Spare Wires

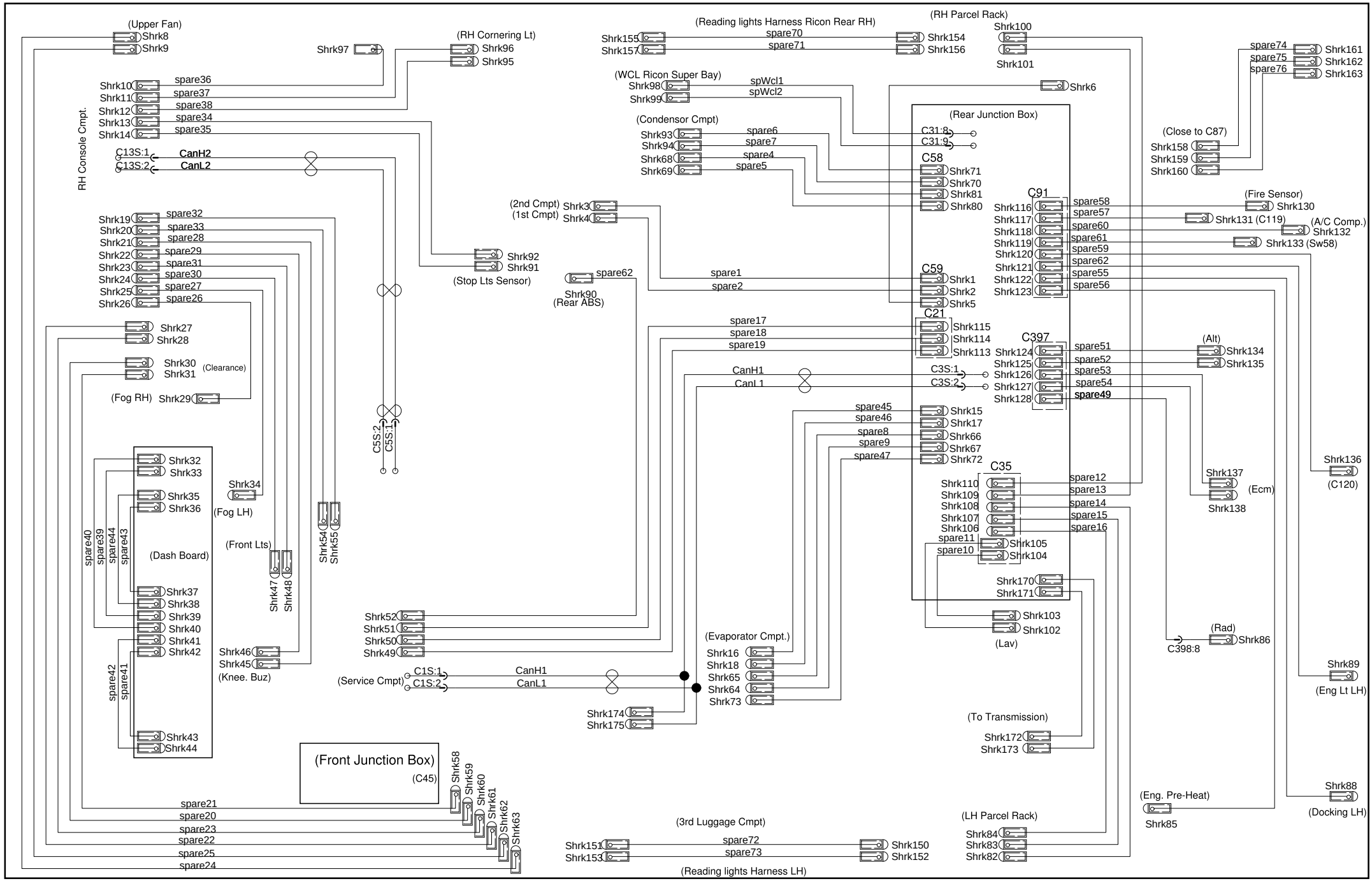

PREVOST®	WIRING DIAGRAM	No:D061030	Page:8.1	Rev:23