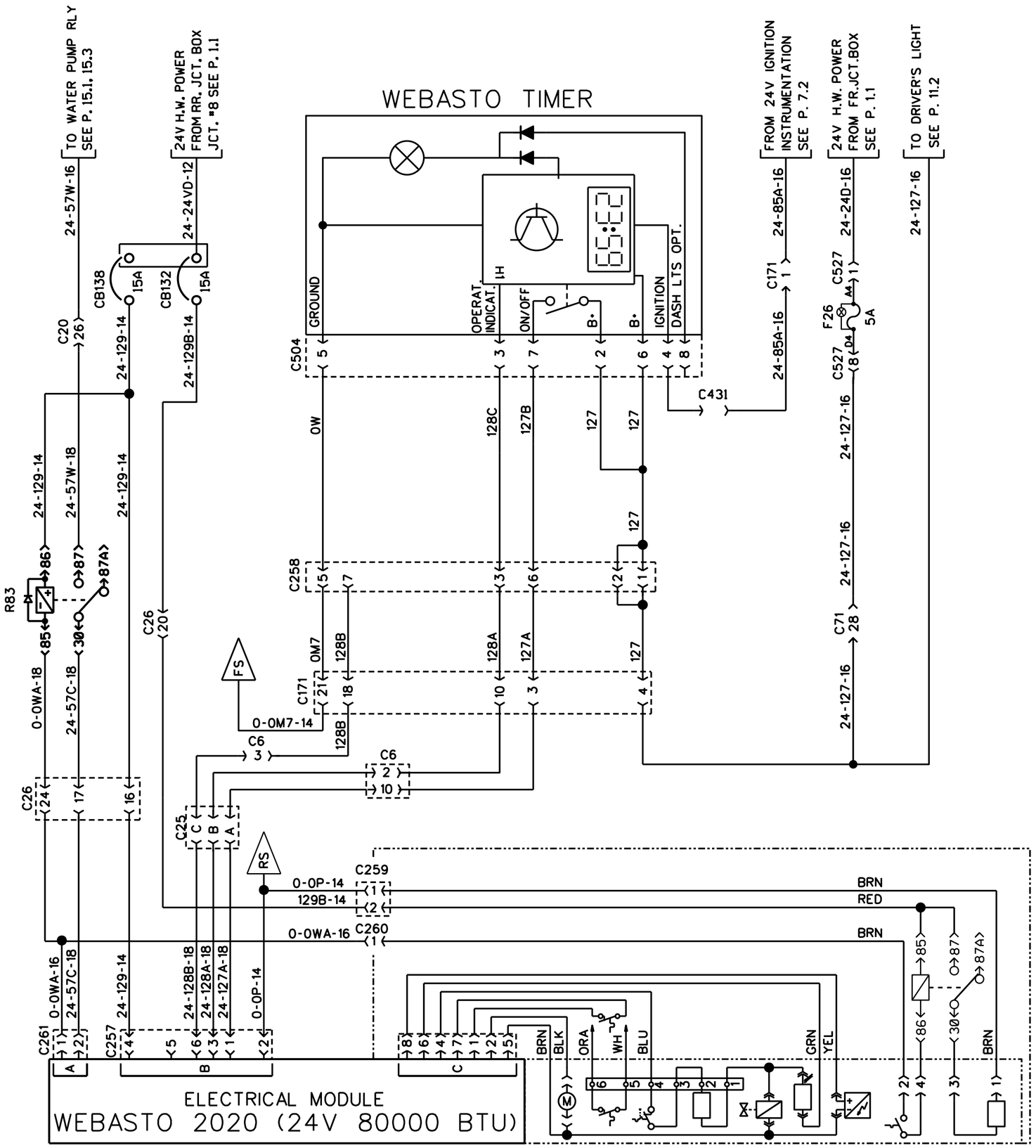

PRE-HEAT WATER HEATER (WEBASTO 2020)

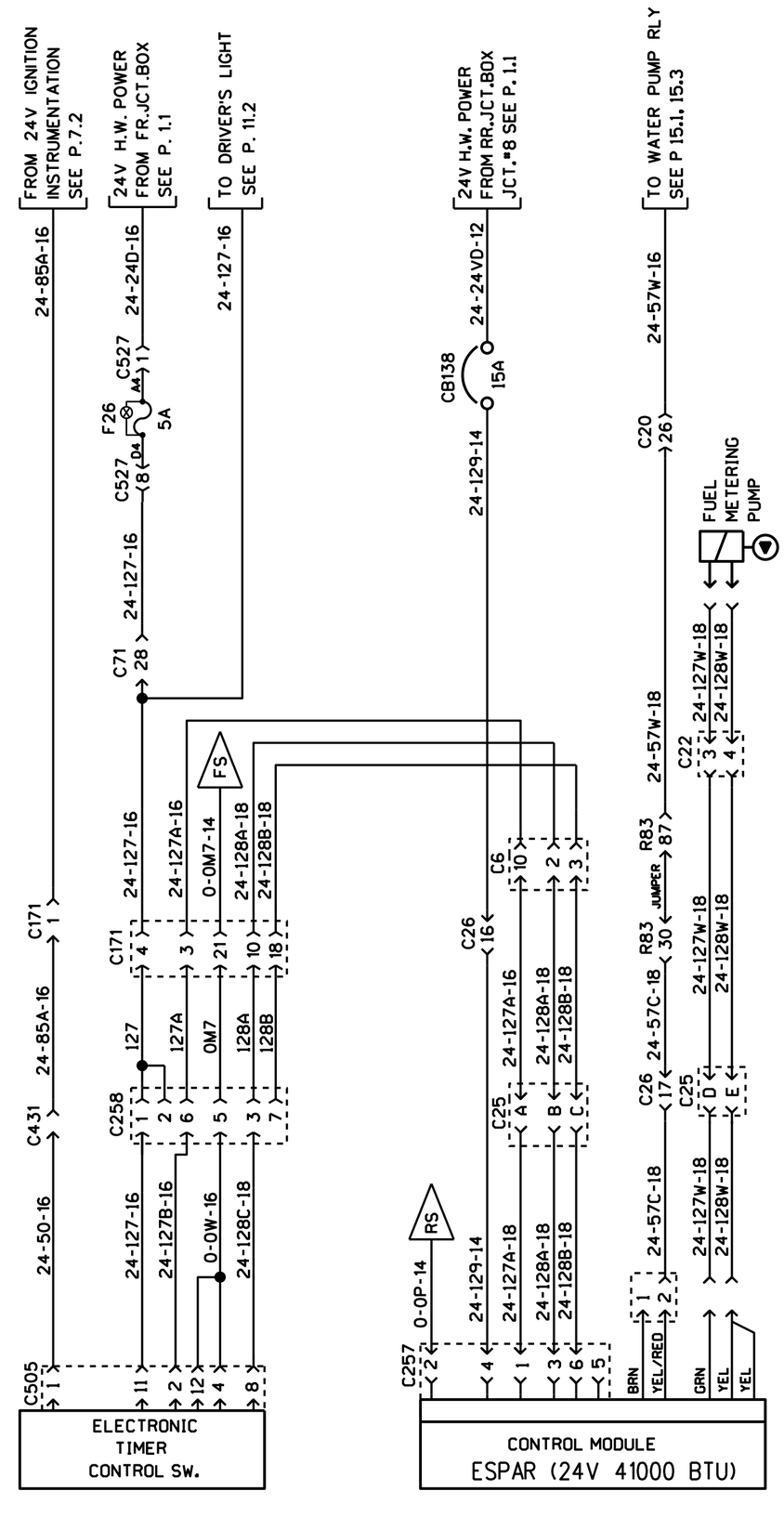

PRE-HEAT WATER HEATER (ESPAR)

PREVOST	WIRING DIAGRAM	NO: D060921	PAGE: 14.1	REVISION 02