ECM_Motor

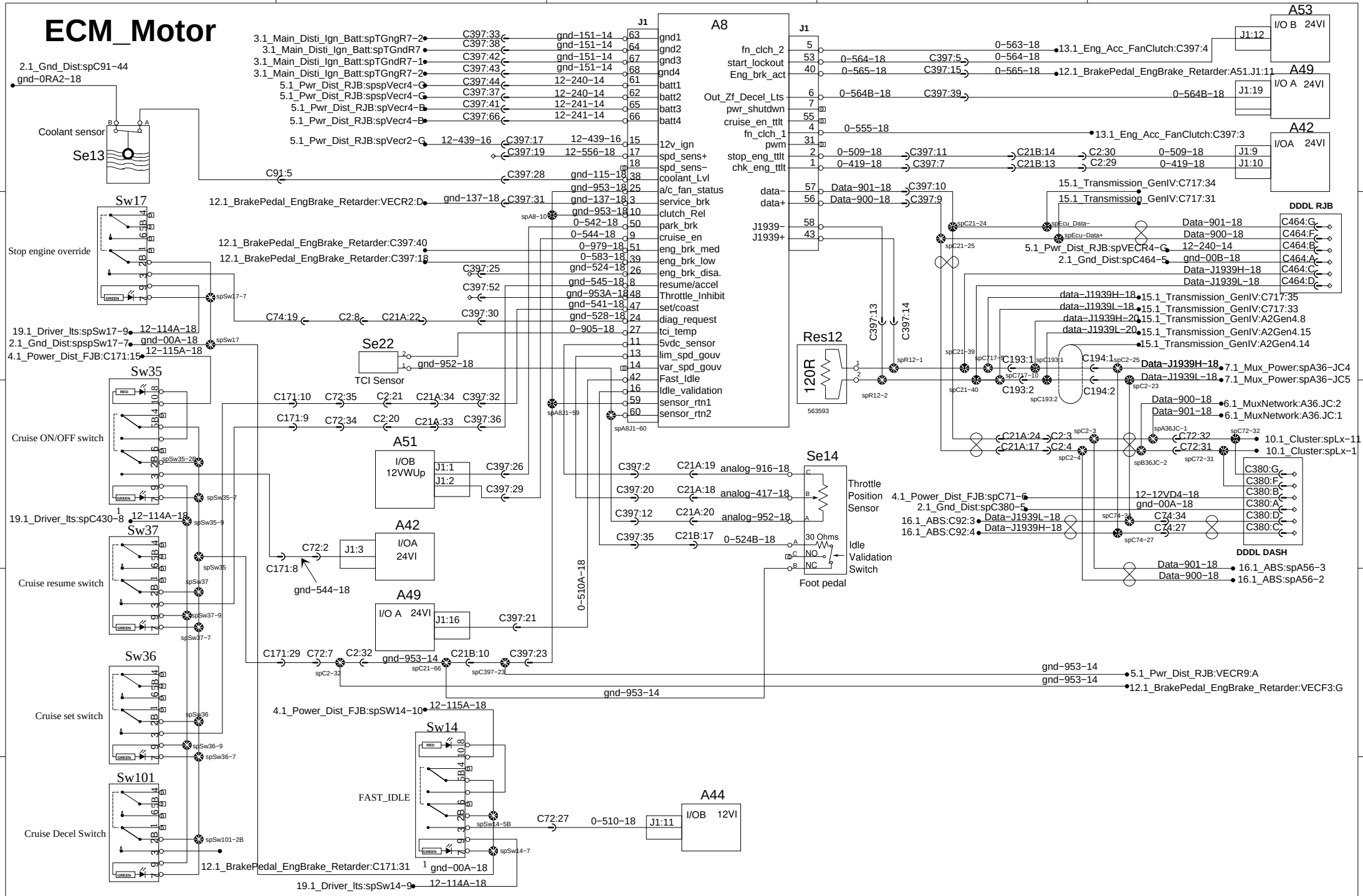

PREVOST®

WIRING DIAGRAM

No:D061040

Page:14.1

Rev:4