Allison Transmission

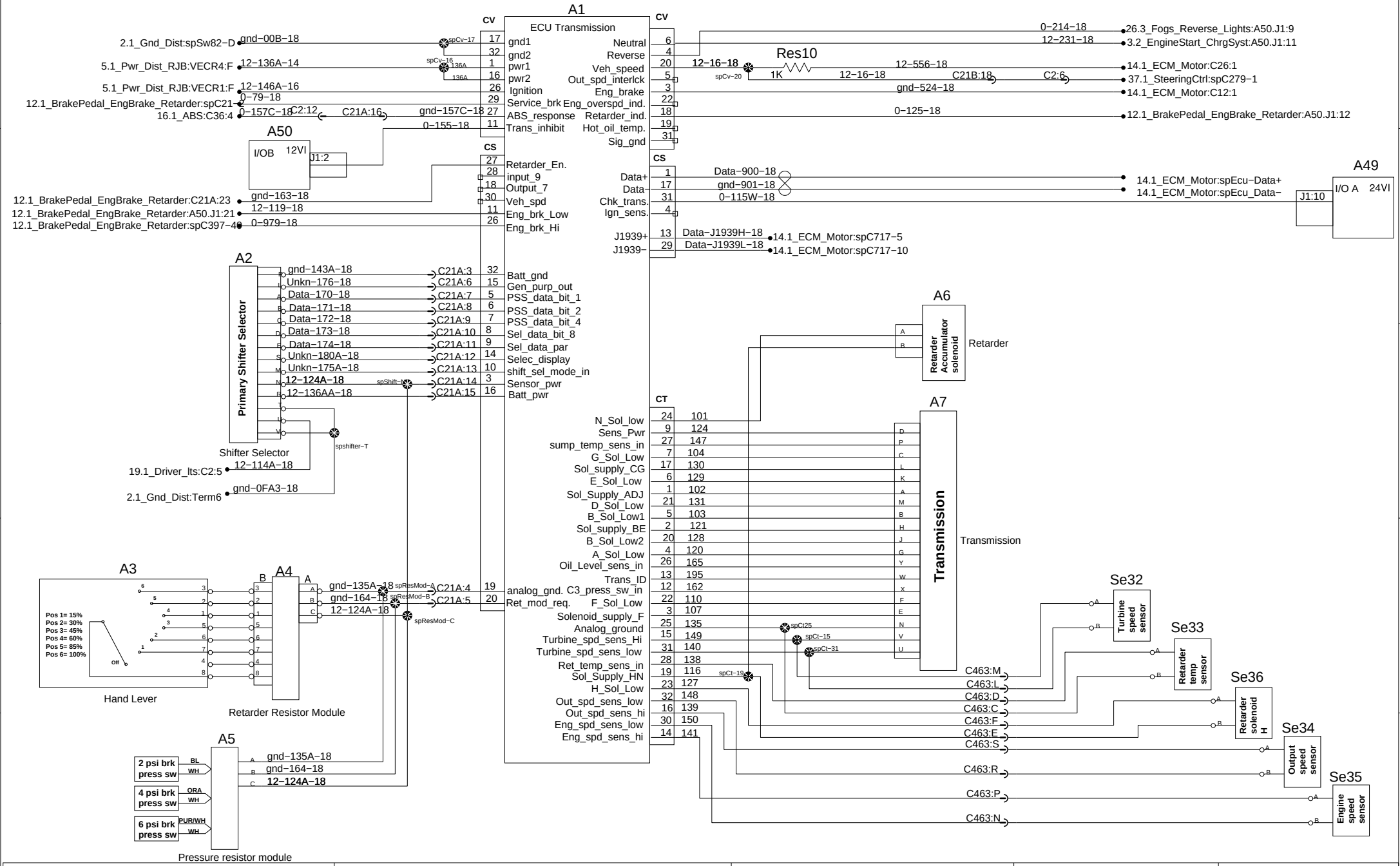

PREVOST®

WIRING DIAGRAM

No:D061040

Page:15.1

Rev:0