Cluster

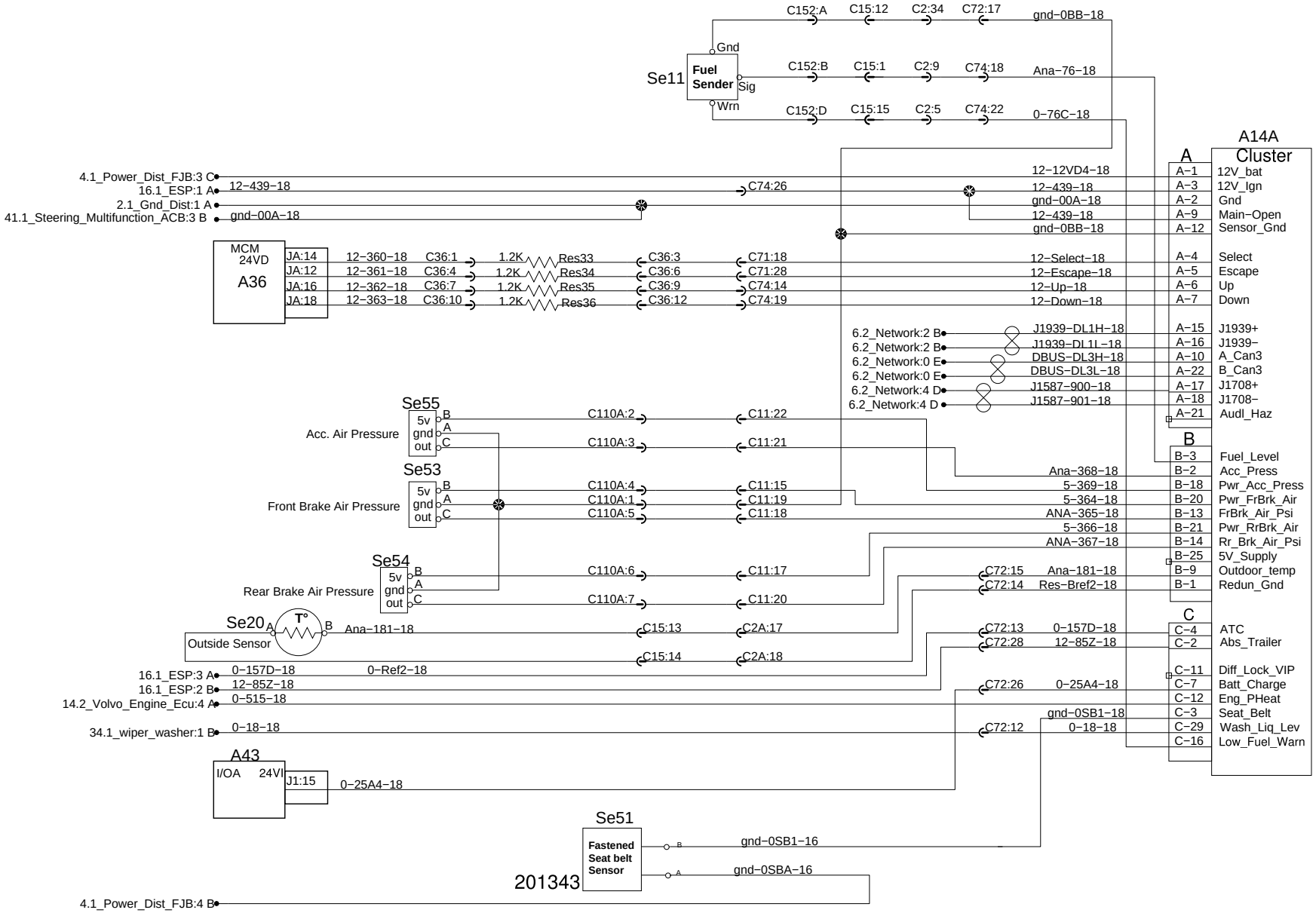

PREVOST®	WIRING DIAGRAM	No:D061340	Page:10.1 SP1	Rev:00