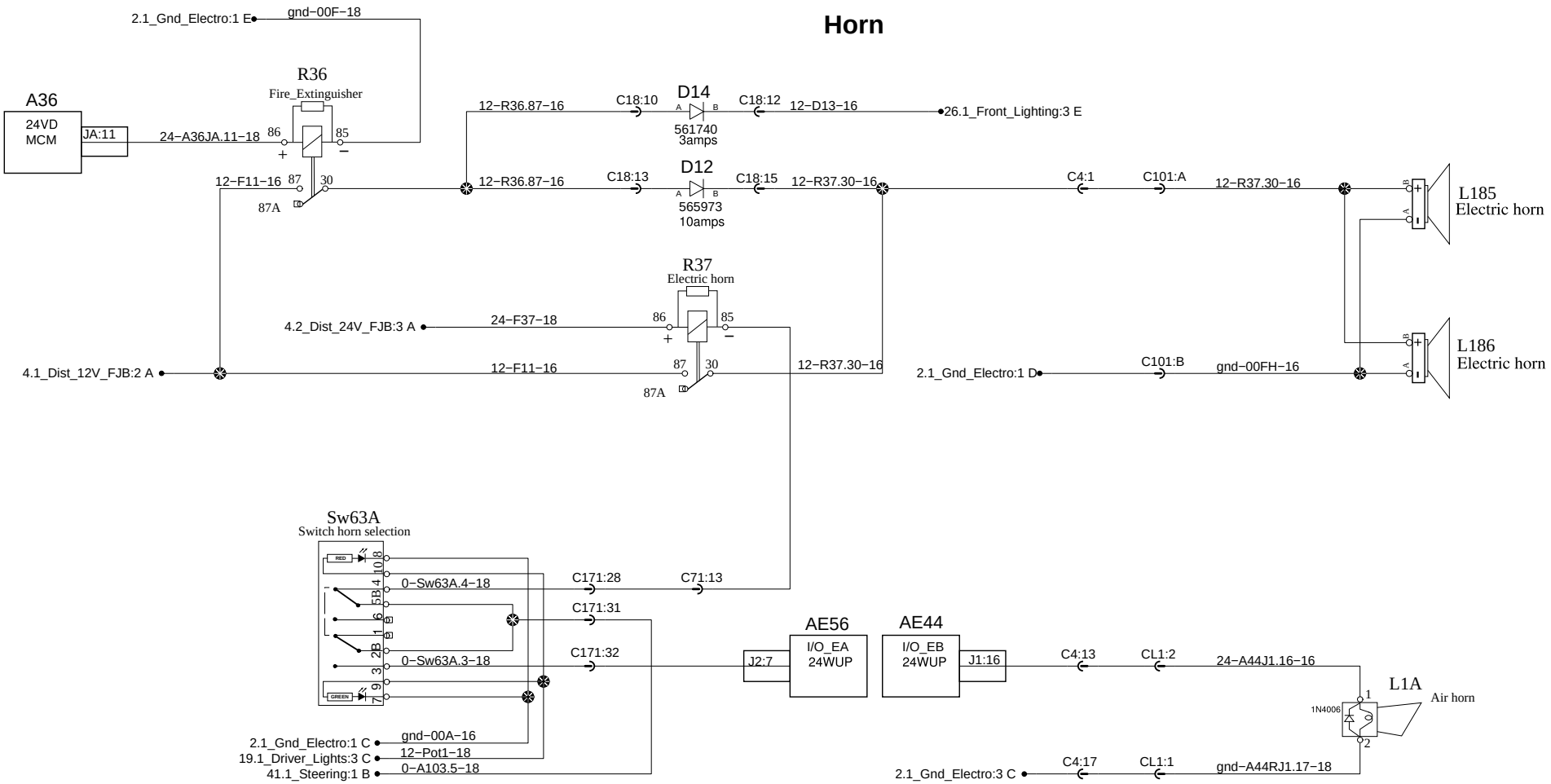

PREVOST®	WIRING DIAGRAM	No:D061550	Page:9.1	Rev:2