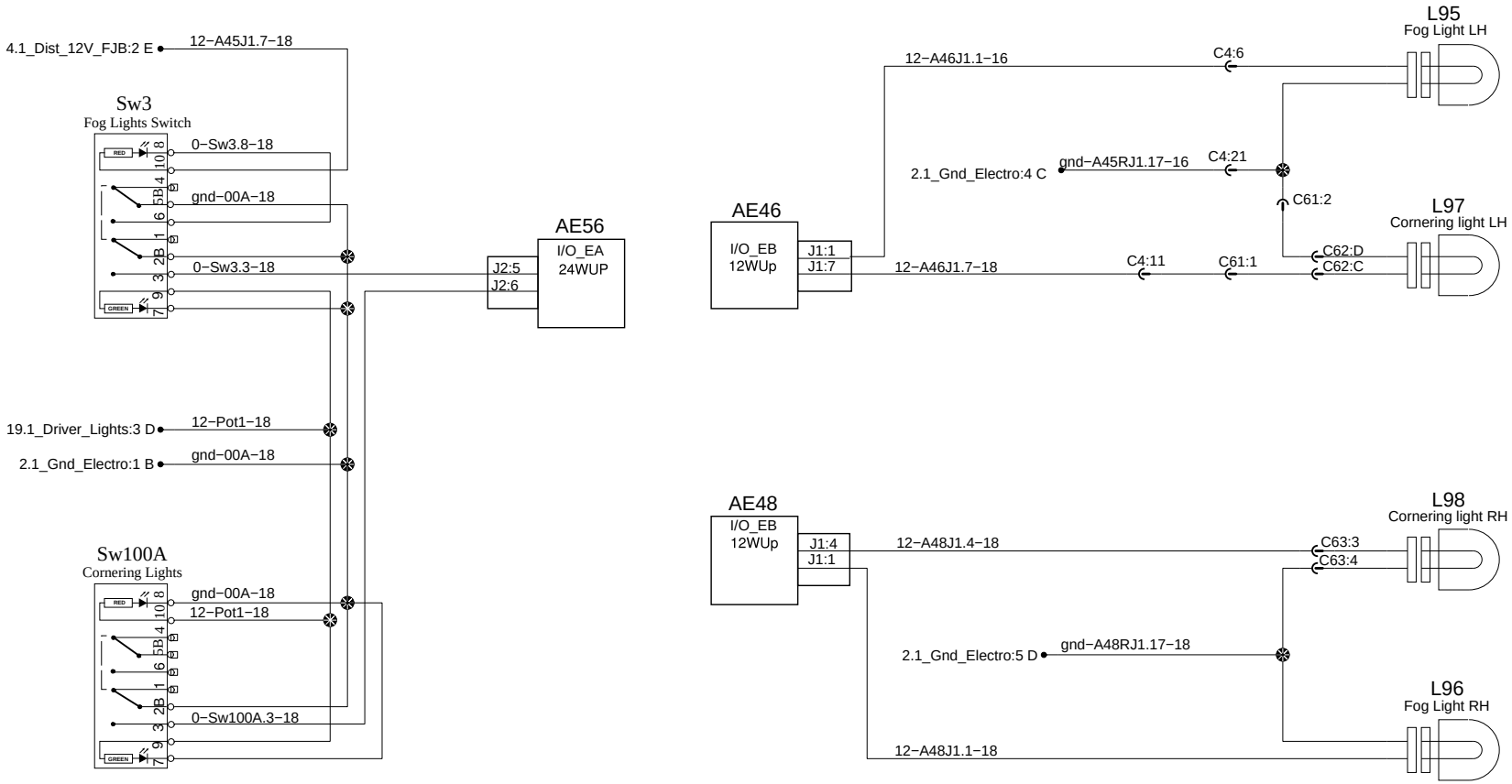Cornering and Fog lights (Option)