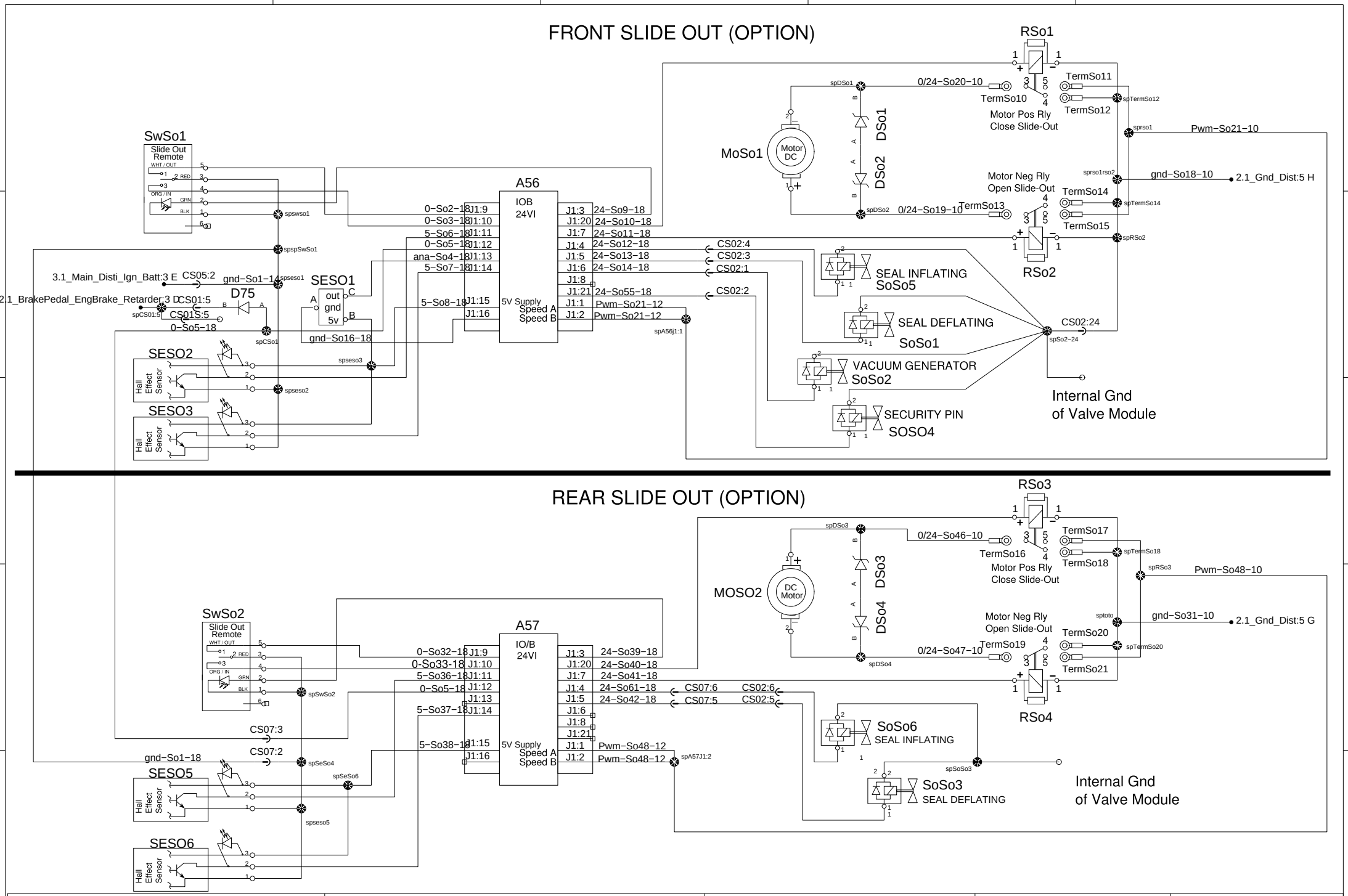

PREVOST®	WIRING DIAGRAM	No:D061040	Page:20.1	Rev:6