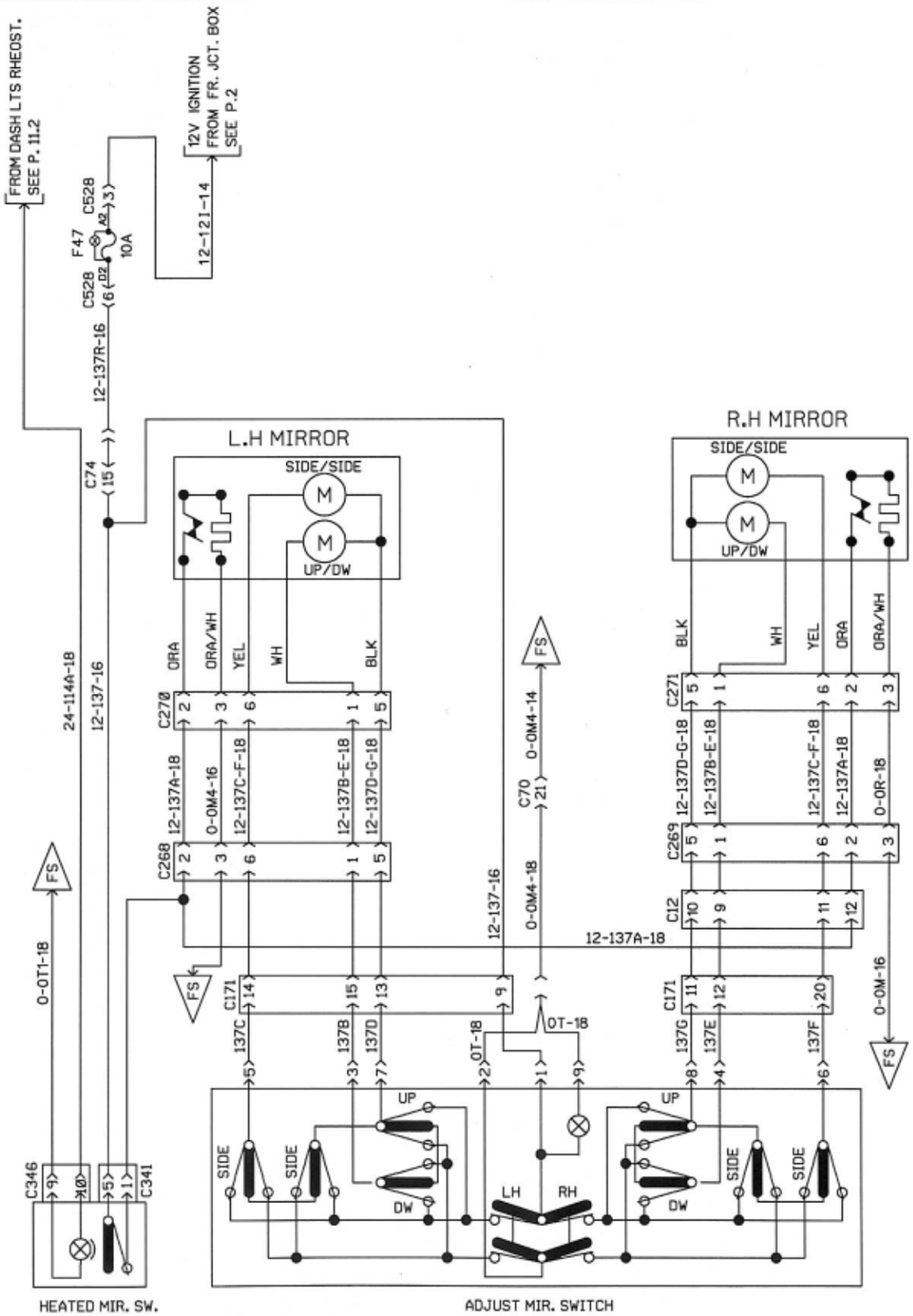

REAR VIEW MIRROR RAMCO FLAT - 1 ADJUSTMENT SW. & 1 HEATED SW.

PREVOST	WIRING DIAGRAM	NO: D060882	PAGE: 24.2	REVISION 00