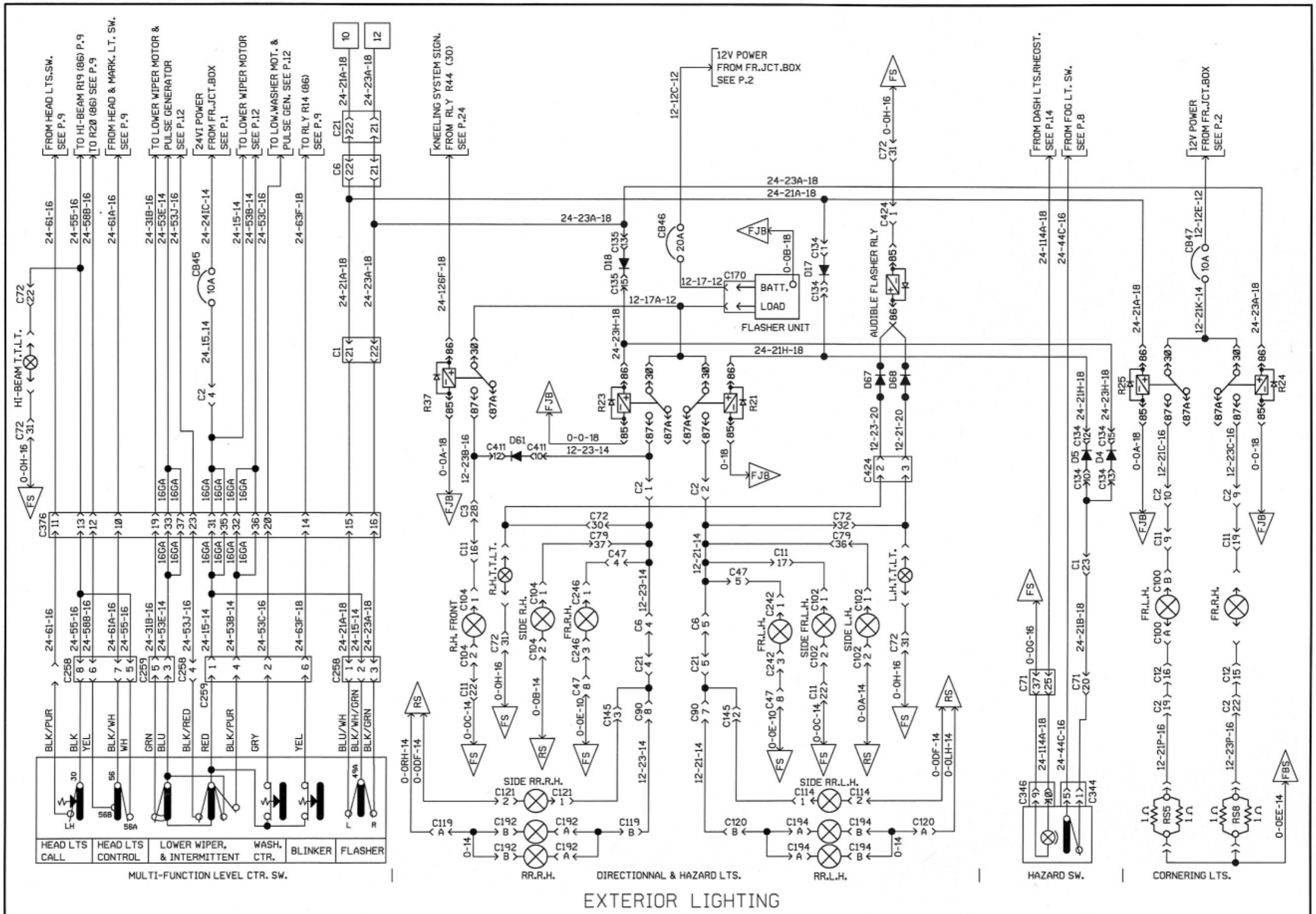


EXTERIOR LIGHTING

| PREVOST CAR inc. | WIRING DIAGRAM | NO: D060869 | P. 10 | REVISION 000 |
|---|---|---|---|---|