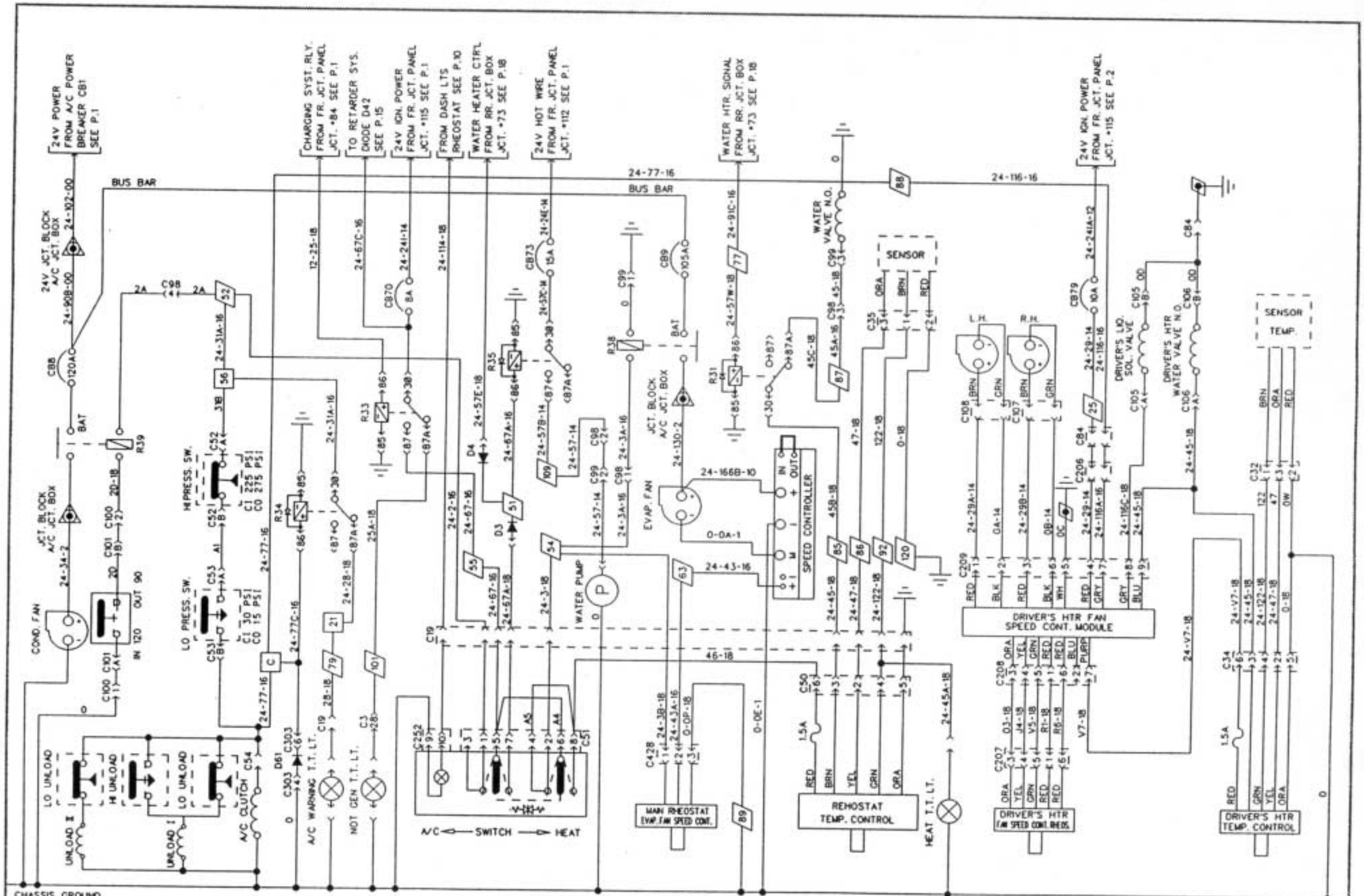

A/C AND HEAT SYSTEM (FULL AIR)

PREVOST CAR inc.	WIRING DIAGRAM	NO: D060815	REVISION DATE 95-02-23	P. 13b