Cornering and Fog lights (Option)

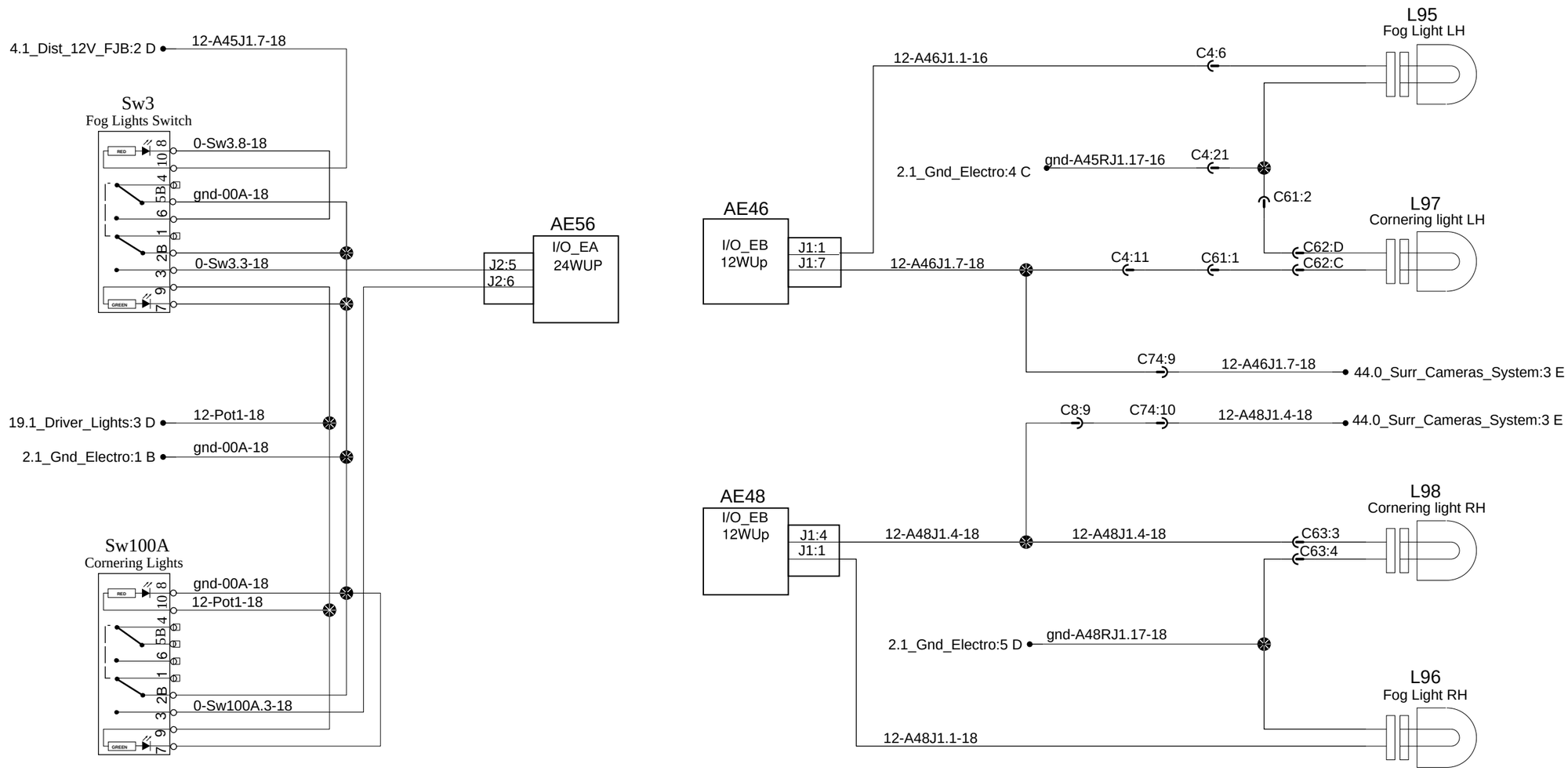

PREVOST®	WIRING DIAGRAM	No:D061550	Page:26.5	Rev:21