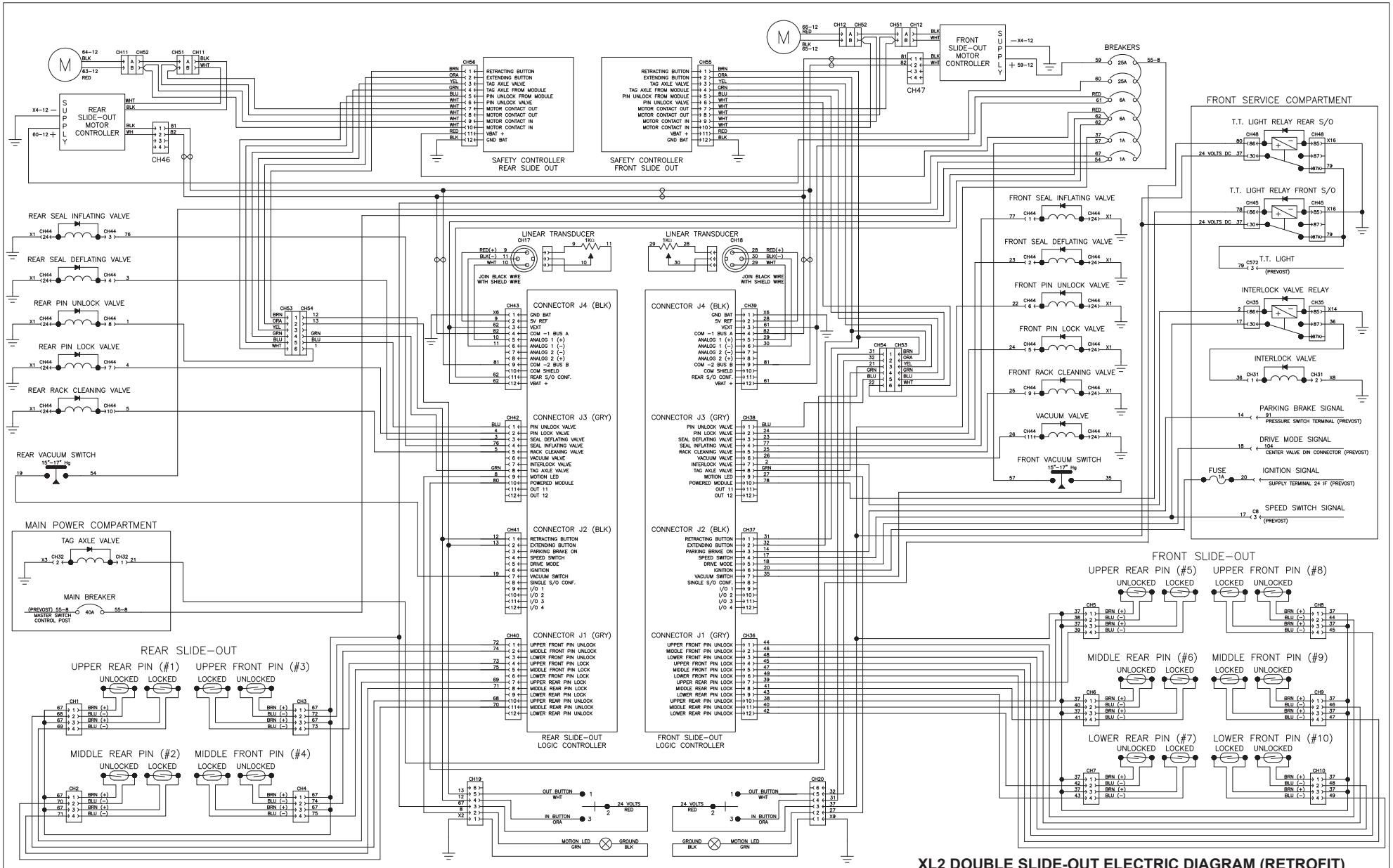

XL2 DOUBLE SLIDE-OUT ELECTRIC DIAGRAM (RETROFIT)

EFFECTIVE TO SERIAL NUMBER 1-7722
AND FROM 1-7781 TO 2-79XX

(ALL WIRES ARE 18 AWG EXCEPT WHEN SPECIFIED)

2002/04/26