Hvac passengers

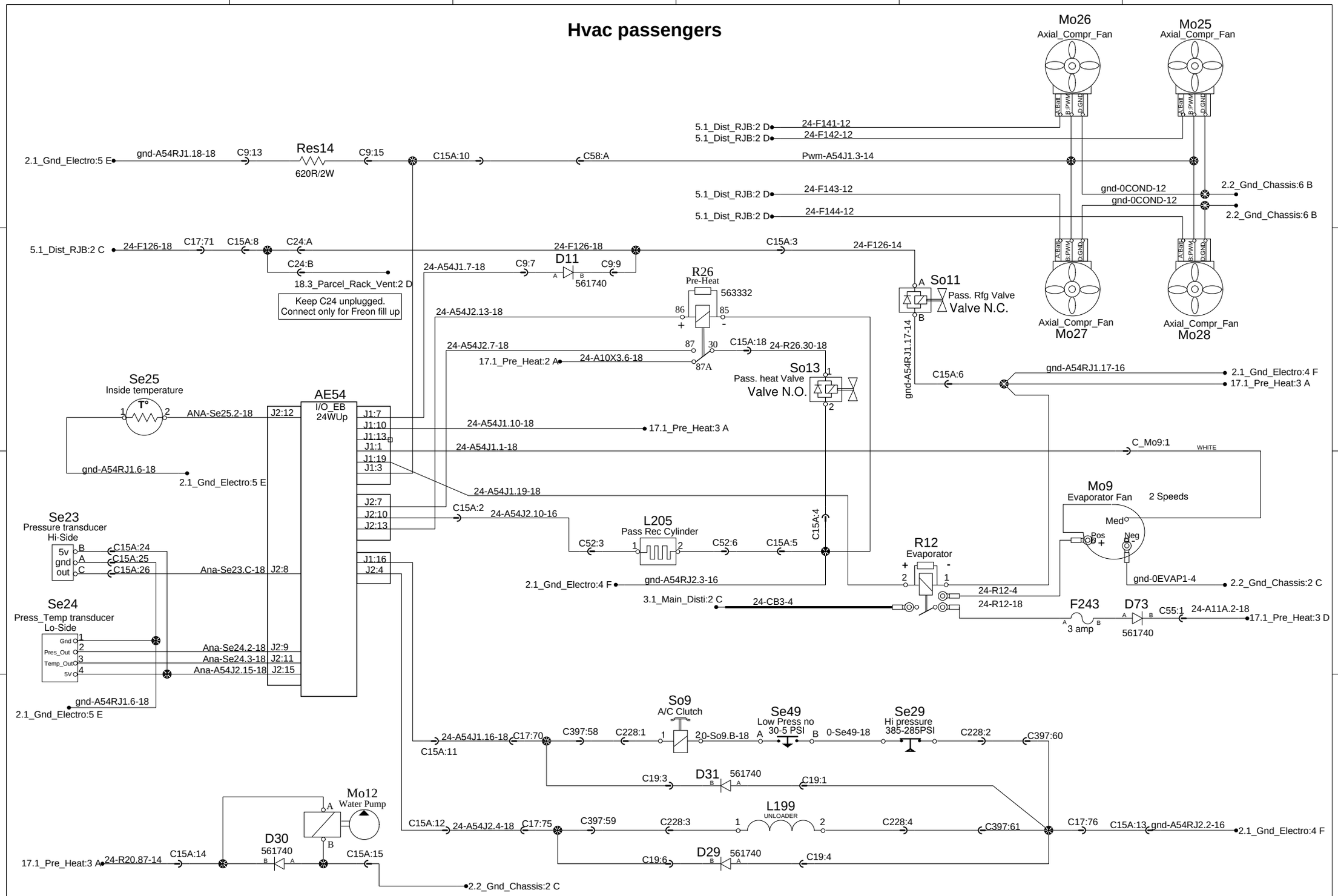

PREVOST®	WIRING DIAGRAM	No:D061550	Page:18.2	Rev:28