Rear flashers, Markers, Tail and stop lights

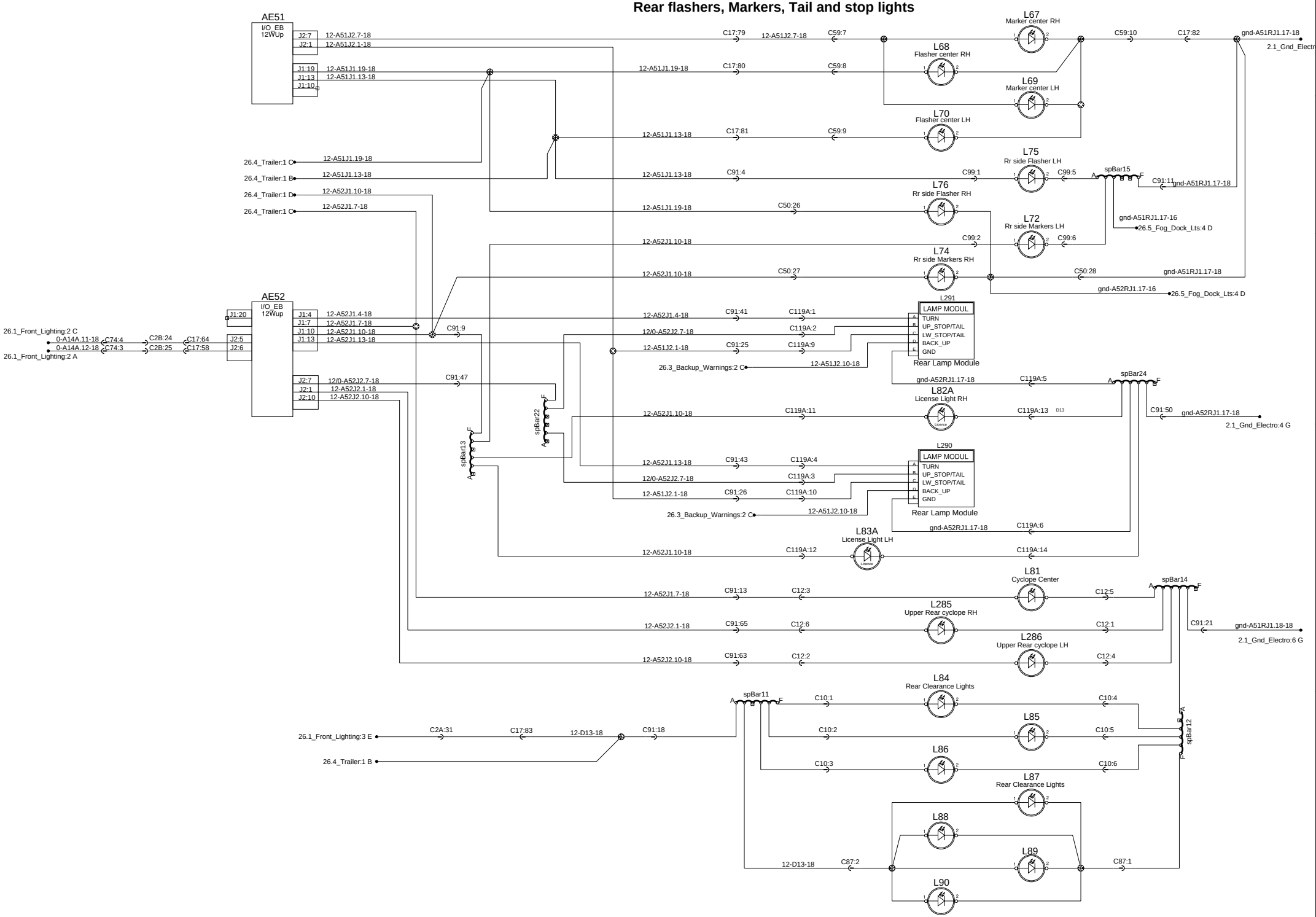

Rev:0

Page:26.2

No:D062140

WIRING DIAGRAM

PREVOST