SECTION 00 : GENERAL INFORMATION

CONTENTS

1. FOREWORD 00-2

2. SCHEMATICS 00-2

3. PRECAUTIONS TO BE OBSERVED BEFORE WELDING 00-2

4. SAFETY NOTICE 00-3

4.1 DATA PLATES AND CERTIFICATIONS 00-3
4.1.1 Engine 00-3
4.1.2 Transmission 00-3
4.1.3 Drive Axle 00-4
4.1.4 Front Axle 00-4
4.1.5 Power Steering Pump 00-4
4.1.6 Coach Final Record 00-4
4.1.7 Safety Certification 00-4
4.1.8 DOT Certification Label 00-4
4.1.9 EPA Engine Label 00-4
4.1.10 Fuel Tank Label 00-5
4.1.11 Vehicle Identification Number (VIN) 00-5

5. FASTENER STRENGTH IDENTIFICATION 00-7

5.1 SELF-LOCKING FASTENERS 00-8
5.2 RECOMMENDATIONS FOR REUSE 00-8
5.3 SIX LOBED SOCKET HEAD 00-8

ILLUSTRATIONS

FIGURE 1: DETROIT DIESEL SERIES 60 00-3
FIGURE 2: WORLD TRANSMISSION 00-3
FIGURE 3: EATON TRANSMISSION 00-3
FIGURE 4: TYPICAL SERIAL & MODEL NUMBERS 00-4
FIGURE 5: TYPICAL SERIAL & MODEL NUMBERS 00-4
FIGURE 6: ISS TYPICAL SERIAL & MODEL NUMBERS 00-4
FIGURE 7: POWER STEERING PUMP NAMEPLATE 00-4
FIGURE 8: ENGINE COMPARTMENT 00-5
FIGURE 9: VEHICLE I.D.00-5
FIGURE 10: VEHICLE IDENTIFICATION NUMBER00-6
FIGURE 11: THREAD NOTATION 00-7
FIGURE 12: BOLT STRENGTH MARKINGS 00-7
FIGURE 13: SELF-LOCKING FASTENERS 00-8
FIGURE 14: METRIC - US STANDARD CONVERSION TABLE 00-9
FIGURE 15: CONVERSION CHART 00-10

1. FOREWORD

This manual includes procedures for diagnosis, service, maintenance and repair for components of the XL2 series coach or bus shell model listed on the front cover page.

This manual should be kept in a handy place for ready reference by the technician. If properly used, it will meet the needs of the technician and owner.

Information provided in Section 1 through 24 pertains to standard equipment items, systems and components as well as the most commonly used optional equipment and special equipment offered on the coach models covered by this manual.

At the beginning of each section: a Table of Contents and a list of illustrations give the page number on which each subject begins and where each figure is located.

Coach operating information is provided in a separate Operator's Manual. Audio/Video system operator instructions are also included in a separate manual.

More specific information on engine and transmission operating, maintenance, and overhaul information is contained in the applicable engine or transmission service manual published by the engine or transmission manufacturer. Engine and transmission parts information is contained in the applicable engine or transmission parts catalog published by the engine or transmission manufacturer.

All information, illustrations and specifications contained in this manual are based on the latest product information available at the time of publication approval. The right is reserved to make product changes at any time without notice.

Note*: Typical illustrations may be used, therefore minor illustration difference may exist when compared to actual parts or other publications.*

Prévost Car occasionally sends Maintenance Information, Warranty Bulletins, Campaign Bulletins or other literature to update users with the latest service procedures. They are issued, when required, to supplement or supersede information in this manual. Update sheet should be filled out and bulletins should be filed at the end of their respective section for future reference.

2. SCHEMATICS

Vehicle AIR SCHEMATICS are provided at the end of Section 12, "Brake". SUSPENSION AIR SCHEMATICS are provided at the end of Section 16, "Suspension". Moreover, ELECTRICAL SCHEMATICS are provided in the technical publications box. Refer to those schematics for detailed circuit information or during diagnosis.

3. PRECAUTIONS TO BE OBSERVED BEFORE WELDING

Caution: *Cut off battery power in main power compartment using battery safety switch.*

1. Disconnect *"Ground"* cables from battery terminals.

Note: *Disconnect "Ground" cables only.*

2. If welding must be done near the dashboard i.e. steering column, you must disconnect all electronic control modules (radio & control head, HVAC, TTLT cluster Volvo). You must also disconnect alternator module located in front service compartment.
3. Disconnect three wiring harness connectors from ECM (Electronic Control Module). The ECM is mounted on the starter side of the engine.
4. For vehicles equipped with an Allison automatic transmission, disconnect three wiring harness connectors from ECU (Electronic Control Unit). The ECU is located in front service compartment.
5. For vehicles equipped with ABS (Anti-Lock Brake System), disconnect wiring harness connectors from ABS Electronic Control Unit. The ABS Electronic Control Unit is located in front service compartment.
6. Cover electronic control components and wiring to protect from hot sparks, etc.
7. Do not connect welding cables to electronic control components.
8. Do the appropriate welding on vehicle.

Caution: *Position welding machine ground clamp as close as possible to the work.*

9. When welding is complete, reconnect ECM, ECU, ABS electronic control units, etc.
10. Terminate by reconnecting *"Ground"* cables to battery terminals.

4. SAFETY NOTICE

This maintenance manual has been prepared in order to assist skilled mechanics in the efficient repair and maintenance of PRÉVOST vehicles.

This manual covers only the procedures as of manufacturing date.

Safety features may be impaired if other than genuine PRÉVOST parts are installed.

Torque wrench tightening specifications must be strictly observed. Locking devices must be installed or replaced by new ones, where specified. If the efficiency of a locking device is impaired, It must be replaced.

This manual emphasizes particular information outlined by the wording and symbols:

***Warning**: Identifies an instruction which, if not followed, could cause personal injuries.*

***Caution**: Outlined an instruction which, if not followed, could severely damage vehicle components.*

***Note*:** Indicates supplementary information needed to fully complete an instruction. *Although, the mere reading of such information does not eliminate the hazard, understanding of the information will promote its correct use.*

4.1 DATA PLATES AND CERTIFICATIONS

Delay and confusion can be avoided by placing the complete vehicle identification number of the coach and the serial numbers of the engine on parts orders and correspondence. Also, the transmission, axles, power steering pump chassis and other major components are identified by serial numbers.

4.1.1 Engine

The engine serial and model number are stamped on the cylinder block (as viewed from the flywheel end) on the left side just below the fire deck and above the cast-in Detroit Diesel logo (Fig. 1).

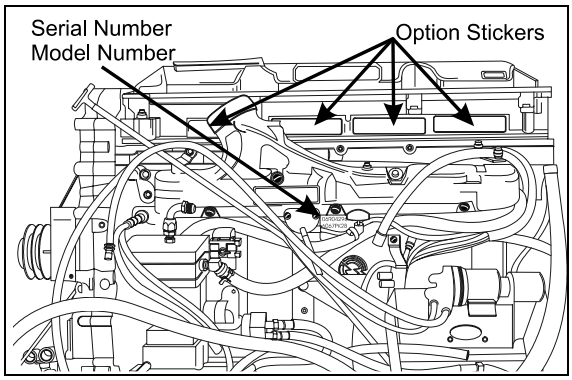

FIGURE 1 : DETROIT DIESEL SERIES 60 01054

In addition, option plates made of laminated paper are located on the rocker cover (starter side). The engine serial and model number and a list of the optional engine equipment is written on the option plate. Refer to this information when ordering replacement parts (Fig. 1).

4.1.2 Transmission

The transmission identification plate may be located on the right-rear side of the transmission. The identification plate shows the transmission serial number, part number (assembly number), and model number. Use all three numbers when ordering parts.

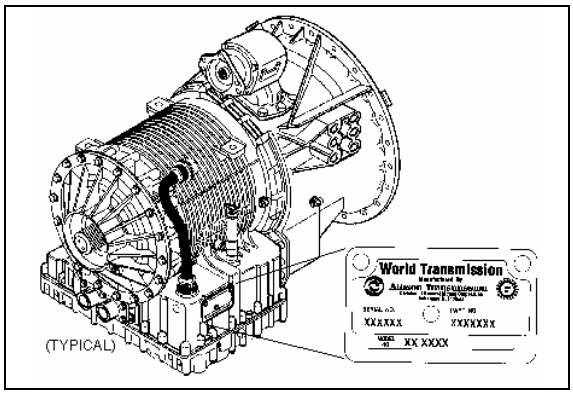

FIGURE 2: WORLD TRANSMISSION 07019

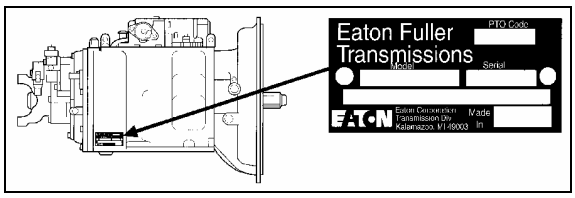

FIGURE 3: EATON TRANSMISSION 07062

4.1.3 Drive Axle

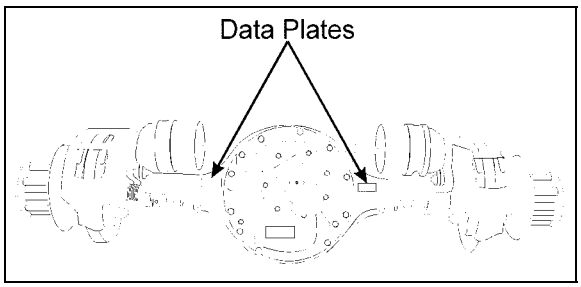

FIGURE 4: TYPICAL SERIAL & MODEL NUMBERS 11019

4.1.4 Front Axle

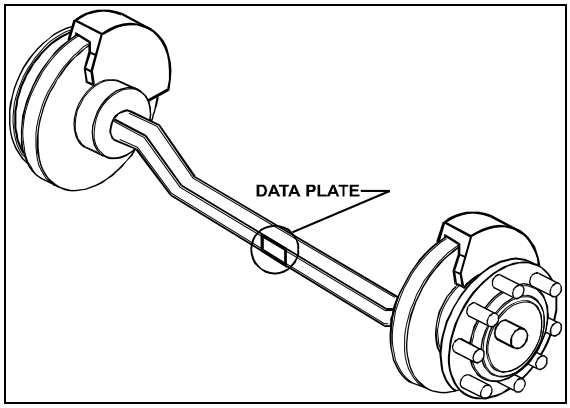

FIGURE 5: TYPICAL SERIAL & MODEL NUMBERS 10024

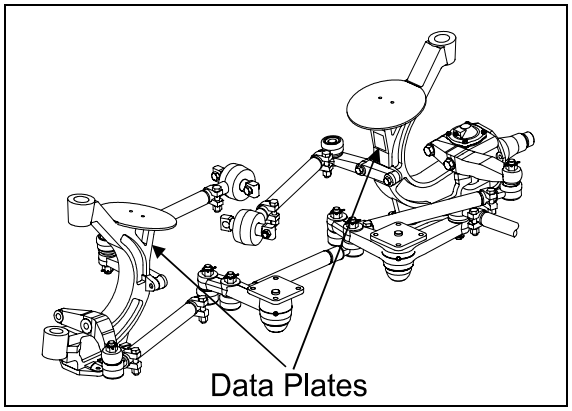

FIGURE 6: ISS TYPICAL SERIAL & MODEL NUMBERS

4.1.5 Power Steering Pump

Power steering pump serial number is located on a tag on the pump (Fig. 7). The pump is mounted on the engine beside the crankshaft pulley.

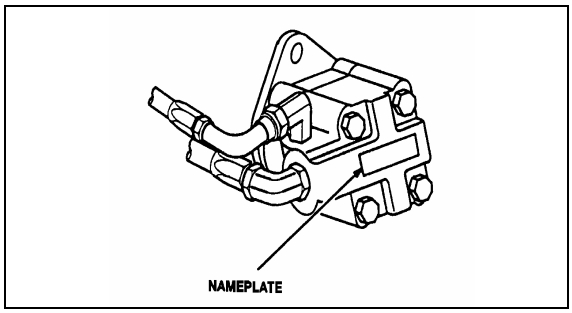

FIGURE 7 : POWER STEERING PUMP NAMEPLATE 00001

4.1.6 Coach Final Record

The Coach Final Record is a record of all data pertaining to the assembly of the coach. This record is included in the technical publication package supplied with the coach. Retain this record in the company records office for reference and safe-keeping.

4.1.7 Safety Certification

Coach components meet specifications and standards as follows:

- Material and parts conform to ASTM and/or SAE standards in effect at the time of manufacture.

- All factory-installed interior materials meet FMVSS 302 for fire resistance.

- Certified according to Provincial, State and Federal Safety standards (Canadian and US) BMCSS, FMVSS, and CMVSS.

Other applicable certification labels are affixed to the component.

4.1.8 DOT Certification Label

This certifies that coaches manufactured by Prevost Car Inc., comply with all Federal Motor Vehicle Safety Standards at the time of manufacture. The DOT Certification label is affixed on the wall, behind the driver's seat.

4.1.9 EPA Engine Label

The exhaust emission certification label affixed to the rear junction box certifies that the engine conforms to federal and any state exhaust emission regulations (Fig. 8). It gives the operating conditions under which certification was made.

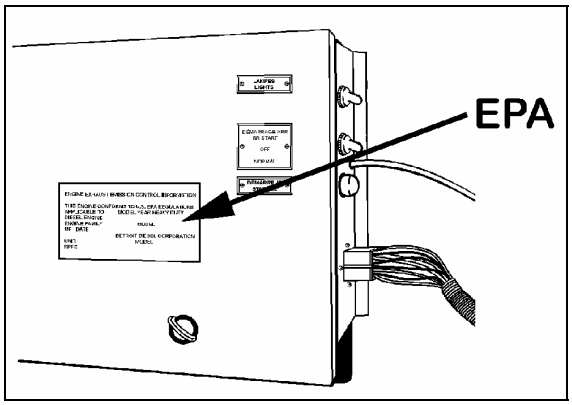

FIGURE 8 : ENGINE COMPARTMENT 01011

4.1.10 Fuel Tank Label

The fuel tank label is molded on the side of the fuel tank. To read this label, unscrew the fuel tank access panel nuts located at the left in the condenser compartment.

4.1.11 Vehicle Identification Number (VIN)

The seventeen digit vehicle identification number (VIN) is located on a plate (Fig. 9 & 10) located on the windshield frame pillar (driver's side). The VIN is visible from the outside of the coach. Make sure the correct vehicle identification number is given when ordering replacement parts. Using the VIN when ordering parts will facilitate processing.

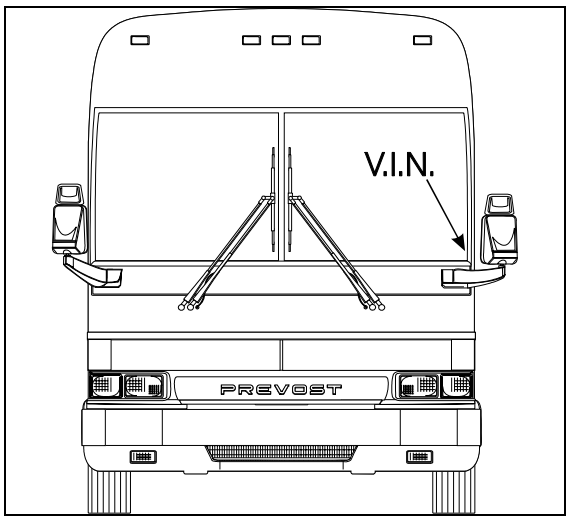

FIGURE 9 : VEHICLE I.D. 18309

Note: *Record the VIN in the coach documentation and keep with company records. The VIN will normally be used for vehicle registration and for obtaining vehicle insurance coverage.*

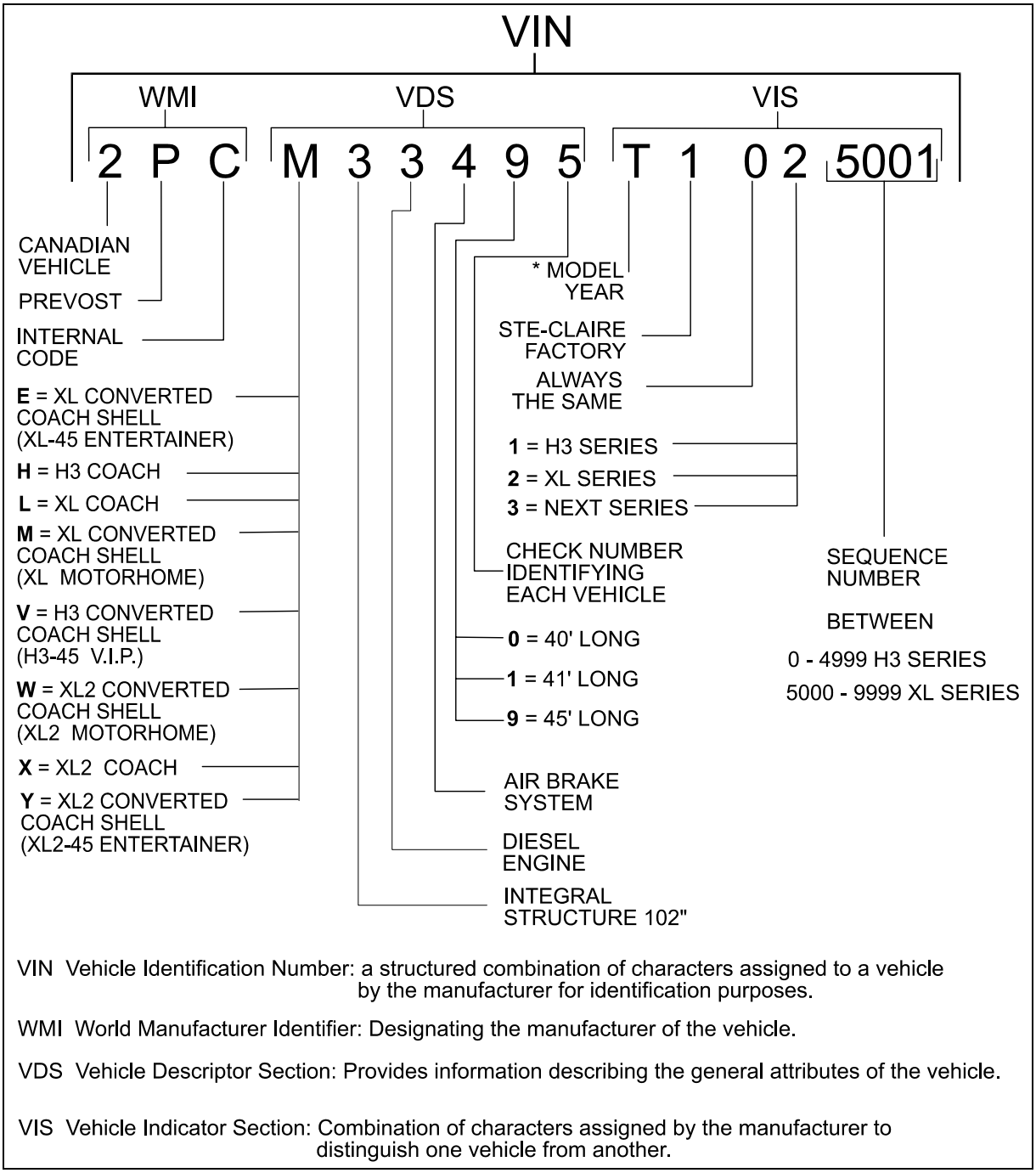

FIGURE 10 : VEHICLE IDENTIFICATION NUMBER VIN1

YEAR	CODE	YEAR	CODE
1996	T	1999	X
1997	V	2000	Y
1998	W	2001	Z

5. FASTENER STRENGTH IDENTIFICATION

Most commonly used metric fastener strength property classes are 9.8 and 10.9 with the class identification embossed on the head of each bolt. Customary (inch) strength classes range from grade 2 to 8 with radial line identification embossed on each bolt head actual grade (i.e., a grade 7 bolt will have 5 embossed radial lines on the bolt head). Some metric nuts will be marked with single digit strength identification numbers on the nut face. Fig. 12 shows the different strength markings. When replacing metric fasteners, be careful to use fasteners of the same or greater strength than the original fasteners (the same number marking or higher). It is also important to select replacement fasteners of the correct size. Correct replacement fasteners are available through the parts division. Some metric fasteners available in after-market parts sources were designed to metric standards of countries other the United States and may be of a lower strength, may not have the numbered head marking system, and may be of a different thread pitch.

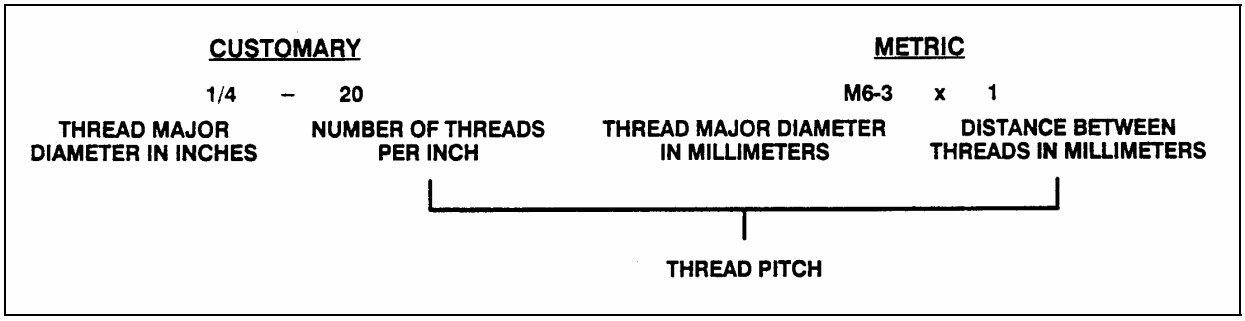

FIGURE 11 : THREAD NOTATION 00002

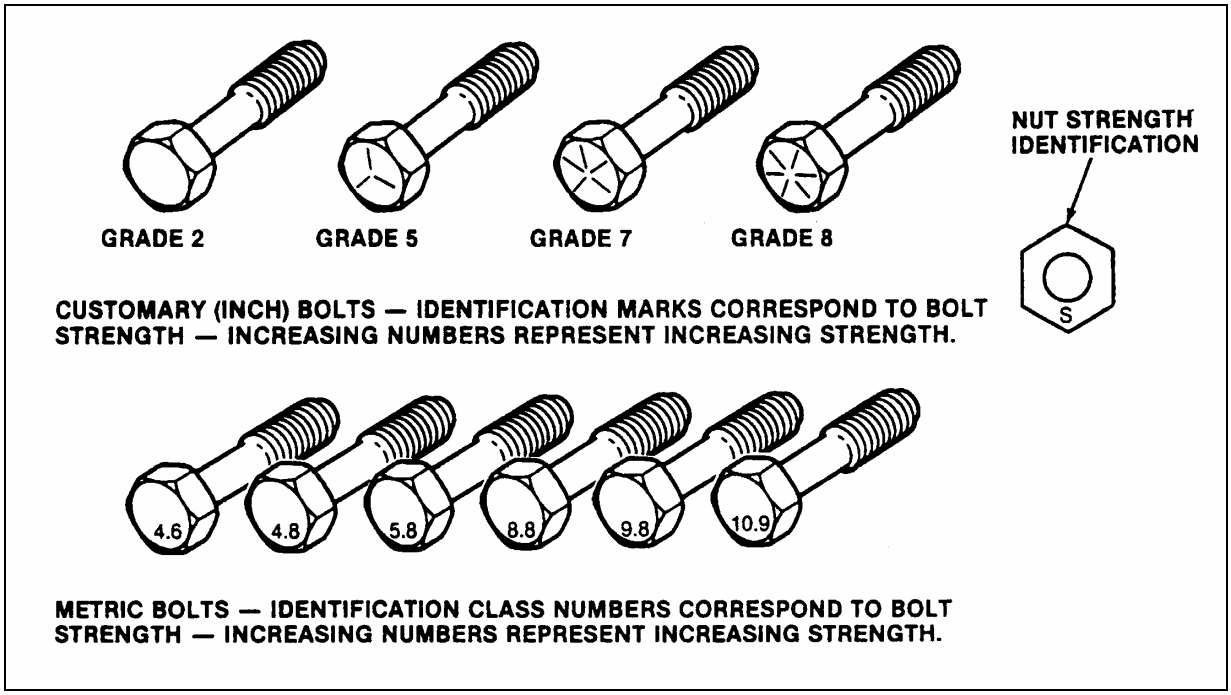

FIGURE 12: BOLT STRENGTH MARKINGS 00003

The metric fasteners used on the coach are designed to new standards and may not yet be manufactured by some non-domestic fastener suppliers. In general, except for special applications, the common sizes and pitches are :

- M 8 X 1.25;
- M 10 X 1.5;
- M 12 X 1.75;
- M 14 X 2;

5.1 SELF-LOCKING FASTENERS

A self-locking fastener is designed with an interference fit between the nut and bolt threads. This is most often accomplished by distortion of the top thread of an all-metal nut or bolt or by using a nylon patch on the threads. A nylon insert or the use of adhesives may also be used as a method of interference between nut and bolt threads (Fig. 13).

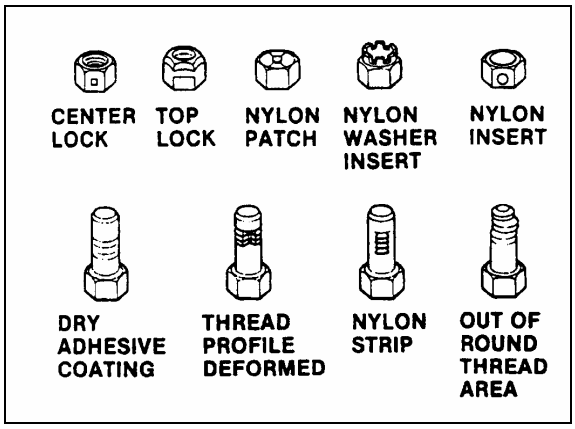

FIGURE 13 : SELF-LOCKING FASTENERS 00004

5.2 RECOMMENDATIONS FOR REUSE

Clean, unrusted self-locking fasteners may be

reused as follows :

a) Clean dirt and other foreign matter from the fastener;

b) Inspect the fastener to ensure there is no crack, elongation, or other sign of fatigue or overtightening. If there is any doubt, replace with a new self-locking fastener of equal or greater strength;

c) Assemble parts and hand start fastener;

d) Observe that, before the fastener seats, it develops torque per the chart in table two. If there is any doubt, replace with a new self-locking fastener of equal or greater strength;

e) Tighten the fastener to the torque specified in the applicable section of this manual;

Fasteners which are rusty or damaged should be replaced with new ones of equal or greater strength.

SELF-LOCKING FASTENER TORQUE CHART

METRIC		6 & 6.3	8	10	12	14	16	20
NUTS AND ALL-METAL BOLTS	N•m	0.4	0.8	1.4	2.2	3.0	4.2	7.0
	lbf•in	4.0	7.0	12	18	25	35	57
ADHESIVE OR NYLON COATED BOLTS	N•m	0.4	0.6	1.2	1.6	2.4	3.4	5.6
	lbf•in	4.0	5.0	10	14	20	28	46

US STANDARD		.250	.312	.375	.437	.500	.562	.625	.750
NUTS AND ALL-METAL BOLTS	N•m	0.4	0.6	1.4	1.8	2.4	3.2	4.2	6.2
	lbf•in	4.0	5.0	12	15	20	27	35	51
ADHESIVE OR NYLON COATED BOLTS	N•m	0.4	0.6	1.0	1.4	1.8	2.6	3.4	5.2
	lbf•in	4.0	5.0	9.0	12	15	22	28	43

5.3 SIX LOBED SOCKET HEAD

Six lobed socket head (Torx) fasteners are used in some applications on vehicles covered in this manual. The tools designed for these fasteners are available commercially. However, in some cases, if the correct tool is not available, a hex socket head wrench may be used.

Multiply	by	to get equivalent number of:
LENGTH		
Inch	25.4	millimeters (mm)
Foot	0.305	meters (m)
Yard	0.914	meters
Mile	1.609	kilometers (km)
AREA		
Inch²	645.2	millimeters² (mm²)
	6.45	centimeters² (cm²)
Foot²	0.093	meters² (m²)
Yard²	0.836	meters²
VOLUME		
Inch³	16 387.0	mm³
	16.387	cm³
	0.016	liters (l)
Quart	0.946	liters
Gallon	3.785	liters
Yard³	0.765	meters³ (m³)
MASS		
Pound	0.453	kilograms (kg)
Ton	907.18	kilograms (kg)
Ton	0.907	ton (t)
FORCE		
Kilogram	9.807	newtons (N)
Ounce	0.278	newtons
Pound	4.448	newtons
TEMPERATURE		
Degree Fahrenheit	(†°F – 32) ÷ 1.8	Degree Celsius (C)

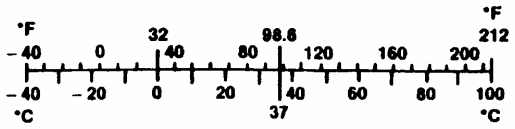

Multiply	by	to get equivalent number of:
ACCELERATION		
Foot/sec²	0.305	meter/sec² (m/s²)
Inch/sec²	0.026	meter/sec²
TORQUE		
Pound-inch	0.113	newton-meters (N·m)
Pound-foot	1.35	newton-meters
POWER		
Horsepower	0.746	kilowatts (kW)
PRESSURE OR STRESS		
Inches of water	0.249	kilopascals (kPa)
Pounds/sq. in.	6.895	kilopascals
ENERGY OR WORK		
BTU	1 055.0	joules (J)
Foot-pound	1.356	joules
kilowatt-hour	3 600 000.0 or 3.6×10^6	joules (J = one W's)
LIGHT		
Foot candle	1.076	lumens/meter² (lm/m²)
VELOCITY		
Miles/hour	1.609	kilometers/hr (km/h)

FIGURE 14: METRIC - US STANDARD CONVERSION TABLE

00005

DECIMAL AND METRIC EQUIVALENTS

FRACTIONS	DECIMAL IN.	METRIC MM	FRACTIONS	DECIMAL IN.	METRIC MM
1/64	.015625	.39688	33/64	.515625	13.09687
1/32	.03125	.79375	17/32	.53125	13.49375
3/64	.046875	1.19062	35/64	.546875	13.89062
1/16	.0625	1.58750	9/16	.5625	14.28750
5/64	.078125	1.98437	37/64	.578125	14.68437
3/32	.09375	2.38125	19/32	.59375	15.08125
7/64	.109375	2.77812	39/64	.609375	15.47812
1/8	.125	3.1750	5/8	.625	15.87500
9/64	.140625	3.57187	41/64	.640625	16.27187
5/32	.15625	3.96875	21/32	.65625	16.66875
11/64	.171875	4.36562	43/64	.671875	17.06562
3/16	.1875	4.76250	11/16	.6875	17.46250
13/64	.203125	5.15937	45/64	.703125	17.85937
7/32	.21875	5.55625	23/32	.71875	18.25625
15/64	.234375	5.95312	47/64	.734375	18.65312
1/4	.250	6.35000	3/4	.750	19.05000
17/64	.265625	6.74687	49/64	.765625	19.44687
9/32	.28125	7.14375	25/32	.78125	19.84375
19/64	.296875	7.54062	51/64	.796875	20.24062
5/16	.3125	7.93750	13/16	.8125	20.63750
21/64	.328125	8.33437	53/64	.828125	21.03437
11/32	.34375	8.73125	27/32	.84375	21.43125
23/64	.359375	9.12812	55/64	.859375	21.82812
3/8	.375	9.52500	7/8	.875	22.22500
25/64	.390625	9.92187	57/64	.890625	22.62187
13/32	.40625	10.31875	29/32	.90625	23.01875
27/64	421875	10.71562	59/64	.921875	23.41562
7/16	.4375	11.11250	15/16	.9375	23.81250
29/64	.453125	11.50937	61/64	.953125	24.20937
15/32	.46875	11.90625	31/32	.96875	24.60625
31/64	.484375	12.30312	63/64	.984375	25.00312
1/2	.500	12.70000	1	1.00	25.40000

FIGURE 15: CONVERSION CHART 00006

CONTENTS

1. ENGINE 01-3

2. ENGINE-MOUNTED COMPONENTS 01-3

2.1 ELECTRONIC CONTROL MODULE 01-4
2.2 ELECTRONIC UNIT INJECTOR 01-4

3. SYNCHRONOUS REFERENCE SENSOR 01-4

3.1 TIMING REFERENCE SENSOR 01-5
3.2 TURBO BOOST PRESSURE SENSOR 01-5
3.3 COOLANT TEMPERATURE SENSOR 01-6
3.4 FUEL TEMPERATURE SENSOR 01-6
3.5 AIR TEMPERATURE SENSOR 01-6
3.6 OIL PRESSURE SENSOR 01-6
3.7 OIL TEMPERATURE SENSOR 01-6

4. ENGINE-RELATED COMPONENTS 01-6

4.1 COOLANT LEVEL SYSTEM (CLS) 01-6
4.2 ELECTRONIC FOOT PEDAL ASSEMBLY (EFPA) & THROTTLE POSITION SENSOR 01-7
4.3 CRUISE CONTROL SWITCHES (CCS) 01-7
4.4 DIAGNOSTIC SYSTEM ACCESSORIES (DSA) 01-7
4.4.1 Check Engine Telltale Light 01-7
4.4.2 Stop Engine Telltale Light 01-8
4.4.3 Stop Engine Override Switch 01-8
4.4.4 Diagnostic Data Link (DDL) Connectors 01-8

5. DDEC IV DIAGNOSTIC CODES 01-8

5.1 READING DIAGNOSTIC CODES - FLASHING LIGHT METHOD: 01-8

6. ENGINE OIL LEVEL 01-10

7. ENGINE OIL AND FILTER CHANGE 01-11

8. RECOMMENDED ENGINE OIL TYPE 01-12

9. POWER PLANT ASSEMBLY REMOVAL 01-12

10. POWER PLANT ASSY. INSTALLATION 01-14

11. VALVE COVER REMOVAL 01-15

11.1 XL2-45 COACHES AND MOTORHOMES 01-15
11.2 XL2-40 COACHES 01-15

12. JAKE BRAKE 01-16

13. ENGINE MOUNTS 01-16

14. ENGINE TROUBLESHOOTING GUIDE 01-17

15. SPECIFICATIONS 01-18

ILLUSTRATIONS

FIGURE 1: DETROIT DIESEL SERIES 60 ENGINE (TYPICAL) 01-3
FIGURE 2: ELECTRONIC CONTROL MODULE (ECM) 01-4
FIGURE 3: UNIT INJECTOR CROSS SECTION 01-4
FIGURE 4: SRS LOCATION 01-5
FIGURE 5: BULL GEAR 01-5
FIGURE 6: TIMING GEAR 01-5
FIGURE 7: TURBO BOOST PRESSURE SENSOR 01-5
FIGURE 8: FUEL TEMPERATURE SENSOR 01-6
FIGURE 9: ENGINE OPS AND OTS 01-6
FIGURE 10: ELECTRONIC FOOT PEDAL ASSEMBLY 01-7
FIGURE 11: ENGINE OIL LEVEL DIPSTICK 01-10
FIGURE 12: OIL RESERVE TANK 01-11
FIGURE 13: ENGINE DRAIN PLUG AND OIL FILTERS 01-11
FIGURE 14: BELT TENSIONER VALVE 01-12
FIGURE 15: ELECTRIC FAN-CLUTCH CONNECTOR 01-13
FIGURE 16: ENGINE COMPARTMENT 01-14
FIGURE 17: RUBBER DAMPER TOLERANCE 01-15
FIGURE 18: POWER PLANT CRADLE INSTALLATION 01-16

1. ENGINE

This vehicle is powered by a 6-cylinder, four-cycle, Detroit Diesel series 60 engine equipped with an electronic control system (DDEC IV).

One engine displacement is used in the Series 60 engines: 12.7 liters. Summary information on the Electronic Control System is given in this section.

Complete maintenance and repair information on the engine will be found in the current DDEC IV Service Manual #6SE483. This maintenance manual covers engine accessories, controls and related components.

Procedures for engine removal and installation are given at the end of this section. The DDEC system is self-diagnostic. It can identify faulty components and other engine-related problems by providing the technician with a diagnostic code.

Refer to DDEC Troubleshooting Guide #6SE492 published by Detroit Diesel for more complete information on diagnosis of components and system problems.

DDEC IV (**D**etroit **D**iesel **E**lectronic **C**ontrol) controls the timing and quantity of fuel injected by the electronic unit injectors (EUI). The system also monitors several engine functions using electrical sensors, which send electrical signals to the Electronic Control Module (ECM). The ECM computes the electrical signals and determines the correct fuel output and timing for optimum power, fuel economy and emissions. The ECM also has the ability to display warnings or shut down the engine completely (depending on option selection) in the event of damaging engine conditions, such as low oil pressure, low coolant level, or high oil temperature.

Two categories divide system components: engine-mounted components and engine-related components.

2. ENGINE-MOUNTED COMPONENTS

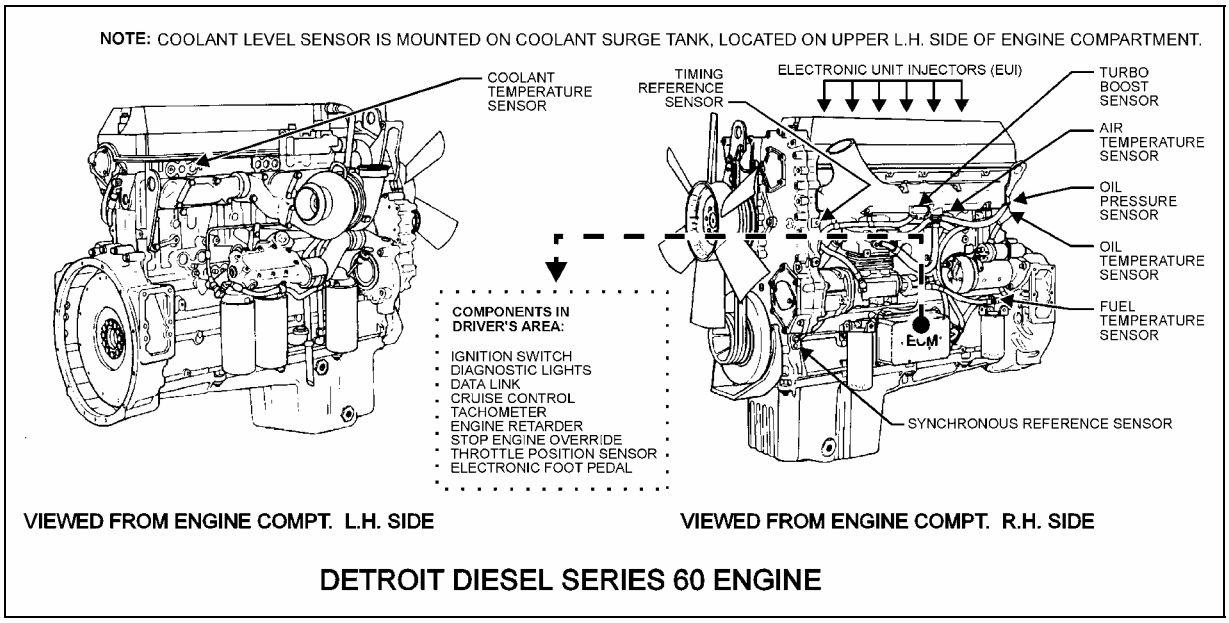

FIGURE 1: DETROIT DIESEL SERIES 60 ENGINE (TYPICAL) 01015B

Engine-mounted components are as follows:

- Electronic Control Module
- Electronic Unit Injector
- Synchronous Reference Sensor
- Timing Reference Sensor
- Turbo Boost Pressure Sensor
- Coolant Temperature Sensor
- Fuel Temperature Sensor
- Air Temperature Sensor
- Oil Pressure Sensor
- Oil Temperature Sensor

2.1 ELECTRONIC CONTROL MODULE

The Electronic Control Module is mounted, on the starter side of the engine (Fig. 2). Considered the *"Brain"* of the DDEC IV system, it provides overall monitoring and control of the engine. It does so by comparing input data from the various sensors to a set of calibration data stored in the EEPROM (**E**lectrically **E**rasable, **P**rogrammable, **R**ead-**O**nly **M**emory) within the Electronic Control Module. After comparing the input data with the calibration data, the ECM sends high-current command pulses to the Electronic Unit Injectors (EUI) to initiate fuel injection. The ECM also receives feedback regarding the start and end of injection for a given cylinder. The EEPROM within the Electronic Control Module is factory programmed by Detroit Diesel. Reprogramming must be done at a Detroit Diesel authorized service center. However, some changes may be performed to the cruise control and road speed limiter using a diagnostic data reader (see paragraph "DDEC IV Diagnostic Codes" in this section).

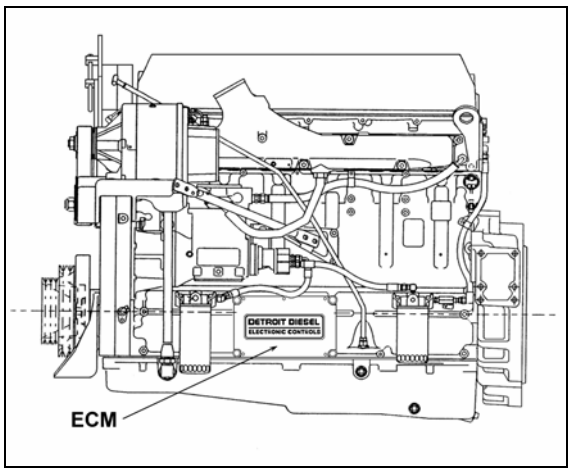

FIGURE 2: ELECTRONIC CONTROL MODULE (ECM) 01064

2.2 ELECTRONIC UNIT INJECTOR

The Electronic Unit Injector (EUI) is a compact device that injects diesel fuel directly into the combustion chamber (Fig. 3). The amount of fuel injected and injection timing is determined by the Electronic Control Module (ECM). The ECM sends a command pulse, which activates the injector solenoid. The EUI performs four functions:

- Creates the high-fuel pressure required for efficient injection;
- Meters and injects the exact amount of fuel required to handle the load;
- Atomizes the fuel for mixing with the air in the combustion chamber;
- Permits continuous fuel flow for component cooling**.**

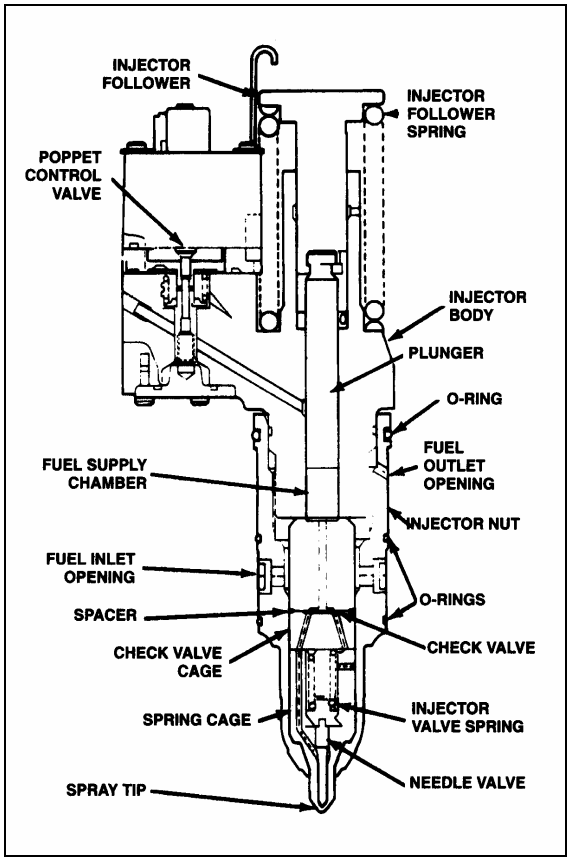

FIGURE 3: UNIT INJECTOR CROSS SECTION 01019

3. SYNCHRONOUS REFERENCE SENSOR

The Synchronous Reference Sensor (SRS) is an electronic component, mounted to the rear of the gear case (Fig. 4). The SRS senses a raised metal pin on the rear of the bull gear and sends a signal to the ECM via a black connector wire. The SRS sensor extends through a hole in the gear case. It is positioned near the rear of the bull gear. A bolt, inserted through a hole in the SRS bracket, secures the SRS assembly to the gear case.

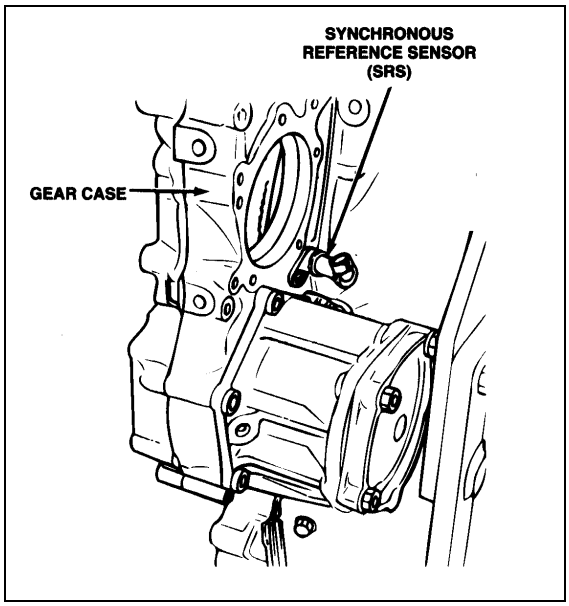

FIGURE 4: SRS LOCATION 01020

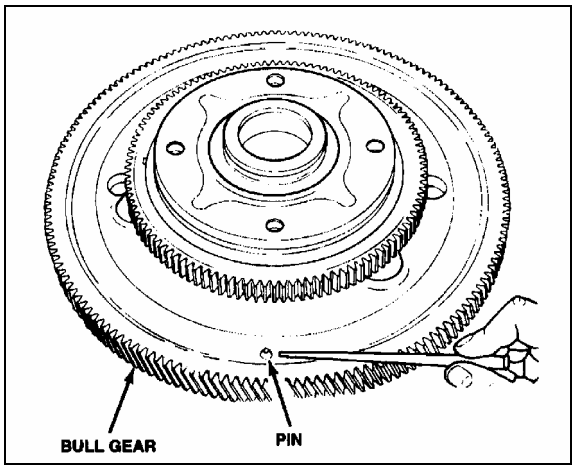

FIGURE 5: BULL GEAR 01021

The bull gear pin passes by the SRS as piston number one crank pin reaches 45• before Top-Dead-Center. The ECM uses this information to determine engine speed.

The SRS is non-serviceable and must be replaced as a unit. No adjustment is required.

3.1 TIMING REFERENCE SENSOR

The Timing Reference Sensor (TRS) is an electronic component mounted on the left side of the gear case (right side of coach), near the crankshaft centerline. The TRS is positioned near the timing wheel gear teeth and extends through an opening in the gear case. A bolt, inserted through a hole in the TRS bracket, secures the TRS assembly to the gear case. The TRS connector is gray. The TRS sends a signal to the ECM, this signal is generated by a series of evenly spaced special teeth on the timing wheel. A tooth passes by the TRS as each cylinder crank pin reaches 10• before Top-Dead-Center.

The ECM uses these signals to determine injector solenoid operation time. The TRS is non-serviceable and must be replaced as a unit. No adjustment is required.

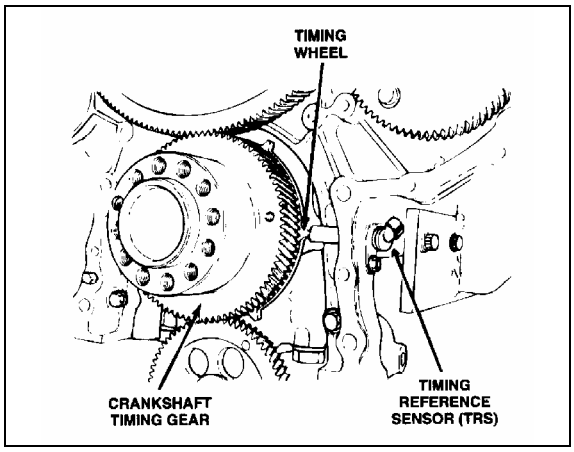

FIGURE 6: TIMING GEAR 01022

3.2 TURBO BOOST PRESSURE SENSOR

Two bolts mount the Turbo Boost Pressure Sensor to the intake manifold. A rubber O-ring seals the sensor to the manifold (Fig. 7). This device is a pressure sensor that sends an electrical signal to the ECM. The ECM uses this information to compute the volume of air entering the engine. Turbo boost sensor information regulates fuel supply to control engine exhaust.

The turbo boost pressure sensor is non-serviceable and must be replaced as an assembly. No adjustment is required.

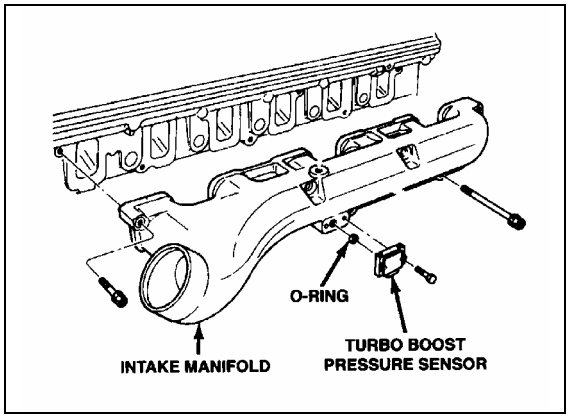

FIGURE 7: **TURBO BOOST PRESSURE SENSOR** 01023

3.3 COOLANT TEMPERATURE SENSOR

The coolant temperature sensor is mounted on the engine's radiator side (turbo side). The sensor helps protect the engine against overheating by sensing coolant temperature.

3.4 FUEL TEMPERATURE SENSOR

The Fuel Temperature Sensor (FTS) is installed on the secondary fuel filter (Fig. 8).

The FTS sends an electrical signal to the ECM indicating fuel inlet temperature. The ECM uses this information to calculate fuel consumption.

The FTS is non-serviceable and must be replaced as a unit. No adjustment is required.

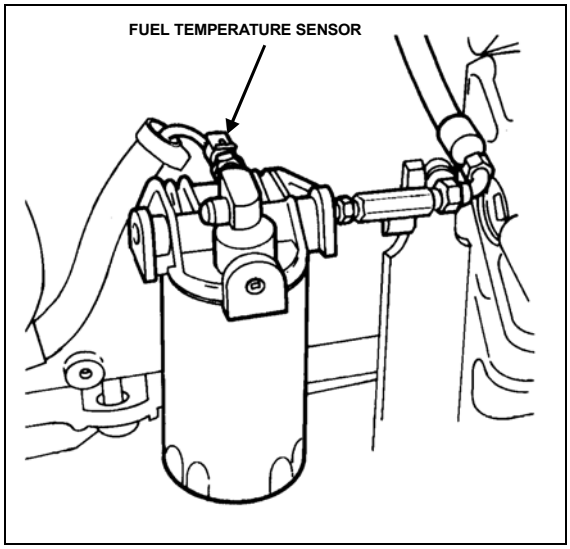

FIGURE 8: FUEL TEMPERATURE SENSOR 01024

3.5 AIR TEMPERATURE SENSOR

The Air Temperature Sensor (Fig. 1) located on the engine (starter side) near the intake manifold provides input data to vary hot idle speed and injection timing. This helps to improve cold starts and reduces white exhaust smoke.

3.6 OIL PRESSURE SENSOR

The Oil Pressure Sensor (OPS) is installed in the main engine-oil gallery. A typical location is the left rear corner of the cylinder block (Fig. 9). The OPS sends an electrical signal to the ECM indicating the engine oil pressure at any given speed. A low oil pressure signal exceeding seven seconds is used by the ECM to begin the stop engine or warning function. The OPS is non-serviceable and must be replaced as a unit. No adjustment is required.

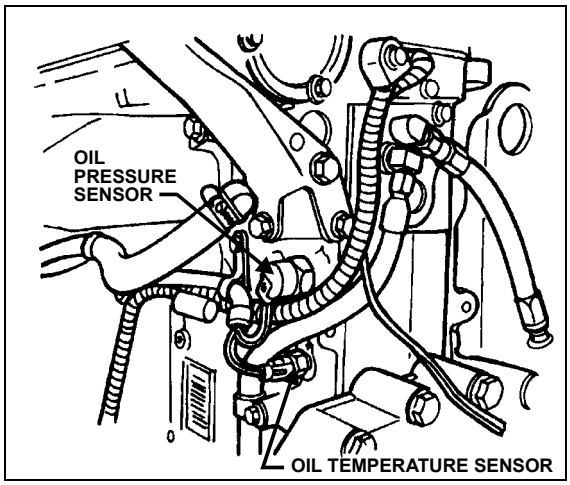

FIGURE 9: ENGINE OPS AND OTS 01025

3.7 OIL TEMPERATURE SENSOR

The Oil Temperature Sensor (OTS) is installed on the main engine-oil gallery. A typical location is the left rear corner of the cylinder block as shown in Figure 9. The OTS sends an electrical signal to the ECM indicating engine oil temperature. The ECM uses this information to modify engine speed for better cold weather starts and faster warm-ups. Oil temperatures exceeding engine specifications for two seconds or more will illuminate the Check Engine Light.

The OTS is non-serviceable and must be replaced as a unit. No adjustment is required.

4. ENGINE-RELATED COMPONENTS

Engine-related components include:

- Coolant Level System (CLS)
- Electronic Foot Pedal Assembly (EFPA) and Throttle Position Sensor
- Cruise Control Switch (CCS)
- Diagnostic System Accessories (DSA)

4.1 COOLANT LEVEL SYSTEM (CLS)

The coolant level system consists of a conductivity probe mounted in the surge tank and an electronic interface module located inside the rear junction box. Coolant level is determined by the change in impedance of the probe and its brass mount when immersed in coolant. The electronic device in the module conditions the signal to levels compatible with DDEC. A low coolant level will trigger the engine warning functions.

The probe and electronic interface module are non-serviceable items and should be replaced as units, if found defective. No adjustment is required.

4.2 ELECTRONIC FOOT PEDAL ASSEMBLY (EFPA) & THROTTLE POSITION SENSOR

The Electronic Foot Pedal Assembly (EFPA) connects the accelerator pedal to a Throttle Position Sensor (TPS). The (TPS) is a device, which sends an electrical signal to the Electronic Control Module (ECM). The TPS signal varies in voltage depending on how far the pedal is depressed. The system is installed in the space normally occupied by a mechanical foot pedal. The (EFPA) has maximum and minimum stops that are built into the unit during manufacturing (Fig. 10). The (TPS) converts the operator's foot pedal input into a signal for the ECM. The (EFPA) is shown in Figure 10.

When installed by the equipment manufacturer, the TPS should not require adjustment. If the TPS is suspected of being misadjusted, confirm that the sensor is installed in accordance with the manufacturer's specifications. It is recommended that the idle count be at 50 or higher with a full throttle count of up to 200.

The TPS is self-calibrating and therefore has no optimum closed throttle or wide open throttle count value. If the counts are within the 50 to 200 range, the sensor is properly set.

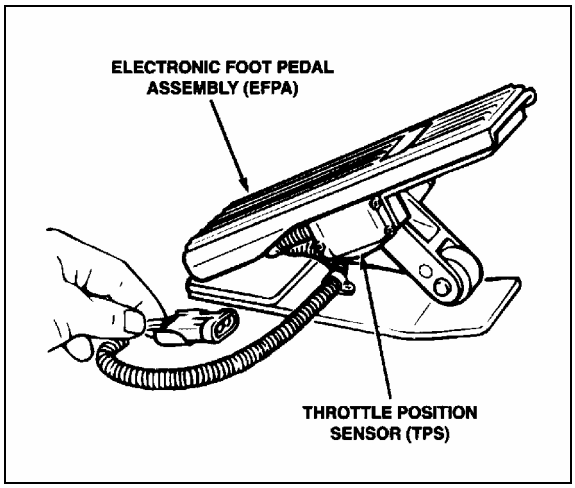

FIGURE 10: ELECTRONIC FOOT PEDAL ASSEMBLY 01026

Monitor the (TPS) at the controls as you move it through its full stroke. Be sure there is no misalignment or obstruction preventing the smooth movement of the TPS through the full stroke. Using a diagnostic data reader, check that the idle and full throttle position counts do not fall within the error zones. The error zones occur when the idle position is less than 14 counts, or when the full throttle position is more than 233 counts. Should these conditions occur, the ECU will signal diagnostic codes of 21-12 for idle error and 21-23 for wide-open throttle error.

4.3 CRUISE CONTROL SWITCHES (CCS)

The four cruise control switches are located in the driver's area on the L.H. side control panel.

1. **Cruise:** This is the main switch that actuates the ECM memory in order to use the speed-regulating mode.
2. **Set:** This switch is used to set the cruise control speed or to decrease the set speed by 2 MPH at each application.

***Note*:** *Cruise control system will not accept speed settings, nor will the "Resume" switch operate below 20 mph (32 km/h) and the engine speed must be above 1100 RPM.*

3. **Resume:** Each time this switch is actuated, the speed will be increased by 2 mph (3,5 km/h). This switch allows the driver return to the last regulated speed following a brake or *"DECEL"* switch application.

***Note**: On-off switch must be in the "ON" position in order to return to the last regulated speed.*

4. **DECEL:** Will cancel the cruise temporarily and let the vehicle coast. Set speed is still in memory for resume.

For additional information, see the "Operator's Manual" or the "Owner's Manual".

4.4 DIAGNOSTIC SYSTEM ACCESSORIES (DSA)

The DDEC IV engine Diagnostic System Accessories include the following:

- Check Engine telltale light;
- Stop Engine telltale light;
- Stop Engine Override switch;
- Diagnostic Data Link (DDL) connectors.

4.4.1 Check Engine Telltale Light

The Check Engine telltale, mounted on the telltale light panel indicates that a problem has been detected and that a code has been stored in the ECM memory. This light also has a 5-second bulb check when the ignition is first

turned on. The Check Engine telltale illuminates when the temperature at coolant sensors exceeds 217°F (103°C) and the temperature at oil sensors exceeds 260°F (127°C). When sensors reach those temperatures, DDEC starts to decrease engine power linearly.

4.4.2 Stop Engine Telltale Light

This light, also mounted on the telltale light panel, illuminates to indicate that a major engine problem is occurring (with the exception of a 5-second bulb check when the ignition is first turned on). The Stop Engine Light illuminates when the temperature at coolant sensors exceeds 222°F (106°C) and the temperature at oil sensors exceeds 239°F (115°C). When sensors detect such temperatures, DDEC shuts the engine down after a 30 seconds grace period. This 30-second delay may be extended another 30 seconds (if absolutely necessary) by using the STOP ENGINE OVERRIDE switch.

***Note**: Once engine is stopped, it can not be restarted until the malfunction is corrected.*

4.4.3 Stop Engine Override Switch

This switch, mounted on the dashboard, may be used to extend the 30-second delay period before engine shutdown when the Stop engine telltale light is illuminated. This switch can be repeatedly depressed in order to move the vehicle out of traffic.

***Note**: The stop engine override switch will be operative only if it has been depressed before the end of the 30 second delay period.*

***Caution:** The OVERRIDE switch must be used only in emergency cases, such as to move the vehicle out of traffic. Excessive use of this switch can cause serious damage to the engine.*

This switch is also used for DDEC diagnostic code requests. Press this switch with the engine at idle or off but with the ignition in the "ON" position and active codes will be flashed on the CHECK ENGINE and STOP ENGINE telltale lights alternately. Refer to “DDEC IV DIAGNOSTIC CODES” in this section for more information.

4.4.4 Diagnostic Data Link (DDL) Connectors

A connector is mounted on the L.H. footwell wall. Another connector is located in the rear electric compartment. They allow the connection of the Diagnostic Data Reader (DDR) to read the codes or to access pertinent data on the condition of the engine. This enables a more complete analysis of any defect found in the DDEC system operation. For more information, see Detroit Diesel Troubleshooting Guide #6SE492.

5. DDEC IV DIAGNOSTIC CODES

5.1 READING DIAGNOSTIC CODES - FLASHING LIGHT METHOD:

DDEC IV makes use of two types of codes: Active and inactive. The difference between the two types of codes is as follows:

Active Codes: Codes that are currently keeping the Check Engine or Stop Engine telltale light illuminated. Active codes are flashed via the Stop Engine Light when checked with the stop-engine-override switch.

Inactive Codes: These are all the codes logged in the ECM (whether or not they are currently turning on the Stop or Check Engine Light). Inactive codes are flashed via the Check Engine telltale light when checked with the stop-engine-override switch. In most instances, only the DDR can provide the information necessary for a quick diagnosis of the problem. If you just need to read out codes, however, and do not have a DDR available, the following procedure will let you read out codes. Make sure the rear-starting switch (located in the engine compartment) is in the normal position. With the ignition ON, the engine idling or engine shut-off, momentarily depress the Stop Engine Override switch. Active codes will be flashed on the stop engine telltale, followed by the inactive codes being flashed on the check-engine telltale panel. The cycle repeats itself until the operator depresses the stop engine override switch again. A code "43" consists of four flashes, followed by a short pause, then three flashes in quick succession.

Refer to DDEC Troubleshooting Manual 6SE497 for more information and SAE codes.

***Note**: Active codes are flashed in ascending numerical flash code order. Inactive codes are flashed in most recent to least recent order.*

***Note**: Fault codes can only be cleared using the DDR.*

DDEC Code Number (Flashed)	DESCRIPTION	DDEC Code Number (Flashed)	DESCRIPTION
11	Variable speed governor sensor input voltage low	12	Variable speed governor sensor input voltage high
13	Coolant level sensor input voltage low	14	Oil, coolant or intercooler temperature sensor input voltage high
15	Oil, coolant or intercooler temperature sensor input voltage low	16	Coolant level sensor input voltage high
17	Bypass or throttle valve position sensor input voltage high	18	Bypass or throttle valve position sensor input voltage low
21	TPS input voltage high	22	TPS input voltage low
23	Fuel temperature sensor input voltage high	24	Fuel temperature sensor input voltage low
25	No active codes	26	Auxiliary shutdown #1 or #2, input active
27	Air inlet or intake air temperature sensor input voltage high	28	Air inlet or intake air temperature sensor input voltage low
31	Auxiliary high side output open circuit or short to ground	32	Check Engine Light or Stop Engine Light short to battery (+) or open circuit
33	Turbo boost pressure sensor input voltage high	34	Turbo boost pressure sensor input voltage low
35	Oil pressure sensor input voltage high	36	Oil pressure sensor input voltage low
37	Fuel pressure sensor input voltage high	38	Fuel pressure sensor input voltage low
41	Too many SRS (missing TRS)	42	Too few SRS (missing SRS)
43	Coolant level low	44	Oil, coolant, intercooler or intake air temperature high
45	Oil pressure low	46	ECM battery voltage low
47	Fuel, air inlet or turbo boost pressure high	48	Fuel or air inlet pressure low
52	ECM A/D conversion fault	53	ECM non volatile memory fault
54	Vehicle speed sensor fault	55	J1939 data link fault
56	J1587 data link fault	57	J1922 data link fault
58	Torque overload	61	Injector response time long

DDEC Code Number (Flashed)	DESCRIPTION	DDEC Code Number (Flashed)	DESCRIPTION
62	Auxiliary output short to battery (+) or open circuit or mechanical fault	63	PWM drive short to battery (+) or open circuit
64	Turbo speed sensor input fault	65	Throttle valve position input fault
66	Engine knock sensor input fault	67	Coolant or air inlet pressure sensor input voltage fault
68	TPS idle validation switch open circuit or short to ground	71	Injector response time short
72	Vehicle overspeed	73	Gas valve position input fault or ESS fault
74	Optimized idle safety loop short to ground	75	ECM battery voltage high
76	Engine overspeed with engine brake	77	Fuel temperature high
81	Oil level, crankcase pressure, dual fuel BOI or exhaust temperature voltage high	82	Oil level, crankcase pressure, dual fuel BOI or exhaust temperature voltage low
83	Oil level, crankcase pressure, exhaust temperature or external pump pressure high	84	Oil level low or crankcase pressure low
85	Engine overspeed	86	External pump or barometer pressure sensor input voltage high
87	External pump or barometer pressure sensor input voltage low	88	Coolant pressure low

TABLE X-X: FLASH CODES AND DESCRIPTION

6. ENGINE OIL LEVEL

Check the oil level daily with the engine stopped. If the engine has just been stopped and is warm, wait at least 10 minutes to allow the oil to drain back to the oil pan before checking. Wipe the dipstick clean then check oil level. The level should always be within the safe range on the dipstick (Fig. 11). Add the proper grade of oil to maintain the correct level on the dipstick. All diesel engines are designed to consume some oil, so a periodic addition of oil is normal.

***Warning**: Touching a hot engine can cause serious burns.*

***Caution**: Do not overfill. Oil may be blown out through the crankcase breather if the crankcase is overfilled.*

***Caution:** Clean end of tube before removing the dipstick to prevent oil contamination.*

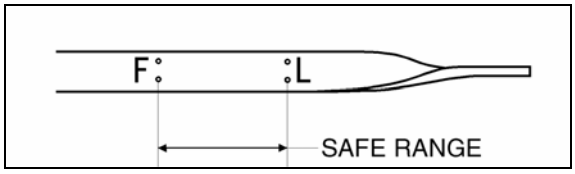

FIGURE 11: ENGINE OIL LEVEL DIPSTICK 01027

Caution: *If the oil level is constantly above normal and excess lube oil has not been added to the crankcase, consult with an authorized Detroit Diesel service outlet for the cause. Fuel or coolant dilution of lube oil can result in serious engine damage.*

The vehicle may be provided with an oil reserve tank in the engine compartment. To adjust oil level, open the oil reserve tank drain valve and allow oil to discharge into the engine until the "Full" mark on the dipstick is reached then close the valve. Check oil reserve tank level and pour oil in the reserve tank if necessary (Fig. 12).

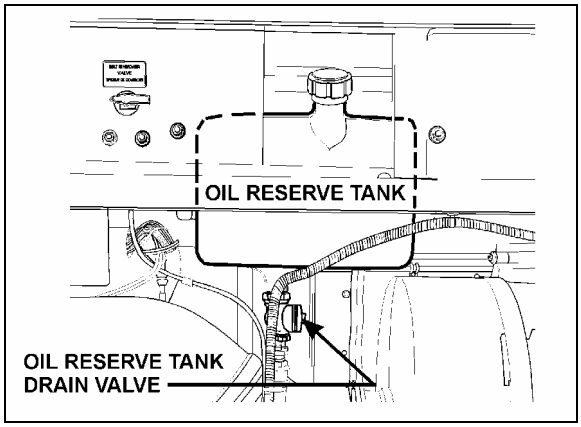

FIGURE 12: OIL RESERVE TANK 01063

7. ENGINE OIL AND FILTER CHANGE

Both the oil and filter should be changed every 12,500 miles (20,000-km) or once a year, whichever comes first. However, changes that are more frequent may be required when the engine is subject to high levels of contamination and/or overheating. Change intervals may be decreased or gradually increased with experience on specific lubricants until the most practical service condition has been established. Always refer to the lubricant manufacturer's recommendations (analysis of drained oil can be helpful).

Caution**:** *Do not use solvents to dilute the engine oil when draining. Dilution of fresh oil can occur which may be detrimental to the engine.*

Change engine oil with the vehicle on a flat and level surface and with the parking brake applied. It is best to drain the oil when the engine is still warm.

1. From under the vehicle, remove the engine drain plug on the oil pan. Allow oil to drain (Fig. 13).

Warning: *Hot engine oil can cause serious burns. Wear coveralls with sleeves pulled down and gloves to protect hands.*

2. Reinstall the drain plug.

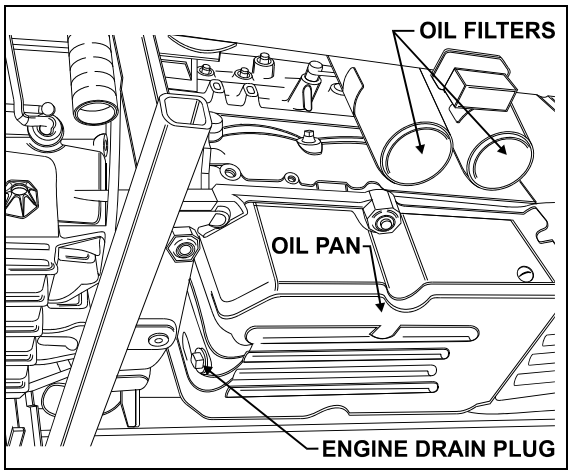

FIGURE 13: ENGINE DRAIN PLUG AND OIL FILTERS 01029

3. Remove the spin-on filter cartridge using a ½" drive socket wrench and extension.
4. Dispose of the used oil and filter in an environmentally responsible manner in accordance with state and/or federal (EPA) recommendations.
5. Clean the filter adapter with a clean rag.
6. Lightly coat the filter gasket (seal) with clean engine oil.
7. Install the new filter on the adapter and tighten manually until the gasket touches the mounting adapter head. Tighten full-flow filters an additional two-thirds of a turn manually. Then, manually tighten bypass filter one full turn.

Caution: *Overtightening may distort or crack the filter adapter.*

8. Remove the engine-oil filler cap and pour oil in the engine until it reaches the "FULL" mark on the dipstick (Fig. 11).
9. Start and run the engine for a short period and check for leaks. After any leaks have been corrected, stop the engine long enough for oil from various parts of the engine to drain back to the crankcase (approximately 20 minutes).
10. Add oil as required to bring the level within the safe range on the dipstick (Fig. 11).

8. RECOMMENDED ENGINE OIL TYPE

To provide maximum engine life, lubricants shall meet the following specifications: SAE Viscosity Grade: 15W-40 API Classification: CH-4

Note: *Monograde oils should not be used in these engines regardless of API Service Classification.*

Note: *The use of supplemental oil additives is discouraged from use in Detroit Diesel Engines.*

Synthetic oils Synthetic oils may be used in Detroit Diesel engines provided they are API-licensed and meet the performance and chemical requirements of non-synthetic oils outlined previously. Synthetic oils do not permit extension of recommended oil drain intervals.

Lubricant Selection World Wide Oils meeting API CD or CC specifications may be used if they also meet military specification MIL-L-2104 D or E. Oils which meet European CCMC D4 specifications may also be used.

Modification of drain interval may be necessary, depending on fuel quality. Contact Detroit Diesel Corporation for further guidance.

9. POWER PLANT ASSEMBLY REMOVAL

To access the engine or engine-related components, the vehicle power plant assembly must be removed as a whole unit by means of a slide-out cradle. The power plant assembly includes the engine, transmission (including retarder if so equipped), air compressor, alternator and transmission oil cooler.

Remove the power plant assembly as follows:

Caution: *Tag hoses and cables for identification before disconnecting in order to facilitate reinstallation. Plug all openings to prevent dirt from entering the system.*

Note: *No parts within the ECM are serviceable. If found defective, replace the complete ECM unit.*

1. Disconnect the battery or batteries from the starting system by removing one or both of the battery cables from each battery system. With the electrical circuit disrupted, accidental contact with the starter button will not produce an engine start. In addition, the Electronic Unit Injectors (EUI) will be disabled, preventing any fuel delivery to the injector tips.

Warning: *Due to the heavy load of the rear bumper assembly, it must be adequately supported before attempting to remove it.*

2. Remove the rear bumper assembly from the vehicle. Refer to Section 18, BODY, under "REAR BUMPER REMOVAL ".
3. Drain the engine cooling system. Refer to Section 05, COOLING under "DRAINING COOLING SYSTEM".

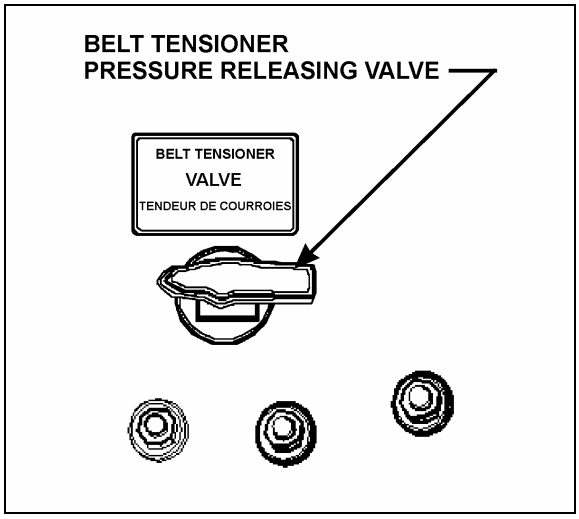

FIGURE 14: BELT TENSIONER VALVE 01063

4. Locate the belt tensioner pressure releasing valve (Fig. 14). Turn pressure releasing valve handle counterclockwise in order to release pressure in belt-tensioner air bellows and loosen belts. Remove the belts.
5. To release all pressure from the air system. Refer to Section 12, BRAKES & AIR SYSTEM for instructions.
6. Disconnect and remove the engine-air intake duct mounted between air cleaner housing and turbocharger inlet (1, Fig. 16).

Caution: *To avoid damage to turbocharger, cover the turbocharger inlet opening to prevent foreign material from* entering.

7. Disconnect and remove the air intake duct mounted between the air cooler outlet and the engine intake (2, Fig. 16).
8. Disconnect and remove section of coolant pipe assembly mounted between the radiator outlet and the water pump inlet (3, Fig. 16).
9. Disconnect the coolant delivery hose located close to the water pump.

10. Disconnect the electric fan-clutch connector, close to the water pump (Fig. 15).

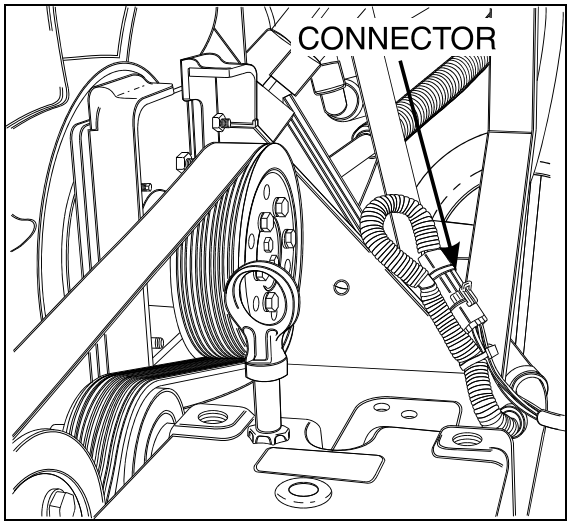

FIGURE 15: ELECTRIC FAN-CLUTCH CONNECTOR 010XX

11. Dismantle the air bellows from the upper bracket of the fan-drive assembly tensioner. Remove the upper bracket (4, Fig. 16).
12. If necessary, remove the fan drive from the engine compartment by removing the four retaining bolts, washers and nuts securing the fan drive to the floor.
13. Disconnect and remove the air intake duct mounted between the turbocharger outlet and the air cooler inlet (5, Fig. 16).
14. Disconnect two vent hoses from the thermostat housing and from the coolant pipe assembly.
15. Disconnect and remove a section of coolant pipe assembly mounted between the thermostat housings and the radiator inlet.
16. Disconnect and remove the small hose connected to the heater line valve and to the water pump.
17. Disconnect the small heater hose located on the cylinder head at the back of the engine.
18. Disconnect and remove the exhaust pipe mounted between the turbocharger outlet and the exhaust bellows. If necessary, refer to Section EXHAUST SYSTEM under MUFFLER REMOVAL AND INSTALLATION".

Caution: *To avoid damage to turbocharger, cover the turbocharger outlet opening to prevent foreign material from entering.*

19. Disconnect the steel-braided airline from the A/C compressor air bellows.
20. Disconnect the oil delivery hose from the valve located at the reserve tank drain (7, Fig. 16).
21. Disconnect the power steering pump supply and discharge hoses. Cap hose openings immediately to limit fluid loss. Remove retaining clips from cradle (6, Fig. 16).
22. Close engine fuel supply shutoff valve on primary fuel filter. Disconnect the fuel line connected to inlet port. On vehicles equipped with the optional water-separator-fuel-filter, disconnect the connector and remove cable ties from cradle.
23. Disconnect the air compressor discharge, governor steel-braided airlines and manual filling airlines from compressor. Remove retaining clips.
24. Disconnect the hose connecting the compressor head to the sump tank.
25. Disconnect ground cables from rear subframe ground-stud located close to the starter motor.
26. Disconnect positive cable (red terminal) from starting motor solenoid.
27. Disconnect the power plant wiring-harness main connectors from ECM and remove retaining clips from engine compartment backwall.
28. On vehicles equipped with an automatic transmission provided with a hydraulic output retarder, disconnect steel-braided airline from pressure regulator output. The pressure regulator is mounted in the upper section of engine compartment backwall and is accessible through the engine compartment R.H. side door.
29. Disconnect fuel return line from bulkhead fixed on engine cylinder head end.
30. On vehicles equipped with an electrically operated cold-starting aid, disconnect the delivery hose from the starting-aid cylinder solenoid valve. Remove cable ties securing hoses.
31. Disconnect turbo boost pressure gauge airline from engine air intake.
32. Only if the vehicle is equipped with a retarder, remove the transmission rubber-damper assembly above transmission by removing:

nut, bushing, rubber damper, rubber damper guide, bolt and washer. Remove the rubber damper bracket from transmission

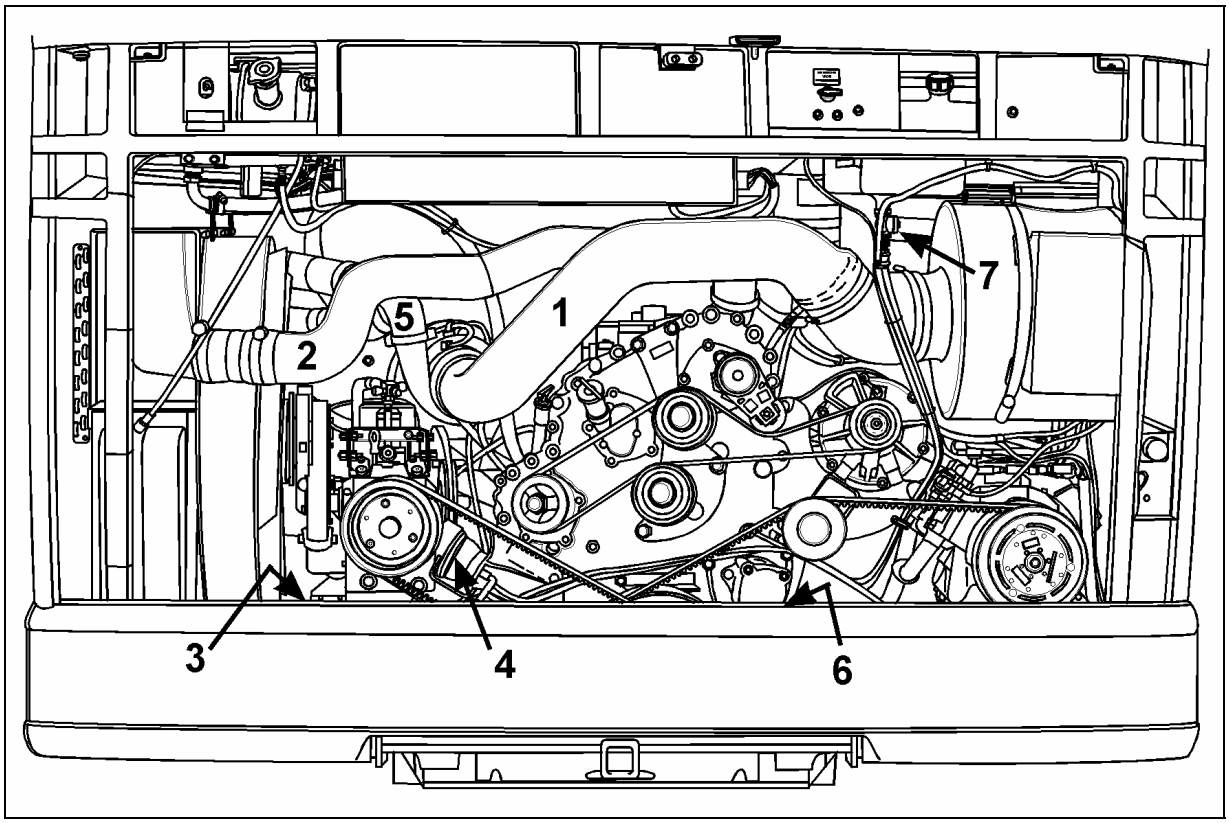

FIGURE 16: ENGINE COMPARTMENT 01071

33. Disconnect connectors from transmission. On the left side: four on rear side with one close to yoke. On right side: close to the solenoid valve of the output retarder.

34. From under the vehicle, disconnect the propeller shaft as detailed in Section 09, under heading "Propeller Shaft Removal".

35. Inspect the power plant assembly to ensure that nothing will interfere when sliding out the cradle. Check for connections or hoses not mentioned in this list as some vehicles are equipped with special or aftermarket components.

36. Remove the six retaining bolts, washers and nuts securing the power plant cradle to the vehicle rear subframe (Fig. 18).

***Note**: Check if any spacer(s) have been installed between power plant cradle and vehicle rear subframe, and if so, note position of each washer for reinstallation purposes.*

37. Using a forklift, with a minimum capacity of 4,000 lbs (1 800 kg), slightly raise the power plant cradle.

38. Pull engine out slowly from the engine compartment. Make sure all lines, wiring and accessories are disconnected and are not tangled.

***Caution**: Due to the minimum clearance between the power plant equipment and the top of the engine compartment, extreme care should be used to raise the power plant cradle, just enough to free the cradle. Clearance between power plant cradle and mounting rail should range between ¼" and ½" (6-12 mm).*

10. POWER PLANT ASSY. INSTALLATION

To install a power plant assembly, follow the same procedure as in "Power Plant Assembly Removal" except in reverse order, then proceed with the following:

1. Torque the power plant cradle mounting bolts to 113-144 lbf•ft (153-195 N•m).

- For vehicles equipped with an Allison automatic transmission and a retarder:

  a) Install transmission bracket (Fig. 17), tighten to 71-81 lbf•ft (96-110 N•m).

  b) Install the transmission's rubber damper assembly above transmission by assembling: bolt, washer, rubber damper guide, rubber damper, bushing nut.

  c) Respect damper tolerance of 58 mm (Fig. 17)

2. If fan drive has been removed, reinstall and align as per Section 05, COOLING SYSTEM, under "FAN DRIVE ALIGNMENT".

3. Refill cooling system with saved fluid (refer to Section 05, COOLANT SYSTEM).

4. Once engine fuel system has been drained, it will aid restarting if fuel filters are filled with fuel oil (refer to Section 03, FUEL SYSTEM).

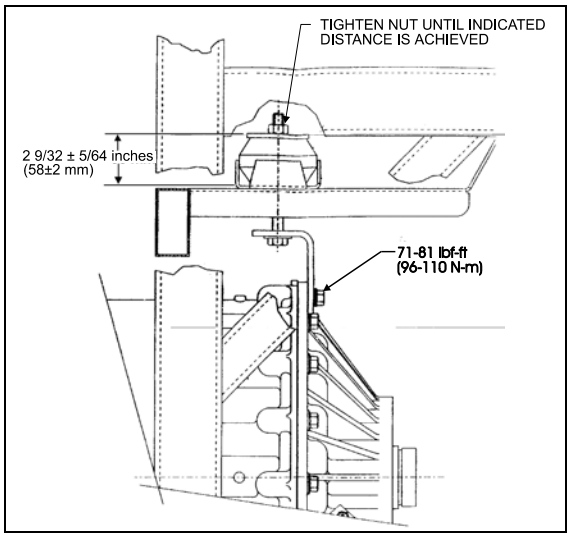

FIGURE 17: RUBBER DAMPER TOLERANCE 07014

5. Start engine for a visual check. Check fuel, oil, cooling, pneumatic and hydraulic system connections for leakage. Test operation of engine controls and accessories.

11. VALVE COVER REMOVAL

Refer to the series 60 detroit diesel service manual for injectors and valves adjustment. Access to engine cover differs depending on vehicle model.

Wait until engine is cold prior to working on vehicle.

11.1 XL2-45 COACHES AND MOTORHOMES

1. Remove air intake pipe.
2. Remove the after CAC (Charger-Air-Cooler) air pipe.
3. Disconnect ventilation pipe from valve cover.
4. Remove trap door located in the middle rear end of vehicle.

Note : *On coaches, last seat has to be removed to access trap door. On motorhomes, it will depend on interior design.*

5. Remove engine cover.
6. Adjust Jake brakes (if applicable), injectors and valves using Detroit Diesel service manual for series 60 engines.
7. Verify engine cover gasket and replace if necessary.

Note : *New gasket must be ordered directly from Detroit Diesel.*

8. Reinstal engine cover with a tightening torque of 18-22 Lbf·ft (25-30 N·m).
9. Connect ventilation pipe to engine cover.
10. Reinstall air intake and after CAC air pipes.
11. Reinstall trap door, seats or interior finish for motorhomes.

11.2 XL2-40 COACHES

1. Close both heat system supply and return valves (see chapter 4.7 of section 5 in XL2 maintenance manual).
2. Drain coolant and remove exit thermostat-housing pipe.
3. Remove air intake pipe.
4. Remove the after CAC (Charger-Air-Cooler) air pipe.
5. Disconnect ventilation pipe from valves cover.
6. Remove engine cover.

7. Adjust Jake brakes (if applicable), injectors and valves using Detroit Diesel service manual for series 60 engines.
8. Verify engine cover gasket and replace if necessary.

Note: *New gasket must be ordered directly from Detroit Diesel.*

9. Reinstall engine cover and tighten bolts to 18-22 Lbf·ft (25-30 N·m).
10. Reconnect ventilation pipe to engine cover.
11. Reinstall exit thermostat-housing, air intake and after CAC air pipes.
12. Fill up coolant (Refer to section 5 in maintenance manual) .
13. Open both heat system supply and return valves.

12. JAKE BRAKE

Refer to both "The Jake Brake Troubleshooting and Maintenance Manual" and "Installation Manual for Model 790 Engine Brakes" for troubleshooting and installation procedures. They are annexed at the end of this section.

13. ENGINE MOUNTS

The power plant assembly is mounted to the cradle by means of four rubber mounts.

Two rubber mounts are used at the front of the engine while two others are mounted on each side of the flywheel housing on vehicles equipped with an automatic transmission (Fig. 18).

It is recommended that new rubber mounts be installed at each major overhaul.

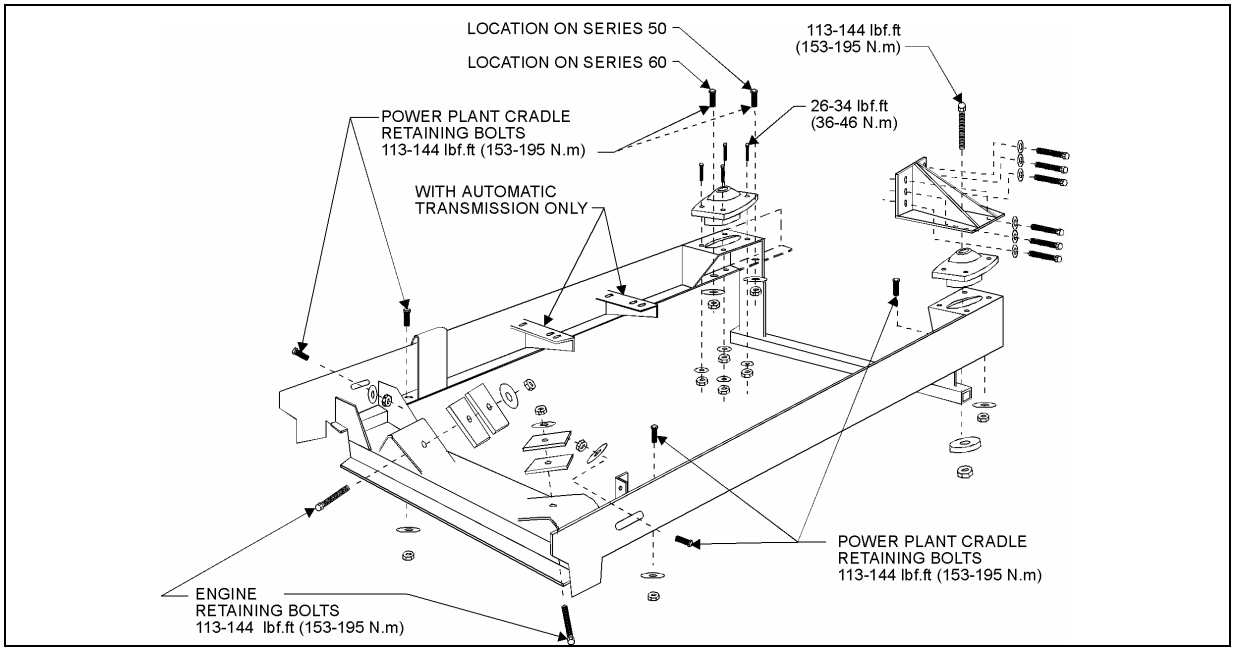

FIGURE 18: POWER PLANT CRADLE INSTALLATION 01032

14. ENGINE TROUBLESHOOTING GUIDE

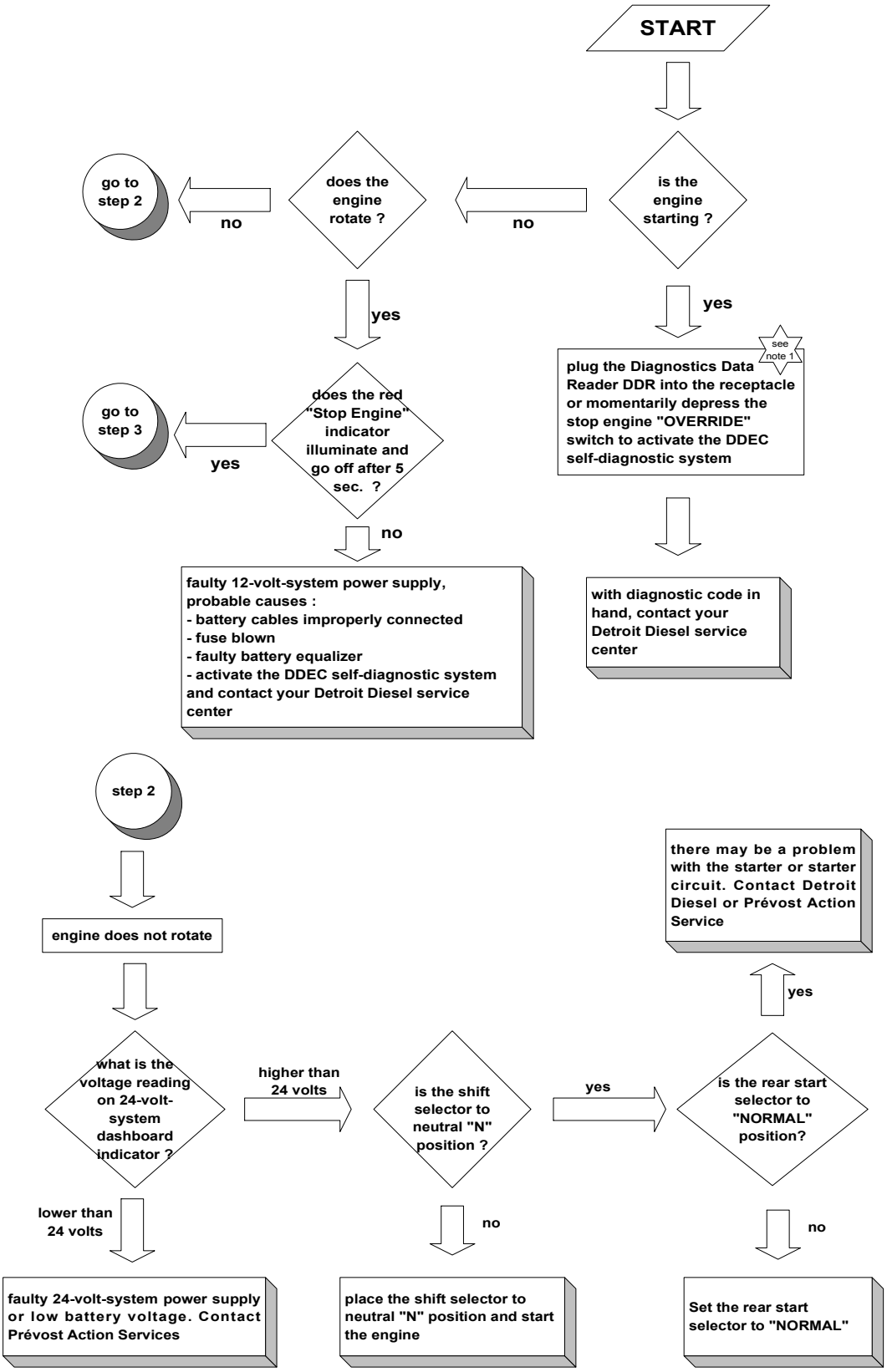

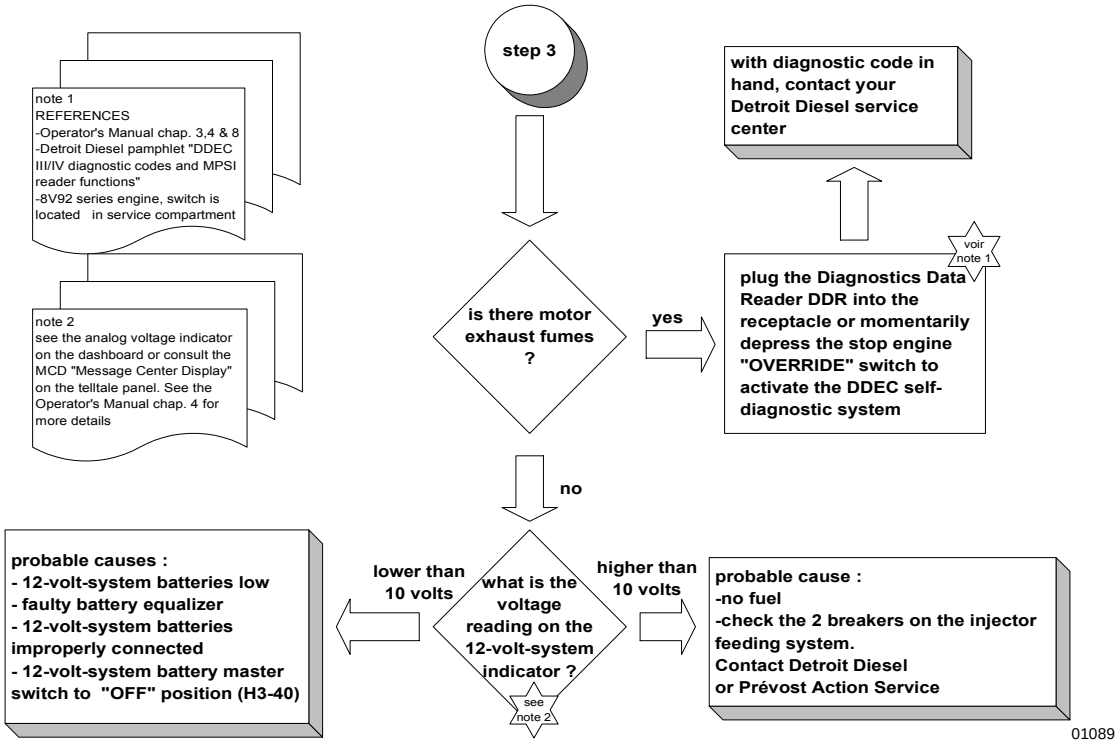

15. SPECIFICATIONS

Series 60 Engine

Make ..... Detroit Diesel

Type ..... Diesel four cycle/in-line engine

Description ..... Turbo/Air to air charge cooled

No. of cylinders 6

Operating range ..... 1200-2100 RPM

Maximum RPM 2100

Displacement, 12.7 Liters:

Bore & Stroke ..... 5.12 X 6.30 in (130 X 160 mm)

Horsepower Range ..... 330 BHP, 400 BHP

Displacement, 12.7 Liters:

Bore & Stroke ..... 5.12 X 6.30 in (130 X 160 mm)

Horsepower Range ..... 500 BHP

Lubricant

Heavy-duty engine oil SAE Viscosity Grade 15W-40, API Classification CH-4 and meeting MIL-L-2104 D or E specifications. Synthetic oil may be used if it meets the performance and chemical requirements of non-synthetic oils outlined previously. Some engine operating conditions may require exceptions to this recommendation.

***Caution**: To avoid possible engine damage, do not use single grade (Monograde) lubricants in Detroit Diesel four-cycle Series 60 engines, regardless of API classification.*

Capacity

Oil reserve tank .....8.4 US qts (8.0 L)

Engine oil level quantity (Series 60)

Oil Pan Capacity, Low Limit..... 26 quarts/25 liters

Oil Pan Capacity, High Limit..... 32 quarts/30 liters

Total Engine Oil Capacity with Filters..... 41 quarts/39 liters

Lubricating oil filter elements

Make ..... AC Rochester Div. GMC # 25014505

Make .....A/C Filter # PF-2100

Type ..... Full Flow

Prévost number 510458

Torque specification

Engine oil filter .....Tighten 2/3 of a turn after gasket contact

Filters

Engine Air Cleaner Filter

Make .....Nelson # 70337-N

Prévost number 530197

Engine Coolant Filter/Conditioner

Make ..... Nalco Chemical Company # DDF3000

Make .....Detroit Diesel # 23507545

Prévost number 550630

***Note:** For primary and secondary fuel filters, refer to Specifications in section 03.*

4. Install the bolts that secure the accessory drive housing to the gear case cover and tighten to 30–38 N·m (22–28 lb·ft) torque using the pattern shown. See Figure 1–413.

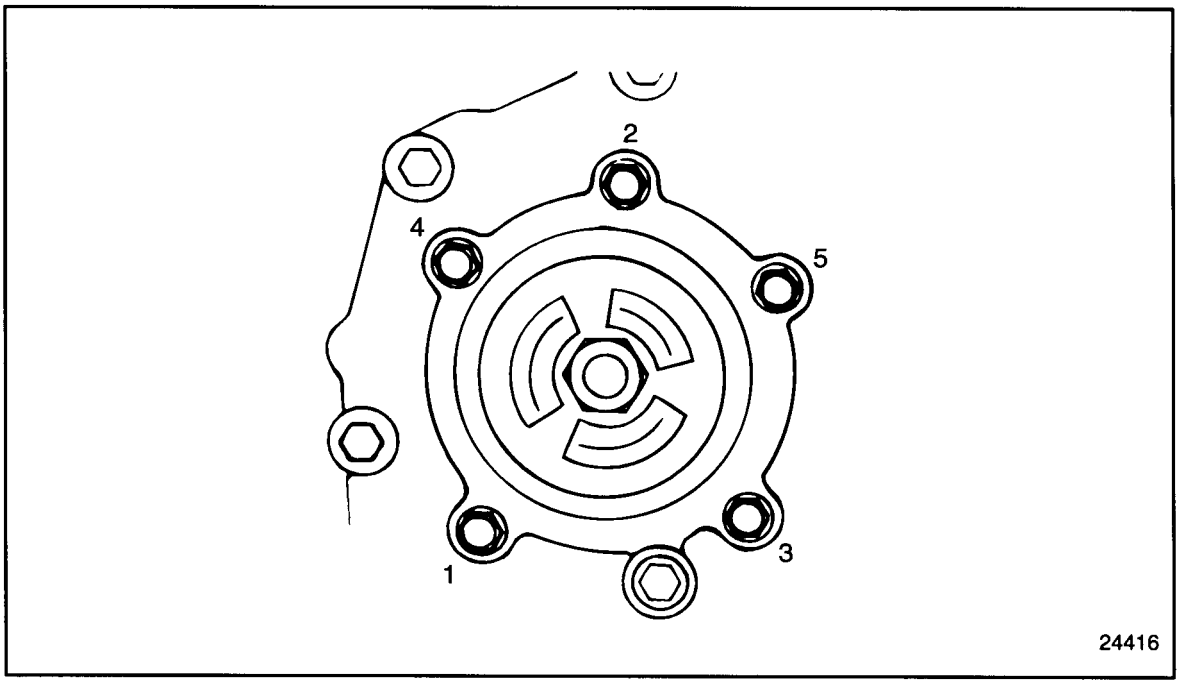

Figure 1-413 Accessory Drive Housing Bolt Torque Sequence

5. Check the bull gear-to-accessory drive gear backlash. Refer to section 1.21.2.1.
6. Adjust the alternator belts. Refer to section 13.12.10.
7. Tighten the alternator mounting bolts.
8. Install any other components removed for this procedure.
9. Refer to section 11.3 for verification of proper accessory drive installation.

1.29 JAKE BRAKE

The engine brake has been designed to fit on the Series 60 engine with no additional valve cover spacers. There are three styles of valve covers for the Series 60 engine. On engines equipped with a two-piece aluminum valve cover, it is NOT necessary to remove the lower valve cover to install the engine brake. However, one style of upper valve cover may require modification at the breather housing location (inside) for engine brake clearance.

The model, part number and serial number are located on the nameplates at the top of each housing. See Figure 1-414.

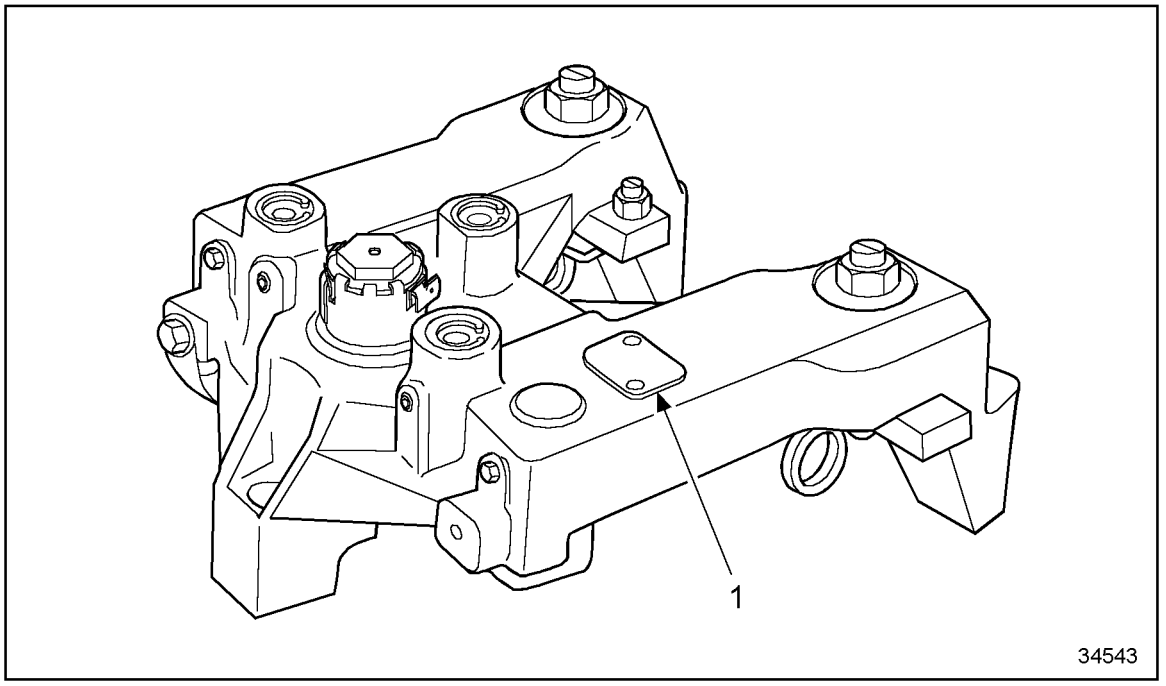

1. Identification Plate

Figure 1-414 Nameplate Location on Housing

NOTICE:
Only the specific brake model can be used with the engine model it was designed for. Also, the correct slave piston adjustment specification must be used. Failure to follow these instructions may result in serious engine or engine brake damage.

Listed in Table 1-9 are the different Jake Brake models used and the slave piston adjustment specification.

All information subject to change without notice.
6SE483 9901 Copyright © 1999 DETROIT DIESEL CORPORATION

Model Number	Model Year	Engine Displacement	Engine Brake	Slave Piston Adjustment
6067WU40	Pre-1991	11.1L	760/760A	0.660 mm (0.026 in.)
6067GU40	Pre-1991	12.7L	760/760A	0.508 mm (0.020 in.)
6067WU60	1991	11.1L	760/760A	0.660 mm (0.026 in.)
6067GU40	1991	12.7L	765	0.660 mm (0.026 in.)
6067GU28	1991	12.7L	765	0.660 mm (0.026 in.)
6067GU91	1991	12.7L	765	0.660 mm (0.026 in.)
6067WK60	1994	11.1L	760A	0.660 mm (0.026 in.)
6067GK60	1994	12.7L	765	0.660 mm (0.026 in.)
6067GK28	1994	12.7L	765	0.660 mm (0.026 in.)
6067EK60	1998	11.1L	760B	0.584 mm (0.023 in.)
6067PK60	1998	12.7L	765A	0.584 mm (0.023 in.)
6067TK60	1998	12.7L	765A	0.584 mm (0.023 in.)
6067TK45	1998	12.7L	765A	0.584 mm (0.023 in.)
6067MK60	1998	12.7L	770	0.660 mm (0.023 in.)
6067BK60	1998	12.7L	770	0.660 mm (0.023 in.)
6067HKXX	1998 (Non-Line Haul)	14L	770	0.660 mm (0.023 in.)
6067MK28, 6067MK45, 6067MK57, 6067MK60	2000	12.7L Standard	790	0.660 mm (0.026 in.)
6067BK28, 6067BK45, 6067BK57, 6067BK60	2000	12.7L Premium	790	0.660 mm (0.026 in.)
6067HK45, 6067HK60	2000	14L U.S.	790A	0.660 mm (0.026 in.)
6067WK28, 6067WK60	2000	11.1L	790B	0.660 mm (0.026 in.)
6067LK28, 6067LK45, 6067LK60	2000	11.1L	790B	0.660 mm (0.026 in.)
6063GK60, 6067GK28, 6067GK45, 6067GK91, 6067PK62, 6067TK28, 6067TK60, 6067TK62	2000	12.7L	790B	0.660 mm (0.026 in.)
6067HK62	2000	14L Australian	790C	0.660 mm (0.026 in.)

All slave piston adjustments shown here are current as of the date of this manual and supersede all previous adjustments.

XXXX = Model numbers to be determined.

Table 1-9 Jake Brake Model Information

NOTE:
All engines built after serial number 06R0004455 have the correct engine parts for engine brake installation. The model numbers have changed because of design changes in the engine brakes.

NOTE:
All Series 60 engines with serial numbers 06R0004455 or higher are Jake Brake ready. Do not install a Jake Brake on engines with lower serial numbers.

Effective December 16,1999, Model 790 Jake Brakes are used on all Series 60 engines requiring an engine brake.

Former Jake Brake production models for the Series 60 engine were the 760A (which replaced model 760), 760B, 765, 765A, and 770.

Detroit Diesel engine model Nos. 6067GU28 and 6067GK28 are for bus/coach applications. Due to interference fits on some coach chassis, a two-housing Jake Brake kit may be required. Contact your Detroit Diesel Distributor for information on these kits.

All information subject to change without notice.
6SE483 9901 Copyright © 1999 DETROIT DIESEL CORPORATION

Energizing the engine brake effectively converts a power-producing diesel engine into a power-absorbing air compressor. This is accomplished through motion transfer using a master-slave piston arrangement which opens cylinder exhaust valves near the top of the normal compression stroke, releasing the compressed cylinder charge to exhaust. See Figure 1-415.

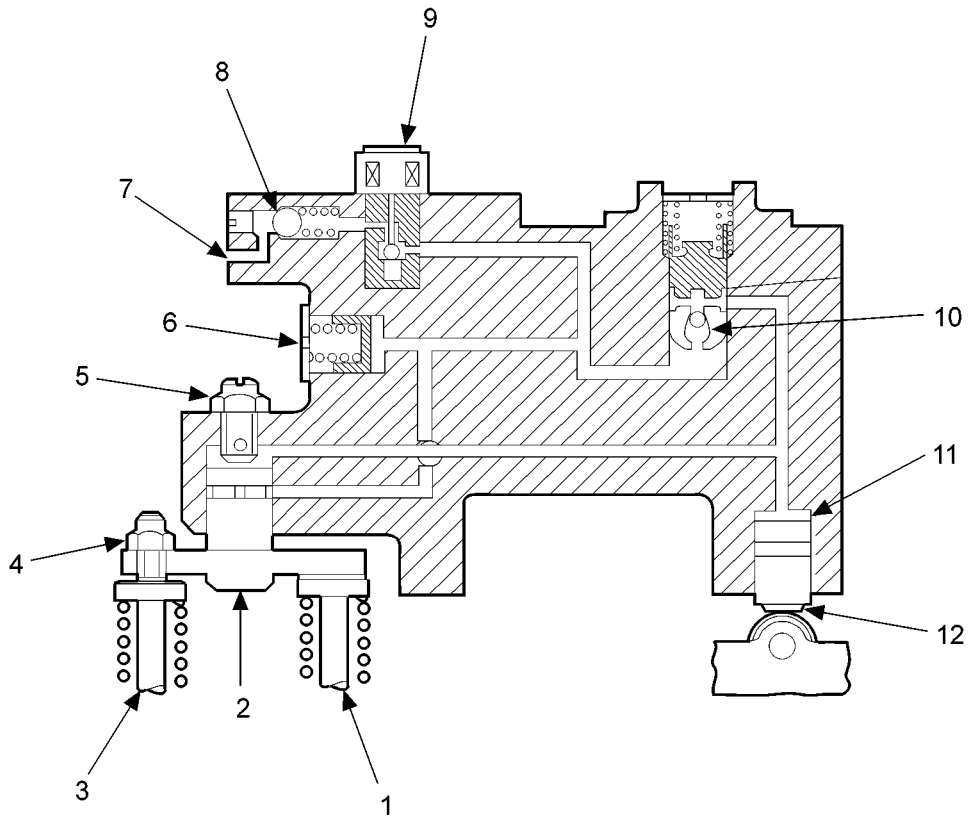

1. Exhaust Valve
2. Slave Piston Assembly
3. Exhaust Valve
4. Leveling Screw
5. Slave Piston Adjusting Screw
6. Accumulator
7. Oil In
8. Check Valve (Model 760)
9. Solenoid Valve
10. Control Valve
11. Master Piston
12. Injector Pin and Roller

Figure 1-415 Jake Brake Schematic

 Copyright © 1999 DETROIT DIESEL CORPORATION

The blowdown of compressed air to atmospheric pressure prevents the return of energy to the engine piston on the expansion stroke, the effect being a net energy loss, since the work done in compressing the cylinder charge is not returned during the expansion process.

Exhaust blowdown occurs as the energized solenoid valve permits engine lube oil to flow under pressure through the control valve to both the master piston and the slave piston. See Figure 1-415.

Oil pressure causes the master piston to move down, coming to rest on the injector rocker arm roller.

The injector rocker arm begins its travel as in the normal injection cycle, moving the master piston upward and directing high-pressure oil to the slave piston. The ball check valve in the control valve traps high-pressure oil in the master-slave piston system.

High pressure oil causes the slave piston to move down, momentarily opening the exhaust valves, while the engine piston is near its top-dead-center position, releasing compressed cylinder air to the exhaust manifold.

At the bottom of its stroke, the slave piston separates from the valve in the slave piston adjusting screw, allowing high pressure oil to flow into the accumulator. This reduces the pressure in the high pressure circuit, permitting the slave piston to retract and the exhaust valves to close in preparation for the normal exhaust valve cycle. The oil pressure reserved in the accumulator ensures that the hydraulic circuit is fully charged for the next cycle. Compressed air escapes to the atmosphere, completing a compression braking cycle.

All information subject to change without notice.
6SE483 9901 Copyright © 1999 DETROIT DIESEL CORPORATION

The Jake Brake is electronically controlled. Jake Brake control system wiring will vary depending on the vehicle manufacturer. For a general overview of the Jake Brake, see Figure 1-416 and see Figure 1-416a.

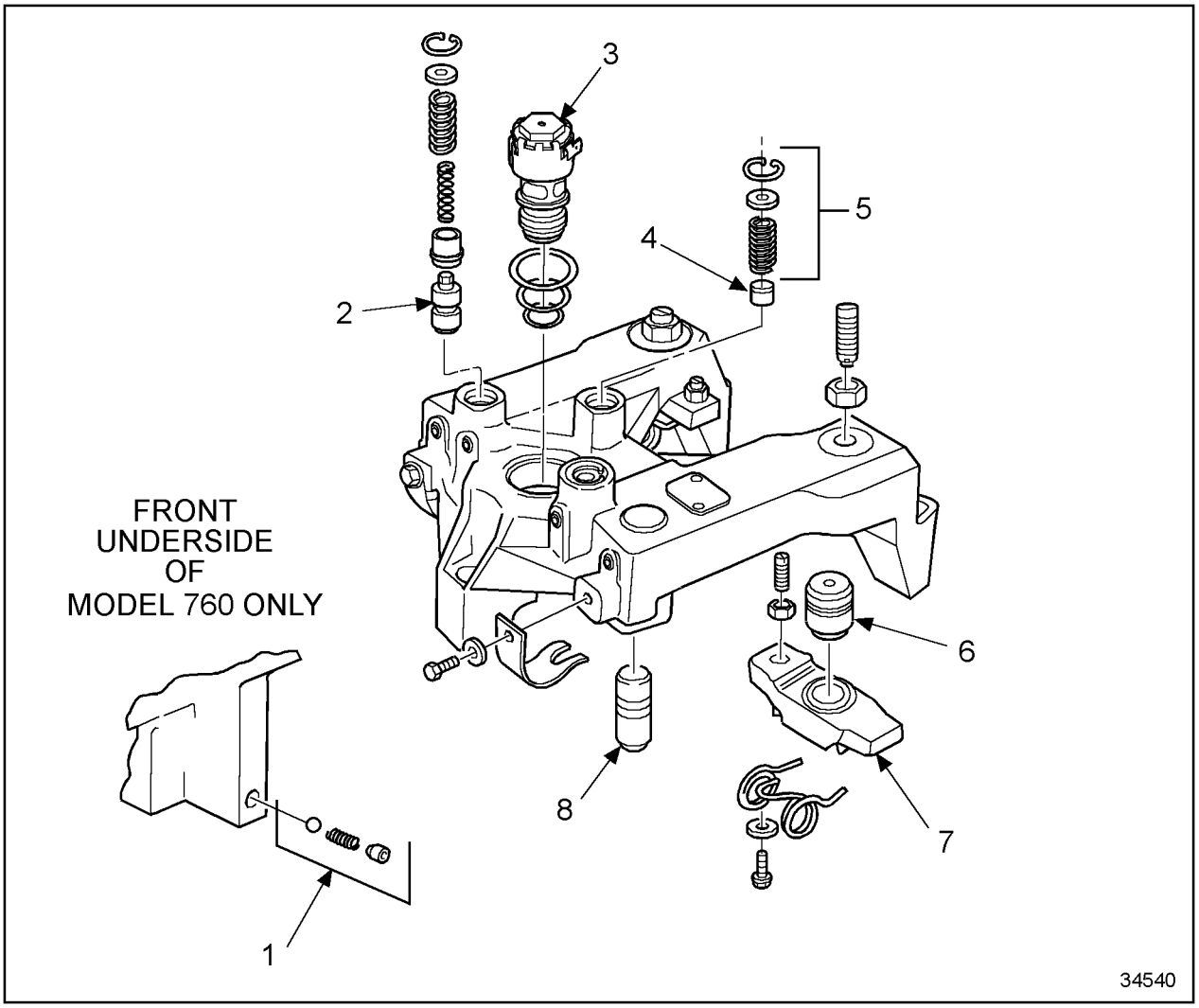

1. Ball Check Valve (Model 760 Only)
2. Control Valve
3. Solenoid Valve
4. Accumulator Piston
5. Power Lash Assembly
6. Slave Piston
7. Bridge
8. Master Piston

Figure 1-416 Typical Model 760, 765, or 770 Jake Brake Assembly

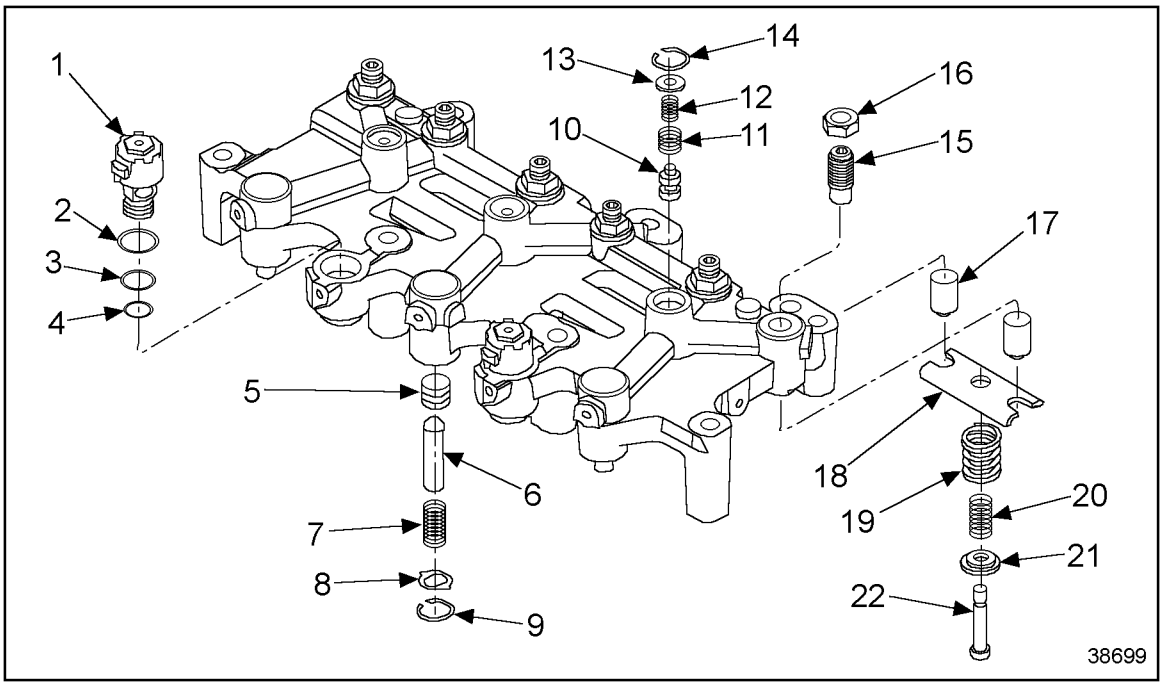

1. Solenoid Valve
2. Upper Seal
3. Center Seal
4. Lower Seal
5. Master Piston
6. Master Piston Pushrod
7. Master Piston Spring
8. Washer
9. Retaining Ring
10. Control Valve
11. Outer Control Valve Spring
12. Inner Control Valve Spring
13. Washer
14. Retaining Ring
15. J-Lash® Screw
16. Locknut
17. Slave Piston
18. Slave Piston Bridge
19. Outer Slave Piston Spring
20. Inner Slave Piston Spring
21. Slave Piston Spring Seat
22. Shoulder Bolt

Figure 1-416a Typical Model 790 Jake Brake Assembly

NOTICE:
This application and adjustment information must be strictly followed. Failure to follow these instructions may result in serious engine or engine brake damage.

All information subject to change without notice.
6SE483 9901 Copyright © 1999 DETROIT DIESEL CORPORATION

1.29.1 Repair or Replacement of Jake Brake

To determine if repair is possible or replacement is necessary, perform the following procedure. See Figure 1-417.

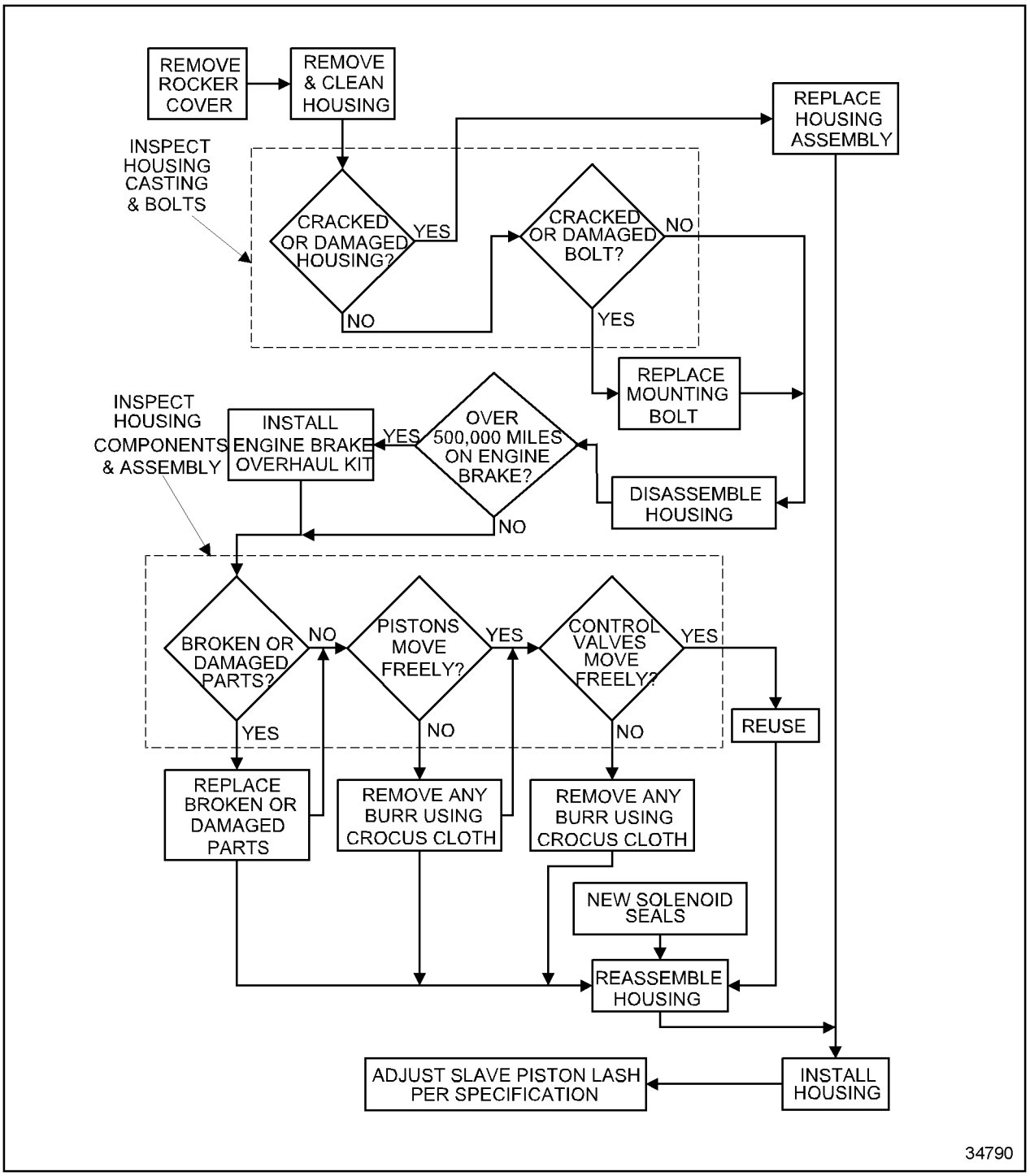

Figure 1-417 Jake Brake Repair or Replacement Flowchart

1.29.2 Removal of Model 760, 765, or 770 Jake Brake

Remove the model 760, 765, or 770 Jake Brake as follows:

NOTE:
The following procedures apply to Model 760, 765, and 777 Jake Brakes. For Model 790 Jake Brake removal procedures, refer to section 1.29.6.

CAUTION:

To avoid possible personal injury, never remove any engine brake component with engine running.

1. Disconnect starting power for engine. Refer to OEM guidelines.
2. Remove the engine rocker cover. Refer to section 1.6.2 for one-piece, refer to section 1.6.3 for two-piece and refer to section 1.6.5 for three-piece.

NOTE:
If the engine is equipped with an aluminum two-piece valve cover, remove only the upper valve cover when installing the engine brake.

3. Note the location of the rocker arm shaft, the exhaust valve rocker arm, the fuel injector rocker arm, and the intake valve rocker arm.
4. Disconnect the solenoid wiring harness connectors from the engine brake solenoids. See Figure 1-418.

All information subject to change without notice.
6SE483 9901 Copyright © 1999 DETROIT DIESEL CORPORATION

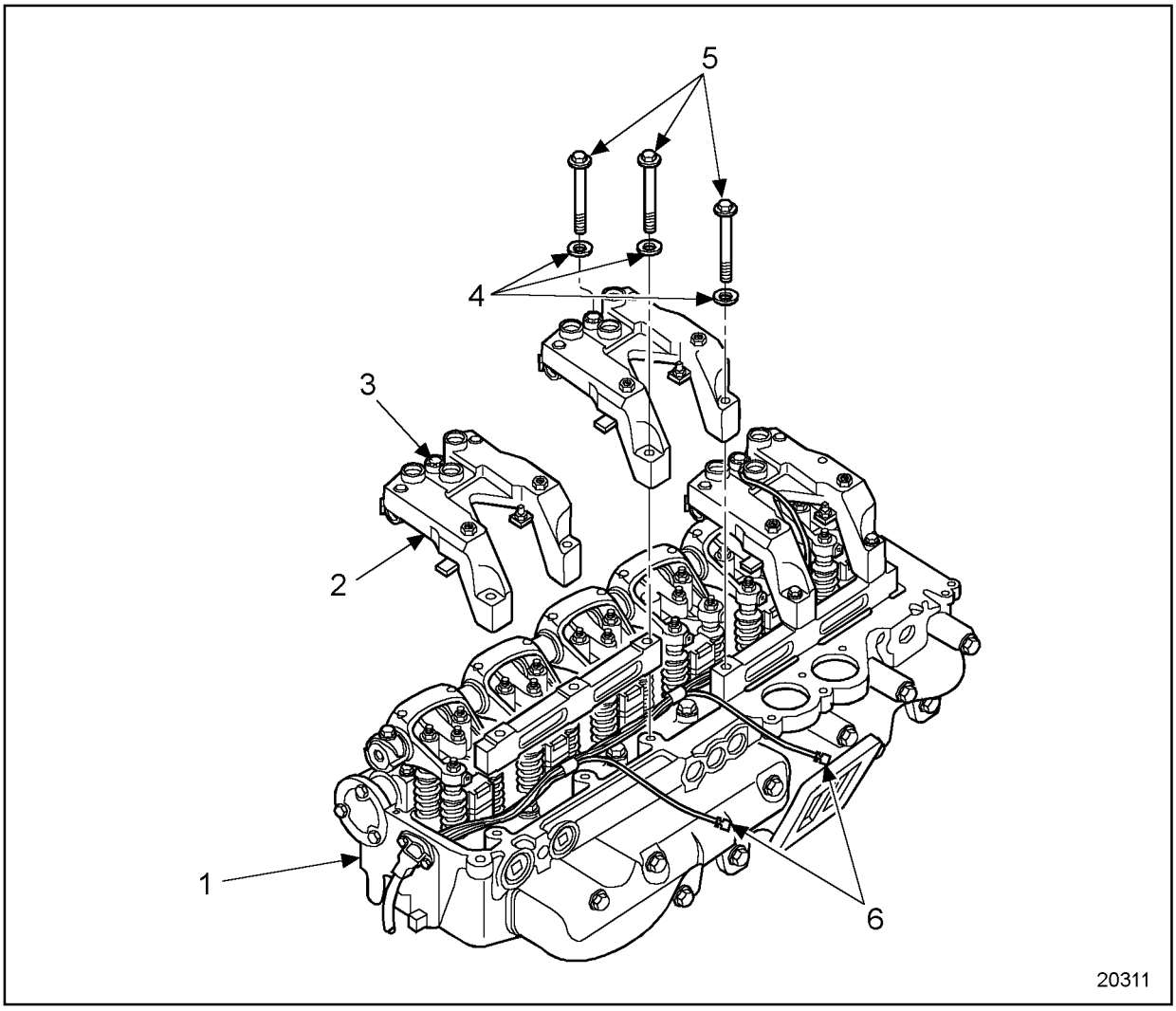

1. Cylinder Head
2. Jake Brake Assembly
3. Solenoid
4. Washers (3 each)
5. Mounting Bolts (3 each)
6. Engine Brake Harness

Figure 1-418 Jake Brake Assembly

5. Remove the nine mounting bolts and washers that secure the engine brake assemblies to the cylinder head. See Figure 1-418.

NOTE:
Only the Model 760 Jake Brake uses two different length mounting bolts. Six bolts, 120 mm (4.72 in.) long, are used on the exhaust side of the engine. Three bolts, 110 mm (4.33 in.) long, are used on the intake side of the engine. These bolts must be reinstalled in their correct positions.

6. Remove the engine brake assemblies and the spacer bar.

1.29.3 Disassembly of Model 760, 765, or 770 Jake Brake

Remove the control valve as follows:

CAUTION:

To avoid personal injury, remove control valve covers carefully. Control valve covers are under load from the control valve springs.

1. Press down on control valve washer using an appropriate diameter rod to relieve spring pressure. See Figure 1-419.

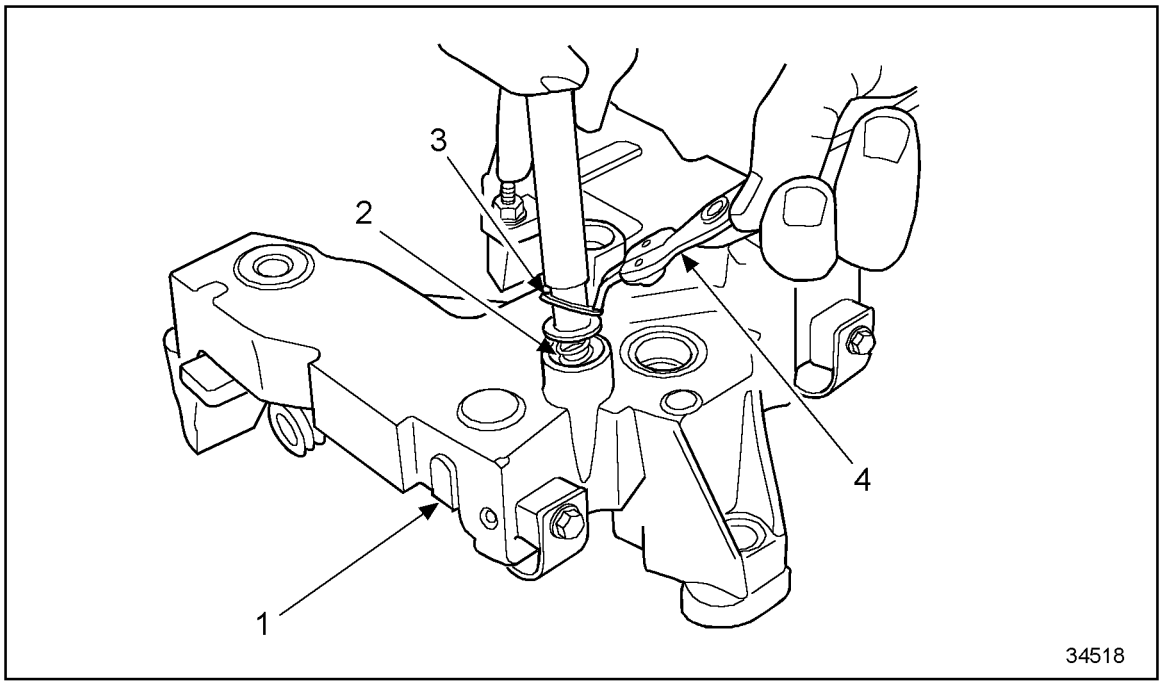

1. Jake Brake Assembly
2. Spring
3. Snap Ring Retainer
4. Snap Ring Pliers

Figure 1-419 Relieving Spring Pressure

All information subject to change without notice.
6SE483 9901 Copyright © 1999 DETROIT DIESEL CORPORATION

2. Using retaining ring pliers, remove retaining ring.
3. Slowly remove cover until spring pressure ceases, then remove the two control valve springs and collar. See Figure 1-420.

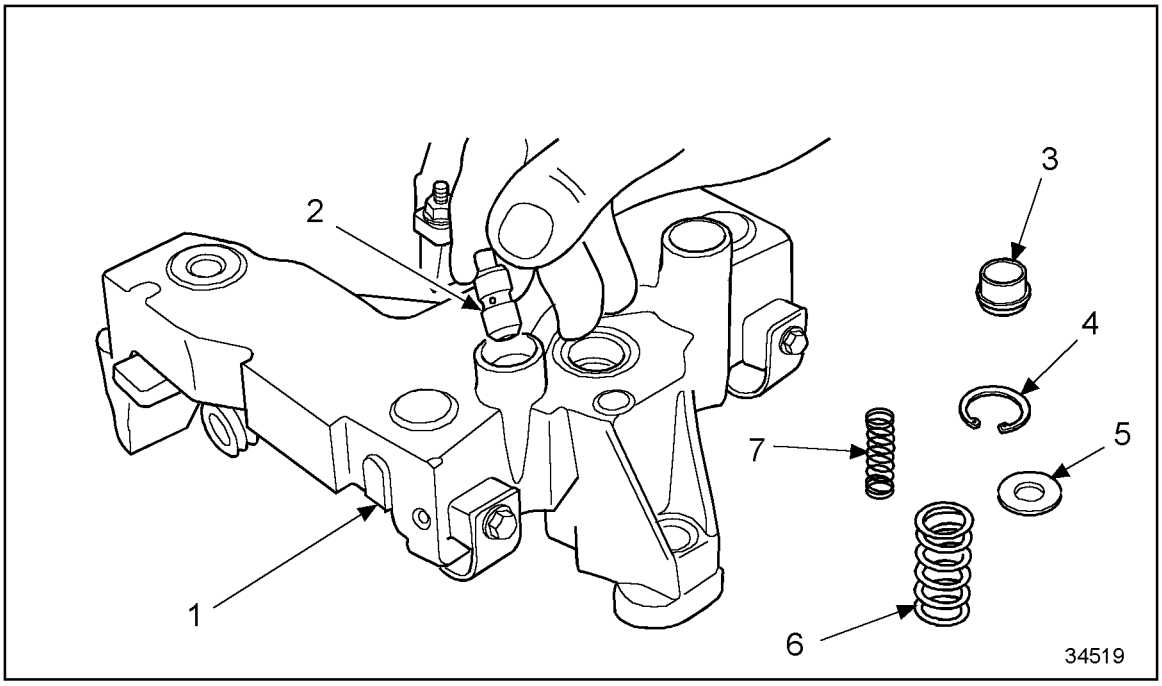

1. Jake Brake Assembly
2. Control Valve
3. Collar
4. Snap Ring Retainer
5. Washer
6. Collar Spring
7. Control Valve Spring

Figure 1-420 Removing Control Valve Springs and Collar

4. Using needle-nose pliers, reach into the bore and grasp the stem of the control valve. Remove control valve.

Remove the slave piston adjusting screw as follows:

1. Loosen slave piston adjusting screw locknut.
2. Remove adjusting screw from housing. See Figure 1-421.

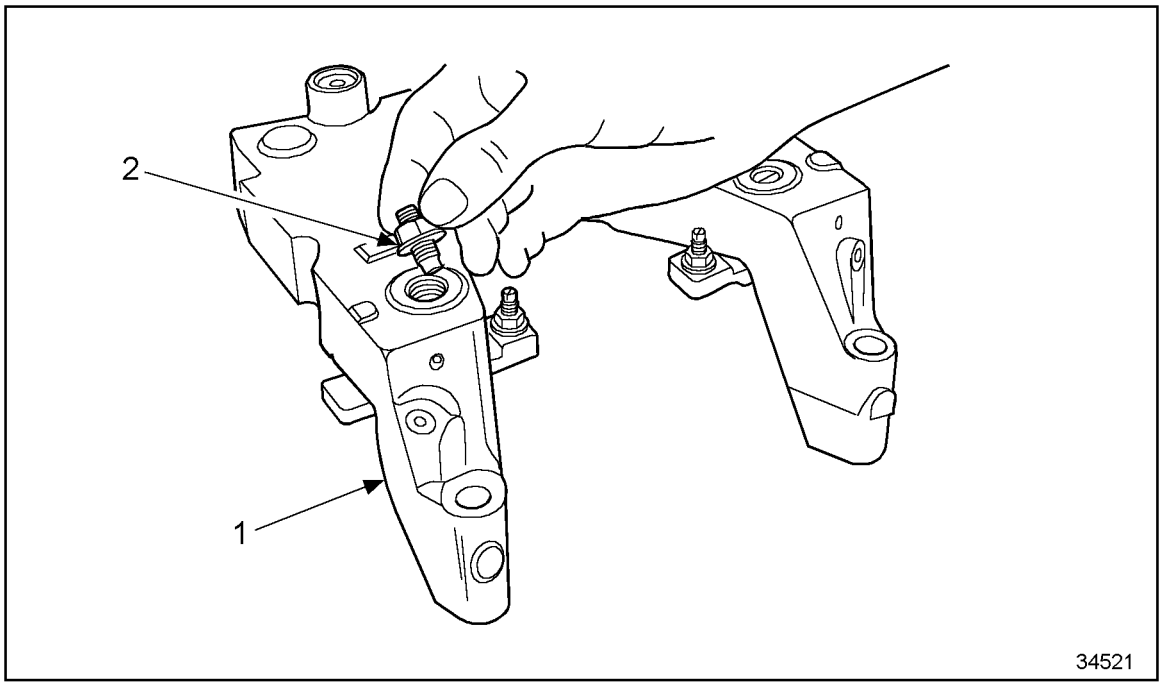

1. Jake Brake Assembly
2. Slave Piston Adjusting Screw

Figure 1-421 Removing Slave Piston Adjusting Screw

All information subject to change without notice.
6SE483 9901 Copyright © 1999 DETROIT DIESEL CORPORATION

Remove the solenoid valve as follows:

NOTICE:
To avoid possible engine damage, do not disassemble or tamper with the solenoid valve.

1. Disconnect solenoid valve harness.
2. Using a 7/8 in. socket and extension for former solenoids or a 3/4 in., 6 point socket and extension for current solenoids, unscrew solenoid valve.
3. Remove and discard the three rubber seal rings. See Figure 1-422.

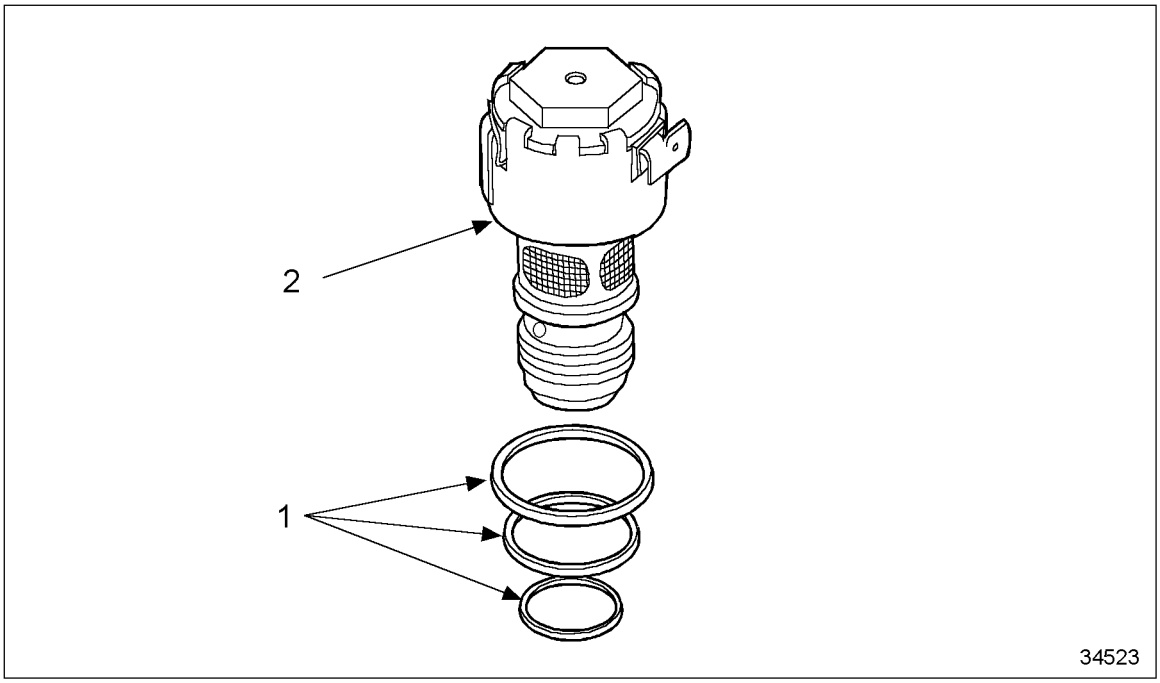

1. Seal Rings (3)
2. Solenoid

Figure 1-422 Removing Rubber Seal Rings

4. If the lower ring stays in the bottom of the housing bore, remove with a piece of wire.

Remove the accumulator as follows:

CAUTION:

The accumulator spring is under strong compression. To avoid possible personal injury if the accumulator spring is discharged, wear safety glasses and use caution when removing the retaining ring and cover.

1. Push down on the accumulator cover using the appropriate diameter rod, and remove the retaining ring. See Figure 1-423.

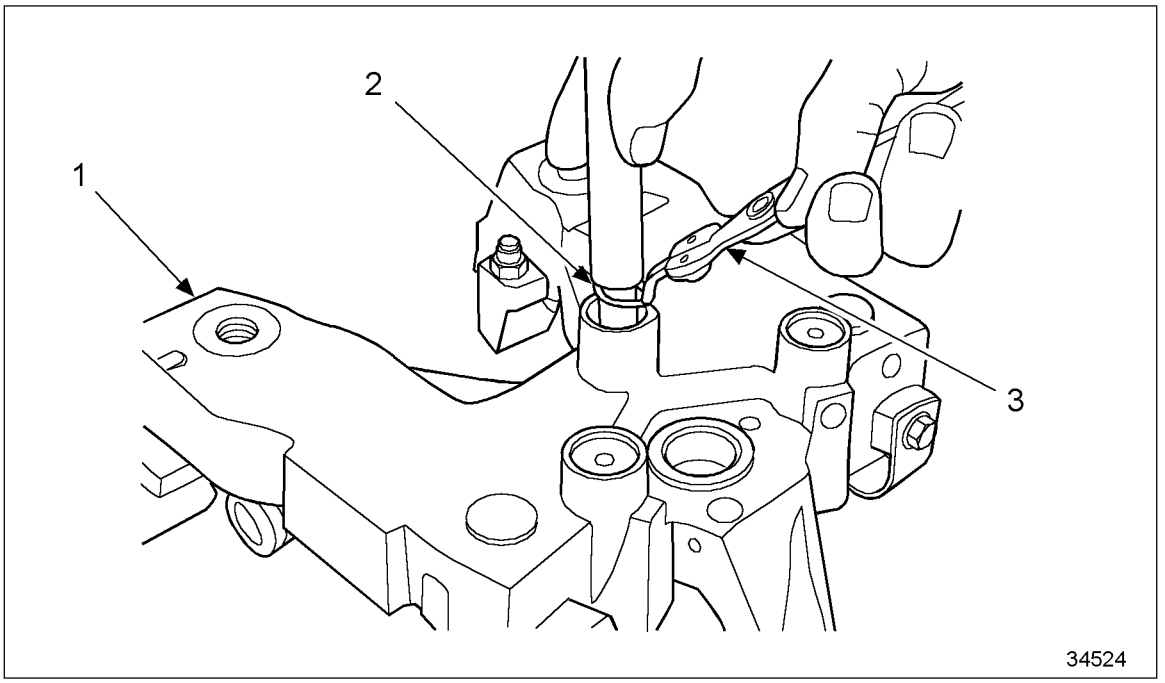

1. Jake Brake Assembly
2. Retaining Ring
3. Retaining Ring Pliers

Figure 1-423 Removing Retaining Ring

2. Relieve pressure on the accumulator cover.
3. Remove the cover and spring.

 All information subject to change without notice. Copyright © 1999 DETROIT DIESEL CORPORATION

4. Use a magnet to remove the piston from the accumulator bore. See Figure 1-424.

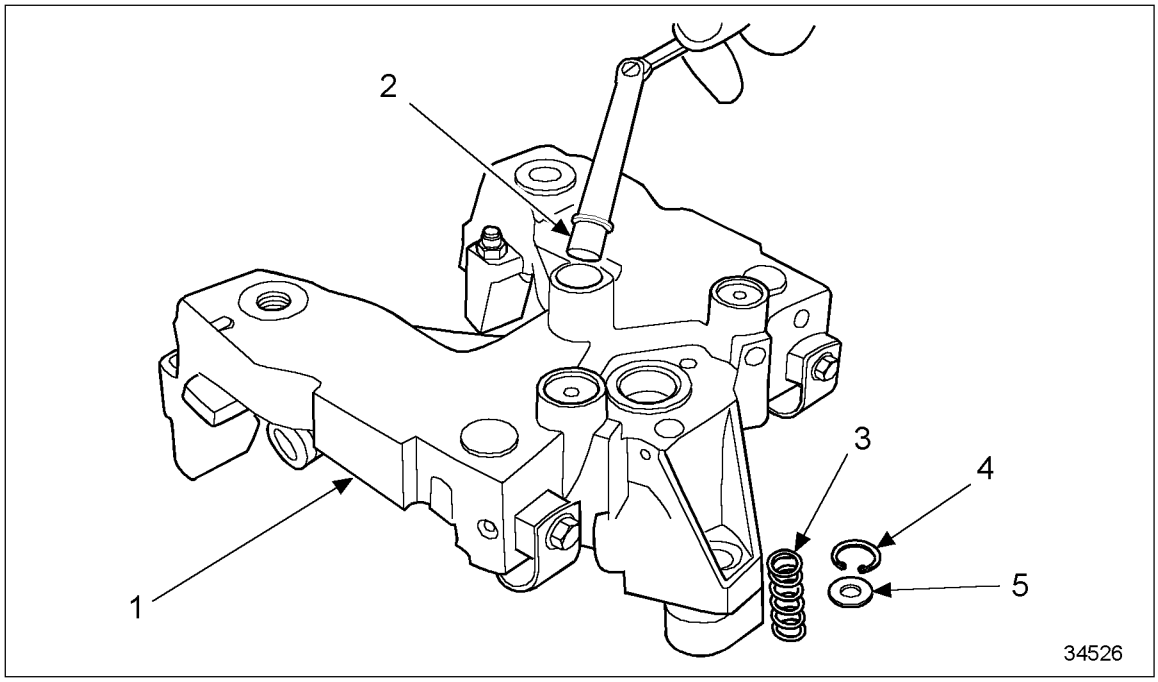

1. Jake Brake Assembly
2. Piston
3. Spring
4. Retaining Ring
5. Washer

Figure 1-424 Removing Piston from Accumulator Bore with Magnet

Remove the master piston as follows:

1. Remove the screw, washer, and master piston spring from the housing.
2. Remove the master piston. See Figure 1-425.

NOTE:
Use needle-nose pliers, if necessary.

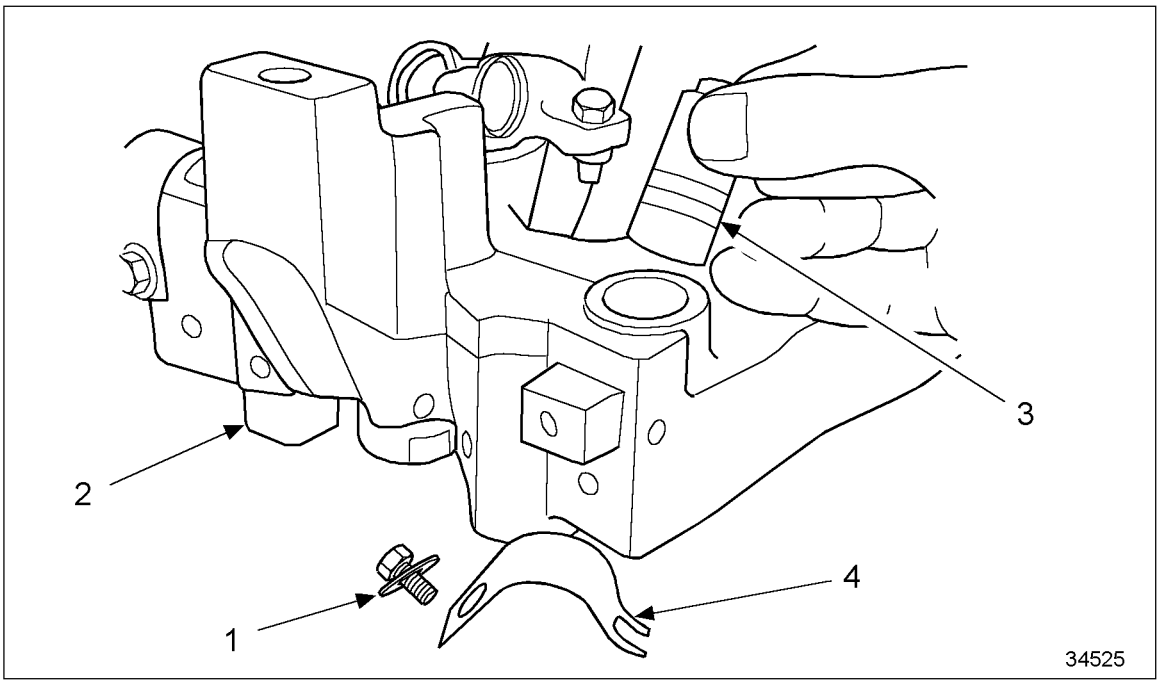

1. Washer and Screw Assembly
2. Jake Brake Assembly
3. Master Piston
4. Master Piston Spring

Figure 1-425 Removing The Master Piston

On Model 760 only, remove the ball check valve as follows:

1. Remove the plug.
2. Remove the ball check valve and spring.

All information subject to change without notice.
6SE483 9901 Copyright © 1999 DETROIT DIESEL CORPORATION

Remove the slave piston as follows:

1. Remove the screw and spring that retains the slave piston return spring.
2. Remove the bridge and the slave piston. See Figure 1-426.

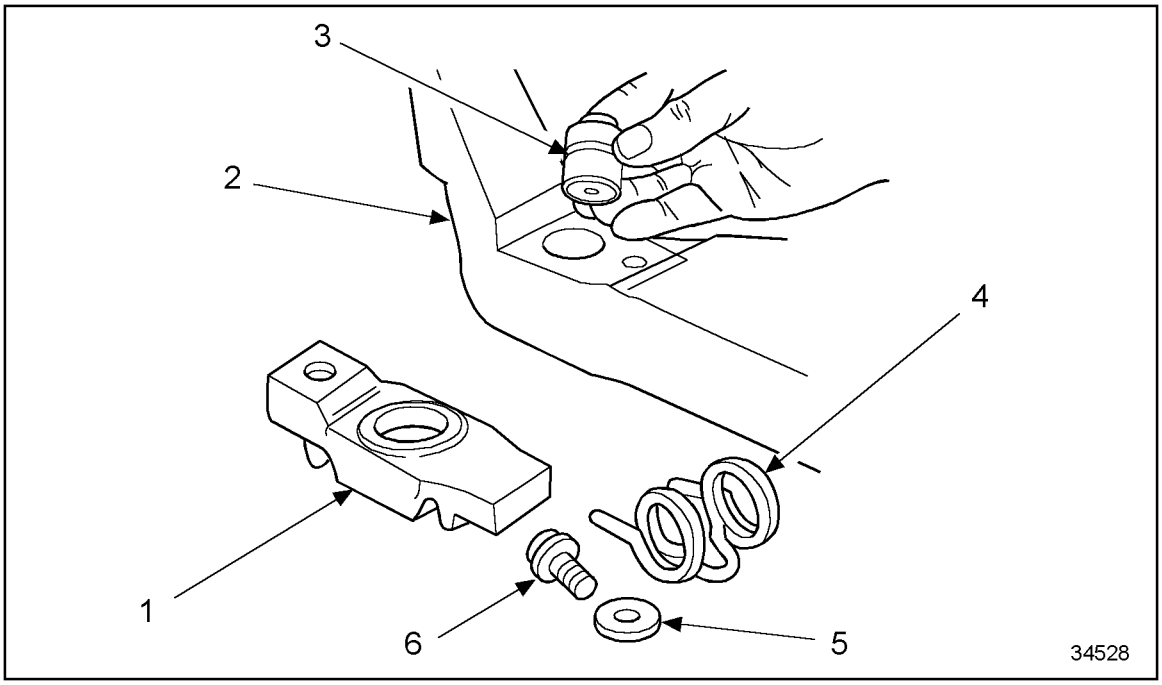

1. Slave Piston Bridge
2. Jake Brake Housing
3. Slave Piston
4. Return Spring
5. Washer
6. Screw

Figure 1-426 Removing Bridge and Slave Piston

3. Loosen the leveling screw locknut and remove the leveling screw from the bridge. See Figure 1-427.

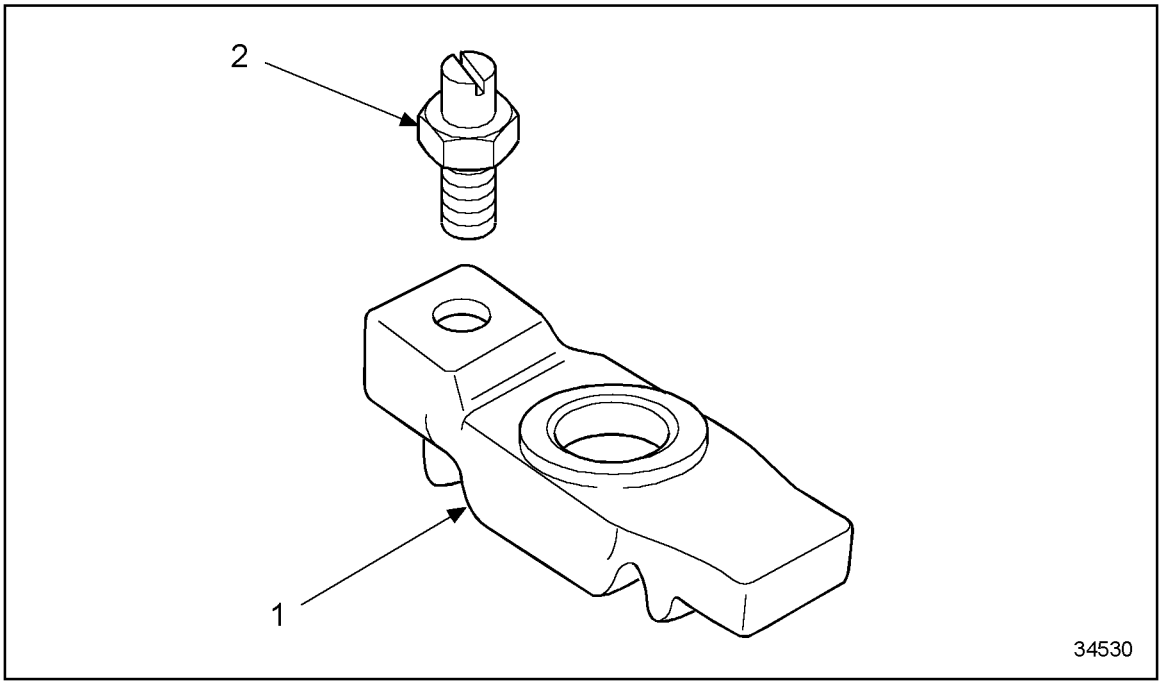

1. Slave Piston Bridge
2. Slave Piston Leveling Screw

Figure 1-427 Removing the Leveling Screw from the Bridge

The injector rocker arm contains a pin and roller for actuating the engine brake master piston. If excessive wear or damage to the roller is present, replace the rocker arm assembly. Refer to Section 1.6.2.

All information subject to change without notice.
6SE483 9901 Copyright © 1999 DETROIT DIESEL CORPORATION

1.29.3.1 Cleaning of Model 760, 765, or 770 Jake Brake

Clean the Jake Brake as follows:

NOTE:
Use an OSHA-approved cleaning solvent when washing parts. Be sure to coat parts with clean engine oil when reinstalling them.

1. Wash the control valves with approved cleaning solvent.
2. Push a wire through the hole in the base of the valve to the distance required to ensure that the ball check is free.

NOTE:
The ball should lift with light pressure on the wire.

CAUTION:
To prevent possible personal injury when using compressed air, wear adequate eye protection (face plate or safety glasses) and do not exceed 40 psi (276 kPa) air pressure.

3. Dry the valve with compressed air, and wipe clean with a paper towel.
4. Thoroughly clean the control valve bore in the housing using clean paper towels.
5. Clean slave piston adjusting screw in an approved cleaning solvent.
6. Clean out the solenoid valve bore in the housing.

NOTICE:
Use clean paper towels to clean the solenoid valve bore. Never use rags, as they may leave lint and residue which can plug the oil passageways, causing Jake Brake malfunction.

7. Clean the master piston in approved cleaning solvent.

1.29.3.2 Inspection of Model 760, 765, or 770 Jake Brake

The Jacobs engine brake is typically a trouble-free device. However, inspections are necessary and some maintenance is required. Use the following procedures to keep the engine brake in top condition.

Inspect the Jake Brake as follows:

1. Inspect slave piston adjusting screw for protrusion, spring pressure and freedom of movement.

NOTE:
The plunger should protrude from the bottom of the screw, have light spring pressure apparent when depressed, and move freely. Be sure the retaining ring is fully engaged in its groove (groove is located on the bottom of the reset screw and top of the POWER-LASH assembly).

   [a] If the plunger does not protrude, the spring does not have light pressure or does not move freely, replace the entire screw assembly. Refer to Section 1.29.4

   [b] If the slave piston adjusting screw meets specifications, continue with inspection.

2. Inspect the accumulator for wear or damage.

   [a] If worn or damaged, replace the accumulator. Refer to Section 1.29.4.

   [b] If accumulator is not worn or damaged, continue with inspection.

3. Inspect the master piston bore for wear or damage.

NOTE:
Some wear marks are permissible.

   [a] If worn or damaged, replace the master piston. Refer to Section 1.29.4.

   [b] If not worn or damaged, continue with inspection.

4. Apply clean lube oil to the piston, and insert into bore.

NOTE:
Master piston should move in and out freely with no binding.

   [a] If binding occurs, replace master piston and/or housing. Refer to Section 1.29.4.

   [b] If no binding occurs, continue with inspection.

5. Inspect master piston spring for relaxation.

NOTE:
The spring should hold the master piston completely in the housing.

   [a] If relaxed, replace the spring. Refer to Section 1.29.4.

   [b] If spring holds tightly, continue with inspection.

All information subject to change without notice.
6SE483 9901 Copyright © 1999 DETROIT DIESEL CORPORATION

6. Inspect the ball check valve (Model 760 only) for wear or damage.
   [a] If worn or damaged, replace ball check valve. Refer to Section 1.29.4.
   [b] If not worn or damaged, proceed with inspection.
7. Inspect slave piston components for excessive wear or damage.
   [a] If worn or damaged, replace slave piston component.
   [b] If not worn or damaged, proceed with inspection.

1.29.3.3 Inspection of Control Valve

Inspect the control valve as follows:

1. Dip the control valves in clean lube oil.
2. Holding the control valve by the stem, let it drop into the bore.
   [a] If binding occurs or if the ball sticks in the valve, replace the control valve. Refer to Section 1.29.4.
   [b] If no binding occurs and the ball does not stick in the control valve, assemble the Jake Brake. Refer to Section 1.29.4.

 Copyright © 1999 DETROIT DIESEL CORPORATION

1.29.4 Assembly of Model 760, 765, or 770 Jake Brake

Install the control valve as follows:

1. Slip the control valve into the bore. See Figure 1-428.

NOTE:
Make sure the control valve collar is installed with the longer sleeve area facing up. If the collar is installed upside down, the engine brake cylinder will not operate.

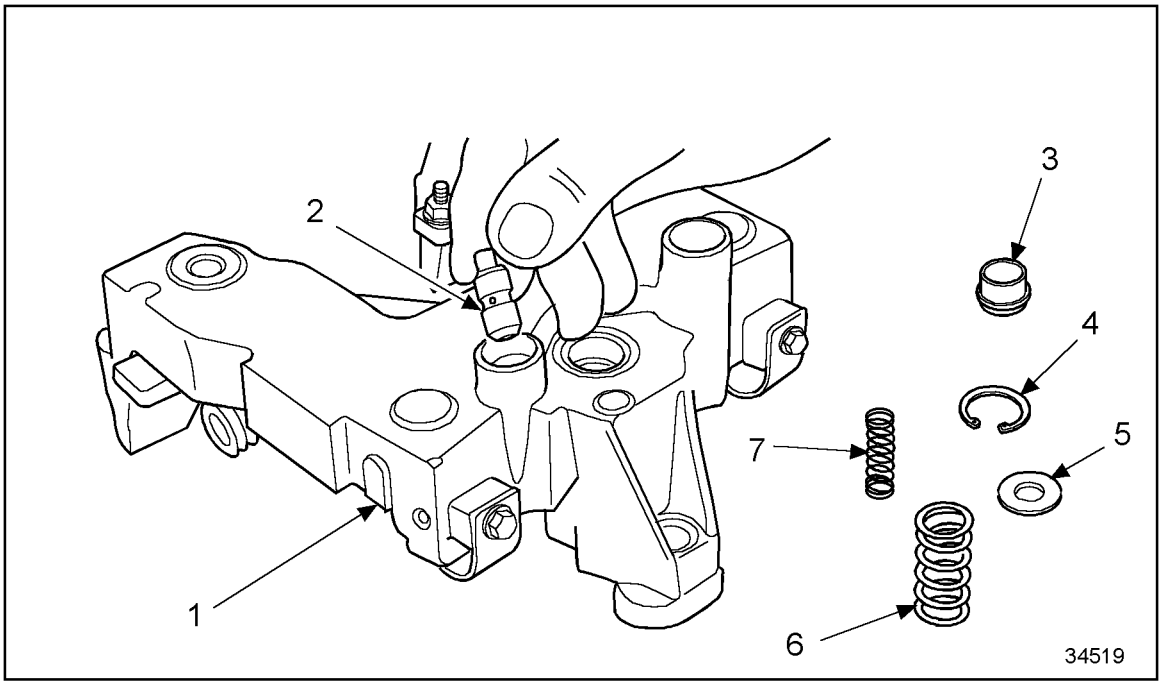

1. Jake Brake Assembly
2. Control Valve
3. Collar
4. Snap Ring Retainer
5. Washer
6. Collar Spring
7. Control Valve Spring

Figure 1-428 Installing the Control Valve

2. Install the control valve collar and two springs.

NOTE:
Ensure the collar is installed with the longer sleeve area facing up. If the collar is installed upside down, the engine brake cylinder will not operate.

3. Press the cover (washer) into place.
4. While holding the cover tightly in place, install the retaining ring.
5. Rotate retaining ring ears 90 degrees to assure ring is seated in groove.

 All information subject to change without notice. Copyright © 1999 DETROIT DIESEL CORPORATION

Install the slave piston adjusting screw as follows:

1. Place the screw in the housing. See Figure 1-429.

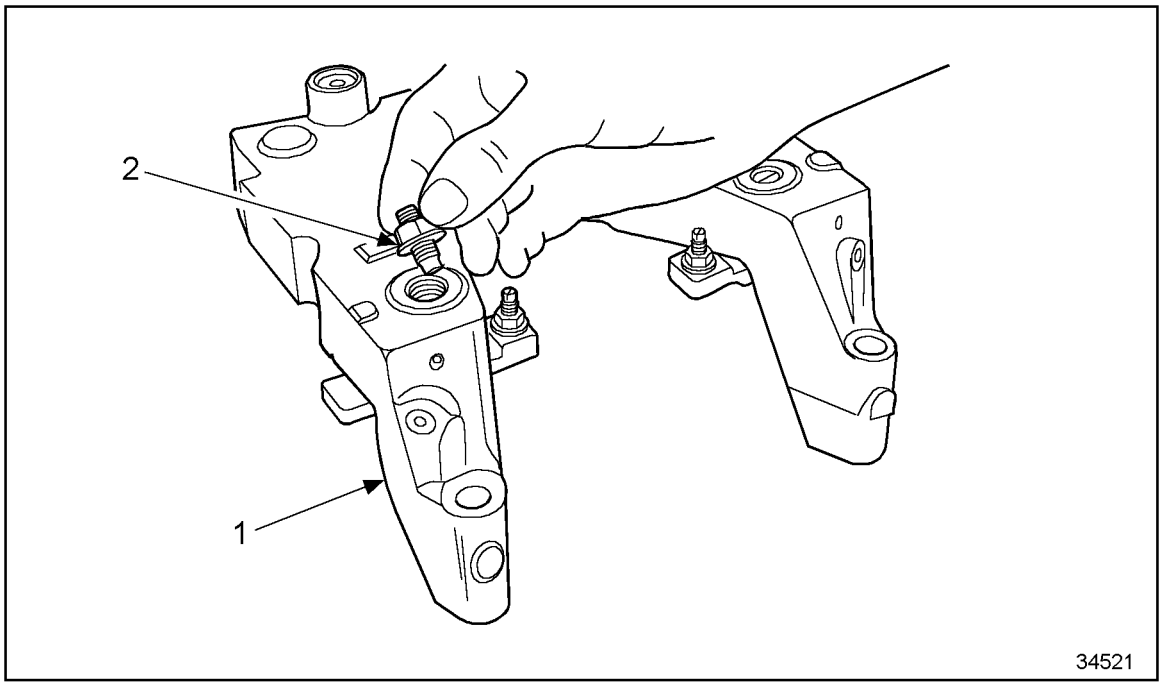

1. Jake Brake Assembly
2. Slave Piston Adjusting Screw

Figure 1-429 Installing the Slave Piston Adjusting Screw

2. Torque the slave piston adjusting screw locknut to 35 N·m (25 lb·ft).

Install the solenoid valve as follows:

NOTE:
As of October 19, 1997, former solenoids have been replaced with the current improved solenoids. The current solenoids have an increased installation torque and improved durability. The current solenoid is interchangeable with the former.

1. Coat new solenoid valve seal rings with clean lube oil.

NOTE:
Use current upper seals when installing current solenoids. New seals are identified with yellow stripes.

2. Install the upper and center seal rings on the solenoid valve body and the lower seal ring into the bottom of the bore in the housing. See Figure 1-430.

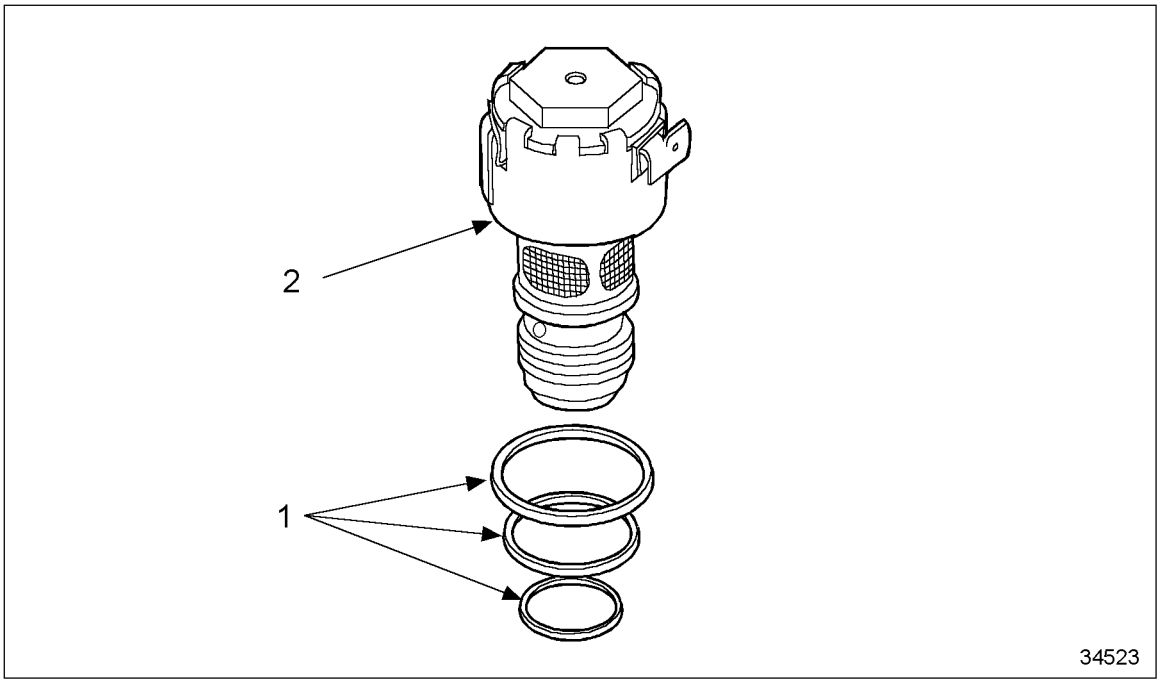

1. Seal Rings (3)
2. Solenoid

Figure 1-430 Installation of Solenoid Valve Seal Rings

3. Make sure the seals are seated properly.
4. Using a 7/8 in. socket and extension for former solenoids or a 3/4 in., 6 point socket and extension for current solenoids, carefully screw the solenoid valve into the housing without unseating the seals.
5. Torque the former solenoid to 12.4 N·m (9 lb·ft). Torque the current solenoid to 20 N·m (15 lb·ft.)

NOTE:
Be careful not to twist the seals while installing.

Install the accumulator as follows:

1. Place the piston into the accumulator bore.
2. Insert the spring, and install the cover.
3. Push down the accumulator cover, and insert retaining ring.

All information subject to change without notice.
6SE483 9901 Copyright © 1999 DETROIT DIESEL CORPORATION

Install the master piston as follows:

1. Apply clean lube oil to the piston.
2. Insert master piston into bore. See Figure 1-431.

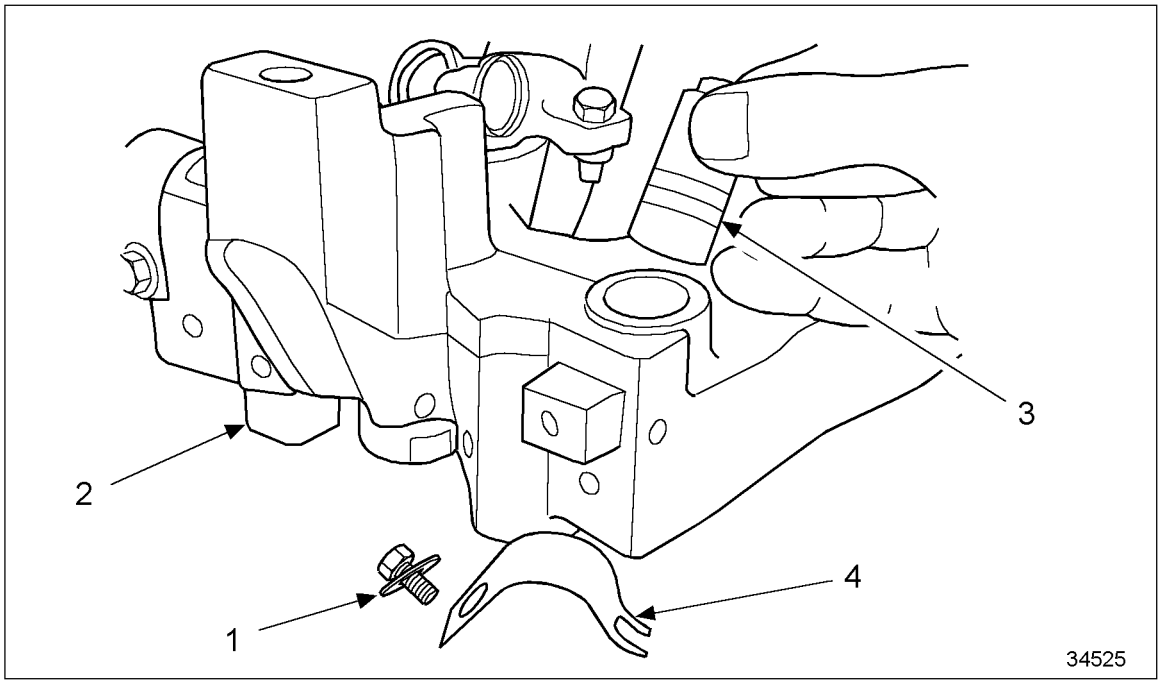

1. Washer and Screw Assembly
2. Jake Brake Assembly
3. Master Piston
4. Master Piston Spring

Figure 1-431 Inserting Master Piston into Bore

3. Install spring, washer, and screw.

NOTE:
Make sure spring legs are centered around master piston boss.

4. Torque screw to 10 N·m (7.4 lb·ft).

On model 760 only, install the ball check valve as follows:

1. Install the ball check valve and spring. See Figure 1-432.

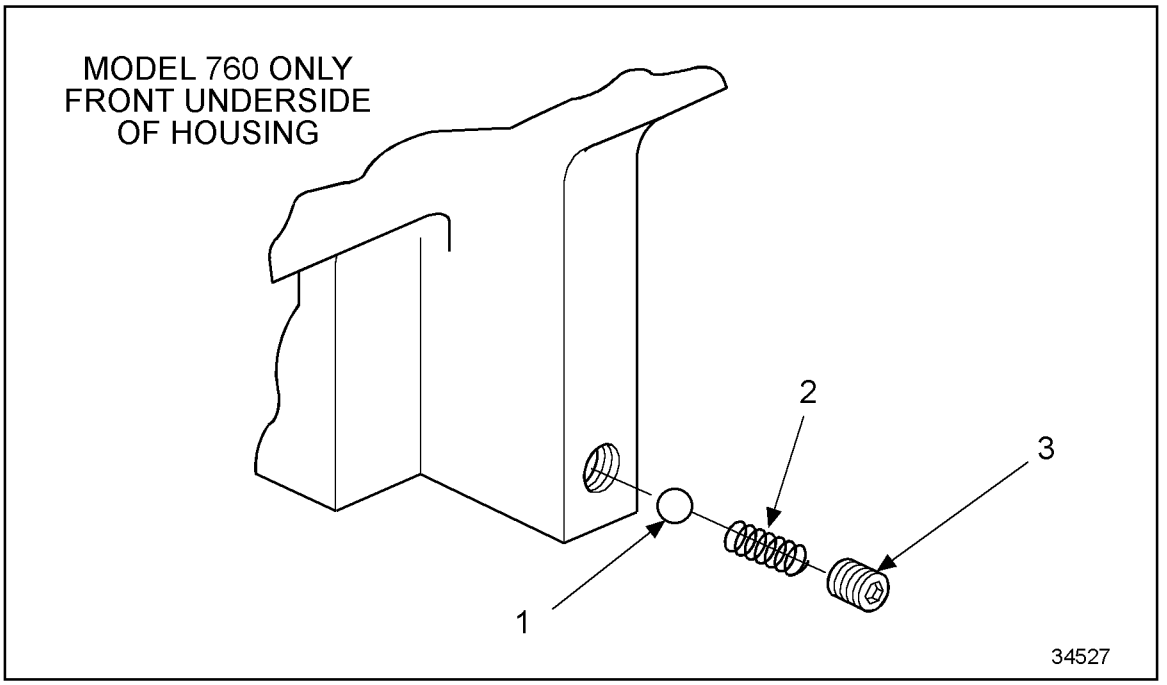

1. Ball Check Valve
2. Spring
3. Pipe Plug

Figure 1-432 Installation of Ball Check Valve

2. Insert the plug. Torque pipe plug to 11.2 N·m (8.3 lb·ft).

All information subject to change without notice.
6SE483 9901 Copyright © 1999 DETROIT DIESEL CORPORATION

Install the slave piston as follows:

1. Install the screw from the slave piston side of the bridge.
2. Install the leveling screw locknut.
3. Install the bridge with the leveling screw toward the center of the housing. See Figure 1-433.

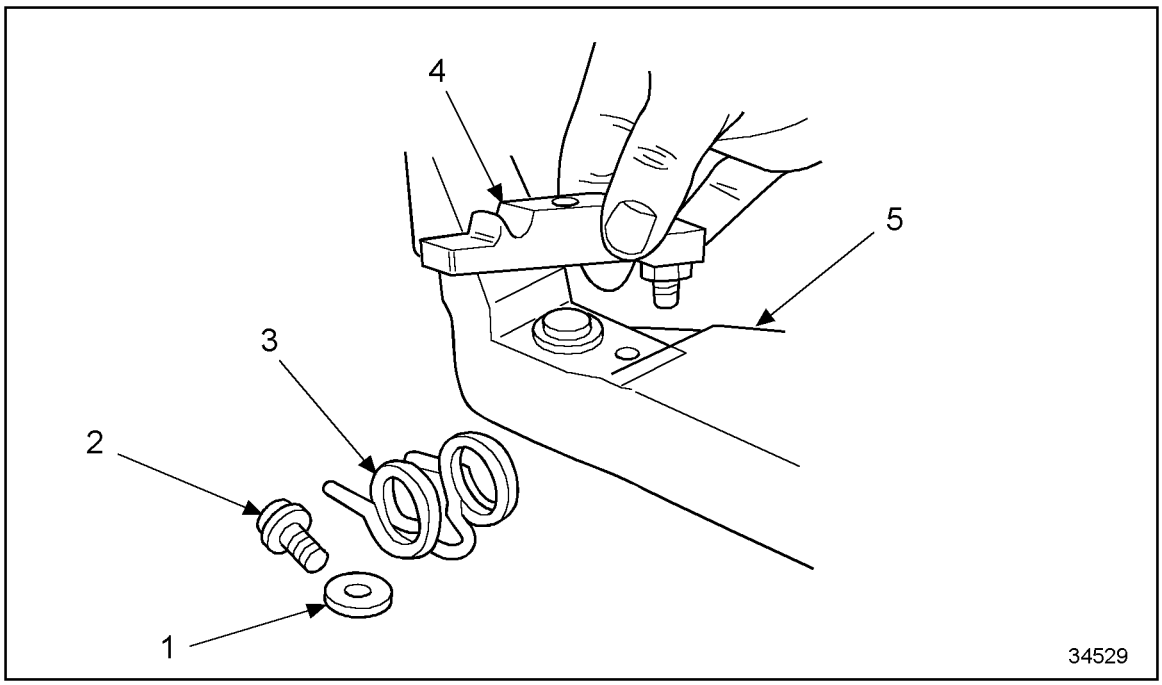

1. Washer
2. Screw
3. Torsion Spring
4. Bridge Assembly
5. Jake Brake Housing

Figure 1-433 Installing Bridge with Leveling Screw Toward Center of Housing

4. Install the slave piston assembly torsion spring with the ends over the bridge. See Figure 1-434.

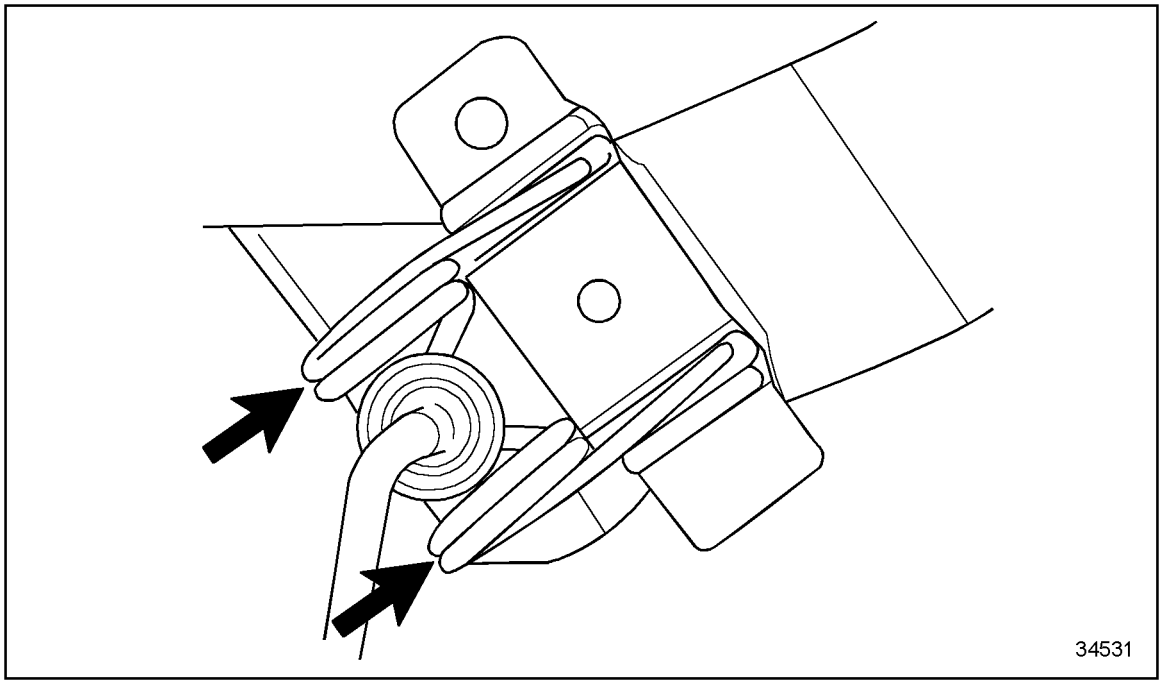

Figure 1-434 Installing the Slave Piston Assembly Torsion Spring

5. Install the screw over the center part of the spring.

NOTICE:
While tightening the screw on the torsion spring, push the spring toward the slave piston assembly. Failure to do so may result in contact between the intake valve adjusting screw and torsion spring. Serious engine damage may result.

6. Torque the screw to 20 N·m (15 lb·ft.).
7. Torque the slave piston leveling screw locknut to 47 N·m (35 lb·ft.).

All information subject to change without notice.
6SE483 9901 Copyright © 1999 DETROIT DIESEL CORPORATION

1.29.5 Installation of Model 760, 765, or 770 Jake Brake

Install the model 760, 765, or 770 Jake Brake as follows:

NOTE:
The following procedures apply to Model 760, 765, and 770 Jake Brakes. For Model 790 Jake Brake installation procedures, refer to section 1.29.10.

1. Adjust the intake and exhaust valve clearances and set the injector heights. Refer to section .

CAUTION:

To prevent possible personal injury when using compressed air, wear adequate eye protection (face plate or safety glasses) and do not exceed 40 psi (276 kPa) air pressure.

2. Attach the length of tubing to a blow gun nozzle, and blow out the oil from the bolt holes.
3. Cover the holes with hand towels to minimize oil spray.

NOTE:
Removing the oil from the bolt holes prevents the cylinder head from cracking when tightening the bolts.

 Copyright © 1999 DETROIT DIESEL CORPORATION

4. Place the spacer bar on the exhaust manifold side of the cylinder head with the "OUT" markings adjoining each other and facing the exhaust manifold. See Figure 1-435, and see Figure 1-436.

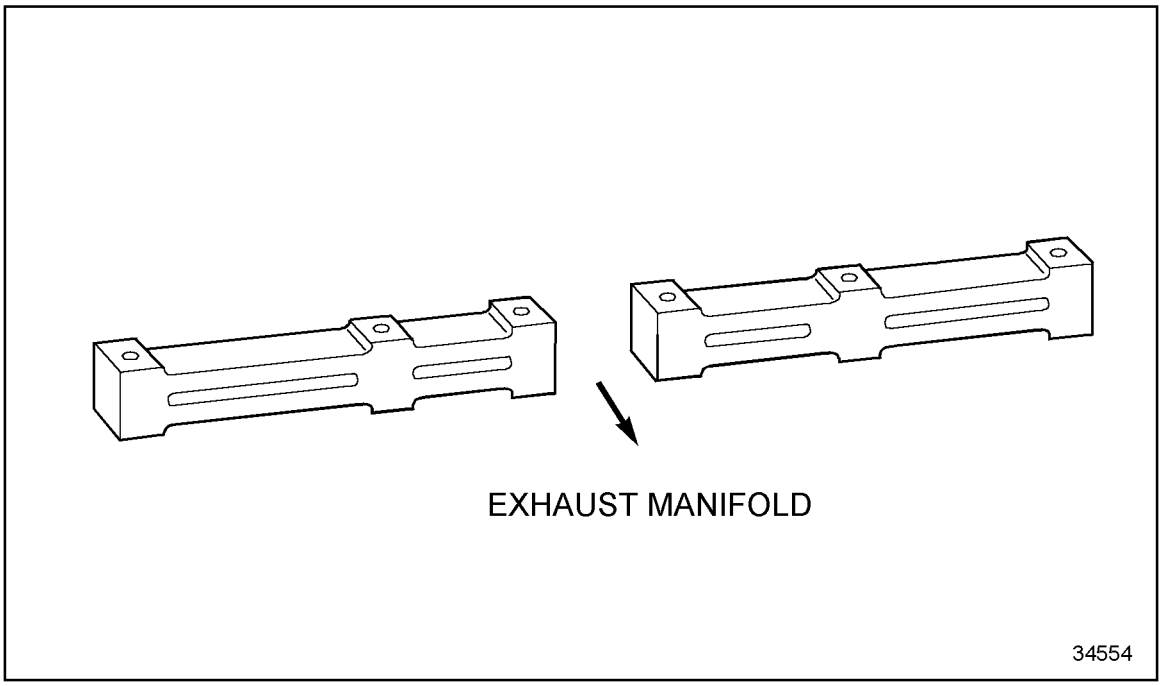

Figure 1-435 Spacer Bars with "Out" Marks Adjoined

All information subject to change without notice.
6SE483 9901 Copyright © 1999 DETROIT DIESEL CORPORATION

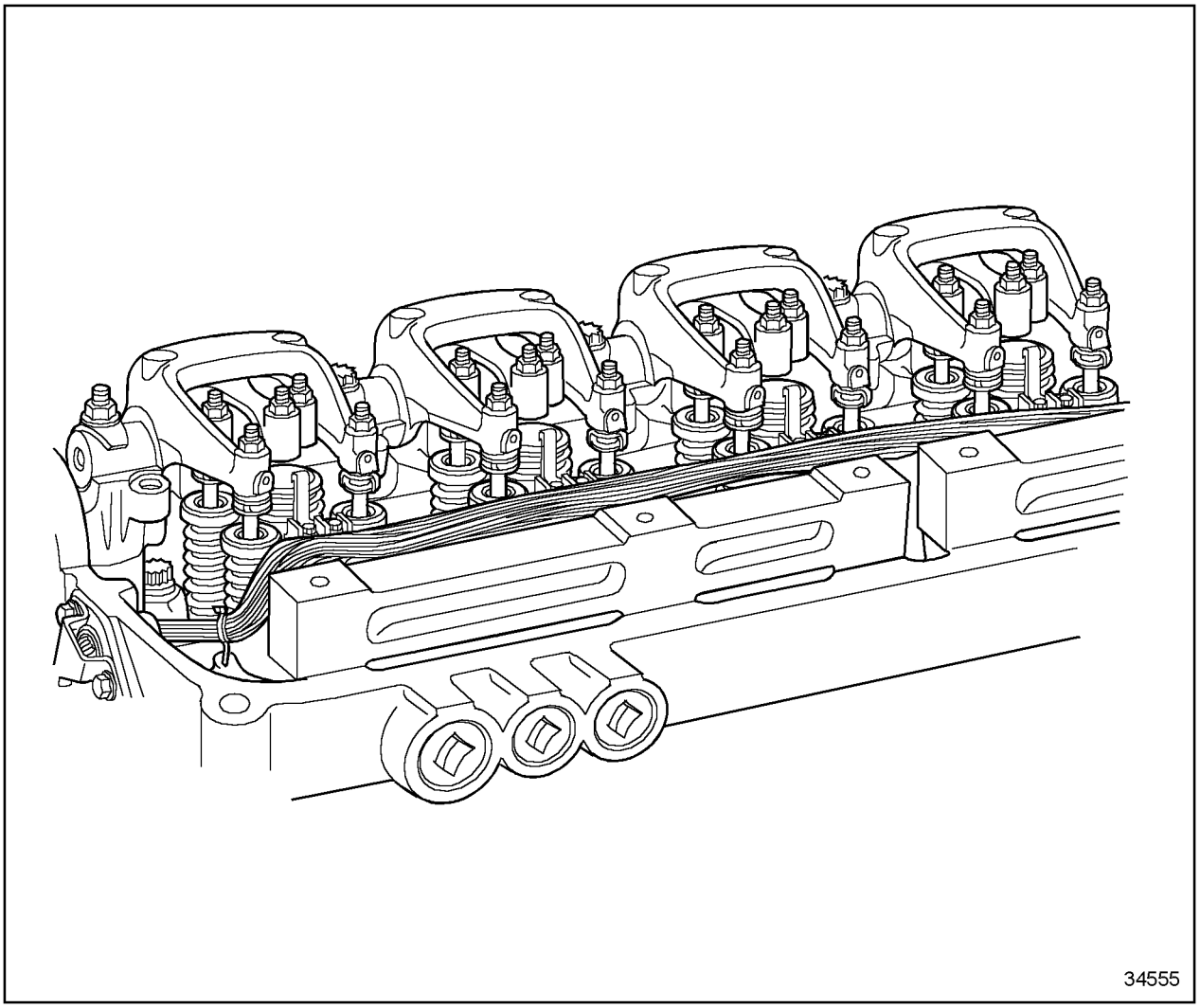

Figure 1-436 Location of Spacer Bars

5. Place the three engine brake housings over the rocker shafts with the solenoid valves toward the camshaft side of the engine.

NOTE:
Be sure housings do not interfere with wiring harness.

NOTICE:
Do not mix the rocker arm shaft bolts and the Jake Brake mounting bolts. If the rocker arm shaft bolt is mistakenly used to mount the Jake Brake housing, the longer shoulder on the bolt will block the oil supply to the Jake Brake on the camshaft side of the housing. The brake will not retard the engine as designed. This condition could cause loss of vehicle braking control on downgrades, which may create a risk of personal injury to the vehicle operator or other persons and damage to the vehicle or property of others.

NOTE:
The rocker arm shaft mounting bolt and Jake Brake mounting bolt, part of the Jake Brake assembly, are similar in appearance. Both are M12 x 110 mm (4.33 in.) long and have 12–point heads.

NOTE:
In the event of a housing hold down bolt failure on a Jacobs engine brake housing, replace all bolts on that particular housing.

NOTICE:
Use bolts that have the Jacobs logo, circled "J". Installation of bolts that do not have the circled "J" may result in damage to the engine, engine brake or both.

[a] The Jake Brake bolt has the Jacobs logo (circled "J") and the letters "EF" marked on the head. The bolt length is no longer marked atop the bolt head.

[b] The DDC rocker arm shaft bolt has the DDC logo (spinning arrows) and the vendor I.D. (F-C) on its head.

[c] Jake Brake model 760 requires two bolts along with one bolt and new washers.

NOTE:
Be sure that only Jake Brake bolts, see Figure 1-437, are installed in the Jake Brake housing.

All information subject to change without notice.
6SE483 9901 Copyright © 1999 DETROIT DIESEL CORPORATION

[d] The DDC bolt shoulder is much longer, 17.0 mm (0.669 in.) versus 4 mm (0.157 in.) than the Jake Brake bolt. See Figure 1-437.

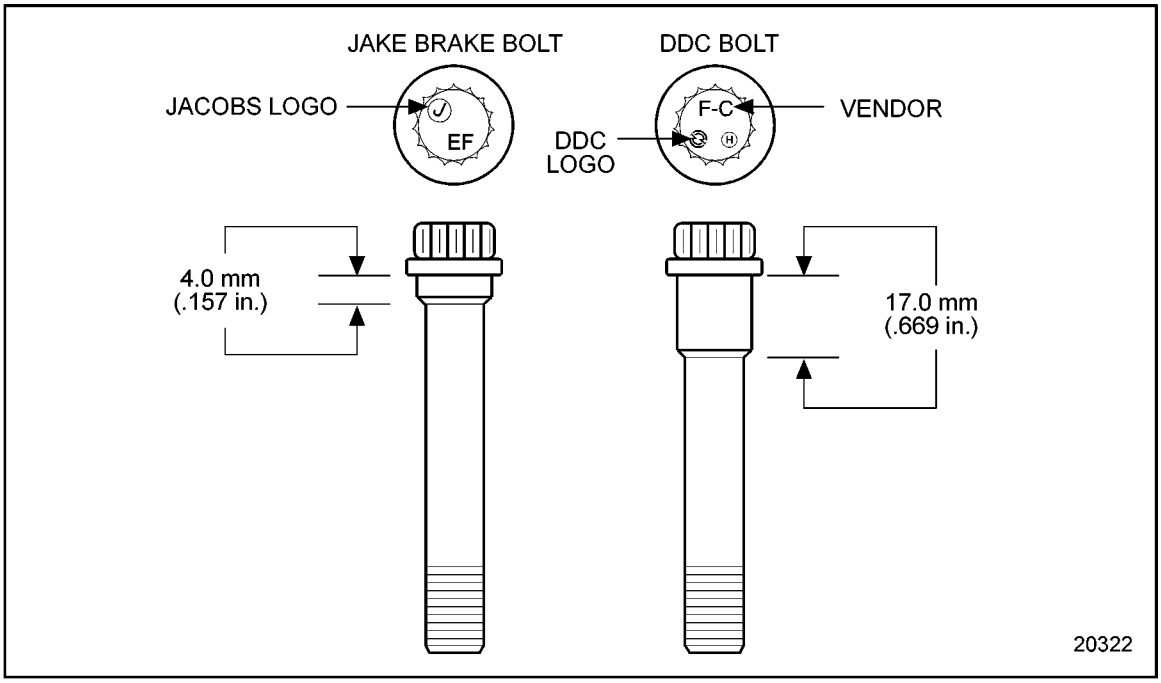

Figure 1-437 Jake Brake and DDC Bolt Identification

NOTICE:
The model 760 uses two lengths of mounting bolts. Six 120 mm bolts should be installed on the exhaust side of the engine. Three 110 mm bolts should be installed on the camshaft side of the engine. Failure to do so will result in engine damage.

6. On model 760, install one washer onto each 120 mm (4.75 in.) bolt, and insert into brake housing on the exhaust manifold side (two per housing). See Figure 1-438.

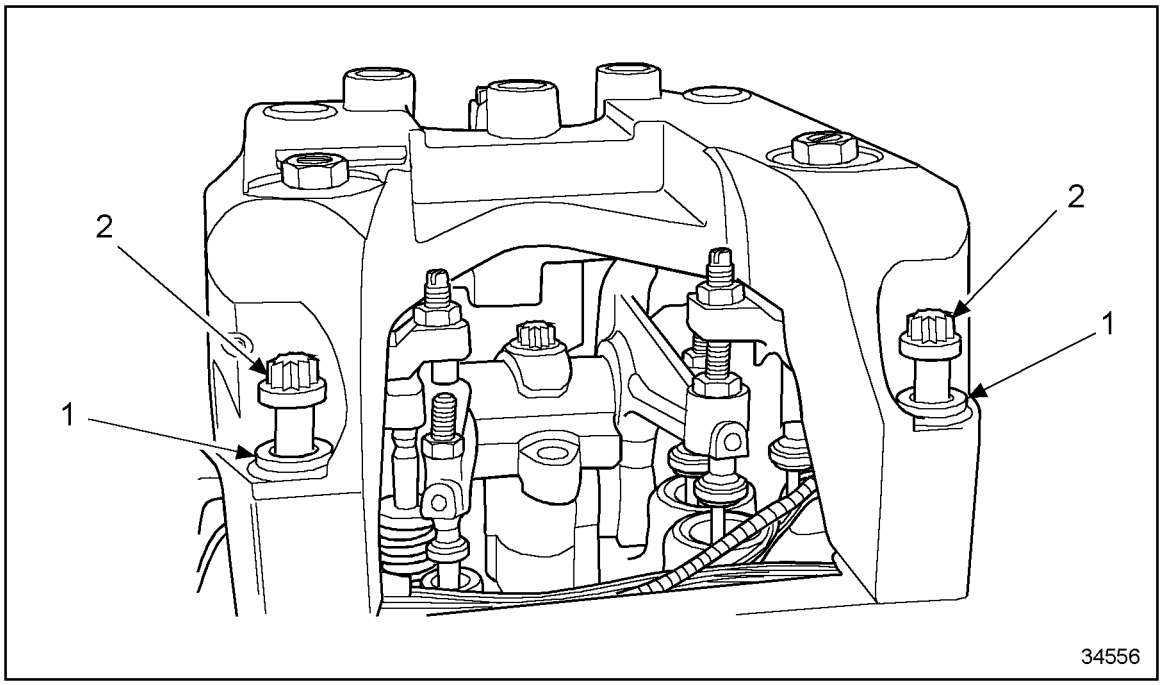

1. Washer
2. Long Bolt

Figure 1-438 Installation of Brake Housing Bolts on Exhaust Manifold Side

All information subject to change without notice.
6SE483 9901 Copyright © 1999 DETROIT DIESEL CORPORATION

7. On model 760, install one washer on the 110 mm (4.375 in.) bolt, and insert into brake housing at the camshaft side (one per housing). See Figure 1-439.

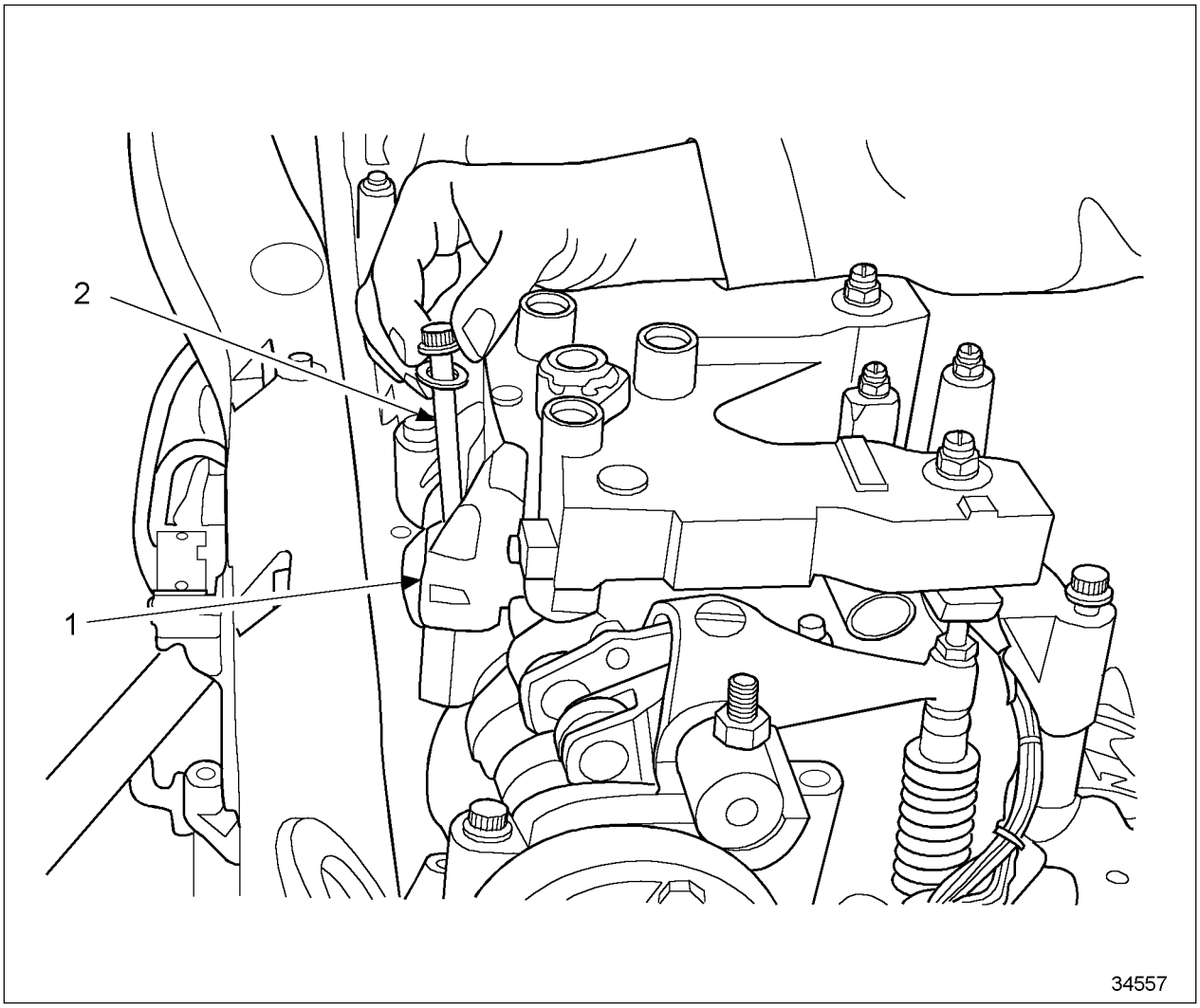

1. Jake Brake Housing Assembly
2. Mounting Bolt

Figure 1-439 Installation of Brake Housing Bolts on Camshaft Side

8. On models 760A, 760B, 765, and 765A, lubricate each hold down bolt with clean engine oil.

NOTE:
All the housing mounting bolts for these models are the same length of 110 mm (4.375 in.).

9. On models 760A, 760B, 765, and 765A, install a washer on each bolt, and install into housings (three bolts per housing).

10. On models 760A and 765, move the housing from side to side, and locate the housing in the center position of the movement. See Figure 1-440.

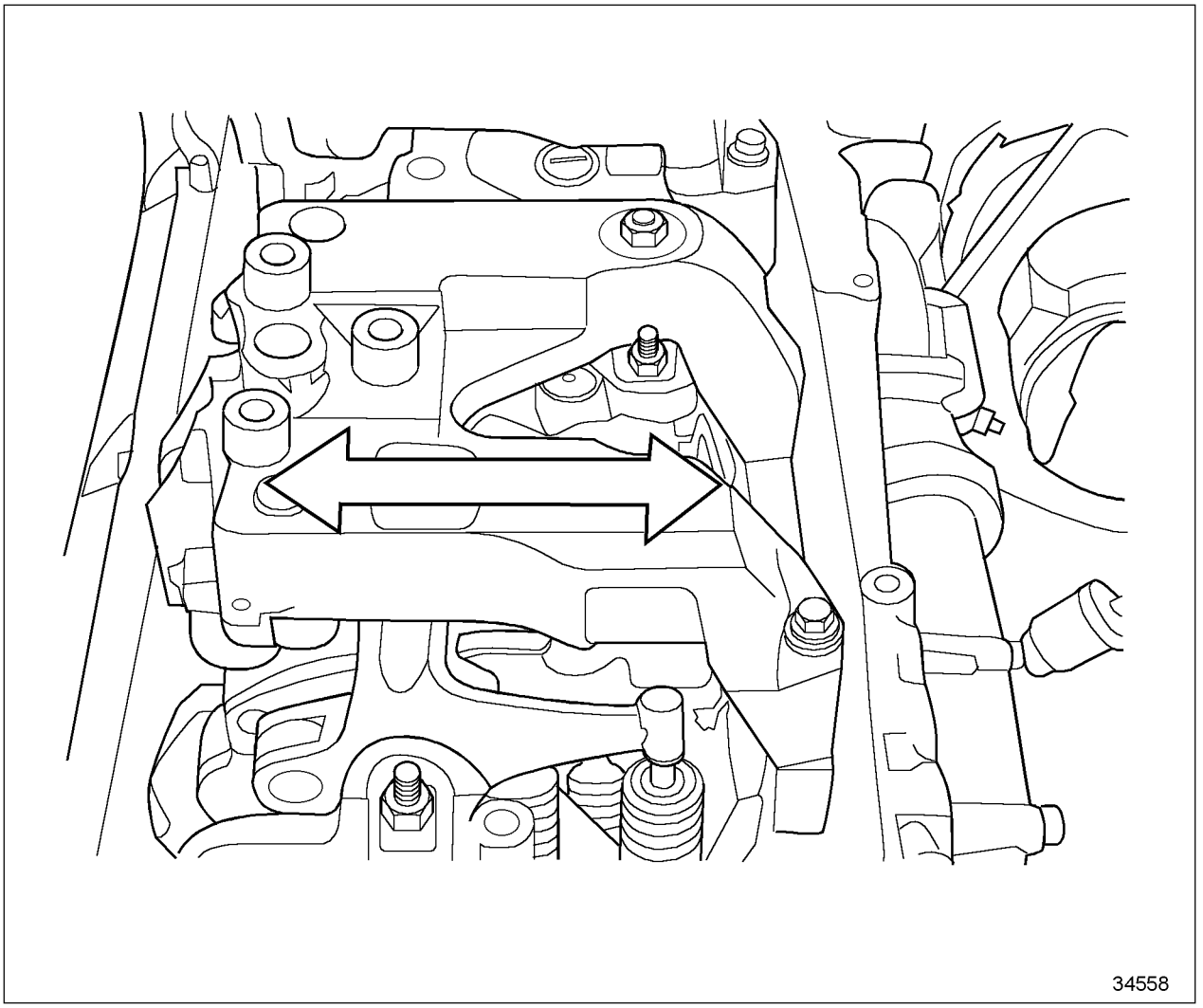

Figure 1-440 Locating Center Position of Housing

11. On models 760B and 765A, move the housing from side to side, and locate as far toward the camshaft side of the engine as possible.
12. On all models, torque the engine brake mounting bolts using the following sequence:
    [a] Torque the three bolts on the camshaft side of the engine to 55 N·m (40 lb·ft).
    [b] Torque the six bolts on the exhaust manifold side of the engine to 55 N·m (40 lb·ft).
    [c] Repeat the tightening sequence and re-torque all bolts to 136 N·m (100 lb·ft).
    [d] Check the torque to 136 N·m (100 lb·ft).
13. Secure wire harness to spacer bars with plastic ties.
14. Connect wiring harness solenoid connectors to solenoids.

All information subject to change without notice.
6SE483 9901 Copyright © 1999 DETROIT DIESEL CORPORATION

1.29.5.1 Adjustment of Slave Piston on Model 760, 765, or 770 Jake Brake

Make the following adjustment with the engine stopped and cold, and the oil temperature at 60°C (140°F) or below. The exhaust valves on the cylinder *must* be in the closed position (rocker arm roller on the base circle of the camshaft). When setting the engine brake lash, the exhaust valves must be in the closed position. Adjust the slave piston on all models as follows:

NOTE:
The following procdures apply to Model 760, 765, and 770 Jake Brakes. For Model 790 Jake Brake slave piston lash setting procedures, refer to section 1.29.10.1.

NOTE:
Model 770 Jacobs engine brake requires a special procedure for adjusting the slave piston. The procedure is clearly indicated in the following adjustment steps.

NOTICE:
Improper slave piston adjustment can result in engine or brake housing damage.

NOTICE:
Strictly follow the slave piston adjustment procedure. Failure to use the proper adjustment procedure will result in poor engine brake performance and/or serious engine damage.

1. Refer to section 1.29 for proper slave piston clearance setting.

 Copyright © 1999 DETROIT DIESEL CORPORATION

2. Back out the leveling screw in the slave piston assembly until the end of the screw is beneath the surface of the bridge in the slave piston assembly. See Figure 1-441.

NOTE:
The leveling screw is located in the bridge member of the slave piston assembly.

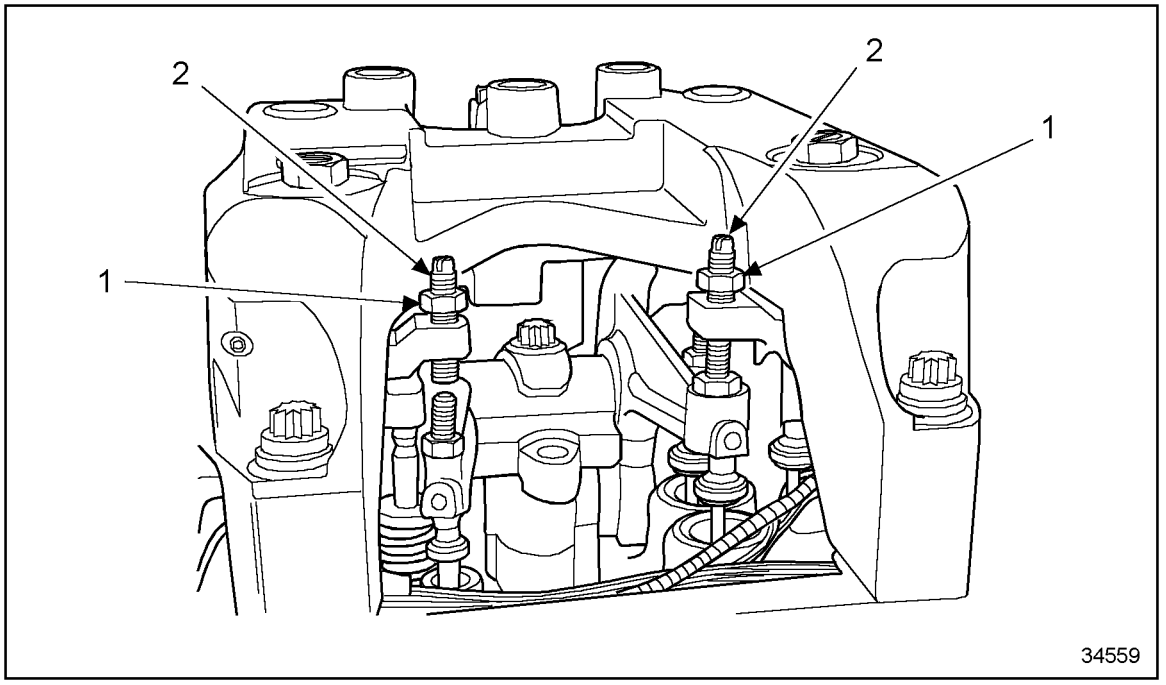

1. Leveling Screw
2. Locknut

Figure 1-441 Location of Leveling Screw

3. On models 760, 760A, 760B, 765, and 765A, place the correct size feeler gage between the solid side of the slave piston (the side without the leveling screw) and the exhaust rocker arm adjusting screw. Feeler gage sizes are listed in Table 1-9.

All information subject to change without notice.
6SE483 9901 Copyright © 1999 DETROIT DIESEL CORPORATION

4. On models 760, 760A, 760B, 765, and 765A, turn the slave piston adjusting screw clockwise until a slight drag is felt on the feeler gage. See Figure 1-442.

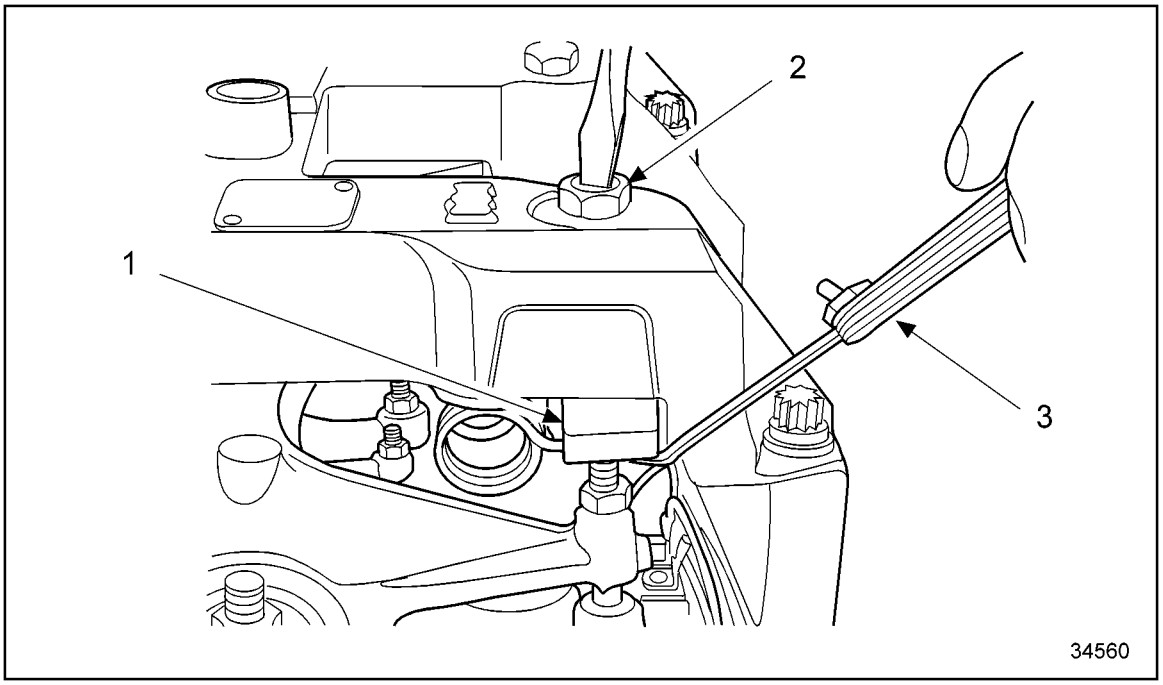

1. Slave Piston Bridge
2. Slave Piston Adjusting Screw
3. Feeler Gage

Figure 1-442 Turn Slave Piston Adjusting Screw Clockwise

5. Perform the following additional steps on model 770:

   [a] Turn in the J-Lash® adjusting screw until the solid side of the slave piston bridge assembly contacts the exhaust valve and the valve springs begin to compress. Turn in one additional turn.

NOTICE:
All oil must be purged from the J-Lash adjusting screw. Oil remaining in the J-Lash screw will cause inaccurate clearance adjustment, resulting in possible engine or engine brake damage. If oil is below room temperature (below 60°F), wait at least two minutes for oil to be purged from the J-Lash adjusting screw.

NOTE:
Wait at least 30 seconds for oil to be purged from the J-Lash adjusting screw.

   [b] Back out the adjusting screw **only** until the correct size feeler gage can be inserted between the solid side of the slave piston bridge assembly and the exhaust valve.

   [c] Adjust the J-Lash so that a light drag is felt on the feeler gage.

NOTE:
Do not back out the J-Lash more than required to obtain a light drag on the feeler gage.

   [d] Use a screwdriver to hold the J-Lash in place, and torque the lock nut to 34 N·m (25 lb·ft).

NOTE:
If the J-Lash screw is backed out until it no longer compresses the slave piston spring, oil will enter the screw and the adjustment will be incorrect. If this occurs, repeat the J-Lash adjustment procedure.

   [e] Recheck the lash settings. If clearance setting is incorrect, repeat the J-Lash adjustment procedure.

NOTE:
Once the engine brake has been run, oil enters the J-Lash screw making the engine brake adjustment unreadable. If unsure of the adjustment, repeat the J-Lash adjustment procedure.

6. On all models, hold the screw in position, and torque the locknut to 35 N·m (26 lb·ft).
7. Check the adjustment, and repeat if necessary.

NOTE:
Do not disassemble the slave piston adjusting screws.

8. Place the correct feeler gage between the leveling screw and the rocker arm adjusting screw.

All information subject to change without notice.
6SE483 9901 Copyright © 1999 DETROIT DIESEL CORPORATION

9. Turn the leveling screw clockwise until a slight drag is felt on the feeler gage. See Figure 1-443.

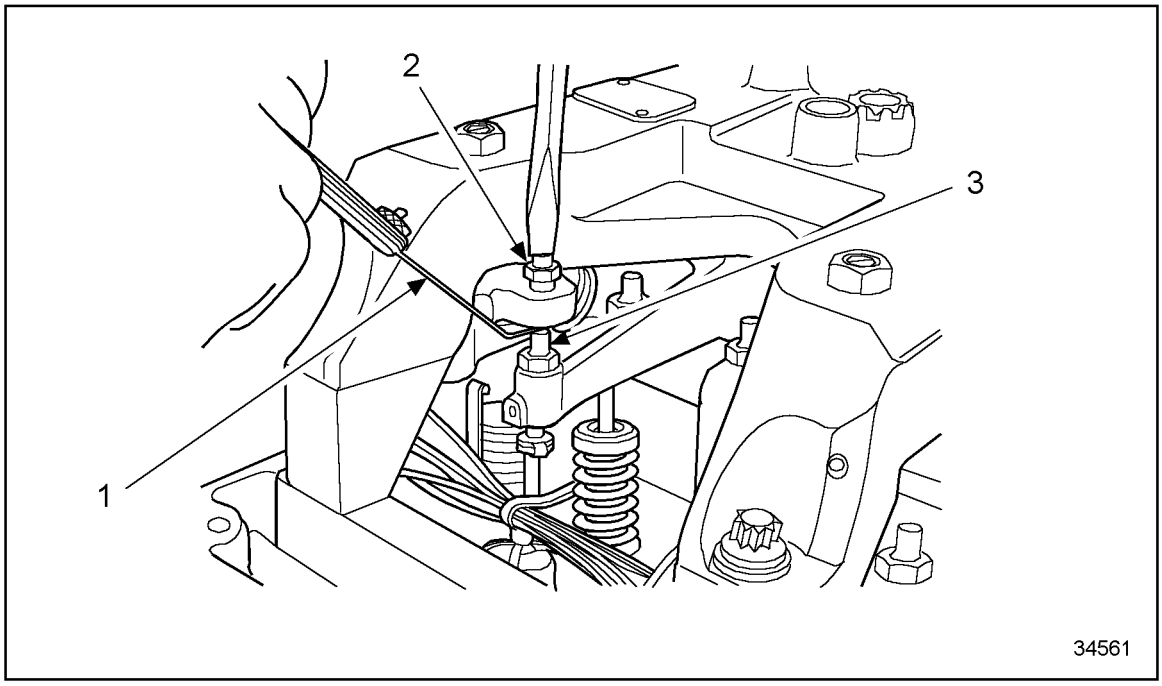

1. Feeler Gage
2. Slave Piston Leveling Screw
3. Rocker Arm Adjusting Screw

Figure 1-443 Setting Clearance on Leveling Screw and Rocker Arm Adjusting Screw

10. Hold the leveling screw in position, and torque the locknut to 47 N·m (35 lb·ft).
11. Check adjustment, and repeat if necessary.
12. Repeat the adjustment procedures for the remaining cylinders. Refer to step 2 through step 11.

NOTE:
Bar over the engine when necessary to place the exhaust valves in the closed position for slave piston adjustment.

13. Install the engine rocker cover. Refer to section 1.6.2 for one-piece, refer to section 1.6.3 for two-piece, and refer to section 1.6.5 for three-piece.
14. Install all remaining components that were removed for this procedure.
15. Connect starting power for the engine.
16. Verify proper Jake Brake installation by driving the vehicle, then checking engine brake performance.

1.29.6 Removal of Model 790 Jake Brake Assembly

Remove the Model 790 Jake Brake as follows:

CAUTION:

To avoid injury from hot engine surfaces, stop the engine and allow it to cool ambient temperature before working on it.

CAUTION:

To avoid injury from accidental engine start-up, disable/disconnect power to the engine starting system.

1. With the engine at ambient temperature and power to the starting system disconnected, Refer to section of the *Series 60 Service Manual*, 6SE483 and remove the engine rocker cover.
2. Note the location of the rocker arm shaft, the exhaust valve rocker arm, the fuel injector rocker arm, and the intake valve rocker arm.
3. Disconnect the solenoid wiring harness connectors from the Jake Brake solenoids.

All information subject to change without notice.
6SE483 9901 Copyright © 1999 DETROIT DIESEL CORPORATION

4. Remove the three (3) 140 mm long mounting bolts that secure the engine brake to the cylinder head. See Figure 1-443a.

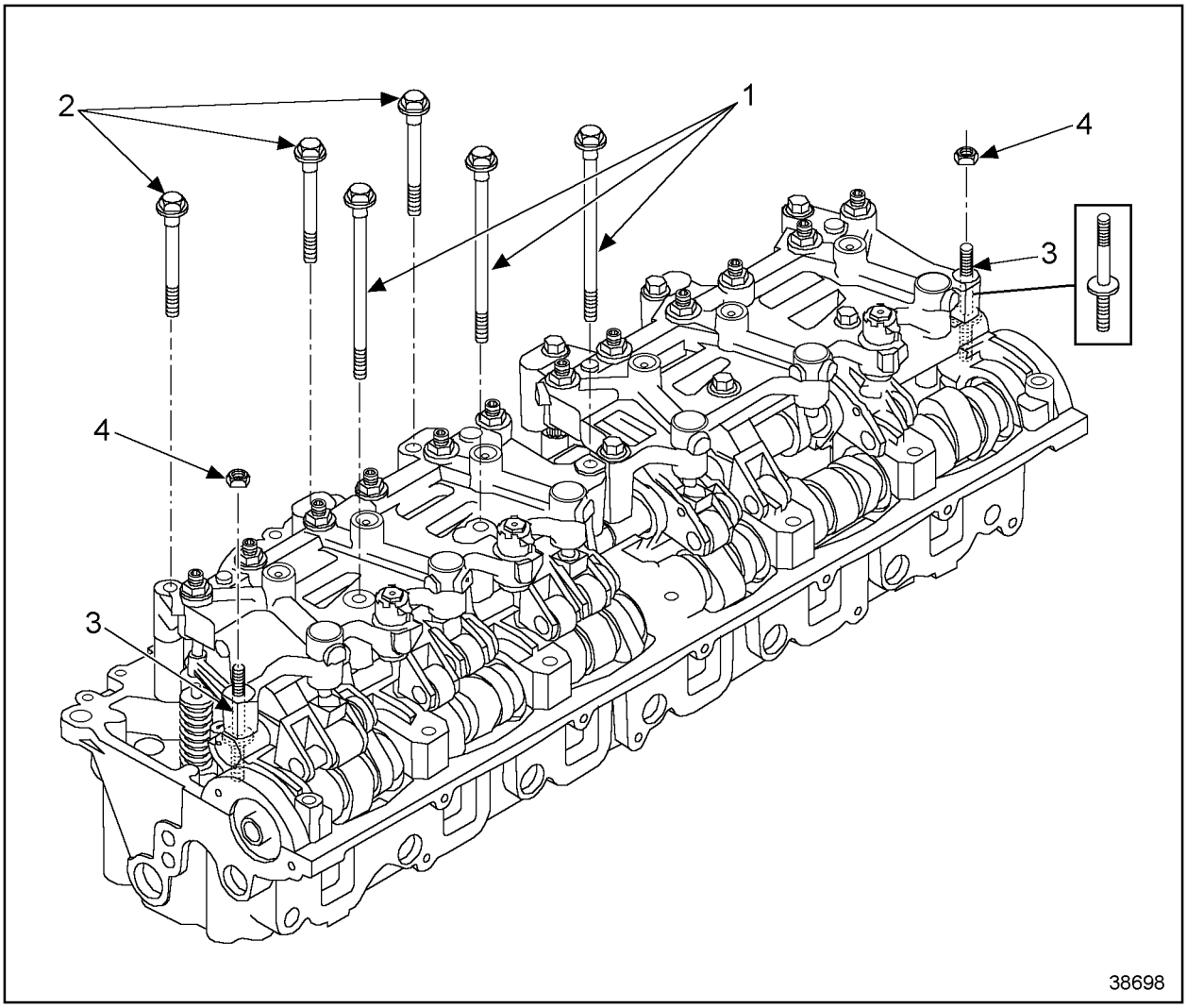

1. Mounting Bolt — 170 mm Long
2. Mounting Bolt — 140 MM Long
3. Stud Bolt
4. Nut

Figure 1-443a Model 790 Jake Brake Fasteners

5. Remove the three (3) 170 mm long mounting bolts and the two (2) nuts that secure the engine brake to the cylinder head.
6. Remove the engine brake assembly.
7. Repeat steps 1 through step 5 and remove the second Jake Brake assembly from the engine.

1.29.6.1 Disassembly of Model 790 Jake Brake

Instructions for disassembly of Model 790 Jake Brakes are incomplete at time of publication, but will be provided at a future date. For components of Model 790 Jake Brakes, see Figure 1-443b.

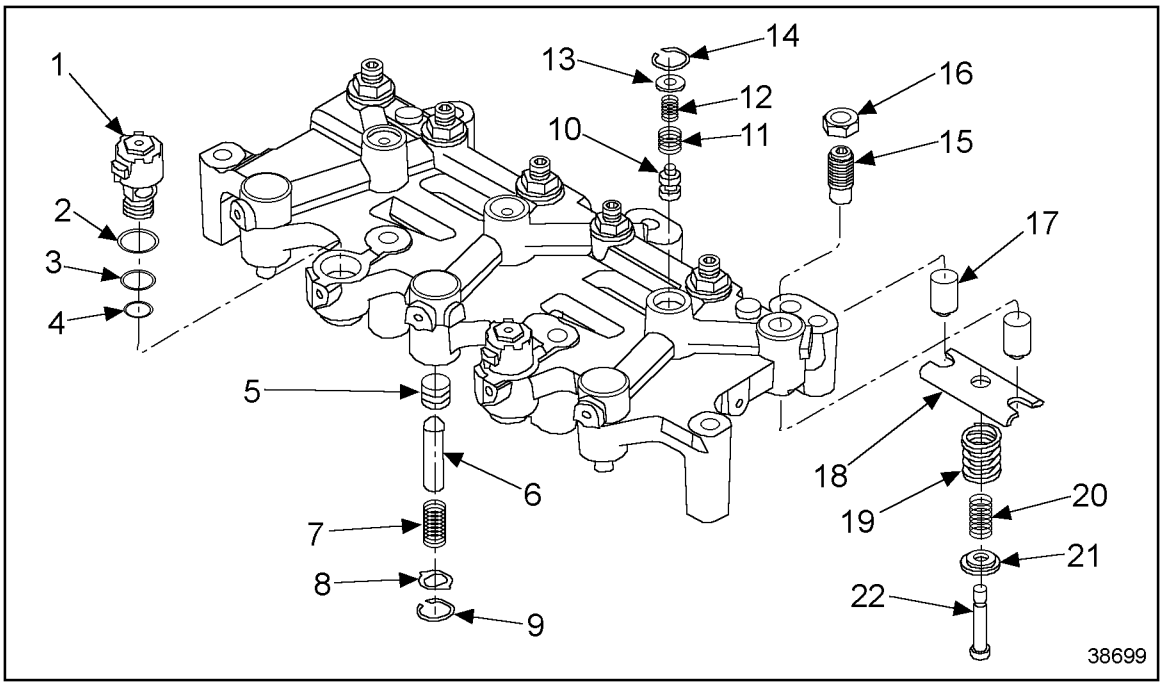

1. Solenoid Valve
3. Center Seal
4. Lower Seal
5. Master Piston
6. Master Piston Pushrod
7. Master Piston Spring
8. Retaining Ring
9. Control Valve
10. Outer Control Valve Spring
11. Inner Control Valve Spring
12. Washer
13. Retaining Ring
14. J-Lash® Screw
15. Locknut
16. Slave Piston
17. Slave Piston Bridge
18. Outer Slave Piston Spring
19. Inner Slave Piston Spring
20. Slave Piston Spring Seat
21. Shoulder Bolt
22. Shoulder Bolt

Figure 1-443b Typical Model 790 Jake Brake Assembly

All information subject to change without notice.
6SE483 9901 Copyright © 1999 DETROIT DIESEL CORPORATION

1.29.7 Cleaning of Model 790 Jake Brake

Instructions for cleaning of Model 790 Jake Brake are incomplete at the time of publication, but will be provided at a future date.

1.29.8 Inspection of Model 790 Jake Brake

Instructions for inspection of Model 790 Jake Brake are incomplete at the time of publication, but will be provided at a future date.

1.29.9 Assembly of Model 790 Jake Brake

Instructions for assembly of Model 790 Jake Brake are incomplete at the time of publication, but will be provided at a future date.

1.29.10 Installation of Model 790 Jake Brake Assembly

The installation procedures for the model 790 Jake Brake assemblies differ slightly from the former engine brakes. Two brake housings are used, instead of three, and spacer bars are not required. Install the model 790 Jake Brake assemblies as follows:

1. With the engine at ambient temperature, install front Jake Brake housing (with two solenoids) over the front three cylinders. Position with solenoids on camshaft side of engine.
2. Install the rear housing (with one solenoid) over the rear three cylinders. Position with solenoid on camshaft side of engine.

NOTE:
There is one extra mounting hole drilled on the slave piston side of each housing. These holes are for manufacturing purposes only and are not used for installation.

 Copyright © 1999 DETROIT DIESEL CORPORATION

3. Install six (6) 170 mm bolts through the housings into the rocker shafts in locations 1 through 6, and install two (2) nuts in locations 7 and 8. See Figure 1-443c.

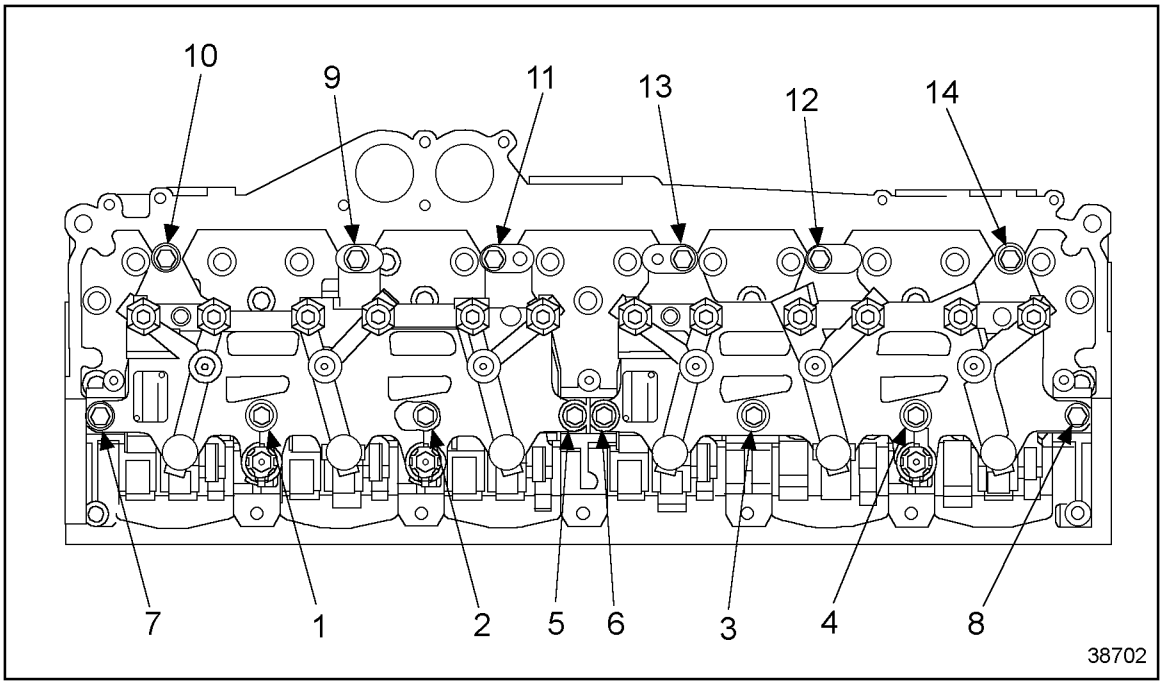

Figure 1-443c Housing Hold-Down Bolt Locations

NOTICE:
To ensure proper engine brake housing installation, Jake Brake mounting bolts (identified by a circle "J" on the heads) and required one-piece spacers *must* be used when mounting the brake assemblies.

4. Install six (6) 140 mm bolts into each housing and through the spacers in locations 9 through 14.
5. Torque all mounting bolts to 136 N·m (100 lb-ft) in bolt location number sequence shown. See Figure 1-443c.
6. Route the wire to the solenoid for cylinder 1 through the front retaining clip on the front housing and connect to the solenoid. Torque screw to 1.13 N·m (10 lb·in.).
7. Route wire to the solenoid for cylinders 3 and 4 through the rear retaining clip on the front housing and connect to the solenoid. Torque screw to 1.13 N·m (10 lb·in.).
8. Route wire to the solenoid for cylinders 4, 5 and 6 through the single retaining clip on the rear housing and secure to the terminal screw on the solenoid. Torque screw to 1.13 N·m (10 lb·in.).
9. Secure any excess wire to the injector harness with wire ties.

All information subject to change without notice.
6SE483 9901 Copyright © 1999 DETROIT DIESEL CORPORATION

1.29.10.1 Set Slave Piston Lash

The slave piston lash must be set after Jake Brake housings are installed. Adjustments must be made with the engine stopped and cold and the oil temperature at 60°C (140°F) or below. Exhaust valves on the cylinder must be in the closed position (rocker arm roller should be on the base circle of the camshaft).

NOTICE:
The slave piston adjustment procedure *must* be followed exactly. Failure to properly adjust Jake Brakes will result in inefficient engine brake performance and may lead to severe engine or Jake Brake damage.

Adjust Jake Brake Model 790 slave piston lash as follows:

1. Loosen the locknut. Then, using a 5/16 in. Allen wrench, turn the J-Lash adjusting screw counter-clockwise until a 0.660 mm (0.026 in.) feeler gauge can be inserted between the slave piston and the exhaust rocker adjusting screw. Insert the feeler gauge.
2. Using the 5/16 in. Allen wrench, turn the J-Lash adjusting screw in (clockwise) until the slave piston contacts the feeler gauge and the exhaust rocker adjusting screw. When the valve spring begins to compress, turn the screw clockwise *one* additional turn. *Wait at least 30 seconds for oil to be purged from the J-Lash adjusting screw.* See Figure 1-443d.

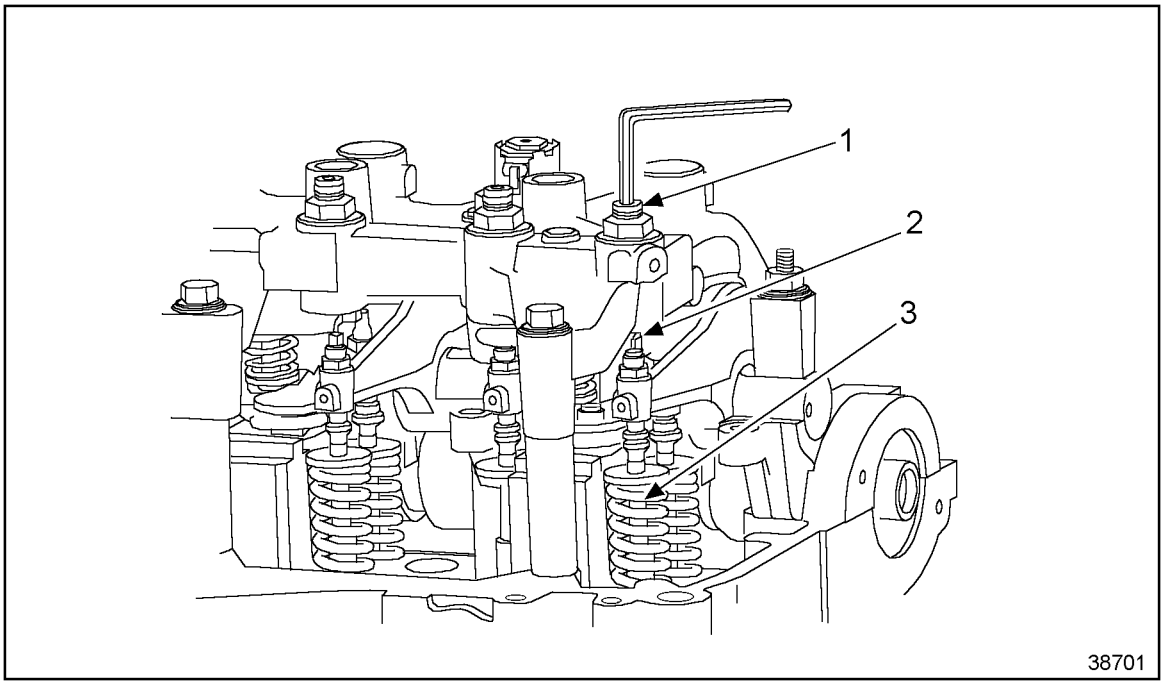

1. J-Lash Adjusting Screw
2. Slave Piston
3. Exhaust Valve Spring

Figure 1-443d Turn the Adjusting Screw Until the Valve Spring Compresses

NOTICE:

Oil *must* be purged from the J-Lash adjusting screw. Oil remaining in the J-Lash screw will cause inaccurate clearance adjustment, which could result in damage to the engine or Jake Brake. ***If oil is below room temperature (below 16° C or 60° F), wait at least two minutes for oil to be purged from the J-Lash adjusting screw.***

3. After waiting the required interval to purge oil from the J-Lash adjusting screw, back out the adjusting screw (turn counter-clockwise) ***only*** until a 0.660 mm (0.026 in.) feeler gage can be moved with a slight resistance. See Figure 1-443e. *Do not back out the J-Lash adjusting screw more than required to obtain a light drag on the feeler gage.* Using the Allen wrench to hold the J-Lash adjusting screw in place, torque the lock nut to 35 N·m (25 lb-ft).

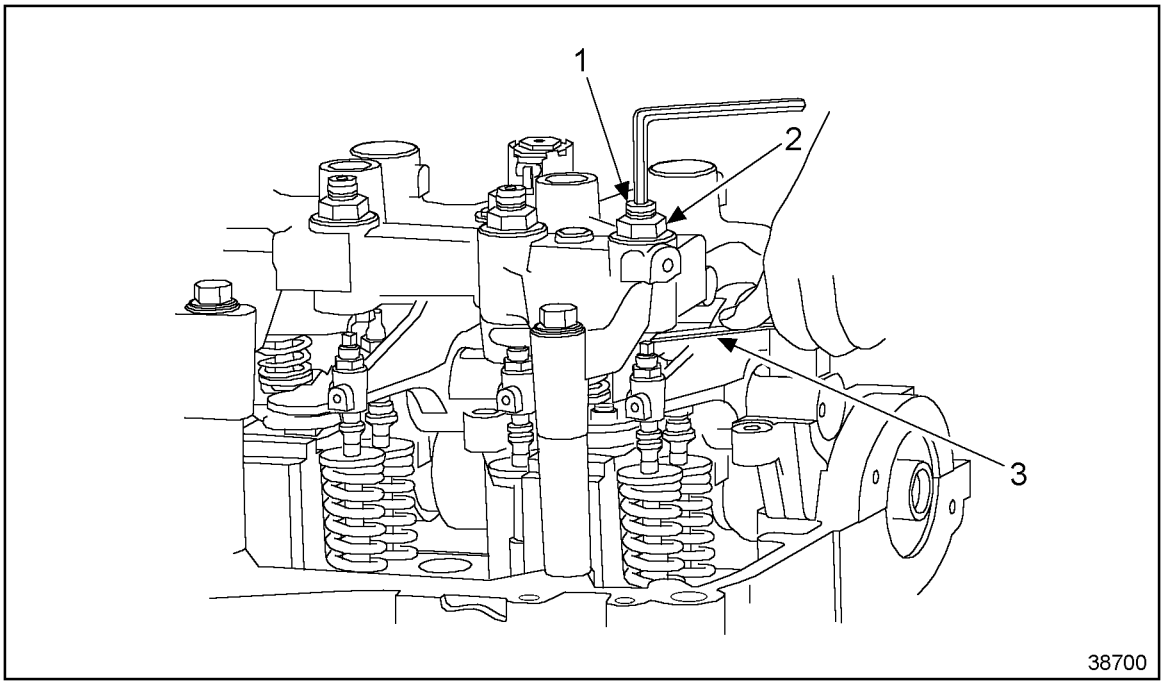

1. J-Lash Adjusting Screw
2. Locknut
3. Feeler Gage

Figure 1-443e Adjusting Slave Piston Lash

NOTE:
If the J-Lash adjusting screw is backed out until it no longer compresses the slave piston spring, oil will enter the screw and the adjustment will be incorrect. If this occurs, repeat step 1 and step 2.

All information subject to change without notice.
6SE483 9901 Copyright © 1999 DETROIT DIESEL CORPORATION

4. After torquing the adjusting screw lock nut, recheck lash setting. If lash is incorrect, repeat step 1 and step 2.

NOTE:
Once the engine brake has been run, you will not be able to check Jake Brake adjustment. This is because of oil retained in the J-Lash adjusting screw. If unsure of the adjustment, you must repeat step 1 through step 3.

5. Repeat step 1 through step 3 for the remaining slave piston on the same cylinder.
6. Repeat step 1 through step 4 for the remaining cylinders.
7. Complete the installation by installing the rocker cover. Refer to section 1.6 of the service manual.
8. Install all remaining components that were removed for this procedure.
9. Connect starting power for the engine.
10. Start and drive the vehicle to verify proper Jake Brake performance.

 Copyright © 1999 DETROIT DIESEL CORPORATION

This Page is Intentionally
Left Blank.

All information subject to change without notice.
6SE483 9901 Copyright © 1999 DETROIT DIESEL CORPORATION

SECTION 03: FUEL SYSTEM

CONTENTS

1. FUEL SYSTEM DESCRIPTION 03-3

2. FUEL LINES AND FLEXIBLE HOSES 03-4

3. FUEL VALVES 03-4

4. FILTERS AND WATER SEPARATOR 03-4

4.1 FUEL FILTER/WATER SEPARATOR SERVICING 03-4
4.2 FUEL FILTER SERVICING (PRIMARY AND SECONDARY) 03-5
4.3 DAVCO FUEL PRO 382 03-6
4.4 PREHEATER FUEL FILTER 03-6

5. FUEL TANK 03-7

5.1 TANK REMOVAL 03-7
5.1.1 Main Fuel Tank 03-7
5.1.2 Auxiliary Fuel Tank (if so equipped) 03-8
5.1.3 Transverse Fuel Tank 03-8
5.2 TANK INSTALLATION 03-8
5.3 FUEL TANK VERIFICATION 03-9
5.4 POLYETHYLENE FUEL TANK REPAIR 03-10

6. PRIMING FUEL SYSTEM 03-10

7. FUEL PUMP INSTALLATION 03-10

8. FUEL OIL SPECIFICATIONS 03-11

9. AIR CLEANER (DRY TYPE) 03-11

9.1 PRE-CLEANER SERVICING 03-11
9.2 AIR CLEANER SERVICING 03-11
9.3 GENERAL RECOMMENDATIONS 03-12
9.4 AIR CLEANER RESTRICTION INDICATOR 03-12

10. FUEL COOLER 03-12

11. FUEL PEDAL 03-12

11.1 FUEL PEDAL ADJUSTMENT 03-12
11.2 POTENTIOMETER REPLACEMENT 03-13

12. SPECIFICATIONS 03-13

ILLUTRATIONS

FIGURE 1: FUEL SYSTEM SCHEMATIC 03-3
FIGURE 2: MANUAL SHUT-OFF VALVES 03-4
FIGURE 3: FUEL FILTER/WATER SEPARATOR 03-5
FIGURE 4: DAVCO FUEL PRO 382 FUEL FILTER 03-6
FIGURE 5: 180 US GALLONSFUEL TANK (XL2-40) 03-8
FIGURE 6: 208 US GAL. MAIN FUEL TANK (XL2-45) & 90 US GAL. AUXILIARY FUEL TANK (OPTIONAL) (MTH 45) 03-9
FIGURE 7: 250 US GALLONS FUEL TANKS (MAIN TANK & TRANSVERSE FUEL TANK) (MTH 40 & MTH 45E) 03-9
FIGURE 8: FUEL TANK REPAIR 03-10
FIGURE 9: PRIME PUMP SWITCH LOCATION 03-10
FIGURE 10: FUEL PUMP LOCATION 03-11
FIGURE 11: RESTRICTION INDICATOR 03-12
FIGURE 12: ELECTRONIC FOOT PEDAL ASSEMBLY03010 03-13

1. FUEL SYSTEM DESCRIPTION

Figure 1 shows a schematic of the fuel system. Fuel is drawn from the fuel tank through a manual shut-off valve, a primary fuel filter or a fuel filter/water separator (optional) before it enters the fuel pump. Leaving the pump under pressure, the fuel flows through a secondary fuel filter and a shut-off valve, then to the cylinder head. The fuel reaches the injectors in the cylinder head through passages within the head. Excess fuel exits at the rear of the head just above the inlet, through a restrictive return fitting which maintains fuel pressure in the system. Finally, the fuel flows through the check valve and the fuel cooler before it returns to the fuel tank. Three preheaters are available: 41 000 BTU, 45000 BTU or 80 000 BTU. If the vehicle is equipped with the 41 000 BTU preheater, the fuel is drawn from the tank through the fuel pump to the preheater. If the vehicle is equipped with the 45000 BTU or with the 80 000 BTU preheater, the fuel is drawn from the fuel tank through a fuel filter to the preheater. Excess fuel returns to the fuel tank.

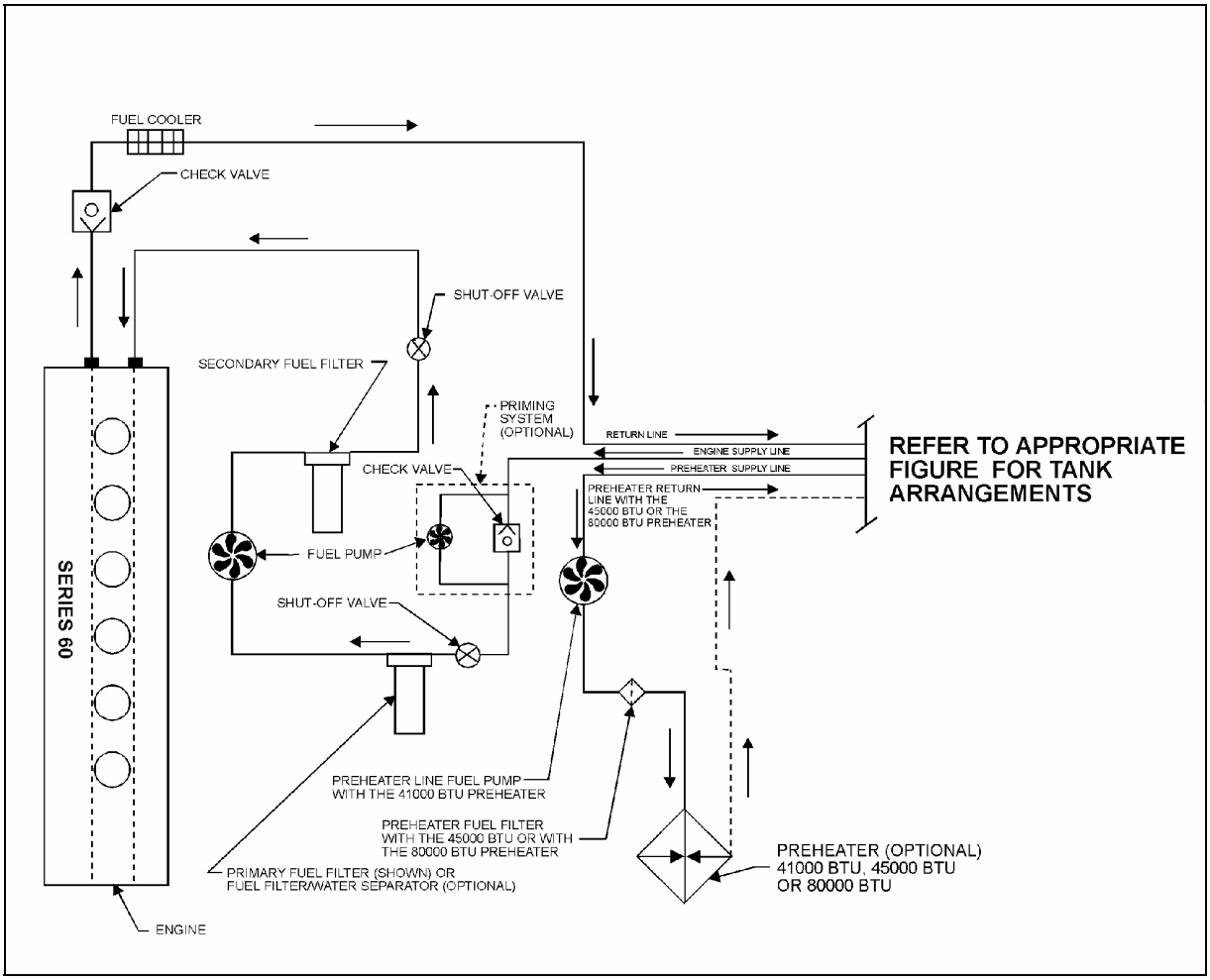

FIGURE 1: FUEL SYSTEM SCHEMATIC 03005

2. FUEL LINES AND FLEXIBLE HOSES

Make a visual check for fuel leaks at all engine-mounted fuel lines and connections and at the fuel tank suction and return lines. Since fuel tanks are susceptible to road hazards, leaks in this area may best be detected by checking for accumulation of fuel under the tank. Engine performance and auxiliary equipment is greatly dependent on the ability of flexible hoses to transfer lubricating oil, air, coolant and fuel oil. Diligent maintenance of hoses is an important step in ensuring efficient, economical and safe operation of engine and related equipment.

Check hoses daily as part of the pre-start-up inspection. Examine hoses for leaks and check all fittings, clamps and ties carefully. Make sure that the hoses are not resting on or touching shafts, couplings, and heated surfaces, including exhaust manifolds, any sharp edges or other obviously hazardous areas. Since all machinery vibrates and moves to a certain extent, clamps and ties can fatigue with age. To ensure continued proper support, inspect fasteners frequently and tighten or replace them as necessary. Refer to the schematic diagram of the fuel system (Fig. 1).

Caution: *Oil level above the dipstick full mark or a decrease in lube oil consumption may indicate internal fuel leaks. Check oil level frequently.*

3. FUEL VALVES

Manual shut-off valves on engine fuel-supply line are located on the R.H. side of engine compartment (Fig. 2). A manual shut-off valve is located at the inlet side of the primary fuel filter (fuel filter/water separator, if vehicle is so equipped) under the air compressor. Another manual shut-off valve is located at the outlet side of the secondary fuel filter, under the starter. No manual valve is required on preheater fuel-supply line, since the positive-displacement fuel pump (located close to the fuel tank) prevents fuel flow when not activated.

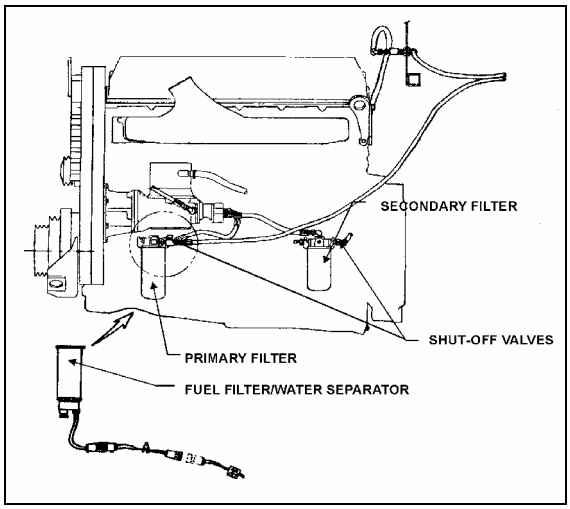

FIGURE 2: MANUAL SHUT-OFF VALVES 03006

4. FILTERS AND WATER SEPARATOR

The fuel system is equipped with primary and secondary fuel filters for additional protection of the injectors. A fuel-filter/water-separator may be installed in primary fuel-filter location, to prevent water infiltration in engine fuel system (Fig. 2). It should be drained periodically, or when the water separator telltale light on the dashboard illuminates. To drain, loosen positive seal drain valve below separator, and tighten after water has been flushed out.

Note: *The operating conditions and cleanliness of type of fuel used determine the service intervals of the filter/water separator element and the secondary fuel filter cartridge.*

4.1 FUEL FILTER/WATER SEPARATOR SERVICING

The fuel filter/water separator is located on the starter side of the engine, below the air compressor. The water separator must be drained periodically or when the telltale light on the dashboard illuminates.

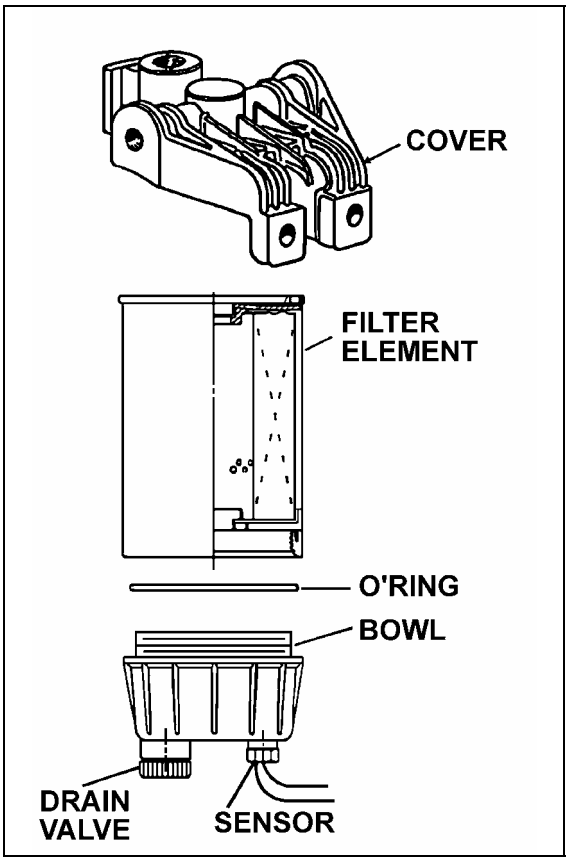

FIGURE 3: FUEL FILTER/WATER SEPARATOR 03025

Replace the water separator element as follows:

1. Drain the fuel filter/water separator as stated previously.
2. With engine "OFF" and engine fuel supply line valves closed; remove the filter element/bowl assembly from cover (for valve location, see *"3. FUEL VALVES"* in this section).
3. Separate bowl from filter element. Clean bowl and O-ring groove.

Note: *Bowl is reusable, do not discard.*

4. Lubricate O-ring with clean diesel fuel or motor oil and place it in bowl groove.
5. Screw new filter element onto bowl snugly by hand.

Caution: *Do not use tool to tighten. Tighten by hand only.*

6. Lubricate filter seal with clean diesel fuel or motor oil.
7. Fill filter element/bowl assembly with clean diesel fuel and attach onto cover. Hand tighten an additional 1/3 to 1/2 turn after making full seal contact.
8. Open valves of the engine fuel supply line.
9. Run the engine and check for leaks.

Caution*: If the water separator continuously requires draining, it is possible that water or sediment has accumulated in the fuel tank. To correct this situation, open the drain plug under the tank when the fuel gauge indicates tank is 1/4 full in order to drain any contaminant.*

4.2 FUEL FILTER SERVICING (PRIMARY AND SECONDARY)

The primary and secondary fuel filters are located on the R.H. side of the engine. The primary filter is located below the air compressor, and the secondary fuel filter is below the starter. They are of a spin-on type and must be replaced every 12,500 miles (20 000 km) or once a year, whichever comes first. The primary fuel filter is equipped with a positive seal drain-valve to prevent water infiltration in engine fuel system. To drain, loosen positive seal drain-valve below filter and tighten after water has been flushed out.

A method of determining when filters are clogged to the extent that they should be changed is based on the fuel pressure at the cylinder head fuel inlet fitting and the inlet restriction at the fuel pump. In a clean system, the maximum pump-inlet restriction should not exceed 6 inches of mercury (20.3 kPa) and must not exceed 12 inches of mercury (41 kPa) with a dirty system.

At normal operating speeds and with the standard 0.080" restriction fittings, the fuel pressure at the cylinder head inlet is 50-75 psi (345-577 kPa). Change the fuel filters whenever the inlet restriction at the fuel pump reaches 12 inches of mercury (42 kPa) at normal operating speeds. Also, change whenever the fuel pressure at the cylinder head inlet fitting falls to the minimum fuel pressure given above.

Change the filter cartridge(s) as follows:

Note: *Use a suitable band wrench or filter wrench, such as J22775, to remove the filters.*

1. Stop engine, shut off the engine fuel supply line valves (for valve location, See *"3. FUEL VALVES").* Unscrew and discard filters.
2. Fill new filter replacement cartridge(s) with clean fuel oil, about two thirds (2/3). Apply a thin coat of clean fuel oil on gasket.
3. Install new filters. Tighten until filter is snug against the gasket, with no side movement. Rotate an additional 1/2 turn by hand.
4. Open engine fuel supply line valves.

Caution: *Mechanical tightening of the fuel filters is not recommended and may result in seal and/or cartridge damage. Tighten the fuel filters by hand only.*

5. Start the engine and check for leaks.

Note: *There is a fuel system shut-off valve on the discharge side of the secondary fuel filter. This check valve is designed to prevent fuel loss at time of filter replacement.*

4.3 DAVCO FUEL PRO 382

The optional Fuel Pro 382 diesel fuel filter system consists of a permanently mounted fuel processor, a replaceable filter element, a filter element cover and collar and a fluid filter base assembly. This system is installed between the fuel tank and the fuel pump and is designed to be the only fuel filter in the fuel system. The filter serves as a water separator as well as a fuel filter.

When new, the fuel level as seen through the clear cover in the 382 filter is very low. It rises as dirt collects on the filter from the bottom up. Restriction remains consistently low because fuel always flows through clean, new media. Change filter when fuel level reaches the top of filter element.

Filter renewal:

1. Stop engine;
2. Drain fuel by opening the drain valve;
3. Untighten upper collar, remove cover;
4. Replace filter element;
5. Check O-Rings and components for wear;
6. Replace cover, hand tighten collar;
7. Pour fuel up to bottom of filter element through spin off cap located on top of cover.
8. Start engine, raise rpm for 2-3 minutes, hand tighten collar again.

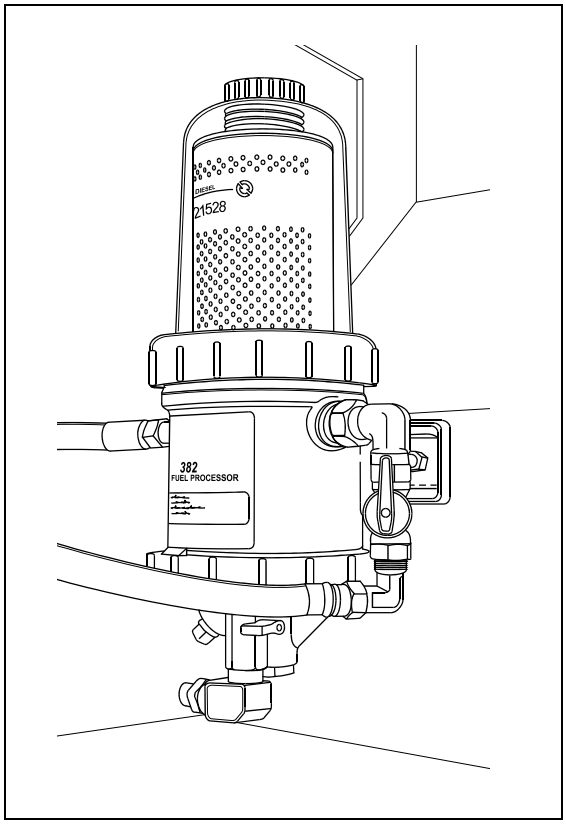

FIGURE 4: DAVCO FUEL PRO 382 FUEL FILTER 03032

Note*: Fuel Pro 382 also accepts standard secondary spin-on fuel filters.*

Environmental Notice*: Diesel fuel is an environmentally hazardous product. Dispose in an environmentally friendly manner.*

4.4 PREHEATER FUEL FILTER

The preheater fuel filter is installed only on vehicles with the optional 45000 BTU or 80 000 BTU preheaters. The filter is located beside the preheater, in the L.H. side rear service compartment or on the R.H. side of engine compartment. Replace the filter every 50,000

miles (80 000 km) or once a year, whichever comes first.

5. FUEL TANK

All XL2 series vehicles are equipped with a high-density cross-link polyethylene fuel tank. XL2-40 coach has a capacity of 180 US gallons (681 liters) and XL2-45 coach has a capacity of 208 US gallons (787 liters). MTH 40 and MTH 45E fuel tanks have a total capacity of 250 US gallons (945 liters) while MTH 45 can be equipped with an optional 90 US gallons (341 Liters) auxiliary stainless steel tank forward of the standard 208 US gallons (787 liters) fuel tank. The main tank is located just forward of the rear baggage compartment, between the A/C condenser and evaporator. The auxiliary tank is located in the baggage compartment just forward of the main tank.

On XL2-40 vehicles, fuel filler neck is accessible by opening a small door located amidships, on R.H. side of vehicle. On all other vehicles, fuel filling access doors on both sides of vehicle provide direct access to filler necks; offering the added advantage of refueling from either side of vehicle.

A pressure relief valve on the fuel tank connection-panel relieves high-pressure buildup and an overflow tube allows offset air in the tank to escape during filling. For 95% of the tank volume, 5% of tank inside space is kept filled with air with no exit opening, allowing for a fuel expansion safety margin. A drain plug, accessible from under the vehicle, is fitted at the bottom of the tank(s).

5.1 TANK REMOVAL

Warning: *Park vehicle safely, apply parking brake, stop engine and set battery master switch (es) to the OFF position before working on the vehicle.*

Before working under an air-suspended vehicle, it is strongly recommended to support the body at the recommended jacking points.

Note: *Before removal, the fuel tank should be completely drained by unscrewing the drain plug. Ensure that the container used has a capacity equal to the amount of fuel remaining in the tank(s).*

For vehicles equipped with a transverse tank or an auxiliary tank, drain it as well since it is directly connected to the main tank.

It is possible to drain both tanks through only one plug, but the other tank will not drain completely since the connecting hose is not on the bottom.

5.1.1 Main Fuel Tank

1. Open the condenser door and remove the fuel tank access panel. The rear baggage compartment fuel tank access panel may also be removed to facilitate access to components.
2. If applicable, unscrew clamps retaining L.H. side filler tube to the fuel tank, then disconnect tube and remove it.
3. Unscrew clamps retaining R.H. side filler tube to fuel tank and filler neck. Disconnect tube and remove it.
4. If applicable, unscrew preheater supply line, preheater return line, auxiliary return line and/or auxiliary return line from fuel tank connection-panel.
5. Unscrew engine supply and return lines from fuel tank connection-panel, identify them for reinstallation.

Note : *For vehicles equipped with a transverse tank or an auxiliary tank, the two hoses joining the tanks should be disconnected.*

6. Disconnect electrical wiring from tank on connection plate.

Warning: *Before removing the bolts securing the tank support to the frame, make sure the tank is supported adequately. Failure to do so could result in injury as well as damage to the tank.*

7. From under the vehicle, on R.H. side, unscrew the 4 bolts (2 in front, 2 in back) retaining the tank support to the frame.

8. From under the vehicle, on the L.H. side, unscrew the 2 bolts (1 in front, 1 in back) retaining the tank support to the frame.
9. Carefully remove tank from under the vehicle.

5.1.2 Auxiliary Fuel Tank (if so equipped)

1. Open the baggage compartment just forward of condenser compartment, disconnect the (2) hoses previously joining the tanks.
2. From underneath vehicle, unscrew the two (2) bolts retaining the tank strap (one on each side).
3. From inside the baggage compartment just forward of condenser compartment, slightly raise the strap and pull out auxiliary fuel tank using the same care as for the main fuel tank.

Caution : *Protective cushions or rags should be placed on the baggage compartment floor to prevent it from being scratched by the fuel tank during removal.*

5.1.3 Transverse Fuel Tank

1. The transverse fuel tank must be removed from R.H. side. The stainless steel panel must be removed by first removing the adhesive.
2. From underneath the vehicle, unscrew the bolt on left and right hand side securing the tank foot. Unscrew the two screws at the center of the tank then disconnect the two hoses previously joining the tanks.
3. Unscrew clamps retaining L.H. side filler tube to the fuel tank, then disconnect tube and remove it.
4. Unscrew clamps retaining R.H. side filler tube to fuel tank and filler neck. Disconnect tube and remove it.
5. Remove plastic molded panel from inside baggage compartment located forward of A/C & Heating compartment.
6. Slide the tank out carefully.

5.2 TANK INSTALLATION

To install Main, Auxiliary and Transverse Fuel Tanks, simply reverse the *"Tank Removal"* procedure.

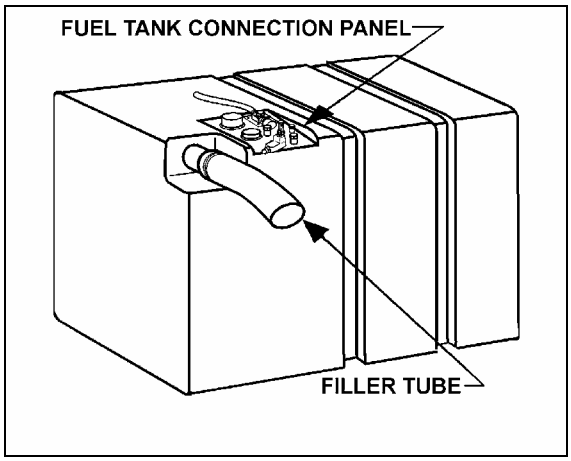

FIGURE 5: 180 US GALLONSFUEL TANK (XL2-40) 03027

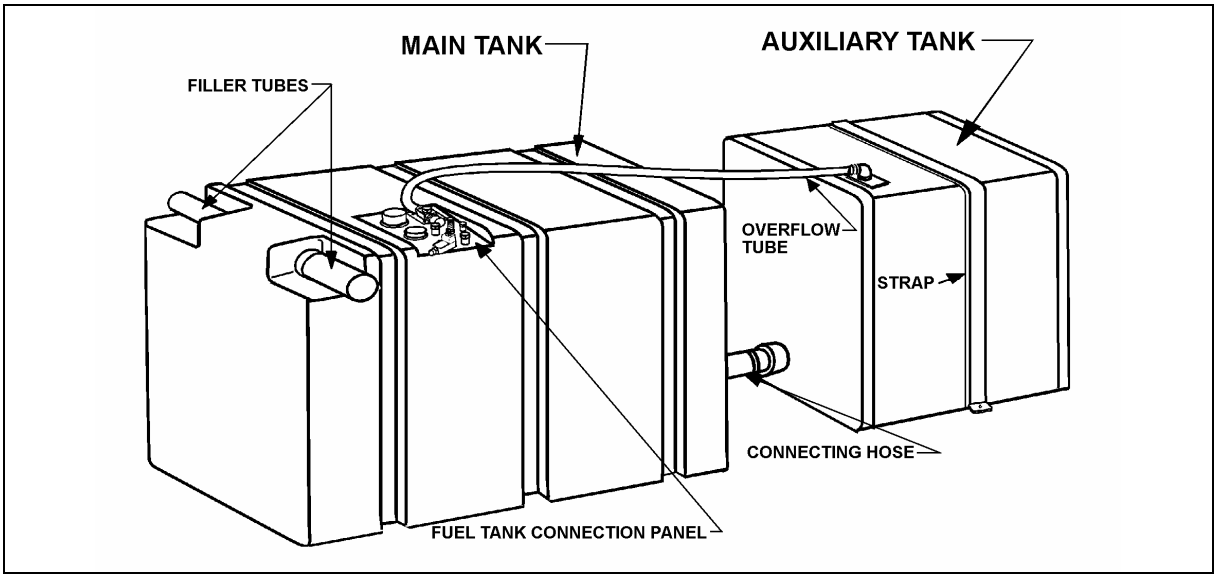

FIGURE 6: 208 US GAL. MAIN FUEL TANK (XL2-45) & 90 US GAL. AUXILIARY FUEL TANK (OPTIONAL) (MTH 45) 03028

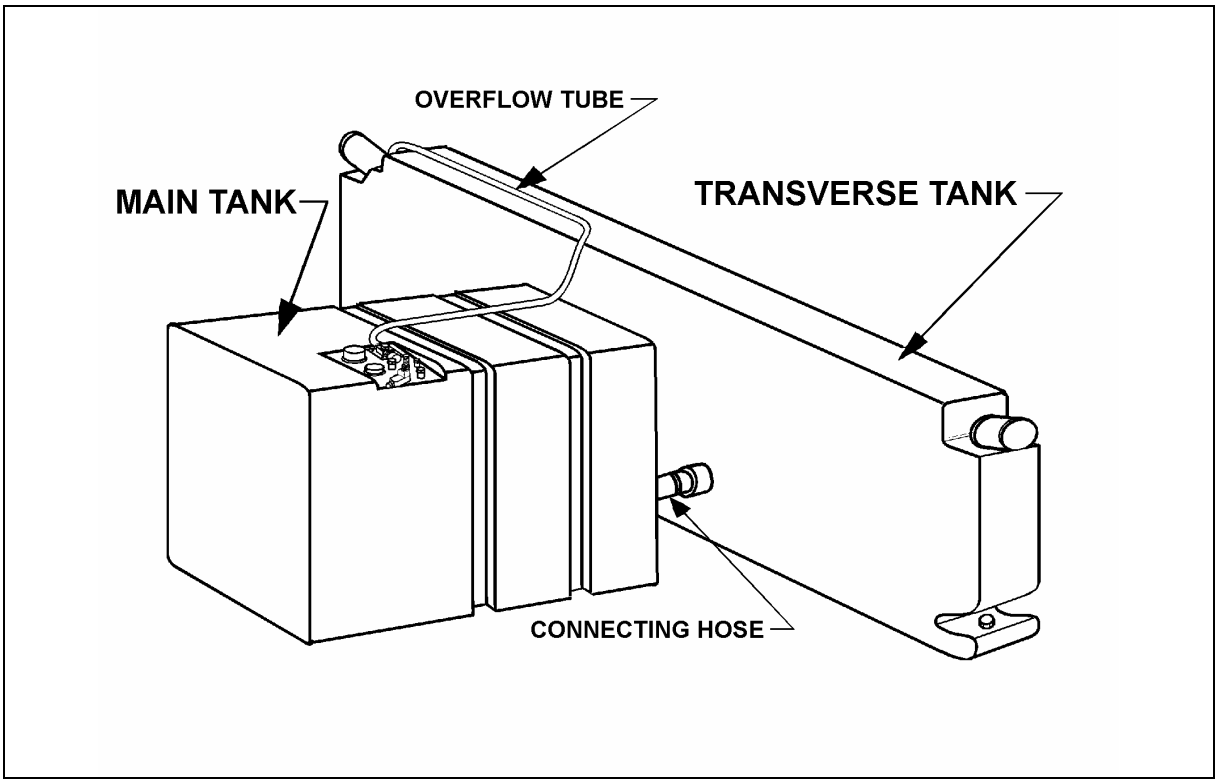

FIGURE 7: 250 US GALLONS FUEL TANKS (MAIN TANK & TRANSVERSE FUEL TANK) (MTH 40 & MTH 45E) 03029

5.3 FUEL TANK VERIFICATION

Inspect fuel tank from under vehicle for leaks or fuel traces. If a leak is detected, repair immediately as per "Polyethylene Fuel Tank Repair" in this section.

Warning: *Park vehicle safely, apply parking brake, stop engine and set battery master switch(es) to the OFF position before working on the vehicle.*

Before working under an air-suspended vehicle, it is strongly recommended to support the body at the recommended jacking points.

5.4 POLYETHYLENE FUEL TANK REPAIR

Note*: Fuel level must be lower than perforation to carry out this procedure.*

Warning*: Park vehicle safely, apply parking brake, stop engine and set battery master switches to the OFF position before working on the vehicle.*

1. Locate perforation on fuel tank.
2. If necessary, remove fuel tank as per instructions in this section.
3. Drill perforation with a 23/64" bit. Make sure drill hole is perfectly round.
4. Insert a screw (Prevost #500196) and a washer (Prévost #5001244) into anchor nut (Prévost #500331).
5. Place assembly in drill hole. tighten screw by 10 complete turns. Refer to Fig. 7.
6. Apply sealant on head plug (Prévost #507300) and seal hole with the head plug.

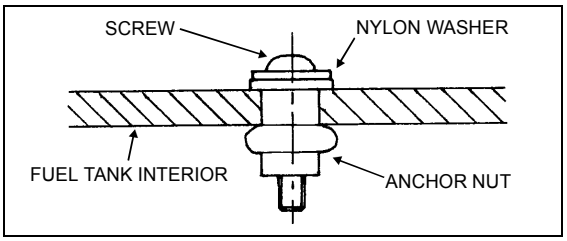

FIGURE 8: FUEL TANK REPAIR 03014

6. PRIMING FUEL SYSTEM

The problem with restarting a diesel engine that has run out of fuel, is that after the fuel is exhausted from the tank, it is pumped from the primary fuel filter or the fuel filter/water separator (if vehicle is so equipped), and sometimes partially removed from the secondary filter. This results in an insufficient fuel supply to sustain engine firing. The primary fuel filter or fuel filter/water separator and secondary filter must be free of air in order for the systems to provide adequate fuel for the injectors. When the engine runs out of fuel, the following operations must be performed before restarting:

Fill fuel tank with the recommended fuel oil. If only partial filling is possible, add a minimum of 10 gallons (38 liters) of fuel.

- If the vehicle is equipped with a Fuel Pro 382 fuel filter/water separation, pour fuel through spin on cap as per "4.3 DAVCO FUEL PRO 382".
- If the vehicle is equipped with an optional priming pump see Figure 1.

Press the priming switch, located in the engine compartment rear junction box just below the switches and cables. Start the engine and check for leaks.

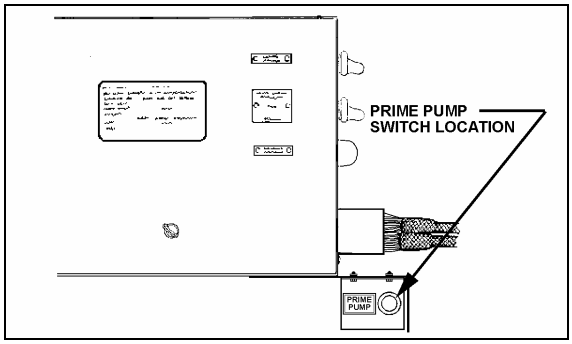

FIGURE 9: PRIME PUMP SWITCH LOCATION 01037

If the vehicle is not equipped with a priming pump:

1. Unscrew the cap on the priming valve located on the secondary filter;
2. Direct fuel under pressure 25 psi (172 kPa) to the priming valve using a quick coupling;
3. Start the engine and check for leaks.

7. FUEL PUMP INSTALLATION

The fuel pump is driven off the rear of the air compressor.

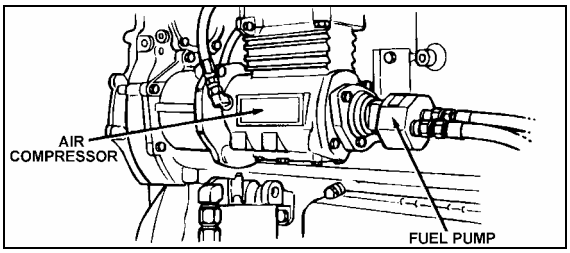

FIGURE 10: FUEL PUMP LOCATION 03026

1. If removed, install inlet and outlet fittings in the cover of the fuel pump.

Note: *New fittings have sealant already applied. When reusing fittings, coat the threads lightly with Locktite Pipe Sealant, Detroit Diesel number J 26558-92, or equivalent, before installing. To prevent sealant from entering fuel system, do not apply to the first two threads of the fitting. Do not use Teflon tape or paste on the fittings.*

2. Install drive coupling in drive hub of the fuel pump. Install a new gasket to the mounting flange of the pump.
3. Index the drive coupling with the drive hub on the end of the air compressor crankshaft and align the pump mounting boltholes with those in the air-compressor rear cover.

Note*: When correctly positioned, the outlet fitting on the pump should be in approximately an 8 o'clock position when viewed from the rear, and the drain opening in the pump body facing down.*

4. Seat the fuel pump squarely against the air compressor. Pilot the flange on the pump body, in the opening in the rear cover of the compressor. Install three mounting bolts and tighten them to 22-28 lbs•ft (30-38 N•m).
5. Connect the fuel inlet and outlet lines to the fuel pump and tighten.
6. Prime engine fuel system before starting engine to ensure pump seal lubrication and prompt engine starting.

8. FUEL OIL SPECIFICATIONS

The quality of fuel oil used for high-speed diesel engine operation is a very important factor in obtaining satisfactory engine performance, long engine life and acceptable exhaust emission levels. The fuel oil should meet ASTM designation D 975. Grade 1-D is recommended, however grade 2-D is acceptable.

Note: *These fuel grades are very similar to grade DF-1 or DF-2 of Federal Specifications VV-F-800. For detailed fuel recommendations, refer to publication "Engine Requirements-Lubricating Oil, Fuel, and Filters" #7SE270 available from Detroit Diesel Distributors.*

9. AIR CLEANER (DRY TYPE)

The vehicle is equipped with a dry-type replaceable element air cleaner, located in the engine compartment. Access the air cleaner through the engine R.H. side door. Engine air enters the air cleaner through (2) two intake ducts located just above engine side doors. It then flows through a pre-cleaner and finally through the air cleaner. The pre-cleaner removes dust and moisture by means of a discharge tube at the bottom of the element. It is in series with a replaceable impregnated paper filter element (air cleaner).

9.1 PRE-CLEANER SERVICING

The pre-cleaner is designed to be self-cleaning ; however, it should be inspected and any accumulated foreign material removed during the periodic replacement of the impregnated paper filter element.

9.2 AIR CLEANER SERVICING

Stop the engine, open the R.H. side engine compartment door, and loosen the wing nut retaining the air cleaner element to the air cleaner. Remove the element by pulling on the handle in the center of the air cleaner element.

Install cleaner element as follows:

1. Inspect the gasket-sealing surface inside the air cleaner. It must be smooth, flat and clean;
2. Install the air cleaner element;
3. Make sure that the element seals securely;
4. Inspect element cover gasket and replace if necessary.

Whenever it becomes necessary to remove the air cleaner assembly (dry type) for maintenance or other repair in this area, great care should be taken when installing air cleaner assembly.

The pre-filter should be installed snugly in the air duct and clamped tightly to the air cleaner inlet to prevent any dust infiltration into the air cleaner.

9.3 GENERAL RECOMMENDATIONS

The following maintenance procedures will ensure efficient air cleaner operation:

1. Keep the air cleaner housing tight on the air intake pipe;
2. Make sure the correct filters are used for replacement;
3. Keep the air cleaner properly assembled so the joints are air-tight;
4. Immediately repair any damage to the air cleaner or related parts;
5. Inspect, clean or replace the air cleaner or elements as operating conditions warrant. Whenever an element has been removed from the air cleaner housing the inside surface of the housing must be cleaned with a soft clean cloth;
6. Periodically inspect the entire system. Dust-laden air can pass through an almost invisible crack or opening which may eventually cause damage to an engine;
7. Never operate the engine without an element in the air cleaner assembly;

Caution : *Do not ignore the Warning given by the air restriction indicator. This could result in serious engine damage.*

8. Store new elements in a closed area free from dust and possible damage.

9.4 AIR CLEANER RESTRICTION INDICATOR

A resettable restriction indicator may be installed on the engine air-intake duct, clearly visible from the rear engine compartment. The indicator monitors the vacuum level between the air filter and the engine. A red marker is displayed when the air filter is clogged and must be replaced. Reset by pressing on the indicator's extremity.

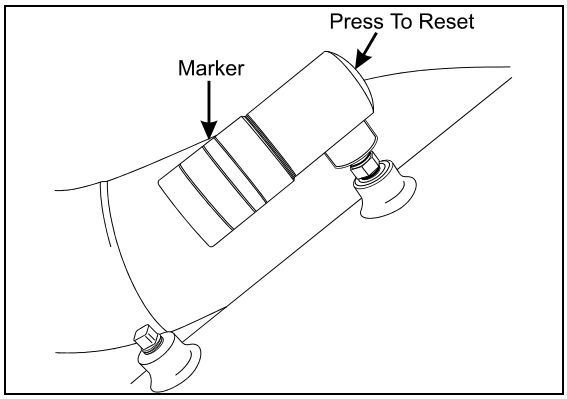

FIGURE 11: RESTRICTION INDICATOR 01052

10. FUEL COOLER

The fuel cooler serves to cool the surplus diesel fuel after it has exited the cylinder head, on its way back to the fuel tank. It is accessible through the engine radiator door, and it is located just in front of the coolant radiator.

11. FUEL PEDAL

The EFPA (Electronic Foot Pedal Assembly) connects the accelerator pedal to a potentiometer (a device that sends an electrical signal to the ECM, which varies in voltage, depending on how far down the pedal is depressed). The EFPA is installed in the space normally occupied by a mechanical foot pedal. It has maximum and minimum stops that are built into the unit during manufacturing.

11.1 FUEL PEDAL ADJUSTMENT

The EFPA contains a throttle position sensor that varies the electrical signal sent to the ECM. The sensor must be adjusted whenever an EFPA is serviced. In addition, the sensor should be adjusted any time codes 21 and 22 are flashed.

With the ignition "ON" and the proper diagnostic tool (DDR) (for information regarding the DDR, see *"01 ENGINE"* in this manual), check the throttle counts at idle and full throttle positions.

Proper pedal output should be 20/30 counts at idle and 200/235 at full throttle. If adjustment is necessary, remove the potentiometer retaining screws and rotate the potentiometer clockwise to increase counts or counterclockwise to

decrease. When correct output is confirmed, tighten retaining screws.

11.2 POTENTIOMETER REPLACEMENT

1. Disconnect cable harness connector.

Caution: *Note the routing and clamping locations of the cable before disassembly. Proper cable routing and fastening is critical to the operation of this system. Marking the foot pedal assembly to record cable routing is recommended.*

2. Loosen the two screws and remove potentiometer. Retain for re-assembly.
3. Discard potentiometer (Fig. 12).
4. Position new potentiometer. Press potentiometer onto the potentiometer shaft, matching cutouts in shaft to drive tangs of potentiometer. Apply hand pressure until potentiometer has bottomed out in housing. Reinstall screws (Fig. 12) and tighten just enough to secure potentiometer lightly. Tighten screws to 10 - 20 lbf•in (1.5 - .2 N•m).
5. Reconnect electronic foot pedal assembly's cable harness to the ECM connector. If potentiometer calibration is necessary (see *"FUEL PEDAL ADJUSTMENT"* in this section).

Caution: *Make sure the cable harness is routed correctly, and securely installed so that it does not become pinched, stretched, or otherwise damaged during vehicle operation.*

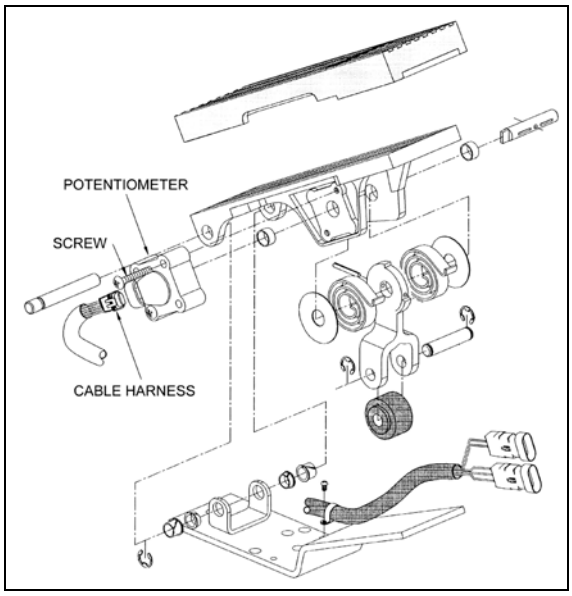

FIGURE 12: ELECTRONIC FOOT PEDAL ASSEMBLY 03035

12. SPECIFICATIONS

Davco FuelPro 382 Fuel Filter / Water Separator Element

Supplier number 23521528
Prévost number 531437

Primary Fuel Filter / Water Separator (optional)

(May be used instead of primary filter (never use with a primary filter).

Make ..... Racor
Type ..... Spin-on

ELEMENT

Supplier number ..... S 3202
Prévost number 531390

BOWL

Supplier number RK30051
Prévost number 531389

DRAIN VALVE AND SEAL

Supplier number RK30058
Prévost number 531397

O-RING
Supplier number RK30076
Prévost number 531398

PROBE/WATER SENSOR
Supplier number RK21069
Prévost number 531391

Primary Fuel Filter
Make ..... AC
Type ..... Spin-on
Filter No. T-915D
Service Part No. 25014274
Prévost number 510137
OR
Service Part No (Type with Water Separator) 23512317
Prévost number 531407
Element torque ..... 1/2 turn after gasket contact

Secondary Fuel Filter
Make ..... AC
Type ..... Spin-on
Filter No. T-916D
Service Part No. 25014342
Prévost number 510128
Element torque ..... 1/2 turn after gasket contact

Fuel tank(s) Capacity (ies)
Standard (XL2-40) ..... 180 US gallons (681 liters)
Standard (XL2-45 & MTH 45) ..... 208 US gallons (787 liters)
Standard (MTH 40 & MTH 45E) ..... 250 US gallons (945 liters)
Optional (MTH 45) ..... 90 US gallons (341 liters)

Air Cleaner
Make ..... Nelson
Prevost Number 530206
Service Part No 7182 8N
Supplier number (element cartridge) 70337N
Prévost number (element cartridge) 530197

Air Cleaner Restriction Indicator
Make ..... Donaldson
Model RBX00-2220
Indicates ..... at 20" (508 mm) of water
Prévost number 530161

Preheater Fuel Filter (45 000 BTU or 80 000 BTU)

Make ..... Webasto
Supplier number 603.359
Prévost number 871037

Preheater Line Fuel Pump (41 000 BTU)

Make ..... Espar
Supplier number 25-1571-45-0000
Prévost number 870973

Fuel Cooler

Make ..... Berendsen
Supplier number DB-1240
Prévost number 950109

SECTION 04 : EXHAUST SYSTEM

CONTENTS

1. DESCRIPTION 4-2

2. MAINTENANCE 4-2

3. MUFFLER REMOVAL & INSTALLATION 4-4

4. FLEXIBLE TUBE INSTALLATION 4-4

5. HEAT BLANKETS (CONVERTED VEHICLES ONLY) 4-4

5.1 EXHAUST 4-4
5.1.1 Installation on XL2-45 Shells 4-4
5.1.2 Installation on XL2-40 & XL2-45E Shells 4-5
5.2 TURBO (ALL SHELLS) 4-5

ILLUSTRATIONS

FIGURE 1: EXHAUST SYSTEM - XL2-40 & 45E (COACH & SHELL) INSTALLATION 4-2
FIGURE 2: EXHAUST SYSTEM - XL2-45 (COACH & SHELL) INSTALLATION 4-3
FIGURE 3: FLEXIBLE TUBE INSTALLATION 4-4
FIGURE 4: EXHAUST BLANKET INSTALLATION 4-4
FIGURE 5: LACING WIRE INSTALLATION 4-5
FIGURE 6: TURBO BLANKET INSTALLATION 4-5

1. DESCRIPTION

The muffler is rubber mounted on the vehicle frame. This feature reduces the transmission of vibrations to the muffler thus resulting in extended life of muffler, brackets and other components.

2. MAINTENANCE

The exhaust system should be inspected periodically for restrictions and leaks. The exhaust systems are shown on figures 1 & 2 (fig. 1 = XL2-40 & 45E and fig. 2 = XL2-45). Restrictions such as kinked or crimped pipes result in excessive back pressure that can lead to increased fuel consumption, power loss, and possible damage to engine combustion chamber components. Exhaust leaks are commonly the result of loose clamp bolts, corroded pipes, or a punctured muffler. In addition to objectionable noise, a leaking exhaust system could allow toxic gases to enter the vehicle. Inspect the exhaust system as follows :

- At vehicle inspection intervals ;
- Whenever a change is noticed in the sound of the exhaust system ; and
- Whenever the exhaust system is damaged.

Replace damaged or corroded exhaust system components without delay.

When operating the engine in a service garage or in a closed area, the exhaust must be vented to the outside. Place the shop vent hose over the exhaust outlet pipe.

Warning: *Avoid breathing exhaust gases since they contain carbon monoxide which is odorless and colorless but harmful. Carbon monoxide is a dangerous gas that can cause unconsciousness and can be lethal. If, at any time you suspect that exhaust fumes are entering the vehicle, locate and correct the cause(s) as soon as possible.*

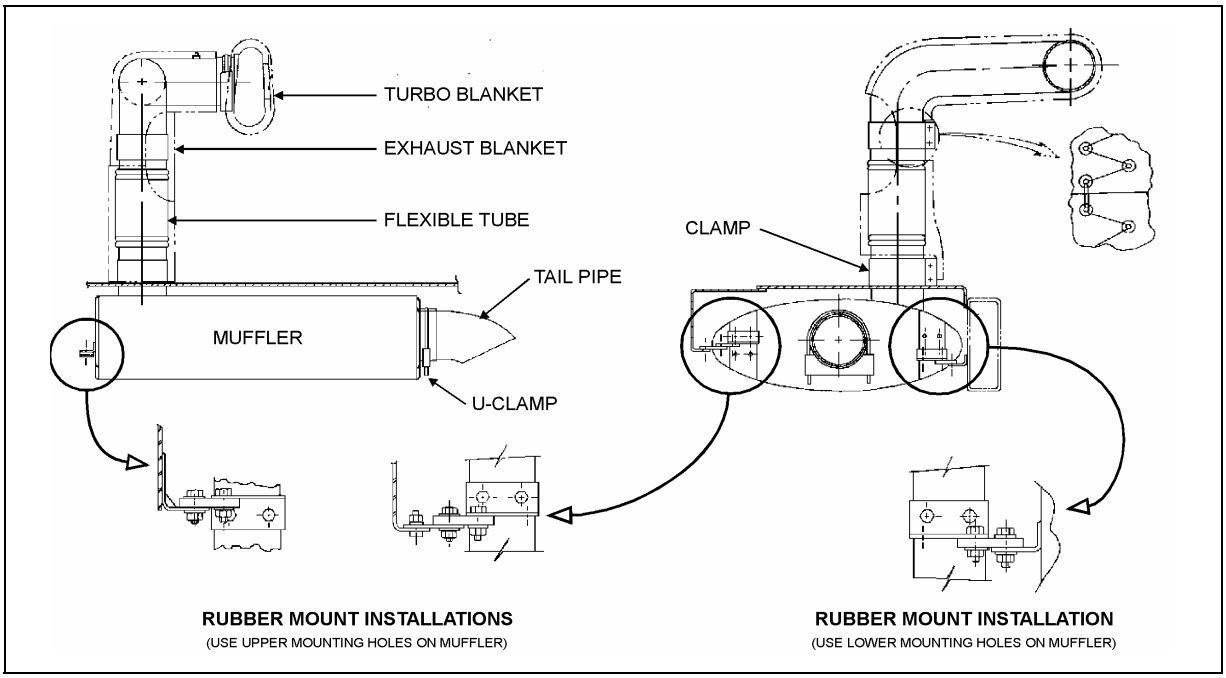

FIGURE 1: EXHAUST SYSTEM - XL2-40 & 45E (COACH & SHELL) INSTALLATION 04004

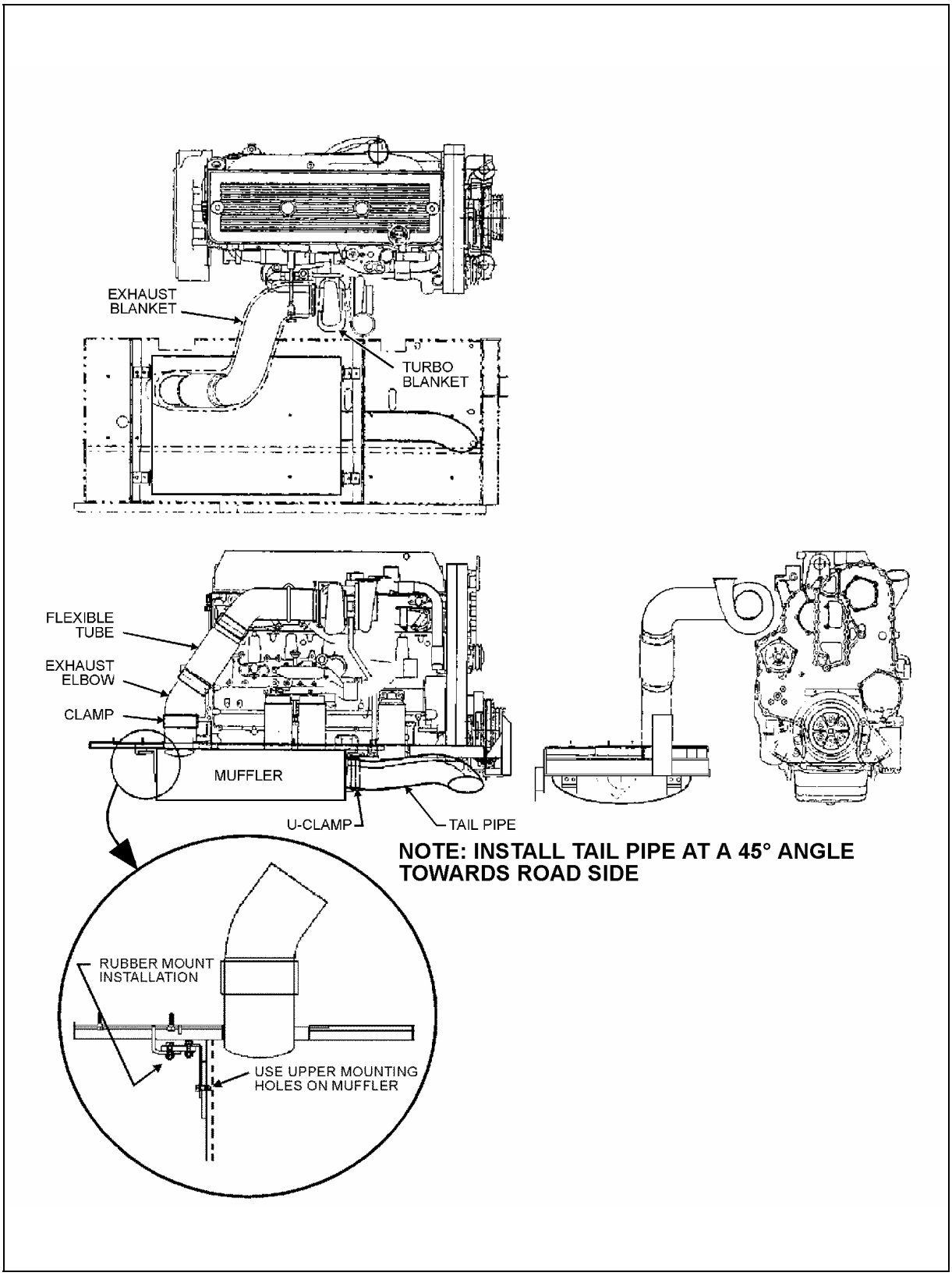

FIGURE 2: EXHAUST SYSTEM - XL2-45 (COACH & SHELL) INSTALLATION 04005

3. MUFFLER REMOVAL & INSTALLATION

Warning: *Make sure that muffler and components are cold before handling.*

1. Remove bolts and clamps securing exhaust pipe bellows to the muffler.
2. Support the muffler from underneath vehicle.
3. Remove U-clamp retaining the tail pipe to the muffler.
4. Remove bolt holding the tail pipe to the frame bracket.
5. Remove the tail pipe.
6. Remove the fasteners holding the four rubber mounts to the frame brackets.
7. Remove the fasteners securing the rubber mounts to the muffler brackets.
8. Remove rubber mounts then muffler from underneath vehicle.
9. Remove parts which are attached to the muffler such as brackets and collar.
10. Inspect and replace parts if necessary. Reinstall parts on the new muffler.

For installation, reverse the removal procedure.

Warning: *Check connections for tightness and fasteners for proper assembly.*

4. FLEXIBLE TUBE INSTALLATION

The flexible exhaust tube contains an inside rigid pipe. To allow appropriate flexibility for assembly, make sure that the rigid pipe is concentric to the flexible part.

To maintain the pipe centered at the time of installation, cardboard spacers must be inserted at four places at equal distance around tubing (Fig. 3). These spacers may be left in place and will deteriorate over time.

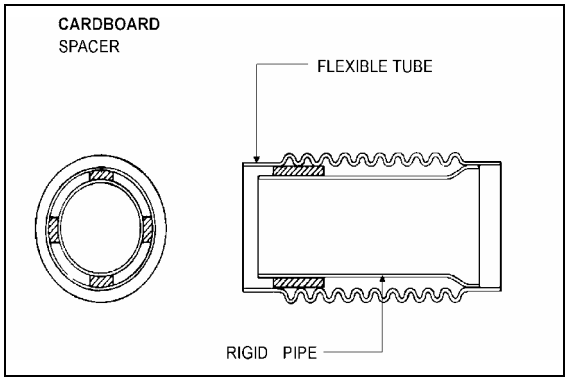

FIGURE 3: FLEXIBLE TUBE INSTALLATION 04003

5. HEAT BLANKETS (CONVERTED VEHICLES ONLY)

5.1 EXHAUST

5.1.1 Installation on XL2-45 Shells

1. Open L.H. side rear service compartment door, then working from inside compartment, cover bellows and exhaust pipe with blanket #040507 (Fig. 4). Position blanket so its recess is facing square tubing.

Note: *If access from L.H. side rear service compartment is limited, remove engine access panel from inside vehicle then work from this area.*

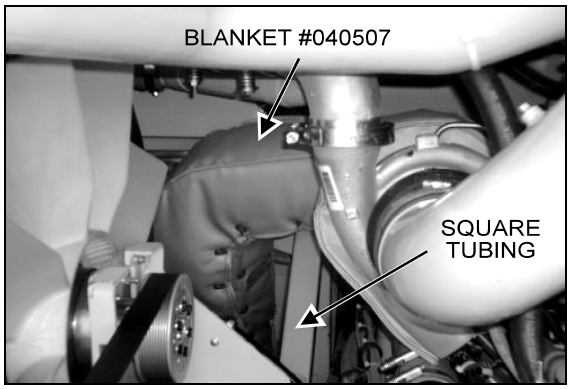

FIGURE 4: EXHAUST BLANKET INSTALLATION 01034

2. Form and compress blanket always working towards seams. Use temporary ties to position and hold blanket for forming, then shoelace for length of blanket using wire #509754 (fig. 5 shows typical installation). Perform a single loose wrap on each capstan. Align the small hole provided in the blanket with the exhaust port fitted on the exhaust pipe.

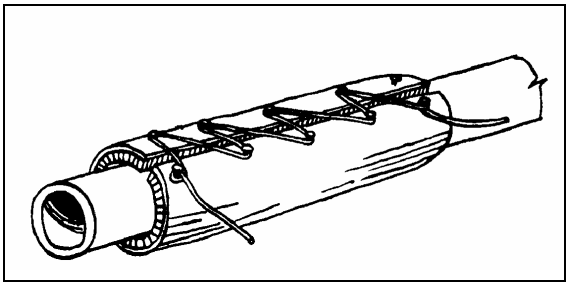

FIGURE 5: LACING WIRE INSTALLATION 01035

3. Install the turbo blanket as described further in this section.

5.1.2 Installation on XL2-40 & XL2-45E Shells

1. Working from inside vehicle, locate engine access panel located at rear of vehicle (just over engine), unscrew bolts (4 or 6) retaining panel then remove.

2. Cover bellows and exhaust pipe with blanket #040511. Position blanket so its recess is facing radiator shroud & fan. Refer to figure 4 showing installation on XL2-45 vehicles; on this model, the blanket is not provided with a recess since the clearance between radiator fan and exhaust pipe is sufficient.

Note: *It may be necessary to work from under the vehicle to install the blanket lower section.*

3. Form and compress blanket always working towards seams. Use temporary ties to position and hold blanket for forming, then shoelace for length of blanket using lacing wire #509754 (see figure 5 showing typical installation). Perform a single loose wrap on each capstan. Align the small hole provided in the blanket with the exhaust port fitted on the exhaust pipe.

Caution: *Ensure radiator fan does not touch the exhaust blanket.*

5.2 TURBO (ALL SHELLS)

Attach a section of lacing wire #509754 to both upper capstans of turbo blanket #040505, then cover turbine housing (Fig. 6). Attach upper capstans with lower capstans to secure blanket in place.

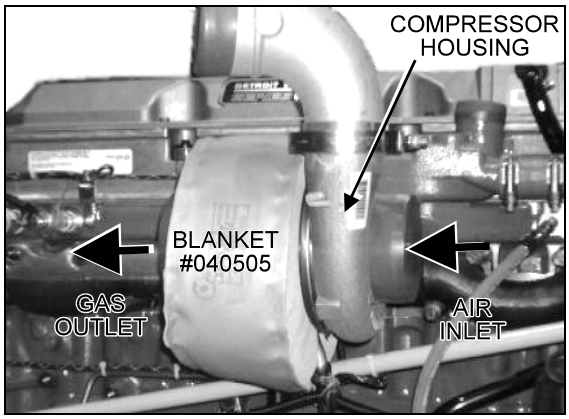

FIGURE 6: TURBO BLANKET INSTALLATION 01036

Note: *The compressor housing does not require a blanket.*

SECTION 05: COOLING SYSTEM

CONTENTS

1. DESCRIPTION 05-3

2. MAINTENANCE 05-4

2.1 VEHICLES WITHOUT COOLANT FILTERS 05-4
2.2 VEHICLES WITH COOLANT FILTERS 05-4

3. HOSES 05-5

3.1 CONSTANT-TORQUE HOSE CLAMPS 05-5
3.1.1 Installation 05-5
3.1.2 Maintenance 05-5

4. COOLANT 05-6

4.1 COOLANT LEVEL VERIFICATION 05-6
4.2 COOLANT LEVEL SENSOR 05-6
4.3 THAWING COOLING SYSTEM 05-6
4.4 COOLANT REQUIREMENTS 05-6
4.5 COOLING SYSTEM RECOMMENDATIONS 05-7
4.6 INHIBITORS 05-7
4.6.1 Inhibitor Test Procedures 05-7
4.7 COOLANT RECOMMENDATIONS 05-7
4.7.1 Vehicles Without Coolant Filters 05-8
4.7.2 Vehicles With Coolant Filters 05-8

5. DRAINING COOLING SYSTEM 05-8

6. FILLING COOLING SYSTEM 05-9

7. FLUSHING 05-10

7.1 COOLING SYSTEM DESCALERS 05-10
7.2 REVERSE FLUSHING 05-10

8. SPIN-ON COOLANT FILTER 05-11

9. RADIATOR 05-12

9.1 MAINTENANCE 05-12

10. VARIABLE SPEED RADIATOR FAN 05-12

10.1 MAINTENANCE 05-12
10.2 INSPECTION 05-13
10.3 THERMOSTAT OPERATION 05-13

11. FAN GEARBOX 05-13

11.1 MAINTENANCE 05-13
11.2 OIL CHANGE 05-13

12. RADIATOR FAN BELT REPLACEMENT 05-14

12.1 BELT TENSION ADJUSTMENT 05-14

13. FAN DRIVE ALIGNMENT 05-15

14. SPECIFICATIONS 05-17

ILLUSTRATIONS

FIGURE 1: COOLING SYSTEM 05-3
FIGURE 2: SURGE TANK - ENGINE COMP'T 05-4
FIGURE 3: CONSTANT-TORQUE CLAMP 05-5
FIGURE 4: SURGE TANK SIGHT GLASS 05-6
FIGURE 5: HEATER LINE SHUT-OFF VALVE 05-8
FIGURE 6: ENGINE COMPARTMENT 05-8
FIGURE 7: HEATER LINE SHUT-OFF VALVES 05-9
FIGURE 8: ENGINE COOLANT DRAIN COCKS 05-9
FIGURE 9: WATER PUMP DRAIN COCK 05-9
FIGURE 10: COOLANT FILTER 05-11
FIGURE 11: MECHANICAL LOCKING DEVICE 05-12
FIGURE 12: THERMOSTAT AND RELATED PARTS 05-13
FIGURE 13: FAN GEARBOX 05-13
FIGURE 14: PRESSURE RELEASING VALVE 05-14
FIGURE 15: REGULATOR VALVE 05-14
FIGURE 16: BELT TENSIONER 05-15
FIGURE 17: ANGLE SUPPORT 05-15
FIGURE 18: PULLEY ALIGNMENT 05-15
FIGURE 19: PULLEY VERTICAL ANGLE 05-15

1. DESCRIPTION

A radiator and thermo-modulated fan are used to effectively dissipate the heat generated by the engine. A centrifugal-type water pump is used to circulate the engine coolant (Fig. 1).

Two full blocking-type thermostats are used in the water outlet passage to control the flow of coolant, providing fast engine warm-up and regulating coolant temperature.

The engine coolant is drawn from the lower portion of the radiator by the water pump and is forced through the oil cooler and into the cylinder block. For vehicles with automatic transmissions, the coolant circulates in the transmission cooler before going through the oil cooler and the cylinder block.

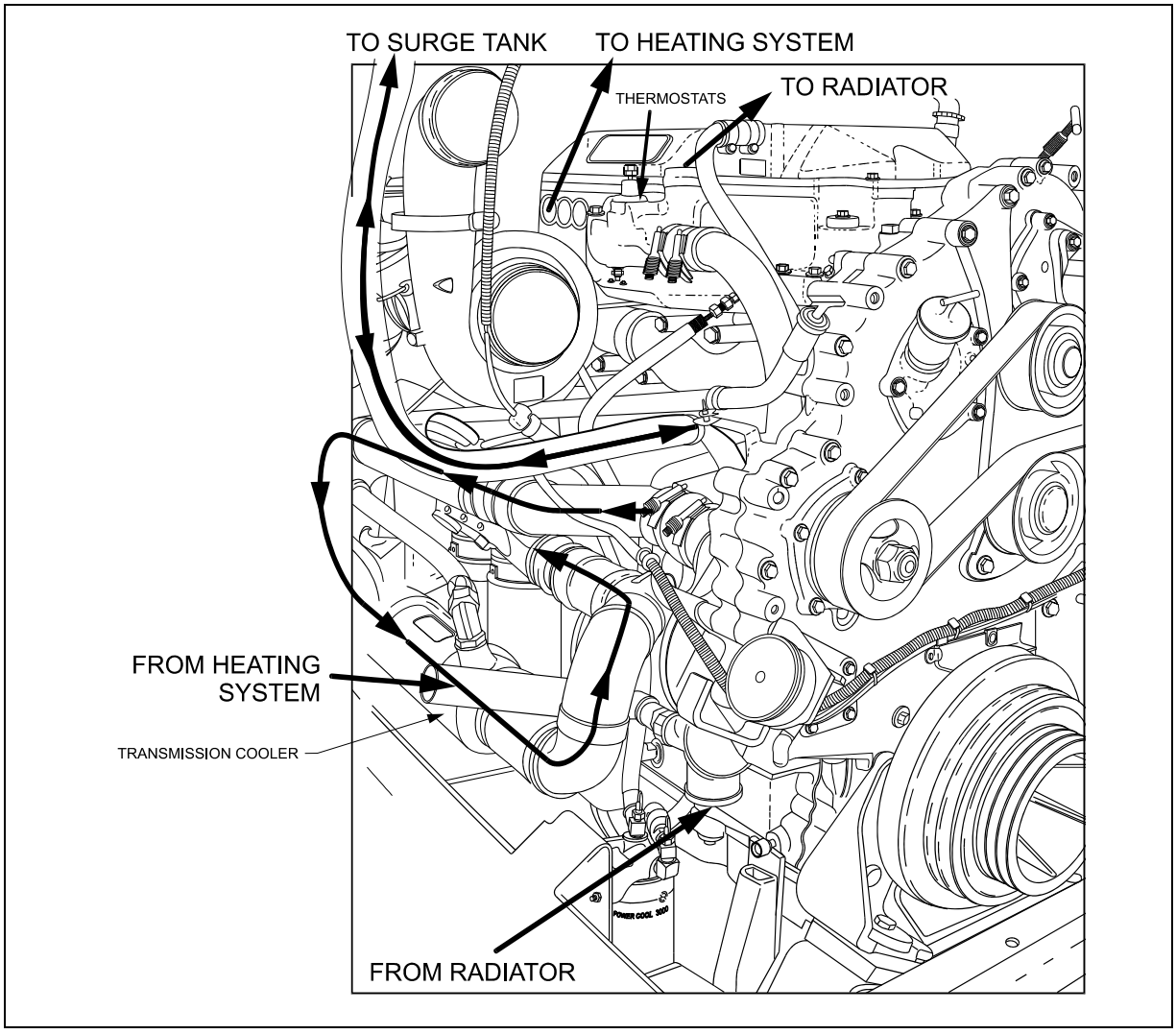

FIGURE 1: COOLING SYSTEM 05075

From the cylinder block, the coolant passes up through the cylinder head and, when the engine is at normal operating temperature, it goes through the thermostat housing and into the upper portion of the radiator. The coolant then passes through a series of tubes where its heat is dissipated by air streams created by the revolving fan and the motion of the vehicle.

Upon starting a cold engine or when the coolant is below normal operating temperature, the closed thermostats direct coolant flow from the thermostat housing through the by-pass tube to the water pump. Coolant is recirculated through

the engine to aid engine warm up. When the thermostat opening temperature is reached, coolant flow is divided between the radiator inlet and the by-pass tube. When the thermostats are completely open, all of the coolant flow is to the radiator inlet.

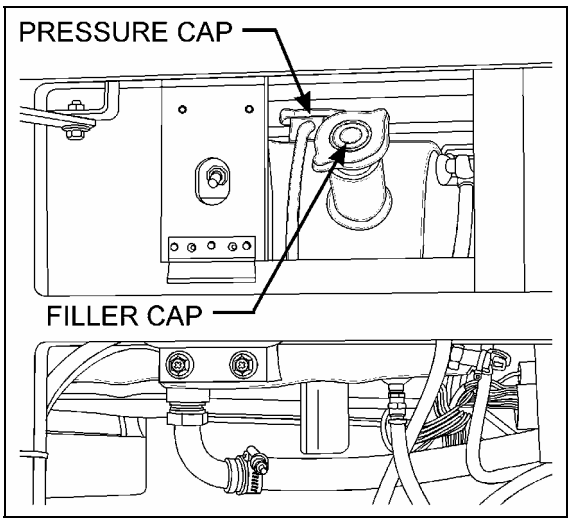

FIGURE 2: SURGE TANK - ENGINE COMP'T 05079

The cooling system is filled through a filler cap on the surge tank (Fig. 2). A pressure cap on top of surge tank or underneath later is used to maintain pressure within the system. When system exceeds normal pressure rating (14 psi - 96.53 kPa), the cap releases air and if necessary, coolant through the overflow tube (Fig. 2). Two thermostats are located in the housing attached to the right side of the cylinder head (Fig. 1). Furthermore, a water temperature sensor mounted on the cylinder head (radiator side) is also supplied for engine protection purposes.

The engine cooling system also provides hot coolant fluid for the vehicle heating system. Refer to section 22, *""HEATING AND AIR CONDITIONING"* in this manual for information relating to heating system water circulation.

2. MAINTENANCE

A systematic routine inspection of cooling system components is essential to ensure maximum engine and heating system efficiency.

- Check coolant level in the surge tank daily, and correct if required. Test antifreeze strength.
- Maintain the prescribed inhibitor strength levels as required. Coolant and inhibitor concentration must be checked at each oil change, every 12,500 miles (20 000 km) or once a year, whichever comes first to ensure inhibitor strength. For vehicles equipped with coolant filters replace precharge element filter with a maintenance element filter as per *"COOLANT FILTER"* in this section. If the vehicle is not equipped with a filter, add the recommended inhibitor concentration to the antifreeze/water solution.
- Drain, flush, thoroughly clean and refill the system every two years or every 200,000 miles (320 000 km), whichever comes first. For vehicle equipped with coolant filters, change the precharge element filter or the existing maintenance element filter for a new maintenance element filter. If the vehicle is not equipped with filters add the recommended inhibitor concentration to the antifreeze/water solution.

Note: *Do not add inhibitors to the antifreeze / water solution if vehicle is equipped with a coolant filter.*

Coolant must be discarded in an environmentally safe manner.

2.1 VEHICLES WITHOUT COOLANT FILTERS

Refer to Nalcool 3000 with Stabil-Aid bulletin annexed to the end of this section for preventive maintenance (at each oil change) and initial treatment instructions (each time the cooling system is drained and flushed).

2.2 VEHICLES WITH COOLANT FILTERS

Change the coolant precharge element filter for a maintenance element filter at initial oil change (see *"Specifications"* at the end of this section) and replace existing maintenance element filter with a new one as per *"COOLANT FILTER"* in this section. A precharge element filter must be installed each time the cooling system is drained and flushed prior to installing a maintenance element filter.

- Check belts for proper tension; adjust as necessary and replace any frayed or badly worn belts.

- Check radiator cores for leaks and make sure the cores are not clogged with dirt or insects. To avoid damaging the fins, clean cores with a low-pressure air hose. Steam clean if required.
- Inspect the water pump operation. A leaky pump sucks in air, increasing corrosion.
- Repair all leaks promptly. Unrepaired leaks can lead to trouble. Inspect and tighten radiator mounts periodically. Test and replace thermostats regularly.

Note: *In order to ensure the integrity of the system, it is recommended that a periodic cooling system pressure check be made. Pressurize the cooling system to 103-138 kPa (15-20 psi) using Radiator and Cooling System Tester, J24460-1. Do not exceed 138 kPa (20 psi).*

Any measurable drop in pressure may indicate a leak. Whenever the oil pan is removed, the cooling system should be pressure checked as a means of identifying any incipient coolant leaks. Make sure the cause of the internal leak has been corrected before flushing the contaminated system.

Leaks at the thermostat housing hose connections may be caused by deformation of connections or by rough surfaces on the castings of the hose mounting surfaces. It is recommended that *"Dow Corning RTV-102 Compound"* or any equivalent product be applied on cast surfaces prior to hose installation.

Caution: *Castings should be clean and free of oil and grease before applying compound. No other sealer should be used with RTV-102 compound.*

3. HOSES

Rotten, swollen, and worn out hoses or loose connections are frequent causes of cooling system problems.

Serious overheating is often caused by an old hose collapsing or from rotten rubber shedding from hoses and clogging the coolant passages.

Connections should be inspected periodically and hose clamps tightened. Replace any hose found to be cracked or swollen.

When installing a new hose, clean pipe connections and apply a thin layer of a non-hardening sealing compound. Replace worn out clamps or clamps that pinch hoses.

3.1 CONSTANT-TORQUE HOSE CLAMPS

All hose clamps of 1 3/8" ID and over, used on the heating and cooling systems, are of the *"Constant-torque"* type. These clamps are worm-driven, made of stainless steel, and supplied with a series of Belleville spring washers. They also feature an extended integral liner that covers the band slots to protect soft/silicone hoses from damage, and help maintain consistent sealing pressure.

This type of clamp is designed to automatically adjust its diameter to compensate for the normal expansion/contraction of a hose and metal connection that occurs during vehicle operation and shutdown. The constant-torque clamp virtually eliminates coolant losses due to *"Cold flow"* leakage and greatly minimizes clamp maintenance.

3.1.1 Installation

A torque wrench should be used for proper installation. The recommended torque is 90 to 100 lbf·in. (10 to 11 N·m). The Belleville spring washer stacks should be nearly collapsed flat and the screw tip should extend ¼" (6 mm) beyond the housing (Fig. 3).

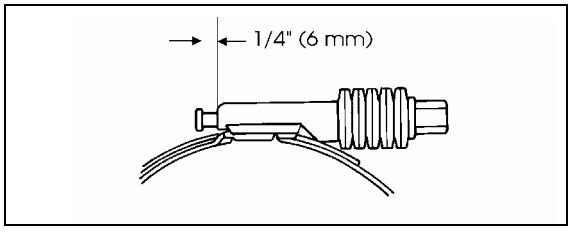

FIGURE 3: CONSTANT-TORQUE CLAMP 05037

Caution: *The hose clamps will break if over-torqued. Do not over-tighten, especially during cold weather when hose has contracted.*

3.1.2 Maintenance

The constant-torque clamps contain a *"Visual torque check" feature.* When the tip of the screw is extending ¼" (6 mm) out of the housing, the clamp is properly installed and maintains a leak-proof connection. Since the constant-torque

clamp automatically adjusts to keep a consistent sealing pressure, there is no need to re-torque hose clamps on a regular basis. During vehicle operation and shutdown, the screw tip will adjust according to the temperature and pressure changes. **Checking for proper torque should be done at room temperature.**

4. COOLANT

4.1 COOLANT LEVEL VERIFICATION

Coolant level is correct when cold coolant is visible through the surge tank sight glass (Fig. 4). If coolant level is low, fill cooling system.

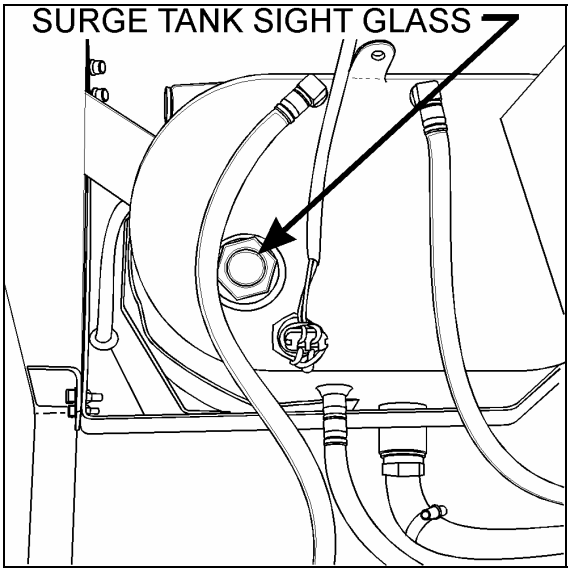

FIGURE 4: SURGE TANK SIGHT GLASS 05080

4.2 COOLANT LEVEL SENSOR

This warning device consists of a fluid level probe mounted on the surge tank. The probe sends a signal to the ECM to indicate coolant level. If the coolant level drops below the probe, the *"Check Engine"* light flashes and a diagnostic code is registered (see section 01″ *ENGINE"*).

Caution: *Do not run engine with the "Check Engine" light flashing.*

The level probe is mounted on the R.H. side of the surge tank while the electronic module is mounted inside the rear electric junction box.

4.3 THAWING COOLING SYSTEM

If the cooling system becomes frozen solid, place the coach in a warm area until the ice is completely thawed. Under no circumstances should the engine be operated when the cooling system is frozen, as it will result in engine overheating due to insufficient coolant.

Once thawed, check engine, radiator and related components for damage caused by expansion of frozen coolant fluid.

4.4 COOLANT REQUIREMENTS

The coolant provides a medium for heat transfer and controls the internal temperature of the engine during operation. In an engine having proper coolant flow, some of the combustion heat is conveyed through the cylinder walls and the cylinder head into the coolant. Without adequate coolant, normal heat transfer cannot take place within the engine, and engine temperature rapidly rises. Coolant must therefore be carefully selected and properly maintained.

Select and maintain coolant in order to meet the following basic requirements:

- Provide for adequate heat transfer.
- Provide protection from cavitation damage.
- Provide a corrosion and erosion resistant environment within the cooling system.
- Prevent formation of scale or sludge deposits in the cooling system.
- Be compatible with the cooling system hose and seal materials.
- Provide adequate freeze protection during cold weather operation.

Combining suitable water with reliable inhibitors satisfies the first five requirements. When freeze protection is required, a solution of suitable water and antifreeze containing adequate inhibitors will provide a satisfactory coolant fluid. Ethylene glycol-based antifreeze is recommended for use in Series 60 engines. The cooling system capacity is 24 US gal (91 liters).

Note: *In general, antifreeze does not contain adequate inhibitors. For this reason, supplemental coolant additives are required.*

For a complete overview of engine coolants used with Detroit Diesel Engines, refer to *"Specifications"* in the Detroit Diesel Series 60 *"Engine Operator's Guide"*.

4.5 COOLING SYSTEM RECOMMENDATIONS

Always maintain cooling system at the proper coolant level. Check daily.

The cooling system must be pressurized to prevent localized boiling of coolant. The system must be kept clean and leak-free. The filler and pressure caps must be checked periodically for proper operation.

4.6 INHIBITORS

A coolant solution, which has insufficient inhibitors or no inhibitors at all, invites the formation of rust, scale, sludge and mineral deposits within the cooling system. These deposits can cause water pump seal wear and coat the interior of coolant system passages. Heat transfer is reduced as deposits build up, leading to an overheating condition. Continued operation with this condition can lead to serious engine damage: liner scuffing, scoring, piston seizure and cylinder head cracking. These damages can occur quickly or over a longer period of time, depending of location and amount of deposits. Improperly inhibited coolants can become corrosive enough to "eat away" coolant passages and seal ring grooves and cause leaks to develop. Hydrostatic lock can occur if leak is internal and accumulates on top of a piston. The result may be a bent connecting rod. Cavitation erosion may occur in improperly inhibited coolants. Cavitation erosion is caused by the implosion of tiny bubbles against localized surfaces of the system. Such implosion causes pinpoint pressures high enough to erode pump impellers, cylinder liners and cylinder blocks. In extreme cases, their surfaces are so deeply pitted that they appear to be spongy, and holes can develop completely through them.

4.6.1 Inhibitor Test Procedures

Test Kits are commercially available to check engine coolant for nitrite concentration. Nitrite concentration is an indication of Supplemental Coolant Additive (SCA) level. Nitrite must be maintained within recommended levels. Coolant must be tested at each oil change to insure that inhibitor levels are maintained within the ranges shown below:

Detroit Diesel Selected Products System		
	Min. PPM	**Max PPM**
Boron (B)	1000	1500
Nitrite (NO2)	800	2400
Nitrates (NO3)	1000	2000
Silicon (Si)	50	250
Phosphorous (P)	300	500
pH	8.5	10.5

***Note**: Above SCA values with GM6038-M or ASTM 4985. Use Nalco Chemical Company nitrite test kits (CO-318). A factory coolant analysis program is available through Detroit Diesel distributors under part number 23508774.*

4.7 COOLANT RECOMMENDATIONS

1. Always use recommended antifreeze, inhibitor and water at proper concentration levels. A 50% coolant/water solution is normally used as factory fill. Antifreeze concentration over 70% is not recommended because of poor heat transfer capability, adverse freeze protection and silicate dropout. Antifreeze concentration below 30% offers little freeze, boilover or corrosion protection.
2. Use only ethylene glycol antifreeze meeting the GM 6038-M or ASTM D 4985 formulation or an equivalent antifreeze with a 0.15% maximum silicate content meeting GM 1899-M performance specifications.
3. Use an antifreeze solution year-round for freeze and boil-over protection. Seasonal changing of coolant from an antifreeze solution to an inhibitor/water solution is recommended.
4. Pre-mix coolant makeup solutions at proper concentrations before adding to the cooling system.
5. Maintain the prescribed inhibitor strength levels as required.

6. Do not mix different base inhibitor packages.
7. Always maintain proper coolant level.

Caution: *Always test the solution before adding water or antifreeze.*

8. If cooling system is not at the proper protection level. Mix coolant/water solution to the proper concentration before adding to the cooling system
9. Use only non-chromate inhibitors.
10. Distilled water is recommended.

DO NOT USE THE FOLLOWING:

- Soluble oil
- Chromate inhibitor
- Methoxy propanol-base antifreeze
- Methyl alcohol-base antifreeze
- Sealer additives or antifreezes containing sealer additives

Warning: *Never remove filler cap while coolant is hot. When coolant is at ambient temperature, release pressure from system by turning the pressure cap counterclockwise 1/4 turn; then remove filler cap slowly. A sudden release of pressure from the heated cooling system can result in severe burns from the expulsion of hot coolant fluid.*

4.7.1 Vehicles Without Coolant Filters

Refer to Nalcool 3000 with Stabil-Aid bulletin annexed to the end of this section for preventive maintenance (at each oil change) and initial treatment instructions (each time the cooling system is drained and flushed).

4.7.2 Vehicles With Coolant Filters

Change the coolant precharge element filter for a maintenance element filter at initial oil change (see Specifications at the end of this section) and replace existing maintenance element filter with a new one as per *"COOLANT FILTER"* in this section. A precharge element filter must be installed each time the cooling system is drained and flushed before installing a maintenance element filter.

Note: *The coolant filter contains inhibitors.*

5. DRAINING COOLING SYSTEM

Use the following procedures to drain the cooling system partially or completely.

To drain engine and related components:

1. Stop engine and allow engine to cool. Close both heater line shutoff valves.

On XL2-40 & 45E vehicles, the valves are located in engine compartment. One is on the R.H. side of compartment and is accessible through engine compartment R.H. side door (Fig. 5).

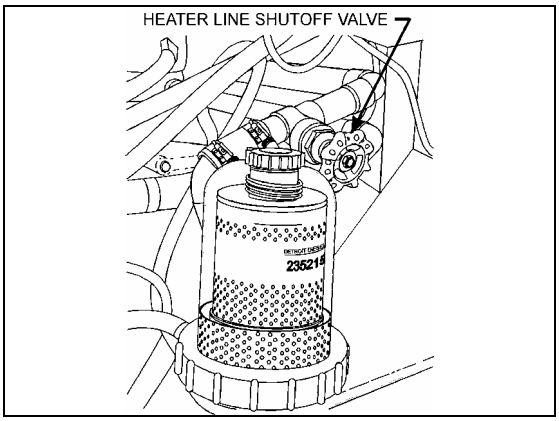

FIGURE 5: HEATER LINE SHUT-OFF VALVE 05070

Another valve is located in the engine compartment under the radiator fan gearbox (Fig. 6).

Note*: Refer to section 22 under "Preheating System" for information about preheater access and heater line shutoff valve.*

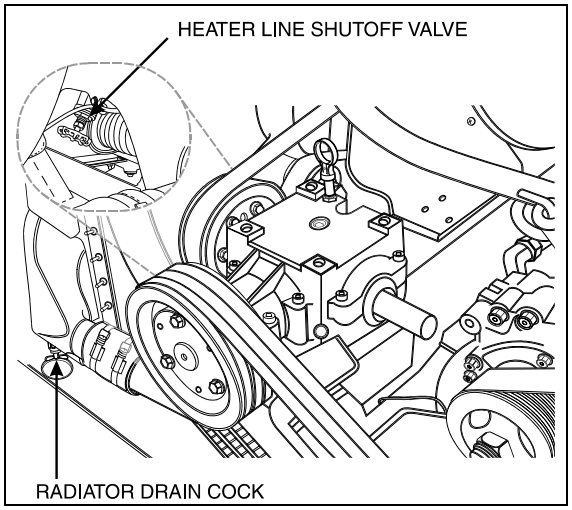

FIGURE 6: ENGINE COMPARTMENT 05078

On XL2-45 vehicles, the valves are located in the engine compartment, on the L.H. side of engine and are accessible through L.H. side rear service compartment (Fig. 7).

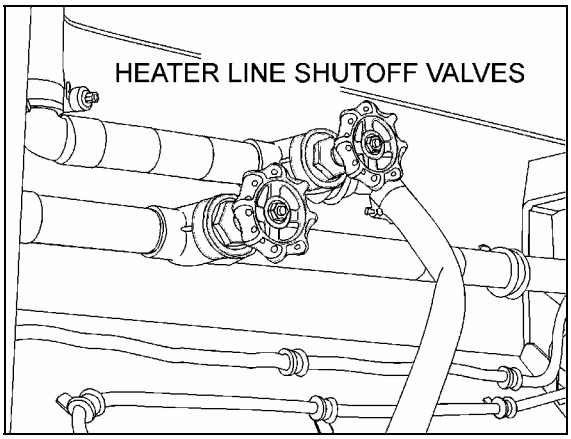

FIGURE 7: HEATER LINE SHUT-OFF VALVES 05067

Warning: *Before proceeding with the following steps, make sure the coolant has cooled down. The sudden release of pressure from a heated cooling system can result in loss of coolant and possible personal injury (scalding) from the hot liquid.*

2. Unscrew the surge tank pressure cap counterclockwise, ¼ turn to let air enter the system and permit the coolant to drain completely from system.

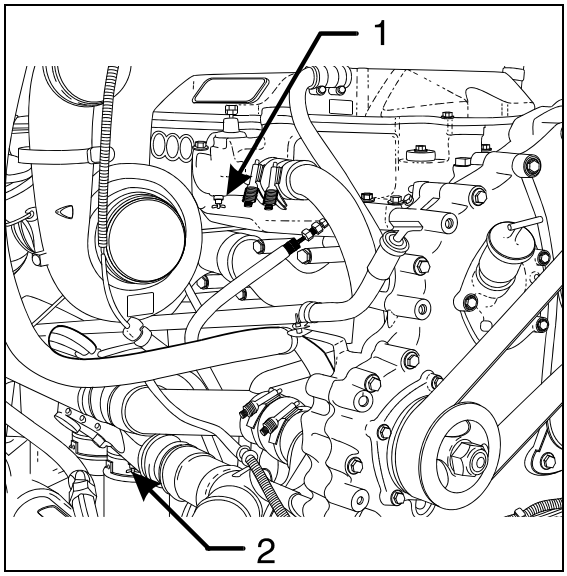

FIGURE 8: ENGINE COOLANT DRAIN COCKS 05074

3. Open the water pump housing inlet line drain cock (Fig. 9).

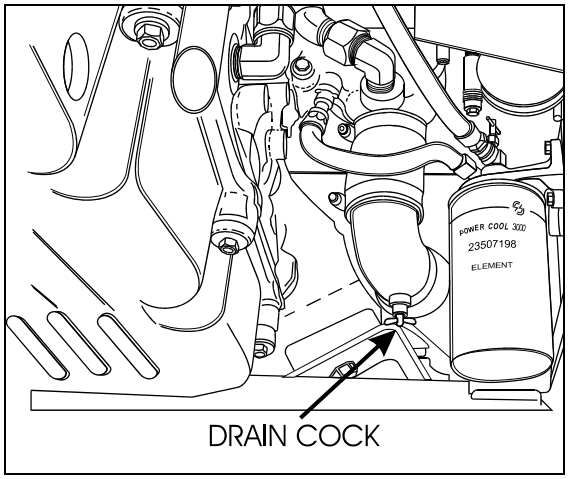

FIGURE 9: WATER PUMP DRAIN COCK 05072

4. Open drain cock at bottom of thermostat housing to drain the coolant trapped above the thermostats (1, Fig. 8).
5. Open the radiator drain cock (Fig. 6).
6. Open engine drain cock (2, Fig. 8).
7. Remove the transmission oil cooler. Drain, flush and inspect. Refer to Section 7, “TRANSMISSION” for oil cooler maintenance or preventive replacement.

Caution: *Drain water pump completely before extended storage to avoid possible water pump damage.*

Caution: *If freezing weather is anticipated and the engine is not protected with antifreeze, drain the cooling system completely when vehicle is not in use. Trapped water in the cylinder block, radiator or other components may freeze and expand resulting in damages. Leave the drain plugs open until the cooling system can be filled with coolant fluid. Do not run engine with cooling system empty.*

To drain the entire system, do the previous steps while maintaining the shutoff valves in the open position; then follow the procedure under *“9.2 Draining Heating System”* in Section 22.

6. FILLING COOLING SYSTEM

If only the engine and related components were drained, maintain the two heater line shutoff valves in their closed position, then proceed as follows.

1. Close all drain cocks. Refer to draining procedure for the location of draining points.
2. Refill cooling system from the surge tank filler cap inlet with a recommended ethylene glycol-based antifreeze and water solution of the required concentration. Add Detroit Diesel selected product cooling system inhibitors (if required).

Note: *The coolant level should remain within two inches of the surge tank filler neck.*

Note: *Make sure the vent line at top of thermostat housing is properly connected and not obstructed. The vent line (thermostat housing dome to radiator top tank) is required to ensure complete engine fill and proper venting of air in the system.*

3. Install the filler and pressure caps, then start the engine and run it at fast idle until reaching normal operating temperature. Check for leaks.

Note: *If for any reason, the coolant level drops below the surge tank level probe, the Check Engine light will flash.*

4. Stop engine and allow to cool.
5. Open the two heater line shutoff valves, check the coolant level in the surge tank, and then add as required.

Caution: *Never pour cold coolant into a hot engine. The sudden change in temperature may crack the cylinder head or block.*

If the entire system has been drained, redo the previous steps while maintaining the two heater line shutoff valves in the "Open" position. With engine running, activate the driver's and central heating systems to permit coolant circulation. Complete the procedure by bleeding the heater cores as explained in Section 22, under *"9.4 Bleeding Heating System".*

7. FLUSHING

If the cooling system is contaminated, flush the cooling system as follows:

1. Drain the coolant from the engine.
2. Refill with clean water.

Caution: *If the engine is hot, fill slowly to prevent rapid cooling and distortion of the engine castings.*

3. To thoroughly circulate the water, start and run the engine for 15 minutes after the thermostats have opened.
4. Fully drain system.
5. Refill with clean water and operate for 15 minutes after the thermostats have opened.
6. Stop engine and allow to cool.
7. Fully drain system.

Vehicles without coolant filters:

Fill with a 50/50-antifreeze/water solution and add required inhibitors.

Vehicles with coolant filters:

Replace the coolant filter with a precharge element filter; in this case do not mix inhibitors with antifreeze/water solution.

Dispose of spent fluids in an environmentally responsible manner according to regulations in effect in your area.

7.1 COOLING SYSTEM DESCALERS

If the engine overheats and the fan belt tension, coolant level and thermostat operation have been found to be satisfactory, it may be necessary to de-scale and flush the entire cooling system.

Remove scale formation by using a reputable and safe de-scaling solvent. Immediately after using the de-scaling solvent, neutralize with a neutralizing agent. It is important that product directions be thoroughly read and followed.

After using the solvent and neutralizer, fully drain the system, then reverse flush the engine and radiator (see *"Reverse Flushing" in this section)* before filling the system with coolant solution.

7.2 REVERSE FLUSHING

After the engine and radiator have been thoroughly de-scaled, they should be reverse-flushed. The water pump should be removed and the radiator and engine reverse-flushed separately to prevent dirt and scale deposits

from clogging the radiator tubes or being forced through the pump. Reverse flushing is accomplished by hot water, under pressure, being forced through the cooling system in a direction opposite to the normal flow of coolant, loosening and forcing deposits out.

The radiator is reverse flushed as follows:

1. Remove the radiator inlet and outlet hoses and replace existing radiator cap with a new one.
2. Attach a hose to the top of the radiator to lead water away from the engine.
3. Attach a hose at the bottom of the radiator and insert a flushing gun in the hose.
4. Connect the water hose of the gun to the water outlet and the air hose to the compressed air outlet.
5. Turn on the water and when the radiator is full, turn on the air in short blasts, allowing the radiator to fill between blasts.

Note: *Apply air gradually. Do not exert more than 138 kPa (20 psi) air pressure. Too great a pressure may rupture a radiator tube.*

6. Continue flushing until only clean water is expelled from the radiator.

The cylinder block and cylinder head water passages are reverse flushed as follows:

1. Remove the thermostats and the water pump.
2. Attach a hose to the water inlet of oil cooler housing to drain water away from engine.
3. Attach a hose to the water outlet at the top of the cylinder head (thermostat housing) and insert the flushing gun in the hose.
4. Turn on the water until the jackets are filled, and then turn on the air in short blasts. Allow jackets to fill with water between air blasts.
5. Continue flushing until the water from the engine runs clean.

If scale deposits in the radiator cannot be removed by chemical cleaners or reverse flushing as outlined above, it may be necessary to remove the upper tank and rod out the individual radiator tubes with flat steel rods. Circulate the water through the radiator core from the bottom to the top during this operation.

8. SPIN-ON COOLANT FILTER

The optional engine cooling system filter is used to filter out impurities such as scale or sand from the coolant and it also eliminates the process of adding inhibitors to the antifreeze/water solution. The filter is mounted to the engine cradle (Fig. 10).

The precharge element filter lasts for 12,500 miles (20 000 km) or one year, whichever comes first. Replace the precharge element filter with a maintenance element filter, which lasts for 200,000 miles (320 000 km) or two years, whichever comes first. Each time the coolant is renewed, a precharge element filter must be installed before installing a maintenance element filter.

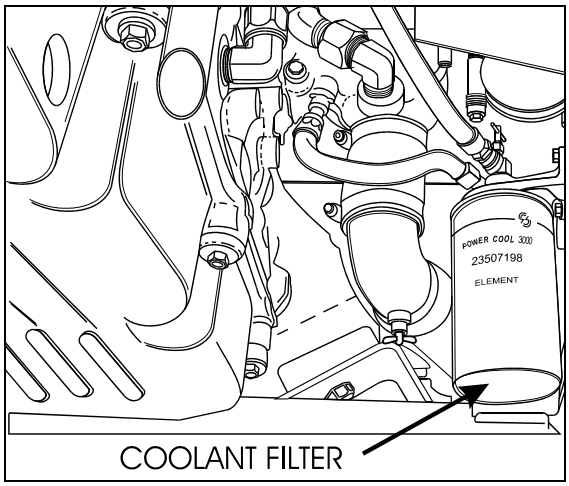

FIGURE 10: COOLANT FILTER 05072

Note: *If a coolant filter is to be installed on an engine already in service, drain and flush the cooling system before installing the filter.*

To replace a filter:

1. Close the two filter shutoff cocks on the filter mounting head and unscrew the old filter from mounting.

Warning: *Failure to relieve cooling system pressure may result in personal injury.*

2. Remove and discard the filter.
3. Clean the filter adapter with a clean, lint-free cloth.

4. Coat surface of gasket with oil, tighten 2/3 to 1 turn after gasket makes contact with head.
5. Open the two filter shutoff cocks.
6. Start engine and check for leaks.

Caution: *Do not exceed recommended service intervals.*

9. RADIATOR

The radiator is mounted on the L.H. side of engine compartment. It is designed to reduce the temperature of the coolant under all operating conditions. It is essential that the radiator core be kept clean and free from corrosion and scale at all times.

9.1 MAINTENANCE

Inspect the exterior of the radiator core every 25,000 miles (40 000 km) or once a year, whichever comes first. Clean with a quality grease solvent, such as a mineral spirits and dry with compressed air. Do not use fuel oil, kerosene, gasoline, or any caustic material. It may be necessary to clean the radiator more frequently if the vehicle is operated in extremely dusty or dirty areas. Refer to coolant system flushing and reverse flushing in this section for maintenance of radiator interior.

10. VARIABLE SPEED RADIATOR FAN

The radiator fan has two thermostatically controlled speeds. The ECM controls the speed by comparing data from engine temperature, coolant temperature and air inlet temperature to a set of calibration data. The fan drive clutch is electromagnetic; the ECM sends an electric current to regulate speed by activating one magnetic coil for the first speed and two magnetic coils for the second speed.

The settings are:

For Series 60 engines with motor serial numbers up to 06R0194000 inclusively

• 204°F (96°C) first speed

• 208°F (98°C) second speed

For Series 60 engines with motor serial numbers from 06R0194000

• 196°F (91°C) first speed

• 203°F (95°C) second speed

Note: *In case of an electrical power failure: remove the bolt from the end of the shaft and screw it into the locking plate. This procedure will prevent engine from overheating by forcing fan rotation (Fig. 11).*

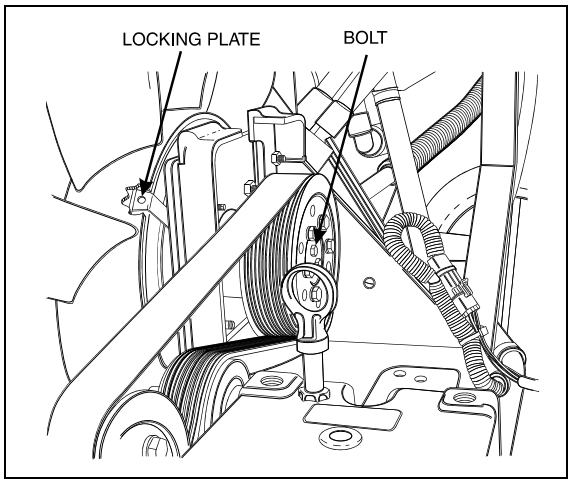

FIGURE 11: MECHANICAL LOCKING DEVICE 05061

10.1 MAINTENANCE

1. Clean the fan and related parts with clean fuel oil and dry them with compressed air. Do not clean with steam or high-pressure jet.
2. Check the fan blades for cracks or other damage. Replace the fan if the blades are cracked or deformed.
3. Remove any rust or rough spots in the grooves of the fan pulley. If the grooves are damaged or severely worn, replace the pulley.
4. Do not add any fluids or lubricants to the fan driving mechanism.
5. Do not restrict fan rotation during engine operation for any reason.
6. Do not operate fan-driving mechanism with a damaged fan assembly. Replace a damaged fan as soon as the fault is noted.
7. Immediately investigate and correct any operator complaint involving driving mechanism or cooling system performance.
8. When questions arise, obtain answers before proceeding. Assistance is available through

the authorized Field Sales distributor serving your area.

10.2 INSPECTION

Warning: *Set the starter selector switch in engine compartment to the "Off" position to prevent accidental starting of the engine.*

- Check security of fasteners securing fan blade assembly to fan driving mechanism.
- Check coupling installation between fan blade assembly and gearbox.
- Visually inspect fan driving mechanism, fan blade assembly, shroud, radiator, and surrounding area for evidence of contact between rotating and non-rotating parts.
- Check fan transfer belt for fraying, cracking, and proper tension.
- Turn fan through at least 360° of rotation. It should turn smoothly with no resistance.

10.3 THERMOSTAT OPERATION

Coolant temperature is controlled by two blocking-type thermostats located in a housing attached to the cylinder head, on the turbo side of the engine (Fig. 12).

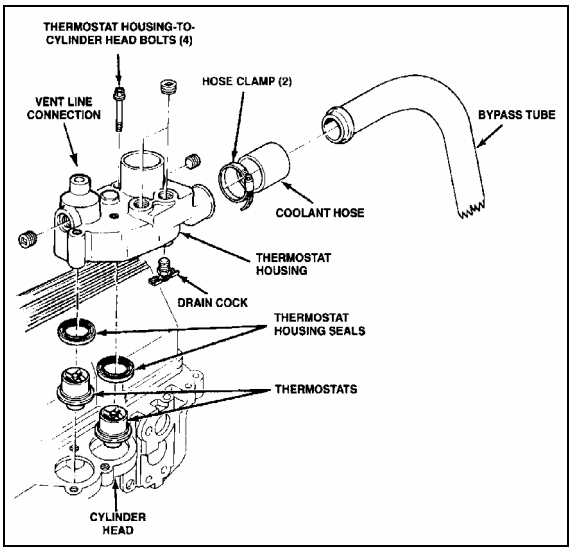

FIGURE 12: THERMOSTAT AND RELATED PARTS 05034

At coolant temperature below approximately 190°F (88°C), the thermostat valves remain closed and block the flow of coolant from the engine to the radiator. During this period, all of the coolant in the system is recirculated through the engine and directed back to the suction side of the water pump via a bypass tube. As the coolant temperature rises above 190°F (88°C) the thermostat valves start to open, restricting the bypass system, and allowing a portion of the coolant to recirculate through the radiator. When the coolant temperature reaches approximately 205-207°F (96-97°C) thermostat valves are fully open, the bypass system is blocked off and the coolant is directed through the radiator.

11. FAN GEARBOX

The radiator fan is belt driven from the engine crankshaft pulley through a standard gearbox, which is designed with two output shafts.

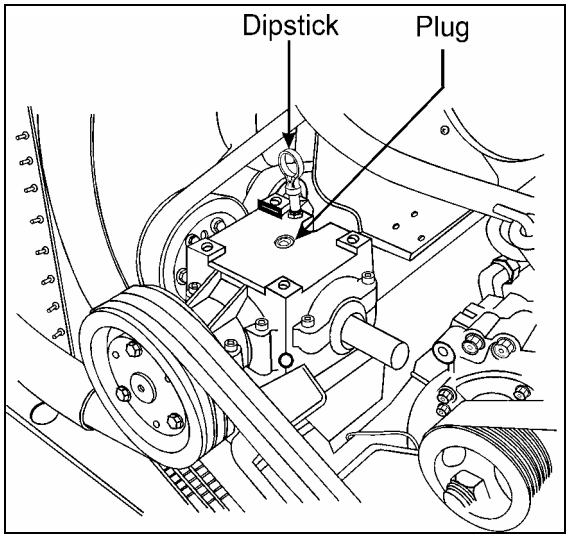

FIGURE 13: FAN GEARBOX 05062

11.1 MAINTENANCE

Change the gearbox oil at 3,000 miles (4,800 km) and subsequently every 50,000 miles (80,000-km) or once a year, whichever comes first.

11.2 OIL CHANGE

1. Stop engine and make sure that all engine safety precautions have been observed.
2. Remove the drain plug located underneath the gearbox case.
3. Drain gearbox.
4. Replace drain plug.

5. Remove the dipstick located on top of gearbox and wipe with a clean rag (Fig. 13).
6. Adjust level to ″Full″ mark using Mobil SHC 630 (Prévost #180217) synthetic oil.
7. Insert dipstick in gearbox case, then remove again to check mark.
8. Reinsert the dipstick.

***Caution**: Vehicles up to V.I.N. #2PCH3341XX1012847 use Mobil SHC 634 (Prévost #180185). Do not mix these two types of oil.*

12. RADIATOR FAN BELT REPLACEMENT

Locate the belt tensioner pressure-releasing valve (Fig. 14), then turn handle counter-clockwise in order to release pressure in belt tensioner air bellows, thus releasing tension on belts.

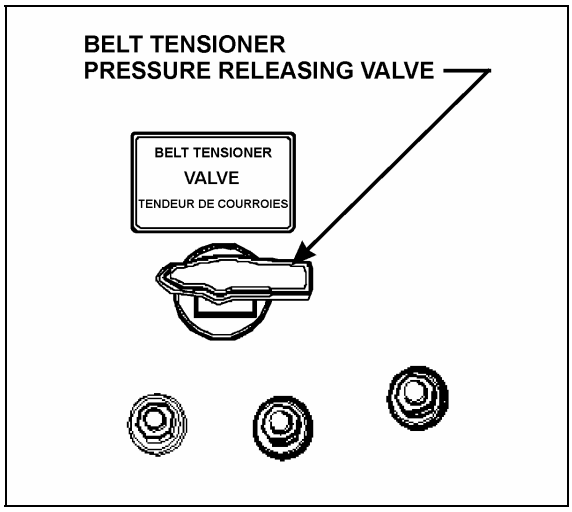

FIGURE 14: PRESSURE RELEASING VALVE 01063

Remove existing belts (3″V″belts & 1 Poly) from fan assembly and replace with new ones.

Turn the pressure-releasing valve clockwise to its initial position to apply tension on the new belts.

***Note:** For proper operation of the belts, adjust the air bellows tensioner pressure regulating valve (located next to control valve) to 50 psi (345 kPa) for vehicles with Series 60 engines.*

12.1 BELT TENSION ADJUSTMENT

The regulator is located in the engine compartment behind the belt tension pressure releasing valve panel. Turn the screw located under the regulator assembly to change the tension pressure. Check proper pressure using the pressure check valve (Fig. 15).

Use Belt Tension Gauge #68-2404 to measure tension of engine belts. For proper operation of air tensioners, adjust upper tensioning bracket to provide a 2-3/8" to 2-½" (60 to 64 mm) bracket extension under normal pressure of 50 psi - 345 kPa. Refer to figure 16 for more information.

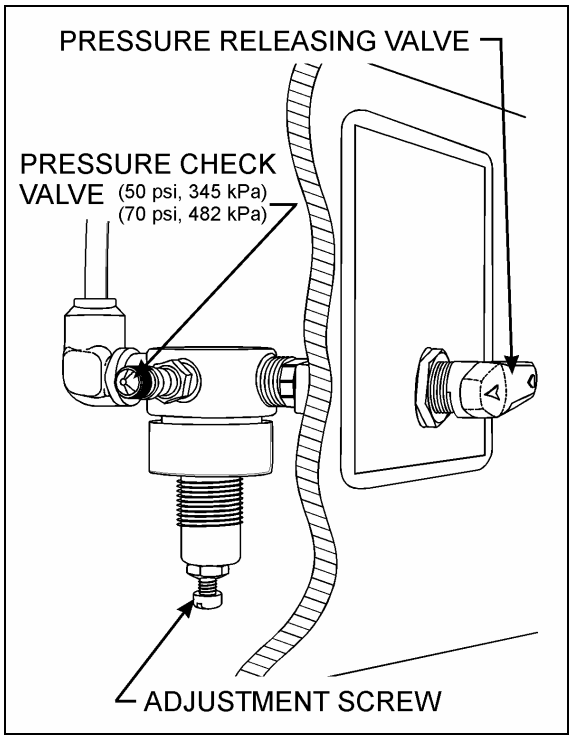

FIGURE 15: REGULATOR VALVE 12151

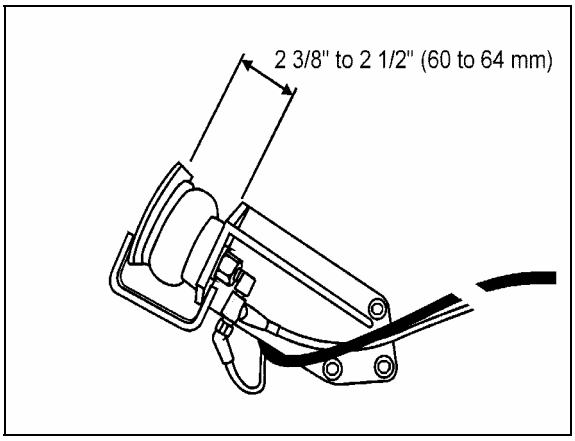

FIGURE 16: BELT TENSIONER 01059

13. FAN DRIVE ALIGNMENT

1. Install both attachment assembly plates (P/N 051779) (48, Fig. 17) through lower plating and secure with four spring nuts (P/N 500666), (70, Fig. 17). Then install one spacer (P/N 050705), (49, Fig. 17) on each spring nut at both anchoring locations (Fig. 17).

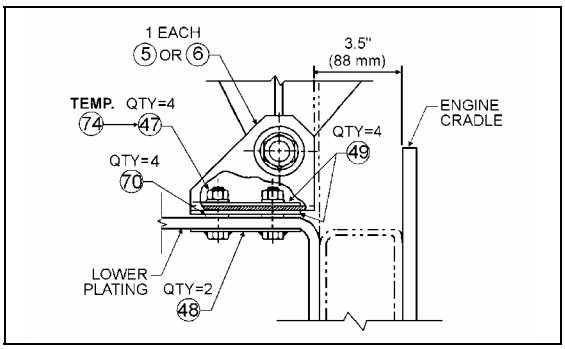

FIGURE 17: ANGLE SUPPORT 05014

2. Center seat assembly in the fan shroud using the horizontal displacement of the fan driving mechanism support. Center with the slots in the floor at anchoring angle support (on some vehicles only). Vertical displacement of the fan clutch is made possible by slots at the base of the fan clutch (on some vehicles only) or by shimming with additional spacers at anchoring locations. Temporarily secure assembly with two nuts (P/N 500709), (74, Fig. 17) at both anchoring locations.

Caution: *Tilt fan and check for clearance.*

3. Using a straight edge, align the 3"V"pulley on gearbox central shaft pulley with engine pulley, while taking pulleys outer edge thickness under consideration i.e. 3"V"pulley's outer edge is thicker than that of engine pulley's (Fig. 18).

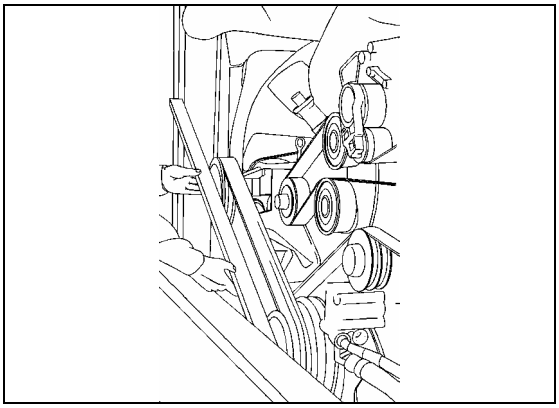

FIGURE 18: PULLEY ALIGNMENT 05064

4. Using a universal protractor, check 3"V" pulley's vertical angle with that of engine pulleys. If angles do not correspond, raise seat assembly by shimming with additional spacers (#49 - P/N 050705).

Note: *Use a straight edge to measure engine pulley's vertical angle (Fig. 19).*

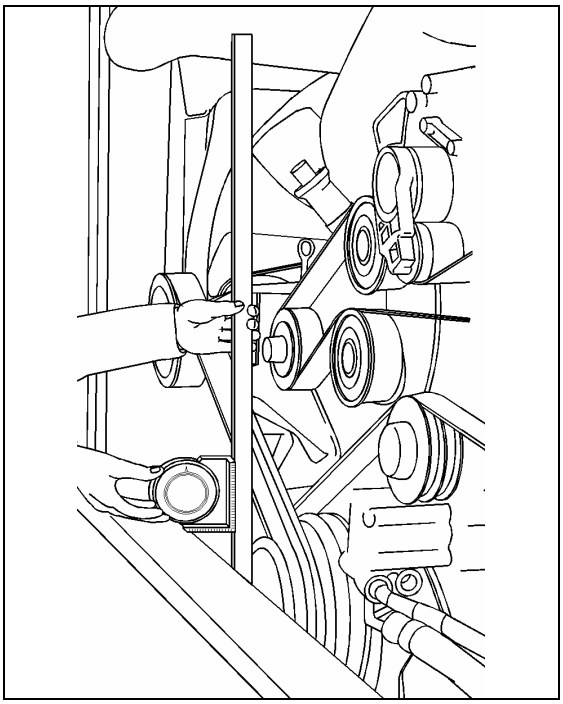

FIGURE 19: PULLEY VERTICAL ANGLE 05063

5. Check alignments again (steps 3, 4 & 5) then replace temporary anchoring nuts

(P/N 500709) (74, Fig. 17) with four nuts (P/N 500714) (47, Fig. 17) and tighten using a wrench.

6. Align multi "V" pulley with fan pulley. Adjust the depth of the pulley on the gearbox shaft.
7. Set belt tensioner pressure regulating valve to 50 PSI - 345 kPa.

Caution: *In order for tensioning system to work properly, the distance between the inside faces of belt tensioning brackets should be between 2-3/8" (60 mm) and 2 ½" (64 mm). Otherwise, release tension on system and readjust distance using bolts securing upper tensioning bracket (Fig. 16).*

.

14. SPECIFICATIONS

Cooling System Capacity (Approximation)

Includes heating system..... 24 US gal (91 liters)

Thermostat

Number used.....2
Start to open .....186-193°F (86-89°C)
Fully open ..... 207°F (97°C)

Radiator

Make .....Long
Location ..... Rear L.H. side
XL2 Buses
Supplier number..... 7601-8361
Prevost number..... 550742
XL2 MTH
Supplier number.... 7601-8357
Prevost number..... 550748

Surge Tank Filler Cap

Make ..... Stant
Model R3
Prevost number 052355

Pressure Cap

Make ..... Stant
Pressure setting.....14 psi (96.53 kPa)
Supplier number R12
Prevost number 550606

Fan Clutch

Make ..... Linnig
Type .....3 speed
XL2 Buses
Supplier number LA1.2.024Y
Prevost number 550803
XL2 MTH
Supplier number.... ..... LA1.2.073
Prevost number..... 550802

Note: *The fan clutch is controlled by DDEC (not by thermoswitch).*

Fan Gearbox

Make .....Superior Gearbox
Ratio.....1:1
Supplier number 411ACF-097-6
Prevost number 550789
Lubricating Oil..... MOBIL SHC 630

Prevost number (Oil) 683666

***Caution**: Vehicles up to V.I.N. #2PCH3341XX1012847 use Mobil SHC 634 (Prévost #682268). Do not mix these two types of oil.*

Fan Belt (gearbox-fan)

Make ..... Dayco
Type ..... Multi-V, Poly rib, 51”
Qty 1
Supplier number 5100495
Prevost number 506663

Fan Belt (gearbox-motor)

Make ..... Gates
Type ..... V belt
Qty 3

Series 60 Engines:

Supplier number AX74
Prevost number 506690

Corrosion Inhibitor and Coolant Stabilizer

Supplier number.....Detroit Diesel 23507857
Supplier number.....Nalco DD3000-15

Coolant Filter

Number used 1
Make ..... Nalco
Type ..... Spin-on

MAINTENANCE ELEMENT FILTER

Supplier number. ....Detroit Diesel 23507545
Supplier number.....Nalco DDF3000
Prevost number 550630

PRECHARGE ELEMENT FILTER

Supplier number. ....Detroit Diesel 23507189
Supplier number.....Nalco DDF60
Prevost number 550629

SECTION 06: ELECTRICAL

CONTENTS

1. GENERAL DESCRIPTION 06-6

1.1 WIRING DIAGRAMS 06-6
1.1.1 Wiring Diagram Keys 06-6
1.1.2 Using Wiring Diagrams 06-6
1.1.3 Testing Circuits 06-6
1.2 WIRE SIZES AND COLORS 06-6
1.3 SPARE WIRES 06-7
1.4 CLEANING CONNECTORS 06-7
1.5 CIRCUIT BREAKERS 06-7
1.6 RELAYS 06-7

2. XL2 COACHES ELECTRICAL COMPARTMENTS AND JUNCTION BOXES 06-10

2.1 MAINTENANCE 06-11
2.2 BOOSTER BLOCK 06-11
2.3 BATTERY SAFETY SWITCH 06-11
2.4 BATTERIES 06-11
2.5 CIRCUIT BREAKERS 06-12
2.6 FRONT SERVICE COMPARTMENT 06-12
2.6.1 L.H. Side of Front Baggage Compartment (Vehicle Equipped With Video System) 06-13
2.7 ENGINE COMPARTMENT (REAR JUNCTION BOX) 06-13

3. XL2 MOTORHOMES ELECTRICAL COMPARTMENTS AND JUNCTION BOXES 06-14

3.1 MAINTENANCE 06-15
3.2 BOOSTER BLOCK 06-15
3.3 BATTERY SAFETY SWITCH 06-15
3.4 BATTERIES 06-16
3.5 CIRCUIT BREAKERS 06-17
3.6 FRONT SERVICE COMPARTMENT 06-17
3.7 ENGINE COMPARTMENT (REAR JUNCTION BOX) 06-18

4. BATTERIES 06-18

4.1 BATTERY REMOVAL AND INSTALLATION 06-19
4.1.1 XL2-40 Coach 06-19
4.1.2 XL2-45 Coach 06-20
4.1.3 Xl2-40, XL2-45E and XL2 45 Bus Shells 06-20
4.2 BATTERY RATING 06-21
4.3 BATTERY TESTING 06-22
4.3.1 Visual Inspection 06-22
4.3.2 Removing Surface Charge 06-22
4.3.3 Load Test 06-22
4.3.4 Testing Battery Cables 06-23
4.4 BATTERY CHARGING 06-24
4.4.1 Battery Charging Guide 06-25
4.4.2 Emergency Jump Starting With Auxiliary (Booster) Battery 06-25
4.5 CLEANING AND INSPECTION 06-26
4.6 COMMON CAUSES OF BATTERY FAILURE 06-26
4.7 TROUBLESHOOTING 06-26

5. ELECTRICAL SYSTEM MONITOR 06-27

5.1 TELLTALE LIGHT DEFINITIONS 06-27

6. BOSCH ALTERNATOR 06-28

7. DELCO ALTERNATOR 06-29

8. CHARGING SYSTEM TROUBLESHOOTING 06-30

8.1 ALTERNATOR OR VOLTAGE REGULATOR 06-30
8.2 ALTERNATOR DIAGNOSIS 06-31
8.2.1 Diode Checks 06-31
8.2.2 Field Winding Check 06-33
8.2.3 Stator Winding Check 06-33
8.3 DIODE REPLACEMENT 06-33
8.3.1 Diode Replacement (in Support) 06-34
8.3.2 Diode Replacement (in End Frame) 06-34
8.4 FIELD REMOVAL 06-34
8.5 FIELD INSTALLATION 06-34
8.6 STATOR REPLACEMENT 06-35
8.6.1 Removal 06-35
8.6.2 Soldering Stator Terminal Leads 06-35
8.6.3 Installation 06-35
8.7 DIODE END COVER INSTALLATION 06-35
8.8 ALTERNATOR REMOVAL (DELCO) 06-35
8.8.1 Disassembly of Alternator 06-36
8.8.2 Alternator Cleaning and Inspection 06-36
8.8.3 Bearing or Rotor Replacement 06-37
8.8.4 Alternator Reassembly 06-38
8.8.5 Output check 06-38
8.9 ALTERNATOR DRIVE BELT 06-38
8.9.1 Adjustment 06-38

9. VOLTAGE REGULATOR (DELCO) 06-38

9.1 TROUBLESHOOTING PROCEDURES 06-39
9.1.1 Undercharged Battery 06-40
9.1.2 Overcharged Battery 06-40
9.2 REGULATOR CHECKS 06-41
9.3 ADJUSTING VOLTAGE 06-41

10. BATTERY EQUALIZER 06-42

11. STARTER 06-42

11.1 MAINTENANCE 06-42
11.2 TROUBLESHOOTING 06-42
11.2.1 No-Load Test 06-43
11.2.2 Lock-Torque Test 06-43
11.3 DISASSEMBLY 06-43
11.3.1 Cleaning 06-44
11.3.2 Armature Servicing 06-44
11.3.3 Field Coil Checks 06-44
11.3.4 Field Coil Removal 06-45
11.3.5 Reassembly 06-45
11.4 PINION CLEARANCE 06-45
11.5 STARTER SOLENOID 06-45
11.5.1 Disassembly 06-46
11.5.2 Solenoid Maintenance 06-46
11.5.3 Solenoid Tests 06-46

11.5.4 Recommendations 06-46

12. ENGINE BLOCK HEATER 06-46

12.1 MAINTENANCE 06-46

13. EXTERIOR LIGHTING 06-46

13.1 HEADLIGHTS 06-47
13.1.1 Headlight Beam Toggle Switch 06-47
13.1.2 Maintenance 06-47
13.1.3 Headlight Adjustment 06-47
13.1.4 Headlight Unit Replacement 06-49
13.1.5 Headlight Bulb Removal and Replacement 06-49
13.2 FRONT TURN SIGNAL 06-50
13.2.1 Front Turn Signal Light Replacement 06-50
13.2.2 Front Turn Signal Light Bulb Removal and Replacement 06-50
13.3 STOP, TAIL, DIRECTIONAL, BACK-UP, AND HAZARD WARNING LIGHTS 06-50
13.3.1 Bulb Removal and Replacement 06-50
13.4 LICENSE PLATE LIGHT 06-50
13.5 CLEARANCE, IDENTIFICATION AND MARKER LIGHTS 06-50
13.5.1 Marker Light Removal and Replacement 06-51
13.5.2 Clearance and Identification Light Removal and Replacement 06-51
13.6 DOCKING AND CORNERING LIGHTS 06-51
13.6.1 Lamp Removal and Replacement 06-51
13.7 FOG LIGHTS 06-52
13.7.1 Bulb Removal and Replacement 06-52

14. INTERIOR LIGHTING EQUIPEMENT 06-52

14.1 CONTROL PANEL LIGHTING 06-52
14.1.1 Switch Lighting 06-52
14.1.2 Telltale Light Replacement 06-52
14.1.3 Gauge Light Bulb Replacement 06-52
14.2 STEPWELL LIGHTS AND LAVATORY NIGHT-LIGHT 06-52
14.2.1 Bulb Removal and Replacement 06-52
14.3 DRIVER'S AREA LIGHTS 06-53
14.3.1 Bulb Removal and Replacement 06-53
14.4 PASSENGER SECTION LIGHTING 06-53
14.4.1 Fluorescent Tube Replacement 06-53
14.4.2 Removal and Replacement of In-Station Fluorescent Tubes 06-54
14.4.3 Removal and Replacement of Reading Lamp Bulb 06-54
14.5 ENGINE COMPARTMENT LIGHTING 06-54
14.6 LAVATORY LIGHT 06-54

15. LIGHT BULB DATA 06-54

16. SPECIFICATIONS 06-57

ILLUSTRATIONS

FIGURE 1: WIRE IDENTIFICATION 06-7
FIGURE 2: TYPES OF RELAYS 06-9
FIGURE 3: ELECTRICAL COMPARTMENT (XL2-40 COACH)....06-10
FIGURE 4: ELECTRICAL COMPARTMENT (XL2-45 COACH)....06-10
FIGURE 5: MAIN POWER COMPARTMENT (XL2-45) 06-11
FIGURE 6: BATTERY COMPARTMENT (XL2-40) 06-12
FIGURE 7: LOCATION OF A/C JUNCTION BOX IN EVAPORATOR COMPARTMENT 06-12
FIGURE 8: A/C JUNCTION BOX 06-12
FIGURE 9: TOP SECTION OF FRONT SERVICE COMPARTMENT....06-12
FIGURE 10: BOTTOM SECTION OF FRONT SERVICE COMPARTMENT 06-13
FIGURE 11: DDR CONNECTOR LOCATION IN DRIVER'S AREA....06-13
FIGURE 12: L.H. SIDE OF REAR BAGGAGE COMPARTMENT'S CEILING....06-13
FIGURE 13: REAR JUNCTION BOX SWITCHES 06-13
FIGURE 14: REAR JUNCTION BOX 06-14
FIGURE 15: ELECTRICAL COMPARTMENTS (XL2-40 BUS SHELLS) 06-14
FIGURE 16: ELECTRICAL COMPARTMENTS (XL2-45E BUS SHELLS)....06-15
FIGURE 17: ELECTRICAL COMPARTMENTS (XL2-45 BUS SHELLS) 06-15
FIGURE 18: BREAKER PANEL 06-16
FIGURE 19: ENGINE COMPARTMENT R.H. SIDE....06-16
FIGURE 20: LOCATION OF A/C JUNCTION BOX IN EVAPORATOR COMPARTMENT 06-17
FIGURE 21: A/C JUNCTION BOX 06-17
FIGURE 22: TOP SECTION OF FRONT SERVICE COMPARTMENT....06-17
FIGURE 23: BOTTOM SECTION OF FRONT SERVICE COMPARTMENT 06-18
FIGURE 24: DDR CONNECTOR LOCATION IN DRIVER'S AREA....06-18
FIGURE 25: REAR JUNCTION BOX SWITCHES 06-18
FIGURE 26: REAR JUNCTION BOX 06-18
FIGURE 27: BATTERIES (TYPICAL)....06-19
FIGURE 28: TEST INDICATOR 06-22
FIGURE 29: LOAD TEST 06-23
FIGURE 30: ALLIGATOR CLAMPS AND BATTERY 06-24
FIGURE 31: OIL CIRCULATION THROUGH ALTERNATOR 06-29
FIGURE 32: ALTERNATOR WIRING DIAGRAM (DELCO)....06-30
FIGURE 33: CONNECTIONS FOR CHECKING ALTERNATOR OUTPUT....06-31
FIGURE 34: VIEW OF RECTIFIER END FRAME WITH COVER REMOVED 06-32
FIGURE 35: DIODE TESTING 06-32
FIGURE 36: DIODE TESTING 06-33
FIGURE 37: STATOR WINDING TEST 06-33
FIGURE 38: ALTERNATOR (HOSES AND WIRES)....06-36
FIGURE 39: ALTERNATOR RETAINING BOLTS AND WASHERS....06-36
FIGURE 40: ALTERNATOR DRIVE BELT 06-38
FIGURE 41: VOLTAGE REGULATOR....06-38
FIGURE 42: TYPICAL WIRING DIAGRAM OF A NEGATIVE GROUND SYSTEM 06-39
FIGURE 43: REGULATOR VOLTAGE SETTING 06-39
FIGURE 44: ADJUSTING REGULATOR VOLTAGE SETTING....06-40
FIGURE 45: REGULATOR VOLTAGE TEST (UNDERCHARGED BATTERY)....06-40
FIGURE 46: CHECKING TRANSISTOR TR1 06-41
FIGURE 47: CHECKING TRANSISTOR TR2 06-41
FIGURE 48: TYPICAL STARTER CROSS SECTION....06-43
FIGURE 49: STARTING MOTOR NO-LOAD TEST 06-43
FIGURE 50: PINION CLEARANCE....06-45
FIGURE 51: ELECTRIC HEATER PLUG LOCATION....06-46
FIGURE 52: HEADLIGHT ASSEMBLY 06-47

FIGURE 53: HEADLIGHT ALIGNMENT 06-47
FIGURE 54: HEADLIGHT ALIGNMENT 06-48
FIGURE 55: HEADLIGHT ALIGNER.....06-48
FIGURE 56: HEADLIGHT ALIGNMENT 06-48
FIGURE 57: HEADLIGHT ALIGNMENT 06-48
FIGURE 58: ALIGNMENT SCREWS 06-49
FIGURE 59: TOP VIEW OF HEADLIGHT ASSEMBLY.....06-49
FIGURE 60: VARIOUS LIGHTS LOCATION 06-51
FIGURE 61: SWITCH.....06-52
FIGURE 62: PARCEL RACK LIGHTING.....06-53
FIGURE 63: ENGINE COMPARTMENT LIGHT 06-52

1. GENERAL DESCRIPTION

This vehicle uses a dual voltage system to obtain two different voltages (12 and 24 volts) for various electrical controls and accessories. The main power source incorporates four maintenance-free “Delco” model 1150 batteries connected in parallel-series. All batteries are kept uniformly charged by means of a 100 amp battery equalizer (standard), giving a maximum possible output supply of 100 amps on the 12 volt system. Both the 12 and 24 volt systems are controlled through individual main battery relays. One or two 24 volt self-rectified alternators are belt driven from the engine, and can be reached through the engine compartment door.

1.1 WIRING DIAGRAMS

A master wiring diagram of the electric circuits, covering standard and optional accessories and systems, is located in the technical publications box. Usually, a separate wiring diagram page is provided for each major function or system. In some cases, more than one circuit may appear on one wiring diagram page; when this occurs, each circuit covered in this page is listed in the wiring diagram index. Moreover, a circuit may appear on several pages; in such case, the number(s) at the extremity of the diagram title will indicate the sheet reference number. Refer to the *"Wiring Diagram Index*" to ensure that the correct diagram is being used to trace the circuit in question.

1.1.1 Wiring Diagram Keys

Various symbols are used on the wiring diagrams to depict different types of electrical components. It is essential to become familiar with these symbols in order to understand the diagrams. The major symbols shown on the diagrams are identified under *"Wiring Diagram keys"* (page **K** of wiring diagrams).

1.1.2 Using Wiring Diagrams

Two methods are used to *"work"* with electric wiring diagrams.

Situation: You have identified the defective part (breaker, diode, relay, etc.), and you wish to locate its corresponding circuit.

Problem: Circuit breaker #56 is released (open circuit) and you don't know which circuit is affected.

a) Refer to wiring diagram index, and look for *"Circuit breaker code"*, pages **F**.

b) At item CB #56, in the first column, you will find the page on which to find the corresponding diagram, in the second column the breaker ampere rating, and in the third column, the Prévost number. The other columns give you the location and the function of the breaker.

c) Refer to page 4, keeping in mind the function of the breaker, i.e. emergency exit lights.

d) When you have located *“emergency exit lights”,* follow the wiring until you come across CB #56 and its circuit.

Situation: You have a problem with a specific system and you want to find the corresponding diagram.

Problem: The last three (3) speakers on the R.H. side of vehicle are inoperative and you must trace the electric circuit.

a) Refer to wiring diagram index and look for *“Sound system”.*

b) You will find on page 26 the components as well as the electric wiring, thus providing you with a complete understanding of this circuit.

1.1.3 Testing Circuits

A careful study of the wiring diagrams should be made to determine the source and flow of current through each circuit. When a circuit is thoroughly understood, a point-to-point check can be made with the aid of the applicable wiring diagrams. Any circuit can be tested for continuity or short circuits with a multimeter or a suitable voltmeter.

All electrical connections must always be kept clean and adequately tight. Loose or corroded connections can result in discharged batteries, difficult starting, dim lights and improper functioning of other electric circuits. Inspect all wiring connections at regular intervals. Make sure knurled nuts on all amphenol-type plugs are securely tightened. Knurled nuts on the plastic amphenol-type connectors will click into a detent when properly tightened. Line connectors, who have the side locking tabs, must have the locks latched in place to ensure a proper electrical connection.

1.2 WIRE SIZES AND COLORS

Each wire in the electrical system has a specific size as designated on the wiring diagram. When

replacing a wire, the correct size must be used. Never replace a wire with one of a smaller size.
The vehicle electrical system is provided with different voltages. The insulation on each wire is distinctly colored in order to determine visually the wiring voltage and to assist in making connectors. The wires are color coded as follows:

Red	24 volt system
Yellow	12 volt system
Black	grounded wire
Blue	110 V ac system (live)
White	110 V ac system (neutral)
Green	110 V ac system (ground)
Orange	speakers (+)
Brown	speakers (-)
Grey	spare wire

Note: *Wires are identified at each 2-4 inch (5-10 cm) intervals by a printed number.*

Each wire on a diagram is patterned to assist in tracing and testing circuits. The wire number identifies the voltage rating, the wire identification number and the basic wire gauge as illustrated in figure 1.

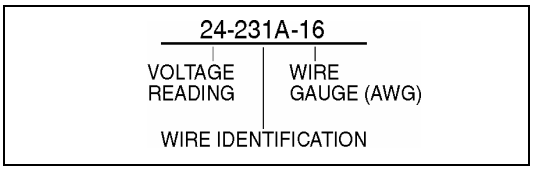

FIGURE 1: WIRE IDENTIFICATION 06048

1.3 SPARE WIRES

When the vehicle leaves the factory, and even in the case of a fully-equipped vehicle, an important number of unconnected spare wires are routed between the junction boxes. Consequently, for any connection of an additional accessory, refer to page D *"Spare wires"* in master wiring diagram to determine the number, the gauge and location of these wires.

Note: *Spare wires are identified by a wire identification number and by the letters "SP", to designate "spare".*

1.4 CLEANING CONNECTORS

When the pins and sockets of connectors become dirty, clean them with a good quality solvent containing HFC 134A refrigerant as its active ingredient. HFC 134A has two qualities that recommend it. First, it does not conduct electricity and therefore, will not cause shorting between connector pins and sockets. Second, it evaporates quickly, eliminating the possibility of condensation within the connectors.
Always shake out or gently blow out any excess HFC 134A before assembling a connector to its mating connector or hardware. HFC 134A trapped in the connector can affect the connector seal.

Warning: *HFC 134A is toxic. HFC 134A bases compounds should always be used in a well-ventilated area, never in a confined space. Use outdoor whenever possible.*

1.5 CIRCUIT BREAKERS

Most electric circuits are protected by circuit breakers of the "Manual Reset" type. The main circuit breakers, as well as those protecting the A/C system, are located in the engine compartment, on R.H. side of the vehicle, in the main power compartment or in the rear baggage compartment depending on type of vehicle. The remaining are located in the evaporator compartment, inside the A/C junction box.

CIRCUIT BREAKERS			
CB1	A/C Full Air	24 volts	200 amps
CB2	Hot Wire	12 volts	40 amps
CB3	Rear Junction Box	12 volts	70 amps
CB4	Front Junction Box	12 volts	90 amps
CB5	Hot Wire	24 volts	30 amps
CB6	Rear Junction Box	24 volts	90 amps
CB7	Front Junction Box	24 volts	90 amps
CB8	Condenser Fan Motor L.H.	24 volts	40 amps
CB9	Evaporator Fan Motor	24 volts	120 amps
CB11	Condenser Fan Motor R.H.	24 volts	40 amps

The smaller circuit breakers are accessible in the front service compartment and rear junction box. This type of circuit breaker deenergizes the circuit without disconnecting any wire. Simply press down the red tab on breaker to open the circuit, repair defective circuit, and afterwards depress black button in center of breaker to close the circuit.

1.6 RELAYS

Relays are used to automatically energize or deenergize a circuit from a remote location. The relay draws a very low current to energize its coil. Once the coil is energized, it develops a magnetic field that pulls a switch arm closed or open, to either energize or deenergize a given

component. As the control current required for the coil is very low, the relay allows a remote station to control a high energy circuit without running great lengths of costly high capacity cable, and also eliminates the need for high amperage switches and heavy connectors.
Many systems on this vehicle are provided with control relays, which are all, located in or on the junction boxes, figure 2.

Note: *Each relay is identified with "12V" or "24V" printed on its casing in order to identify the coil operating voltage.*

Caution: *The magnetic relays for the starting motor, evaporator and both condenser motors and condenser speed controls should have the 5/16" stud nuts torqued to 50 ± 5 in•lbf (5,5 ± 0,5 N•m).*

	Configuration on base	Key printed on casing	Key used on wiring diagram	Example
Cubic relay (Steel or plastic casing) Type: S.P.D.T. 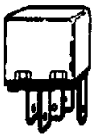		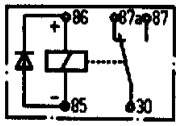	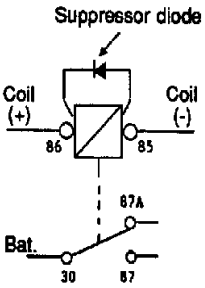	R #5
Magnetic relay (Round steel casing) Type: S.P.S.T. 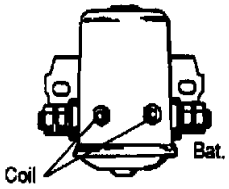	None	None	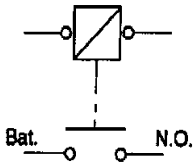	R #4
Magnetic relay (Round steel casing) Type: D.P.D.T. 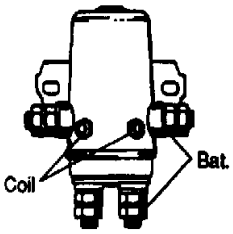	None	None	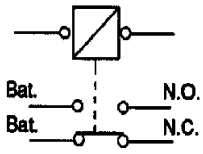	R #40

NOTE: This relay is provided with an internal suppressor diode; never reverse wiring terminals #85 and 86 at base as a direct short circuit will result.

The relay coils connected to the alternator "relay terminal" should never be provided with a suppressor diode as the output current at this terminal is not rectified, thus rendering relay inoperative.

LEGEND

Bat.	Battery
N.O.	Normally Open
N.C.	Normally Closed
S.P.D.T.	Single Pole Double Throw
S.P.S.T.	Single Pole Single Throw
D.P.D.T.	Double Pole Double Throw

FIGURE 2: TYPES OF RELAYS 06050

2. XL2 COACHES ELECTRICAL COMPARTMENTS AND JUNCTION BOXES

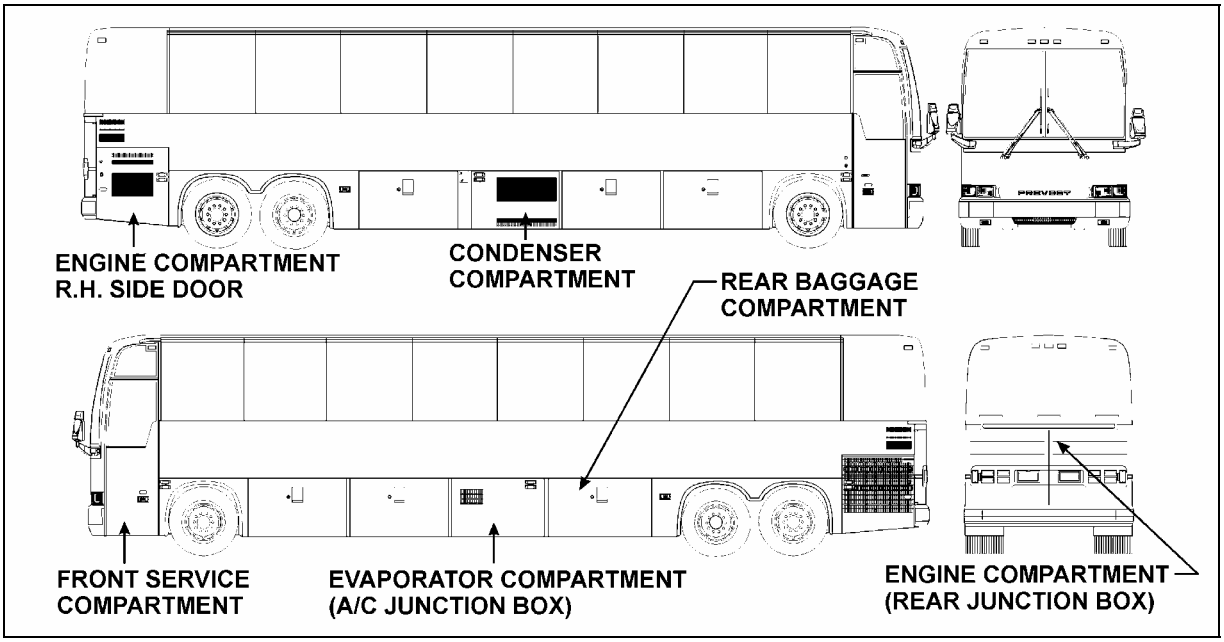

FIGURE 3: ELECTRICAL COMPARTMENT (XL2-40 COACH) 06328

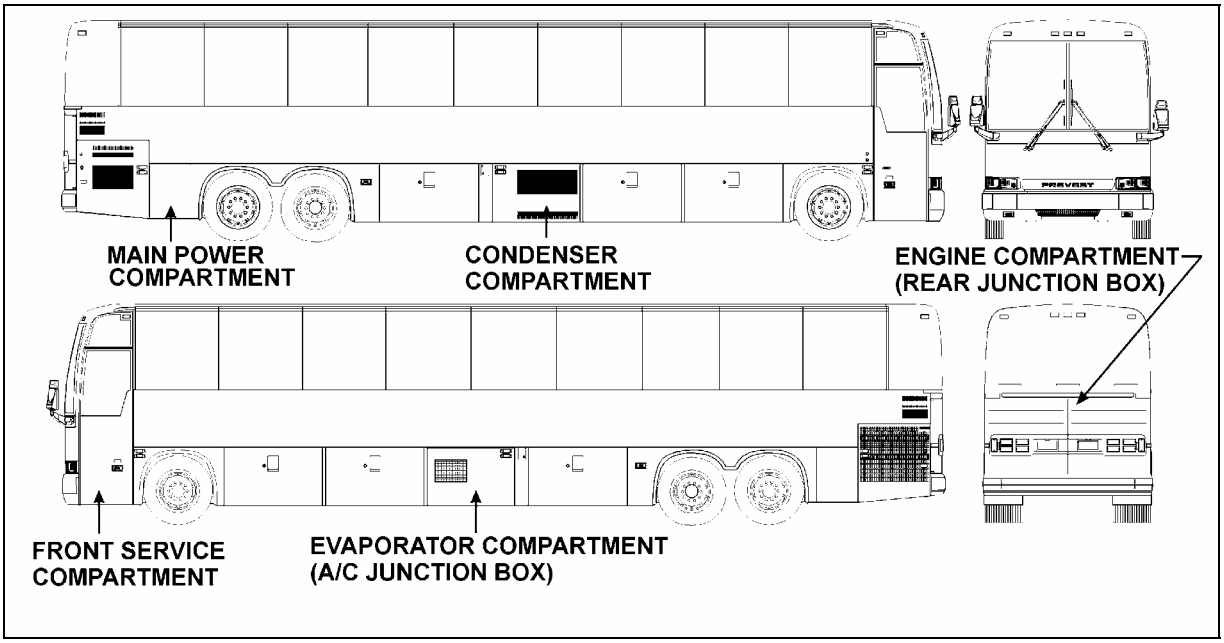

FIGURE 4: ELECTRICAL COMPARTMENT (XL2-45 COACH) 06329

2.1 MAINTENANCE

A Cortec VCI-238 corrosion inhibitor has been sprayed in all electrical compartments to protect components from corrosion. The life expectancy of this product is five years, so it is recommended to reapply it every five years. It is also recommended to spray it on new components when added or replaced.

Warning: *Use VIC-238 in a well ventilated area. Do not smoke. Avoid prolonged contact with skin and breathing of spray mist. Harmful or fatal if swallowed. Do not induce vomiting. Call physician immediately.*

2.2 BOOSTER BLOCK

On XL2-40 coaches, booster block is located in the engine compartment on the R.H. side and is accessible through engine R.H. side door. On XL2-45 coaches, booster block is located in the main power compartment (Fig. 5).

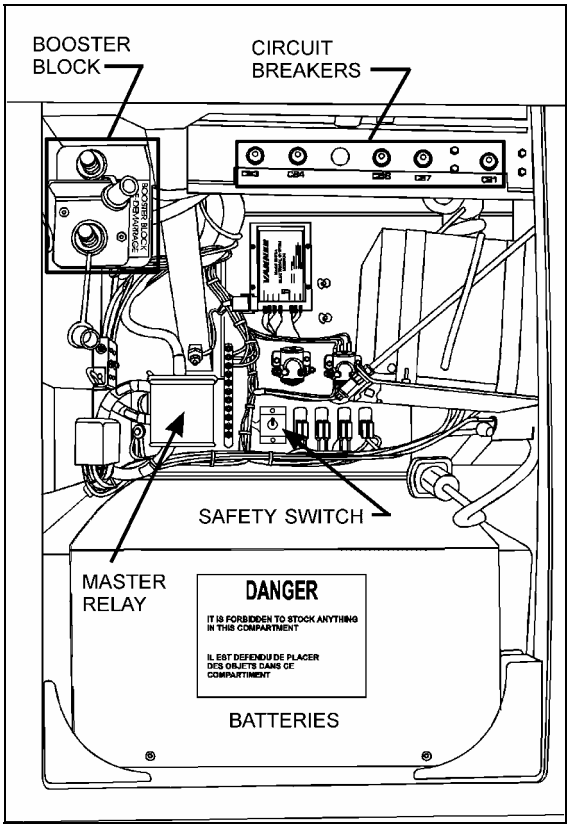

FIGURE 5: MAIN POWER COMPARTMENT (XL2-45) 06316

2.3 BATTERY SAFETY SWITCH

This switch disconnects both the 12 and 24 volts. This toggle switch is located in the battery compartment (XL2-40), or in the main power compartment (XL2-45).

Caution: *During repair or maintenance periods, set battery safety switch to the "OFF" position in order to avoid personal injury. This ensures that power is cut off even if master key switch is set to the "ON" position by mistake. When master key switch is set to the "OFF" position, electrical supply from the batteries is automatically cut off.*

Note: *When battery safety switch or master key switch is set to the "OFF" position, the electrical supply from the batteries is cut off, with the exception of the Fire Detection System, the Engine & Transmission Electronic Controls, the Auxiliary Heating System, the Battery Equalizers and the Digital Clock.*

2.4 BATTERIES

To gain access to the battery compartment, open the R.H. side rear baggage compartment. Batteries are accessible by means of an access door which is located on the back wall of the rear baggage compartment (XL2-40). To open battery access door, simply take out handle from it's cavity, turn ¼ counterclockwise and pull on the handle. The batteries are located in the main power compartment on the XL2-45 coach.

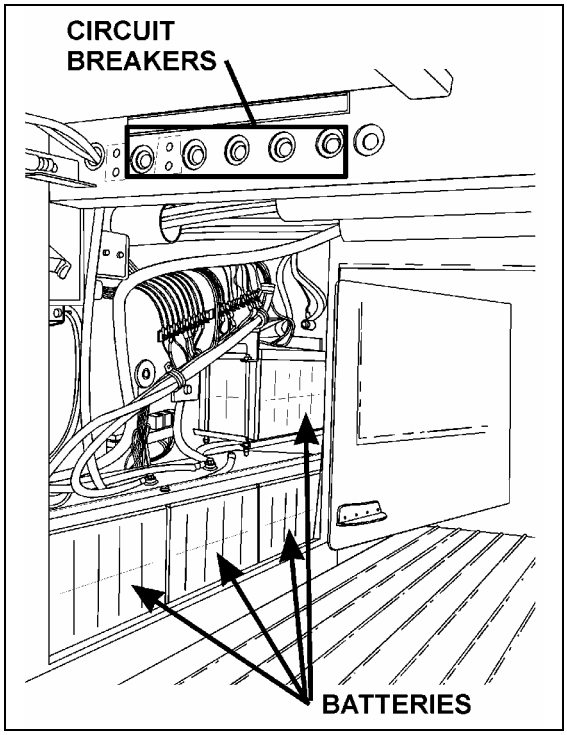

FIGURE 6: BATTERY COMPARTMENT (XL2-40) 06325

Electric Circuit Protection

Two type of cutoff mechanisms are installed to protect the vehicle's electrical system; fuses and manually-resettable circuit breakers. If an electrical device is inoperative, check the corresponding cutoff mechanism.

Caution: *Never replace a fuse with a higher rated one because it will cause severe damage to the electric system.*

2.5 CIRCUIT BREAKERS

Most of the manually-resettable circuit breakers are located in the: A/C junction box, rear junction box, front service compartment, rear baggage compartment and in the main power compartment. An identification decal is affixed on the inside face of each door.

XL2-40 and XL2-45 coaches are equipped with eight (8) main breakers; they are installed just below R.H. side rear baggage compartment's ceiling or in the main power compartment and in the A/C junction box in the evaporator compartment, they can be identified as follows (Fig. 5, 6, 7and 8):

1. A/C full air (CB1) 200 amps-24 volts;
2. Front junction box (CB7) 90 amps-24 volts;
3. Rear junction box (CB6) 90 amps-24 volts;
4. Direct (CB4) 90 amps-12 volts;
5. Rear junction box (CB3) 70 amps-12 volts;
6. Condenser fan motor L.H. (CB8) 40 A-24 volts;
7. Evaporator fan motor (CB9) 120 amps-24 volts;
8. Condenser fan motor R.H. (CB11) 40 A-24 volts.

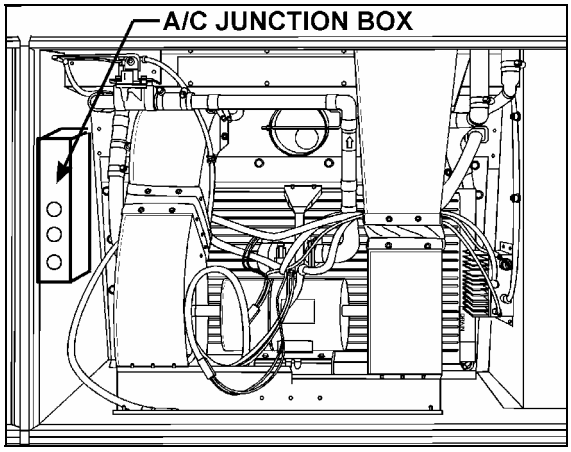

FIGURE 7: LOCATION OF A/C JUNCTION BOX IN EVAPORATOR COMPARTMENT 06414

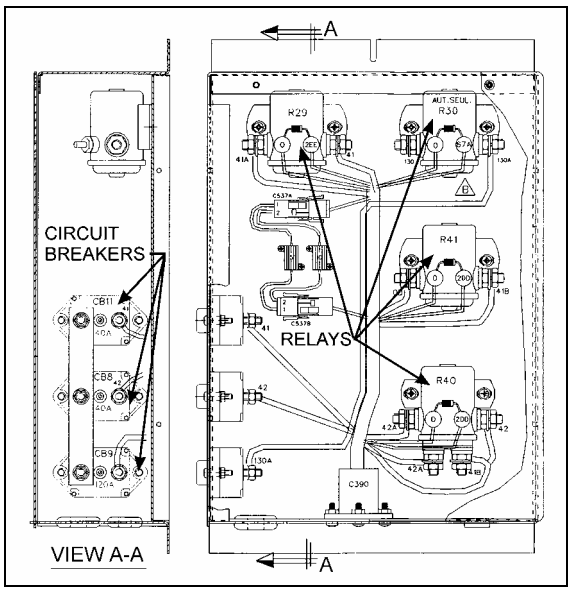

FIGURE 8: A/C JUNCTION BOX 06317

2.6 FRONT SERVICE COMPARTMENT

The front service compartment is located on L.H. side of vehicle, under the driver's window. It contains the following components (Fig. 9 and 10):

- relays;
- breakers;
- alternator module
- diodes;
- ABS blinker switch;
- electronic control unit for ABS.

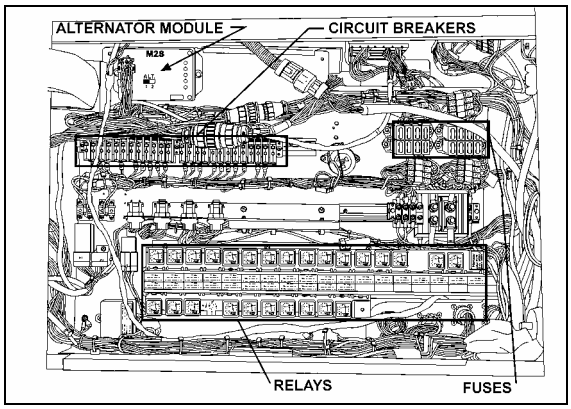

FIGURE 9: TOP SECTION OF FRONT SERVICE COMPARTMENT 06319

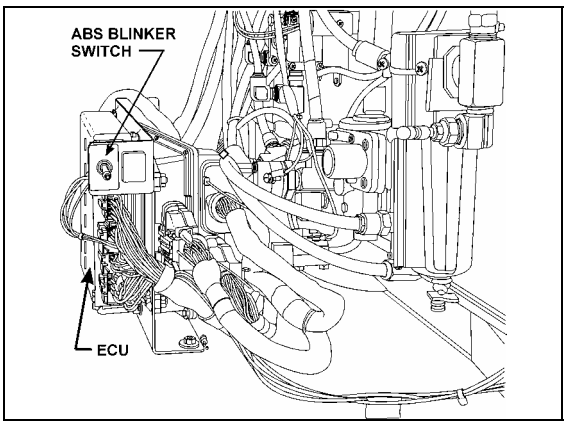

FIGURE 10: BOTTOM SECTION OF FRONT SERVICE COMPARTMENT 06394

DDR connector

To enhance troubleshooting and to allow interrogation of the ECU for valuable service information, a DDR (diagnostic data reader) can be used. To use it, plug the appropriate connector (not furnished by the manufacturer) in the terminal located in the rear junction box or the connector located on L.H. console (refer to fig. 11 and 14). You can also use your push-button shifter to per form certain maintenance operations (see Section 01, Engine, under paragraph "4. DDEC IV Diagnostic codes").

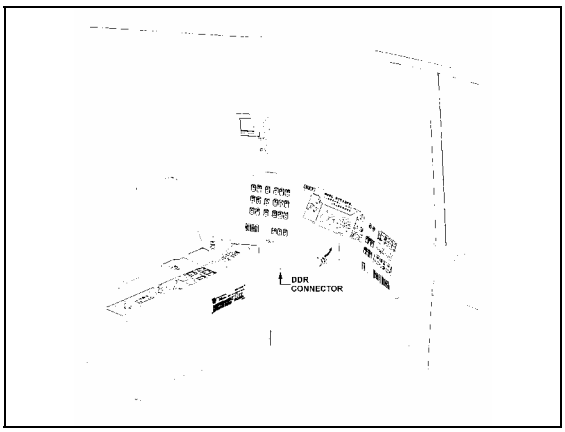

FIGURE 11: DDR CONNECTOR LOCATION IN DRIVER'S AREA 18375

2.6.1 L.H. SIDE OF FRONT BAGGAGE COMPARTMENT (Vehicle Equipped With Video System)

This compartment may contain the following components (Fig.12):

- protective screen (with video system);
- video inverter (with video system);
- electronic system monitor.

Battery Equalizers

On XL2-40 coach, two (2) battery equalizers ("VANNER"-50 amps-12 & 24 volts) are installed just below L.H. side rear baggage compartment's ceiling. The r eset buttons are located on the end of equalizers facing the center of the coach (Fig. 12). On XL2-45 coach the battery equalizers are located in the main power compartment (Fig. 5).

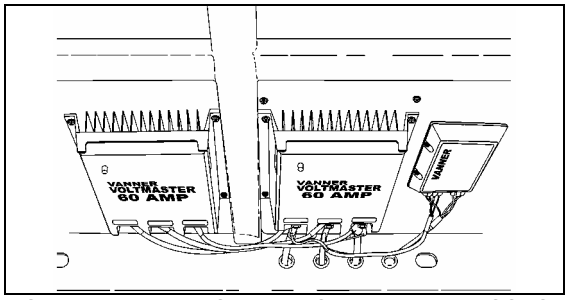

FIGURE 12: L.H. S IDE OF RE AR BAGGAGE COMPARTMENT'S CEILING 06326

2.7 ENGINE COMPARTMENT (REAR JUNCTION BOX)

The rear junction box is located in the engine rear compartment.

Switches are located on R.H. side of re ar junction box (Fig.13):

- engine compartment light switch;
- starter selector switch;
- rear start (push button switch).

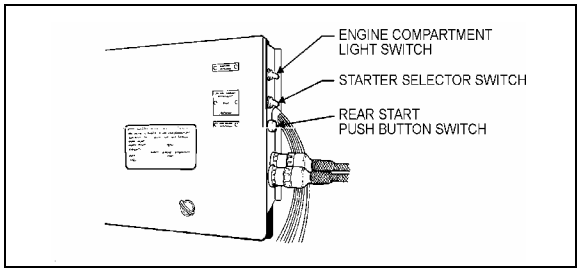

FIGURE 13: REAR JUNCTION BOX SWITCHES 01017

The rear junction box contains the following components (Fig. 14):

- relays;
- breakers;
- diodes;
- time delay relay;
- DDR connector.

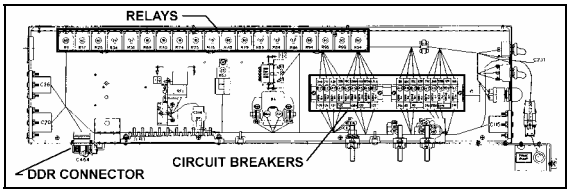

FIGURE 14: REAR JUNCTION BOX 06318

3. XL2 MOTORHOMES ELECTRICAL COMPARTMENTS AND JUNCTION BOXES

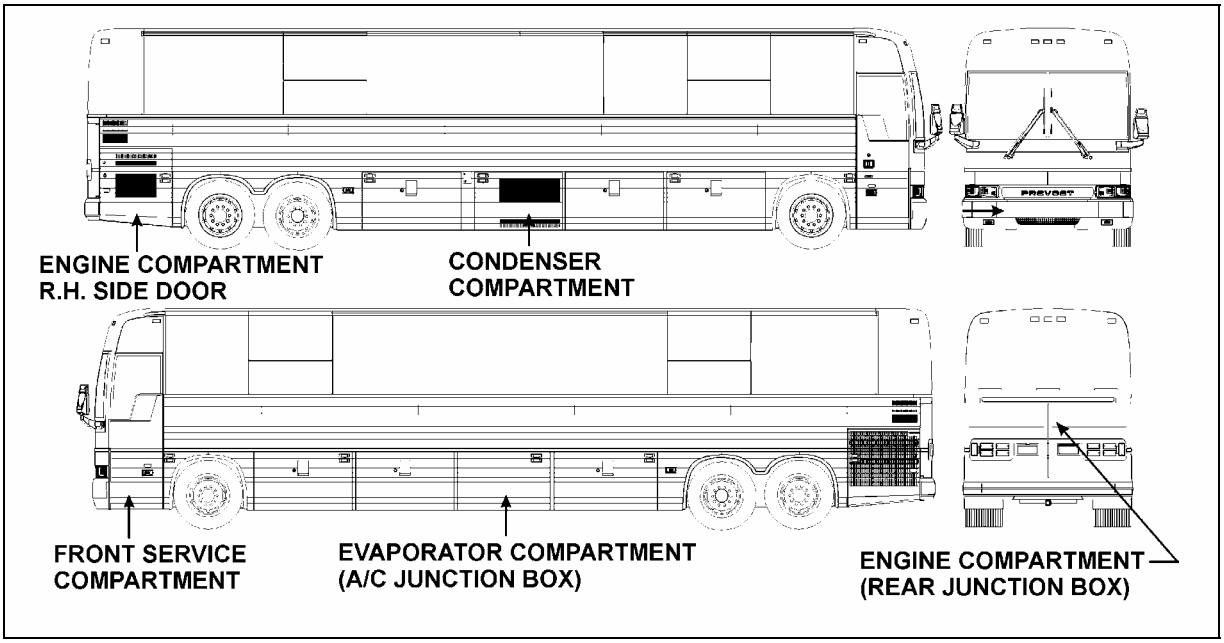

FIGURE 15: ELECTRICAL COMPARTMENTS (XL2-40 BUS SHELLS) 06330

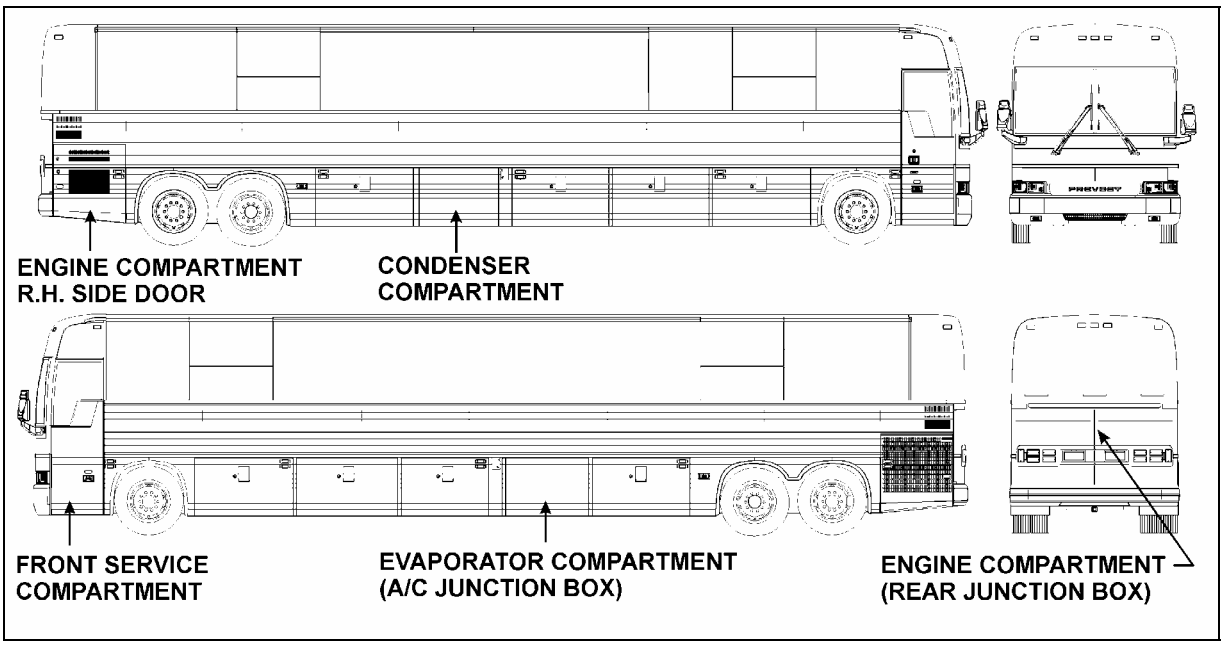

FIGURE 16: ELECTRICAL COMPARTMENTS (XL2-45E BUS SHELLS) 06324

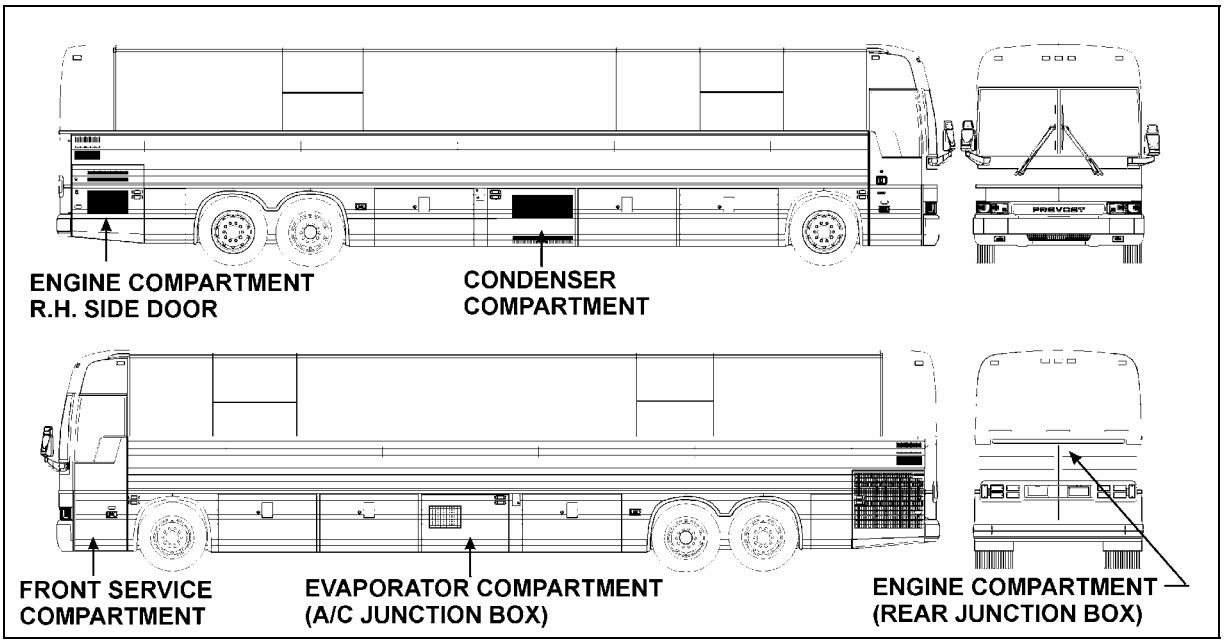

FIGURE 17: ELECTRICAL COMPARTMENTS (XL2-45 BUS SHELLS) 06323

3.1 MAINTENANCE

A Cortec VCI-238 corrosion inhibitor has been sprayed in all electrical compartments to protect components from corrosion. The life expectancy of this product is five years, so it is recommended to reapply it every five years. It is also recommended to spray it on new components when added or replaced.

Warning: *Use VIC-238 in a well ventilated area. Do not smoke. Avoid prolonged contact with skin and breathing of spray mist. Harmful or fatal if swallowed. Do not induce vomiting. Call physician immediately.*

3.2 BOOSTER BLOCK

On all XL2 MTH, booster block is located on the breaker panel in the engine compartment on the R.H. side and is accessible through engine R.H. side door (Fig. 18).

3.3 BATTERY SAFETY SWITCH

This switch disconnects both the 12 and 24 volts. This toggle switch is located on the breaker panel in the engine compartment on the R.H. side and is accessible through engine R.H. side door (Fig. 18).

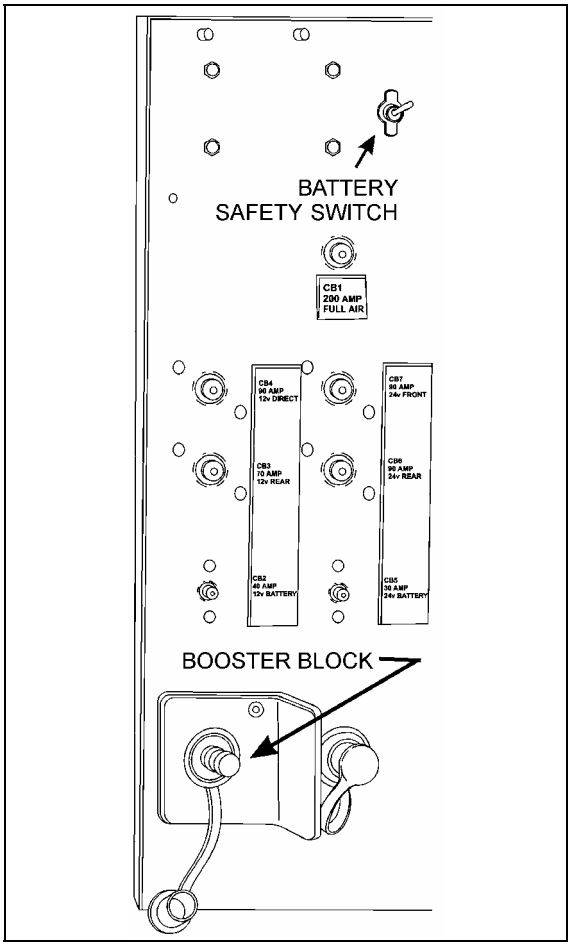

FIGURE 18: BREAKER PANEL 06382

Caution: *During repair or maintenance periods, set battery safety switch to the "OFF" position in order to avoid personal injury. This ensures that power is cut off even if master key switch is set to the "ON" position by mistake. When master key switch is set to the "OFF" position, electrical supply from the batteries is automatically cut off.*

Note: *When battery safety switch or master key switch is set to the "OFF" position, the electrical supply from the batteries is cut off, with the exception of the Fire Detection System, the Engine & Transmission Electronic Controls, the Auxiliary Heating System, the Battery Equalizers and the Digital Clock.*

3.4 BATTERIES

The batteries are located in the engine compartment R.H. side (Fig. 19). The battery arrangement may differ between vehicle types due to available space.

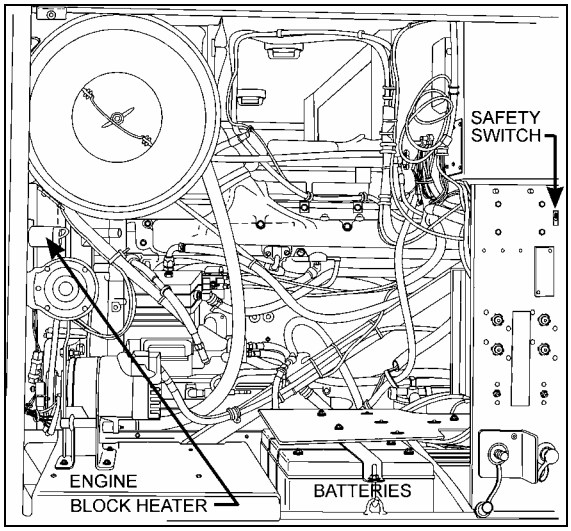

FIGURE 19: ENGINE COMPARTMENT R.H. SIDE 18354

Electric Circuit Protection

Two type of cutoff mechanisms are installed to protect the vehicle's electrical system; fuses and manually-resettable circuit breakers. If an electrical device is inoperative, check the corresponding cutoff mechanism.

Caution: *Never replace a fuse with a higher rated one because it will cause severe damage to the electric system.*

3.5 CIRCUIT BREAKERS

Most of the manually-resettable circuit breakers are located in the: A/C junction box, rear junction box, front service compartment and in the engine compartment R.H. side. An identification decal is affixed on the inside face of each door.

MTH XL2-40, XL2-45E and XL2-45 may be equipped with ten (10) main breakers; six (6) of which are standard and four (4) are supplied only on vehicles with central A/C system. CB2 to CB7 breakers are standard and CB1, CB8, CB9 and CB11 breakers are optional.

On all vehicles, breakers CB1 to CB7 are installed on br eaker panel in engine compartment R.H. side (Fig. 18). They are accessible through engine R.H. side door and can be identified as follows:

1. A/C full air (CB1) 200 amps-24 volts;
2. Front junction box (CB7) 90 amps-24 volts;
3. Rear junction box (CB6) 90 amps-24 volts;
4. Direct (CB4) 90 amps-12 volts;
5. Rear junction box (CB3) 70 amps-12 volts;
6. Battery CB2) 40 amps-12 volts;
7. Battery (CB5) 30 amps-24 volts;

On all veh icles, optional breakers CB 8, CB9 and CB11 are installed in the A/C junction box in the evaporator compartment (Fig. 20 and 21), they can be identified as follows:

1. Condenser fan motor L.H. (CB8) 40 A-24 volts;
2. Evaporator fan motor (CB9) 120 amps-24 volts;
3. Condenser fan motor R.H. (CB11) 40 A-24 volts.

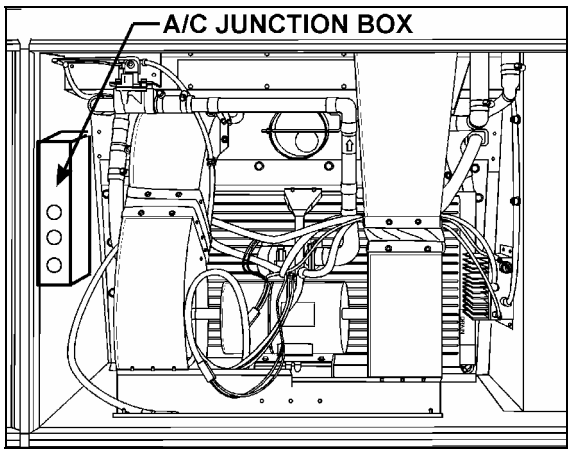

FIGURE 20: LOCATION OF A/C JUNCTION BOX IN EVAPORATOR COMPARTMENT 06414

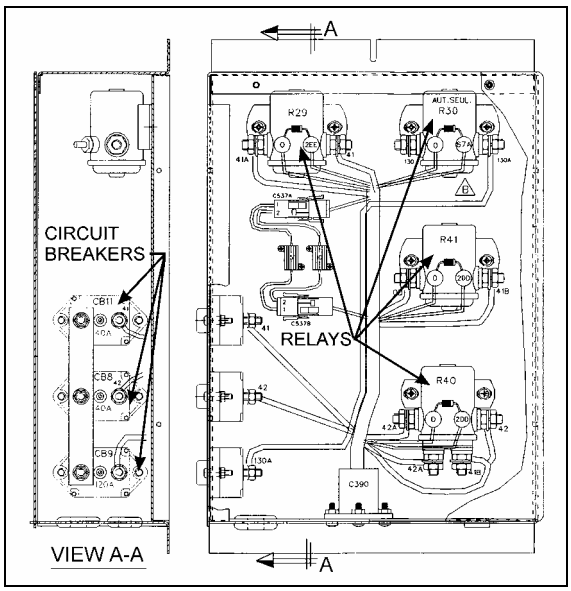

FIGURE 21: A/C JUNCTION BOX 06317

3.6 FRONT SERVICE COMPARTMENT

The front service compartment is located on L.H. side of vehicle, under the driver's window. It contains the following components (Fig. 22 and 23):

- relays;
- breakers;
- alternator module
- diodes;
- ABS blinker switch;
- electronic control unit for ABS.

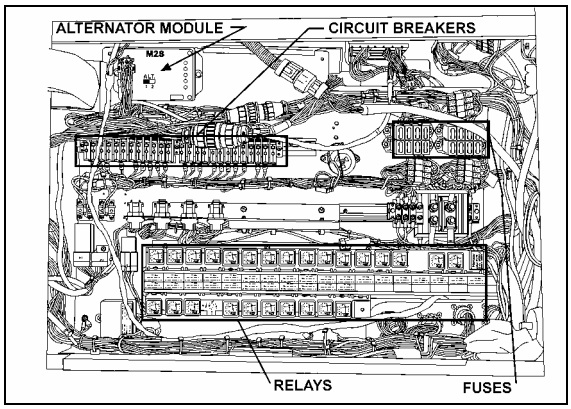

FIGURE 22: TOP SECTION OF FRONT SERVICE COMPARTMENT 06319

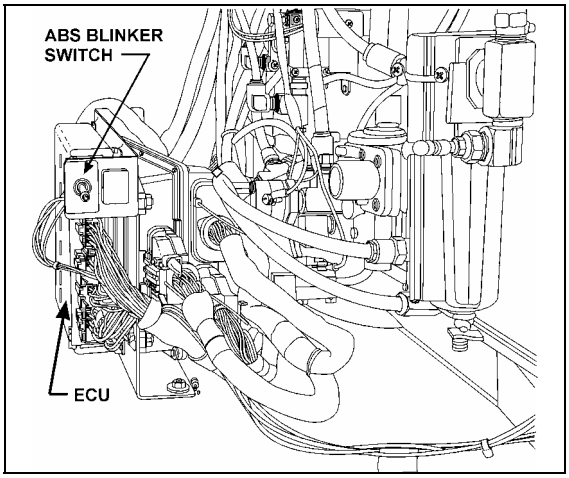

FIGURE 23: BOTTOM SECTION OF FRONT SERVICE COMPARTMENT 06394

DDR connector

To enhance troubleshooting and to allow interrogation of the ECU for valuable service information, a DDR (diagnostic data reader) can be used. To use it, plug the appropriate connector (not furnished by the manufacturer) in the terminal located in the rear junction box or the connector located on L.H. console (refer to fig. 24 and 26). You can also use your push-button shifter to per form certain maintenance operations (see Section 01, Engine, under paragraph "4. DDEC IV Diagnostic codes").

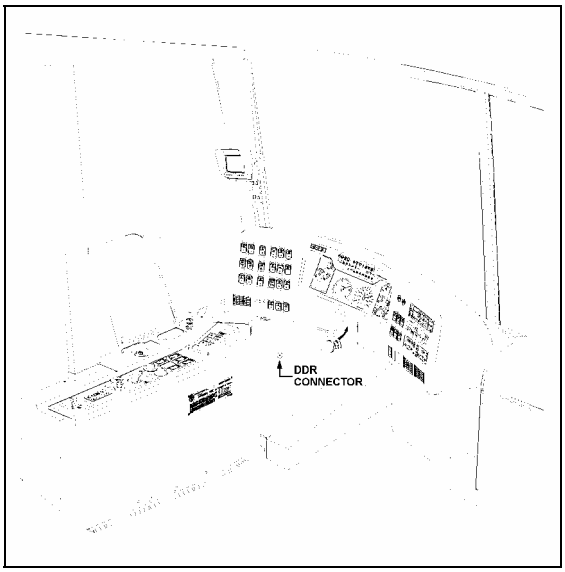

FIGURE 24: DDR CONNECTOR LOCATION IN DRIVER'S AREA 18375

3.7 ENGINE COMPARTMENT (REAR JUNCTION BOX)

The rear junction box is located in the engine rear compartment.
Switches are located on R.H. side of re ar junction box (Fig.25):

- engine compartment light switch;
- starter selector switch;
- rear start (push button switch).

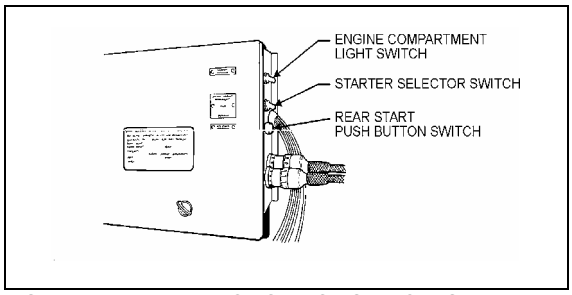

FIGURE 25: REAR JUNCTION BOX SWITCHES 01017

The rear junction box contains the following components (Fig. 26):

- relays;
- breakers;
- diodes;
- time delay relay;
- DDR conector.

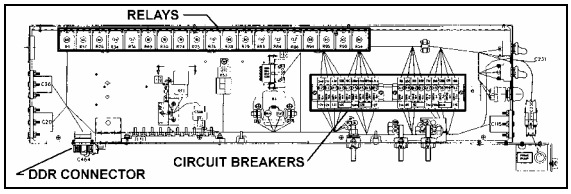

FIGURE 26: REAR JUNCTION BOX 06318

4. BATTERIES

The vehicle is provided with f our (4) maintenance-free 12 volt heavy-duty batteries connected in series-parallel (Fig. 27). The top-mounted negative and positive terminals are tightly sealed to pr event leaks. Water never needs to be added to this type of battery. There are no filler caps in the c over. The battery is sealed, except for small vent holes in the cover. The vents must not be restricted as they allow small amounts of gases produced in the battery to escape. The s pecial chemical composition inside the battery reduces gassing to a very small amount at normal charging voltages. Besides reducing gassing, the special chemistry greatly reduces the pos sibility of overcharge damage.

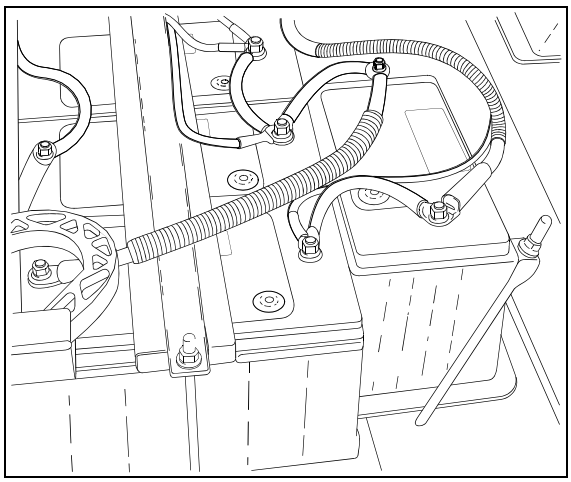

FIGURE 27: BATTERIES (TYPICAL) 06343

The vents require keeping the battery in an upright position to prevent electrolyte leakage. Tipping the battery beyond a 45° angle in any direction can allow a small amount of electrolyte to leak out of the vent holes.

Warning: *DO NOT tip battery by more than 45° when carrying or installing the battery.*

Note: *Evidence of electrolyte leakage does not necessarily mean the battery is defective.*

With special cables properly attached to batteries, the metal surfaces that carry the current are co mpletely sealed from the atmosphere. This prevents terminal oxidation and corrosion that may cause starting and charging problems. If new cables are required, sealed terminal cable replacements should be used to retain the r eliability of the original maintenance-free connections.

Warning: *All lead-acid batteries generate hydrogen gas, which is highly flammable. If ignited by a spark or flame, the gas may explode violently, causing spraying of acid, fragmentation of the battery, which may result in severe personal injuries. Wear safety glasses and do not smoke when working near batteries. In case of contact with acid, flush immediately with water.*

The battery has four (4) major functions:

1. Providing a source of current for starting the engine.
2. Stabilizing the voltage in t he electrical system;
3. Supplying current for a limited time, when electrical demands of the equipment exceed the power output of the alternator;
4. Providing a limited source of po wer for connected accessories, when the engine is not running.

4.1 BATTERY REMOVAL AND INSTALLATION

4.1.1 XL2-40 Coach

The batteries are loca ted in the rear baggage compartment (battery compartment).

Warning: *To prevent possible electric shocks or sparking, the battery master switch should be in the "Off" position before disconnecting cables from the batteries (see paragraph "2.3 Battery master switch").*

<u>To remove lower defective batteries:</u>

1. Remove the two (2) batteries retaining bracket nuts. Remove the batteries retaining bracket (Fig. 6).
2. Unscrew terminal nuts of ea ch defective battery. Remove battery cables from the batteries.
3. Remove defective batteries.

<u>To remove the upper battery:</u>

1. Loosen the two (2) rod nuts and remove the battery securing bracket (Fig. 6).
2. Unscrew terminal. Remove battery cables from the battery.
3. Remove defective battery.
4. Installation is the reverse of removal.

Note: *When the battery cables have been removed from the batteries, wrap the battery terminals and cable ends with electric tape to prevent accidental grounding. The ground cables should always be disconnected first and replaced last.*

Note: *When the battery cables have been removed from the batteries, wrap the battery terminals and cable ends with electric tape to prevent accidental grounding. The ground cables should always be disconnected first and replaced last.*

Note: *In replacing batteries, only batteries of the same specification should be used. Refer to "Specifications" at th e end of this section for further details.*

Caution: *Ensure that connections are not reversed when reinstalling batteries, since damage to electrical system components will result.*

When reinstalling batteries, battery connections must be tightened to 10-15 ft-lbf (13-20) N·m) and the nut on top of sliding tray to 45-55 in-lbf (5-6 N·m). A torque wrench is required to ensure an accurate tightening torque.

Warning: *To prevent possible electric shock or sparking, the battery master switch must be set to the "Off" position before tightening an electrical connection.*

Note: *A protective silicone free, coating should be applied on a ll terminals that have been disconnected. We recommend the use of Cortec VCI-238 (Prévost #682460) on all electrical connections.*

4.1.2 XL2-45 Coach

The batteries are located in the main power compartment.

1. Remove the two screws at the bottom of the plastic protective cover, then unscrew the two quarter turn nuts to remove the protective cover (Fig. 5)

Warning: *To prevent possible electric shocks or sparking, the battery master switch should be in the "Off" position before disconnecting cables from the batteries (see paragraph "2.3 Battery master switch").*

2. Remove the supports, and unscrew terminal nuts of each defective battery.
3. Remove battery cables from the batteries.

Note: *When the battery cables have been removed from the batteries, wrap the battery terminals and cable ends with electric tape to prevent accidental grounding. The ground cables should always be disconnected first and replaced last.*

4. Remove batteries.
5. Installation is the reverse of removal.

Note: *When the battery cables have been removed from the batteries, wrap the battery terminals and cable ends with electric tape to prevent accidental grounding. The ground cables should always be disconnected first and replaced last.*

Note: *In replacing batteries, only batteries of the same specification should be used. Refer to "Specifications" at the end of this section for further details.*

Caution: *Ensure that connections are not reversed when reinstalling batteries, since damage to elec trical system components will result.*

When reinstalling batteries, battery connections must be tightened to 13 -15 ft-lbf (18-20) N·m) and the nut on top of sliding tray to 45-55 in-lbf (5-6 N·m). A torque wrench is required to ensure an accurate tightening torque.

Warning: *To prevent possible electric shock or sparking, the battery master switch must be set to the "Off" position before tightening an electrical connection.*

Note: *A protective silicone free, coating should be applied on all term inals that have been disconnected. We recommend the use of Cortec VCI-238 (Prévost #682460) on all electrical connections.*

4.1.3 Xl2-40, XL2-45E and XL2 45 Bus Shells

The batteries are located in the engine compartment R.H. side (Fig. 19).

1. Remove the tree (3) plastic protective cover retaining bolts. Remove the plastic protective cover.
2. Remove the support retaining bolt.

Warning: *To prevent possible electric shocks or sparking, the 12 and 24 vo lts battery master switch should be in the "Off" position before disconnecting cables from the batteries (see paragraph "3.3 Battery Master Switch").*

3. Remove the support (if necessary, remove battery cables). To remove battery cables, unscrew terminal nuts and remove cables.
4. Remove battery cables from defective batteries.

Note: *When the battery cables have been removed from the batteries, wrap the battery terminals and cable ends with electric tape to prevent accidental grounding. The ground cables should always be disconnected first and replaced last.*

5. Remove defective batteries.
6. Installation is the reverse of removal.

Note: *In replacing batteries, only batteries of the same specification should be used. Refer to "Specifications" at the end of this section for further details.*

Caution: *Ensure that connections are not reversed when reinstalling batteries, since damage to electrical system components will result.*

When reinstalling batteries, battery connections must be tightened to 13-15 ft-lbf (18-20) N·m) and the nut on top of sliding tray to 45-55 in-lbf (5-6 N·m). A torque wrench is required to ensure an accurate tightening torque.

Warning: *To prevent possible electric shock or sparking, the battery master switch must be set to the "Off" position before tightening an electrical connection.*

Note: *A protective silicone free, coating should be applied on all terminals that have been disconnected. We recommend the use of Cortec VCI-238 (Prévost #682460) on all electrical connections.*

4.2 BATTERY RATING

Each of the 12 volt batteries used on the vehicle has the following rating:

- Reserve capacity: 180 minutes
- Cold cranking (amps): 625 @ 0°F (-18°C)
- Cold cranking (amps): 490 @ -20°F (-29°C)
- Weight (filled): 59 lb. (26,7 kg)

The reserve capacity is defined as the number of minutes a new, fully charged battery at 80 F (26,6 C) can be discharged at 25 amperes and maintain a minimum of 1.75 volts per cell (10.5 volts total for one 12 volts battery). This rating can be used as a basis for determining how long a vehicle might run after an alternator failure.

The cold cranking rating is defined as the minimum discharge current a battery will deliver in amperes for 30 seconds at 0 F (-18 C) while maintaining a minimum of 1.2 volts per cell (7.2 volts total for one 12 volts battery). This rating can be used as a basis for comparing starting performance.

4.3 BATTERY TESTING

The maintenance-free battery has a strong ability to withstand the damaging effects of overcharge. The test indicator in the cover is used only to determine if the battery can be tested in case of a cranking problem.
The test indicator in the battery cover is to be used with accepted diagnostic procedures only. It must not be used to determine if the battery is good or bad, charged or discharged. The test indicator is a built-in hydrometer in one cell that provides visual information for battery testing (Fig. 28).
It is important when observing the test indicator, that the battery be relatively level and has a clean indicator top to see the correct indication. Some lighting may be required in poorly lit areas. Under normal operation, two indications can be observed.

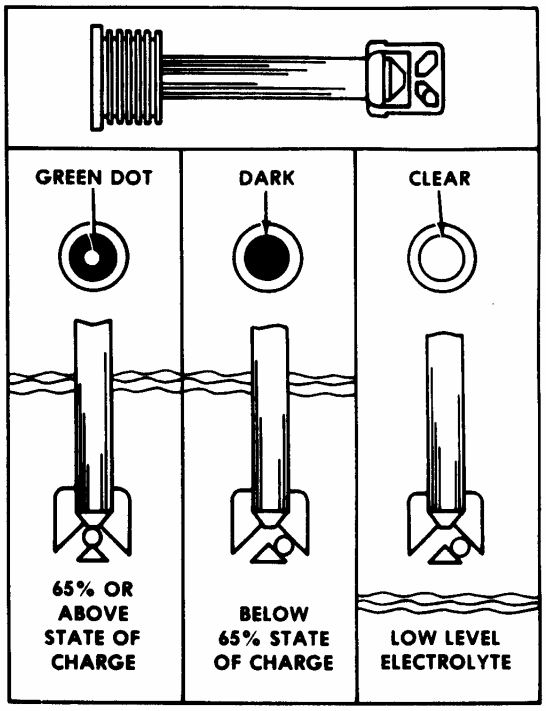

FIGURE 28: TEST INDICATOR 06096

Green Dot Visible

Any green appearance is interpreted as a *"green dot"*, and the battery is ready for testing. On rare occasions, following prolonged cranking, the green dot may still be visible when the battery is obviously discharged. Should this occur, charge the battery as described under *"Charging Procedure"* in *"Battery Charging"* later in this section.

Dark - Green Dot Not Visible

If there is difficulty cranking the engine, the battery should be tested as described in this section. On rare occasions, the test indicator may turn light yellow. In this case, the integral charging system should be checked. Normally, the battery is capable of further service; however, if difficult start has been reported, replace the battery. **DO NOT CHARGE, TEST, OR JUMP-START.**

4.3.1 Visual Inspection

1. Check the outside of the battery for a broken or cracked cover or case that could permit loss of electrolyte. If obvious physical damage is noted, replace the battery.
2. Check for loose terminal posts, cable connections, damaged cables, and for evidence of corrosion. Correct conditions as required before proceeding with tests.

4.3.2 Removing Surface Charge

Disconnect cables from the battery and attach alligator clamps to the contact lead pad on the battery as shown in figure 30. Connect a 300 ampere load across the terminal for 15 seconds to remove surface charge from the battery.

4.3.3 Load Test

This test is one means of checking the battery to determine its ability to function as required in the vehicle.
To make this test, use test equipment that will withstand a heavy electrical load from the battery, such as a carbon pile resistor or other suitable means.

1. Connect a voltmeter, ammeter, and a variable load resistance as illustrated in figure 29.

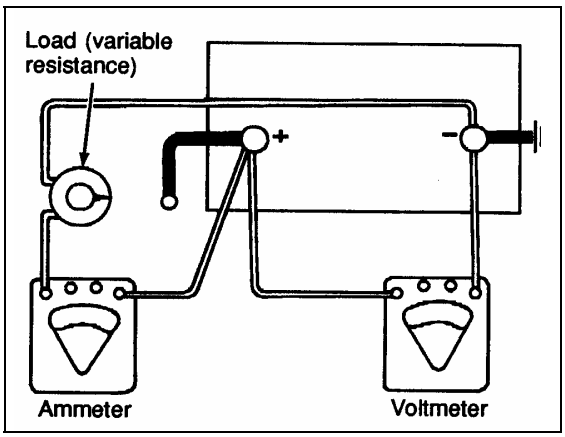

FIGURE 29: LOAD TEST 06064

Caution: *Observe polarity of the meters and the battery when making connections, and select the correct meter range.*

2. Apply a 290 amperes load to the battery for 15 seconds.
3. With an ammeter reading specified load, read voltage. The voltage should be at least 9.6 volts. Disconnect the load. If the voltmeter indicates 9.6 volts or more, the battery is good. If the voltmeter reading is less than 9.6 volts, replace the battery. This voltage is to be used for battery ambient temperatures of 70ºF (21ºC) and above. For temperatures below 70ºF (21ºC), refer to the following *"Voltage and Temperature Chart"*.

Voltage and Temperature Chart

Ambient Temperature	Minimum Voltage
70ºF (21ºC) and above	9.6
60ºF (16ºC)	9.5
50ºF (10ºC)	9.4
40ºF (4ºC)	9.3
30ºF (-1ºC)	9.1
20ºF (-7ºC)	8.9
10ºF (-12ºC)	8.7
0ºF (-18ºC)	8.5

Note: *The accuracy of this test procedure is dependent upon close adherence to the proper load, time and temperature specifications.*

4.3.4 Testing Battery Cables

Check all cable ring terminals and connections to determine if they are in good condition. Excessive resistance, generally caused by poor connections, produces an abnormal voltage drop which may lower voltage at the starter to such a low value that normal operation of the starter will not be obtained. An abnormal voltage drop can be detected with a low-reading voltmeter as follows:

Warning: *To prevent the engine from starting, the DDEC engine circuits, which are protected by breakers (CB-19, CB-20 and CB-21) located in the rear junction box, must be deenergized during these tests; afterward, depress black button to close circuit.*

1. Check voltage drop between grounded (negative) battery terminal and vehicle frame by placing one prod of the voltmeter on the battery terminal and the other on a good ground (unpainted surface) on the vehicle. With the starter cranking the engine at a temperature of 70ºF (21ºC), voltage reading should be less than 0.3 volt. If the voltage reading exceeds 0.3 volt, there is excessive resistance in this circuit.
2. Check voltage drop between the positive battery terminal and the starter positive terminal stud while the motor is operated. If the reading is more than 2.5 volts, there is excessive resistance in this circuit.

Note: *If it is necessary to extend the voltmeter lead for this test, use a #16 (AWG) or larger wire.*

3. Check voltage drop between the starter housing and a good ground on the vehicle. The reading should be less than 0.2 volt.

Warning: *Any procedure other than the following could cause personal injury or damages to the charging system resulting from battery explosion or electrical burns.*

Wear adequate eye protection when working on or near the batteries. Ensure that metal tools or jumper cables do not contact the positive battery terminal (or a metal surface in contact with it) as a short circuit will result. Do not attempt to jump start a vehicle suspected of having a frozen battery because the battery may rupture or explode. Both the booster and discharged batteries must be treated carefully when using jumper cables. Follow exactly the procedure outlined later in this section, being careful not to cause sparks.

4.4 BATTERY CHARGING

Warning: *During charging of the batteries, an explosive gas mixture forms in each cell. Part of this gas escapes through the vent holes and may form an explosive atmosphere around the battery itself if ventilation is poor. This explosive gas may remain in or around the battery for several hours after it has been charged. Sparks or flames can ignite this gas causing an internal explosion, which may shatter the battery.*

1. *Do not smoke near a battery which is being charged or which has been recently charged.*
2. *Do not break live circuits at battery terminals because a spark usually occurs at the point where a live circuit is broken. Care must always be taken when connecting or disconnecting booster leads or cable clamps on chargers. Poor connections are a common cause of electric arcs, which cause explosions.*
3. *The electrical system on this vehicle is negative ground. Installing the batteries with the positive terminals grounded or incorrect use of the booster battery and jumper cables will result in serious damage to the alternator, batteries and battery cables.*

The batteries used on this vehicle can be charged either on or off the vehicle; however, when they are removed from the vehicle, it is recommended that an adapter kit, which is available from any "A/C DELCO" dealer, be used in charging sealed-terminal batteries. Use the booster block to charge the batteries when they are left on vehicle and **make sure that the main battery disconnect switch is set to the *"On"* position.**

The alligator clamps of the tester or charger must be placed between the terminal nuts and the lead pads of the terminal studs (Fig. 30) after the vehicle cables are detached. The alligator clamps should make firm contact with the lead pads.

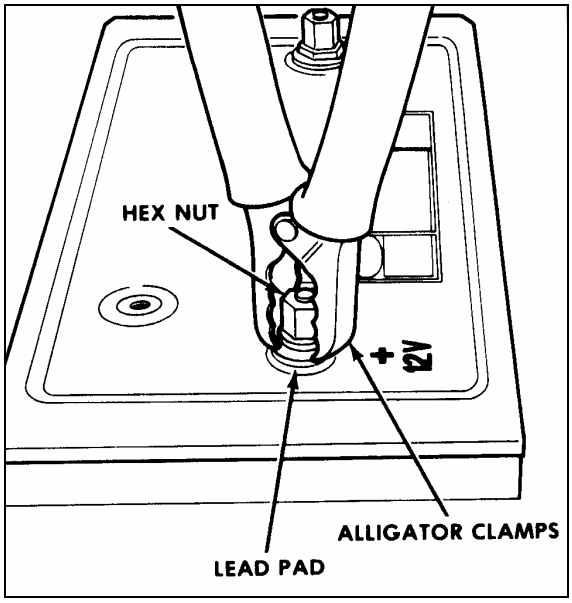

FIGURE 30: ALLIGATOR CLAMPS AND BATTERY 06065

Note: *If this connection cannot be made because of the alligator clamp design, the load value for testing must be reduced from 290 to 260 amperes.*

On rare occasions, such as those that occur following prolonged cranking, the green dot in the test indicator may still be visible when the battery is obviously discharged. Should this occur, a boost charge of 20 amperes-hour is recommended. Under normal operating conditions, do not charge battery if the green dot is visible. The battery should never be charged if the test indicator (hydrometer) is clear or light yellow. If this occurs, replace the battery.

A charge rate between 3 and 50 amperes is generally satisfactory for any maintenance-free battery as long as spewing of electrolyte does not occur or the battery does not feel excessively hot (over 125ºF (52ºC)). If spewing or violent gassing of electrolyte occurs or battery temperature exceeds 125ºF (52ºC), the charging rate must be reduced or temporarily stopped to allow cooling and to avoid damaging the battery.

Battery temperature can be estimated by touching or feeling the battery case. The battery is sufficiently charged when the green dot in the built-in hydrometer is visible. No further charging is required. Shake or tilt the battery at hourly intervals during charging to mix the electrolyte and see if the green dot appears.

Warning: *Always turn off the charger before connecting or disconnecting to a battery.*

Note: *The charge rate must be doubled when the batteries are charged by the booster block, because of the series-parallel circuit.*

Battery charging consists of a charge current in amperes for a period of time in hours. Thus, a 25 ampere charging rate for 2 hours would be a 50 ampere-hour charge to the battery. Most batteries, whose load test values are greater than 200 amperes, will have the green dot visible after at least a 75 ampere-hour charge. In the event that the green dot does not appear, replace the battery.

4.4.1 Battery Charging Guide

Fast Charging Rate
20 amps @ 3-3/4 hours
30 amps @ 2-1/2 hours
40 amps @ 2 hours
50 amps @ 1-1/2 hours

Slow Charging Rate
5 amps @ 15 hours
10 amps @ 7-1/2 hours
The time required for a charge will vary according to the following factors:

Size of Battery
For example, a completely discharged large heavy-duty battery requires more than twice the recharging time of a completely discharged small passenger car battery.

Temperature
For example, a longer time will be needed to charge any battery at 0°F (-18°C) than at 80°F (27°C). When a fast charger is connected to a cold battery, the current accepted by the battery will be very low at first, then in time, the battery will accept a higher rate as it warms.

State of Charge
For example, a completely discharged battery requires more than twice as much charge than a half-charged battery. Since the electrolyte is nearly pure water and a poor conductor in a completely discharged battery, the current accepted is very low at first. Later, as the charging current causes the electrolyte acid content to increase, the charging current will likewise increase.

Charger Capacity
For example, a charger which can supply only 5 amperes will require a much longer period of charging than a charger that can supply 30 amperes or more.

4.4.2 Emergency Jump Starting With Auxiliary (Booster) Battery

Warning: *Do not jump start vehicles equipped with maintenance-free batteries if the test indicator is light yellow.*

Both booster and discharged batteries should be treated carefully when using jumper cables. A vehicle with a discharged battery may be started by using energy from a booster battery or the battery from another vehicle.

Warning: *Jump starting may be dangerous and should be attempted only if the following conditions are met:*

The booster battery or the battery in the other vehicle must be of the same voltage as the battery in the vehicle being started, and must be negative grounded.

If the booster battery is a sealed-type battery without filler openings or caps, its test indicator must be dark or a green dot must be visible. Do not attempt jump starting if the test indicator of the booster battery or the discharged battery has a light or bright center.

Warning: *Follow the procedure exactly as outlined hereafter. Avoid making sparks.*

1. Wear eye protection and remove rings, watches with metal bands and other metal jewelry.
2. Apply parking brake and place the transmission shift lever or push-button pads in Neutral (N) position in both vehicles. Turn off lights, heater and other electrical loads. Observe the charge indicator. If the indicator in the discharged battery is illuminated, replace the battery. **Do not** attempt jump starting when indicator is illuminated. If the test indicator is dark and has a green dot in the center, failure to start is not due to a discharged battery and the cranking system should be checked. If charge indicator is dark but the green dot does not appear in center, proceed as follows:
3. Connect one end of one red jumper cable to the positive (+) terminal of the booster power source and the other end to the positive (+) post of the booster power block, located in the main power compartment or in the engine compartment R.H. side (refer to fig. 5 and 18).

4. Connect one end of the remaining negative jumper cable (black) to the negative (-) terminal of the booster power source, and the other end of the black jumper cable to the negative (-) post of the booster power block.
5. Make sure the clips from one cable do not inadvertently touch the clips on the other cable. Do not lean over the battery when making connections. The ground connection must provide good electrical conductivity and current carrying capacity.
6. Start the engine in the vehicle that is providing the jump start. Let the engine run for a few minutes, then start the engine in the vehicle that has the discharged batteries.
7. When removing the jumper cables, perform the above procedure exactly in reverse order, and replace protective caps on booster block terminals.

***Warning**: Any procedure other than the above could result in personal injury, property damage due to battery explosion, or damage to the charging system of the booster vehicle or of the boosted vehicle.*

***Note:** Jumper cables must withstand 500 cranking amperes. If cable length is 20 feet (6m) or less, use 2/0 (AWG) gauge wires. If cable length is between 20-30 feet (6-9m), use 3/0 (AWG) wires.*

4.5 CLEANING AND INSPECTION

The external condition of the battery and the battery cables should be checked periodically. The top of the battery should be kept clean and the battery hold-down clamp bolts should be kept properly tightened. For best results when cleaning the battery, wash first with a diluted solution of ammonia or soda to neutralize any acid present, then wash out with clean water. The battery hold-down bolts should be kept tight enough to prevent the batteries from moving, but they should not be tightened to the point that excessive strain is placed on the battery hold-down cover (proper tightening torque: 45-55 in•lbf (5-6 N•m).

To insure good contact, the battery cable ring terminals should be tight on the battery posts. If the posts or cable ring terminals are corroded, the cables should be disconnected and the posts and clamps cleaned separately with a soda solution and a wire brush. Install cable ring terminals on battery posts and tighten to a torque of 10-15 ft•lbs (13-20 N•m). Replace protective caps to prevent corrosion and sparks.

4.6 COMMON CAUSES OF BATTERY FAILURE

When a battery fails, the cause of failure may be related to something other than the battery. For this reason, when a battery failure occurs, do not be satisfied with merely recharging or replacing the battery. Locate and correct the cause of the failure to prevent recurrence. Some common external causes of battery failure are as follows:

1. A defect in charging system such as high resistance or a faulty alternator or regulator.
2. A malfunction within the 12 volts system (equalizer).
3. Overloads caused by a defective starter or excessive use of accessories.
4. Dirt and electrolyte on top of the batteries causing a constant drain.
5. Hardened battery plates, due to battery being in a low state of charge over a long period of time.
6. Shorted cells, loss of active material from plates.
7. Driving conditions or requirements under which the vehicle is driven for short periods of time.
8. A constant drain caused by a shorted circuit such as an exposed wire or water infiltration in junction boxes causing ground fault.
9. Extended operation of preheating system with engine not running.
10. Failing to close disconnect switches during the night.

4.7 TROUBLESHOOTING

If a battery is known to be good and then has not performed satisfactorily in service for no apparent reason, the following factors may reveal the cause of trouble:

1. Vehicle accessories and disconnect switches inadvertently left on overnight.

2. Defects in the charging system, such as high wiring resistance, faulty alternator, regulator or battery equalizer.
3. A vehicle electrical load exceeding the alternator (or battery equalizer) capacity, with the addition of electrical devices, such as CB radio equipment, a cellular phone or additional lighting systems.
4. Defects in the electrical system, such as shorted or pinched wires.
5. Extended driving at a slow speed while using many accessories.
6. Loose or poor battery cable-to-post connections, previous improper charging of a run-down battery, or lo ose hold-down clamp bolts.
7. High-resistance connections or defects in the cranking system.

5. ELECTRICAL SYSTEM MONITOR

This vehicle is eq uipped with an electronic device that monitors and detects abnormal alternator, voltage regulator, battery banks or battery equalizers conditions. The monitor is installed in the main power compartment (XL2-45) (refer to fig. 5), in the battery compartment or in the engine compartment R.H. side (MTH). The *"Battery balance"* and *"Battery Hi/Lo"* warning lamps connected to this module are mounted in the dashboard (refer to *"Operator's Manual"* for location). If a malfunction should occur, the monitor sends a signal to the driver through the warning light of the malfunctioning component. If the *"Battery Hi/Lo"* warning light is illuminated, check the 24 v olt voltmeter to determine if the battery voltage is too high or too low.

Note: *According to the battery charging condition, it is n ormal that "Battery Hi/Lo" warning light illuminates upon starting the engine and stays illuminated for a few seconds. This is caused by the normal voltage drop of the battery during starting.*

5.1 TELLTALE LIGHT DEFINITIONS

Battery Hi/Lo

Voltmeter drops below 24 V dc

- Check alternator output.
- Check voltage regulator.
- Check battery connections.
- Check battery cells.
- Check battery equalizer connections.

Voltmeter exceeds 30 V dc

- Check alternator output.
- Check voltage regulator.
- Check battery connections.

Battery Balance

Note: *Allow at least 15 minutes to balance batteries after any corrective measure has been taken.*

1. Batteries out of balance (difference greater than 1.5 volts between the two battery banks).
   - Check battery equalizer connections.
   - Check equalizer cables for proper gauge.
   - Check battery connections.
2. Demand for 12 volt power exceeding rated amperage output of battery equalizers causing batteries to go out of balance.
   - Reduce 12 volt load or install additional battery equalizer(s).

"Battery" Warning Light

This warning light is not controlled by the electronic monitor, but by the "R" terminal of the alternator using the normally-closed contact of relay R-33. If a voltage drop should occur in the charging system, the *"Battery"* telltale light will immediately illuminate to warn the driver. The *"Battery Hi/Lo"* telltale light will illuminate if voltage drops below 24 V dc.
Refer to heading *"Diagnosis of Charging System Problems"* later in this section, to determine weather the alternator or the voltage regulator is defective. Should the *"Battery"* telltale light illuminate while the 24 volt voltmeter keeps on giving a normal reading and the *"Battery Hi/Lo"* telltale light does not illuminate, the relay R-33 or its wiring is probably defective.

Caution: *The relay R-33 should never be replaced with a relay provided with a suppressor diode on its coil as the output current (between 12 and 14 volts) at the alternator "R" terminal is not rectified, thus rendering the relay inoperative.*

Note: *When the "Battery" warning light illuminates, the "A/C & Heating" system shuts off in order to prevent battery discharge.*

6. BOSCH ALTERNATOR

One or two 24 volt 140 amp., self regulated, belt driven, air-cooled BOSCH alternators may be used in the 24 volt electrical system (instead of the DELCO 24 volt 270 amp. alternator).

Change the brushes as per "Repair and Testing Instructions for T1 Alternator 0120 69 552" every 100,000 miles (160 000 fm) or once every two years, whichever comes first.

Replace bearings as per "Repair and Testing Instructions for T1 Alternator 0120 69 552" every 200,000 miles (320 000 fm) or once every four years, whichever comes first.

Refer to Bosh T1 Alternator Maintenance Manual Annexed at the end of this section.

7. DELCO ALTERNATOR

The 24 volt charging system consists of a belt driven, oil-cooled, brushless alternator, a 24 volt voltage regulator, an alternator relay and a 1 2 volt system that includes a 12 volt, 100 amp equalizer. The components used in this system are described under the applicable headings hereafter.

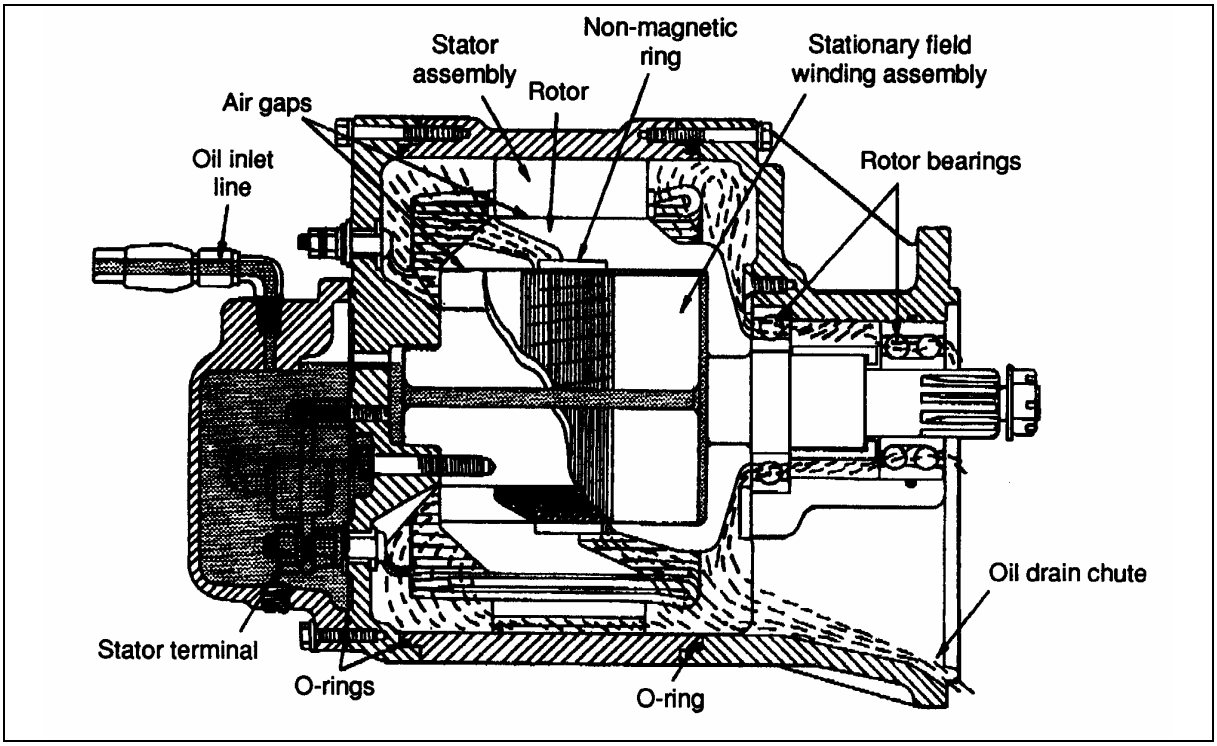

FIGURE 31: OIL CIRCULATION THROUGH ALTERNATOR 06066

This oil-cooled alternator is self rectifying. All current carrying members, windings, built-in diodes, and field coils are stationary. The only moving component is the rotor. The alternator is a totally-enclosed unit, cooled and lubricated by engine oil. The oil inlet is on t he diode end cover. The oil dra ins back into the engine crankcase through the drive end frame and drive adapter housing. This alternator should never be operated with the oil supply line disconnected. A continuous flow of engine oil through the alternator lubricates the bearings and cools the assembly. Four terminals are used on this alternator: the DC output terminal, two field terminals, and a 12 volt relay terminal. The alternator output voltage is regulated by a separate 24 volt regulator that controls the alternator field current (Fig. 31 and 32).

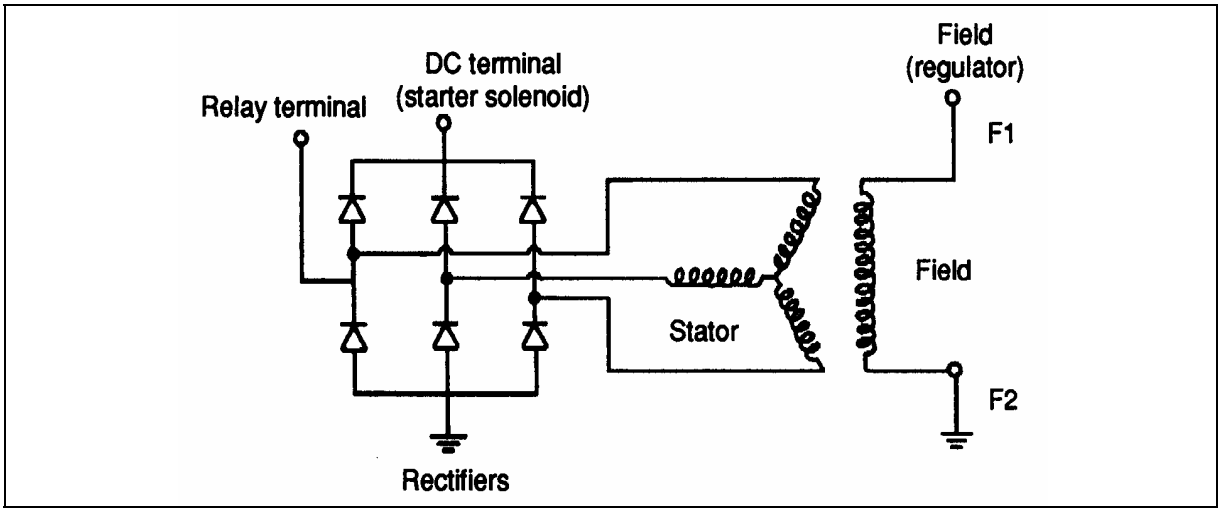

FIGURE 32: ALTERNATOR WIRING DIAGRAM (DELCO) 06067

Note: *The relay coils connected to the alternator "relay terminal" SHOULD NEVER BE PROVIDED WITH A SUPPRESSOR DIODE as the output current at this terminal is not rectified, thus rendering relay inoperative.*

Caution: *The electrical system is NEGATIVE GROUNDED. Connecting the ba tteries or a battery charger with the positive terminal grounded will endanger the alter nator diodes and vehicle wiring by a high current flow. Burned wiring harnesses and bu rned "open" di odes will result. Always ensure that the alternator and battery polarities are matched prior to installation. THE ALTENATOR WILL NOT REVERSE TO ACCEPT INVERSE POLARITY. Also, do not ground or sh ort across any of the alternator or regulator terminals.*

Since there are no brushes, slip rings, or rubbing seals, the alternator requires no periodic maintenance other than the following:

Check alternator-to-engine mounting bolts for looseness and tighten to the proper torque.

Check all electrical connections for tightness and corrosion. Clean and tighten connections as necessary. Be sure wiring insulation is in good condition and that all wiring is securely clipped to prevent chafing of the insulation.

With the engine running, listen for noise and check the alternator for vibration. If the alternator is noisy or vibrates excessively, it should be removed for inspection and repair.

Ensure that battery terminals are clean and tight.

8. CHARGING SYSTEM TROUBLESHOOTING

The troubleshooting of the charging system is made easier by the use of a 1 2 and a 24 volt voltmeter, "*Battery*", *"Battery balance"* and *"Battery Hi/Lo"* telltale lights mounted in the dashboard (for location refer to the *"Operator's Manual"*). The definition of e ach warning light is explained under the "ELECTRICAL SYSTEM MONITOR"

8.1 ALTERNATOR OR VOLTAGE REGULATOR

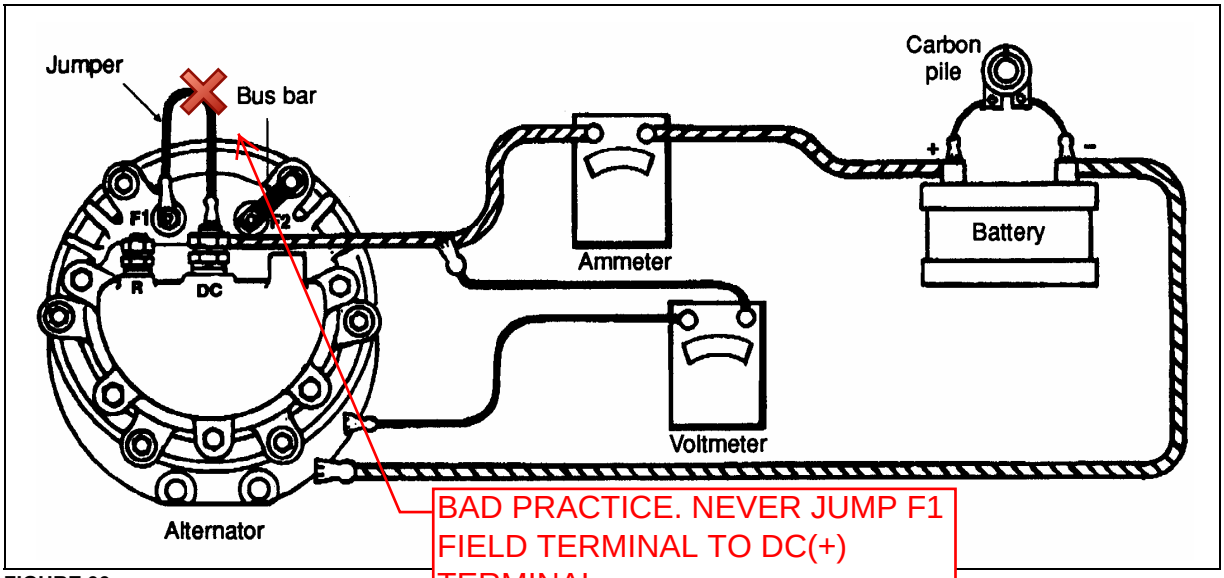

FIGURE 33:

8.2 ALTERNATOR DIAGNOSIS

Caution: *Before checking the alternator, set the battery master switch to the OFF position.*

It is not necessary to disassemble completely the alternator to make electrical checks. All electrical checks are made at the diode end of the assembly without having to remove the rotor, drive end frame or bearing. If the electrical components are not defective but bearing replacement is necessary, this can be done at the drive end without having to disassemble the diode end of the unit.
The components in the alternator that require electrical checks are the field winding, the six diodes, and the stator winding.

8.2.1 Diode Checks

Each diode may be checked for shorts and opens as follows:

1. Ensure the battery master switch is set to the "OFF" position.
2. Remove the pipe plug from underneath the end housing to drain the oil in the rectifier engine oil supply.
3. Remove the cap screws (7) and lock washers that attach the diode end cover to the end housing. Remove the end cover from the end housing.

Note: *Do not operate the alternator unless this unit is completely reassembled.*

4. Remove seal from the end housing, detach and remove "DC" and relay terminals, stud, insulating sleeves and O-rings.
5. Disconnect all diode flexible leads; i.e. three from the output terminal stud and three from the diode supports. See figure 20 for more details.

Each diode may be checked for short or open circuits with an ohmmeter.

Note: *The ohmmeter polarity may be determined by connecting its leads to the voltmeter leads. The voltmeter will read up-scale when the negative leads are connected together and the positive leads are connected together. The polarity of the voltmeter leads may be determined by connecting the leads to the identified terminals on a battery.*

Note: *Use an ohmmeter with a single 1.5 volts cell. Most accurate reading will be determined when the 300 ohms value is calibrated to the center one-third of the scale. DO NOT USE high voltage, such as a 110 volts test lamp to check diodes.*

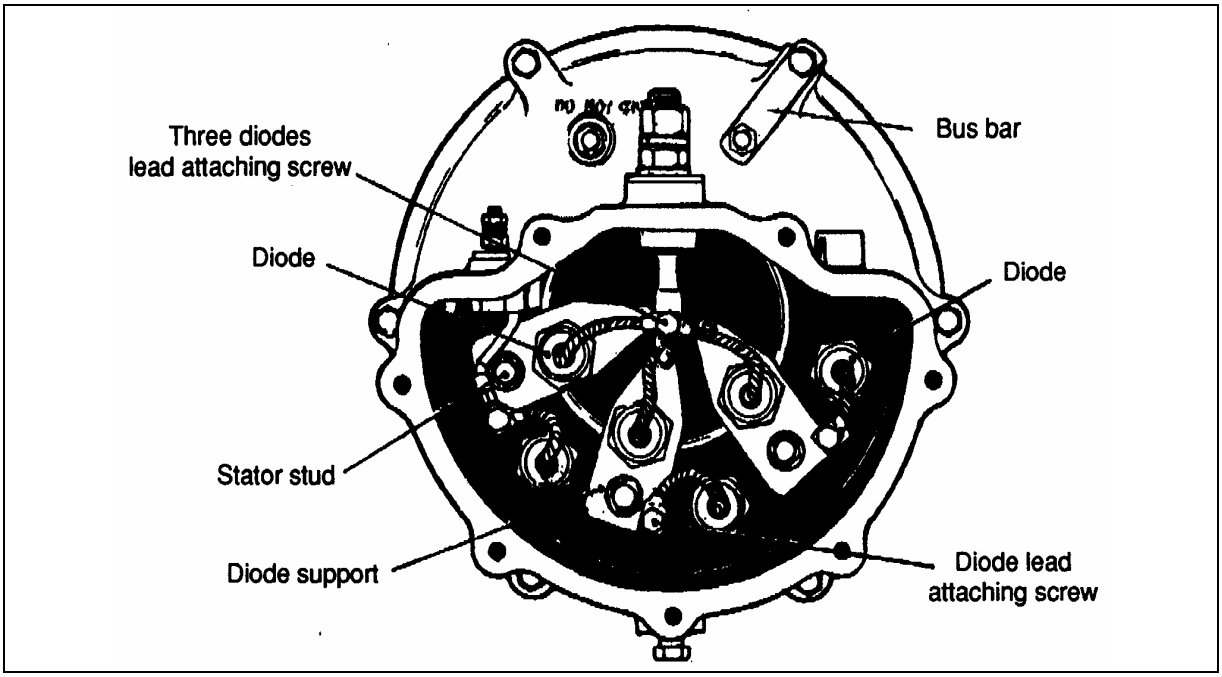

FIGURE 34: VIEW OF RECTIFIER END FRAME WITH COVER REMOVED 06069

To check diodes mounted in the supports for short fields, connect the positive ohmmeter lead to each diode lead and the ohmmeter negative lead to each support as shown in "A", "B", and "C" of figure 35. To check diodes mounted in the end frame for shorts, connect the ohmmeter positive lead to e ach diode lead and the ohmmeter negative lead to the end frame as shown in p arts "D", "E", "F". The ohmmeter readings may vary considerably when checking diodes for shorts, but if the reading is 300 ohms or less, the diode is probably defective and should be replaced. A dio de that reads 300 ohms or less will allow ex cessive reverse current from the battery. Replace defective diodes as explained later in this section.

To check the diodes mounted in the d iode supports for open fields, connect the ohmmeter negative lead to each diode lead and the ohmmeter positive lead to ea ch support as shown in parts “A”, “B”, and “C” of figure 36. To check the diodes mounted in end frame for shorts, connect the ohmmeter negative lead to each diode lead and the ohmmeter positive lead to the end frame as shown in parts “D”, “E” and “F”. An infinite resistance reading indicates an open diode. Diodes can be replaced by following the procedure outlined under DIODE REPLACEMENT”.

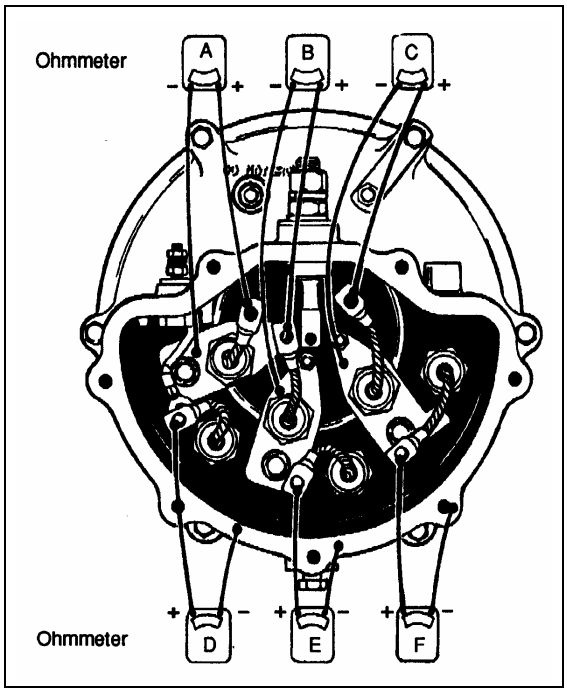

FIGURE 35: DIODE TESTING 06070

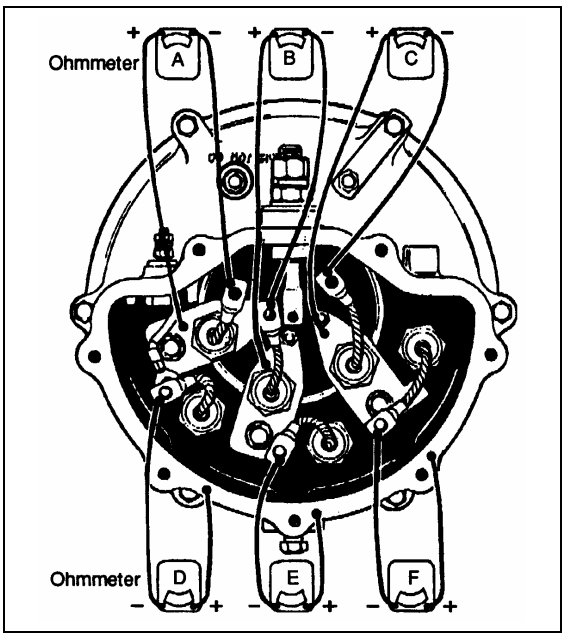

FIGURE 36: DIODE TESTING 06071

When reinstalling diodes, torque to 9-11 ft•lbf (12-15 N•m). Re-stake next to the threads in an arbor press with an 1/8 inch (3,2 mm) round punch. Press the punch with gradual pressure. Do not strike as the shock may damage the diodes.

8.2.2 Field Winding Check

The field winding may be checked for shorts and opens with an ohmmeter. To check the field winding, connect the ohmmeter to field terminal and to ground. A resistance reading above normal indicates an open, and a reading less than normal indicates a short field. The normal resistance value is 3.0 to 3.3 ohms at 80°F (27°C). An alternate method of checking is to place a battery of specified voltage, and an ammeter in series with the field winding. The current should register 7.2 to 8.3 amperes at 24 volts. Coil resistance is approximately 3.1 ohms. Amperage readings, other than the above, indicate an open, grounded, or shorted field. A defective field coil can be replaced by removing the end frame on which the field terminal is located and then removing the four field coil mounting screws. See FIELD REPLACEMENT" for a detailed procedure.

8.2.3 Stator Winding Check

The stator winding may be checked for open and short fields with an ohmmeter as follows:

Open Fields

Connect the ohmmeter leads to two pairs of diode supports as shown in parts "A", "B", and "C" of figure 37. Correct polarity of the leads must be observed. The ohmmeter should indicate a low resistance. If an infinite or a high resistance is measured in either one or both checks, the stator windings are open.

Ground

To check the stator windings for ground, connect an ohmmeter to the diode support and diode end frame as shown in part "C" of figure 37. The ohmmeter should indicate a very high or infinite resistance. If zero, or a very low resistance is measured, the windings are grounded.

Shorts

The stator windings are difficult to check for shorts without finely calibrated laboratory test equipment due to the very low resistance values of the windings. However, if all other alternator checks are satisfactory, yet the unit fails to perform to specifications, shorted stator windings are probable.

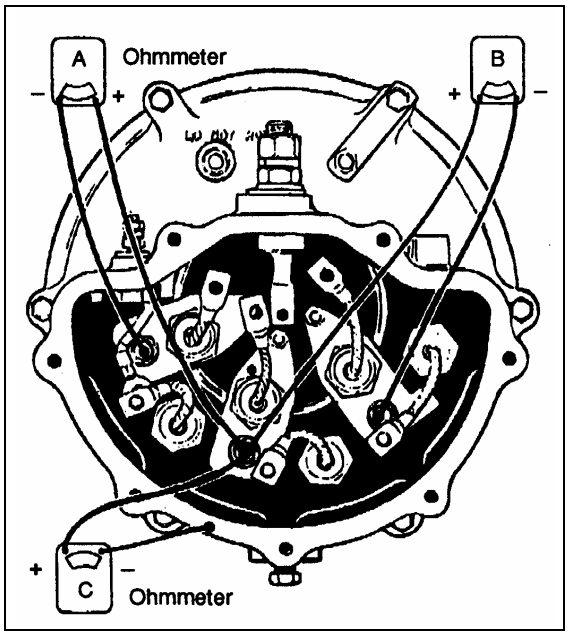

FIGURE 37: STATOR WINDING TEST 06072

8.3 DIODE REPLACEMENT

The following replacement procedures are based on the assumption that the diode end cover is still off and diode leads were disconnected as explained earlier in this section.

Note: *When replacing a diode, make sure it is designed for a negative ground system. The diode can be identified by the symbol stamped on the diode case. The arrow must point toward the diode flexible lead.*

To replace the three diodes that are mounted in the supports attached to the stator lead studs, it is necessary to remove the diode and support assembly. The two outer diode and support assemblies are identical and can be installed on either side. The center unit has a different support, with 2 inches (50,8 mm) between the mounting hole centers.

Note*: The outer supports are provided with 2 ¼" (57,15 mm) center holes.*

8.3.1 Diode Replacement (in Support)

1. Remove nut with lock washer attaching the diode support to the stator lead stud.
2. Remove nut, lock washer, and flat washer attaching support to the small stud in the end frame.
3. Remove the diode and support assembly. Then remove insert from small hole in support or from small stud in the end frame.
4. Remove nut and flat washer from diode mounting stud, then remove diode from the support.
5. Place a new diode in the support and install a flat washer and nut on the diode mounting stud. Hold the diode with a wrench placed over flats on the diode, while tightening nut on the mounting stud to a torque of 160-180 in•lbf (18-20 N•m).
6. Place diode and support assembly over the stator lead stud and the small mounting stud. Place insert over small stud inside the hole in the support. Install flat washer, lock washer, and nut on the small stud, and tighten to a torque of 22-25 in•lbf (2-3 N•m). Install nut with lock washer on stator lead stud and tighten firmly.

8.3.2 Diode Replacement (in End Frame)

To remove diode, use a thin 1 inch open end wrench on flats of the diode case to unscrew diode from the end frame. Thread the new diode into the end frame and tighten to a torque of 160-180 in•lbs (18-20 N•m). If no other parts are to be replaced, refer to "DIODE END COVER INSTALLATION" in this section.

8.4 FIELD REMOVAL

1. Remove three diode and support assemblies from the end frame to provide access to the two lower field to end frame bolts.
2. Remove nut with lock washer and flat washer from three stator lead studs.
3. Remove the six bolts and lock washers attaching the diode end frame to the stator frame.
4. Separate the end frame from the stator frame, and remove the end frame and field assembly from the rotor while pushing the stator lead studs out of the end frame.
5. Remove nut, lock washer, flat washer, and insulating washer which secure the field lead terminal stud in the end frame. Push the stud out of the end frame.
6. Remove field terminal stud insulating bushing and seal from the end frame. Remove insulating sleeve from the field terminal stud.
7. Remove the four bolts and lock washers attaching the field to the end frame.
8. To separate the field from the end frame, install four 3/8-24 x 3 inch bolts in place of the 3/8-24 x 2 inch bolts removed in step 7. Thread bolts in to even heights. Support the end frame in an arbor press. Then, using a suitable press plate to exert pressure on all four bolt heads, press the field out of the end frame.

8.5 FIELD INSTALLATION

1. Position the field assembly on the end frame. Insert four 3/8-24 x 3 inch bolts through the end frame and thread into the field to keep holes aligned.
2. Support the end frame on an arbor press bed so that the diodes will not be damaged, and press the field into the end frame. Press in until shoulder on field coil bottoms against the end frame.
3. Remove the four guide bolts. Install four 3/8-24 x 2 inch bolts, using new lock washers to attach the field to the end frame. Tighten bolts securely.
4. Place insulating sleeve in inner side of the field terminal stud hole in the end frame, and

insert the terminal stud through the sleeve. Place two O-rings and insulating bushing over the terminal stud and push into hole in the end frame. Install insulating washer, flat washer, toothed lock washer, and nut on terminal stud. Tighten firmly.

5. Install each stator lead stud in the end frame as follows: Place insulating washer over the stud and insert the stud through the end frame. Place the insulating bushing over the stud and position in end frame hole. Install flat washer, lock washer, and nut on the stud. Tighten firmly.
6. Install three diode and support assemblies on the end frame as previously directed under “DIODE REPLACEMENT”.
7. Install a new seal in notch around end of the stator frame. Insert field into the rotor and position the end frame against the stator frame. Attach end frame to the stator frame with six bolts and lock washers. Tighten bolts firmly.
8. If no other parts require replacement, refer to "DIODE END COVER INSTALLATION" in this section to complete the assembly.

8.6 STATOR REPLACEMENT

If tests performed under “Stator Winding Checks” earlier in this section indicated an open circuit or short in the stator, the stator and frame assembly must be replaced.

8.6.1 Removal

1. Remove diode end frame and field assembly as previously directed in steps 1 through 4 under “Field Removal”.
2. Remove the six bolts and lock washers attaching the stator frame to the drive end frame.
3. Separate the stator frame from the drive end frame and remove the stator frame from the end frame and rotor.

8.6.2 Soldering Stator Terminal Leads

1. Using a wire brush, thoroughly clean the wire and terminal.
2. Silver solder the stator lead to the terminal using a torch.
3. Thoroughly clean the silver solder connection with a wire brush.
4. Using a high grade energized rosin flux, coat the silver soldered connection with a 80-20 tin-lead solder or pure tin solder to prevent deterioration of the silver solder by engine oil.

Note: *The silver solder will provide the required mechanical strength, which will not be affec ted by temperature. The tin-lead solder will protec t the silver solder connection from deterioration by engine oil.*

8.6.3 Installation

1. Position new seal in notch around the drive end of the stator frame.
2. Position the stator and frame assembly over the rotor against the drive end frame. Attach the stator frame to the drive end frame with six bolts and lock washers. Tighten bolts firmly.
3. Install diode end frame and field assembly as directed in steps 5, 6 and 7 un der “installation”.
4. Install rectifier end cover as directed later.

8.7 DIODE END COVER INSTALLATION

1. Make sure all diodes are properly installed and securely tightened. Leads from diodes threaded into the end frame must be securely attached to the diode supports. The relay terminal lead must also be attached to the left diode support.
2. Connect leads from the three diodes mounted in supports to the output terminal stud. Tighten the attachment screw firmly. Place insulating bushing over relay terminal stud.
3. Place a new seal in the diode end frame.
4. With the end cover in place against the end frame, install the cap screws and lock washers. Tighten the cap screws evenly and firmly.
5. Make sure the drain plug is installed in bottom of the end cover and securely tightened.

8.8 ALTERNATOR REMOVAL (DELCO)

1. Place *"Starter Selector Switch"* in engine compartment to the *"OFF"* position.
2. Place the battery master switch to the “OFF” position.

3. Remove alternator drive belt (see “ALTERNATOR DRIVE BELT”).

Note: *When reinstalling drive belt, it is important to set the belt tension correctly. (refer to the appropriate heading later in this section).*

4. Scratch off protective sealer from electrical connections (relay, field and positive terminals). Refer to figure 38.

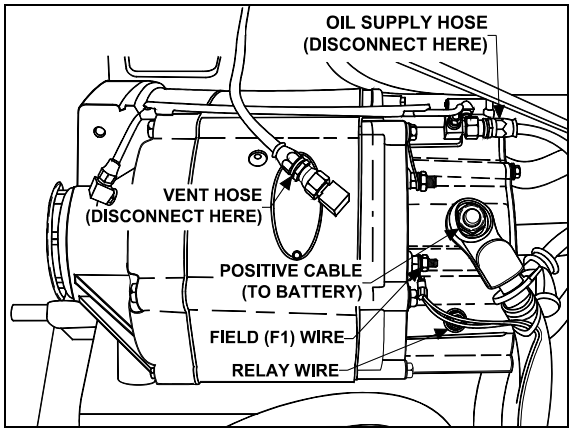

FIGURE 38: ALTERNATOR (HOSES AND WIRES) 06341

Note: *After reconnecting electrical wires, it is important to cover terminals with protective sealer (Prévost #680745).*

5. Disconnect wire #25 from the relay terminal, wire #107 from the field “F1” terminal and disconnect battery cable from the positive “+” terminal on the diode end cover. Tag wires removed to ease identification at time of installation. Refer to figure 38.

6. Disconnect oil supply line and vent hose from top of alternator (Fig. 38) and tape lines to prevent entry of foreign matter. Disconnect oil drain hose from bottom of alternator (Fig. 39) and tape line to prevent entry of foreign matter.

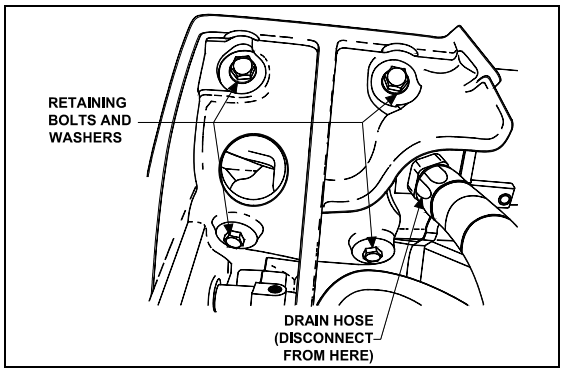

FIGURE 39: ALTERNATOR RETAINING BOLTS AND WASHERS 06350

7. Remove the four bolts and lock washer retaining alternator (refer to fig. 39).

Warning: *Alternator weights approximately 154 lbs (70 kg). Another person is required to take the alternator out of the engine compartment.*

8.8.1 Disassembly of Alternator

After diode, field and stator winding checks, the alternator can be disassembled to repair a faulty component, such as field or stator, or to proceed with bearing or rotor replacement. Perform the following steps to disassemble the alternator:

1. Remove nuts and washers from "DC" terminal on diode end frame.
2. Separate the diode cover plate from the diode end frame by removing the mounting screws.
3. Remove the washer, nut and lock washer attaching the diode supports to the end frame, the three screws connecting the diode leads to the diode supports, and the three nuts which attach the stator studs to the diode supports.
4. Separate the diode support assemblies from the diode end frame, and the three nuts that connect the studs to the diode end frame.
5. Mark the position of the drive end frame and diode frame with respect to the stator assembly so that the parts can be reassembled in the same position.
6. Detach the diode end frame and field assembly from the stator assembly by removing the attachment screws.
7. Separate the field assembly from the diode end frame by removing the four attachment screws.
8. Separate the rotor assembly and drive end frame from the stator assembly by removing the attaching screws.
9. Remove the shaft nut and washer, and the pulley. Press the rotor shaft out of the drive end frame.
10. Remove the retainer plate and pull the bearings from the drive end frame.

8.8.2 Alternator Cleaning and Inspection

Whenever the alternator is disassembled, it should be cleaned and inspected.

Cleaning

If sludge has accumulated on the stator, a light mineral oil should be used to clean it.

Inspection

When the alternator has been disassembled to the extent that the stator is exposed, the stator should be checked for the following:

a) Adequate varnish.

b) Proper spacing of conductors so that “near shorts” do not exist.

c) Proper phase lead placement.

d) Strong conductor and cross-over welds

8.8.3 Bearing or Rotor Replacement

Whenever the rotor and drive end frame are disassembled for any reason, the single-row ball bearing must be replaced with a new one due to the probability of damage during disassembly.

Removal and Disassembly

1. If the pulley was not removed from the rotor shaft at time of alternator removal, remove the nut and flat washer from the shaft and pull the pulley off the shaft.

2. Remove the six bolts and lock washers attaching the drive end frame to the stator frame. Separate the drive end frame from the stator frame. Remove the drive end frame and support assembly.

3. Support the drive end frame in an arbor press so that the rotor can be pressed down out of the end frame. Using a suitable adapter against the end of the rotor shaft that will pass through the inner race of the double-row ball bearing, press the rotor down out of the end frame and bearings. Since the single-row bearing outer race is held in the end frame by the retainer plate, and the inner race is a press fit on to the rotor shaft, the bearing will probably be damaged when the shaft is pressed out and need to be replaced with a new part.

4. Remove the six screws attaching the bearing retainer plate to the drive end frame. Remove the retainer plate, the single-row bearing and the bearing spacer from the end frame.

5. Support the drive end frame in an arbor press with the double-row bearing down, so that the bearing can be pressed down out of the end frame. Using a suitable driver that will exert a force on the bearing outer race, press the bearing out of the end frame.

6. Remove the rubber bearing clamp from groove in the end frame.

Assembly and Installation

1. Install a new single-row ball bearing into inner side of the drive end frame. Install the bearing retainer plate and attach with six screws. Stake screws in place after tightening.

2. Position the rubber bearing clamp in the groove in bearing bore of the drive end frame. Lubricate the clamp to permit the bearing to be pressed in without dislodging or damaging the clamp.

3. Position the rotor in an arbor press with the shaft end up. Install the drive end frame and single-row bearing assembly over the rotor shaft. Using a driver over the rotor shaft, which will exert a force on the bearing inner race, press the bearing onto the shaft until it bottoms against the rotor.

4. Install bearing spacer over the rotor shaft. Position the double-row bearing over the rotor shaft at end frame bore. Using an adapter that will exert a force on both the inner and outer races of the bearing, press the bearing onto the shaft and into the end frame until the inner race bottoms against the bearing spacer.

5. Place a new seal around the drive end of the stator frame.

6. Insert the rotor between the stator and field, and position the drive end frame against the stator frame. Attach the end frame to the stator frame with six bolts and lock washers. Tighten the bolts to a torque of 5 to 5.4 ft•lbf (6-7 N•m).

Caution: *When replacing the alternator on the vehicle, ensure that an alternator with the proper drive ratio is used. Installation of an alternator with any other drive ratio will result in severe and costly damage to the alternator and engine.*

8.8.4 Alternator Reassembly

Reassembly is the reverse of disassembly.

Note: *When tightening the outside nut on the "DC" output terminal, torque the nut to 30-35 ft•lbf (41-47 N•m). The lower nut should be supported while doing so.*

When reinstalling diodes, tighten to a torque of 9-11 ft•lbf (12-15 N•m).

8.8.5 Output check

When removed from the engine, the alternator may be checked without circulating oil on a test bench, providing the output is limited to 100 amperes or less. The alternator may be bench tested without circulating oil at outputs exceeding 100 amperes, as long as the period of operation is limited to less than 15 seconds.

Caution: *Operating the alternator at outputs greater than 100 amperes without adequate oil circulation for periods exceeding 15 seconds, will cause the alternator to overheat, resulting in damage to the winding and diodes.*

If the alternator is to be operated at an output greater than 100 amperes for longer than 15 seconds, circulating oil must be provided. SAE 30 engine oil must be applied to the connection on the diode end cover at a pressure of 35 psi and at a temperature of 60°F to 220°F (16°C to 104°C). This will provide an oil flow of about one gallon per minute.
To check the alternator on a test bench, make electrical connections as shown in figure 33. Make sure the negative battery terminal is connected to the alternator frame.

8.9 ALTERNATOR DRIVE BELT

Removal

1. Insert a ¾'' socket drive into one of the tensioning arm opening (Fig. 40).
2. Twist the tensioning arm to slacken belt.
3. Remove belt.

Installation

Installation of the alternator drive belt is the reverse of removal.

8.9.1 Adjustment

Correct belt tension is required to maximize belt life. The tensioning arm maintains proper belt tension, no adjustment is required.
Check for wear and proper tension every 6,250 miles (10 000 km) or twice a year, whichever comes first.

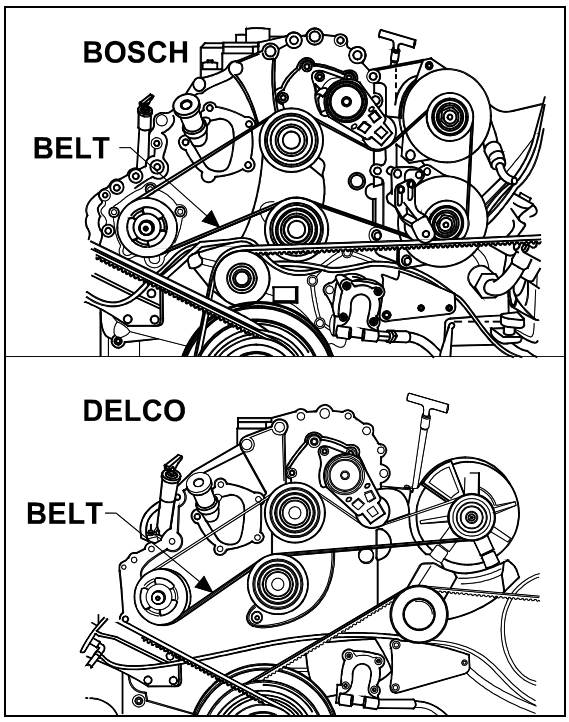

FIGURE 40: ALTERNATOR DRIVE BELT 06407

9. VOLTAGE REGULATOR (DELCO)

The 24 volt regulator used with Delco alternator is located in the engine compartment R.H. side (MTH).

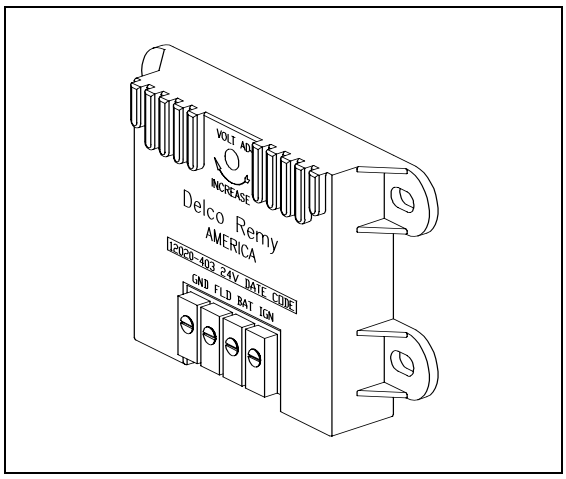

FIGURE 41: VOLTAGE REGULATOR 06408

The transistor regulator illustrated in figure 41 is an assembly mainly consisting of diodes, capacitors, resistors and transistors. These components are mounted on a printed circuit panel board to form a completely static unit containing no moving parts. Regulators of this type have only four terminals which are identified "GND." (ground), "FLD" (field) "BAT" (battery) and "IGN" (ignition).

The regulator components work together to limit the alternator voltage to the preset value by controlling the alternator field current. This is the only function that the regulator performs in the charging system.
The voltage at which the alternator operates is determined by the regulator adjustment. Once adjusted, the alternator voltage remains constant. The regulator is unaffected by length of service, changes in temperature, or changes in alternator output and speed.
A typical wiring diagram of a negative ground system is illustrated in figure 42. This diagram shows only the basic charging system components. It does not show any components such as the control relays. Refer to *"Charging system"* wiring diagram, in *"Wiring diagrams"* for the electric circuits and connections.

Voltage regulator maintenance
The voltage regulator is a service-free electronic unit. When it fails, it should be replaced. The following procedure must be used:

Caution: *Set the battery master switch to the "OFF" position.*

- Open the engine compartment R.H. side door in order to get access to the voltage regulator;
- Unscrew the electrical cable connectors;
- Unscrew the voltage regulator unit;
- Install a new voltage regulator by reversing the procedure.

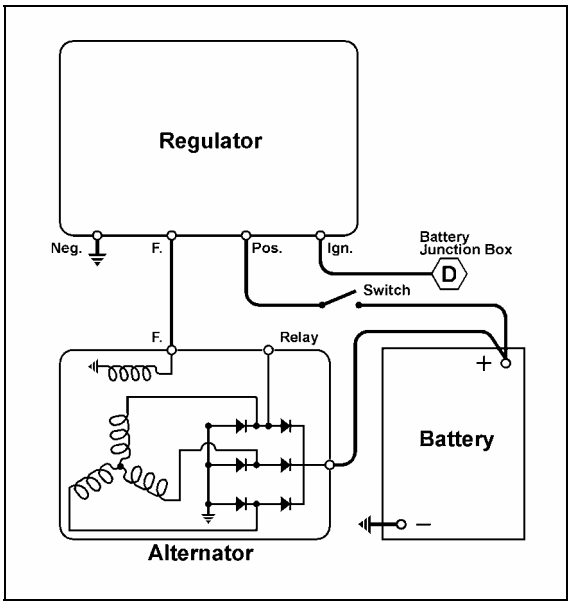

FIGURE 42: TYPICAL WIRING DIAGRAM OF A NEGATIVE GROUND SYSTEM 06415

Note: *For information about BOSCH alternator and voltage regulator, refer to technical publication "Repair and Testing Instructions for T1 Alternator 0120 689 552".*

9.1 TROUBLESHOOTING PROCEDURES

Trouble in the electrical system will usually be indicated by one of two conditions: an undercharged or an overcharged battery. Either condition can result from an improper voltage regulator setting:

Checking Battery Voltage
The absence of gas production during the continuous appearance of the green dot in the battery's built-in hydrometer indicates that the voltage setting is satisfactory. Check the following conditions:

Checking Voltage Regulator Setting
1. To check the voltage setting, connect a voltmeter across the "POS" and "NEG" terminals on the regulator, and an ammeter to the "C" terminal on the alternator. Refer to figure 43.

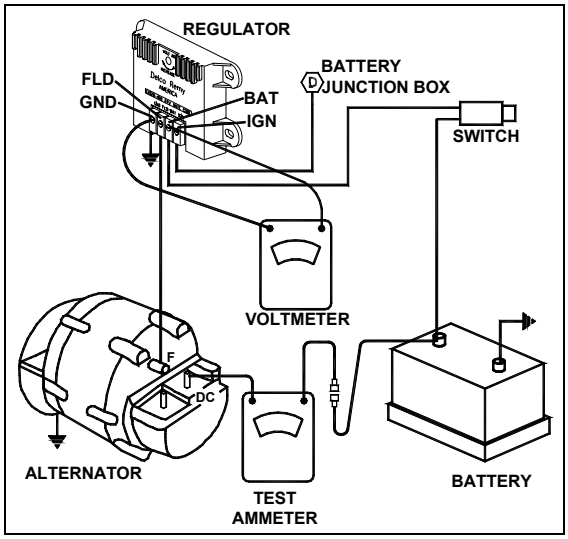

FIGURE 43: REGULATOR VOLTAGE SETTING 06416

2. Operate the engine at approximately 1000 rpm (about 2300 alternator rpm), with accessories on, to obtain an alternator output of 20-200 amperes.
3. Note the voltage setting. It should be steady at 27.5 volts.
4. If not, the desired setting can be obtained by removing the plug from the voltage regulator cover and slightly turning the adjusting screw inside the regulator. Turn the

adjusting screw clockwise to increase the voltage setting or counterclockwise to decrease it. See figure 44 for details.

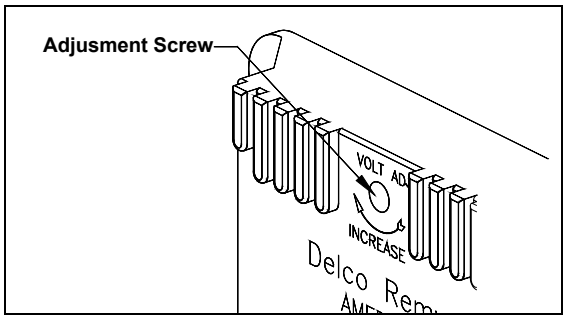

FIGURE 44: ADJUSTING REGULATOR VOLTAGE SETTING 06418

Note: *If regulator voltage cannot be adjusted to the specified setting, remove the regulator and repair or replace it as necessary.*

9.1.1 Undercharged Battery

If the voltage setting is steady and reasonably close to the specified value and the battery is undercharged, raise the setting by 0.3 volt, then check for an improved battery condition over a minimum service period of 48 hours. If the voltage cannot be adjusted to the desired value, the alternator should be checked as follows:

1. Stop alternator, turn off all accessories and disconnect battery ground cable.
2. Disconnect all leads from the regulator and from the alternator field. **Do not allow leads to touch ground.**
3. Connect a voltmeter and an ammeter in the circuit at the alternator "DC" terminal.
4. Connect a jumper lead from the alternator "DC" terminal to the alternator field terminal.

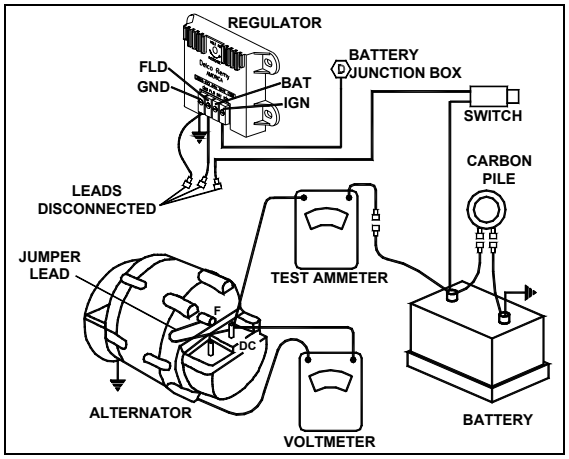

FIGURE 45: REGULATOR VOLTAGE TEST (UNDERCHARGED BATTERY) 06417

5. Connect a carbon pile resistor load across the battery. Turn to the *"Off"* position.
6. See figure 45 for wiring connections.
7. Reconnect battery ground cable
8. Turn on all vehicle accessories.
9. Operate alternator and adjust carbon pile resistor load as required to check for rated output as given in Delco-Remy Service Bulletin 1G-187 or 1G-188.
10. Check the alternator field winding as follows: Disconnect the lead from the field terminal and connect an ohmmeter from the field terminal to ground. A resistance reading above normal indicates an open field, and a resistance reading less than normal indicates a shorted or grounded field. The normal resistance can be calculated by dividing the voltage by the field current published in Delco-Remy Service Bulletin 1G-186, 1G-187, or 1G-188. The normal resistance value should be at or near midscale on the ohmmeter for accuracy. An alternate method of checking is to connect a battery of specified voltage and an ammeter in series with the field winding, and compare readings with published specifications in Delco-Remy Service Bulletin 1G-186, 1G-187, or 1G-188. An alternator is defective if it does not produce rated output or if field windings are faulty. If the alternator provides rated output, and field windings check satisfactorily, the regulator should be checked as covered under "Regulator Checks".

9.1.2 Overcharged Battery

If the voltage setting as checked above is steady and reasonably close to the specified value, lower the setting by 0.3 volt and check for an improved battery condition over a minimum service period of 48 hours. If the voltage cannot be adjusted to the desired value, proceed as follows: where the alternator field is grounded internally in the alternator as shown in figure 42 a shorted or grounded field or a defective regulator can cause an overcharged battery. The field winding can be checked as covered in paragraph “Undercharged Battery”. If the field winding is found to be correct, the alternator is not defective, and the regulator should be checked as covered under “Regulator Checks”.

9.2 REGULATOR CHECKS

Separate the cover from the base, and remove the panel assembly from the cover. Carefully note the location of all washers and lock washers.

The component parts are keyed to figure 42. Before making electrical checks, visually inspect the components and make sure all soldered connections are secure. Various electrical checks with an ohmmeter can be made to determine which components are defective.

The ohmmeter **must** be accurate, and should be a scale-type meter with a 1.5 or 3 volt cell. Most digital ohmmeters cannot be u sed to check semiconductors. However, some digital ohmmeters are specially designed to test semiconductors and can be used to test components in the regulator. Consult the ohmmeter's manufacturer for specifications concerning the capabilities of the ohmmeter.

It is important that all of the following checks be made. If a defective part is found, replace it before proceeding with the remaining checks. Be sure to make all the checks since more than one component may be defective.

A defective regulator can be repaired according to the following methods:

A) By changing the printed circuit board in the regulator. Unscrew the retaining screws on the printed circuit and remove it. Install a new printed circuit board. This method is the most commonly used.

B) By removing any retaining screws involved and unsoldering the co nnections. When resoldering, limit solder time to a minimum as excessive heat may damage the printed circuit board and component parts. However good soldered connections are essential for satisfactory operation. A resin core 63% tin 37% lead solder with a 360°F (182°C) melting point is recommended along with a soldering iron rated at 50 watts or less. Use extreme care to avoid overheating. Before checking the printed circuit board, remove transistor TR1, which must be checked separately. Connect the ohmmeter as shown in figure 46, and then reverse the ohmmeter leads to obtain two readings on the same component. Use the middle scale on scale-type meters on which the 300 ohm value should be within, or nearly within, the middle third of scale.

Capacitors C1 and C2 = The ohmmeter should read high and low on each capacitor. If not, replace capacitor.

Diodes D1, D2 and D3 = Each diode should give one high and one low reading. If not, replace diode.

Resistor R2 = Turn voltage adjustment screw (identified in figure 44) with ohmmeter connecting each way. Reading should change as slotted screw is turned. If not, replace R2.

Transistor TR1 = See figure 46. Use the low scale. Each of the three checks should read low and high. If not, replace TR1.

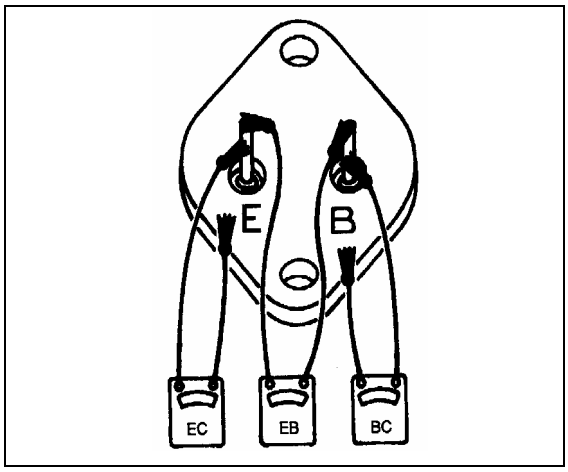

FIGURE 46: CHECKING TRANSISTOR TR1 06081

Transistor TR2 = Change the ohmmeter to use the low scale. EB should read low and high. BC should read low and high. EC should both read high. If not, replace TR2. See figure 47.

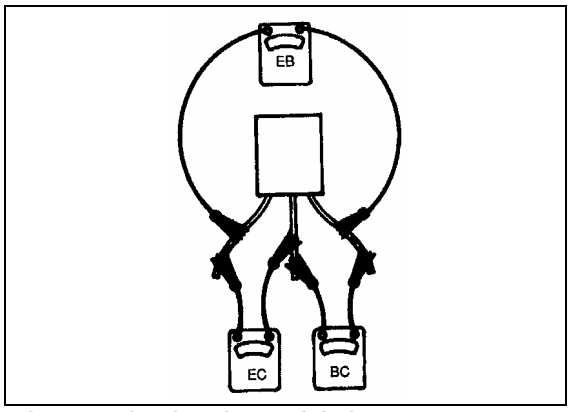

FIGURE 47: CHECKING TRANSISTOR TR2 06081

9.3 ADJUSTING VOLTAGE

After repair, the regulator must be adjusted to the desired voltage setting. Follow the procedure under "Checking Voltage Regulator Setting". Slowly turn the adjus ting screw full range and observe the voltmeter to ensure that the voltage is being controlled, then, while still turning, slowly adjust to the desired setting.

10. BATTERY EQUALIZER

Battery equalizer troubleshooting guide and owner's manual (60 and 100 amps) are annexed at the end of this section.
Refer to "Electrical Compartments and Junction Box" of this section, for location.

11. STARTER

The starter has a shift lever and solenoid plunger that are totally enclosed to protect them from exposure to dirt, icy conditions and splashing.
Positive lubrication is provided to the bronze bushing located in the commutator end frame, in the lever housing and in the nose housing, by an oil-saturated wick that projects through each bushing and contacts the armature shaft.
The clutch is a *"Positork"* drive type, that meshes with the ring gear by the action of the solenoid. Once engaged, the clutch will not disengage during intermittent engine firing. That prevents damage to pinion and ring gear teeth. The pinion remains engaged until starting is assured and the solenoid circuit is interrupted. Refer to figure 48 for more details.

11.1 MAINTENANCE

All wicks and oil reservoirs should be saturated with SAE 10 oil, and the splines underneath the clutch should be lubricated with a light coating of SAE 10 oil. Other than normal periodic lubrication and keeping cable connections clean and tight, the starter should require no periodic maintenance. However, under normal operating conditions, the starter should be disassembled, inspected, cleaned and tested at time of engine overhaul.

11.2 TROUBLESHOOTING

Failure of the starter to crank the engine at normal speed may be due to a defective battery, worn battery cables, poor connections in the cranking circuit, defective engine starting switch, low temperature, condition of the engine or a defective starter. To determine if the starter is the problem, it will first be necessary to check the batteries, the cranking circuit, the magnetic switch, the solenoid and the control switch.
To obtain full performance data on a starter, or to determine the cause of abnormal operation, the starter should be subjected to the following tests. These tests are performed with the starter removed from the engine. Check the armature for freedom of rotation by prying on the pinion with a screwdriver. Tight bearings, a bent armature shaft, or a loose pole shoe screw will prevent the armature from turning freely. Failure of the starter to perform according to specifications will require disassembly of the motor for further checks and adjustments. However, if the armature does rotate freely, the motor should be given a no-load test before disassembly.

Caution: *Never operate the starter more than 30 seconds at a time without pausing to allow it to cool for at least 2 minutes. Overheating, caused by excessive starting, will seriously damage the starter.*

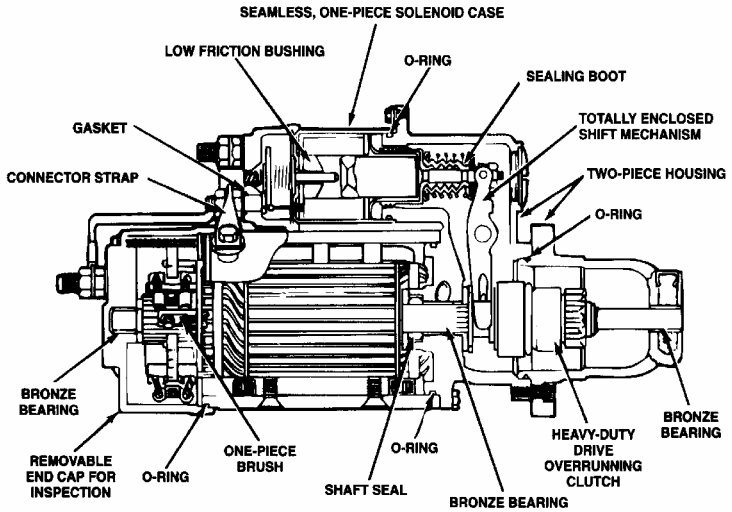

FIGURE 48: TYPICAL STARTER CROSS SECTION 06147

11.2.1 No-Load Test

Before disassembly of the starting motor, the following check of starting motor operation should be done to determinate any condition that may require special attention during overhaul. Make test connections to the starting motor as in figure 49.

Connect the starting motor in series with fully charged batteries to give 24 volts, an ammeter capable of reading several hundred amperes and a variable resistance. Also connect a voltmeter as illustrated in figure 49 from the solenoid motor (M) terminal to the starter frame. A rpm indicator is necessary to measure armature speed. Proper voltage can be obtained by varying the resistance unit.

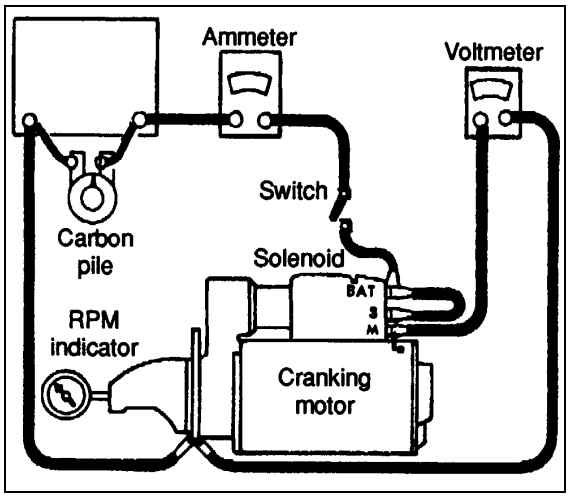

FIGURE 49: STARTING MOTOR NO-LOAD TEST 06084

No-load test results

1. Rated current draw and no-load speed indicate normal condition of the starter.
2. Low free-speed and high current draw indicate the following:
   a) Excessive friction. Tight, dirty, or worn bearings, bent armature shaft, or loose pole shoes allowing the armature to drag.
   b) Shorted armature. This can be further checked on a growler after disassembly of the starter.
   c) Grounded armature or fields. Check again after disassembly.
3. Failure of the starter to operate with high current draw indicates the following:
   a) A direct ground in the terminal or fields.
   b) *"Frozen"* bearings. This may be determined by turning the armature by hand.
4. Failure to operate with no current draw indicates:
   a) Open field circuit. This can be checked after starter disassembly by inspecting internal connections and tracing circuit with a test lamp.
   b) Open armature coils. Inspect the commutator for badly burned bars after disassembly.
   c) Broken brush springs, worn brushes, high insulation between the commutator bars or other causes which would prevent good contact between the brushes and commutator.
5. Low no-load speed and low current draw indicate high internal resistance due to poor connections, defective leads, dirty commutator and causes listed previously in condition 4.
6. High free-speed and high current draw indicate shorted fields. If shorted fields are suspected, replace the field coil assembly and check for improved performance.

11.2.2 Lock-Torque Test

A variable resistance with a high current capacity should be used. The starter should be securely mounted and brake arm hooked to the drive pinion. When specified current is applied, the torque can be computed from the reading on the scale. A one foot brake arm will directly indicate foot-pounds.

Warning: *This test requires extreme caution. Follow instructions carefully.*

11.3 DISASSEMBLY

Normally, the starter should be disassembled only far enough to make repairs or to replace the defective parts. As a precaution, it is suggested that safety glasses be worn when disassembling or assembling the cranking motor. Proceed as follows:

1. Note the relative position of the solenoid, lever housing, and nose housing so the motor can be reassembled in the same manner.
2. Disconnect field coil from the solenoid motor terminal, and lead from the solenoid ground terminal.
3. On motors with brush inspection plugs, remove the plugs and then remove the brush lead screws. This will disconnect the field leads from the brush holders.
4. Remove the attaching bolts and separate the commutator end frame from the field frame.
5. Separate the nose housing and field frame from the lever housing by removing attaching bolts.
6. Remove armature and clutch assembly from lever housing.
7. Separate solenoid from the lever housing by pulling apart.

11.3.1 Cleaning

The driving mechanism armature and fields should not be cleaned in a degreasing tank, or with grease dissolving solvents, since these would dissolve the lubricants in the drive mechanism and damage the insulation in the armature and field coils. All parts, except the drive, should be cleaned with mineral spirits and a brush. The drive can be wiped with a clean cloth.
If the commutator is dirty, it may be cleaned with No. 00 sandpaper.

Caution: *Never use emery cloth to clean the commutator.*

11.3.2 Armature Servicing

If the armature commutator is worn, dirty, out of round, or has high insulation, the armature should be put in a lathe so the commutator can be turned down. The insulation should then be cut 1/32" (0,79 mm) wide and 1/32" (0,79 mm) deep, and the slots cleaned out to remove any trace of dirt or copper dust. As a final step in this procedure, the commutators should be sanded lightly with No. 00 sandpaper to remove any burrs left as a result of the undercutting procedures.
The armature should be checked for opens, short circuits and grounds as follows:

Open Circuit Test

Open circuits are usually caused by excessively long starting periods. The most likely place for an open circuit to occur is at the commutator riser bars. Inspect the points where the conductors are joined to the commutator bars for loose connections. Poor connections cause arcing and burning of the commutator bars as the starter is used. If the bars are not too badly burned, repair can often be performed by resoldering the leads in the riser bars (using rosin flux), and turning down the commutator in a lathe to remove the burned material.

Caution: *Do not undercut the insulation between the commutator segments after turning down the commutator.*

Short Circuit Test

Short circuits in the armature are located by means of a growler. When the armature is revolved in the growler with a steel strip such as a hacksaw blade held above it, the blade will vibrate above the area of the armature core in which the short circuit is located. Short circuits between bars are sometimes produced by brush dust or copper between the bars. These short circuits can be eliminated by cleaning out the slots.

Ground Test

Grounds in the armature can be detected by the use of a 110 volts test lamp and test points. If the lamp lights when one test point is placed on the commutator with the other point on the core or shaft, the armature is grounded. Grounds occur as a result of insulation failure, which is often brought about by overheating of the starter produced by excessively long starting periods, or by accumulation of brush dust between the commutator bars and the steel commutator ring.

11.3.3 Field Coil Checks

The field coils may be checked for grounds and opens by using a test lamp.

Grounds

If the motor has one or more coils normally connected to ground, the ground connections must be disconnected during this check. Connect one lead of the 110 volts test lamp to the field frame and the other lead to the field connector. If the lamp lights, at least one field coil is grounded, and it must be repaired or replaced.

Opens

Connect test lamp leads to ends of field coils. If lamp does not light, the field coils are open.

11.3.4 Field Coil Removal

Field coils can be removed from the field frame assembly by using a pole shoe screwdriver. A pole shoe spreader should also be used to prevent distortion of the field frame. Careful installation of the field coils is necessary to prevent shorting or grounding of the field coils as the pole shoe is tightened into place. Where the pole shoe has a long lip on one side and a short lip on the other, the long lip should be assembled in the direction of armature rotation so it becomes the trailing (not leading) edge of the pole shoe.

11.3.5 Reassembly

Reassembly is the reverse of disassembly. To reassemble the end frame with brushes on to the field frame, pull the armature out of the field frame just far enough to permit the brushes to be placed over the commutator. Push the commutator end frame and the armature back against the field frame.
The recommended torque for the cross-slotted pole shoe screws is 25-35 ft•lbf (34-47 N•m). The electric cable connector is fixed with a nut tightened to 20 ft•lbf (27 N•m) and a jam nut tightened to 27 ft•lbf (37 N•m).

11.4 PINION CLEARANCE

Pinion clearance should be checked after reassembly of motor to ensure the clearance is within specifications. To check pinion clearance (starter off engine), first disconnect the motor field connector from the solenoid motor terminal. Connect 24 volt battery with the positive battery lead to the solenoid switch terminal (5), and the negative battery lead to the grounded (G) solenoid terminal. Momentarily flash a jumper lead from the solenoid motor terminal to the grounded (G) solenoid terminal. The pinion gear will now shift into cranking position and remain that way until the battery is disconnected. Push the pinion or drive back towards the commutator end to eliminate slack movement. Measure the distance between pinion and pinion stop. This should be 23/64" ± 1/32" (9,5 mm ± 0,79 mm). Pinion clearance is adjusted to these limits by turning the solenoid shaft nut after removing access plug in shift housing. See figure 50.

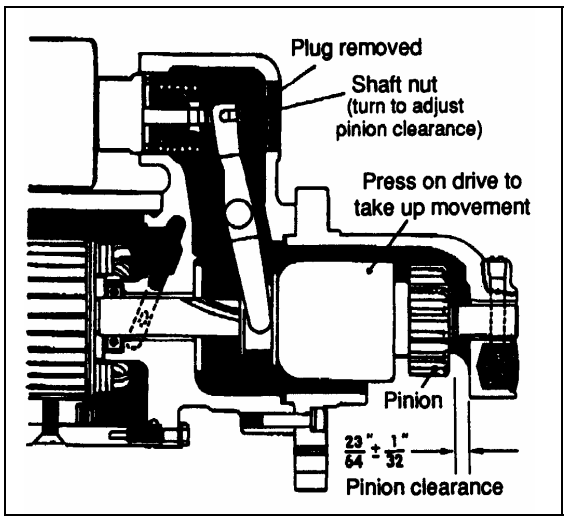

FIGURE 50: PINION CLEARANCE 06085

11.5 STARTER SOLENOID

The starter solenoid allows the starter pinion to mesh with the flywheel ring gear and also closes the electric circuit to energize the starting motor. There are two windings in the solenoid: a pull-in winding and a hold-in winding. Both windings are energized when the external control switch is closed. They produce a magnetic field that pulls the plunger in so that the drive pinion is allowed into mesh, and the main contacts in the solenoid switch are closed to connect the battery directly to the starter. Closing of the main switch contacts shorts out the pull-in winding since this winding is connected across the main contacts. The magnetism produced by the hold-in winding is sufficient to hold the plunger in, and shorting out the pull-in winding reduces drain on the battery. When the control switch is opened momentarily, the pull-in winding and the hold-in winding are connected in series between the battery and common ground.
The polarity of the pull-in winding is reversed and opposes the magnetic pull of the hold-in winding. The magnetic holding force on the solenoid plunger is thus canceled. The return spring then quickly pulls the solenoid plunger back, opening the solenoid switch contacts and withdrawing the pinion gear from the meshing position at the same time. Proper operation of the switch depends on maintaining a definite balance between the magnetic strength of the pull-in and hold-in windings.
This balance is established in the design by the size of wire and the number of turns specified. An open circuit in the hold-in winding or attempts to start the motor with a discharged battery may cause the switch to chatter.

11.5.1 Disassembly

To disassemble the solenoid, remove nuts, washers, and insulators from the switch terminal and battery terminal. Remove the cover screws and cover. Take out the contact disk assembly.

11.5.2 Solenoid Maintenance

The solenoid requires no periodic maintenance other than keeping the terminals clean and tight. Always check the action of the solenoid if it has been removed. If the unit fails to function, first check wiring before condemning the solenoid. Solenoid windings can be checked for open or short circuit or current draw.

11.5.3 Solenoid Tests

Two tests must be made to determine the current draw of (1) both windings in parallel and (2) the hold-in winding alone. The solenoid windings can be tested with the solenoid either off or on the starter. However, when the solenoid is checked on the starter, it is necessary to disconnect both leads at the main solenoid terminals to prevent interference. The main solenoid terminal that is normally connected to the starter must then be grounded to the solenoid base by means of a jumper lead. For the first test, connect a source of variable voltage (battery and a variable resistance) in series with an ammeter between the solenoid base and the solenoid small switch terminal. Connect a voltmeter between the same two points. Slowly increase voltage and note the current draw. It should be 55-63 amps at 24 volts. Disconnect the jumper lead grounding the main solenoid terminal and readjust the variable resistance to obtain the specified voltage of 24 volts. It should not exceed 6.8 amperes.

When the solenoid has been removed from the starter for repair or replacement, the linkage must be adjusted to provide the correct pinion clearance when the solenoid is remounted on the starter. See *"Pinion Clearance"* earlier in this section for correct pinion clearance adjustment.

11.5.4 Recommendations

1. Tag each lead to ensure correct connections when the starter is reinstalled.
2. Tighten the 5/8"-11 starter attaching bolts to a torque of 137-147 ft•lbf (186-200 N•m).
3. Keep all the electrical connections clean and tight.
4. When installing wiring terminal leads to the starter and the solenoid switch, torque the No. 10-32 connections to 16-30 in•lbf (2-3 N•m) and the ½"-13 connections to 18-20 ft•lbf (24-27 N•m). For first nut and 24-27 ft•lbf (33-36 N•m) for the terminal one.

12. ENGINE BLOCK HEATER

The vehicle may be equipped with an engine immersion-type electric block heater to assist cold weather starting. The heater male electric plug is easily accessible through the engine compartment R.H. side door (Fig. 51). To use it, connect the female plug of an electrical extension cord to the heater plug. The extension cord must be plugged into a 110-120 V AC power source only. The engine block heater should be used whenever the vehicle is parked for an extended period of time in cold weather and a suitable power source is available.

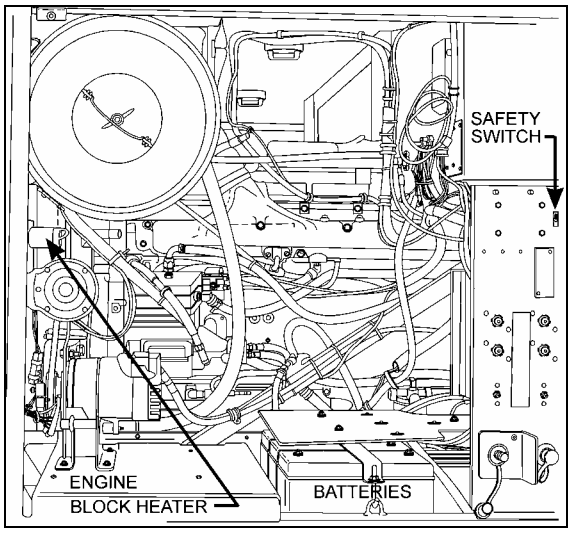

FIGURE 51: ELECTRIC HEATER PLUG LOCATION 18354

12.1 MAINTENANCE

This heater is non-serviceable except for the cord, and if faulty, must be replaced as a unit.

13. EXTERIOR LIGHTING

The circuit for exterior lights, as well as their control switches, relays and circuit breakers are shown on the applicable wiring diagrams. Wiring diagrams are located in the technical publication box.

13.1 HEADLIGHTS

Each headlight assembly consists of a 12 volt halogen rectangular lamp unit and a front turn signal light. Headlight lamps are double-filament units, having high and low beams.

13.1.1 Headlight Beam Toggle Switch

The multifunction lever located on the steering column is used to select proper lighting. High beams or low beams can be selected by pulling the lever rearward. A high beam indicator on the central dashboard panel is illuminated when the high beam circuit is energized.

Note: *Pulling the lever rearward while the lights are off will flash the headlights.*

13.1.2 Maintenance

Clean headlights with soap and water and a good glass cleaner whenever dirty. For maximum illumination, headlight connections must be coated with a die lectric grease to prevent oxidation and proper voltage must be maintained. Low battery voltage, loose or dirty contacts in wiring system and poor ground contribute to a de crease in voltage. Check wiring and connections regularly and keep battery properly charged. When a he adlight burns out, a new bulb must be installed. Headlight aiming is not necessary after a bulb replacement.

Headlights must be properly aimed to provide maximum allowable road illumination. When using mechanical aiming devices, follow manufacturer's instructions.

Headlight aim should be checked after installing a new headlight unit. Aiming can be performed without removing headlight assembly. Horizontal and vertical aiming of ea ch headlight unit is provided by two adjusting screws that move the headlight unit within its support (fig. 58). There is no adjustment for focus since the he adlight unit is set for proper focus during manufacturing assembly.

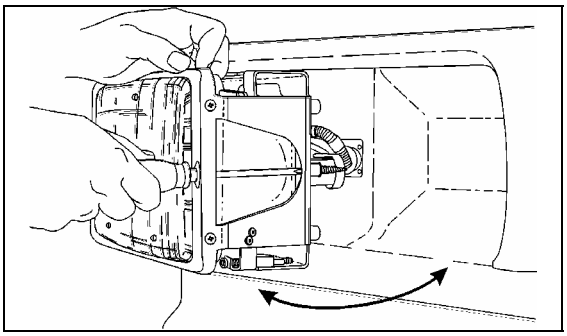

FIGURE 52: HEADLIGHT ASSEMBLY 06405

13.1.3 Headlight Adjustment

The following is a general procedure for headlight adjustment using a mechanical equipment, such as a *"Bear 47-132 headlight aligner".* If your mechanical equipment is different, refer to the manufacturer's instruction manual.

Setting aligner according to slope

The floor level offset dial must match with slope to ensure a precise alignment.

1. Park vehicle on a level floor.
2. Fix one (1) calibration fixture to each aligner.
3. Install aligner in center of each wheel on one side of vehicle. Unit B must be installed beside the front axle wheel with its viewing port facing rearward, and unit A beside the drive axle wheel with its viewing port facing forward. See figure 54 for more details.

Note: *Check that the three indicators on each module are set to zero.*

4. Level each unit with t he thumb adjusting screw on the fixture until level-vial bubble is centered.
5. Look through the top port hole of unit A, and turn horizontal knob until split images are aligned. See figure 53.

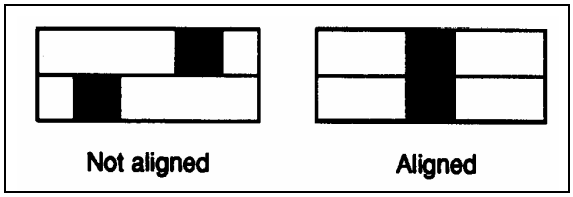

FIGURE 53: HEADLIGHT ALIGNMENT 06088

6. Set according to floor slope. Transfer positive (+) or negative (-) reading of horizontal dial to the floor level offset dial to offset floor slope on each aligner (Fig. 55). Push on the floor level offset dial to register reading.
7. Remove calibration fixture from each unit.

Note: *If vehicle remains stationary during the headlight alignment procedure, it is no t necessary to check floor slope each time.*

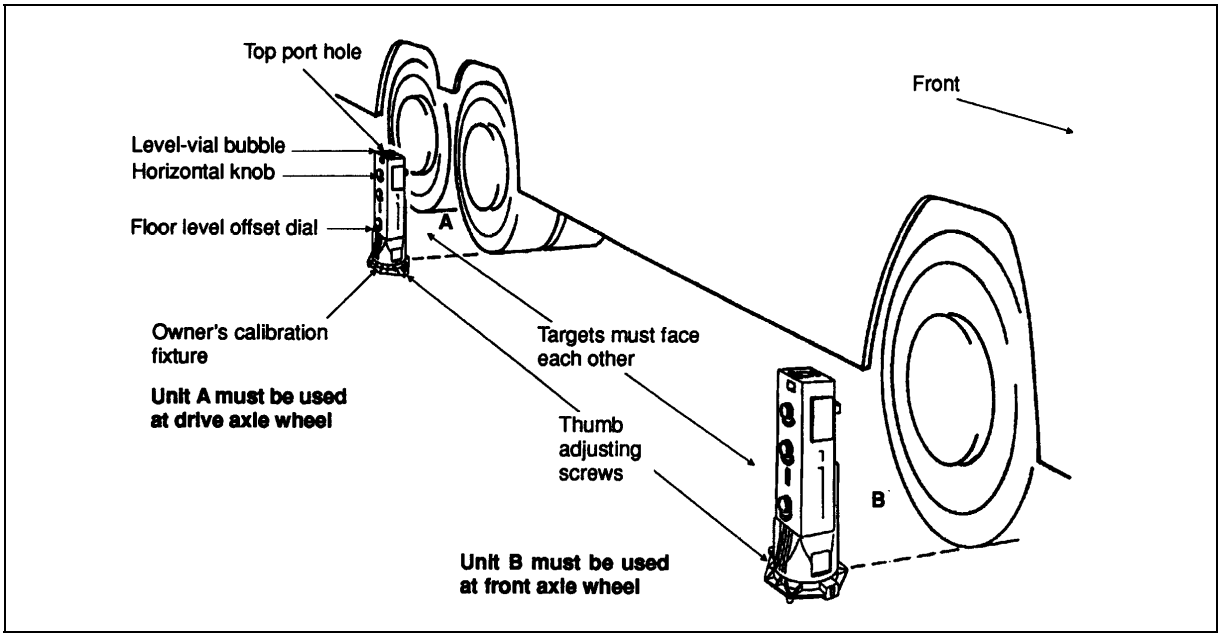

FIGURE 54: HEADLIGHT ALIGNMENT 06087

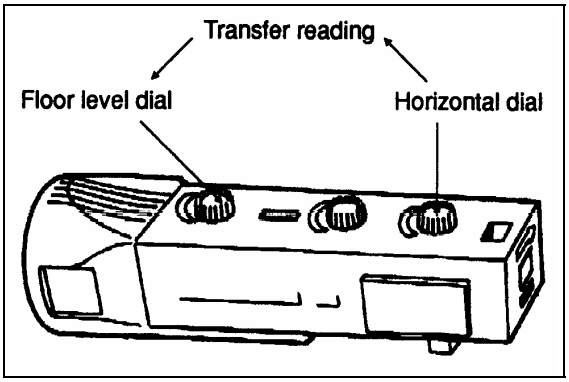

FIGURE 55: HEADLIGHT ALIGNER 06089

Headlight Alignment

The aligner is provided with adapters for different sizes of he adlights that are always aligned in pairs.

1. Fix the adequate adapter on each headlight.

Note: *The adapters are equipped with steel inserts, thus providing a good seating for precise headlight adjustment.*

2. Install aligners on headlights (unit A on driver's side and unit B on other side with the sight openings facing each other) by pushing the handle forward to secure rubber suction disc. Pull handle until it locks. Refer to figure 56.

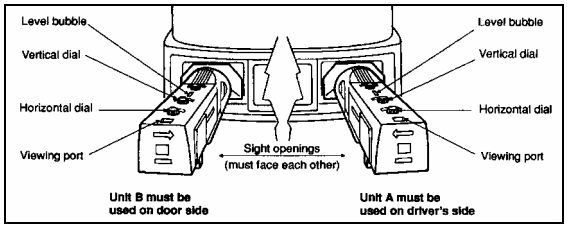

FIGURE 56: HEADLIGHT ALIGNMENT 06090

Note: *Ensure that floor level offset dial is set correctly before aligning headlights.*

Horizontal Alignment

1. Reset horizontal dial to zero.
2. Check that split image is v isible in the viewing port. If not, reposition aligner by turning it.
3. Turn the horizontal aim a djusting screw of each headlight unt il split image is aligned (Fig. 57 and 58).

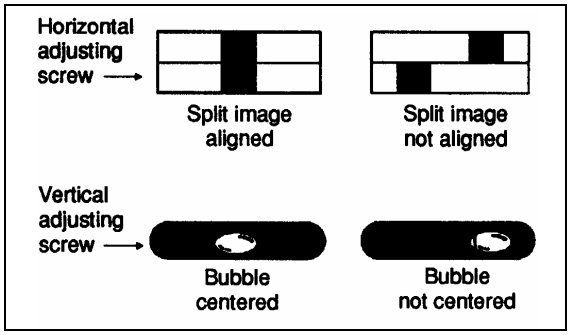

FIGURE 57: HEADLIGHT ALIGNMENT 06091

Vertical Alignment

1. Reset vertical dial to zero.
2. Turn the adjusting screw of the headlight vertical aim until bubble is centered (Fig. 57 and 58). Repeat operation on other headlight.
3. Recheck the horizontal alignment.

Remove aligners by pressing on vacuum release button.
Repeat the same procedure for the high beams.

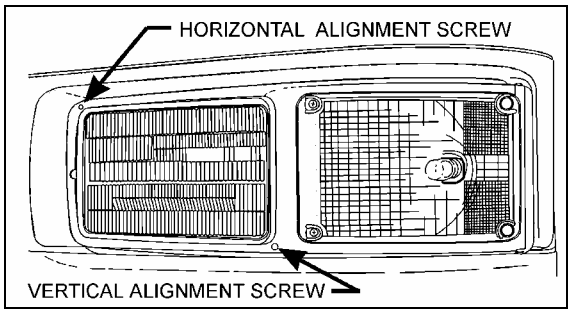

FIGURE 58: ALIGNMENT SCREWS 06413

If proper mechanical equipment is not available, perform adjustments as described below:

1. Park vehicle on level floor so headlights are 25 feet (7,6 m) from a smooth surface preferably of ligh t color. A door or wall is suitable. Centerline of vehicle should be perpendicular to this vertical surface.
2. Draw a horizontal line on vertical surface at height of ligh t center. Locate point on this horizontal line at which projected centerline of vehicle intersects. Measure distance between light centers and divide this distance equally on either side of center mark. Then draw two vertical lines directly ahead of each light center.
3. Switch on high beams and cover one headlight while adjusting the other.
4. When aiming headlights, beam may appear distorted. A new headlight unit must be installed to correct this condition.
5. After headlight is properly aligned, cover it and proceed in the same manner as above with opposite headlight.

13.1.4 Headlight Unit Replacement

Removal

1. Remove screw fixing headlight assembly to its housing (Fig. 52) and pivot assembly out.
2. Remove socket from headlight lamp connector.
3. Remove six mounting screws attaching headlight unit to support.

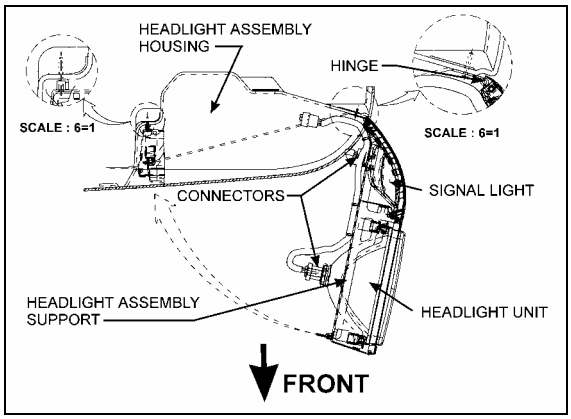

FIGURE 59: TOP VIEW OF HEADLIGHT ASSEMBLY 06421

Installation

1. Install wiring connector on back of new headlight unit. Position unit in support with molded lens number at top.
2. Secure headlight unit using six mounting screws.
3. Pivot headlight assembly back into its housing then secure using fixing screw.
4. Perform alignment procedure.

Note: *The headlight aim must be checked and adjusted even if it was properly adjusted before the headlight unit was replaced.*

13.1.5 Headlight Bulb Removal and Replacement

1. Remove the headlight screw fixing the headlight assembly, then pivot headlight assembly out.
2. Remove socket from headlight lamp.
3. Remove the bulb by pushing and rotating it out of the socket.
4. Install the new bulb by reversing the previous procedure.

13.2 FRONT TURN SIGNAL

The front turn signal is part of the headlight assembly. The turn signal lens is located on each front corner and shares a common support with the headlights. Turn signal is visible from both front and side.

13.2.1 Front Turn Signal Light Replacement

Removal

1. Remove screw fixing headlight assembly to its housing (Fig. 52) and pivot assembly out.
2. Remove socket from front turn signal light lamp connector.
3. Remove four mounting screws attaching front turn signal light to support.

Installation

1. Install wiring connector on back of new front turn signal light. Position unit in support with molded lens number at top.
2. Secure front turn signal light using four mounting screws.
3. Pivot headlight assembly back into its housing then secure using fixing screw.

13.2.2 Front Turn Signal Light Bulb Removal and Replacement

1. Remove the headlight screw fixing the headlight assembly, then pivot headlight assembly out.
2. Remove socket from front turn signal light.
3. Remove the bulb by pushing and rotating it out of the socket.
4. Install the new bulb by reversing the previous procedure.

13.3 STOP, TAIL, DIRECTIONAL, BACK-UP, AND HAZARD WARNING LIGHTS

A combination stoplight, taillight, directional signal light and back-up light assembly is mounted at the rear, on each side of the vehicle. Furthermore, when braking, two center stoplights (LED) and a cyclops light (LED) will illuminate simultaneously with the stoplights on the sides for increased safety. The L.H. and R.H. side center stop lights are also used as directional signal and marker lights.

The stop, tail, directional signal and back-up lights consist of individual bulbs mounted in a common housing, and each light is serviced individually as a complete unit and need only to be plugged into or unplugged from socket after removing proper light lens.
The hazard warning flashing system uses the front, side and rear directional lights simultaneously. This system is energized by a switch on the L.H. dashboard.

13.3.1 Bulb Removal and Replacement

1. Unscrew the retaining lens screws (2), then remove the lens.
2. Remove the bulb by pushing and then rotating it counterclockwise out of the socket.
3. Install the new bulb by pushing and rotating it clockwise, then replace the lens; the “Hella” inscription molded on the lens must be pointing upwards.

Note: *Lens must be installed in their original position.*

Note: *Taillights are provided with a different candle power bulb. Make sure appropriate replacements are used for any defective bulbs.*

13.4 LICENSE PLATE LIGHT

Two sealed units are mounted above the rear license plate(s) of vehicle. In case of burn out, the sealed unit must be changed according to the following procedure.

1. Pry out the rubber seal with a small screwdriver. Pull on the sealed unit and disconnect it.
2. Reconnect new sealed unit, place rubber seal, and press on it until it is seated in position.

13.5 CLEARANCE, IDENTIFICATION AND MARKER LIGHTS

The vehicle is equipped with marker, identification and clearance lights (LED). The clearance lights are mounted at each corner of the coach near the top and the identification lights are in the upper center of rear and front sections. The rear clearance lights are red and the front ones are amber.
The amber marker lights are mounted along the sides of vehicle.

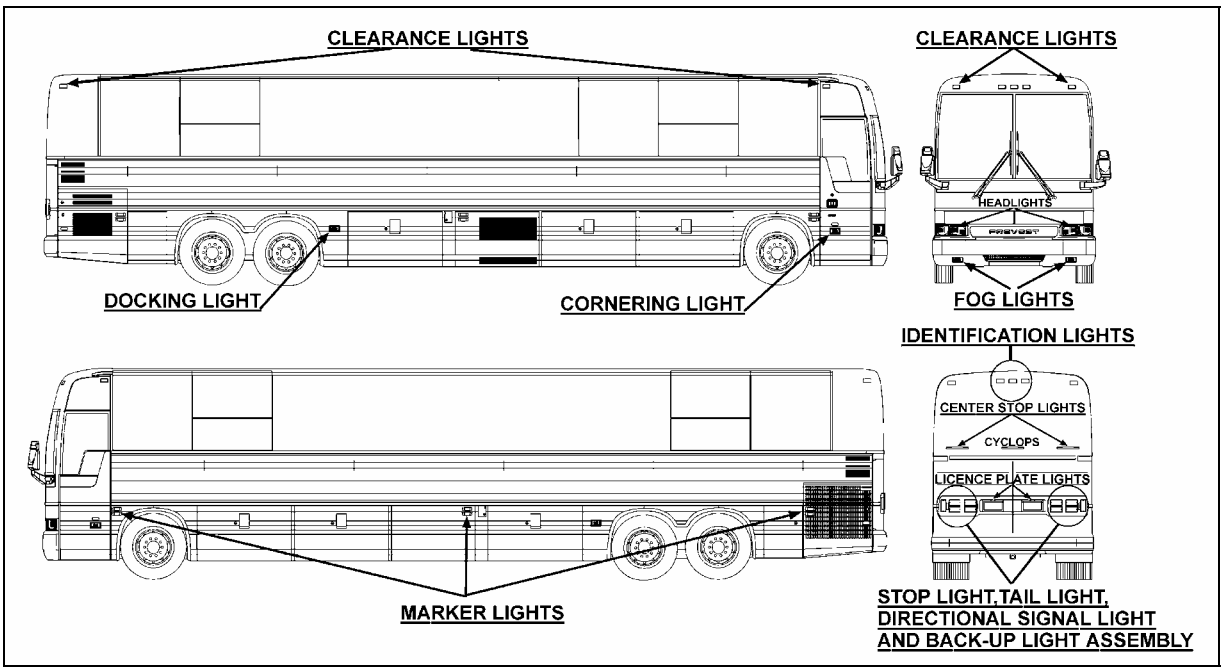

FIGURE 60: VARIOUS LIGHTS LOCATION 06412

13.5.1 Marker Light Removal and Replacement

The side marker light is a sealed unit (LED) and should be replaced as an assembly in accordance with the following procedure:

1. Unscrew both *"Phillips"* light screws, then remove the light assembly.
2. Position the new light assembly and install the "Phillips" screws.

13.5.2 Clearance and Identification Light Removal and Replacement

The clearance and identification light are sealed units (LED) and can be replaced in accordance with the following procedure:

1. Unscrew both "Phillips" light screws, then remove the light assembly.
2. Position the new light assembly, then install the "Phillips" screws.

13.6 DOCKING AND CORNERING LIGHTS

MTH vehicles are provided with two halogen headlights that serve as cornering lights. They are mounted on the vehicle as follows: one is mounted on the front L.H. side service compartment door, while the other is located on the entrance door on the R.H. side. The main function of these lights is to inc rease lateral visibility when turning a corner. These lights are energized simultaneously with the directional lights. A dashboard-mounted rocker switch may be actuated to ca ncel this system in special situations.

Two additional halogen headlights are installed aft of the rear baggage compartment. These lights are used as docking lights and both will illuminate automatically when reverse range is selected to f acilitate back-up or docking procedure. These lights do not operate automatically when the reverse range is selected, but by means of a dashboard-mounted rocker switch. When actuated, the docking as well as the cornering lights illuminate.

13.6.1 Lamp Removal and Replacement

Both docking and cornering headlights can be changed in ac cordance with the following procedure:

1. Remove the two "Phillip s" screws attaching the retaining ring.
2. Disconnect the light unit connection.
3. Remove the lamp.
4. Position new lamp.
5. Connect and position the light unit.
6. Finally, install the retaining ring.

13.7 FOG LIGHTS

Standard halogen fog lights (MTH) or optional (coaches), can be mounted on this vehicle to give the driver better visibility in foggy weather, or to improve the range of vision just ahead of the coach.

13.7.1 Bulb Removal and Replacement

1. Remove the protector cap on light unit (if so equipped). Remove the light unit retainer screw and slide the retainer upward.
2. Remove the light unit. Disconnect the light unit connection.
3. Remove retaining clip from its notches, then lift the retaining clip and remove the bulb.
4. Install the new bulb, then replace the retaining tab of clip to its position into the notches.

Caution: *During this step, avoid contacting the bulb with your fingers. This could alter the bulb life.*

5. Reconnect the light unit and replace in its proper position.
6. Replace the retainer.
7. Replace the light unit cover (if so equipped).

14. INTERIOR LIGHTING EQUIPEMENT

14.1 CONTROL PANEL LIGHTING

The instrument gauges and switches mounted on all control panels are energized whenever the exterior light switch is pushed to the first position. A control dimmer located on the dashboard is used to vary the brightness of the panel gauges, switches and indicator lights.
The gauge lights, panel lights, switch lights and indicator lights have a different bulb arrangement. Thus, the procedure to change a defective bulb can vary according to the application.

14.1.1 Switch Lighting

1. Slightly pull the switch with a defective LED away from the control panel.
2. Disconnect the electric cable from the switch.
3. To install a new switch, reverse the procedure (Fig. 60).

Note: *Switches are lighted by the use of LED. When lighting on a switch fails, replace defective switch as a unit.*

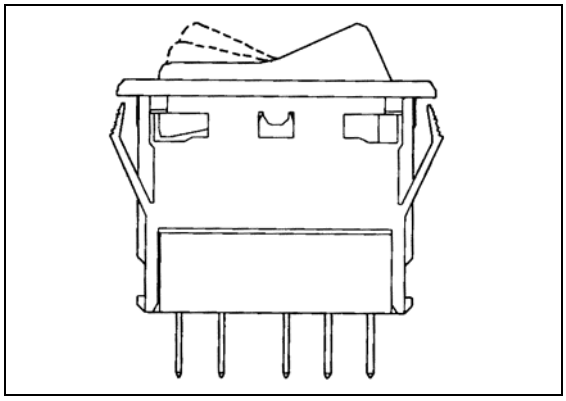

FIGURE 61: SWITCH 06321

14.1.2 Telltale Light Replacement

Telltale module is non-serviceable and must be replaced as a unit.

1. Unscrew and remove the top dashboard panel.
2. Remove the telltale back wire electric connectors.
3. Unscrew and remove the telltale module.
4. To replace the telltale module, reverse the procedure.

14.1.3 Gauge Light Bulb Replacement

1. For any gauge light bulb replacement, the dashboard panel must be removed in order to have access to the rear of gauges.
2. Remove bulb socket from the gauge, turn the defective bulb counterclockwise and pull it out of the gauge.
3. Push a new bulb and socket ASM and turn clockwise to lock in place.
4. Replace the rear dashboard housing.

14.2 STEPWELL LIGHTS AND LAVATORY NIGHT-LIGHT

Stepwell lights are illuminated when the door opening system is activated.
The lavatory night-light is illuminated as soon as the ignition switch is set to the *"ON"* position.

14.2.1 Bulb Removal and Replacement

Proceed as follows to replace defective bulb:

1. Unscrew the two Phillips-head screws retaining the lens to the lavatory wall, and remove it.
2. With the light lens removed, pull bulb from the lamp while applying lateral pressure.

3. Install the new bulb into the lamp.
4. Position the light lens and install it.

14.3 DRIVER'S AREA LIGHTS

Two halogen ceiling lights are installed over the stepwell and the driver's area. These lights are frequently used for night-time operation when passengers board or leave coach.

14.3.1 Bulb Removal and Replacement

1. Unsnap the lamp with a flat head screwdriver and remove it.
2. Pull the defective bulb out of the socket.
3. Install the new bulb by pushing it in position.
4. Replace the lamp by snapping it back in place.

Caution: *Do not touch halogen bulbs with bare hands as natural oils on s kin will s horten bulb life span.*

14.4 PASSENGER SECTION LIGHTING

The passenger section of coach is lit by two types of fluo rescent tube lamps installed on the parcel racks.
The aisle lights are loc ated on front of parcel racks, and provide soft, indirect cabin lighting and parcel rack interior lighting. More powerful lighting for general and in-station applications is provided by fluorescent tubes located under the parcel racks, close to the windows. A dual power system is available for this lighting either from the 24 volt vehicle power supply or from a 110 volt outlet supply. In order to save batteries during extended periods of in-station lighting, no current is drawn from the batteries as soon as the 110 volt circuit is connected.
Moreover, adjustable reading lamps are installed under the parcel racks for passenger accommodation.

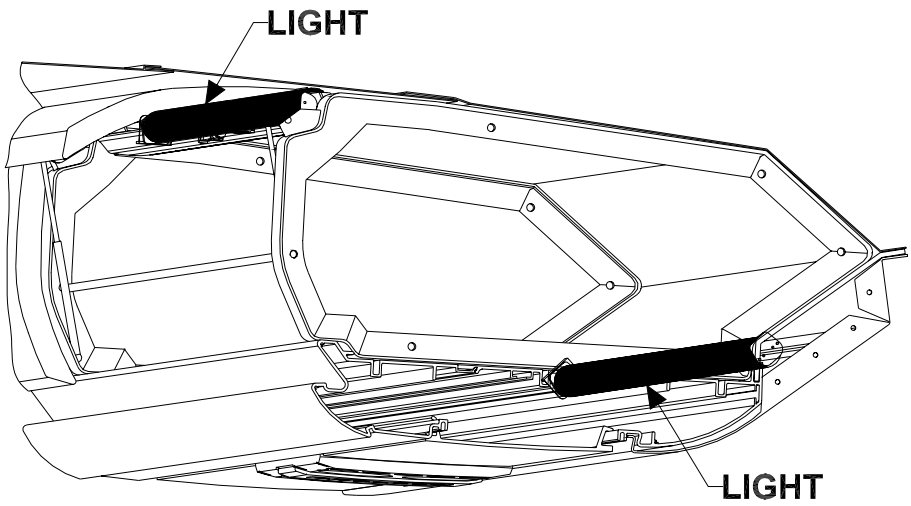

FIGURE 62: PARCEL RACK LIGHTING 06419

14.4.1 Fluorescent Tube Replacement

Indirect Fluorescent Light

1. Open the parcel rack access door, if so equipped, unscrew the two Phillips screws (one each end). Let the hinged cover down.
2. Remove fluorescent tube from light socket.
3. Install a new fluorescent tube.
4. Lift the hinged cover and replace the two retaining screws (Fig. 61).

Parcel Rack Interior Lighting

1. Open the parcel rack access door, if so equipped, unscrew the two Phillips screws (one each end). Pull the hinged cover down.

2. Push on the bulb, turn and then, pull it from the socket.
3. Install a new bulb.
4. Lift the hinged cover and replace the two retaining screws.

14.4.2 Removal and Replacement of In-Station Fluorescent Tubes

1. Start by pulling out the corner of the lens then delicately peeling it out of its seat.

Caution: *The lens is fragile. Be very careful when removing and handling.*

2. Rotate and pull the fluorescent tube from its sockets.
3. Install a new fluorescent tube, rotating the tube to secure it in the sockets.
4. Replace the screen lens by first inserting one side in the seat, then push the other side in and snap it in place by running it in from one corner to the next.

14.4.3 Removal and Replacement of Reading Lamp Bulb

1. Engage the tool (#830164) over the lamp and turn one quarter turn counterclockwise. Then, remove the tool slowly.
2. Pull the bulb socket off the reading lamp unit.
3. Push and turn bulb counterclockwise, then pull it out of the socket.
4. Install new bulb in the socket, then push and turn clockwise to lock bulb in position.
5. Push the bulb socket in the reading lamp unit.
6. Position the reading lamp with the tool (#830164), turn one quarter turn clockwise.

14.5 ENGINE COMPARTMENT LIGHTING

A switch located on R.H. side of rear junction box can be used to actuate the two circular engine compartment lights.

Each light is provided with one bulb that can be replaced as follows:

1. Remove the lens by unscrewing the ring two fixing screws, pry out the lens.
2. Push and turn the defective bulb counterclockwise, then pull it out of the socket.
3. Install the new bulb in the socket, then push and turn clockwise to lock bulb in position.
4. Install the lens, and fasten the ring two fixing screws.

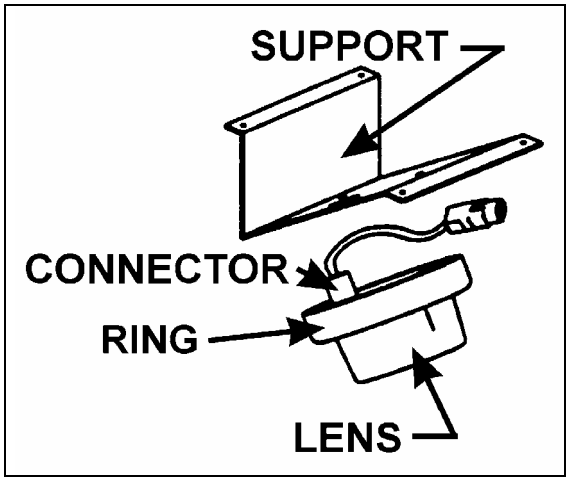

FIGURE 63: ENGINE COMPARTMENT LIGHT 06425

14.6 LAVATORY LIGHT

The lavatory light is installed on ceiling and is provided with two bulbs. A microswitch, mounted in the door exterior frame, is activated by the door lock mechanism upon locking to energize the circuit. This switch is readily serviced by removing the two Phillips-head screws securing the mounting plate to the door exterior frame.

Proceed as follows to replace a bulb:

1. Remove the lens by the use of a flat screwdriver to pry the lens out.
2. Push and turn the defective bulb counterclockwise, then pull it out of the socket.
3. Place the new bulb into the socket, then push and turn clockwise to lock bulb in position.
4. Place the lens, and snap it in place.

15. LIGHT BULB DATA

When replacing a light bulb, special attention must be paid to the voltage rating (refer to light bulb date hereafter).

***Note**: All ex terior lights are 12 volts and all interior lights are 24 volts, except for the "Check engine" and "Stop engine" warning lights and flasher indicator lights which are also on 12 volt system.*

LIGHT BULB DATA					
APPLICATION	**PREVOST PART NO.**	**TRADE OR SAE NUMBER**	**WATTS OR CANDLE POWER**	**VOLTS**	**QTY**
EXTERIOR LIGHTING					
Hi/Lo-beam	930291	9004	65/45 W	12	2
Docking & cornering	930319	9415	37.5W	12	4
Fog	561882	H3 (OSRAM)	55 W	12	2
License plate (sealed)	930266	TL 15206	---	12	2
Marker Light (red)	930340	Grote 47072-3	---	12	2
Marker Light (amber)	930341	Grote 47073	---	12	10
Identification (red)	930334	TL 25420R	---	12	3
Clearance (red)	930334	TL 25420R	---	12	4
Identification (amber)	930337	TL 25450Y	---	12	3
Clearance (amber)	930337	TL 25450Y	---	12	4
Front directional (hazard & marker)	562135	3057	32/3W	12	2
Rear directional	560589	1156	32 W	12	4
Stop	560589	1156	32 W	12	8
Back-up	560589	1156	32 W	12	4
Center stop	930330	HELLA 96208	---	12	2
Cyclops	930330	HELLA 96208	---	12	1
Tail	560123	67	4 W	12	4
Exterior compartment (except engine)	562278	HELLA 78207 OSRAM 6429	10 W	24	12
Engine compartment	560136	1003	15cp	12	2
INTERIOR LIGHTING					
Instrument cluster lights	562838	2721 MFX (OSRAM)	---	---	---
Telltale panel assy.	562791	---	---	---	1
Step light	562278	HELLA 78207 OSRAM 6429	10 W	24	3

16. SPECIFICATIONS

Battery

Make ..... Delco-Remy
Model 1150
Type ..... Maintenance-free
Terminal type ..... Top Stud
Group size 31
Volts 12
Load test amperage 290
Reserve capacity (minutes) 180

Cold cranking (in amps)
-At 0°F (-18°C) ..... 625 (each battery)
-At-20°F (-29°C) ..... 490 (each battery)

Maximum dimensions (inches/mm)
-Length (including flange) 13.0/330,2
-Width 6.8/172,7
-Height (including top posts) 9.4/238,8
-Approximate weight (lbs/kg) 60/27,2

❖ *Battery tester cable clamps should be between terminal nuts and lead pads of terminals. If not possible, load value should be 210 amperes.*

Torque specifications

Battery cable to post ..... 10-15 ft-lbf (13-20 N·m)
Battery cover ..... 45-50 ft-lbf (5-6 N·m)

Electrical system monitor

Make ..... Vanner
Model EM-70
Input ..... 24 V dc
System high ..... Greater than 30 V dc
System low ..... Less than 24 V dc
Trip level ..... + 0.75 V dc
Prévost Number 562058

Alternator

Make ..... Delco Remy
Model Number 1117702
Series 50DN
Type 600

Field current at 80°F (27°C)
-Amperes ..... 7.2 – 8.0
-Volts 24

Hot output

-Amperes ..... 270 at 80°F (27°C) ambient

-Volts 28

-Approximate rpm 3000

Ground ..... negative

Prévost number 561723

Alternator

Make..... BOSCH
Model Number..... 0120689552
Series T1

Hot output

-Amperes..... 140 at 25°C (AMBIENT)
-Volts 28
-Approximate rpm..... 6000
Ground ..... negative
Prevost Number 562752

Regulator

Make..... Delco-Remy
Model Number.....
Type ..... Transistor
Voltage adjustment ..... External screw
Prévost number 562775

Battery equalizer

Make..... Vanner
Model..... 60-50A
Amperes..... 50 amps
Prévost Number 561016

Battery equalizer

Make..... Vanner
Model..... 60-100
Amperes..... 100 amps
Prévost Number 562970

Starter

Make..... Delco-Remy
Model Number..... 1990269
Series ..... 50 MT
Type 400
Rotation (viewing drive end) ..... CW
Brush tension ..... 5 lbs (2,2 kg) Min.
Voltage 24

No-load test
-Volts 23
-Min. current draw ..... 60 amperes
-Max. current draw ..... 90 amperes
-Min. rpm ..... 7000 rpm

Starter solenoid

Make..... Delco-Remy
Model Number..... 1115557

Current Draw 80°F(27°C)
-Hold-in winding ..... 7.35 – 8.2 amps
-Pull-in winding..... 48 – 54.5 amps
Volts 24

Repair and Testing Instructions for T1 Alternator

0120 689 552

All rights rest with Robert Bosch Corp, including patent rights. All rights of use of reproduction and publication rest with R. B. Corp.

Modifications

Edition	Date	Name	Modifications
001	8/28/98	I. Serra	Original
002	12/4/98	I. Serra	Update 8.98 Instructions

All rights rest with Robert Bosch Corp, including patent rights. All rights of use of reproduction and publication rest with R. B. Corp.

Table of contents

1 GENERAL 5

2 SAFETY PRECAUTIONS 6

2.1 SPECIAL TOOL USAGE 6
2.2 FIRE RISK 6
2.3 SKIN PROTECTION 6
2.4 COMPRESSED AIR 6
2.5 EXPLOSION RISK 6

3 SPECIFICATIONS 7

3.1 ELECTRICAL TEST SPECIFICATIONS 7
3.2 MECHANICAL TEST SPECIFICATIONS 8
3.3 TIGHTENING TORQUES 8

4 ALTERNATOR SCHEMATIC 9

5 ALTERNATOR CODING 10

6 PARTS CLEANING 11

7 TOOLS, TEST EQUIPMENT LUBRICANTS AND ADHESIVES 12

7.1 TEST EQUIPMENT 12
7.2 SPECIAL TOOLS 12
7.3 LUBRICANTS AND ADHESIVES 13
7.3.1 Lubricant Quantities 13

8 EXPLODED VIEW 14

9 ALTERNATOR DISASSEMBLY AND TESTING 15

9.1 REAR COVER REMOVAL 15
9.2 VOLTAGE REGULATOR REMOVAL 15
9.2.1 Brush Replacement 16
9.3 NOISE SUPPRESSION CAPACITOR TESTING AND REMOVAL 16
9.4 PULLEY AND FAN REMOVAL 17
9.5 SEPARATION OF DRIVE SHIELD AND COLLECTOR END SHIELD 17
9.6 RECTIFIER ASSEMBLY TESTING 18
9.7 REMOVAL AND TESTING OF STATOR ASSEMBLY 19
9.8 RECTIFIER ASSEMBLY REMOVAL 20
9.9 DAMPENING RESISTOR TESTING AND REMOVAL 21
9.10 REMOVAL OF COLLECTOR END SHIELD BEARING AND SEAL 21
9.11 REMOVAL OF SLIDING BUSHING IN COLLECTOR END SHIELD 22
9.12 REMOVAL OF ROTOR FROM DRIVE END SHIELD 22
9.13 REMOVAL OF BEARING AND SEAL FROM DRIVE END SHIELD 24
9.14 REMOVAL OF COLLECTOR RING END INNER BEARING RACE FROM ROTOR 24
9.15 ROTOR INSPECTION 25
9.16 COLLECTOR RING REPLACEMENT 26

10 ALTERNATOR ASSEMBLY 27

10.1 ROTOR ASSEMBLY 27
10.2 DRIVE END SHIELD ASSEMBLY 28

All rights rest with Robert Bosch Corp, including patent rights. All rights of use of reproduction and publication rest with R. B. Corp.

10.3 COLLECTOR RING END SHIELD ASSEMBLY 29
10.4 RECTIFIER ASSEMBLY 30
10.5 STATOR ASSEMBLY 32
10.6 ROTOR AND DRIVE END SHIELD INSTALLATION 32
10.7 REGULATOR AND CAPACITOR INSTALLATION 33

11 FUNCTIONAL TESTING 35

11.1 GENERAL INFORMATION 35
11.1.1 Power Output Tests 35
11.1.2 Voltage Trace Evaluation 35
11.2 POWER OUTPUT TESTING 35
11.2.1 Test Bench Mounting 35
11.2.2 Power Output Test 36
11.3 VOLTAGE TRACE EVALUATION 37
11.3.1 Oscilloscope Hook-up 37
11.3.2 Normal Pattern 38
11.3.3 Open Exciter Diode 39
11.3.4 Open Positive Rectifier Diode 40
11.3.5 Open Negative Rectifier Diode 41
11.3.6 Shorted Exciter Diode 42
11.3.7 Shorted Positive Rectifier Diode 43
11.3.8 Shorted Negative Rectifier Diode 44
11.3.9 Open Phase of Stator 45

All rights rest with Robert Bosch Corp, including patent rights. All rights of use of reproduction and publication rest with R. B. Corp.

1 General

This manual contains repair and testing instructions with corresponding test specifications for the 0 120 689 5... series alternators.

T1 (RL) 28V 70/140A

Note: Alternator 0 120 689 543 was utilized in preparing these instructions.

All rights rest with Robert Bosch Corp, including patent rights. All rights of use of reproduction and publication rest with R. B. Corp.

2 Safety Precautions

2.1 Special Tool Usage

The use of incorrect or unsuitable tools and test equipment can lead to personal injury and may damage the alternator or its component parts. Only use tools that are specified in this instruction or meet the specification of the recommended tools.

2.2 Fire Risk

To provide radio interference suppression, the alternator is equipped with capacitors with a long storage time. Cleaning of alternator components may cause and electrical discharge when they are immersed in cleaning fluid. This discharge may cause combustible liquids to ignite.

2.3 Skin Protection

To avoid skin irritation when handling oils and greases, apply protective gloves or creams before starting work and wash off hands with soap and water when servicing has been completed.

2.4 Compressed Air

Only use compressed air regulated to a maximum of 4 Bar (60 PSI), and a clean cloth for cleaning of the armature, excitation windings and alternator plates.

2.5 Explosion Risk

Avoid exposure to fire, open flame and sparks. Thoroughly dry all cleaned parts as gases could form from the cleaning process and may cause an explosion.

All rights rest with Robert Bosch Corp, including patent rights. All rights of use of reproduction and publication rest with R. B. Corp.

3 Specifications

3.1 Electrical Test Specifications

Interference suppression capacitor 1.8 … 2.6 μF (microfarad)

Load current less than/equal to 10A 27.6 … 28.4 V (volts, regulated)

Damping Resistance 3.1 … 3.5 kΩ (kilohms)

Stator Resistance 0.036 Ω (-0/+10%) T1 (RL) 28V70/140A

Rotor Resistance 7.5 Ω (-0/+10%) T1 (RL) 28V70/140A

Power Output Test

Alternator	Speed (RPM)	Load Current - Inductive (A)	Test Duration (Min)
T1 (RL) 28V70/140 A	1500	76	30
	6000	136	10

Following completion of the output test, allow alternator to run at 7000 rpm for one minute.

Oscilloscope Pattern

This image represents a properly functioning alternator. The D.C. voltage produced has a small harmonic wave.

Small spikes may be superimposed on the oscilloscope screen if the voltage regulator is regulating. Applying a load to the alternator output terminals can turn off the regulator.

In order to be able to compare oscilloscope images, the oscilloscope so the pattern fits between two vertical 10x divisions.

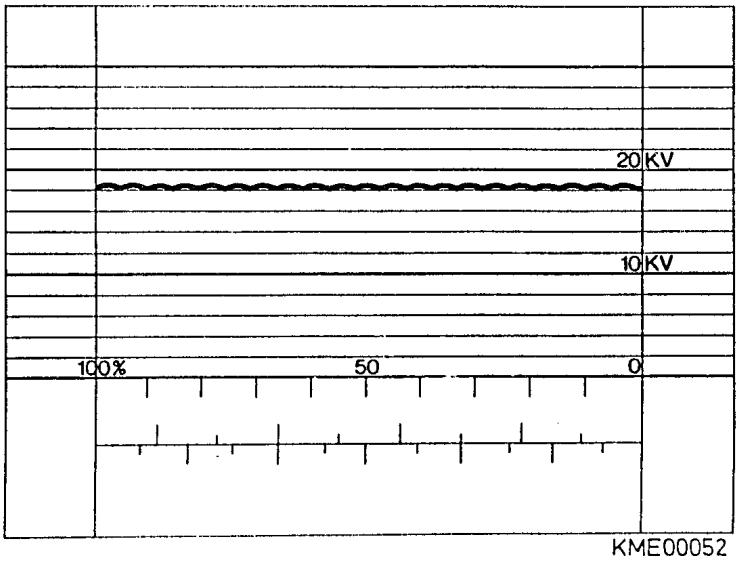

Figure 1 Normal Oscilloscope Pattern

All rights rest with Robert Bosch Corp, including patent rights. All rights of use of reproduction and publication rest with R. B. Corp.

3.2 Mechanical Test Specifications

Rotor to Stator Air Gap (Between any side of stator and rotor)		Greater than 0.3 mm (0.012 in)
Eccentricity (Rotor mounted at bearing points)	Outer Diameter Of Rotor	0.05 mm (0.002 in) maximum
	Outer Diameter Of Collector Rings	0.03 mm (0.0012 in) maximum
Collector ring diameter	New	32.5 mm (1.279 in)
	Used	31.5 mm (1.240 in) minimum
Carbon Brush Projection	New	16.0 mm (0.630 in) minimum
	Used	7.0 mm (0.275 in) minimum

3.3 Tightening Torques

Item Number	Description	Metric (Nm)	SAE
55	Air Intake Stud	3.0 … 3.4	26.5 … 30.1 in. lbs.
66	D+ Terminal	2.4 … 3.2	21.2 … 28.3 in. lbs.
29	B+ Terminal, B- Terminal	10.0 … 13.0	88.5 … 115 in. lbs.
37	W Terminal	4.1 … 5.5	36.3 … 48.7 in. lbs.
15	Voltage Regulator	1.3 … 1.7	11.5 … 15.0 in. lbs.
43	Capacitor Mounting Screw	4.3 … 5.7	38.0 … 50.4 in. lbs.
23	Rectifier Mounting Screw	1.3 … 1.7	11.5 … 15.0 in. lbs.
21	Drive End Shield to Collector Ring Shield	7.2 … 9.7	63.7 … 85.9 in. lbs.
5	Drive End Shield Bearing Cover Plate	4.1 … 5.5	36.3 … 48.7 in. lbs.
52	Pulley Retaining Nut	135 … 170	99.5 … 125.4 ft. lbs.

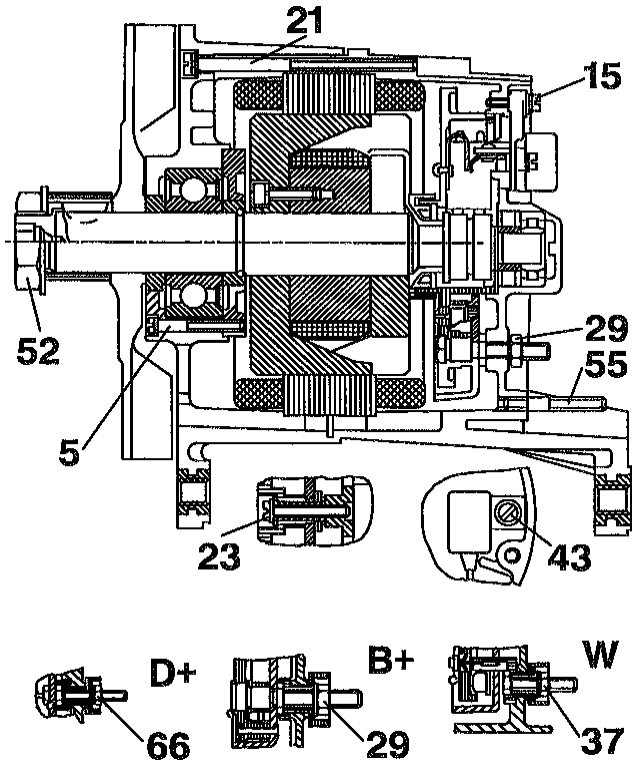

Figure 2 Fastener Torque Chart

All rights rest with Robert Bosch Corp, including patent rights. All rights of use of reproduction and publication rest with R. B. Corp.

4 Alternator Schematic

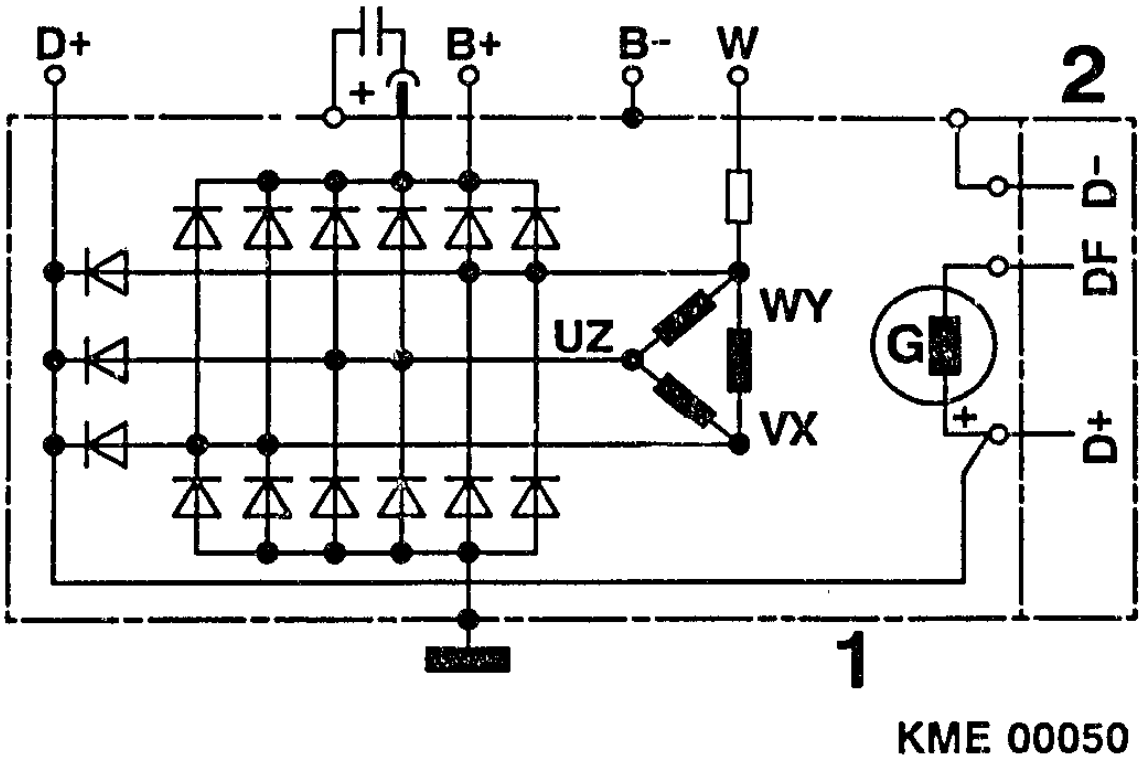

Figure 3 Alternator/Voltage Regulator Schematic

1 Alternator

B+ Battery Positive
B- Battery Negative
D+ Dynamo + (Warning Lamp Output)
W Tachometer Output

2 Voltage Regulator

D+ Dynamo + (Alternator Output)
DF Dynamo Field
D- Dynamo -

All rights rest with Robert Bosch Corp, including patent rights. All rights of use of reproduction and publication rest with R. B. Corp.

5 Alternator Coding

T 1 R 28V 70/ 140A

Rated current in amps measured at 6000 rpm

Rated current in amps measured at 1500 rpm

Alternator Voltage

Direction of Rotation

(→) Or R	Clockwise
(←) Or L	Counter Clockwise
(↔) Or RL	Multidirectional

1	Claw Pole Alternator
2	Salient Pole Alternator
3	Windingless Rotor Alternator

Outer Diameter of Alternator

G	100 … 109 mm
K	120 … 129 mm
N	130 … 139 mm
T	170 … 199 mm
U	more than 200 mm

All rights rest with Robert Bosch Corp, including patent rights. All rights of use of reproduction and publication rest with R. B. Corp.

6 Parts Cleaning

Caution: Fire Risk

To provide radio interference suppression, the alternator is equipped with capacitors with a long storage time. Cleaning of alternator components may cause and electrical discharge when they are immersed in cleaning fluid. This discharge may cause combustible liquids to ignite.

Alternator components with capacitors should only be cleaned with a non-combustible cleaner such as HAKU 1025/6.

Caution: Compressed Air

Only use compressed air regulated to a maximum of 4 Bar (60 PSI), and a clean cloth for cleaning of the armature, excitation windings and alternator plates.

Caution: Explosion Risk

Avoid exposure to fire, open flame and sparks. Thoroughly dry all cleaned parts as gases could form from the cleaning process and may cause an explosion.

All rights rest with Robert Bosch Corp, including patent rights. All rights of use of reproduction and publication rest with R. B. Corp.

7 Tools, Test Equipment Lubricants and Adhesives

7.1 Test Equipment

Description	Bosch Number	
Alternator Test Bench	Commercially Available	
Internal Short-Circuit Tester (Flash Tester)	KDAW 9978	0 986 619 110
Universal Multi-Meter	MMD 302	0 684 500 302
Alternator Tester	WPG 012.00	0 684 201 200

7.2 Special Tools

Description	Bosch Number	
Arbor Press	Commercially Available	
Soldering Iron	Commercially Available	
Universal Bearing Puller	Commercially Available	
V-Block *Note: 2 Required*	Commercially Available	
14mm Hex, 1/2" Drive Socket	Commercially Available	
Clamping Support	KDAW 9999	0 986 619 362
Die Spigot for Arbor Press (Used with KDLJ 6011, KDLJ 6012, KDLJ 6015)	KDLJ 6010	0 986 618 124
Bearing Remover	KDLJ 6009	0 986 618 121
Press Tool for Roller Bearing	KDLJ 6021	0 986 618 139
Bearing and Seal Installer	KDLJ 6011	0 986 618 125
Collector Ring Installer	KDLJ 6012	0 986 618 126
Drive End Shield Support Ring for Rotor Pressing	KDLJ 6013	0 986 618 127
Press Tool - Spacer Ring, Roller Bearing Inner Race and Collector Rings	KDLJ 6018	0 986 618 134
Alignment Pin - Drive End Shield and Collector Ring End Shield	KDLJ 6014	0 986 618 128
Removal Tool - Sliding Bushing	KDLJ 6015	0 986 618 129
Holding Tool - Sliding Bushing	KDLJ 6016	0 986 618 130
Inner Bearing Race Removal Tool	KDAW 9996	0 986 619 269
Puller Receiver Cup	KDAW 9995/0/1	0 986 619 214
Threaded Pin with Cone	KDAW 9995/14	0 986 619 250
Bearing Puller Spring Collet	KDAW 9995/6	0 986 619 233
Feeler Gauge 0.15 … 0.6 mm (.005 … .024 in) *Note: 4 required*	KDZV 7399	0 986 618 378
Dial Indicator	EFAW 7	1 687 233 011
Magnetic Indicator Stand	T-M 1	4 851 601 124

All rights rest with Robert Bosch Corp, including patent rights. All rights of use of reproduction and publication rest with R. B. Corp.

7.3 Lubricants and Adhesives

Description	Manufacturer Number	Bosch Number
Roller Bearing Grease	UNIREX N3	5 975 560 125
	Ft1 v 34	5 700 009 000
	VS 15164-Ft	5 975 560 000
Molycote Paste	Ft 70 v 1	5 700 040 000
Adhesive Dispersant	KK57v1	5 703 151 000
Silicon Paste	Ft2v4	5 700 083 005

7.3.1 Lubricant Quantities

Bottom of Roller Bearing	2 g (0.07 oz.)
Collector End Shield Radial Seal	2 g (0.07 oz.)
Roller Bearing	2…2.5 g (0.07…0.09 oz.)

All rights rest with Robert Bosch Corp, including patent rights. All rights of use of reproduction and publication rest with R. B. Corp.

8 Exploded View

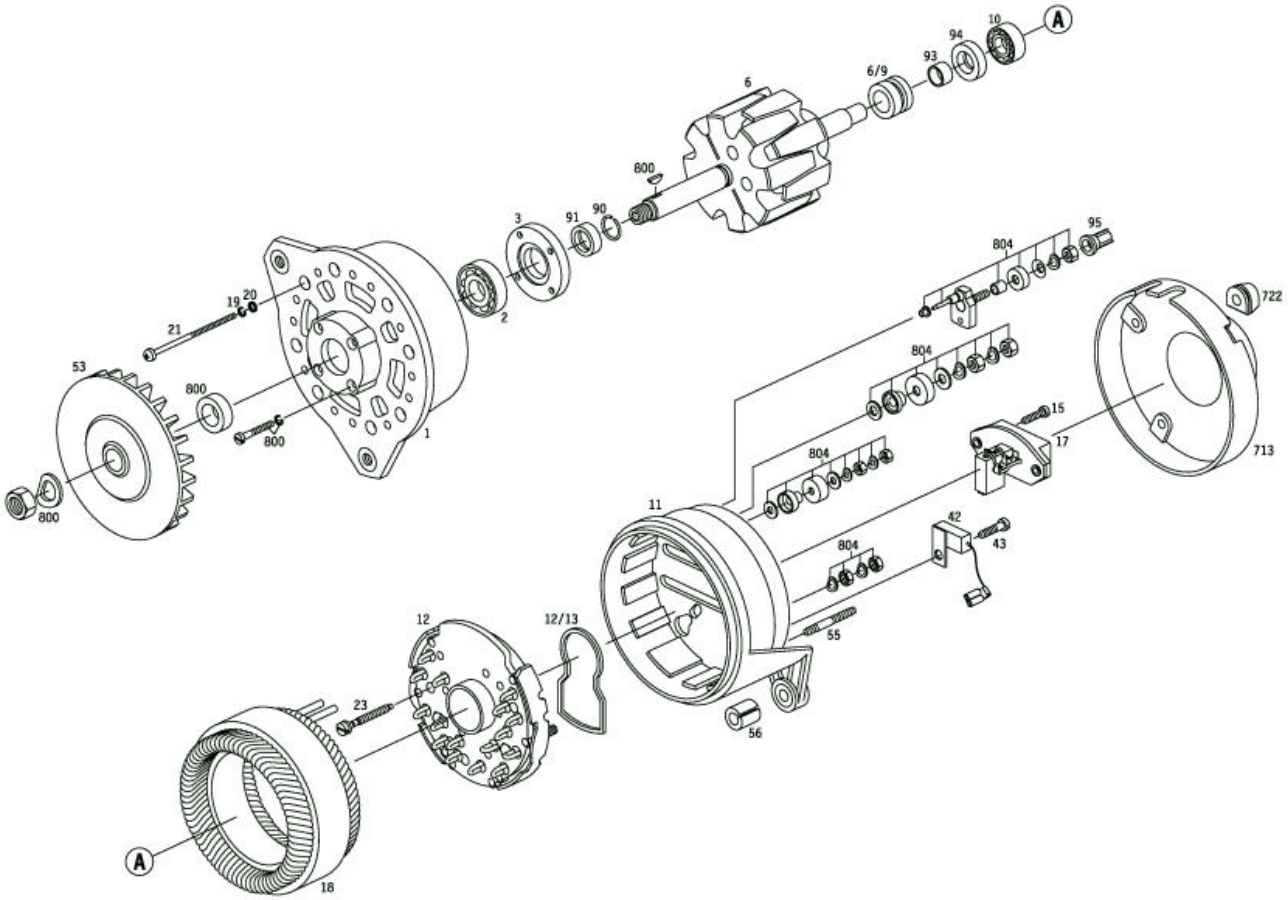

Figure 4 Alternator Exploded View

Item	Designation	Item	Designation
1	Drive End Shield	20	Plain Washer
2	Ball Bearing	21	Oval-Head Screw
3	Cover Plate	23	Washer & Screw Assembly
6	Rotor	42	Suppression Capacitor
6/9	Collector Ring	43	Oval-Head Screw
10	Roller Bearing	53	Fan
11	Collector-Ring End Shield	55	Stud
12	Rectifier	56	Expansion Bushing
12/13	Seal	90	Retainer
15	Washer & Screw Assembly	91	Support Ring
17	Transistor Regulator	93	Spacer Ring
17/3/8	Compression Spring	94	Radial Seal
17/3/801	Carbon-Brush Set	95	Protective Cap
17/10	Gasket	713	Air-Intake Cover
18	Stator	722	Grommet
19	Spring Lock Washer		

All rights rest with Robert Bosch Corp, including patent rights. All rights of use of reproduction and publication rest with R. B. Corp.

9 Alternator Disassembly and Testing

9.1 Rear Cover Removal

1. Clamp alternator in clamping fixture KDAW 9999 (Bosch Number 0 986 619 362).

2. Remove four nuts holding on the air intake cover. (Figure 5)

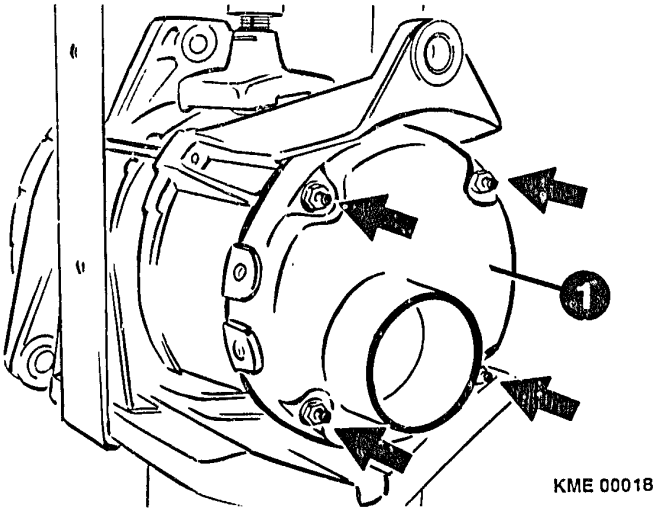

Figure 5 Air Intake Cover Removal (1)

Note: The voltage regulator must be removed before any further disassembly of the alternator takes place. The brushes of the regulator can break if the regulator is not removed before any other disassembly takes place.

9.2 Voltage Regulator Removal

1. Remove the three (3) screws that secure the regulator to the collector ring end shield. (Figure 6)

2. Carefully remove the voltage regulator from the collector ring end shield.

Note: The brushes of the regulator will break if the regulator is not removed before any other disassembly of the alternator takes place.

All rights rest with Robert Bosch Corp, including patent rights. All rights of use of reproduction and publication rest with R. B. Corp.

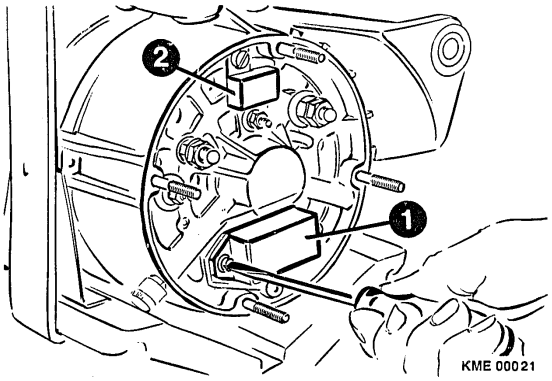

Figure 6 Voltage Regulator (1) and Suppression Capacitor (2)

9.2.1 Brush Replacement

1. The exposed length of the carbon brushes must be measured to determine if they require replacement. Measure the length of each brush. If the exposed brush length is less than 7 mm (0.276"), the brush must be replaced. (Figure 7)

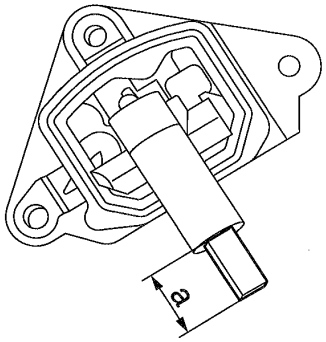

Figure 7 Brush Length Measurement

2. To replace the brushes, the brush lead must be unsoldered and the brush removed from the regulator.

3. Insert the new brush into the regulator and solder the brush lead to the regulator.

Note: Use only rosin-core solder to attached the brush lead.

4. Check the brushes for freedom of movement after they are soldered.

5. Measure the exposed length of the new brushes. The exposed length should be 16 mm (0.630")

9.3 Noise Suppression Capacitor Testing and Removal

1. Disconnect the suppression capacitor from terminal B+.

All rights rest with Robert Bosch Corp, including patent rights. All rights of use of reproduction and publication rest with R. B. Corp.

2. Connect Multimeter MMD 302 (Bosch Number 0 684 500 302) or equivalent to the lead of the suppression capacitor and the B- terminal of the alternator. (Figure 8)

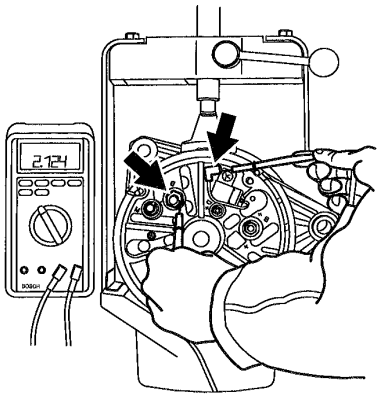

Figure 8 Testing of Suppression Capacitor

3. Measure the capacitance of the suppression capacitor. If the capacitance does not read between 1.8 and 2.6 μF (microfarad), the capacitor must be replaced.

4. Remove the screw that secures the suppression capacitor and remove capacitor.

Note: After removing the suppression capacitor from the alternator, the capacitor lead should be shorted to the capacitor-mounting strip to discharge the capacitor. Failure to do so may cause the capacitor to discharge while being cleaned.

9.4 Pulley and Fan Removal

1. Using a 14-mm hex socket to hold the rotor shaft. Loosen and remove pulley-retaining nut with a box wrench. (Figure 9)

Note: Do not use an air impact gun to remove the nut as the force of the impact may cause damage to the alternator bearings.

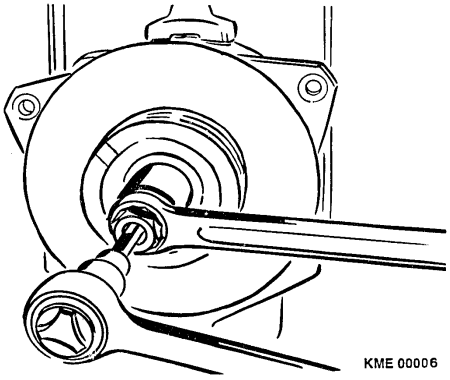

Figure 9 Pulley and Fan Removal

2. Remove the pulley and cooling fan from the alternator.

9.5 Separation of Drive Shield and Collector End Shield

Note: With a scribe, mark the relationship between the drive end shield and the collector ring end shield. This will assist in the realigning of the two shields upon reassembly.

1. Loosen and remove the four (4) outer Oval-head screws which hold the end shields together. (Figure 10)

All rights rest with Robert Bosch Corp, including patent rights. All rights of use of reproduction and publication rest with R. B. Corp.

2. Slide the drive end shield and rotor out of the collector end shield.

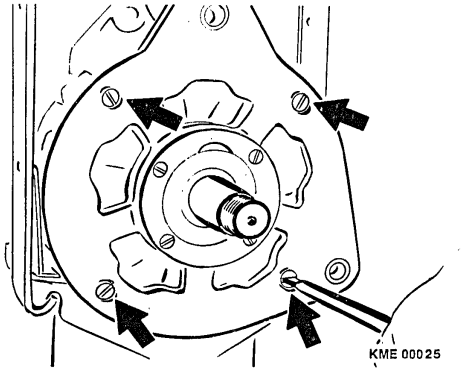

Figure 10 Drive End Shield Removal

9.6 Rectifier Assembly Testing

Note: The following testing of the rectifier is to be performed with the rectifier assembly installed and wired in to the stator.

1. With the rectifier assembly still installed in the collector end shield, testing of the rectifier is to be performed.

   a. Using tester WPG 012.00 (Bosch Number 0 684 201 200) (Figure 11)

   i) Connect the negative (black) lead of the tester to the collector end shield and the positive (red) lead to each of the stator connection solder joints.

   ii) Connect the positive (red) lead of the tester to the B+ Terminal and the negative (black) lead to each of the stator connection solder joints.

   iii) Connect the positive (red) lead of the tester to the D+ Terminal and the negative (black) lead to each of the stator connection solder joints.

The rectifier assembly is reusable if the tester remains in green zone. If the rectifier assembly fails any test, one or more of the diodes are defective and the whole assembly must be replaced.

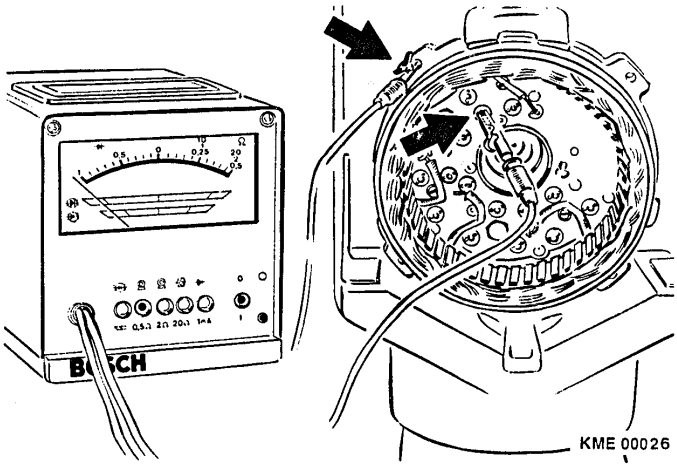

Figure 11 Testing of Rectifier Assembly

All rights rest with Robert Bosch Corp, including patent rights. All rights of use of reproduction and publication rest with R. B. Corp.

b. Using a Diode Tester

i) Connect the negative (black) lead of the tester to the collector end shield and the positive (red) lead to each of the stator connection solder joints. No current should pass through the rectifier assembly.

ii) Connect the positive (red) lead of the tester to the collector end shield and the negative (black) lead to each of the stator connection solder joints. Current should pass through the rectifier assembly.

iii) Connect the positive (red) lead of the tester to the B+ Terminal and the negative (black) lead to each of the stator connection solder joints. No current should pass through the rectifier assembly.

iv) Connect the negative (black) lead of the tester to the B+ Terminal and the positive (red) lead to each of the stator connection solder joints. Current should pass through the rectifier assembly.

v) Connect the positive (red) lead of the tester to the D+ Terminal and the negative (black) lead to each of the stator connection solder joints. No current should pass through the rectifier assembly.

vi) Connect the negative (black) lead of the tester to the D+ Terminal and the positive (red) lead to each of the stator connection solder joints. Current should pass through the rectifier assembly.

If the rectifier assembly fails any test, one or more of the diodes are defective and the whole assembly must be replaced.

9.7 Removal and Testing of Stator Assembly

1. With tester WPG 012.00 or Multimeter MMD 302 set to read 0 to 0.5 Ω, test the resistance of the stator while it is still attached to the rectifier assembly. Connect the test leads between the phase outputs of the stator. Repeat the test until all three phases of the stator has been tested. A good stator will read between 0.036 Ω and 0.040 Ω. (Figure 12)

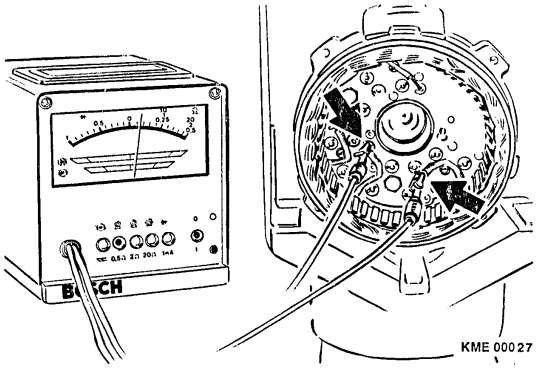

Figure 12 Stator Resistance Testing

2. Unsolder the stator phase connections from the rectifier assembly with a soldering gun or iron.

3. Bend open any bent-over lead connections with a screwdriver or pliers and pull the stator leads from the rectifier eyelets.

Note: The insulation tester applies a voltage of 80 VAC to the stator. Voltages of 80V can be fatal. When performing this test, observe care is used in handling the stator and any component or surface that is exposed to the stator. Use insulated gloves and do not touch the work surface until all tests are completed.

All rights rest with Robert Bosch Corp, including patent rights. All rights of use of reproduction and publication rest with R. B. Corp.

4. Using insulation tester KDAW 9983 (Bosch Number 0 986 619 110) or equivalent, apply 80 VAC to each of the stator phase leads with one probe while the other probe is in contact with the exterior of the stator. (Figure 13)

   No continuity should be present. Any continuity between the stator phase leads and the exterior of the stator indicates a breakdown of the stator insulation and a short to ground. If continuity is present, the stator must be replaced.

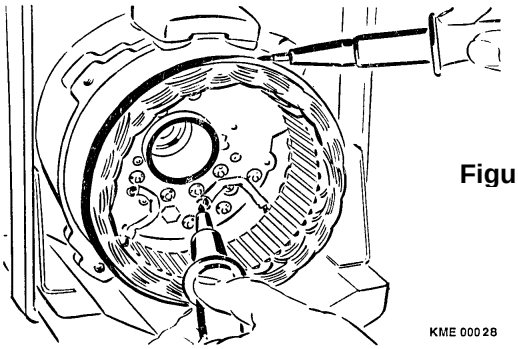

Figure 13 Stator Insulation Testing

9.8 Rectifier Assembly Removal

1. Loosen and remove the three screws that hold the rectifier to the collector end shield. (Figure 14)

2. Unsolder the W terminal from the rectifier assembly.

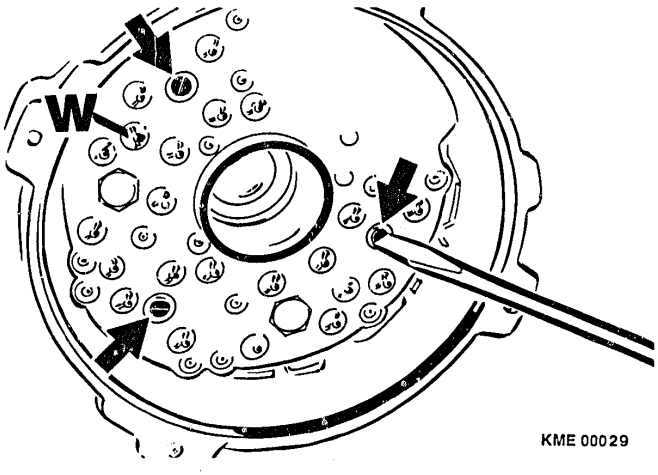

Figure 14 Rectifier Assembly Removal

3. Remove the nuts holding terminals B+, B- and D+ to the collector end shield.

   Note: Do not attempt to remove the studs from the rectifier assembly. Terminals B+, B- and D+ are permanently attached to the rectifier assembly. Terminal W is attached to the collector end shield. Do not loosen Terminal W.

4. Remove the rectifier assembly from the collector end shield.

All rights rest with Robert Bosch Corp, including patent rights. All rights of use of reproduction and publication rest with R. B. Corp.

9.9 Dampening Resistor Testing and Removal

1. The W Terminal incorporates a dampening resistor. Using a Multimeter MMD 302, connect one lead to the exterior portion of the W terminal and connect the other lead to the other side of the W Terminal. The Multimeter should read between 3.1 and 3.5 k˜ (kilohm). If the resistance is above or below this range, the W terminal is to be replaced as an assembly. (Figure 15)

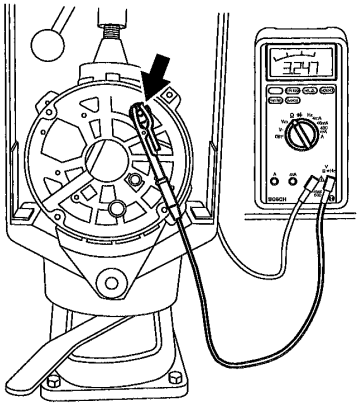

Figure 15 Testing of W Terminal Dampening Resistor

2. Loosen the nut retaining terminal W to the collector end shield.

3. Remove terminal W.

9.10 Removal of Collector End Shield Bearing and Seal

1. Insert extractor KDLJ 6009 (Bosch Number 0 986 618 121) into bearing.

2. Screw threaded rod KDAW 9995/14 (Bosch Number 0 986 618 214) into extractor KDLJ 6009.

3. Slide the receiver cup KDAW 9995/0/5 (Bosch Number 0 986 619 250) onto threaded rod.

4. Screw on the handle, rotate until the bearing, and seal come out of the collector end shield. (Figure 16)

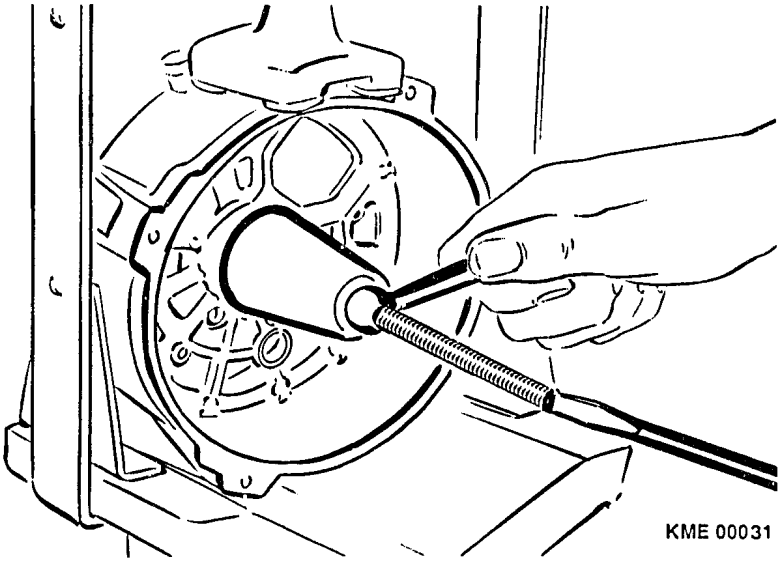

Figure 16 Bearing and Seal Removal

All rights rest with Robert Bosch Corp, including patent rights. All rights of use of reproduction and publication rest with R. B. Corp.

5. If the roller bearing is stuck in end shield, proceed as follows:

   a. Remove extractor KDLJ 6009 from the bearing.
   b. Destroy the bearing cage with a screwdriver or similar tool.
   c. Remove rollers from bearing.
   d. Insert spring collet KDAW 9995/6 (Bosch Number 0 986 619 233) into bearing outer race.
   e. Screw threaded rod KDAW 9995/14 into extractor KDAW 9995/6.
   f. Slide the receiver cup KDAW 9995/0/5 onto threaded rod.
   g. Screw on handle and rotate until the bearing race comes out of the collector end shield.

9.11 Removal of Sliding Bushing in Collector End Shield

1. Place collector end shield in an arbor press, support mounting/pivot boss on mandrel KDLJ 6016 (Bosch Number 0 986 618 130). (Figure 17)

2. Place bushing mandrel KDLJ 6015 (Bosch Number 0 986 618 219) on sliding bushing.

3. Press sliding bushing out of collector end shield into mandrel KDLJ 6016.

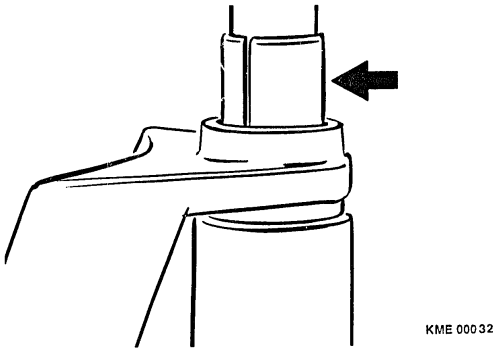

Figure 17 Sliding Bushing Removal

9.12 Removal of Rotor from Drive End Shield

1. Place drive end shield onto pressing ring KDLJ 6013 (Bosch Number 0 986 618 127).

2. Place pressing ring into an arbor press. (Figure 18)

All rights rest with Robert Bosch Corp, including patent rights. All rights of use of reproduction and publication rest with R. B. Corp.

3. Press out rotor.

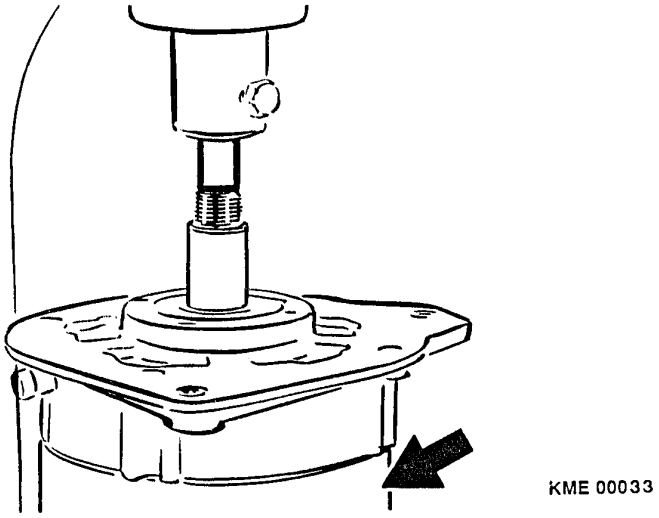

Figure 18 Pressing out Rotor

4. Remove spacer ring from rotor shaft.

Notes: Protect the threads of the rotor from damage prior to pressing. Always replace the drive end bearing if the rotor has been pressed out. Therefore, only remove the rotor if;

- *the rotor is to be replaced*
- *the excitation winding of the rotor is to be replaced*
- *the drive end bearing/spacer ring is to be serviced*
- *the rotor collector rings are to be replaced*

All rights rest with Robert Bosch Corp, including patent rights. All rights of use of reproduction and publication rest with R. B. Corp.

9.13 Removal of Bearing and Seal from Drive End Shield

1. Loosen and remove the four (4) screws holding the bearing cover plate. (Figure 19)
2. Remove the spacer ring (Refer to arrow in Figure 19).
3. Remove the bearing from the drive end shield.

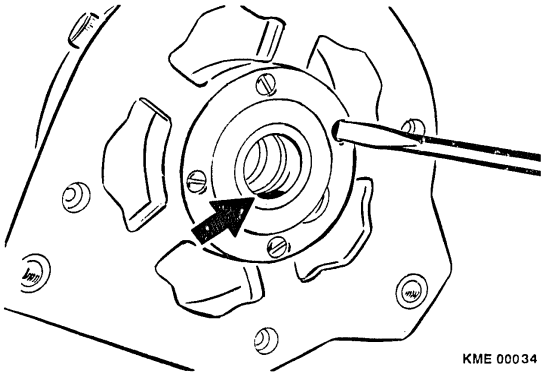

Figure 19 Drive End Bearing Removal

9.14 Removal of Collector Ring End Inner Bearing Race from Rotor

1. With a universal bearing puller, remove the inner race of the endshield bearing. (Figure 20)

Notes: Place jaws of the puller yoke behind the inner-bearing race and pull the bearing race only. Do not place the yoke behind the spacer ring. Pulling both the bearing and the spacer ring at the same time may damage the rotor. The inner bearing race must be replaced anytime the collector end shield bearing is replaced.

2. Reposition the puller and remove the spacer ring from the rotor shaft.

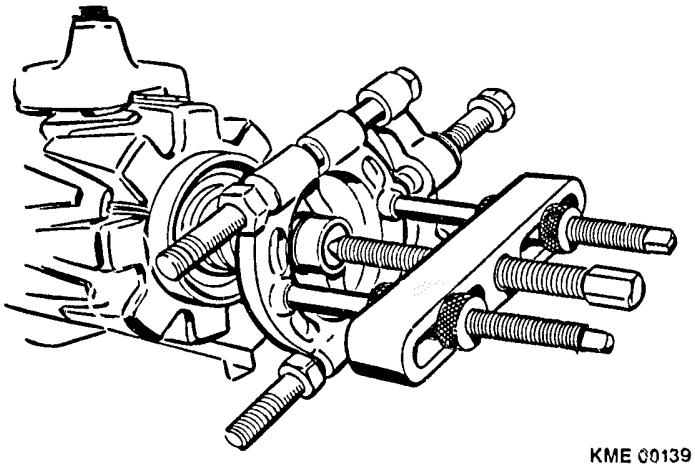

Figure 20 Inner Bearing Race Removal

All rights rest with Robert Bosch Corp, including patent rights. All rights of use of reproduction and publication rest with R. B. Corp.

9.15 Rotor Inspection

1. Using electric tester ETE 014.00 or Multimeter MMD 302, measure the resistance between the two collector rings of the rotor. The resistance measured should be between 7.5 and 8.3 ˜. (Figure 21)

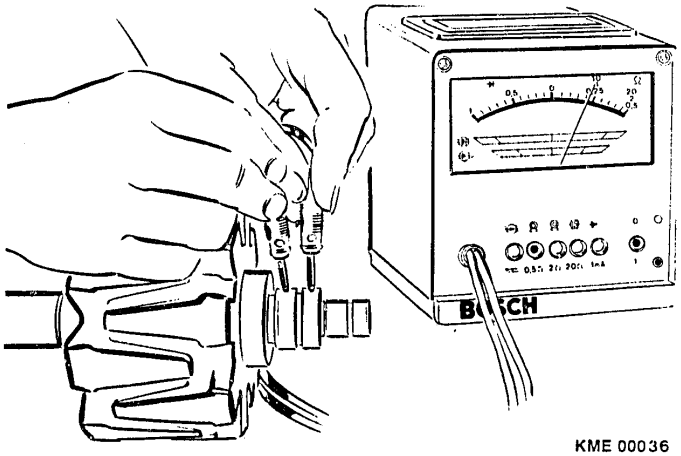

Figure 21 Rotor Resistance Testing

2. Using insulation tester KDAW 9983 or equivalent, apply 80 VAC to the rotor claw poles and each of the collector rings. If the insulation tester lights, there is a short to ground within the rotor. (Figure 22)

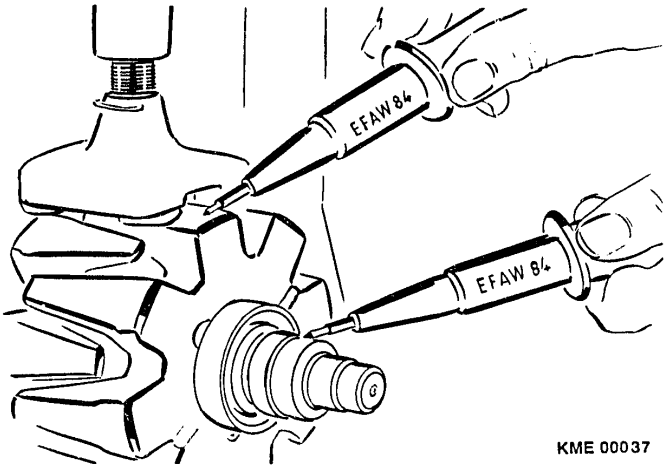

Figure 22 Rotor Insulation Testing

Note: The insulation tester applies a voltage of 80 VAC to the rotor. Voltages of 80V can be fatal. When performing this test, observe care is used in handling the rotor and any component or surface that is exposed to the rotor. Use insulated gloves and do not touch the work surface until all tests are completed.

3. Mount the rotor in a pair of V-Blocks at the rotor bearing points.

All rights rest with Robert Bosch Corp, including patent rights. All rights of use of reproduction and publication rest with R. B. Corp.

4. Position dial indicator (Magnetic Base T-M 1 (Bosch Number 4 851 601 124) and Dial Indicator EFAW 7 (Bosch Number 1 687 233 011)) to measure the concentricity of the rotor at:: (Figure 23)

   a. Outer diameter of rotor, maximum run-out 0.05 mm (0.002 in). If the run-out of the rotor exceeds the maximum, the rotor must be replaced.

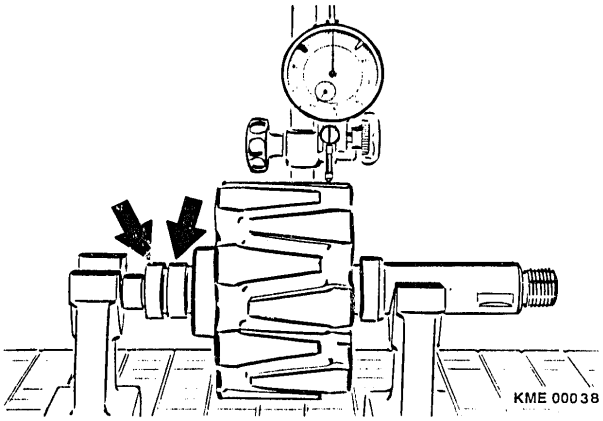

Figure 23 Rotor Concentricity Measurement

   b. Each collector ring, maximum run-out 0.03 mm (0.0012 in). If the run-out exceeds the maximum, the collector rings can be machined down to a minimum of 31.5 mm (1.240 in) diameter. If the required machining causes the collector ring diameter to drop below the minimum dimension, the collector ring(s) must be replaced.

9.16 Collector Ring Replacement

1. Before the collector rings can be removed, the spacer ring from the end of the rotor must be removed. Refer to Section 9.14 *"Removal of Inner Bearing Race from Rotor."*

2. Unsolder the rotor leads from each collector ring.

3. With a universal bearing puller, remove each collector ring one at a time from the rotor. (Figure 24)

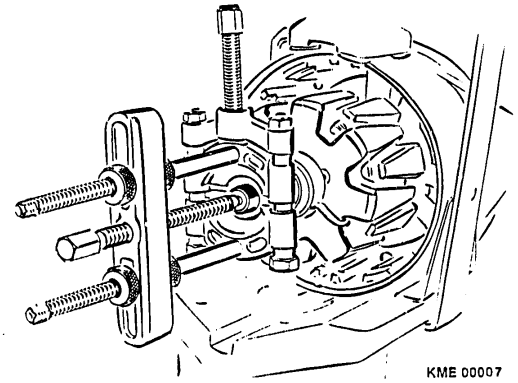

Figure 24 Collector Ring Removal

All rights rest with Robert Bosch Corp, including patent rights. All rights of use of reproduction and publication rest with R. B. Corp.

10 Alternator Assembly

10.1 Rotor Assembly

1. Position rotor in arbor press with the drive end pointing down.

2. Press the lead for the rotor winding into the slot of the rotor.

3. Slide the collector rings onto the rotor shaft as far as possible by hand. Make sure the lead for the rotor windings does not become damaged while sliding the collector rings over the lead.

4. Lining up the slot in tool KDLJ 6012 (Bosch Number 0 986 618 126) with the rotor lead, press the collector rings onto the rotor as far as possible. (Figure 25)

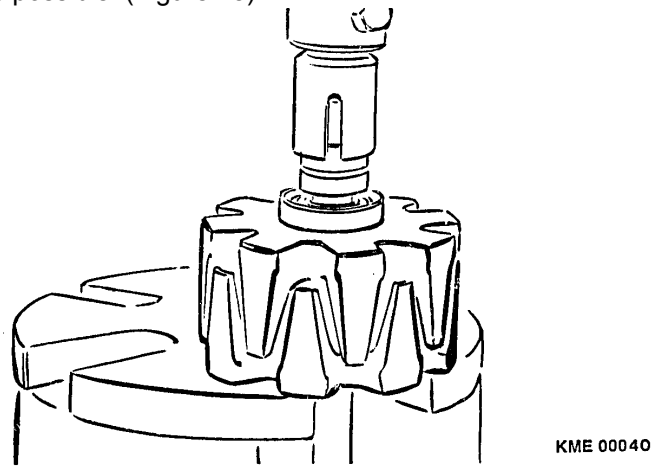

Figure 25 Pressing on Collector Rings

5. Solder each of the rotor winding leads to one of the collector rings with rosin core solder.

6. After soldering, touch up surface of collector ring to remove any excess solder from the brush contact surface.

7. Press on collector end shield bearing spacer ring with tool KDLJ 6018 (Bosch Number 0 986 618 134) until it contacts the stop on the rotor and no air gap is present. (Figure 26)

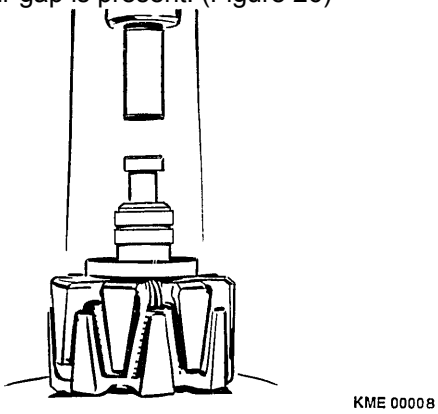

Figure 26 Spacer Ring Installation

All rights rest with Robert Bosch Corp, including patent rights. All rights of use of reproduction and publication rest with R. B. Corp.

Note: Do not allow the spacer ring to twist while pressing onto the rotor.

8. Place the inner bearing race of the collector end shield bearing onto the rotor shaft.

9. Press the bearing onto the rotor shaft with tool KDLJ 6018. (Figure 26)

10.2 Drive End Shield Assembly

1. Insert sealed ball bearing into the drive end shield.

2. Align the holes of the bearing cover plate with the holes in the drive end shield.

3. Start the four screws which hold the bearing cover plate and tighten to 4.1 … 5.5 Nm (36.3 … 48.7 in. lbs.) (Figure 27)

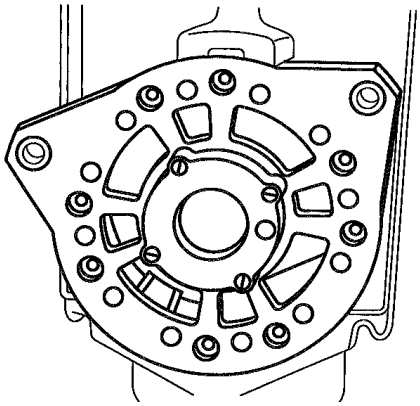

Figure 27 Drive End Bearing Retaining Screws

4. Insert bearing/fan spacer ring into the drive end shield from the fan side of the shield.

5. Place drive end shield on to an arbor press with the bearing/fan spacer ring pointed down. (Figure 28)

6. Slide support ring onto the drive end of the rotor. Make sure the under cut side of the ring faces the retaining ring on the rotor.

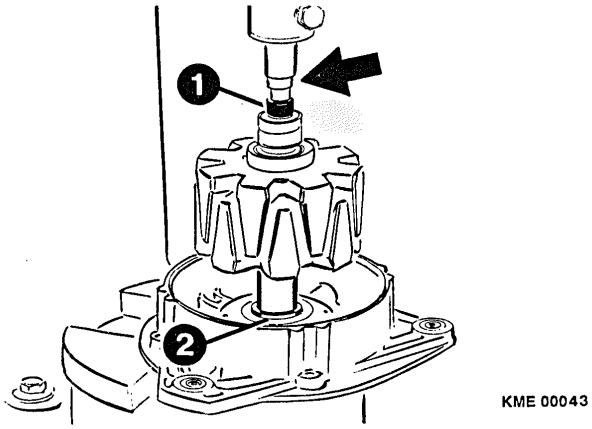

Figure 28 Installing Rotor into Drive End Shield
(1) Tool KDLJ 6018 (2) Support Ring

All rights rest with Robert Bosch Corp, including patent rights. All rights of use of reproduction and publication rest with R. B. Corp.

7. Place rotor into the drive end bearing.

8. Place tool KDLJ 6018 onto the end of the rotor and press the rotor into the drive end bearing until the bearing seats against the support ring.

10.3 Collector Ring End Shield Assembly

1. Pack the collector end roller bearing with 2 to 2.5 g (0.07 to 0.09 oz.) of UNIREX N3 grease.

2. Place the end shield on an arbor press.

3. Place tool KDLJ 6011 (Bosch Number 0 986 618 125) into bearing and press bearing into collector end shield. (Figure 29)

4. Pack the bottom of the collector end housing bearing bore with an additional 2 g (0.07 oz.) of UNIREX N3 grease.

5. Coat the sealing lip of the radial lip seal and pack the seal with 2 g (0.07 oz.) of UNIREX N3 grease.

Notes: Do not assemble the alternator with a dry radial seal as this will lead to seal failure and contamination of the brushes and collector rings.

Make sure there is no excess grease on the exterior of the seal before installation in the collector end shield. Excess grease on the exterior of the seal will cause contamination of the collector rings and brushes.

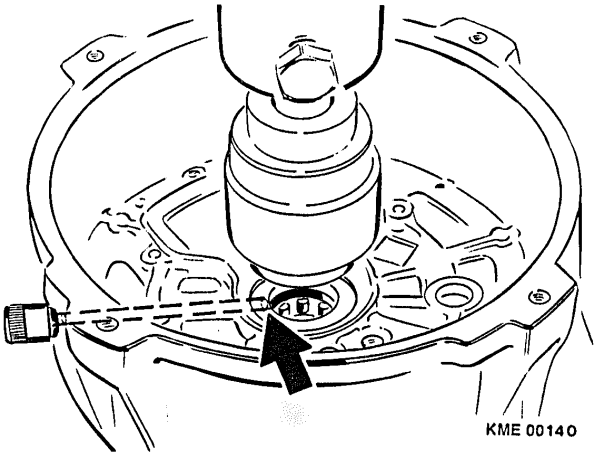

Figure 29 Installation of Bearing and Seal

6. Place seal onto tool KDLJ 6011 and press the seal into the collector end shield. (Figure 29)

7. Place collector end shield in an arbor press, support mounting/pivot boss on tool KDLJ 6016. (Figure 30)

8. Coat the inside of the collector end shield bore with Molycote.

9. Place sliding bushing into place on collector end shield.

All rights rest with Robert Bosch Corp, including patent rights. All rights of use of reproduction and publication rest with R. B. Corp.

10. With tool KDLJ 6015, press sliding bushing into end shield until the bushing is flush with the inner surface of the mounting/pivot boss. (Figure 30)

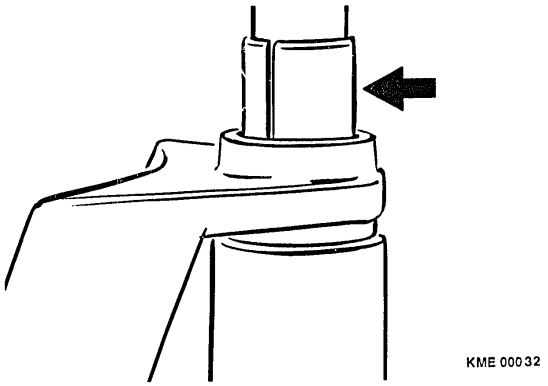

Figure 30 Sliding Bushing Installation

11. Insert terminal W into collector end shield in location marked W. Make sure the locating lug of the terminal assembly indexes the end shield correctly.

12. Place insulator and flat washer onto terminal W.

13. Install nut and torque to 4.1 to 5.5 Nm (36.3 to 48.7 in. lbs.)

14. Install protective cap onto terminal W. (Figure 31)

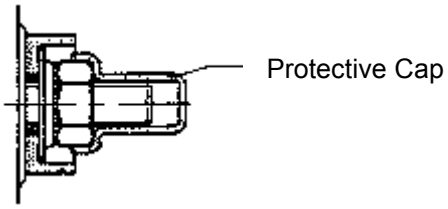

Figure 31 Terminal W Insulator, Washer, Nut and Cap

10.4 Rectifier Assembly

1. Place flat washer and insulator (a) onto terminal B+ and D+ studs of the rectifier assembly. (Figure 32)

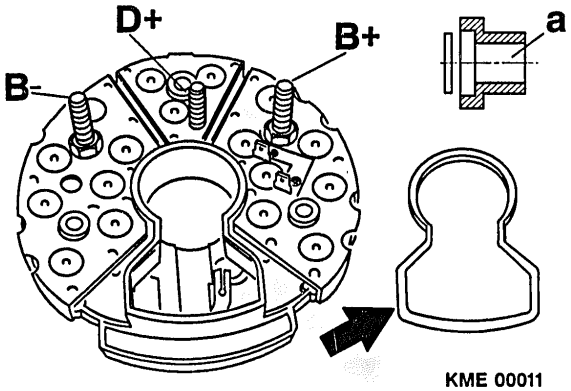

Figure 32 Rectifier Insulators and Seal

All rights rest with Robert Bosch Corp, including patent rights. All rights of use of reproduction and publication rest with R. B. Corp.

2. Coat the keyhole shaped surface of the rectifier with adhesive. (Figure 32)

3. Place the rectifier seal ring onto the keyhole shaped surface of the rectifier. Make sure the seal conforms to the shape of the keyhole.

4. Once the adhesive has cured, place the rectifier into the collector end shield. Make sure the solder lug of the W Terminal passes into the correct position of the rectifier assembly.

5. Install the insulating washer, flat washer and nut to terminal studs B+ and D+. (Figure 33)

6. Install flat washer and nut onto terminal stud B-. (Figure 33)

7. Check that the soldering lug of terminal W is still in the proper location of the rectifier assembly.

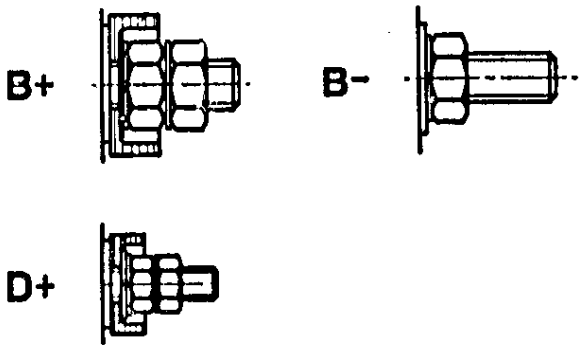

Figure 33 Terminal B+, B- and D+ Assembly

8. Torque terminal stud nuts B+, D+ and B- to:
   a. Terminal B+ and B-..... 10 to 13 Nm (88.5 to 115 in. lbs.)
   b. Terminal D+..... 2.4 to 3.2 Nm (21.2 to 28.3 in. lbs.)

9. Install the flat washer and second nut to terminal studs B+, D+ and B- and torque to:
   a. Terminal B+ and B-..... 10 to 13 Nm (88.5 to 115 in. lbs.)
   b. Terminal D+..... 2.4 to 3.2 Nm (21.2 to 28.3 in. lbs.)

10. Install the three (3) rectifier mounting screws and torque to 1.3 to 1.7 Nm (11.5 to 15 in. lbs.).

11. Solder the soldering lug of terminal W to the solder pad of the rectifier assembly with rosin core solder. (Figure 34)

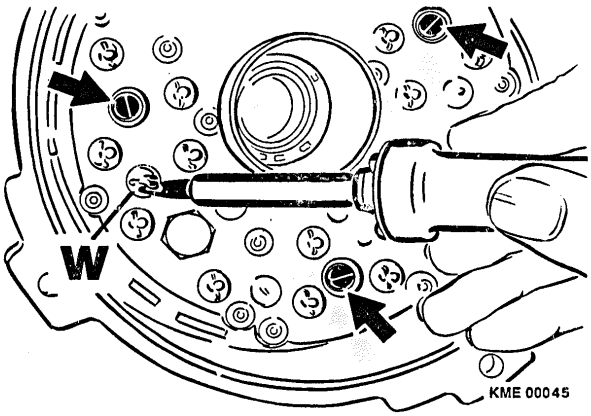

Figure 34 Rectifier Mounting and Soldering of Terminal W

All rights rest with Robert Bosch Corp, including patent rights. All rights of use of reproduction and publication rest with R. B. Corp.

10.5 Stator Assembly

1. Position the stator on the collector end shield. The side of the stator with the winding leads should be closest to the collector end shield.
2. Line up the scribed mark of the stator with the scribed mark of the collector end shield. If either the stator or collector end shield was replaced, a new mark should be scribe across the new part using the replaced component as a reference.

3. Place each of the stator leads into a corresponding soldering lug of the rectifier assembly. After the lead is through the soldering lug, bend the lead so it forms a U around the lug. (Figure 35)

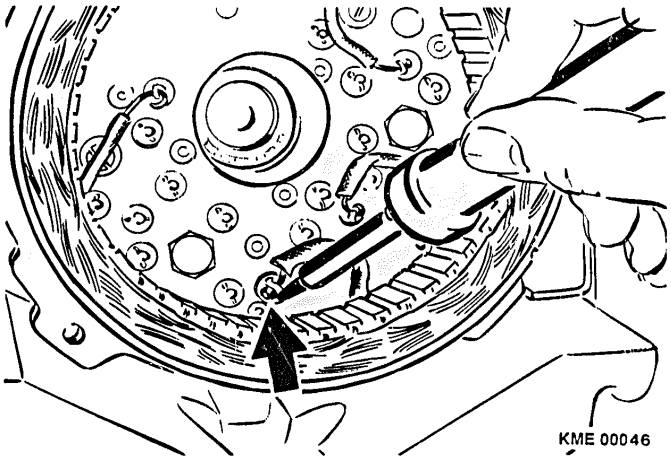

Figure 35 Soldering of Stator Leads

4. Solder each of the stator leads to the rectifier assembly with rosin core solder.

10.6 Rotor and Drive End Shield Installation

1. Place collector end shield and stator assembly on a suitable surface so the rotor and drive end shield assembly can be lowered into place

2. Guide the rotor and drive end shield assembly until the inner bearing race of the collector end bearing enters the roller bearing. Once the inner race enters the bearing, lower the assemblies completely into the collector end shield.

3. Insert guide pin KDLJ 6014 (Bosch Number 0 986 618 128) through the sliding bushing of the collector end shield and the bushing of the drive end shield. (Figure 36)

4. Start the four (4) drive end shield to collector end shield screws.

5. Place the alternator assembly into clamping fixture KDAW 9999.

6. Insert four (4) 0.3 mm (0.012 in) feeler gauges between the stator and the rotor. The feeler gauges should be place in four diametrically opposed positions. (Figure 36)

7. Torque the drive end shield to collector end shield screws to 7.2 to 9.7 NM (21.2 to 28.3 in. lbs.).

All rights rest with Robert Bosch Corp, including patent rights. All rights of use of reproduction and publication rest with R. B. Corp.

8. Remove the four feeler gauges from between the stator and rotor.

9. Turn the rotor by hand. The rotor should rotate freely by hand. If the rotor does not turn freely, loosen the drive end shield to collector end shield screws and repeat steps 6, 7, 8 and 9.

10. While rotating the rotor by hand, listen for contact between the rotor and the stator or stator leads. If any contact sound is heard, the rotor and drive end shield assembly must be removed, the cause determined and repaired before continuing. Once the problem has been corrected, start at step 1 of this section.

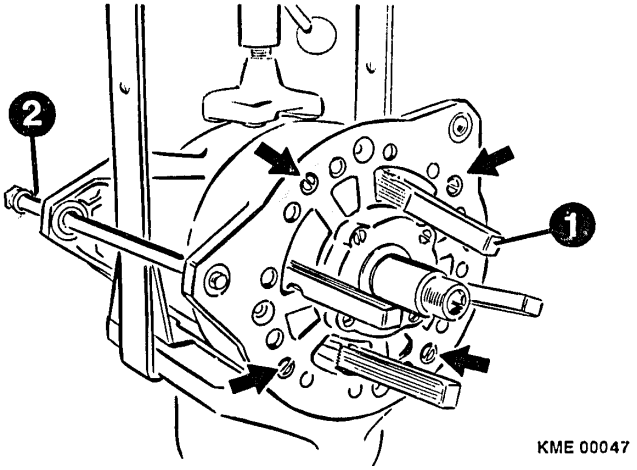

Figure 36 Drive End Shield, Stator and Collector End Shield Assembly
(1) Feeler Gauge (2) Tool KDLJ 6015

11. Remove the alignment pin KDLJ 6014 from the alternator.

10.7 Regulator and Capacitor Installation

1. Depress the carbon brush closest to the regulator into the regulator/brush holder.

2. Insert a straightened paper clip (1 to 1.3 mm dia. x 40mm) into the hole of the regulator until the pin holds the brush in place.

3. Pivot the regulator into the opening of the alternator. Once the brush holder is inside the alternator cavity, slowly remove the paper clip and allow the brushes to extend from the holder. (Figure 37)

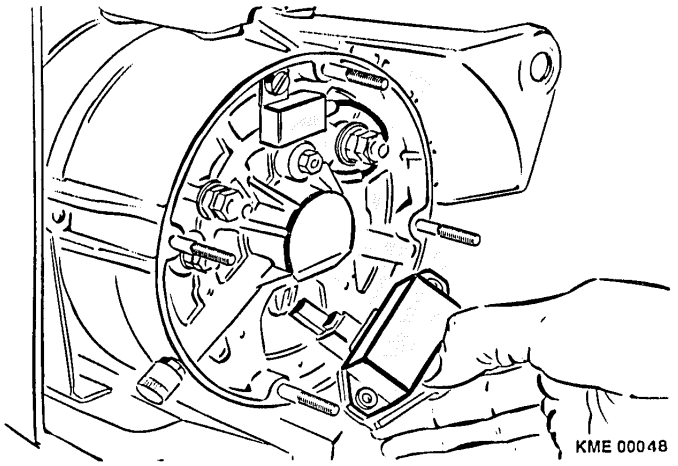

Figure 37 Regulator Installation

All rights rest with Robert Bosch Corp, including patent rights. All rights of use of reproduction and publication rest with R. B. Corp.

4. Align the mounting holes of the regulator to holes of the alternator housing.

Note: When aligning the mounting holes, pay attention to the force used as damage can occur to the brushes.

5. Install the three (3) regulator mounting screws and torque to 1.3 to 1.7 Nm (11.5 to 15 in. lbs.). (Figure 38)

6. Install capacitor on collector end shield and tighten mounting screw to 4.3 to 5.7 Nm (38.0 to 50.4 in. lbs.). (Figure 38)

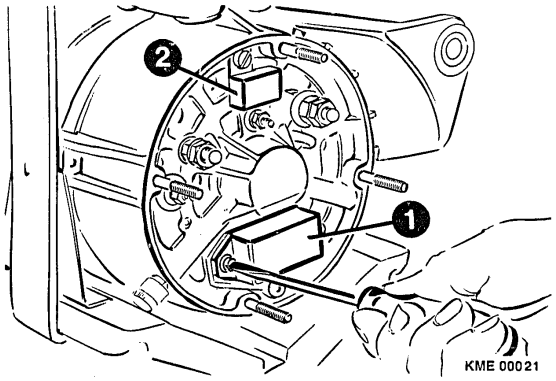

Figure 38 Capacitor Installation
(1) Voltage Regulator (2)

7. Connect lead of capacitor to spade terminal +.

8. Install air intake cover onto alternator. Do not torque cover until it has been installed on the vehicle/engine.

All rights rest with Robert Bosch Corp, including patent rights. All rights of use of reproduction and publication rest with R. B. Corp.

11 Functional Testing

11.1 General Information

The functional testing of the alternator is broken into two categories, Power Output and Voltage Trace Evaluation. All of the tests describe here are performed with the voltage regulator installed on the alternator.

11.1.1 Power Output Tests

The power output tests verify the capability of the alternator to produce rated current and voltage at different speeds. This test requires a test bench of sufficient horsepower to turn a fully loaded alternator at a given speed. Additionally, the test bench must have the ability to inductively load the alternator to its rated amperage for an extended amount of time.

The power output test is to be performed anytime the alternator is suspected of being defective or if the alternator has been disassembled.

11.1.1.1 Test Bench Requirements

To perform the power output test of this series alternator, a test bench must meet the following minimum criteria.

Characteristic	Minimum Specification
Variable Speed Control	0 - 12,000 RPM
Drive Motor	4 kW (5.4 hp)
Load Bank Capability	170 A @ 28 V for 10 minutes 80 A @ 28 V for 30 minutes
Output Voltage Capability	28 V

11.1.2 Voltage Trace Evaluation

The voltage trace evaluation compares the output of the alternator as viewed on an oscilloscope to know oscilloscope patterns. The voltage trace evaluation is an important tool for diagnostics of an alternator that cannot meet the criteria of the power output test. Proper interpretation of the waveforms obtained can lead a technician to the defective component of a failed alternator. The voltage trace evaluation is done while the alternator is still mounted to the alternator test bench. Most any oscilloscope, which is capable of accepting the alternator voltage output, is useable for this evaluation.

11.2 Power Output Testing

11.2.1 Test Bench Mounting

1. Mount the alternator to the test bench per the operating instructions of the test bench manufacturer.

2. Connect the drive system of the test bench to the alternator as per the instructions of the test bench manufacturer.

Note: Only perform the power output tests with the fan pulley installed on the alternator. Failure to test the alternator with the correct fan installed can cause the alternator to overheat and damage the internal components of the alternator.

All rights rest with Robert Bosch Corp, including patent rights. All rights of use of reproduction and publication rest with R. B. Corp.

3. Connect the test leads of the test bench to the alternator as follows:

   a. Connect the +24 v lead of the test bench to the B+ terminal of the alternator.
   b. Connect the -24 v lead of the test bench to the B- terminal of the alternator.
   c. Connect the charging indicator lamp of the test bench to the D+ terminal of the alternator.

Note: Refer to test bench manufacturers operating instructions for correct terminology of test leads
Refer to figure 39 for a schematic outline of alternator to test bench connections. Compare this schematic to the hook-up schematic of your test bench.

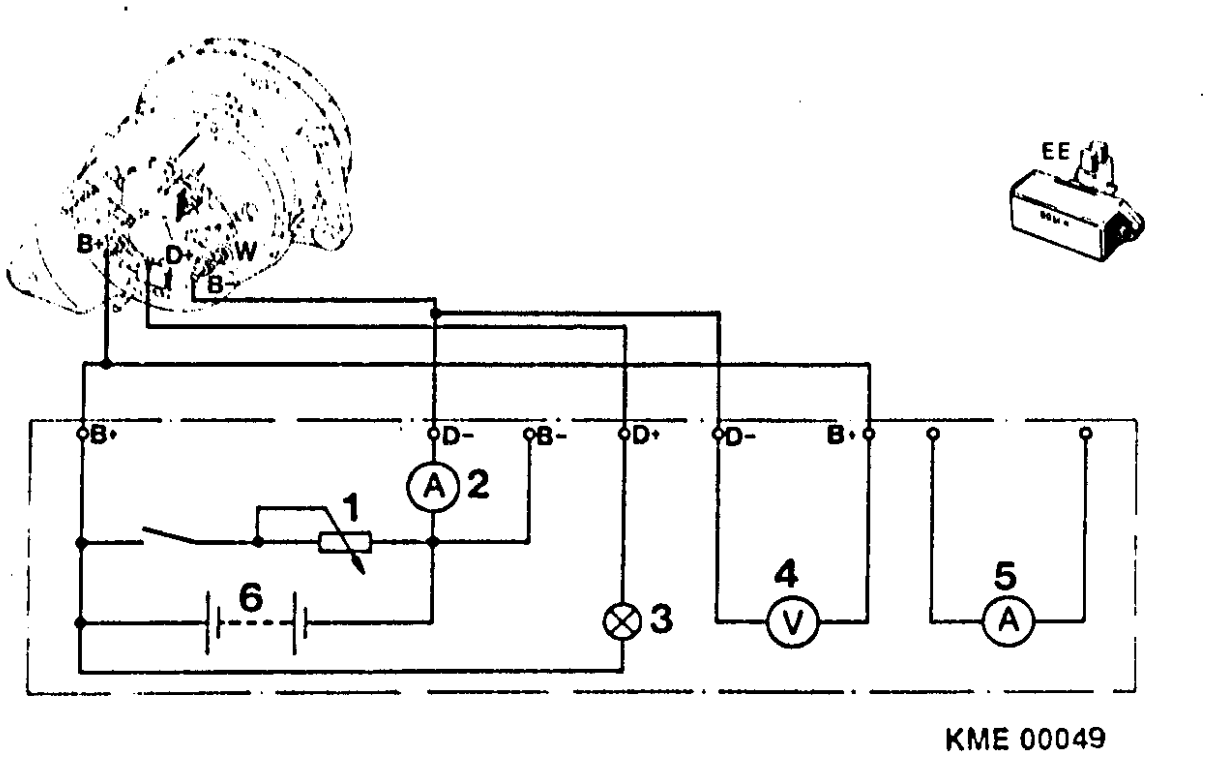

Figure 39 Alternator Test Bench Hook-up Schematic

(1) Variable Load Resistor
(2) Ammeter (Alternator Output)
(3) Charging Indicator Lamp
(4) Voltmeter (Regulated Voltage)
(5) Ammeter
(6) Test Bench Battery

4. Make sure the test bench is set for the correct voltage and rotation before starting tests.

11.2.2 Power Output Test

1. Start test bench and increase speed to 1500 rpm, alternator speed.

2. Increase inductive load on the alternator until 76A output is achieved. As load is increased, monitor test bench speed and correct if speed drops while applying load.

All rights rest with Robert Bosch Corp, including patent rights. All rights of use of reproduction and publication rest with R. B. Corp.

3. Hold test bench at this speed and load for 30 minutes. Monitor alternator output and speed during the test period.

4. Remove load and operate the alternator at 7000 rpm for one minute to allow the alternator to cool.

5. Refer to the test bench operating instructions and allow the load bank to cool the required amount of time before proceeding to the next test.

6. After the load bank has cooled, increase the test bench until the alternator has reached 6000 rpm.

7. Increase inductive load on the alternator until 136A alternator output is achieved. As load is increased, monitor test bench speed and correct if speed drops while applying load.

8. Hold test bench at this speed and load for 10 minutes. Monitor alternator output and speed during the test period.

9. Remove load and operate the alternator at 7000 rpm for one minute to allow the alternator to cool.

10. Refer to the test bench operating instructions and allow the load bank to cool the required amount of time before proceeding to the next test.

11. Apply a minimum load of 10A to the alternator.

12. Measure the regulated voltage of the alternator. The correct regulated voltage is between 27.6 and 28.4 volts.

13. If the alternator passes the three output tests, no further testing is required. If the alternator failed any of the three tests, proceed with the voltage trace evaluation.

11.3 Voltage Trace Evaluation

The voltage trace evaluation is a comparison of the voltage output of the alternator to know patterns. These know patterns will help identify different failed components.

11.3.1 Oscilloscope Hook-up

1. Following the manufacturer's instructions for your oscilloscope, connect the scope to the B+ and B- terminals of the alternator.

2. Adjust the oscilloscope to read 28 volts.

3. Turn on test bench and operate the alternator with a 10A load.

4. Compare oscilloscope display to the following test patterns.

All rights rest with Robert Bosch Corp, including patent rights. All rights of use of reproduction and publication rest with R. B. Corp.

11.3.2 Normal Pattern

This image represents a properly functioning alternator. The D.C. voltage produced has a small harmonic wave.

Small spikes may be superimposed on the oscilloscope screen if the voltage regulator is regulating. Applying a load to the alternator output terminals can turn off the regulator.

In order to be able to compare oscilloscope images, the oscilloscope so the pattern fits between two vertical 10x divisions.

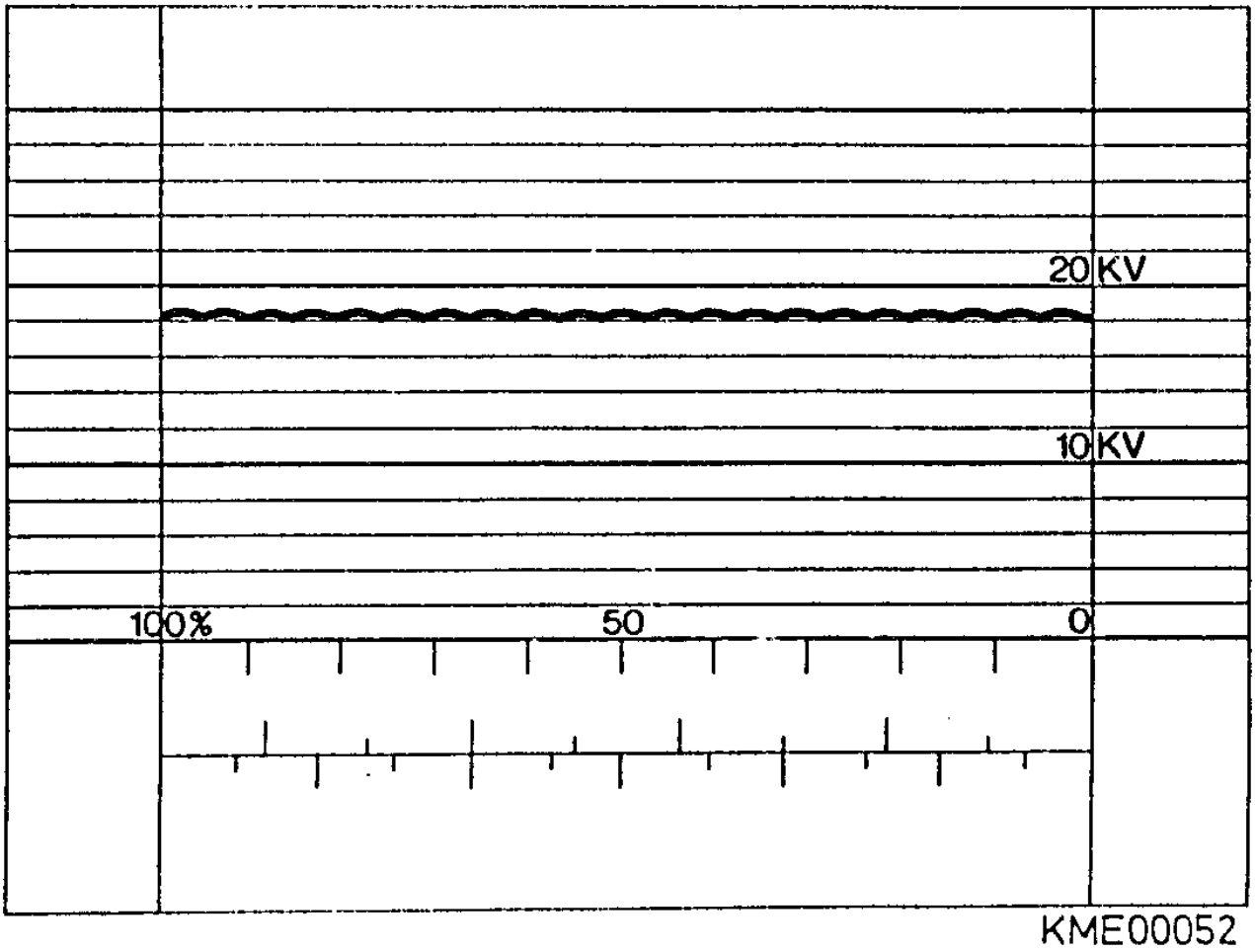

Figure 40 Normal Pattern

All rights rest with Robert Bosch Corp, including patent rights. All rights of use of reproduction and publication rest with R. B. Corp.

11.3.3 Open Exciter Diode

This pattern displays a characteristic dip in the normally smooth wave characteristic of a defective exciter diode. This would require disassembly of the alternator and replacement of the rectifier assembly.

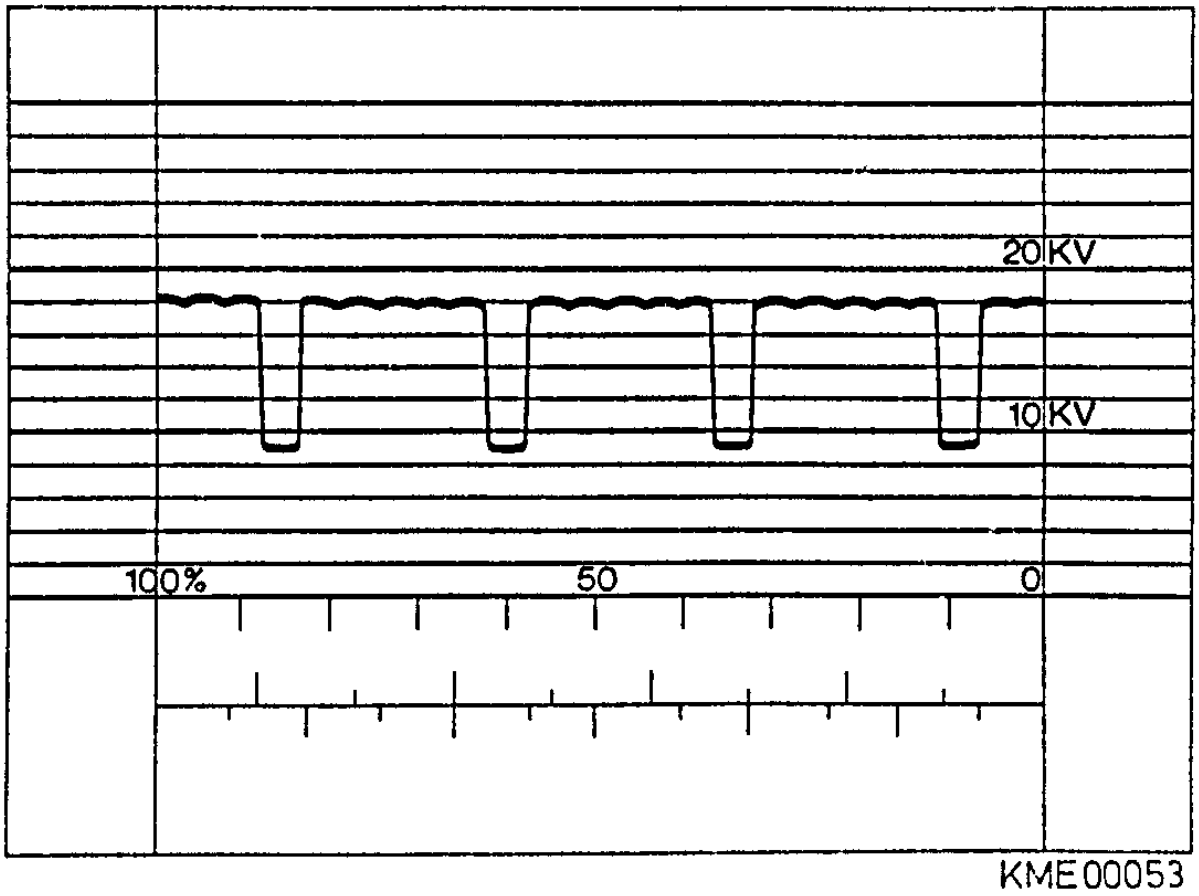

Figure 41 Open Exciter Diode

All rights rest with Robert Bosch Corp, including patent rights. All rights of use of reproduction and publication rest with R. B. Corp.

11.3.4 Open Positive Rectifier Diode

This pattern identifies an open positive rectifier diode. In the case of multiple diodes in parallel, all of the diodes on the circuit must be open. An example is:

There are two diodes in the rectifier for each phase of the stator. Both diodes must be open for this pattern to appear.

With this type of defect, the rectifier assembly must be replaced.

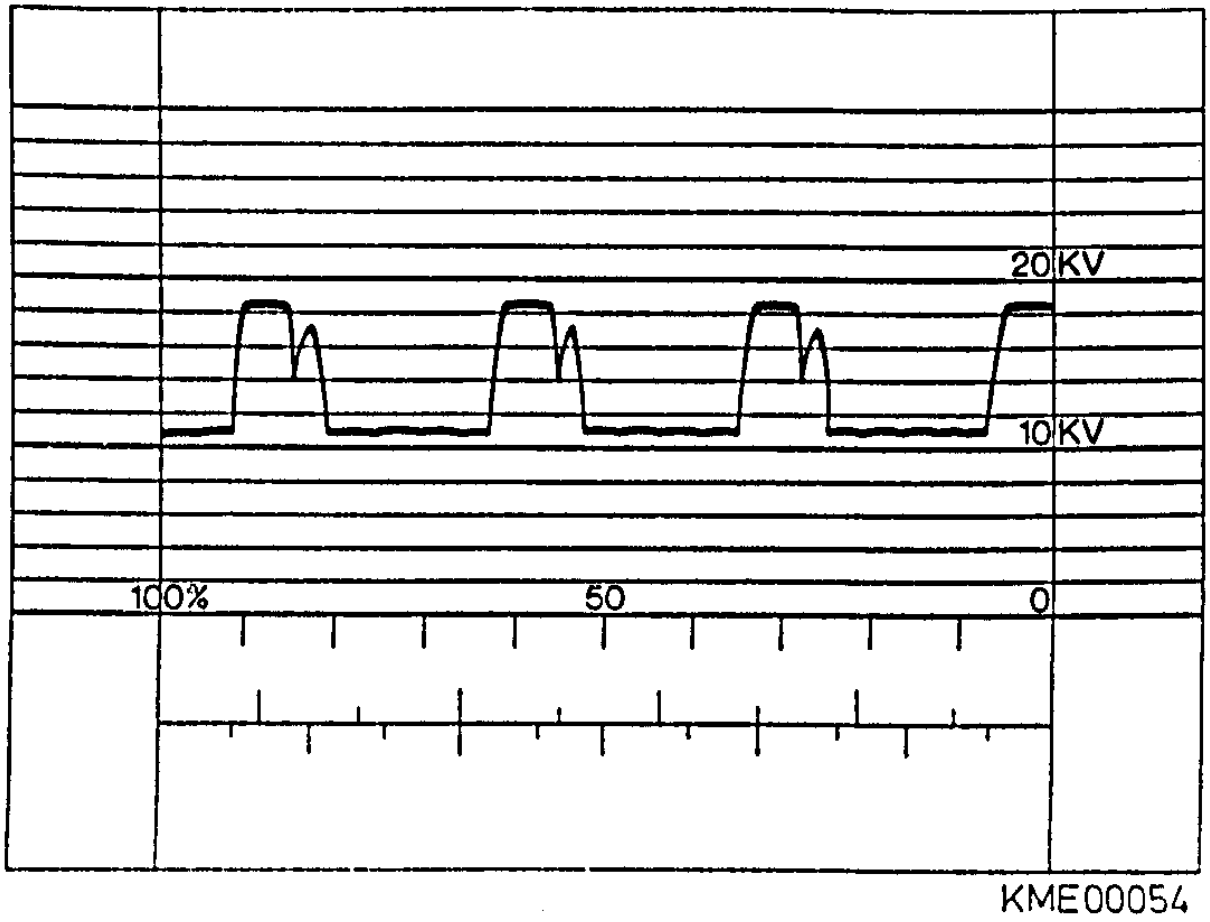

Figure 42 Open Positive Rectifier Diode

All rights rest with Robert Bosch Corp, including patent rights. All rights of use of reproduction and publication rest with R. B. Corp.

11.3.5 Open Negative Rectifier Diode

This pattern identifies an open negative rectifier diode. In the case of multiple diodes in parallel, all of the diodes on the circuit must be open. An example is:

There are two diodes in the rectifier for each phase of the stator. Both diodes must be open for this pattern to appear.

With this type of defect, the rectifier assembly must be replaced.

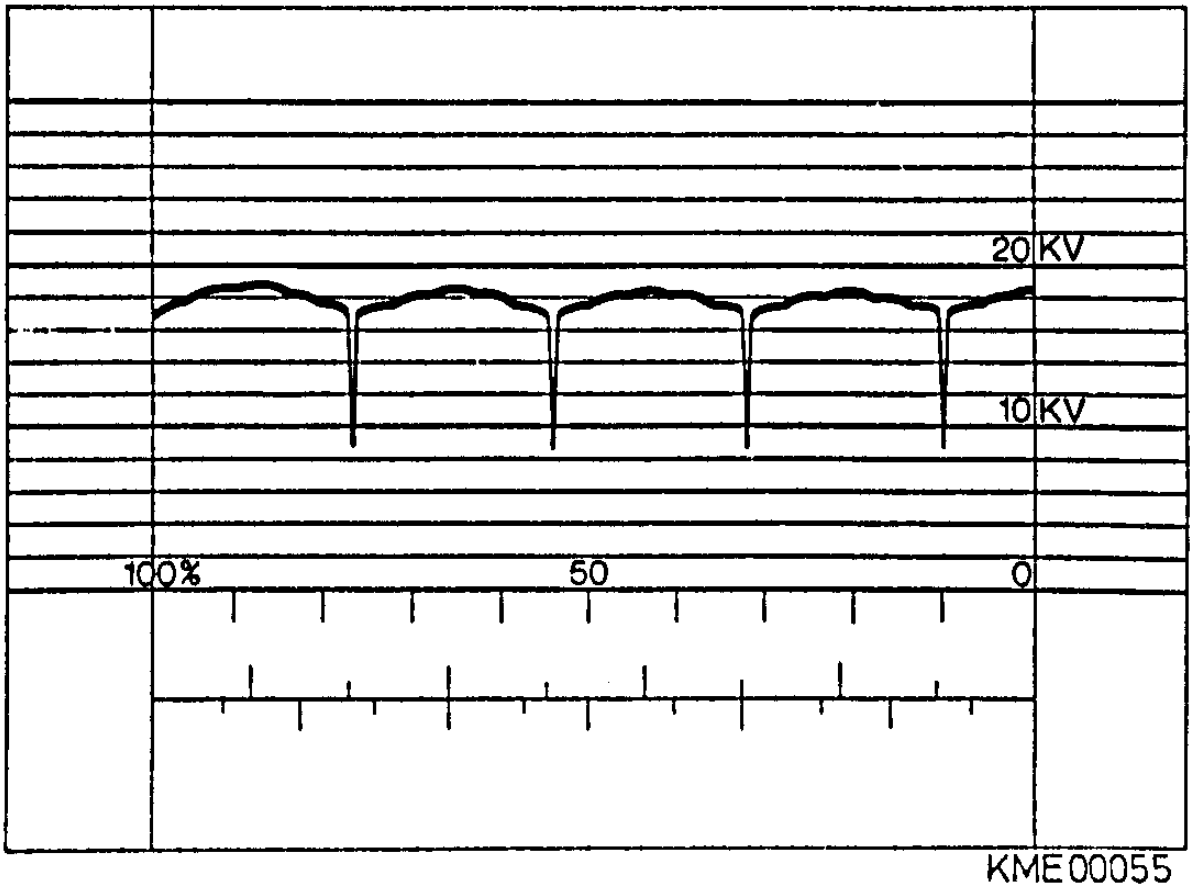

Figure 43 Open Negative Rectifier Diode

All rights rest with Robert Bosch Corp, including patent rights. All rights of use of reproduction and publication rest with R. B. Corp.

11.3.6 Shorted Exciter Diode

This pattern identifies a shorted exciter diode. This would require disassembly of the alternator and replacement of the rectifier assembly.

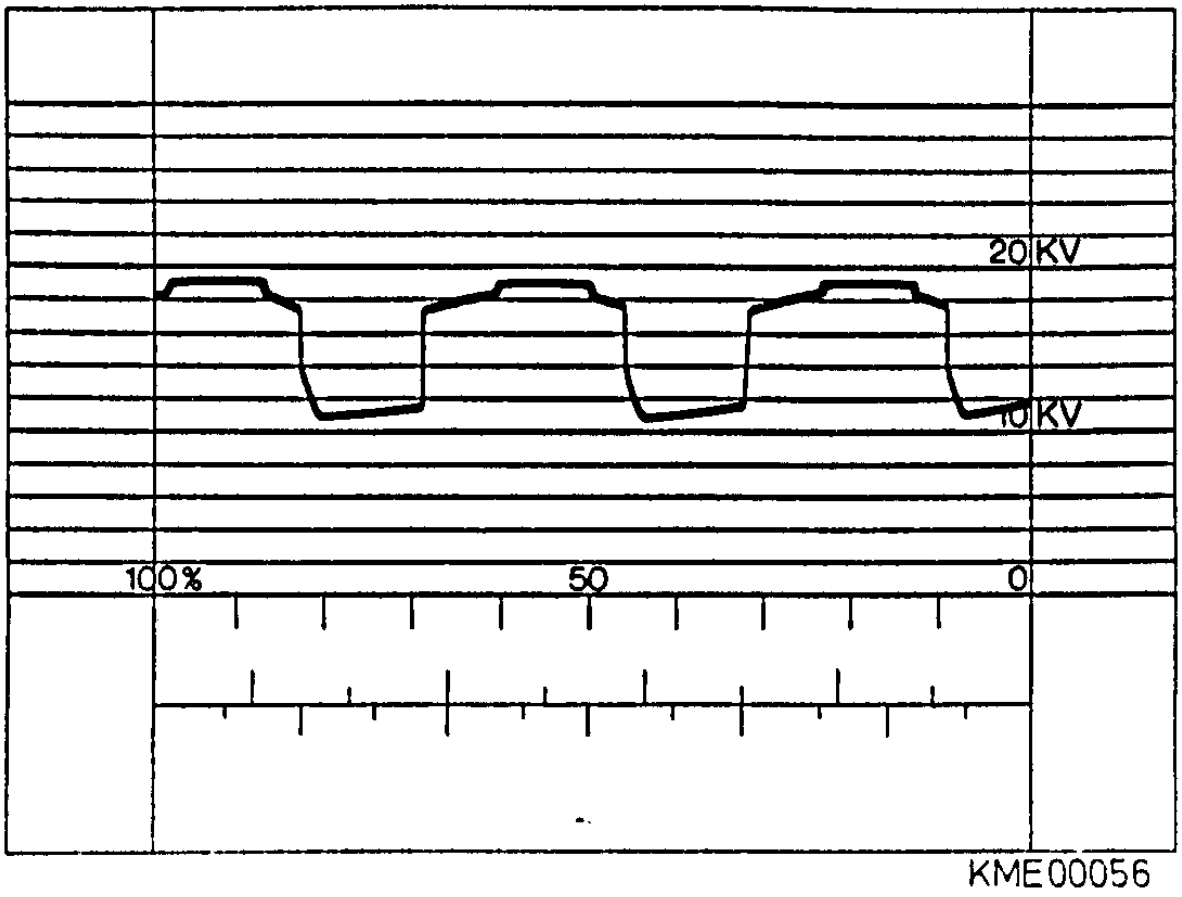

Figure 44 Shorted Exciter Diode

All rights rest with Robert Bosch Corp, including patent rights. All rights of use of reproduction and publication rest with R. B. Corp.

11.3.7 Shorted Positive Rectifier Diode

This pattern identifies a positive rectifier diode that is shorted. This defect requires replacement of the rectifier assembly.

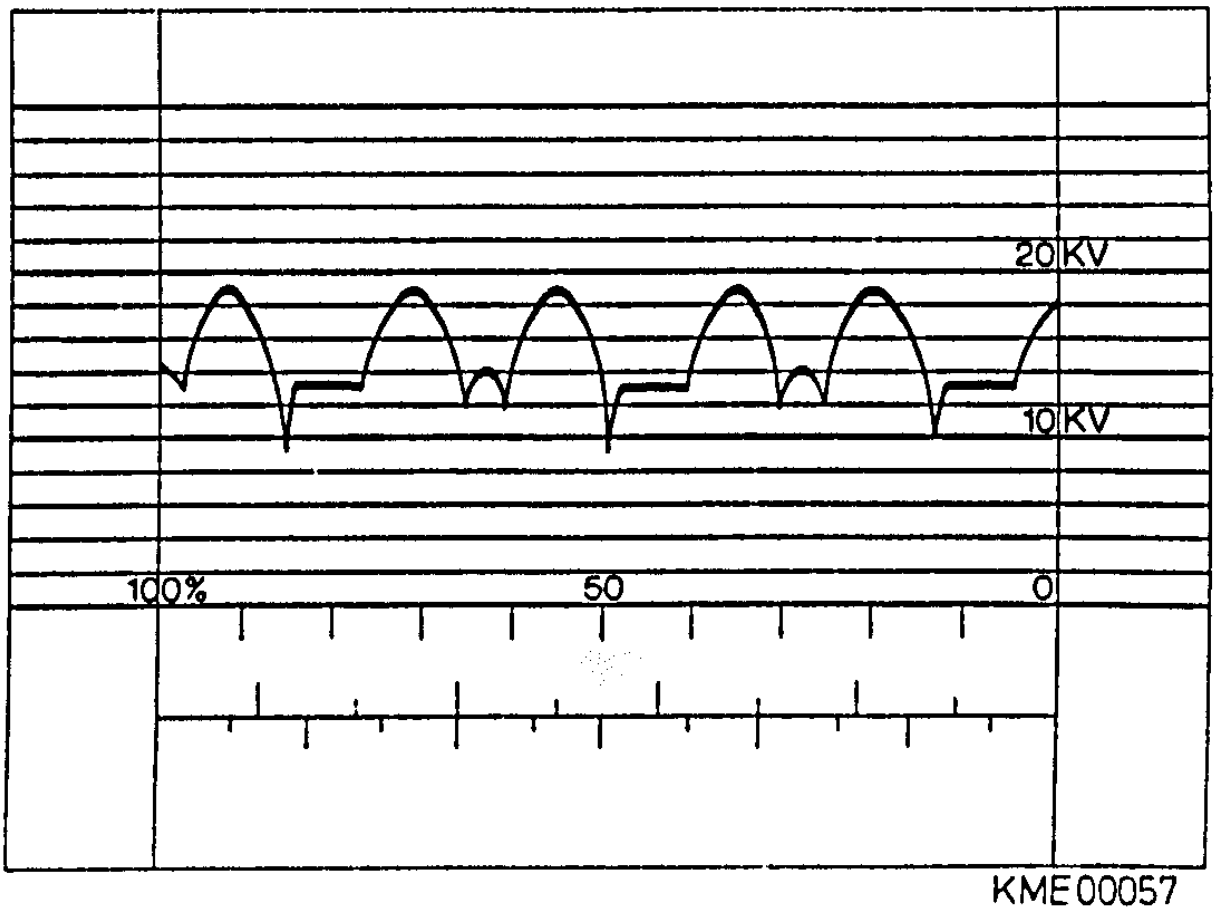

Figure 45 Shorted Positive Rectifier Diode

All rights rest with Robert Bosch Corp, including patent rights. All rights of use of reproduction and publication rest with R. B. Corp.

11.3.8 Shorted Negative Rectifier Diode

This pattern identifies a negative rectifier diode that is shorted. This defect requires replacement of the rectifier assembly.

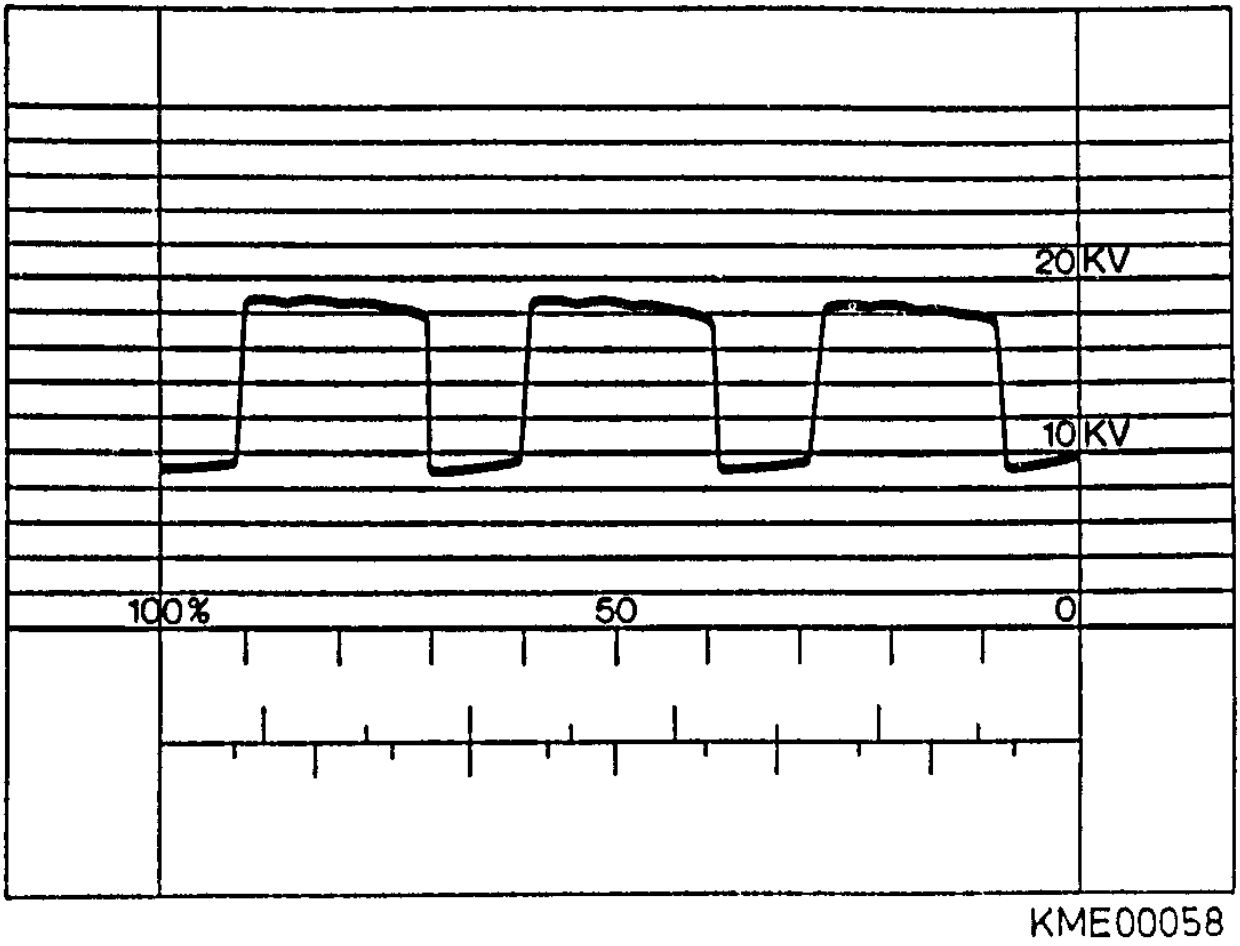

Figure 46 Shorted Negative Rectifier Diode

All rights rest with Robert Bosch Corp, including patent rights. All rights of use of reproduction and publication rest with R. B. Corp.

11.3.9 Open Phase of Stator

This pattern illustrates a stator with an open phase winding. This type of defect would require replacement of the stator.

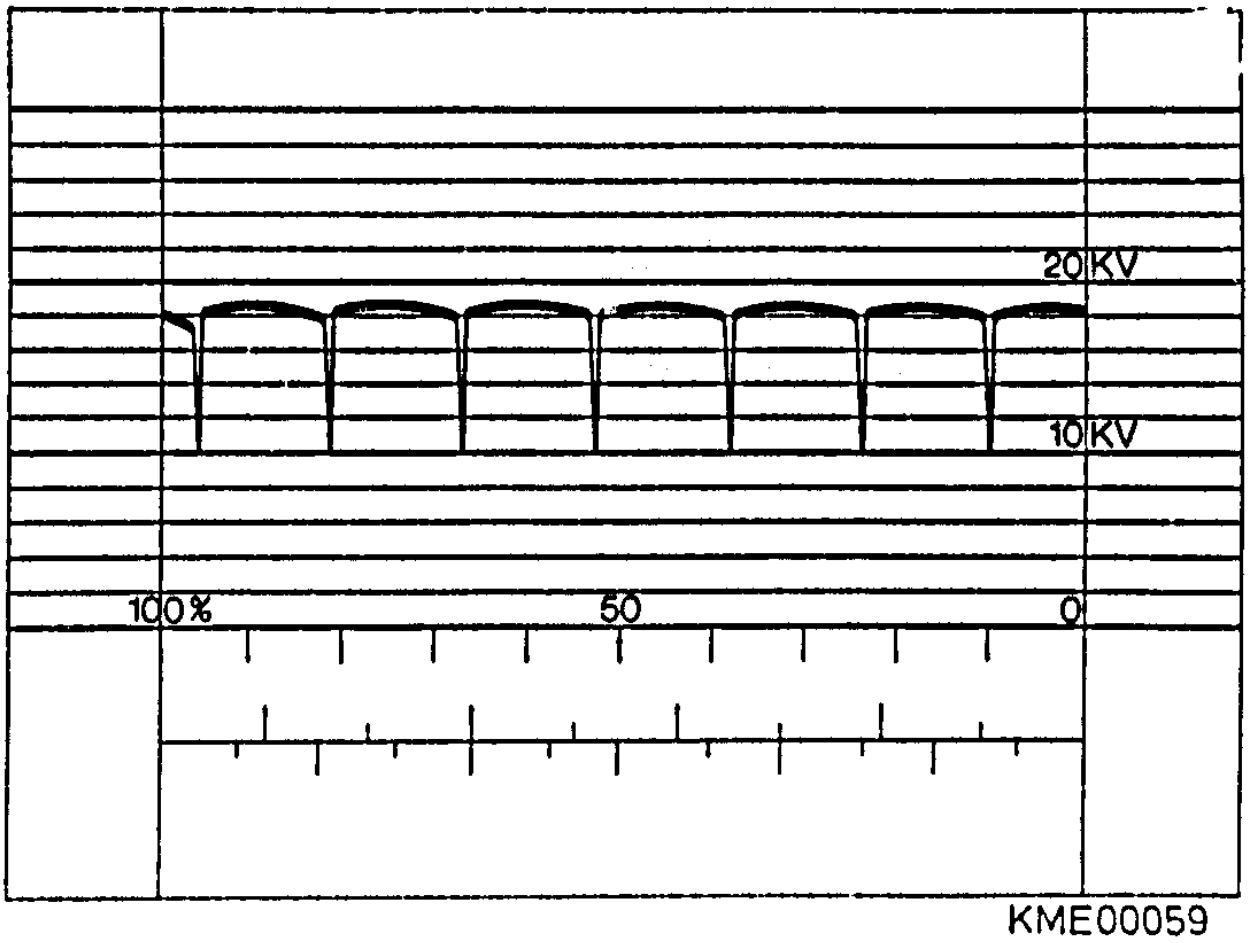

Figure 47 Open Stator Phase

All rights rest with Robert Bosch Corp, including patent rights. All rights of use of reproduction and publication rest with R. B. Corp.

SECTION 07: TRANSMISSION

1. DESCRIPTION 07-3

1.1 EATON AUTOMATIC TRANSMISSION 07-3
1.2 ALLISON AUTOMATIC TRANSMISSION 07-3
1.2.1 Retarder (if applicable) 07-4

2. WELDING PROCEDURES 07-4

3. MAINTENANCE 07-5

3.1 EATON AUTOMATIC TRANSMISSION 07-5
3.1.1 Oil Level Check 07-5
3.1.2 Cold Check 07-5
3.1.3 Hot Check 07-6
3.1.4 Lubricant Leaks 07-6
3.1.5 Coolant Leakage 07-7
3.1.6 Oil and Filter Change 07-7
3.1.7 Oil Recommendations 07-8
3.1.8 Main Parts Listing and Illustration 07-8
3.1.9 Operating Temperatures with Oil Coolers 07-8
3.2 ALLISON AUTOMATIC TRANSMISSION 07-9
3.2.1 Cold Check 07-10
3.2.2 Hot Check 07-10
3.2.3 Readout of the Oil Level Sensor 07-10
3.2.4 Keeping Oil Clean 07-12
3.2.5 Oil Recommendations 07-12
3.2.6 Oil Contamination 07-13
3.2.7 Metal Particles 07-13
3.2.8 Coolant Leakage 07-13
3.2.9 Oil and Filter Change 07-13

4. TRANSMISSION REMOVAL 07-14

4.1 EATON AUTOMATIC TRANSMISSION 07-14
4.2 ALLISON AUTOMATIC TRANSMISSION 07-15

5. TRANSMISSION OIL COOLER REMOVAL 07-16

5.1 TRANSMISSION WITHOUT RETARDER 07-16
5.2 TRANSMISSION WITH RETARDER 07-17

6. TRANSMISSION DISASSEMBLY AND REASSEMBLY 07-18

6.1 EATON AUTOMATIC TRANSMISSION 07-18

7. CLEANING AND INSPECTION OF THE TRANSMISSION 07-18

7.1 EATON AUTOMATIC TRANSMISSION 07-18
7.2 ALLISON AUTOMATIC TRANSMISSION 07-18
7.2.1 Breather 07-18

8. TRANSMISSION INSTALLATION 07-18

8.1 EATON AUTOMATIC TRANSMISSION 07-18
8.2 ALLISON AUTOMATIC TRANSMISSION 07-19

9. ALLISON TRANSMISSION PRINCIPLES OF OPERATION 07-21

10. TROUBLESHOOTING 07-21

10.1 EATON AUTOMATIC TRANSMISSION 07-21
10.2 ALLISON AUTOMATIC TRANSMISSION 07-24
10.2.1 WTEC/Electronic Control Unit 07-24
10.2.2 WTEC/Troubleshooting 07-24
10.2.3 Diagnostic Code Memory 07-24
10.2.4 Reading Codes 07-25
10.2.5 Clearing Codes 07-26

11. SPECIFICATIONS 07-39

ILLUSTRATIONS

FIGURE 1: EATON AST 7L TRANSMISSION 07-3
FIGURE 2: SHIFT CONTROL PAD 07-3
FIGURE 3: GEAR DISPLAY MODULE 07-3
FIGURE 4: WORLD TRANSMISSION 07-4
FIGURE 5: WORLD TRANSMISSION CONTROL PAD 07-4
FIGURE 6: OIL LEVEL DIPSTICK (AUTO. TRANS.) 07-5
FIGURE 7: COLD CHECK 07-6
FIGURE 8: HOT CHECK 07-6
FIGURE 9: DRAIN PLUGS AND FILTER 07-7
FIGURE 10: EATON TRANSMISSION MAIN PARTS LISTING 07-8
FIGURE 11: OIL LEVEL DIPSTICK (AUTO. TRANS.) 07-9
FIGURE 12: COLD CHECK 07-10
FIGURE 13: HOT CHECK 07-10
FIGURE 14: DRAIN PLUG AND FILTERS 07-14
FIGURE 15: EATON TRANSMISSION CONNECTIONS 07-15
FIGURE 16: EATON TRANSMISSION LIFTING POINTS 07-15
FIGURE 17: ENGINE CRANKING POSITIONS 07-16
FIGURE 18: TRANSMISSION OIL COOLER 07-16
FIGURE 19: OIL COOLER INSTALLATION 07-17
FIGURE 20: OIL COOLER SECTION VIEW 07-17
FIGURE 21: LIFTING EYES AND SENSOR POSITION 07-19
FIGURE 22: NUT TOLERANCE 07-20
FIGURE 23: AIR PRESSURE REGULATOR (TYPICAL) 07-21
FIGURE 24: WTEC / ELECTRONIC CONTROL UNIT 07-24

1. DESCRIPTION

XL2 Series vehicles may be provided with either an Eaton Autoshift AST 7L automatic transmission or an Allison World automatic transmission.

1.1 EATON AUTOMATIC TRANSMISSION

The optional Eaton AutoShift AST 7L automatic transmission is a seven-speed automatic transmission.

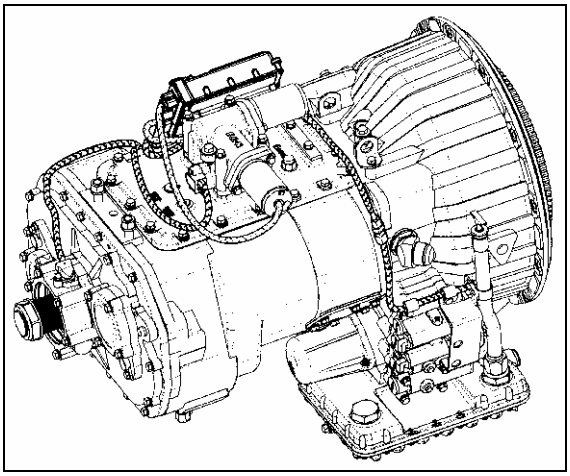

FIGURE 1: EATON AST 7L TRANSMISSION 07060

Control of the transmission is done via a push-button shift control pad located on the lateral console. Gear select buttons located on the pad allow manual control of the transmission.

The transmission performs a self-test at power-up. It is normal for the service light to illuminate briefly at power-up. If the service light stays on or illuminates while driving, the ECM has detected a fault code. In that case have the vehicle serviced as soon as possible. Fault codes can be flashed on the control pad service light.

A gear display module informs the driver of which gear is presently engaged. A flashing number indicates the next gear to be engaged. UP arrows indicate that the input shaft rpm is too low to engage the gear. In this situation, the transmission ECM will slightly increase engine rpm. DOWN arrows indicate the input shaft rpm is too high to engage the gear, the ECM is waiting for the shaft to slow down before allowing the shift.

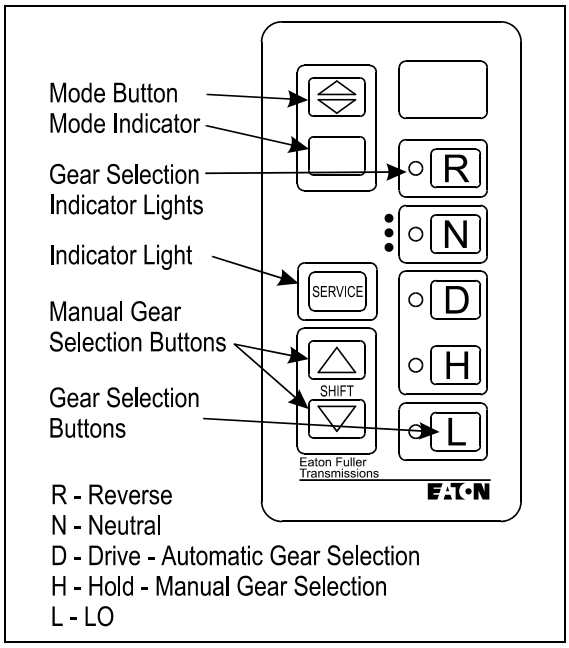

FIGURE 2: SHIFT CONTROL PAD 07055

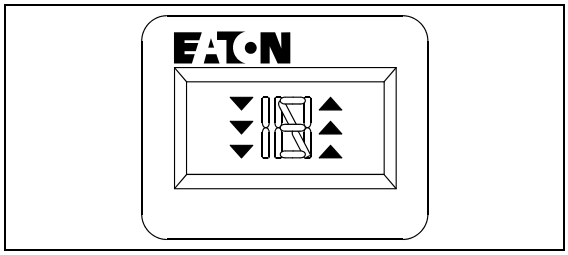

FIGURE 3: GEAR DISPLAY MODULE 07056

1.2 ALLISON AUTOMATIC TRANSMISSION

The B500(R) World Transmission has 6 speeds with two top range (fifth and sixth) overdrives. Total coverage is determined by dividing the highest gear ratio by the lowest gear ratio. Total coverage expresses the transmission gear ratio versatility. Transmissions with larger total coverage number have a wider variety of available ratios.

An electronic control allows the transmission to shift at exactly the right point on the engine's fuel consumption curve for best economy. Early lockup maintains the highest possible mechanical efficiency through the closely-spaced gear steps, culminating in two overdrive ratios. This combination allows progressive shifting

techniques, where engine speeds are reduced for higher efficiency and lower fuel consumption.

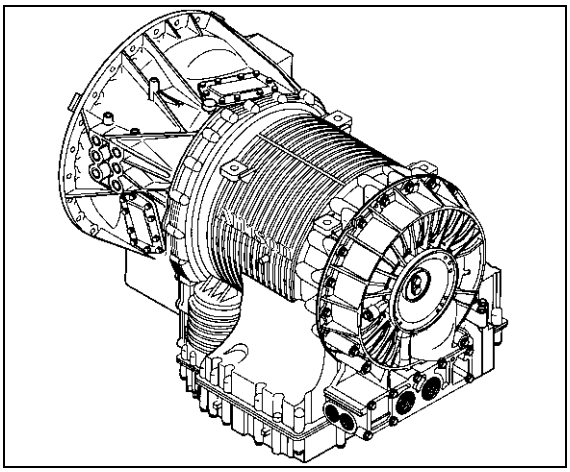

FIGURE 4: WORLD TRANSMISSION 07020B

Gear selection and torque converter modes are controlled by a microcomputer-based electronic transmission management system. It is fed information regarding throttle position, operator range selection, engine speed, turbine speed, transmission output speed and various system pressures from special electronic sensors. With this information, it computes shift points and clutch pressures to meet immediate needs. Using closed loop adaptive logic, the electronic control looks at a number of parameters during the shift, and makes minute adjustments to match the shift to desired profile stored in its memory. It then looks at these adjustments and resets the parameters, which allow the transmission to quickly compensate for variations in load, terrain or environment and to adjust for clutch wear and engine power changes. A Diagnostic Data Reader can be connected to the electronic control unit to provide a self-check of all systems in the transmission. Four-digit trouble codes greatly reduce the time it takes to pinpoint potential problems. (Refer to heading *"10. TROUBLESHOOTING"* in this section).

1.2.1 Retarder (if applicable)

This optional auxiliary braking device for the automatic transmission is integrated into the basic envelope of the transmission and transmits its braking force directly to the propeller shaft. It requires no additional length and adds only 75 pounds (34 kg) of weight. Operation of the retarder is controlled electronically by the driver's use of the brake and/or by hand control lever.

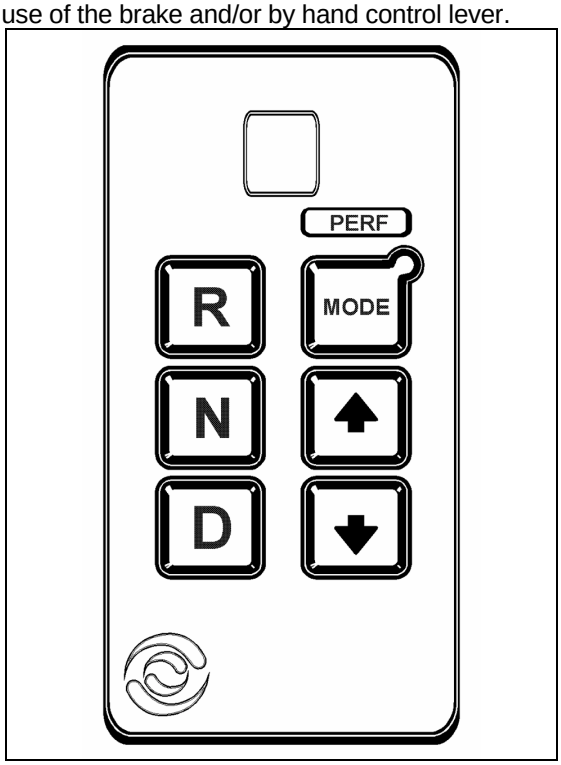

FIGURE 5: WORLD TRANSMISSION CONTROL PAD 07025

When activated, fluid enters a cavity and provides resistance to the turning of rotor blades revolving with the output shaft. This effectively slows the vehicle to the point where the service brakes are needed only for final stopping. The retarder is fully modulated and is compatible with ABS.

2. WELDING PROCEDURES

These procedures are intended only for vehicles equipped with transmission electronic controls. When frame or other welding is required on the vehicle, the following precautions are to be taken to protect the electronic control components:

1. Disconnect the wiring harness connectors at the transmission electronic control unit.
2. Disconnect the positive and negative battery connections, and any electronic control ground wires connected to the frame or chassis.
3. Cover electronic control components and wiring to protect them from hot sparks, etc.

4. Do not connect welding cables to electronic control components.

3. MAINTENANCE

3.1 EATON AUTOMATIC TRANSMISSION

3.1.1 Oil Level Check

To gain access to the dipstick, open the engine compartment rear doors; dipstick is located on the radiator side of the engine (Fig. 6).

To check the transmission oil level, a cold check and a hot check must be performed. A cold check must be made between 60ºF (16ºC) and 120ºF (50ºC). The transmission oil temperature gauge indicates the operating temperature; it is located in the MCD dashboard integrated Liquid Crystal Display and can be viewed when selecting the Gauge Mode (refer to ''Operator's Manual'' for added information).

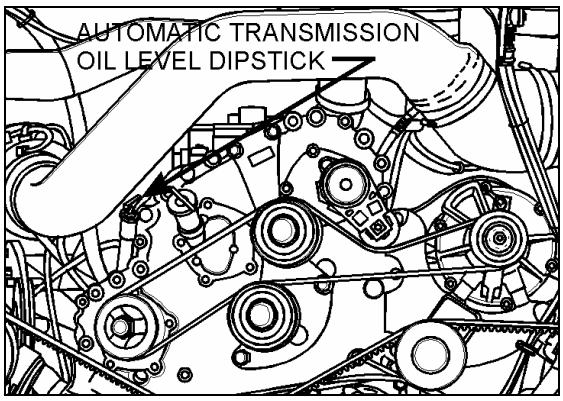

FIGURE 6: OIL LEVEL DIPSTICK (AUTO. TRANS.) 07033

Note: *Perform the cold check first to verify the transmission oil level before performing the hot check.*

The hot check can be performed when the transmission oil reaches the normal operating temperature of 180ºF (82ºC) to 220ºF (104ºC).

Clean all dirt from around the end of the oil filler tube before removing the dipstick. Dirt or foreign matter must not be permitted to enter the oil system since it will cause valves to stick, undue wear of transmission parts, and clogged passages. Check the oil level in accordance with the following procedures and record any abnormal level on your *"Maintenance Records".*

Warning: *When checking the oil level, be sure that the parking brake and/or emergency brakes are set and properly engaged, and the wheels are choked. Unexpected and possible sudden vehicle movement may occur if these precautions are not taken.*
Special care must be taken not to touch the engine coolant tubing and/or exhaust pipe, since this could cause severe burns.
Do not wear loose clothing and, stay away from rotating parts during procedure; personal injury could occur.

Always check the oil level reading at least twice when the engine is running. Consistency is important in maintaining the accuracy of the reading. If inconsistent readings persist, check the transmission breather to ensure it is clean and free of debris.

3.1.2 Cold Check

The purpose of the **Cold Check** is to determine if the transmission has enough fluid to be operated safely until a **Hot Check** can be made.

1. If the engine has been shut down for an extended period of time, park the vehicle on a level surface and apply the parking brake.

Caution: *The oil level rises as sump temperature increases. DO NOT fill above the "Cold Run" band if the transmission oil is below normal operating temperature.*

2. Run the engine for at least one minute. Shift to Drive (D) and operate the engine for 30 seconds at 1000-1500 rpm; then shift to Reverse (R) to clear the hydraulic system of air. Finally shift to Neutral (N) and allow the engine to idle for two minutes (500 - 800 rpm).

3. While the engine is running, remove the dipstick from the tube and wipe it clean (Figs. 6 & 7).

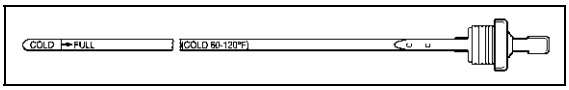

FIGURE 7: COLD CHECK 07063

4. Insert the dipstick into the tube and then remove, checking the oil level reading (Fig. 7). Repeat the check procedure to verify the reading. If the oil reading is within the "Cold Run" band, the level is satisfactory for operating the transmission until the oil is hot enough to perform a "Hot Run" check. If the oil reading is not within the "Cold Run" band, add or drain oil as necessary to bring the level within the "Cold Run" band.
5. Perform a **Hot Check** at the first opportunity after the normal operating temperature of 180ºF (82ºC) to 220ºF (104ºC) is attained.

Caution: *An accurate fluid level check cannot be made unless the engine is idling (500-800 rpm) in Neutral, the transmission fluid is at the proper temperature, and the vehicle is on a level surface.*

3.1.3 Hot Check

Caution: *The oil must be hot to ensure an accurate check for this procedure. The oil level rises as temperature increases.*

1. Operate the transmission in Drive (D) range until normal operating temperature is reached 180ºF (82ºC) to 220ºF (104ºC).
2. Park the vehicle on a level surface and shift to Neutral (N). Apply the parking brake and allow the engine to idle for two minutes (500 - 800 rpm).
3. While the engine is running, remove the dipstick from the tube and wipe it clean.
4. Insert the dipstick into the tube and then remove, checking the oil level reading. Repeat the check procedure to verify the reading.

The safe operating level is anywhere within the "Hot Run" band on the dipstick (Fig. 8).

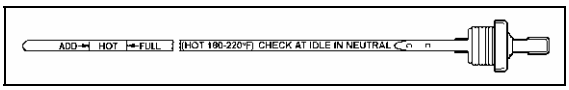

FIGURE 8: HOT CHECK 07064

1. If the oil level is not within the "Hot Run" band, add or drain oil as necessary to bring the oil level within the band.

Note: *The* Cold Check *is more appropriate for verifying the oil level after the first fill-up. In case of conflict, the* Hot Check *has priority over the* Cold Check.

3.1.4 Lubricant Leaks

A lubricant leak could cause a catastrophic transmission failure. Check for leaks at the gasket surfaces, the lubricant lines, flywheel housing, rear seal and the cooler.

1. Visually check each gasket to ensure that no leak is present. Typically, a moist spot is acceptable; however, drips or larger wet areas are not. Check for leaks at the rear housing, PTO, shift bar housing, converter housing to main case, and transmission controller gasket surfaces. It is also important to ensure that the leak is indeed coming from the transmission. Make sure the lubricant is not being blown back from the engine or another vehicle component.
2. There are two external lines for lubricant on the AST transmission. One lubricates the synchronizer system and the other allows the transmission lubricant to return back to the torque converter sump. Check the lines to ensure they are not leaking.
3. Check for leaks around the flywheel. Leaks in this area could be caused by a faulty gasket, loose plugs or sensors, or even the starter. The AST transmission has what is called a “wet housing,” which means that the flywheel housing is used as a sump for the transmission fluid. Any leaks here could cause a transmission failure.
4. The rear seal is very important in maintaining lubricant in the transmission. If the seal is improperly installed or has failed again, a catastrophic failure may occur. Check the rear seal by performing the following two steps:

- Visually inspect the rear seal for a leak. If the rear seal is suspected, then proper isolation is necessary.
- Other leaks can give the impression that the rear seal is leaking. One possible cause is the speed sensor. Any lubricant leak above and in front of the rear seal could cause lubricant to collect around the

seal. Wipe the seal with a clean rag, operate the vehicle and recheck to verify the leak path.

5. Ensure there are no leaks at the oil cooler, hoses and fittings of the cooler circuits.

3.1.5 Coolant Leakage

If engine coolant leaks into the transmission oil system, immediate action must be taken to prevent malfunction and possible serious damage. The transmission must be completely disassembled, inspected, and cleaned. All traces of the coolant contamination must be removed. Friction clutch plates contaminated with ethylene glycol must be replaced.

3.1.6 Oil and Filter Change

When it is time to change the transmission oil, there are only a few steps to follow: draining and filling the transmission, draining and filling the cooler (if equipped) and changing the oil filter. Remember to be careful when changing the transmission oil as it may be hot.

Drain

1. Locate the drain plugs on the bottom of the transmission case and on the bottom of the torque converter housing pan (Fig. 9).
2. Place a drain pan under each drain plug. Remove both drain plugs and allow the oil to drain completely.

Note: *Remove the bottom cooler lines. Disconnect the cooler line at the torque converter outlet. Pressurize one line with 20 PSI until all oil is forced out of the cooler. Reconnect all cooler lines.*

Note: *When changing lubricant type, brand, viscosity or grade, the transmission must be flushed to remove all lubricant. Flush the lubricant as per Service Manual TRSM-0062.*

4. Using a 9/16” wrench, remove the three mounting bolts from the filter housing. Remove the filter housing and O-ring seal from the transmission. Remove the oil filter by pulling the filter straight off the nipple. Inspect the oil filter nipple and remove if damaged.
5. If required, install oil filter nipple using hydraulic sealant and tighten to 34-48 lbf-ft (46-65 N•m). Install the oil filter on the oil filter nipple. Install O-ring and oil filter housing on the transmission. Using a 9/16” wrench, tighten the three mounting bolts to 26-32 lbf-ft (35-43 N•m).
6. Install the transmission case drain plug and tighten to 45-50 lbf-ft (61-68 N•m). Install the torque converter housing pan drain plug and tighten to 14-20 lbf-ft (19-27 N•m).

Refill

1. Using the oil level dipstick filler tube, refill with 7 US gallons (26,5 liters) and start the engine at idle.
2. With the engine idling, continue checking and filling until proper oil level is reached (approximately 10 U.S. gallons (38 liters)).

Note: *The total volume varies depending on cooler design.*

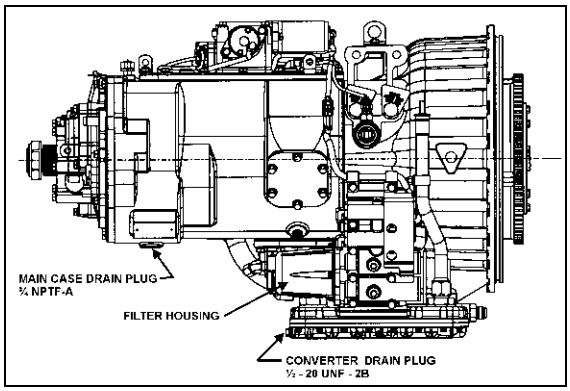

FIGURE 9: DRAIN PLUGS AND FILTER 07065

3.1.7 Oil Recommendations

Where transmissions are concerned, lubrication is possibly the most important part of keeping a vehicle operating.

- Synthetic Dexron III or newer automatic transmission lubricant must be used in the AST model transmissions. Dexron lubricants can be used for ambient temperatures above 0°F (-17.8°C).
- Synthetic Arctic Oil is approved for applications in severe cold. Arctic Oil will have an SAE grade of OW-20. Arctic Oil may be used in temperature below 0°F (-17.8°C).

Type	Grade (SAE)	Ambient Temperature
Synthetic Dexron®III or Newer	OW-20	Above 0°F (-17.8°C)
Synthetic Arctic Oil		Below 0°F (-17.8°C)

3.1.8 Main Parts Listing and Illustration

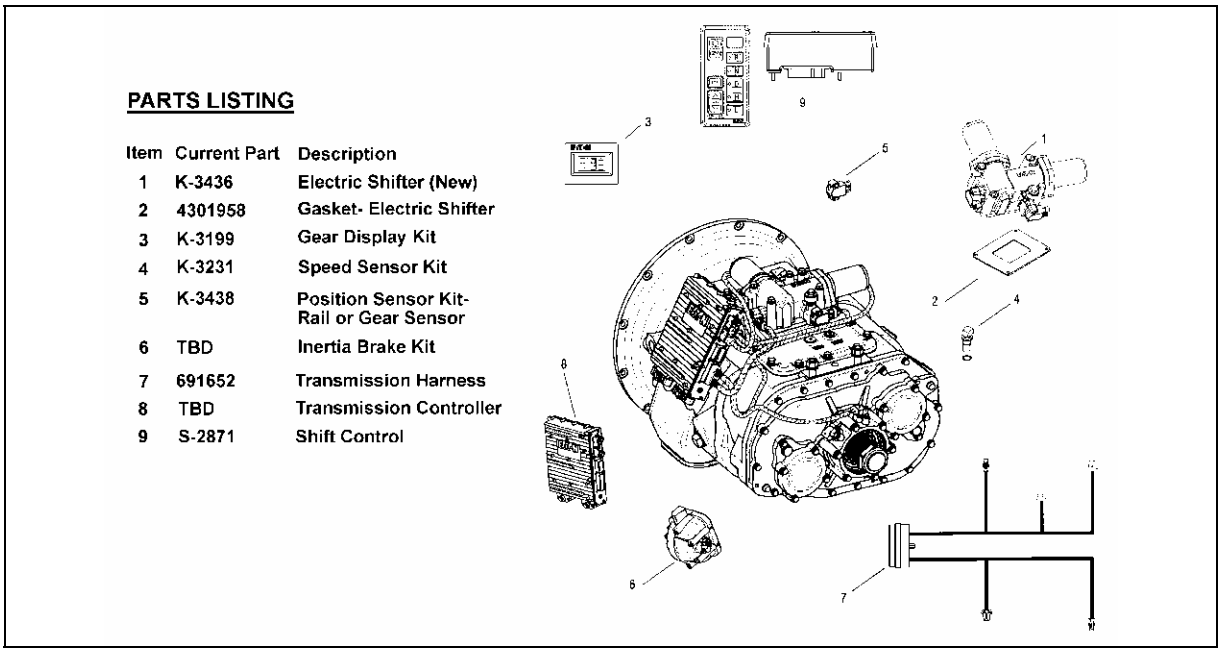

FIGURE 10: EATON TRANSMISSION MAIN PARTS LISTING 07061

3.1.9 Operating Temperatures with Oil Coolers

The transmission must not be operated consistently at temperatures above 250°F,
however, intermittent operating temperatures to 300°F do not harm the transmission. Operating temperatures above 250°F increases the lubricant's oxidation rate and shortens its effective life. When the average operating temperature is above 250°F, the transmission can require more frequent oil changes or external cooling.

The following conditions in any combination can cause operating temperatures of over 250°F :
(1) operating consistently at slow speeds,
(2) high ambient temperatures,
(3) restricted air flow around transmission,
(4) exhaust system too close to transmission,
(5) high horsepower operation.

Internal oil coolers are available to reduce operating temperatures when the above conditions are encountered.

OIL COOLER CHART	
TRANSMISSION OIL COOLERS ARE :	
Recommended	- With engines of 350 HP and above.
Required	- With engines of 399 HP and above and GVW's over 90,000 lbs,
	- With engines of 399 HP and above and 1400 ft•lbf or greater torque,
	- With engines of 450 HP and above.
	- With transmission retarder installed.

TABLE 1 : LUBRICANT CHANGE AND INSPECTION	
Change Interval	**Description**
Every 2,500 miles	Inspect lubricant level. Perform transmission inspection.
Every 2 years or 250,000 miles, whichever occurs first.	Change transmission lubricant and filter.

3.2 ALLISON AUTOMATIC TRANSMISSION

To gain access to the dipstick, open the engine compartment rear doors ; dipstick is located on the radiator side of the engine (Fig. 10).

To check the transmission oil level, a cold check and a hot check must be performed. A cold check must be made between 60ºF (16ºC) and 140ºF (60ºC). The transmission oil temperature gauge indicates the operating temperature; it is located in the MCD dashboard integrated Liquid Crystal Display and can be viewed when selecting the Gauge Mode (refer to ''Operator's Manual'' for added information).

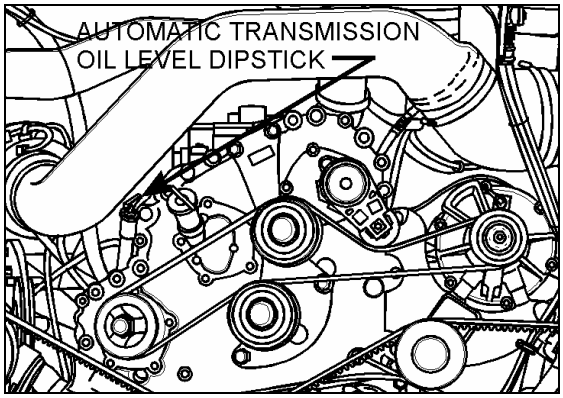

FIGURE 11: OIL LEVEL DIPSTICK (AUTO. TRANS.) 07033

Note: *Perform the cold check first to verify the transmission oil level before performing the hot check.*

The hot check can be performed when the transmission oil reaches the normal operating temperature of 160ºF (71ºC) to 200ºF (93ºC).

Clean all dirt from around the end of the oil filler tube before removing the dipstick. Dirt or foreign matter must not be permitted to enter the oil system since it will cause valves to stick, undue wear of transmission parts, and clogged passages. Check the oil level in accordance with the following procedures and record any abnormal level on your *"Maintenance Records".*

Warning: *When checking the oil level, be sure that the parking brake and/or emergency brakes are set and properly engaged, and the wheels are choked. Unexpected and possible sudden vehicle movement may occur if these precautions are not taken.*
Special care must be taken not to touch the engine coolant tubing and/or exhaust pipe, since this could cause severe burns.
Do not wear loose clothing and, stay away from rotating parts during procedure; personal injury could occur.

Always check the oil level reading at least twice when the engine is running. Consistency is important in maintaining the accuracy of the reading. If inconsistent readings persist, check the transmission breather to ensure it is clean and free of debris.

3.2.1 Cold Check

The purpose of the **Cold Check** is to determine if the transmission has enough fluid to be operated safely until a **Hot Check** can be made.

1. If the engine has been shut down for an extended period of time, park the vehicle on a level surface and apply the parking brake.

Caution: *The oil level rises as sump temperature increases. DO NOT fill above the "Cold Run" band if the transmission oil is below normal operating temperature.*

2. Run the engine for at least one minute. Shift to Drive (D) and operate the engine for 30 seconds at 1000-1500 rpm; then shift to Reverse (R) to clear the hydraulic system of air. Finally shift to Neutral (N) and allow the engine to idle (500 - 800 rpm).
3. While the engine is running, remove the dipstick from the tube and wipe it clean (Figs. 9 & 10).

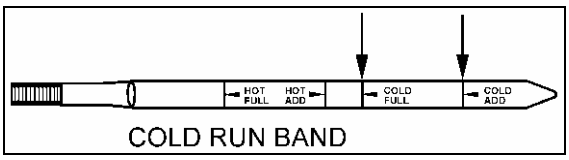

FIGURE 12: COLD CHECK 07050

4. Insert the dipstick into the tube and then remove, checking the oil level reading (Fig. 10). Repeat the check procedure to verify the reading. If the oil reading is within the "Cold Run" band, the level is satisfactory for operating the transmission until the oil is hot enough to perform a "Hot Run" check. If the oil reading is not within the "Cold Run" band, add or drain oil as necessary to bring the level within the "Cold Run" band.
5. Perform a **Hot Check** at the first opportunity after the normal operating temperature of 160ºF (71ºC) to 200ºF (93ºC) is attained.

Caution: *An accurate fluid level check cannot be made unless the engine is idling (500-800 rpm) in Neutral, the transmission fluid is at the proper temperature, and the vehicle is on a level surface.*

3.2.2 Hot Check

Caution: *The oil must be hot to ensure an accurate check for this procedure. The oil level rises as temperature increases.*

1. Operate the transmission in Drive (D) range until normal operating temperature is reached 160ºF (71ºC) to 200ºF (93ºC).
2. Park the vehicle on a level surface and shift to Neutral (N). Apply the parking brake and allow the engine to idle (500 - 800 rpm).
3. While the engine is running, remove the dipstick from the tube and wipe it clean.
4. Insert the dipstick into the tube and then remove, checking the oil level reading. Repeat the check procedure to verify the reading.

The safe operating level is anywhere within the "Hot Run" band on the dipstick (Fig. 11).

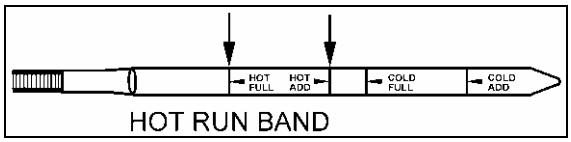

FIGURE 13: HOT CHECK 07049

3. If the oil level is not within the "Hot Run" band, add or drain oil as necessary to bring the oil level within the band.

Note: *The* Cold Check *is more appropriate for verifying the oil level after the first fill-up. In case of conflict, the* Hot Check *has priority over the* Cold Check*; the automatic system of verification via the shift selector has priority over the* Hot Check*.*

3.2.3 Readout of the Oil Level Sensor

The optional Oil Level Sensor (OLS) is designed to measure transmission oil level only when the following combination of operating conditions exist:

1. Engine must be at idle;

2. **NEUTRAL** must be selected;
3. Zero output speed;
4. Transmission oil must be within a "normal" temperature band (160-250°F; 70-120°C), and;
5. Once the first four (4) conditions are met, there must be a "waiting" period (approx. 2 min., to facilitate consistent oil drainback) before oil level measurement begins.

To enter OLS readout mode (after meeting the conditions noted above), simultaneously press the UPSHIFT and DOWNSHIFT arrows on the shifter. If the five (5) conditions noted above are present, the display will immediately enter the reading mode. If the "waiting" period has not elapsed, the left digit of the display will become a "chasing" digit and the right digit will count down from (8) to (1) until the waiting period is complete.

After attaining the reading mode, the display will flash *"OL-OK"*, *"LO-01"*, *"HI-02"*, etc., where the suffix *"01"* or *"02"* indicates the volume of oil (in quarts) either low or high.

At any time in this sequence, simultaneously pressing the UPSHIFT and DOWNSHIFT arrows directs the ECU to enter the transmission diagnostic mode as described under *"10. Troubleshooting"* in this section.
D, N, or R may also be selected on the shifter at any time - the OLS mode will abort and normal transmission will commence. Shifts are not inhibited.

Oil Level Sensor (OLS) Codes

CODE	CAUSE OF CODE
OL-OK	Oil Level Is Correct
LO-01	One Quart Low
LO-02	Two Quarts Low
HI-01	One Quart High
HI-02	Two Quarts High
OL-50	Engine Speed (RPM) Too Low
OL-59	Engine Speed (RPM) Too High
OL-65	Neutral Must Be Selected
OL-70	Sump Oil Temperature Too Low
OL-79	Sump Oil Temperature Too High
OL-89	Output Shaft Rotation
OL-95	Sensor Failure

3.2.4 Keeping Oil Clean

Oil must be handled in clean containers, fillers, etc., to prevent foreign material from entering the transmission. Place the dipstick on a clean surface area while filling the transmission.

Caution: *Containers or fillers that have been used to handle antifreeze or engine coolant must NEVER be used for handling transmission fluid. Antifreeze and coolant solutions contain ethylene glycol that, if introduced into the transmission, can cause the clutch plates to fail.*

3.2.5 Oil Recommendations

Hydraulic oils used in the transmission have an important influence on transmission reliability and durability. In order of preference DEXRON-III and DEXRON-IIE, Castrol TranSynd Synthetic Fluid, MIL-L-2104D, and type C-4 oils (Allison approved SAE 10W or SAE 30) are recommended. Type C-4 oil is the only oil approved for use in off-highway applications. Use type SAE 30 where ambient temperature is consistently above 86ºF (30ºC). Some DEXRON-II oils are also qualified as type C-4 oils and may be used in off-highway applications. However, a DEXRON-II fluid which is not a qualified type C-4 oil must never be used in off-highway applications. Consult your local Allison dealer or distributor to determine if a DEXRON-II oil is also a qualified type C-4 oil.
Before using type C-4 oils, consult the vehicle manufacturer to ensure that materials used in tubes, hoses, seals, etc., are compatible with type C-4 oils. Also, consult your local Allison dealer or distributor to determine if the oil you have selected is an approved type C-4 oil. Ford Motor Company specification oils M2C33-F, M2C138-CJ and M2C166-H may be used and may be intermixed with DEXRON-II oil.

OIL SPECIFICATIONS AND AMBIENT TEMPERATURE OPERATING CONDITIONS	
Oil type	Ambient temperature
MIL-L-2104D, DEXRON-II, TranSynd TES 295, C-4	120ºF (48ºC) to -25ºF (-32ºC)
MIL-L-46167	-25ºF (-32ºC) to -60ºF (-51ºC)

The use of an arctic preheat kit is recommended at temperatures below -25ºF (-32ºC). If a preheat kit is not available, the ECU will restrict full operation until the sump temperature is increased. The chart below shows the temperature ranges in which the transmission will operate. It should be noted that at lower sump temperature, the transmission's operation may be restricted.

Transmission Oil Temperature	"DO NOT SHIFT" light	Operation
Below -26ºF (-32ºC)	ON	Neutral only
-24ºF (-31ºC) to +19ºF (-7ºC)	OFF	Start with neutral and reverse, normal upshifts
+20ºF (-6ºC) to 260ºF (126ºC)	OFF	Full operation in all ranges
Above 260ºF (126ºC)	ON	Inhibits 5th and 6th ranges

Oil Contamination

At each oil change, examine the drained oil for evidence of dirt or water. A nominal amount of condensation will emulsify during operation of the transmission. However, if there is evidence of water, check the cooler (heat exchanger) for other signs of leakage. This, however, may also indicate leakage from the engine oil system.

3.2.6 Metal Particles

Metal particles in the oil (except for minute particles normally trapped in the oil filter) indicate damage has occurred in the transmission. When these particles are found in the sump, the transmission must be disassembled and closely inspected to find the source. Metal contamination will require complete disassembly of the transmission and cleaning of all internal and external circuits, coolers, and all other areas where the particles could lodge.

Caution: *If excessive metal contamination has occurred, replacement of the oil cooler and replacement of all bearings within the transmission is recommended.*

3.2.7 Coolant Leakage

If engine coolant leaks into the transmission oil system, immediate action must be taken to prevent malfunction and possible serious damage. The transmission must be completely disassembled, inspected, and cleaned. All traces of the coolant contamination must be removed. Friction clutch plates contaminated with ethylene glycol must be replaced.

TABLE 2 : Oil and oil filter change intervals		
Initial Break-In		**5,000 miles (8 000 km)**
Coach	**Non-Transynd Fluid**	**12,000 miles (19300 km) or 6 months, whichever comes first**
Coach	**Transynd Fluid**	**50,000 miles (80400 km) or 24 months, whichever comes first**
MTH with retarder	**Non-Transynd Fluid**	**12,000 miles (19300 km) or 6 months, whichever comes first**
MTH with retarder	**Transynd Fluid**	**50,000 miles (80400 km) or 24 months, whichever comes first**
MTH without retarder	**Non-Transynd Fluid**	**50,000 miles (80400 km) or 12 months, whichever comes first**
MTH without retarder	**Transynd Fluid**	**100,000 miles (160900 km) or 24 months, whichever comes first**

3.2.8 Oil and Filter Change

Transmission oil change must be performed with the vehicle on a flat and level surface and with parking brake applied. Oil and oil filter change frequency is determined by the severity of service and operating conditions of the transmission and by the filter equipment installed. See *"Table 2"* for oil and filter change intervals. More frequent changes may be required when operations are subject to high levels of contamination or overheating.

The procedure for changing the transmission oil and oil filters is as follows:

Drain

1. The transmission should be at an operating temperature of 160ºF (71ºC) to 200ºF (93ºC) when the oil is drained. This will ensure quicker and more complete fluid drainage.

Note: *Remove transmission protective panel located underneath transmission for easier access.*

2. Remove the drain plug from under the transmission (Fig. 8) and allow the oil to drain into a suitable container. Check the condition of the oil as described previously.
3. To replace the integral filters, remove twelve bolts (6 on each cover), two filter covers, two O-rings, two square cut seals and the two filters from the bottom of the control module (Fig. 8).
4. To install filters, pre-lube and install the two O-rings, the two square cut seals followed by the filters (lube the O-ring in filter cartridge only) into the filter compartment. Index each filter/cover assembly to holes in channel plate/sump. Push the cover assembly in by hand to seat the seals.

Caution: *Do not use bolts to draw the cover to sump. This can damage the cover, seal, or sump.*

5. Install twelve bolts and both covers, and then tighten to 38-45 lbf•ft (51-61 N•m).
6. Inspect the drain plug and O-ring. Replace if necessary. Reinstall the drain plug and tighten to 18-24 lbf•ft (25-32 N•m).
7. Reinstall transmission protective panel

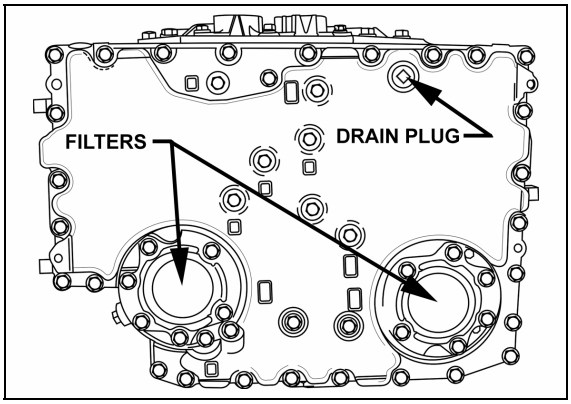

FIGURE 14: DRAIN PLUG AND FILTERS 07052

Refill

Using the oil level dipstick filler tube, refill with 37 US qts (39 liters) and check the oil level using the previously described procedure. The refill amount is less than the initial filling because some of the oil remains in the external circuits and transmission cavities.

4. TRANSMISSION REMOVAL

4.1 EATON AUTOMATIC TRANSMISSION

The following procedures deal with the removal of the transmission without removing the power plant cradle from vehicle. The method used to support the transmission depends upon conditions and available equipment.

1. Set transmission to "Neutral" position, apply parking brake, then set battery master switch to the *"OFF"* position.
2. Jack up vehicle, then place safety supports underneath body.

Caution: *Only the recommended jacking points must be used as outlined in Section 18,* "Body".

Note: *For more clearance between the tag axle and transmission, the tag axle may be unloaded and jacked up or retracted (if applicable).*

3. Remove engine splash guards and protective panels surrounding transmission.
4. Remove cross member from under transmission.
5. Remove the drain plugs on the bottom of the transmission case and on the bottom of the torque converter housing pan and allow oil to drain. Install the transmission case drain plug and tighten to 45-50 lbf-ft (61-68 N•m). Install the torque converter housing pan drain plug and tighten to 14-20 lbf-ft (19-27 N•m).

Warning: *It is better to drain oil when it is still warm. Avoid contact with oil since it can be very hot and cause personal injury.*

6. Remove transmission dipstick and filler tube.
7. Disconnect propeller shaft from transmission and remove its safety guard. Refer to Section 09, *"PROPELLER SHAFT"*.

8. Disconnect the two oil cooler hoses from transmission. Cover hose ends and fittings to prevent fluid contamination.

Warning: *A significant amount of oil may drain from oil lines when they are disconnected.*

9. Disconnect main power supply ring terminals and transmission interface harness (Fig. 15).

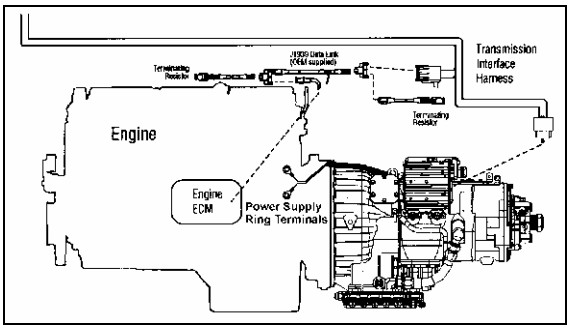

FIGURE 15: EATON TRANSMISSION CONNECTIONS 07066

10. Remove any locking tie, clamp and bracket that may interfere with the removal of transmission.

11. Support transmission using a suitable transmission jack with a minimum capacity of 1 ton, then remove the twelve transmission to flywheel housing mounting cap screws.

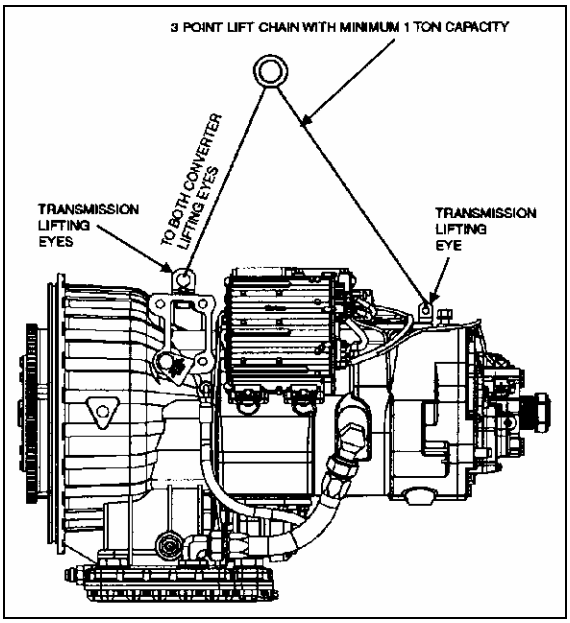

FIGURE 16: EATON TRANSMISSION LIFTING POINTS 07067

Caution: *Make sure transmission-to-engine alignment is maintained when removing screws to avoid damaging the torque converter housing.*

12. Slowly pull transmission straight out to clear the input shaft.

13. Remove the transmission.

4.2 ALLISON AUTOMATIC TRANSMISSION

The following procedure deals with the removal of the transmission without removing the power plant cradle from vehicle. The methods used to support the transmission and engine depend upon conditions and available equipment.

1. Select transmission's "NEUTRAL" position, apply parking brake, then set battery master switch to the "OFF" position.

2. Jack up vehicle, then place safety supports underneath body.

Caution: *Only the recommended jacking points must be used as outlined in Section 18,* "BODY".

Note: *For more clearance between the tag axle and transmission, the tag axle may be unloaded and jacked up or retracted (if applicable).*

3. Remove engine splash guards and protective panels surrounding transmission.

4. Remove cross member from under transmission.

5. Remove the transmission drain plug and allow oil to drain. Inspect the drain plug washer and replace it if necessary. Reinstall the drain plug and tighten to 33-41 lbf•ft (45-56 N•m) (see *"3.2.9 Oil and Filter Change"* in this section.

Warning: *It is better to drain oil when it is still warm. Avoid contact with oil since it can be very hot and cause personal injury.*

6. Remove transmission dipstick and filler tube.

7. Disconnect propeller shaft from transmission and remove its safety guard. Refer to Section 09, *"PROPELLER SHAFT".*

8. Disconnect the two oil cooler hoses from transmission. Cover hose ends and fittings to prevent fluid contamination.

Warning: *A significant amount of oil may drain from oil lines when they are disconnected.*

9. Disconnect all sensors on L.H. side of the transmission.

10. Disconnect main wiring harness.

11. Disconnect the air supply line (steel-braided hose) from retarder control valve (if applicable).

12. Remove any locking tie, clamp and bracket that may interfere with the removal of transmission.

13. Support transmission using a suitable transmission jack.

14. Remove the access plug from the flywheel housing on the R.H. side below starter. From access plug, remove the 12 converter-to-flexible plate attaching screws. Cranking the engine to gain access to the attaching screws may be done by turning the crankshaft pulley using a suitable adapter (fig. 17).

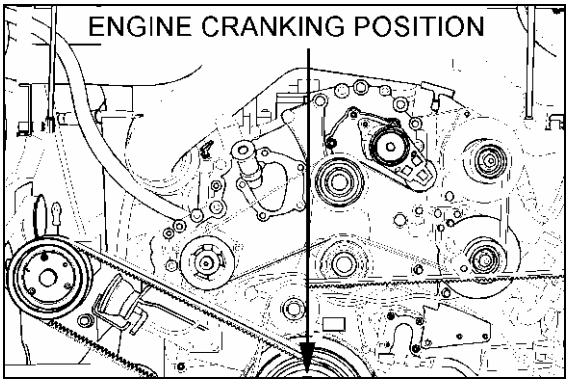

FIGURE 17: ENGINE CRANKING POSITIONS 01061

Caution: *Do not rotate alternator shaft clockwise to avoid removing tension on belt.*

15. Remove the 12 screws retaining the torque converter housing to the flywheel housing.

Caution: *Make sure transmission-to-engine alignment is maintained when removing screws to avoid damaging torque converter housing.*

16. Remove the transmission rubber mount above transmission by removing the nut, bolt and washer over the rubber and its support. Remove the bracket from transmission (only if the vehicle is equipped with a retarder).

17. Slowly pull transmission straight out to clear the engine.

18. Remove the transmission.

5. TRANSMISSION OIL COOLER REMOVAL

5.1 TRANSMISSION WITHOUT RETARDER

Stop engine and allow engine to cool. Close both heater line shutoff valves (refer to Section 05 *''Cooling''*).

To drain the cooling system, proceed as per Section 05 *''Cooling''*, paragraph 5: Draining. If the cooling system is contaminated, flush system as per Section 05 *''Cooling''*, paragraph 7: Flushing.

1. Disconnect and remove the engine air intake duct mounted between the air cleaner housing and the turbocharger inlet.

Caution: *To avoid damage to turbocharger, cover the turbocharger inlet opening to prevent foreign material from entering.*

2. Disconnect the two transmission hoses from oil cooler. Cover hose ends and fittings to prevent fluid contamination.

Warning: *A significant amount of oil may drain from oil lines when they are disconnected.*

3. Unfasten the constant-torque hose clamps and remove the two hoses.

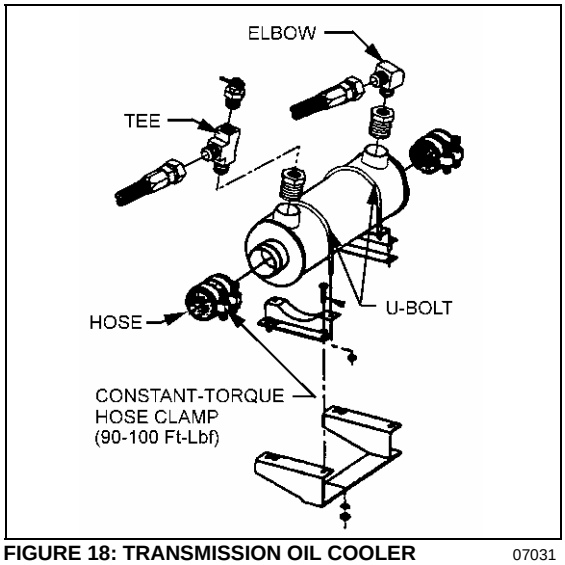

FIGURE 18: TRANSMISSION OIL COOLER 07031

4. Unscrew the four holding nuts and remove the U-bolts, remove the oil cooler from engine compartment.

5. Reinstall transmission oil cooler by using reverse procedure.

5.2 TRANSMISSION WITH RETARDER

This specification covers the procedure on installing the removable tube bundle into the shell.

Stop engine and allow engine to cool. Close both heater line shutoff valves (refer to Section 05 *''Cooling''*).

To drain the cooling system, proceed as per Section 05 *''Cooling''*, paragraph 5: Draining. If the cooling system is contaminated, flush system as per Section 05 *''Cooling''*, paragraph 7: Flushing.

1. Disconnect and remove the engine air intake duct mounted between the air cleaner housing and the turbocharger inlet.

Caution: *To avoid damage to turbocharger, cover the turbocharger inlet opening to prevent foreign material from entering.*

2. Disconnect the two transmission hoses from oil cooler. Cover hose ends and fittings to prevent fluid contamination.

Warning: *A significant amount of oil may drain from oil lines when they are disconnected.*

3. Unfasten the constant-torque hose clamps and remove the two hoses.
4. Unscrew the four holding nuts and remove the straps, remove the oil cooler from engine compartment.

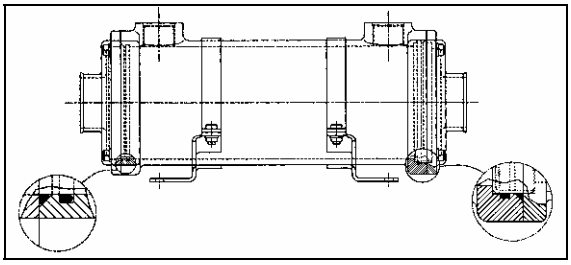

FIGURE 19: OIL COOLER INSTALLATION 07053

5. Unscrew the bolts and remove the water bonnets, remove the tube bundle. Clean and oil, (mineral oil is sufficient), inside of the shell.
6. Oil, (mineral oil is sufficient), and stretch all o'rings, stretching the o'rings slightly will help hold them in place during installation. It is mandatory to replace all o'rings after a unit is disassembled.

Note: *One end of the shell is larger than the other end and the tube bundle can only be inserted one way.*

7. Inspect, (beveled areas are critical), and oil, (mineral oil is sufficient), tube bundle.
8. Insert O-rings into the grooves on the shell, (one large and one small), inspect O-rings to ensure they are seated properly.
9. Place shell on solid surface with the smaller end down.

Note: *When inserting the floating tube bundle, be certain that the oil ports on the shell are orientated properly with the baffles on the tube bundle, (this will ensure maximum oil flow across the tube bundle.*

10. Care to be taken to ensure tube bundle and tube plate sealing surfaces are not damaged during the installation process. Insert the tube bundle with the smaller end first into the shell until snug.

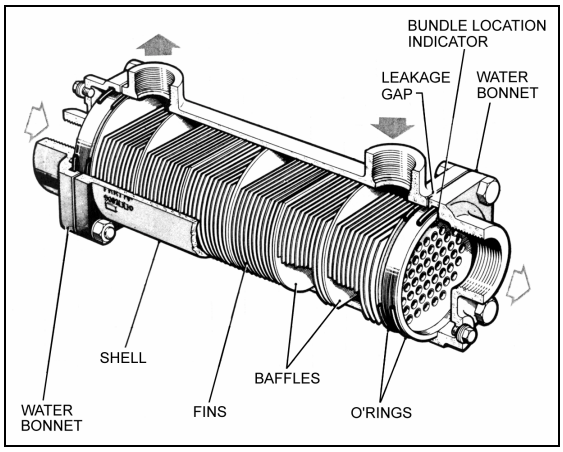

FIGURE 20: OIL COOLER SECTION VIEW 07054

11. While handling the unit be careful that the tube bundle does not slide out. Inspect the O-ring on smaller end and ensure that it is properly seated.
12. Slight force will be required to fully seat the tube bundle. A press is recommended being used to ensure equal force is applied to the tube bundle. After the tube bundle is fully seated, inspect the ends to ensure the o-rings were not damaged during the installation.
13. Place proper size O-rings onto the 45º chamfers on the tube bundle and install the

water bonnets. Tighten bolts snug to compress O-rings.

Caution: *Do not use air or electric impact wrenches while tightening bolts.*

14. Reinstall transmission oil cooler by using reverse procedure.

6. TRANSMISSION DISASSEMBLY AND REASSEMBLY

6.1 EATON AUTOMATIC TRANSMISSION

Refer to ''Eaton Fuller'' Service Manual, Direct Parts Shipment Program and Troubleshooting Guide annexed to this section.

7. CLEANING AND INSPECTION OF THE TRANSMISSION

7.1 EATON AUTOMATIC TRANSMISSION

When performing preventive maintenance inspections, several items must be checked. It is important, however, to perform every step to insure the transmission meets its life expectancy. Proper preventive maintenance consists of the following:

1. Check the transmission oil level;
2. Inspect under the vehicle for loose or missing bolts;
3. Check the transmission for oil leaks;
4. Inspect the rear transmission seal;
5. Worn or frayed electrical harnesses, improper routing.

Caution: *DO NOT pressure wash the transmission electrical connectors. Water and detergent will cause the contacts to corrode or become faulty.*

7.2 ALLISON AUTOMATIC TRANSMISSION

The exterior of the transmission should be cleaned and inspected at regular intervals. The length of service and severity of operating conditions will determine the frequency of such inspections. Inspect the transmission for:

1. Loose bolts (transmission and mounting components);
2. Oil leaks (correct immediately);
3. Loose, dirty, or improperly adjusted throttle sensor linkage;
4. Damaged or loose oil lines;
5. Worn or frayed electrical harnesses, improper routing;
6. Worn or out of phase drive line U-joint and slip fittings.

Caution: *DO NOT pressure wash the transmission electrical connectors. Water and detergent will cause the contacts to corrode or become faulty.*

7.2.1 Breather

The breather is located on the engine, flywheel side near the valve cover. It serves to prevent pressure build-up within the transmission and must be cleaned to keep the passage opened. The prevalence of dust and dirt will determine the frequency at which the breather requires cleaning. Use care when cleaning the engine. Spraying steam, water or cleaning solution directly at the breather can force the water or solution into the transmission. Always use care when removing the hose connector from transmission to prevent the entry of foreign matter.

8. TRANSMISSION INSTALLATION

8.1 EATON AUTOMATIC TRANSMISSION

Note: *For more clearance between the tag axle and transmission, the tag axle may be unloaded and jacked up, or retracted (if applicable).*

1. Handle the transmission carefully to avoid damage to the transmission components and to surrounding vehicle components.
2. Never set the transmission directly on the oil pan. If the pan is damaged or bent inward, the internal suction screen should be inspected for damage.
3. Use a hoist or a transmission jack that permits precise control of transmission movement during installation.

4. Use the three transmission lifting eyes provided. The lifting eye position must not be changed on the transmission.

Note: *Refer to figure 21 for lifting eye and sensor retaining bolt locations. These bolts can not be used for brackets or for any other purpose.*

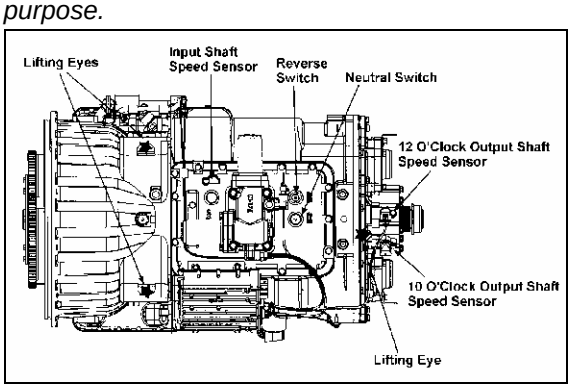

FIGURE 21: LIFTING EYES AND SENSOR POSITION07068

5. Use a three point lift chain or transmission jack with a minimum capacity of 1 ton. Adjust lift chain or transmission jack to obtain the same relative angle as the engine.
6. Lubricate the torque converter center pilot and the transmission O-ring seal with soluble grease or equivalent.
7. Align the converter splines and the flywheel splines to mesh and push the transmission into the flywheel ring and housing. Pushing by hand should be the only force required to seat the transmission O-ring into the housing. If interference is encountered, move the transmission away from the engine to investigate the cause.
8. Align the converter housing bolt holes with the engine flywheel housing bolt holes and install all the cap screws finger tight.

Caution: *The converter housing must be flush against the engine flywheel housing before tightening any cap screws. Do not use the cap screws to seat housing.*

9. Tighten four mounting cap screws at 90° intervals around the converter housing, then tighten the remaining transmission mounting cap screws using the recommended torque specifications (37-50 lbf-ft when using 7/16-14 x ¼ SAE grade 5 minimum zinc chromate hex head flanged cap screws with sealant).

Caution: *Do not tighten any mounting cap screws until all cap screws have been installed and finger tightened. Do not remove the transmission support chain or jack until all mounting cap screws have been tightened.*

10. Install the transmission rubber mount between the rubber support and the frame with a bolt, nut and washer. Tighten the nut until the tolerance is met.
11. Remove jack from under transmission.
12. Reconnect main power supply ring terminals and transmission interface harness.
13. Reinstall clamps, brackets, and replace locking ties previously removed during removal procedure.
14. Reinstall the two oil cooler hoses previously removed from the transmission.
15. Install propeller shaft and its safety guard. Refer to Section 09, *"PROPELLER SHAFT"*.
16. Install cross member under transmission.
17. Install engine splash guards.
18. Install tag axle wheels (if previously removed).
19. Make sure that the drain plugs are in place, then refill transmission. Check and adjust oil level.

8.2 ALLISON AUTOMATIC TRANSMISSION

Note: *For more clearance between the tag axle and transmission, the tag axle may be unloaded and jacked up, or retracted (if applicable).*

1. With the access plug removed, align one of the 12 attaching screw holes in the flexible plate with the access opening (starter side).
2. Place the transmission on a transmission jack.
3. Install a headless guide bolt into one of the 12 threaded holes for flexible plate attaching screws in the flywheel.
4. Lubricate the flywheel center pilot boss with molybdenum disulfide grease (Molycote G, or equivalent).
5. Raise transmission and position the flywheel pilot boss into the flexible plate adapter. Align the guide bolt previously installed in the

flywheel with the flexible plate hole facing the access opening in the flywheel housing.

Warning: *Severe damages and/or personal injury can occur if transmission is not adequately supported.*

6. Seat the transmission against the engine flywheel housing. NO FORCE IS REQUIRED. If interference is encountered, move the transmission away from engine, then investigate the cause.

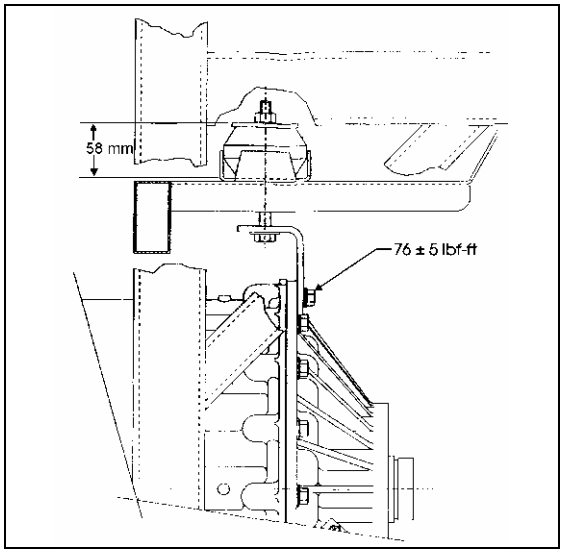

FIGURE 22: NUT TOLERANCE 07014

Caution: *The torque converter housing must be seated against the flywheel housing prior to tightening any screws. DO NOT USE SCREWS TO SEAT THE HOUSING.*

7. Start all torque converter housing screws, then tighten four of them gradually and in a criss-cross sequence around the housing. Tighten the 12 remaining screws. Recommended torque is between 42-50 lbf•ft (57-68 N•m).

8. Remove the guide bolt through the access opening in the flywheel housing. Replace it with a self-locking screw, finger-tighten then start the remaining screws; tighten to 17-21 lbf•ft (23-28 N•m). Place a wrench on the crankshaft pulley attaching screw to turn the converter to gain access to the threaded holes.

9. Reinstall the access plug.

10. If the vehicle is equipped with a retarder; install the bracket on the transmission and tighten the bolt to 71-81 lbf•ft (96-110 N•m). Install the transmission rubber mount between the rubber support and the frame with a bolt, nut and washer. Tighten the nut until the tolerance of 58 ± 2 mm is met (Fig. 12).

11. Remove jack from under transmission.

12. Connect all sensors.

13. Connect the main wiring harness.

14. Connect the air supply line (steel-braided hose) to the retarder control valve (if applicable).

15. Connect the two transmission oil cooler hoses as they were previously.

16. Reinstall clamps and brackets, and replace locking ties previously removed during removal procedure.

17. Install propeller shaft and its safety guard. Refer to Section 09, *"PROPELLER SHAFT".*

18. Install transmission dipstick and filler tube.

19. Install cross member under transmission.

20. Install engine splash guards.

21. Adjust the retarder pressure to 80 ± 3 psi with the air pressure regulator. For more information refer to Section 12, *"BRAKE AND AIR SYSTEM*", under heading *"AIR PRESSURE REGULATOR".* The air pressure regulator is located at back of engine compartment, on R.H. side (Fig. 23) or in the R.H. side rear service compartment.

22. Make sure that the drain plug is in place, then remove the transmission dipstick and pour approximately 37 US quarts (39 L) of automatic transmission fluid through the filler tube. Check and adjust oil level.

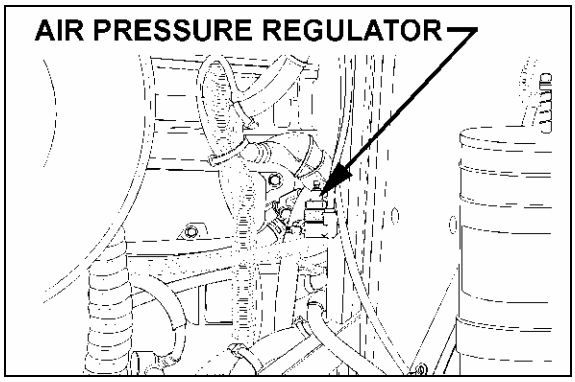

FIGURE 23: AIR PRESSURE REGULATOR (TYPICAL) 07037

Caution: *Do not overfill the transmission. Overfilling can cause oil aeration (milky appearance) and overheating. If overfilling occurs, drain oil as required to bring it to the proper level.*

9. ALLISON TRANSMISSION PRINCIPLES OF OPERATION

Refer to *"Allison Transmission, MD Series, Principles of Operation, SA 2454".*

10. TROUBLESHOOTING

10.1 EATON AUTOMATIC TRANSMISSION

Refer to ''Eaton Fuller'' Troubleshooting Guide TRTS-0062 annexed at the end of this section.

Fault code retrieval and clearing

Retrieve AutoShift fault codes by enabling the system's self-diagnostic mode or using a PC-based service tool, such as the Service Ranger:

- Place the transmission in neutral;
- Apply the parking brakes;
- Turn the ignition key to ON but do not start the engine. If the engine is already running, you may still retrieve codes, but do not engage the starter if the engine stalls;
- Retrieve codes :

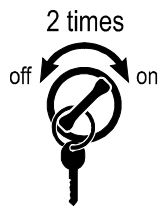

To retrieve active codes, start with the key/lever in the ON position. Turn the key/lever OFF and ON two times within five seconds ending with the key/lever in the ON position.

After five seconds, the service light begins flashing two-digit fault codes. If no codes are active, the service light will flash code 25 (no codes).

Observe the sequence of flashes on the service light and record the codes. A one to two second pause separates each stored code and the sequence automatically repeats after all the codes have been flashed.

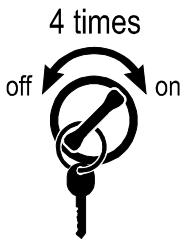

To retrieve inactive (intermittent) codes, start with the key/lever in the ON position. Turn the key/lever OFF and ON four times within five seconds ending with the key/lever in the ON position.

After five seconds, the service light begins flashing two-digit fault codes. If no codes are active, the service light will flash code 25 (no codes).

Observe the sequence of flashes on the service light and record the codes. A one to two second pause separates each stored code and the sequence automatically repeats after all the codes have been flashed.

- Clearing Fault Codes :

The following procedure clears all inactive codes from the ECU's memory (active fault codes are automatically cleared when the fault has been corrected).

Note: *PC-based tools such as Service Ranger can be used to clear codes.*

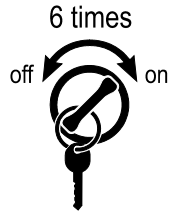

To clear inactive codes, start with the key/lever in the ON position. Turn the key/lever OFF and ON six times within five seconds ending with the key/lever in the ON position. If the codes have been successfully cleared, the service light will come on and stay on for five seconds.

Turn the key/lever to the OFF position and allow the system to power down.

- Observe the sequence of flashes on the indicator lights and record the codes. A one or two second pause separates each stored code and the sequence automatically repeats after all codes have been flashed.

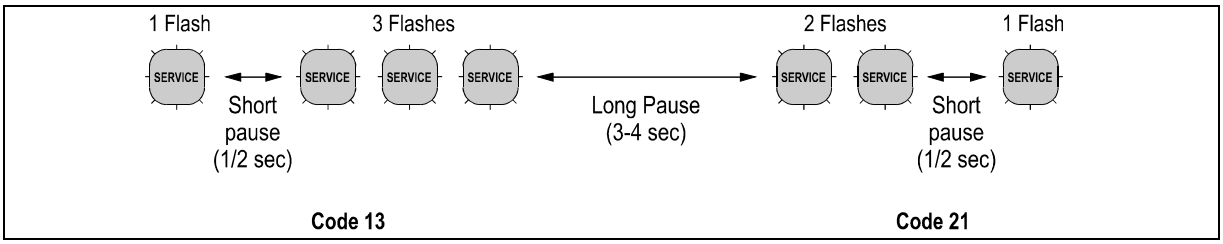

Refer to Eaton Fuller Troubleshooting Guide (TRTS-0062).

Eaton Fuller Automatic Transmission Fault Codes					
Code	**Description**	**Code**	**Description**	**Code**	**Description**
11	Shift Control	35	J-1939 Data Link	58	Output shaft speed sensor
12	Transmission ECU	41	Range failed to engage	61	Rail select motor
16	Eaton proprietary link (EPL)	42	Splitter Failed to Engage	63	Gear select motor
17	Start enable relay Coil	43	Range Solenoid Valve	65	Logic Power

Eaton Fuller Automatic Transmission Fault Codes					
Code	**Description**	**Code**	**Description**	**Code**	**Description**
21	Interrupt Solenoid Coil	44	Inertia brake solenoid coil	71	Stuck engaged
22	Lockup/Bypass Solenoid Coil	51	Rail select sensor	72	Failed to select rail
24	Hydraulic System Fault	52	Gear select sensor	73	Failed to engage gear
32	Switched System Voltage	56	Input shaft speed sensor	74	Failed to synchronize
33	Battery voltage supply	57	Main shaft speed sensor	83	Shift lever missing

10.2 ALLISON AUTOMATIC TRANSMISSION

Refer to “Allison Transmission, MD Series, Troubleshooting Manual, SA 2158A”.

10.2.1 WTEC/Electronic Control Unit

The ’’World’’ automatic transmission has a new Electronic Control Unit (ECU) which involves specific diagnostic incident codes. The ECU transmission unit is located in the coach front service compartment.

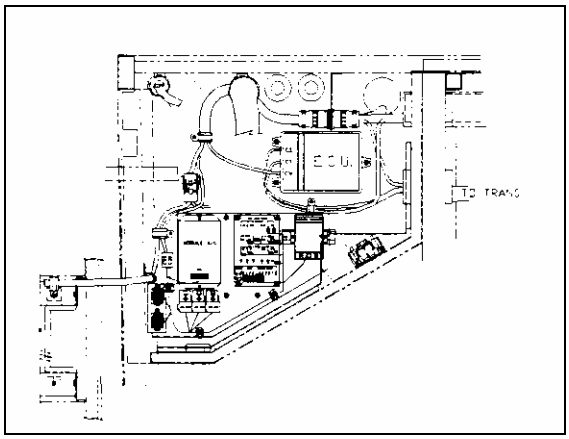

FIGURE 24: WTEC / ELECTRONIC CONTROL UNIT 07039

WTEC/ECU Replacement

The automatic transmission ECU is a non-serviceable electronic device. When it fails, it must be replaced using the following procedure:

- open the coach front service compartment in order to get access to the ECU;
- remove the electrical cable connectors;
- unscrew the WTEC/ECU unit;
- replace by reversing the procedure.

Caution: *Place the battery master switch to the ’’OFF’’ position.*

10.2.2 WTEC/Troubleshooting

For complete information about WTEC/Troubleshooting, refer to ’’Allison Transmission, MD Series, Troubleshooting Manual, SA2978’’ March 1997, pages D-9 and D-

10.2.3 Diagnostic Code Memory

Diagnostic codes are logged in a list in memory (sometimes referred to as the queue), positioning the most recently occurring code first and containing up to five codes. The codes contained in the list have the information recorded as shown in the chart below. Access to the code list position, main code, sub code and active indicator is available through either the shifter display or the Pro-Link Diagnostic Data Reader (DDR). Access to the ignition cycle counter and event counter is obtained through the DDR only.

Code List Position	Main Code	Sub Code	Active Indicator	Ignition Cycle Counter	Event Counter
d1	21	12	YES	00	10
d2	41	12	YES	00	04
d3	23	12	NO	08	02
d4	34	12	NO	13	01
d5	56	11	NO	22	02
Displayed on shifter display and DDR			YES= ACTIVE= "MODE ON"	Ignition cycle counter and event counter are not available on shifter display	

Note: *All information is available with a diagnostic tool (DDR).*

The following paragraphs define the different parts of the code list.

Code List Position

The position (1 through 5) which a code occupies in the code list in memory. Positions are shown as "d1" (Diagnostic Code #1) through "d5."

Main Code

The general condition or area of fault detected by ECU.

Sub Code

The specific area or condition under the main code in which the condition was detected.

Active Indicator

Will be turned "On" when a fault condition is active (shifter will display "MODE ON" or the DDR will display "YES"). Will be set to "Off" when conditions exist to indicate fault condition is gone.

Ignition Cycle Counter

Used to clear diagnostic codes that are inactive from the code list in memory. A counter is incremented each time a normal ECU power down occurs following clearing of the Active Indicator. A code will be cleared from the list when the counter exceeds 25.

Event Counter

Used to count the number of occurrences of a diagnostic code that occurs prior to the incident being cleared from the code list. The most recent code will be in position "d1". If the most recent code is one which is already in the code list, that code will be moved to position "d1", the Active Indicator will be turned "On" (shifter will display "MODE ON" or the DDR will display "YES"), the Ignition Cycle Counter is cleared and "1" is added to the Event Counter.

Clearing the Active Indicator and code Records from the Code List in Memory

If the conditions causing a diagnostic code to be set are cleared, the Active Indicator can be manually cleared by holding the "MODE" button down continuously for 3 seconds until a tone is heard from the shifter.

To clear code records from the list, hold the "MODE" button down continuously for ten seconds until a second tone sounds. All diagnostic records in the list that are not active will then be cleared and the remaining records will be moved up the list.

Code Reading and Code Clearing Procedures

Diagnostic codes can be read and cleared by two methods: by using the Pro-Link 9000 DDR plugged in the receptacle located on L.H. lateral console (Shells)/L.H. side control panel (Coaches) or by using the shifter display. The use of the Pro-Link 9000 DDR is described in the instruction manual supplied with each tool. The method for reading and clearing codes described in this section refers only to entering of the Diagnostic Display Mode by the proper button selection.

The Diagnostic Display Mode may be entered for viewing of codes at any speed. Codes can only be cleared when the output speed = 0 and no output speed sensor failure is active.

The following descriptions explain how to use the shifter to read and clear codes.

10.2.4 Reading Codes

1. Enter the diagnostic display mode by pressing the "⬆" and "⬇" (upshift and downshift arrows) buttons at the same time on the pushbutton shifter.

Note: *If a "DO NOT SHIFT" condition is present at this time, the lever should be in the same position as it was at the time of code detection. If not, this shifter tone will sound continuously.*

Note*: If an Oil Level Sensor (OLS) is present, the oil level will be displayed first. Diagnostic code display is achieved by depressing the UPSHIFT and DOWNSHIFT arrows or display MODE button a second time.*

2. Read the first code in the first of five code positions on the digital display of the shifter. For example, we will read code 25 11 in the first position. The display will change every two seconds as follows:
   a. Code list position --"d1";
   b. Main code --"25";
   c. Sub code --"11"; and
   d. Display will repeat cycle of a., b. and c, above.
3. Press the "MODE" button momentarily to view the second position (d2) in the same way as 2. above.
4. To view the third, fourth and fifth positions (d3, d4 and d5), momentarily press the "MODE" button as explained above.
5. Pressing the "MODE" button momentarily after the fifth position is displayed will cause the sequence of code positions to start over with the first position.
6. Any code that is active will be indicated by the "MODE ON" indicator (Active Indicator) being turned on while in that code position (while in the normal operation).
7. Any code position in the list which does not have a diagnostic code logged will display "- - " for both the main and sub code displays. All positions after a code codes.

10.2.5 Clearing Codes

1. Clearing of the active indicator is automatically done at ECU power down on all but code 69 34.
2. Some codes will clear the active indicator automatically when the condition causing the code is no longer detected by the ECU (see Diagnostic Code List and Description, page 7 - 22).
3. Manual clearing is possible while in the diagnostic display mode and after the condition causing the code is corrected (output speed must be zero).
   a. To clear all active indicators, hold the "MODE" button down continuously for 3 seconds until the shifter tone sounds for 0.5 seconds.
   b. Release the "MODE" button to return to normal operating mode. If the condition causing the code was not active at the time, the active indicator will turn off.

Caution: *If clearing a code while locked in a Forward or Reverse position (fail-to-range), the transmission will still be in Drive or Reverse when the clearing procedure is completed. Neutral must be selected manually.*

Exiting the Diagnostic Display Mode

The diagnostic display mode can be exited by any of the following procedures:

1. Press the "⬆" and "⬇" (upshift and downshift) buttons at the same time on the pushbutton shifter.
2. Press any range button, "D", "N" or "R", on the pushbutton shifter (the shift will be commanded if it is not inhibited by an active code).
3. Do nothing and wait until the calibrated time (approximately 10 minutes) has passed and the system automatically returns to the normal operating mode.
4. Turn off power to the ECU (turn off the vehicle at the ignition switch).
5. After the clearing of a code, the active indicator procedure described above has been performed.

Clearing Records from the Code List in Memory

If the requirements for Manual Clearing the Active Indicator have been satisfied, and the "MODE" button is held down continuously for ten seconds while in the display mode until a tone sounds, then all diagnostic records in the code list that are not active will be cleared and the remaining records will be moved up in the code list.

Abbreviations found in the Code Chart

The following responses are used throughout the following chart to command safe operation when diagnostic codes are set.

1. **DNS** (**D**o **N**ot **S**hift) Response
   a. Turn off lockup clutch and inhibit lockup operation.

b. Inhibit all shifts.

c. Turn on the *DO NOT SHIFT* light.

d. Pulse the tone generator for 8 seconds when the condition is first detected.

e. Blank the select digit in the display.

f. Ignore any range selection inputs and disable the button feedback tone for the pushbutton shifter.

2. **SOL OFF** (**Sol**enoid **Off**) Response

   All solenoids are commanded off (turning solenoids "A" and "B" off electrically causes them to be on hydraulically).

3. **RPR** (**R**eturn to **P**revious **R**ange) Response

   When the ratio or C3 pressure switch tests associated with a shift are not passed, the ECU commands the same range as commanded at the beginning of the shift.

4. **NNC** (**N**eutral **N**o **C**lutches) Response

   When certain ratio or C3 pressure switch tests are not passed, the ECU commands a neutral condition with no clutches applied.

Diagnostic code list and description

MAIN CODE	SUB CODE	DESCRIPTION	DO NOT SHIFT LIGHT	INHIBITED OPERATION DESCRIPTION
12	12	Oil level, low	No	No upshift above a calibration range
12	23	Oil level, high	No	No upshift above a calibration range
13	12	ECU input voltage, low	Yes	DNS, SOL OFF (Hydraulic default)
13	13	ECU input voltage, medium low	No	None: Shift adaptive feature will not function.
13	23	ECU input voltage, high	Yes	DNS, SOL OFF (Hydraulic default)
14	12	Oil level sensor, low	No	None
14	23	Oil level sensor, high	No	None
21	12	Throttle position sensor, low	No	Use Throttle default value
21	23	Throttle position sensor, high	No	Use Throttle default value
22	14	Engine speed sensor reasonableness test	No	Use default engine speed
22	15	Turbine speed sensor reasonableness test	Yes	DNS, Lock in current range
22	16	Output speed sensor reasonableness or rapid decel test	Yes	DNS, Lock in current range
23	12	Primary Shifter or RSI Link Fault	No	Hold in last valid direction
23	13	Primary Shifter Mode Function Fault	No	Mode change not permitted

MAIN CODE	SUB CODE	DESCRIPTION	DO NOT SHIFT LIGHT	INHIBITED OPERATION DESCRIPTION
23	14	Secondary Shifter or RSI Link Fault	No	Hold in last valid direction
23	15	Secondary Shifter Mode Function Fault	No	Mode change not permitted
24	12	Sump oil temperature, cold	Yes	DNS
24	23	Sump oil temperature, hot	No	No upshifts above a calibration range
25	00	Output speed reasonableness test, detected at 0 speed, (L)	Yes	DNS, Lock in current range (L)
25	11	Output speed reasonableness test, detected at 0 speed, (1st)	Yes	DNS, Lock in current range (1st)
25	22	Output speed reasonableness test, detected at 0 speed 2nd	Yes	DNS, Lock in current range (2nd)
25	33	Output speed reasonableness test, detected at 0 speed, 3rd	Yes	DNS, Lock in current range (3rd)
25	44	Output speed reasonableness test, detected at 0 speed, 4th	Yes	DNS, Lock in current range (4th)
25	55	Output speed reasonableness test, detected at 0 speed, 5th	Yes	DNS, Lock in current range (5th)
25	66	Output speed reasonableness test, detected at 0 speed, 6th	Yes	DNS, Lock in current range (6th)
25	77	Output speed reasonableness test, detected at 0 speed, R	Yes	DNS, Lock in current range (R)
32	00	C3 pressure switch open, L range	Yes	DNS, Lock in current range (L)
32	33	C3 pressure switch open, 3rd range	Yes	DNS, Lock in current range (3rd)
32	55	C3 pressure switch open, 5th range	Yes	DNS, Lock in current range (5th)
32	77	C3 pressure switch open, R range	Yes	DNS, Lock in current range (R)
33	12	Sump oil temperature sensor, low	No	Use default value of 200ºF (93ºC)
33	23	Sump oil temperature sensor, high	No	Use default value of 200º F (93º C)
34	12	EEPROM, factory cal. compatibility number wrong	Yes	DNS, SOL OFF (Hydraulic default)

MAIN CODE	SUB CODE	DESCRIPTION	DO NOT SHIFT LIGHT	INHIBITED OPERATION DESCRIPTION
34	13	EEPROM, factory calibration block checksum	Yes	DNS, SOL OFF (Hydraulic default)
34	14	EEPROM, Power Off Block checksum	Yes	Use previous location, or factory calibration and reset adaptive
34	15	EEPROM, Diagnostic Queue Block Checksum	Yes	Use previous location, or clear diagnostic queue
34	16	EEPROM, Real Time Block Checksum	Yes	DNS, SOL OFF (Hydraulic default)
35	00	Power interruption (Code set after power restored)	No	NONE (Hydraulic default during interruption)
35	16	Real Time EEPROM Write Interruption	Yes	DNS, SOL OFF (Hydraulic default)
36	00	Hardware/Software not compatible	Yes	DNS, SOL OFF (Hydraulic default)
41	12	Open or short to ground, A solenoid circuit	Yes	DNS, SOL OFF (Hydraulic default)
41	13	Open or short to ground, B solenoid circuit	Yes	DNS, SOL OFF (Hydraulic default)
41	14	Open or short to ground, C solenoid circuit	Yes	DNS. SOL OFF (Hydraulic default)
41	15	Open or short to ground, D solenoid circuit	Yes	DNS, SOL OFF (Hydraulic default)
41	16	Open or short to ground, E solenoid circuit	Yes	DNS, SOL OFF (Hydraulic default)
41	21	Open or short to ground, F solenoid circuit	No	Lock-up inhibited
41	22	Open or short to ground, G solenoid circuit	Yes	DNS, SOL OFF (Hydraulic default)
41	23	Open or short to ground, H solenoid circuit	No	Retarder allowed, differential lock inhibited
41	24	Open or short to ground, J solenoid circuit	No	Low and 1st inhibited
41	25	Open or short to ground, K solenoid circuit	No	K solenoid operation inhibited
41	26	Open or short to ground,	No	Low and 1st inhibited

MAIN CODE	SUB CODE	DESCRIPTION	DO NOT SHIFT LIGHT	INHIBITED OPERATION DESCRIPTION
		N solenoid circuit		
42	12	Short to battery, A solenoid circuit	Yes	DNS, Lock in a range
42	13	Short to battery, B solenoid circuit	Yes	DNS, Lock in a range
42	14	Short to battery, C solenoid circuit	Yes	DNS, Lock in a range
42	15	Short to battery, D solenoid circuit	Yes	DNS, Lock in a range
42	16	Short to battery, E solenoid circuit	Yes	DNS, Lock in a range
42	21	Short to battery, F solenoid circuit	No	Lock-up inhibited
42	22	Short to battery, G solenoid circuit	Yes	DNS, Lock in a range
42	23	Short to battery, H solenoid circuit	No	Retarder allowed, differential lock inhibited
42	24	Short to battery, J solenoid circuit	No	Low and 1st inhibited
42	25	Short to battery, K solenoid circuit	No	K solenoid operation inhibited
42	26	Short to battery, N solenoid circuit	No	Low and 1st inhibited
43	21	Low side driver, F solenoid circuit	No	Lock-up inhibited
43	25	Low side driver, K solenoid circuit	No	K solenoid operation inhibited
43	26	Low side driver, N solenoid circuit	No	Low and 1st inhibited
44	12	Short to ground, A solenoid circuit	Yes	DNS, SOL OFF (Hydraulic default)
44	13	Short to ground, B solenoid circuit	Yes	DNS, SOL OFF (Hydraulic default)
44	14	Short to ground, C solenoid circuit	Yes	DNS, SOL OFF (Hydraulic default)

MAIN CODE	SUB CODE	DESCRIPTION	DO NOT SHIFT LIGHT	INHIBITED OPERATION DESCRIPTION
44	15	Short to ground, D solenoid circuit	Yes	DNS, SOL OFF (Hydraulic default)
44	16	Short to ground, E solenoid circuit	Yes	DNS, SOL OFF (Hydraulic default)
44	21	Short to ground, F solenoid circuit	No	Lock-up inhibited
44	22	Short to ground, G solenoid circuit	Yes	DNS, SOL OFF (Hydraulic default)
44	23	Short to ground, H solenoid circuit	No	Retarder allowed. differential lock inhibited
44	24	Short to ground, J solenoid circuit	No	Low and 1st inhibited
44	25	Short to ground, K solenoid circuit	No	K solenoid operation inhibited
44	26	Short to ground, N solenoid circuit	No	Low and 1st inhibited
45	12	Open circuit, A solenoid circuit	Yes	DNS, SOL OFF (Hydraulic default)
45	13	Open circuit, B solenoid circuit	Yes	DNS, SOL OFF (Hydraulic default)
45	14	Open circuit, C solenoid circuit	Yes	DNS, SOL OFF (Hydraulic default)
45	15	Open circuit, D solenoid circuit	Yes	DNS, SOL OFF (Hydraulic default)
45	16	Open circuit, E solenoid circuit	Yes	DNS, SOL OFF (Hydraulic default)
45	21	Open circuit, F solenoid circuit	No	Lock-up inhibited
45	22	Open circuit, G solenoid circuit	Yes	DNS, SOL OFF (Hydraulic default)
45	23	Open circuit, H solenoid circuit	No	Retarder allowed differential lock inhibited
45	24	Open circuit, J solenoid circuit	No	Low and 1st inhibited
45	25	Open circuit, K	No	K solenoid operation

MAIN CODE	SUB CODE	DESCRIPTION	DO NOT SHIFT LIGHT	INHIBITED OPERATION DESCRIPTION
		solenoid circuit		inhibited
45	26	Open circuit, N solenoid circuit	No	Low and 1st inhibited
51	10	Offgoing ratio test (during shift), 1 to L	Yes	Low and 1st inhibited
51	12	Offgoing ratio test (during shift), 1 to 2	Yes	DNS, RPR
51	21	Offgoing ratio test (during shift), 2 to 1	Yes	DNS, RPR
51	23	Offgoing ratio test (during shift), 2 to 3	Yes	DNS, RPR
51	43	Offgoing ratio test (during shift), 4 to 3	Yes	DNS, RPR
51	45	Offgoing ratio test (during shift), 4 to 5	Yes	DNS, RPR
51	65	Offgoing ratio test (during shift), 6 to 5	Yes	DNS, RPR
52	01	Offgoing C3PS test (during shift), L to 1	Yes	DNS, RPR
52	08	Offgoing C3PS test (during shift), L to N1	Yes	DNS, NNC
52	32	Offgoing C3PS test (during shift), 3 to 2	Yes	DNS, RPR
52	34	Offgoing C3PS test (during shift), 3 to 4	Yes	DNS, RPR
52	54	Offgoing C3PS test (during shift), 5 to 4	Yes	DNS, RPR
52	56	Offgoing C3PS test (during shift), 5 to 6	Yes	DNS, RPR
52	71	Offgoing C3PS test (during shift), R to 1	Yes	DNS, NNC
52	72	Offgoing C3PS test (during shift), R to 2	Yes	DNS, NNC
52	78	Offgoing C3PS test (during shift),	Yes	DNS, NNC

MAIN CODE	SUB CODE	DESCRIPTION	DO NOT SHIFT LIGHT	INHIBITED OPERATION DESCRIPTION
		R to N1		
52	79	Offgoing C3PS test (during shift), R to 2 (R to NNC to 2)	Yes	DNS, NNC
52	99	Offgoing C3PS test (during shift), N3 to N2	Yes	DNS, RPR
53	08	Offgoing speed test (during shift), L to N1	Yes	DNS, NNC
53	18	Offgoing speed test (during shift), 1 to N1	Yes	DNS, NNC
53	28	Offgoing speed test (during shift), 2 to N1	Yes	DNS, NNC
53	29	Offgoing speed test (during shift), 2 to N2	Yes	DNS, RPR
53	38	Offgoing speed test (during shift), 3 to N1	Yes	DNS, NNC
53	39	Offgoing speed test (during shift), 3 to N3	Yes	DNS, RPR
53	48	Offgoing speed test (during shift), 4 to N1	Yes	DNS, NNC
53	49	Offgoing speed test (during shift), 4 to N3	Yes	DNS, RPR
53	58	Offgoing speed test (during shift), 5 to N1	Yes	DNS, NNC
53	59	Offgoing speed test (during shift), 5 to N3	Yes	DNS, RPR
53	68	Offgoing speed test (during shift), 6 to N1	Yes	DNS, NNC
53	69	Offgoing speed test (during shift), 6 to N4	Yes	DNS, RPR
53	78	Offgoing speed test (during shift), R to N1	Yes	DNS, NNC
53	99	Offgoing speed test (during shift), N2 to N3 or N3 to N2	Yes	DNS, RPR
54	01	Oncoming ratio test (after shift),	Yes	DNS, RPR

MAIN CODE	SUB CODE	DESCRIPTION	DO NOT SHIFT LIGHT	INHIBITED OPERATION DESCRIPTION
		L to 1		
54	07	Oncoming ratio test (after shift), L to R	Yes	DNS, NNC
54	10	Oncoming ratio test (after shift), 1 to L	Yes	DNS, RPR
54	12	Oncoming ratio test (after shift), 1 to 2	Yes	DNS, RPR
54	17	Oncoming ratio test (after shift), 1 to R	Yes	DNS, NNC
54	21	Oncoming ratio test (after shift), 2 to 1	Yes	DNS, RPR
54	23	Oncoming ratio test (after shift), 2 to 3	Yes	DNS, RPR
54	27	Oncoming ratio test (after shift), 2 to R	Yes	DNS, NNC
54	32	Oncoming ratio test (after shift), 3 to 2	Yes	DNS, RPR
54	34	Oncoming ratio test (after shift), 3 to 4	Yes	DNS, RPR
54	43	Oncoming ratio test (after shift), 4 to 3	Yes	DNS, RPR
54	45	Oncoming ratio test (after shift), 4 to 5	Yes	DNS, RPR or SOL OFF (Hydraulic default)
54	54	Oncoming ratio test (after shift), 5 to 4	Yes	DNS,RPR
54	56	Oncoming ratio test (after shift), 5 to 6	Yes	DNS,RPR
54	65	Oncoming ratio test (after shift), 6 to 5	Yes	DNS,RPR
54	70	Oncoming ratio test (after shift), R to L	Yes	DNS,NNC
54	71	Oncoming ratio test (after shift), R to 1	Yes	DNS,NNC
54	72	Oncoming ratio test (after shift),	Yes	DNS,NNC

MAIN CODE	SUB CODE	DESCRIPTION	DO NOT SHIFT LIGHT	INHIBITED OPERATION DESCRIPTION
		R to 2		
54	80	Oncoming ratio test (after shift), N1 to L	Yes	DNS,RPR
54	81	Oncoming ratio test (after shift), N1 to 1	Yes	DNS,RPR
54	82	Oncoming ratio test (after shift), N1 to 2	Yes	DNS,RPR
54	83	Oncoming ratio test (after shift), N1 to 3	Yes	DNS,RPR
54	85	Oncoming ratio test (after shift), N1 to 5	Yes	DNS,RPR
54	86	Oncoming ratio test (after shift), Nl to 6	Yes	DNS, RPR
54	92	Oncoming ratio test (after shift), R to 2 (R to NNC to 2)	Yes	DNS, NNC
54	92	Oncoming ratio test (after shift), N1 to 2 (N1 to NNC to 2)	Yes	DNS, RPR
54	92	Oncoming ratio test (after shift), N2 to 2	Yes	DNS, RPR
54	93	Oncoming ratio test (after shift), N3 to 3	Yes	DNS, RPR
54	95	Oncoming ratio test (after shift), N3 to 5	Yes	DNS, RPR
54	96	Oncoming ratio test (after shift), N4 to 6	Yes	DNS, RPR
54	97	Oncoming ratio test (after shift), 2 to R (2 to NNC to R)	Yes	DNS, NNC
55	17	Oncoming C3PS test (after shift), 1 to R	Yes	DNS, NNC
55	27	Oncoming C3PS test (after shift), 2 to R	Yes	DNS, NNC
55	80	Oncoming C3PS test (after shift), N1 to L	Yes	DNS, RPR
55	87	Oncoming C3PS test (after shift), N1 to R	Yes	DNS, RPR

MAIN CODE	SUB CODE	DESCRIPTION	DO NOT SHIFT LIGHT	INHIBITED OPERATION DESCRIPTION
55	97	Oncoming C3PS test (after shift), 2 to R or NVL to R (2 to NNC to R)	Yes	DNS, NNC
56	00	Range verification test, L	Yes	DNS, 1st, Low, or SOL OFF (Low)
56	11	Range verification test, 1st	Yes	DNS, 6th
56	22	Range verification test, 2nd	Yes	DNS, 6th or 5th
56	33	Range verification test, 3rd	Yes	DNS, 5th or SOL
56	44	Range verification test, 4th	Yes	DNS, 3rd or 5th
56	55	Range verification test, 5th	Yes	DNS, SOL OFF (5th) or 3rd
56	66	Range verification test, 6th	Yes	DNS, 5th, 3rd, or SOL OFF (3rd)
56	77	Range verification test, R	Yes	DNS, N2 or N3
57	11	Range verification C3PS test, 1st	Yes	DNS, SOL OFF (3rd)
57	22	Range verification C3PS test, 2nd	Yes	DNS, 3rd
57	44	Range verification C3PS test, 4th	Yes	DNS, 5th or SOL OFF (3rd)
57	66	Range verification C3PS test, 6th	Yes	SOL OFF (5th), DNS
57	88	Range verification C3PS test, N1	Yes	DNS, N3
57	99	Range verification C3PS test, N2 or N4	Yes	DNS, N3
61	00	Retarder oil temperature, hot	No	None
62	12	Retarder oil temperature sensor, low	No	None
62	23	Retarder oil temperature sensor, high	No	None
63	00	Special function input	No	Depends on special function
64	12	Retarder modulation request sensor, low	No	Retarder operation inhibited
64	23	Retarder modulation request sensor, high	No	Retarder operation inhibited
65	00	Engine rating too high	Yes	DNS
66	00	Serial communications interface fault	No	Use default throttle values
69	12	ECU, A solenoid driver open	Yes	DNS, SOL OFF

MAIN CODE	SUB CODE	DESCRIPTION	DO NOT SHIFT LIGHT	INHIBITED OPERATION DESCRIPTION
				(hydraulic default)
69	13	ECU, B solenoid driver open	Yes	DNS, SOL OFF (hydraulic default)
69	14	ECU, C solenoid driver open	Yes	DNS, SOL OFF (hydraulic default)
69	15	ECU, D solenoid driver open	Yes	DNS, SOL OFF (hydraulic default)
69	16	ECU, E solenoid driver open	Yes	DNS, SOL OFF (hydraulic default)
69	21	ECU, F solenoid driver open	No	Lock-up inhibited
69	22	ECU, G solenoid driver open	Yes	DNS, SOL OFF (Hydraulic default)
69	23	ECU, H solenoid driver open	No	Retarder allowed, differential lock inhibited
69	24	ECU, J solenoid driver open	No	Low and 1 st inhibited
69	25	ECU, K solenoid driver open	No	K solenoid operation inhibited
69	26	ECU, N solenoid driver open	No	Low and 1st inhibited
69	32	ECU, SPI communications link fault	No	Hold in last valid direction
69	33	ECU, Central Operating Processor (COP) time-out	Yes	Reset ECU, Shutdown ECU on 2nd occurrence (power loss: hydraulic defaults)
69	34	ECU, EEPROM write time-out	Yes	DNS, SOL OFF (Hydraulic default)
69	35	ECU, EEPROM checksum	Yes	Induce COP time-out (reset ECU)
69	36	ECU, RAM self test	Yes	Induce COP time-out (reset ECU)
69	41	ECU, I/O ASIC addressing test	Yes	Induce COP time-out (reset ECU)
0	35	Software, minor loop overrun	Yes	Induce COP time-out (reset ECU)
70	35	Software, illegal write to access $0000	Yes	Induce COP time-out (reset ECU)
70	35	Software, major loop overrun	Yes	Induce COP time-out

MAIN CODE	SUB CODE	DESCRIPTION	DO NOT SHIFT LIGHT	INHIBITED OPERATION DESCRIPTION
				(reset ECU)

11. SPECIFICATIONS

EATON AUTOMATIC TRANSMISSION

Make ..... Eaton Fuller Autoshift
Model TO-14607B-AST

Ratio:

Overall 12.35:1
Reverse 8.99:1
1st 9.24:1
2nd 5.35:1
3rd 3.22:1
4th 2.04:1
5th 1.37:1
6th 1.00:1
7th 0.75:1
Torque converter stall ratio 2.2:1

Fluid:

Type ..... Dexron III
Capacity ..... 89 US pints (42 liters)
Torque Capacity ..... 1450 lbf•ft (1964 N•m)

ALLISON AUTOMATIC TRANSMISSION WITH OR WITHOUT RETARDER

XL2 Buses
Gross input power (maximum) ..... 450 hp (335 kW)
Gross input torque (maximum) ..... 1460 lbf•ft (1978 N•m)
Rated input speed (minimum-maximum) ..... 1600-2300 rpm
XL2 MTH
Gross input power (maximum) ..... 525 hp (391 kW)
Gross input torque (maximum) ..... 1550 lbf•ft (2102 N•m)
Rated input speed (minimum-maximum) ..... 1600-2300 rpm

Mounting:
Engine ..... SAE #1 flywheel housing, flex disk drive

Torque converter:
Type ..... One stage, three element, polyphase
Stall torque ratio ..... TC 521-2.4;TC 531-2.3;TC 541-1.9;TC 551-1.8;TC 561-1.6
Lockup clutch with torsional damper ..... Integral/standard

Gearing:
Type ..... Patented, constant mesh, helical, planetary

Ratio:

First	3.51:1
Second	1.91:1
Third	1.43:1
Fourth	1.00:1
Fifth	0.74:1
Sixth	0.64:1
Reverse	4.80:1

Ratio coverage:

6 speed	5.48:1

*** Gear ratios do not include torque converter multiplication.**

Oil System:

Oil type	DEXRON-IIE, DEXRON III OR TRANSYND
Capacity (excluding external circuits)	Initial fill 47 US qts (45 liters)
Oil change	37 US qts (39 liters)

Oil Filters:

Make	Allison Transmission
Type	Disposable cartridge
Supplier number	29503829
Prévost number	57-1687

SECTION 09: PROPELLER SHAFT

CONTENTS

1. PROPELLER SHAFT 09-2

1.1 DESCRIPTION 09-2

2. REMOVAL, DISASSEMBLY, REASSEMBLY AND INSTALLATION 09-2

3. CLEANING, INSPECTION AND LUBRICATION 09-3

3.1 CLEANING AND INSPECTION 09-3

3.2 LUBRICATION 09-3

4. EXPLANATION OF COMMON DAMAGES 09-3

5. TROUBLESHOOTING 09-3

6. SPECIFICATIONS 09-4

ILLUSTRATIONS

FIGURE 1: PROPELLER SHAFT ASSEMBLY 09-2

1. PROPELLER SHAFT

1.1 DESCRIPTION

The propeller shaft transmits power from the transmission to the differential (Fig. 1). Depending on the vehicle's transmission type, different lengths of propeller shafts are available. Refer to paragraph *"6. SPECIFICATIONS"* at the end of this section for details. All propeller shafts are "Dana 1810 " type with tubular shafts. They are provided with two heavy-duty universal joints (Fig. 1).

The propeller shaft has a full round end yoke at each end. The tube yoke is connected to the differential by a full round end yoke with four needle bearings.

The other extremity (slip yoke assembly) is connected to the transmission by a half round end yoke with two needle bearings.

Furthermore, a slip joint on the propeller shaft compensates for variations in distance between the transmission and the differential, or between the output retarder (optional on the automatic transmission) and differential.

The rise and fall of the drive axle bring about these variations as the vehicle passes over uneven surfaces. The slip joint also eases removal of the transmission or the drive axle.

2. REMOVAL, DISASSEMBLY, REASSEMBLY AND INSTALLATION

Refer to *"SPICER UNIVERSAL JOINTS AND DRIVESHAFTS"* annexed to this section, under headings *"Heavy Duty - removal, disassembly, reassembly and installation".*

Where applicable:

- Remove or install propeller shaft safety guard.
- Screw bolts to the specified torque (Fig. 1).

Note: *Disregard the procedure on "Lock straps" mentioned in the "Spicer Universal Joints and Driveshafts Manual".*

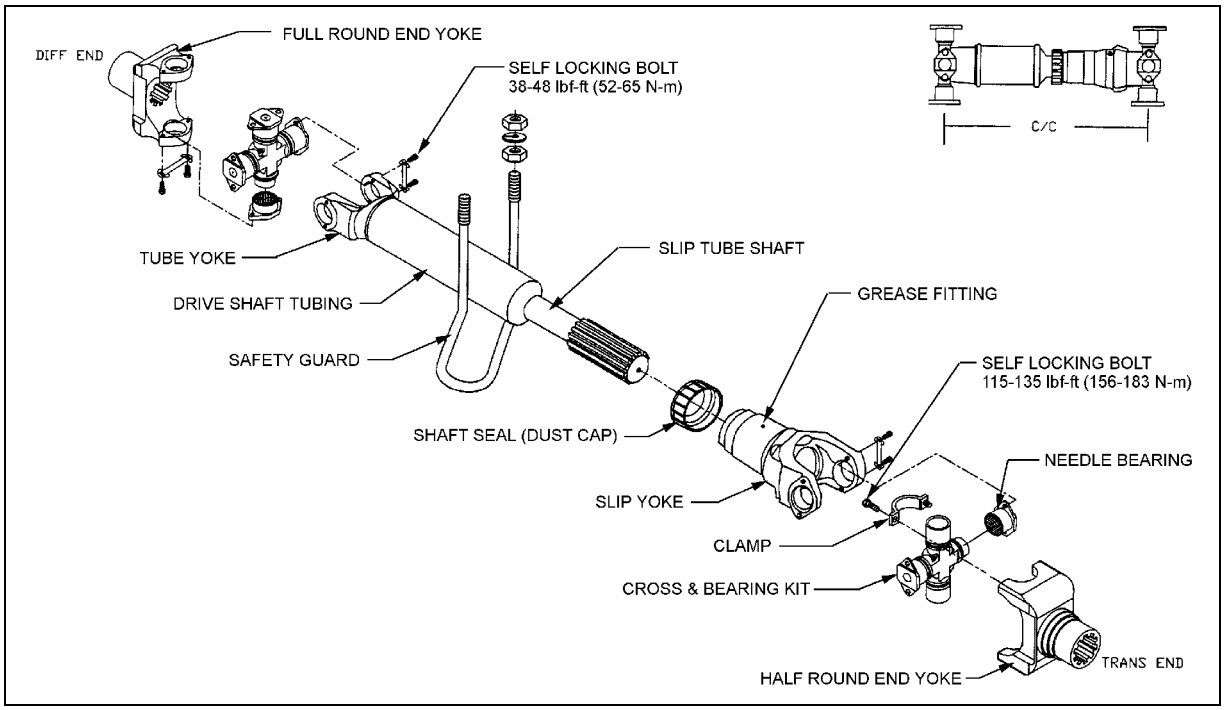

FIGURE 1: PROPELLER SHAFT ASSEMBLY 09002

3. CLEANING, INSPECTION AND LUBRICATION

3.1 CLEANING AND INSPECTION

Thoroughly clean grease from bearings, journal, lubricating grease fittings and other parts. Needle bearing assemblies may be soaked in a cleaning solution to soften hard grease particles. It is extremely important that bearing assemblies be absolutely clean and blown out with compressed air, since small particles of dirt or grit can cause rapid bearing wear. Do not attempt to disassemble needle bearings.

Bearing journal areas should be inspected for roughness or grooving. If light honing does not remove roughness, the entire bearing assembly should be replaced. Excessive wear of the needle bearing is indicated if the needles drop out of the retainer, or if marks are present on the journal bearing surface. In such case, replace bearing assembly. Finally, inspect yokes for cracks, wear or distortion.

Note: *Repair kits are available for overhaul of the propeller shaft assembly. Refer to the paragraph "6. Specifications" of this section.*

3.2 LUBRICATION

Lubricate propeller shaft universal joints and slip yoke periodically, every 6,250 miles (10 000 km) or twice a year, whichever comes first. Apply grease gun pressure to the lube fitting. Use a good quality lithium-base grease such as: NLGI No.2 (suitable for most temperatures) or NLGI No.1 (suitable for extremely low temperatures). Refer to "Spicer Universal Joints and Driveshafts, Service Manual", under heading, "Inspection and Lubrication". See lubrication procedures for U-joints and lubrication for slip splines.

Note: *Do not assume that bearing cavities have been filled with new grease unless it has expelled around all seals.*

4. EXPLANATION OF COMMON DAMAGES

1. Cracks: Stress lines due to metal fatigue. Severe and numerous cracks will weaken the metal until it breaks.

2. Galling: Scraping off of metal or metal displacement due to friction between surfaces. This is commonly found on trunnion ends.

3. Spalling (surface fatigue): Breaking off of chips, scales, or flakes of metal due to fatigue rather than wear. It is usually found on splines and U-joint bearings.

4. Pitting: Small pits or craters in metal surfaces due to corrosion. If excessive, pitting can lead to surface wear and eventual failure.

5. Brinelling: Surface wear failure due to the wearing of grooves in metal. It is often caused by improper installation procedures. Do not confuse the polishing of a surface (false brinelling), where no structural damage occurs, with actual brinelling.

6. Structural Overloading: Failure caused by a load greater than the component can stand. A structural overload may cause propeller shaft tubing to twist under strain or it may cause cracks or breaks in U-joints and spline plugs.

5. TROUBLESHOOTING

Refer to *"Spicer Service Manual - Universal Joints and Driveshafts"* under heading *"Troubleshooting".*

6. SPECIFICATIONS

PROPELLER SHAFT

XL2-40 COACH

Vehicles equipped with a World Transmission

Make ..... Hayes-Dana Inc.
Series 1810
Supplier number 819299-1
Prevost number 580075

Vehicles equipped with and Eaton Fuller Automatic Transmission

Make ..... Hayes-Dana Inc.
Series 1810
Supplier number ..... N/A
Prevost number ..... N/A

XL2-45 COACH AND M-45 MOTORHOME

Vehicles equipped with a World Transmission

Make ..... Hayes-Dana Inc.
Series 1810
Supplier number 819325-2200
Prevost number 580070

Vehicles equipped with an Eaton Fuller Automatic Transmission

Make ..... Hayes-Dana Inc.
Series 1810
Supplier number ..... N/A
Prevost number ..... N/A

M-40 AND M-45E MOTORHOME

Make ..... Hayes-Dana Inc.
Series 1810
Supplier number 819299-1
Prevost number 580075

Repair kits

Make ..... Hayes-Dana Inc.
U-joint kit (tube yoke), Supplier number 5-281X
U-joint kit (tube yoke), Prevost number 580043
U-joint kit (slip yoke), Supplier number 5-510X
U-joint kit (slip yoke), Prevost number 580062
Cap and bolt kit, bolt torque 115-135 lbf•ft (156-183 N•m), Supplier number 6.5-70-18X
Cap and bolt kit, bolt torque 115-135 lbf•ft (156-183 N•m), Prevost number 580063
Bolts kit, bolt torque 38-48 lbf•ft (52-65 N•m), Supplier number 6-73-209
Bolts kit, bolt torque 38-48 lbf•ft (52-65 N•m), Prevost number 580071

Half Round End Yoke

Make ..... Hayes-Dana Inc
(6 speed), Supplier number 6.5-4-3021-1
(6 speed), Prevost number 580072

Make ..... Dana-Spicer
(7 speed), Supplier number 6.5-4-3821-1
(7 speed), Prevost number 571690

Note: *U-joint kits will come equipped with the serrated bolt and lock patch and will no longer contain a lock strap.*

SECTION 10: FRONT AXLE

CONTENTS

1. FRONT AXLE 10-2

1.1 DESCRIPTION 10-2

2. LUBRICATION 10-3

3. MAINTENANCE 10-3

3.1 TIE ROD END PLAY ADJUSTMENT 10-3

4. REMOVAL AND REPLACEMENT 10-3

4.1 REMOVAL 10-3
4.2 REPLACEMENT 10-4

5. SERVICE INSTRUCTIONS FOR STEER AXLE 10-4

6. FRONT WHEEL ALIGNMENT 10-4

6.1 MINOR FRONT WHEEL ALIGNMENT 10-4
6.2 MAJOR FRONT WHEEL ALIGNMENT 10-4
6.3 INSPECTION BEFORE ALIGNMENT 10-5
6.4 TURNING ANGLE ADJUSTMENT 10-5
6.4.1 R.H. Turn Adjustment 10-5
6.4.2 L.H. Turn Adjustment 10-6
6.5 HYDRAULIC STOP 10-7
6.6 FRONT WHEEL CAMBER 10-7
6.6.1 Camber Check 10-7
6.7 FRONT AXLE CASTER 10-7
6.8 FRONT WHEEL TOE-IN 10-8
6.8.1 Inspection and Adjustment 10-9

7. TROUBLESHOOTING 10-10

8. SPECIFICATIONS 10-11

ILLUSTRATIONS

FIGURE 1: FRONT AXLE ASSEMBLY 10-2
FIGURE 2: TIE ROD END PLAY ADJUSTMENT 10-3
FIGURE 3: CAMBER 10-7
FIGURE 4: CASTER 10-8
FIGURE 5: TOE-IN MEASUREMENTS 10-8
FIGURE 6: AIR BELLOWS MOUNTING SUPPORT AND AXLE 10-11

1. FRONT AXLE

1.1 DESCRIPTION

This front axle is of the ''Reverse Elliot'' type manufactured by Dana Spicer Europe. The front axle consists of a girder section axle bed or beam with stub axles. Each stub axle is carried on a taper king pin, with a steep angle taper roller bearing at its top and a plain phosphor bronze bushing at the bottom. The hub taper roller bearings are of a generous size and adjusted by means of shims, and secured by a special nut and washer. Brakes are manufactured by KNORR-BREMSE. Steering ball joints with hardened balls and rubbing pads incorporate compression springs which automatically take up any wear.

The tie rod simplifies toe-in adjustment. The maximum turning angle is set through stop screws installed on the inner side of the knuckle.

Steering stabilizer (damper) and steering drag link which are mounted on the front axle are described in Section 14; *''Steering''* of this manual.

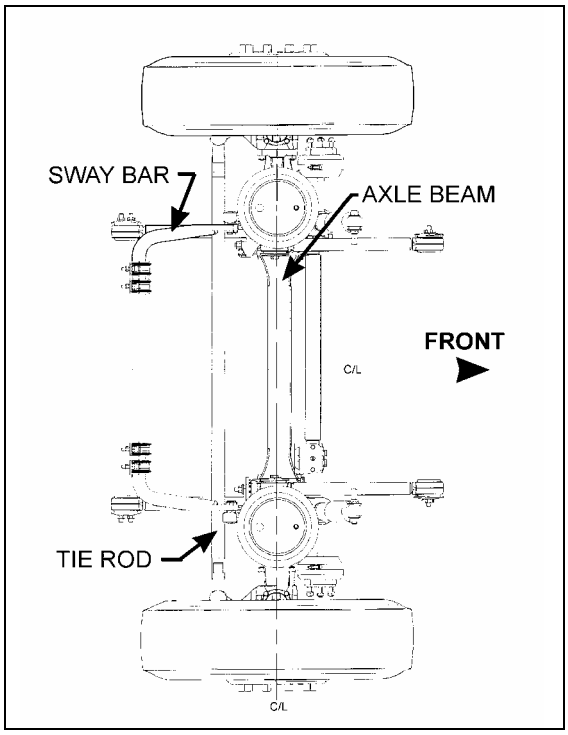

FIGURE 1: FRONT AXLE ASSEMBLY 10026

2. LUBRICATION

Perform periodic lubrication. Lubrication points of the front axle are shown on the lubrication and servicing chart annexed to Section 24; *''Lubrication''*. Tie rod ends and knuckle pins are provided with grease fittings for pressure lubrication. These grease fittings should be serviced every 6,250 miles (10 000 km) or twice a year whichever comes first. Good quality lithium-base grease NLGI No.1 and 2 are recommended.

3. MAINTENANCE

A periodic inspection of the front axle assembly should be made to check that all bolts are tight, and that no damage and distortion have taken place. Suspension support stud nuts, U-bolt nuts, tie rod arms, steering arm nuts and stop screws should be checked and tightened, as required, to the torque specifications given at the end of this section. Also check the condition of the steering knuckle pins and bushings. In case of excessive looseness, the bushings and pins should be replaced.

Any looseness in the steering linkage, under normal steering loads, is sufficient cause to immediately check all pivot points for wear, regardless of accumulated mileage. Steering linkage pivot points should be checked each time the front axle assembly is lubricated. Any looseness can be visually detected while rotating the steering wheel in both directions.

Steering knuckles, knuckle pins and bushings can be overhauled or replaced without removing the axle from the vehicle. However, if extensive overhaul work is necessary, the axle assembly should be removed.

Caution: *Should removal of a locking device be required when undergoing repairs, disassembly or adjustments, always replace with a new one.*

3.1 TIE ROD END PLAY ADJUSTMENT

If end play exceeds 0.047” (1.2 mm), readjustment is necessary.

Remove protective cap, using a suitable tool ie: a 1” x 1/8” x 9” long flat bar, tighten adjuster piece fully home (SOLID) locating thrust cup onto ball pin.

Still with tool located on adjuster piece, back off carefully (LEAST AMOUNT) until adjuster piece cotter pin is allowed to pass through body, then remove tool.

Reinstall protective cap.

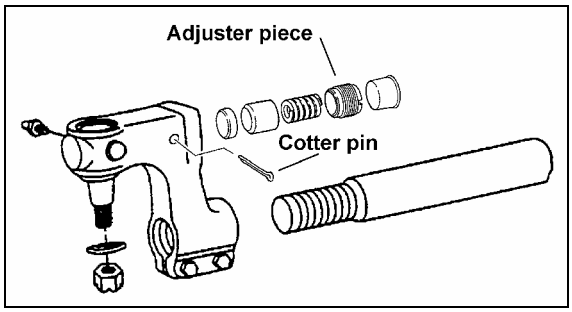

FIGURE 2: TIE ROD END PLAY ADJUSTMENT 10029

4. REMOVAL AND REPLACEMENT

The following procedure deals with the removal of the front axle assembly. The method used to support the axle assembly and suspension components during removal and disassembly depends upon local conditions and available equipment.

4.1 REMOVAL

1. Raise the vehicle by its jacking points on the body (see Section 18, *''Body''* under heading 16; Vehicle Jacking Points) until vehicle body is approximately 30 inches (760 mm) from the floor. Place jack stands under frame. Remove the wheels (if required, refer to Section 13, *''Wheels, Hubs and Tires''*).

Caution : *Use only the recommended jacking points as outlined in section 18 “BODY”.*

2. Exhaust compressed air from the air supply system by opening the drain valve of each reservoir.
3. Install jacks under axle jacking points to support the axle weight.

Warning : *To help prevent injury caused by the axle rolling off the jacks, these should be equipped with U-adapters, or similar precautions must be taken.*

4. Disconnect the steering drag link from the steering arm.
5. Remove the ABS sensors from their location in hubs (if applicable).
6. Disconnect the height control valve link from its support on the axle.
7. Disconnect air lines from front brake chambers, and cover line ends and fittings to prevent the entry of foreign matter.

Caution: *Position the air lines and electric wires so they will not be damaged while removing the front axle assembly.*

8. Proceed with steps a, b and c, while referring to Section 16: *''SUSPENSION''.*
   a) Disconnect sway bar links from axle brackets.
   b) Remove shock absorbers.
   c) Disconnect five radius rods: one transversal and two longitudinal from subframe, and two upper rods from axle.
9. Remove the bolts and nuts fixing the axle to the left-hand and right-hand side air bellows mounting supports.
10. Using the jacks, slowly lower the axle assembly, and carefully pull away from underneath vehicle.

4.2 REPLACEMENT

Reverse front axle "*Removal*" procedure. Ensure cleanliness of air bellows support mounting plates.

Note : *Refer to Section 16, ''SUSPENSION'', Section 14, ''Steering'' and to paragraph 8 ''Specifications'' at the end of this section for applicable checks and recommended tightening torques.*

5. SERVICE INSTRUCTIONS FOR STEER AXLE

Refer to GKN Parts and Service Manual for axles annexed at the end of this section.

6. FRONT WHEEL ALIGNMENT

Correct front wheel alignment must be maintained for steering comfort and satisfactory tire life. Road shocks and vibrations, as well as normal stress and strains on the front-end system can, under normal operating conditions, result in loss of front wheel alignment.

Check the front wheel alignment when the following occurs:

1. Every 200,000 miles (320 000 km) or 24 months (normal maintenance);
2. When the vehicle does not steer correctly; or
3. To correct a tire wear condition.

There are two types of front wheel alignment: **minor alignment** and **major alignment**.

6.1 MINOR FRONT WHEEL ALIGNMENT

Perform a minor front wheel alignment for all normal maintenance conditions.

Perform the minor front wheel alignment in the following sequence :

1. Inspect all the systems that affect the wheel alignment. See paragraph 6.3, *''Inspection Before Alignment''* in this section.
2. Check and adjust the hub bearings. See section 13, *''Wheels, hubs and Tires''* under heading 11: Front and Tag Axle Wheel Hubs.
3. Check and adjust the toe-in.

6.2 MAJOR FRONT WHEEL ALIGNMENT

Perform a major front wheel alignment to correct steering and tire wear conditions.

Perform the major front wheel alignment in the following sequence:

1. Inspect all systems affecting the wheel alignment. See paragraph 6.3, *''Inspection Before Alignment''* in this section.
2. Check and adjust the hub bearings. See section 13, *''Wheels, hubs and Tires''* under heading 11: Front and Tag Axle Wheel Hubs.

Note: *If steering angle stoppers are changed, a special procedure is required for readjusting gearbox steering limiter. See paragraph 6.5 ''HYDRAULIC STOP'' in this section.*

3. Check and adjust the turning angle adjustment.
4. Check the camber angle.
5. Check and adjust the caster angle.
6. Check and adjust the toe-in.

6.3 INSPECTION BEFORE ALIGNMENT

Check the following before doing a front wheel alignment:

1. Ensure that the vehicle is at normal riding height. See Section 16, *''Suspension''* under heading 7: *''Suspension Height Adjustment''*.
2. Ensure that front wheels are not the cause of the problem. See Section 13, *''Wheels, Hubs and Tires''*. Inspect the tires for wear patterns indicating suspension damage or misalignment.
   a. Make sure the tires are inflated to the specified pressure.
   b. Make sure the front tires are the same size and type.
   c. Make sure the wheels are balanced.
   d. Check wheel installation and straightness.
3. Check the wheel bearing adjustment.
4. Check steering linkage for bending and pivot points for looseness.
5. Check knuckle pins for evidence of excessive wear.
6. Check radius rods for bending and rubber bushings for evidence of excessive wear.
7. Make sure all fasteners are tightened to the specified torque. Use a torque wrench for verification. As soon as the fastener starts to move, record the torque. Correct if necessary. Replace any worn or damaged fasteners.

6.4 TURNING ANGLE ADJUSTMENT

The maximum turning angle is set through the two steering stop screws installed on the axle center. The turning angle is factory adjusted to accommodate the chassis design, and therefore, does not require adjustment on new vehicles. However, it should be checked and adjusted any time any component of the steering system is repaired, disassembled or adjusted.

Check if front tires rub against the frame or if the steering gear has been serviced.

Proceed with the following method to check the steering maximum turning angle :

6.4.1 R.H. Turn Adjustment

Caution : *To prevent the steering damper from interfering with the adjustment of turning angles, make sure its fixing bracket is at the correct location on the axle center (refer to section 14 "STEERING").*

1. Turn steering wheel to the right until the boss on the axle center touches the right stop screw.
2. Verify the nearest point of contact of the ball socket body with the air bellows support assembly. Measure the distance between those two points.
3. The distance between these two points should be approximately 1/8 inch (3 mm). If not, the steering stop screws must be readjusted.
4. Verify the nearest point of contact of the drag link with the tire. Measure the distance between those two points.

5. The distance should be 1 inch (25 mm) or more. If not, the steering stop screws must be readjusted.

6. This must be done for a full right turn.

7. If readjustment is required:
    a. Remove the swivel stop screw.
    b. Add to the stop screw the required number of washers to obtain the proper measure, tighten the stop screw afterwards. Two washers of different thickness are available: 1/16 inch and 3/16 inch.

6.4.2 L.H. Turn Adjustment

1. Turn steering wheel to the left until the boss on the axle center touches the left stop screw.

2. Verify the nearest point of contact of the ball socket body with the air bellows support assembly. Measure the distance between those two points.

3. The distance between these two points should be approximately 1/8 inch (3 mm). If not, the steering stop screws must be readjusted.

4. Check the stroke of the steering stabilizer cylinder (damper). It should not exceed 12.59 inches (320 mm).

5. This must be done for a full left turn.

6. If readjustment is required:
    a. Remove the swivel stop screw.
    b. Add to the stop screw the required number of washers to obtain the proper measure, tighten the stop screw afterwards. Two washers of different thickness are available: 1/16 inch and 3/16 inch.

Note : *If steering angle stoppers are changed, a special procedure is required for readjusting gearbox steering limiter. See paragraph 6.5 ''HYDRAULIC STOP'' in this section.*

6.5 HYDRAULIC STOP

Note : *Before steering limiter readjustment, verify vehicle wheel alignment and ensure that oil level is checked and that air bleeding is done.*

Refer to *'ZF-Servocom Repair Manual''* annexed at the end of Section 14 *''Steering''* under heading *'Setting and Functional Test.*

6.6 FRONT WHEEL CAMBER

Wheel camber is the number of degrees the top of the wheel tilts outward (positive) or inward (negative) from a vertical angle (Fig. 2).

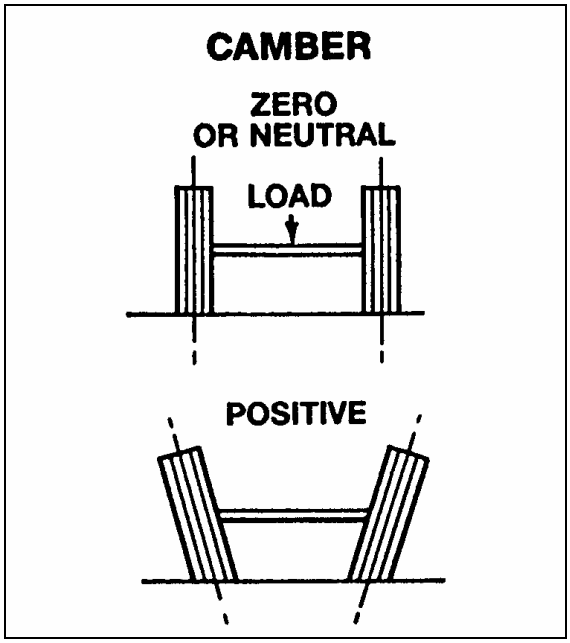

FIGURE 3: CAMBER 10006

The camber angle is not adjustable. Camber variations may be caused by wear at the wheel bearings, steering knuckle pins or by a bent knuckle or sagging axle center. Steering effort is affected by improper camber, and uneven tire wear will result. Excessive positive camber causes an irregular wear of tire at the outer shoulder and excessive negative camber causes wear at the inner shoulder.

6.6.1 Camber Check

For camber specifications, refer to paragraph 8: ''SPECIFICATIONS'' in this section

1. Use an alignment machine to check the camber angle.

2. If camber reading is not in the specifications, adjust the wheel bearings and repeat the check. If the reading is still not within specifications, verify the steering knuckle pins and axle center.

   See instructions in *''GKN Parts and Service Manual For Axles''* annexed to the end of this section under heading: *''Removal of Stub Axle''.*

3. Check the wheel lateral distortion as instructed in Section 13, *''Wheels, Hubs and Tires''* under heading, *''Checking for Distorted Wheel on Vehicle''*. If distortion is excessive, straighten or replace wheel(s).

6.7 FRONT AXLE CASTER

For caster specifications, refer to paragraph 8: ''SPECIFICATIONS'' in this section.

Positive caster is the rearward tilt from the vertical axis of the knuckle pin. Negative caster is the forward tilt from the vertical axis of the knuckle pin (Fig. 3). This vehicle is designed with a positive caster. The purpose of the caster angle is to give a trailing effect. This results in stabilized steering and a tendency for the wheels to return to the straight-ahead position after taking a turn.

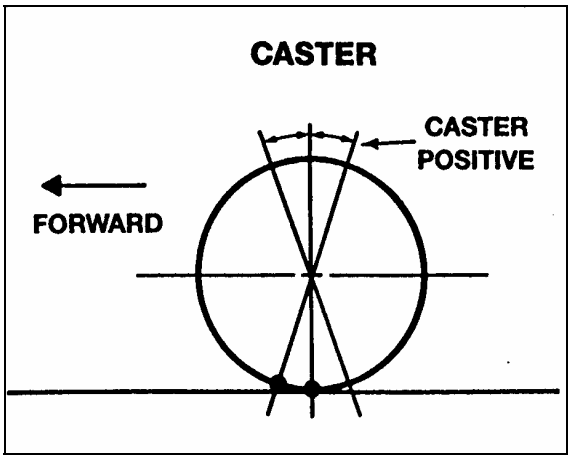

FIGURE 4: CASTER 10007

Excessive caster results in hard steering around corners. A shimmy may also develop when returning to the straight ahead position (pulling out of curves).

Insufficient caster will cause wandering and steering instability. Caster variations may be caused by a bent axle, tilting or distortion of the side suspension supports, damaged radius rod bushings, or unequal tightening of the front and rear suspension support bolts. Incorrect caster must be corrected by replacing the damaged suspension parts. A precision instrument should be used to measure the caster.

Note : *The caster of this vehicle is factory set and is not adjustable. However, if after replacing damaged parts or in case of improper caster due to irregular setting, the front axle caster needs adjustment; it can be adjusted by means of shims (Prévost #110663) on the left-hand side upper radius rod support in order to obtain minor adjustment.*

6.8 FRONT WHEEL TOE-IN

Wheel toe-in is the degree (usually expressed in fractions of an inch) to which the forward part of the vehicle front wheels are closer together than the rear part, measured at wheel centerline height with the wheels in the normal ''straight-ahead'' position of the steering gear.

Incorrect toe-in results in excessive tire wear caused by side slippage and also steering instability with a tendency to wander. Toe-in may be measured from the center of tire tread or from the inside of the tires. Take measurements at both front and rear of axle (see ''F and ''G'' in fig. 4).

When setting toe-in adjustment, the front suspension must be neutralized; that is, all component parts must be in the same relative position when marking the adjustment as they will be when in operation.

To neutralize the suspension, the vehicle must be rolled forward, approximately ten feet.

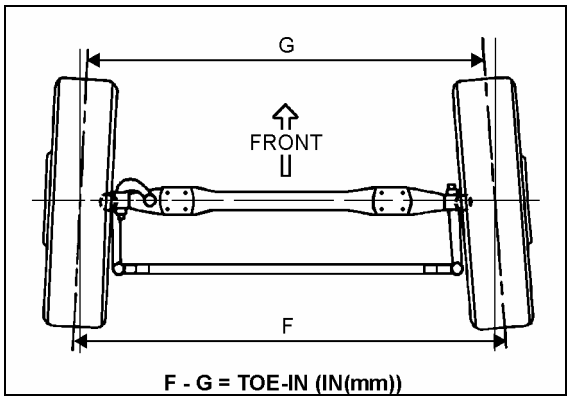

FIGURE 5: TOE-IN MEASUREMENTS 10015B

For toe-in specifications, refer to paragraph 8 ''Specifications'' in this section.

By rolling the vehicle forward, all tolerances in the front suspension are taken up and the suspension is then in its normal operating position. Neutralizing the front suspension is extremely important, especially if the vehicle has been jacked up in order to mark the tires. Otherwise, the front wheels will not return to their normal operating position due to the tires gripping the floor surface when the vehicle jack is lowered.

Note: *''Toe-in'' measurements must be taken at the horizontal axis of the wheel centerline.*

6.8.1 Inspection and Adjustment

Before checking front wheel toe-in, first check the camber angles and make the necessary corrections.

1. Measure the toe-in.

2. If the toe-in measurement is not within the specified tolerance, carry out the following procedure :

    a. Loosen the pinch bolt nuts and bolts on each tie rod end.
    b. Turn the tie rod until the specified toe-in measurement is obtained.
    c. Tighten the pinch bolt nuts alternately and progressively to 65-75 lbf•ft (88-102 N•m), thus securing all tie rod joints.

7. TROUBLESHOOTING

CONDITION	CAUSE	CORRECTION
Tires wear out quickly or have uneven tire tread wear.	1. Tires have incorrect air pressure. 2. Tires out-of-balance. 3. Incorrect tag axle alignment. 4. Incorrect toe-in setting. 5. Incorrect steering arm geometry.	1. Put specified air pressure in tires. 2. Balance or replace tires. 3. Align tag axle. 4. Adjust toe-in specified setting. 5. Service steering system as necessary.
Vehicle is hard to steer.	1. Low pressure in the power steering system. 2. Steering gear not assembled correctly. 3. Steering linkage needs lubrication. 4. King pins binding. 5. Incorrect steering arm geometry. 6. Caster improperly adjusted. 7. Tie rod ends hard to move. 8. Worn thrust bearing.	1. Repair power steering system. 2. Assemble steering gear correctly. 3. Lubricate steering linkage. 4. Replace king pins. 5. Service steering system as necessary. 6. Adjust caster as necessary. 7. Replace tie rod ends. 8. Replace thrust bearing.
Bent or broken steering arm, steering top lever or tie rod assembly.	1. Too much pressure in the power steering system. 2. Cut-off pressure of the power steering system improperly adjusted. 3. Vehicle not powered on correctly. 4. Power steering system not installed correctly.	1. Replace damaged part(s), adjust power steering system to specified pressure. 2. Make sure vehicle is powered on correctly. 3. Correctly install the power steering system. 4. Correctly install the power steering system.
Worn or broken steering ball stud.	1. Drag link fasteners tightened past specified torque. 2. Lack of lubrication or incorrect lubricant. 3. Power steering stops improperly adjusted.	1. Replace damaged part(s), tighten drag link fasteners to specified torque. 2. Lubricate linkage with specified lubricant. 3. Adjust stops to specified dimension.
Worn king pins and knuckle bushings.	1. Worn or missing seals and gaskets. 2. Incorrect lubricant. 3. Axle not lubricated at scheduled frequency. 4. Incorrect lubrication procedures. 5. Lubrication schedule does not match operating conditions.	1. Replace damaged part(s), replace seals and gaskets. 2. Lubricate axle with specified lubricant. 3. Lubricate axle at scheduled frequency. 4. Use correct lubrication schedule to match operating conditions. 5. Change lubrication schedule to match operating conditions.
Vibration or shimmy of front axle during operation.	1. Caster not adjusted properly. 2. Wheels and/or tires out-of balance. 3. Worn steering stabilizer cylinder.	1. Adjust caster. 2. Balance or replace wheels and/or tires. 3. Replace steering stabilizer cylinder.

8. SPECIFICATIONS

Front Axle

Make ..... DANA SPICER EUROPE

Model S-84

Front Track ..... 84.4 inches (2 145 mm)

Rated load capacity ..... 16,500 lbs (7 500 kg)

Torque specifications

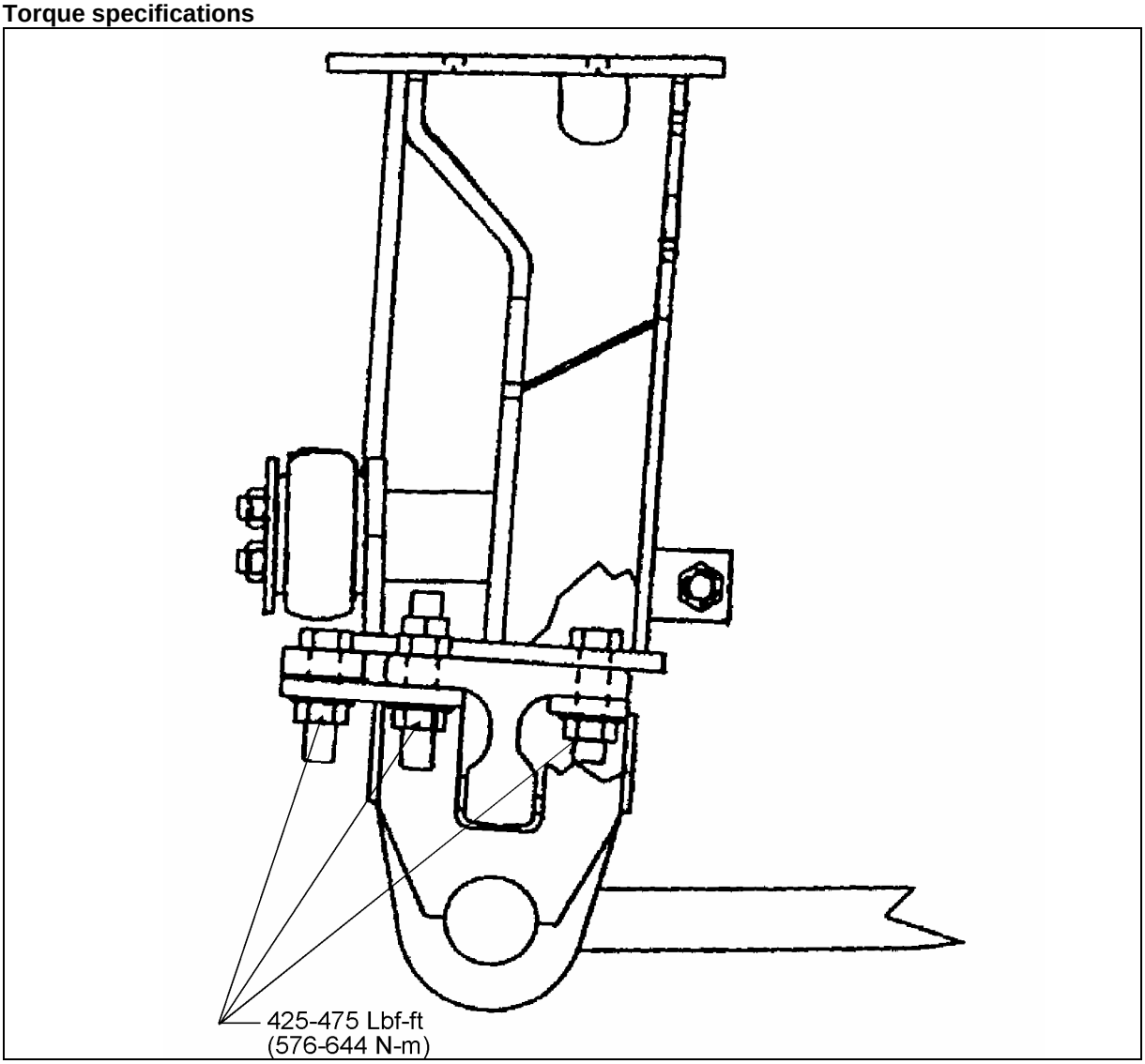

FIGURE 6: AIR BELLOWS MOUNTING SUPPORT AND AXLE 10009

For more torque specifications, see ''GKN Parts and Service Manual for Axles'' annexed at the end of this section , under heading ''Tightening Torque Table for type S-82 Steer Axle.

FRONT WHEEL ALIGNMENT SPECIFICATIONS			
Front Wheel Alignment	**Minimal**	**Nominal**	**Maximal**
Camber, degrees R.H. and L.H. *	- ½	0	+ ½
Caster, degrees R.H. and L.H.	+ 2	+ 2 ¾	+ 3 ½
Toe-in (F minus G), inches	1/16	3/32	1/8

***Note :** Camber angle changes with loading. The given numbers are for an empty vehicle.*

SECTION 11: REAR AXLES

CONTENTS

1. DRIVE AXLE 11-2

1.1 DESCRIPTION 11-2
1.2 DRIVE AXLE LUBRICATION 11-2
1.3 MAINTENANCE 11-2
1.3.1 Checking and Adjusting the Oil Level 11-2
1.3.2 Draining and Replacing the Oil 11-3
1.3.3 Speed Sensors (Anti-Lock Brake system, ABS) 11-3
1.4 REMOVAL AND REINSTALLATION 11-3
1.5 DISASSEMBLY AND REASSEMBLY 11-4
1.6 GEAR SET IDENTIFICATION 11-4
1.7 ADJUSTMENTS 11-4
1.8 FASTENER TORQUE CHART 11-4
1.9 TIRE MATCHING 11-4
1.10 DRIVE AXLE ALIGNMENT 11-4
1.10.1 Procedure 11-5
1.10.2 Alignment Procedure Using Bee-Line System 11-6
1.11 AXLE SHAFT SEALING METHOD 11-11

2. TAG AXLE 11-11

2.1 OIL LUBRICATED WHEEL BEARINGS 11-11
2.2 REMOVAL AND REINSTALLATION 11-12
2.3 TAG AXLE ALIGNMENT 11-12

3. SPECIFICATIONS 11-13

ILLUSTRATIONS

FIGURE 1: TYPICAL SERIAL & MODEL NUMBERS 11-2
FIGURE 2: DIFFERENTIAL AXLE HOUSING BOWL 11-2
FIGURE 3: JACKING POINTS ON FRAME 11-3
FIGURE 4: JACKING POINTS ON DRIVE AXLE 11-4
FIGURE 5: FRONT AND DRIVE AXLE ALIGNMENT 11-6
FIGURE 6: TAG AXLE ALIGNMENT 11-6
FIGURE 7: DRIVE AXLE TOES 11-7
FIGURE 8: DRIVE AXLE OFF-TRACKING 11-8
FIGURE 9: EXAMPLE CALCULATION 11-9
FIGURE 10: EXAMPLE CALCULATION 11-10
FIGURE 11: AXLE SHAFT INSTALLATION 11-11
FIGURE 12: OIL FILL CAP 11-11
FIGURE 13: JACKING POINTS ON TAG AXLE 11-12

1. DRIVE AXLE

1.1 DESCRIPTION

The Meritor drive axle is equipped with a single reduction standard carrier mounted in front of the axle housing. The carrier consists of a hypoid drive pinion, a ring gear set and gears in the differential assembly (refer to figure 1 for serial and model numbers).

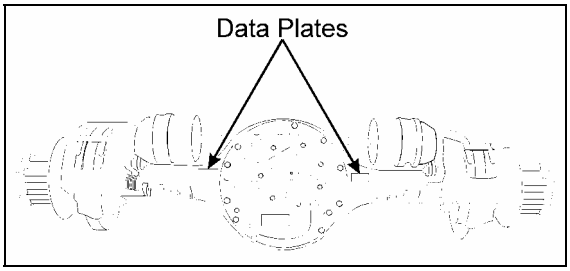

FIGURE 1: TYPICAL SERIAL & MODEL NUMBERS 11019

A straight roller bearing (spigot) is mounted on the head of the drive pinion. All other bearings in the carrier are tapered roller bearings. When the carrier operates, there is a normal differential action between the wheels all the time.

Several speed ratios are available for the drive axle. These ratios depend upon the motor and transmission. Also, special applications may suggest slightly different gear ratios.

1.2 DRIVE AXLE LUBRICATION

Additional lubrication information is covered in the Meritor *"Maintenance Manual No. 5"* annexed to this section. During initial stage of normal operation, tiny metal particles originating from moving parts can be found on mating surfaces. These particles are carried by the lubricant through the assembly and act as lapping compound, which accelerates wear of all parts. To ensure maximum life of the differential and prevent premature failure, the original "factory fill" lubricant should be drained. Change break-in oil before 3,000 miles (4 800 km) of initial operation (drain the unit while it is still warm from operation), in accordance with the lubrication and servicing schedule.

Change differential oil and clean the breathers, magnetic fill and drain plugs, every 100,000 miles (160 000 km) or once every two years, whichever comes first.

Use Multigrade gear oil MIL-L-2105-D. Use the 75W90-gear oil for northern climates and the 80W140 for southern climates. In extreme conditions, or for better performance, fill with synthetic gear oil. Check oil level and add (if necessary) every 6,250 miles (10 000 km) or twice a year, whichever comes first (Fig. 2).

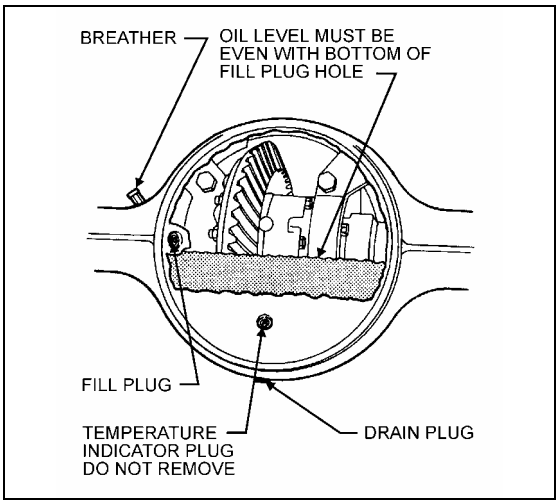

FIGURE 2: DIFFERENTIAL AXLE HOUSING BOWL 11007

1.3 MAINTENANCE

Proper vehicle operation begins with preventive maintenance, such as good differential use. The most common types of drive axle carrier failures are spinout, shock, fatigue, overheating and lubrication. Avoid neglecting these points since they would be the first steps to improper maintenance, expensive repairs, and excessive downtime.

Inspect the pinion oil seal, axle shaft flange and carrier housing gaskets for evidence of lubricant leakage. Tighten the bolts and nuts, or replace the gaskets and seals to correct leaks. Maintenance of the axle mountings consists primarily in a regular and systematic inspection of the air suspension units and radius rods, as directed in Section 16, *"SUSPENSION".*

1.3.1 Checking and Adjusting the Oil Level

Warning: *Before servicing, park safely over a repair pit, apply parking brake, stop engine and set battery master switch to the "OFF" position.*

1. Make sure the vehicle is parked on a level surface.

Caution: *Check the oil level when the axle is at room temperature. When hot, the oil temperature may be 190ºF (88ºC) or more and can cause burns. Also, a correct reading is not obtained when the axle is warm or hot.*

2. Make sure the axle is "cold" or at room temperature.
3. Clean the area around the fill plug. Remove the fill plug from the differential axle housing bowl (Fig. 2).
4. The oil level must be even with the bottom of the hole of the fill plug.
   a. If oil flows from the hole when the plug is loosened, the oil level is high. Drain the oil to the correct level.
   b. If the oil level is below the bottom of the hole of the fill plug, add the specified oil.
5. Install and tighten the fill plug to 35-50 lbf•ft (48-67 N•m).

1.3.2 Draining and Replacing the Oil

Warning: *Before servicing, park safely over a repair pit, apply parking brake, stop engine and set battery master switch to the "OFF" position.*

1. Make sure the vehicle is parked on a level surface. Put a large container under the axle's drain plug.

Note: *Drain the oil when the axle is warm.*

2. Remove the drain plug from the bottom of the axle. Drain and discard the oil in an environment friendly manner.
3. Install and tighten the drain plug to 35-50 lbf•ft (48-67 N•m).
4. Clean the area around the fill plug. Remove the fill plug from the differential housing bowl.
5. Add the specified oil until the oil level is even with the bottom of the hole of the fill plug. Allow the oil to flow through the axle and check the oil level again (lube capacity 41 pints [13,3 liters]).

Caution: *The differential overheats when the oil temperature rises above 250ºF (120º*C).

6. Install and tighten the fill plug to 35-50 lbf•ft (48-67 N•m).

1.3.3 Speed Sensors (Anti-Lock Brake system, ABS)

For removing and installing the drive axle speed sensors (for anti-lock brake systems, ABS), refer to Section 12: *''Brake and Air System''* and to Rockwell WABCO Maintenance Manual: *"Anti-Lock Brake Systems For Trucks, Tractors and Buses"*, annexed at the end of section 12.

1.4 REMOVAL AND REINSTALLATION

The following procedure deals with the removal of the drive axle assembly and its attachments as a unit. The method used to support the axle during removal and disassembly depends upon local conditions and available equipment.

1. Raise vehicle by its jacking points on the body (fig. 3 or see Section 18, *"BODY"* under heading *"VEHICLE JACKING POINTS").* Place jack stands under frame. Remove drive axle wheels (if required, refer to Section 13, *"WHEELS, HUBS AND TIRES".*

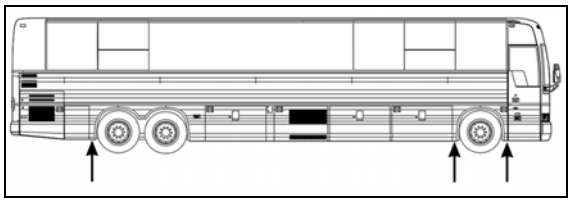

FIGURE 3: JACKING POINTS ON FRAME 11020

2. Exhaust compressed air from the air supply system by opening the drain cock on each air reservoir.
3. Disconnect the propeller shaft as directed in Section 9, *"PROPELLER SHAFT",* in this manual.
4. On both sides of the vehicle, unscrew fasteners retaining front wheel housing plastic guards, and remove them from vehicle.
5. Disconnect both height control valve links from air spring mounting plate brackets.
6. Remove cable ties securing the ABS cables (if vehicle is so equipped) to service brake chamber hoses. Disconnect the ABS cable plugs from the drive axle wheel hubs.

Note: *When removing drive axle, if unfastening cable ties is necessary for ease of operation, remember to replace them afterwards.*

7. Disconnect the brake chamber hoses.

Note: *Position the hoses so they will not be damaged when removing the axle.*

8. Install jacks under the axle jacking points to support the axle weight (refer to figure 4).

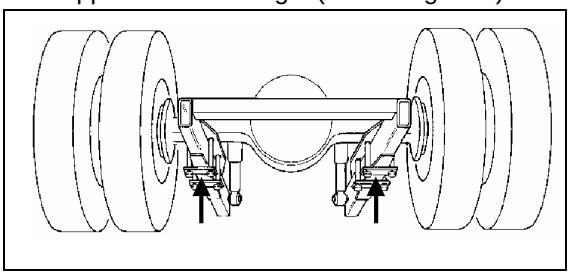

FIGURE 4: JACKING POINTS ON DRIVE AXLE H3B762

9. Remove the four shock absorbers as outlined in Section 16, *"SUSPENSION"* under heading *"SHOCK ABSORBER REMOVAL".*
10. Remove the sway bar.
11. Remove the lower and upper longitudinal radius rod supports from vehicle sub-frame as outlined in Section 16, *"SUSPENSION",* under heading *"RADIUS ROD REMOVAL".*
12. Remove the transversal radius rod support from the vehicle sub-frame.
13. Remove the two retaining nuts from each of the four air bellows lower mounting supports.
14. Use the jacks to lower axle. Carefully pull away the jacks axle assembly from underneath vehicle.
15. Reverse removal procedure to reinstall drive axle.

Note: *Refer to Section 16, "SUSPENSION" for suspension components' proper tightening torques.*

Note: *Refer to section 13 "WHEELS, HUBS AND TIRES" for correct wheel bearing adjustment procedure.*

1.5 DISASSEMBLY AND REASSEMBLY

Disassembly and re-assembly procedures are covered under applicable headings in Meritor's *"MAINTENANCE MANUAL, NO. 5",* annexed to this section.

1.6 GEAR SET IDENTIFICATION

Gear set identification is covered under applicable heading in Meritor's *"MAINTENANCE MANUAL NO. 5",* annexed to this section.

1.7 ADJUSTMENTS

Adjustments are covered under applicable headings in Meritor's *"MAINTENANCE MANUAL NO. 5",* annexed to this section.

1.8 FASTENER TORQUE CHART

A differential fastener torque chart is provided in Meritor's *"MAINTENANCE MANUAL NO. 5",* annexed to this section.

1.9 TIRE MATCHING

Drive axle tire matching is covered under the applicable heading in Section 13, *"WHEELS, HUBS AND TIRES"* in this manual.

1.10 DRIVE AXLE ALIGNMENT

Note: For *drive axle alignment specifications, refer to paragraph 3: ''SPECIFICATIONS'' in this section.*

The drive axle alignment consists in aligning the axle according to the frame. The axle must be perpendicular to the frame. The alignment is achieved with the use of shims inserted between the lower longitudinal radius rod supports and the frame.

Drive axle alignment is factory set and is not subject to any change, except if the vehicle has been damaged by an accident or if there are requirements for replacement.

Caution: *If this setting is significantly altered, the vehicle will produce offset tracking (dog tracking).*

If the axle has been removed for repairs or servicing and if all the parts are reinstalled exactly in the same place, the axle alignment is not necessary. However, if the suspension supports have been replaced or altered, proceed with the following instructions to verify or adjust the drive axle alignment.

Note: *When drive axle alignment is modified, tag axle alignment must be re-verified.*

1.10.1 Procedure

1. Park vehicle on a level surface, then chock front vehicle wheels.
2. Using two jacking points (which are at least 30 inches [76 cm] apart) on drive axle, raise the vehicle sufficiently so that wheels can turn freely at about ½ inch from ground. Secure in this position with safety stands, and release parking brake.
3. Install wheel mount sensors on front and drive axles (fig. 5). Adjust front axle according to appropriate specifications chart below.

Note : *See reference numbers on wheel mount sensors (fig. 5).*

Note: *Select axle specifications in the appropriate chart.*

FRONT AXLE INDEPENDENT FRONT SUSPENSION EQUIPPED VEHICLES			
Alignment / value	Minimum value	Nominal value	Maximum value
Right camber (deg.)	-0.125	0.125	0.375
Left camber (deg.)	-0.125	0.125	0.375
Right caster (deg.)	1.5	2	2.5
Left caster (deg.)	1.5	2	2.5
Total toe (inches)	1/16	3/32	1/8

DRIVE AXLE ALIGNMENT

- With the system installed as for front axle alignment (fig.5), adjust drive axle according to specifications' chart below.

DRIVE AXLE ALL VEHICLES			
Alignment / value	Minimum value	Nominal value	Maximum value
Thrust angle (deg.)	-0.11	0	0.11

TAG AXLE ALIGNMENT

- Remove and reinstall all wheel mount sensors on the drive and tag axles (fig. 6);

Note *: For an accurate alignment, the tag axle must be aligned with the drive axle.*

Note *: Reinstall wheel mount sensors as shown in figure 6. For example, the sensor from the right side of the front axle is mounted on the left side of the tag axle. For corresponding wheel mount sensor reference numbers, refer to figure 5.*

- Adjust tag axle according to specifications' chart below.

TAG AXLE ALL VEHICLES			
Alignment / value	Minimum value	Nominal value	Maximum value
Thrust angle (deg.)	-0.02	0	0.02

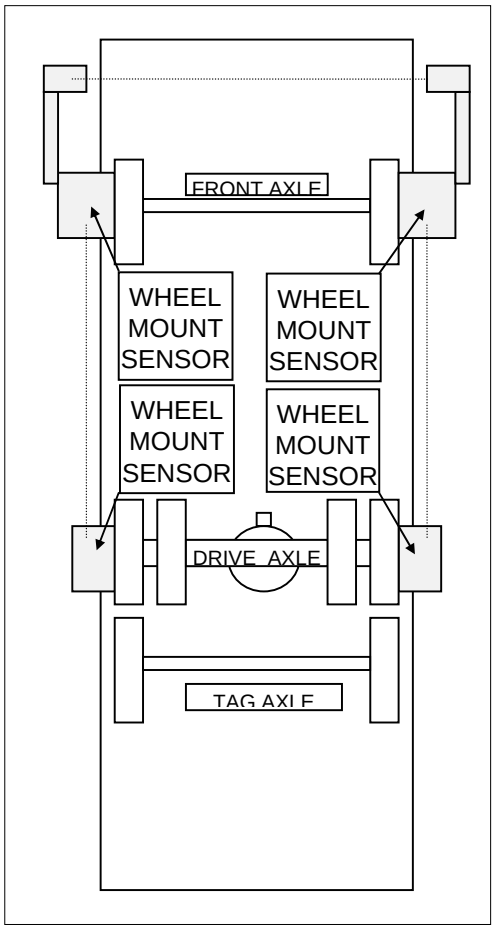

FIGURE 5: FRONT AND DRIVE AXLE ALIGNMENT

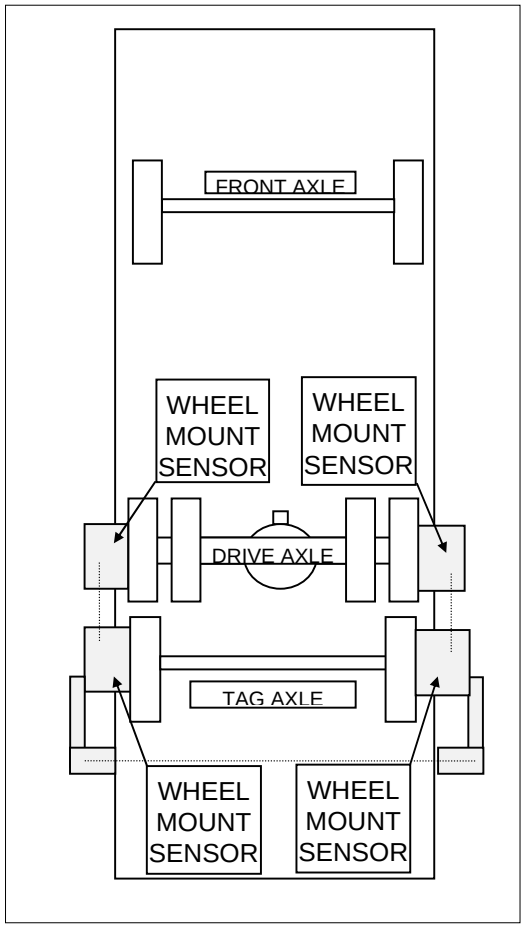

FIGURE 6: TAG AXLE ALIGNMENT

Note: *Refer to Section 16,* "SUSPENSION", *for proper torque tightening of the longitudinal radius rod support nuts.*

Note (2): *When the drive alignment is changed, the tag alignment must also be adjusted.*

1.10.2 Alignment Procedure Using Bee-Line System

NON-ADJUSTABLE DRIVE AXLE

Proceed as follows to measure the alignment of the drive axle:

1. Measure left and right differential toes (Fig. 7).
2. Calculate the theoretical off-tracking which is required to obtain an ideal drive thrust axis:
   Theoretical differential off-tracking = *(right differential toe - left differential toe)* x *distance (in inches)*
   (84'')

distance = distance between the two targets

3. Measure the real differential off-tracking (Fig. 8).

4. Proceed with tag axle alignment detailed below.

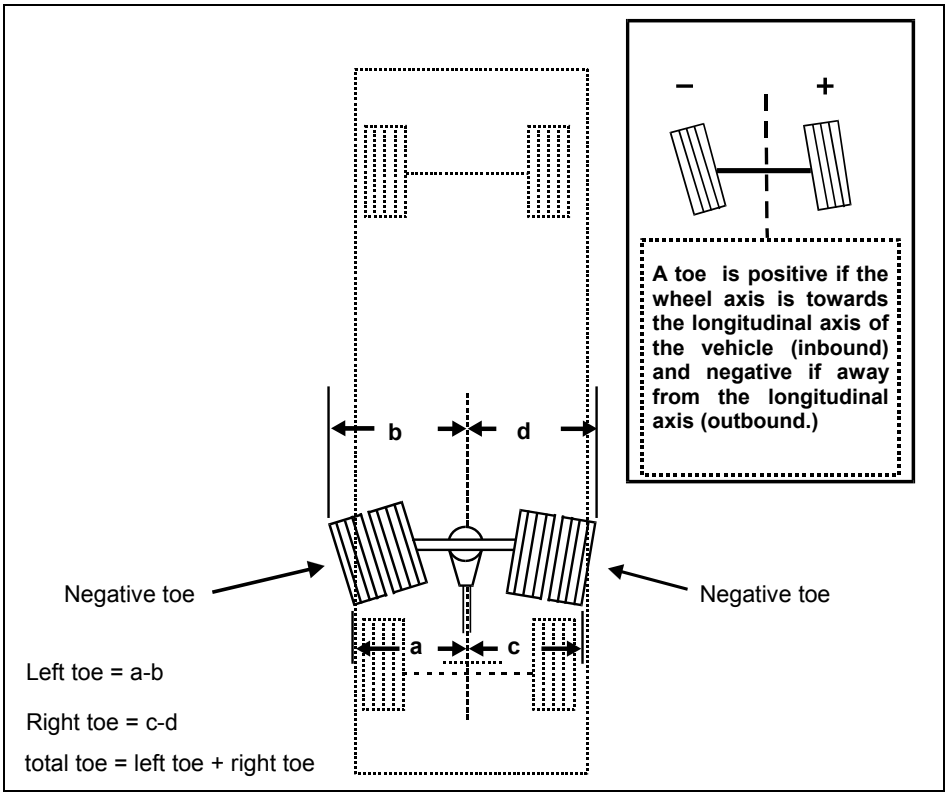

FIGURE 7: DRIVE AXLE TOES 11011

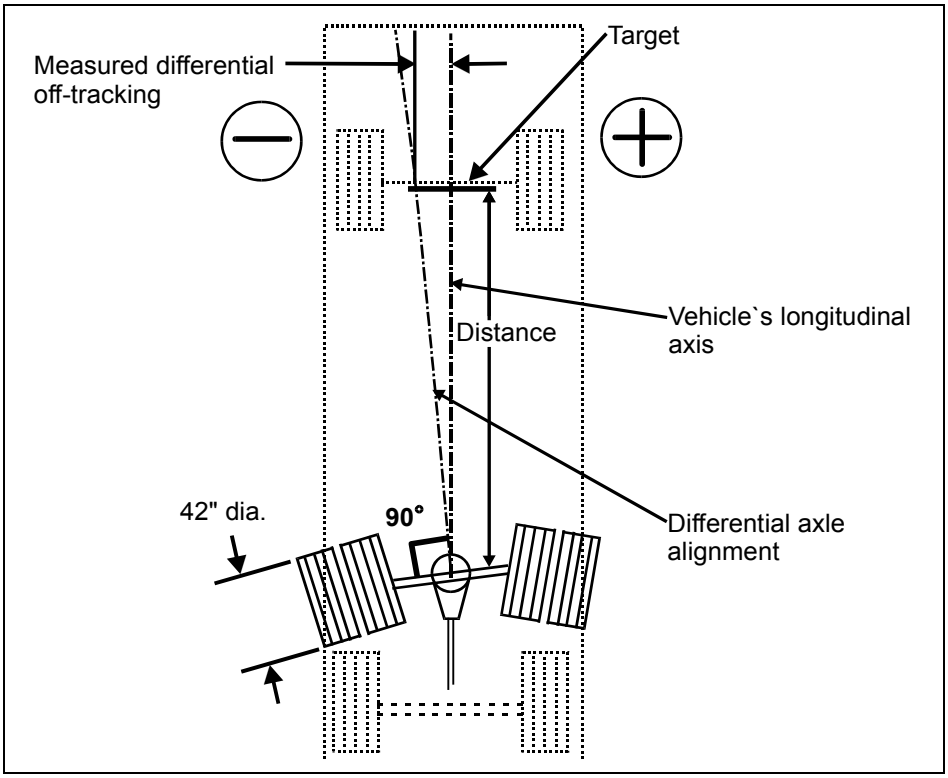

FIGURE 8: DRIVE AXLE OFF-TRACKING 11012

ADJUSTABLE DRIVE AXLE

1. Measure left and right differential toes (Fig. 7).
2. Calculate the theoretical off-tracking which is required to obtain an ideal drive thrust axis:

   Theoretical differential off-tracking = $\frac{\text{(right differential toe - left differential toe)} \times \text{distance (in inches)}}{84''}$

3. Calculate the acceptable tolerance.

Note: *An off-tracking tolerance of one inch over 45 feet is acceptable*

Acceptable alignment tolerance for any reference distance is calculated as follows:

Tolerance = $\frac{\text{Reference distance (in inches)}}{540}$

4. Align the off-tracking of the differential within the tolerances (Fig. 9).
5. Measure the ''real differential off-tracking'' obtained (must be within tolerances).
6. Proceed with tag axle alignment detailed below.

Example: If we have the following conditions:

- Differential left toe: = -1/8"
- Differential right toe: = +1/16"
- Reference distance = 20 feet.

The theoretical off-tracking required is then: $\frac{\text{(right toe - left toe) x 20' x 12"/foot}}{84"}$

or: $\frac{\text{+1/16" - (-1/8")}}{84"}$ x 240" = $\frac{\text{3/16" x 240"}}{84"}$ = $\frac{\text{+0.54"}}{}$

Since the acceptable tolerance (for a 20 foot reference distance) is $\frac{\text{20' x 12"/foot}}{540}$ = 0.44"

For this example alignment, the differential off-tracking must then be between (0.54" - 0.44") and (0.54" + 0.44") inches or between 0.1" and 0.98"

Acceptable alignment zone for this example would be from 0.1" to 0.98". The optimal value would be 0.54.

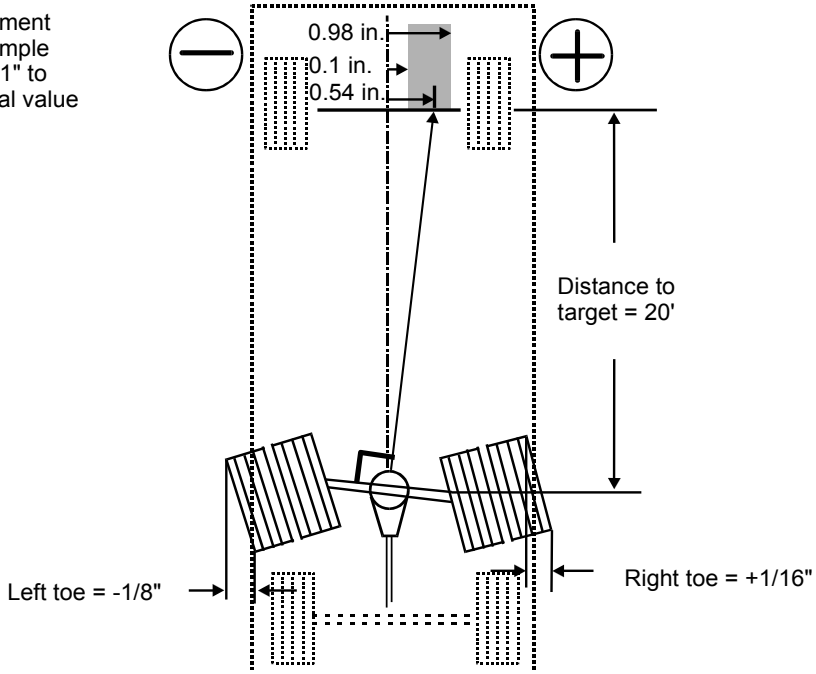

FIGURE 9: EXAMPLE CALCULATION 11013

TAG AXLE

1. Measure tag left and right toes.
2. Calculate the off-tracking required by the tag axle to compensate for the tag wheel toes.

   Theoretical tag off-tracking = $\frac{\text{(right tag toe - left tag toe) x distance (inches)}}{\text{84 inches}}$

3. Calculate the corrected tag off-tracking (in function of differential alignment):

   Corrected tag off-tracking =

theoretical tag off-tracking + (real differential off-tracking - theoretical differential off-tracking)

4. Calculate the acceptable tolerance.

Note: *An off-tracking tolerance of 1/16 inch over 20 feet is acceptable.*
The tolerance accepted for any reference distance is: $\frac{\text{reference distance (in inches)}}{3840}$

5. Align off-tracking of the tag within tolerances (Fig. 10).

Example: If we have the following conditions:

- Tag left toe: = -1/16"
- Tag right toe: = +1/8"
- Reference distance = 24 feet.

The theoretical off-tracking required would be: $\frac{\text{(right toe - left toe) x 24' x 12"/ft}}{84"}$

or: $\frac{\text{+1/8" - (-1/16") x 288"}}{84"} = \frac{\text{3/16" x 288"}}{84"} = \text{+0.64"}$

Corrected tag off-tracking =

theoretical tag off-tracking + (real differential off-tracking - theoretical differential off-tracking)

Corrected tag off-tracking = +0.64 + (0.74 - 0.54) = +0.84

Since the acceptable tolerance (for a 288" reference distance) is $\frac{288"}{3840}$ or 0.075"

For this example alignment, the real tag axis would then require to be between (0.84" - 0.075") and (0.84" + 0.075") inches or between 0.765" and 0.915"

This means you would have to adjust the tag to obtain any point from 0.565" and 0.715" on the target.

Acceptable alignment zone for this example would be from 0.765" to 0.915". The optimal value would be +0.84"

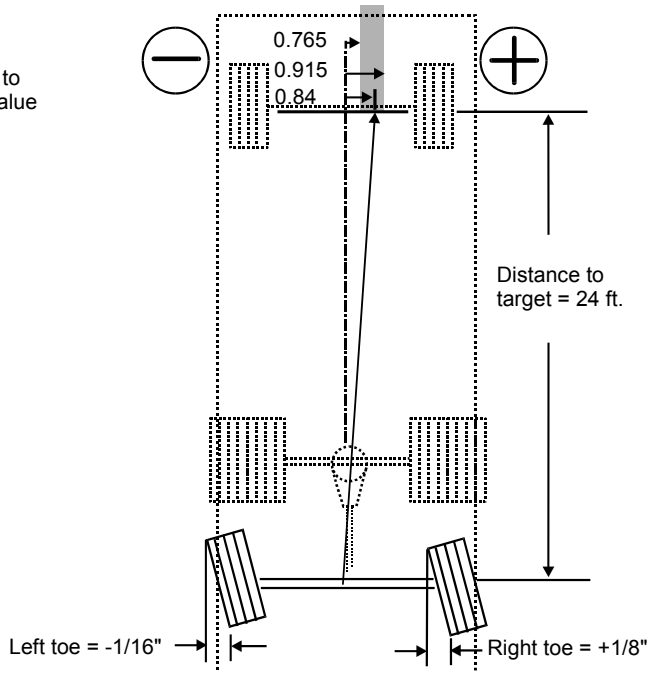

FIGURE 10: EXAMPLE CALCULATION 11014

1.11 AXLE SHAFT SEALING METHOD

The following method is to be used to ensure that axle shaft installation is fluid-tight:

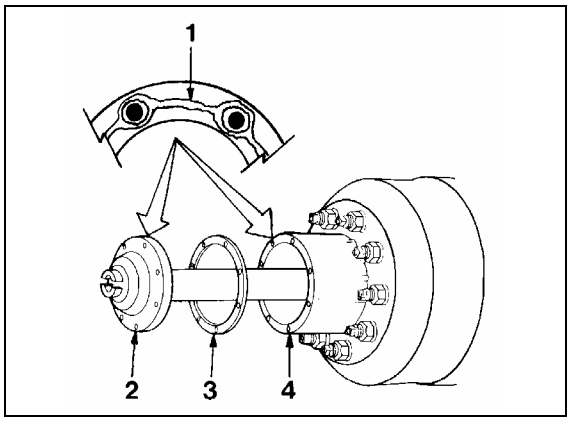

FIGURE 11: AXLE SHAFT INSTALLATION 11003

1 ..... Silicone sealant*
2 ..... Axle shaft
3 .....Gasket
4 .....Wheel hub

1. Clean the mounting surfaces of both the axle shaft flange and wheel hub where silicone sealant will be applied. Remove all old silicone sealant, oil, grease, dirt and moisture. Dry both surfaces.
2. Apply a continuous thin bead of silicone sealant* (Prévost P/N 680053) on the mounting surfaces and around the edge of all fastener holes of both the axle shaft flange and wheel hub.

* *GENERAL ELECTRIC Silicone Rubber Adhesive Sealant RTV 103 Black.*

Warning: *Carefully read cautions and instructions on the tube of silicone sealant and its packing.*

3. Assemble components immediately to permit the silicone sealant to compress evenly between parts.
   a. Place a new gasket, then install the axle shaft into the wheel hub and differential carrier. The gasket and flange of the axle shaft must fit flat against the wheel hub.
   b. Install the tapered dowels at each stud and into the flange of the axle shaft. Use a punch or drift and hammer if needed.
   c. Install the lock washers and nuts on the studs. Tighten nuts to the correct torque value.

Note: *Torque values are for fasteners that have a light application of oil on the threads (refer to Meritor Maintenance Manual).*

9/16-18 plain nut: 110 – 165 lbf•ft(149 – 224 N•m)

5/8-18 plain nut: 150 - 230 lbf•ft (203 - 312 N•m)

2. TAG AXLE

The tag axle is located behind the drive axle. It carries a single wheel and tire on each side. One optional system allows unloading of the tag axle air springs without raising the axle, while the other system enables unloading and raising of the tag axle (refer to the *"OPERATOR'S MANUAL"* for location of controls). Both these systems have been designed for the following purposes:

1. Shortening of wheelbase, thus allowing tighter turning in tight maneuvering areas such as parking lots or when making a sharp turn.
2. Transferring extra weight and additional traction to the drive wheels on slippery surfaces.

Caution: *Never exceed 30 mph (50 km/h) with tag axle up or unloaded and resume normal driving as soon as possible.*

The tag axle service brakes operate only when the axle is in normal driving (loaded) position.

2.1 OIL LUBRICATED WHEEL BEARINGS

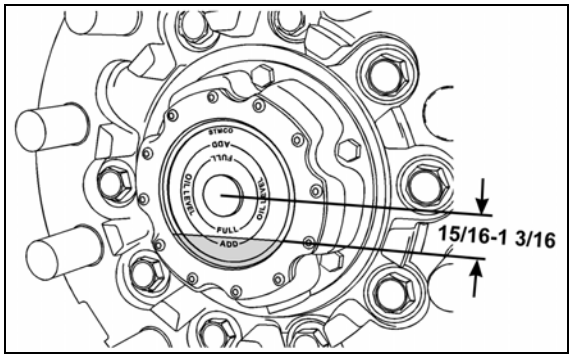

FIGURE 12: OIL FILL CAP 13017

The oil level on the tag axle and front axle wheel bearings must be maintained between the “ADD” and “FULL” level mark in the cap or between 15/16” and 1 3/16” from wheel centerline (23 to 30 mm). These oil level indicators, which are shown as a line, are incorporated to the plastic lens (Fig. 12). To check the oil level after the vehicle has been driven, wait at least 15 minutes to ensure that oil has settled. Differential oil is used to lubricate the drive axle wheel bearings. Maintain the differential oil at the level indicated to ensure adequate lubrication of the wheel bearings.

2.2 REMOVAL AND REINSTALLATION

The following procedure deals with the removal of the tag axle assembly along with the suspension components. The method used to support the axle and suspension components during removal and disassembly depends upon local conditions and available equipment.

1. Raise vehicle by its jacking points on the body (fig. 3 or see Section 18, *"BODY"* under heading : *"VEHICLE JACKING POINTS"*). Place jack under frame. Remove drive axle wheels (if required, refer to Section 13, *"WHEELS, HUBS AND TIRES"*).
2. Exhaust compressed air from the air supply system by opening the drain cock on each air reservoir.
3. Install jacks under tag axle jacking points to support the axle weight (refer to figure 13).

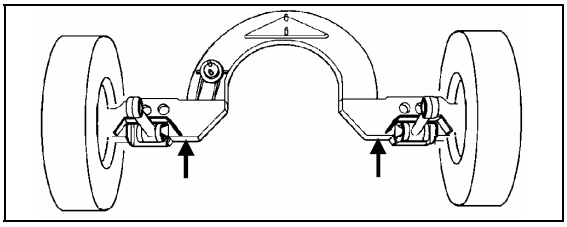

FIGURE 13: JACKING POINTS ON TAG AXLE OEH3B764

4. <u>Applies only to vehicles equipped with retractable tag axles:</u> Disconnect tag axle lifting chain collars from lower longitudinal radius rods.
5. Remove the propeller shaft as directed in Section 9, *"PROPELLER SHAFT",* in this manual.
6. Disconnect the tag axle brake chamber hoses.

Caution : *Position the hoses so they will not be damaged when removing axle.*

7. Disconnect hose from the air spring upper mounting plate.
8. Remove the two shock absorbers as outlined in Section 16, *"SUSPENSION",* under *"SHOCK ABSORBER REMOVAL".*
9. Disconnect the lower longitudinal radius rods as outlined in Section 16, *"SUSPENSION",* under *"RADIUS ROD REMOVAL".*
10. Disconnect the transversal radius rod.
11. Disconnect the upper longitudinal radius rod.
12 Remove the air bellows retaining nuts from each of the two upper mounting plates.
13. Use the jacks to move the axle forward to clear the axle off the transmission. Lower the axle.

Caution: *On vehicles equipped with an automatic transmission (with or without the output retarder), move tag assembly very carefully. Pay special attention to the U-shaped section, as the transmission end components may be easily damaged through a false maneuver.*

14. Reverse removal procedure to reinstall tag axle.

Note: *Refer to Section 16*, *"SUSPENSION"*, *for proper torque tightening of suspension components.*

Note: *Refer to section* 13 *"WHEELS, HUBS AND TIRES" for correct wheel bearing adjustment procedure.*

2.3 TAG AXLE ALIGNMENT

The tag axle alignment consists in aligning the tag axle parallel to the drive axle position. Before aligning the tag axle, proceed with the drive axle alignment (paragraph 1.10). Tag axle alignment is achieved with the use of shims inserted between the lower longitudinal radius rod supports and axle. Tag axle alignment is factory set and is not subject to any change, except if vehicle has been damaged by an accident or if there are requirements for parts replacement.

Caution: *If this setting is altered significantly, it will cause excessive tire wear.*

Note: *It may be necessary to adjust the axle TOE as well as its alignment. In this case, insert shims (7 min. - P/N 121203 or 15 min. - P/N 121240) in between mounting plate and spindle, as required.*

If axle has been removed for repair or servicing and if all parts are reinstalled exactly in their previous locations, axle alignment is not necessary. However, if the suspension supports have been replaced or have changed position, proceed with the following instructions to verify or adjust the tag axle alignment.

3. SPECIFICATIONS

Drive Axle

Make ..... Meritor
Drive track ..... 76.7 inches (1 949 mm)
Gear type ..... Hypoid
Axle type ..... Full floating
Lube capacity ..... 41 pints (19,3 liters)

Drive axle ratio

World Transmission

4.88:1 Standard
4.56:1 Optional

Note: *The drive axle alignment consists in aligning the axle with reference to the frame. The axle must be perpendicular to the frame.*

Tag Axle

Make ..... Prévost
Rear track ..... 83.6 inches (2 124 mm)
Axle type ..... Dana Spicer Europe TS5 Hub Unit

Note: *The tag axle alignment consists in aligning the tag axle parallel to the drive axle.*

SECTION 12: BRAKE AND AIR SYSTEM

CONTENTS

1. AIR SYSTEM 12-5

2. BRAKES 12-5

3. AIR RESERVOIRS 12-5

3.1 MAINTENANCE 12-6
3.1.1 Wet (Main) Air Tank 12-6
3.1.2 Primary Air Tank 12-6
3.1.3 Accessory Air Tank 12-6
3.1.4 Emergency/Parking Brake Overrule Air Tank 12-6
3.1.5 Secondary Air Tank 12-6
3.1.6 Kneeling Air Tank 12-6

4. AIR SYSTEM EMERGENCY FILL VALVES 12-6

5. ACCESSORY AIR FILTER 12-7

5.1 FILTER ELEMENT REPLACEMENT 12-7
5.2 CLEANING 12-7

6. AIR GAUGES (PRIMARY, SECONDARY AND ACCESSORY) 12-7

7. AIR FILTER/DRYER 12-8

8. AIR LINES 12-8

8.1 FLEXIBLE HOSES 12-8
8.1.1 Copper Tubing 12-8
8.1.2 Nylon Tubing 12-9
8.2 AIR LINE OPERATING TEST 12-9
8.3 AIR LINE LEAKAGE TEST 12-9
8.4 MAINTENANCE 12-9

9. PRESSURE REGULATING VALVES 12-9

9.1 MAINTENANCE 12-10
9.2 PRESSURE SETTING PROCEDURE 12-10

10. AIR COMPRESSOR (TU-FLO 750) 12-10

10.1 COMPRESSOR REMOVAL AND INSTALLATION 12-11

11. GOVERNOR (D-2) 12-11

12. EMERGENCY/PARKING BRAKE CONTROL VALVE (PP-1) 12-11

13. EMERGENCY / PARKING BRAKE OVERRULE CONTROL VALVE (RD-3) 12-12

14. FLIP-FLOP CONTROL VALVE (TW-1) 12-12

15. DUAL BRAKE APPLICATION VALVE (E-10P) 12-12

15.1 BRAKE PEDAL ADJUSTMENT 12-12
15.1.1 Maintenance 12-12

16. STOPLIGHT SWITCHES 12-13

17. PARKING BRAKE ALARM SWITCH 12-13

18. BRAKE RELAY VALVE (R-12 & R-12DC) 12-13

19. QUICK RELEASE VALVES (QR-1) 12-13

20. SPRING BRAKE VALVE (SR-1) 12-14

21. PRESSURE PROTECTION VALVE (PR-4) 12-14

22. LOW PRESSURE INDICATOR (LP-3) 12-14

23. SHUTTLE-TYPE DOUBLE CHECK VALVE (DC-4) 12-14

24. AIR HORN VALVE 12-15

25. AIR SYSTEM TROUBLESHOOTING 12-15

26. BRAKE OPERATION 12-15

27. AIR BRAKES 12-16

27.1 DISC BRAKES 12-16
27.1.1 Disc Brake Pads 12-16
27.1.2 Caliper Maintenance 12-16
27.1.3 Roadside Inspection for Knorr/Bendix Air Disc Brakes 12-17
27.1.4 Pad Removal 12-18
27.1.5 Checking Pad Wear 12-18
27.1.6 Important Pad and Rotor Measurements 12-18
27.1.7 Checking Caliper Guidance and Seal Condition 12-18
27.1.8 Checking the Tappet Boots 12-19
27.1.9 Pad Installation 12-19
27.1.10 Adjusting the Running Clearance 12-20
27.1.11 Brake Tools 12-20
27.1.12 Checking Brake Pads 12-20
27.1.13 Torque specifications 12-20

28. SAFE SERVICE PROCEDURES 12-22

29. AIR BRAKE TROUBLESHOOTING 12-22

30. BRAKE AIR CHAMBER 12-25

30.1 MAINTENANCE 12-25
30.2 EMERGENCY/PARKING BRAKE MANUAL RELEASE 12-26
30.3 BRAKE CHAMBER REMOVAL 12-26
30.4 BRAKE CHAMBER INSTALLATION 12-26
30.5 BRAKE CHAMBER DISASSEMBLY 12-26

31. ANTI-LOCK BRAKING SYSTEM (ABS) 12-27

31.1 TROUBLESHOOTING AND TESTING 12-27
31.1.1 Blink Code Troubleshooting and Repair 12-29
31.2 ABS COMPONENTS 12-30
31.2.1 Electronic Control Unit (ECU) 12-30
31.2.2 Maintenance 12-30
31.3 ABS MODULATOR VALVE 12-30
31.3.1 Maintenance 12-30
31.4 SENSORS 12-30
31.4.1 Maintenance 12-31
31.4.2 Sensor Installation 12-31
31.5 SPRING CLIP 12-31
31.5.1 Maintenance 12-31

32. FITTING TIGHTENING TORQUES 12-31

33. SPECIFICATIONS 12-33

ILLUSTRATIONS

FIGURE 1: AIR RESERVOIRS LOCATION 12-5
FIGURE 2: REAR VALVE LOCATION (TYPICAL) 12-6
FIGURE 3: FRONT SERVICE COMPARTMENT 12-6
FIGURE 4: ACCESSORY AIR FILTER 12-7
FIGURE 5: BENDIX AD-9 AIR FILTER/DRYER 12-8
FIGURE 6: WABCO 1200 AIR FILTER/DRYER 12-8
FIGURE 7: AIR PRESSURE REGULATING VALVE 12-10
FIGURE 8: AIR PRESSURE REGULATOR 12-10
FIGURE 9: AIR COMPRESSOR AND GOVERNOR 12-11
FIGURE 10: D-2 GOVERNOR 12-11
FIGURE 11: PP-1 12-11
FIGURE 12: RD3 12-12
FIGURE 13: TW1 12-12
FIGURE 14: BRAKE PEDAL ADJUSTMENT 12-13
FIGURE 15: DELCO SWITCH 12-13
FIGURE 16: BENDIX SWITCH 12-13
FIGURE 17: R-12 12-13
FIGURE 18: QR-1 12-13
FIGURE 19: SR-1 12-14
FIGURE 20: PR-4 12-14
FIGURE 21: LP-3 12-14
FIGURE 22: DC-4 12-15
FIGURE 23: BRAKE PAD CHECK 12-16
FIGURE 24: CLEARANCE INSPECTION 12-16
FIGURE 25:RUNNING CLEARANCE 12-17
FIGURE 26: ADJUSTER PINION 12-17
FIGURE 27: BOX WRENCH ON ADJUSTER PINION 12-17
FIGURE 28: CALIPER AXIAL MOVEMENT 12-17
FIGURE 29: BRAKE PAD CHECK 12-18
FIGURE 30: PAD REMOVAL 12-18

FIGURE 31: PAD WEAR 12-18
FIGURE 32: ROTOR AND PAD WEAR LIMITS 12-18
FIGURE 33: CALIPER GUIDANCE 12-19
FIGURE 34: RUBBER BOOTS 12-19
FIGURE 35: PAD INSTALLATION 12-19
FIGURE 36: RUNNING CLEARANCE 12-20
FIGURE 37: BRAKE PAD CHECK 12-20
FIGURE 38: TORQUE SPECIFICATION 12-20
FIGURE 39: TORQUE SPECIFICATION 12-21
FIGURE 40: AIR-OPERATED BRAKING SYSTEM XLII 12-23
FIGURE 41: FRONT AXLE BRAKE AIR CHAMBER 12-25
FIGURE 42: TAG AXLE BRAKE AIR CHAMBER 12-25
FIGURE 43: ABS 4S/4M CONFIGURATION 12-29
FIGURE 44: ABS BLINKER SWITCH & ECU LOCATION 12-30
FIGURE 45: ABS MODULATOR VALVE 12-30
FIGURE 46: ABS SENSOR LOCATION 12-31
FIGURE 47: SPRING CLIP 12-31
FIGURE 48: HOSE FITTINGS 12-31
FIGURE 49: HOSE FITTING 12-32
FIGURE 50: HOSE FITTING 12-32
FIGURE 51: HOSE FITTING 12-32

1. AIR SYSTEM

The basic air system consists of an air compressor, reservoirs, valves, filters and interconnecting lines and hoses. It provides a means for braking, operating controls and accessories, and suspension (refer to Section 16, *"Suspension"*, for complete information on suspension description and maintenance). An air system schematic diagram is annexed in the technical publications box provided with the vehicle for better understanding of the system.

2. BRAKES

This vehicle uses both the service brake and emergency/parking brake. The service brake air system is divided into two independent circuits to isolate front brakes from rear brakes, thus providing safe breaking in the event that one circuit fails. Front axle brakes operate from the secondary air system, while brakes on both the drive axle and tag axle operate from the primary air system.

***Note**: The tag axle service brake operates only when the axle is in normal ride position (loaded and down).*

Furthermore, the brake application or release, which is speed up by a pneumatic relay valve (R-12), will start with the rear axles and will be followed by the front axle, thus providing uniform braking on a slippery road. The vehicle is also equipped with an Anti-Lock Braking System (ABS), which is detailed later in this section.

The drive and tag axles are provided with spring-loaded emergency/parking brakes, which are applied automatically whenever the control valve supply pressure drops below 40 psi (275 kPa). The optional emergency/parking brake overrule system allows the driver to release spring brakes, and to move the vehicle to a safe parking place, such as in the case of a self-application of these brakes due to a drop in air pressure.

3. AIR RESERVOIRS

The air coming from the air dryer is first forwarded to the wet air tank, then to the primary (for the primary brake system), secondary (for the secondary brake system), and accessory (for the pneumatic accessories) air tanks (Fig. 1).

Two additional air reservoirs may be installed on the vehicle: the kneeling air tank and emergency/ parking brake overrule air tank.

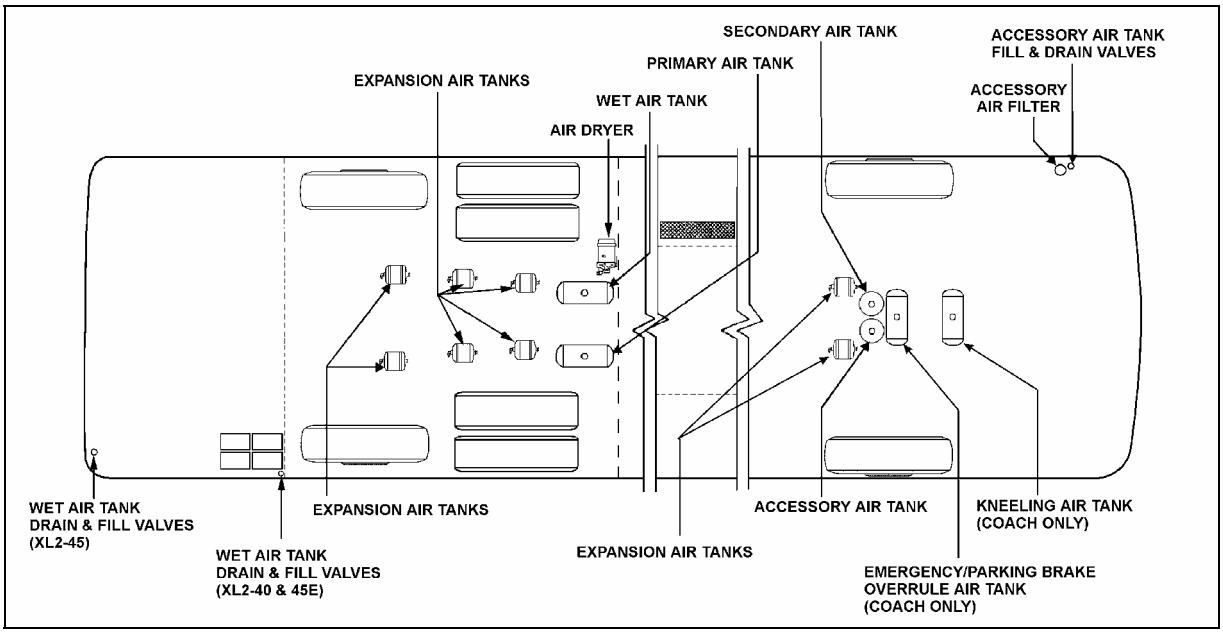

FIGURE 1: AIR RESERVOIRS LOCATION 24006

3.1 MAINTENANCE

Ensure that the wet (main) air tank is purged during pre-starting inspection. In addition, it is good practice to purge this reservoir at the end of every working day. The remaining reservoirs must be purged at every 12,500 miles (or 20 000 km) or once every year, whichever comes first.

3.1.1 Wet (Main) Air Tank

This reservoir, located above the L.H. wheel of drive axle in the rear wheelhousing, is provided with a bottom drain valve. A recommended purge using the bottom drain valve should be done every 12,500 miles (20 000 km), or once a year, whichever comes first.

3.1.2 Primary Air Tank

This reservoir is located above the R.H. wheel of the drive axle and is provided with a bottom drain valve (Fig. 1). It is recommended to purge the primary air tank every 12,500 miles (20 000 km) or once a year, whichever comes first.

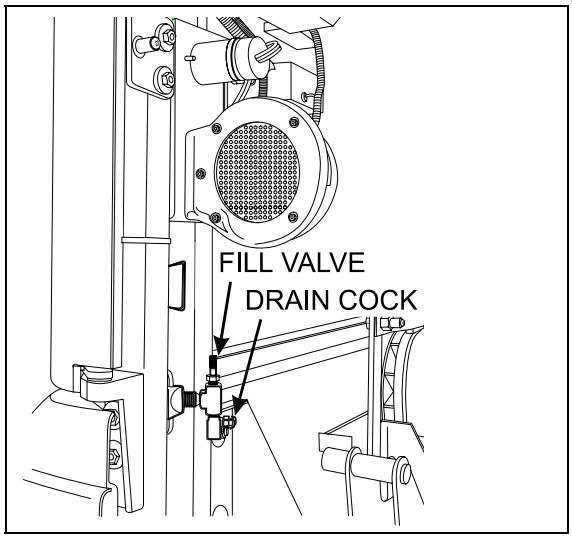

FIGURE 2: REAR VALVE LOCATION (TYPICAL) 12162

3.1.3 Accessory Air Tank

The accessory air tank is installed close to the front axle and is provided with a bottom drain valve (Fig. 1).
Purge the reservoir by it's drain valve every 12,500 miles (20 000 km) or once a year, whichever comes first.

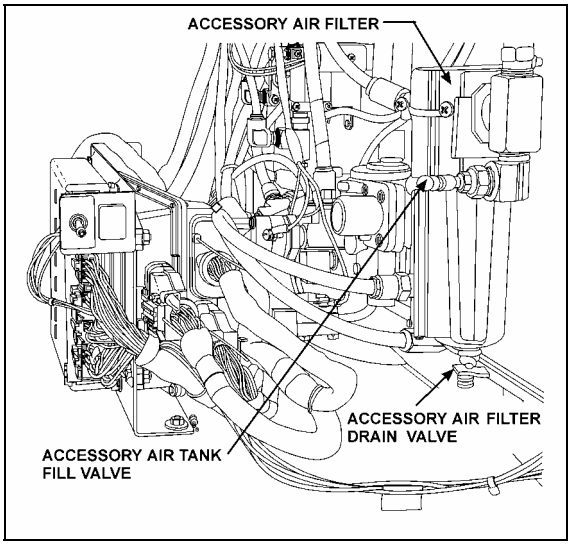

FIGURE 3: FRONT SERVICE COMPARTMENT 12144

3.1.4 Emergency/Parking Brake Overrule Air Tank

Installed on vehicles equipped with this option, this reservoir is located in the front wheelhousing (Fig. 1). It is provided with a bottom drain valve.

Purge this reservoir every 12,500 miles (20 000 km) or once a year, whichever comes first.

3.1.5 Secondary Air Tank

This tank is located in the front wheelhousing, behind the steering axle (Fig. 1). It is provided with a bottom drain valve

Purge this reservoir every 12,500 miles (20 000 km) or once a year, whichever comes first.

3.1.6 Kneeling Air Tank

The kneeling air tank is installed on vehicles equipped with the Kneeling or Hi/Low-Buoy options. It is located in the front wheelhousing (Fig. 1), and is provided with a bottom drain valve.

4. AIR SYSTEM EMERGENCY FILL VALVES

All vehicles come equipped with two emergency fill valves that enable system pressurization by an external source such as an air compressor. The rear valve is located in the engine compartment and is accessible from engine R.H. side door (Fig 2.). It can be positioned close to the door hinge or the door opening.

***Caution**: Maximum allowable air pressure is 125 psi (860 kPa). Air filled through these two points will pass through the standard air filtering system provided by Prevost. Do not fill system by any point on the system.*

The front valve is located in the front service compartment close to R.H. side of door frame (Fig. 3).

These two air system emergency fill valves are fitted with the same valve stems as standard tires, and can be filled by any standard external air supply line.

The rear air system emergency fill valve will supply air for all systems (brakes, suspension and accessories) while the front fill valve will supply air for accessories only.

5. ACCESSORY AIR FILTER

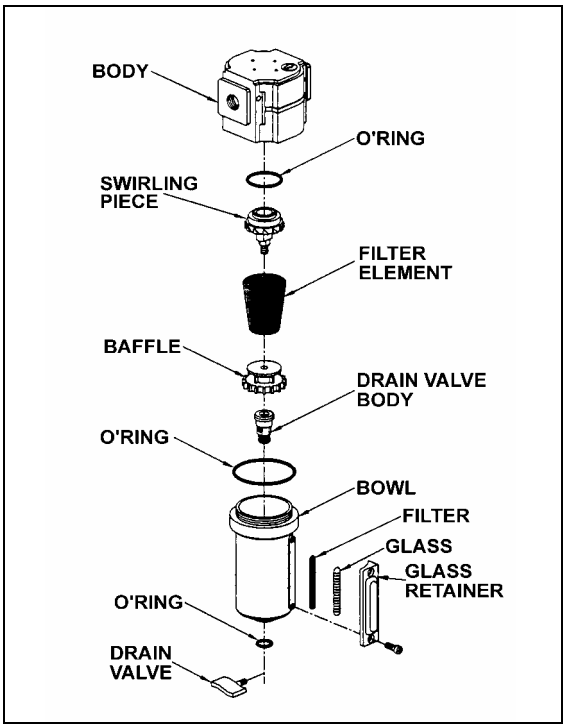

FIGURE 4: ACCESSORY AIR FILTER 12088

This filter is located inside the front service compartment (Fig. 3). Its main function consists in filtering the air supplied to the accessory air system, when connected to an external supply line. Ensure filter is purged whenever supplying the system with an external air line and at least every 12,500 miles (20 000 km).
To purge, open drain valve (Fig. 4), let the moisture come out, then close the drain valve.

5.1 FILTER ELEMENT REPLACEMENT

Replace filter element whichever of the following occurs first: every 100,000 miles (160 000 km), every two years, or whenever differential pressure exceeds 15 psi (105 kPa) between filter inlet and outlet ports. Check condition of all three O'rings for damage. Replace when necessary (Fig. 4).

5.2 CLEANING

Clean filter body and bowl with a warm water and soap solution. Rinse thoroughly with clean water. Blow dry with compressed air making sure the air stream is moisture free and clean. Pay particular attention to the internal passages.

Inspect all parts for damage and replace if necessary.

6. AIR GAUGES (PRIMARY, SECONDARY AND ACCESSORY)

The air pressure gauges, located on the dashboard (see *"Operator's Manual" or "Owner's Manual"*), are connected to the DC-4 double check valve, located on the pneumatic accessory panel in the front service compartment.

The latter is connected to the air lines running from the primary and secondary air tanks, as shown on the pneumatic system diagram provided in the technical publications box. The accessory air gauge is connected to the accessory air tank using the drain valve connector. The vehicle should never be set in motion until the buzzer alarm and warning lights turn off, i.e. when air pressure registers at least 66 psi (455 kPa). Moreover, if pressure drops below 66 psi (455 kPa), the *"Low air pressure"* warning lights will turn on, and the *"Low air pressure"* buzzer will sound. Stop the vehicle immediately, determine and correct the cause(s) of pressure loss. Check the gauges regularly with an accurate test gauge. Replace the gauge with a new unit if there is a difference of 4 psi (27 kPa) or more in the reading.

7. AIR FILTER/DRYER

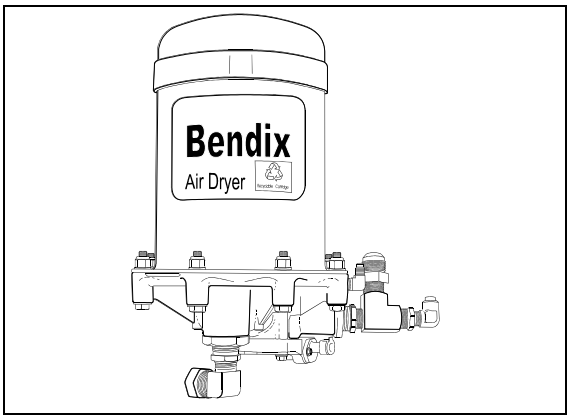

FIGURE 5: BENDIX AD-9 AIR FILTER/DRYER 12155

The air filter/dryer is located in front of rear wheelhousing above drive axle (Fig. 5 & 6). Its purpose is to remove moisture that could damage the air system before the air enters the system reservoir. The air filter/dryer also filters the air to remove dirt, compressor oil, and other contaminants that can damage the system. Change cartridge every 100,000 miles (160 000 km) or once every two years, whichever comes first. The air dryer may be purged for maintenance purposes using the remote drain valve located in the engine compartment and accessible through the engine compartment R.H. side door. The valve is positioned over the battery assembly, close to the door hinge or close to the L.H. side of door opening depending on type of vehicle (Fig. 2).

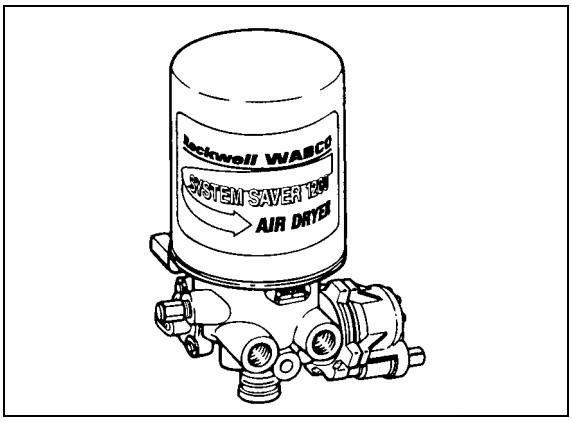

FIGURE 6: WABCO 1200 AIR FILTER/DRYER 12152

Maintenance and repair information on the relevant air dryer are supplied in the applicable booklet annexed to this section under reference “Service Data Sheet SD-08-2412” for AD-9 or “Maintenance Manual No 34” for Wabco.

8. AIR LINES

Copper tubing, nylon-reinforced tubing, and flexible hoses are used to connect the units in the pneumatic system, including air brake system, suspension system and accessory systems such as the entrance door, fresh air damper cylinder, air horns, etc. Furthermore, the nylon tubing is color coded to ease identification. Refer to the following table for the complete color identification code. Service instructions for each type of air line are also provided under the applicable headings.

Color	Circuit
Red	Secondary
Green	Primary and Delivery
Yellow	Parking Brake
Blue	Suspension
Black	Accessory

8.1 FLEXIBLE HOSES

A flexible hose is used normally where it is impractical to use copper or nylon tubing due to constant flexing during operation, such as brake chamber hoses. Hose connections should be tested for leakage at least every 6,250 miles (10 000 km) or twice a year, whichever comes first and tightened or replaced if necessary. Any hose which is chafed, worn or kinked should be replaced.

Teflon-braided stainless steel hoses used in the engine compartment must be replaced only with similar hoses.

8.1.1 Copper Tubing

Annealed copper tubing with three-piece compression type fittings are used in the engine compartment where heat and high pressure resistant lines are required. Connections should be checked for leakage at least every 6,250 miles (10 000 km) or twice a year, whichever comes first. Tighten or replace when necessary. When replacing copper tubing, the parts must be free of burrs, copper cuttings, and dirt. Blow out tubing with compressed air. Any such particles will destroy sealing seats in air control units. Also, new tubing must be the same size as the old one.

Always use new tubing ring when replacing tubing. When tightening tube connector nuts,

tighten to the specified torque to ensure an airtight connection (refer to *"Various Fittings Tightening Torques"* at the end of this section). Overtightening will cause leakage. Apply SAE 10 oil or spray white grease (Prévost part No. 680343) to ball sleeves, tubes and male threads. Torque to the minimum value and check for leaks. If leaking occurs, back off tube nut about ½ turn and retorque to a higher than minimum value.

8.1.2 Nylon Tubing

Nylon tubing is used for air lines in areas where usage of this material is suitable. Nylon tubing is flexible, durable, and weather resistant. When replacing an air line, use nylon tubing only where it has been used previously.

Nylon air lines must never be routed in areas where temperature could exceed 200°F (93°C).

***Caution**: Nylon air lines should be used to replace existing nylon lines only, and must comply with the color identification code to ease pneumatic system troubleshooting.*

8.2 AIR LINE OPERATING TEST

If any trouble symptom such as slow brake application or slow brake release indicates a restricted or clogged air line, disconnect the suspected tube or hose at both ends and blow through it to clear the passage.

Inspect tubing and hose for partial restriction that may be caused by dents or kinks. If such a condition is found, the tubing or hose should be replaced.

8.3 AIR LINE LEAKAGE TEST

With air system fully charged and the brakes applied, coat all tubing and hose connections with a soapy solution to check for air leakage. No leakage is permitted. Leakage can sometimes be corrected by tightening the connection. If this fails to correct the leakage, new fittings, nylon tubing, copper tubing, teflon-braided stainless steel and flexible hoses must be installed as applicable.

8.4 MAINTENANCE

Inspect all lines for cuts, swelling, kinks or other damage or deterioration. Check for lines being pinched by other components. Retaining clips and ties must be in place.

Any support or bracket should be in good condition and mounted firmly in position. Hose spring guards should be in usable condition and not distorted. Particular attention should be given to long lines. Any supporting component (clips, ties, grommets, etc.) must be secured to prevent against unnecessary vibration and eventual loosening of connection. Any detected leak should be repaired. Be sure nylon lines are not near areas of intense heat. Check for any missing grommets or loose material where chafing or cutting may occur. Replace with new material as required. In general, lines should be securely located in position and free from any binding condition which would hinder air flow.

9. PRESSURE REGULATING VALVES

There is one pressure regulator for the belt tensioners, and an optional one installed on vehicles equipped with the world transmission output retarder.

The belt tensioner pressure regulating valve is located in the engine compartment above the doors and is used to limit the air pressure in belt tensioners to 50 ± 2 psi (345 ± 15 kPa) for series 60 engines (Fig. 7).

The optional regulator is either located in the engine compartment (accessible through the engine R.H. side door) or in the R.H. side rear service compartment. It is used for transmission retarder and should be adjusted to 80 ± 3 psi (550 ± 20 kPa).

	Air Pressure (psi)	Air Pressure (kPa)
Belt Tensioner	**series 60** 50 ± 2	**series 60** 345 ± 15
Retarder	80 ± 3	550 ± 20

9.1 MAINTENANCE

Every 100,000 miles (160 000 km) or once every two years, whichever comes first, disassemble the regulating valve and wash all metal parts in a cleaning solvent (Fig. 7). Examine the diaphragm; if cracked, worn or damaged, replace with a new one. If the valve is excessively grooved or pitted, it should be replaced. Replace any other part that appears worn or damaged. After reassembly, adjust to the specified pressure setting and check for air leakage.

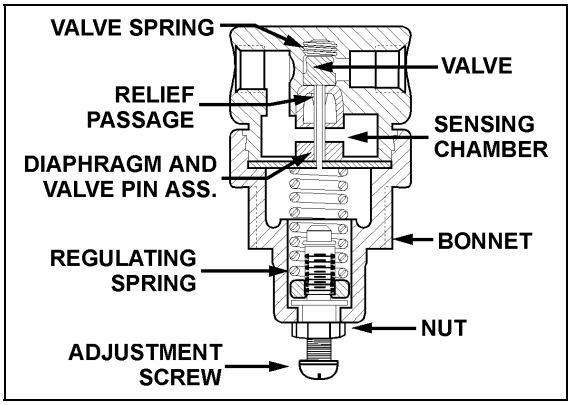

FIGURE 7: AIR PRESSURE REGULATING VALVE 12141B

9.2 PRESSURE SETTING PROCEDURE

Remove the dust cap from the pressure check valve (Fig. 8). Attach a pressure gauge at this port and check the pressure reading. If the pressure reading is incorrect, adjust as follows:

1. Loosen the locking nut, turn the adjustment screw counterclockwise to decrease pressure by approximately 10 psi (70 kPa) below the required pressure.
2. Turn the adjustment screw clockwise to increase the pressure slowly until the required pressure setting is reached. Tighten the locking nut.
3. Remove pressure gauge and replace dust cap on the air pressure check valve.

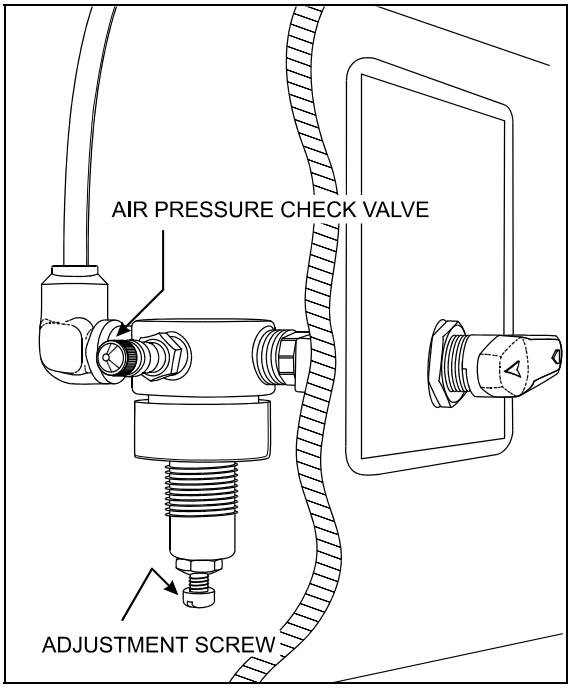

FIGURE 8: AIR PRESSURE REGULATOR 12151

10. AIR COMPRESSOR (TU-FLO 750)

The air compressor is located on starter side of the engine, on the rear of the engine gear case (Fig. 9). Its function is to provide and maintain air under pressure to operate devices in brake and air systems.

This air compressor also drives the engine fuel pump which is bolted to the rear end of the compressor. The compressor crankshaft is designed to accept a drive coupling which is placed between the compressor and fuel pump.

The compressor is driven by the bull gear, and is water cooled. Engine coolant is fed to the compressor through a flexible hose tapped into the block water jacket and connected to the rear of the compressor. Coolant returns from the right of the compressor (governor side) through a flexible hose to the engine cylinder head.

The air is taken from the air intake manifold and entered in the back of the compressor. The compressed air is pushed into the discharge line located on top of the compressor, which sends air to the air dryer. Lubricating oil is supplied to the compressor by a line from the cylinder block oil gallery connected to the air compressor. Lubricating oil returns to the engine crankcase through the air compressor drive assembly.

Maintenance and repair information on the TU-FLO 750 air compressor is supplied in the applicable booklet annexed to this section under reference number SD-01-344.

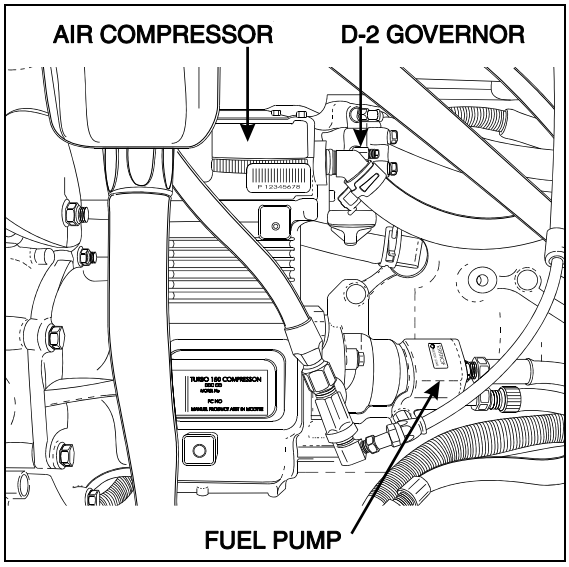

FIGURE 9: AIR COMPRESSOR AND GOVERNOR 12160

10.1 COMPRESSOR REMOVAL AND INSTALLATION

1. Exhaust compressed air from air system by opening the drain valve of each air tank.
2. Drain the engine cooling system. See Section 5: "*Cooling System*".
3. Identify and disconnect all air, coolant and oil lines from the compressor and governor assembly.
4. Access the compressor by the engine R.H. side compartment. Remove the four compressor mounting bolts and the two fuel pump support bracket bolts.
5. Slide air compressor rearward to disengage the hub from coupling. Remove the air compressor.

Reverse removal procedure for installation.

11. GOVERNOR (D-2)

The governor is mounted on the air compressor (Fig. 9), its function is to maintain the system pressure between a minimum and a maximum value. Maintenance and repair information on D-2 governor is supplied in the applicable booklet annexed to this section under reference number SD-01-503.

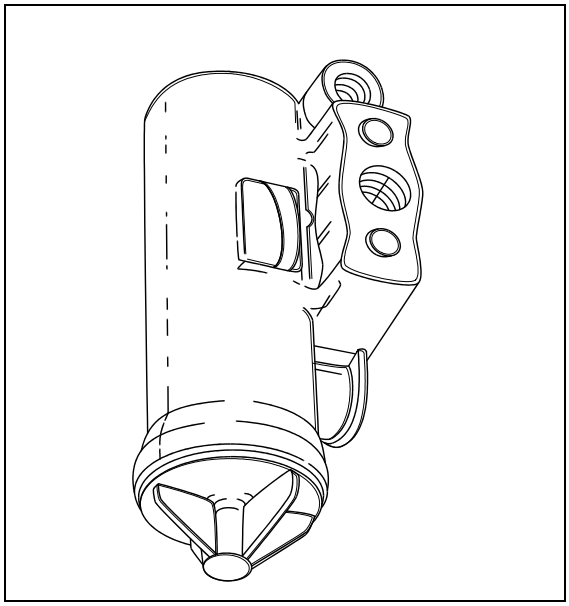

FIGURE 10: D-2 GOVERNOR 12137

12. EMERGENCY/PARKING BRAKE CONTROL VALVE (PP-1)

A push-pull control valve mounted on the L.H. lateral console is provided for parking brake application or release. The spring brakes are self-actuated whenever the control valve supply pressure drops below 40 psi (275 kPa). In the UP position, brakes are ON. In the DOWN position, brakes are RELEASED. A protective case around the knob prevents accidentally releasing the brakes.

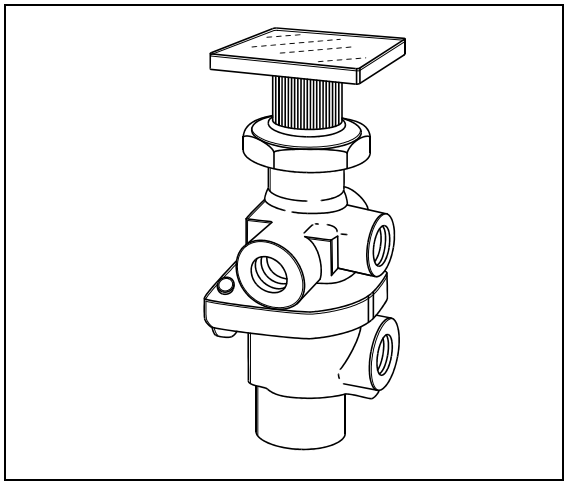

FIGURE 11: PP-1 12142

Maintenance and repair information on this valve is supplied in the applicable booklet annexed to this section under reference number SD-03-3611.

Remove the valve the following way:

1. Drain the air system.
2. Access this valve by tearing out the finishing panel, which holds the controls in place (Fig. 11).
3. Disconnect the air tubes.
4. Remove the retaining screws.
5. Service or replace the valve.
6. Installation is the reverse of removal.

13. EMERGENCY / PARKING BRAKE OVERRULE CONTROL VALVE (RD-3)

A RD-3 control valve is used with the optional parking brake overrule system. In the case of self-application of spring brakes due to a pressure drop, the brakes can be released by holding down this control valve. Maintenance and repair information on this valve is supplied in the applicable booklet annexed to this section under reference number SD-03-3611.

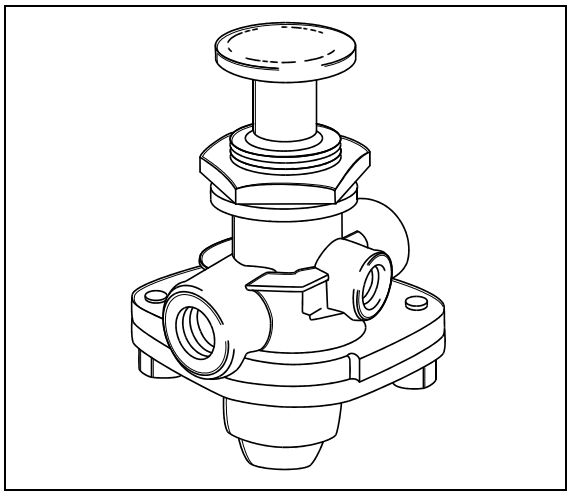

FIGURE 12: RD3 12136

14. FLIP-FLOP CONTROL VALVE (TW-1)

A flip-flop control valve mounted on the L.H. lateral console is provided to unload tag axle air springs (and to lift tag axle if vehicle is so equipped). Another one controls the low-buoy system (coaches only). It is a manually operated "on-off" valve. Maintenance and repair information on this valve is supplied in the applicable booklet annexed to this section under reference number SD-03-3602.

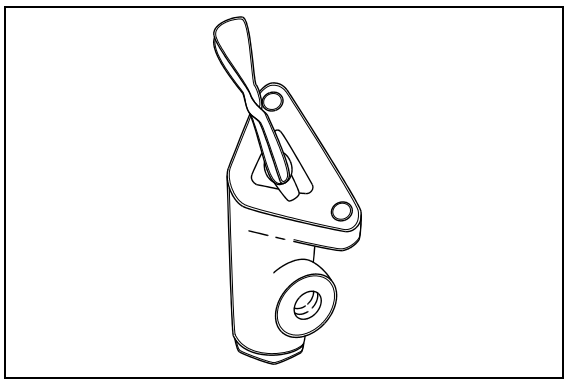

FIGURE 13: TW1 12138

15. DUAL BRAKE APPLICATION VALVE (E-10P)

The E-10P dual brake valve is a floor mounted, foot-operated type brake valve with two separate supply and delivery circuits. This valve is located in the front service compartment (Fig. 14).

15.1 BRAKE PEDAL ADJUSTMENT

After brake pedal replacement or repair, adjust the pedal to its proper position according to the following procedure:

1. Replace the linkage, loosen threaded rod lock nuts and screw or unscrew the threaded adjustment rod in order to obtain a 45° brake pedal inclination (Fig. 14).
2. Tighten threaded rod lock nuts.

15.1.1 Maintenance

Maintenance and repair information on the E-10P dual brake application valve is supplied in the applicable booklet annexed to this section under reference number SD-03-830.

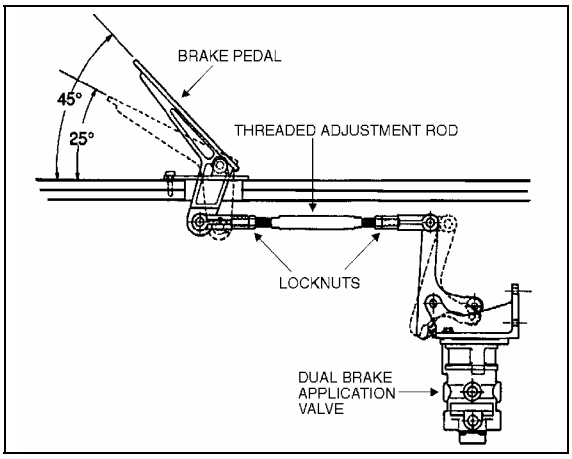

FIGURE 14: BRAKE PEDAL ADJUSTMENT 12040

16. STOPLIGHT SWITCHES

Two electro-pneumatic stoplight switches are mounted on the dual brake application valve (E-12). The upper one is used for the primary air circuit while the lower one is used for the secondary air circuit. Both switches are connected in parallel and have the same purpose, i.e. completing the electrical circuit and lighting the stoplights when a brake application is made. The upper switch (AC Delco) is designed to close its contact between 2 psi and 4 psi (14 kPa to 28 kPa) (Fig. 15), while the lower one (Bendix, SL-5) closes its contact at 4 psi (28 kPa) (Fig. 16). The switches are not a serviceable items; if found defective, the complete unit must be replaced.

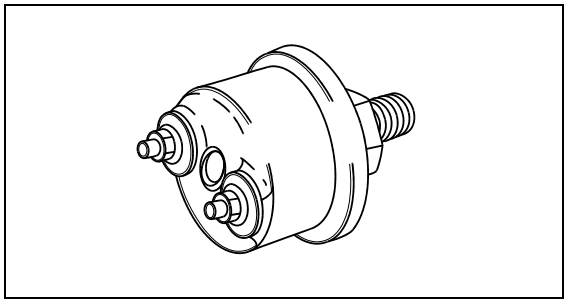

FIGURE 15: **DELCO SWITCH** 12139

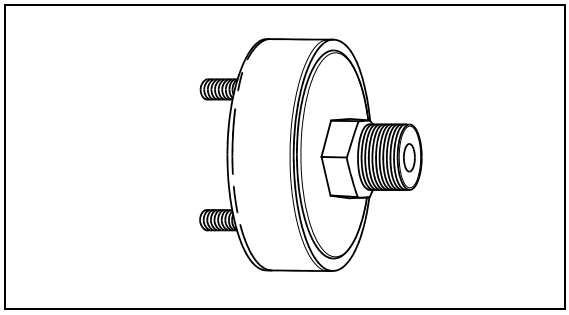

FIGURE 16: BENDIX SWITCH 12140

17. PARKING BRAKE ALARM SWITCH

Refer to the appropriate annexed booklet (Bendix, SL-5 Stop Light Switch; reference no. SD-06-2501).

The parking brake alarm uses the same switch as the stoplights. It is mounted on the spring brake valve and operates in conjunction with a NC relay to sound a warning alarm by completing the electrical circuit when the ignition key is turned OFF with parking brake released.

18. BRAKE RELAY VALVE (R-12 & R-12DC)

The primary air system includes three brake relay valves being supplied by the dual brake valve, and which function is to speed up the application and release of the service brakes.

One R-12DC valve supplies the drive axle service brake air line, while the other two valves supply independently both the tag axle right and left service brake air line and act as interlock valves. These valves are accessible from under the vehicle at the level of the tag axle. Maintenance and repair information on these valves is supplied in the applicable booklets annexed to this section under reference number SD-03-1064 and SD-03-1068.

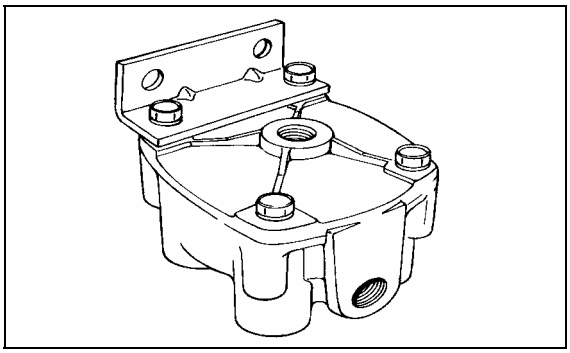

FIGURE 17: R-12 12074

19. QUICK RELEASE VALVES (QR-1)

The quick release valve is located on the front axle service brakes air line and permit rapid exhaust of air pressure from brakes, thus decreasing the brake release time.

Maintenance and repair information on this valve is supplied in the applicable booklet annexed to this section under reference number SD-03-901.

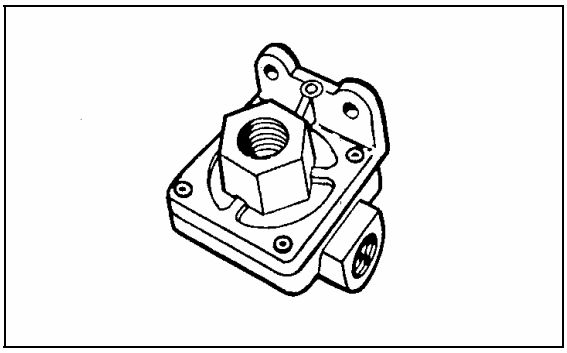

FIGURE 18: QR-1 12075

20. SPRING BRAKE VALVE (SR-1)

The spring brake valve is located on the pneumatic accessory panel in the front service compartment. The function of the SR-1 is to modulate the spring brakes during the application of the foot brake valve in the event of loss of service brake pressure. Maintenance and repair information on the spring brake valve is supplied in the applicable booklet annexed to this section under reference number SD-03-4508.

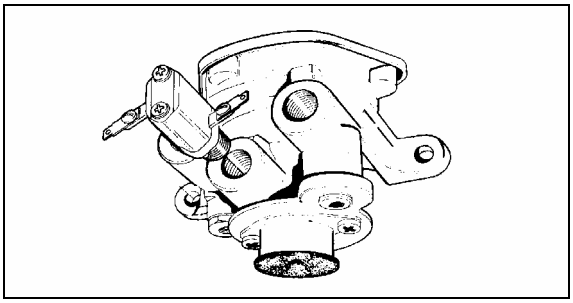

FIGURE 19: SR-1 12076

21. PRESSURE PROTECTION VALVE (PR-4)

Maintenance and repair information on the pressure protection valve is supplied in the applicable booklet annexed to this section under reference number SD-03-2010.

The air system includes two pressure protection valves (Fig. 20). One valve is installed on the manifold block, and insures at all times a minimum pressure of 70 psi (482 kPa) in the suspension air system in the event that a pressure drop occurs in either the suspension air system or accessory air system. This valve is located in the front service compartment besides the air filter.

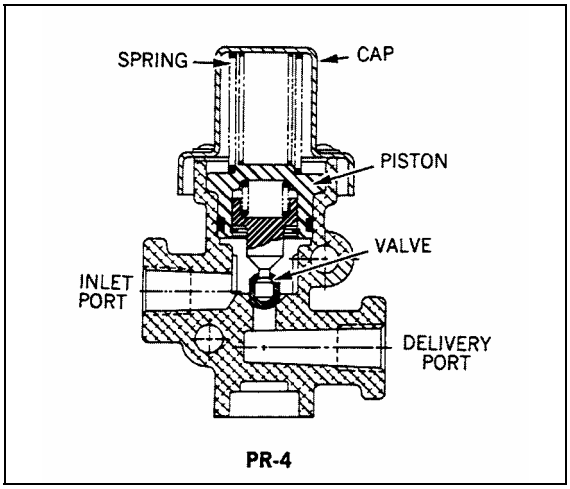

FIGURE 20: PR-4 12174

The other valve is installed on the accessory air tank, and insures a minimum pressure of 70 psi (482 kPa) in the accessory air system in the event that a pressure drop occurs in either the suspension air system or braking air system (refer to Fig. 1 for accessory air tank location).

22. LOW PRESSURE INDICATOR (LP-3)

Maintenance and repair information on the low pressure indicators is supplied in the applicable booklet annexed to this section under reference number SD-06-2.

The air system includes two low pressure switches (Fig. 21), both located on the pneumatic accessory panel in the front service compartment. One serves for the parking brake signal, the remaining pressure switch monitors the parking brake telltale panel indicator. Their pressure setting is 66 ± 6 psi (455 ± 40 kPa

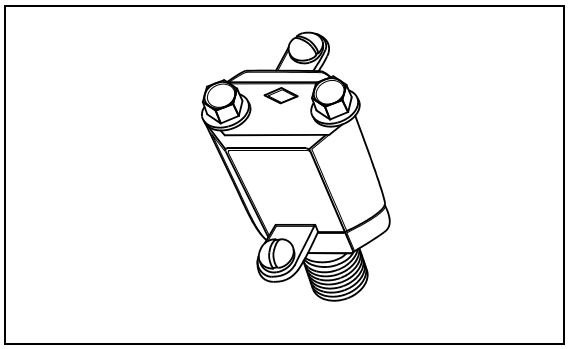

FIGURE 21: LP-3 12135

23. SHUTTLE-TYPE DOUBLE CHECK VALVE (DC-4)

Maintenance and repair information on the shuttle-type double check valve is supplied in the applicable booklet annexed to this section under reference number SD-03-2202.

The double check valve is located on the pneumatic accessory panel in the front service compartment. In the event of a pressure drop in either the primary or secondary system, this unit will protect the emergency /parking brake control valve and the intact portion of the air system from pressure loss.

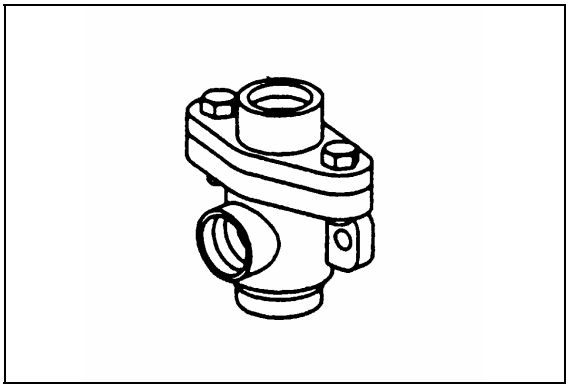

FIGURE 22: DC-4 12134

24. AIR HORN VALVE

The air horn valve is located in the L.H. front service compartment. The air horn button is on the center of the steering wheel. Refer to section 23 “ACCESSORIES” for more information.

25. AIR SYSTEM TROUBLESHOOTING

The following list has been designed to help in troubleshooting some of the most common problems in the air system and main causes. For air brakes troubleshooting, refer to “*Air Brakes Troubleshooting”* in this section. For more troubleshooting information, refer to the manufacturer's brochures annexed to this section.

Air pressure doesn't rise to, or doesn't maintain, a normal setting:

- Defective air gauge (registering incorrectly).
- Excessive leaking in air system.
- Reservoir drain cock open.
- Governor poorly adjusted or defective.
- Defective compressor.
- Worn compressor or excessive wear on piston and/or ring.
- Air pressure rises to normal setting too slowly.

Excessive leaking in air system:

- Clogged engine air cleaner.
- Worn compressor or excessive wear on piston and/or ring.
- Engine speed too low.

Air pressure rises above a normal setting:

- Defective air gauge (registering incorrectly).
- Governor poorly adjusted or defective.
- Restriction in line between governor and compressor unloading mechanism.

Air pressure drops quickly when engine is stopped:

- Leaks in compressor discharge valve.
- Leaks in governor.
- Leaks in air lines.
- Leaks in air system valves.

26. BRAKE OPERATION

The vehicle braking system uses both service and parking air-operated brakes. The air system is divided into two independent circuits to isolate the front axle brakes and the rear axle brakes (drive and tag), thus providing safe brake operation in the event that one circuit of the system fails. The primary circuit is connected to the drive and tag axle brakes, while the secondary circuit is connected to the front axle brakes. The tag axle service brakes operate only when the axle is in the normal driving (loaded) position. The spring-type emergency brakes are mounted on the drive and tag axles, and will apply automatically if primary system pressure falls below 40 psi (276 kPa). The optional parking brake override system can cancel the parking brakes, enabling the driver to move the vehicle to a safe parking place. To operate this system, push down and hold the control knob located on the R.H. side of the driver’s seat (see *"Operator's Manual"* for more details).

Furthermore, brake application or release, which is speed up by a pneumatic relay valve (R-12), will start with the rear axles and be followed by the front axle, thus providing uniform braking on a slippery surface. The vehicle may also be equipped with an Anti-lock Brake System (ABS), detailed later in this section.

Brake and air system maintenance consists of periodic inspections. Check all parts for damage and brake adjustment (refer to subsequent headings in this section for more details).

Ensure all fasteners are tight (refer to "*Specifications"* for recommended tightening torques).

27. AIR BRAKES

27.1 DISC BRAKES

Knorr-Bremse SB7000 disc brakes are used on all axles. The front and drive axle discs are actuated by 24 square inch effective area air brake chambers, while on tag axle, the brake chambers have a 16 square inch effective area for service brake and a 16 square inch effective area for emergency/parking brakes. The *Knorr-Bremse SB7000* brakes are supplied with automatic clearance (slack) adjusters as standard equipment for easier adjustment. For more information on disc brake components and maintenance, refer to the manufacturer's brochure at the end of this section.

27.1.1 Disc Brake Pads

Brake pads have to be checked on a regular basis depending on the vehicle operation. The remaining thickness of the pads should never be less than 3/32 in (2 mm). To check pad condition without removing the wheel, verify the position of guide bushing (6) relatively to guide sleeve (4) (see Fig. 23). When guide sleeve is in alignment with guide bushing, brake pad thickness has to be checked more precisely with the wheel removed. When replacing brake pads, all four pads on an axle have to be changed at the same time. There is no inner or outer pad, since all pads are the same. Once removed, worn pads should be replaced in their original position.

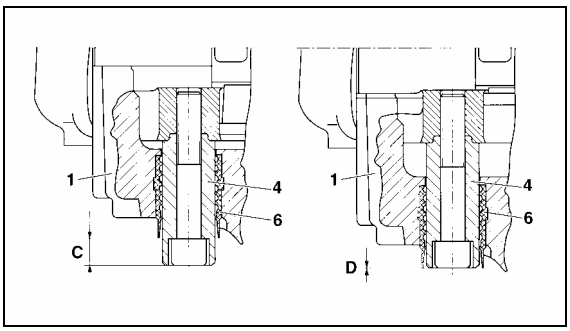

FIGURE 23: BRAKE PAD CHECK 12117

27.1.2 Caliper Maintenance

Use the following procedure for brake calipers servicing. The procedure must be followed in proper sequence to ensure that only needed repairs or replacements are performed on calipers. Problems such as hot brakes or cracked rotors may be effects of sticking calipers, too-small clearance between rotor and pad or possible trapped air pressure in the brake chamber. If any of these symptoms occur, perform this procedure before replacing the rotor to ensure the cause of the problem is properly solved.

1. Check for presence of residual pressure:

To check if there is any residual air pressure in the brake chamber, make four or five brake applications, then try to turn the wheel manually, if the wheel does not turn, use a wrench to crack the air line and listen for trapped air in the brake chamber then try to turn the wheel manually again. If you find trapped air in the brake booster, ensure that all pneumatic components in the braking system are functioning properly.

Note: *A residual pressure of 2-3 PSI in the system is sufficient to prevent the brakes from releasing. Also the stop light switch can operate with as little as 1 PSI, therefore an illuminated brake light does not mean brakes are dragging.*

2. Pad to rotor clearance inspection:

Remove clip and washer (26 & 45, Fig. 24), push down retainer bar (11), pull out pin (44) and remove retainer bar. Push caliper toward actuator (center of vehicle) for maximum clearance.

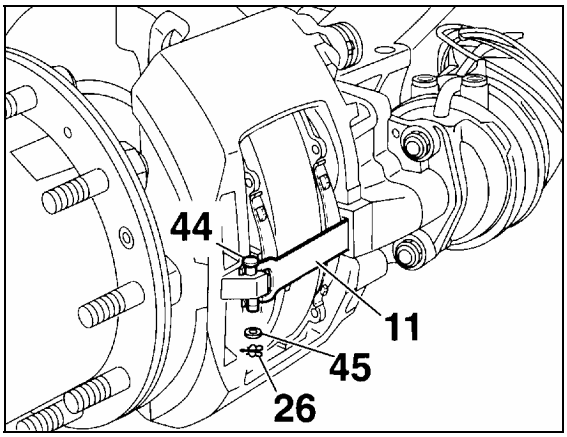

FIGURE 24: CLEARANCE INSPECTION 12119

3. Measure pad to rotor clearance:

Place a long feeler gauge (long enough to measure across entire tappet surface) between the tappet and the backing plate of the pad, measure clearance at both tappets. Clearance

should range between 0.020 and 0.035 inch (0.5 mm and 0.9 mm), with a maximum difference between tappet measurements on same brake of 0.008 inch (0.2 mm).

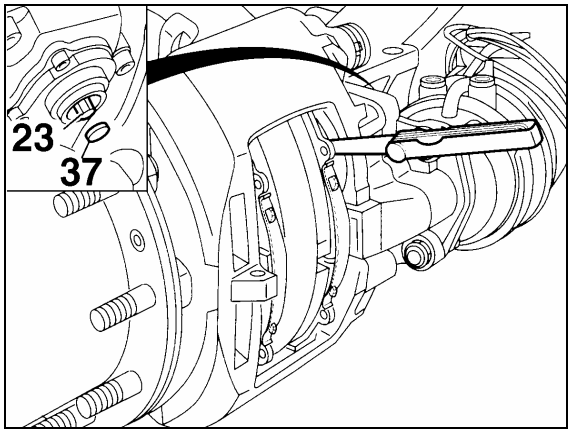

FIGURE 25:RUNNING CLEARANCE 12116

4. Checking the adjuster

Warning: *Use only a standard box wrench on the adjuster hexagonal pinion. Do not overtorque the pinion as overtorquing will damage the pinion.*

a) Remove cap (37, Fig. 26).

b) Using a box wrench (8 mm), turn the adjuster pinion (23, Fig. 26) counterclockwise about 2 - 3 clicks to increase running clearance. By operating the braking system about 5 - 10 times (30 PSI or 2 bar), the wrench should turn clockwise in small increments if the adjuster is functioning correctly (Figs. 26 and 27).

Note: With increasing number of applications, the incremental adjustment will decrease.

c) In case of malfunction, i. e. the pinion or box wrench:

   i) Does not turn.

   ii) Turns only with the first application.

   iii) Turns forwards then backwards with every application.

In any of the above cases, the automatic adjuster has failed and the caliper must be replaced. In such cases the brakes can be adjusted manually to run a short distance.

d) Take the box wrench off. Replace the cap and check for proper sealing.

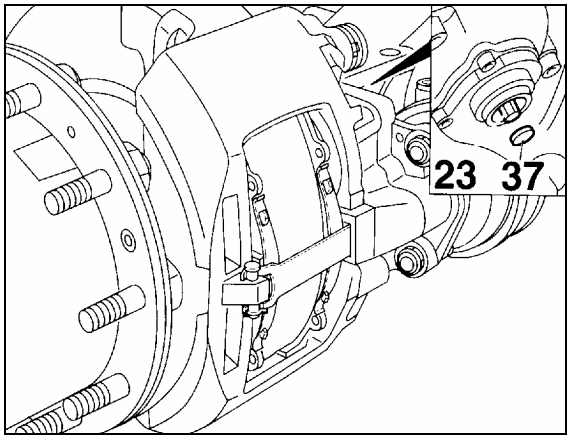

FIGURE 26: ADJUSTER PINION 12120

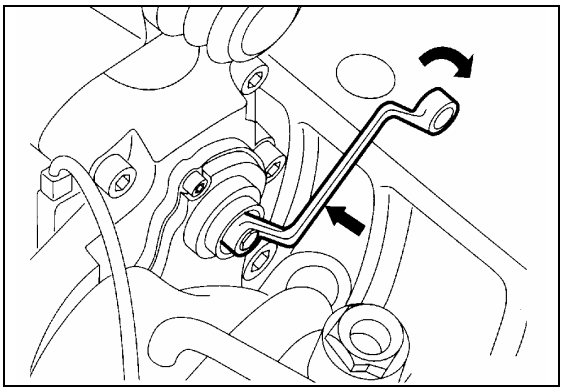

FIGURE 27: BOX WRENCH ON ADJUSTER PINION 12118

27.1.3 Roadside Inspection for Knorr/Bendix Air Disc Brakes

The coach is equipped with air disc brakes and therefore, cannot be inspected using the requirements for chamber stroke or visible lining clearance or lining thickness as specified for drum brakes. The roadside inspector should use the following instructions to determine that the air disc brakes are within proper adjustment and have sufficient pad wear thickness.

The Knorr/Bendix air disc brake is designed to move freely, with minimal force, in the axial direction on the two sliding pins as identified in figure 28. The movement in the axial direction should not exceed 2 mm (5/64”).

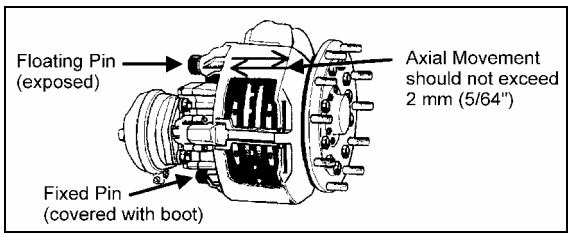

FIGURE 28: CALIPER AXIAL MOVEMENT 12132

The pad thickness can be seen but would require removal of the tire and rim. An indicator of the pad wear condition is available by inspecting the floating pin location in relation to the rubber bushing as shown in figure 29. When pads are in new thickness condition, the pin will be exposed (C) 19 mm (¾”). When the pads are worn to replacement conditions, the pin will be nearly flush to the bushing (D) or within 1 mm (3/64”) of the edge of the rubber bushing.

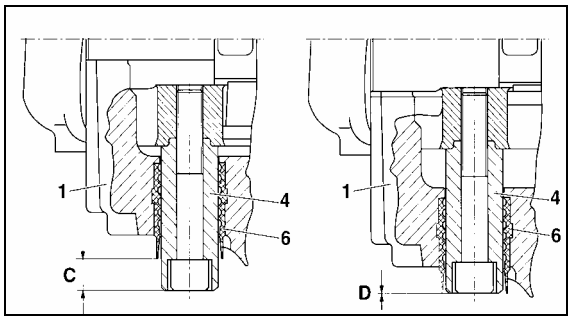

FIGURE 29: BRAKE PAD CHECK 12117

27.1.4 Pad Removal

Turn adjuster pinion (23) counterclockwise to increase pad to rotor clearance (a clicking noise will be heard). Push caliper toward actuator and remove pads (12).

Caution: *Do not apply brakes while pads are removed as this could cause over stroke damage to the adjusting mechanism.*

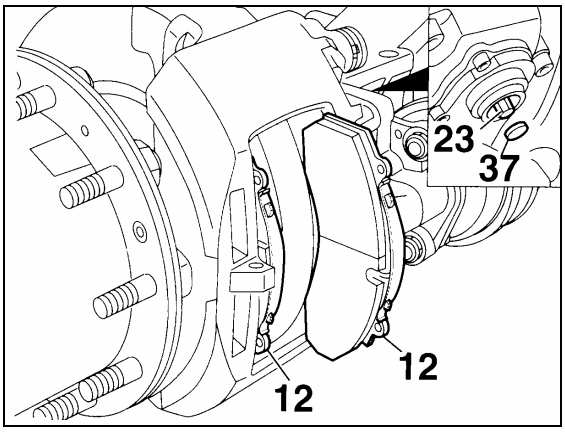

FIGURE 30: PAD REMOVAL 12111

27.1.5 Checking Pad Wear

Minimum friction material thickness is 2 mm (A, Fig. 31)

New friction material has a thickness of 21 mm (B, Fig. 31)

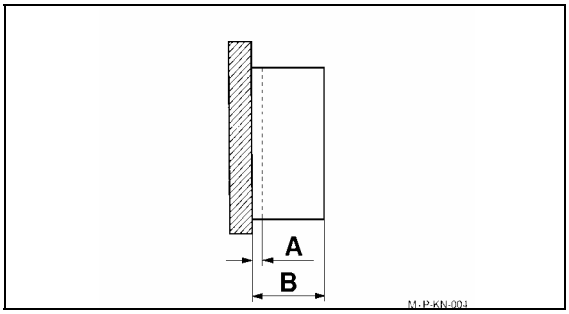

FIGURE 31: PAD WEAR 12112

27.1.6 Important Pad and Rotor Measurements

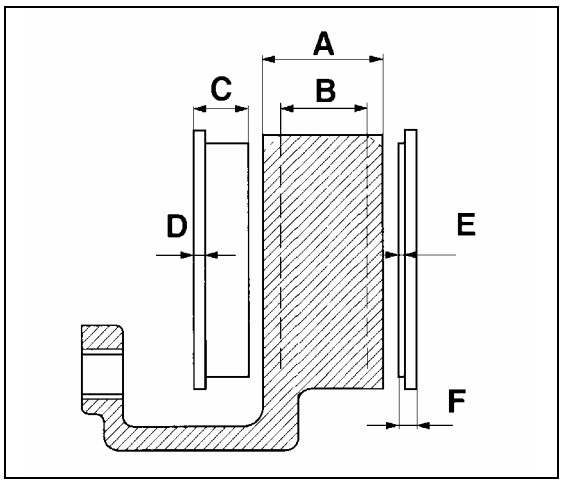

FIGURE 32: ROTOR AND PAD WEAR LIMITS 12113

A = Rotor thickness (new): 45 mm;

B = Rotor thickness (worn): 37 mm Requires replacement;

C = Overall thickness of pad (new): 30 mm;

D = Backplate: 9 mm;

E = Minimum thickness of pad material: 2 mm;

F = Minimum allowed thickness of overall backplate and friction material: 11 mm. **Replacement necessary**.

27.1.7 Checking Caliper Guidance and Seal Condition

Perform sliding test. You must be able to slide the caliper easily at any time. Sliding test should be performed at least every three months or more often depending on the type of operation.

Sliding Test (Refer to Fig. 33):

a) Using hand pressure only, the caliper (1) must slide freely with its guide pin arrangements (4-7) across a distance of 1 3/16 inch

(30 mm) when the pads are removed. The sleeve (5) is sealed using the boot (9) and the cap (10).

b) The rubber components (9 and 10) should show no damage. The positioning must be checked. If necessary the caliper has to be repaired using the guide kit (part #611168) or with the seal and guide kit (part #611199). When repairing a caliper with the above kits, make sure all parts in the kit are used. Use special green grease (Prévost #683344) to reassemble the slide pin into the bushing, white or yellow grease (Prévost #683345) may be used for all other lubrication needs.

c) Depending on caliper manufacturing date, black paint may be present on the unsealed pin (short pin). Paint on the slide pin can prevent the caliper from sliding properly especially when the pad starts to wear. If paint is present on the pin, separate the pin from the bushing, clean and reinstall the pin according to procedure.

Note: *Do not attempt to use thinner or alcohol to clean the pin without removing it as it may damage the rubber bushing.*

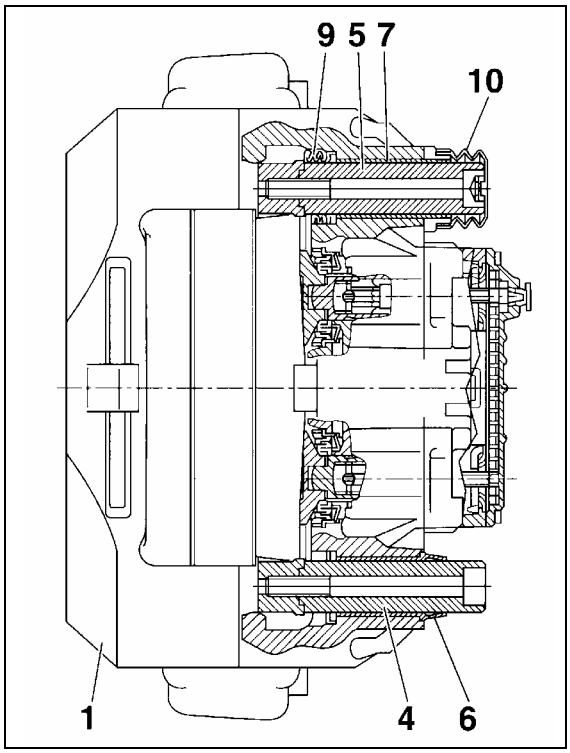

FIGURE 33: CALIPER GUIDANCE 12114

27.1.8 Checking the Tappet Boots

a) The rubber boots (13, Fig. 34) should show no damage, check the attachment.

Caution: *Any ingress of water and dirt will lead to corrosion and may affect the function of the actuation mechanism and adjuster unit.*

b) If boots are damaged but show no corrosion, the boots and tappets should be replaced (Prévost #611177).

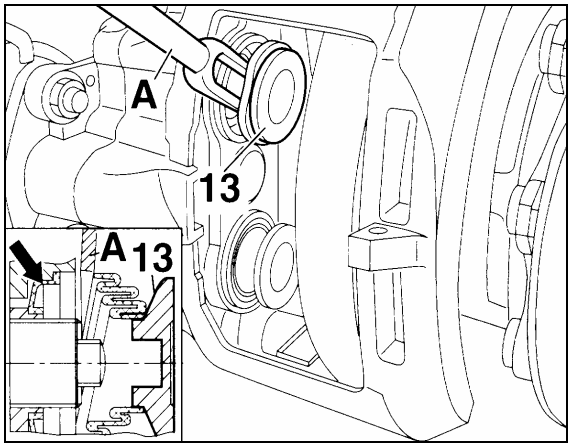

FIGURE 34: RUBBER BOOTS 12115

27.1.9 Pad Installation

Turn adjuster pinion (23, Fig. 35) counterclockwise until tappets are fully retracted and clean pad seat area. Slide caliper to full outboard position and install outside pad. Slide caliper to full inboard position and install inside pad.

Warning: *It is recommended to change all pads on an axle at the same time.*

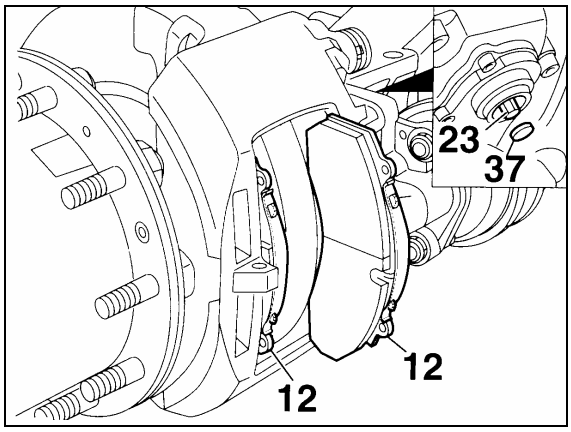

FIGURE 35: PAD INSTALLATION 12111

27.1.10 Adjusting the Running Clearance

a) Insert a feeler gauge 0.028 inch (0.7 mm thickness) between tappet and pad back-plate (Fig. 36). Turn adjuster pinion clock-wise until 0.028 inch (0.7 mm) clearance is achieved. Replace cap (37) (Prévost # 641313).

b) To ensure a constant running clearance between the rotor and pads, the brake is equipped with an automatic adjuster unit. When the pads and rotor wear, the running clearance between the pads and rotor increases. The adjuster (23, Fig. 36) and turning device turn the threaded tubes by the amount necessary to compensate the wear.

Total running clearance should be between 0.020 and 0.035 inch (0.5 and 0.9 mm). Smaller clearances may lead to overheating problems.

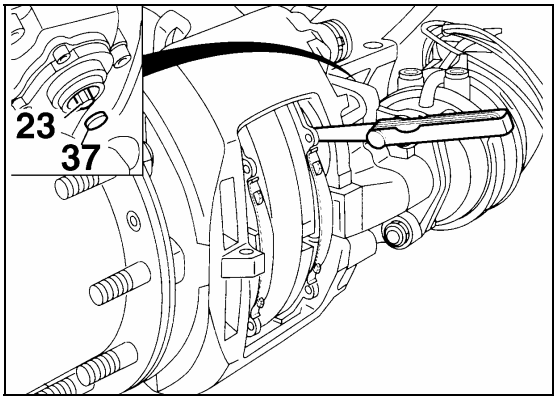

FIGURE 36: RUNNING CLEARANCE 12116

27.1.11 Brake Tools

Four brake tools are available from Prévost to facilitate disc brake maintenance:

a) #641321, Tappet with boot (item 13).
b) #641322, Caliper inner boot (item 9).
c) #641323, Caliper bushing (item 7).
d) #641435, Fork for boot tappet (item 13).

Maintenance tip

Using the following procedure, pad wear can be determined without removing the wheel.

27.1.12 Checking Brake Pads

Brake pads have to be checked on a regular basis depending on the vehicle operation. The remaining thickness of the pads should never be less than 3/32 inch (2 mm). To check pad condition without removing the wheel, verify the position of guide bushing (6) relatively to guide sleeve (4) (Fig. 37). When guide sleeve is in alignment with guide bushing, brake pad thickness must be checked more precisely with wheel removed. When replacing the brake pads, all four pads on an axle have to be changed at the same time. There is no inner or outer pad, since all pads are the same. Worn pads should be replaced in the same position.

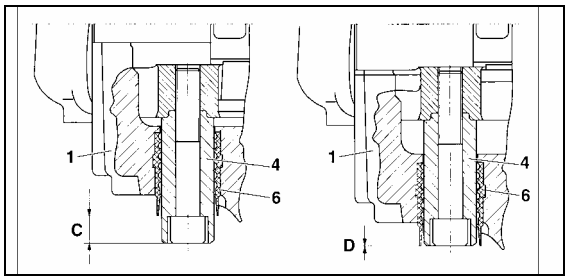

FIGURE 37: BRAKE PAD CHECK 12117

27.1.13 Torque specifications

For proper caliper maintenance, refer to the following figures.

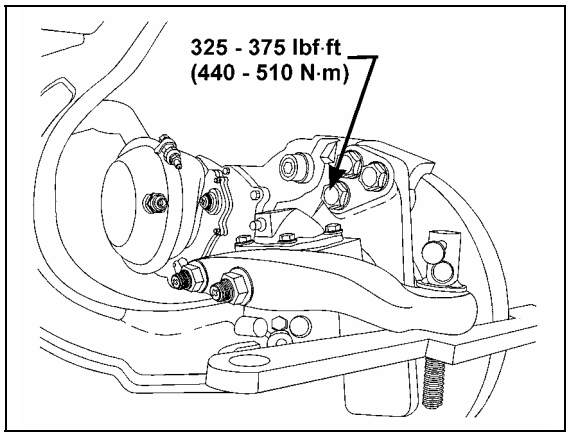

FIGURE 38: TORQUE SPECIFICATION 12145

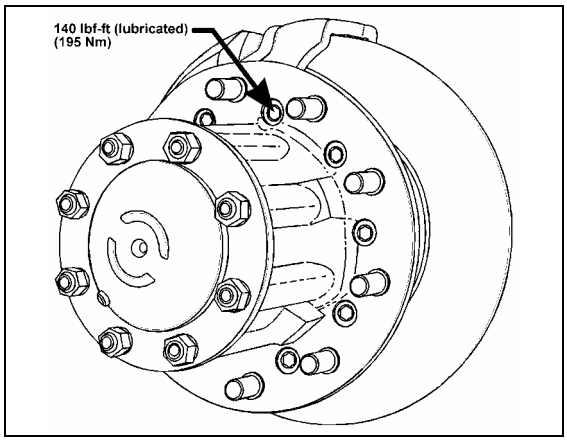

FIGURE 39: TORQUE SPECIFICATION 12149

28. SAFE SERVICE PROCEDURES

Most recently manufactured brake linings no longer contain asbestos fibers. Instead of asbestos, these linings contain a variety of ingredients, including glass fibers, mineral wool, aramid fibers, ceramic fibers, and carbon fibers. At present, OSHA (Occupational Safety and Health Administration) does not specifically regulate these non-asbestos fibers, except as nuisance dust. Medical experts do not agree about the potential long-term risks from working with and inhaling non-asbestos fibers. Nonetheless some experts think that long-term exposure to some non-asbestos fibers could cause diseases of the lung, including pneumo-coniosis, fibrosis, and cancer. Therefore, lining suppliers recommend that workers use caution to avoid creating and breathing dust when working on brakes that contain non-asbestos fibers.

***Warning**:*

Whenever possible, work on brakes in a separate area away from other operations.

Always wear a respirator approved by NIOSH (National Institute of Occupational Safety and Health) or MSHA (Mine Safety and Health Administration) during all brake service procedures. Wear the respirator from removal of the wheels through assembly.

NEVER use compressed air or dry brushing to clean brake parts or assemblies. OSHA recommends that you use cylinders that enclose the brake. These cylinders have vacuums with high efficiency (HEPA (Health and Environment Protection Agency)) filters and workmans' arm sleeves. But, if such equipment is not available, carefully clean parts and assemblies in the open air.

Clean brake parts and assemblies in the open air. During disassembly, carefully place all parts on the floor to avoid getting dust into the air. Use an industrial vacuum cleaner with a HEPA filter system to clean dust from the brake drums, backing plates and other brake parts. After using the vacuum, remove any remaining dust with a rag soaked in water and wrung until nearly dry.

If you must grind or machine brake linings, take additional precautions because contact with fiber dust is higher during these operations. In addition to wearing an approved respirator, do such work in an area with exhaust ventilation.

When cleaning the work area, NEVER use compressed air or dry sweeping to clean the work area. Use an industrial vacuum with a HEPA filter and rags soaked in water and wrung until nearly dry. Dispose of used rags with care to avoid getting dust into the air. Use an approved respirator when emptying vacuum cleaners and handling used rags.

Wash your hands before eating, drinking or smoking. Do not wear your work clothes home. Vacuum your work clothes after use and then launder them separately, without shaking, to prevent fiber dust from getting into the air.

Material safety data sheets on this product, as required by OSHA, are available from Rockwell and Knorr-Bremse.

29. AIR BRAKE TROUBLESHOOTING

The following tests and check lists have been designed to identify the cause(s) of a sluggish performance and/or leaks in the system. These tests require very little time to perform, and give you a general idea of the system condition. Each test is provided with a corresponding check list which will guide you to the most common causes of problems.

Before performing any test, check all air lines for kinks or dents, and hoses for signs of wear, drying out or overheating.

***Warning**: When working on or around brake system and its related components, the following precautions should be observed:*

Always block vehicle wheels. Stop engine when working under a vehicle. Keep hands away from chamber push rods and slack adjusters as they may apply when system pressure drops.

Never connect or disconnect a hose or line containing air pressure. It may whip as air escapes. Never remove a component or pipe plug unless you are sure all system pressure has been depleted.

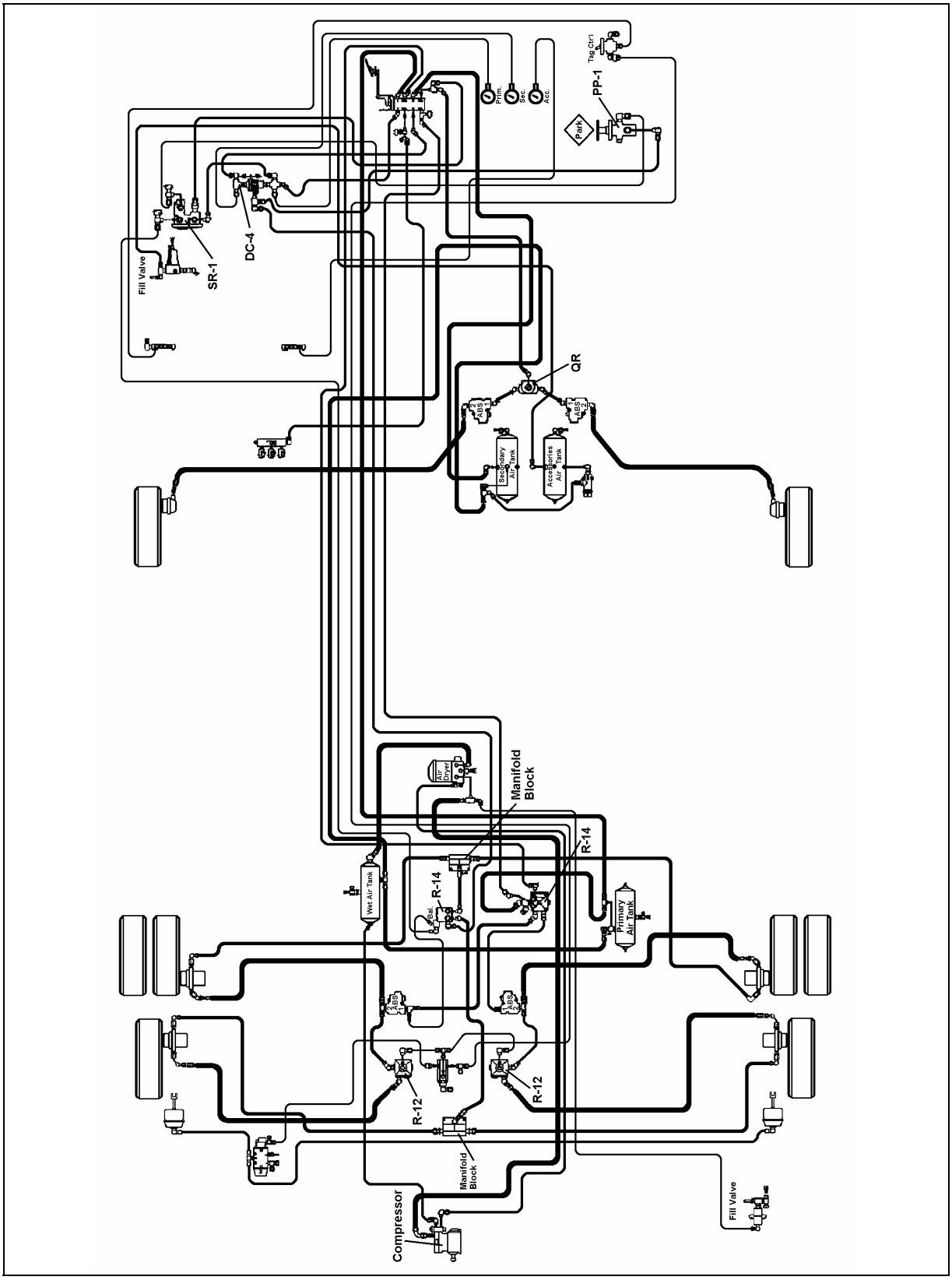

FIGURE 40: AIR-OPERATED BRAKING SYSTEM XLII

Never exceed recommended air pressure and always wear safety glasses when working with air pressure. Never look into air jets or direct them at anyone.

Never attempt to disassemble a component until you have read and understood the recommended procedures. Some components contain powerful springs and injury can result if not properly disassembled. Use only proper tools and observe all precautions pertaining to the use of those tools.

Always clean connecting piping and/or fittings, and coat pipe threads with Teflon pipe sealant before installing any air brake system component.

PRESSURE BUILD-UP / LOW PRESSURE WARNING / CUTOFF POINT / GOVERNOR CUTOUT

CONDITION: Vehicle parked, wheels blocked.

1. Completely drain air reservoirs.
2. Start engine and run at fast idle. Low pressure warning lights should be *"On"*.
3. Start checking pressure at 50 psi (344 kPa).
4. Low pressure warning lights and buzzer should go off at or above 60 psi (415 kPa).
5. At 85 psi (586 kPa), run engine at full rpm, then check that build up time to 100 psi (690 kPa) is 30 seconds or less.
6. Governor cutout. Cuts out at the correct pressure of 120-125 psi (826-861 kPa).
7. Governor cut-in. Reduce service air pressure to governor cut-in. The difference between cut-in and cut-out pressures should not exceed 25 psi (172 kPa). Cut-in pressure should be 100 psi (689 kPa) or more, raise pressure if needed.

For common corrections, refer to the following check list:

High or Low Warning Cutoff Point

- ✓ Perform a telltale light and gauge test. Replace entire cluster if found defective.

High or Low Governor Cutout Point

- ✓ Perform a telltale light and gauge test. Replace entire cluster if found defective.
- ✓ Adjust governor to desired cut-in.

OR

- ✓ Repair or replace governor as necessary after checking that compressor unloader mechanism operates correctly.

More than 30 seconds to build-up pressure from 85 to 100 psi (585 - 690 kPa) at full engine RPM

- ✓ Perform a telltale light and gauge test. Replace entire cluster if found defective
- ✓ Check compressor strainer or inlet line. If restricted, clean or replace element or faulty line.
- ✓ Check compressor head or discharge line for carbon deposits or restriction. Clean or replace as necessary.
- ✓ If discharge valves leak, pull head and correct or replace cylinder head.
- ✓ If drive is slipping, replace gear.
- ✓ If inlet valves are stuck, open or leaking severely, replace unloader kit, inlet valves and/or seats as necessary.
- ✓ If drain cock is found open, close it.
- ✓ If governor leaks when *"unloaded"*, clean or replace inlet valve or replace governor.
- ✓ Listen for air leaks and repair.
- ✓ Redo list to check all items repaired or replaced.

AIR SUPPLY RESERVOIR LEAKAGE

CONDITION**:** Full pressure, engine stopped, parking brake applied

1. Allow at least 1 minute for pressure to stabilize.
2. Stop engine, then check air pressure gauge for 2 minutes. Note any pressure drop.
3. Pressure should not drop by more than 3 psi (20 kPa) per minute.

For common corrections, refer to the following check list:

Excessive air loss:

- ✓ With the primary air system at normal operating pressure (95 - 125 psi (655 - 860 kPa)), coat all air line connections and

pneumatic components with a water and soap solution. Bubbles will indicate an air leak, and none should be permissible. Repair or replace defective parts.

- ✓ Listen for leaks and correct as required.
- ✓ Redo test to check all items repaired or replaced.

BRAKE SYSTEM AIR LEAKAGE

CONDITION**:** Full pressure, engine stopped, parking brake released.

1. Apply service (foot) brakes, allow at least 1 minute for pressure to stabilize.
2. Hold down foot valve for 2 minutes while observing air pressure gauge on the dash-board.
3. Pressure drop should not be more than 3 psi (20 kPa) per minute.

For common corrections, refer to the following check list.

Excessive leakage on brake service side:

- ✓ With the primary air system at normal operating pressure (95 - 125 psi (655 - 860 kPa)) and foot brake applied, coat all air line connections and brake pneumatic components with a water and soap solution. Bubbles will indicate an air leak, and none should be permissible. Repair or replace defective parts.
- ✓ Listen for leaks and correct as required.
- ✓ Redo test to check all items repaired or replaced.

30. BRAKE AIR CHAMBER

If this vehicle is equipped with *Knorr-Bremse SB7000* disc brakes on all axles, it also uses “Knorr-Bremse” brake chambers. The tag and drive axle chambers consist of two separate air chambers, each having its own diaphragm and push rod. They are used as a service brake chamber, an emergency brake in case of air pressure loss and a spring-applied parking brake. Refer to figures 41 and 42.

The front axle brake air chambers are used only for service brake duty (Fig. 41).

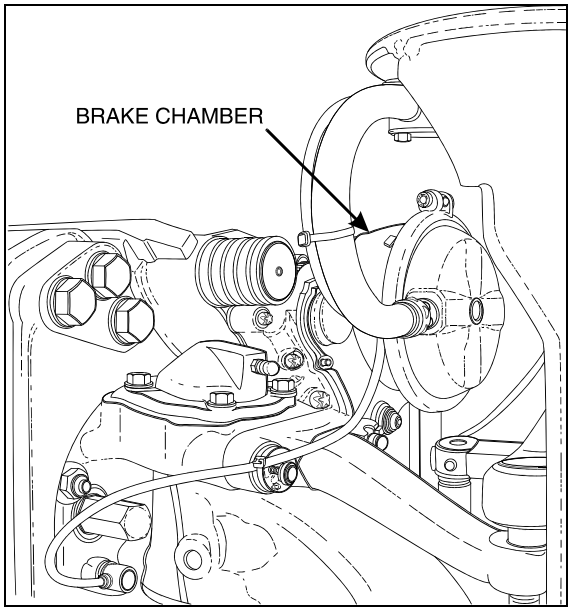

FIGURE 41: FRONT AXLE BRAKE AIR CHAMBER 12158

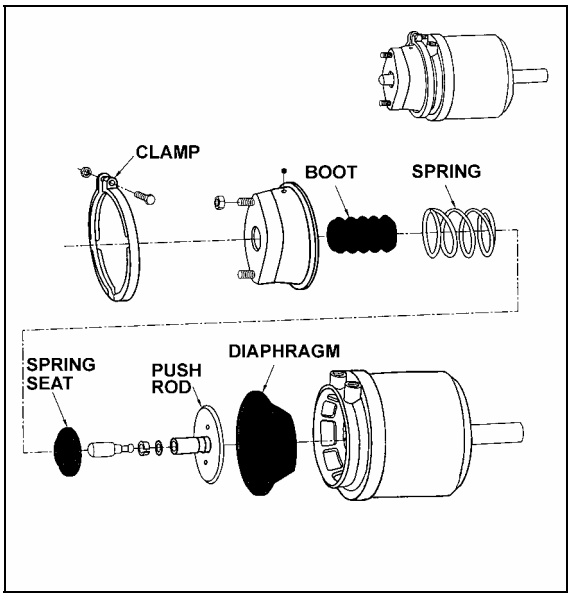

FIGURE 42: TAG AXLE BRAKE AIR CHAMBER 12126

30.1 MAINTENANCE

Every 6,250 Miles (10 000 km) or twice a year, whichever comes first depending on type of operation:

Check all hoses and lines. They should be secure and in good condition.

Every 100,000 Miles (160 000 km) or once a year, whichever comes first depending on type of operation:

1. Disassemble and clean all parts.
2. Install new diaphragm or any other part if worn or deteriorated.

***Note**: When the diaphragm, spring, or both are replaced, they should be replaced in the corresponding chamber on the same axle.*

3. Perform an airtighteness test:

a) Make and hold a full brake application.

b) Coat clamping ring(s) with a soapy solution. If leakage is detected, tighten clamping ring only enough to stop leakage. ***Do not overtighten*** as this can distort sealing surface or clamping ring. Coat area around push rod hole (loosen boot if necessary). No leakage is permitted. If leakage is detected, the diaphragm must be replaced.

30.2 EMERGENCY/PARKING BRAKE MANUAL RELEASE

***Warning**: Never stand in the axis line of the spring brake chambers, especially when caging the spring.*

Drive Axle

1. Block the wheels to prevent the vehicle from moving.
2. Remove the release stud tool from its storage place on drive axle brake air chamber.
3. Remove the access plug from the end of the spring chamber, then insert the release stud through the opening. Turn the release stud ¼ turn (clockwise) to anchor it into the spring plate. Install the flat washer and nut, then turn the nut clockwise to cage the spring. Repeat on the opposite side.

***Warning:** Make sure the release stud is properly anchored in spring plate receptacle prior to caging the spring.*

4. To manually reset the emergency/parking brake, turn the nut counterclockwise. Reinstall access plugs on the spring chambers, and release stud tools in their storage places.

Tag Axle

1. Block the wheels to prevent the vehicle from moving.
2. Turn the release bolt counterclockwise to cage the power spring (approx. 2.5 inches (6 cm)). Repeat on the opposite side.
3. To manually reset the emergency/parking brake, turn the bolt clockwise.

30.3 BRAKE CHAMBER REMOVAL

***Warning:** To prevent personal injuries, brakes should be inoperative prior to working on any of their components.*

***Warning**: To prevent personal injuries, brake chambers should be made inoperative by releasing spring tension prior to disposal.*

1. Block the wheels to prevent the vehicle from moving.
2. Safely support vehicle at the recommended body jacking points.
3. To gain access to a given brake air chamber, the corresponding wheel can be removed (refer to Section 13: *"Wheels, Hubs and Tires"*).
4. Exhaust compressed air from system by opening the drain valve of each reservoir.
5. For the drive and tag axles brake chambers, manually release spring brakes (refer to "*Emergency/Parking Brake, Manual Release"* procedure in this section).
6. Disconnect air line(s) from brake chamber.
7. Remove the cotter pin connecting brake chamber and slack adjuster (drive axle).
8. Unbolt and remove the brake chamber from vehicle.

30.4 BRAKE CHAMBER INSTALLATION

Reverse removal procedure, then check brake adjustment.

***Caution**: Always clean air lines and fittings, and coat pipe threads with teflon pipe sealant before reconnecting air lines.*

30.5 BRAKE CHAMBER DISASSEMBLY

***Warning:** Spring brake chambers, on drive and tag axles contain an extremely high compressive force spring, which can possibly cause serious injury if special precautions are not taken when working around this area.*

To avoid such injury, the following recommendations must be applied:

1. Prévost recommends the installation of a new spring brake chamber if it is found to be defective.

2. Spring brake chamber maintenance and/or repair must be performed by trained and qualified personnel only.

3. Before manually releasing spring brakes, visually check spring brake for cracks and/or corrosion.

4. On "MGM" brake chambers (drive axle), make sure the release stud is properly anchored in spring plate receptacle prior to caging the spring.

5. Never stand in the axis line of the spring brake chambers, especially when caging the spring.

Warning: *To prevent personal injury, brakes should be inoperative before working on any components.*

1. Block the wheels to prevent the vehicle from moving.
2. Safely support vehicle at the recommended body jacking points.

Note*: To gain access to a given brake air chamber, the corresponding wheel can be removed (refer to Section 13: "Wheels, Hubs and Tires").*

3. Exhaust compressed air from air system by opening the drain valve of each reservoir.
4. For the drive and tag axles brake chambers, manually release spring brakes (refer to "*Emergency/Parking Brake Manual Release"* procedure in this section).
5. Remove clamp ring, remove and discard the existing diaphragm. Install the new diaphragm squarely on body.
6. Reverse the procedure for assembly. Tap clamp ring to ensure proper seating. Check for proper operation before placing vehicle in service.

31. ANTI-LOCK BRAKING SYSTEM (ABS)

This device has been designed to ensure stability and permit steering control of vehicle during hard braking, and to minimize its stopping distance whatever the road conditions are. On slippery roads and generally in emergency situations, over-braking frequently induces wheel lock. The anti-lock braking system provides maximum braking performance while maintaining adequate steering control on slippery roads.

The ABS continuously monitors wheel behavior during braking. Sensors on each wheel of front and drive axles (tag axle is slave to drive axle) transmit data to a four channel electronic processor which senses when any wheel is about to lock. Modulator valves quickly adjust the brake pressure (up to 5 times per second) to prevent wheel locking. Each wheel is therefore controlled according to the grip available between its tire and the road.

With this device, the vehicle is brought to a halt in the shortest possible time, while remaining stable and under the driver's control.

Since the braking system has dual circuits, the ABS is also provided with a secondary system should a fault develop in the ABS. Anti-lock systems are a parallel system which does not hinder brake functioning in case of failure. Braking system functions in normal, non anti-lock controlled operation during ABS system failure.

The ABS system consists of two diagonally related circuits, only the half of the system which has sustained damage or other fault is switched off (i.e. wheels return to normal non-ABS braking). The other diagonal half remains under full ABS control.

Note*: ABS is active on service brake, transmission retarder, Jake brake, but is inactive on emergency/parking brake.*

Note*: The ABS system is inoperative at speeds under 4 mph (6 Km/h). Illumination of ABS telltale indicator at these speeds is normal.*

Caution*: Disconnect the ECU or pull the ABS fuse before towing vehicle.*

31.1 TROUBLESHOOTING AND TESTING

For troubleshooting and testing of the vehicle's anti-lock braking system, refer to Rockwell WABCO Maintenance Manual: *"Anti-Lock Brake Systems For Trucks, Tractors and Buses"*, at the

end of this section. Blink codes are listed in this section hereafter.

***Caution**: Turn Blink switch OFF before driving.*

ABS WARNING LAMP			
Ignition **ON** 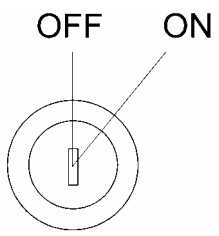	Normal Operation	ABS lamp comes on at ignition momentarily for a bulb check, then goes out.	System is OK.
	After Servicing ABS System	ABS lamp does not go out at ignition.	When vehicle is driven at speeds above 4 mph (6 km/h), lamp goes out. System is OK.
	Existing Fault	ABS lamp does not go out at ignition.	Lamp does not go out at speeds above 4 mph (6 km/h) – a fault exists in the ABS system.

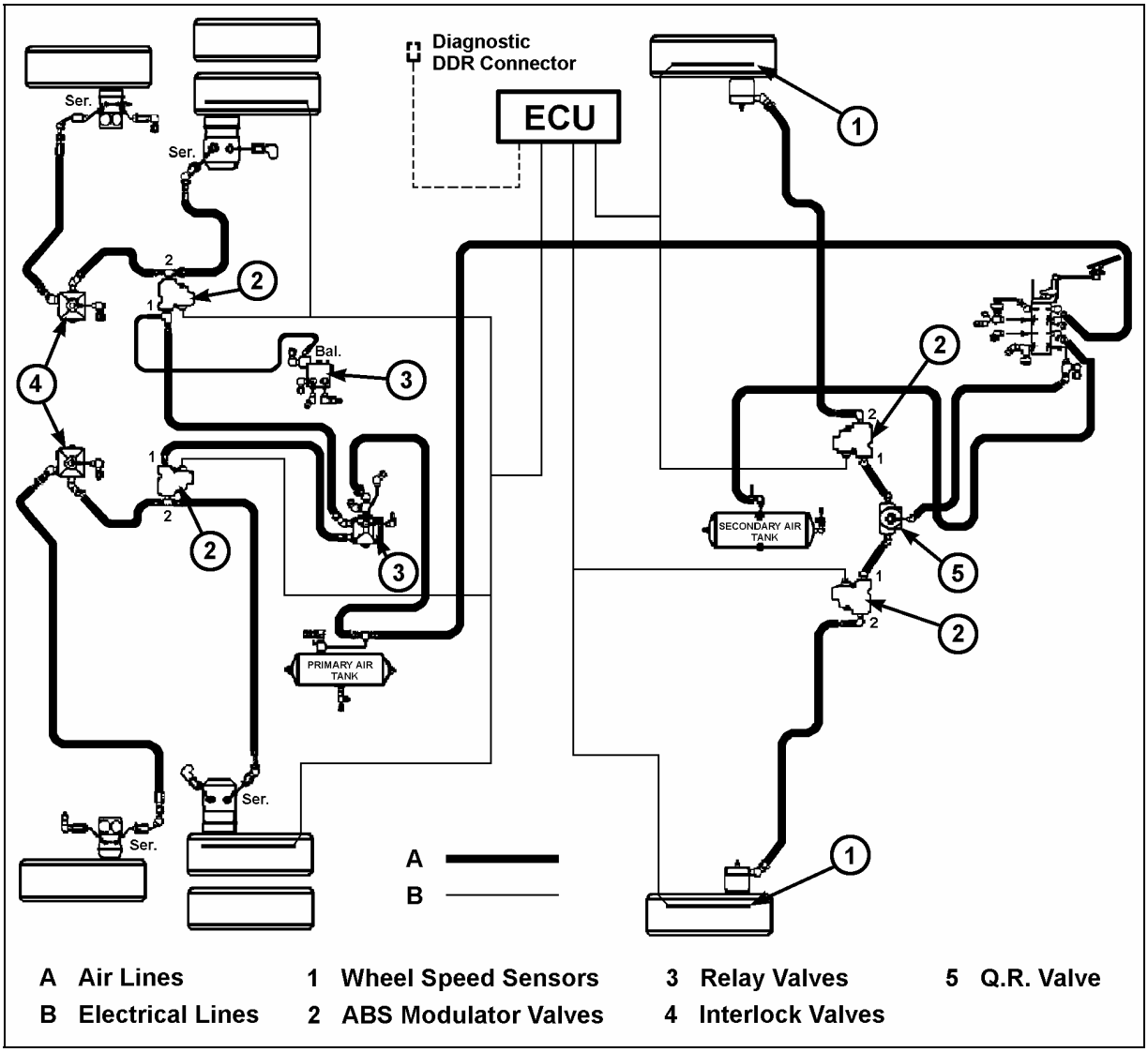

FIGURE 43: ABS 4S/4M CONFIGURATION

31.1.1 Blink Code Troubleshooting and Repair

BLINK CODE		Action required
1st Digit	2nd Digit	
1	1	System Okay
2	1-6*	Check ABS Modulator valve, valve cable, and connectors. Verify 4.0-8.0 ohms resistance (ABS modulator valve).
3	1-6*	Adjust wheel sensor to touch wheel. Check sensor gap. Check for loose wheel bearings or excessive hub runout. Verify minimum 0.2 volts AC output @ 30 RPM.
4	1-6*	Check sensor, sensor cable, and connectors. Verify 500-2000 ohms resistance.
5	1-6*	Check for tire size mismatch or tooth wheel difference.
6	1-6*	Check for damaged tooth wheel.
7	1	Check for proper data link connection (J1922 and J1939)
7	2	Check ATC Valve, valve cables, and connectors. Verify 6.4-12.0 ohms resistance.
7	3	Check brake relay connections.
7	4	Check ABS warning light connections.
7	5	Verify proper ATC set-up. Reconfigure if required.
7	6	Verify accuracy of blink code and clear from ECU memory.
8	1	Check vehicle voltage and supply to ECU (9.5-14 volts).
8	2	Check vehicle voltage (9.5-14 volts). Verify accuracy of blink code and clear from ECU memory.
8	3	Verify accuracy of blink code and clear from ECU memory.
8	4	Verify accuracy of blink code and clear from ECU memory. *If code does not clear, it may be necessary to reconfigure or replace the ECU.*
8	5	Check ABS ground connections.

***1-6 Key**

1	Right front steer axle (curb side)
2	Left front steer axle (driver's side)
3	Right rear drive axle (curb side)
4	Left rear drive axle (driver's side)
5	Not used
6	Not used

31.2 ABS COMPONENTS

The main components of the ABS system are listed hereafter. Refer to each component for its specific function in the system and for proper maintenance.

31.2.1 Electronic Control Unit (ECU)

This control unit is located in the front service compartment, (refer to figure 44 for location). According to the data transmitted by the sensors (number of pulses/sec is proportional to the speed of each wheel), the electronic control unit determines which wheel is accelerating or decelerating. It then establishes a reference speed (average speed) from each wheel data, and compares the speed of each wheel with this reference speed to determine which wheel is accelerating or decelerating.

As soon as wheel deceleration or wheel slip threshold values are exceeded, the electronic control unit signals a solenoid control valve to limit the excessive brake pressure produced by the driver in the appropriate brake chamber.

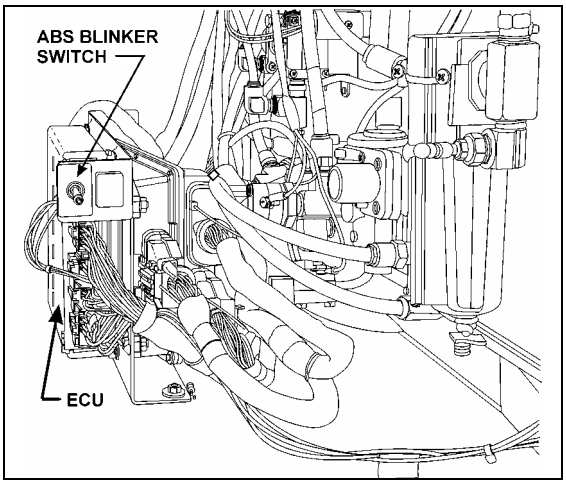

FIGURE 44: ABS BLINKER SWITCH & ECU LOCATION 12147

31.2.2 Maintenance

No specific maintenance is required. The ECU is not serviceable. When found to be defective, replace.

***Caution**: In order to protect the ABS electronic control unit from voltage surges, always disconnect before performing any welding procedure on vehicle.*

31.3 ABS MODULATOR VALVE

This ABS system is equipped with four modulator valves, located between the brake chamber and the relay valve or quick release valve (Fig. 45). Note that there is only one solenoid valve controlling the drive and tag axle wheels on the same side (tag axle is slave to drive axle).

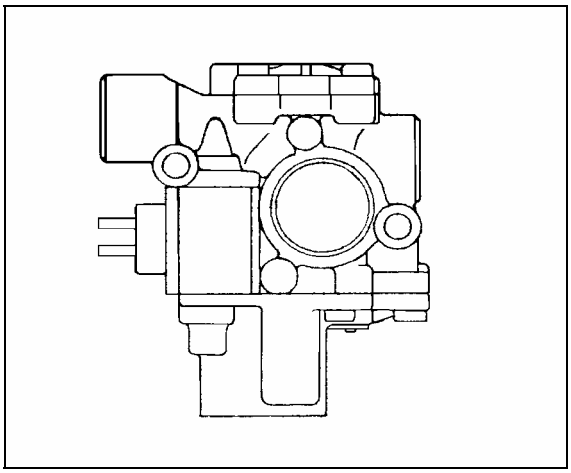

FIGURE 45: ABS MODULATOR VALVE 12084

This is an *"On/Off"* type valve, i.e., at brake application, the valve exhausts air from the brake chamber when the electronic unit senses that the corresponding wheel speed is decreasing in relation to the other wheels.

31.3.1 Maintenance

No specific maintenance is required for the solenoid control valve.

31.4 SENSORS

The sensors are mounted on the front and drive axle wheel hubs (Fig. 46). The inductive sensors consist essentially of a permanent magnet with a round pole pin and a coil. The rotation of the toothed wheel alters the magnetic flux picked up by the coil, producing an alternating voltage, the frequency of which is proportional to wheel speed. When wheel speed decreases, magnetic flux decreases proportionately. Consequently, the electronic control unit will command the solenoid control valve to decrease the pressure at the corresponding brake chamber.

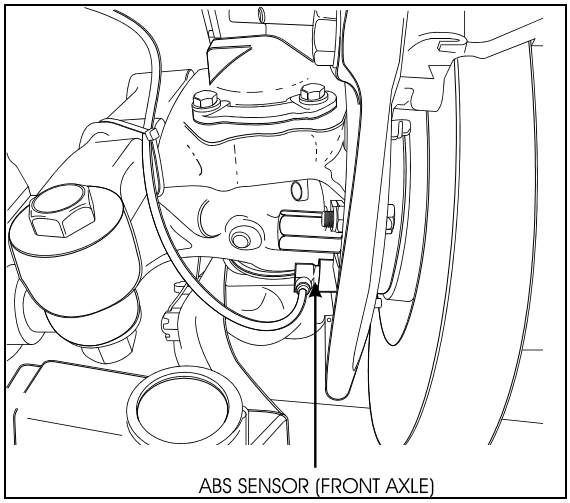

FIGURE 46: ABS SENSOR LOCATION 12153

31.4.1 Maintenance

No specific maintenance is required for sensors, except if the sensors have to be removed for axle servicing. In such a case, sensors should be lubricated with a special grease (Prévost #680460) before reinstallation. Refer to paragraph *"Sensor Installation"* for details.

Note: *The resistance value, when sensors are checked as a unit, must be equal to 1,75 k ohms. To check the sensors for proper output voltage after the sensors and toothed wheels have been assembled to the axle, connect a suitable AC voltmeter across the output terminals. With the hubs rotating at 30 rpm, the output voltages should read from 50 to 1999 mV to be acceptable.*

31.4.2 Sensor Installation

The following procedure deals with sensor installation on the axle wheel hubs. Read procedure carefully before reinstalling a sensor, as its installation must comply with operational tolerances and specifications.

1. Apply recommended lubricant (Prévost #680460) to spring clip and sensor.

Caution*: Use only this type of grease on the sensors.*

2. Insert spring clip in the holder on hub. Make sure the spring clip tabs are on the inboard side of the vehicle. Push in until the clip stops.
3. Push the sensor completely inside the spring clip until it is in contact with the tooth wheel. Ensure mounting is rigid, as it is an important criterion for adequate sensor operation.

Note*: This installation should be of the "press fit" type.*

31.5 SPRING CLIP

The spring clip retains the sensor in its mounting bracket close to the toothed pulse wheel. The gap between the sensor end and teeth is set automatically by pushing the sensor in the clip hard up against the tooth wheel, and the latter knocks back the sensor to its adjusted position (Fig. 47).

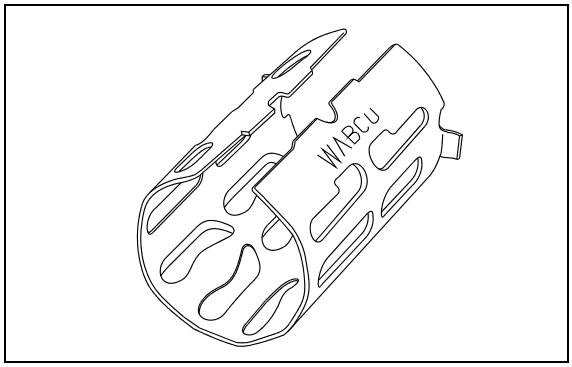

FIGURE 47: SPRING CLIP 12161

31.5.1 Maintenance

The spring clip requires no specific maintenance.

32. FITTING TIGHTENING TORQUES

45° Flare and Inverted Flare: Tighten assembly with a wrench until a solid feeling is encountered. From that point, tighten 1/6 turn (Fig. 48).

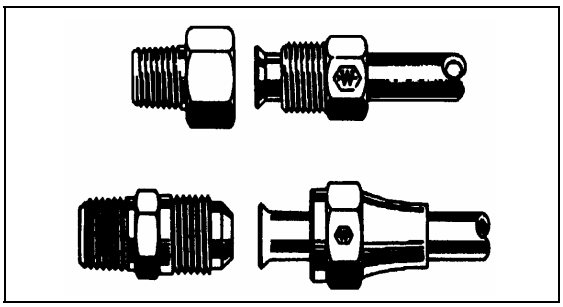

FIGURE 48: HOSE FITTINGS 12053

Compression: Tighten nut by hand (Fig. 49). From that point, tighten using a wrench the number of turns indicated in the chart hereafter.

Fitting size	Pipe diameter (inches)	Number of additional turns required following hand tightening
2	1/8	1 ¼
3	3/16	1 ¼
4	1/4	1 ¼
5	5/16	1 ¾
6	3/8	2 ¼
8	1/2	2 ¼
10	5/8	2 ¼
12	3/4	2 ¼
16	1	2 ¼

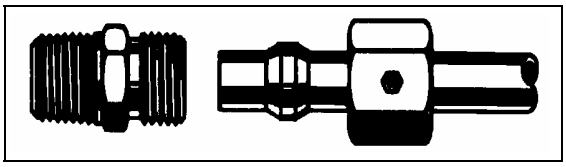

FIGURE 49: HOSE FITTING 12054

NTA-Type Plastic Tubing: Hand tighten nut (Fig. 50). From that point, tighten using a wrench the number of turns indicated in the following chart.

Tubing diameter (inches)	Number of additional turns required following hand tightening
1/4	3
3/8 to 1/2	4
5/8 to 3/4	3 ½

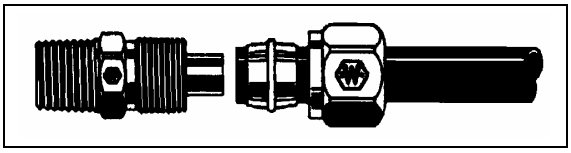

FIGURE 50: HOSE FITTING 12055

AB-Type Copper Piping: Hand tighten nut (Fig. 51). From that point, tighten with a wrench the number of turns indicated in the following chart.

Piping diameter (inches)	Number of additional turns required following hand tightening
1/4, 3/8, 1/2	2
5/8, 3/4	3

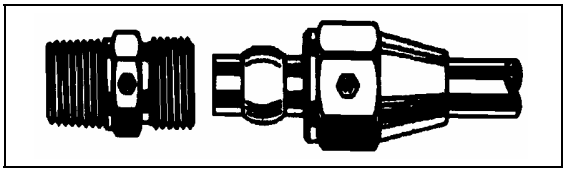

FIGURE 51: HOSE FITTING 12056

Pipe Tightening: All connections must be hand tightened. From that point, tighten a minimum of 2 ½ additional turns.

Note: *Use Locktite (Prévost number 680098) pipe sealant to seal pipe thread.*

33. SPECIFICATIONS

Air Compressor

Make..... Bendix Westinghouse
Model.....Tu-Flo 750
Capacity (at 1250 rpm) .....16.5 cfm (0,467 m^3/min.)
Supplier number..... 109426
Prévost number..... 641362

Governor

Make..... Bendix Westinghouse
Model..... D-2
Cut-in pressure..... 95-105 psi (655-724 kPa)
Cutout pressure..... 120-125 psi (827-861 kPa)
Supplier number..... 284358
Prévost number..... 640964

Air Dryer

Make..... Bendix Westinghouse
Model.....AD-9
Heater consumption .....100 watts
Supplier number..... 108229
Prévost number..... 641243
Desiccant cartridge kit supplier number..... 107796
Desiccant cartridge kit Prévost number 641244

Make..... Rockwell Wabco
Model..... System Saver 1200
Heater consumption .....100 watts
Supplier number.....RWABK-095
Prévost number..... 641337
Desiccant cartridge kit supplier number..... R950011
Desiccant cartridge kit Prévost number 641278

Flip-Flop Control Valve

Make..... Bendix Westinghouse
Model..... TW-1
Type ..... On-Off
Supplier number..... 229635
Prévost number..... 640136

Emergency/Parking Brake Control Valve

Make..... Bendix Westinghouse
Model..... PP-1
Automatic release pressure ..... 40 psi (275 kPa) nominal
Supplier number..... 287325
Prévost number..... 641128

Emergency/Parking Brake Overrule Control Valve

Make..... Bendix Westinghouse
Model.....RD-3
Supplier number..... 281481
Prévost number..... 640472

Dual Brake Application Valve

Make..... Bendix Westinghouse
Model..... E-10P
Supplier number..... 5006280
Prévost number..... 641856

Stoplight Switches

Make..... Bendix Westinghouse
Model..... SL-5
Contact close (ascending pressure) ..... 4 psi and more (28 kPa)
Supplier number..... 286404
Prévost number..... 641462

Brake Relay Valves

Make..... Bendix Westinghouse
Model..... R-12 & R-12C
Supplier number..... 102852
Prévost number..... 641088

Quick Release Valve

Make..... Bendix Westinghouse
Model..... QR-1
Supplier number..... 5001496
Prévost number..... 641429

Spring Brake Valve

Make..... Bendix Westinghouse
Model..... SR-1
Supplier number..... 286364
Prévost number..... 640870

Pressure Protection Valve

Make..... Bendix Westinghouse
Model..... PR-4
Nominal closing pressure..... 70 psi (482 kPa)
Supplier number..... 277226
Prévost number..... 641137

Shuttle-Type Double Check Valve

Make..... Bendix Westinghouse
Model..... DC-4
Supplier number..... 277988
Prévost number..... 641015

Low Pressure Indicators

Make..... Bendix Westinghouse
Model..... LP-3
Contact close ..... 66 psi (455 kPa)
Supplier number..... 277227
Prévost number..... 640975

Air Pressure Regulator

Make..... Norgren
Adjustable output range ..... 0-80/85 psi (0-552/586 kPa)
Recommended pressure setting..... 75 psi (517 kPa)
Supplier number..... R06-2G7 RNKA
Prévost number..... 641472

Air Filter Element

Make.....Norgren
Type .....With manual drain
Supplier number.....F74G-345-004
Prévost number.....641338

Front Axle Brake Chambers

Make.....Knorr-Bremse
Type 24
Supplier number (R.H.) .....BS-3457 II 34671
Prévost number (R.H.) 641414
Supplier number (L.H.).....BS-3457 II 34670
Prévost number (L.H.).....641413

Drive Axle Brake Chambers

Make.....Knorr-Bremse
Type .....24 as service -24 as emergency
Supplier number.....II/35699/BS-9524
Prévost number.....641432

Piggy Back (On Drive Brakes)

Make.....Knorr-Bremse
Type .....24 as emergency
Supplier number.....II/17567/0061
Prévost number.....641433

Tag Axle Brake Chambers

Make.....Knorr-Bremse
Type .....16 as service – 16 as emergency
Supplier number..... II/18224/V1-BS9396
Prévost number.....641308

Piggy Back (On Tag Brakes)

Make.....Knorr-Bremse
Type .....16 as emergency
Supplier number.....II/18224/0061
Prévost number.....641431

Brake Lining (All Axles)

Make.....Knorr-Bremse
Supplier number.....II 33976
Prévost number.....611049
Prévost number.....641226

ABS ANTILOCK BRAKING SYSTEM (if applicable)

ABS MODULATOR VALVE

Make..... Rockwell Wabco
Voltage .....24 V
Supplier number.....472 195 006 0
Prévost number.....641097

Sensor, Front Axle

Supplier number.....441 032-572-0
Prévost number.....641288

Sensor, Drive Axle (In Wheel End)

Supplier number.....441 032-576-0
Prévost number.....641095

AlliedSignal Bendix

Service Data

SD-01-344

TU-FLO 750 COMPRESSOR

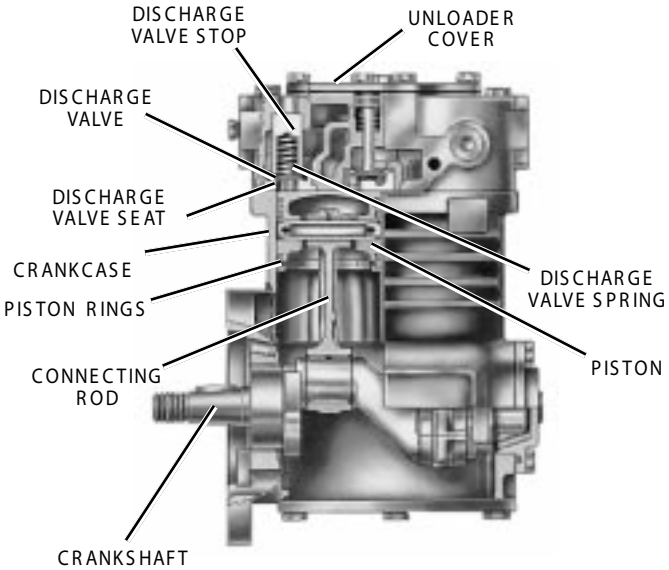

BENDIX TU-FLO 750 COMPRESSOR (CROSS SECTION)

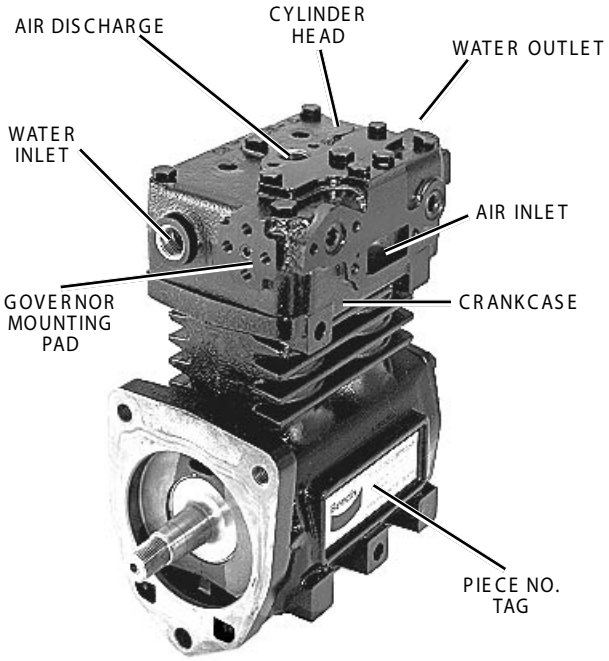

BENDIX TU-FLO 750 COMPRESSOR (EXTERIOR)

DESCRIPTION

The function of the air compressor is to provide and maintain air under pressure to operate devices in the air brake and/or auxiliary air systems. The Tu-Flo 650 compressor is a two cylinder single stage, reciprocating compressor with a rated displacement of 16.5 cubic feet per minute at 1250 RPM.

The compressor assembly consists of two major subassemblies, the cylinder head and the crankcase. The cylinder head is an iron casting which houses the inlet, discharge, and unloader valving. (See Figure 1.) The cylinder head contains the air inlet port and is designed with both top and side air discharge ports. Three water coolant ports provide a choice of coolant line connections. Governor mounting surfaces are provided at both the front and the rear of the cylinder head. The head is mounted on the crankcase and is secured by six cap screws. The Tu-Flo 750 compressor is designed such that the cylinder head can be installed in one of two positions which are 180 degrees apart. The crankcase houses the cylinder bores, pistons, crankshaft and main bearings, and provides the flange or base mounting surface.

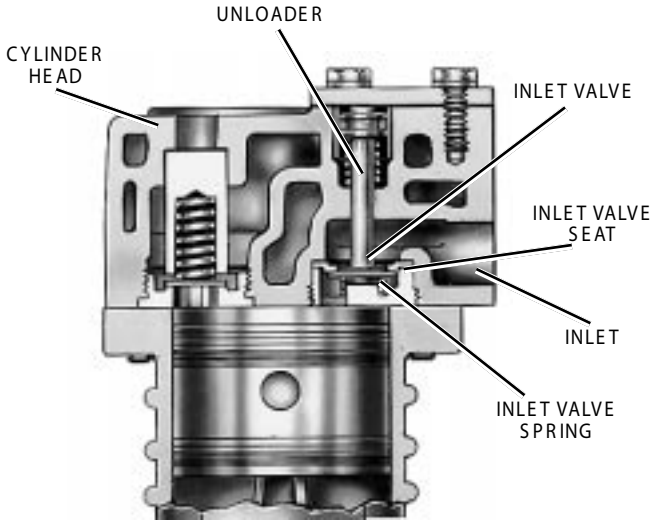

END VIEW OF CYLINDER HEAD

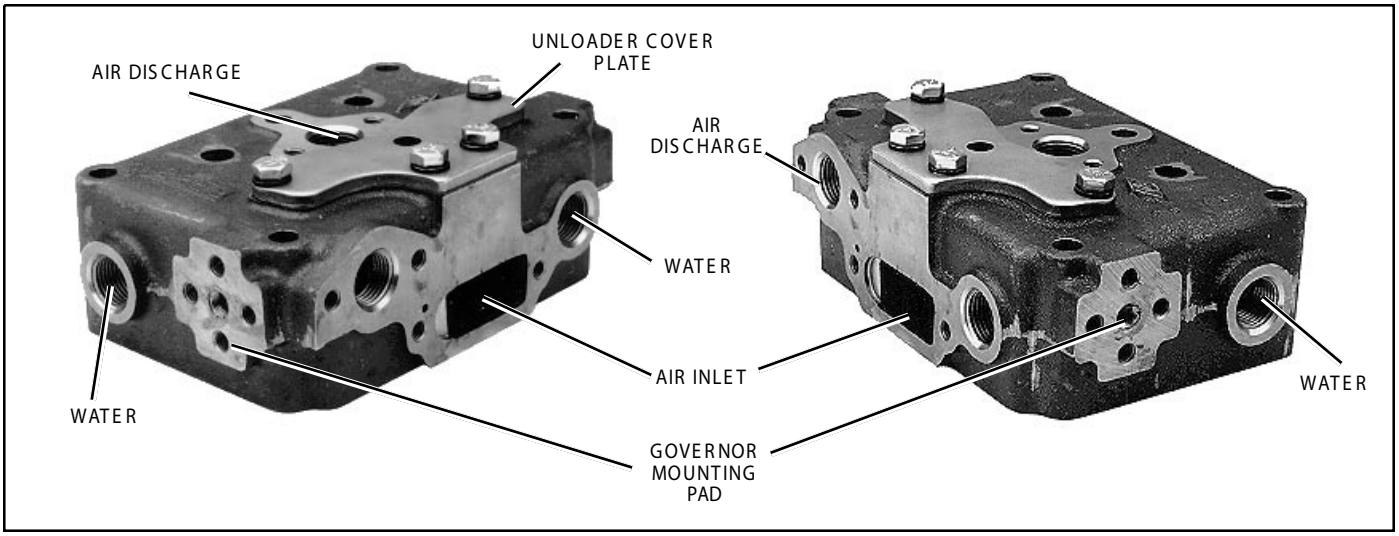

FIGURE 1 - CYLINDER HEAD

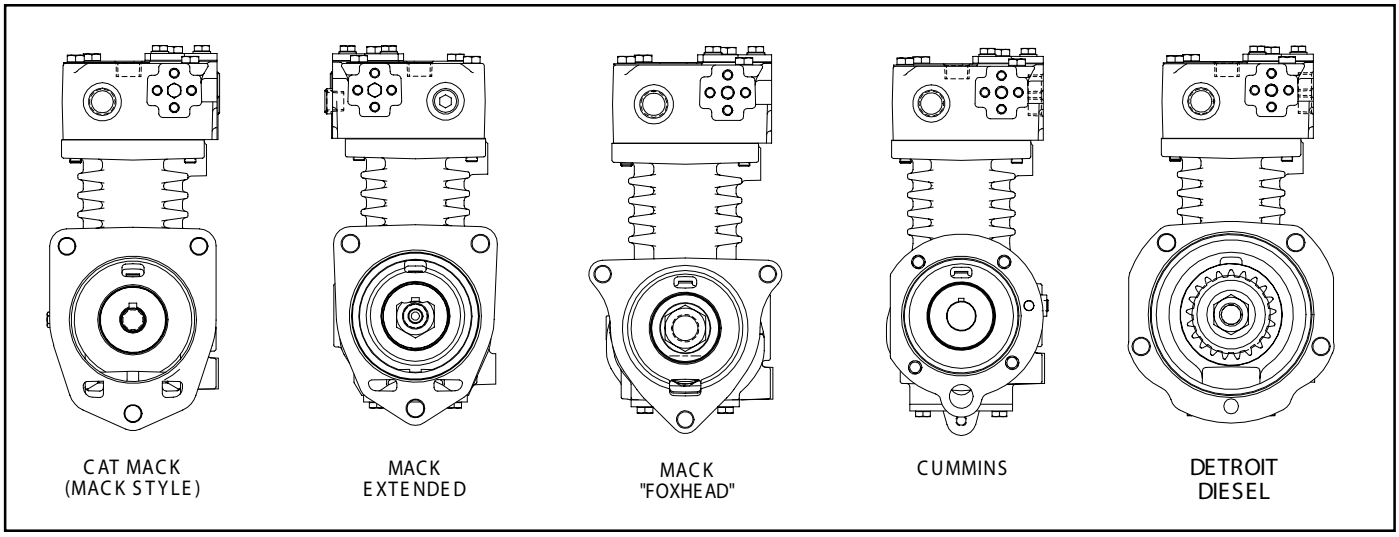

FIGURE 2 - MOUNTING CONFIGURATIONS

Various mounting and drive configurations, as shown in Figure 2, are supplied as required by the vehicle engine designs. A nameplate identifying the compressor piece number and serial number is attached to the side of the crankcase. (Reference Figure 3.)

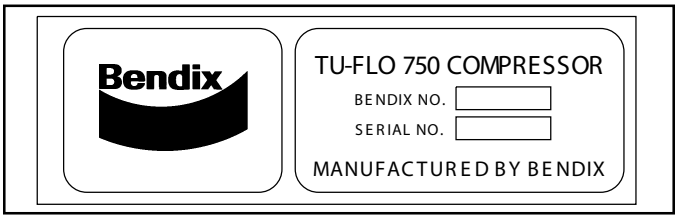

FIGURE 3 - NAMEPLATE

OPERATION

The compressor is driven by the vehicle engine and is operating continuously while the engine is running. Actual compression of air is controlled by the compressor unloading mechanism and the governor. The governor which is generally mounted on the compressor maintains the brake system air pressure to a preset maximum and minimum pressure level.

INTAKE AND COMPRESSION OF AIR (LOADED)

During the down stroke of the piston, a slight vacuum is created between the top of the piston and the cylinder head, causing the inlet valve to move off its seat and open. (Note: The discharge valve remains on its seat.) Atmospheric air is drawn through the air strainer and the open inlet valve into the cylinder (see Figure 4). As the piston begins its upward stroke, the air that was drawn into the cylinder on the down stroke is being compressed. Air pressure on the inlet valve plus the force of the inlet spring, returns the inlet valve to its seat and closes. The piston continues the upward stroke and compressed air pushes the discharge valve off its seat and air flows by the open discharge valve, into the discharge line and to the reservoirs (see Figure 5). As the piston reaches the top of its stroke and starts down, the discharge valve spring and air pressure in the discharge line returns the discharge valve to its seat. This prevents the compressed

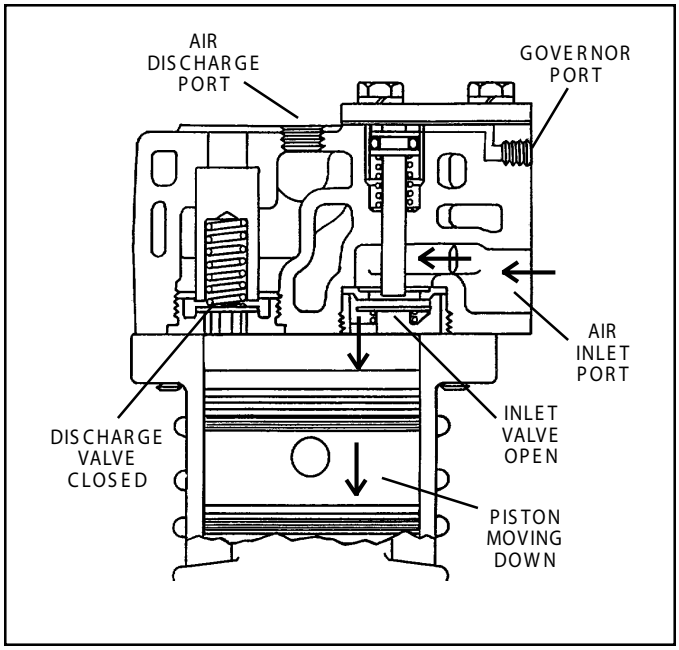

FIGURE 4 - OPERATIONAL-LOADED (INTAKE)

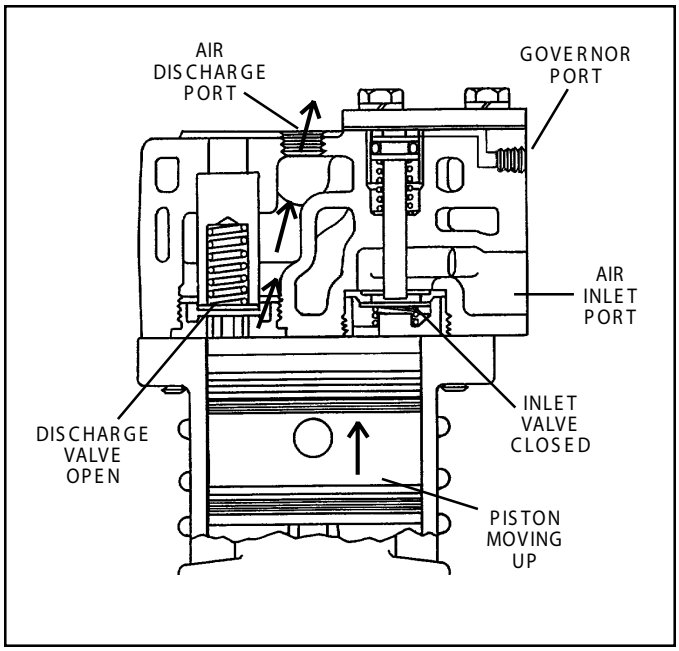

FIGURE 5 - OPERATIONAL-LOADED (COMPRESSION)

air in the discharge line from returning to the cylinder bore as the intake and compression cycle is reseated.

NON-COMPRESSION OF AIR (UNLOADED)

When air pressure in the reservoir reaches the cut-out setting of the governor, the governor allows air to pass from the reservoir, through the governor and into the cavity above the unloader pistons. The unloader pistons move down holding the inlet valves off their seats (see Figure 6.) With the inlet valves held off their seats by the unloader pistons, air is pumped back and forth between the two cylinders, and the discharge valves remain closed. When air pressure from the reservoir drops to the cut-in setting of the governor, the governor closes and exhausts the air from above the unloader pistons. The unloader springs force the pistons upward and the inlet valves return to their seats. Compression is then resumed.

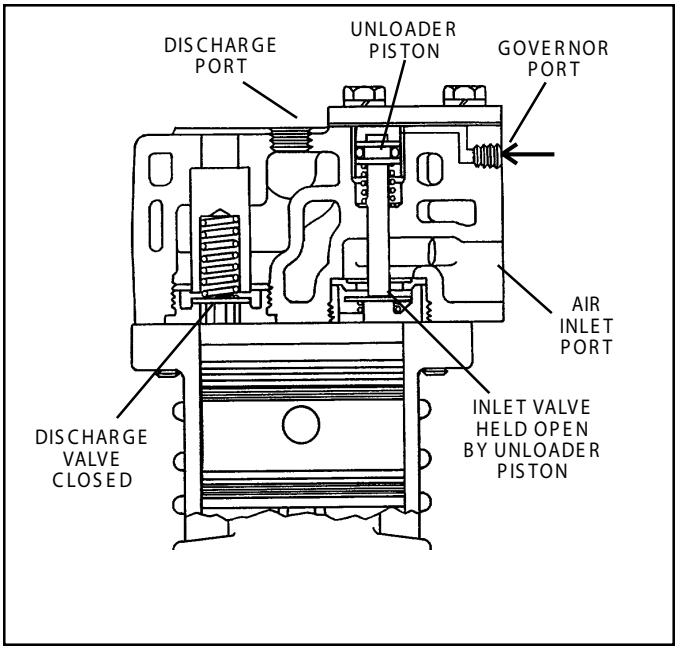

FIGURE 6 - OPERATIONAL-UNLOADED

LUBRICATION

The vehicle's engine provides a continuous supply of oil to the compressor. Oil is routed from the engine to the compressor oil inlet. An oil passage in the compressor crankshaft allows oil to lubricate the connecting rod crankshaft bearings. Connecting rod wrist pin bushings and crankshaft ball bearings are spray lubricated. An oil return line connected from the compressor drain outlet to the vehicle engine crankcase allows for oil return. On flange mounted models the oil drains back directly to the engine through the mounting flange.

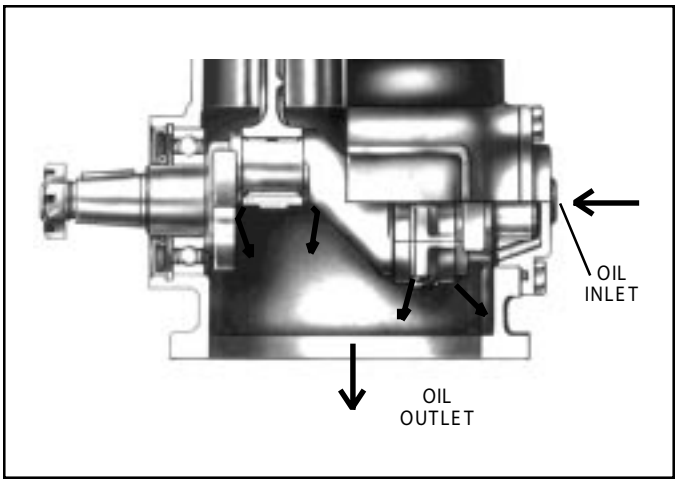

FIGURE 7 - LUBRICATION (BASE MOUNT MODEL SHOWN)

COOLING

Air flowing through the engine compartment from the action of the engine's fan and the movement of the vehicle assists in cooling the compressor. Coolant flowing from the engine's cooling system through connecting lines enters the head and passes through internal passages in the cylinder head and is returned to the engine. Proper cooling is important in maintaining discharge air temperatures below the maximum recommended 400 degrees Fahrenheit.

Figure 8 illustrates the various approved coolant flow connections. See the tabulated technical data in the back of this manual for specific requirements.

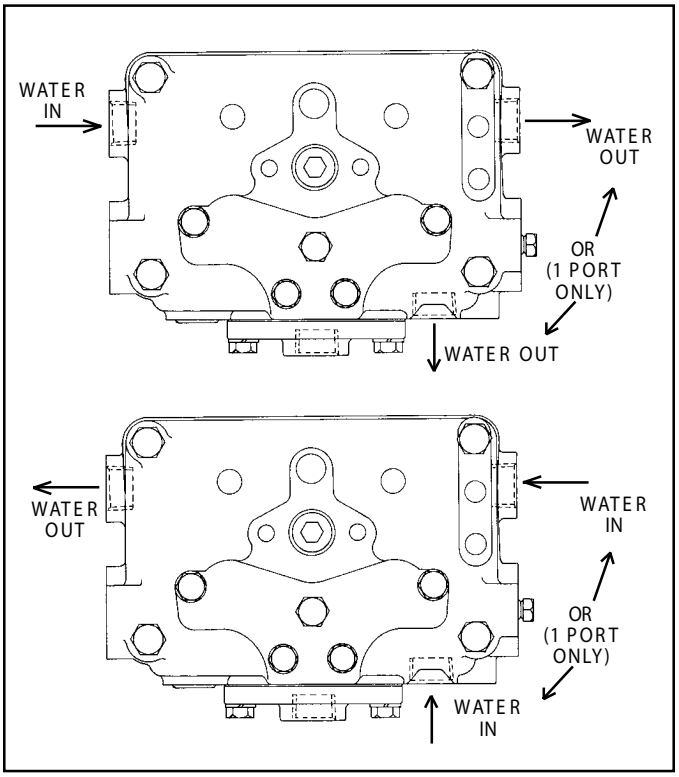

FIGURE 8 - COOLING

AIR INDUCTION

There are three methods of providing clean air to the Tu-Flo 750 compressor:

1. Naturally aspirated - Compressor utilizes its own attached air strainer (polyurethane sponge or pleated paper dry element).
2. Naturally aspirated - Compressor inlet is connected to the engine air cleaner or the vacuum side (engine air cleaner) of the supercharger or turbocharger.
3. Pressurized induction - Compressor inlet is connected to the pressure side of the supercharger or turbocharger.

See the tabulated technical data in the back of this manual for specific requirements for numbers 2 and 3 above.

If a previously unturbocharged compressor is being turbocharged, it is recommended that the inlet cavity screen (238948) be installed with an inlet gasket (291909) on both sides of the screen.

COMPRESSOR TURBOCHARGING PARAMETERS

Air entering the compressor inlet during the loaded cycle must not exceed 250 degrees Fahrenheit (121 degrees Celsius). A metal inlet line is suggested to help meet this parameter.

The following compressor crankshaft rotative speed and inlet pressure relationships may not be exceeded.

Crankshaft	Maximum Compressor R.P.M. Inlet Pressure
1900 RPM	30.0 psi (207 kPa)
2000 RPM	27.5 psi (190 kPa)
2100 RPM	24.0 psi (165 kPa)
2200 RPM	21.0 psi (145 kPa)
2300 RPM	19.0 psi (131 kPa)
2400 RPM	16.0 psi (110 kPa)

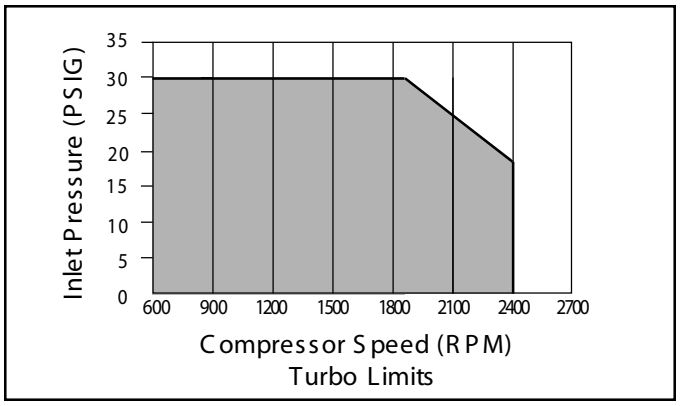

FIGURE 9 - TURBO LIMITS CURVE

PREVENTATIVE MAINTENANCE

Important Note: Review the warranty policy before performing any intrusive maintenance procedures. An extended warranty may be voided if intrusive maintenance is performed during this period.

AIR INDUCTION

One of the single most important aspects of compressor preventive maintenance is the induction of clean air. The type and interval of maintenance required will vary depending upon the air induction system used.

The intervals listed under the headings below pertain to typical highway and street operation. More frequent maintenance will be required for operation in dusty or dirty environments.

POLYURETHANE SPONGE STRAINER

PAPER AIR STRAINER DRY ELEMENT-PLEATED

FIGURE 10 - STRAINERS

POLYURETHANE SPONGE STRAINER

Every month, 150 operating hours or 5,000 miles, whichever occurs first, remove and wash all of the parts. The strainer element should be cleaned or replaced. If the element is cleaned, it should be washed in a commercial solvent or a detergent and water solution. The element should be saturated in clean engine oil, then squeezed dry before replacing it in the strainer. Be sure to replace the air strainer gasket if the entire strainer is removed from the compressor intake.

DRY ELEMENT - PLEATED PAPER STRAINER

Every two months, 800 operating hours or 20,000 miles whichever occurs first, loosen the spring clip from the unhinged side of the mounting baffle and open the cover. Replace the pleated paper filter and secure the cleaned cover, making sure the filter is in position. Be sure to replace the air strainer gasket if the entire air strainer is removed from the compressor intake.

INTAKE ADAPTER

When the engine air cleaner is replaced: Some compressors are fitted with compressor intake adapters, which allow the compressor intake to be connected to the engine air induction system. In this case, the compressor receives a supply of clean air from the engine air cleaner. When the engine air filter is changed, the compressor intake adapter should be checked. If it is loose, remove the intake adapter, clean the strainer plate, if applicable, and replace the intake adapter gasket, and reinstall the adapter securely. Check line connections both at the compressor intake adapter and at the engine. Inspect the connecting line for ruptures and replace it if necessary.

COMPRESSOR COOLING

Every 6 months, 1800 operating hours or after each 50,000 miles whichever occurs first, inspect the compressor discharge port, inlet cavity and discharge line for evidence of restrictions and carboning. If excessive buildup is noted, thoroughly clean or replace the affected parts and closely inspect the compressor cooling system. Check all compressor coolant lines for kinks and restrictions to flow. Minimum coolant line size is 3/8" I.D. Check coolant lines for internal clogging from rust scale. If coolant lines appear suspicious, check the coolant flow and compare to the tabulated technical data present in the back of this manual. Carefully inspect the air induction system for restrictions.

LUBRICATION

Every six months, 1800 operating hours or 50,000 miles which ever occurs first, check external oil supply and return lines, if applicable, for kinks, bends, or restrictions to flow. Supply lines must be a minimum of 3/16" I.D. and return lines must be a minimum of 1/2" I.D. Oil return lines should slope as sharply as possible back to the engine crankcase and should have as few fittings and bends as possible. Refer to the tabulated technical data in the back of this manual for oil pressure minimum values

COMPRESSOR DRIVE

Every six months, 1800 operating hours or 50,000 miles, whichever occurs first, check for noisy compressor operation, which could indicate a worn drive gear coupling, a loose pulley or excessive internal wear. Adjust and/or replace as necessary.

If the compressor is belt driven, check for proper belt and pulley alignment and belt tension. Check all compressor mounting bolts and retighten evenly if necessary. Check for leakage and proper unloader mechanism operation. Repair or replace parts as necessary.

Every 24 months, 7200 operating hours, or after each 200,000 MILES, perform a thorough inspection, and depend-

ing upon the results of this inspection or experience, disassemble the compressor, clean and inspect all parts thoroughly, replace all worn or damaged parts using only genuine Bendix replacements or replace the compressor with a genuine Bendix remanufactured unit.

GENERAL SERVICE CHECKS

OPERATING TESTS

Vehicles manufactured after the effective date of FMVSS 121, with the minimum required reservoir volume, must have a compressor capable of raising air system pressure from 85-100 psi in 25 seconds or less. This test is performed with the engine operating at maximum recommended governed speed. The vehicle manufacturer must certify this performance on new vehicles with appropriate allowances for air systems with greater than the minimum required reservoir volume.

AIR LEAKAGE TESTS

Compressor leakage tests need not be performed on a regular basis. These tests should be performed when; it is suspected that discharge valve leakage is substantially affecting compressor build-up performance, or when it is suspected that the compressor is "cycling" between the load and unloaded modes due to unloader piston leakage.

These tests must be performed with the vehicle parked on a level surface, the engine not running, the entire air system completely drained to 0 P.S.I., and the inlet check valve detail parts removed, if applicable.

UNLOADER PISTON LEAKAGE

The unloader pistons can be checked for leakage as follows: with the cylinder head removed from the compressor and the inlet flange securely covered, apply 120 psi of air pressure to the governor port. Listen for an escape of air at the inlet valve area. An audible escape of air should not be detected.

DISCHARGE VALVE LEAKAGE

Unloader piston leakage must be repaired before this test is performed. Leakage past the discharge valves can be detected as follows: Remove the discharge line and apply shop air back through the discharge port. Listen for an escape of air at the compressor inlet cavity. A barely audible escape of air is generally acceptable.

If the compressor does not function as described above or if the leakage is excessive, it is recommended that it be returned to the nearest authorized Bendix distributor for a factory remanufactured compressor. If it is not possible, the compressor can be repaired using a genuine Bendix cylinder head maintenance kit. Retest the cylinder head after installation of the kit.

REMOVAL AND DISASSEMBLY

GENERAL

The following disassembly and assembly procedure is presented for reference purposes and presupposes that a major rebuild of the compressor is being undertaken. Several maintenance kits are available which do not require full disassembly. The instructions provided with these parts and kits should be followed in lieu of the instructions presented here.

REMOVAL

These instructions are general and are intended to be a guide, in some cases additional preparations and precautions are necessary.

1. Block the wheels of the vehicle and drain the air pressure from all the reservoirs in the system.
2. Drain the engine cooling system and the cylinder head of the compressor. Identify and disconnect all air, water and oil lines leading to the compressor.
3. Remove the governor and any supporting bracketry attached to the compressor and note their positions on the compressor to aid in reassembly.
4. Remove the discharge and inlet fittings, if applicable, and note their position on the compressor to aid in reassembly.
5. Remove the flange or base mounting bolts and remove the compressor from the vehicle.
6. Remove the drive gear(s) or pulley from the compressor crankshaft using a gear puller. Inspect the pulley or gear and associated parts for visible wear or damage. Since these parts are precision fitted, they must be replaced if they are worn or damaged.

PREPARATION FOR DISASSEMBLY

Remove road dirt and grease from the exterior of the compressor with a cleaning solvent. Before the compressor is disassembled, the following items should be marked to show their relationship when the compressor is assembled. Mark the rear end cover in relation to the crankcase. Mark the base plate or base adapter in relation to the crankcase.

A convenient method to indicate the above relationships is to use a metal scribe to mark the parts with numbers or lines. Do not use marking methods such as chalk that can be wiped off or obliterated during rebuilding.

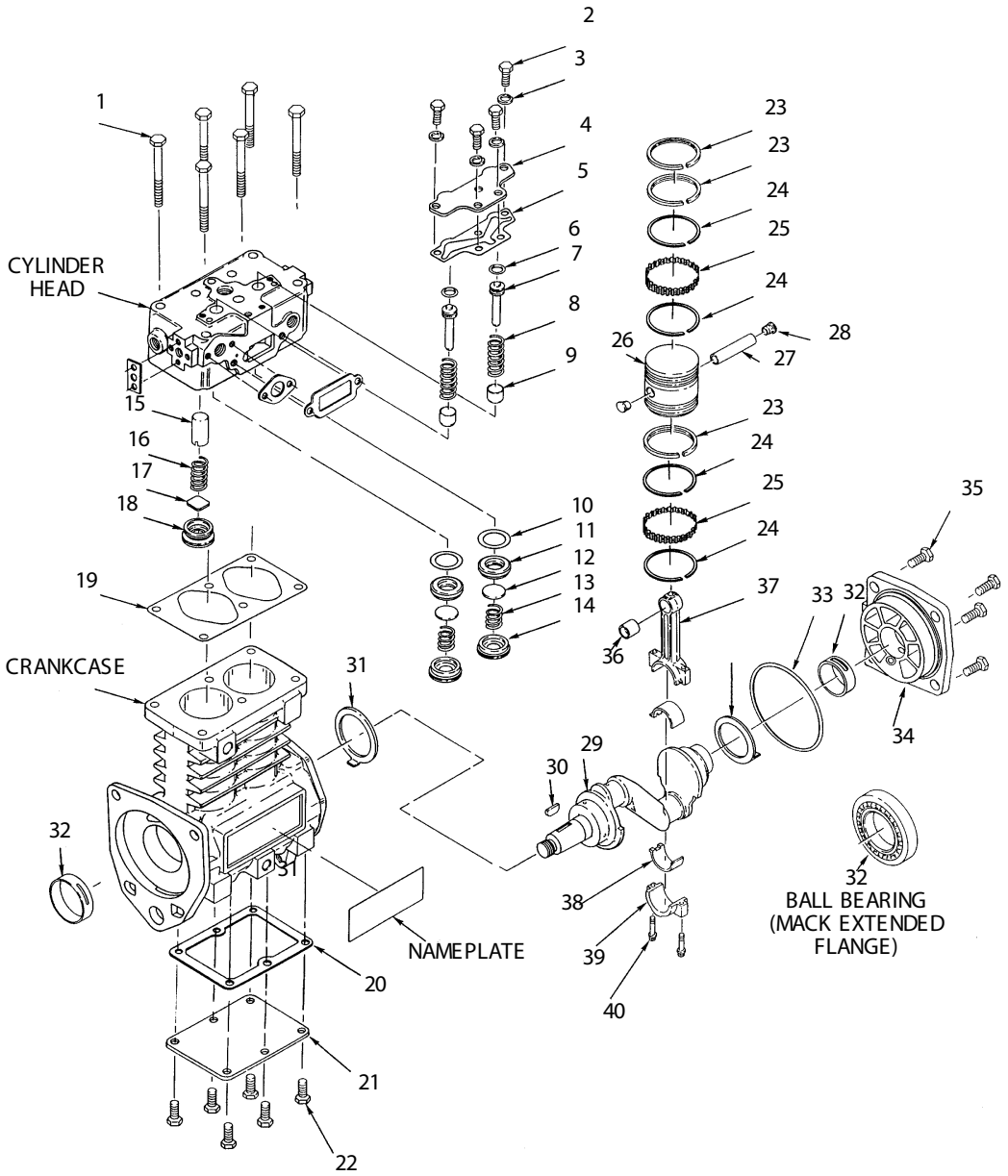

FIGURE 11 - EXPLODED VIEW

ITEM	QTY	DESCRIPTION	ITEM	QTY	DESCRIPTION	ITEM	QTY	DESCRIPTION
1	6	Cylinder Head Cap Screws	15	2	Discharge Valve Stop	29	1	Crankshaft
2	4	Unloader Plate Cap Screws	16	2	Discharge Valve Spring	30	1	Crankshaft Key
3	4	Unloader Plate Lock Washers	17	2	Discharge Valve	31	2	Thrust Washer
4	1	Unloader Plate	18	2	Discharge Valve Stop	32	2	Sleeve (or Ball) Bearing
5	1	Unloder Plate Gasket	19	1	Cylinder Head Gasket	33	1	End Cover Seal
6	2	O-ring	20	1	Base Gasket	34	1	End Cover
7	2	Unloader	21	1	Base Plate	35	4	End Cover Cap Screws
8	2	Spring	22	6	Base Plate Cap Screws	36	2	Wrist Pin Bushing
9	2	Unloader Bushing	23	6	Standard Piston Rings	37	2	Connecting Rod
10	2	Gasket	24	8	Oil Ring	38	2	Conn. RodInserts (Sets)
11	2	Inlet Valve Seat	25	4	Expander Ring	39	2	Connecting Rod Caps
12	2	Inlet Valve	26	2	Pistion	40	4	Connecting Rod Bolts
13	2	Inlet Valve Spring	27	2	Wrist Pin			
14	2	Inlet Valve Stop	28	4	Wrist Pin Button			

CYLINDER HEAD

Remove the six cylinder head cap screws (1) and tap the head with a soft mallet to break the gasket seal. Remove the unloader cover plate cap screws (2), lockwashers (3) and the unloader cover plate (4). Scrape off any gasket material (5) from the cover plate, cylinder head and crankcase.

1. Remove the unloader pistons (7), o-rings (6) and springs (8).
2. Inspect the unloader piston bushings (9) for nicks, wear, corrosion and scoring. It is recommended that the compressor be replaced if it is determined that the unloader bushing is damaged or worn excessively.

Before disassembling the discharge valve mechanism, measure and record the discharge valve travel (from closed to completely open).

3. If the measured discharge valve travel exceeds .046 inches, the compressor should be replaced. If the discharge valve travel does not exceed .046, using a 9/16" Allen wrench, remove the discharge valve seats (18), valves (17) and valve springs (16).
4. Remove the inlet valve stops (14), valves (17), valve seats (11), valve springs (12) and gaskets (10). It is recommended that a tool such as a J-25447-B, produced by Kent Moore Tool Division Roseville, Michigan phone 1-800-328-6657, be used to remove the inlet valve stop.

CRANKCASE BOTTOM COVER OR ADAPTER DISASSEMBLY

1. Remove the cap screws (22) securing the bottom cover or adapter (21). Tap with a soft mallet to break the gasket seal. Scrape off any gasket material (20) from the crankcase and bottom cover or adapter.

CONNECTING ROD DISASSEMBLY

Before removing the connecting rod, mark the connecting rods (37) and their caps (39) to ensure correct reassembly. The connecting rod and cap are a matched set therefore the caps must not be switched or rotated end for end.

1. Remove the connecting rod bolts (40) and bearing caps (39).
2. Push the pistons (26) with the connecting rods (37) attached out the top of the cylinder bore of the crankcase. Replace the bearing caps on the connecting rods.
3. Remove the piston rings (23-25) from the piston. If the piston is to be removed from the connecting rod, remove the wrist pin teflon plugs (28) and press the wrist pin (27) from the piston and connecting rod.
4. If the piston is removed from the rod, inspect the wrist pin bore in the piston and bronze wrist pin bushing (36) in the connecting rod. If excessive wear is noted or suspected, replace the connecting rod and piston.

COMPRESSOR CRANKCASE DISASSEMBLY

1. Remove the key or keys (30) from the crankshaft (29) and any burrs from the crankshaft where the key or keys were removed. (Note: Through drive compressors may have a crankshaft key at both ends.)
2. Remove the four cap screws (35) and lockwashers or nuts and lockwashers that secure the rear end cover (34) to the crankcase.
3. Remove the rear end cover (34), thrust washer (31) and end cover oil seal ring (33), taking care not to damage the bearing if present in the end cover.
4. If the compressor has ball type main bearings, press the crankshaft (29) and ball bearings from the crankcase, then press the ball bearings from the crankshaft.
5. Press the oil seal out of the compressor crankcase, if so equipped.

CLEANING OF PARTS GENERAL

All parts should be cleaned in a good commercial grade of solvent and dried prior to inspection.

CYLINDER HEAD

Remove carbon deposits from the discharge cavity and rust and scale from the cooling cavities of the cylinder head body. Scrape all foreign matter from the body surfaces and use shop air pressure to blow the dirt particles from the cavities. Clean carbon and dirt from the inlet and unloader passages. Use shop air to blow the carbon and dirt deposits from the unloader passages.

OIL PASSAGES

Thoroughly clean all oil passages through the crankshaft, crankcase, end covers, base plate or base adapter. Inspect the passages with a wire to be sure. Blow the loosened foreign matter out with air pressure.

INSPECTION OF PARTS

CYLINDER HEAD BODY

Inspect the cylinder head for cracks or damage. With the cylinder head and head gasket secured to a flat surface or crankcase, apply shop air pressure to one of the coolant ports with all others plugged, and check for leakage by applying a soap solution to the exterior of the body. If leakage is detected, replace the compressor.

END COVERS

Check for cracks and external damage. If the crankshaft main bearing (32) is installed in the end cover (34), check for excessive wear and flat spots and replace if necessary.

CRANKCASE

Check all crankcase surfaces for cracks and damage. On compressors where ball bearing main bearings are used the difference between the O.D. of the outer race and the I.D. of the crankcase hole should be .0003 in. tight to .0023 in. loose. This is to maintain the correct fit. The compressor must be replaced if the fit is too loose.

On compressors fitted with precision, sleeve main bearings, the difference between the O.D. of the crankshaft journal and the main bearing I.D. must not exceed .005 in. If the clearance is greater than .005 in. the bearing must be replaced.

The cylinder bores should be checked with inside micrometers or calipers. Cylinder bores which are scored or out of round by more than .0005 in. or tapered more than .0005 in. should be rebored or honed oversize. Oversized pistons and piston rings are available in .010 in., .020 in. and .030 in. oversizes. Cylinder bores must be smooth, straight and round. Clearance between the cast iron pistons and cylinder bores should be between .002 in. minimum and .004 in. maximum.

PISTON RINGS

Check the pistons for scores, cracks or enlarged ring grooves; replace the pistons if any of these conditions are found. Measure each piston with a micrometer in relation to the cylinder bore diameter to be sure the diametrical clearance is between .002 in. minimum and .004 in. maximum.

Check the fit of the wrist pins to the pistons and connecting rod bushings. The wrist pin should be a light press fit in the piston. If the wrist pin is a loose fit, the piston and pin assembly should be replaced. Check the fit of the wrist pin in the connecting rod bushing by rocking the piston. This clearance should not exceed .0007 in. Replace the connecting rod and cap assembly which includes the wrist pin bushings if excessive clearance is found. Check the fit of the rings in the piston ring grooves. Check the ring gap with the rings installed in the cylinder bores. Refer to Figure 12 for correct gap and groove clearances.

CRANKSHAFT

Check the crankshaft threads, keyways, tapered ends and all machined and ground surfaces for wear, scores, or damage. Standard crankshaft journals are 1.1242 in. - 1.1250 in. in diameter. If the crankshaft journals are excessively scored or worn or out of round and cannot be reground, the compressor must be replaced. Connecting rod bearing inserts are available in .010 in., .020 in. and .030 in. undersizes for compressors with reground crankshafts. Main bearing journals must be maintained so the ball bearings are a snug fit or so that no more than .005 in. clearance exists between the precision sleeve main bearing and the main bearing journals on the crankshaft. Check to be sure the oil passages are open through the crankshaft.

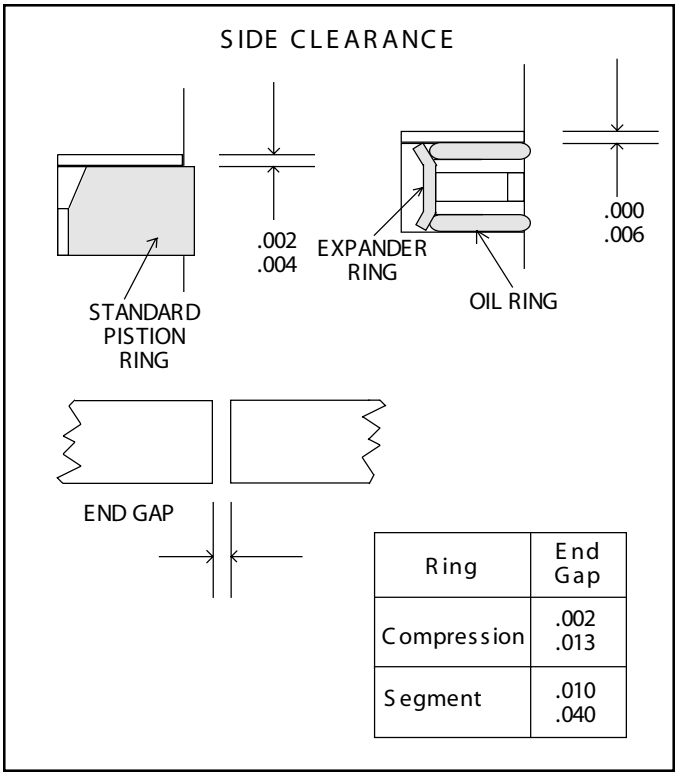

Ring	End Gap
Compression	.002 .013
Segment	.010 .040

FIGURE 12 - RING CONFIGURATION

CONNECTING ROD BEARINGS

Used bearing inserts must be replaced. The connecting rod and cap are a matched set and therefore the caps must not be switched or rotated end for end. Make sure the locating tangs on the inserts engage with the locating notches in the rod and cap. Clearance between the connecting rod journal and the connecting rod bearing must not be less than .0003 in. or more than .0021 in. after rebuilding.

REPAIRS

UNLOADER

A new cylinder head maintenance kit should be used when rebuilding. Note: The entire contents of this kit must be used. Failure to do so may result in compressor failure. The unloader pistons in the kit are prelubricated with a special lubricant piece number 239379 and need no additional lubrication. Install the springs and unloader pistons in their bores being careful not to cut the o-rings. Install the unloader cover gasket and unloader cover and secure the cover cap screws. Tighten the cap screws to 175-225 in. lbs. in a crossing pattern after first snugging all screws.

DISCHARGE VALVES, VALVE STOPS AND SEATS

If the discharge valve seats merely show signs of slight wear, they can be dressed by using a lapping stone, grinding compound and grinding tool however it is recommended that a cylinder head maintenance be used. Install new discharge valve springs and valves. Screw in the discharge valve seats, and tighten to 70-90 ft.-lbs. Discharge valve travel should be between .030 in. to .046 in. To test for leakage by the discharge valves, apply 100 psi to the cylinder head discharge port and apply a soap solution to the discharge valve and seats. Leakage in the form of soap bubbles is permissible. If excessive leakage is found, leave the air pressure applied and with the use of a fiber or hardwood dowel and a hammer, tap the discharge valves off their seats several times. This will help the valves to seat and should reduce the leakage. With the air pressure still applied at the discharge port of the cylinder head, check for leakage around the discharge valve stop on the top of the cylinder head casting. No leakage is permitted.

INLET VALVES AND SEATS

Inlet valves and springs should be replaced. However, if the inlet valve seats show signs of slight nicks or scratches, they can be redressed with a fine piece of emery cloth or by lapping with a lapping stone, grinding compound and grinding tool. If the seats are damaged to the extent that they cannot be reclaimed, they must be replaced.

ASSEMBLY

General Note: All torques specified in this manual are assembly torques and typically can be expected to fall off after assembly is accomplished. Do not retorque after initial assembly torques fall unless instructed otherwise. A compiled listing of torque specifications is presented at the end of this manual.

To convert inch pounds of torque to foot pounds of torque, divide in pounds by 12.

inch pounds ÷ 12 = foot pounds

To convert foot pounds of torque to inch pounds of torque, multiply foot pounds by 12.

foot pounds x 12 = inch pounds

INSTALLING CRANKSHAFT

Press new sleeve bearings in the end cover and crankcase. Ensure that the slot in the bearings line up with the oil passages in the end cover or crankcase. If you have a model with no oil passage present in the crankcase, press the sleeve bearing into the crankcase with the slot located 90 degrees from vertical.

Install the front thrust washer with the tang inserted in the slot toward the flange. Insert the crankshaft and the rear thrust washer with the tang toward the rear of the compressor.

Place the oil seal ring on the boss of the rear end cover and install the end cover making sure not to pinch the seal ring. Ensure the tang of the thrust washer is inserted in the slot of the end cover. Fasten the end cover to the crankcase with the four cover cap screws. Torque the cap screws to 175-225 inch pounds in a cross pattern.

PISTONS AND CONNECTING RODS

If the pistons are to be replaced ensure that the correct pistons are being installed. Note that the pistons for the Tu-Flo 750 compressor are similar to those of other Bendix compressor models but may be identified by the piston diameter and the distance to the center of the wrist pin from the top of the piston as shown in Figure 13.

PISTON RINGS

Check each ring end gap in a cylinder bore before installation. Place the ring in the top of the cylinder bore and using the piston, push the ring to the midpoint of the cylinder bore and check the ring gap. If the end gaps are incorrect either the wrong repair size has been purchased or the compressor is worn beyond specification and should be replaced.

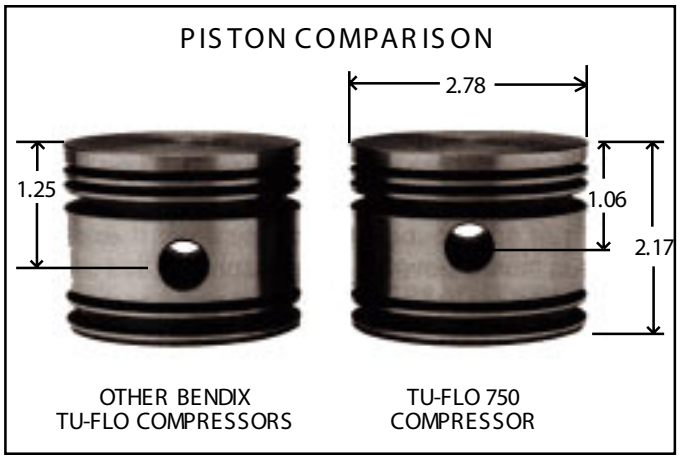

FIGURE 13 - PISTON COMPARISON

Install the rings on the pistons per the following instructions starting at the center of the piston and moving outward.

1. Install the spacer and segment rings as follows. Place the spacer ring (25) in the piston groove, the ends of the spacer must butt and not overlap. Install the top segment (24) by inserting one end above the spacer in the ring groove, 120 degrees from the spacer ends and wind the segment into position. Install the bottom segment in the same manner beneath the spacer making sure the gap is staggered 120 degrees from both the top ring segment and the spacer end gaps. Before using be sure

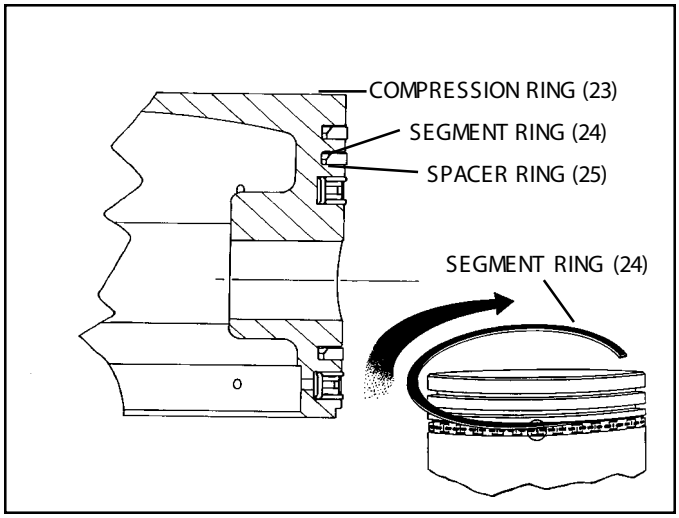

FIGURE 14 - PISTON & RINGS

both painted ends of the spacer are visible and butted. (Refer to Figure 14.)

2. Install the compression rings (23) in the proper grooves with the bevel or "pip" mark (if any) toward the top of the piston. (Refer to Figure 14.)

Check the ring side clearance of each ring in the piston ring groove. (Refer to Figure 12.) If the side clearance is too large, the piston ring groove is worn beyond specifications and the piston must be replaced.

Rotate the piston rings in their respective groove so that each end gap is at least 90 degrees from the previous ring's end gap.

Lubricate the wrist pin (22) and wrist pin bushing in the connecting rod with engine oil. Assemble the upper portion of the connecting rods and the pistons with the wrist pins. Insert the wrist pin buttons (28) in the ends of the wrist pin. Lubricate the pistons and rings with engine oil. Using a ring compression tool return the piston to the cylinder bore.

Turn the crankshaft so that one of its connecting rod journals is in the downward, center position. Install the crankshaft journal bearing segments (38) on the connecting rod (37) and connecting rod cap (39). Tighten the connecting rod bolts (40) evenly and torque to 150 - 170 inch pounds. Install the other connecting rod and piston in the same manner. It is recommended that new connecting rod cap screws be used.

Before replacing the cylinder head on the crankcase ensure the correct pistons have been used by turning the crankshaft one complete revolution such that each piston moves to its maximum upward stroke. At the maximum upward stroke position each piston should move to the top of the crankcase. If the piston does not approach the top of the crankcase the piston is incorrect and if not replaced could result in compressor damage.

BASE PLATE OR BASE ADAPTER

Position the base plate or base adapter gasket (20) on the crankcase and install the base plate or base adapter (21) as marked before disassembly. Tighten the six cap screws (22), securing the cast iron base adapter evenly to a torque of 175-225 inch pounds for base plate or cover in a crossing pattern after first snugging all 6 screws.

CYLINDER HEAD

Place the cylinder head gasket (19) and cylinder head on the compressor crankcase and install the six cylinder head cap screws. If the cylinder head gasket has a bead on one side, install the gasket on the crankcase with the beaded side up. Snug the cylinder head cap screws prior to torquing the cap screws to 440-500 in. lbs. in a cross pattern. Retorque the unloader cover cap screws to 170-225 in. lbs.

FINAL COMPRESSOR ASSEMBLY

Install all crankshaft keys making certain to support the crankshaft to avoid bearing damage. Install the crankshaft nut where applicable. When installing drive couplings or gears, do not exceed 120 foot pounds torque on the crankshaft nut.

Use covers, plugs, or masking tape to protect all ports if compressor is not to be installed immediately. Protect the ends of the crankshaft against damage by wrapping with masking tape or friction tape.

TESTING REBUILT COMPRESSOR

In order to properly test a compressor under operating conditions, a test rack for correct mounting, cooling, lubricating, and driving the compressor is necessary. Such tests are not compulsory if the unit has been carefully rebuilt by an experienced person. A compressor efficiency or build up test can be run which is not too difficult. An engine lubricated compressor must be connected to an oil supply line of at least 15 P.S.I. pressure during the test and an oil return line must be installed to keep the crankcase drained.

Connect to the compressor discharge port, a reservoir with a volume of 1500 cubic inches, including the volume of the connecting line. With the compressor operating at 2100 R.P.M., the time required to raise the reservoir(s) pressure from 85 psi to 100 psi should not exceed 5 seconds. During this test, the compressor should be checked for gasket leakage and noisy operation, as well as unloader operation and leakage.

If the compressor functions as indicated reinstall on the vehicle connecting all lines as marked in the disassembly procedure.

TU-FLO 750 SPECIFICATIONS

Average weight 53
Number of cylinders 2
Bore size ..... 2.78 In.
Stroke ..... 1.87 In.
Displacement at 1250 RPM ..... 16.5 CFM
CFM Maximum recommended RPM ..... 2400 RPM
Minimum coolant flow (water cooled) at
Maximum RPM ..... 2.5 GPM
Minimum RPM ..... 5 GPM
Approximate horsepower required at
1250 RPM at 120 PSIG (naturally aspirated) 3.2
Turbocharge limits
See Compressor Turbocharging Parameters
Maximum inlet air temperature ..... 250°F
Maximum discharge air temperature ..... 400°F
Minimum pressure required to unload
(naturally aspirated) ..... 60 PSIG
Minimum oil pressure required at
engine idling speed ..... 15 PSIG
Minimum oil pressure required at
maximum governed engine speed ..... 15 PSIG
Minimum discharge-line size ..... 1/2" I.D.
Minimum coolant-line size ..... 3/8" I.D.
Minimum oil-supply line size ..... 3/16" I.D.
Minimum oil-return line size ..... 1/2" I.D.
Minimum air-inlet line size ..... 5/8" I.D.
Minimum unloader-line size ..... 3/16" I.D.

TORQUE SPECIFICATIONS

Bolt, Nut or Screw ..... Assembly Torque (in. lbs.)
Cylinder Head ..... 440 - 500
Unloader Cover Plate ..... 175 - 225
Discharge Valve Seat ..... 840 - 1080 (70-90 ft. lbs.)
Inlet Valve Stop ..... 840 - 1080 (70-90 ft. lbs.)
End Cover ..... 175 - 225
Connecting Rod ..... 150 - 170
Bottom Cover ..... 175 - 225
Air Strainer ..... 125 - 150
Inlet Fitting ..... 175 - 225
Discharge Fitting ..... 175 - 225
Governor or Governor Adapter ..... 175 - 225
Pipe Plugs
1/16 ..... 35 - 50
1/8 ..... 85 - 105
1/4 ..... 130 - 170
3/8 ..... 160 - 200
1/2 ..... 200 - 270
Pipe Bushing
1/2 ..... 175 - 225
Crankshaft Nut:
Marsden or Castle ..... 1200 - 1400 (100-120 ft. lbs.)
P/N 298125
(Metric Thread) ..... 2640 - 3048 (220-254 ft. lbs.)

DIMENSIONAL DATA

Port Sizes
Water inlet ..... 1/2 - 14 NPT
Water outlet ..... 1/2 - 14 NPT
Air discharge ..... 1/2 - 14 NPT
Governor ..... 1/8 - 27 NPT
Oil inlet (end cover) ..... 1/8 - 27 NPT
Piston
(standard) ..... 2.77825 in.
(.010 oversize) ..... 2.78825 in.
(.020 oversize) ..... 2.79825 in.
(.030 oversize) ..... 2.80825 in.
Cylinder bore
(standard) ..... 2.7810 in.
(.010 oversize) ..... 2.7910 in.
(.020 oversize) ..... 2.8010 in.
(.030 oversize) ..... 2.8110 in.

MAINTENANCE KITS AND AVAILABLE SERVICE PARTS

Cylinder Maintenance Kit.

Piston Ring Kit (standard and oversizes.)

Piston and Rod Kit (standard and oversizes.)

Crankshaft Bearing Kit.

IMPORTANT! PLEASE READ:

When working on or around a vehicle, the following general precautions should be observed:

1. Park the vehicle on a level surface, apply the parking brakes, and always block the wheels.
2. Stop the engine when working around the vehicle.
3. If the vehicle is equipped with air brakes, make certain to drain the air pressure from all reservoirs before beginning any work on the vehicle.
4. Following the vehicle manufacturer's recommended procedures, deactivate the electrical system in a manner that removes all electrical power from the vehicle.
5. When working in the engine compartment the engine should be shut off. Where circumstances require that the engine be in operation, extreme caution should be used to prevent personal injury resulting from contact with moving, rotating, leaking, heated, or electrically charged components.
6. Never connect or disconnect a hose or line containing pressure; it may whip. Never remove a component or plug unless you are certain all system pressure has been depleted.
7. Never exceed recommended pressures and always wear safety glasses.
8. Do not attempt to install, remove, disassemble or assemble a component until you have read and thoroughly understand the recommended procedures. Use only the proper tools and observe all precautions pertaining to use of those tools.
9. Use only genuine Bendix replacement parts, components, and kits. Replacement hardware, tubing, hose, fittings, etc. should be of equivalent size, type, and strength as original equipment and be designed specifically for such applications and systems.
10. Components with stripped threads or damaged parts should be replaced rather than repaired. Repairs requiring machining or welding should not be attempted unless specifically approved and stated by the vehicle or component manufacturer.
11. Prior to returning the vehicle to service, make certain all components and systems are restored to their proper operating condition.

COMPRESSOR TROUBLESHOOTING CHART

SYMPTOMS	CAUSE	REMEDY
1. Compressor passes excessive oil as evidenced by presence of oil at exhaust ports of valving or seeping from air strainer.	A. Restricted air intake.	A. Check engine or compressor air cleaner and replace if necessary. Check compressor air inlet for kinks, excessive bends and be certain inlet lines have the minimum specified inside diameter. Recommended minimum inlet line inside diameter is 5/8". Recommended maximum air inlet restriction is 25" of water.
	B. Restricted oil return (to engine)	B. Oil return to the engine should not be in any way restricted. Check for excessive bends, kinks and restrictions in the oil return line. Minimum recommended oil return line size is 5/8" O.D. tubing or equivalent I.D. (1/2" minimum). Return line must constantly descend from the compressor to the engine crankcase. Make certain oil drain passages in the compressor and mating engine surfaces are unobstructed and aligned. Special care must be taken when sealants are used with, or instead of, gaskets.
	C. Poorly filtered inlet air.	C. Check for damaged, defective or dirty air filter on engine or compressor. Check for leaking, damaged or defective compressor air intake components (e.g. induction line, fittings, gaskets, filter bodies, etc.). The compressor intake should not be connected to any part of the exhaust gas recirculation (E.G.R.) system on the engine.
	D. Insufficient compressor cooling (compressor runs hot).	D. For air-cooled portions of the compressor: 1. Remove accumulated grease, grime or dirt from the cooling fins. Replace components found damaged. 2. Check for damaged cooling fins. Replace components found damaged. For water-cooled compressor or water-cooled portions of the compressor: 1. Check for proper coolant line sizes. Minimum recommended size is 1/2" O.D. tubing. 2. Check the coolant flow through the compressor. Minimum allowable flow is 2.5 gallons per minute at engine governed speed. If low coolant flow is detected, inspect the coolant lines and fittings for accumulated rust scale, kinks and restrictions. 3. Water temperature should not exceed 200 degrees Fahrenheit. 4. Optimum cooling is achieved when engine coolant flows, as shown in Figure 8 of this manual.

COMPRESSOR TROUBLESHOOTING CHART (Continued)

SYMPTOMS	CAUSE	REMEDY
1. (Continued.)	E. Contaminants not being regularly drained from system reservoirs.	E. Check reservoir drain valves to insure that they are functioning properly. It is recommended that the vehicle should be equipped with functioning automatic drain valves, or have all reservoirs drained to zero (0) psi daily, or optimally to be equipped with a desiccant-type air dryer prior to the reservoir system.
	F. Compressor runs loaded an excessive amount of time.	F. Vehicle system leakage should not exceed industry standards of 1 psi pressure drop per minute without brakes applied and 3 psi pressure drop per minute with brakes applied. If leakage is excessive, check for system leaks and repair.
	G. Excessive engine crankcase pressure.	G. Test for excessive engine crankcase pressure & replace or repair ventilation components as necessary. (An indication of crankcase pressure is a loose or partially lifted dipstick.)
	H. Excessive engine oil pressure.	H. Check the engine oil pressure with a test gauge and compare the reading to the engine specifications. Bendix does not recommend restricting the compressor oil supply line because of the possibility of plugging the restriction with oil contaminants. Minimum oil supply line size is 3/16" I.D. tubing.
	I. Faulty compressor.	I. Replace or repair the compressor only after making certain none of the preceding installation defects exist.
2. Noisy compressor operations.	A. Loose drive gear or pulley.	A. Inspect the fit of the drive gear on pulley on the compressor crankshaft. The pulley on gear must be completely seated and the crankshaft nut must be tight. If the compressor crankshaft surface or its keyway are damaged, it is an indication of loose drive components. If damage to the compressor crankshaft is detected, replace the compressor. When installing the drive gear or pulley, torque the crankshaft nut to the appropriate torque specifications. <u>Do not back off the crankshaft nut to align the cotter pin and castellated nut</u>. (Some compressors do not use castellated nuts.) <u>Do not use impact wrenches.</u>

COMPRESSOR TROUBLESHOOTING CHART (Continued)

SYMPTOMS	CAUSE	REMEDY
2. (Continued.)	B. Excessively worn drive couplings or gears.	B. Inspect drive gear and couplings and engine for excessive wear. Replace as necessary. (Nonmetallic gears should be replaced when the compressor is changed.)
	C. Compressor cylinder head or discharge line restrictions.	C. Inspect the compressor discharge port and discharge line for carbon build-up. If carbon is detected, check for proper cooling to the compressor. (See Cause and Remedy (D) under Symptom #1.) Inspect the discharge line for kinks and restrictions. Replace discharge line as necessary.
	D. Worn or burned out bearings.	D. Check for proper oil pressure in the compressor. Minimum required oil pressure; 15 psi engine idling, 15 psi maximum governed engine rpm. Check for excessive oil temperature—should not exceed 240 degrees Fahrenheit.
	E. Faulty compressor.	E. Replace or repair the compressor after determining none of the preceding installation defects exist.
3. Excessive build-up and recover time. Compressor should be capable of building air system from 85-100 psi in 40 seconds with engine at full governed rpm. Minimum compressor performance is certified to meet Federal requirements by the vehicle manufacturer. Do not downsize the original equipment compressor.	A. Dirty induction air filter.	A. Inspect engine or compressor air filter and replace if necessary.
	B. Restricted induction line.	B. Inspect the compressor air induction line for kinks and restrictions and replace as necessary.
	C. Restricted discharge line or compressor discharge cavity.	C. Inspect the compressor discharge port and line for restrictions and carbon build-up. If a carbon build-up is found, check for proper compressor cooling. Replace faulty sections of the discharge line.
	D. Slipping drive components.	D. Check for faulty drive gears and couplings and replace as necessary. Check the condition of drive belts and replace or tighten, whichever is appropriate.
	E. Excessive air system leakage.	E. Test for excessive system leakage and repair as necessary. Use the following as a guide: Build system pressure to governor cutout and allow the pressure to stabilize for one minute. Using the dash gauge, note the system pressure and the pressure drop after two minutes. The pressure drops should not exceed: 1. 2 psi in each reservoir for a single vehicle. 2. 6 psi in each reservoir for a tractor and trailer. 3. 8 psi in each reservoir for a tractor and 2 trailers.

COMPRESSOR TROUBLESHOOTING CHART (Continued)

SYMPTOMS	CAUSE	REMEDY
3. (Continued.)	F. Sticking unloader pistons.	F. Check the operation of the unloading mechanism. Check the proper operation of the compressor air governor. If the governor is operating properly, replace the unloader mechanism. Inspect for bent, linked or blocked tubing leading to or from the governor.
	G. Faulty compressor.	G. Replace or repair the compressor after determining none of the preceding installation defects exist.
4. Compressor fails to unload.	A. Faulty governor or governor installation.	A. Test the governor for proper operation and inspect air lines to and from the governor for kinks or restrictions. Replace or repair the governor or its connecting air lines
	B. Faulty or worn unloader pistons or bores.	B. Inspect for worn, dirty or corroded unloader pistons and their bores. Replace as necessary.
5. Compressor leaks oil.	A. Damaged mounting gasket.	A. Check the compressor mounting bolt torque. If the mounting bolt torque is low, replace the compressor mounting gasket before retorquing the mounting bolts.
	B. Cracked crankcase or end cover.	B. Visually inspect the compressor exterior for cracked or broken components. Cracked or broken crankcases or mounting flanges can be caused by loose mounting bolts. The end cover can be cracked by overtorquing fitting or plugs installed in the end cover. Replace or repair the compressor as necessary.
	C. Loose end cover cap cover.	C. Check the cap screw torques and tighten as necessary.
	D. Loose oil supply or return line fittings.	D. Check the torque of external oil line fittings and tighten as necessary.
	E. Porous compressor casting.	E. Replace the compressor if porosity is found.
	F. Mounting flange or end cover, o-ring or gasket - missing, cut or damaged	F. Replace as necessary.
6. Compressor constantly cycles (compressor remains unloaded for a very short time).	A. Leaking compressor unloader pistons.	A. Remove the compressor inlet air strainer or fitting. With the compressor unloaded (not compressing air), check for air leakage. Replace as necessary.
	B. Faulty Governor.	B. Test the governor for proper operation and repair or replace as necessary.

COMPRESSOR TROUBLESHOOTING CHART (Continued)

SYMPTOMS	CAUSE	REMEDY
6. (Continued.)	C. Excessive system leakage.	C. Test for excessive system leakage as instructed in Symptom #3 Remedy E. Reduce leakage wherever possible.
	D. Excessive reservoir contaminants.	D. Drain reservoirs.
7. Compressor leaks coolant.	A. Improperly installed plugs and coolant line fittings.	A. Check torque of fittings and plugs and tighten as necessary. Overtorqued fittings and plugs can crack the head or block casting.
	B. Freeze cracks due to improper antifreeze strength.	B. Test antifreeze and strengthen as necessary. Check coolant flow through compressor to assure the proper antifreeze mixture reaches the compressor.
	C. Faulty compressor (porous castings).	C. If casting porosity is detected, replace the compressor.
8. Compressor head gasket failure.	A. Restricted discharge line.	A. Clear restriction or replace line.
	B. Loose head bolts	B. Tighten evenly to a torque of 25-30 foot pounds.
	C. Faulty compressor or head gasket.	C. Check for rough or poorly machined head or block surfaces. Replace compressor as necessary.

AlliedSignal Bendix

Service Data

SD-01-503*

D-2 GOVERNOR

*FORMERLY SD-01-16

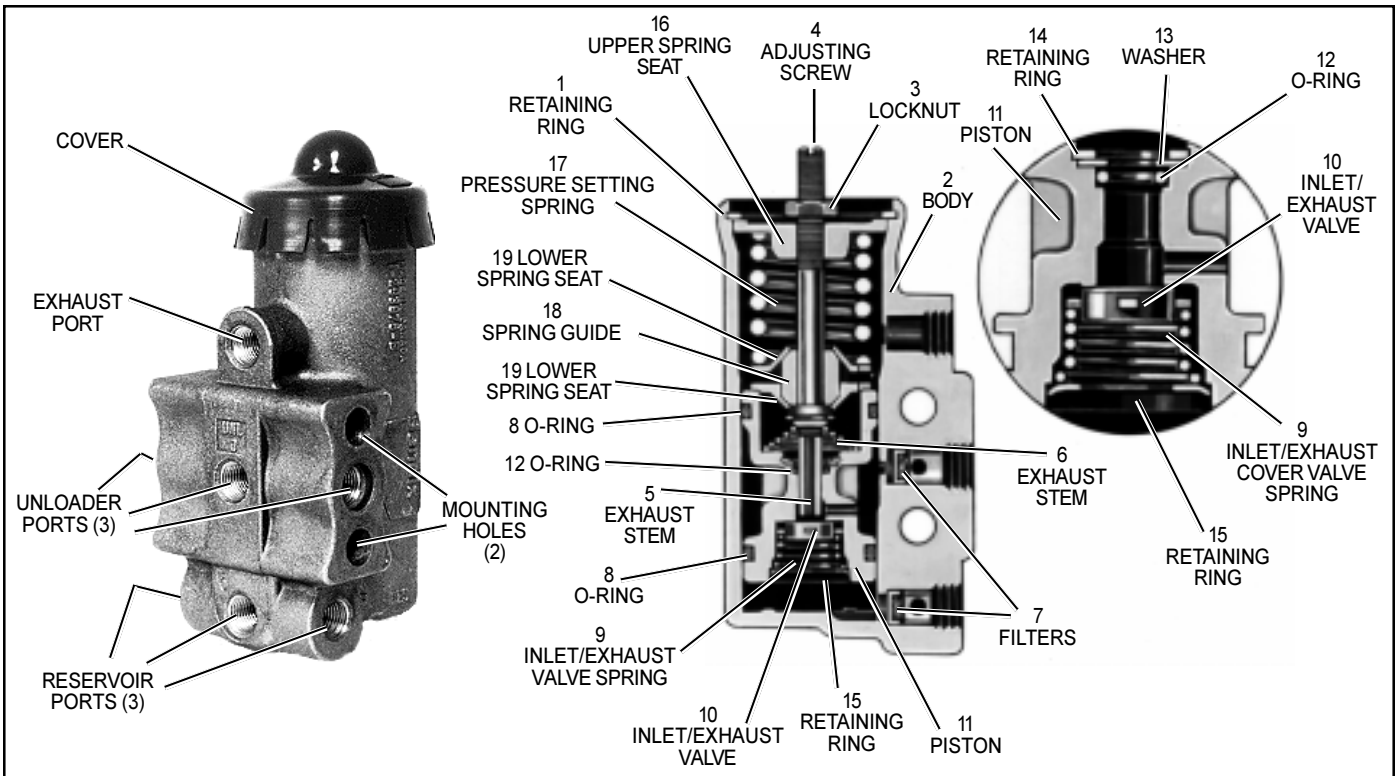

*FIGURE 1 - **D-2 GOVERNOR***

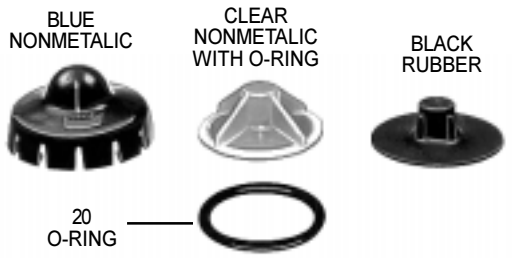

*FIGURE 2 - **TYPES OF COVERS***

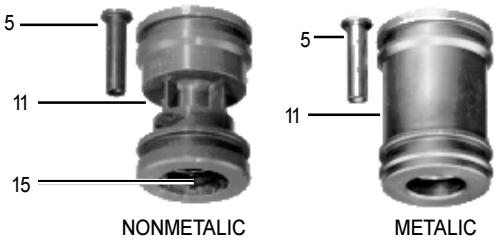

*FIGURE 3 - **TYPES OF PISTONS***

DESCRIPTION

The D-2 Governor, operating in conjunction with the unloading mechanism, automatically controls the air pressure in the air brake or air supply system between a maximum (cut-out) pressure and a minimum (cut-in) pressure. The compressor runs continually while the engine runs, but the actual compression of air is controlled by the governor actuating the compressor unloading mechanism which stops or starts the compression of air when the maximum or minimum reservoir pressures are reached.

D-2 governors are provided with mounting holes which allow direct mounting to the compressor or remote mounting.

Porting consists of three reservoir ports (1/8 inch P.T.), three unloader ports (1/8 inch P.T.) and one exhaust port (1/8 inch P.T.).

OPERATION

Reservoir air pressure enters the D-2 Governor at one of its reservoir ports and acts on the piston and inlet/exhaust valve. As the air pressure builds up, the piston and valve move together against the resistance of the pressure setting spring. When the reservoir air pressure reaches the cut-out setting of the governor, the exhaust stem seats on the inlet/exhaust valve, closing the exhaust passage, and then opens the inlet passage. Reservoir air pressure then flows around the inlet valve, through the passage in the piston and out the unloader port to the compressor unloading mechanism. Air also flows around the piston which is slightly larger at the upper end. The added force resulting from this larger area assures a positive action and fully opens the inlet valve.

As the system reservoir air pressure drops to the cut-in setting of the governor, the force exerted by the air pressure on the piston will be reduced so that the pressure setting spring will move the piston down. The inlet valve will close and the exhaust will open. With the exhaust open, the air in the unloader line will escape back through the piston, through the exhaust stem and out the exhaust port.

PREVENTIVE MAINTENANCE

Important Note: Review the warranty policy before performing any intrusive maintenance procedures. An extended warranty may be voided if intrusive maintenance is performed during this period.

Every 6 months, 50,000 miles or 1800 operating hours, perform operating and leakage tests.

SERVICE TESTS

OPERATING TESTS

Start the vehicle engine and build up air pressure in the air brake system and check the pressure registered by a dash or test gauge at the time the governor cuts-out, stopping the compression of air by the compressor. The cut-out pressure should be in accordance with the pressure setting of the piece number being used. (Common cut-out pressures are between 105-125 psi.) With the engine still running, make a series of brake applications to reduce the air pressure and observe at what pressure the governor cuts-in the compressor. As in the case of the cut-out pressure, the cut-in pressure should be in accordance with the pressure setting of the piece number being used. (Common cutting pressures are between 90-105 psi.)

Never condemn or adjust the governor pressure settings unless they are checked with an accurate test gauge or a dash gauge that is registering accurately. If the pressure settings of the D-2 Governor are inaccurate or it is necessary that they be changed, the adjustment procedure follows. **Note:** If the governor cover is marked nonadjustable and the adjusting stem has been sheared off, this is a nonserviceable governor and must be replaced with a new or remanufactured unit.

A. Remove the top cover from the governor.

B. Loosen the adjusting screw locknut.

C. **To raise the pressure settings,** turn the adjusting screw counter-clockwise. **To lower the pressure settings,** turn the adjusting screw clockwise. **Note:** Be careful not to overadjust. Each 1/4 turn of the adjusting screw raises or lowers the pressure setting approximately 4 psi.

D. When proper adjustment is obtained, tighten the adjusting screw locknut and replace the cover.

(**Note**: The pressure range between cut-in and cut-out is not adjustable.)

LEAKAGE TEST

Leakage tests on the D-2 governor should be made in both cut-in and cut-out positions.

CUT-IN POSITION

Apply soap solution around the cover and to the exhaust port. Slight bubble leakage permitted. Excessive leakage indicates a faulty inlet valve or lower piston o-ring.

CUT-OUT POSITION

Apply soap solution around the cover and to the exhaust port. Slight bubble leakage permitted. Excessive leakage indicates a faulty exhaust valve seat, exhaust stem o-ring, or o-ring at the top of the piston.

If the governor does not function as described or leakage is excessive, it is recommended that it be replaced with a new or remanufactured unit, or repaired with genuine Bendix parts available at authorized Bendix parts outlets.

IMPORTANT! PLEASE READ:

When working on or around air brake systems and components, the following precautions should be observed:

1. **Park the vehicle on a level surface, apply the parking brakes, and always block the wheels.**
2. **Stop the engine when working around the vehicle.**
3. **If the vehicle is equipped with air brakes, make certain to drain the air pressure from all reservoirs before beginning <u>any</u> work on the vehicle.**
4. **Following the vehicle manufacturer's recommended procedures, deactivate the electrical system in a manner that removes all electrical power from the vehicle.**

5. **When working in the engine compartment the engine should be shut off. Where circumstances require that the engine be in operation, extreme caution should be used to prevent personal injury resulting from contact with moving, rotating, leaking, heated, or electrically charged components.**
6. **Never connect or disconnect a hose or line containing pressure; it may whip. Never remove a component or plug unless you are certain all system pressure has been depleted.**
7. **Never exceed recommended pressures and always wear safety glasses.**
8. **Do not attempt to install, remove, disassemble or assemble a component until you have read and thoroughly understand the recommended procedures. Use only the proper tools and observe all precautions pertaining to use of those tools.**
9. **Use only genuine Bendix replacement parts, components, and kits. Replacement hardware, tubing, hose, fittings, etc. should be of equivalent size, type, and strength as original equipment and be designed specifically for such applications and systems.**
10. **Components with stripped threads or damaged parts should be replaced rather than repaired. Repairs requiring machining or welding should not be at tempted unless specifically approved and stated by the vehicle or component manufacturer.**
11. **Prior to returning the vehicle to service, make certain all components and systems are restored to their proper operating condition.**

REMOVING AND INSTALLING

REMOVING

1. Block and hold vehicle by means other than air brakes.
2. Drain air brake system.
3. If the governor is compressor-mounted type, disconnect reservoir air line. If the governor is remote- mounted, disconnect both the unloader and reservoir air lines.
4. Remove governor mounting bolts, then governor.

   Caution: Prior to disassembly, it is required to have the proper maintenance kit available to replace parts to be discarded during disassembly.

DISASSEMBLY

1. Clean the governor exterior of dirt and grease.
2. If the governor cover is marked nonadjustable and the adjusting screw has been sheared off, this is a nonserviceable governor and must be replaced with a new or remanufactured unit.
3. If the governor has a blue nonmetallic cover, (refer to Figure 2) hold governor with one hand, with the other hand grip cover from the top and pull up with thumb until cover disengages from the governor body. If top cover on governor is made of rubber or clear nonmetallic material unscrew cover until it releases from the adjusting screw (4) of governor. Remove o-ring (20, Figure 2) if present. **Note:** O-ring (20) is used on Hi-Temp and waterproof governors only.
4. With a pair of retaining ring pliers, remove the spring assembly retaining ring (1) and save.
5. Pull the adjusting screw (4) and spring assembly out of the governor body (2).

   Note: Disassembly of the spring assembly normally is not required. (Reuse and do not wash the assembly because lubrication may be removed.) If Disassembly of the spring assembly is necessary, the following instructions apply; otherwise, proceed to Step 6.

   Remove the lock nut (3), then the hex-shaped upper spring seat (16) from the adjusting screw (4). Remove the pressure setting spring (17), lower spring seat (19), spring guide (18) and the other lower spring seat (19) from the adjusting screw (4).
6. Gently tap the open end of the valve body on a flat surface to remove the exhaust stem (5), the exhaust stem spring (6), and piston assembly (11). Items 5 and 11 may be made of metal or nonmetallic material.
7. Remove and discard the two o-rings (8) on the piston O.D. and with a hooked wire remove and discard the o-ring (12) from the piston I.D. On nonmetallic piston, washer (13) and retaining ring (14) may be removed to facilitate removal of o-ring (12).
8. If piston assembly is nonmetallic (Figure 3), use a small screwdriver and carefully insert blade of screwdriver between two of the ears of the retainer ring in the bottom of the piston (11) and pry retainer ring (15) out of the piston and discard. Remove inlet/exhaust valve spring (9) and the inlet/exhaust valve (10) and discard. If piston assembly is metallic, disengage inlet/exhaust valve spring (9) from recess in bottom of piston (11), remove inlet/exhaust valve spring (9), and the inlet exhaust valve (10) and discard.
9. Remove and discard filters (7) from unloader and reservoir ports in governor body.

CLEANING AND INSPECTION

1. Clean all remaining parts in mineral spirits.
2. Inspect body for cracks or other damage. Be particularly careful that all air passages in the body, exhaust stem, and piston are not obstructed.
3. Check springs for cracks, distortion, or corrosion.
4. Replace all parts which are worn or damaged.

ASSEMBLY

Prior to assembly, lubricate the two lower body bores, all o-rings and o-ring grooves with lubricant provided. **Note:** Also spring guide and adjusting screw (if disassembled).

1. Install o-ring (12) in piston (11). Replace washer (13) and retaining ring (14) on nonmetallic piston if removed during disassembly.
2. Drop the inlet/exhaust valve (10) into place at the bottom of the piston (11).
3. **Nonmetallic Piston:** Install the inlet/exhaust valve spring (9) with the small end against the valve, place the retaining ring (15) on top of the large end of the valve spring (9) [concave side of retaining ring (15) facing away from piston (11)], press into piston with thumb, making sure ears of retaining ring (15) are seated into piston (11) as far as possible.

   Note: Do not use a press or hammer to install retaining ring. Excessive force may damage the piston.

   Metallic Piston: Install the inlet/exhaust valve spring (9) with the small end against the valve. Press the spring down until the larger coiled end snaps into the recess inside the piston (11).
4. Install the piston o-rings (8) on the piston (11).
5. Install the exhaust stem spring (6) in the piston (11) with the large coil end next to the piston.
6. Install the exhaust stem (5) through spring (6) and into piston (11).
7. Install assembled piston (11) into the governor body (2).
8. If the spring assembly was not disassembled, proceed to Step 9. If the spring assembly was disassembled, the following instructions apply: install on the adjusting screw (4) in this order; lower spring seat (19), spring guide (18), spring seat (19), pressure setting spring (17), hex-shaped upper spring seat (16). Screw the upper spring seat onto the adjusting screw until the distance from the top of the seat to the bottom of the adjusting screw head is approximately 1-7/8 inches. Install the lock nut (3).
9. Install the adjusting screw (4) and spring assembly into the governor body (2).
10. Install retaining ring (1) making certain that it seats completely into the groove in the governor body (2).

    If cover provided in kit is black rubber, (refer to Figure 2) install by pushing it onto the adjusting screw.

    If cover provided in kit is clear nonmetallic, install o-ring (20) and screw cover onto the adjusting screw. Tighten until cover bottoms on governor body. **Note:** O-ring (20) is used only on Hi-Temp and waterproof governors. If cover provided in kit is blue nonmetallic place cover over one edge of top of governor; with index finger catch knob on top of cover and pull until cover snaps into place.

    Note: Nonmetallic cover should be at room temperature for ease of assembly. Do not attempt to force cover on square to the governor body.
12. Install filters (7) in governor body. The head of a pencil makes a satisfactory installation tool.

INSTALLATION

1. If the governor is compressor-mounted, clean the mounting pad on both the compressor and governor. Clean connecting line, or lines. Be certain the unloading port is clear and clean. If the governor is mounted remotely, it should be positioned so that its exhaust port points down. It should be mounted higher than the compressor so that its connecting lines will drain away from the governor.
2. Install governor.
3. If compressor-mounted type, use the governor mounting gasket provided.
4. Connect air lines to governor.
5. Perform operating and leakage tests as outlined under Service Tests section.

AlliedSignal
Bendix™

BW1425 © AlliedSignal Truck Brake Systems 1/1999 Printed in U.S.A.

AlliedSignal Bendix

Service Data

SD-03-1064*

R-12 & R-14 RELAY VALVES

*FORMERLY SD-03-31

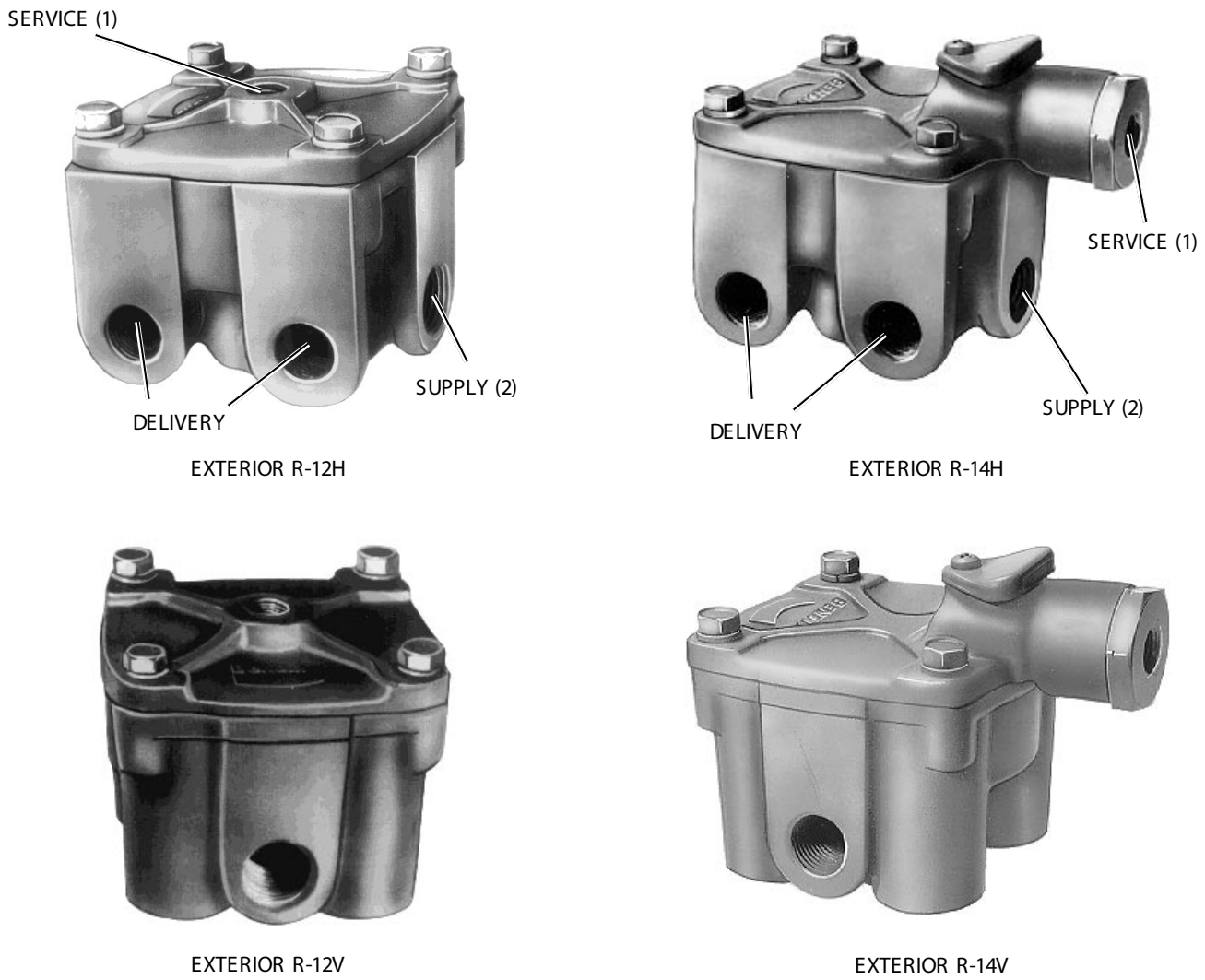

FIGURE 1 - EXTERIOR VIEWS

DESCRIPTION

The Relay Valve in an air brake system functions as a relay station to speed up the application and release of the brakes. The valve is normally mounted at the rear of the vehicle in proximity to the chambers it serves. The valve operates as a remote controlled brake valve that delivers or releases air to the chambers in response to the control air delivered to it from the foot brake valve or other source.

The R-12 and R-14 Relay Valves are designed for either reservoir or frame mounting. A universal mounting bracket is furnished that permits easy interchange with other Bendix relay valves. Both valves are available in the two body styles illustrated in Figure 1. The R-14 differs from the R-12 in that it incorporates a quick release and anti-compounding feature located above its horizontal service port. The R-14's anti-compound feature allows it

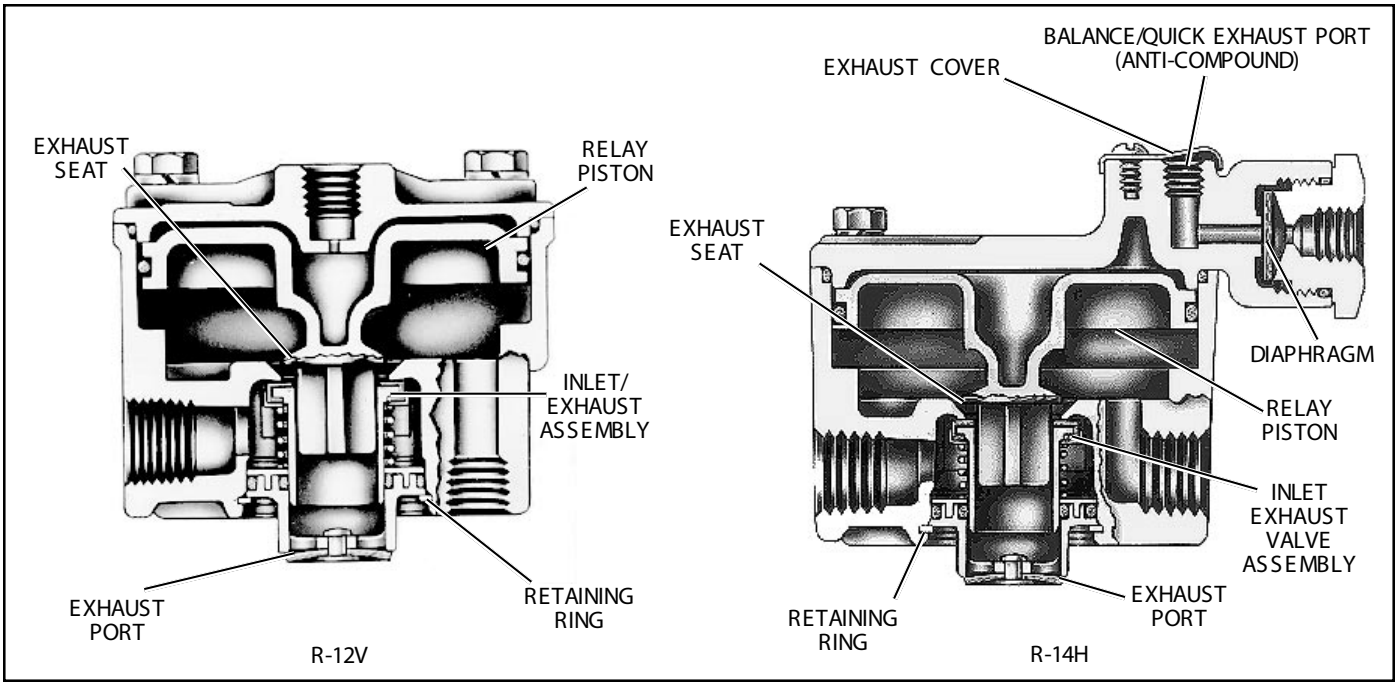

FIGURE 2 - SECTIONAL VIEWS

to be conveniently used as either a service or spring brake relay valve. An exhaust cover is installed that protects the 1/8" balance port when the R-14 anti-compound feature is not in use.

All parts are interchangeable between the R-12 and R-14 with the exception of the detail components of the R-14 cover. Both valves make extensive use of non-metallic internal components. For ease of servicing, the inlet/exhaust valve can be replaced without the need for line removal.

OPERATION

APPLICATION

Air pressure delivered to the service port enters the small cavity above the piston and moves the piston down. The exhaust seat moves down with the piston and seats on the inner or exhaust portion of the inlet/exhaust valve, sealing off the exhaust passage. At the same time, the outer or inlet portion of the inlet/exhaust valve moves off its seat, permitting supply air to flow from the reservoir, past the open inlet valve and into the brake chambers.

BALANCE

The air pressure being delivered by the open inlet valve also is effective on the bottom area of the relay piston. When air pressure beneath the piston equals the service air pressure above, the piston lifts slightly and the inlet spring returns the inlet valve to its seat. The exhaust remains closed as the service line pressure balances the delivery pressure. As delivered air pressure is changed, the valve reacts instantly to the change, holding the brake application at that level.

EXHAUST OR RELEASE

When air pressure is released from the service port and air pressure in the cavity above the relay piston is exhausted, air pressure beneath the piston lifts the relay piston and the exhaust seat moves away from the exhaust valve, opening the exhaust passage. With the exhaust passage open, the air pressure in the brake chambers is then permitted to exhaust through the exhaust port, releasing the brakes.

ANTI COMPOUNDING (SIMULTANEOUS SERVICE AND PARK APPLICATION)

In those applications where the R-14 Relay Valve is used to control spring brake chambers, the anti-compound feature may be utilized. With the anti-compound feature of the R-14 connected, a service application made while the vehicle is parked is countered by a release of the parking brakes. To utilize this feature, the exhaust cover of the quick release portion of the R-14 is removed and a line is installed which is connected to the delivery of the service brake valve or relay valve. With no air pressure at the service port of the R-14, the parking brakes are applied. If a service brake application is made, air from the service brake valve enters the exhaust port of the quick release of the R-14 and moves the diaphragm, blocking the service port. Air then proceeds into the cavity above the relay piston, forces the piston down, closing the exhaust and

opening the inlet to deliver air to the spring brake cavity as described under the section of this manual entitled Application.

PREVENTIVE MAINTENANCE

Important: Review the warranty policy before performing any intrusive maintenance procedures. An extended warranty may be voided if intrusive maintenance is performed during this period.

Because no two vehicles operate under identical conditions, maintenance and maintenance intervals will vary. Experience is a valuable guide in determining the best maintenance interval for any one particular operation.

1. Every three months or 25,000 miles or 900 operating hours check for proper operation.
2. Every twelve months or 100,000 miles or 3600 operating hours: disassemble valve, clean parts with mineral spirits. Replace all rubber parts and any part worn or damaged. Check for proper operation before placing vehicle in service.

OPERATIONAL AND LEAKAGE TEST

1. Chock the wheels, fully charge air brake system and adjust the brakes.
2. Make several brake applications and check for prompt application and release at each wheel.
3. Check for inlet valve and o-ring leakage.
   A. Make this check with the service brakes released when the R-12 or R-14 is used to control the service brakes.
   B. Make the check with the spring brakes applied (PARK) when the R-14 is used to control the spring brakes. Coat the exhaust port and the area around the retaining ring with a soap solution; a 1 inch bubble in 3 seconds leakage is permitted.
4. Check for exhaust valve leakage.
   A. Make this check with the service brakes fully applied if the R-12 or R-14 control the service brakes.
   B. Make this check with the spring brakes fully released if the R-14 is used to control the spring brakes. Coat the exhaust port with a soap solution; a 1 inch bubble in 3 seconds leakage is permitted. Coat the outside of the valve where the cover joins the body to check for seal ring leakage; no leakage is permitted.
5. If the R-14 is used to control the spring brakes, place the park control in the released position and coat the balance port with a soap solution to check the diaphragm and its seat. Leakage equivalent to a 1 inch bubble in 3 seconds is permitted.

Note: If the anti-compound feature is in use, the line attached to the balance port must be disconnected to perform this test.

If the valves do not function as described above, or if leakage is excessive, it is recommended that the valves be replaced with new or remanufactured units or repaired with genuine Bendix parts, available at any authorized Bendix parts outlet.

REMOVAL AND INSTALLATION

REMOVAL

1. Block and hold vehicle by means other than air brakes.
2. Drain air brake system reservoirs.
3. If entire valve is to be removed, identify air lines to facilitate installation.
4. Disconnect air lines from valve.*
5. Remove valve from reservoir or if remotely mounted, remove mounting bolts and then valve.

*It is generally not necessary to remove entire valve to service the inlet/exhaust valve. The inlet/exhaust valve insert can be removed by removing the snap ring, exhaust cover assembly and then inlet/exhaust valve.

Caution: Drain all reservoirs before attempting to remove the inlet exhaust valve.

DISASSEMBLY

Note: Prior to disassembly, mark the location of the mounting bracket to the cover and the cover to the body.

1. Remove the four (4) cap screws and lockwashers securing the cover to the body.
2. Remove the cover, sealing ring, and mounting bracket.
3. Remove the piston and o-ring from the body.
4. While depressing the exhaust cover, remove the retaining ring and slowly relax the spring beneath the exhaust cover.
5. Remove the exhaust cover assembly and o-rings.
6. Remove the inlet/exhaust valve return spring from the body.
7. Remove the inlet/exhaust valve from the body.
8. Remove the valve retainer from the inlet/exhaust valve.
9. Remove the Phillips head screw and exhaust cover from the R-14 cover.
10. Remove the service port cap nut and o-ring from the R-14.
11. Remove the diaphragm from the R-14 cover.

opening the inlet to deliver air to the spring brake cavity as described under the section of this manual entitled Application.

PREVENTIVE MAINTENANCE

Important: Review the warranty policy before performing any intrusive maintenance procedures. An extended warranty may be voided if intrusive maintenance is performed during this period.

Because no two vehicles operate under identical conditions, maintenance and maintenance intervals will vary. Experience is a valuable guide in determining the best maintenance interval for any one particular operation.

1. Every three months or 25,000 miles or 900 operating hours check for proper operation.
2. Every twelve months or 100,000 miles or 3600 operating hours: disassemble valve, clean parts with mineral spirits. Replace all rubber parts and any part worn or damaged. Check for proper operation before placing vehicle in service.

OPERATIONAL AND LEAKAGE TEST

1. Chock the wheels, fully charge air brake system and adjust the brakes.
2. Make several brake applications and check for prompt application and release at each wheel.
3. Check for inlet valve and o-ring leakage.
   A. Make this check with the service brakes released when the R-12 or R-14 is used to control the service brakes.
   B. Make the check with the spring brakes applied (PARK) when the R-14 is used to control the spring brakes. Coat the exhaust port and the area around the retaining ring with a soap solution; a 1 inch bubble in 3 seconds leakage is permitted.
4. Check for exhaust valve leakage.
   A. Make this check with the service brakes fully applied if the R-12 or R-14 control the service brakes.
   B. Make this check with the spring brakes fully released if the R-14 is used to control the spring brakes. Coat the exhaust port with a soap solution; a 1 inch bubble in 3 seconds leakage is permitted. Coat the outside of the valve where the cover joins the body to check for seal ring leakage; no leakage is permitted.
5. If the R-14 is used to control the spring brakes, place the park control in the released position and coat the balance port with a soap solution to check the diaphragm and its seat. Leakage equivalent to a 1 inch bubble in 3 seconds is permitted.

Note: If the anti-compound feature is in use, the line attached to the balance port must be disconnected to perform this test.

If the valves do not function as described above, or if leakage is excessive, it is recommended that the valves be replaced with new or remanufactured units or repaired with genuine Bendix parts, available at any authorized Bendix parts outlet.

REMOVAL AND INSTALLATION

REMOVAL

1. Block and hold vehicle by means other than air brakes.
2. Drain air brake system reservoirs.
3. If entire valve is to be removed, identify air lines to facilitate installation.
4. Disconnect air lines from valve.*
5. Remove valve from reservoir or if remotely mounted, remove mounting bolts and then valve.

*It is generally not necessary to remove entire valve to service the inlet/exhaust valve. The inlet/exhaust valve insert can be removed by removing the snap ring, exhaust cover assembly and then inlet/exhaust valve.

Caution: Drain all reservoirs before attempting to remove the inlet exhaust valve.

DISASSEMBLY

Note: Prior to disassembly, mark the location of the mounting bracket to the cover and the cover to the body.

1. Remove the four (4) cap screws and lockwashers securing the cover to the body.
2. Remove the cover, sealing ring, and mounting bracket.
3. Remove the piston and o-ring from the body.
4. While depressing the exhaust cover, remove the retaining ring and slowly relax the spring beneath the exhaust cover.
5. Remove the exhaust cover assembly and o-rings.
6. Remove the inlet/exhaust valve return spring from the body.
7. Remove the inlet/exhaust valve from the body.
8. Remove the valve retainer from the inlet/exhaust valve.
9. Remove the Phillips head screw and exhaust cover from the R-14 cover.
10. Remove the service port cap nut and o-ring from the R-14.
11. Remove the diaphragm from the R-14 cover.

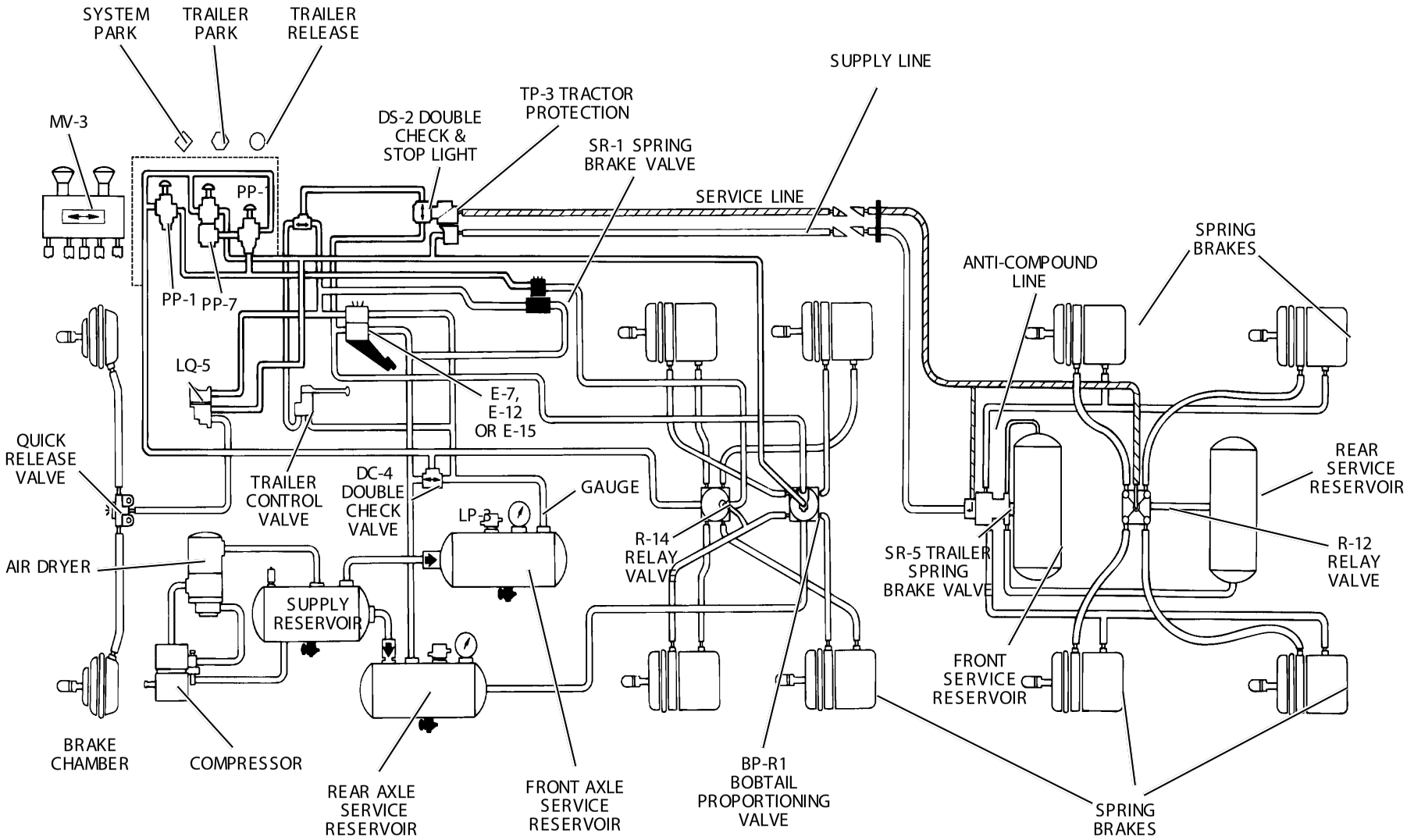

FIGURE 3 - TYPICAL PIPING SCHEMATIC

CLEANING AND INSPECTION

1. Wash all metal parts in mineral spirits and dry them thoroughly.

   (Note: When rebuilding, all springs and all rubber parts should be replaced.)
2. Inspect all metal parts for deterioration and wear, as evidenced by scratches, scoring and corrosion.
3. Inspect the exhaust valve seat on the relay piston for nicks and scratches which could cause excessive leakage.
4. Inspect the inlet valve seat in the body for scratches and nicks, which could cause excessive leakage.
5. Inspect the exhaust seat of the quick release diaphragm in the R-14 cover and make sure all internal air passages in this area are open and clean and free of nicks and scratches.
6. Replace all parts not considered serviceable during these inspections and all springs and rubber parts. Use only genuine Bendix replacement parts, available from any authorized Bendix parts outlet.

ASSEMBLY

Note: All torque specified in this manual are assembly torque and can be expected to fall off slightly after assembly. Do not re-torque after initial assembly torque fall. For assembly, hand wrenches are recommended.

Prior to assembly, lubricate all o-rings, o-ring bores and any sliding surface with a silicone lubricant equivalent to Dow Corning #10.

1. Install large piston o-ring on piston.
2. Install inner and outer o-rings in the exhaust cover assembly.
3. Install the sealing ring on the cover.
4. Install piston in body, taking care not to damage the piston o-ring.
5. Noting the reference marks made during disassembly, install the cover on the valve body and the mounting bracket on the cover.
6. Secure the mounting bracket and cover to the body using the four (4) cap screws and lock washers. Torque to 80-120 inch pounds.
7. Install the valve retainer on the inlet/exhaust valve and install in the body.
8. Install the inlet/exhaust valve return spring in the body.
9. Install the exhaust cover assembly in the body, taking care not to damage the o-ring.
10. While depressing the exhaust cover, install the retaining ring. Make certain the retainer is completely seated in its groove in the body.
11. Install the R-14 service port cap nut o-ring on the cap nut. Install the diaphragm in the R-14 cover making certain it is positioned between the guide ribs in the cover.
13. Install the service port cap nut and torque to 150 inch pounds.
14. If the quick release exhaust port was protected with an exhaust cover, install the cover using the #10-24 Phillips head screw. Torque to approx. 15-25 inch pounds.
15. Test the valves as outlined in the Operational and Leakage Test section before returning the valve to service.

INSTALLATION

1. Clean air lines.
2. Inspect all lines and/or hoses for damage and replace as necessary.
3. Install valve and tighten mounting bolts.
4. Connect air lines to valve (plug any unused ports).
5. Test valve as outlined in Operational and Leakage Tests.

IMPORTANT! PLEASE READ

When working on or around a vehicle, the following general precautions should be observed:

1. Park the vehicle on a level surface, apply the parking brakes, and always block the wheels.
2. Stop the engine when working around the vehicle.
3. If the vehicle is equipped with air brakes, make certain to drain the air pressure from all reservoirs before beginning ANY work on the vehicle.
4. Following the vehicle manufacturer's recommended procedures, deactivate the electrical system in a manner that removes all electrical power from the vehicle.
5. When working in the engine compartment the engine should be shut off. Where circumstances require that the engine be in operation, EXTREME CAUTION should be used to prevent personal injury resulting from contact with moving, rotating, leaking, heated, or electrically charged components.
6. Never connect or disconnect a hose or line containing pressure; it may whip. Never remove a component or plug unless you are certain all system pressure has been depleted.
7. Never exceed recommended pressures and always wear safety glasses.

8. Do not attempt to install, remove, disassemble or assemble a component until you have read and thoroughly understand the recommended procedures. Use only the proper tools and observe all precautions pertaining to use of those tools.
9. Use only genuine Bendix replacement parts, components, and kits. Replacement hardware, tubing, hose, fittings, etc. should be of equivalent size, type, and strength as original equipment and be designed specifically for such applications and systems.
10. Components with stripped threads or damaged parts should be replaced rather than repaired. Repairs requiring machining or welding should not be at tempted unless specifically approved and stated by the vehicle or component manufacturer.
11. Prior to returning the vehicle to service, make certain all components and systems are restored to their proper operating condition.

AlliedSignal

Bendix™

BW1431 ©AlliedSignal Truck Brake Systems Co. 1/1999. Printed in U.S.A.

AlliedSignal Bendix

Service Data

SD-03-1068

R-12DC RELAY VALVE WITH BIASED DOUBLE CHECK

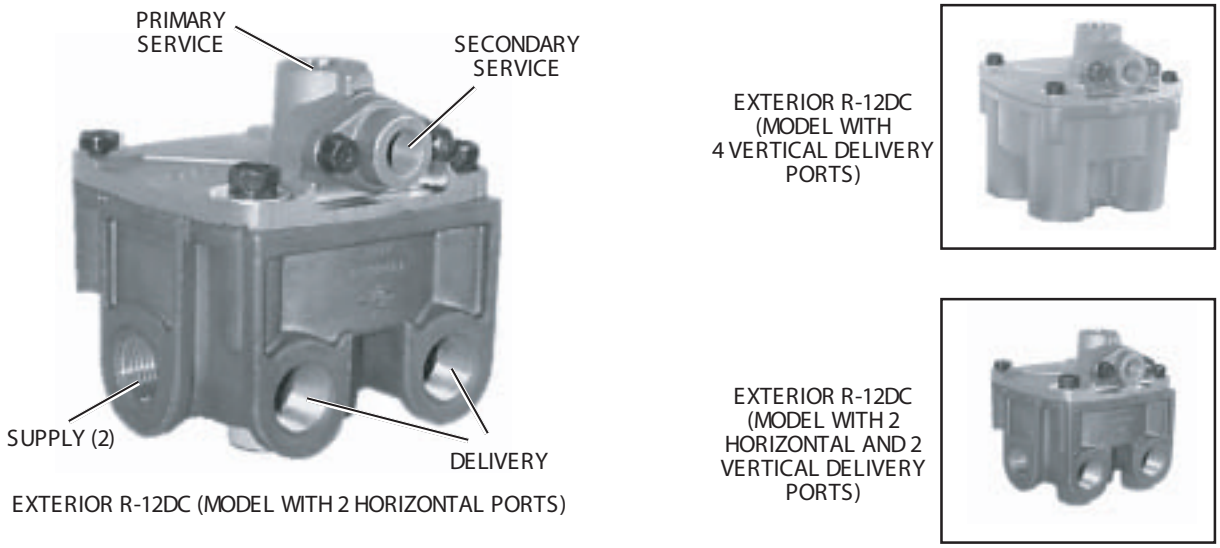

FIGURE 1 - EXTERIOR VIEWS.

DESCRIPTION

The Relay Valve in an air brake system functions as a relay station to speed up the application and release of the brakes. The valve is normally mounted at the rear of the vehicle in proximity to the chambers it serves. The valve operates as a remote controlled brake valve that delivers or releases air to the chambers in response to the control air delivered to it from the foot brake valve.

The R-12DC Relay Valves are designed for either reservoir or frame mounting. (See Figure 1). For ease of servicing, the inlet/exhaust valve can be replaced without the need for line removal.

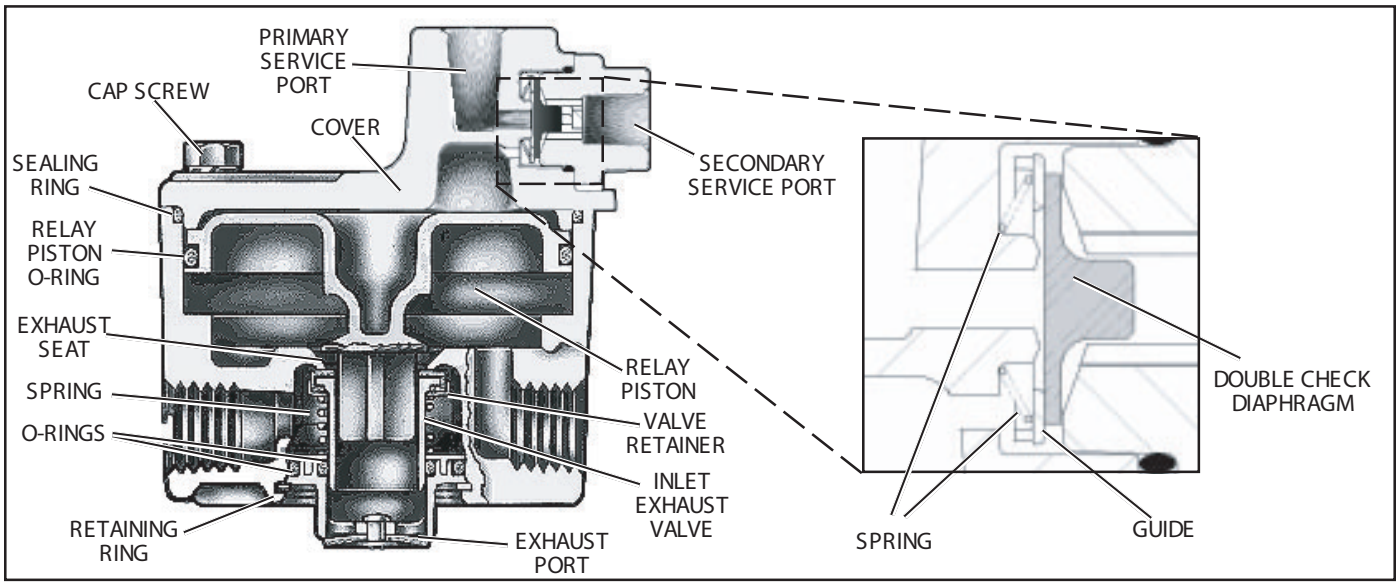

FIGURE 2 - R-12DC SECTIONAL VIEW

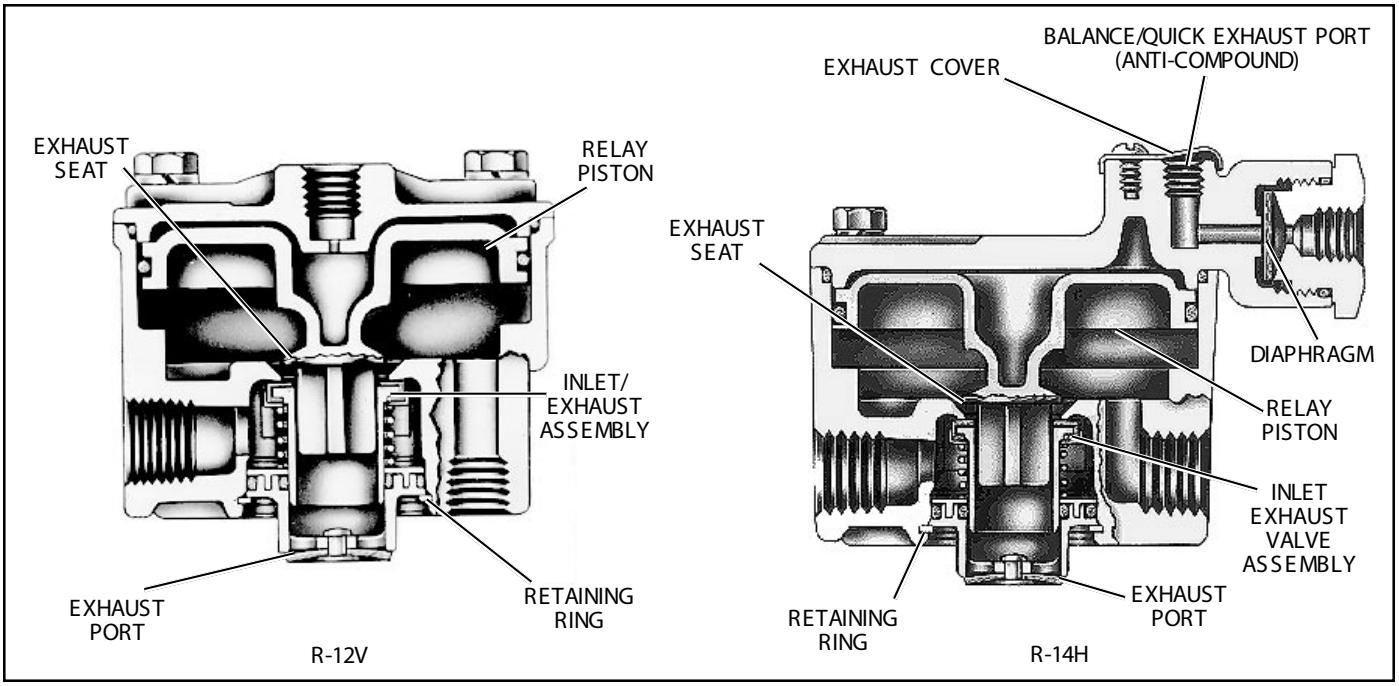

FIGURE 2 - SECTIONAL VIEWS

to be conveniently used as either a service or spring brake relay valve. An exhaust cover is installed that protects the 1/8" balance port when the R-14 anti-compound feature is not in use.

All parts are interchangeable between the R-12 and R-14 with the exception of the detail components of the R-14 cover. Both valves make extensive use of non-metallic internal components. For ease of servicing, the inlet/exhaust valve can be replaced without the need for line removal.

OPERATION

APPLICATION

Air pressure delivered to the service port enters the small cavity above the piston and moves the piston down. The exhaust seat moves down with the piston and seats on the inner or exhaust portion of the inlet/exhaust valve, sealing off the exhaust passage. At the same time, the outer or inlet portion of the inlet/exhaust valve moves off its seat, permitting supply air to flow from the reservoir, past the open inlet valve and into the brake chambers.

BALANCE

The air pressure being delivered by the open inlet valve also is effective on the bottom area of the relay piston. When air pressure beneath the piston equals the service air pressure above, the piston lifts slightly and the inlet spring returns the inlet valve to its seat. The exhaust remains closed as the service line pressure balances the delivery pressure. As delivered air pressure is changed, the valve reacts instantly to the change, holding the brake application at that level.

EXHAUST OR RELEASE

When air pressure is released from the service port and air pressure in the cavity above the relay piston is exhausted, air pressure beneath the piston lifts the relay piston and the exhaust seat moves away from the exhaust valve, opening the exhaust passage. With the exhaust passage open, the air pressure in the brake chambers is then permitted to exhaust through the exhaust port, releasing the brakes.

ANTI COMPOUNDING (SIMULTANEOUS SERVICE AND PARK APPLICATION)

In those applications where the R-14 Relay Valve is used to control spring brake chambers, the anti-compound feature may be utilized. With the anti-compound feature of the R-14 connected, a service application made while the vehicle is parked is countered by a release of the parking brakes. To utilize this feature, the exhaust cover of the quick release portion of the R-14 is removed and a line is installed which is connected to the delivery of the service brake valve or relay valve. With no air pressure at the service port of the R-14, the parking brakes are applied. If a service brake application is made, air from the service brake valve enters the exhaust port of the quick release of the R-14 and moves the diaphragm, blocking the service port. Air then proceeds into the cavity above the relay piston, forces the piston down, closing the exhaust and

opening the inlet to deliver air to the spring brake cavity as described under the section of this manual entitled Application.

PREVENTIVE MAINTENANCE

Important: Review the warranty policy before performing any intrusive maintenance procedures. An extended warranty may be voided if intrusive maintenance is performed during this period.

Because no two vehicles operate under identical conditions, maintenance and maintenance intervals will vary. Experience is a valuable guide in determining the best maintenance interval for any one particular operation.

1. Every three months or 25,000 miles or 900 operating hours check for proper operation.
2. Every twelve months or 100,000 miles or 3600 operating hours: disassemble valve, clean parts with mineral spirits. Replace all rubber parts and any part worn or damaged. Check for proper operation before placing vehicle in service.

OPERATIONAL AND LEAKAGE TEST

1. Chock the wheels, fully charge air brake system and adjust the brakes.
2. Make several brake applications and check for prompt application and release at each wheel.
3. Check for inlet valve and o-ring leakage.
   A. Make this check with the service brakes released when the R-12 or R-14 is used to control the service brakes.
   B. Make the check with the spring brakes applied (PARK) when the R-14 is used to control the spring brakes. Coat the exhaust port and the area around the retaining ring with a soap solution; a 1 inch bubble in 3 seconds leakage is permitted.
4. Check for exhaust valve leakage.
   A. Make this check with the service brakes fully applied if the R-12 or R-14 control the service brakes.
   B. Make this check with the spring brakes fully released if the R-14 is used to control the spring brakes. Coat the exhaust port with a soap solution; a 1 inch bubble in 3 seconds leakage is permitted. Coat the outside of the valve where the cover joins the body to check for seal ring leakage; no leakage is permitted.
5. If the R-14 is used to control the spring brakes, place the park control in the released position and coat the balance port with a soap solution to check the diaphragm and its seat. Leakage equivalent to a 1 inch bubble in 3 seconds is permitted.

Note: If the anti-compound feature is in use, the line attached to the balance port must be disconnected to perform this test.

If the valves do not function as described above, or if leakage is excessive, it is recommended that the valves be replaced with new or remanufactured units or repaired with genuine Bendix parts, available at any authorized Bendix parts outlet.

REMOVAL AND INSTALLATION

REMOVAL

1. Block and hold vehicle by means other than air brakes.
2. Drain air brake system reservoirs.
3. If entire valve is to be removed, identify air lines to facilitate installation.
4. Disconnect air lines from valve.*
5. Remove valve from reservoir or if remotely mounted, remove mounting bolts and then valve.

*It is generally not necessary to remove entire valve to service the inlet/exhaust valve. The inlet/exhaust valve insert can be removed by removing the snap ring, exhaust cover assembly and then inlet/exhaust valve.

Caution: Drain all reservoirs before attempting to remove the inlet exhaust valve.

DISASSEMBLY

Note: Prior to disassembly, mark the location of the mounting bracket to the cover and the cover to the body.

1. Remove the four (4) cap screws and lockwashers securing the cover to the body.
2. Remove the cover, sealing ring, and mounting bracket.
3. Remove the piston and o-ring from the body.
4. While depressing the exhaust cover, remove the retaining ring and slowly relax the spring beneath the exhaust cover.
5. Remove the exhaust cover assembly and o-rings.
6. Remove the inlet/exhaust valve return spring from the body.
7. Remove the inlet/exhaust valve from the body.
8. Remove the valve retainer from the inlet/exhaust valve.
9. Remove the Phillips head screw and exhaust cover from the R-14 cover.
10. Remove the service port cap nut and o-ring from the R-14.
11. Remove the diaphragm from the R-14 cover.

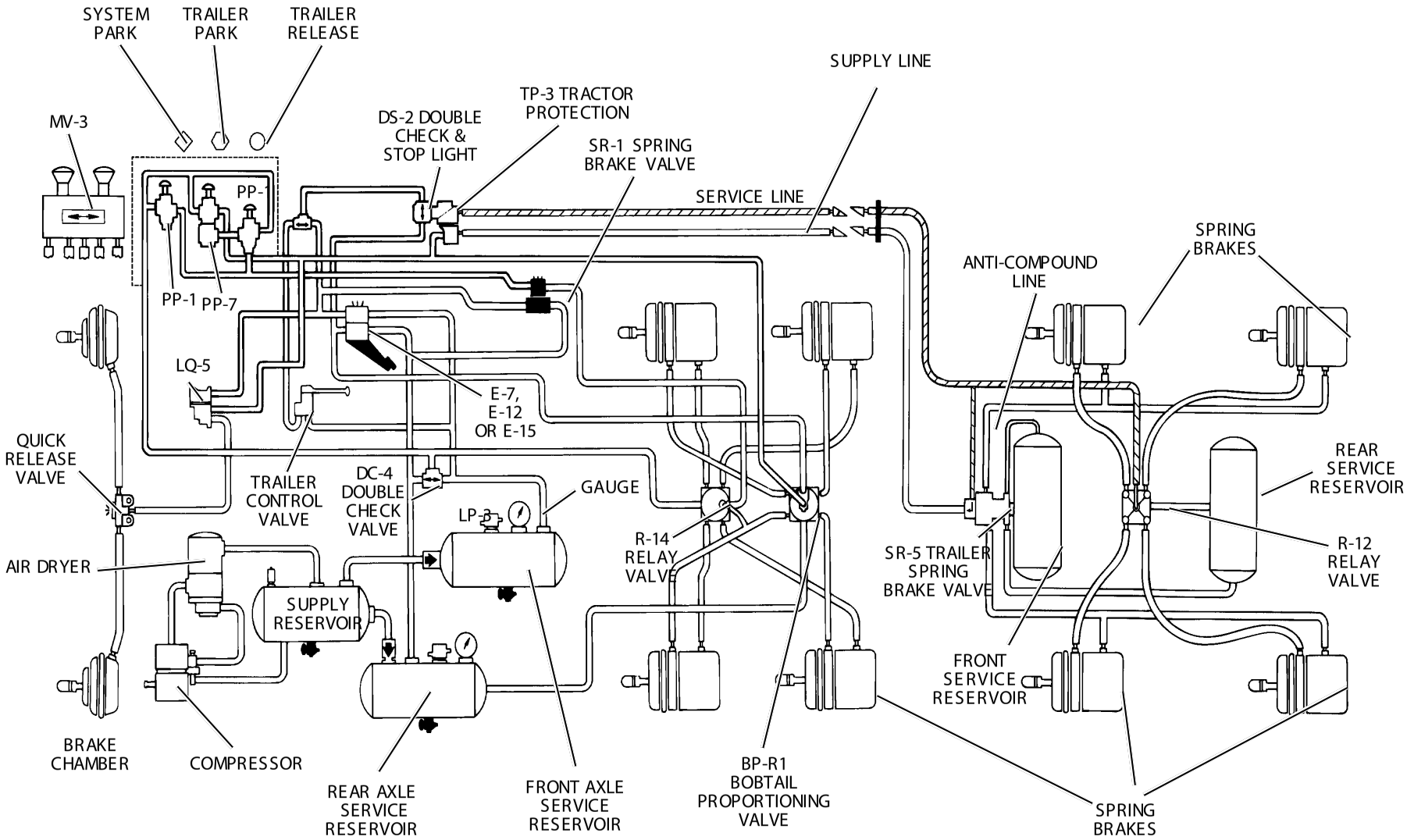

FIGURE 3 - TYPICAL PIPING SCHEMATIC

CLEANING AND INSPECTION

1. Wash all metal parts in mineral spirits and dry them thoroughly.

   (Note: When rebuilding, all springs and all rubber parts should be replaced.)
2. Inspect all metal parts for deterioration and wear, as evidenced by scratches, scoring and corrosion.
3. Inspect the exhaust valve seat on the relay piston for nicks and scratches which could cause excessive leakage.
4. Inspect the inlet valve seat in the body for scratches and nicks, which could cause excessive leakage.
5. Inspect the exhaust seat of the quick release diaphragm in the R-14 cover and make sure all internal air passages in this area are open and clean and free of nicks and scratches.
6. Replace all parts not considered serviceable during these inspections and all springs and rubber parts. Use only genuine Bendix replacement parts, available from any authorized Bendix parts outlet.

ASSEMBLY

Note: All torque specified in this manual are assembly torque and can be expected to fall off slightly after assembly. Do not re-torque after initial assembly torque fall. For assembly, hand wrenches are recommended.

Prior to assembly, lubricate all o-rings, o-ring bores and any sliding surface with a silicone lubricant equivalent to Dow Corning #10.

1. Install large piston o-ring on piston.
2. Install inner and outer o-rings in the exhaust cover assembly.
3. Install the sealing ring on the cover.
4. Install piston in body, taking care not to damage the piston o-ring.
5. Noting the reference marks made during disassembly, install the cover on the valve body and the mounting bracket on the cover.
6. Secure the mounting bracket and cover to the body using the four (4) cap screws and lock washers. Torque to 80-120 inch pounds.
7. Install the valve retainer on the inlet/exhaust valve and install in the body.
8. Install the inlet/exhaust valve return spring in the body.
9. Install the exhaust cover assembly in the body, taking care not to damage the o-ring.
10. While depressing the exhaust cover, install the retaining ring. Make certain the retainer is completely seated in its groove in the body.
11. Install the R-14 service port cap nut o-ring on the cap nut. Install the diaphragm in the R-14 cover making certain it is positioned between the guide ribs in the cover.
13. Install the service port cap nut and torque to 150 inch pounds.
14. If the quick release exhaust port was protected with an exhaust cover, install the cover using the #10-24 Phillips head screw. Torque to approx. 15-25 inch pounds.
15. Test the valves as outlined in the Operational and Leakage Test section before returning the valve to service.

INSTALLATION

1. Clean air lines.
2. Inspect all lines and/or hoses for damage and replace as necessary.
3. Install valve and tighten mounting bolts.
4. Connect air lines to valve (plug any unused ports).
5. Test valve as outlined in Operational and Leakage Tests.

IMPORTANT! PLEASE READ

When working on or around a vehicle, the following general precautions should be observed:

1. Park the vehicle on a level surface, apply the parking brakes, and always block the wheels.
2. Stop the engine when working around the vehicle.
3. If the vehicle is equipped with air brakes, make certain to drain the air pressure from all reservoirs before beginning ANY work on the vehicle.
4. Following the vehicle manufacturer's recommended procedures, deactivate the electrical system in a manner that removes all electrical power from the vehicle.
5. When working in the engine compartment the engine should be shut off. Where circumstances require that the engine be in operation, EXTREME CAUTION should be used to prevent personal injury resulting from contact with moving, rotating, leaking, heated, or electrically charged components.
6. Never connect or disconnect a hose or line containing pressure; it may whip. Never remove a component or plug unless you are certain all system pressure has been depleted.
7. Never exceed recommended pressures and always wear safety glasses.

8. Do not attempt to install, remove, disassemble or assemble a component until you have read and thoroughly understand the recommended procedures. Use only the proper tools and observe all precautions pertaining to use of those tools.
9. Use only genuine Bendix replacement parts, components, and kits. Replacement hardware, tubing, hose, fittings, etc. should be of equivalent size, type, and strength as original equipment and be designed specifically for such applications and systems.
10. Components with stripped threads or damaged parts should be replaced rather than repaired. Repairs requiring machining or welding should not be at tempted unless specifically approved and stated by the vehicle or component manufacturer.
11. Prior to returning the vehicle to service, make certain all components and systems are restored to their proper operating condition.

AlliedSignal

Bendix™

BW1431 ©AlliedSignal Truck Brake Systems Co. 1/1999. Printed in U.S.A.

AlliedSignal Bendix

Service Data

SD-03-2010*

PRESSURE PROTECTION VALVES

*Formerly SD-03-55

DESCRIPTION

The pressure protection valve is a normally closed, pressure control valve which can be referred to as a non-exhausting sequence valve. These valves are used in many different applications. An example would be in an air brake system to protect one reservoir, or reservoir system from another, by closing automatically at a preset pressure should a reservoir system failure occur. The valves can also be used to delay filling of auxiliary reservoirs to insure a quick build-up of brake system pressure.

The PR-2 and PR-4 pressure protection valves have one 1/4" N.P.T.F. supply port and one 1/4" N.P.T.F. delivery port which are identified. Both valves are provided with two 9/32" mounting holes through the body. The closing pressure of the PR-2 is externally adjustable while the PR-4 has a fixed setting.

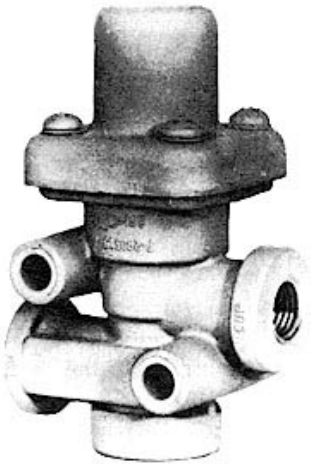

PR-3 OR PR-4

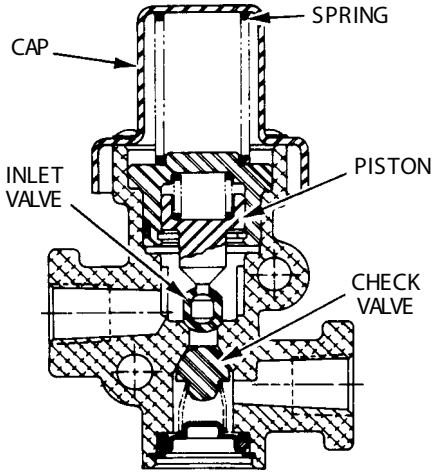

PR-3

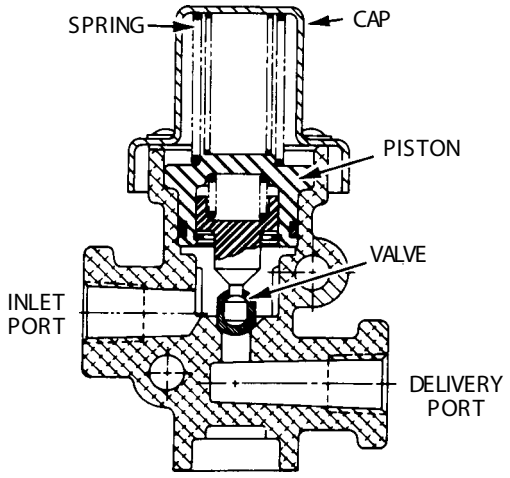

PR-4

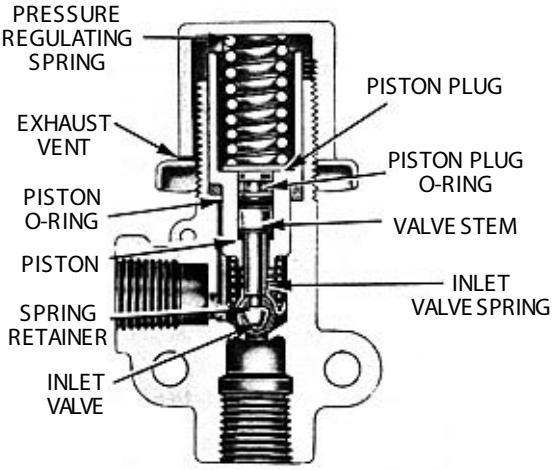

PR-2

OPERATION

Air entering the supply port is initially prevented from flowing out the delivery port by the inlet valve which is held closed by the pressure regulating spring above the piston. When sufficient air pressure builds beneath the piston to overcome the setting of the regulating spring, the piston will move, causing the inlet valve to unseat (open), and allow air to flow out the delivery port. As long as air pressure at the supply port and beneath the piston remains above the specified closing pressure, the inlet valve will remain open.

NOTE: The PR-2 and PR-4 closing pressure is noted on the label affixed to the valve. Opening pressures of the valves are higher than closing pressures. The pressure ranges are noted below:

PR-2-Opening pressure 15-20 psi higher than closing pressure.

PR-3 & PR-4-Opening pressure approx. 10 psi higher than closing pressure.

PR-3-Check valve will retain maximum pressure in downstream reservoir.

If for any reason system air pressure is decreased below the specified closing pressure, the regulating spring will move the piston closing the inlet valve. The remaining air pressure at either the supply or delivery side, (depending upon where the pressure drop has occurred) will be retained.

PREVENTIVE MAINTENANCE

Every three months, 900 operating hours or 25,000 miles, whichever if first, it is recommended that the operation and leakage checks described in this manual be performed.

OPERATING AND LEAKAGE CHECKS

OPERATING CHECKS

1. Provide a pressure gauge and drain valve at the supply side and delivery side of the pressure protection valve being checked.
2. Build up the air system to full pressure and shut off the engine.
3. While watching the gauges on the supply and delivery sides of the valve, slowly begin to exhaust pressure from the delivery side. Note that both gauges will show pressure loss until the closing pressure of the pressure protection valve is reached.

   The pressure protection valve should close at approximately (± 5 psi) the pressure indicated on the valve's label or in the vehicle handbook. The gauge on the delivery side of the valve should continue to show loss of pressure while the gauge on the supply side should stop at the same pressure as the setting of the valve.
4. (PR-3 only) Build pressure up again and shut off engine. Slowly exhaust air from the supply side of the PR-3. The gauge on the delivery side of the valve should remain at the highest pressure previously attained.

LEAKAGE CHECKS

1 . Build up the air system to full pressure and shut off the engine.
2. Apply a soap solution around the cap of the pressure protection valve. A one-inch bubble in three seconds or longer is acceptable. PR-3 - No leakage permissable at bottom of valve.
3. Drain the air pressure from the delivery side of the pressure protection valve and disconnect the air line to it.
4. Apply a soap solution to the delivery port. A one inch bubble in five seconds or more is acceptable.

GENERAL

If the pressure protection valve does not operate as described or leakage is excessive, it is recommended that a replacement be obtained at the nearest authorized AlliedSignal Truck Brake Systems Co. distributor.

REMOVING AND INSTALLING

REMOVING

1 . Block or hold the vehicle by means other than air brakes.
2. Drain all system reservoirs individually, to 0 psi.
3. Disconnect and identify (supply and delivery) the air lines leading to and from the pressure protection valve.
4. Remove the mounting bolts, if any, that secure the valve.

INSTALLING

1. Re-install the mounting bolts and secure the replacement valve to the vehicle.
2. Reconnect the supply delivery air lines to the proper ports of the replacement valve.

GENERAL

After installing a replacement valve, it is recommended that the operating and leakage checks be performed as outlined in this manual. If the closing pressure does not conform to that shown on the valve label or in the vehicle or a different setting is desired, the PR-2 may be adjusted by loosening the locknut and tightening or loosening the adjusting cap as required; however, if the proper setting cannot be attained by moderate adjustment of the cap, the valve may have the wrong spring and will have to be exchanged for the correct valve. The PR-3 and PR-4 are not adjustable.

IMPORTANT! PLEASE READ

When working on or around a vehicle, the following general precautions should be observed:

1. **Park the vehicle on a level surface, apply the parking brakes, and always block the wheels.**
2. **Stop the engine when working around the vehicle.**
3. **If the vehicle is equipped with air brakes, make certain to drain the air pressure from all reservoirs before beginning ANY work on the vehicle.**
4. **Following the vehicle manufacturer's recommended procedures, deactivate the electrical system in a manner that removes all electrical power from the vehicle.**
5. **When working in the engine compartment the engine should be shut off. Where circumstances require that the engine be in operation, EXTREME CAUTION should be used to prevent personal injury resulting from contact with moving, rotating, leaking, heated, or electrically charged components.**
6. **Never connect or disconnect a hose or line containing pressure; it may whip. Never remove a component or plug unless you are certain all system pressure has been depleted.**
7. **Never exceed recommended pressures and always wear safety glasses.**
8. **Do not attempt to install, remove, disassemble or assemble a component until you have read and thoroughly understand the recommended procedures. Use only the proper tools and observe all precautions pertaining to use of those tools.**
9. **Use only genuine Bendix replacement parts, components, and kits. Replacement hardware, tubing, hose, fittings, etc. should be of equivalent size, type, and strength as original equipment and be designed specifically for such applications and systems.**
10. **Components with stripped threads or damaged parts should be replaced rather than repaired. Repairs requiring machining or welding should not be attempted unless specifically approved and stated by the vehicle or component manufacturer.**
11. **Prior to returning the vehicle to service, make certain all components and systems are restored to their proper operating condition.**

AlliedSignal

Bendix™

BW1440 © AlliedSignal Truck Brake Systems Co. 1/1999. Printed in U.S.A.

AlliedSignal Bendix

Service Data

SD-03-2202*

*FORMERLY SD-03-67

DOUBLE CHECK VALVES

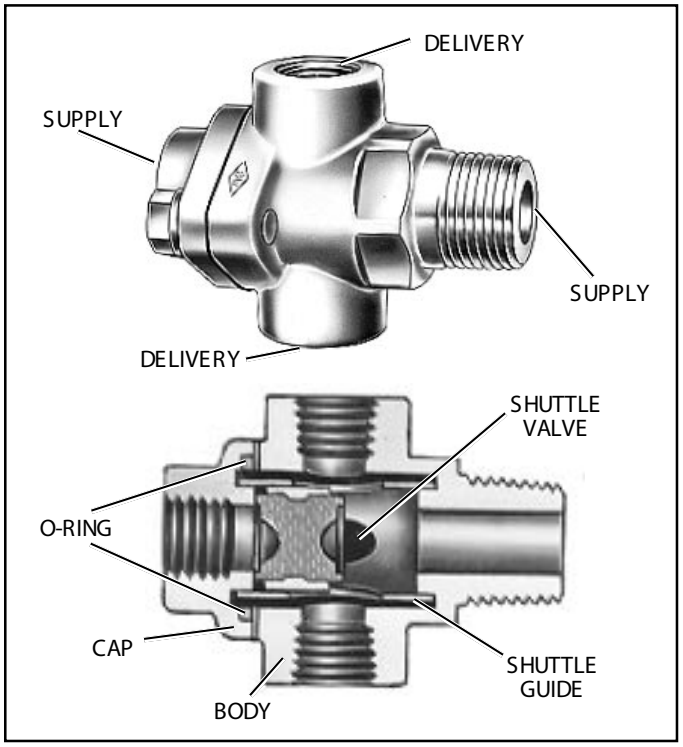

FIGURE 1 - DOUBLE CHECK VALVE (SHUTTLE TYPE)

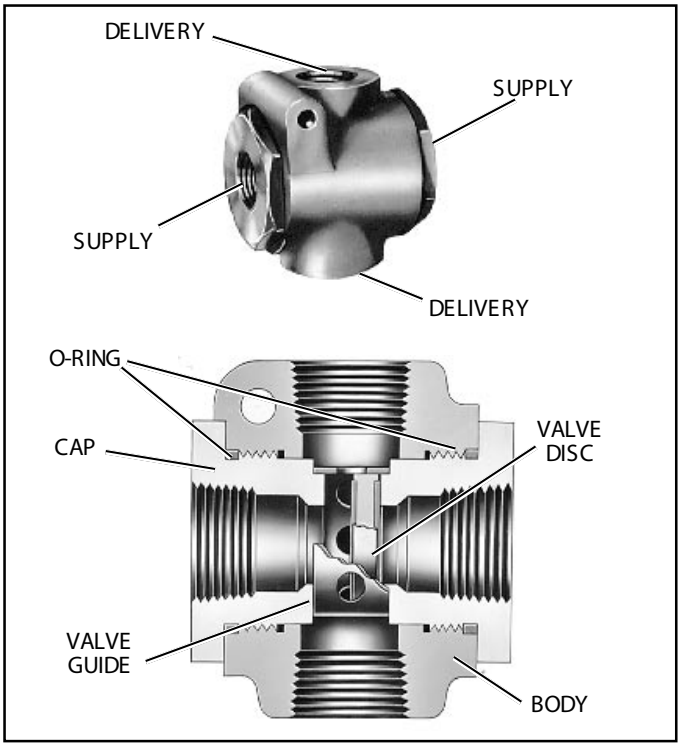

FIGURE 2 - DOUBLE CHECK VALVE (DISC TYPE)

DESCRIPTION

Double Check Valves are used in an air brake system to direct a flow of air into a common line from either of two sources, whichever is at the higher pressure. They may be used for directing air flow for specific functions or to select the higher pressure of either of two sources of air as a supply source.

AlliedSignal manufactures two types of Bendix Double Check Valves: shuttle and disc. Although the valves are somewhat different physically, the same function is performed by both types. The difference in the design of the two valves is that the shuttle type has a movable shuttle to seal off the lower pressure source, whereas the disc type has a movable disc.

OPERATION

As air under pressure enters either end of the Double Check Valve (inlet port) the moving shuttle or disc responds to the pressure and seals the opposite port, assuming it is at a lower pressure level than the other. The air flow continues out the delivery port of the Double Check Valve. The position of the shuttle or disc will reverse if the pressure levels are reversed. Double Check Valves are designed so that the shuttle or disc can never impede the backflow of air in the exhaust mode.

Figure 3 (see page 2) illustrates a typical use of a Double Check Valve to control a given device, such as trailer brakes, from either of two control sources.

Figure 4 (see page 2) illustrates a typical use of a Double Check Valve to supply air to a system or systems from either of two separate sources, whichever is at the greater pressure level. In this type of installation the pressure differential to which the valve is subjected may under certain conditions be minimal. It is therefore suggested that performance of the Double Check Valve will be optimized if it is mounted in the horizontal position.

PREVENTIVE MAINTENANCE

Every 3600 operating hours, 100,000 miles, or yearly, disassemble, clean and inspect all parts. Install new parts if they show signs of wear or deterioration.

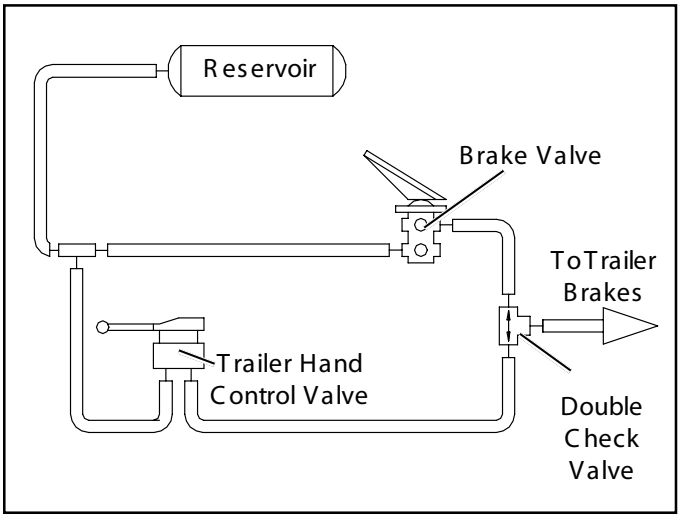

FIGURE 3 - DOUBLE CHECK VALVE: CONTROL OF SYSTEM FROM EITHER OF TWO CONTROL SOURCES

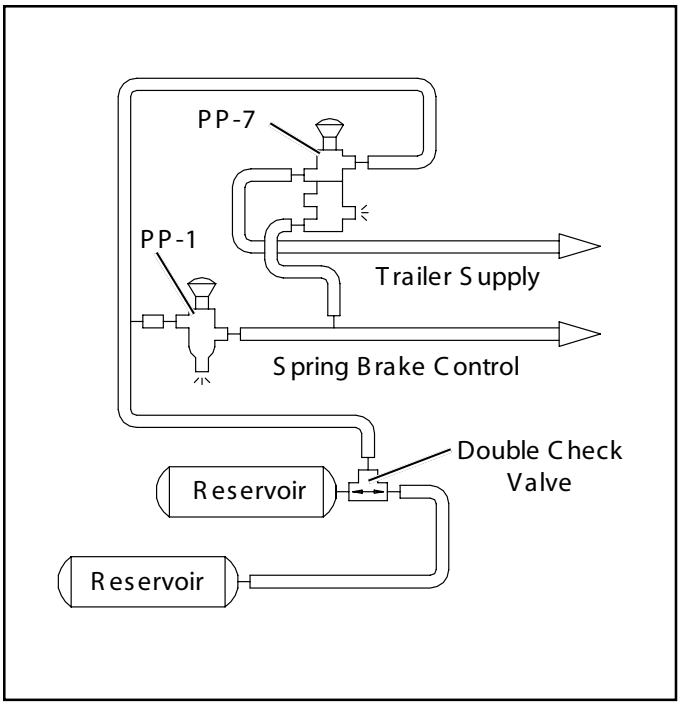

FIGURE 4 - DOUBLE CHECK VALVE: SYSTEM WITH TWO SUPPLY SOURCES

SERVICE CHECKS

OPERATING AND LEAKAGE TEST

A. When the Double Check Valve is used in conjunction with a Trailer Control Valve, the following operating and leakage test can be made:

1. Apply and release foot brake valve and note that the brakes apply and release on both tractor and trailer.
2. Apply and release the Trailer Control Valve and note that only the trailer brakes apply and release. With trailer control valve applied check exhaust port of foot brake valve for leakage with soap solution. Permissible leakage is a one inch bubble in five seconds (100 sccm).
3. Apply and hold a full foot brake valve application. Check exhaust port of Trailer Control Valve for leakage with soap solution. Permissible leakage is a one inch bubble in five seconds (100 sccm). (Note: On some vehicles, an exhaust line is connected to the exhaust port and piped outside the cab in which case it may be necessary to disconnect this line to make leakage check.)

B. If Double Check Valve is to be bench tested or tested on the vehicle, two separately controlled air supplies must be connected to the inlet ports.

1. Install an accurate test gauge in the outlet port or in a line from outlet port.
2. Apply and release air to one inlet port and note that gauge registers application and release.
3. Repeat by applying and releasing air to other inlet port.
4. Leakage check should be performed at inlet ports of valve in the following manner:

   a. Disconnect line from one inlet port.

   b. Apply air to other inlet port and coat opposite inlet port with soap solution. Permissible leakage is a one inch bubble in five seconds (100 sccm).

   c. Repeat Step "b" applying air to other inlet port while checking opposite inlet port for leakage.

If the Double Check Valve does not function as described or if leakage is excessive, it is recommended that the valve be repaired or replaced with genuine Bendix parts. The following instructions should prove helpful:

DISASSEMBLY

1. Remove end cap(s) from valve.
2. Remove grommets (if applicable).
3. Remove shuttle and/or shuttle guide, disc and/or disc guide (depending upon type of valve).

CLEANING AND INSPECTION

1. Clean all metal parts in a cleaning solvent.
2. Inspect all metal parts for signs of cracks, wear or deterioration. Replace all parts not considered serviceable.
3. Replace all rubber parts.

ASSEMBLY

1. Install disc guide, disc and/or shuttle and shuttle guide.
2. Coat all static seals such as o-rings, grommets, etc. with BW 650M Silicone lubricant (BW 291126). It is not necessary to lubricate shuttles or discs.
3. Install grommets.
4. Install end cap(s).

TESTING OF REBUILT DOUBLE CHECK VALVE

Perform operating and leakage tests as described in "Service Checks" section.

IMPORTANT! PLEASE READ:

When working on or around a vehicle, the following general precautions should be observed:

1. Park the vehicle on a level surface, apply the parking brakes, and always block the wheels.
2. Stop the engine when working around the vehicle.
3. If the vehicle is equipped with air brakes, make certain to drain the air pressure from all reservoirs before beginning ANY work on the vehicle.
4. Following the vehicle manufacturer's recommended procedures, deactivate the electrical system in a manner that removes all electrical power from the vehicle.
5. When working in the engine compartment the engine should be shut off. Where circumstances require that the engine be in operation, EXTREME CAUTION should be used to prevent personal injury resulting from contact with moving, rotating, leaking, heated, or electrically charged components.
6. Never connect or disconnect a hose or line containing pressure; it may whip. Never remove a component or plug unless you are certain all system pressure has been depleted.
7. Never exceed recommended pressures and always wear safety glasses.
8. Do not attempt to install, remove, disassemble or assemble a component until you have read and thoroughly understand the recommended procedures. Use only the proper tools and observe all precautions pertaining to use of those tools.
9. Use only genuine Bendix replacement parts, components, and kits. Replacement hardware, tubing, hose, fittings, etc. should be of equivalent size, type, and strength as original equipment and be designed specifically for such applications and systems.
10. Components with stripped threads or damaged parts should be replaced rather than repaired. Repairs requiring machining or welding should not be attempted unless specifically approved and stated by the vehicle or component manufacturer.
11. Prior to returning the vehicle to service, make certain all components and systems are restored to their proper operating condition.

AlliedSignal

Bendix™

BW1846 © AlliedSignal Truck Brake Systems Co. 1/1999. Printed in U.S.A.

AlliedSignal Bendix

Service Data

SD-03-3602*

TW-1, TW-3, TW-4, TW-5 & TW-6 CONTROL VALVES

*Formerly SD-03-64

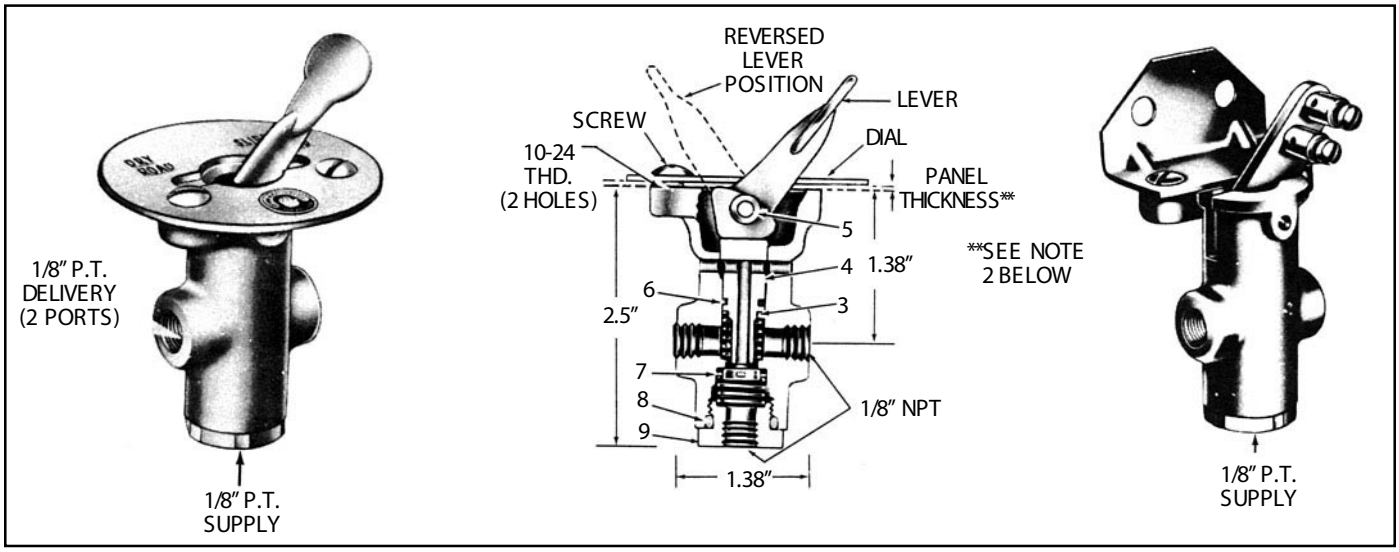

FIGURE 1 - TW-1

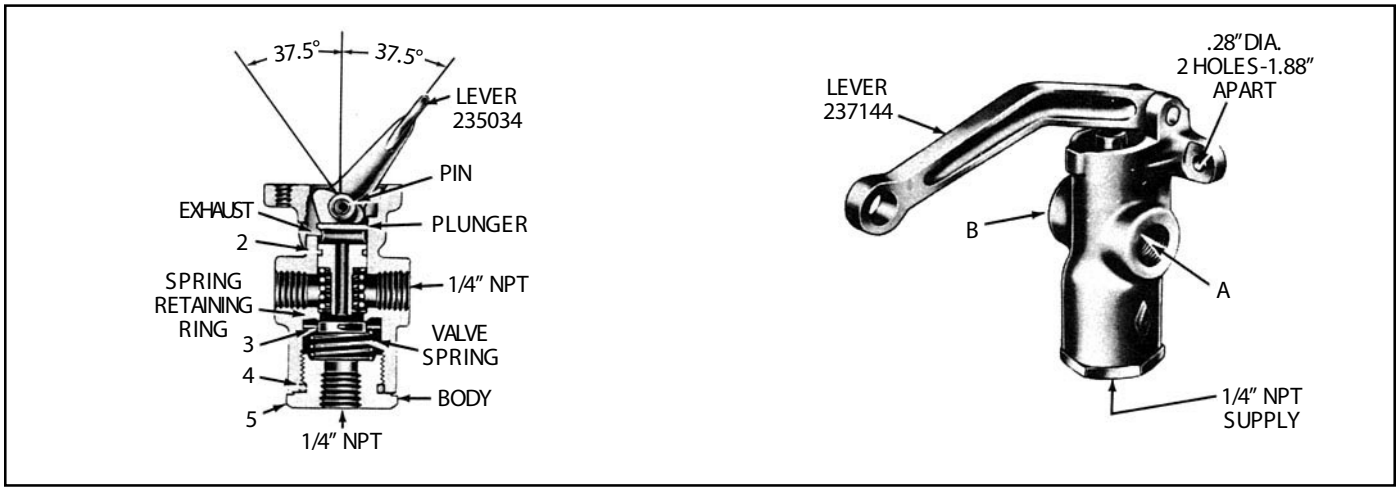

FIGURE 2 - TW-3

DESCRIPTION

The TW series valves are manually operated on-off valves. They are extensively used in air systems to control nonmodulating air controlled devices. They may be lever or button operated, direct or remote control.

The TW-1 (Figure 1) is normally panel mounted with a steel, zinc or nylon manually operated lever. Some are equipped with a steel lever with connectors for Bowden cable control. All TW-1's have 1/8" NPT ports.

The TW-3 (Figure 2) is lever operated, either direct or remote and differs from the TW-1 in having 1/4" NPT ports and larger capacity. Some versions have a heavy inlet valve spring making them suitable for vacuum control.

TW-4's and TW-5's (Figure 3) are similar to the TW-1 except the plunger is designed for a push button, giving momentary application whenever the button is depressed.

The TW-6 (Figure 4) is a TW-1 with a grounding switch included. In the exhaust position the switch is open. When the valve is applied the switch is closed.

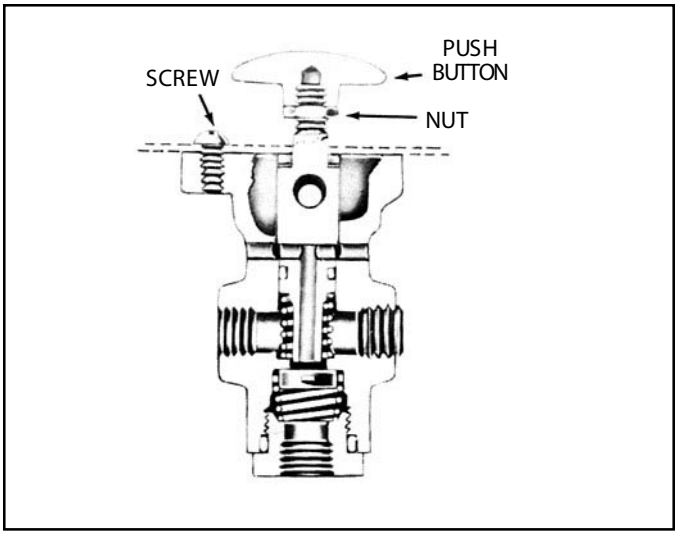

FIGURE 3 - TW-4

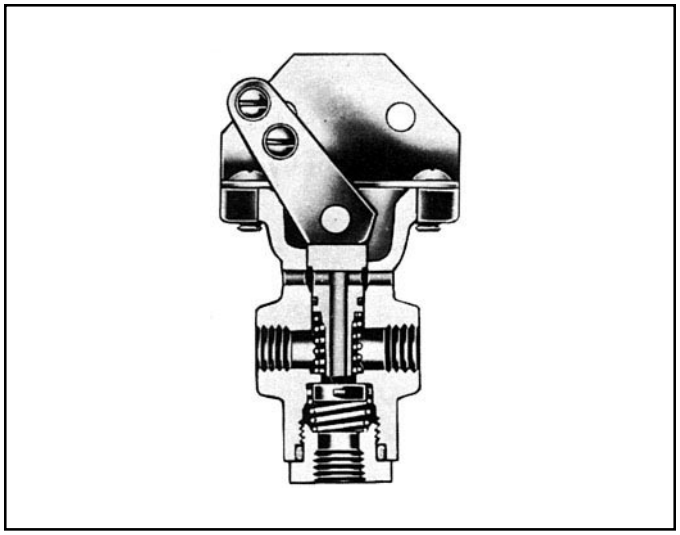

FIGURE 4 - TW-6

OPERATION

With air pressure a the supply port (Figure 1) and the plunger in the upward position the valve is in the exhaust position. The delivery ports are open to atmosphere through the exhaust passage in the center of the plunger.

When the plunger is depressed by the cam action of the lever (Figure 1) or by a direct force on a push button (Figure 3) the plunger contacts the inlet valve, closing the exhaust passage and pushes the inlet valve off the inlet seat in the body, allowing supply air to flow through the delivery ports to the controlled device.

PREVENTIVE MAINTENANCE

Every year, 100,000 miles or 1800 operating hours disassemble, clean and check all parts and replace if necessary.

SERVICE CHECKS

OPERATING AND LEAKAGE TESTS

Connect a 100 psi air pressure source to the supply port and connect delivery to an air gauge. (if there are two delivery ports, plug one.) With the valve in the released position, check for leakage at the exhaust holes with a soap solution. No leakage permitted. Place the valve in the applied position. Supply air pressure should show on the gauge. Check for leakage at the exhaust holes. No leakage permitted.

If the TW valve does not function as described or if leakage occurs, it is recommended that it be replaced with a new unit or repaired with genuine Bendix parts.

REMOVING

Secure the vehicle with other means than brakes and drain the reservoirs.

Disconnect all air lines and remove the valve.

INSTALLING

Place valve handle through appropriate hole in panel, place dial (if used) over handle and install mtg. screws. Connect air lines.

DISASSEMBLY

Remove operating handle or lever by driving the pin out of the body (Figure 1) and remove the lever, plunger and plunger spring. Remove the O-Ring from the plunger.

Remove the supply cap nut, inlet valve and spring. Remove the 0-Ring from the supply cap nut.

CLEANING AND INSPECTION OF PARTS

Wipe rubber parts clean. Clean plastic and metal parts in mineral spirits and dry thoroughly. Inspect all rubber parts for wear or deterioration and replace where necessary. Polish the inlet seat in the body if nicked or corroded. Inspect all springs for cracks, distortion or corrosion and replace if necessary.

ASSEMBLY

Prior to assembly lubricate body bore, plunger, O-Rings, and cap nut threads with Bendix silicone lubricant BW 650M Pc. No. 291126.

Place inlet valve in body.

Place inlet valve spring on inlet valve.

Place O-Ring on cap nut and install cap nut.

Install plunger spring from top of body.

Install O-Ring on plunger and install plunger.

TW-1 TW-3 & TW-6

Depress plunger, place lever cam in slot in body, line up holes in body with hole in lever and insert pin.

TW-4 & TW-5

Depress plunger with button until hole in plunger lines up with holes in body. Insert pin.

LEAKAGE TEST

Test valve per instructions in paragraph on "Service Checks."

IMPORTANT! PLEASE READ

When working on or around a vehicle, the following general precautions should be observed:

1. Park the vehicle on a level surface, apply the parking brakes, and always block the wheels.
2. Stop the engine when working around the vehicle.
3. If the vehicle is equipped with air brakes, make certain to drain the air pressure from all reservoirs before beginning ANY work on the vehicle.
4. Following the vehicle manufacturer's recommended procedures, deactivate the electrical system in a manner that removes all electrical power from the vehicle.
5. When working in the engine compartment the engine should be shut off. Where circumstances require that the engine be in operation, EXTREME CAUTION should be used to prevent personal injury resulting from contact with moving, rotating, leaking, heated, or electrically charged components.
6. Never connect or disconnect a hose or line containing pressure; it may whip. Never remove a component or plug unless you are certain all system pressure has been depleted.
7. Never exceed recommended pressures and always wear safety glasses.
8. Do not attempt to install, remove, disassemble or assemble a component until you have read and thoroughly understand the recommended procedures. Use only the proper tools and observe all precautions pertaining to use of those tools.
9. Use only genuine Bendix replacement parts, components, and kits. Replacement hardware, tubing, hose, fittings, etc. should be of equivalent size, type, and strength as original equipment and be designed specifically for such applications and systems.
10. Components with stripped threads or damaged parts should be replaced rather than repaired. Repairs requiring machining or welding should not be attempted unless specifically approved and stated by the vehicle or component manufacturer.
11. Prior to returning the vehicle to service, make certain all components and systems are restored to their proper operating condition.

AlliedSignal

Bendix™

BW1580 © AlliedSignal Truck Brake Systems Co. 1/1999. Printed in USA.

AlliedSignal Bendix

Service Data

SD-03-3611*

PUSH-PULL TYPE CONTROL VALVES: PP-1, PP-2, PP-5, PP-8, & RD-3

*FORMERLY SD-03-61

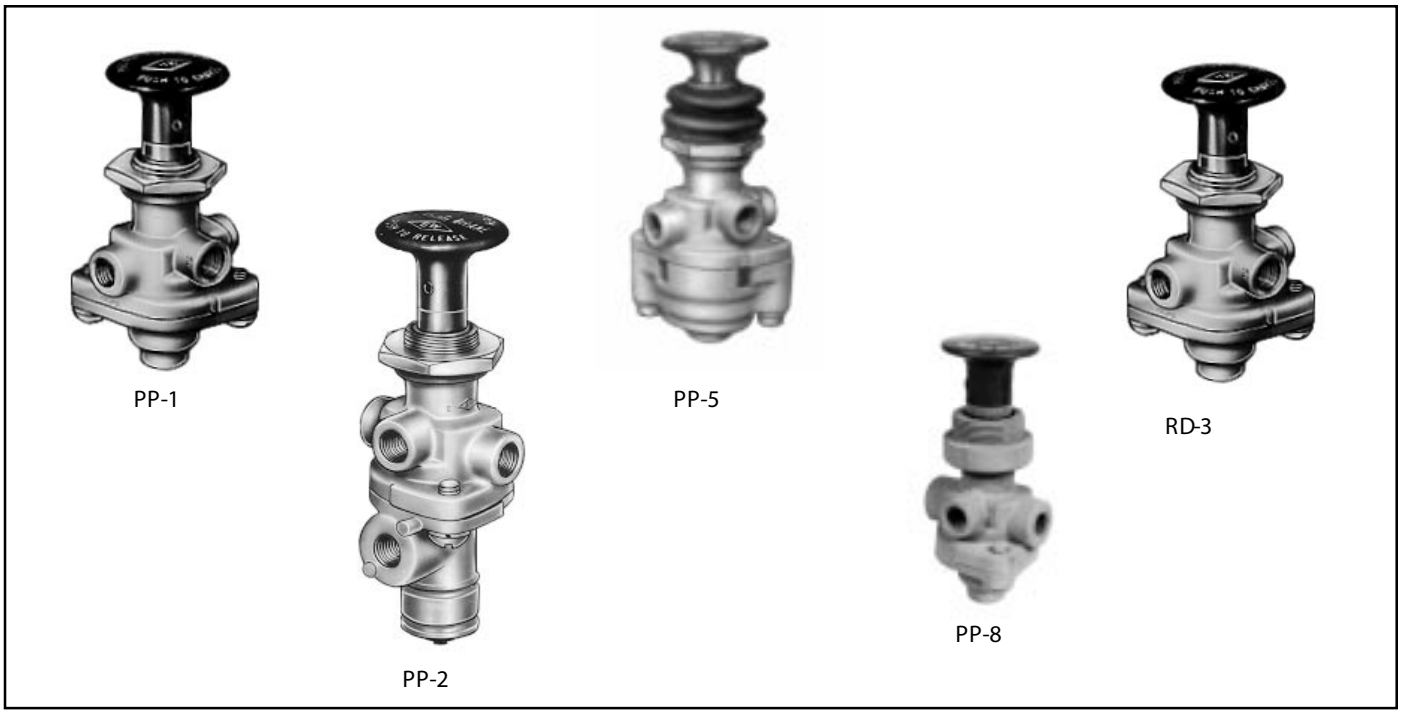

FIGURE 1 - PUSH-PULL TYPE CONTROL VALVES

DESCRIPTION

The PP valves are push-pull manually operable on-off air control valves with an exhaust function. Most are pressure sensitive, so that they will automatically move from the applied to the exhaust position as supply pressure is reduced to a certain minimum, depending on the spring installed. The exception to this is the PP-8 valve and some PP-1 valves which have no spring. The PP-8 valve also has a larger diameter shaft for button mounting so that when installed on the same panel with other PP valves the buttons cannot be inadvertently mixed. The PP-8 is normally used to operate tractor spring brakes independently from the trailer.

The PP-5 is unique in having an auxiliary piston in the lower cover which, upon receiving a pneumatic signal of 18 psi or more, will cause the valve to move from the applied to the exhaust position from a 100 psi application.

The RD-3 differs slightly in that it normally remains in the exhaust position and requires a constant manual force to hold it in the applied position.

The PP-2 has an auxiliary port which may be plumbed into a service brake line to release the spring brakes if a service application is made, preventing compounding of forces on the foundation brakes.

PREVENTIVE MAINTENANCE

Every six months, 50,000 miles or 1800 operating hours, disassemble, clean and replace parts if necessary.

REMOVAL

Block and/or hold the vehicle by a means other than air brakes and drain all reservoirs.

1. Drive the Button Roll-Pin out with a punch and remove the button.
2. Mark each air supply line and its port for easy reinstallation, then disconnect them. Remove the valve from the panel by removing the Panel Mounting Nut.

	AUTOMATIC EXHUAST	MOMENTARY APPLY	PILOT TRIP FEATURE	NON-AUTOMATIC
PP-1	20,30,40 or 60 psi			
PP-2	40 psi			
PP-5	40 psi		18 psi	
RD-3		Must be held manually		
PP-8				Will remain in either position

INSTALLING

1. Install valve in panel, securing with the Panel Mounting Nut.
2. Reconnect the air lines using marks made during removal as a guide.
3. Install the operating button. Secure the operating button by installing the Button Roll Pin.

DISASSEMBLY: PP-1, PP-8 AND RD-3

1. Remove the two cap screws (3) which retain the lower cover and remove cover. Remove the sealing ring (4).
2. Insert a small punch through the roll pin hole in the stem and remove the lock nut (5).
3. Remove inlet-exhaust valve (6) and plunger (7) and spring (8) (if any).
4. Remove o-ring (9) from plunger.

DISASSEMBLY: PP-5

1. Perform same operations as for PP-1.
2. Remove inlet seal (10) in Figure 4 from lower cover. Remove the ring diaphragm (4) from the inlet seat.
3. Remove piston (11) Figure 4 and o-ring (2).

DISASSEMBLY: PP-2

1. Insert a small punch through the roll pin hole in the plunger and remove the lock nut (1) from the plunger.
2. Withdraw the plunger and remove the spring (9) and o-ring (8).
3. Remove the two machine screws (2) and remove the lower cover (3).
4. Remove the inlet-exhaust valve (4), and piston (5).
5. Remove o-rings (6 & 7) from piston.

OPERATING AND LEAKAGE TESTS

PP-1, PP-8, RD-3

1. An accurate test gauge should be tee'd into the supply line and a means of controlling the supply pressure provided. Apply a 120 psi air source to the supply port. A small volume reservoir (e.g. 90 cu. in.) with a gauge should be connected to the delivery port.
2. With 120 psi supply pressure, and the button pulled out (exhaust position), leakage at the exhaust port should not exceed a 1" bubble in five seconds; at the plunger stem a 1" bubble in five seconds. There should be no leakage between upper and lower body.
3. Push the button in (applied position). Leakage at the exhaust port should not exceed a 1" bubble in 3 seconds; at the plunger a 1" bubble in three seconds. (The RD-3 will have to be manually held in this position.)
4. Reduce the supply pressure. At a pressure from 60 to 20 psi depending on the spring installed the button should pop out automatically, exhausting the delivery volume. (This does not apply to the RD-3, PP-8 or some PP-1's).

PP-5

1. Proceed as for PP-1 through Step 3.
2. Connect a modulated source of air pressure to the pilot air inlet. With the button pushed in (applied position) with 125 psi supply pressure and a gradually increasing pressure applied at the pilot air port the valve should move to the release position with a pilot pressure of not more than 18 psi. Leakage in this mode should not exceed a 1" bubble in three seconds at the exhaust port and a 1" bubble in five seconds at the plunger stem.

PP-2

1. Proceed as for PP-1 through Step 1.
2. With the button pulled out (exhaust position), leakage at the brake valve port or at the plunger stem should not exceed a 1" bubble in five seconds.
3. Push the button in. Supply pressure should be present in the delivery volume. Leakage at the exhaust port or around the plunger stem should not exceed a 1" bubble in five seconds.
4. Pull the button out and apply supply pressure at the brake valve port. Supply pressure should be present in the delivery volume and leakage at the exhaust port should not exceed a 1" bubble in five seconds.

Note: If any of the above push-pull valves do not function as described or if leakage is excessive, it is recommended they be returned to our nearest authorized distributor for a factory rebuilt or new valve.

IMPORTANT! PLEASE READ:

When working on or around a vehicle, the following general precautions should be observed:

1. Park the vehicle on a level surface, apply the parking brakes, and always block the wheels.
2. Stop the engine when working around the vehicle.

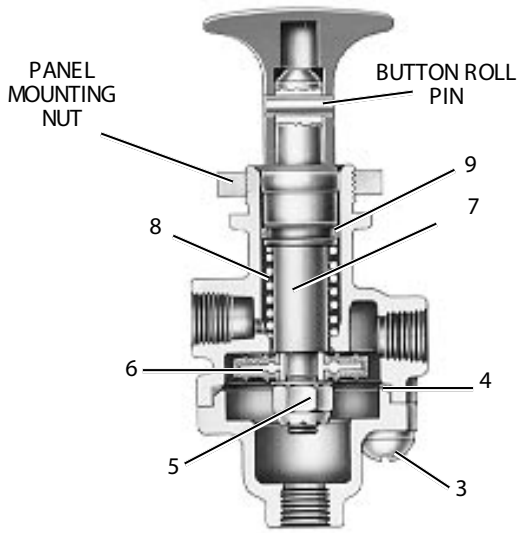

FIGURE 2 PP-1

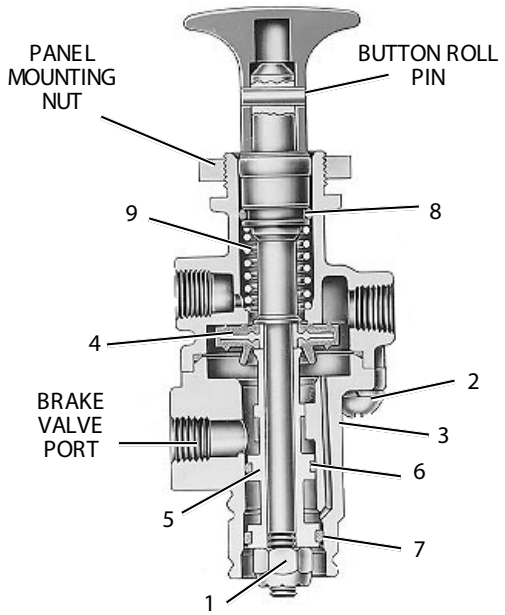

FIGURE 3 PP-2

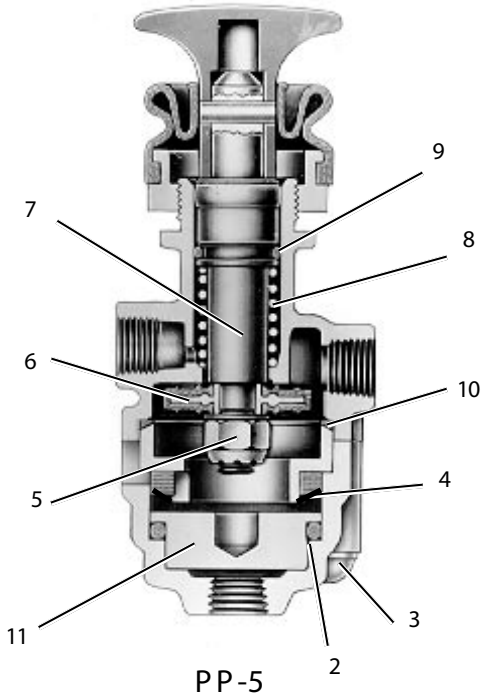

PP-5

FIGURE 4

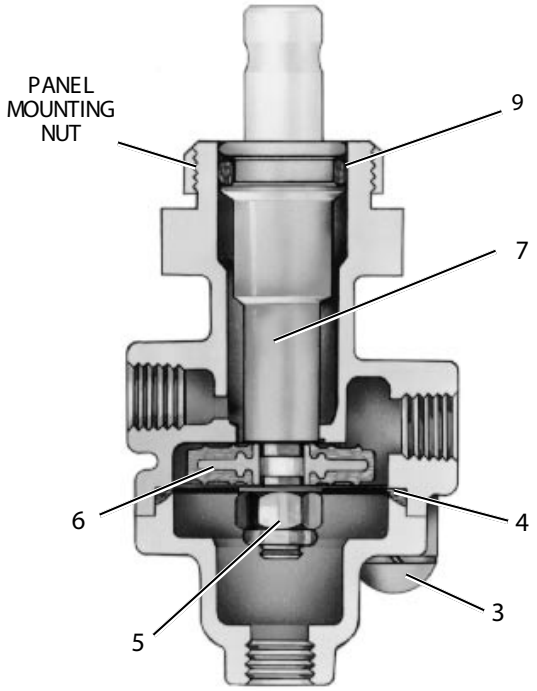

PP-8

FIGURE 5

3. If the vehicle is equipped with air brakes, make certain to drain the air pressure from all reservoirs before beginning <u>any</u> work on the vehicle.
4. Following the vehicle manufacturer's recommended procedures, deactivate the electrical system in a manner that removes all electrical power from the vehicle.
5. When working in the engine compartment the engine should be shut off. Where circumstances require that the engine be in operation, <u>extreme caution</u> should be used to prevent personal injury resulting from contact with moving, rotating, leaking, heated, or electrically charged components.

6. Never connect or disconnect a hose or line containing pressure; it may whip. Never remove a component or plug unless you are certain all system pressure has been depleted.
7. Never exceed recommended pressures and always wear safety glasses.
8. Do not attempt to install, remove, disassemble or assemble a component until you have read and thoroughly understand the recommended procedures. Use only the proper tools and observe all precautions pertaining to use of those tools.
9. Use only genuine Bendix replacement parts, components, and kits. Replacement hardware, tubing, hose, fittings, etc. should be of equivalent size, type, and strength as original equipment and be designed specifically for such applications and systems.
10. Components with stripped threads or damaged parts should be replaced rather than repaired. Repairs requiring machining or welding should not be attempted unless specifically approved and stated by the vehicle or component manufacturer.
11. Prior to returning the vehicle to service, make certain all components and systems are restored to their proper operating condition.

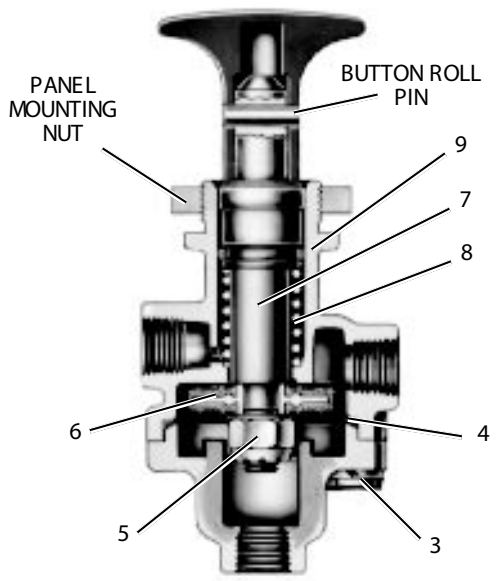

RD-3

FIGURE 6

BW1578 © AlliedSignal Truck Brake Systems Co. 1/1999. Printed in USA.

AlliedSignal Bendix

Service Data

SD-03-4508*

SR-1 SPRING BRAKE VALVE

*Formerly SD-03-87

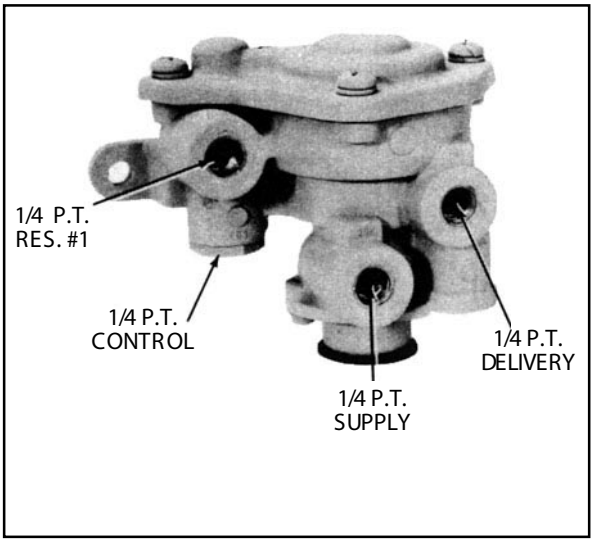

FIGURE 1 - EXTERIOR VIEW

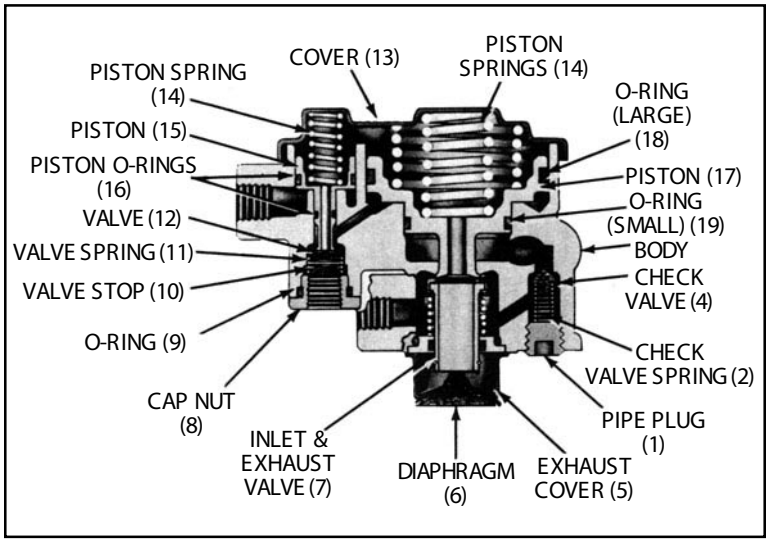

FIGURE 2 - SECTIONAL VIEW

DESCRIPTION:

The SR-1 Spring Brake Valve is used in dual or “split” air brake systems equipped with spring brake actuators. The function of the SR-1 is to supply a specific, limited hold-off pressure to the spring brakes, and in the event of loss of No. 1 service air pressure, to modulate the spring brakes through the use of the service brake valve.

The valve has four identified 1/4" N.P.T.F. ports and a diaphragm protected exhaust port. Two 5/16" diameter holes are provided in the integral mounting bracket of the valve body. The SR-1 must be mounted with the exhaust port down toward the road surface.

OPERATION - INITIAL AIR SYSTEM CHARGE

Upon initial charge, air from #1 & #2 service reservoirs flows through the park control valve and enters the SR-1 supply port. Air entering the supply port flows past inlet and exhaust valve B to the underside of piston B and out the delivery port of the SR-1 to the emergency air connection at the spring brake actuator. Note that the springs above piston B force it into contact with inlet and exhaust valve B. In the position shown the exhaust is closed and the inlet is open.

Air flowing from the No. 1 reservoir only enters the reservoir port of the SR-1. This air remains under piston A as system pressure builds. With No. 1 reservoir pressure below approximately 55 P.S.I. the spring above piston A forces it into contact with inlet and exhaust valve A causing the exhaust to seal and the inlet to open.

With air system pressure above approximately 55 P.S.I. in No. 1 & 2 service reservoirs, piston A has moved against the force of the spring above it, allowing the inlet of valve A to close and opening the hollow exhaust passage through piston A.

OPERATION - AIR BRAKE SYSTEM FULLY CHARGED

When air pressure beneath piston B is approximately 95** P.S.I., piston B rises slightly, against the force of the springs above it, allowing the inlet of valve B to close. The exhaust through valve B remains closed. The closing of the inlet portion of valve B retains approximately 95* P.S.I. in the hold- off cavity of the spring brake actuators while allowing full air system pressure to build elsewhere.

**Note: Other spring brake hold-off pressures are supplied according to the vehicle manufacturer’s specifications. 95 P.S.I. was chosen only for the purpose of explanation.

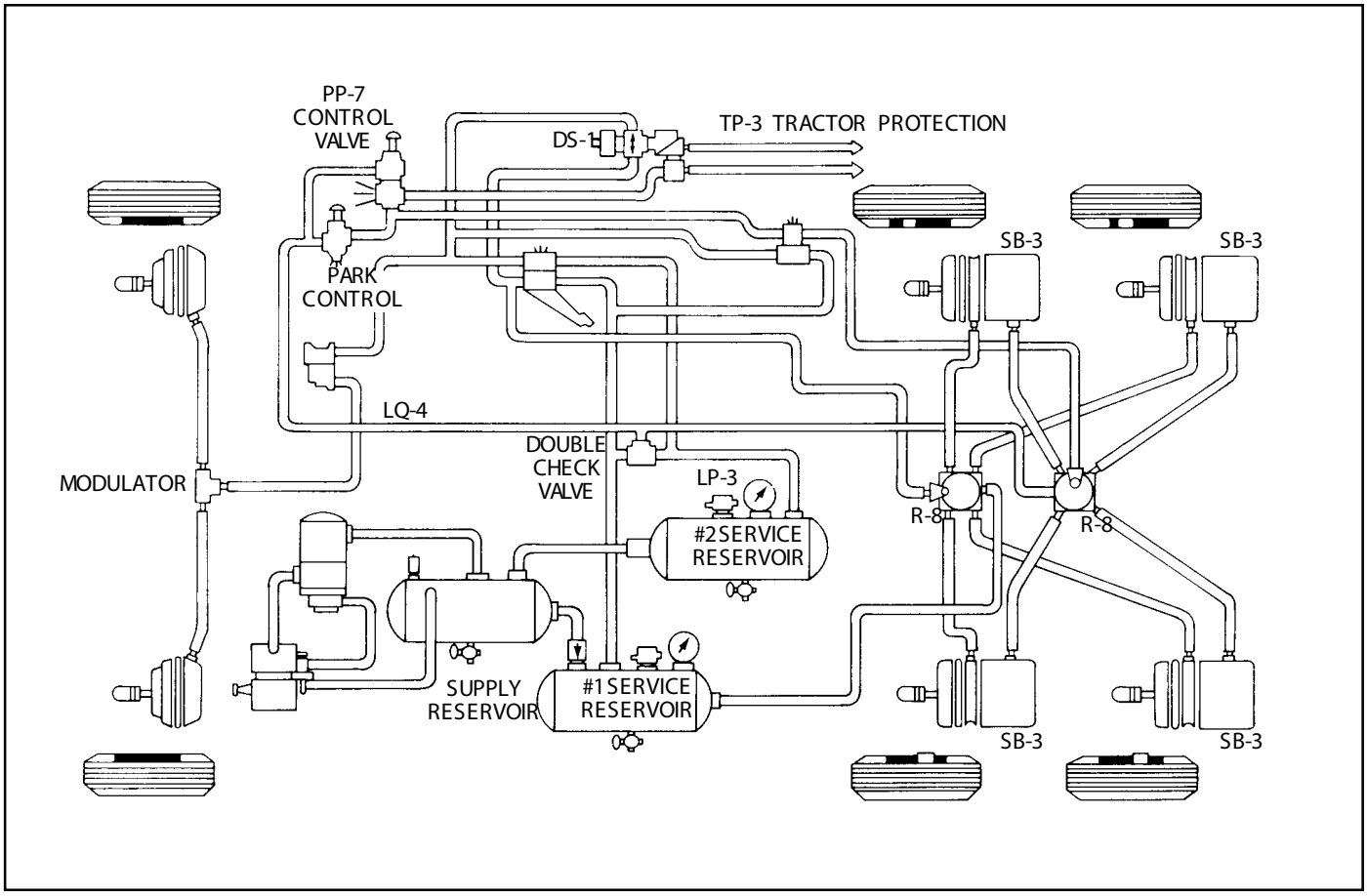

FIGURE 3 - PIPING DIAGRAM

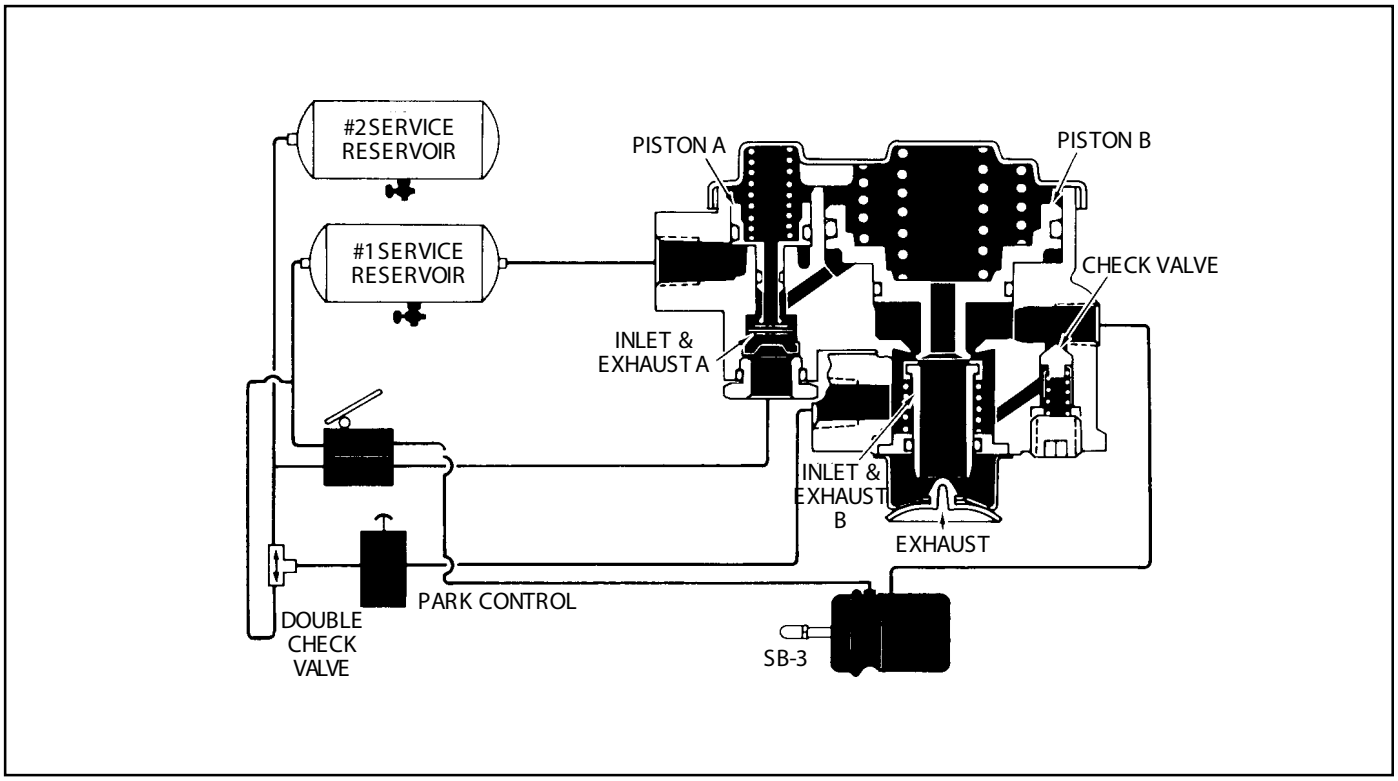

FIGURE 4 - CHARGING - BELOW 55 P.S.I.

Use only the proper tools and observe all precautions pertaining to use of those tools.

9. Use only genuine Bendix replacement parts, components, and kits. Replacement hardware, tubing, hose, fittings, etc. should be of equivalent size, type, and strength as original equipment and be designed specifically for such applications and systems.
10. Components with stripped threads or damaged parts should be replaced rather than repaired. Repairs requiring machining or welding should not be attempted unless specifically approved and stated by the vehicle or component manufacturer.
11. Prior to returning the vehicle to service, make certain all components and systems are restored to their proper operating condition.

DISASSEMBLY (REFER TO FIGURE 2)

1. Remove the socket head pipe plug (1).
2. Remove the check valve spring (2) and the check valve (4).
3. Remove the two phillips head screws and remove the exhaust cover (5).
4. Separate the exhaust diaphragm (6) from the cover.
5. Remove the inlet and exhaust valve assembly (7).
6. Remove the inlet and exhaust valve cap nut (8) and separate the cap nut o-ring (9).
7. Remove the valve stop (10) valve spring (11) and inlet and exhaust valve (12).
8. Remove the four phillips head screws and lockwashers that secure the cover to the body. Caution: the cover is under a spring load, and should be held while removing the screws.
9. Remove the cover (13) and the three piston springs (14). Note: Some SR-1 piece numbers have one large piston spring.
10. Remove the small piston (15) and the small and large o-rings (16).
11. Remove the large piston (17). Remove piston o-rings (18) & (19).

CLEANING & INSPECTION

Wash all metal parts in mineral spirts and dry.

Inspect all parts for excessive wear or deterioration.

Inspect the valve seats for nicks or burrs.

Check the springs for cracks or corrosion.

Replace all rubber parts and any part not found to be serviceable during inspection. Use only genuine Bendix replacement parts.

ASSEMBLY (REFER TO FIGURE 2)

Prior to assembly of the SR-1 Spring Brake Valve, lubricate all o-rings, o-ring grooves, and piston bores with Dow Corning 55-M Pneumatic Grease (Bendix No. 291126).

Note: All torques specified in this manual are assembly torques and can be expected to fall off, after assembly is accomplished. Do not retorque after initial assembly torques fall.

1 . Assemble the check valve (4), and valve spring (2) and install in body.
2. Apply pipe sealant to the socket head pipe plug (1) and install in the body. Tighten to 130-170 inch pounds torque.
3. Install inlet and exhaust valve assembly (7) in valve body.
4. Secure the exhaust cover (5) with two 10-24 phillips screws and lockwashers. Tighten to 20-30 inch pounds torque.
5. Install exhaust diaphragm (6) into the exhaust cover.
6. Place inlet exhaust valve (12) in the body. Install the valve spring (11) and valve stop (10).
7. Install o-ring (9) on cap nut and install cap nut (8) in body. Tighten to 100- 125 inch pounds torque.
8. Install the small and large o-rings (16) on the small diameter piston (15) and install piston in the body.
9. Install large o-ring (18) and small o-ring (19) on the large diameter piston and install piston in the body.
10. Install the piston springs (14) in their respective pistons.
11. Secure the cover to body using four 1/4"-20 phillips head screws and lockwashers. Tighten to 50-80 inch pounds torque.

TESTING THE REBUILT SR-1 SPRING BRAKE VALVE

Test the rebuilt SR-1 Spring Brake Valve by performing the operation and leakage test outlined in the “Service Checks” section of this manual.

IMPORTANT! PLEASE READ

When working on or around a vehicle, the following general precautions should be observed:

1. Park the vehicle on a level surface, apply the parking brakes, and always block the wheels.
2. Stop the engine when working around the vehicle.
3. If the vehicle is equipped with air brakes, make certain to drain the air pressure from all reservoirs before beginning ANY work on the vehicle.
4. Following the vehicle manufacturer’s recommended procedures, deactivate the electrical system in a manner that removes all electrical power from the vehicle.
5. When working in the engine compartment the engine should be shut off. Where circumstances require that the engine be in operation, EXTREME CAUTION should be used to prevent personal injury resulting from contact with moving, rotating, leaking, heated, or electrically charged components.
6. Never connect or disconnect a hose or line containing pressure; it may whip. Never remove a component or plug unless you are certain all system pressure has been depleted.
7. Never exceed recommended pressures and always wear safety glasses.
8. Do not attempt to install, remove, disassemble or assemble a component until you have read and thoroughly understand the recommended procedures.

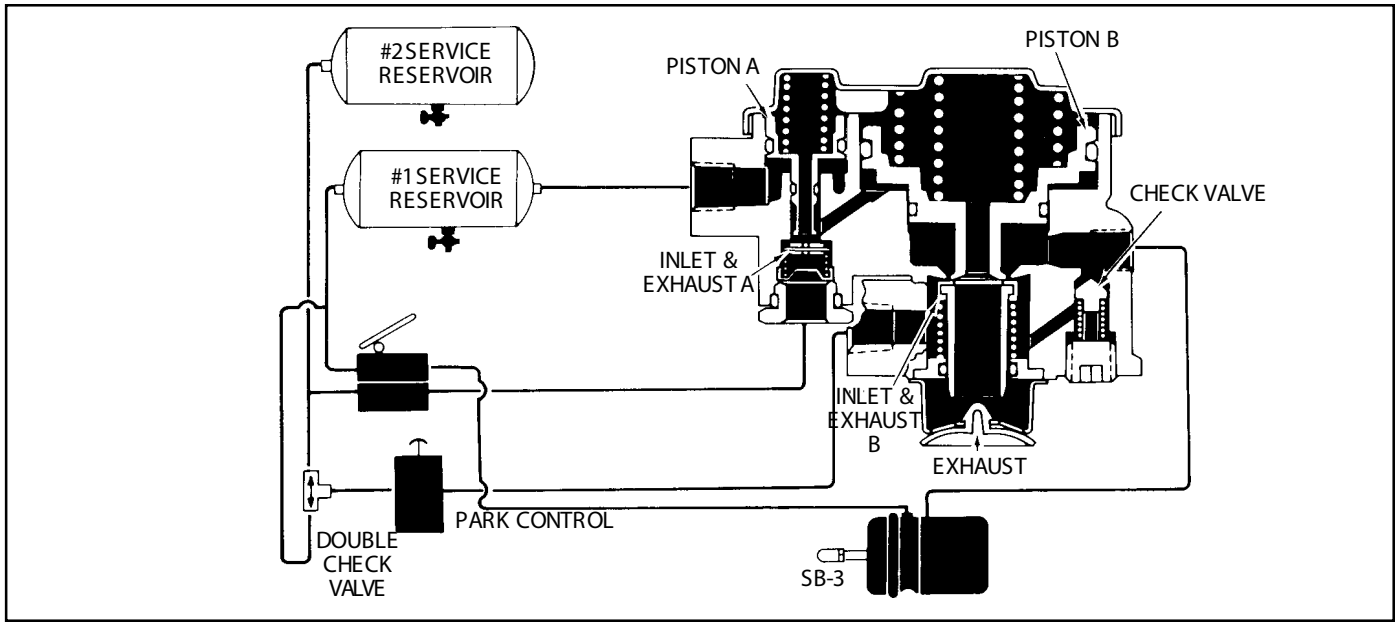

FIGURE 9 - PARK APPLICATION

OPERATION - PARKING

If both systems #1 and #2 are intact and the park control valve is placed in the "park" or exhaust position, the SR-1 supply of air pressure and the air pressure in the spring brake actuator cavities is exhausted. The single check valve in the SR-1 assists this exhaust of air pressure from the spring brake by allowing the air below piston B to flow back out the open exhaust of the park control valve. When air pressure below piston B has dropped sufficiently, piston B moves down opening the inlet of valve B thus providing an additional exhaust passage for air exhausting through the SR-1 from the spring brakes.

PREVENTIVE MAINTENANCE

Every 3600 operating hours, 100,000 miles or yearly, disassemble valve, clean all parts in mineral spirits. Replace all rubber parts, and any part worn or damaged with genuine Bendix parts.

SERVICE CHECKS

OPERATING CHECKS

Block vehicle and hold by means other than vehicle brakes. Charge air brake system to governor cut-out pressure.

1. Place parking control valve in the "park" position. Observe that the spring brake actuators apply promptly. In the delivery port of the valve install a test gauge known to be accurate. Place the parking control valve in the "release" position. Observe that the spring brake actuators release fully.
2. With the parking control valve in the "release" position, note the gauge pressure reading. (Check the vehicle manual for the correct spring brake actuator hold-off pressure.) If the pressure reading is incorrect, the valve must be repaired or replaced.
3. Place the parking control valve in the "park" position, the gauge reading should drop to zero promptly. A slow release of pressure may indicate faulty operation of the single check valve (within the Modulating Valve.)
4. Place the parking control valve in the "release" position. Locate the number one service reservoir and drain it completely.

   Apply the foot brake valve several times and note that the pressure reading on the gauge decreases each time the foot brake valve is applied. After several applications, pressure on the gauge will drop to the point where release of the spring brake actuators will no longer occur.

LEAKAGE CHECK

With the air system fully charged and the parking control valve in the "release" position, coat the exhaust port and around the valve corner with a soap solution. Slight leakage is permitted.

If the SR-1 Spring Brake Valve does not function as described above, or leakage is excessive, it is recommended that it be returned to the nearest Bendix authorized distributor for a new or remanufactured valve. If this is not possible, the valve can be repaired with genuine Bendix parts in which case the following should prove helpful.

Note: A maintenance kit for the SR-1 Spring Brake Valve is available from any authorized Bendix outlet. All parts necessary for minor repair are included.

REMOVAL

1. Prior to removing the SR-1 apply the parking brakes and drain all the vehicle reservoirs.
2. Identify all air lines before disconnecting.
3. Remove the two mounting bolts from the SR-1 and remove the valve.

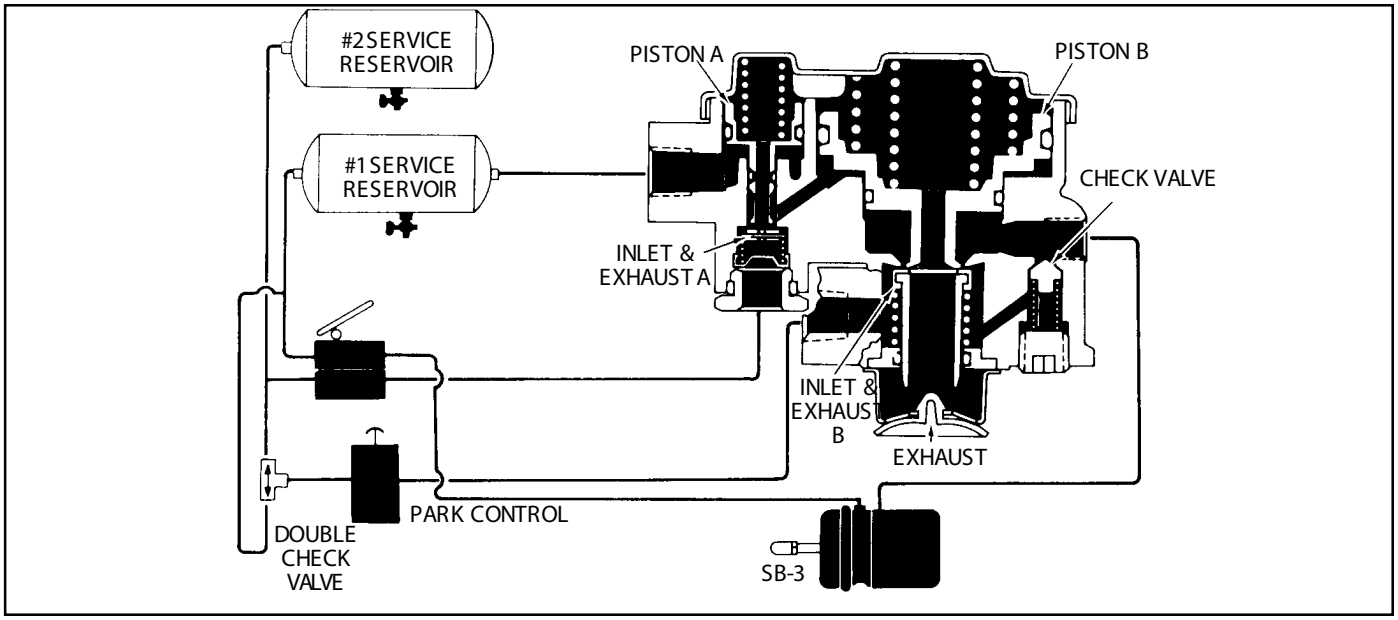

FIGURE 7 - SERVICE APPLICATION - LOSS OF #2 RESERVOIR

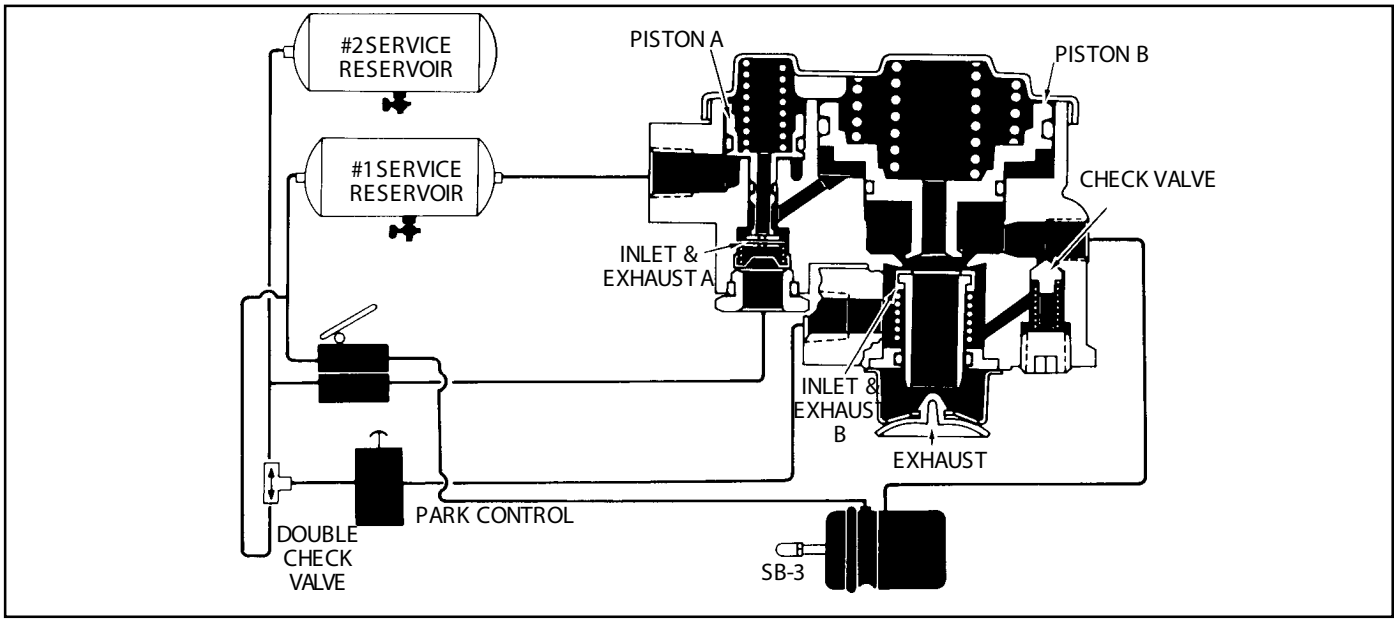

FIGURE 8 - SERVICE APPLICATION - LOSS OF #1 RESERVOIR

circuit of the dual brake valve will apply the service section of the spring brake actuators.

OPERATION - SERVICE APPLICATION WITH LOSS OF NO. 1 RESERVOIR PRESSURE

If air pressure in the No. 1 service reservoir falls below approximately 55 P.S.I., the pressure beneath piston A is insufficient to resist the spring force above and piston A moves into contact with valve A. Initial contact between piston A and valve A closes the hollow exhaust passage of piston A. Continued movement of the piston opens the inlet of valve A.

The No. 2 service reservoir and the park control valve are protected from pressure loss by the action of the Double Check Valve.

When a service application of the dual brake valve is made, air delivered from the No. 2 delivery circuit of the dual brake valve enters the SR-1 control port. Air entering the control port, now moves past the inlet of valve A and is conducted through a passage in the body to the underside of piston B. The added force of air pressure beneath piston B, moves up, opening the exhaust of valve B. When the exhaust of valve B opens, air pressure trapped in the emergency section of the spring brake actuator is allowed to escape resulting in a brake application by the emergency section. The amount of air pressure released from the spring brake is in proportion to the amount of air pressure delivered to the control port of the SR-1 by the No. 2 delivery of the dual brake valve.

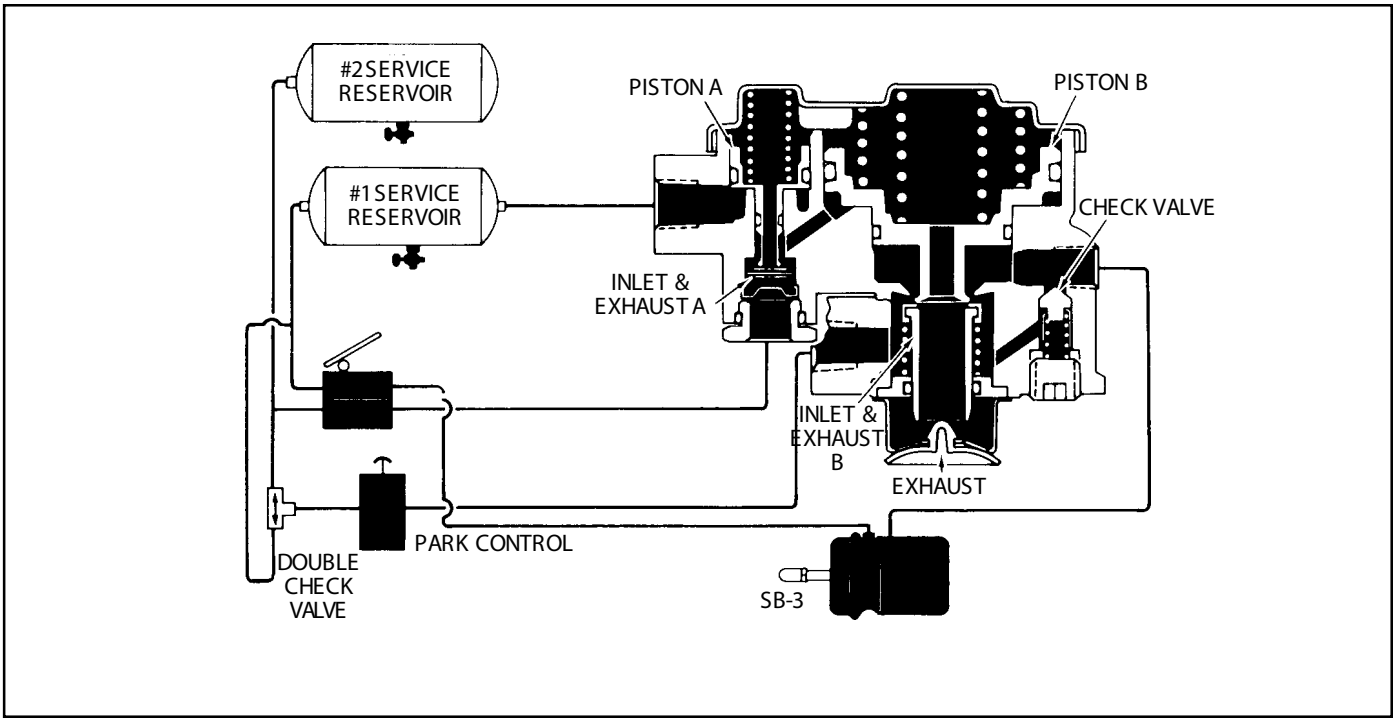

FIGURE 5 - SYSTEM FULLY CHARGED

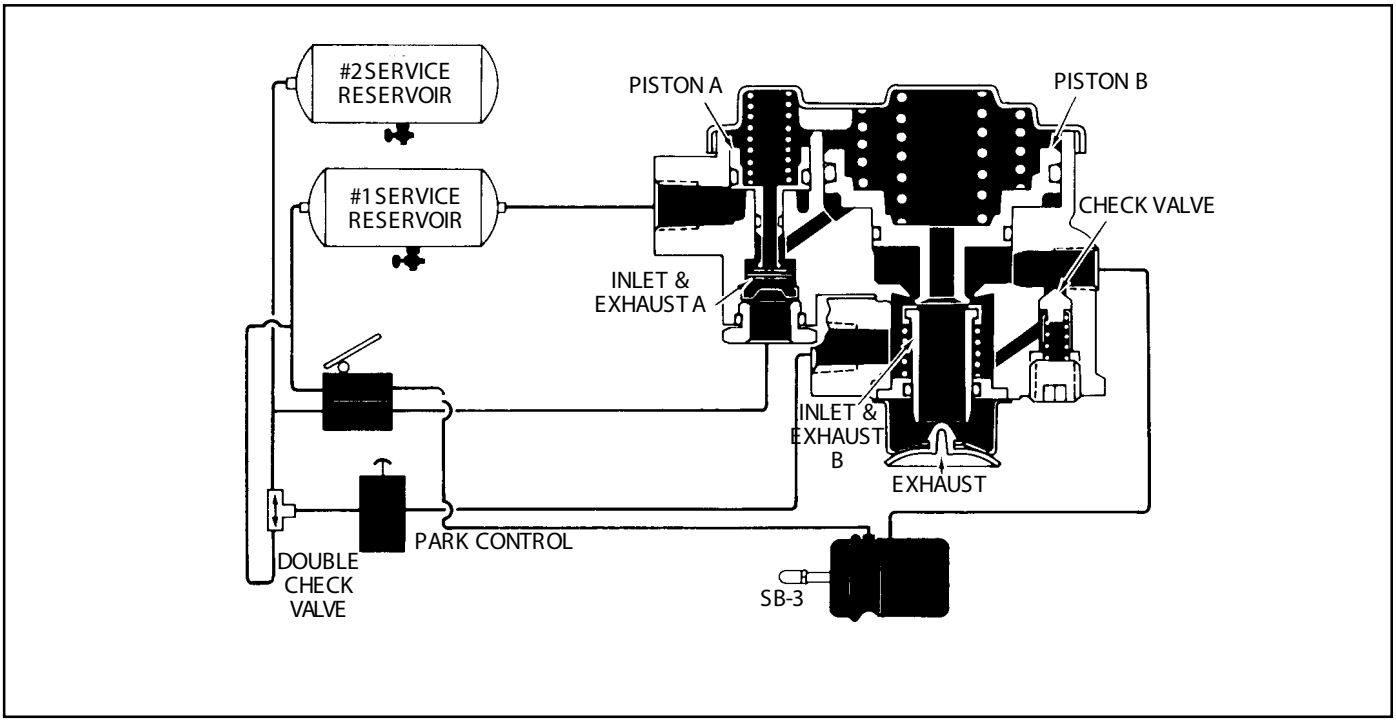

FIGURE 6 - NORMAL SERVICE APPLICATION

OPERATION - NORMAL SERVICE RESERVOIRS 1& 2 CHARGED

When a service application is made by actuating the dual brake valve; air, from the No. 2 delivery circuit is delivered from the brake valve to the control port, and is stopped at the closed inlet of valve A. No movement of the internal components of the SR-1 takes place. Air from the No. 1 delivery circuit of the dual brake valve actuates the service section of the spring brake actuators.

OPERATION - SERVICE APPLICATION WITH LOSS OF NO. 2 RESERVOIR PRESSURE

In the event air pressure is lost in No. 2 reservoir, the No. 1 reservoir as well as the parking control valve will be protected through the action of the double and single check valves in the air system. A service application of the dual air brake valve in this situation results in little or no air being delivered from the No. 2 delivery circuit to the control port of the SR-1. No movement of the SR-1 internal components takes place. Braking is assured because the No. 1 service reservoir is protected by a check valve and the No. 1 delivery

AlliedSignal

Bendix™

BW1589 © AlliedSignal Truck Brake Systems Co. 1/1999. Printed in USA.

AlliedSignal Bendix

Service Data

SD-03-830

E-8P & E-10P DUAL BRAKE VALVES

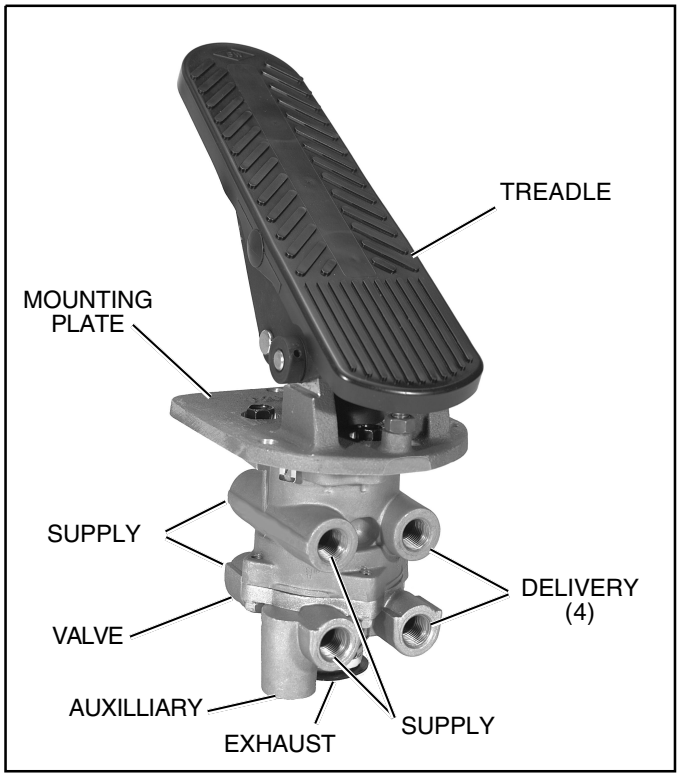

*FIGURE 1 - **E-8P***

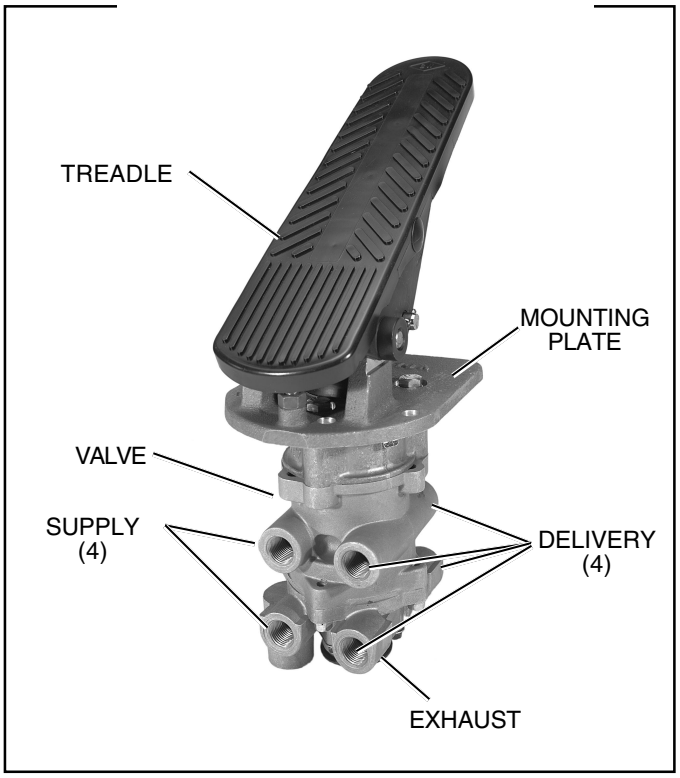

*FIGURE 2 - **E-10P***

DESCRIPTION

Refer to Figures 4, 5 and 6 for item numbers referenced in parenthesis.

The E-8P (Figure 1) and E-10P (Figure 2) Dual Brake Valves are floor mounted, treadle operated type brake valves with two separate supply and delivery circuits for service (primary and secondary) braking, which provides the driver with a graduated control for applying and releasing the vehicle brakes.

The E-10P Dual Brake Valve (Figure 2) is similar to the E-8P Dual Brake Valve except that a metal coil spring (5) housed in an upper body assembly replaces the rubber spring (27) used in the E-8P valve. The use of a metal coil spring (and the upper body assembly) provides greater treadle travel and, therefore, provides the driver with a less sensitive "feel" when making a brake application. The E-10P Dual Brake Valve is generally used on busses, where smooth brake applications contribute to passenger comfort.

The circuits in the E-8P/E-10P Dual Brake Valves are identified as follows: The No. 1 or primary circuit is that portion of the valve between the spring seat which contacts the plunger and the relay piston; the No. 2 or secondary circuit is that portion between the relay piston and the exhaust cavity.

The primary circuit of the valve is similar in operation to a standard single circuit air brake valve and under normal operating conditions the secondary circuit is similar in operation to a relay valve.

Both primary and secondary circuits of the brake valve use a common exhaust protected by an exhaust diaphragm.

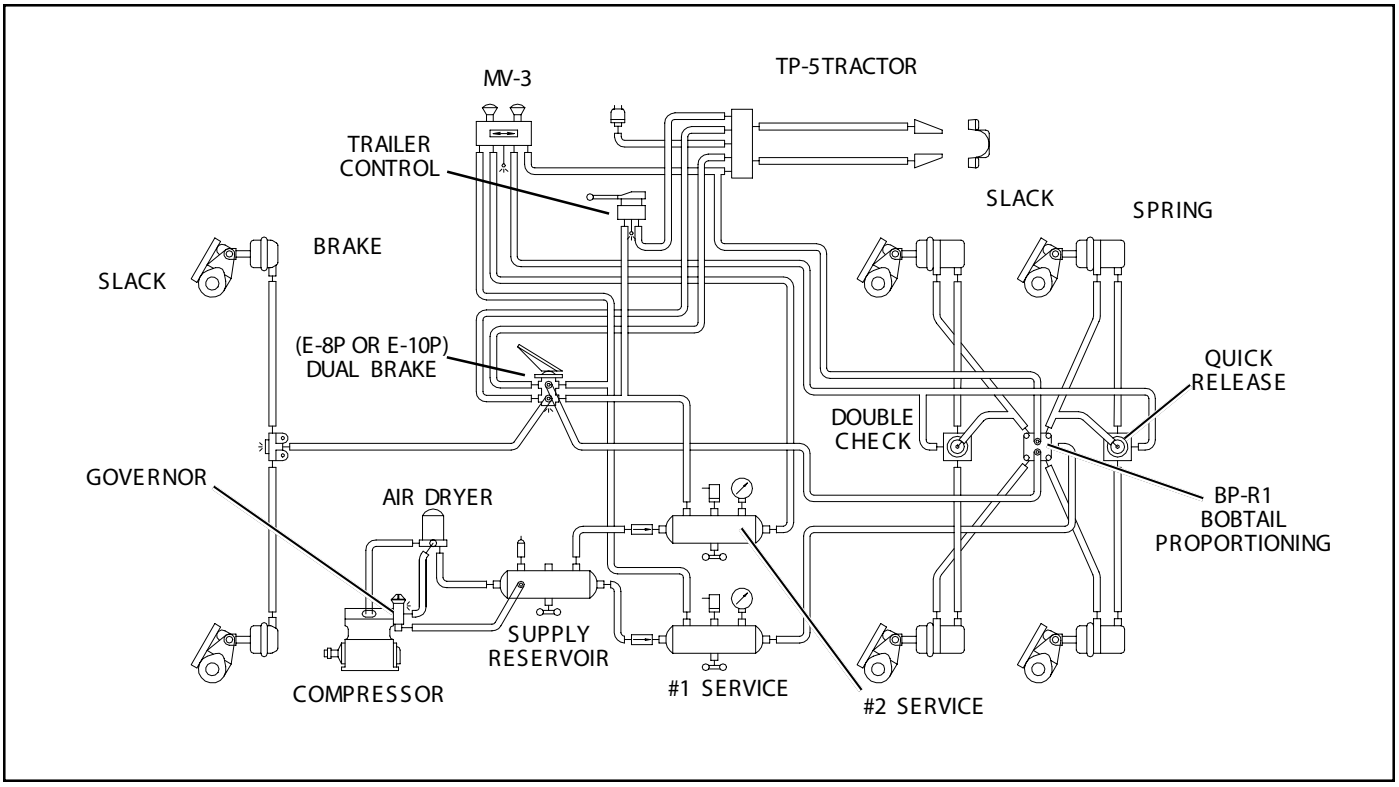

FIGURE 3 - ***TYPICAL PIPING SCHEMATIC***

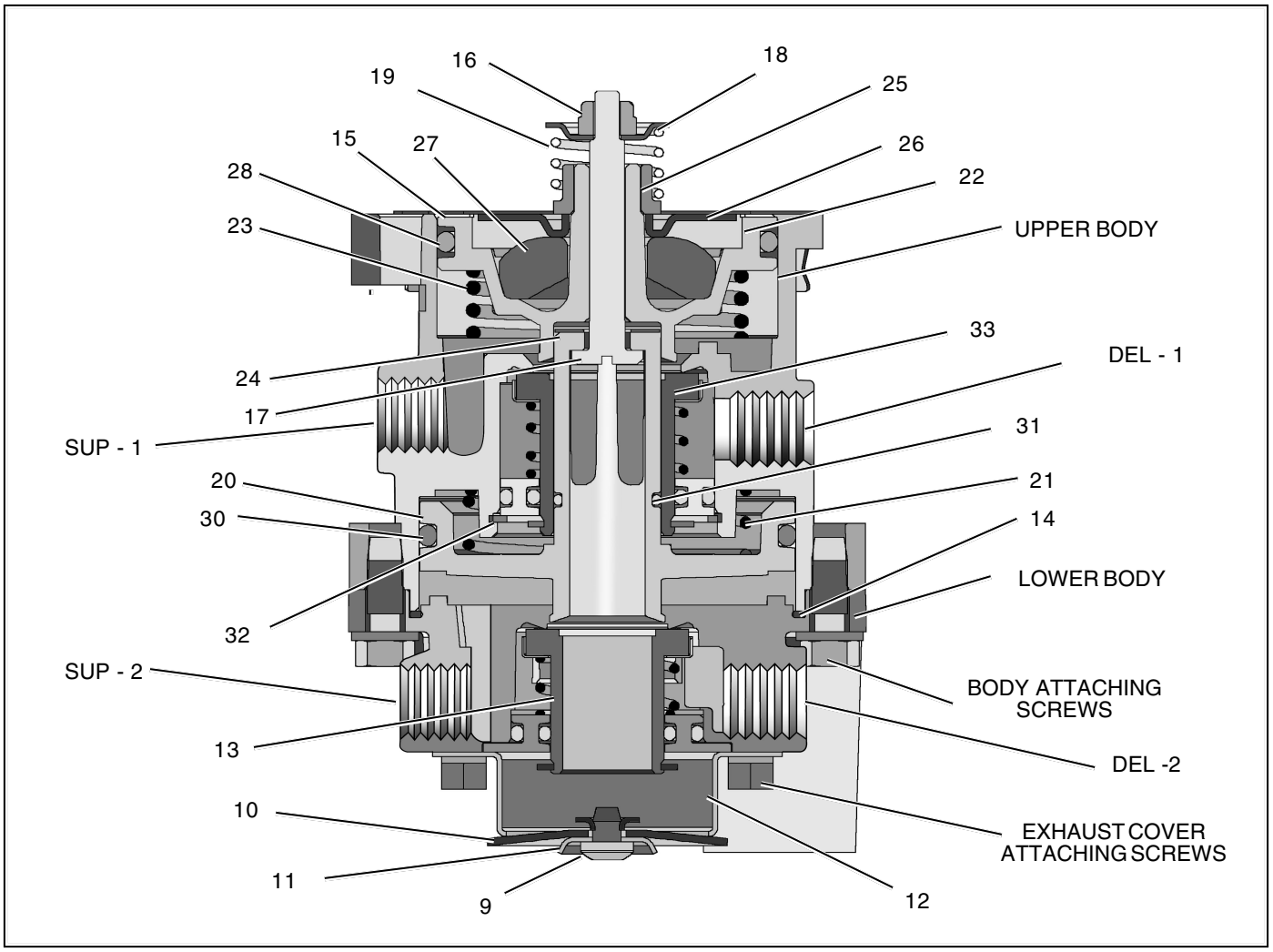

FIGURE 4 - ***E-8P SECTIONAL VIEW***

2. Reconnect all air lines to the valve using the identification made during VALVE REMOVAL step 1.
3. After installing the brake valve assembly, perform the "OPERATION AND LEAKAGE CHECKS" before placing the vehicle in service.

IMPORTANT: MAINTENANCE PRECAUTIONS

When working on or around a vehicle, the following general precautions should be observed:

1. **Park the vehicle on a level surface, apply the parking brakes, and always block the wheels.**
2. **Stop the engine when working around the vehicle.**
3. **Drain the air pressure from all reservoirs before beginning ANY work on the vehicle.**
4. **Following the vehicle manufacturer's recommended procedures, deactivate the electrical system in a manner that removes all electrical power from the vehicle.**
5. **When working in the engine compartment the engine should be shut off. Where circumstances require that the engine be in operation, EXTREME CAUTION should be used to prevent personal injury resulting from contact with moving, rotating, leaking, heated, or electrically charged components.**
6. **Never connect or disconnect a hose or line containing pressure; it may whip. Never remove a component or plug unless you are certain all system pressure has been depleted.**
7. **Never exceed recommended pressures and always wear safety glasses.**
8. **Do not attempt to install, remove, disassemble, or assemble a component until you have read and thoroughly understand the recommended procedures. Use only the proper tools and observe all precautions pertaining to use of those tools.**
9. **Use only genuine Bendix replacement parts, components, and kits. Replacement hardware, tubing, hose, fittings, etc. should be of equivalent size, type, and strength as original equipment and be designed specifically for such applications and systems.**
10. **Components with stripped threads or damaged parts should be replaced rather than repaired. Repairs requiring machining or welding should not be attempted unless specifically approved and stated by the vehicle or component manufacturer.**
11. **Prior to returning the vehicle to service, make certain all components and systems are restored to their proper operating condition.**

11. Remove the relay piston (20), relay piston spring (21), primary piston (**E-8P:** 22, **E-10P:** 2) and primary piston return spring (**E-8P:** 23, **E-10P:** 6) from the upper body. Use care so as not to nick seats.
12. A small washer (24) will be found in the cavity of the lower side of the primary piston (**for E-8P**: 22, **for E-10P**: 2).
13. For **E-8P only:** Disassemble the primary piston by rotating the spring seat nut (25) counterclockwise. Separate the spring seat nut, spring seat (26), and rubber spring (27) and remove the piston o-ring (28).
14. Remove the large and small o-rings (30 & 31) from the relay piston (20).
15. Remove the retaining ring (32) securing the primary inlet and exhaust valve assembly (33) in the upper body and remove the valve assembly.

CLEANING AND INSPECTION

1. Wash all metal parts in mineral spirits and dry.
2. Inspect all parts for excessive wear or deterioration.
3. Inspect the valve seats for nicks or burrs.
4. Check the springs for cracks or corrosion.
5. Replace all rubber parts and any part not found to be serviceable during inspection, use only genuine Bendix replacement parts.

ASSEMBLY

Prior to reassembling, lubricate all o-rings, o-ring grooves, piston bores, and metal to metal moving surfaces with Dow Corning 55 o-ring lubricant (Bendix piece number 291126).

Note: All torques specified in this manual are **assembly** torques and can be expected to fall off, after assembly is accomplished. **Do not retorque** after initial assembly torques fall.

1. Install the primary inlet and exhaust assembly (33) in the upper body and replace the retaining ring (32) to secure it. Be sure the retaining ring is seated completely in its groove.
2. Install the large and small o-rings (30 & 31) on the relay piston (20).
3. **For E-8P only:** Install o-ring (28) in the primary piston (22) o-ring groove.
4. **For E-8P only:** Install the rubber spring (do not lubricate) (27), concave side down in the primary piston (22) and place the spring seat (26), flat side up, over the rubber spring.
5. **For E-8P only:** Install the primary piston spring seat nut (25), with its hex closest to the spring seat, and rotate clockwise until the top surface of the spring seat is even with the top surface of the piston. Set aside.
6. Place relay piston spring (21) in concave portion of relay piston (20) and install relay piston through primary inlet/exhaust assembly (33) into under side of upper body.
7. **For E-10P only:** Install o-ring (4) on adapter (1) and install adapter on upper body. Install o-ring (34) on primary piston (2).
8. Place screwdriver, blade up, in vise. Insert stem (17) through the relay piston upper body sub assembly, slide this assembly over the blade of the secured screwdriver, engage the screwdriver blade in the slot in the head of the stem.
9. Place the washer (24) over the stem (17) and on top of the relay piston (20).
10. Install primary return spring (**E-8P**: 23, **E-10P**: 6) in upper body piston bore.
11. **For E-8P only:** Install the primary piston rubber spring sub assembly (steps 4 & 5) over the stem, into the upper body piston bore. **For E-10P:** Install primary piston sub-assembly (reference step 7).
12. Compress piston(s) (**For E-8P:** the relay piston (20), **for E-10P:** the primary and relay pistons (2 & 20)) and retaining ring into the upper body from either side and hold compressed, either manually or mechanically. **See the cautionary note under step 8 in the Disassembly section of this manual.**
13. Place the stem spring (19) (**E-8P:** place over the spring seat nut (25)), the spring seat (18) (concave side up) and lock nut (16) on the stem (17). Torque to 20 - 30 inch pounds.
14. **For E-8P only:** Install the primary piston retainer (15) over the piston, making certain all three lock tabs have engaged the outer lip of the body.
15. **For E-10P only:** Install coil spring (5), spring seat (7), and retaining ring (8) .
16. Replace the rubber seal ring (14) on the lower body.
17. Install the 4 hex head cap screws securing the lower body to the upper body. Torque to 30 - 60 inch pounds.
18. Install the secondary inlet and exhaust valve assembly (13) on the lower body.
19. Install the screws that secure the exhaust cover (12) to the lower body. Torque to 20 - 40 inch pounds.
20. Secure the screw (9) holding the exhaust diaphragm (10) and the diaphragm washer (11) to the exhaust cover (12). Torque to 5 - 10 inch pounds.
21. Install all air line fittings and plugs making certain thread sealant material does not enter valve.

VALVE INSTALLATION

1. Install the assembled brake valve on the vehicle.

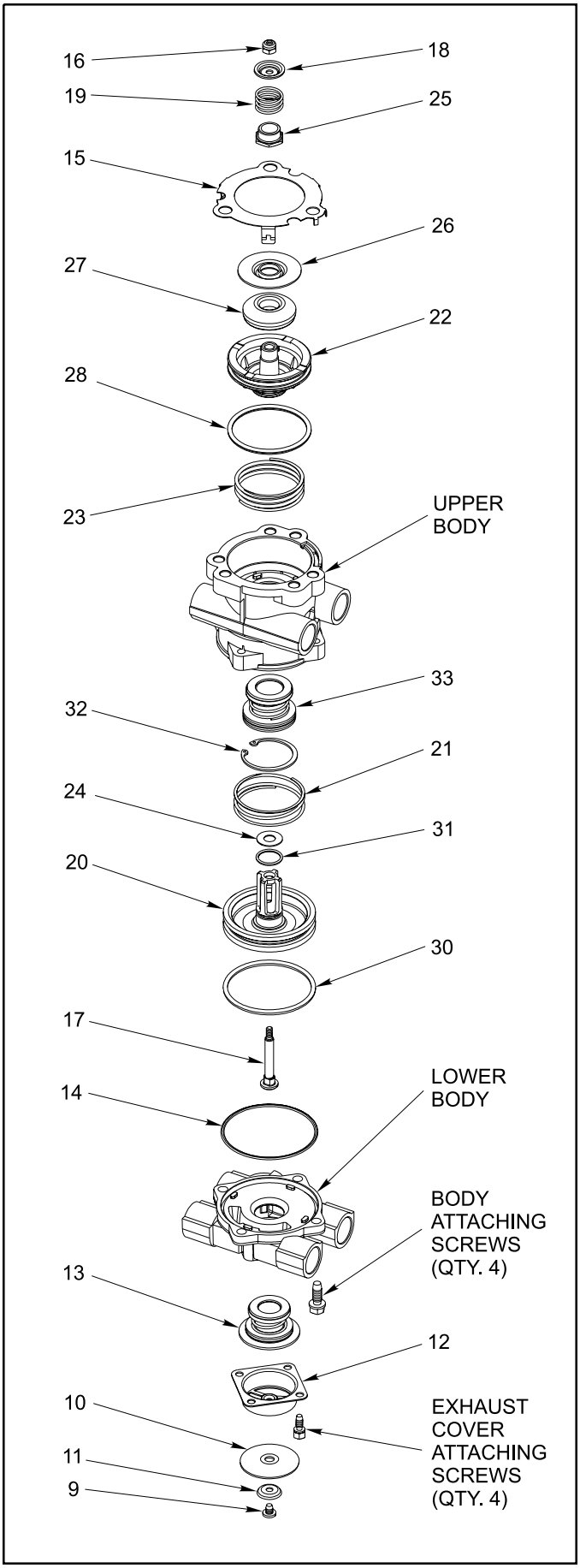

FIGURE 5 - **E-8P BRAKE VALVE - EXPLODED VIEW**

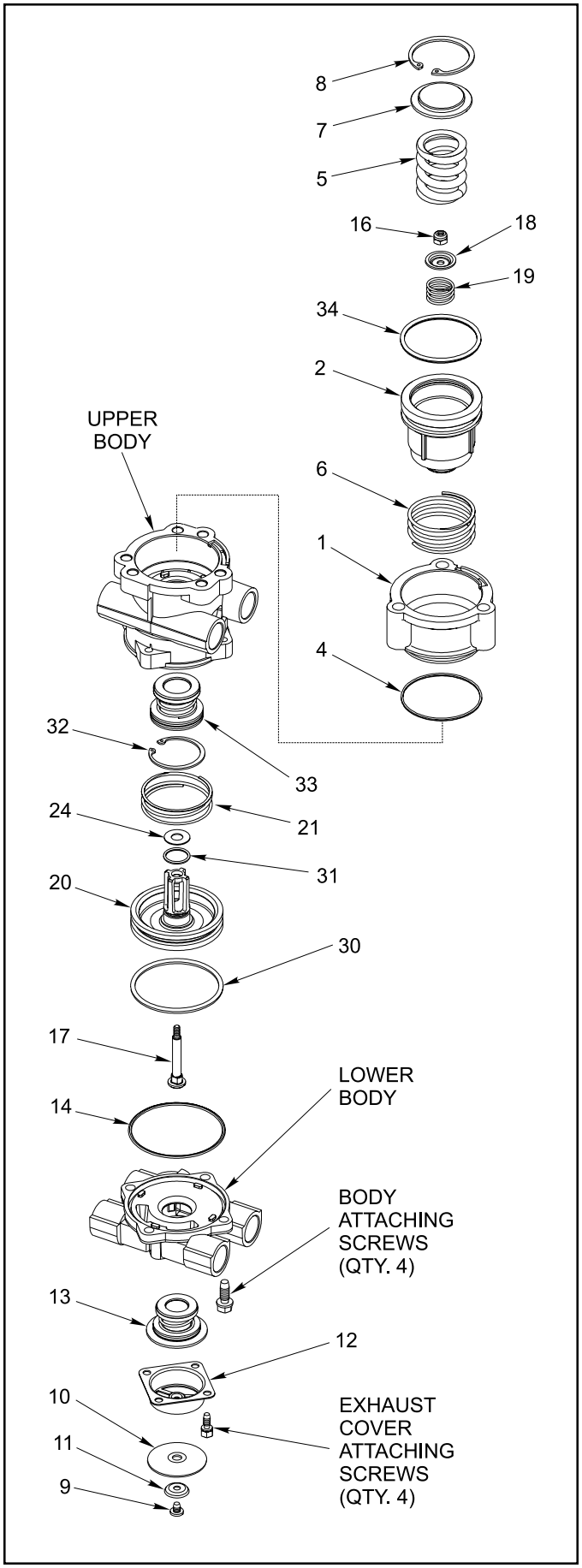

FIGURE 6 - **E-10P BRAKE VALVE - EXPLODED VIEW**

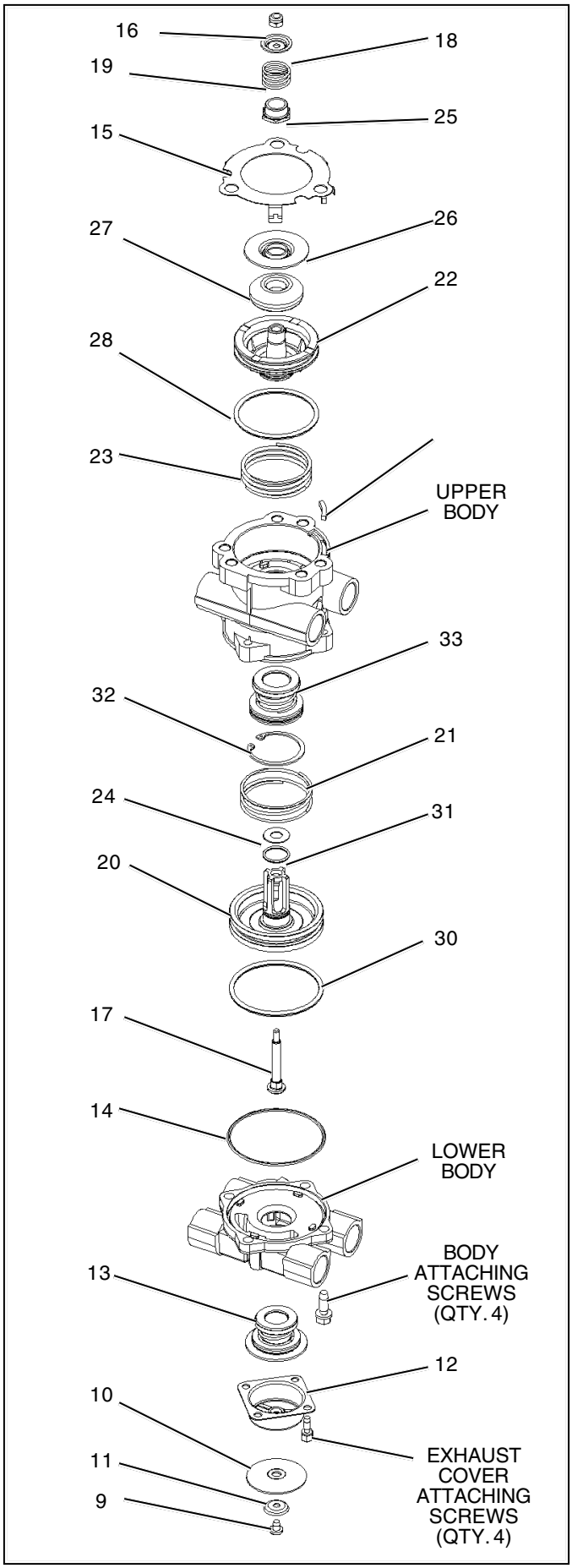

FIGURE 5 - ***E-8P BRAKE VALVE - EXPLODED VIEW***

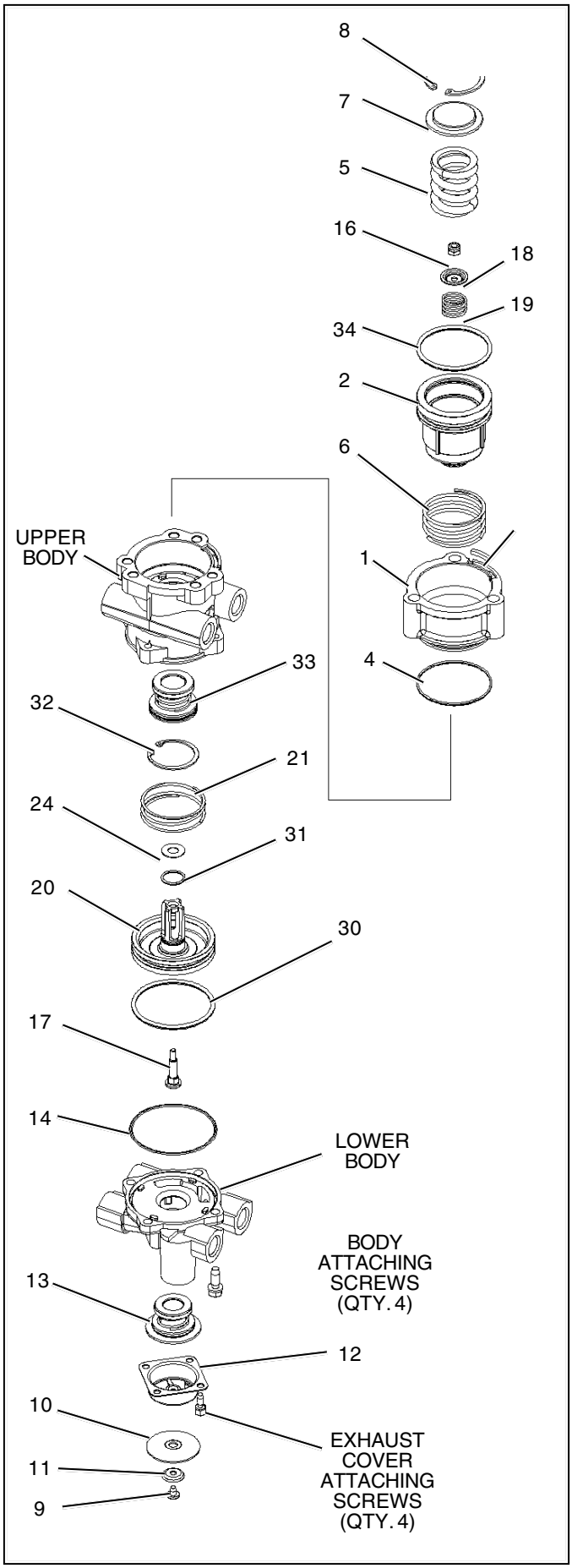

FIGURE 6 - ***E-10P BRAKE VALVE - EXPLODED VIEW***

Using light oil, lubricate the treadle roller, roller pin, and hinge pin.

Check the rubber plunger boot for cracks, holes or deterioration and replace if necessary. Also, check mounting plate and treadle for integrity.

Apply 2 to 4 drops of oil between plunger and mounting plate - **do not over oil!**

Every year, or 100,000 miles, or 3,600 operating hours:

Disassemble, clean parts with mineral spirits, replace all rubber parts, or any part worn or damaged. Check for proper operation before placing vehicle in service.

SERVICE CHECKS

OPERATING CHECK

Check the delivery pressure of both primary and secondary circuits using accurate test gauges. Depress the treadle to several positions between the fully released and fully applied positions, and check the delivered pressure on the test gauges to see that it varies equally and proportionately with the movement of the brake pedal.

After a full application is released, the reading on the test gauges should fall off to zero promptly. It should be noted that the primary circuit delivery pressure will be about 2 PSI greater than the secondary circuit delivery pressure with both supply reservoirs at the same pressure. This is normal for this valve.

Important: A change in vehicle braking characteristics or a low pressure warning may indicate a malfunction in one or the other brake circuit, and although the vehicle air brake system may continue to function, the vehicle should not be operated until the necessary repairs have been made and both braking circuits, including the pneumatic and mechanical devices, are operating normally. Always check the vehicle brake system for proper operation after performing brake work and before returning the vehicle to service.

LEAKAGE CHECK

1. Make and hold a high pressure (80 psi) application.
2. Coat the exhaust port and body of the brake valve with a soap solution.
3. Leakage permitted is a one inch bubble in 3 seconds. If the brake valve does not function as described above or leakage is excessive, it is recommended that it be replaced with a new or remanufactured unit, or repaired with genuine Bendix parts available at authorized Bendix parts outlets.

Refer to figures 4, 5 and 6 for item numbers referenced in parenthesis.

REMOVAL

1. Chock the vehicle wheels or park the vehicle by mechanical means. (Block and hold vehicle by means other than air brakes.) Drain all air system reservoirs.
2. Identify and disconnect all supply and delivery lines at the brake valve.
3. Remove the brake valve and treadle assembly from the vehicle by removing the three cap screws on the outer bolt circle of the mounting plate. The basic brake valve alone can be removed by removing the three cap screws on the inner bolt circle.

DISASSEMBLY (Figures 4, 5 and 6)

1. If the entire brake valve and treadle assembly was removed from the vehicle, remove the three cap screws securing the treadle assembly to the basic brake valve.
2. Remove the screw (9) securing the exhaust diaphragm (10) and washer (11) to the exhaust cover (12).
3. Remove the four screws that secure the exhaust cover (12) to the lower body.
4. Remove the secondary inlet and exhaust valve assembly (13) from the lower body.
5. Remove the four hex head cap screws securing the lower body to the upper body and separate the body halves.
6. Remove the rubber seal ring (14) from the lower body.
7. **For E-8P only:** While applying thumb pressure to the primary piston (22), lift out and up on the three lock tabs of the primary piston retainer (15).
8. **For E-10P only:** While depressing spring seat (7), remove retaining ring (8). Remove spring seat (7) and coil spring (5).

   Caution: Before proceeding with the disassembly, refer to Figures 3 and 4 and note that the lock nut (16) and stem (17) are used to contain the primary piston return spring (**for E-8P:** 23, **for E-10P:** 6), stem spring (19), and the relay piston spring (21). The combined force of these springs is approximately 50 pounds and care must be taken when removing the lock nut as the spring forces will be released. It is recommended that the primary piston and relay piston be manually or mechanically contained while the nut and stem are being removed.
9. Using a 3/8" wrench, hold the lock nut (16) on the threaded end of the stem (17). Insert a screwdriver to restrain the stem, remove the lock nut (16), spring seat, (18) and stem spring (19).
10. **For E-10P only:** Remove adapter (1) and o-ring (4). Remove the primary piston (2) from adapter (1) and o-ring (34) from the primary piston (2).

OPERATION - Refer to Figure 3

APPLYING: NORMAL OPERATION - NO. 1 OR PRIMARY CIRCUIT PORTION

When the brake treadle is depressed, the plunger exerts force on the spring seat (26), graduating spring (23), and primary piston (22). The primary piston, which contains the exhaust valve seat, closes the primary exhaust valve. As the exhaust valve closes, the primary inlet valve is moved off its seat allowing primary air to flow out the No. 1 or primary delivery port.

APPLYING: NORMAL OPERATION - NO. 2 OR SECONDARY CIRCUIT

When the primary inlet valve (33) is moved off its seat, air is permitted to pass through the bleed passage and enters the relay piston cavity. The air pressure moves the relay piston (20), which contains the exhaust seat, and closes the secondary exhaust valve. As the secondary exhaust valve closes, the inlet valve (13) is moved off its seat allowing the secondary air to flow out the delivery of the same circuit. Because of the small volume of air required to move the relay piston (20), action of the secondary circuit of the valve is almost simultaneous with the primary circuit portion.

APPLYING: LOSS OF AIR IN THE NO. 2 OR SECONDARY CIRCUIT

Should air be lost in the No. 2 or secondary circuit, the No. 1 or primary circuit will continue to function as described above under *Normal Operation: No.1 or Primary Circuit Portion*.

APPLYING: LOSS OF AIR IN THE NO. 1 OR PRIMARY CIRCUIT

Should air be lost in the primary circuit, the function will be as follows: As the brake treadle is depressed and no air pressure is present in the primary circuit supply and delivery ports, the primary piston (22) will mechanically move the relay piston (20) , allowing the piston to close the secondary exhaust valve and open the secondary inlet valve and allow air to flow out the secondary delivery port.

BALANCED: NO. 1 OR PRIMARY CIRCUIT

When the primary delivery pressure acting on the primary piston (22) equals the mechanical force of the brake pedal application, the primary piston (22) will move and the primary inlet valve (33) will close, stopping further flow of air from the primary supply line through the valve. The exhaust valve remains closed preventing any escape of air through the exhaust port.

BALANCED: NO. 2 OR SECONDARY CIRCUIT

When the air pressure on the delivery side of the relay piston (20) approaches that being delivered on the primary side of the relay piston, the relay piston moves closing the secondary inlet valve and stopping further flow of air from the supply line through the valve. The exhaust remains closed as the secondary delivery pressure balances the primary delivery pressure.

When applications in the graduating range are made, a balanced position in the primary circuit is reached as the air pressure on the delivery side of the primary piston (22) equals the effort exerted by the driver's foot on the treadle. A balanced position in the secondary portion is reached when air pressure on the secondary side of the relay piston (20) closely approaches the air pressure on the primary side of the relay piston.

When the brake treadle is fully depressed, both the primary and secondary inlet valves remain open and full reservoir pressure is delivered to the actuators.

RELEASING: NO. 1 OR PRIMARY CIRCUIT

With the brake treadle released, mechanical force is removed from the spring seat (26), graduating spring (23), and primary piston (22). Air pressure and spring load moves the primary piston, opening the primary exhaust valve, allowing air pressure in the primary delivery line to exhaust out the exhaust port.

RELEASING: NO. 2 OR SECONDARY CIRCUIT

With the brake treadle released, air is exhausted from the primary circuit side of the relay piston (20). Air pressure and spring load move the relay piston, opening the secondary exhaust valve, allowing air pressure in the secondary delivery line to exhaust out the exhaust port.

PREVENTIVE MAINTENANCE

Important: Review the warranty policy before performing any intrusive maintenance procedures. An extended warranty may be voided if intrusive maintenance is performed during this period.

Because no two vehicles operate under identical conditions, maintenance and maintenance intervals will vary. Experience is a valuable guide in determining the best maintenance interval for any one particular operation.

Visually check for physical damage to the brake valve such as broken air lines and broken or missing parts.

Every 3 months, or 25,000 miles or 900 operating hours:

Clean any accumulated dirt, gravel, or foreign material away from the heel of the treadle, plunger boot, and mounting plate.

AlliedSignal

Bendix™

BW2066 © AlliedSignal Truck Brake Systems Co. 7/1999. Printed in USA.

AlliedSignal Bendix

Service Data

SD-03-901*

QR AND QR-1 QUICK RELEASE VALVES

*Formerly SD-03-69

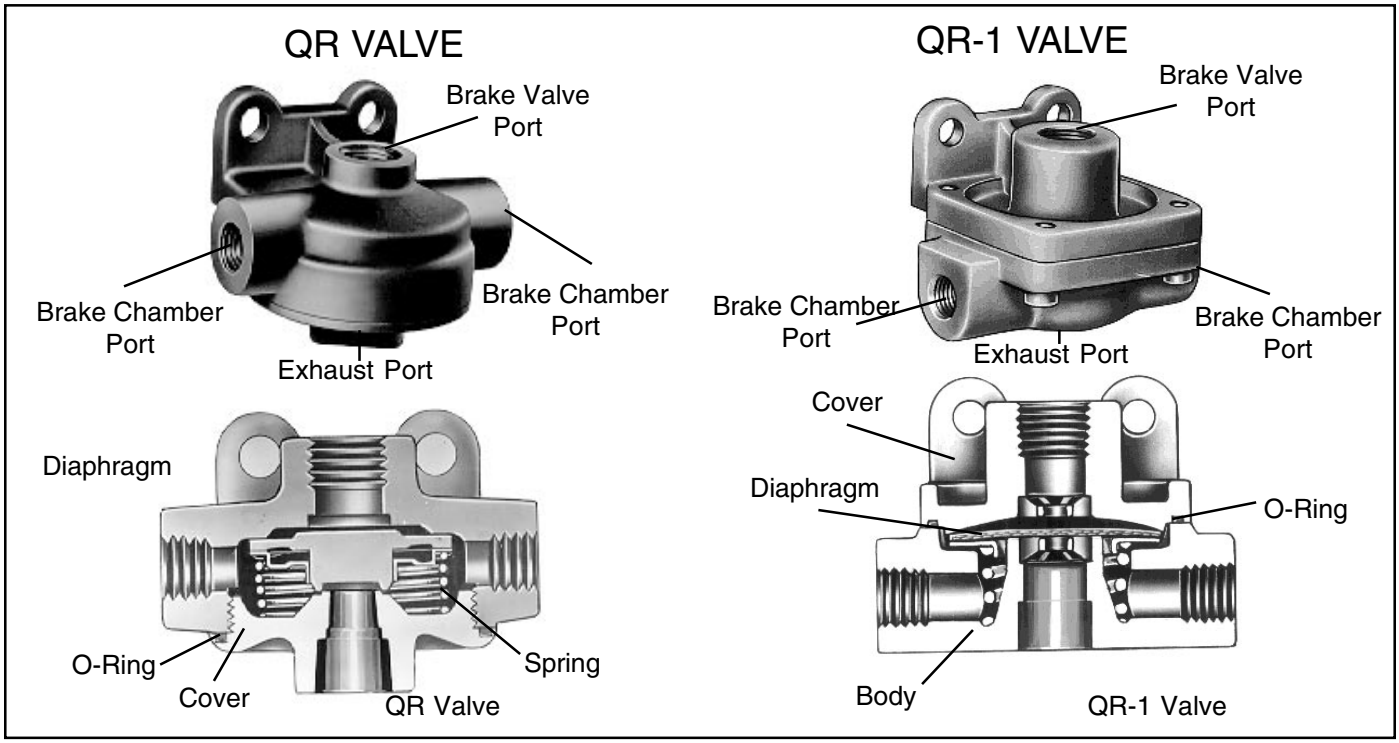

FIGURE 1

DESCRIPTION

The function of the Quick Release Valve is to speed up the exhaust of air from the air chambers. It is mounted close to the chambers it serves. In its standard configuration the valve is designed to deliver within one (1) psi of control pressure to the controlled device; however, for special applications the valve is available with greater differential pressure designed into the valve.

Reference Figure 1, two styles of Quick Release Valves are available and are functionally the same; the QR valve, which is of older design and utilizes a spring and spring seat, and the QR-1 valve, which in its standard configuration does not employ a spring or spring seat.

(Note: AR-1 Valves with a pressure differential employ a spring and spring seat.)

Porting consists of one (1) brake valve port, two (2) delivery ports and one (1) exhaust port.

OPERATION

When a brake application is made, air pressure enters the brake valve port; the diaphragm moves down, sealing the exhaust. At the same time, air pressure forces the edges of the diaphragm down and air flows out the delivery port.

When air pressure being delivered (beneath the diaphragm) equals the pressure being delivered by the brake valve (above the diaphragm), the outer edge of the diaphragm will seal against the body seat. The exhaust port is still sealed by the center portion of the diaphragm when the brake valve application is released; the air pressure above the diaphragm is released back through the brake valve exhaust; air pressure beneath the diaphragm forces the diaphragm to rise, opening the exhaust, allowing air in the chambers to exhaust.

PREVENTIVE MAINTENANCE

Every 12 months, 100,000 miles or 3600 operating hours; disassemble valve, wash metal parts in mineral spirits, wipe rubber parts dry. It is recommended that all rubber parts be replaced. Inspect all parts and replace any part showing signs of wear or deterioration.

OPERATING AND LEAKAGE TESTS

While holding a foot brake valve application:

1. Coat exhaust port with soap solution; leakage of a one (1) inch bubble in three (3) seconds is permitted.
2. Coat body and cover with soap solution. No leakage perm itted between body and cover.

If the valve does not function as described, or if leakage is excessive, it is recommended that it be replaced with a new or remanufactured unit, or repaired with genuine Bendix parts.

REMOVING AND INSTALLING

REMOVING

Block vehicle wheels and/or hold vehicle by means other than air brakes.

Drain all air brake system reservoirs.

Disconnect air lines from valve.

Remove mounting bolts, then valve.

INSTALLING

Mount valve with exhaust port pointing down; securely tighten mounting bolts.

Connect air lines to valve (brake valve application line to top port; brake chamber line to side ports.)

DISASSEMBLY

QR VALVE

1. Using wrench on square portion of exhaust port, remove cover.
2. Remove spring, spring seat and diaphragm. Remove cover O-Ring.

QR-1 VALVE

1. Remove four screws.
2. Remove spring and spring seat {if so equipped).
3. Remove diaphragm.
4. Remove cover O-Ring.

CLEANING AND INSPECTION

Clean all metal parts in mineral spirits. Wipe all rubber parts clean.

It is recommended that all rubber parts and any other part showing signs of wear or deterioration be replaced with genuine Bendix parts.

ASSEMBLY

QR VALVE

1. Position spring seat over the diaphragm and then install into body.
2. Install spring and cover O-Ring.
3. Install cover; tighten securely. (Torque to 150-400 inch pounds.)

QR-1 VALVE

1. If valve is equipped within spring and spring seat:
a. Position spring in body.
b. Position diaphragm over spring seat.
c. Install O-Ring in cover groove; install cover and tighten screws evenly and securely. (Torque to 30-60 inch pounds.)
2. If valve is not equipped with spring and spring seat:
a. Install diaphragm.
b. Install O-Ring in cover groove; install cover and tighten screws evenly and securely. (Torque to 30-60 inch pounds.)
3. Perform tests as outlined in “Operating and Leakage Tests” section.

IMPORTANT! PLEASE READ

When working on or around a vehicle, the following general precautions should be observed:

1. Park the vehicle on a level surface, apply the parking brakes, and always block the wheels.
2. Stop the engine when working around the vehicle.
3. If the vehicle is equipped with air brakes, make certain to drain the air pressure from all reservoirs before beginning ANY work on the vehicle.
4. Following the vehicle manufacturer’s recommended procedures, deactivate the electrical system in a manner that removes all electrical power from the vehicle.
5. When working in the engine compartment the engine should be shut off. Where circumstances require that the engine be in operation, EXTREME CAUTION should be used to prevent personal injury resulting from contact with moving, rotating, leaking, heated, or electrically charged components.
6. Never connect or disconnect a hose or line containing pressure; it may whip. Never remove a component or plug unless you are certain all system pressure has been depleted.
7. Never exceed recommended pressures and always wear safety glasses.
8. Do not attempt to install, remove, disassemble or assemble a component until you have read and thoroughly understand the recommended procedures. Use only the proper tools and observe all precautions pertaining to use of those tools.
9. Use only genuine Bendix replacement parts, components, and kits. Replacement hardware, tubing, hose, fittings, etc. should be of equivalent size, type, and strength as original equipment and be designed specifically for such applications and systems.
10. Components with stripped threads or damaged parts should be replaced rather than repaired. Repairs requiring machining or welding should not be attempted unless specifically approved and stated by the vehicle or component manufacturer.
11. Prior to returning the vehicle to service, make certain all components and systems are restored to their proper operating condition.

BW1442 © AlliedSignal Truck Brake Systems Co. 1/1999. Printed in USA.

AlliedSignal Bendix

Service Data

SD-06-1600*

LOW PRESSURE INDICATORS

*Formerly SD-06-2

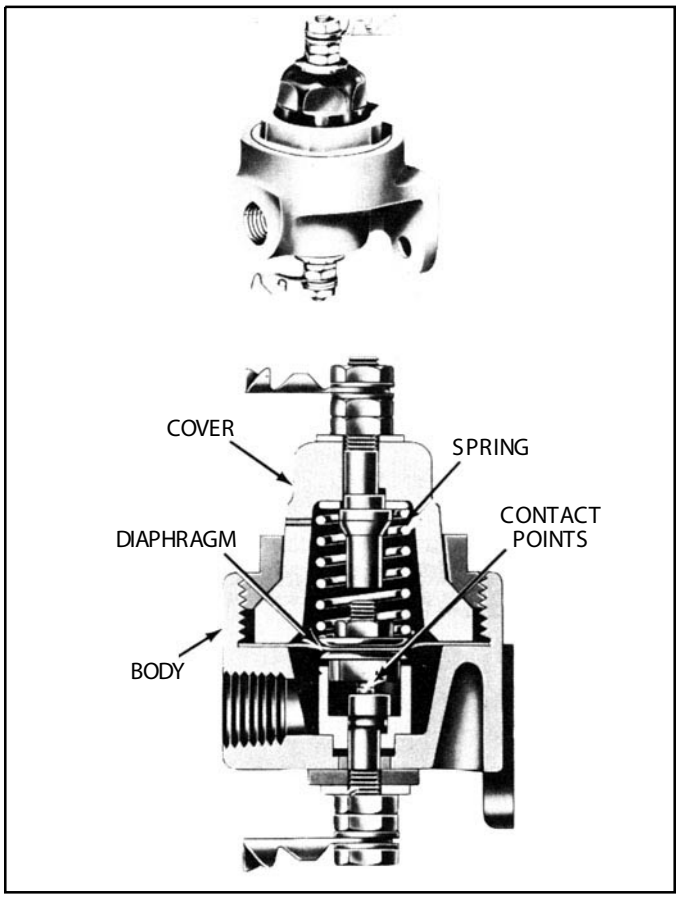

FIGURE 1 - LP-2

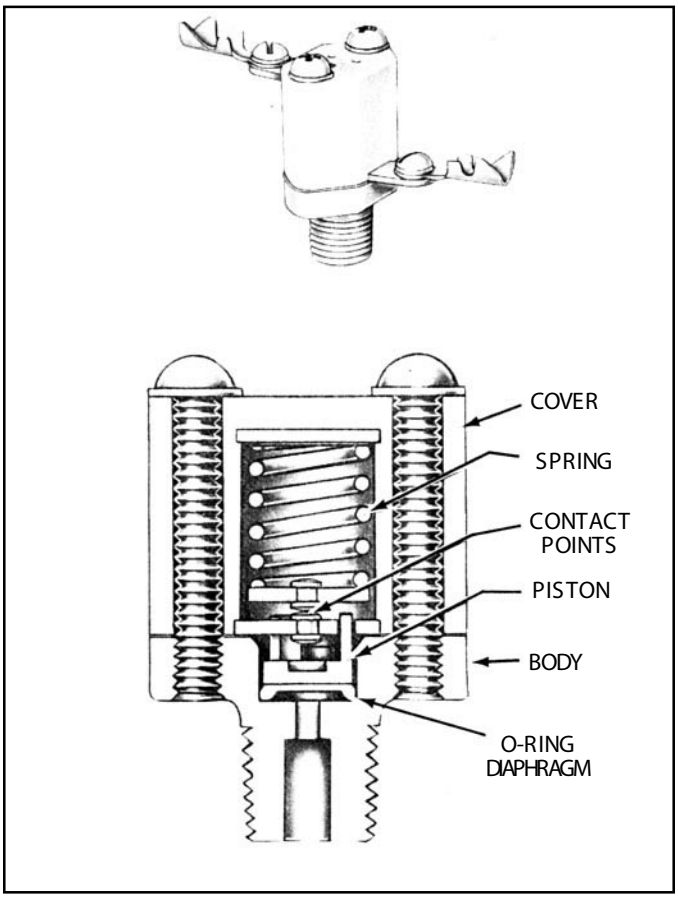

FIGURE 2 - LP-3

DESCRIPTION

The Low Pressure Indicator is a safety device designed to give an automatic warning to the driver whenever air pressure in the air brake system is below the safe minimum for normal vehicle operation. It is usually used to operate an electrical buzzer or warning light, or both, which are audible or visible to the driver.

Two styles of Low Pressure Indicators are currently manufactured.

The LP-2 Low Pressure Indicator, which is the older style and consists of a die cast body with a spring loaded diaphragm clamped between the body and the Bakelite cover.

The LP-3 Low Pressure Indicator is the newer style, consisting of a die cast body, nylon cover and employs a spring loaded O-Ring diaphragm and piston. The LP-3 is available with either one terminal or two. The single terminal unit utilizes a metallic gasket between body and case to ground the lower contract strip. The two terminal unit utilizes a phenolic insulating gasket to isolate both terminals from the vehicle frame.

The electrical contacts provided in both the LP-2 and LP-3 indicators remain closed by spring force until the air brake system pressure below the diaphragm is above the setting (force) of the Low Pressure Indicator spring. The setting of the indicator and piece number is marked on a label on the valve body. If a label is not present, then the vehicle manual should be consulted for the proper setting. The nominal setting of the indicator is 60 psi; however, pressure settings may vary depending upon the vehicle.

OPERATION

To describe the operation, we shall assume that the Low

Pressure Indicator is set for 60 psi. When air pressure at the supply port and under the diaphragm is above 60 psi, the electrical contacts remain open because the force exerted by air pressure underneath the diaphragm overcomes the force exerted by the spring above the diaphragm.

When air pressure below the diaphragm drops below 60 psi, the spring exerts a force which is greater than the force exerted by the air pressure below the diaphragm. This causes the diaphragm (and the piston in the LP-3) to move and allow the electrical contacts to close. This completes or closes the electrical circuit to the warning device, warning the driver of low air pressure in the system.

PREVENTIVE MAINTENANCE

Every six months, 1800 operating hours or 50,000 miles, check electrical connections. Low Pressure Indicator should be checked for proper operation by performing "Operating Test" as described elsewhere in this sheet.

TESTING FOR SERVICEABILITY

OPERATING TEST

1. If possible, determine the setting of the Low Pressure Indicator by referring to the label on the valve or the vehicle manual.
2. Operation of the Low Pressure Indicator may be checked with ignition switch "on" by reducing the system pressure and observing that low pressure warning occurs when system pressure drops below the setting of the Low Pressure Indicator. The contacts will be closed when the warning device operates. If the setting of the indicator is unknown, the contacts should close between approximately 70 psi and 50 psi.

LEAKAGE TEST

1. With air pressure present at the supply port, coat the indicator with soap solution. No leakage permitted.

REMOVING

1. Block the wheels. Otherwise, secure the vehicle with other than service brakes.
2. The ignition switch should be in the "off" position.
3. Drain the air from the system.
4. Disconnect the electrical connections at the Low Pressure Indicator.
5. Disconnect the air line and mounting bolts or unscrew the Indicator from the fitting and remove.

INSTALLING

1. Install in a convenient location for servicing.
2. Connect to a reservoir pressure line at a high point in the system for adequate drainage.
3. If installing an LP-2G Indicator, use a supply line of 1/4 O.D. minimum.
4. Connect the Indicator terminals in series with the ignition switch and the warning device.

DISASSEMBLY

NOTE: It is generally recommended that the Low Pressure Indicator, if faulty, be replaced with a new unit; however, service parts are available; and if repairs are necessary, the following will apply:

LP-2 Unscrew the cover retainer from the body. Remove cover and remove spring and diaphragm assembly.

LP-3. Remove cover screws, lockwashers. Remove cover, contact disc, spring, and shim(s). (Note: Shims may or may not be present.) Remove contact plate, gasket, piston, and O-Ring diaphragm.

CLEANING AND INSPECTION

Clean all metal parts in mineral spirits.

Inspect all parts for wear, cracks, or deterioration and replace all parts not considered serviceable with genuine Bendix parts.

If contact points are not pitted severely, they can be dressed with a fine file.

ASSEMBLY

LP-2

1. Place and position the diaphragm assembly in the body. Position the spring so that it rests on the upper diaphragm follower.
2. Place cover over the diaphragm and screw cover retainer to the body and tighten securely. (Torque to 110-130 inch pounds.)

LP-3

1. Lubricate bore of body and both sides of the O-Ring diaphragm with silicone lubricant BW-650-M (Bendix piece no. 291126).
2. Install O-Ring diaphragm in body. (Note: O-Ring portion of diaphragm should face supply port.)
3. Install piston in body. Flat side of piston should face O-Ring diaphragm.
4. Install gasket. (Always use a phenolic gasket in a two terminal switch and a metallic gasket in the single terminal.)
5. Position contact plate over fingers of piston. Contact plate should rest on face of gasket.
6. If shim(s) are used, place shim(s) in cover.
7. Place spring in cover.
8. Place contact point so that it rests on spring.

9. Install cover on body, using machine screws, making certain that the contact plate is in position over fingers of piston, and arm of contact plate is positioned so that it will fit in groove of cover.
10. Tighten screws securely. (Torque to 20-30 inch pounds).

TEST OF REBUILT LOW PRESSURE INDICATOR

After rebuilding, perform the leakage and operating tests as outlined in section "Testing for Serviceability."

IMPORTANT! PLEASE READ

When working on or around a vehicle, the following general precautions should be observed:

1. Park the vehicle on a level surface, apply the parking brakes, and always block the wheels.
2. Stop the engine when working around the vehicle.
3. If the vehicle is equipped with air brakes, make certain to drain the air pressure from all reservoirs before beginning ANY work on the vehicle.
4. Following the vehicle manufacturer's recommended procedures, deactivate the electrical system in a manner that removes all electrical power from the vehicle.
5. When working in the engine compartment the engine should be shut off. Where circumstances require that the engine be in operation, EXTREME CAUTION should be used to prevent personal injury resulting from contact with moving, rotating, leaking, heated, or electrically charged components.
6. Never connect or disconnect a hose or line containing pressure; it may whip. Never remove a component or plug unless you are certain all system pressure has been depleted.
7. Never exceed recommended pressures and always wear safety glasses.
8. Do not attempt to install, remove, disassemble or assemble a component until you have read and thoroughly understand the recommended procedures. Use only the proper tools and observe all precautions pertaining to use of those tools.
9. Use only genuine Bendix replacement parts, components, and kits. Replacement hardware, tubing, hose, fittings, etc. should be of equivalent size, type, and strength as original equipment and be designed specifically for such applications and systems.
10. Components with stripped threads or damaged parts should be replaced rather than repaired. Repairs requiring machining or welding should not be attempted unless specifically approved and stated by the vehicle or component manufacturer.
11. Prior to returning the vehicle to service, make certain all components and systems are restored to their proper operating condition.

BW1447 © AlliedSignal Truck Brake Systems Co. 1/1999. Printed in USA.

AlliedSignal Bendix

Service Data

SD-06-2501*

SL-5 STOP LIGHT SWITCH & DS-2 COMBINED STOP LIGHT SWITCH & DOUBLE CHECK VALVE

*Formerly SD-06-7

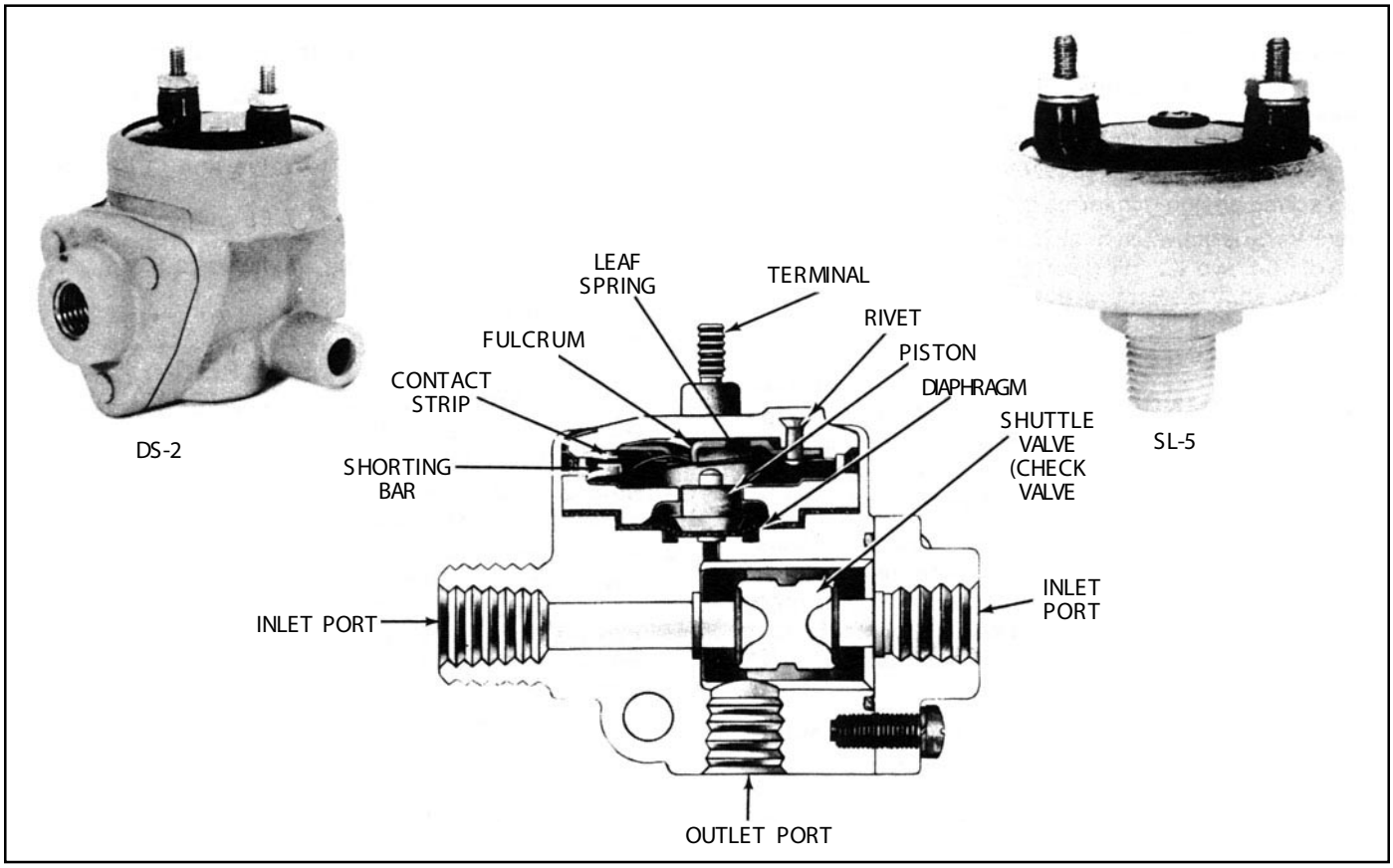

FIGURE 1 - DS-2 SECTIONAL

DESCRIPTION

The stop light switch (SL-5) is an electro-pneumatic 5 psi non- grounded switch that operates in conjunction with the brake valve and stop lights by completing the electrical circuit and lighting the stop lights when a brake application is made.

The combined stop light switch and double check valve (DS-2), as the name implies, combines a stop light switch (SL-5) with a double check valve to perform the function of both. It operates in conjunction with the brake valve and hand control valve by directing the flow of air from whichever delivers the higher pressure into a common delivery line and to the stop light switch, closing the electrical circuit to the stop lamps.

The stop light switch can be used with either 12 or 24 volt systems.

The stoplight switch is not a serviceable item; and if found defective in either device, the complete unit must be replaced.

The shuttle valve in the DS-2 is serviceable and may be replaced.

Both the SL-5 and DS-2 have been tested and meet the requirements of FMVSS-121.

OPERATION

The stop switch mechanism is identical in the SL-5 and DS-2.

When a brake application is made, air pressure from the brake valve enters the cavity below the diaphragm. The air pressure below the diaphragm moves the piston until it contacts the leaf spring. The leaf spring travels past a

fulcrum at which point the leaf springs snaps a shorting bar which mates with the contact strips. The stop light electrical circuit is completed, lighting the stop lights before the brake application pressures reach 6 psi.

The snap action spring design minimizes arcing.

The Double Check Valve is activated by air being introduced through either of the two (2) inlet ports. The greater pressure pushes the shuttle along its guides and closes the opposite inlet port. The air is then directed out the common delivery line and to the stop light switch.

PREVENTIVE MAINTENANCE

Every six months, 1800 operating hours or 50,000 miles check the electrical connections and determine that stop lamps operate properly.

OPERATING AND LEAKAGE TEST

1. Install an accurate air gauge in the service line (or brake chamber). Apply brake valve gradually. Stop lamps should light at 6 psi or less and go out after the brake application is released. This checks the electrical function of the stop light switch in either the SL-5 or DS-2.
2. (DS-2 only) Apply the foot valve and coat the exhaust port of the hand valve (or other alternate source). Reverse the above, applying the hand valve or other alternate source and coat the exhaust port of the foot valve. In either mode a leakage of not more than a 1" bubble in 5 seconds is permissible.
3. (SL-5 or DS-2) When pressurized, no leakage is permitted from the body of the valve or switch.

If the SL-5 or DS-2 does not function as described above or if leakage is excessive, the valve or switch should be replaced with a new unit or in the case of the double check portion of the DS-2 repaired with genuine Bendix parts.

REMOVING AND INSTALLING

REMOVING

1. Block vehicle wheels or hold by means other than vehicle service brakes.
2. Disconnect electrical connections from terminal screws.
3. (SL-5) Remove the switch using a wrench on the hex portion of the body.
4. (DS-2) Disconnect air lines and remove the DS-2.

INSTALLING

1. Replace the SL-5 or DS-2 in the port from which it was removed. Do not install with the terminals pointing down.
2. Secure electrical connections.
3. Reinstall air line connections to DS-2 valve.

DISASSEMBLY (Double Check Valve)

1. Remove three cap screws and cap.
2. Remove O-Ring seal from cap.
3. Remove shuttle valve.

CLEANING AND INSPECTION

1. Blow dust or other foreign material out of body. Do not immerse in cleaning fluid.
2. Inspect shuttle valve and O-Ring and replace if deteriorated.

TEST

Repeat "Operating and Leakage Test."

IMPORTANT! PLEASE READ

When working on or around a vehicle, the following general precautions should be observed:

1. Park the vehicle on a level surface, apply the parking brakes, and always block the wheels.
2. Stop the engine when working around the vehicle.
3. If the vehicle is equipped with air brakes, make certain to drain the air pressure from all reservoirs before beginning ANY work on the vehicle.
4. Following the vehicle manufacturer's recommended procedures, deactivate the electrical system in a manner that removes all electrical power from the vehicle.
5. When working in the engine compartment the engine should be shut off. Where circumstances require that the engine be in operation, EXTREME CAUTION should be used to prevent personal injury resulting from contact with moving, rotating, leaking, heated, or electrically charged components.
6. Never connect or disconnect a hose or line containing pressure; it may whip. Never remove a component or plug unless you are certain all system pressure has been depleted.
7. Never exceed recommended pressures and always wear safety glasses.
8. Do not attempt to install, remove, disassemble or assemble a component until you have read and thoroughly understand the recommended procedures. Use only the proper tools and observe all precautions pertaining to use of those tools.
9. Use only genuine Bendix replacement parts, components, and kits. Replacement hardware, tubing, hose, fittings, etc. should be of equivalent size, type, and strength as original equipment and be designed specifically for such applications and systems.
10. Components with stripped threads or damaged parts should be replaced rather than repaired. Repairs requiring machining or welding should not be attempted unless specifically approved and stated by the vehicle or component manufacturer.
11. Prior to returning the vehicle to service, make certain all components and systems are restored to their proper operating condition.

BW1594 © AlliedSignal Truck Brake Systems Co. 1/1999. Printed in USA.

AlliedSignal Bendix

Service Data

SD-08-2412

AD-9 AIR DRYER

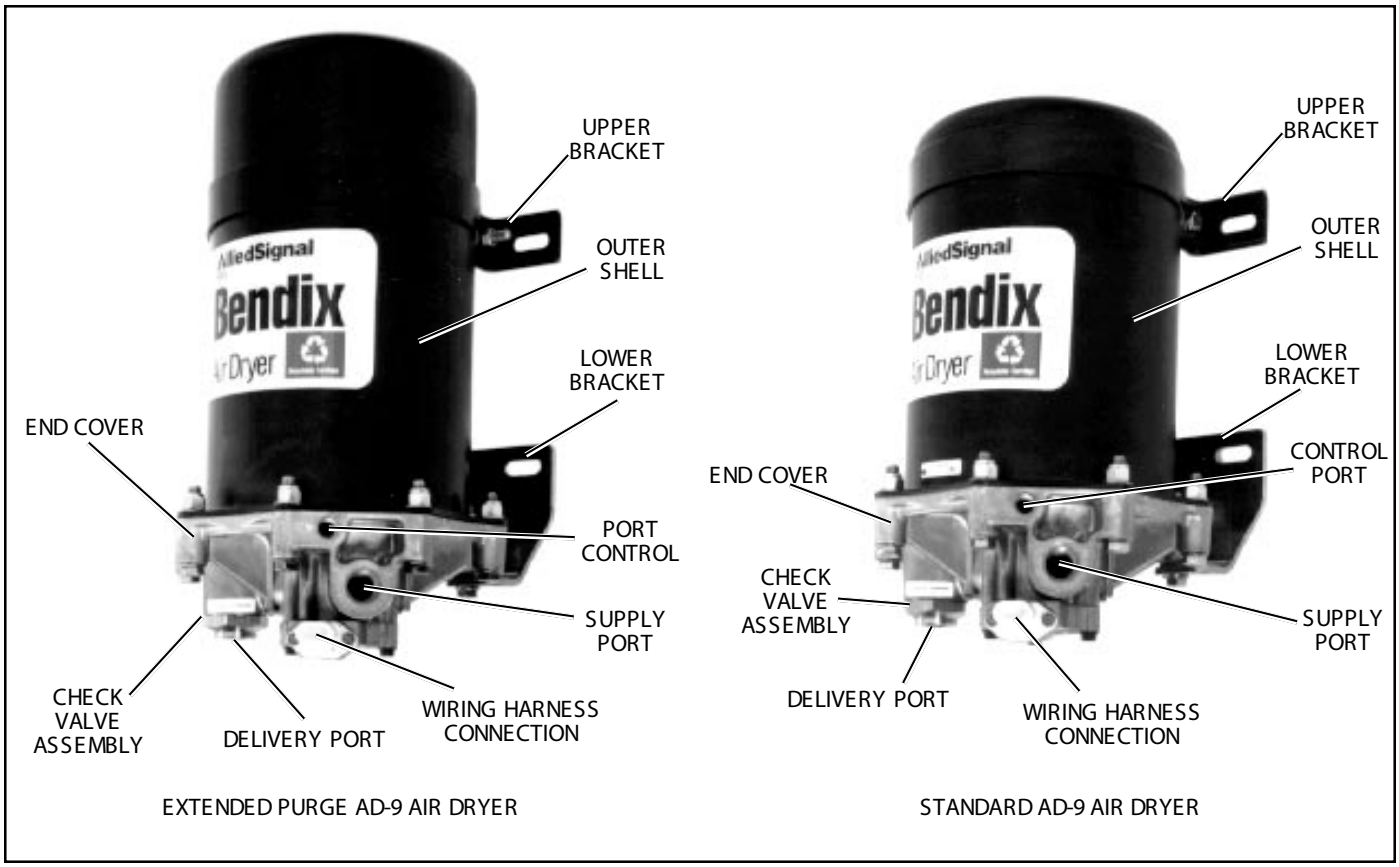

FIGURE 1 - AD-9 AIR DRYER MODELS

DESCRIPTION

The function of the AD-9 Air Dryer is to collect and remove air system contaminants in solid, liquid and vapor form before they enter the brake system. It provides clean, dry air to the components of the brake system which increases the life of the system and reduces maintenance costs. Daily manual draining of the reservoirs is eliminated.

The AD-9 Air Dryer consists of a desiccant cartridge and a die cast aluminum end cover secured to a cylindrical steel outer shell with eight cap screws and nuts. The end cover contains a check valve assembly, a safety valve, three threaded air connections and the purge valve housing assembly. The removable purge valve housing assembly incorporates a purge valve mechanism and a turbo charger cut-off feature that is designed to prevent loss of engine "turbo" boost pressure during the purge cycle of the AD-9 air dryer. For ease of serviceability, the desiccant cartridge and discharge check valve assembly are screw in type. The purge valve housing assembly, which includes the heater and thermostat assembly, and the discharge check valve assembly, is serviceable from the exterior of the air dryer, while servicing the screw-in desiccant cartridge requires removal of the air dryer assembly from the vehicle.

The AD-9 has three female pipe thread air connections and each is identified as follows:

Port I.D.	Function/Connection
CON 4	Control Port (purge valve control and turbo cut-off).
SUP 11	Supply Port (air in).
DEL 2	Delivery Port (air out).

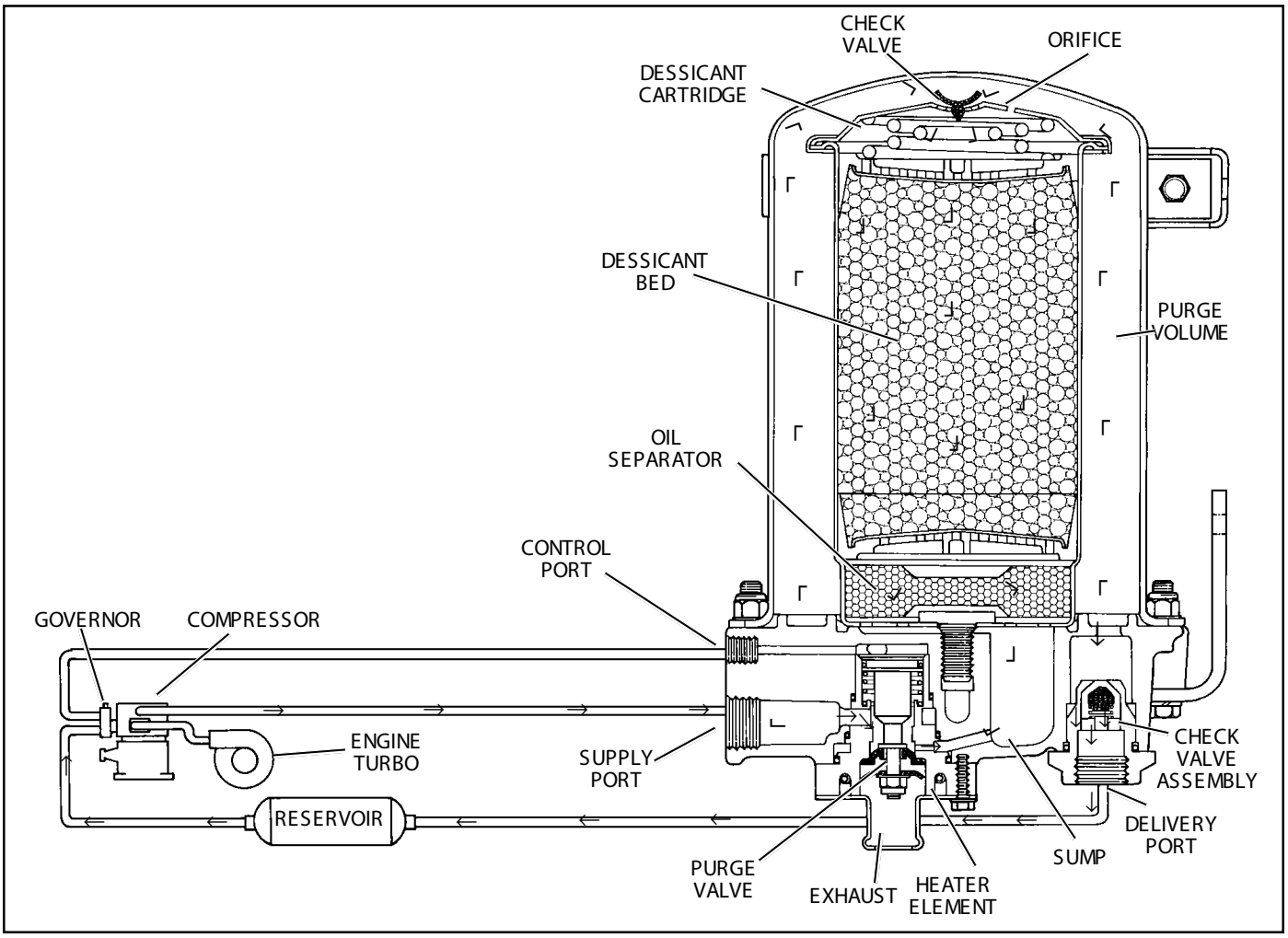

FIGURE 2 - AD-9 CHARGE CYCLE

OPERATION OF THE AD-9 AIR DRYER

The AD-9 air dryer alternates between two operational modes or "cycles" during operation: the charge cycle and the purge cycle. The following description of operation is separated into these "cycles" of operation.

CHARGE CYCLE (refer to Figure 2)

When the compressor is loaded (compressing air) compressed air, along with oil, oil vapor, water and water vapor flows through the compressor discharge line to the supply port of the air dryer end cover. As air travels through the end cover assembly, its direction of flow changes several times, reducing the temperature, causing contaminants to condense and drop to the bottom or sump of the air dryer end cover.

After exiting the end cover, the air flows into the desiccant cartridge. Once in the desiccant cartridge air first flows through an oil separator which removes water in liquid form as well as oil, oil vapor and solid contaminants.

Air exits the oil separator and enters the desiccant drying bed. Air flowing through the column of desiccant becomes progressively dryer as water vapor adheres to the desiccant material in a process known as "adsorption". The desiccant cartridge using the adsorption process typically removes 95% of the water vapor from the pressurized air.

The majority of dry air exits the desiccant cartridge through its integral single check valve to fill the purge volume between the desiccant cartridge and outer shell. Some air will also exit the desiccant cartridge through the purge orifice adjacent to the check valve.

Dry air flows out of the purge volume through the single check valve assembly and out the delivery port to the first (supply) reservoir of the air system.

The air dryer will remain in the charge cycle until air brake system pressure builds to the governor cutout setting.

PURGE CYCLE (refer to Figure 3)

When air brake system pressure reaches the cutout setting of the governor, the compressor unloads (air compression stopped) and the purge cycle of the air dryer begins. When the governor unloads the compressor, it pressurizes the compressor unloader mechanism and line

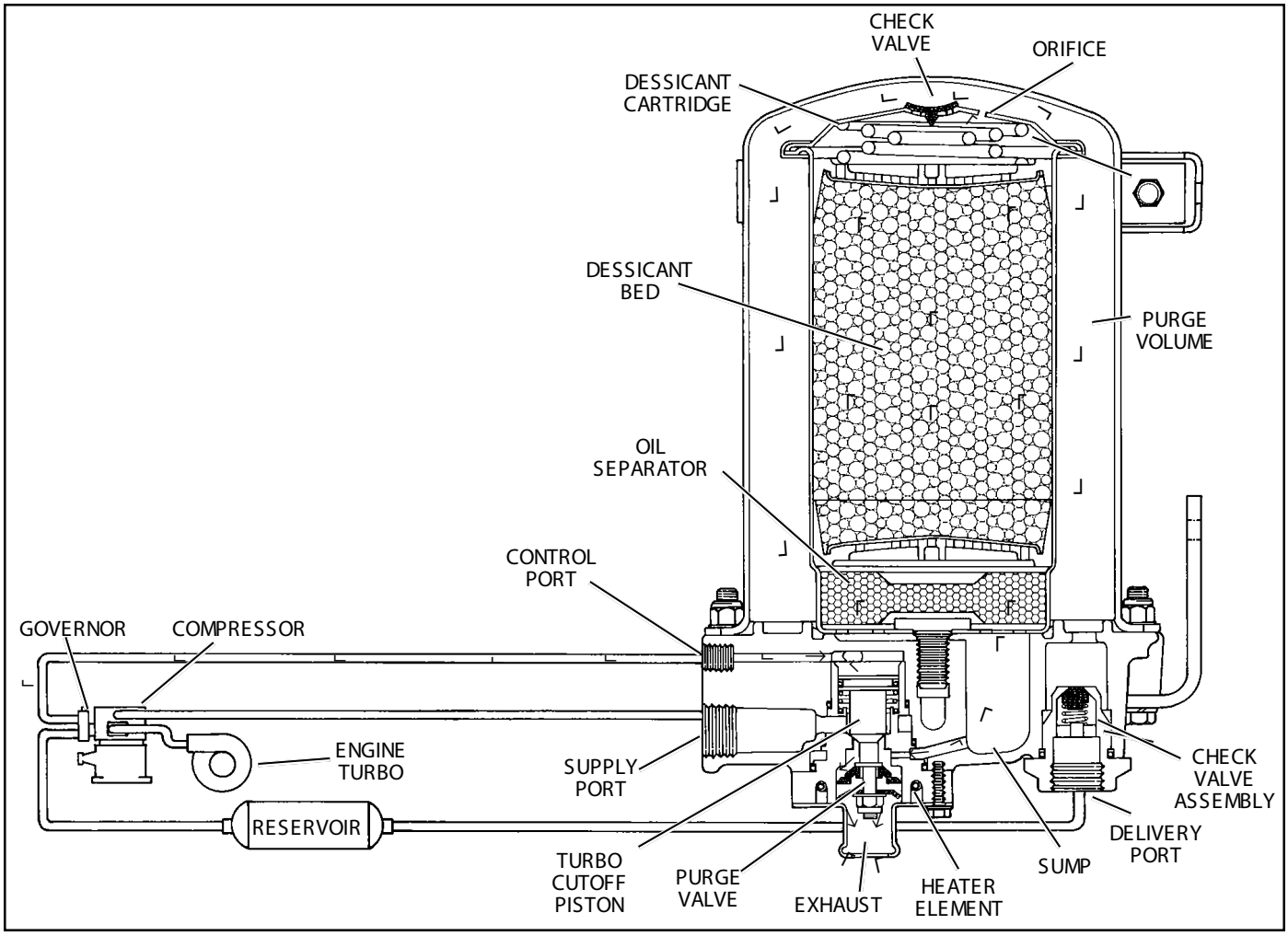

FIGURE 3 - AD-9 PURGE CYCLE

connecting the governor unloader port to the AD-9 end cover control port. The purge piston moves in response to air pressure causing the purge valve to open to atmosphere and (partially) closing off the supply of air from the compressor, this will be further discussed in the section covering the turbo cut-off feature. Contaminants in the end cover sump are expelled immediately when the purge valve opens. Also, air which was flowing through the desiccant cartridge changes direction and begins to flow toward the open purge valve. Oil and solid contaminants collected by the oil separator are removed by air flowing from the desiccant drying bed to the open purge valve.

The initial purge and desiccant cartridge decompression lasts only a few seconds and is evidenced by an audible burst of air at the AD-9 exhaust.

The actual reactivation of the desiccant drying bed begins as dry air flows from the purge volume through the desiccant cartridge purge orifice and into the desiccant drying bed. Pressurized air from the purge volume expands after passing through the purge orifice; its pressure is lowered and its volume increased. The flow of dry air through the drying bed reactivates the desiccant material by removing the water vapor adhering to it. Generally 15-30 seconds are required for the entire purge volume of a standard AD-9 to flow through the desiccant drying bed.

The end cover single check valve assembly prevents air pressure in the brake system from returning to the air dryer during the purge cycle. After the 30 second purge cycle is complete, the air dryer is ready for the next charge cycle to begin.

The purge valve will remain open after the purge cycle is complete and will not close until air brake system pressure is reduced and the governor signals the compressor to charge.

TURBO CUT-OFF FEATURE (Refer to Figure 4)

The primary function of the turbo cut-off valve is to prevent loss of engine turbocharger air pressure through the AD-9 in systems where the compressor intake is connected to the engine turbocharger. The turbo cut-off valve also reduces the “puffing” of air out the open exhaust when a naturally aspirated, single cylinder compressor equipped with an inlet check valve is in use.

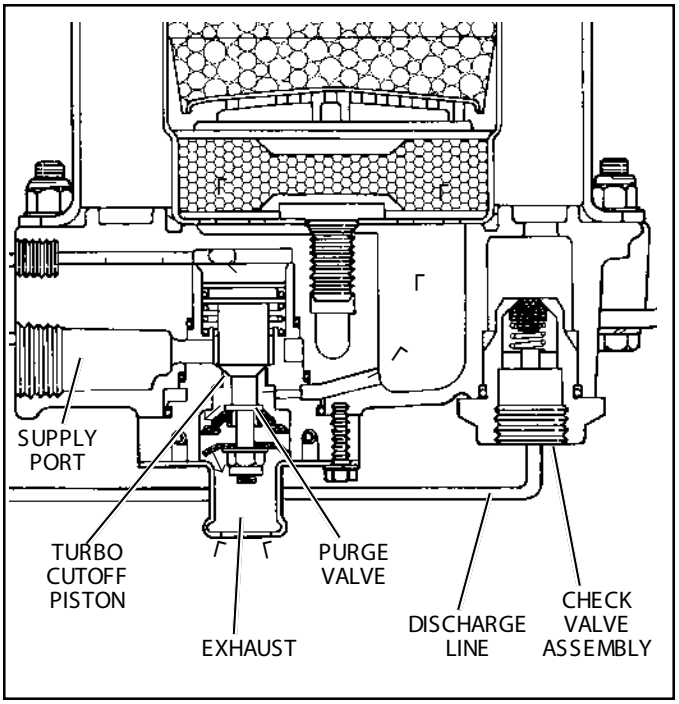

FIGURE 4 - AD-9 TURBO CUTOFF

At the onset of the purge cycle, the downward travel of the purge piston is stopped when the turbo cut-off valve (tapered portion of purge piston) contacts its mating metal seat in the purge valve housing. With the turbo cut-off valve seated (closed position), air in the discharge line and AD-9 inlet port is restricted from entering the air dryer. While the turbo cut-off effectively prevents loss of turbo charger boost pressure to the engine, some "seepage" of air may be detected under certain conditions of compressor engine and turbo charger operation, even so there will always be low pressure trapped in the discharge line.

PREVENTIVE MAINTENANCE

Important: Review the warranty policy before performing any intrusive maintenance procedures. An extended warranty may be voided if intrusive maintenance is performed during this period.

Because no two vehicles operate under identical conditions, maintenance and maintenance intervals will vary. Experience is a valuable guide in determining the best maintenance interval for any one particular operation.

Every 900 operating hours or 25,000 miles or every three (3) months:

1. Check for moisture in the air brake system by opening reservoirs, drain cocks, or valves and checking for presence of water. If moisture is present, the desiccant may require replacement; however, the following conditions can also cause water accumulation and should be considered before replacing the desiccant:
   A. An outside air source has been used to charge the system. This air did not pass through the drying bed.

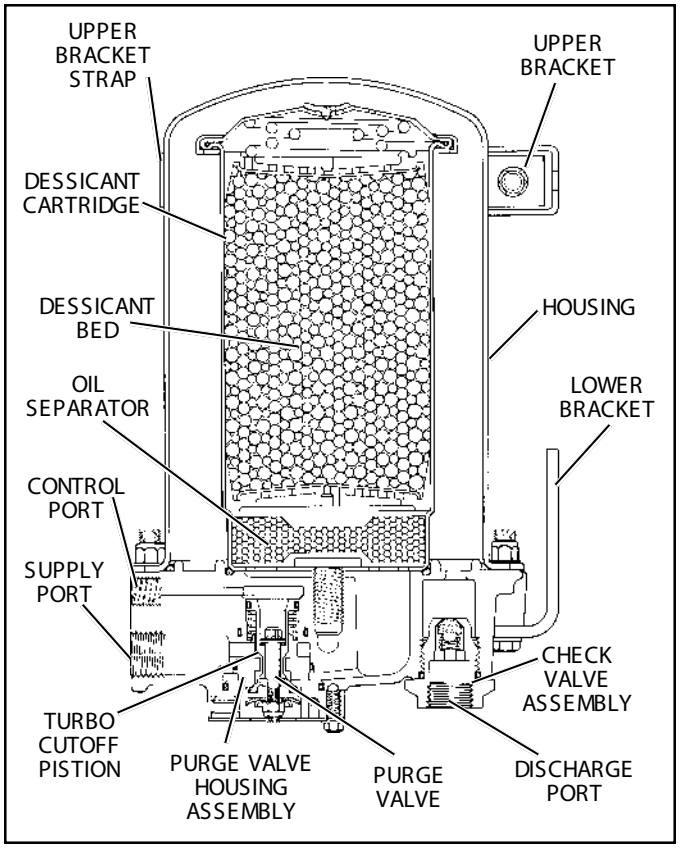

FIGURE 5 - AD-9 AIR DRYER SECTIONAL VIEW

   B. Air usage is exceptionally high and not normal for a highway vehicle. This may be due to accessory air demands or some unusual air requirement that does not allow the compressor to load and unload (compressing and non-compressing cycle) in a normal fashion. Check for high air system leakage.
   C. The air dryer has been installed in a system that has been previously used without an air dryer. This type system will be saturated with moisture and several weeks of operation may be required to dry it out.
   D. Location of the air dryer is too close to the air compressor. Refer to Locating AD-9 On Vehicle section.
   E. In areas where more than a 30 degree range of temperature occurs in one day, small amounts of water can accumulate in the air brake system due to condensation. Under these conditions, the presence of small amounts of moisture is normal and should not be considered as an indication that the dryer is not performing properly.

   Note: A small amount of oil in the system may be normal and should not, in itself, be considered a reason to replace the desiccant; oil stained desiccant can function adequately.
2. Check mounting bolts for tightness. Retorque to 270-385 inch pounds.

3. Perform the Operation & Leakage Tests listed in this publication.

Every 10,800 hours; 300,000 miles or 36 months:

1. Rebuild the air dryer including the desiccant cartridge.

Note: The desiccant change interval may vary from vehicle to vehicle. Although typical desiccant cartridge life is three years, many will perform adequately for a longer period of time. In order to take maximum advantage of desiccant life and assure that replacement occurs only when necessary, it is important that Operation & Leakage Tests be performed.

OPERATION & LEAKAGE TESTS

1. Test the outlet port check valve assembly by building the air system to governor cut-out and observing a test air gauge installed in the #1 reservoir. A rapid loss of pressure could indicate a failed outlet port check valve. This can be confirmed by bleeding the system down, removing the check valve assembly from the end cover, subject air pressure to the unit and apply a soap solution to the check valve side. Leakage should not exceed a 1 inch bubble in 1 second.
2. Check for excessive leakage around the purge valve. With the compressor in loaded mode (compressing air), apply a soap solution to the purge valve housing assembly exhaust port and observe that leakage does not exceed a 1 inch bubble in 1 second. If the leakage exceeds the maximum specified, service the purge valve housing assembly.
3. Close all reservoir drain cocks. Build up system pressure to governor cut-out and note that AD-9 purges with an audible escape of air. "Fan" the service brakes to reduce system air pressure to governor cut-in. Note that the system once again builds to full pressure and is followed by an AD-9 purge.
4. Check the operation of the safety valve by pulling the exposed stem while the compressor is loaded (compressing air). There must be an exhaust of air while the stem is held and the valve should reseat when the stem is released.
5. Check all lines and fittings leading to and from the air dryer for leakage and integrity.
6. Check the operation of the end cover heater and thermostat assembly during cold weather operation as follows:

   A. Electric Power to the Dryer

   With the ignition or engine kill switch in the ON position, check for voltage to the heater and thermostat assembly using a voltmeter or test light. Unplug the electrical connector at the air dryer and place the test leads on each of the pins of the male connector. If there is no voltage, look for a blown fuse, broken wires, or corrosion in the vehicle wiring harness. Check to see if a good ground path exists.

   B. Thermostat and Heater Operation

   Turn off the ignition switch and cool the end cover assembly to below 40 degrees Fahrenheit. Using an ohmmeter, check the resistance between the electrical pins in the female connector. The resistance should be 1.5 to 3.0 ohms for the 12 volt heater assembly and 6.8 to 9.0 ohms for the 24 volt heater assembly. Note: Some early models of the AD-9 will have resistance readings of 1.0 to 2.5 ohms for the 12 volt heater assembly and 4.8 to 7.2 ohms for the 24 volt heater assembly. If the resistance is higher than the maximum stated, replace the purge valve housing assembly, which includes the heater and thermostat assembly.

   Warm the end cover assembly to over 90 degrees Fahrenheit and again check the resistance. The

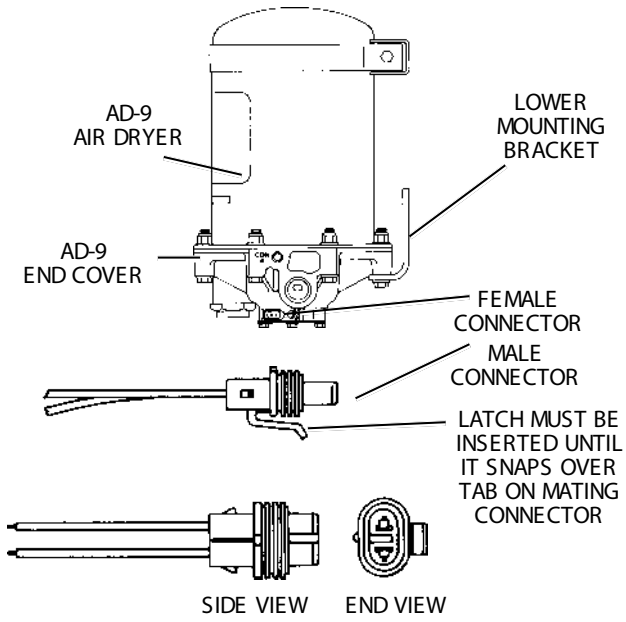

A two lead, 12 inch, wire harness with attached weather resistant connector is supplied with all retrofit and replacement AD-9 Air Dryers. Connect one of the two leads of the wire harness to the engine kill or ignition switch. The remaining lead of the wire harness must be connected to a good vehicle ground. A fuse should be installed in the power carrying wire; install a 10 amp fuse for 12 volt heaters and a 5 amp fuse for a 24 volt heater.
Use 14 AWG wire if it is necessary to lengthen the wire harness provided.
Make certain all wire splices are waterproofed.
Tie wrap or support all electrical wire leading to the AD-9.

FIGURE 6 - HEATER AND THERMOSTAT CONNECTOR

resistance should exceed 1000 ohms. If the resistance values obtained are within the stated limits, the thermostat and heater assembly is operating properly. If the resistance values obtained are outside the stated limits, replace the purge valve housing assembly, which includes the heater and thermostat assembly.

REBUILDING THE AD-9 AIR DRYER

GENERAL

If, after completing the routine operation and leakage tests, it has been determined that one or more components of the air dryer requires replacement or maintenance, refer to the following list to find the appropriate kit(s).

When rebuilding or replacing components of the air dryer use only genuine Bendix parts. For ease in servicing the AD-9 desiccant cartridge assembly, it is recommended that the air dryer be removed from the vehicle.

MAINTENANCE KITS AVAILABLE:

107798 Purge Valve Housing Maintenance Kit

This kit contains the parts necessary to rebuild the air portion of the purge valve housing and does not include the heater and thermo.

107794 Desiccant Cartridge Replacement Kit

This kit contains the parts necessary to change the desiccant cartridge only.

107796 Remanufactured Desiccant Cartridge Replacement Kit

This kit contains the parts necessary to change the desiccant cartridge only.

107799 End Cover Check Valve Assembly Replacement

3/4 inch thread size.

107800 End Cover Check Valve Assembly Replacement

1/2 inch thread size.

107896 Service New or Remanufactured Exchange Purge Valve Housing Assembly

(w/heater and thermo.) 12 volt system.

107897 Service New or Remanufactured Exchange Purge Valve Housing Assembly

(w/heater and thermo.) 24 volt system.

107695 Complete Mounting Bracket Kit

This kit contains the upper and lower brackets as well as the necessary hardware items to mount them.

IMPORTANT! PLEASE READ

When working on or around a vehicle, the following general precautions should be observed:

1. Park the vehicle on a level surface, apply the parking brakes, and always block the wheels.
2. Stop the engine when working around the vehicle.
3. If the vehicle is equipped with air brakes, make certain to drain the air pressure from all reservoirs before beginning ANY work on the vehicle.
4. Following the vehicle manufacturer's recommended procedures, deactivate the electrical system in a manner that removes all electrical power from the vehicle.
5. When working in the engine compartment the engine should be shut off. Where circumstances require that the engine be in operation, EXTREME CAUTION should be used to prevent personal injury resulting from contact with moving, rotating, leaking, heated, or electrically charged components.
6. Never connect or disconnect a hose or line containing pressure; it may whip. Never remove a component or plug unless you are certain all system pressure has been depleted.
7. Never exceed recommended pressures and always wear safety glasses.
8. Do not attempt to install, remove, disassemble or assemble a component until you have read and thoroughly understand the recommended procedures. Use only the proper tools and observe all precautions pertaining to use of those tools.
9. Use only genuine Bendix replacement parts, components, and kits. Replacement hardware, tubing, hose, fittings, etc. should be of equivalent size, type, and strength as original equipment and be designed specifically for such applications and systems.
10. Components with stripped threads or damaged parts should be replaced rather than repaired. Repairs requiring machining or welding should not be at tempted unless specifically approved and stated by the vehicle or component manufacturer.
11. Prior to returning the vehicle to service, make certain all components and systems are restored to their proper operating condition.

AD-9 REMOVAL

1. Park the vehicle on a level surface and prevent movement by means other than the brakes.
2. Drain all reservoirs to 0 p.s.i. (0 kPa).— Caution: Compressor discharge line may still contain residual pressure.
3. Identify and disconnect the three air lines from the end cover and note the position of end cover ports relative to the vehicle.
4. Unplug the vehicle wiring harness from the heater and thermostat assembly connector on the purge valve housing assembly.

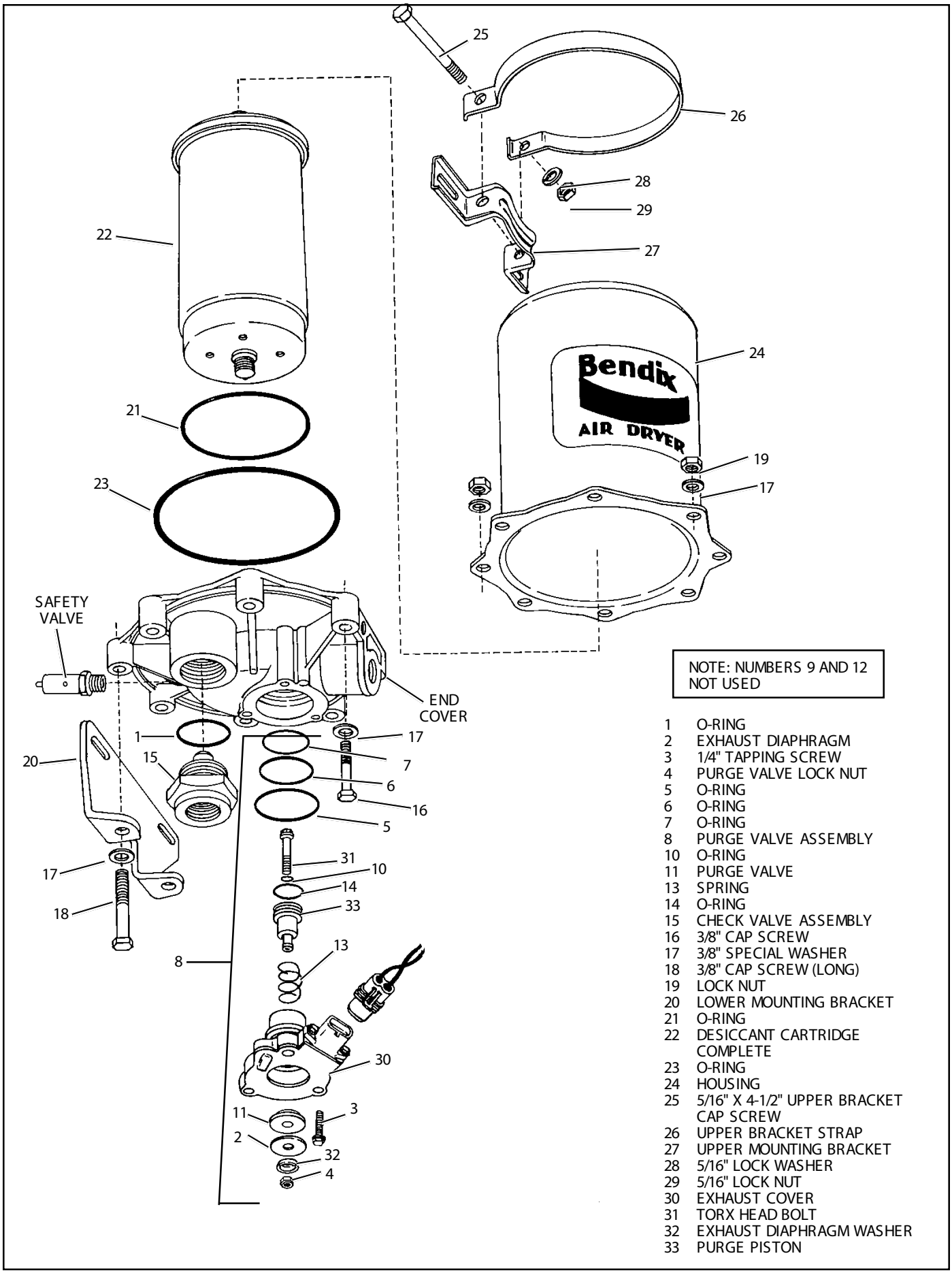

NOTE: NUMBERS 9 AND 12 NOT USED

1	O-RING
2	EXHAUST DIAPHRAGM
3	1/4" TAPPING SCREW
4	PURGE VALVE LOCK NUT
5	O-RING
6	O-RING
7	O-RING
8	PURGE VALVE ASSEMBLY
10	O-RING
11	PURGE VALVE
13	SPRING
14	O-RING
15	CHECK VALVE ASSEMBLY
16	3/8" CAP SCREW
17	3/8" SPECIAL WASHER
18	3/8" CAP SCREW (LONG)
19	LOCK NUT
20	LOWER MOUNTING BRACKET
21	O-RING
22	DESICCANT CARTRIDGE COMPLETE
23	O-RING
24	HOUSING
25	5/16" X 4-1/2" UPPER BRACKET CAP SCREW
26	UPPER BRACKET STRAP
27	UPPER MOUNTING BRACKET
28	5/16" LOCK WASHER
29	5/16" LOCK NUT
30	EXHAUST COVER
31	TORX HEAD BOLT
32	EXHAUST DIAPHRAGM WASHER
33	PURGE PISTON

FIGURE 7 - AD-9 AIR DRYER ASSEMBLY

5. Loosen the 5/16" X 4-1/2" hex bolt securing the upper mounting strap.
6. Remove, retain and mark the two 3/8" end cover cap screws, lock nuts and four special washers that retain the lower mounting bracket to the end cover, also mark these two holes of the end cover. (These bolts are longer than the other 6 bolts.)
7. Remove the AD-9 air dryer from its mounting brackets on the vehicle.

DISASSEMBLY

The following disassembly and assembly procedure is presented for reference purposes and presupposes that a major rebuild of the AD-9 is being undertaken. Several replacement parts and maintenance kits are available which do not require full disassembly. The instructions provided with these parts and kits should be followed in lieu of the instructions presented here. Refer to Figure 7 during disassembly.

Caution: While performing service on the AD-9 air dryer, it is not recommended that a clamping device (vise, C-clamp, etc.) be used to hold any die cast aluminum component as damage may result. To hold the end cover, install a pipe nipple in the supply port and clamp the nipple into a vise.

1. Using an adjustable wrench or an 1-3/4" socket, remove the delivery, check valve assembly (15) and o-ring. Remove the o-ring from the check valve assembly.
2. Remove the three 1/4" self tapping screws (3) that secure the purge valve housing assembly to the end cover assembly. Pull the purge valve housing assembly out of the end cover assembly. Remove the three o-rings (5,6 & 7) from the exterior of the purge valve housing assembly. Note: O-rings 5 and 6 may be lodged in the end cover bores, if so, they must be removed
3. Purge Valve Disassembly:

   Note: In most cases a flat (non-extended) exhaust cover (30) is used. This cover should be left intact while servicing the purge valve housing assembly. However, if an extended type exhaust cover is in use to accommodate the attachment of an exhaust hose, the exhaust cover must be carefully peeled off the purge valve housing. Use a thin flat blade to pry the exhaust cover off, taking care not to damage the potting material (RTV sealant) under the cover. To remove the piston from the purge valve housing assembly requires a special Torx head socket or a twelve point 1/4" socket to hold the head of the purge valve bolt (31).

   A. Remove the 1/4" nut (4) from the bottom of the purge valve housing assembly using a 9/16" socket wrench and a Torx head socket to hold the head of the bolt (31). Remove the diaphragm washer (32) (if present), and the diaphragm (2) (if present), and the purge valve (11) from the purge valve housing.

   B. Remove the 1/4" Torx head bolt (31) from the opposite end, then the purge piston (33), the return spring (13) and two o-rings (10 & 14); one on the O.D. and the other in the inside of the purge piston.

   C. Heater and Thermostat Assembly Replacement.

   Caution: Do not attempt to remove this assembly, as it will be damaged during the removal process and is not available as a service part. If the heater and thermostat are defective, replace the entire purge valve housing assembly which includes these items.
4. Remove the remaining six 3/8" cap screws (16), lock nuts (19) and twelve special washers (17) that secure the end cover to the housing (24). Separate the end cover and desiccant cartridge (22) from the housing (24).
5. Remove the end cover to outer housing o-ring (23).
6. Do not remove the safety valve from the end cover unless it has been proven defective. If replacement is required, apply thread sealant or teflon tape on the threads of the replacement valve and torque to 120-400 in. lbs.
7. Place a strap or chain wrench around the desiccant cartridge (22) so that it is approximately 2-3 inches away from the end cover. Rotate the cartridge counterclockwise until it completely separates from the end cover. Note: A substantial torque (up to 50 lb. ft.) may be required to perform this disassembly.
8. Remove the desiccant cartridge o-ring (21) from the end cover.

CLEANING & INSPECTION

1. Using mineral spirits or an equivalent solvent, clean and thoroughly dry all metal parts.
2. Inspect the interior and exterior of all metal parts that will be reused for severe corrosion, pitting and cracks. Superficial corrosion and or pitting on the exterior portion of the upper and lower body halves is acceptable.
3. Inspect the bores of both the end cover and the purge valve housing for deep scuffing or gouges.
4. Make certain that all purge valve housing and end cover passages are open and free of obstructions.
5. Inspect the pipe threads in the end cover. Make certain they are clean and free of thread sealant.
6. Inspect the purge valve housing bore and seats for excessive wear and scuffing.
7. Inspect the purge valve piston seat for excessive wear.

8. Inspect all air line fittings for corrosion. Clean all old thread sealant from the pipe threads.
9. All o-rings removed should be discarded and replaced with new o-rings provided in appropriate kit(s).

Any component exhibiting a condition described in step 1 to 8 should be replaced.

ASSEMBLY

Prior to assembly, coat all o-rings, o-ring grooves, and bores with a generous amount of barium base lubricant. Refer to Figure 7 during assembly unless otherwise advised.

1. Purge Valve Housing Assembly
   A. Install the o-ring (14) in its groove on the O.D. of the purge piston. Place the return spring (13) in the bore of the purge valve housing. Place the o-ring (10) into its recess in the bore of the purge piston. Install the 1/4" Torx head bolt (31) into the I.D. of the purge piston. Insert the purge piston (33) into the I.D. of the spring (13). Using a Torx head wrench, push the purge piston into the piston housing until it bottoms.
   B. While depressing the purge piston with the Torx head wrench, install the following parts over the purge valve bolt (31) from the opposite end of the purge valve housing; the purge valve (11) with its rubber side first, followed by the diaphragm (2) (if present), the diaphragm washer (32) (if present) or the flat washer and finally the 1/4" hex nut (4). Torque the purge valve nut and bolt (4 & 31) to between 60-80 in. lbs.
   C. Install the three o-rings (5, 6 & 7) on the purge valve housing placing each in its appropriate location. If the exhaust cover (30) was removed during disassembly, install it on the purge valve housing assembly making certain the "bubble" portion is positioned over the thermostat. Install the assembled purge valve housing in the end cover making certain to orient both parts such that the connector is approximately 10 degrees clockwise from the supply port, while making certain the purge valve housing is fully seated against the end cover. Secure the purge valve housing to the end cover using the three 1/4" self-tapping screws (3). Start all three screws by hand then torque to 50-80 in. lbs.
2. Install the o-ring on the check valve assembly (15), then install the assembly in the end cover.
3. Install the desiccant cartridge o-ring (21) in its groove in the end cover. Using a light coat of barium grease, lubricate the bottom of the desiccant cartridge in the area that will contact the o-ring (21) and end cover. Screw the desiccant cartridge into the end cover until contact is made between it and the o-ring. Using a strap or chain wrench positioned 2-3" from the bottom of the cartridge, turn the desiccant cartridge clockwise 180-225 degrees beyond the position where initial contact was made between the cartridge and end cover o-ring. Torque should not exceed 50 ft. lbs.
4. Install the end cover outer housing o-ring (23) on the shoulder in the end cover. Place the housing (24) over the desiccant cartridge and align the holes. Install the six 3/8" cap screws (16), lock nuts (19) and twelve special washers (17) making certain they are in the proper position as marked during disassembly. The two longer 3/8" cap screws (18) will be used to secure the AD-9 to its mounting bracket. Tighten the six cap screws and nuts in a star pattern in a fashion similar to Figure 8; depending on lower bracket location. Torque to 270-385 in. lbs. (Refer to Fig. 8.) Note: The two remaining bolt holes in the end cover and two 3/8" cap screws must be the ones marked during disassembly to assure proper orientation of the ports and adequate length of the cap screws.

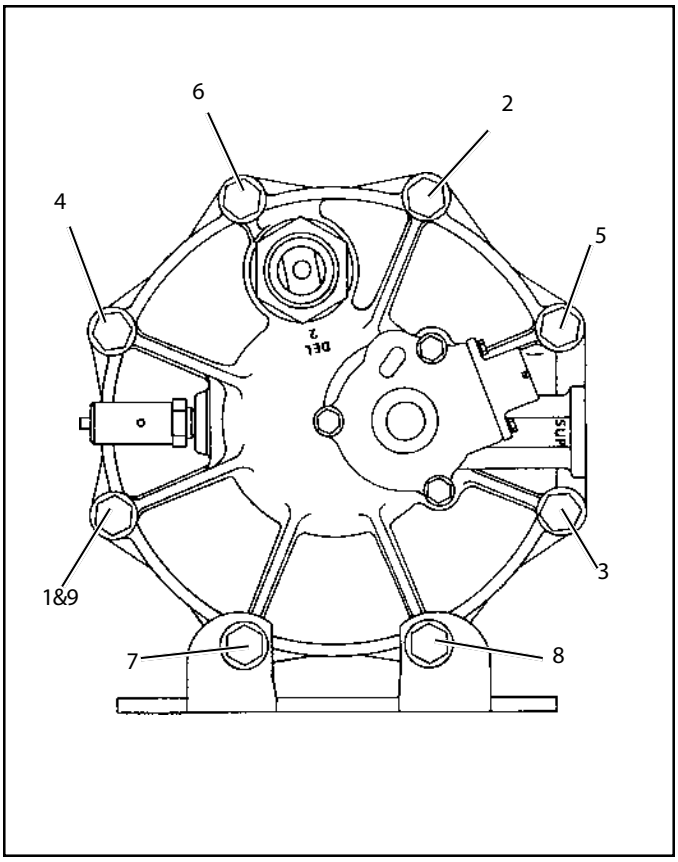

FIGURE 8 - END COVER TO HOUSING TORQUE PATTERN

INSTALLATION

1. Install the assembled AD-9 air dryer back onto the vehicle by slipping it into the upper mounting bracket. Align the two unused holes in the end cover with the bottom mounting bracket such that the bottom bracket

supports air dryer. The AD-9 end cover should rest on the bracket. Using the remaining two 3/8" cap screws (18), four special washers (17), and two lock nuts (19), secure the air dryer to the lower bracket. Tighten, then torque the two remaining cap screws to 270-385 in. lbs.

2. Tighten the 5/16" X 4-1/2" bolt and nut on the upper mounting bracket. Torque to 80-120 in lbs.
3. Reconnect the three airlines to the proper ports on the end cover (identified during disassembly).
4. Reconnect the vehicle wiring harness to the AD-9 heater and thermostat assembly connector by plugging it into the air dryer connector until its lock tab snaps in place.
5. Before placing vehicle back into service, perform the Operation and Leakage Tests stated elsewhere in this manual.

RETROFITTING THE AD-9 AIR DRYER

GENERAL

The following retrofit instructions are presented for reference purposes only since Bendix aftermarket retrofit and replacement air dryers are packaged with the most up-to-date installation instructions. The instructions packaged with the AD-9 should be followed in lieu of those presented here.

The preceding portion of this manual deals with "in-service" repair and or replacement of the AD-9 air dryer. The portion of the manual that follows is concerned with installing an AD-9 on a vehicle not previously equipped with one.

VEHICLE APPLICATION REQUIREMENTS

The basic application requirements presented here apply to a standard air dryer installation. The majority of highway vehicles in use today will meet these basic requirements however, some may not. Examples of vehicles that may not meet the requirements include, bulk trailer unloading operations and other high air consumption/continuous flow systems. While the AD-9 air dryer can be used on these vehicles the standard installation procedure presented in this manual may require modification to assure proper operation and service life. Consult your local authorized Bendix parts outlet or sales representative for additional information.

1. Charge Cycle Time - The AD-9 air dryer is designed to provide clean, dry air for the brake system. When a vehicle's air system is used to operate non-brake air accessories it is necessary to determine that during normal, daily operation the compressor should recover from governor "cut-in" to governor "cut-out" (usually 100 psi to 120 psi) in 90 seconds or less at engine RPMs commensurate with the vehicle vocation. If the recovery time consistently exceeds this limit, it may be necessary to "bypass" the air accessory responsible for the high air usage. Consult your local authorized Bendix parts outlet or sales representative for additional information.
2. Purge Cycle Time - During normal vehicle operation, the air compressor must remain unloaded for a minimum of 20 seconds for the standard AD-9 Air Dryer or 30 seconds for the Extended Purge model. These minimum purge times are required to ensure complete regeneration of the desiccant material. If the purge time is occasionally shorter than the times specified, no permanent ill effect should be expected, however, if the purge time is consistently less than the minimum, an accessory by-pass system must be installed.
3. European Air Brake Systems - Brake systems that incorporate compressors without integral unloading mechanisms and/or utilize a compressor discharge line unloader valve have special AD-9 air dryer installation requirements. Consult your local authorized Bendix parts outlet or sales representative for additional information.
4. Air Compressor Size - Although the AD-9 air dryer can be used in conjunction with larger compressors, it was designed primarily for units rated for up to 17 CFM. It is recommended that when using the AD-9 air dryer with a compressor which has a rated displacement exceeding 17 CFM that an authorized Bendix parts outlet or Bendix marketing representative be contacted for assistance.
5. Holset "E or QE" Type Air Compressors - In order for the AD-9 to function properly when installed with the Holset Type "E or QE" compressor, several specialized Holset components are required. Consult your local authorized Holset parts outlet or sales representative for additional information.
6. Use of Standard or Extended Purge AD-9 - Use the following guidelines:

Total Vehicle Reservoir Volume	Requirement
Less than 9,000 cu. in.	Standard AD-9
9,000 - 12,500 cu. in.	Extended Purge AD-9
Greater than 12,500 cu. in.	Contact Bendix Rep. or Bendix Engineering

VEHICLE PREPARATION

1. Park the vehicle on a level surface and prevent movement by means other than the brakes.
2. Drain all reservoirs to 0 p.s.i. (0 kPa).

LOCATING AD-9 ON VEHICLE

1. The AD-9 air dryer must be mounted vertically (purge exhaust toward road surface) outside the engine compartment in an area of air flow while the vehicle is in motion. The AD-9 must not be exposed to direct wheel splash (located behind axle mud flap is acceptable).
2. Locate the AD-9 air dryer as close to the first (supply) reservoir as possible.
3. Do not locate the AD-9 air dryer near heat producing components such as the vehicle exhaust and make certain adequate clearance from moving components (e.g. drive shaft, suspension, pitman arm, etc.) is provided.
4. Locate the AD-9 air dryer on vehicle so that a minimum of 11 inches (28 CM) clearance below the end cover is available to allow servicing. Alternatively, provide access to the bracket bolts so the unit may be removed for servicing.
5. When choosing the mounting location for the AD-9, note the discharge line length requirements stated under the heading Connecting the Air Lines, elsewhere in this instruction sheet.

   Important Note: Under normal operating conditions, the maximum inlet air temperature for the AD-9 air dryer is 150 degrees Fahrenheit.

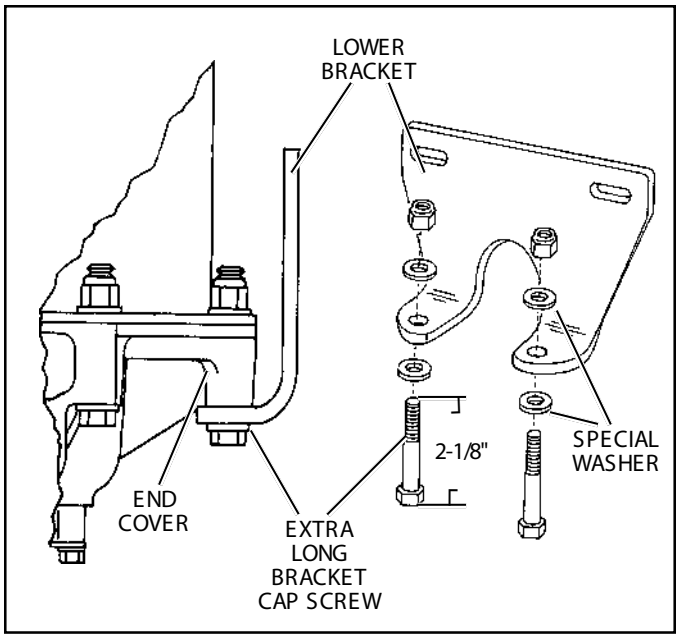

FIGURE 9 - LOWER BRACKET INSTALLATION

MOUNTING THE AD-9

1. To install the lower mounting bracket on the AD-9 air dryer, it will be necessary to remove and discard two of the end cover bolts and lock nuts. To determine which end cover bolts to utilize to attach the lower bracket, take into consideration the piping connections required to install the AD-9 air dryer and use those that will best position the unit for ease of installation. Locate the bracket such that it cradles the end cover as shown in Figure 2. Utilizing the two 2-3/8" long cap screws, lock nuts and special washers provided with the AD-9 air dryer retrofit unit, attach the lower mounting bracket and torque to 270-385 in. lbs.
2. Assemble the mounting strap and upper mounting bracket as illustrated in Figure 4, by utilizing the 5/16" cap screw, 5/16" lockwasher and 5/16" nut provided.
3. Place the upper bracket assembly onto the shell of the AD-9 air dryer and orient it so that it bears entirely on the cylindrical surface and does not extend onto the domed top. The slot spacing between the upper and lower bracket should be a minimum of 5.5 inches apart. Do not tighten strap onto the shell at this time.
4. A universal mounting plate (Pc. No. 248478) is available to facilitate the mounting of the AD-9 air dryer to the vehicle. It can be obtained through an authorized Bendix parts outlet.
5. Mount the AD-9 air dryer on the vehicle using 3/8" bolts (grade 5 min.) and washers. Torque to 25 ft. lbs. (300 inch pounds.) After positioning and mounting the upper bracket assembly according to the installation requirements, torque the 5/16" nut to 80120 in. lbs. to tighten strap onto the shell.

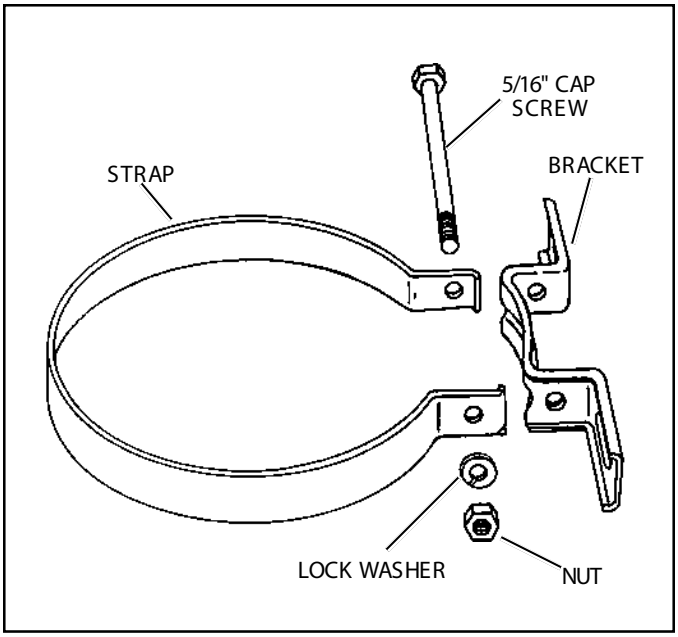

FIGURE 10 - UPPER MOUNTING BRACKET AND STRAP

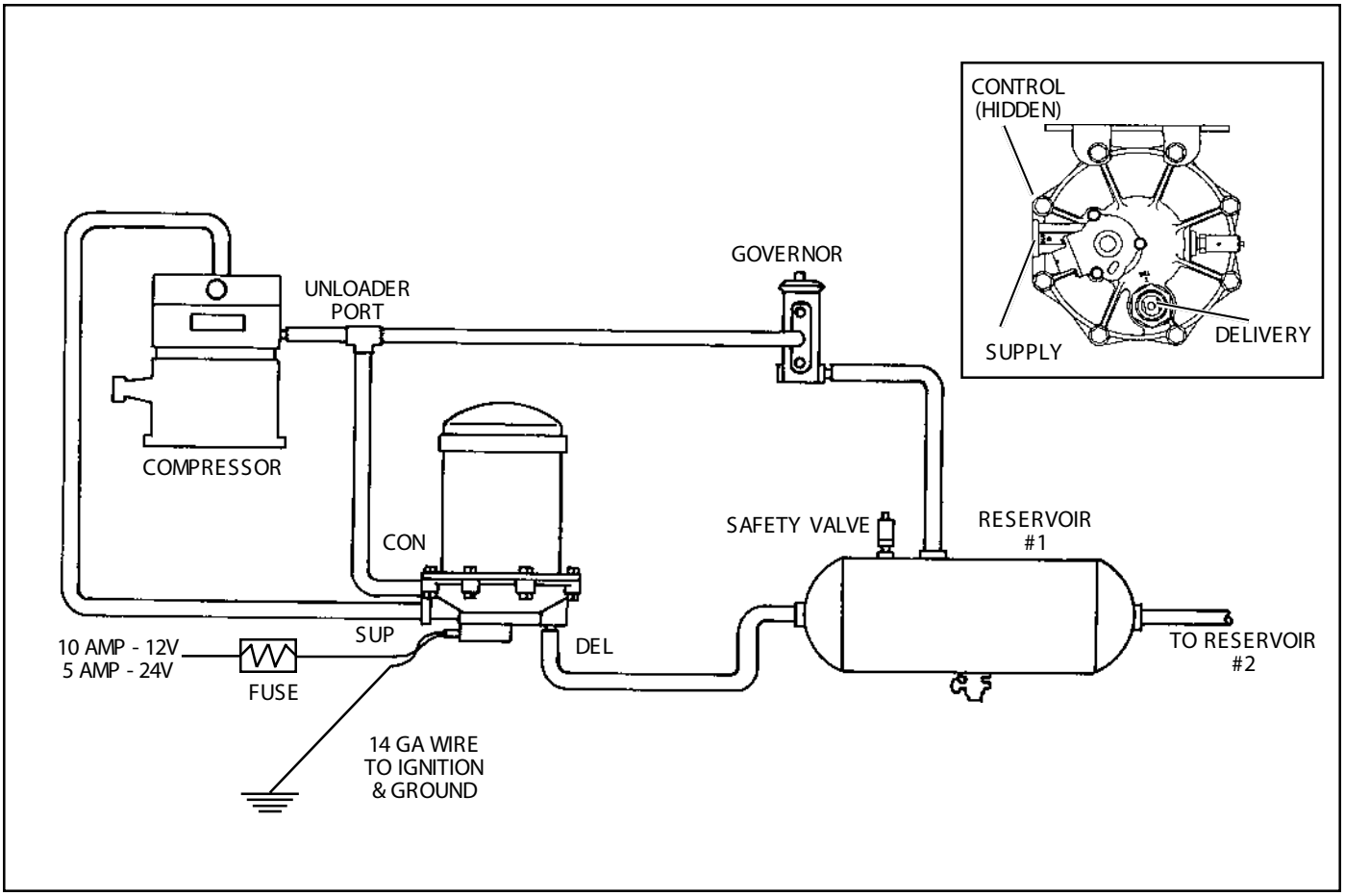

FIGURE 2 - AD-9 CHARGE CYCLE

CONNECTING THE AIR LINES

PURGE CONTROL LINE

1. Install a Purge Control air line having a minimum inside diameter of 3/16 inches between the AD-9 end cover control port and an unused unloader port on the governor. The control line must be plumbed direct to the governor and not in series with automatic drain valves, lubrication systems, etc.
2. The control line should slope downward to the end cover without forming potential water traps.

DISCHARGE LINE

General:

Where minimum diameter are specified, larger line diameters generally improve performance and life and reduce temperatures, particularly in severe applications.

1. The discharge line material should be wire braided "Teflon" hose, copper tubing or a combination of both.
2. The discharge line should slope downward from the compressor discharge port to the AD-9 air dryer supply port without forming water traps, kinks or restrictions. Cross-overs from one side of the frame rail to the other, if required, should occur as close as possible to the compressor.
3. Fitting extensions must not be installed at the AD-9 supply port.
4. Discharge line lengths and inside diameter requirements are dependent on the vehicle application and are as follows:

Typical P&D, School Bus and Line Haul

The minimum discharge line length is 6 feet and the maximum is 16 feet.

LENGTH	I.D. MIN.	OTHER REQUIREMENTS
6.0 - 9.5 ft.	1/2 in.	None
9.5 - 12 ft.	1/2 in.	Last 3 feet including Supply Port fitting must be insulated with 1/2 inch thick closed cell polyethylene pipe insulation.
12 - 16 ft.	5/8 in.	Last 3 feet including Supply Port fitting must be insulated with 1/2 inch thick closed cell polyethylene pipe insulation.

If the discharge line length must be less than 6 feet or greater than 16 feet, contact your local Bendix representative or authorized parts outlet for further information.

High Duty Cycle Vehicles (City Transit Coaches, Refuse Haulers, etc.)		
The minimum discharge line length is 10 feet and the maximum is 16 feet.		
LENGTH	I.D. MIN.	OTHER REQUIREMENTS
10-16 ft.	1/2 in.	None

If the discharge line length must be less than 10 feet or greater than 16 feet, contact your local Bendix representative or authorized parts outlet for further information.

DELIVERY LINE

1. Install an air line of the same approximate I.D. as the discharge line between the AD-9 air dryer delivery port and the first (supply) reservoir. This line should also slope downward to the reservoir, if possible.

EXHAUST LINE

1. If it is necessary to direct AD-9 air dryer discharge contaminants away from vehicle components it may be necessary to purchase a special exhaust cover for the AD-9 air dryer (Pc. No. 298924) to replace the standard exhaust cover furnished with the unit. A 1 inch (25.4 mm) I.D. hose can be clamped on the special AD-9 air dryer exhaust cover. Note: Use a thin flat blade to pry the standard exhaust cover off.

WIRING THE HEATER/THERMOSTAT

1. Determine the vehicle's electrical system voltage and make certain that the AD-9 air dryer that is to be installed contains the same voltage heater. Use the AD-9 air dryer part number to confirm the proper voltage. The AD-9 air dryer is available with either a 12 or 24 volt heater which uses 75 watts of power.
2. A two lead, 12 inch, wire harness with attached weather resistant connector is supplied with all retrofit and replacement AD-9 air dryers. Connect one of the two leads of the wire harness to the engine kill or ignition switch. The remaining lead of the wire harness must be connected to a good vehicle ground (not to the air dryer or its mounting bracket). A fuse should be installed in the power carrying wire; install a 10 amp fuse for 12 volt heaters and a 5 amp fuse for a 24 volt heater.
3. Use 14 GA wire if it is necessary to lengthen the wire harness provided with the AD-9 air dryer. Make certain all wire splices are waterproofed.
4. Tie wrap or support all electrical wire leading to the AD-9 air dryer at 6 - 8 inch intervals. Note: Wires should have sufficient slack and not completely taught.

TESTING THE AD-9

Before placing the vehicle in service, perform the following tests:

1. Close all reservoir drain cocks.
2. Build up system pressure to governor cut-out and note that the AD-9 air dryer purges with an audible escape of air.
3. "Fan" the service brakes to reduce system air pressure to governor cut-in. Note that the system once again builds to full pressure and is followed by a purge at the AD-9 air dryer exhaust.
4. It is recommended that the following items be tested for leakage to assure that the AD-9 air dryer will not cycle excessively.
   (A) Total air system leakage (See Bendix publication BW-5057 "Air Brake Handbook").
   (B) Compressor unloader mechanism.
   (C) Governor.
   (D) Drain cock and safety valve in first (supply) reservoir.
   (E) All air connections leading to and from the first (supply) reservoir.

AD-9 AIR DRYER TROUBLESHOOTING CHART

SYMPTOMS	CAUSE	REMEDY
1. Dryer is constantly "cycling" or purging.	A. Excessive system leakage.	A. Test for excessive system leakage. Allowable leakage: Pre-121 vehicles, single vehicles - 2 psi/minute. Tractor trailer - 3 psi/minute. 121 vehicles, single vehicle - 1 psi/minute per service reservoir. Tractor trailer - 3 psi/minute per service reservoir.
	B. Excessive leakage in fitting, hoses and tubing connected to the compressor, air dryer and first reservoir.	B. Using soap solution, test for leakage at fittings, drain valve (if any) and safety valve in first reservoir. Repair or replace as necessary.
	C. Defective check valve assembly in AD-9 air dryer end cover.	C. Remove check valve assembly from end cover. Subject air pressure to delivery side of valve. Apply soap solution at opposite end and check for leakage. (Permissible leakage - 1inch bubble in five seconds) If excessive leakage, replace check valve assembly.
	D. Defective governor.	D. Test governor for proper cut-in and cut-out pressures and excessive leakage in both positions.
	E. Leaking purge valve housing assembly and/or o-rings in AD-9 air dryer end cover.	E. With the supply port open to atmosphere, apply 120 psi at the control port. Apply a soap solution to the supply port and exhaust port (purge valve seat area). Permissible leakage - 1 inch bubble in five seconds.
	F. Compressor unloader mechanism leaking excessively.	F. Remove air strainer or fitting from compressor inlet cavity. With compressor unloaded, check for unloader piston leakage. Slight leakage permissible.
	G. Holset "E" type compressor.	G. Test Air Dryer system using Bendix Product Bulletin PRO-08-19 entitled "Troubleshooting The Holset E compressor system With Bendix Air Dryer."
	H. Rapid cycling of the governor due to air starvation at the RES port of the governor.	H. With gauge installed at RES port of governor, pressure should not drop below "Cut-In" pressure at the onset of the compressor "Unloaded" cycle. If pressure drops, check for "kinks" or restrictions in line connected to RES port. Line connected to RES port on governor must be same diameter, or preferably larger than, lines connected to UNL port(s) on governor.

AD-9 AIR DRYER TROUBLESHOOTING CHART (Continued)

SYMPTOMS	CAUSE	REMEDY
2. Water in vehicle reservoir.	A. Desiccant requires replacement - excessive contaminants in desiccant cartridge assembly.	A. Replace desiccant cartridge.
	B. Improper discharge line length or improper line material. Maximum air dryer inlet temperature is exceeded.	B. Refer to section entitled "Connecting the Air Lines" and check "Discharge Line" size and length.
	C. Air system charged from outside air source (outside air not passing through air dryer).	C. If system must have outside air fill provision, outside air should pass through air dryer. This practice should be minimized.
	D. Air dryer not purging (see Symptom #5).	D. See cause and remedy for Symptom #5.
	E. Purge (air exhaust) time insufficient due to excessive system leakage (see causes for Symptom #1).	E. Check causes and remedies for Symptom #1.
	F. Excessive air usage - Air dryer/vehicle application requires additional purge volume. Air dryer not compatible with vehicle air system requirement (Improper air dryer/ vehicle application).	F. <u>Charge Cycle Time</u> - The AD-9 is designed to provide clean, dry air for the brake system. When a vehicle's air system is used to operate non-brake air accessories it is necessary to determine that during normal, daily operation the compressor should recover from governor "cut-in" to governor "cut-out" (usually 100 psi to 120 psi) in 90 seconds or less at engine RPM's commensurate with the vehicle vocation. If the recovery time consistently exceeds this limit, it may be necessary to "bypass" the air accessory responsible for the high air usage. An example of where a by-pass system would be required is when the compressor is used to pressurize a tank trailer for purposes of off-loading product. Consult your local authorized Bendix parts outlet or sales representative for additional information. <u>Purge Cycle Time</u> - During normal vehicle operation, the air compressor must remain unloaded for a minimum of 20 seconds for the standard AD-9 or 30 seconds for the Extended Purge Model. These minimum purge times are required to ensure complete regeneration of the desiccant material. If the purge time is consistently less than the minimum, an accessory by-pass system must

AD-9 AIR DRYER TROUBLESHOOTING CHART (Continued)

SYMPTOMS	CAUSE	REMEDY
2. Water in vehicle reservoir (continued).		be installed. Consult your local authorized Bendix parts outlet or sales representative for additional information. <u>European Air Brake Systems</u> - Brake systems that incorporate compressors without integral unloading mechanisms and/or utilize a compressor discharge line unloader valve have special air dryer installation requirements. Consult your local authorized Bendix parts outlet or sales representative for additional information. <u>Air Compressor Size</u> - Although the AD-9 can be used in conjunction with larger compressors, it was designed primarily for units rated for up to 17 CFM. It is recommended that when using the AD-9 with a compressor which has a rated displacement exceeding 17 CFM that an authorized Bendix parts outlet or Bendix marketing representative be contacted for assistance.
	G. Air by-passes desiccant cartridge assembly.	G. Replace desiccant cartridge/end cover/o-ring. Check to make sure desiccant cartridge assembly is properly installed.
	H. Purge time is significantly less than minimum allowable.	H. Replace desiccant cartridge/end cover o-ring. Check to make sure desiccant cartridge assembly is properly installed. Replace desiccant cartridge assembly.
3. Safety valve on air dryer "popping off" or exhausting air.	A. Desiccant cartridge plugged.	A. Check compressor for excessive oil passing and/or correct compressor installation. Repair or replace as necessary. Rebuild or replace cartridge.
	B. Defective discharge check valve in end cover of the AD-9.	B. Test to determine if air is passing through check valve. Repair or replace.
	C. Defective fittings, hose or tubing between air dryer and first reservoir.	C. Check to determine if air is reaching first reservoir. Inspect for kinked tubing or hose. Check for undrilled or restricted hose or tubing fittings.
	D. Excessive pressure pulsations from compressor. (Typical single cylinder type).	D. Increase volume in discharge line. Added length or size of line, or add a ping tank.
	E. Safety valve setting lower than the maximum system pressure.	E. Reduce system pressure or obtain a higher setting safety valve.

AD-9 AIR DRYER TROUBLESHOOTING CHART (Continued)

SYMPTOMS	CAUSE	REMEDY
4. Constant exhaust of air at air dryer purge valve exhaust or unable to build system pressure. (Charge mode.)	A. Air dryer purge valve leaking excessively.	A. With compressor loaded, apply soap solution on purge valve exhaust, to test for excessive leakage. Repair purge valve as necessary.
	B. Defective governor.	B. Check governor for proper "cut-in", "cut-out" pressure and excessive leakage in both positions. Repair or replace as necessary.
	C. Purge control line connected to reservoir or exhaust port of governor.	C. Purge control line must be connected to unloader port of governor.
	D. Purge valve frozen open - faulty heater and thermostat, wiring, blown fuse.	D. Test heater and thermostat as described in Step 7 of Preventative Maintenance Section.
	E. Inlet and outlet air connections reversed.	E. Compressor discharge to inlet port. Reconnect lines properly.
	F. Kinked or blocked (plugged) discharge line.	F. Check to determine if air passes through discharge line. Check for kinks, bends, excessive carbon deposits.
	G. Excessive bends in discharge line (water collects and freezes).	G. Discharge line should be constantly sloping from compressor to air dryer with as few bends as possible.
	H. Excessive system leakage.	H. See Symptom #1's Causes and Remedies.
	I. Purge valve stays open - supply air leaks to control side.	I. Replace purge valve housing assembly o-rings.
5. Air dryer does not purge or exhaust air.	A. Broken, kinked, frozen, plugged or disconnected purge control line.	A. Test to determine air flows through purge control line when compressor unloaded. Check for undrilled fittings. (See Symptom #4, Remedy C.)
	B. See Causes B, E, G for Symptom #4.	B. Refer to Remedies B, E, G for Symptom #4.
6. Desiccant material being expelled from air dryer purge valve exhaust (may look like whitish liquid or paste or small beads.) - OR - Unsatisfactory desiccant life.	A. This symptom is almost always accompanied by one or more of Symptoms 1, 2, 3, 4 and 5. See related causes for these Symptoms above.	A. See Causes and Remedies for Symptoms 1, 2, 3, 4 and 5.
	B. Air dryer not securely mounted. (Excessive vibration.)	B. Vibration should be held to minimum. Add bracket supports or change air dryer mounting location if necessary.
	C. Defective cloth covered perforated plate in air dryer.	C. Replace desiccant cartridge assembly.

AD-9 AIR DRYER TROUBLESHOOTING CHART (Continued)

SYMPTOMS	CAUSE	REMEDY
6. (Continued.)	D. Compressor passing excessive oil.	D. Check for proper compressor installation; if symptoms persist, replace compressor.
	E. Desiccant cartridge not assembled properly to end cover. (Loose attachment)	E. Check the torque on the desiccant cartridge to end cover attachment. Refer to assembly section of this data sheet.
7. "Pinging" noise excessive during compressor loaded cycle.	A. Single cylinder compressor with high pulse cycles.	A. A slight "pinging" sound may be heard during system build up when a single cylinder compressor is used. If this sound is deemed objectionable, it can be reduced substantially by increasing the discharge line volume. This can be accomplished by adding an additional four feet of discharge line or adding a 90 cubic inch reservoir between the compressor and the AD-9 air dryer.
8. Constant seepage of air at air dryer purge valve exhaust (non-charging mode.)	A. Inlet of air compressor pressurized by turbocharger from engine.	A. Some leakage of pressure past the metal seat of the turbo cutoff feature of the AD-9 is to be expected also may be audible. This slight loss of air will not effect the engine or turbo performance.
	B. Defective check valve assembly in AD-9 air dryer end cover.	B. Refer to Remedy C, Symptom #1.
9. The air dryer purge piston cycles rapidly in the compressor unloaded (noncompressing) mode.	A. Compressor fails to "unload".	A. Faulty governor installation; no air line from governor to compressor or line is "kinked" or restricted. Install or repair air line.

BW1627 © AlliedSignal Truck Brake Systems Co. 1/1999. Printed in USA.

SECTION 13: WHEELS, HUBS & TIRES

CONTENTS

1. WHEELS 13-3

2. WHEEL MAINTENANCE 13-3

2.1 INSPECTION 13-3
2.2 SINGLE WHEEL REMOVAL 13-3
2.3 SINGLE WHEEL INSTALLATION 13-4

3. DUAL WHEELS 13-4

3.1 OUTER WHEEL REMOVAL 13-4
3.2 INNER WHEEL 13-4
3.3 INNER WHEEL INSTALLATION 13-4
3.4 OUTER WHEEL INSTALLATION 13-4
3.5 INSPECTION 13-4

4. ALUMINUM WHEEL ANTI-CORROSION PROTECTION 13-5

5. WHEEL STRAIGHTNESS TEST 13-5

6. WHEEL STUDS 13-6

6.1 DRIVE AXLE STUDS 13-6
6.2 FRONT AND TAG AXLE STUDS 13-6

7. HUB MOUNTED WHEELS 13-6

7.1 CARE OF WHEELS 13-7

8. FRONT AND TAG AXLE WHEEL HUBS 13-7

8.1 GREASE LUBRICATED WHEEL HUBS 13-7
8.1.1 Recommended Lubricants 13-7
8.1.2 Hub Bearing Inspection 13-7
8.2 OIL LUBRICATED WHEEL HUBS 13-7
8.2.1 Hub Bearing Maintenance 13-7

9. DRIVE AXLE WHEEL HUBS 13-8

9.1 BEARING ADJUSTMENT 13-8
9.2 DISASSEMBLY AND REPAIR 13-8

10. SPARE WHEEL (IF APPLICABLE) 13-9

10.1 PULLING OUT SPARE WHEEL 13-9
10.2 CHANGING A FLAT 13-10
10.3 SPARE WHEEL MAINTENANCE 13-10

11. TIRE MAINTENANCE 13-10

11.1 INFLATION PRESSURE 13-11
11.2 TIRE MATCHING 13-12
11.3 WHEEL BALANCING 13-12
11.4 TIRE ROTATION 13-12

12. SPECIFICATIONS 13-13

ILLUSTRATIONS

FIGURE 1: ALUM/STEEL WHEEL ARRANGEMENT 13-3
FIGURE 2: TIGHTENING SEQUENCE 13-3
FIGURE 3: DUAL WHEEL INSTALLATION 13-5
FIGURE 4: DIAL GAUGE INSTALLATION 13-6
FIGURE 5: OIL FILL CAP 13-7
FIGURE 6: SPARE WHEEL COMPARTMENT 13-9
FIGURE 7: SPARE WHEEL AND TIRE 13-9
FIGURE 8: REMOVING SPARE WHEEL AND TIRE 13-9
FIGURE 9: FORWARD R.H. SIDE COMPARTMENT 13-10
FIGURE 10: REAR BAGGAGE COMP. L.H. SIDE 13-10
FIGURE 11: TIRE INFLATION 13-11
FIGURE 12: TIRE LIFE / INFLATION PRESSURE 13-12

1. WHEELS

When the vehicle is provided with stud-mounted wheels, wheel studs and nuts on the left side of the vehicle have left-hand threads whereas those on the right side have right-hand threads. If equipped with hub-mounted wheels, all studs and nuts have right-hand threads. Either steel wheels or optional aluminum-polished wheels may be installed on the vehicle. Both are mounted with radial tubeless tires.

Aluminum wheel dimensions are 22.50 X 9 inches (571.5 X 228.6 mm) and steel wheel dimensions are 22.50 X 8.25 inches (571.5 X 209.6 mm) or 22.50 X 9 inches (571.5 X 228.6 mm) for 315/80 R 22.5 and 12 R 22.5 tires.

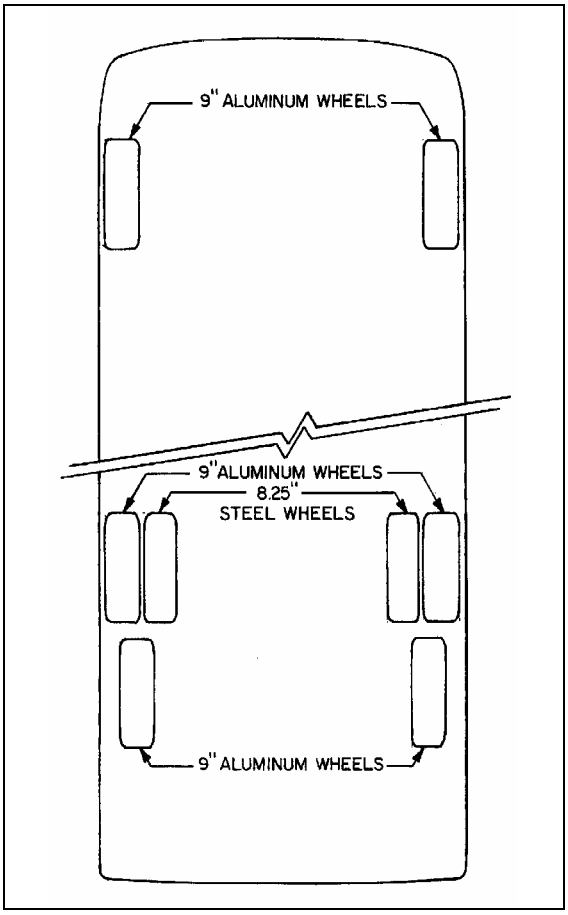

FIGURE 1: ALUM/STEEL WHEEL ARRANGEMENT 13001

2. WHEEL MAINTENANCE

Wheel maintenance consists of periodic inspections. Check all parts for damage and make sure that wheel nuts are tightened to the proper torque. In the case of a new vehicle, or after a wheel installation, stud nuts should be tightened every 100 miles (160-km) for the first 500 miles (800-km) to allow setting in of clamping surfaces.

Wheel studs and nuts must be kept free from grease and oil. No lubricant whatsoever should be used. Cleanliness of the wheel and its rotor mating surfaces is important for proper wheel mounting.

It is also important that wheel stud nuts be tightened alternately on opposite sides of the wheel. Refer to Figure 2 for the suggested tightening sequence.

However, for hub mounted wheels, it is recommended to add some rust protection lubricant on the pilot diameter of the hub (to facilitate future removal).

2.1 INSPECTION

Tighten stud nuts progressively as shown in Figure 2. The final tightening should be done with a torque wrench. Tighten stud nuts to 450 - 500 lbf·ft (610 - 680 N·m) for aluminum as well as steel wheels.

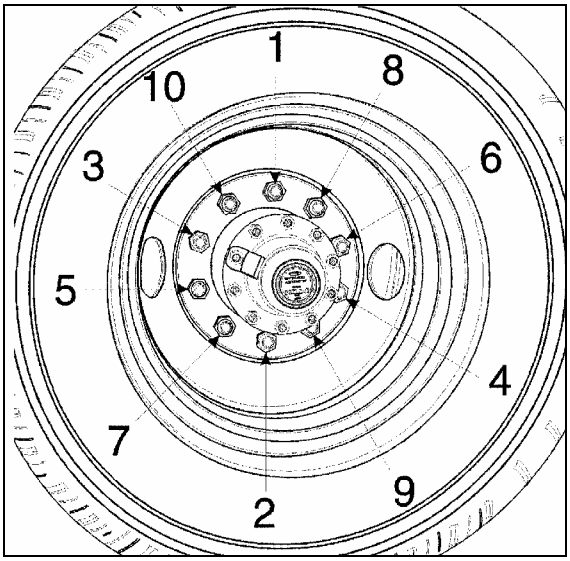

FIGURE 2: TIGHTENING SEQUENCE 13018

2.2 SINGLE WHEEL REMOVAL

1. Stop engine and apply parking brake.

2. Loosen wheel nuts about one turn (do not remove the nuts). This is not necessary if equipped with hydraulic powered gun.

Note: *For stud-mounted wheels, turn nuts counterclockwise for R.H. side and clockwise for the L.H. side of vehicle. For hub-mounted wheels, turn nuts counterclockwise on both sides of the vehicle.*

3. Raise the vehicle by its jacking points on the body. See Section 18, *"BODY",* under heading *"VEHICLE JACKING POINTS";*

4. Unscrew wheel hex stud nuts and remove the wheel;

Caution: *Always mark position of the wheel on the axle prior to removal in order to replace wheel at the same location, thus avoiding a new wheel balancing.*

2.3 SINGLE WHEEL INSTALLATION

1. Mount the wheel over studs, being careful not to damage stud threads;

2. Screw in the hex stud nuts (refer to Figure 2 for sequence) so that wheel will position itself concentrically with hub. This is important, otherwise wheel may be eccentric with hub and will not run straight. In this initial step, slightly tighten the nuts to correctly position the wheel;

3. Tighten stud nuts progressively as shown in Figure 2. The final tightening should be done with a torque wrench. Tighten stud nuts to 450 - 500 lbf·ft (610 - 680 N·m) for aluminum as well as steel wheel.

Caution: *Insufficient mounting-torque can result in damage to parts. Excessive mounting torque can cause studs to break and the wheel to crack in stud hole area.*

3. DUAL WHEELS

3.1 OUTER WHEEL REMOVAL

Same as described in *"Single Wheel Removal"* procedure described previously.

3.2 INNER WHEEL

1. Remove outer wheel;

2. Unscrew inner cap nuts

3. Remove inner wheel.

3.3 INNER WHEEL INSTALLATION

1. Mount the wheel over studs, being careful not to damage stud threads;

2. Screw in the inner cap nuts (Fig. 3), so that wheel will position itself concentrically with hub. Refer to Figure 2 for sequence;

3. Tighten inner cap nuts progressively according to sequence shown in Figure 2. Final tightening should be done with a torque wrench. Tighten inner cap nuts to 450 - 500 lbf·ft (610 - 680 N·m) for aluminum as well as steel wheel.

Caution: *Insufficient mounting-torque can result in damage to parts. Excessive mounting torque can cause studs to break and the wheel to crack in stud hole area.*

3.4 OUTER WHEEL INSTALLATION

With inner wheel installed, tighten the hex stud nuts (Fig. 3) using the single wheel installation procedure described previously.

Note: *On dual wheel assemblies, position the wheels with the tire valves 180º apart in order to have access to both the inner and outer valves.*

3.5 INSPECTION

1. Loosen a hex stud nut three turns (Fig. 3);

2. Tighten the inner cap nut to 450 - 500 lbf·ft (610 - 680 N·m);

3. Tighten the hex stud nut to 450 - 500 lbf·ft (610 - 680 N·m).

Repeat for each of the 10 *"hex stud nut - inner cap nut assemblies"* according to the tightening sequence in Figure 2.

Caution: *Do not attempt to tighten an inner cap nut without having previously loosened the hex stud nut.*

Caution: *The actual length of thread engagement present in an assembled wheel can not always be determined by visual inspection of measurement of a tightened assembly. The relationship of the wheel cap nut seat to the end*

of the stud may vary. If there is any doubt that enough thread engagement is present, the number of engaged threads may be counted. Tighten all nuts in the regular manner, then loosen one to hand-tightness. The number of turns to disengage a 1-1/8-inch nut should be at least five full turns. At least seven full turns should be required to disengage a ¾-inch nut. Ideally, when torqued to the proper load, the stud should be flush with the face of the nut. ***The face of the nut may be recessed in nuts that are taller for improved wrenching. With most of the nuts in present use, a few unengaged threads at the outer end will cause no problem provided at least 5-7 full turns are required to disengage the nut depending on thread size.***

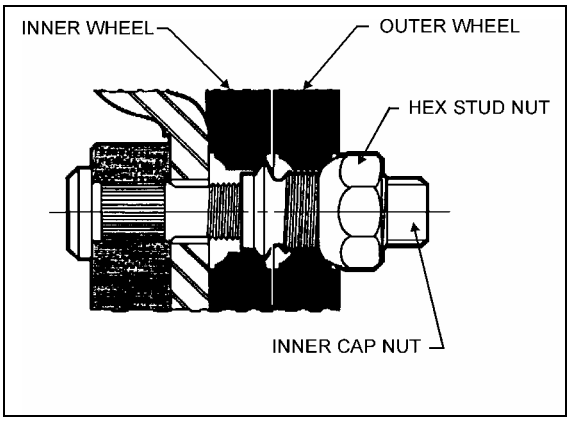

FIGURE 3: DUAL WHEEL INSTALLATION 13007

4. ALUMINUM WHEEL ANTI-CORROSION PROTECTION

Clean wheels often by means of a high pressure water jet. Cleaning may be accelerated with mild soap. Do not use concentrated alkaline cleaning products.

When tire is removed, clean and inspect wheel thoroughly. Remove dirt and corrosion on rim by means of a wire brush. Do not use a wire brush on the outer surface of the wheel.

The following measures should be taken to maintain original appearance of the aluminum wheels:

1. Remove any tar from wheel surface with a good quality tar remover.
2. Spray Alcoa Cleaner (Prévost #683529) evenly on cool outer surface of wheel. Let work 15-20 minutes (keep wet by spraying more Cleaner if necessary).
3. Rinse thoroughly with clean water and let air dry. Heavy oxidation may require a repeat application of cleaner.
4. Apply Alcoa Polish (Prévost #683528) sparingly to a small area using a clean, soft cloth. Work polish into surface as you would a rubbing compound.
5. Buff, turning cloth frequently, until surface is clean and shiny. Let air dry. Use power buffer to improve ease of use and gloss uniformity.
6. On completely dry, clean and polished surface, generously apply Alcoa sealant (Prévost #683527). Rinse thoroughly with water while surface is still wet in appearance (have water source ready as the dry time is very short, usually less than 2 minutes).
7. For best results, finish by wiping the surface with a clean rag to remove excess water, then allow surface to dry.

Clean aluminum wheels as required to maintain original look.

Warning: *Wheel surfaces may have sharp or cutting edges that may cause injury to the hands. To prevent contact with sharp edges, it is strongly recommended to wear rubber gloves when washing or polishing wheels.*

5. WHEEL STRAIGHTNESS TEST

1. Slightly raise axle to be checked and place a safety support underneath;
2. Check wheel lateral runout. Install a dial gauge as shown in Figure 4, then rotate the wheel by hand one full turn. As the wheel turns, note any variation on the dial gauge;

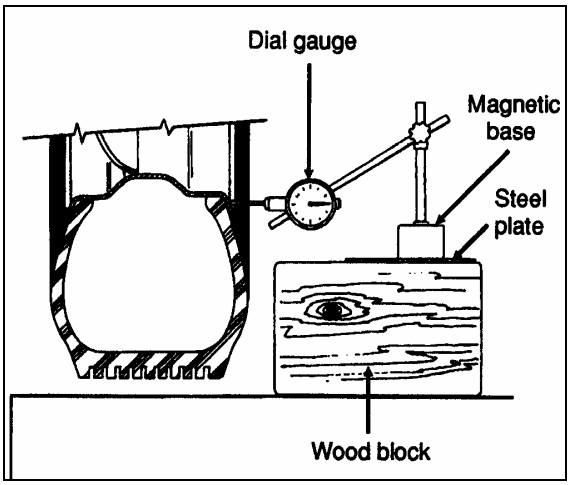

FIGURE 4: DIAL GAUGE INSTALLATION 13008

Caution: *Damage to the dial gauge could occur if it strikes a wheel balancing weight.*

3. If the variation in lateral runout exceeds 0.125 inch (3,2 mm), the wheel must be replaced.

If doubt exists whether wheel or hub is distorted, hub may be checked as follows:

1. Replace the existing wheel with a wheel known to be correct;
2. Check wheel lateral runout as outlined in step 2;
3. If, within specifications, the hub is correct but the suspected wheel must be replaced.

Warning: *NEVER STRAIGHTEN ALUMINUM WHEELS. Never heat aluminum wheels to repair damages incurred after hitting a curb or resulting from other causes. The special alloy in wheels has been heat treated, and any uncontrolled heating could alter wheel structure. Furthermore, never weld aluminum-forged wheels for any reason whatsoever.*

6. WHEEL STUDS

Stripped threads may be the result of excessive torquing or may have been damaged during wheel installation when placing the wheel over the studs. A stud having damaged threads must be replaced. Broken studs are a direct result of operating with loose stud nuts or improperly seated wheels. When a broken stud is replaced, the adjacent studs, on each side of the broken one must also be replaced since they could have been subjected to excessive strain and may be fatigued.

When installing wheel studs to hubs, check nuts retaining the wheel stud to wheel hub and replace if they are deformed, damaged or severely corroded. Install nut (and washer where applicable) to new stud. Torque to 450 - 500 lbf·ft (610 - 680 N·m).

Note: *For stud-mounted wheels, turn nuts counterclockwise on R.H. side of vehicle and clockwise on L.H. side. For hub-mounted wheels, turn nuts counterclockwise on both sides of vehicle.*

6.1 DRIVE AXLE STUDS

Wheel can be mounted on the drive axle either with ¾"-16 studs with an inner cap nut, and a 1-1/8”-16 nut, or with M22 x 1.5 studs and an M22 flange nut.

6.2 FRONT AND TAG AXLE STUDS

Wheel can be mounted on tag axle with studs (1-1/8"-16 thread) or hub mounted (M22 x 1.5 thread).

Note: *Wheel studs and nuts must be kept free from grease and oil. No lubricant whatsoever should be used.*

7. HUB MOUNTED WHEELS

Wheel surfaces in contact with hubs, nuts or other wheels should be kept free of all rust, grease and paint (except for initial “E” coat protection, applied to stop rusting and to facilitate wheel removal). The reason for this is to assure that all faces are clamped together without buildup of any coating. The threads of the wheel studs and the wheel nuts should be clean and undamaged.

Note*: When painting wheels, make sure to mask all surfaces identified above.*

Using a calibrated torque wrench, tighten wheel nuts to 450 - 500 lbf·ft (610 - 680 N·m)of torque. Do not use power tools or long bars for tightening. Tighten wheel nuts alternately as shown in figure 2.

Note: *Tightening should not be done immediately after prolonged braking or when wheel ends are hot.*

Check wheel nut torque at every 100 miles (160 km) for 500 miles (800 km) after fitting wheels. Let cool before checking. If any relaxation of the initial 450 - 500 lbf·ft (610 - 680 N·m) of torque has occurred, retighten. Relaxation of initial torque may occur because of the “bedding down” of the hub and wheel surfaces.

Note: *Torque relaxation occurs when wheel ends are hot but should revert to original setting when cool. Retightening when hot will produce a higher torque reading than recommended.*

7.1 CARE OF WHEELS

Check for cracks in wheels, especially around the fixing holes, studs, nuts and washers. If in doubt, renew.

Do not simply retighten very loose wheel fixings or wheels that are continually becoming loose. Find out why they are loose and whether any damage has been caused.

Use trained personnel and keep records of all attention to wheels and fixings, including which parts were renewed and when.

8. FRONT AND TAG AXLE WHEEL HUBS

Two types of wheel hubs are available. One is lubricated with grease and the other is lubricated with oil.

8.1 GREASE LUBRICATED WHEEL HUBS

Front and tag axle wheel hubs and hub bearings need to be cleaned and greased every 50,000 miles (80 000 km) or once a year, whichever comes first.

8.1.1 Recommended Lubricants

A good quality lithium-base grease NLGI No. 1 or No. 2 is recommended.

8.1.2 Hub Bearing Inspection

An inspection should be made after the first 3,000 miles (4 800 km) and then at intervals of 25,000 miles (40 000 km). When the wheels are raised, they should revolve quite freely without roughness.

Hub bearings should have a slight end movement within the limits of 0.0005 to 0.002" (0.0127 to 0.0508 mm) when rocked forward and backwards on axle stub. Refer *to "MERITOR MAINTENANCE MANUAL NO. 2)",* annexed to Section 10, *"FRONT AXLE"*

8.2 OIL LUBRICATED WHEEL HUBS

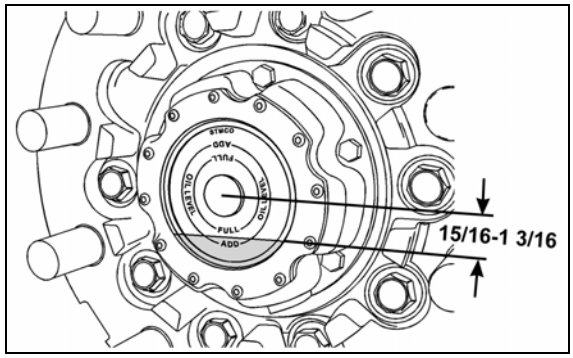

FIGURE 5: OIL FILL CAP 13017

8.2.1 Hub Bearing Maintenance

If applicable, the front and tag axle wheel hubs use oil lubrication that eliminates periodic grease repacking of the hubs. A sight glass is provided for convenient verification of oil level. Oil level should be checked daily and must be maintained between the ”ADD” and “FULL” level mark in the sight glass or between 15/16” and 1 3/16” from wheel centerline (23 to 30 mm). If oil is not visible through the sight glass, general purpose gear lubricant SAE 85W/140 (API spec. GL5) must be added by removing the oil fill cap in center of hub to bring oil to the correct level. To check oil level after vehicle has been driven, wait at least 15 minutes to ensure that oil has settled.

Note: *For vehicles equipped with Independent Front Suspension, refer to Section 16 "SUSPENSION".*

Caution: *Hub oil fill cap is provided with a very small vent hole in its center. Occasionally insert a small tip (toothpick size) to avoid hole restriction and prevent overpressure in bearing housing.*

9. DRIVE AXLE WHEEL HUBS

Drive wheels use a single oil-seal assembly. They are lubricated from the oil supply in the differential housing. Bearings are tapered rollers, adjustable to compensate wear. Maintain differential oil level with general-purpose gear lubricant (refer to Section 24 *"LUBRICATION"* for proper oil grade selection) to ensure adequate oil supply to wheel bearings at all times.

9.1 BEARING ADJUSTMENT

To adjust drive wheel bearings:

1. Raise vehicle until both dual wheels can be turned freely (approximately 6 inches from the ground). Position jack stands under drive axle, then lower vehicle approximately 2 inches in order to avoid entire weight of the axle being supported by the suspension air bellows and the shock absorber pins.
2. Remove axle shaft as indicated in *"Meritor - Maintenance Manual No. 5"* under heading *"Single Reduction Differential Carriers"* annexed to *"Section 11"* of this manual. Remove gaskets. Unscrew lock nut and remove adjusting nut lock ring.
3. To adjust, tighten adjusting nut until the wheel binds. Rotate the wheel while tightening so that all surfaces are in proper contact. Back off adjusting nut approximately, ¼ to 1/3 turn to assure 0.001/0.007" (0.0254/0.1778 mm) endplay and to ensure that wheel turns freely. Replace the lock ring, and adjust nut dowel pin in one of the holes. The ring may be turned over if necessary to allow more accurate bearing adjustment.
4. Tighten lock nut and check bearing adjustment. Replace the axle shaft using a new gasket.

9.2 DISASSEMBLY AND REPAIR

1. Jack vehicle as per “BEARING ADJUSTMENT*"* and remove axle shaft as indicated in *"MERITOR - MAINTENANCE MANUAL NO. 5"* entitled *"Single Reduction Differential Carriers"* annexed to Section 11 of this manual.
2. Remove wheels and tires.

Caution: *Always mark position of the wheel on the axle before removal, to replace wheel at the same location, thus avoiding a new wheel balancing.*

3. Remove lock nut, lock ring and adjusting nut from axle housing to prevent the outer bearing from falling out. Remove outer bearing cone and roller assembly.
4. Remove screws attaching inner oil seal retainer to hub, and remove inner oil seal assembly. Remove inner bearing cone and roller assembly. Bearing cups can be separated from the hub using a hammer and a long brass drift.
5. Thoroughly clean all parts. Bearing cone and roller assemblies can be cleaned in a suitable cleaning solvent using a stiff brush to remove old lubricant.
6. In case that excessive wear, deterioration, cracking or pitting is present on the bearing cups, rollers or cones, the bearings should be replaced. Seals should be replaced each time they are removed from the hub. To install new oil seal, use a suitable adapter and drive the seal into the retainer bore until it bottoms.
7. When installing wheel on spindle, center the wheel hub with spindle to avoid damaging the seal with the end of the spindle. Push wheel straight over the spindle until inside diameter of seal press fits on wiper ring. Fill hub cavity with general-purpose gear lubricant (refer to Section 24 *"LUBRICATION"* for proper oil grade selection). Lubricate, then install outer bearing cone. Adjust bearing and lock. Assemble axle flange to axle using a new gasket. Apply sealant in stud area. After both wheels have been assembled according to above procedure, fill the differential with the recommended lubricant to the proper factory recommended level.

Note: *During regular inspection, do not forget to check lubricant level in differential. Clean thoroughly or replace vent as required.*

10. SPARE WHEEL (IF APPLICABLE)

Tire failure is a rare event if tires are properly cared for. In case of a flat tire, move vehicle a safe distance away from traffic and apply parking brake. Remember to use the hazard flashers and according to the Highway Code regulations, set up the triangular reflectors (see *"Emergency Warning Reflectors"* in the Operator's Manual) at an adequate distance, to warn incoming motorists.

The spare wheel is stored in a dedicated compartment behind the front bumper. To access, pull the release handle located in the middle and upper part of bumper than lower the bumper. Although the bumper is heavy, sprung hinges permit one person operation.

When closing bumper compartment, make sure bumper is securely installed.

Note: *Converted vehicles contain no spare wheel. Access to compartment is obtained by pulling the release handle located in the middle and upper part of the bumper.*

Warning: *This compartment has not been designed for storage. Never leave loose objects in this area since they may interfere with steering linkage mechanism. Make sure bumper is safely locked in place after closing the compartment.*

10.1 PULLING OUT SPARE WHEEL

To remove the spare, untighten the pressure screw holding the tire in place, then press down on the spring loaded locking pin located at the top of the retaining bracket and remove the bracket. Using the strap, pull the spare out of the compartment (refer to the following illustrations). Rollers ease manipulation. Remove the protective cover. Install the flat in place of the spare by reversing the procedure. Do not forget to have the flat repaired as soon as possible.

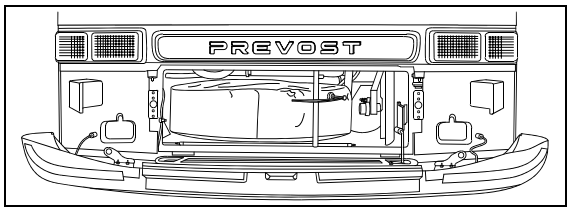

FIGURE 6: SPARE WHEEL COMPARTMENT

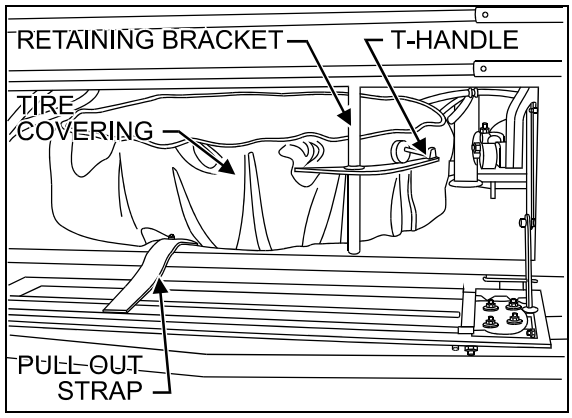

FIGURE 7: SPARE WHEEL AND TIRE 18415

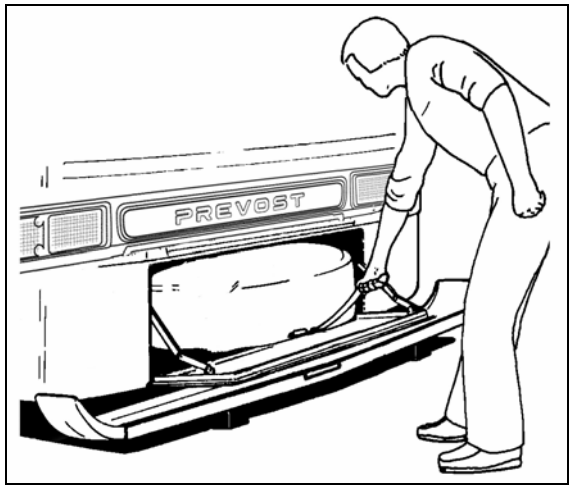

FIGURE 8: REMOVING SPARE WHEEL AND TIRE 13022

Note*: The jack and wheelnut wrench are either stored at right in forward baggage compartment or at left in rear baggage compartment.*

The jack/tools kit stowed in the forward R.H. baggage compartment contains a:

1. Hydraulic jack;
2. Jack bar;
3. Wheel nut wrench and extension;
4. Triangular reflectors box.

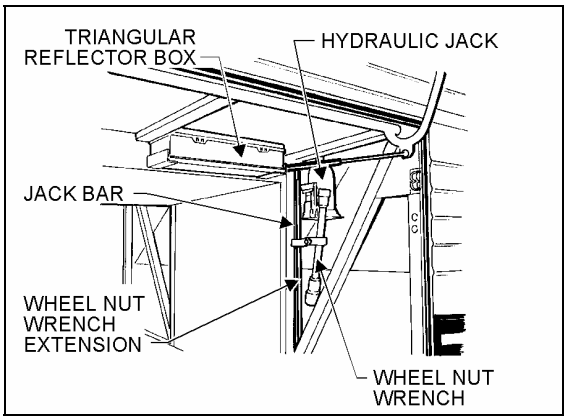

FIGURE 9: FORWARD R.H. SIDE COMPARTMENT 23012

***Note**: Check the inflation pressure of the spare tire periodically to keep it ready for use. Inflate spare tire to the pressure of the tire, which has the highest pressure on the vehicle. When installing, deflate to correct pressure if necessary.*

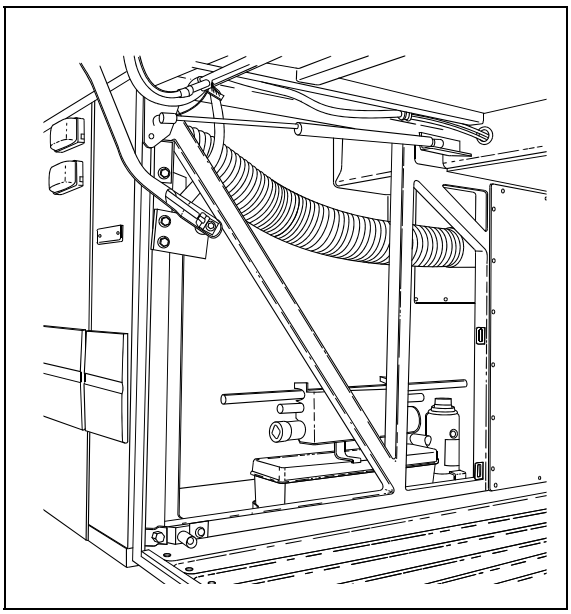

FIGURE 10: REAR BAGGAGE COMP. L.H. SIDE

10.2 CHANGING A FLAT

In case of flat tire, refer to appropriate procedure under “WHEEL MAINTENANCE" heading in this section.

***Note:** For hydraulic jack placement, refer to Section 18 "BODY", under heading "VEHICLE JACKING POINTS".*

***Warning:** Place jack on stable and level ground; if necessary, place a board under the jack. Do not raise the vehicle until you are sure the jack is securely engaged.*

***Warning:** To prevent personal injury and/or equipment damage, use only the recommended jacking points. Passengers must not remain inside vehicle while wheel is being replaced.*

***Caution**: Adjust tire pressure according to the appropriate cold tire inflation-pressure.*

***Note:** Store damaged wheel in spare tire compartment. Repair and balance the flat tire as soon as possible.*

10.3 SPARE WHEEL MAINTENANCE

Maintenance of the spare wheel and tire consists in ensuring that tire inflation pressure is the same as the tire on the coach that has the highest inflation pressure (refer to “SPECIFICATIONS” in this section for the recommended tire inflation pressure). Inspect rim to ensure that there is no important corrosion. In addition, check if spare wheel covering is in good condition and check that spare tire is securely fastened in compartment.

11. TIRE MAINTENANCE

The most critical factor in tire maintenance is proper inflation (Fig. 8). No tire is impervious to loss of air pressure. To avoid the hazards of under inflation, always maintain tires at their recommended inflation pressure. Improper inflation decreases tire life.

An under inflated tire builds up heat that can cause sudden tire destruction, resulting in improper vehicle handling and possible loss of vehicle control. At least once a week, before driving (when tires are cold), check inflation pressure on all the tires, including the spare tire. This is especially important in cases when different drivers operate the vehicle.

***Warning:** Failure to maintain correct tire inflation pressure may result in sudden tire destruction, improper vehicle handling, and will cause rapid and irregular tire wear. Inflation pressure should be checked weekly and always before long distance trips.*

11.1 INFLATION PRESSURE

The condition and pressure of the tires can greatly affect both useful tire life and road safety.

At regular intervals, verify the tire pressures. Use an accurate tire pressure gauge when checking inflation pressures. Never exceed the maximum inflation pressure specified on each tire.

Note: *Inflation pressure should be checked when tires are cold. Cold tire inflation pressure can be measured when a vehicle has not been driven for at least 3 hours or less than 1 mile (1.6 km). Driving, even for a short distance, causes tires to heat up and air pressure to increase. Check inflation pressure on all tires (including the spare tire) using an accurate tire gauge.*

Note: *The recommended tire inflation pressures are given in the applicable documents supplied with the vehicle. In addition, cold tire inflation pressures are listed on the Department of Transport's certification plate, affixed on the panel behind the driver's seat. For special tire selection, a "*PRÉVOST COACH SPECIAL SPECIFICATION*" chart is supplied with the vehicle and is affixed on the left wall near the driver's seat. Remember, tire inflation pressure must be adjusted according to vehicle loading - see table in "Coach Final Record"*

Caution: *Never bleed air from hot tires as tires will then be under inflated. Use an accurate tire gauge to check pressures (Do not kick tires as an inflation check. This is an unreliable method).*

Caution: *These tire pressures are established in accordance with the maximum allowable load on each axle. A lower pressure is recommended if the axle load is less than the above specifications. Weigh vehicle fully loaded and pressurize according to tire manufacturer's recommendations. For other tire and wheel specifications, see Prévost tire pressure tabulation in "Coach Final Record".*

Warning: *Incorrect tire pressures cause increased tire wear and adversely affect road holding of the vehicle, which may lead to loss of vehicle control.*

Warning*: Recommended tire inflation pressures and maximum allowable loads apply to speeds up to 65 mph (105 km/hr). Do not drive vehicle at a higher speed than 65 mph (105 km/h) or above the posted speed limit.*

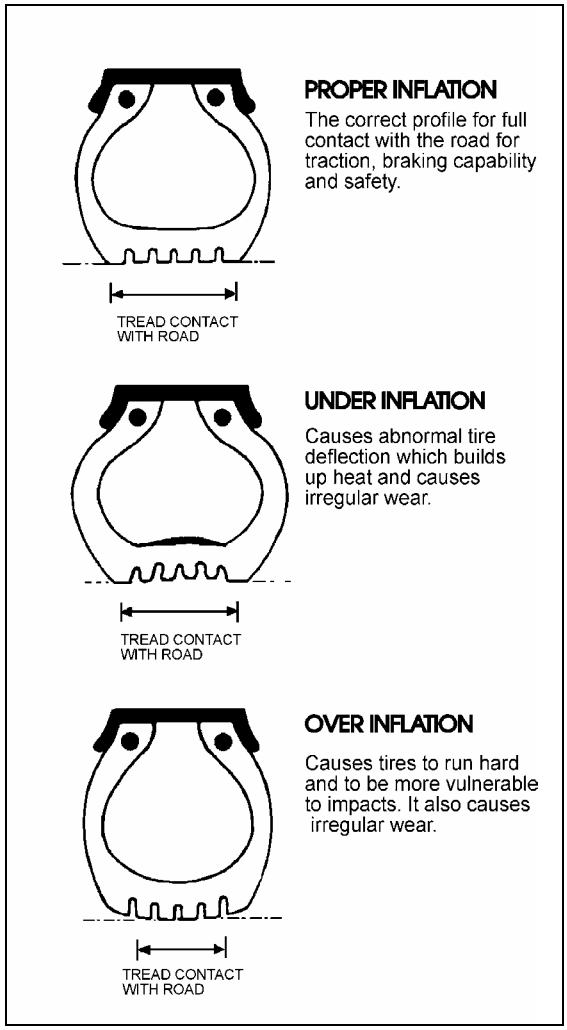

FIGURE 11: TIRE INFLATION 13009

Warning: *All tires on the same axle should always be inflated to the same pressure. There should not be a difference in pressure between right and left tires on the same axle. A 5-psi (35-kPa) underinflation in one front tire can not only reduce vehicle maneuverability, but will create steering hazards which can lead to an accident.*

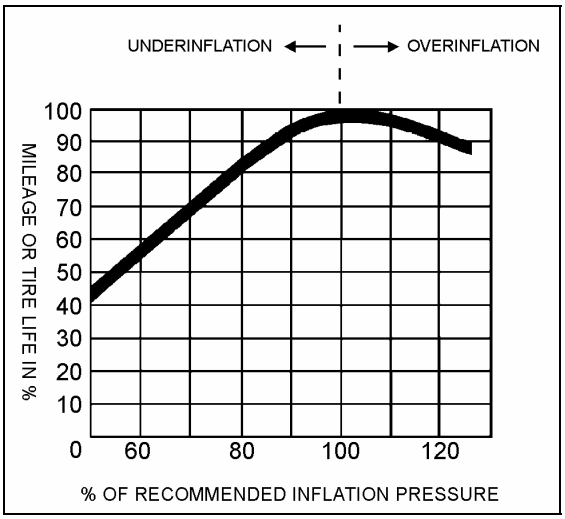

FIGURE 12: TIRE LIFE / INFLATION PRESSURE 13010

11.2 TIRE MATCHING

Unmatched tires on drive axle will cause tire wear and scuffing, as well as possible damage to the drive unit. Consequently, we recommend that tires be matched within 1/8" (3 mm) of the same rolling radius.

Note: *It is recommended that all tires on coach be of the same type.*

11.3 WHEEL BALANCING

Before balancing, wheels must be clean and free from all foreign matter. The tires should be in good condition and properly mounted. An unbalanced wheel can be due to a bent wheel or improper mounting. Before removing the wheel from the vehicle, check for swaying movement and if necessary, check the wheel lateral runout as outlined under heading *"WHEEL STRAIGHTNESS CHECK".*

Warning: *When balancing wheel and tire assemblies, it is strongly recommended to closely follow instructions covering the operation of wheel balancer.*

Caution: *A maximum of 16-oz (450 g) of balancing weight is recommended. If more weight is necessary, check and correct the cause.*

11.4 TIRE ROTATION

Radial tires should be rotated only when necessary. If the tires are wearing evenly, there is no need to rotate. If irregular wear becomes apparent or if the wear rate on the tires is perceptively different (from axle to axle), then tires should be rotated in such a manner as to alleviate the condition.

Note: *There is no restriction on criss-cross rotation.*

12. SPECIFICATIONS

STEEL WHEELS (including inner drive axle)

Wheel size..... 9.0" X 22.5"

Wheel nut torque..... 450 - 500 lbf•ft (610 - 680 N•m)

Tire size..... 315/80 R 22.5

ALUMINUM WHEELS (except inner drive axle)

Wheel size..... 9" X 22.5"

Wheel nut torque..... 450 - 500 lbf•ft (610 - 680 N•m)

Tire size..... 315/80 R 22.5

RECOMMENDED TIRE INFLATION PRESSURE AT MAXIMUM LOAD (cold)

***Note**: Inflation pressure is given on the certification plate for Prévost standard 315/80 R22.5 tires. For special tire selection, a "*PRÉVOST COACH SPECIAL SPECIFICATION*" chart is supplied with the vehicle and is affixed on the left wall near the driver's seat.*

***Warning**: Special tire selection may lower maximum allowable speed limit, even below posted speed limit. For maximum safety, check with tire manufacturer.*

***Caution:** In the case of a converted vehicle, weigh fully loaded and pressurize according to tire manufacturer's recommendations.*

***Warning**: Recommended tire inflation pressures and maximum allowable loads apply to speeds up to 65 mph (105 km/hr). Do not drive vehicle at a higher speed than 65 mph (105 km/h) or above the posted speed limit.*

ALUMINUM WHEEL CLEANING AND MAINTENANCE PRODUCTS

Aluminum Wheel Cleaner (22 Oz bottle) .....Prévost #683529
Aluminum Wheel Polish (16 Oz bottle) .....Prévost #683528
Aluminum Wheel Sealer (13 Oz bottle) .....Prévost #683527

SECTION 14: STEERING

CONTENTS

1. STEERING SYSTEM 14-3

1.1 DESCRIPTION 14-3

2. POWER STEERING GEAR 14-4

2.1 DESCRIPTION 14-4
2.2 POWER STEERING GEAR REMOVAL 14-5
2.3 POWER STEERING GEAR INSTALLATION 14-5

3. BLEEDING POWER STEERING HYDRAULIC SYSTEM 14-5

4. HYDRAULIC PRESSURE TEST 14-5

5. TROUBLESHOOTING 14-5

6. POWER STEERING HYDRAULIC PUMP 14-5

6.1 DESCRIPTION 14-5
6.2 REMOVAL AND INSTALLATION 14-5
6.3 MAINTENANCE 14-6

7. STEERING WHEEL 14-6

7.1 REMOVAL 14-6
7.2 INSTALLATION 14-6

8. STEERING COLUMN 14-6

8.1 REMOVAL 14-6

9. TURNING ANGLE ADJUSTMENT 14-6

10. STEERING LINKAGE ADJUSTMENT 14-7

11. PITMAN ARM 14-7

11.1 REMOVAL 14-7
11.2 INSTALLATION 14-8
11.3 ADJUSTMENT 14-8

12. MAINTENANCE 14-8

12.1 POWER STEERING RESERVOIR AND FILTER 14-9
12.1.1 Oil Level Check Procedure 14-9
12.1.2 Filter Replacement 14-9
12.2 STEERING STABILIZER CYLINDER (DAMPER) 14-10
12.3 DRAG LINK 14-10
12.4 POWER STEERING HYDRAULIC PUMP 14-10

13. DRIVING TIPS 14-10

14. TORQUE SPECIFICATIONS 14-11

15. SPECIFICATIONS 14-12

ILLUSTRATIONS

FIGURE 1: STEERING SYSTEM AXLE SETUP 14-3
FIGURE 2: POWER STEERING GEAR 14-4
FIGURE 3: FRONT SERVICE COMPARTMENT 14-4
FIGURE 4: STEERING COLUMN 14-6
FIGURE 5: PITMAN ARM ADJUSTMENT 14-7
FIGURE 6: FIXING NUT PUNCH MARK 14-8
FIGURE 7: HYDRAULIC FLUID RESERVOIR LOCATION 14-9
FIGURE 8: POWER STEERING FLUID RESERVOIR 14-9
FIGURE 9: STEERING STABILIZER (DAMPER) 14-10
FIGURE 10: DRAG LINK COMPONENTS 14-11
FIGURE 11: TIE ROD END 14-11
FIGURE 12: FRONT AXLE COMPONENTS 14-11

1. STEERING SYSTEM

1.1 DESCRIPTION

The steering system consists of the steering wheel and column assembly, a vane-type hydraulic pump, reservoir, filter, interconnecting system lines and hoses, integral power steering gear, linkage and steering damper (Fig. 1). The steering linkage includes the pitman arm, drag link, steering arm, tie rod arms and tie rod.

Hydraulic components are added to transmit, increase and regulate steering control forces.

These elements are:

1. Steering stabilizer (damper);
2. A vane type hydraulic pump; and
3. Hydraulic reservoir and hoses.

The steering stabilizer reduces road shocks and vibrations in the system. The steering gearbox is self powered and provides movement with power assistance to the left wheel.

Steering stability and tire wear are influenced by wheels, hubs, tires, air suspension, brakes, front suspension and front end alignment which are all covered in their respective sections in this manual.

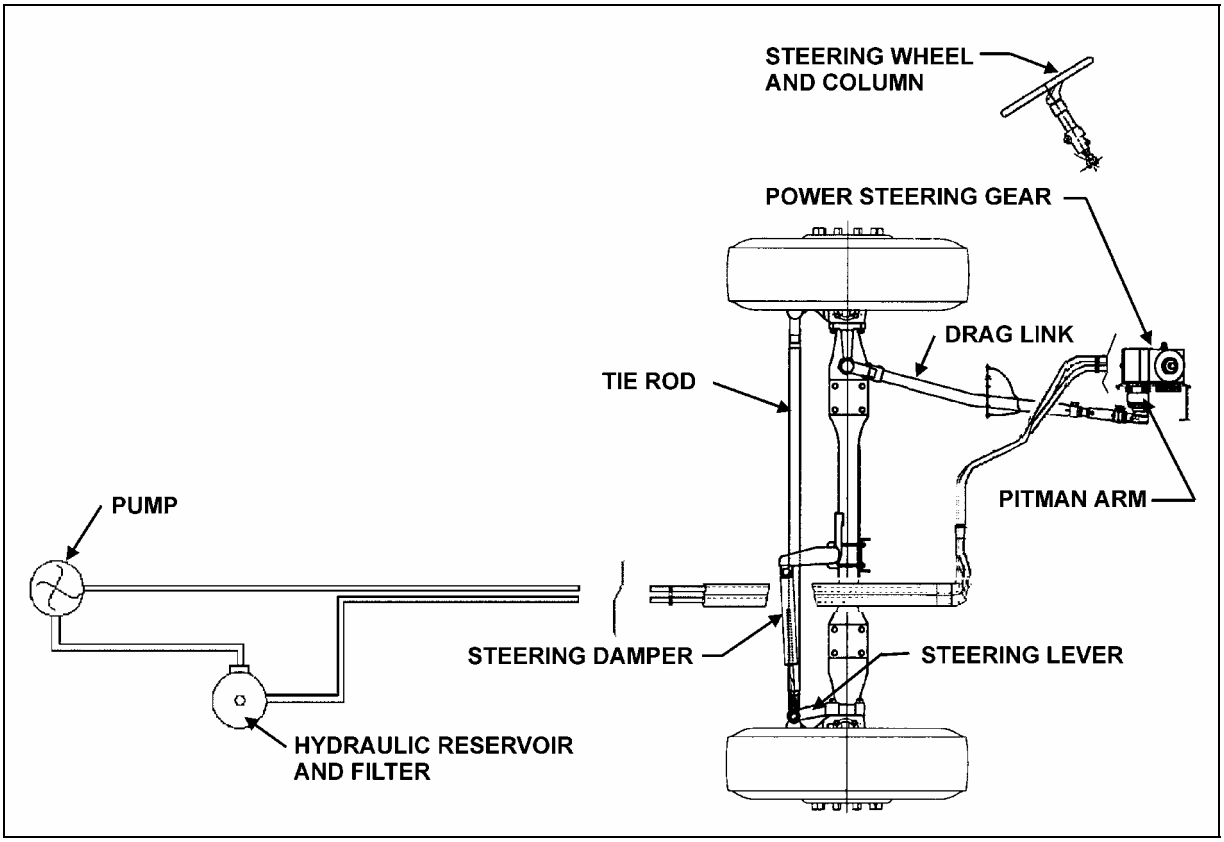

FIGURE 1: STEERING SYSTEM AXLE SETUP 14041

2. POWER STEERING GEAR

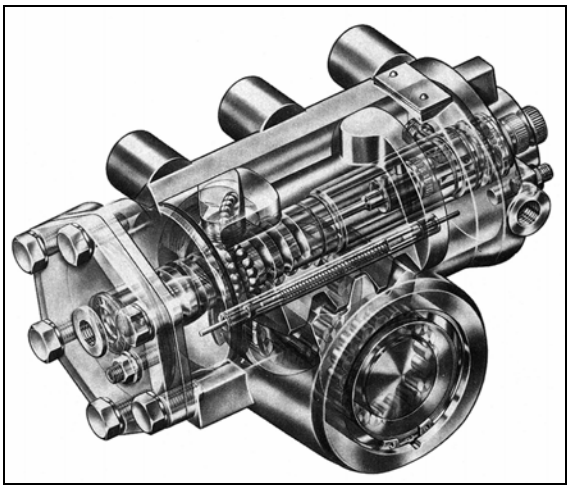

FIGURE 2: POWER STEERING GEAR 14035

2.1 DESCRIPTION

The power steering gear is located in the lower part of front service compartment (Figs. 2 & 3). The housing of the ZF-Servocom contains a control valve, working cylinder and a complete mechanical steering gear. The pressure oil for the steering is delivered by a motor-driven oil pump which is supplied with oil from an oil tank.

The housing is designed as a cylinder for the piston, which converts the rotation of the steering shaft and the worm into an axial movement and transfers this to the steering worm sector shaft. The serration of the sector shaft is straight-cut with a high surface quality in such a way that it is only possible to set a unique setting without play on installation in the straight-ahead driving area by means of the two eccentrically designed lateral housing covers.

The piston and worm are connected via a ball chain. When the worm is turned, the balls are collected by a circulating pipe at one end of the chain and fed in again at the other end, thus producing an endless ball chain.

The control valve consists of the valve slide in a needle bearing in the worm, with six control grooves on the circumference and the control sleeve on the worm, which also has six control grooves. The valve slide, designed with steering shaft connection, turns together with the worm as the steering wheel is turned.

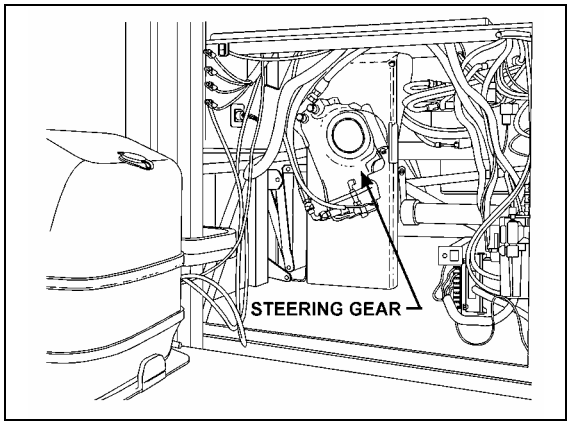

FIGURE 3: FRONT SERVICE COMPARTMENT 14039

A torsion bar, which is pinned with the valve slide and the worm, keeps the control valve in the neutral position as long as no opposing force is applied to the steering wheel. The steering housing contains a pressure relief valve, which limits the discharge pressure of the oil pump to the maximum value required. A replenishing valve can also be used, through which oil is sucked from the return if steering is not hydraulically boosted.

Compared with constant ratio, steering versions with variable ratio are more directly designed in the center area than outside the center area. The resulting smaller steering corrections benefit steering behavior in straight-ahead driving. At the same time, the indirect transmission means that there is a higher hydraulic torque available at the steering arm in parking movement. If the hydraulic assistance fails, the operating forces on the steering wheel are correspondingly lower in this area. This is achieved through a piston/steering worm sector shaft serration with differing modulus and angle of pressure.

Upon transfer of a torque from the steering shaft to the worm, or vice versa, the torsion bar is deformed in the elastic area so that there is torsion between the valve slide and the control sleeve. When the steering wheel is released, the torsion bar ensures that the valve is returned to the neutral position.

Refer to the *"ZF-SERVOCOM Repair Manual"* and *"ZF-SERVOCOM Operating, Servicing /Maintenance and Inspection Instructions"* annexed to this section for the functional aspects and maintenance procedure of the steering gear.

2.2 POWER STEERING GEAR REMOVAL

Warning: *The steering gearbox weighs approximately 100 lbs (45 kg) dry. Exercise caution when maneuvering.*

1. Put a container into place, then disconnect both the inlet and outlet hoses from the power steering gear. Cover fittings to prevent fluid contamination.

2. Mark both the pitman arm and sector shaft with a line, then remove pitman arm. Refer to *"11.1 Pitman Arm Removal"* procedure.

3. Mark both the steering shaft universal joint yoke and steering gear input shaft with a line, then disconnect universal joint.

4. Unscrew and remove the power steering gear.

2.3 POWER STEERING GEAR INSTALLATION

Reverse *"Power Steering Gear Removal"* procedure paying particular attention to the following:

1. Tighten fasteners as recommended under paragraph 14: *''TORQUE SPECIFICATIONS".*

2. Bleed air from the system as per step 3, next.

3. BLEEDING POWER STEERING HYDRAULIC SYSTEM

To bleed the power steering hydraulic system, refer to the *"ZF-SERVOCOM REPAIR MANUAL"* annexed to this section, under heading *"SETTING AND FUNCTIONAL TEST"*.

4. HYDRAULIC PRESSURE TEST

Perform a pressure test as outlined in the *"ZF-SERVOCOM REPAIR MANUAL"* annexed to this section under heading *"SETTING AND FUNCTIONAL TEST"*.

5. TROUBLESHOOTING

Perform troubleshooting of the steering gear as outlined in the *"ZF-SERVOCOM REPAIR MANUAL"*, the *"ZF-SERVOCOM Operating, Servicing/Maintenance and Inspection Instructions* and the *"TRW - POWER STEERING PUMP SERVICE MANUAL"* and the "TRW - CHART YOUR WAY TO EASY STEERING" guide annexed to this section.

Note: *For vehicles equipped with ZF-SERVOCOMTRONIC unit, refer to the supplement to the repair manual ZF-SERVOCOM.*

6. POWER STEERING HYDRAULIC PUMP

6.1 DESCRIPTION

The power steering pump is a vane type, gear driven, hydraulic unit which supplies hydraulic pressure for the operation of the steering gear. The pump is mounted on the engine, on the crankshaft pulley's R.H. side.

6.2 REMOVAL AND INSTALLATION

The pump is accessible through the engine compartment rear door.

To remove the pump, proceed as follows:

1. Put an empty container directly below pump, then disconnect both the inlet and outlet hoses from the pump. Block fitting cavities to prevent fluid contamination.

2. Remove the two (2) mounting screws, then slowly pry out the pump.

3. Remove and discard gasket.

Caution: *Inspect the drive coupling thoroughly, and replace if necessary (the drive coupling is a fiber component located between the engine and the pump).*

For pump installation, reverse the removal procedure paying particular attention to the following:

Caution: *Ensure that drive coupling is correctly positioned before reinstalling the pump.*

1. Install a new gasket (Prévost P/N 510488).

2. Bleed air from the system as per step 3, *"Bleeding Power Steering Hydraulic System"*.

6.3 MAINTENANCE

Refer to the *"ZF-SERVOCOM REPAIR MANUAL"* and the *"TRW - POWER STEERING PUMP SERVICE MANUAL"* annexed to this section.

7. STEERING WHEEL

7.1 REMOVAL

1. Set the battery master switch located in the R.H. side rear service compartment, or the engine compartment to the *"OFF"* position.

2. Using a tool, such as a small flat head screwdriver, pry off the air horn cap.

3. Loosen the small screw in center of cap and the other retaining the black wire, then disconnect the white terminal. Remove horn cap.

4. Loosen and remove the steering wheel nut.

5. Using a suitable puller, remove the steering wheel.

7.2 INSTALLATION

To install, reverse the removal procedure. Torque steering wheel nut to 35-45 lbf•ft (47-60 N•m).

8. STEERING COLUMN

8.1 REMOVAL

To disassemble the steering column from system, refer to Figure 4. The steering column has no lubrication points. The lower steering column U-joint is easily accessible through the front service compartment. The upper steering column U-joint and the steering slip joint are accessible from the front driver's area. To access these joints, proceed as follows:

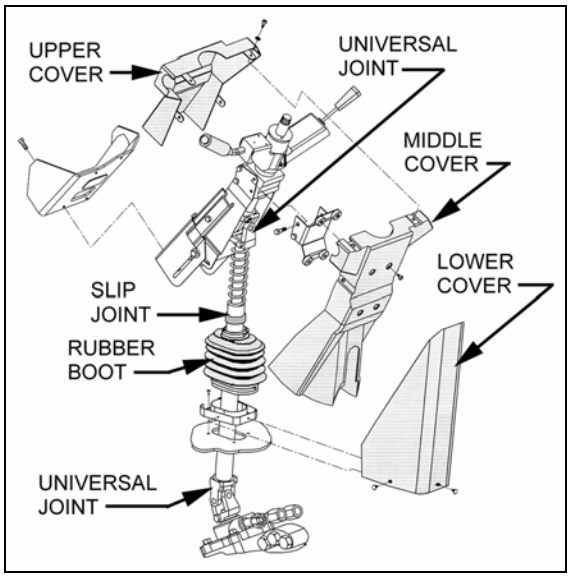

FIGURE 4: STEERING COLUMN 14040

1. From the front driver's compartment area, remove the three plastic fasteners on steering column lower cover. Remove the lower cover (Fig. 4).

2. Unscrew the four retaining screws on steering column middle cover.

3. Unscrew the four retaining screws fixing steering column upper cover to middle cover. Remove the steering column middle and upper covers.

4. Position the steering wheel in order to gain access to the joints.

9. TURNING ANGLE ADJUSTMENT

The maximum turning angle is set through two (2) steering stop screws installed on the axle center. Steering stop screws are factory adjusted to accommodate the chassis design, and therefore, do not require adjustment on new vehicles. However, these should be checked and adjusted if necessary, any time a steering system component is repaired, disassembled or adjusted. Refer to section 10 *"FRONT AXLE"* under heading *''6.4 ''TURNING ANGLE ADJUSMENT".*

Caution: *To prevent the steering damper from interfering with the adjustment of turning angles, make sure its fixing bracket is at correct location on the axle (refer to* "12.2 Steering Stabilizer Cylinder (Damper)).

Hydraulic Stop

Caution: *Reduce or shut off the power steering hydraulic pressure before the boss on the axle touches the stop screw. If not, the components of the front axle will be damaged (refer to* "ZF-SERVOCOM REPAIR MANUAL" *and "ZF-SERVOCOM Operating, Servicing/Maintenance and Inspection Instructions" annexed to this section, under heading* "SETTING THE STEERING LIMITER").

Caution: *Never maintain the relief pressure for more than 5 seconds, since damage to the power steering pump may occur.*

10. STEERING LINKAGE ADJUSTMENT

The steering linkage includes the pitman arm, drag link, steering arm, tie rod arms and tie rod.

Perform lubrication according to *"GKN PARTS AND SERVICE MANUAL NO. 1604 Issue A - GKN AXLES LIMITED"* annexed to section 10 *"FRONT AXLE".*

Drag link ends are provided with grease fittings. Under normal conditions, these should be serviced every 6,250 miles (10 000 km). Refer to section 24 *"LUBRICATION".*

Steering linkage pivot points should be checked each time they are lubricated. Looseness can be visually detected while rotating the steering wheel in both directions. Replace defective parts.

Caution: *Front wheel alignment should be checked and adjusted if necessary, any time a component of the steering system is repaired, disassembled or adjusted. Refer to section 10* "FRONT AXLE" *under heading* 6. "FRONT WHEEL ALIGNMENT".

11. PITMAN ARM

11.1 REMOVAL

1. Remove cotter pin, nut and washers from drag link ball stud at pitman arm.

2. Disconnect drag link from pitman arm, using jaw style pullers (pressure screw type).

Warning: *Always wear approved eye protection when operating pullers.*

Caution: *Do not drive (hammer in) pitman arm on or off pitman shaft as this can damage the steering gear.*

Caution: *Heating of components to aid in disassembly is not allowed because it has a detrimental effect on axle components and steering linkages.*

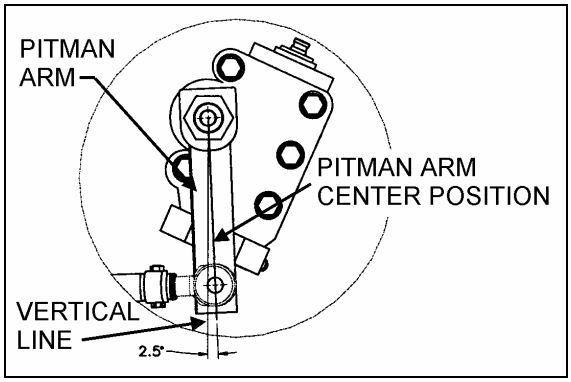

FIGURE 5: PITMAN ARM ADJUSTMENT 14037

3. Using a cold chisel, undo punch mark that locks fixing nut to the pitman arm.

4. Remove pitman arm fixing nut.

5. Check the radial position of the pitman arm in relation to the sector shaft prior to removal of pitman arm.

6. Add reference marks to the arm and shaft if necessary to ensure correct alignment at reassembly.

7. You must use a puller to remove pitman arm.

11.2 INSTALLATION

1. Position pitman arm on sector gear shaft with reference marks aligned.
2. Install fixing nut (Prévost #661050). Tighten nut to 405-445 lbf•ft (550-605 N•m).

Note: *Use a new nut if the previously removed nut was punched.*

3. Lock nut with sector shaft using a punch mark into the groove (Refer to figure 6).

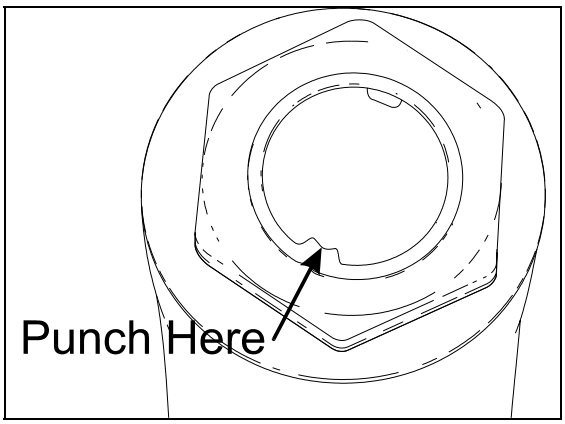

FIGURE 6: FIXING NUT PUNCH MARK 16098

4. Connect drag link to pitman arm while ensuring that rubber stabilizer is in place on the rod end. Install washers. Tighten nut to 160-300 lbf•ft (220-410 N•m). Afterwards, install a new cotter pin.

11.3 ADJUSTMENT

1. Disconnect the drag link from pitman arm. Center steering wheel by dividing the total number of steering wheel turns in two. Scribe a reference mark on steering gearbox at the center previously determined.
2. Using a protractor, check the angle of the pitman arm (refer to Fig. 5 for details).
3. The pitman arm should be adjusted to an angle of 2.5º in relation with the vertical axis (towards front of vehicle). If not, unscrew and remove fixing nut. Remove the pitman arm according to the procedure outlined under previous heading *"Pitman arm removal"*. Adjust to the proper angle.
4. When adjustment is achieved, replace fixing nut and torque to 405-445 lbf•ft (550-605 N•m).

12. MAINTENANCE

The power steering system requires little maintenance. However, the system should be kept clean to ensure maximum operating performance and troublefree service. Periodic inspections should also be made to check for leakage and all parts for damage or distortion. Insure all fasteners are tight (see *"14. SPECIFICATIONS"* for recommended tightening torques.
When the slightest evidence of dirt, sludge or water is discovered in the system, disconnect fluid lines at the power steering gear to drain the system. Drain and refill the system with *"Dexron-IIE or Dexron-III"* automatic transmission oil.

Air in the hydraulic system will cause spongy action and noisy operation. When a hose has been disconnected or when fluid has been lost for any reason, the system must be bled. Bleed system as outlined under heading 3*: "BLEEDING POWER STEERING HYDRAULIC SYSTEM".*

Warning: *Do not operate the pump without fluid in the power steering fluid reservoir.*

If the steering linkage between the steering gear and the two front wheels is not properly adjusted, or if it is bent, twisted or worn, the steering of the vehicle will be seriously impaired. Whenever a steering linkage part is repaired, replaced or adjusted, steering geometry and front wheel alignment must be checked and necessary corrections made. Refer to section 10 *"FRONT AXLE"* under heading 6: *"FRONT WHEEL ALIGNMENT"*.

At regular lubrication intervals, the steering linkage should be thoroughly inspected for worn or loose components.

After the vehicle has been operated continually and high mileage figures have been reached, overhaul of the various steering units will be required. General overhaul procedure normally requires removal of the entire assembly, cleaning and inspection of all parts and final assembly. Careful inspection of all parts during overhaul is very important and must not be neglected.

Lubrication fittings must all be cleaned before applying lubricant. Moreover, always be sure the equipment used in applying lubricant is clean. Every precaution should be taken to prevent entry of dirt, grit, lint or other foreign matter into lubricant containers. Replace fittings that have become broken or damaged. Lubrication intervals, as well as the recommended lubricants for the steering components, are given in the *"LUBRICATION AND SERVICING SCHEDULE"* in Section 24 of this manual. The intervals given in the schedule are recommended for normal service. More frequent intervals may be required under severe operating conditions.

12.1 POWER STEERING RESERVOIR AND FILTER

The power steering reservoir is located on R.H. side of engine compartment and accessible through the engine compartment doors. (Fig. 6).

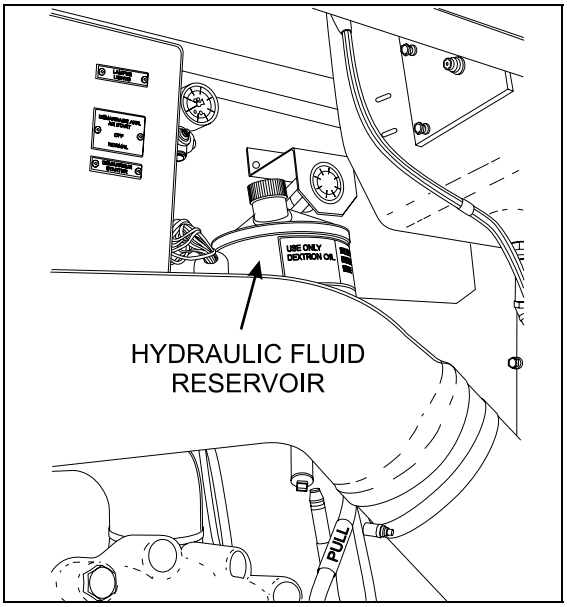

FIGURE 7: HYDRAULIC FLUID RESERVOIR LOCATION 14044

At regular intervals, fluid level should be checked in the reservoir and filter assembly. Furthermore, the oil filter cartridge element in the power steering reservoir should be replaced every 50,000 miles (80 000 km) or once a year, whichever comes first.

12.1.1 Oil Level Check Procedure

1. Stop engine. Open engine compartment R.H. side door.
2. Unscrew and remove the dipstick located on top of reservoir and wipe with a clean rag.
3. Insert dipstick in reservoir. Remove it again to check fluid level (Fig. 7).
4. Adjust level to *"FULL"* mark using proper dipstick side depending on fluid temperature, use *"Dexron-IIE or Dexron-III"* automatic transmission oil.
5. Reinsert and tighten the dipstick.

12.1.2 Filter Replacement

1. Unscrew and remove the cover nut located on top of the power steering reservoir.
2. Remove the reservoir cover and the gasket.
3. Remove the retaining spring and finally the filter cartridge element.

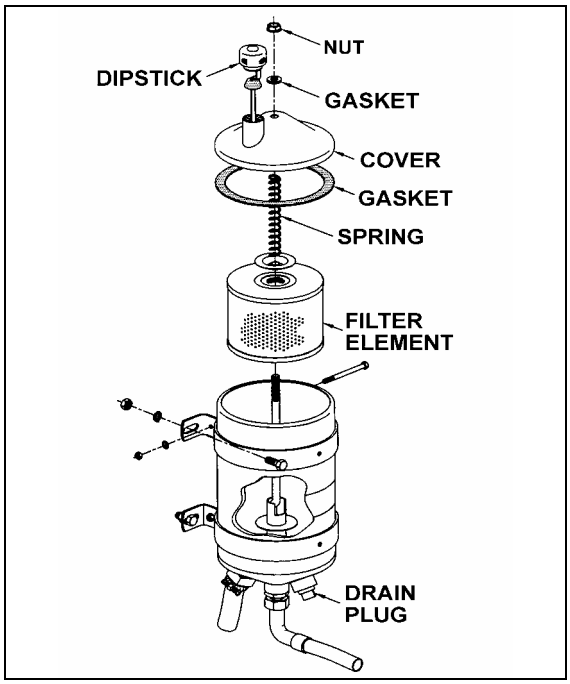

FIGURE 8: POWER STEERING FLUID RESERVOIR 14018A

12.2 STEERING STABILIZER CYLINDER (DAMPER)

The steering damper is located on R.H. side, at back of front axle (Fig.8).

The cylinder is nonadjustable and non-repairable. Check for oil leaks or lack of resistance. Disconnect the cylinder from axle, then carefully attempt to extend and collapse it manually.

The rod end (ball joint) is provided with a grease fitting. Under normal conditions, it should be serviced every 6,250 miles (10 000 km) or twice a year, whichever comes first. Good quality lithium-base grease NLGI No. 1 and 2 are recommended (refer to section 24 *"LUBRICATION")*. Check the ball joint for wear, and replace if necessary.

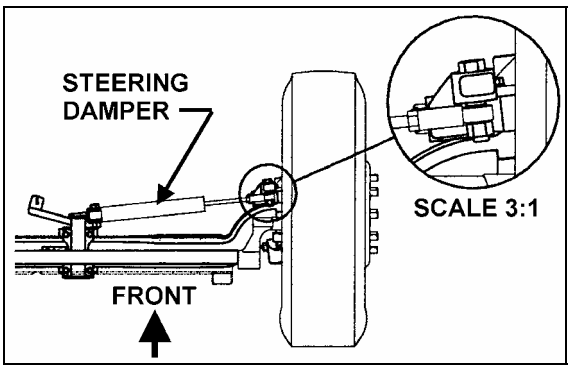

FIGURE 9: STEERING STABILIZER (DAMPER) 14042

12.3 DRAG LINK

Lubricate the fittings every 6,250 miles (10 000 km) or twice a year, whichever comes first. Good quality lithium-base grease NLGI No. 1 and 2 are recommended (refer to section 24 *"LUBRICATION")*.

12.4 POWER STEERING HYDRAULIC PUMP

For maintenance of the power steering hydraulic pump, refer to the *"TRW - POWER STEERING PUMP SERVICE MANUAL"* annexed to this section.

13. DRIVING TIPS

In order to maximize power steering pump service life, do not attempt to turn the steering wheel when the vehicle is stationary, and especially when service brakes are applied (wheel locking will oppose the effect of steering geometry which tends to make the front wheels rotate in opposite directions).
Persisting in turning, or maintaining the steering wheel with an extra effort, could make the hydraulic system work at the relief pressure, and consequently, cause the hydraulic fluid to become overheated.

Caution: *Never maintain the hydraulic system at the relief pressure for longer than 5/10 seconds to avoid damaging the power steering pump.*

Note: *Unequal or low tire pressure, oversize tires, and vehicle overloading are some of the causes that may increase steering effort.*

14. TORQUE SPECIFICATIONS

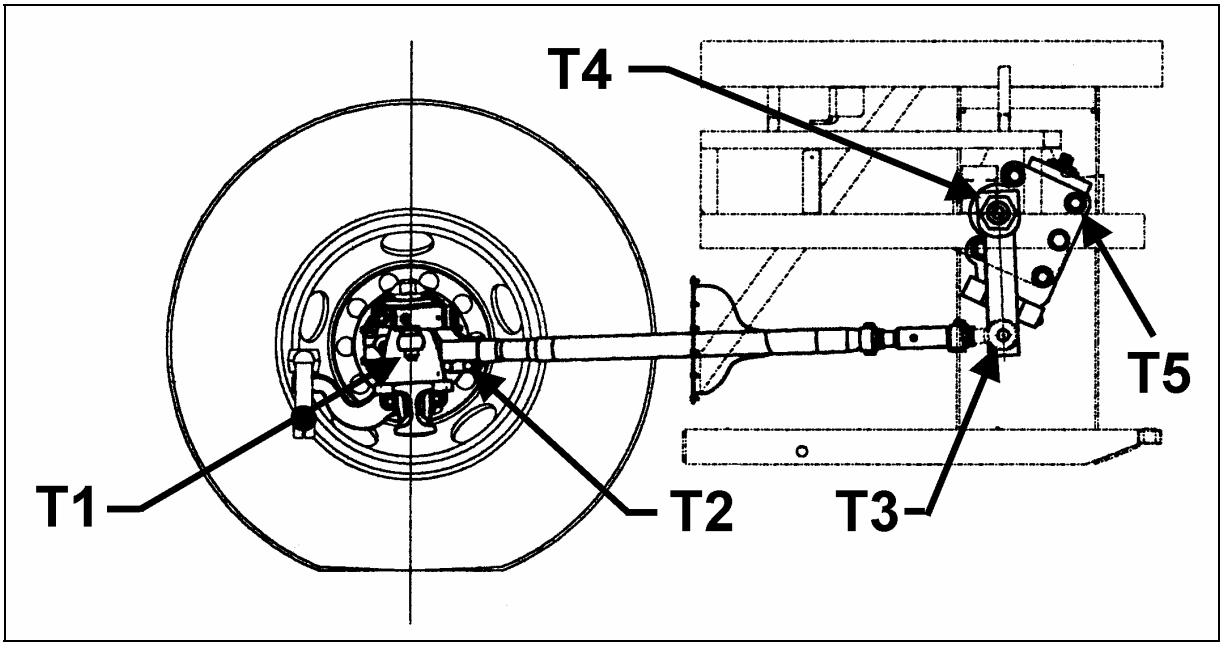

FIGURE 10: DRAG LINK COMPONENTS 14038

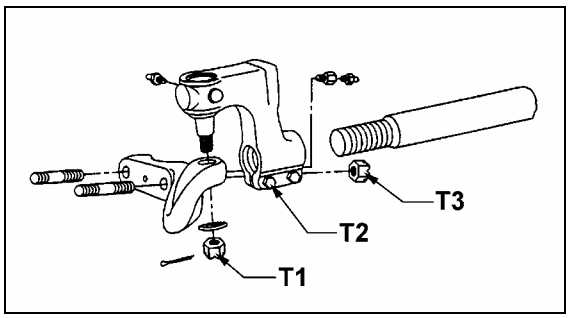

FIGURE 11: TIE ROD END 14036

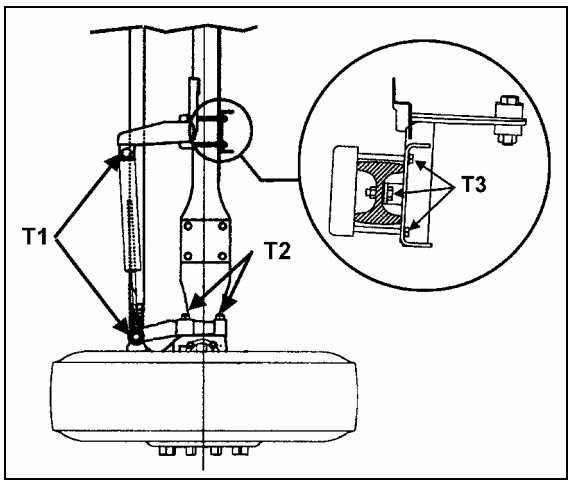

FIGURE 12: FRONT AXLE COMPONENTS 14045

DRY TORQUES			
Description	**Reference**	**lbf•ft**	**N•m**
Drag Link End Stud Nut (on steering arm)	Fig. 9, T1	160-300	220-410
Drag Link End Pinch Bolt Nuts	Fig. 9, T2	50-65	70-90
Drag Link End Stud Nut (on pitman arm)	Fig. 9, T3	160-300	220-410
Pitman Arm Fixing Nut	Fig. 9, T4	405-445	550-605
Tie Rod End Screw Pin Nut	Fig. 10, T1	100-175	135-240
Tie Rod End Pinch bolt Nuts	Fig. 10, T2	65-75	90-100
Lower Lever Stud Nuts	Fig.10, T3	190-275	260-375
Steering Stabilizer (damper) Fixing Nuts	Fig. 11, T1	100-120	135-165
Steering Top Lever Nuts	Fig. 11, T2	150-200	205-275
Steering Damper Mounting Support Nuts	Fig. 11, T3	65-70	90-95

TORQUE (LUBRICATED WITH LOCTITE #242 BLUE)			
Description	**Reference**	**lbf•ft**	**N•m**
Steering Gear Fixing Bolts (5)	Fig. 9, T5	275	375

15. SPECIFICATIONS

Power Steering Gear

Make ..... ZF-SERVOCOMTRONIC
Model 8098
Supplier number 8098-988-571
Prevost number 661044
F.E.W. ..... 16,600 lbs (7 545 kg)
Pressure rating ..... 2,175 psi (150 Bar)
Gear ratio (center) ..... 22.2 : 1
Gear ratio (extremities) ..... 26.2 : 1
Minimum pump flow for 1.5 hwt/sec ..... 4.22 gpm (16 lpm)

Power Steering Gear

Make ..... ZF-SERVOCOM
Model 8098
Supplier number 8098-988-570
Prevost number 661045
F.E.W. ..... 16,600 lbs (7 545 kg)
Pressure rating ..... 2,175 psi (150 Bar)
Gear ratio (center) ..... 22.2 : 1
Gear ratio (extremities) ..... 26.2 : 1
Minimum pump flow for 1.5 hwt/sec ..... 4.22 gpm (16 lpm)

Power Steering Pump

Make ..... TRW
Type ..... PS Series
Relief valve setting ..... 2,175 psi (14 990 kPa)
Controlled flow rate ..... 4.23 gpm (16 lpm)
Inlet port ..... 1 1/4 NPT
Outlet port ..... 3/4-16 straight thread SAE O' ring boss conn.
Supplier number PS251615L10200
Prevost number 661009
Gasket - Supplier number 23516100
Gasket - Prevost number 510488

Power Steering Reservoir

Make ..... Nelson Muffler
Oil capacity ..... 4 US qts (3.7 liters)
Supplier number 91410A
Prevost number 660982
Make ..... Nelson Muffler
Element filter - Supplier number ..... 83804 E
Element filter - Prevost number 660987

Steering Stabilizer Cylinder (Damper)

Make ..... Gabriel
Extended length ..... 32.73±0.12"
Collapsed length ..... 20.26±0.12"
Stroke ..... 12.47±0.12"
Supplier number 651535
Prevost number 660979
Dust cap - Prevost number 660980

SECTION 16: SUSPENSION

CONTENTS

1. DESCRIPTION 16-3

2. AIR SPRINGS 16-4

2.1 INSPECTION 16-4
2.2 REMOVAL 16-4
2.3 INSTALLATION 16-4

3. SHOCK ABSORBERS 16-5

3.1 INSPECTION 16-5
3.2 REMOVAL 16-6
3.3 INSTALLATION 16-6

4. RADIUS RODS 16-7

4.1 INSPECTION 16-7
4.2 REMOVAL 16-7
4.3 BUSHING REMOVAL 16-7
4.4 BUSHING INSTALLATION 16-8
4.5 INSTALLATION 16-9

5. SWAY BAR 16-10

5.1 REMOVAL 16-10
5.2 INSTALLATION 16-10

6. SUSPENSION AIR SYSTEM 16-10

6.1 INSPECTION 16-10
6.2 AIR LINE TEST 16-11
6.3 AIR TANK MAINTENANCE 16-11

7. SUSPENSION HEIGHT ADJUSTMENT 16-11

8. HEIGHT CONTROL VALVES 16-12

Loading position 16-12
Neutral position 16-12
Unloading position 16-12
8.1 MAINTENANCE 16-13
8.1.1 Removal and installation 16-13
8.1.2 Air leakage test 16-13

9. FRONT KNEELING SYSTEM 16-13

9.1 PRINCIPLE OF OPERATION 16-14
9.2 MAINTENANCE 16-14
9.3 BELLOWS CONTROL SOLENOID VALVES 16-14
9.3.1 Removal and installation 16-14

10. HIGH-BUOY SYSTEM 16-14

10.1 PRINCIPLES OF OPERATION 16-14
10.2 MAINTENANCE 16-15
10.3 HIGH-BUOY – PRESSURE REGULATING VALVE 16-15
10.3.1 Adjustment 16-15

10.3.2 Disassembly 16-16
10.3.3 Cleaning 16-16
10.3.4 Reassembly 16-16

11. LOW-BUOY SYSTEM 16-16

11.1 PRINCIPLES OF OPERATION 16-16
11.2 MAINTENANCE 16-17

12. "LEVEL-LOW" SYSTEM 16-17

12.1 PRINCIPLES OF OPERATION 16-17
12.2 MAINTENANCE 16-18

13. TROUBLESHOOTING 16-18

14. PARTS SPECIFICATIONS 16-19

15. TORQUE SPECIFICATIONS 16-20

ILLUSTRATIONS

FIGURE 1: FRONT SUSPENSION COMPONENTS 16-3
FIGURE 2: REAR SUSPENSION COMPONENTS 16-3
FIGURE 3: AIR SPRING 16-4
FIGURE 4: SHOCK ABSORBER 16-6
FIGURE 5: TYPICAL SHOCK ABSORBER SETUP 16-6
FIGURE 6: TYPICAL RADIUS ROD SETUP 16-7
FIGURE 7: RADIUS ROD BUSHING REMOVAL 16-7
FIGURE 8: RADIUS ROD BUSHING INSTALLATION 16-8
FIGURE 9: RADIUS ROD INSTALLATION 16-9
FIGURE 10: RIGID FRONT AXLE SWAY BAR 16-10
FIGURE 11: TYPICAL AIR SPRING CLEARANCE 16-12
FIGURE 12: HEIGHT CONTROL VALVE 16-12
FIGURE 13: REGULATING VALVE 16-15

1. DESCRIPTION

The vehicle is provided with an air suspension system. The system consists of air springs, height control valves, radius rods, sway bars, tripod and shock absorbers (Fig. 1 and 2). The system operation is fully automatic and maintains a constant vehicle height regardless of load, or load distribution.

The vehicle can also be equipped with systems such as:

- Front Kneeling (w/ Front High-Buoy);
- Front Kneeling (w/ Full High-Buoy);
- Front Kneeling (w/ Front High-Buoy) and Low-Buoy Combination;
- Front Kneeling (w/ Full High-Buoy) and Low-Buoy Combination;
- Level-Low.

For a description of all these systems, refer to the appropriate heading in this section.

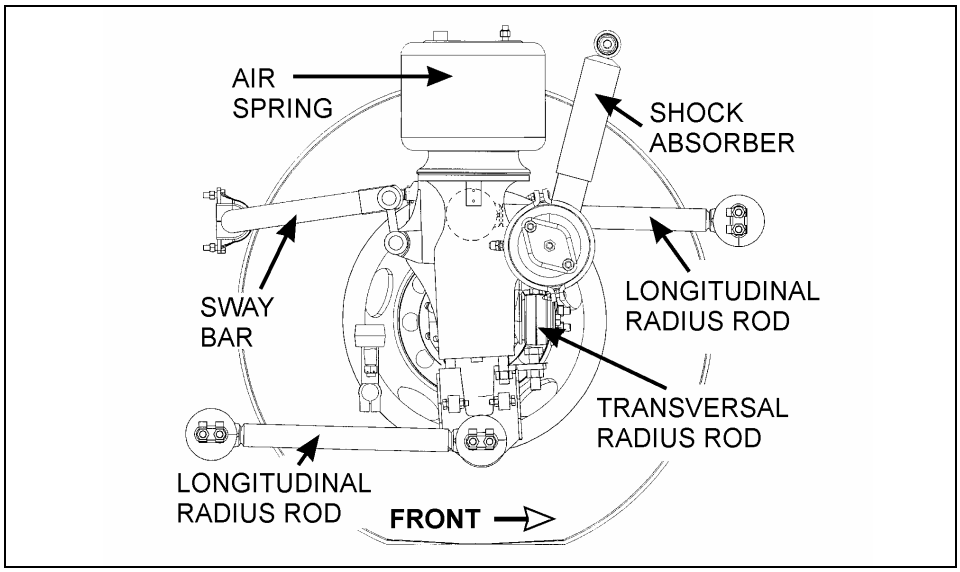

FIGURE 1: FRONT SUSPENSION COMPONENTS 16096

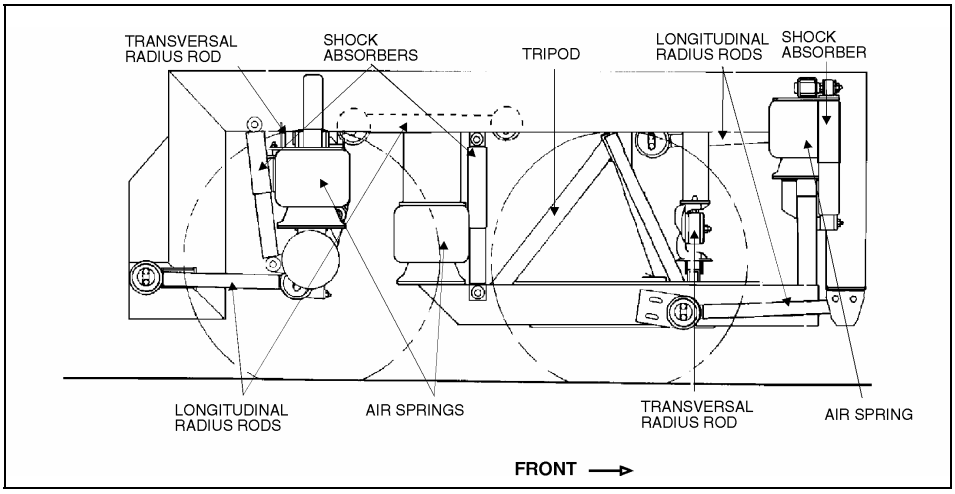

FIGURE 2: REAR SUSPENSION COMPONENTS 16027

2. AIR SPRINGS

The air springs are made from a special compound rubber molded to the proper contour and dimensions. The entire vertical load of the vehicle is supported by these springs. Each of the three axles is provided with air springs that are attached to the subframe and to the axles (Fig. 3).

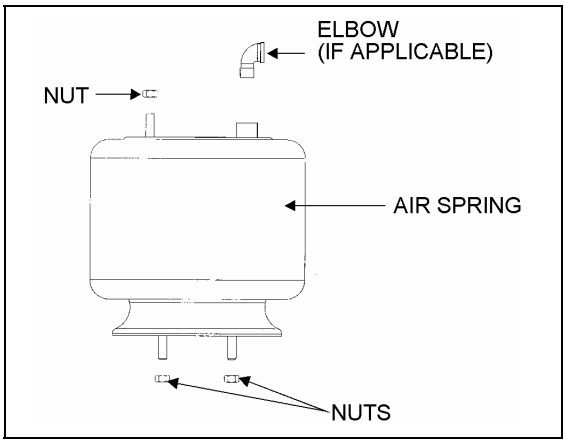

FIGURE 3: AIR SPRING 16052

2.1 INSPECTION

1. Check operation of bellows.
2. Visually inspect bellows for evidence of cracks, punctures, deterioration, or chafing. Replace the bellows if any damage is evident.
3. With the primary air system at normal operating pressure (95 - 125 psi (655 - 860 kPa)), coat all suspension air line connections and bellows mounting areas with a water and soap solution. Bubbles will indicate an air leak, and none is permissible. Repair or replace defective parts.

Note: *If air spring is removed from vehicle, bellows can be lightly inflated and submerged in water to detect any leakage. If any leakage is detected, replace bellows.*

Warning: *To prevent personal injury, do not apply more than 10 psi (69 kPa) of air pressure to the uninstalled air spring.*

2.2 REMOVAL

Note: *Suspension air springs (front, drive, and tag axles) can be removed without removing the entire axle assembly.*

1. Safely support vehicle at the recommended body jacking points.

   To gain access to a given air spring, the corresponding wheel can be removed as follows.

   a) Jack vehicle until the tire clears the ground, and place safety supports underneath body.

Caution: *Only the recommended jacking points must be used as outlined in Section 18, "Body".*

   b) Support the axle with a suitable hydraulic floor jack at the recommended jacking point.

   c) Remove wheel.

2. Exhaust compressed air from accessory air tank by opening drain cock under reservoir.
3. Disconnect the height control valve link and pull down the overtravel lever to ensure all air is exhausted from air springs.

Note: *While performing this step, do not change the height control valve overtravel lever adjustment.*

4. Disconnect air line from air spring, remove elbow (if applicable), and cover both the line end and fitting to prevent the entry of foreign matter.
5. Remove the air spring upper nut, and then the two lower nuts. Remove air spring.

2.3 INSTALLATION

1. Compress air spring as necessary, then aligning studs with their holes, position air spring between both the lower and upper supports. Thread the lower nuts and the small upper nut a few turns.

Note: *To facilitate air spring installation, compress it manually then put a piece of tape*

over the air line threaded fitting. This prevents air from getting back into the bag and keeps it compressed, thus enabling to place the bag in between the mounting plates and greatly easing installation.

2. Tighten and torque the lower stud nuts, and then the upper one to 20 – 25 ft•lbf (27 – 34 N•m).
3. Thread the remaining upper nut (large nut) and tighten to 20 – 25 ft•lbf (27 – 34 N•m).
4. Install elbow (if applicable), then connect air line.
5. Connect the height control valve link.
6. Build up air pressure in system.

Note: *To accelerate this operation, air reservoirs can be filled from an exterior air supply connected to the accessory tank fill valve or to the emergency fill valve.*

7. Check operation of bellows, and with the primary air system at normal operating pressure (95 – 125 psi (655 – 860 kPa)), coat the air line connections and air spring mounting areas with a water and soap solution. Bubbles will indicate an air leak, and none is permissible. Repair or replace defective parts.
8. Reinstall wheel.
9. Remove the hydraulic floor jack from under the axle, then lower vehicle to ground.

3. SHOCK ABSORBERS

Double-action, telescoping-type shock absorbers ensure a smooth ride and enhance vehicle stability on the road. All shock absorbers are eye-type mountings. The front and tag axles are each provided with two shock absorbers while the drive axle is provided with four of them (Fig. 1 and 2).

Shock absorbers are non-adjustable and non-repairable. Maintenance requirements involve replacement of the rubber mounting bushings, and tightening of all shock absorber pins at the proper torque of 500 - 550 ft•lbf (680 - 750 N•m) when shock absorber replacement occurs. If a shock absorber becomes inoperative, complete unit must be replaced.

Caution: *When a shock absorber is found defective, always replace with a new set on affected axle, except if there has been a recent replacement of one unit. The following method will help in determining if both shock absorbers on the same axle have to be replaced.*

3.1 INSPECTION

Loosen lower mounting of both shocks, then carefully attempt to raise and lower the bottom portion of each shock. Note the rate of effort for distance of travel. Replace both shocks if a definite differential rate is found.

The shock must be bench checked in an upright, vertical position. If checked in any other position, air will enter the cylinder tube and make the shock absorber appear defective.

Proceed as follows to check shock absorbers:

1. With the shock absorber in a vertical position (top end up), clamp the bottom mount in a vise.

Caution: *Do not clamp the reservoir tube or the dust tube.*

2. Rotate the dust tube. Notice any binding condition (may be compared with new unit). Binding condition indicates a scored rod. Units with scored rods should be replaced.

3. Fully extend shocks and check for leaks in the seal cover area. Shock fluid is a very thin hydraulic fluid that has a characteristic odor and dark brown tint. A slight trace of shock fluid around the seal cover area is not a cause for replacement. The shock seal is designed to permit a very slight seepage to lubricate the rod. Units that leak should be replaced.

4. Visually check shock for dents that could cause the shock to bind. Also, check for a bent rod.

5. Extend and collapse shock several times to determine that it has control (resistance) in both rebound and compression.

6. Visually inspect the shock mountings and vehicle mounting for:

   a. Broken mounts;

   b. Extreme bushing wear;

   c. Shifted bushing or sleeve;

   d. Deep cracks in bushing material (shallow surface cracks are normal);

   e. Loose shock absorber pins;

   f. Presence of convex washers, and their position relative to the rubber bushing.

3.2 REMOVAL

1. Remove nuts and washers from shock absorbers on upper and lower mounting pins, taking care to identify the inner and outer washers to ease reinstallation. Refer to figure 4 for details

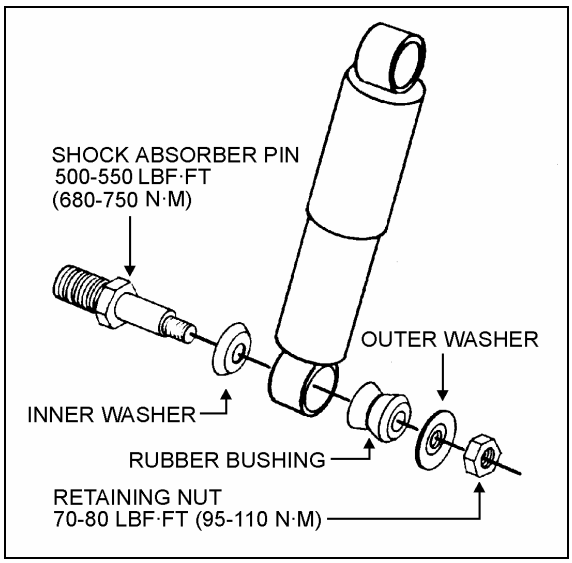

FIGURE 4: SHOCK ABSORBER 16008

2. Remove the shock absorber assembly from pins.

3. Remove the two inner bushings from the shock absorber and discard them

3.3 INSTALLATION

1. Ensure that the shock absorber mounting pins are tight and that the threads are not stripped.

2. Install new rubber mounting bushings on shock absorbers (upper and lower).

3. Place the inner washers (with washer convex side facing the shock absorber rubber bushing) on each shock absorber pin (Fig. 5).

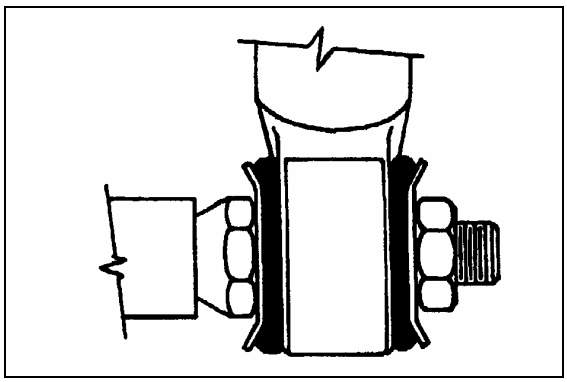

FIGURE 5: TYPICAL SHOCK ABSORBER SETUP 16009

4. Install the shock absorber eyes over the mounting pins, then the outer washers (with washer convex side facing the shock absorber rubber bushing) on each shock extremity.

Note: *If shock absorber pins are removed, they must be reinstalled using "loctite" (see "PARTS SPECIFICATIONS" in this section).*

5. Place the lower and upper mounting pin stud nuts and torque to 70 - 80 ft•lbf (95 – 110 N•m).

4. RADIUS RODS

Radius rods are used to secure the axles in the proper transversal and longitudinal positions. Four radius rods are provided on the front axle suspension (three longitudinal and one transversal), four on the drive axle suspension (three longitudinal and one transversal) and also four on the tag axle with a layout similar to the drive axle. Refer to figures 1 and 2 for details. These rods transmit both braking and driving forces from the axles to the vehicle body.

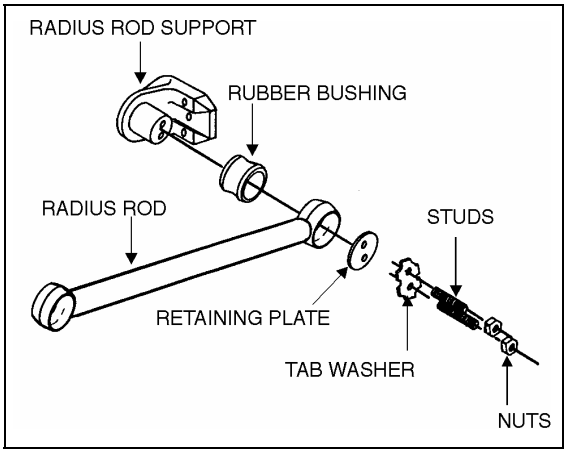

FIGURE 6: TYPICAL RADIUS ROD SETUP 16010

4.1 INSPECTION

The following instructions apply to all radius rods used on this vehicle:

1. Clean all parts thoroughly.
2. Inspect radius rods for distortion and cracks. We recommend the "Magnaflux" process to detect cracks in the radius rod. Any damaged part should be replaced with a new one.

Note: *New bushings should be used when rods are replaced.*

3. The radius rod bushings should be checked periodically for signs of shearing, deterioration, or damage. Any defective part should be replaced with a new one.

4.2 REMOVAL

1. Flatten the tab washer which secures the two retaining nuts (or bolts), then unscrew the nuts (or bolts) at each extremity of the radius rod (Fig. 6).
2. Remove the tab washer and the retaining plates and radius rod ends from anchor pins, then remove the radius rod.

4.3 BUSHING REMOVAL

1. Safely support the radius rod as shown in figure 7.

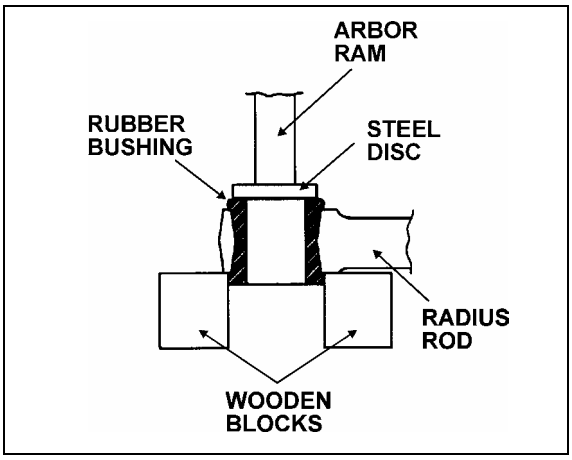

FIGURE 7: RADIUS ROD BUSHING REMOVAL 16011

2. Place a flat steel disc, slightly smaller than the outside diameter of the bushing (Fig. 7).

3. Using an arbor press or a suitable driving tool, press or drive the old bushing out of the rod and discard the bushing.

Caution: *Make sure to prevent the steel disc from contacting the radius rod end.*

4.4 BUSHING INSTALLATION

1. Lightly spray the inner and outer surfaces of radius rod bushing with water.

Caution: *No lubricant whatsoever is to be used on the rubber bushing.*

2. Safely support the radius rod, and place new bushing on top of the radius rod end (Fig. 8).

3. Place a block of wood on top of bushing and press on it manually.

4. If necessary, use an arbor press or a suitable driving tool. Press or drive the bushing into the radius rod end until it extends equally on both sides of the rod.

5. It is also possible to proceed differently. Place radius rod bushing on a plane surface. Spray a light coat of water on the inner and outer surfaces of radius rod bushing.

6. Take radius rod, align the bushing. Tap radius rod on bushing until latter is positioned correctly.

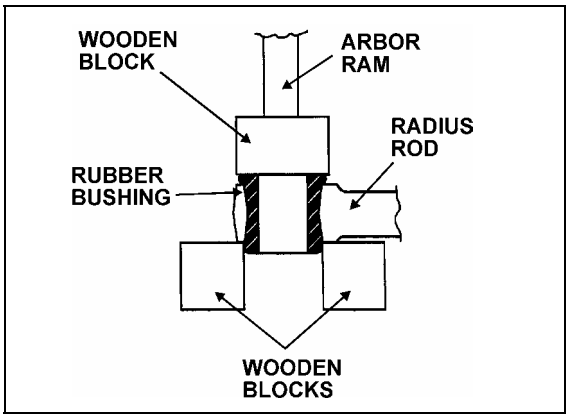

FIGURE 8: RADIUS ROD BUSHING INSTALLATION 16012

4.5 INSTALLATION

1. Lightly spray the radius rod support with water. Place the radius rod end over the radius rod support (Fig. 9).

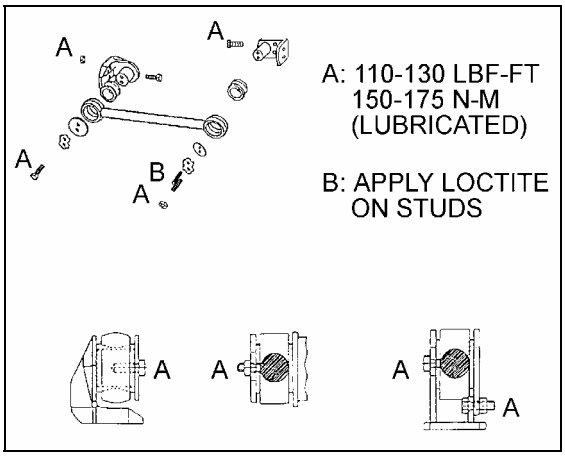

FIGURE 9: RADIUS ROD INSTALLATION 16028

2. Position the retaining plate. Install the tab washer and nuts (or bolts).

Caution: *Always use new tab washers at installation.*

3. Tighten the nuts (or bolts) lightly, and repeat at the other end.

4. Refer to heading *"SUSPENSION HEIGHT ADJUSTMENT"* later in this section, and set the vehicle to normal ride height.

5. With the vehicle at normal ride height, apply oil on threads and tighten all radius rod anchor pin nuts or bolts to 110 – 130 ft•lbf (150 – 175 N•m).

Caution: *It is extremely important upon reconnection of the rods that the proper clearance height between the axle and body be maintained. Otherwise, the rubber bushings in radius rod ends will become preloaded, thus reducing their life span.*

5. SWAY BAR

A sway bar is provided on the front axle to increase vehicle stability. It controls lateral motion (swaying movement) of the vehicle (Fig. 10). Vehicles equipped with an independent front suspension (IFS) are provided with two sway bars. Refer to supplement information on independent front suspension for more details.

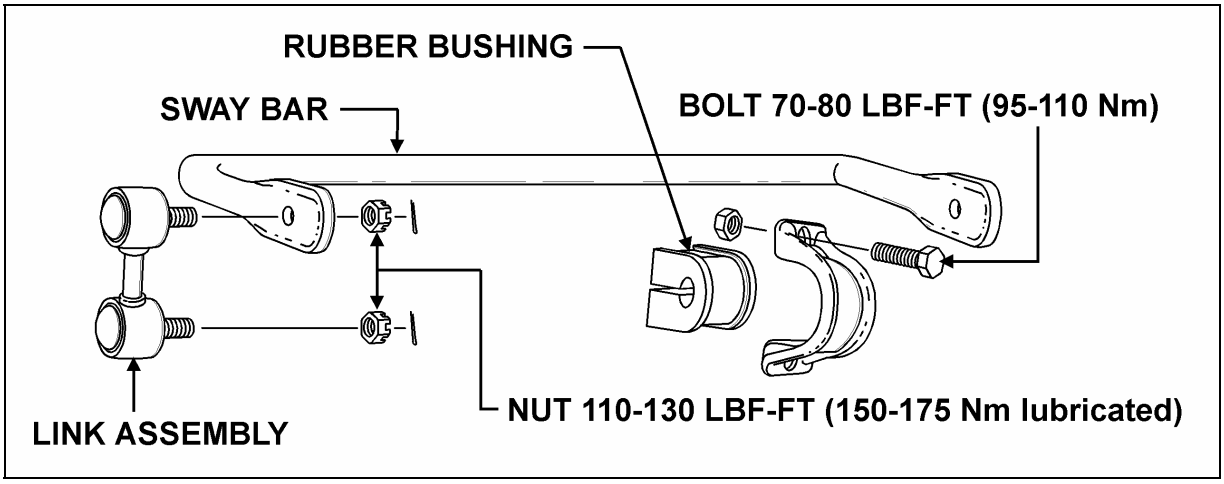

FIGURE 10: RIGID FRONT AXLE SWAY BAR 16099

5.1 REMOVAL

1. Disconnect the two links from sway bar.
2. Safely support the sway bar. Unbolt the four bushing collars from subframe.
3. Remove sway bar.

Note: *Sway bar bushings are slitted to ease their removal.*

5.2 INSTALLATION

1. Loosely install the sway bar.
2. Tighten the eight bushing collar nuts to 70 - 80 ft•lbf (95 - 110 N•m) (Fig. 10).
3. Install two sway bar link upper and lower nuts and tighten to 100 - 130 ft•lbf (150 - 175 N•m) (Fig. 10).
4. Install a cotter pin on each nut and bend.

6. SUSPENSION AIR SYSTEM

The suspension air system has its own air reservoir (accessory tank) which is located behind the front axle. Pressurized air from the main tank (wet tank) flows through a pressure protection valve (PR-2), installed on the accessory air tank then flows to the accessory air tank.

The pressure protection valve (PR-2) controls the pressure at which compressed air is delivered to the accessory air tank. The valve remains closed until a preset pressure is reached (approximately 70 psi (485 kPa)). It then opens and passes air out the delivery port.

The main use for this valve is to protect the main air system by ensuring at all times a sufficient air pressure in the main system (i.e. air delivered to the accessories will be shut off in case of a decrease in pressure). Maintenance and repair information on the pressure protection valve is supplied in the applicable booklet, annexed to Section 12, *"Brakes and Air System"* under reference number SD-03-55.

Warning: *Depressurize parts prior to removal.*

6.1 INSPECTION

The following inspection should be performed at established service inspection periods. Performing these procedures will allow substandard performance to be discovered before the condition becomes bad enough to cause operator complaints and failure on a run.

1. Visually inspect the suspension air lines for evidence of chafing on metal parts or other damage.
2. Visually inspect the air springs for cracks, abrasion or other damage.
3. Replace any parts found to be damaged.

6.2 AIR LINE TEST

With the main air system at normal operating pressure (95 – 125 psi (655 – 860 kPa)), coat all suspension air line connections and air spring mountings with a solution of soap and water. Air leakage will produce soap bubbles. Any leak found must be corrected as no air leakage is permissible.

6.3 AIR TANK MAINTENANCE

Refer to Section 12, “Brakes and Air System” under “MAINTENANCE” for complete instructions on air tank maintenance.

7. SUSPENSION HEIGHT ADJUSTMENT

The flow of pressurized air from the accessory air tank to the air springs is controlled by three height control valves. These valves are mounted to the subframe and connected to the axles through an arm and link connection. This connection allows the valves to apportion air pressure in the springs to the vehicle load, maintaining normal ride height.

Immediate response height control valves increase or decrease the air pressure in the suspension system as required. One height control valve is located at center of front axle, and regulates air to front axle air springs in order to maintain the vehicle at the required height. Two are located at the drive axle, one on each inner side of rear wheelhousing. Refer to figure 12.

The appropriate vehicle body height is obtained by measuring the clearance of all the air springs installed on the front and drive axles. The clearance should be 11 11/16 (297 mm) for the air springs installed on the front axle and 11 ½ ± ¼” (292 ± 6 mm) for those installed on the drive axle. Refer to figure 11 to identify the correct location where the measure has to be taken. At this point, it should not be necessary to make an adjustment under normal service conditions. However, if an adjustment is required, change the position of the overtravel lever in relation to the overtravel control body. The lever should be moved up to raise the height of vehicle, and down to lower it. Check that main air pressure is at normal operating pressure and raise the vehicle to the specified height.

Caution: *Because of the ‘‘deadband’’, always adjust on "fill cycle". If it is necessary to lower vehicle height, release sufficient air to be well below height, and adjust to height through fill cycle.*

To adjust suspension height, proceed as follows:

1. With the vehicle at normal operating air pressure, check the air spring clearance as illustrated in figure 11. This clearance should be 11 11/16 (297 mm) for the front axle air springs and 11 ½ ± ¼” (292 ± 6 mm) for those on the drive axle.

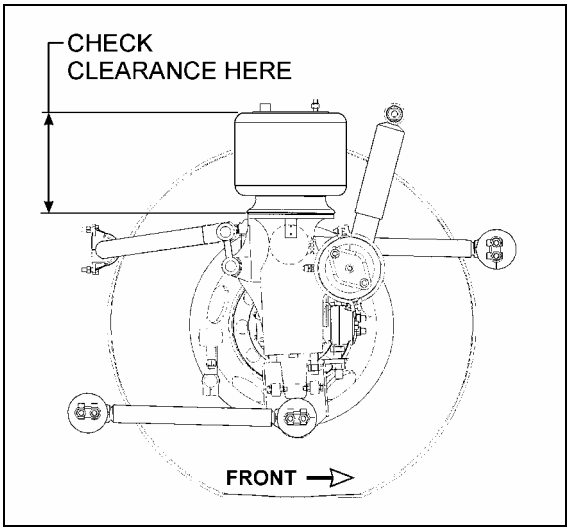

FIGURE 11: TYPICAL AIR SPRING CLEARANCE 16097

Note: *The measure should be taken from under the upper air spring support on subframe to top of the lower air spring support on axle (refer to fig. 11 for more details). If adjustment is required, begin with the drive axle.*

2. Loosen the adjusting nuts on the connecting rod of height control valve to raise or lower the overtravel lever until the desired clearance is reached.

3. If there is not enough play on adjusting nuts, it is possible to make further adjustments by loosening the clamp on the rubber coupling and bringing it up or down.

Note: *Allow suspension to stabilize before taking reading.*

4. When the desired height is obtained, tighten adjusting nuts and clamp.

8. HEIGHT CONTROL VALVES

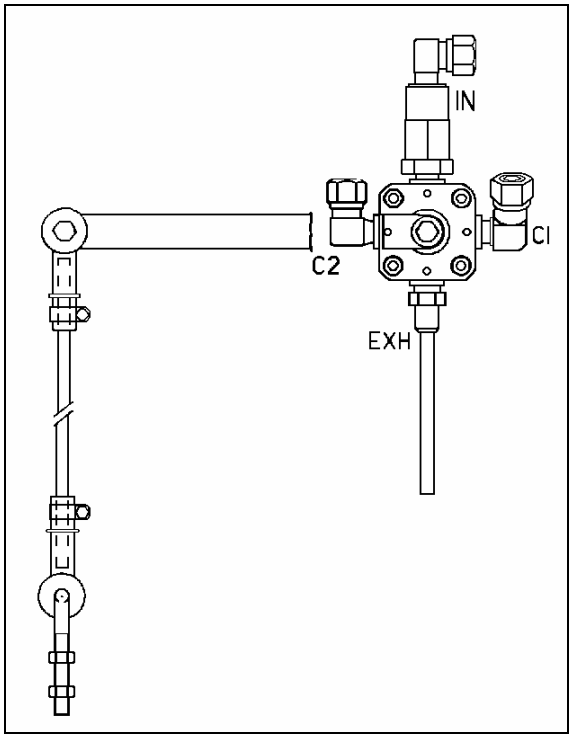

FIGURE 12: HEIGHT CONTROL VALVE 16093

The height control valves automatically add air to, or release air from air springs to maintain constant suspension height regardless of load, or load distribution. Each valve adjusts independently according to the following conditions:

Loading position

As the load increases and lowers the vehicle body, the overtravel lever commands the height control valve to add air to air springs.

Neutral position

When vehicle body reaches the normal ride height, the height control valve overtravel lever reaches the "neutral" position and keeps both the supply and exhaust ports closed to ensure normal ride height is maintained. This condition remains static until the vehicle load is altered.

Unloading position

As the load decreases and raises the vehicle body, the overtravel lever commands the height control valve to release air from air springs.

8.1 MAINTENANCE

The height control valve requires no periodic maintenance. Height control valve linkage operates on rubber bushings and no lubrication should be attempted at this point.

8.1.1 Removal and installation

Before disconnecting any height control valve air lines, securely support the vehicle by its jacking points on the body, and place safety support underneath body. Refer to *"VEHICLE JACKING POINTS"* in Section 18, *"Body"*.

1. Exhaust air from air system by opening the drain cock on accessory air reservoir.
2. Disconnect overtravel lever from link and pull down lever to exhaust remaining air from air springs.
3. Disconnect air supply and delivery lines from the height control valve. Cover ends of the lines with tape.
4. Remove the two nuts retaining the height control valve to the mounting bracket, then remove valve assembly.

Reverse removal procedure to replace height control valve. After installation, check for leakage using a soap and water solution.

8.1.2 Air leakage test

Note: *The following procedure applies when valve assembly has been removed from vehicle.*

1. Clean the exterior of valve assembly.
2. Connect air pressure line to air inlet port, then allow air pressure build-up (70- 100 psi (480 - 690 kPa)).
3. Dip the valve assembly in a container of water, and watch for air bubbles when the overtravel lever is in the center position. No air should escape from any point of the valve assembly.
4. If bubbles appear from the air spring port, this is an indication that the air inlet valve assembly is defective and must be replaced.
5. Remove air pressure line from air inlet fitting and connect it to the air spring port. If bubbles appear at the air inlet check valve port, this is an indication that check valve unit is defective and must be replaced.
6. If bubbles appear at the exhaust port, this is an indication that the exhaust valve assembly is defective and must be replaced.
7. If bubbles appear around edge of valve cover plate, the cover plate gasket must be replaced.
8. If no leaks are found, remove valve assembly from water, then with air pressure still connected to the air spring port, actuate overtravel lever to remove any excess water which may have entered exhaust valve chamber. Remove air line, connect it to the air inlet port, and repeat operation to remove water from the air inlet valve chamber.

9. FRONT KNEELING SYSTEM

The kneeling system is used to lower front of vehicle. This allows passengers to board the vehicle with greater ease. The kneeling action is achieved by exhausting air from the front air springs (bellows). This system bypasses the height control valve to provide a fast up and down movement of the front suspension. Only seven seconds are required to lower vehicle from normal level to the lowered position, and approximately the same time to raise the vehicle back to normal level. The quick response is achieved by an auxiliary air tank installed beside the secondary air reservoir (for exact position, refer to Section 12, *"Brake and Air System").* This tank provides sufficient air supply to the kneeling system for some successive operations.

The system is provided with two safety features; first, a speed switch will enable the kneeling system to work only under 5 mph (8 km/h). Secondly, the parking brake is automatically applied, and a limit switch will keep it applied as long as the vehicle has not returned to a certain

height where the driver will be able to manually remove the parking brake.

The purpose of the hi-buoy function in this system is to raise the front end of the vehicle to allow an extra ground clearance for particular situations. In driving condition, the height control valve is in operation and only the hi-buoy can be operated.

9.1 PRINCIPLE OF OPERATION

Refer to the air system schematic diagram annexed at the end of Section 12, *"Brake and Air System".*

DOWN (FRONT KNEELING):

Both the bellows control and bellows exhaust solenoid valves are energized, so the air control valves release air from front air springs. The height control valve is bypassed to ensure no air is forwarded to air springs while lowering the front suspension.

UP (FRONT HIGH-BUOY):

Only the bellows control solenoid valve is energized, so the air coming from the kneeling air tank is routed through air control valves, and up to front air springs.

The height control valve is bypassed until the kneeling proximity switch signals the kneeling module to cut off the bellows control solenoid valve, about 1" (25 mm) below normal ride height. The final height adjustment is achieved by the height control valve.

9.2 MAINTENANCE

Since the kneeling action is issued from both the air system and electrical system, refer to Section: 12, *"Brake and Air System"* and Section 06, *"Electrical System".*

For diagnosis and understanding of the system, refer to wiring diagrams, and to the appropriate air system schematic diagram annexed to Section 12, *"Brake and Air System".*

9.3 BELLOWS CONTROL SOLENOID VALVES

9.3.1 Removal and installation

1. On the rear side of steering compartment, locate both the bellows control and bellows exhaust solenoid valves.
2. Identify hoses and wires to ease reinstallation. Disconnect solenoid wires and the three flexible black hoses from solenoid valves.
3. Unscrew and remove the control solenoid valve and exhaust solenoid valve assembly. Place on a clean working place.

Reverse removal procedure to reinstall.

***Caution**: Any cable tie that has been cut during removal procedure should be replaced with a new one.*

10. HIGH-BUOY SYSTEM

The purpose of the rear high-buoy system is to raise the entire vehicle body about 4" (100 mm) in order to increase ground clearance to board a ferryboat, to jump a curb, etc. This system can be put into service during normal vehicle operation.

10.1 PRINCIPLES OF OPERATION

The rear high-buoy system is added over the front kneeling (with front high-buoy). The front end uses the same valves as the front kneeling (with front high-buoy). A solenoid valve is added to send air to the double shuttle valves for the rear end. It uses the same dash switch as the kneeling (with front high-buoy).

UP:

The air coming from the control valve, flows through double shuttle valves, to supply air springs. The double shuttle valves prevent

height control valves from releasing air from air springs.

DOWN:

The control valve, on the dashboard, cuts off air supply, so the double shuttle valves allow height control valves to accomplish their function. Height control valves release air from air springs until suspension returns to its normal position.

10.2 MAINTENANCE

Refer to the air system schematic diagram “OPT. FRONT KNEELING WITH REAR HIGH-BUOY COMBINATION” annexed at the end of this Section.

10.3 HIGH-BUOY – PRESSURE REGULATING VALVE

The regulating valve is located in the front service compartment. This valve should be adjusted to 90 psi (621 kPa).

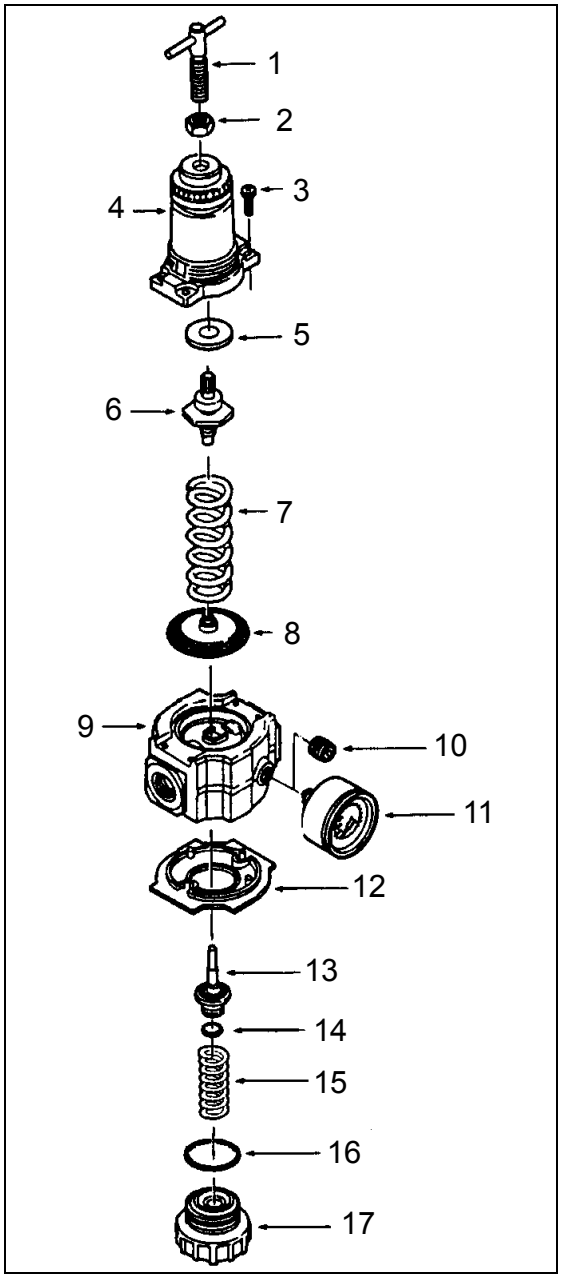

FIGURE 13: REGULATING VALVE 16035

10.3.1 Adjustment

1. Before turning on system air pressure, release jam nut (2, Fig. 13) then turn regulator adjustment counterclockwise until all load is removed from the regulating spring.

2. Turn on system pressure.
3. Turn regulator adjustment clockwise until the desired outlet pressure is reached.
4. To avoid minor readjustment after making a change in pressure setting, always approach the desired pressure from a lower pressure. When reducing from a higher to a lower setting, first reduce the pressure at a lower pressure, then increase it to the desired level of pressure.
5. Tighten jam nut (2, Fig. 13) to lock pressure setting.

10.3.2 Disassembly

1. Shut off inlet pressure and reduce pressure in inlet and outlet lines to zero. Turn regulator adjustment (1, Fig. 13) counterclockwise until all load is removed from regulating spring. Regulator can be disassembled without removal from air line.
2. Disassemble regulator in accordance with the item numbers on the exploded view.

10.3.3 Cleaning

1. Clean parts with warm water and soap. Dry parts and blow out internal passages in body using clean, dry compressed air.
2. Inspect parts. Replace those found to be damaged.

10.3.4 Reassembly

1. Lubricate O-ring (14 and 16, Fig. 13), valve stem (13, Fig. 13), tip of adjusting screw (1, Fig. 13), and the outer circumference and both sides of the thrust washer (9, Fig. 13) with a light coat of good quality O-ring grease.
2. Assemble the regulator as shown on the exploded view.

Torque Table	
Item	Torque in Inch-Pound (N·m)
3 (Screw)	25-35 (2.8-3.9)
17 (Bottom plug)	20-25 (2.3-2.8)

11. LOW-BUOY SYSTEM

The purpose of the low-buoy system is to lower the whole suspension by about 4” (100 mm) in order to reduce the overall height for low clearances. This system can be put into service during normal vehicle operation.

11.1 PRINCIPLES OF OPERATION

On XL2 coaches, the rear low-buoy is added over the front kneeling system. The control valve on the left console panel sends an electric signal from its pressure switch to control the front suspension as if kneeling. It also removes air from a relay valve that exhausts air supply to all leveling valves and the quick release in the rear section. Air from the rear suspension can then be depleted through the check valve-quick release assembly.

DOWN:

The control valve, on the L.H. control panel, cuts off air supply, so air is released from air springs. A relay valve prevents height control valves from supplying air springs.

UP:

The control valve, on the L.H. control panel, supplies air to close the passage between both the delivery and supply ports. A relay valve opens and provides air springs until the suspension reaches the normal ride height.

11.2 MAINTENANCE

Refer to the air system schematic diagram “OPT. FRONT KNEELING WITH REAR LOW-BUOY COMBINATION” annexed at the end of this Section.

12. “LEVEL-LOW” SYSTEM

This system is available on XLII motorhomes only. The purpose of the *"level-low"* leveling system is to adjust suspension in three separate points (front, rear right and rear left) in order to level vehicle body. This system can be put into service when the ignition key is turned to the *"ON"* position, and must be used only when the parking brake is applied. The *"level-low"* warning light on the dashboard indicates that the selector switch is not in the *"OFF"* position.

12.1 PRINCIPLES OF OPERATION

DOWN:

The (front/rear right/rear left) control solenoid valve supplies air to the (front/rear right/rear left) five-way three-position air control valve, which bypasses the (front/rear right/rear left) height control valve, and opens a passage to allow the air control and exhaust valve to release air from (front/rear right/rear left) air springs.

UP:

The (front/rear right/rear left) control solenoid valve supplies air to the (front/rear right/rear left) five-way three-position air control valve, which bypasses the (front/rear right/rear left) height control valve, and opens a passage to allow the air control and exhaust valve to supply air to (front/rear right/rear left) air springs.

DRIVE:

When the ignition key is turned to the *"ON"* position with selector knob in the *"DRIVE"* position, the drive control solenoid valve supplies air to all five-way three-position air control valves, each one opening a passage to allow height control valves to accomplish their function.

When the ignition key is turned to the *"OFF"* position and selector knob to the *"DRIVE"* position, the air is entrapped between air springs and five-way three-position air control valves to ensure the adjusted level will be kept.

Warning: *Never move vehicle with selector knob in any other position than the "DRIVE" position.*

12.2 MAINTENANCE

Since the kneeling action is issued from both the air system and electrical system, refer to Section: 12, *"Brake and Air System"* and Section 06, *"Electrical System*".

For diagnosis and understanding of the system, refer to wiring diagrams, and to the appropriate air system schematic diagram annexed to Section 12, *"Brake and Air System"*.

13. TROUBLESHOOTING

Condition	Cause	Correction
Bellows deflate over time	1. Defective check valve assembly. 2. Defective exhaust valve assembly. 3. Leak in air line and/or bellows. 4. Defective valve cover, rubber O-rings or gasket.	1. Replace check valve assembly. 2. Replace exhaust valve assembly. 3. Replace air line or bellows. 4. Replace valve cover, O-rings or gasket.
Bellows raise to full height and fail to exhaust air pressure	1. A clogged exhaust screen in height control valve assembly. 2. A combination clogged exhaust screen and defective air inlet valve assembly.	1. Remove and clean screen. 2. Clean exhaust screen and replace air inlet valve assembly.
Erratic valve action	1. Dirt or foreign matter in the air valve lever chamber. 2. Defectives valves.	1. Remove valve cover and blow out dirt. Install cover using new gasket. 2. Overhaul height control valve assembly
Vehicle body fails to level to satisfactory ride height	1. Improper height control valve overtravel lever adjustment	1. Adjust lever as directed.

14. PARTS SPECIFICATIONS

Front and tag axle air springs

Make..... Goodyear Tire and Rubber
Model.....1200
Type ..... Mae West
Nominal diameter.....12” (304 mm)
Supplier number.....1R12-319
Prévost number.....630125

Drive axle air springs

Make..... Goodyear Tire and Rubber
Model.....1100
Type .....Double Flare
Nominal diameter.....11.5” (292 mm)
Supplier number.....1R11-088
Prévost number.....630104

Front axle shock absorbers

Make..... Arvin
Color..... White
Collapsed length 15.47±0.125” (39,29±0,32 cm)
Extended length ...24.5±0.125” (33,32±0,32 cm)
Supplier number.....680422
Prévost number.....630134

Drive and tag axle shock absorbers

Make..... Monroe
Type .....Gas Magnum
Collapsed length .....15.38” (30,05 cm)
Extended length .....23.63” (60,01 cm)
Supplier number.....650407
Prévost number.....630127

Height control valve (MTH, front only)

Make .....Barksdale
Quantity used.....1
Supplier number 52321POAQ3-Q62
Prévost number 630157

Height control valve (coach, all axles & MTH, rear only)

Make .....Barksdale
Quantity.....2
Supplier number 52321POAQ3-Q26
Prévost number 630156

Bellows control and exhaust solenoid valve assembly

Make .....Norgren

Solenoid valve manifold

Supplier number D0043B
Prévost number 641130

Coil

Voltage..... 24 V DC
Current draw .....29 amperes
Supplier number 54932-27
Prévost number 641144

Valve (3 way, 2 positions)

Type .....N/C
Supplier number 411-C-456235W
Prévost number 641357
Type ..... N/O
Supplier number 411-D-456236X
Prévost number 641356

Radius rod bushing

Make..... Prévost

Prévost number.....630021

Loctite

Make.....Loctite

Prévost number.....680039

Sway bar bushing (Front Axle)

Make..... Prévost

Prévost number.....630020

Sway bar link

Make..... Tennaco Automotive

Supplier number.....934400

Prévost number.....630230

Shock absorber

Make .....Arvin

Supplier number 405803

Prévost number 630062

Make .....Monroe

Supplier number 45380

Prévost number 630062

Air regulator

Make .....Norgren

Recommended pressure sett. . 90 psi (621 kPa)

Supplier number R74G-4AT-RMN

Prévost number 641352

15. TORQUE SPECIFICATIONS

1- Shock absorber pin ..... 500-550 ft-lbf (680-750 N·m)

2- Shock absorber pin nut ..... 70-80 ft-lbf (95-110 N·m)

3- Radius rod stud ..... 20-40 ft-lbf (27-54 N·m)

4- Radius rod retaining nut or bolt .....110-130 ft-lbf lubricated (150-175 N·m lubricated)

5- Radius rod support nut .....110-130 ft-lbf lubricated (150-175 N·m lubricated)

6- Axle attachment nut..... 425-475 ft-lbf (580-645 N·m)

7- Air spring stud nut ..... 20-25 ft-lbf (27-34 N·m)

8- Sway bar link nuts .....110-130 ft-lbf lubricated (150-175 N·m lubricated)

9- Sway bar bushing collar bolts ..... 70-80 ft-lbf (95-110 N·m)

Note: *During assembly, use “Loctite 242” (Prévost No 680038) with item 1 and 3. After assembly, apply “anti-seize compound” (Prévost No 680064) on all threads nuts.*

SECTION 16: SUPPLEMENT INFORMATION ON INDEPENDENT FRONT SUSPENSION (IFS)

CONTENTS

1. INTRODUCTION ..... 16(IFS)-4

2. STEERING LINKAGE ..... 16(IFS)-4

2.1 STEERING LINKAGE ADJUSTMENT ..... 16(IFS)-7
2.2 PITMAN ARM REMOVAL ..... 16(IFS)-7
2.3 PITMAN ARM INSTALLATION ..... 16(IFS)-7
2.4 DRAG LINK ..... 16(IFS)-8
2.4.1 Adjustment ..... 16(IFS)-8
2.5 BELL CRANK AND IDLER ARM ..... 16(IFS)-8
2.5.1 Bell Crank and Idler Arm Removal ..... 16(IFS)-8
2.5.2 Bell crank or Idler Arm Ball Joint Disassembly ..... 16(IFS)-8
2.5.3 Bell Crank or Idler Arm Ball Joint Reassembly ..... 16(IFS)-9
2.6 RELAY ROD ..... 16(IFS)-10
2.6.1 Replacement ..... 16(IFS)-10
2.7 TIE RODS ..... 16(IFS)-10
2.7.1 Removal ..... 16(IFS)-10
2.7.2 Installation ..... 16(IFS)-11
2.8 STEERING ARMS ..... 16(IFS)-11
2.8.1 Removal ..... 16(IFS)-11
2.8.2 Installation ..... 16(IFS)-11
2.9 LUBRICATION FITTINGS ..... 16(IFS)-11
2.10 POWER STEERING HYDRAULIC PUMP ..... 16(IFS)-12

3. LOWER AND UPPER A-ARM BALL JOINT ..... 16(IFS)-12

3.1 STRIPPING DOWN ..... 16(IFS)-12
3.2 ASSEMBLY ..... 16(IFS)-13

4. LOWER A- ARM CENTRAL JOINTS (BT-SECTIONAL BEARING SYSTEM) ..... 16(IFS)-13

4.1 STRIPPING DOWN ..... 16(IFS)-13
4.2 ASSEMBLY ..... 16(IFS)-14

5. UPPER A-ARM BALL JOINTS (ONE-PART BEARING SYSTEM) ..... 16(IFS)-16

5.1 MAINTENANCE ..... 16(IFS)-16
5.2 STRIPPING DOWN ..... 16(IFS)-16
5.3 ASSEMBLY ..... 16(IFS)-16

6. FRONT END ALIGNMENT ..... 16(IFS)-17

6.1 ALIGNMENT TERMINOLOGY ..... 16(IFS)-17
6.2 FRONT END INSPECTION ..... 16(IFS)-18
6.3 FRONT WHEEL CAMBER ..... 16(IFS)-18
6.4 FRONT WHEEL TOE-IN ..... 16(IFS)-18
6.4.1 Toe-In Check ..... 16(IFS)-18
6.4.2 Toe-In Adjustment ..... 16(IFS)-18
6.5 FRONT AXLE CASTER ..... 16(IFS)-19
6.6 MAJOR DAMAGE ..... 16(IFS)-19

7. FRONT AIR SPRINGS ..... 16(IFS)-20

7.1 INSPECTION ..... 16(IFS)-20
7.2 REMOVAL ..... 16(IFS)-20
7.3 INSTALLATION ..... 16(IFS)-20

8. SHOCK ABSORBERS ..... 16(IFS)-22
8.1 SHOCK ABSORBER REMOVAL ..... 16(IFS)-22
8.2 SHOCK ABSORBER INSTALLATION ..... 16(IFS)-22
9. SWAY BAR ..... 16(IFS)-22
9.1 REMOVAL ..... 16(IFS)-22
9.2 INSTALLATION ..... 16(IFS)-22
10. INDEPENDENT FRONT SUSPENSION ADJUSTMENT ..... 16(IFS)-24
11. SUSPENSION HEIGHT ADJUSTMENT ..... 16(IFS)-24
12. HEIGHT CONTROL VALVE ..... 16(IFS)-25
12.1 LOADING POSITION ..... 16(IFS)-25
12.2 NEUTRAL POSITION ..... 16(IFS)-25
12.3 UNLOADING POSITION ..... 16(IFS)-25
12.4 MAINTENANCE ..... 16(IFS)-25
12.5 REMOVAL AND INSTALLATION ..... 16(IFS)-26
13. "LEVEL-LOW" LEVELING SYSTEM ..... 16(IFS)-26
13.1 PRINCIPLES OF OPERATION ..... 16(IFS)-26
14. AIR SYSTEM ..... 16(IFS)-26
14.1 AIR TANK MAINTENANCE ..... 16(IFS)-28
14.1.1 Wet Air Tank ..... 16(IFS)-28
14.1.2 Primary Air Tank ..... 16(IFS)-28
14.1.3 Secondary Air Tank ..... 16(IFS)-28
14.1.4 Accessory Air Tank ..... 16(IFS)-28
14.1.5 Expansion Air Tank ..... 16(IFS)-29
14.2 EMERGENCY FILL VALVES ..... 16(IFS)-29
15. HUB UNIT AND SWIVEL ASSEMBLY ..... 16(IFS)-29
16. TORQUE TABLE ..... 16(IFS)-30
17. SPECIFICATIONS ..... 16(IFS)-31

ILLUSTRATIONS

FIGURE 1: SUSPENSION AND STEERING LINKAGE ..... 16(IFS)-4
FIGURE 2: LOCATION OF CLAMPS ..... 16(IFS)-5
FIGURE 3: CLAMP POSITIONING..... 16(IFS)-6
FIGURE 4: CLAMP POSITIONING..... 16(IFS)-6
FIGURE 5: CLAMP POSITIONING..... 16(IFS)-6
FIGURE 6: CLAMP POSITIONING..... 16(IFS)-7
FIGURE 7: PITMAN ARM ALIGNMENT16(IFS)-7
FIGURE 8: BELL CRANK AND IDLER ARM BALL JOINT 16(IFS)-9
FIGURE 9: BELL CRANK ..... 16(IFS)-9
FIGURE 10: BELL CRANK ..... 16(IFS)-10
FIGURE 11: LUBRICATION FITTINGS' LOCATION DIAGRAM ..... 16(IFS)-12
FIGURE 12: BALL JOINT ..... 16(IFS)-13
FIGURE 13: CENTRAL JOINT ..... 16(IFS)-15
FIGURE 14: BALL JOINT ..... 16(IFS)-16
FIGURE 15: STEERING LINKAGE MEASURE..... 16(IFS)-17
FIGURE 16: FRONT END ALIGNMENT DIAGRAM..... 16(IFS)-19
FIGURE 17: AIR SPRINGS ..... 16(IFS)-20
FIGURE 18: AIR SPRING AND SHOCK ABSORBER ..... 16(IFS)-21
FIGURE 19: SHOCK ABSORBER..... 16(IFS)-22
FIGURE 20: SWAY BAR (FRONT SUSPENSION) ..... 16(IFS)-23
FIGURE 21: SWAY BAR (REAR SUSPENSION)..... 16(IFS)-23
FIGURE 22: HEIGHT CONTROL VALVE LOCATION ..... 16(IFS)-24
FIGURE 23: TYPICAL AIR SPRING CLEARANCE..... 16(IFS)-25
FIGURE 24: FRONT HEIGHT CONTROL VALVE ..... 16(IFS)-25
FIGURE 25: LOCATION OF AIR TANKS ..... 16(IFS)-27
FIGURE 26: REAR VALVE LOCATION ..... 16(IFS)-28
FIGURE 27: FRONT VALVE LOCATION ..... 16(IFS)-28
FIGURE 28: REAR VALVE LOCATION..... 16(IFS)-29
FIGURE 29: FRONT VALVE LOCATION ..... 16(IFS)-29

1. INTRODUCTION

This supplement contains service procedures and specifications that apply to the PREVOST converted coach shell vehicles or coaches equipped with an independent front suspension.

This text contains information unique to the independent suspension system. In the case you cannot find information on a subject in this supplement section, the information given in the regular sections of the Maintenance Manual will apply.

2. STEERING LINKAGE

Turning motion of the steering wheel is transferred by the steering gear and steering linkage to the steering arms at the right and left front wheels. The steering linkage consists of tie rods connected to the bell crank and the steering arm at the left side of the coach, and to the idler arm and steering arm at the right side of the coach. The bell crank and idler arm are connected by a relay rod. A drag link connected to the bell crank and the pitman arm, which is mounted to the steering gear, transfers the turning motion of the steering wheel to the steering arms (Fig. 1).

Lower and upper A-arms are widely spaced. They are mounted on ball joints. Torque rods prevent rotation of the uprights around the lower and upper ball joints.

If the steering linkage is bent, twisted or worn, steering action of the coach will be seriously affected. Any time steering linkage components are replaced or adjusted, steering geometry and front wheel alignment must be checked as explained in this section of supplement.

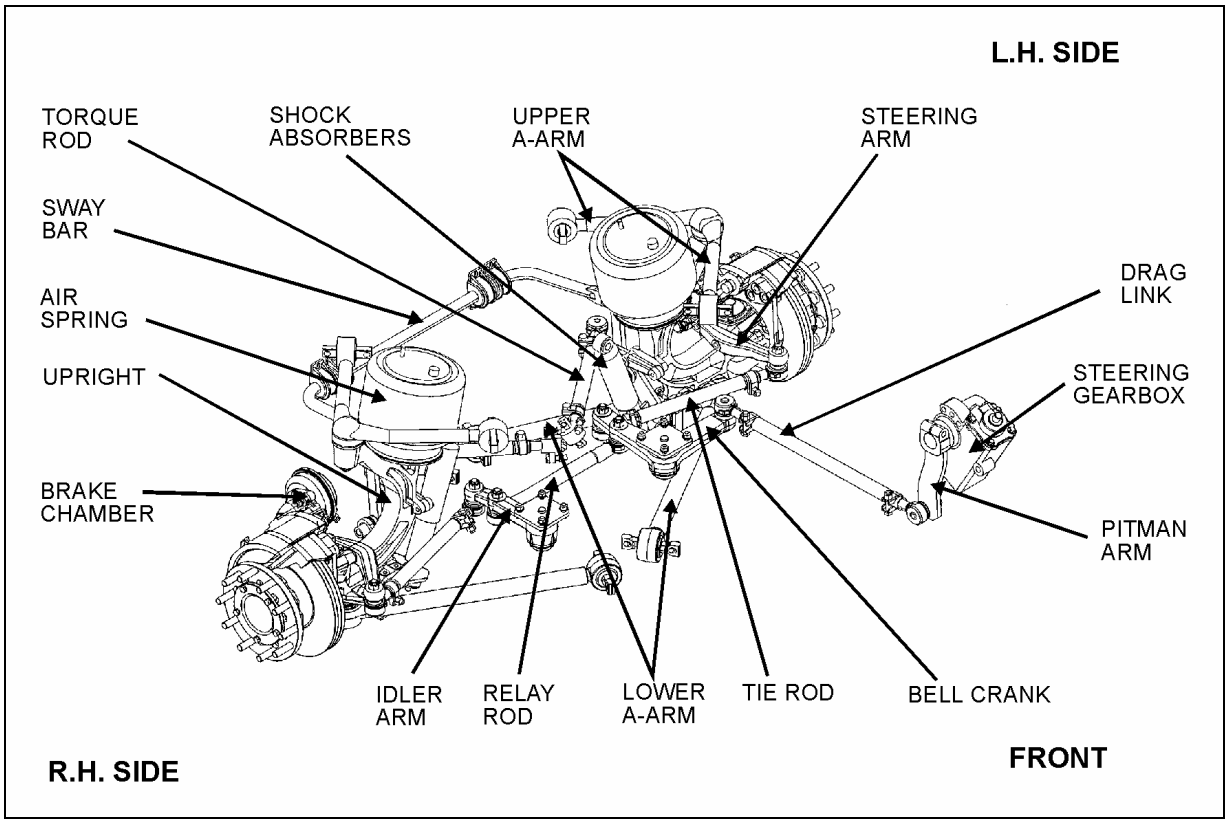

FIGURE 1: SUSPENSION AND STEERING LINKAGE 16036

Turning Angle

The maximum turning angle is set mechanically through the two steering stop screws installed on the swivel assembly. The turning angle (56° + 0° - 1°) mechanical stop is factory adjusted to accommodate the chassis design, and therefore, does not require adjustment on new vehicles.

However, turning angle should be checked and adjusted hydraulically, if necessary, any time a component of the steering system is repaired, disassembled or adjusted.

Before checking the turning angle, be sure the front end is properly aligned as described under paragraph "4. Front End Alignment" in this supplement.

To check steering maximum turning angle, proceed with the following method :

1. Check if front tires rub against the frame or if the steering gear has been serviced.

Caution: *If clamps are not correctly installed, they can interfere with other parts.*

2. For a full left and right turn, check clamps' position and for interfering parts. Refer to figures 2 to 6 for location and positioning of clamps. If readjustment is required, make the proper adjustment.

Note: Prior to steering limiter adjustment, verify vehicle wheel alignment, and ensure that oil level is adequate and that air bleeding is done.

3. If necessary readjust steering limiter. Refer to "ZF-Servocom Repair Manual" annexed to XL2 Maintenance Manual, Section 14, "Steering", under heading: "Setting and Functional Test".

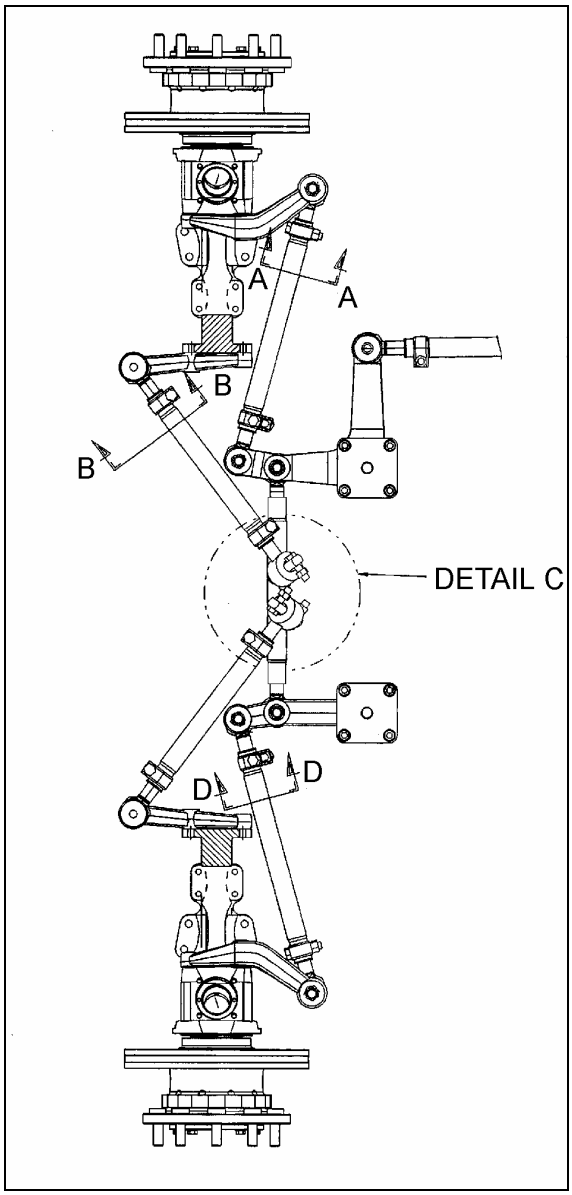

FIGURE 2: LOCATION OF CLAMPS 16037

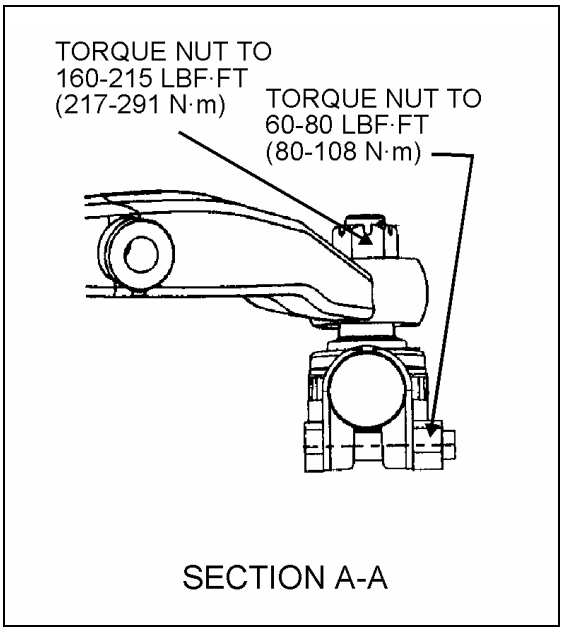

FIGURE 3: CLAMP POSITIONING 16038

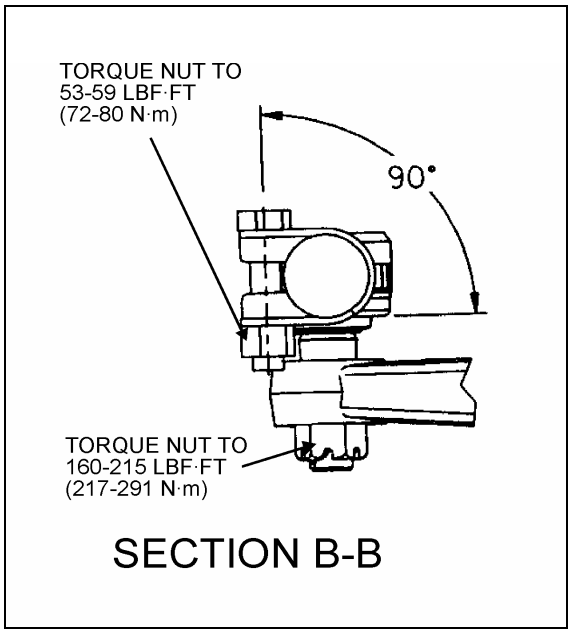

FIGURE 4: CLAMP POSITIONING 16039

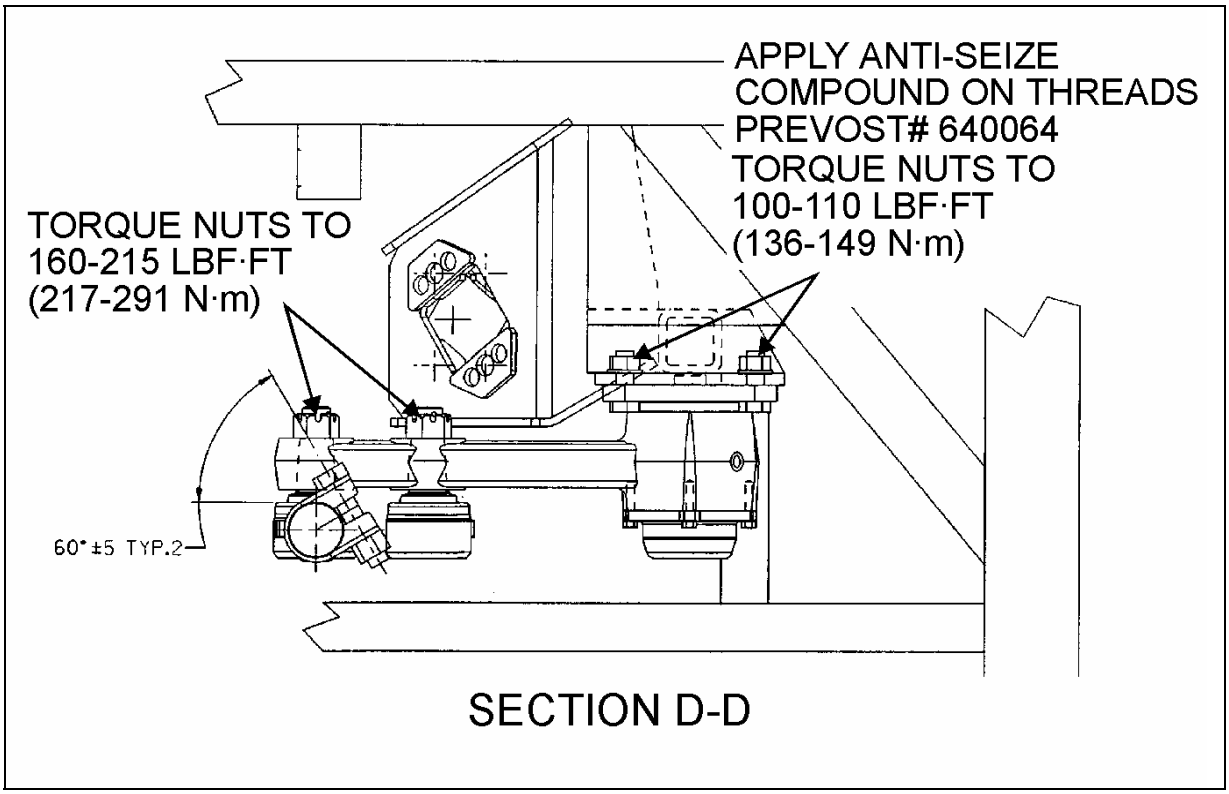

FIGURE 5: CLAMP POSITIONING 16040

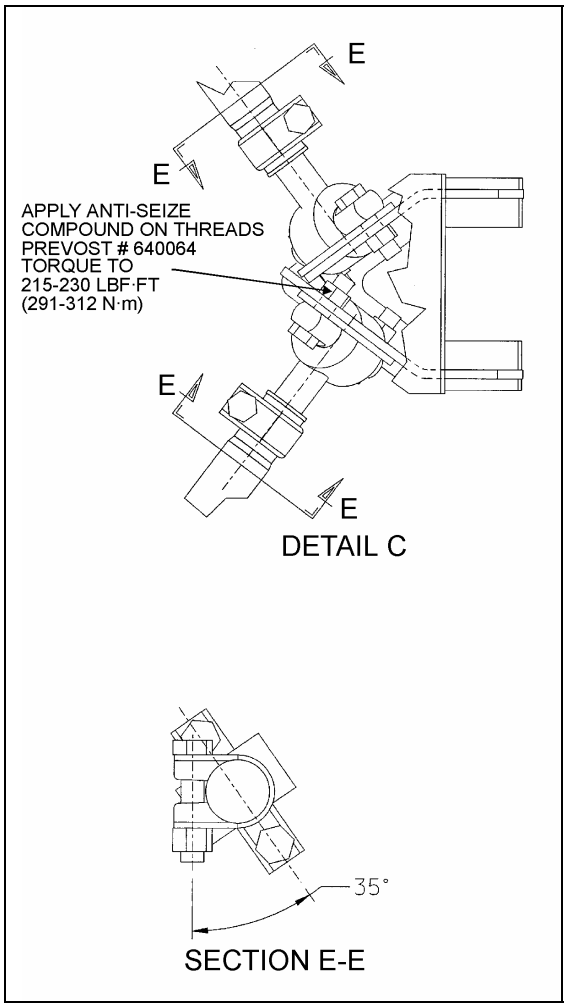

FIGURE 6: CLAMP POSITIONING 16041

2.1 STEERING LINKAGE ADJUSTMENT

Note: *Whenever a steering linkage component has been removed and replaced, check steering geometry and front end alignment as directed in this Supplement. Check to insure that all stud nuts and mounting bolts and nuts have been tightened to proper torques listed under "16. TORQUE TABLE" at the end of this supplement.*

1. The pitman arm should be adjusted with reference mark aligned or to an angle of 2.5° in relation with the vertical axis (Fig. 7).
2. Locate centerline of vehicle then install relay rod in boss at steering bell crank and idler arm. Align center of relay rod with centerline of vehicle.
3. Install drag link to pitman arm and adjust opposite end of drag link to fit mounting stud hole in bell crank.
4. Install tie rods, then adjust toe-in as per "FRONT END ALIGNMENT" in this Supplement.

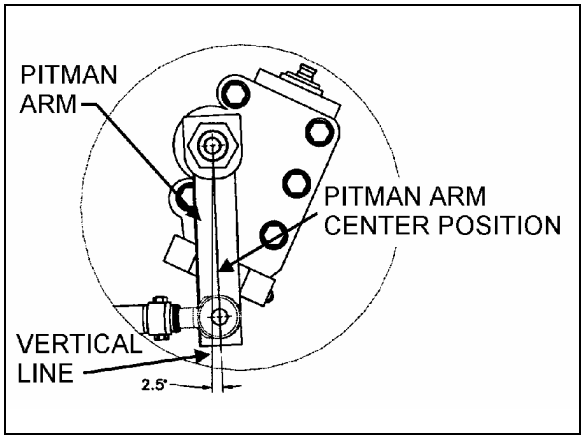

FIGURE 7: PITMAN ARM ALIGNMENT 14037

2.2 PITMAN ARM REMOVAL

1. Remove cotter pin, nut and washer from drag link ball stud at pitman arm.
2. Disconnect drag link from pitman arm, using jaw style pullers (pressure screw type).

Warning: *Always wear approved eye protection when operating pullers.*

Caution: *Do not drive pitman arm on or off pitman shaft as this can damage the steering gear.*

Caution: *Heating of components to aid in disassembly is not allowed because it has a detrimental effect on axle components and steering linkages.*

3. Remove pitman arm fixing nut.
4. Check the radial position of the pitman arm in relation to the sector shaft prior to removal of pitman arm.
5. Add reference marks to the arm and shaft if necessary to ensure correct alignment at reassembly.
6. Remove pitman arm. Use a puller if you cannot remove the pitman arm manually.

2.3 PITMAN ARM INSTALLATION

1. Position pitman arm on sector gear shaft with reference marks aligned.
2. Install fixing nut. Tighten nut to 405-445 lbf•ft (550-605 N•m) (Fig. 7).

3. Connect drag link to pitman arm. Install washers. Tighten nut to 160-300 lbf•ft (220-410 N•m). Advance nut to next alignment cotter pin slot and install a new cotter pin.

2.4 DRAG LINK

Drag link assembly consist of three parts; a drag link and two end assemblies. Both end assemblies are identical and they are retained on the drag link with a clamp bolt and nut.

Stud nuts at the pitman arm and bell crank ends of the drag link must be kept tight or hole at ball stud end of drag link and hole in pitman arm may become enlarged as a result of excessive looseness. Subsequent tightening of stud nuts may draw studs too far into holes and dust cover parts may become damaged which can result in component failure.

Drag link end sockets are equipped with lubrication fittings and should be lubricated as directed in "LUBRICATION FITTINGS" in this supplement.

2.4.1 Adjustment

It should not be necessary to alter the length of the drag link except when a new link is installed or when removable end assembly has been replaced. If drag link adjustment is necessary, proceed as follows:

1. Position front wheels in straight ahead position.
2. Center steering gear as previously explained in paragraph "2.1 Steering Linkage Adjustment".
3. Remove cotter pin and stud from drag link at bell crank. Locate centerline of vehicle and center of relay rod. With center of relay rod aligned with centerline of vehicle, loosen clamp bolt at socket end (bell crank end) of drag link and adjust length of socket end assembly to fit in boss of bell crank.

Note: *Do not change position of pitman arm.*

4. Install stud nut and torque to 160 lbf•ft (220 N•m). Align nut with cotter pin slot (tighten) and install a new cotter pin.
5. Torque mounting clamp bolt nut to 60-80 lbf•ft (80-110 N•m), then test the adjustment. Front wheels should turn from right to left extremities without noticeable binding at drag link ends.

2.5 BELL CRANK AND IDLER ARM

Bell crank and idler arm are equipped with one lubrication fitting and should be lubricated as directed in paragraph "2.9 LUBRICATION FITTINGS" at the end of this Supplement.

2.5.1 Bell Crank and Idler Arm Removal

Note: *Use a piece of wire to anchor loosen end of relay rod and tie rod in order to prevent placing an excessive load on opposite socket end.*

Bell crank : Disconnect drag link, tie rod and relay rod from bell crank by removing cotter pins, stud nuts and washers from ball studs. Separate socket assemblies from the bell crank.

Idler arm : Remove cotter pins, nuts and washers from ball studs connecting relay rod and tie rod to idler arm. Separate socket assemblies from idler arm.

Remove nuts and washers from bolt attaching bell crank or idler arm mounting bracket to vehicle understructure. Remove bell crank or idler arm mounting bracket.

2.5.2 Bell crank or Idler Arm Ball Joint Disassembly

1. Remove adjacent link assemblies from bell crank or idler arm as previously described.
2. Remove the cap (Fig. 8).
3. Remove the cotter pin, nut and tongue washer. Remove bearings, grease seal, bearing bushing and the bell crank or idler arm from its mounting bracket stud (Fig. 8).

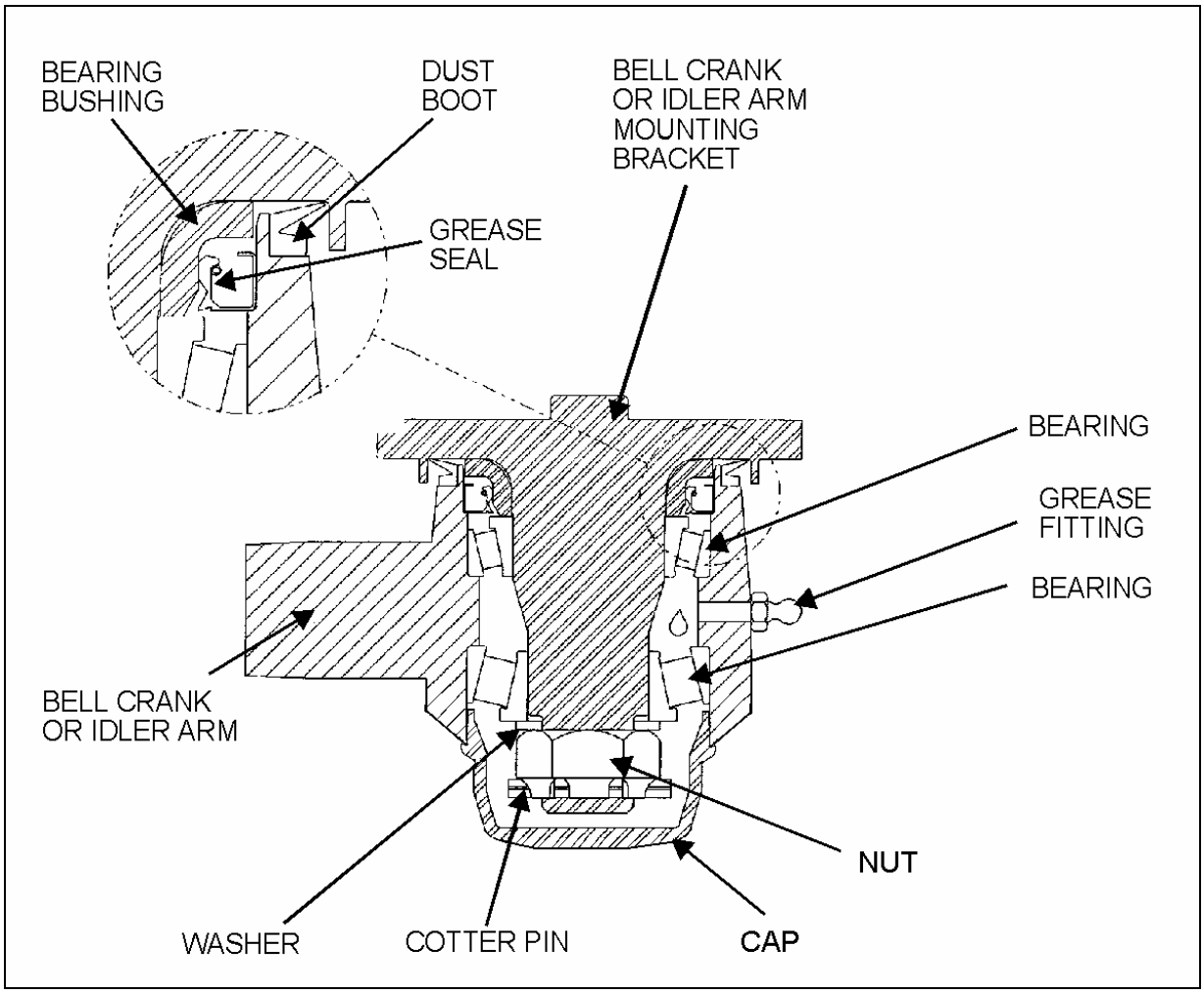

FIGURE 8: BELL CRANK AND IDLER ARM BALL JOINT 16043A

2.5.3 Bell Crank or Idler Arm Ball Joint Reassembly

Note: *For bearing installation use tool Prévost # 110684.*

1. Install bearing bushing on bell crank or idler arm mounting bracket stud.
2. Install bearing and grease seal in bell crank or idler arm eye (Fig. 8).

Note : *Install grease seal according to figure 8. Grease must be able to exit the bell crank or idler arm mechanism. For grease seal installation use tool Prévost # 110683.*

3. Install bell crank or idler arm on its mounting bracket stud (Fig. 8).
4. Install bearing and nut.

Note : *Apply grease on bearing before installation.*

5. Firmly tighten nut (Fig. 9).

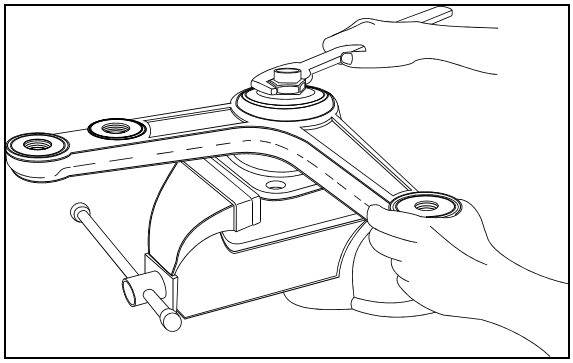

FIGURE 9: BELL CRANK 16044

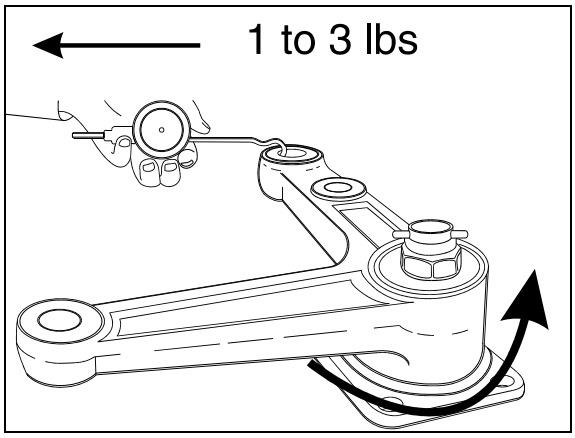

FIGURE 10: BELL CRANK 16045

6. Unscrew nut until bell crank or idler arm starts to turn by the application of 1 to 3 pounds load (Fig. 10).
7. Check for loose bearings by applying an up and down load on bell crank or idler lever (Fig. 9). The lever is not supposed to move in the vertical axis direction.
8. Align nut with cotter pin slot (tighten) and install a new cotter pin.

Note: *Bend cotter pin around the nut (Fig. 8). Do not bend the cotter pin in the direction of the cap, because it may interfere with the cap.*

9. Install the cap.
10. **Bell crank :** Install drag link, tie rod and relay rod as directed herein under each specific subject.
11. **Idler arm :** Install tie rod and relay rod as directed herein under each specific subject.
12. Adjust turning angle as previously directed under paragraph "**Turning Angle**" and check front end alignment as specified in paragraph "6. Front End Alignment" of this supplement.

2.6 RELAY ROD

Relay rod ends are equipped with lubrication fittings and should be lubricated as directed in paragraph "2.9 LUBRICATION FITTINGS" in this supplement.

Note: *The relay rod is crimped in place and it is not possible to remove the ball joints.*

2.6.1 Replacement

1. Remove cotter pins from bell crank and idler arm end of relay rod. Loosen nuts flush with end of studs.
2. Place a sledge hammer behind the adjacent part to absorb shocks. Strike the studs with a brass hammer to loosen end assemblies.
3. Remove stud nuts and washers then remove studs.
4. Position relay rod studs into bell crank and idler arm then tap stud ends with a brass hammer to seat tapered surfaces.
5. Install washers and stud nuts. Tighten nuts to 160 lbf•ft (220 N•m) torque. Align cotter pin slot (tighten) and install a new cotter pin.

2.7 TIE RODS

Tie rod ends are connected to the bell crank and left steering arm, and to the idler arm and right steering arm. Each tie rod assembly consists of three parts; a tube and two socket end assemblies. The tie rod ends are threaded into the tube and secured with clamp bolts. Right and left hand threads are provided to ease toe-in adjustment. Tie rod assemblies are interchangeable from the right to the left side of the coach.

Tie rod end sockets require no maintenance other than periodic lubrication and inspection to see that ball studs are tight. Replace socket ends when there is excessive up and down motion, lost motion or end play at ball end of stud.

1. Periodically check bolt nut for tightness.
2. Inspect tie rod for bent condition and inspect tube for damaged threads. If tie rod is bent or threads are damaged, replace the assembly.
3. Lubricate tie rod end fittings as directed in paragraph "2.9 LUBRICATION FITTINGS" at the end of this section.

2.7.1 Removal

1. Remove cotter pins and stud nuts which attach tie rod socket ends to bell crank and left steering arm (or idler arm) and right steering arm.
2. Remove tie rod ball stud by tapping on steering arm and bell crank or idler arm with

hammer, while using a sledge hammer to absorb shocks.

Note: *If tie rod end assemblies are damaged in any way, they must be replaced.*

2.7.2 Installation

1. Install socket end assemblies on tie rod. Be sure both ends are threaded an equal distance into the tube.
2. Make sure threads on stud and in stud nut are clean and not damaged.
3. Position ball studs (socket ends of tie rod) in holes in steering arm and bell crank or idler arm. Install a ball stud nut on each stud and tighten firmly.
4. Torque stud nuts to 160 lbf•ft (220 N•m). Align cotter pin slot (tighten) and install a new cotter pin.

Note: *Adjust toe-in as directed in paragraph "6.4.2 TOE-IN ADJUSTMENT" of this supplement.*

5. Make sure tie rod ends are properly aligned with ball studs, then torque tie rod end clamp bolts to 60-80 lbf•ft (80-110 N•m).

Note: *If tie rod is not properly aligned with stud, binding will result.*

2.8 STEERING ARMS

The left and right wheel steering arms are secured to a swivel at one end and to a tie rod at the other end.

2.8.1 Removal

1. Remove wheel as directed in Section 13, "WHEELS AND TIRES" of the maintenance manual.
2. Remove cotter pin, washer and nut from stud securing tie rod to steering arm. Remove ball stud from steering arm by tapping on arm with a hammer, Placing a sledge hammer underneath steering arm to absorb shocks.
3. Remove cotter pin and nut securing steering arm to swivel assembly. Remove steering arm from swivel.

2.8.2 Installation

1. Insert steering arm in swivel.
2. Torque steering arm to swivel nut to 190 lbf•ft (260 N•m). Align cotter pin slot (tighten) and install a new cotter pin.
3. Position tie rod ball stud in steering arm and tap with a brass hammer to seat ball stud in steering arm. Install washer and nut on stud. Torque nut to 160 lbf•ft (220 N•m). Tighten nut to nearest cotter pin slot and install a new cotter pin.
4. Install wheel as directed in Section 13, "WHEEL, HUBS AND TIRES" under paragraph "3.2 Installation" of the maintenance manual.

2.9 LUBRICATION FITTINGS

All lubrication fittings must be clean before applying lubricant. Also, always be sure equipment used in applying lubricant is clean. Every precaution should be taken to prevent entry of dirt, grit, lint or other foreign matter into lubricant containers. Replace fitting when they become broken or damaged.

Intervals of application given in the following paragraphs are recommended for normal service. More frequent intervals may be applied under severe operating conditions. In selecting proper lubricants, supplier reputation must be considered. The supplier must be responsible for product quality. The diagram (Fig. 11) shows approximate location of steering lubrication fittings.

1. **Drag Link Ends :** Lubricate at two fittings, one at each end of link, every 6,250 miles (10 000 km) with a good quality lithium-base grease NLGI No. 2 (Shell Retinax LX or equivalent).
2. **Relay Rod Ends :** Lubricate at two fittings, one at each end of rod, every 6,250 miles (10 000 km) with a good quality lithium-base grease NLGI No. 2 (Shell Retinax LX or equivalent).
3. **Tie Rod Ends :** Lubricate at four fittings, one at each end of both tie rods, every 6,250 miles (10 000 km) with a good quality lithium-base grease NLGI No. 2 (Shell Retinax LX or equivalent).
4. **Hub Unit and Swivel Assembly :** Refer to GKN AXLES LIMITED KIRKSTALL DIVISION, SERVICE MANUAL, Section "A.

LUBRICATION" annexed at the end of section 10.

5. **Idler Arm and Crank bell :** Lubricate at two fittings, one on the idler arm and the other on the crank bell, every 6,250 miles (10 000 km) with a good quality lithium-base grease NLGI No. 2 (Shell Retinax LX or equivalent). Apply grease gun pressure to the fitting until lubricant appears at the top seal.

6. **Upper V-Link Outer Ball Joint :** Lubricate at fitting until you see some grease on the relief valve nearby, every 6,250 miles (10 000 km) with a good quality lithium-base grease NLGI No. 2 (Shell Retinax LX or equivalent).

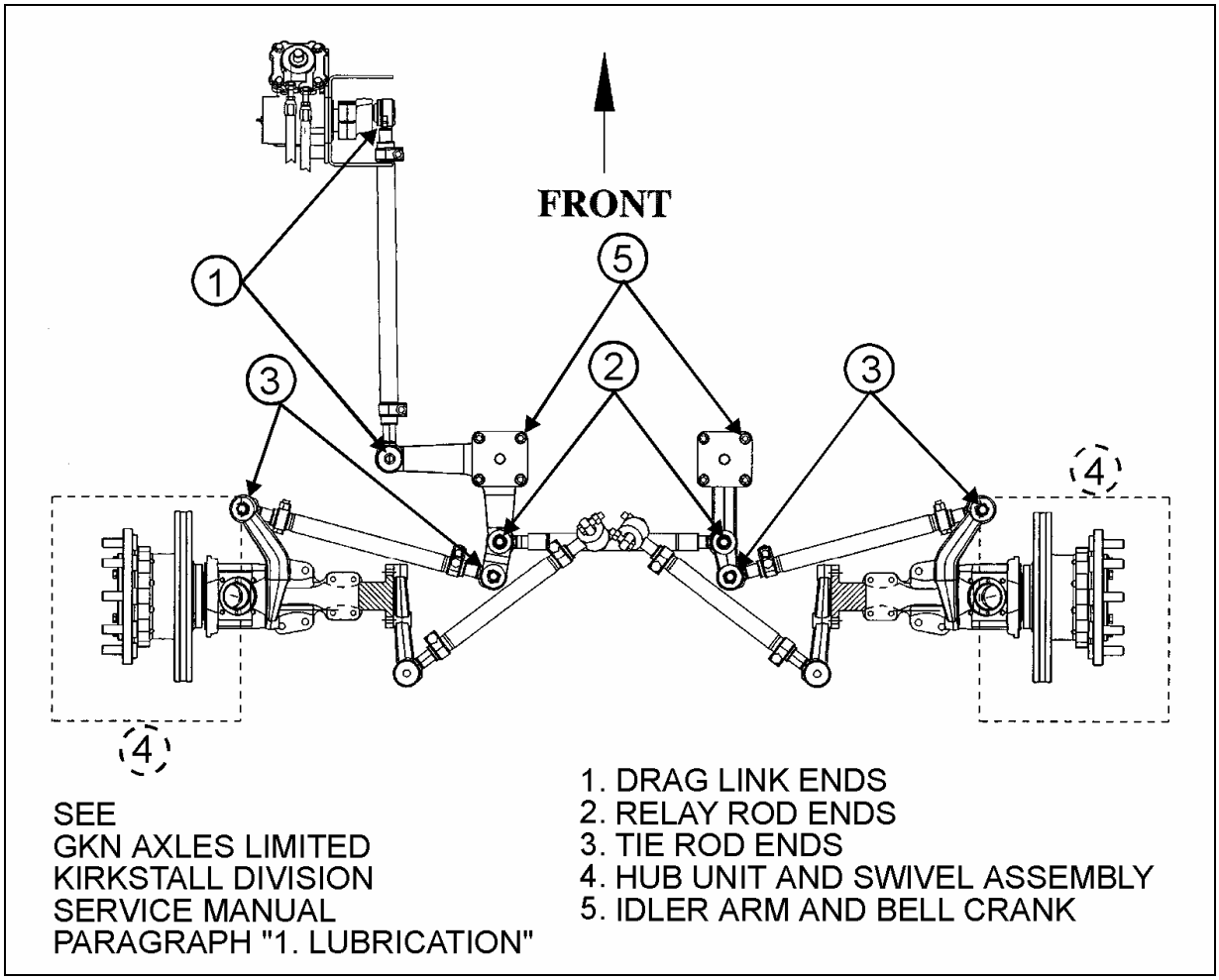

FIGURE 11: LUBRICATION FITTINGS' LOCATION DIAGRAM 16046

2.10 POWER STEERING HYDRAULIC PUMP

Refer to the "TRW Power Steering Pump Service Manual" annexed at the end of Section 14.

3. LOWER AND UPPER A-ARM BALL JOINT

The assembly work may be done only by a recognized specialized workshop. Ensure that old and new parts do not get mixed up with each other. It is for this reason that all the old parts are to be scrapped immediately after a joint has been stripped down. A complete repair set must be used for each joint repaired, i.e. use of only part of a repair set is not permissible. All numeral or letter designations mentioned below refer to figure 12.

3.1 STRIPPING DOWN

Strip down the defective joint through removal of locking ring (3), annular spacer (2) and ball

pin/bushing, assembly (1) and thereafter clean out housing bore and locking circlip groove.

3.2 ASSEMBLY

Execute assembly of the new joint parts in the following sequence :

1. Complete moistening of the contact surface between housing bore and ball pin through application of the grease.

Note: *Apply grease, only in the case of repair kit (Prévost # 611114)).*

2. Insert ball pin/bushing, assembly (1). In case of the two-bolt type, ensure that the bolt bores are in the correct position in relation to the axis of the tube.
3. Place joint in receiving fixture (C) and mount annular assembly tool (B) on the housing. Then locate annular spacer (2) and locking-Circlip (3) in the housing using axial load (F) with the aid of assembly matrix (A) (For axial load, refer to table 1) (For Prévost tools #, refer to table 2). If the ends of the annular spacer are not in contact with each other, the thus formed opening must be located at 180° to the opening of the locking circlip. Pay attention during assembly to ensure that the locking circlip eyelets are located at each side of the housing shaft axis (locking circlip eyelet lug points to tube), and that locking circlip (3) is properly engaged in the groove of the housing.

TABLE 1		
Suitable for repair kits **Prévost #**	**Position**	**Axial load F (kN)**
611111	Upper A-arm	120
611114	Lower A-arm	160

4. When repairing defective ball pin assemblies, the necked down-bolt must regularly be replaced with a new one.

In special cases where it is necessary to repair defective ball pin assemblies with sealing caps the following must be observed: Dismounting of the sealing cap cannot take place without destruction and after repair work is complete it must be replaced with a new one.

TABLE 2			
Suitable for repair kits Prévost #	**PRÉVOST TOOLS NEEDED (Prévost #)**		
	A	**B**	**C**
611111	683108	683109	683110
611114	683111	683112	683112

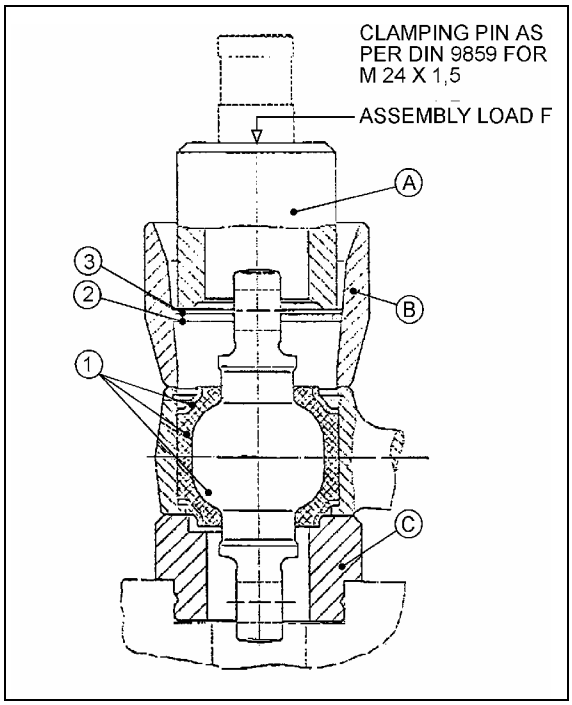

FIGURE 12: **BALL JOINT** 16047

4. LOWER A- ARM CENTRAL JOINTS (BT-SECTIONAL BEARING SYSTEM)

All reference numbers mentioned refer to component parts shown in figure 13.

4.1 STRIPPING DOWN

1. The joint is to be stripped down in the following sequence :
2. Remove sheet metal-cap (10) with annular seal (11) and then loosen tightening clip (7).
3. Screw out necked down bolt (14) and use hex screw M 24 x 1.5 x 50 (DIN 961) to press bracket (15) out of ball sleeve (1).
4. Remove sealing boot (6) with tightening clip (7) and clamping ring (8).
5. Remove circlip (5) and strip down the bearing elements of the joint (12), (3), (1) and

(2). Then clean out the housing bore and the circlip groove.

4.2 ASSEMBLY

Assemble the new component parts of the joint in the following sequence:

1. Insert into housing lower elements (3) and (2): ensure that ball surface has first been greased. Then insert bearing element (1) and the upper bearing elements (2) and (3) and finally bearing element (12).
2. Place joint in fixture (C) and mount assembly ring (B) on housing. Thereafter apply axial pressure F1 through press tool (A) to insert circlip (5) in housing groove (For axial load, refer to table 3). Attention is to be paid to ensure that the circlip eyelets are positioned at approximately 90° to the axis of the tube and that the circlip is properly seated in the housing groove) (For Prévost tools #, refer to table 5).

TABLE 3		
Suitable for repair kits Prévost #	**Position**	**Axial load F1 (kN)**
611112	Lower A-arm	200

3. Use assembly sleeve (D) to mount sealing boot (6) including clamping ring (8) on bracket (15). Attention is to be paid to ensure that the clamping ring maintains its correct position in the clamping ring groove.
4. Faultlessly apply grease by mechanical means to bracket-outer core (15) and ball-inner cone (1). Insert bracket outer cone in fixture (E) with distance ring (G) and then use press tool (H) to apply pressure F2 to press mount with ball-inner cone (For axial load, refer to table 4).

TABLE 4		
Suitable for repair kits Prévost #	**Position**	**Axial load F2 (kN)**
611112	Lower A-arm	100

5. After lifting out of fixture prematurely mount, torque bolt M 14 x 1.5 between 3 to 4 N•m. Finally use a torque wrench to tighten bolt with a tightening torque of 135 N•m. Ensure that the maximum rotation during tightening does not exceed one complete turn. If the specified tightening torque is not reached during one turn, the bolt is to be replaced with a new one.
6. Fill the cavity under the sealing boot (6) with grease and fix tightly to housing with tightening clip (7).
7. Fill the upper cavity of the joint with grease and then mount annular seal (11) and sheet-metal cap (10).
8. Either fix sheet-metal cap to housing through screwing it into place or through 4 spot i.e. according to individual design specifications.

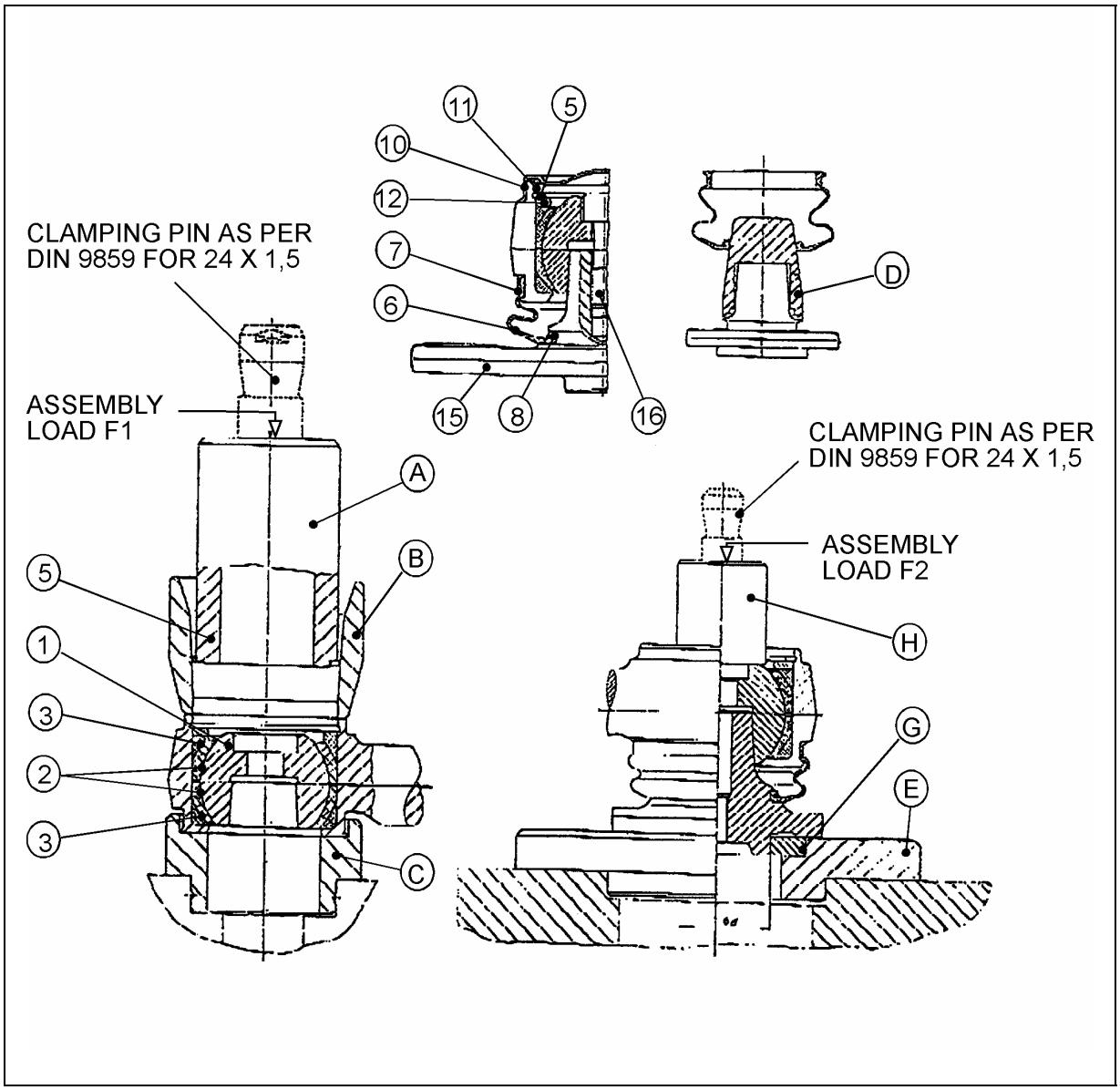

FIGURE 13: CENTRAL JOINT 16048

TABLE 5							
Suitable for repair kits Prévost #	**PRÉVOST TOOLS NEEDED (Prévost #)**						
	A	**B**	**C**	**D**	**E**	**G**	**H**
611112	683114	683115	683116	683117	683118	683120	683119

5. UPPER A-ARM BALL JOINTS (ONE-PART BEARING SYSTEM)

5.1 MAINTENANCE

Check ball joint play and make a visual inspection of the joint boot each time lubrication is performed.

All reference numbers mentioned below refer to component parts shown in (Fig. 14).

To repair order Prévost kit # 611108.

5.2 STRIPPING DOWN

Stripping down of the defective joint is to be done in the following sequence:

1. Remove hose clip (6) and clamping ring (7).
2. Take off sealing boot (5).
3. Open up through forcing back peening point and screw out the end ring with hook-spanner (A)) (For Prévost tools #, refer to table 6). Remove joint bearing elements (1 and 2) and thereafter clean out ball shaped-housing.

5.3 ASSEMBLY

Reassemble the joint with the new component parts in the following sequence :

1. Insert bearing element (1) (with threaded shaft in vertical position) and (2) (preassembled with grease) in ball shaped-housing.
2. Screw end ring onto housing using hook spanner.
3. Fix end ring to housing through peening again at one point.
4. Fit sealing boot (5).
5. Fill space under sealing boot with special LM-grease (20 g ± 1,5 g). Make sure that sealing boot is properly seated in the housing retaining groove and then fit hose clip (6) and clamping ring (7).

TABLE 6	
Suitable for repair kits Prévost #	**ORDER PRÉVOST TOOLS # SEE FIGURE 14**
	A
611108	683121

6. Lubricate at fitting (8) with Molykote grease until you see some grease on the relief valve (9) nearby. Lubricate as per servicing schedule in Section 24: Lubrication.

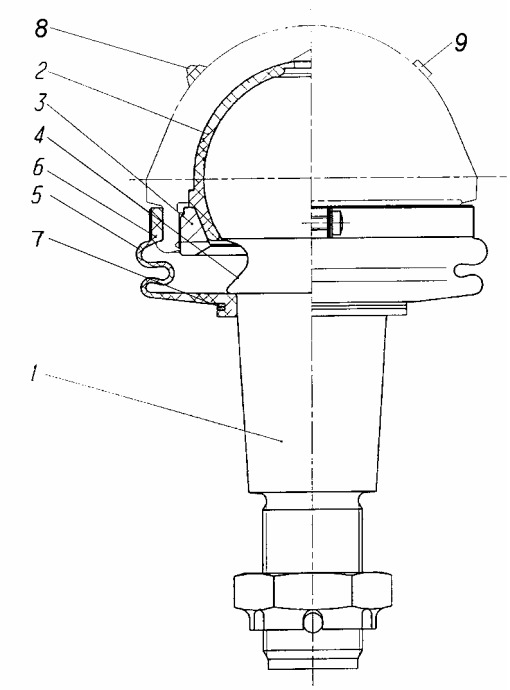

FIGURE 14: BALL JOINT 16049

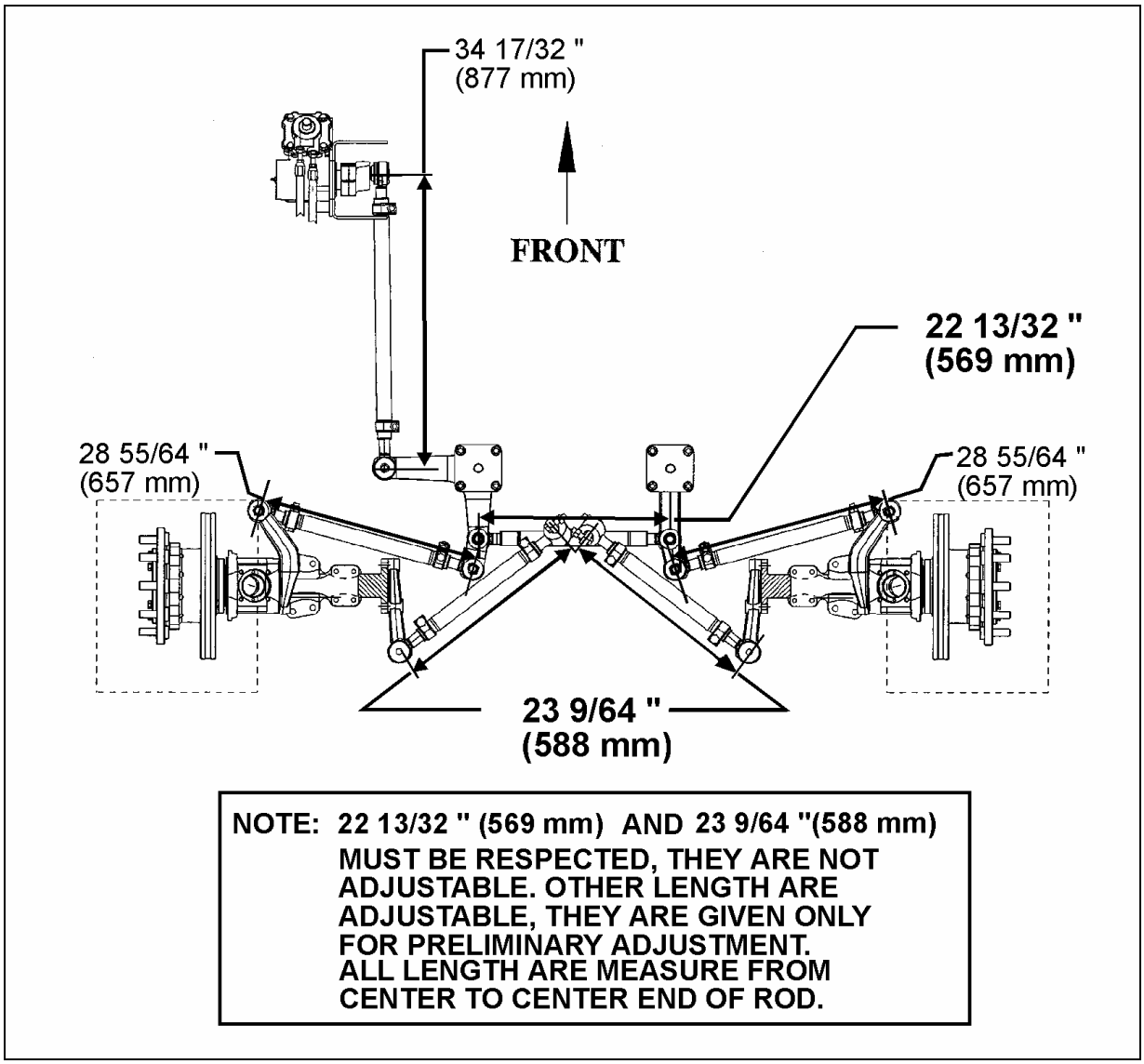

FIGURE 15: STEERING LINKAGE MEASURE 16050

6. FRONT END ALIGNMENT

Proper front end alignment must be maintained to insure ease of steering and provide satisfactory tire life. When making front end alignment inspections, the vehicle must be level and empty with the full weight of the vehicle on the wheels.

Front end alignment inspections fall into two groups : regular service inspections performed at periodic intervals, and inspections to determine the extent of damage after a collision or severe service.

Regular service inspections concern toe-in, camber and caster.

Any variation from the specified alignment will indicate either a need for adjustment or a more thorough inspection to determine if parts replacement is required.

6.1 ALIGNMENT TERMINOLOGY

Wheel Camber

The amount the wheels are inclined from the vertical plane (A, Fig. 16).

Wheel Toe-In

The distance the front wheels are closer together at the front than at the rear of the tires (D minus E, Fig. 16).

Front Axle Caster

The inclination of the king pin from vertical in the fore and aft direction (C, Fig. 16).

King Pin Inclination

The inclination of the king pin from vertical toward the center of the vehicle at the top and outward at the bottom (B, Fig. 16).

6.2 FRONT END INSPECTION

Before checking front end alignment, make the following inspection:

1. Check that the vehicle is at normal ride height (see paragraph "11. Suspension Height Adjustment").
2. Check the tires for proper inflation.
3. Check wheel installation and run-out.
4. Check wheel bearing adjustment.
5. Check tie rods and drag link ends for looseness.
6. Check king pins for looseness.
7. Check if the length of the torque rod is 23 9/64" (588 mm) (Fig. 15). Check if the length of the relay rod is 22 13/32" (569 mm)

6.3 FRONT WHEEL CAMBER

Positive camber is the outward inclination of the wheels at the top, negative or reverse camber is the inward inclination of the wheels at the top. Camber variations may be caused by wear at the wheel bearings, wheel spindle bushings, or bent suspension parts.

Check camber, with an accurate gauge. If camber is incorrect, check suspension parts for wear and replace worn parts. If wear is not perceptible, suspension parts may be bent or lower suspension arm may be improperly shimmed.

Check King pin inclination. If King pin inclination is incorrect, readjust the camber and check king pin inclination again.

Note: *Camber is more important than king pin inclination, so adjust camber and verify king pin inclination.*

When shimming the lower suspension arm, an equal number of shims MUST be used at each mounting bolt (Fig. 16). This allows the proper clamp load to be maintained at each bolt. If the king pin inclination is incorrect, the wheel king pin assembly may be bent and therefore should be replaced.

Excessive positive camber results in irregular wear of the tires at the outer shoulders. Negative or reverse camber causes wear at the inner shoulders.

Note: *Shim only the lower suspension arm to adjust the front wheel camber.*

6.4 FRONT WHEEL TOE-IN

Toe-in is measured from the center of the tire treads. Measurements at the front and rear of the tires must be made at the same height from the floor. Incorrect toe-in results in excessive tire wear and steering instability with a tendency to wander.

6.4.1 Toe-In Check

1. Check the camber adjustment and adjust if necessary.
2. Hoist the front of the vehicle and spin the wheels marking the centerline of the tire treads.
3. Place the wheels in the straight ahead position and bring the vehicle to rest on the floor.
4. Roll the vehicle ahead several feet. This removes any slack caused by looseness in the wheel bearings or steering connections.
5. Check the distance between the tire centerlines at the front and rear of the front tires. These two measurements must be made at the same height above the floor. The front measurement must be 3/32 ±1/32 of an inch less than the rear measurement.

6.4.2 Toe-In Adjustment

1. Loosen the tie rod clamp bolts.
2. Using a pipe wrench, turn the tie rod tubes to obtain the toe-in measurement specified in step 5 under paragraph "6.4.1 Toe-in Check" of this Supplement.
3. Tighten the tie rod clamp bolts and recheck toe-in.
4. Check that the angular relationship of the pitman arm to the steering gear is as shown in figure 7.

Note: *Use only tie rods to adjust toe-in.*

6.5 FRONT AXLE CASTER

Positive caster is the inclination of the top of the king pins toward the rear of the vehicle. Negative or reverse caster is the inclination of the king pins toward the front of the vehicle. This vehicle is designed with positive caster. The purpose of caster is to provide steering stability by keeping the wheels in a straight ahead position.

Caster variations may be caused by bent upper suspension arm, lower suspension arm, or king pin housing. Caster can not be adjusted. Incorrect caster must be corrected by replacing the damaged suspension parts. Precision instruments should be used to measure caster.

Variations from the specified caster will affect steering stability, cause wandering, wheel shimmy, and reduce returnability when pulling out of curves.

6.6 MAJOR DAMAGE

If the suspension has sustained major damage, it may be necessary to shim the bell crank and the idler arm to avoid the bump steer or roll steer. Moreover refer to paragraph "6. Front End Alignment".

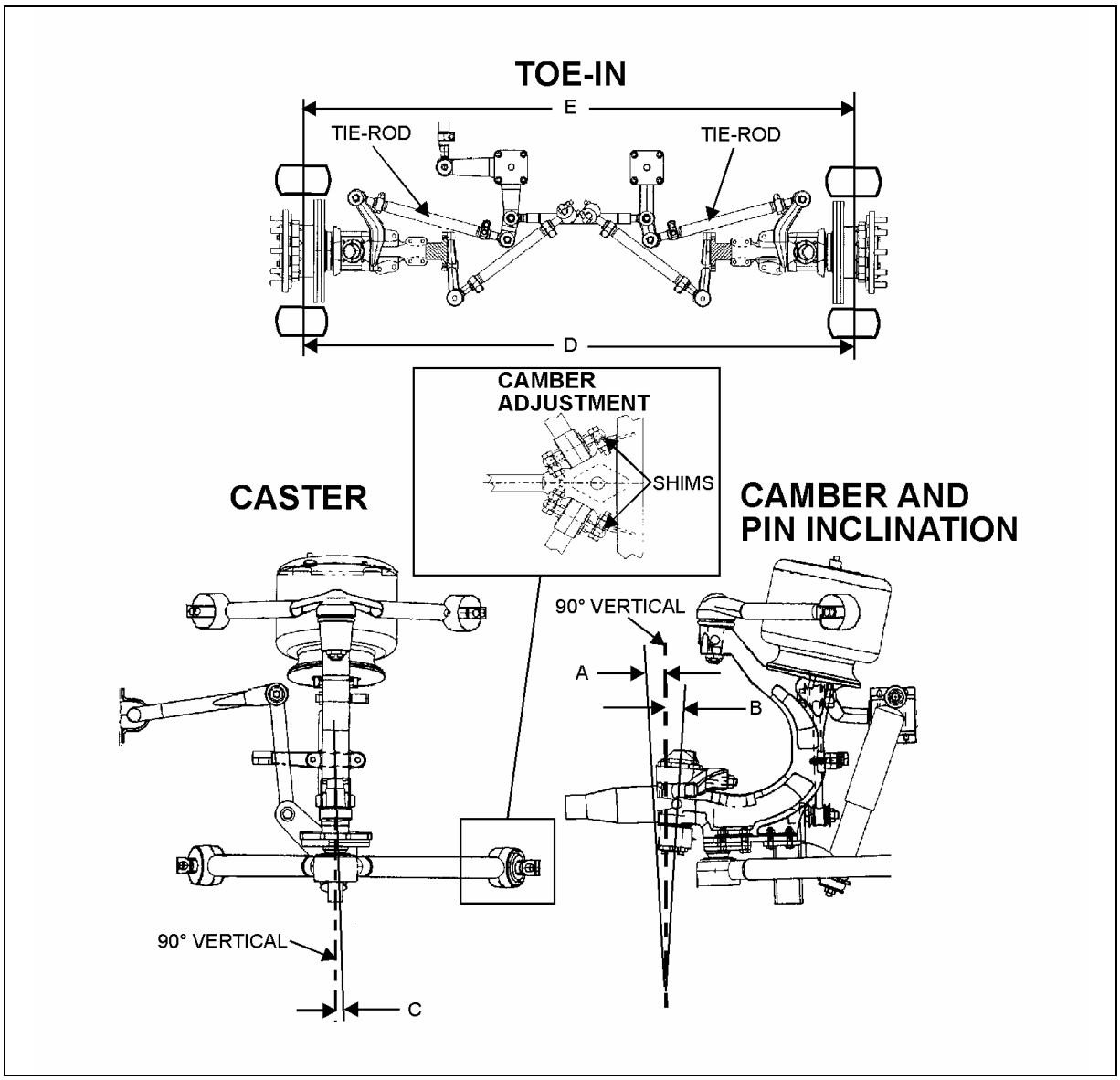

FIGURE 16: FRONT END ALIGNMENT DIAGRAM 16051

DIAGRAM SPECS (SEE FIGURE 16)		
A	WHEEL CAMBER	1/8° ± 1/4°
B	KING PIN INCLINATION	6,5° (not adjustable)
C	CASTER	2° (not adjustable)
D-E	TOE-IN	3/32 ± 1/32 inch.

7. FRONT AIR SPRINGS

Two *"rolling lobe"* type air springs are used with the independent front suspension, one at each wheel. These air springs are special and use the complete piston as an extra reservoir to lower the spring stiffness. Front air springs are attached to the subframe and to uprights.

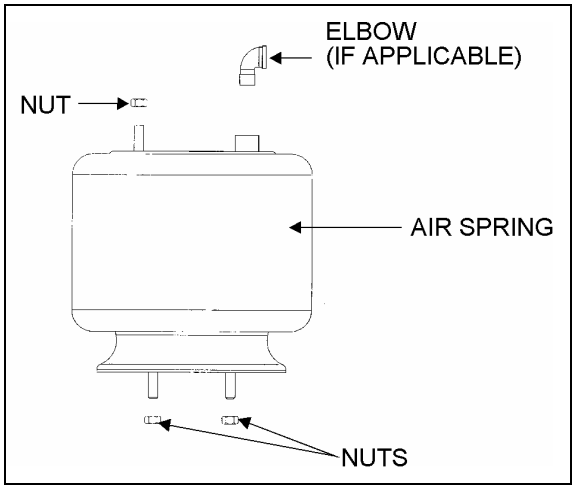

FIGURE 17: AIR SPRINGS 16052

7.1 INSPECTION

1. Check operation of bellows.
2. Visually inspect bellows for evidence of cracks, punctures, deterioration, or chafing. Replace the bellows if damage is evident.
3. With the primary air system at normal operating pressure (95 - 125 psi (655 - 860 kPa)), coat all suspension air line connections and bellow mounting areas with a water and soap solution. Bubbles will indicate an air leak, and none is permissible. Repair or replace defective parts.

Note: *If air spring is removed from vehicle, bellows can be lightly inflated and submerged in water to detect any leakage. If leakage is detected, replace bellows.*

Warning: *To prevent personal injury, do not apply more than 10 psi (69 kPa) air pressure to the unmounted air spring.*

7.2 REMOVAL

Note: *Front air springs can be removed without removing the entire suspension assembly.*

1. Safely support vehicle at the recommended body jacking points and jack up body understructure.
2. To gain access to a given air spring, the corresponding wheel can be removed.

Caution: *Only the recommended jacking points must be used as outlined in Section 18, "Body" in the maintenance manual.*

3. Support the assembly with a suitable jack. See figure 18 for jacking point.
4. Exhaust compressed air from accessory air tank by opening drain cock under reservoir.
5. Disconnect the height control valve link and pull down the overtravel lever to ensure all air is exhausted from air springs.

Note: *While performing this step, do not change the height control valve overtravel lever adjustment.*

6. Disconnect air line from air spring, remove elbow (if applicable), and cover both the line end and fitting to prevent the entry of foreign matter.
7. Remove the air spring upper nut, and then the two lower nuts. Remove air spring and remove the back up plate from the top of the air spring.

7.3 INSTALLATION

Note: *To facilitate air spring installation, compress it manually then put a piece of tape over the air line threaded fitting. This prevents air from getting back into the bag and keeps it compressed, thus enabling to place the bag in between the mounting plates and greatly easing installation.*

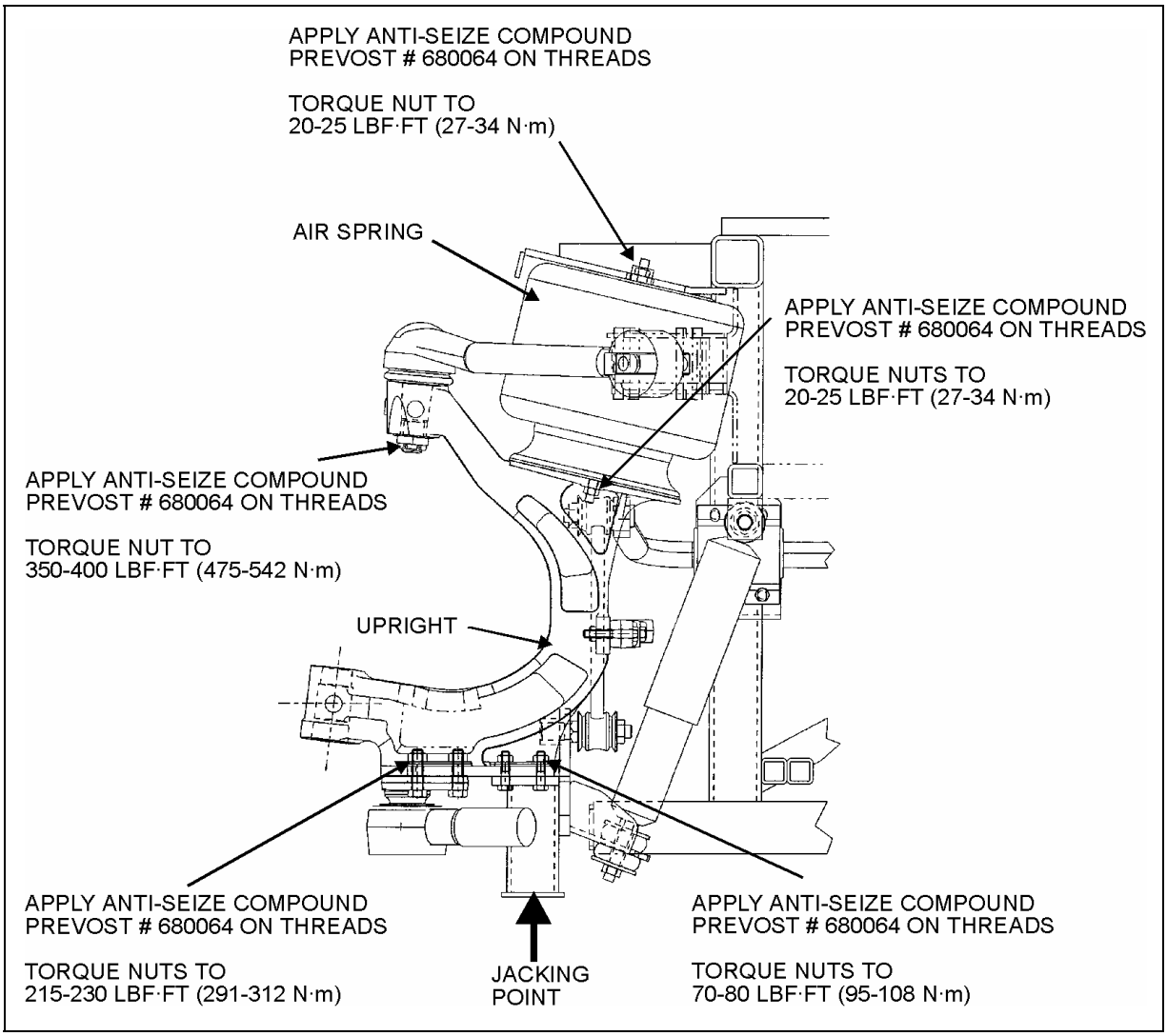

FIGURE 18: AIR SPRING AND SHOCK ABSORBER 16053

1. Compress air spring as necessary, then aligning studs with their holes, position air spring between both the lower and upper supports. Thread the lower nuts and the small upper nut a few turns.
2. Tighten and torque the lower stud nuts, and then the upper nut to 20 - 25 lbf•ft (27 – 34 N•m).
3. Install elbow (if applicable), then connect air line.
4. Connect the height control valve link.
5. Build up air pressure in system.

Note: *To accelerate this operation, air reservoirs can be filled from an exterior air supply connected to the accessory tank fill valve or to the emergency fill valve.*

6. Check operation of bellows, and with the primary air system at normal operating pressure (95 - 125 psi (655 - 860 kPa)), coat the air line connections and air spring mounting areas with a water and soap solution. Bubbles will indicate an air leak, and none is permissible. Repair or replace defective parts.
7. Remove the hydraulic floor jack from underneath shock absorber bracket.

8. SHOCK ABSORBERS

The two front shock absorbers are double-acting and telescopic type. Shock absorbers ensure a smooth ride and enhance vehicle stability on the road. Front shock absorbers have eye-type mountings on the upper side and bayonet type on lower side. Shock absorbers are non-adjustable and non-repairable.

Caution: *When a shock absorber is found defective, always replace with a new set on affected axle, except if there has been a recent replacement of one unit. The following method will help in determining if both shock absorbers on the same axle have to be replaced.*

8.1 SHOCK ABSORBER REMOVAL

1. Remove the nut, washer and rubber joint from shock absorber mounting stud. Discard the rubber joints.
2. Remove the nut and washer from shock absorber mounting pin (upper side), taking care to identify the inner and outer washers to ease reinstallation. Refer to figure 19 for details.
3. Remove the shock absorber from the vehicle.
4. Remove inner: washers, rubber joint and bushings from the shock absorber. Discard bushings and rubber joint.

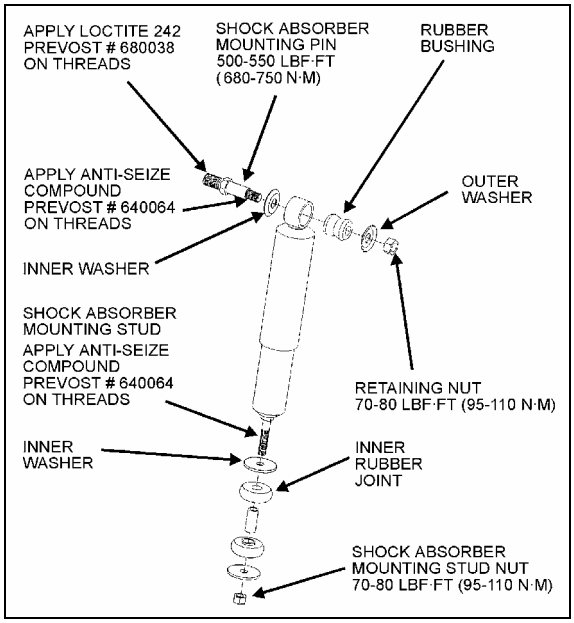

FIGURE 19: SHOCK ABSORBER 16054

8.2 SHOCK ABSORBER INSTALLATION

1. Check that the shock absorber mounting pin is properly torqued (500 - 550 lbf•ft (680 - 750 N•m)). Ensure that the stud is clean and not stripped (upper side).
2. Install new rubber (mounting) bushing on shock absorber (upper side).
3. Place the inner washer on shock absorber pin (Fig. 19).
4. Install washer and rubber joint on shock absorber mounting stud (lower side).
5. Install the shock absorber as shown in figure 18 with the mounting stud protruding through the hole in the mounting bracket and the shock absorber eyes over the mounting pins. Install the outer washer.
6. Place a rubber joint and washer on the shock absorber mounting stud. Place the lower shock absorber mounting stud nut and torque to 70 - 80 lbf•ft (95 – 110 N•m).
7. Place the upper mounting pin stud nut and torque to 70 - 80 lbf•ft (95 – 110 N•m).

9. SWAY BAR

A sway bar is provided on the front and drive axles to increase vehicle stability. It controls lateral motion (swaying movement) of vehicle.

9.1 REMOVAL

1. Disconnect the two links from sway bar.
2. Safely support the sway bar. Unbolt bushing collars from subframe.
3. Remove sway bar.

Note: *Sway bar bushings are slitted to ease their removal.*

9.2 INSTALLATION

1. Loosely install the sway bar.
2. Torque bushing collar nuts to 70 - 80 lbf•ft (95 - 110 N•m).
3. Torque sway bar link upper nuts to 215 - 225 lbf•ft (290 - 305 N•m) on front suspension and to 100-120 lbf•ft (136 - 163 N•m) on rear suspension.
4. Torque sway bar link lower nuts to 70 - 80 lbf•ft (95 - 110 N•m).

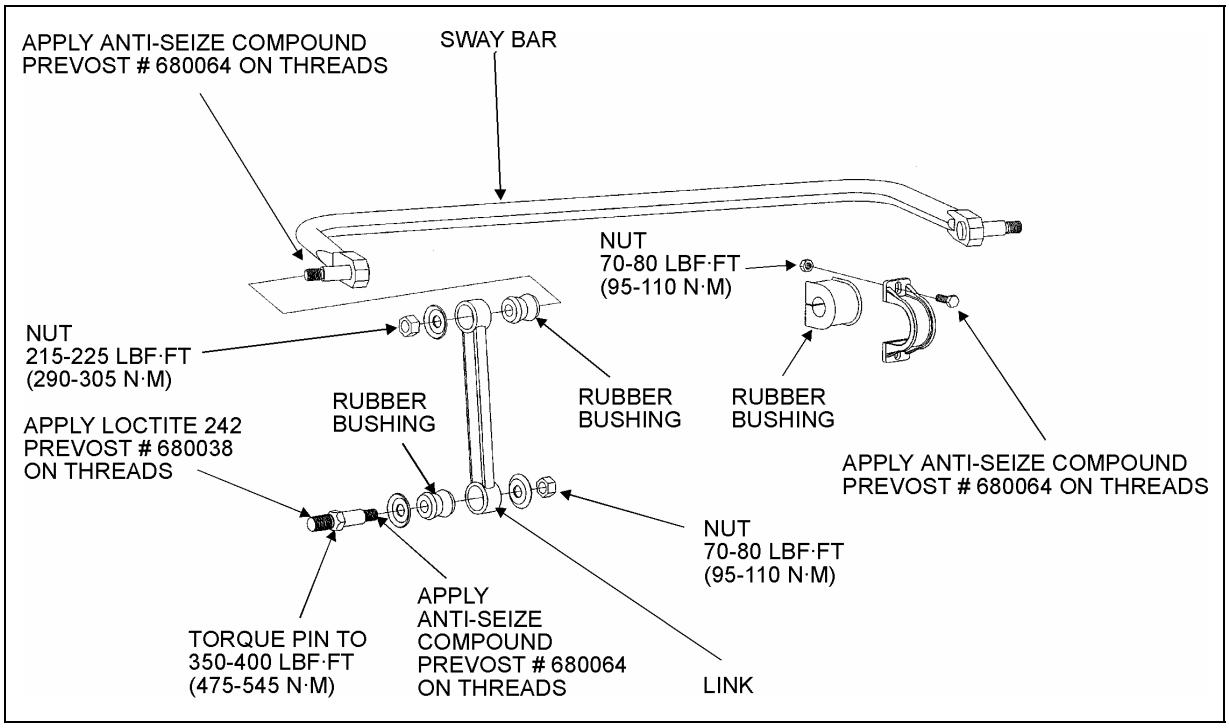

FIGURE 20: SWAY BAR (FRONT SUSPENSION) 16055

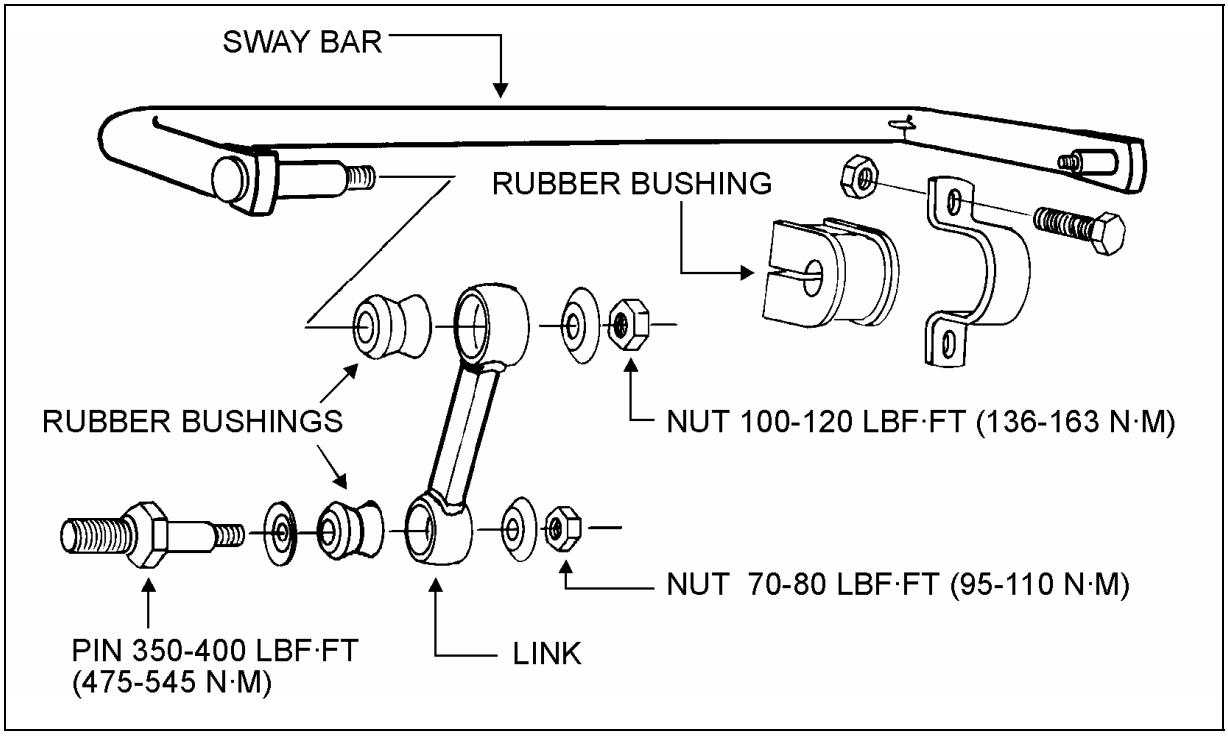

FIGURE 21: SWAY BAR (REAR SUSPENSION) 16014

10. INDEPENDENT FRONT SUSPENSION ADJUSTMENT

Converted coach shells are equipped with "LEVEL-LOW" leveling system. The purpose of the "LEVEL-LOW" is to adjust suspension in three separate points (front, rear right and rear left air springs) in order to level vehicle body. Three height control valves, automatically control air pressure in the three separate points (air springs) and maintains a constant vehicle height regardless of load, or load distribution. The control solenoid valve supplies air to the five way three-position air control valve, which bypasses the height control valve, and opens a passage to allow the air control and exhaust valve to release/supply air from airs springs. To improve road comfort, an expansion air tank is installed in series with each air springs.

In addition to the above suspension components the system also includes: sway bar, upper and lower suspensions, bars and shock absorbers (Fig. 1).

Note: *Only for preliminary adjustment, refer to figure 15. Torque rod length must be fixed to 23 9/64" (588 mm) and relay rod to 22 13/32" (569 mm).*

Caution: *Parts must be replaced by ones with the same part numbers or with equivalent parts, if replacement becomes necessary. Do not use parts of lesser quality or substitute design. Torque values must be used as specified during reassembly to assure proper retention of these parts.*

11. SUSPENSION HEIGHT ADJUSTMENT

The flow of pressurized air from the accessory air tank to the air springs is controlled by three height control valves. The two rear valves are mounted to the subframe and connected to the rear axles through an arm and link connection. The front valve is mounted to the subframe and connected to the front air tank support (Fig. 22). These connections allow the valves to apportion air pressure in the springs to the vehicle load, maintaining normal ride height.

Immediate response height control valves increase or decrease the air pressure in the suspension system as required. One height control valve is located **at center of front sway bar**, and regulates air to front suspension air springs in order to maintain the vehicle at the required height. Two are located at the drive axle, one on each inner side of rear wheelhousing.

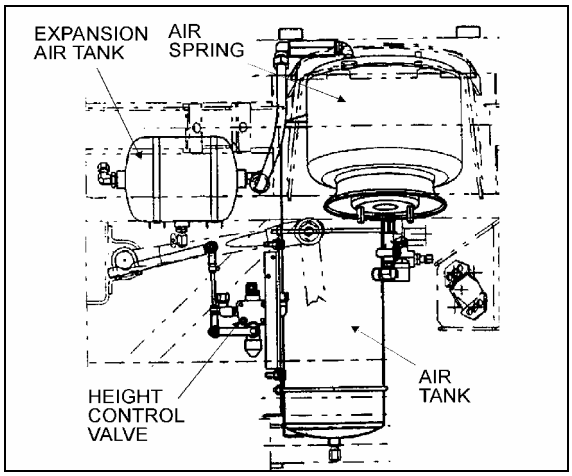

FIGURE 22: HEIGHT CONTROL VALVE LOCATION 16057

The appropriate vehicle body height is obtained by measuring the clearance of all the air springs installed on the vehicle. The two front air springs clearance should be 11 11/16 inches (297 mm). Refer to figure 23 to identify the correct area to take measurement. The rear air springs clearance should be 11 ½ ± ¼" (292 ± 6 mm) (refer to Maintenance Manual, Section 16, under "Suspension Height Adjustment" for rear height control valves' adjustment). At this point, it should not be necessary to make an adjustment under normal service conditions. However, if an adjustment is required, change the position of the overtravel lever in relation to the overtravel control body. The lever should be moved up to raise vehicle height, and down to lower it. Check that main air pressure is at normal operating pressure and raise the vehicle to the specified height.

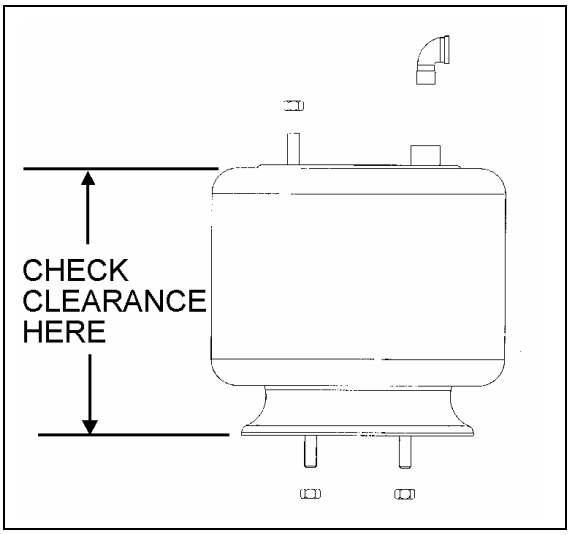

FIGURE 23: TYPICAL AIR SPRING CLEARANCE 16058

Caution: *Always adjust on "fill cycle". If it is necessary to lower vehicle height, release sufficient air to be well below height, and adjust to height or fill cycle.*

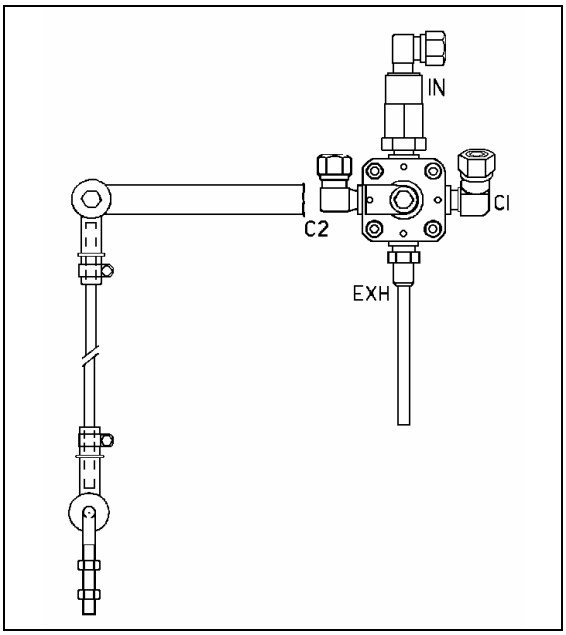

FIGURE 24: FRONT HEIGHT CONTROL VALVE 16093

The normal ride height is obtained by adjusting air spring clearance of both front and rear suspension as follows:

Front air spring clearance

1. With the vehicle at normal operating air pressure (100 - 125 psi (689 - 860 kPa)), measure air spring clearance. This clearance should be 11 11/16 inches (297 mm).

Note: *The measurement should be taken from underneath the upper air spring support on subframe to top of the lower air spring support on axle (refer to figure 23 for more details). If adjustment is required, begin with the drive axle.*

2. Loosen the clamp on the rubber coupling and bring it up or down (Fig. 24).

Note: *Allow suspension to stabilize before taking reading.*

When the desired height is obtained, tighten clamp.

Rear air springs clearance

Refer to XL2 Maintenance Manual, Section 16, under "Suspension Height Adjustment".

12. HEIGHT CONTROL VALVE

The height control valves automatically add air to, or release air from air springs to maintain constant suspension height regardless of load, or load distribution. Each valve adjusts independently according to the following conditions:

12.1 LOADING POSITION

As the load increases and lowers the vehicle body, the overtravel lever commands the height control valve to add air to air springs.

12.2 NEUTRAL POSITION

When vehicle body reaches the normal ride height, the height control valve overtravel lever reaches the "neutral" position and keeps both the supply and exhaust ports closed to ensure normal ride height is maintained. This condition remains static until the vehicle load is altered.

12.3 UNLOADING POSITION

As the load decreases and raises the vehicle body, the overtravel lever commands the height control valve to release air from air springs.

12.4 MAINTENANCE

The height control valve requires no periodic maintenance. Height control valve linkage operates on rubber bushings and no lubrication should be attempted at this location. Inspect the valve for loose joints, air leaks and worn bushings.

12.5 REMOVAL AND INSTALLATION

Before disconnecting a height control valve air line, securely support the vehicle by its jacking points on the body, and place safety supports underneath body. Refer to paragraph *"16. Vehicle Jacking Points"* in Section 18, *"Body"*.

1. Exhaust air from air system by opening all air tank drain cocks. Remove height control valves.
2. Disconnect overtravel lever from link and pull down lever to exhaust remaining air from air springs.
3. Disconnect air supply and delivery lines from the height control valve. Cover line ends with tape to prevent entry of foreign matter.
4. Remove the nuts retaining the height control valve to the mounting bracket, then remove valve assembly.

Reverse removal procedure to replace height control valve. After installation, check for leakage using a soap and water solution.

13. "LEVEL-LOW" LEVELING SYSTEM

The purpose of the *"level-low"* leveling system is to adjust suspension in three separate points (front, rear right and rear left) in order to level vehicle body. This system can be put into service when the ignition key is turned to the *"ON"* position, and must be used only when the parking brake is applied. The *"level-low"* warning light on the dashboard indicates that the selector switch is not in the *"OFF"* position. Level low system controls are located on L.H. side control panel.

13.1 PRINCIPLES OF OPERATION

Refer to the systems pneumatic diagram annexed at the end of this section.

14. AIR SYSTEM

The basic air system consists of an air compressor, tanks, valves, filters and interconnecting lines and hoses (refer to Section 12, "Brake and Air System" for complete information). It provides a means for braking, operating controls and accessories, and suspension. An air system schematic diagram is annexed at the end of this supplement for better understanding of the system.

The air coming from the air dryer is first directed to the wet air tank, then to the primary (for the primary brake system), secondary (for the secondary brake system), and accessory (for the pneumatic accessories) air tanks (Fig. 25).

In addition, an expansion air tank is installed in series with each air spring.

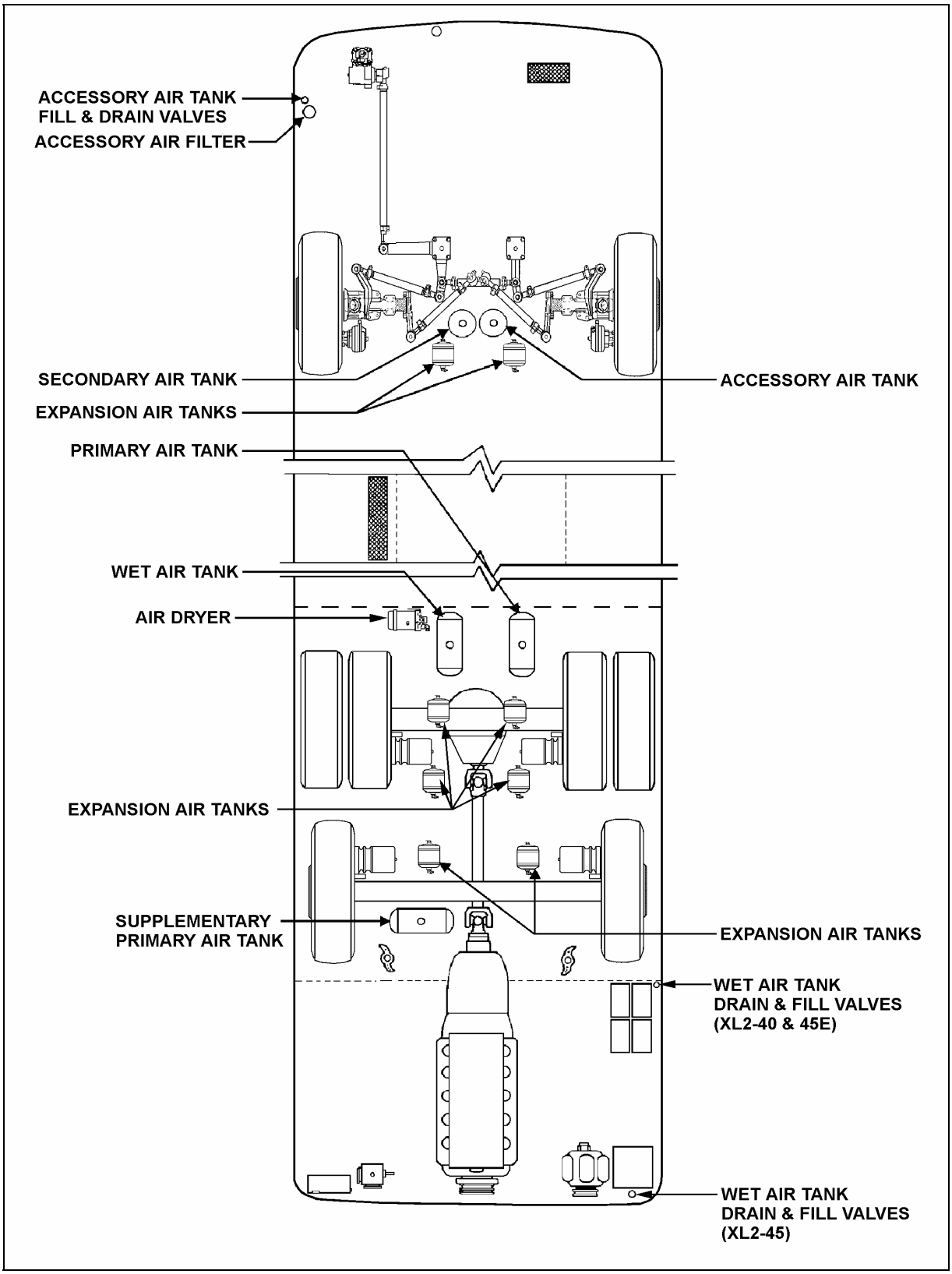

FIGURE 25: LOCATION OF AIR TANKS 24007

14.1 AIR TANK MAINTENANCE

Ensure that the accessory air tank is purged during pre-starting inspection. A good practice is to purge this tank at the end of every driving day by the remote air tank drain valve located in the steering compartment (Fig. 27).

Moreover, purge all tanks by their bottom drain valves at specified intervals.

14.1.1 Wet Air Tank

This tank is installed above L.H. wheel of drive axle, and is provided with a bottom drain valve. It is recommended to **purge** the wet air tank by its bottom drain valve every 12,500 miles (20 000 km), or once a year, whichever comes first.

A remote valve located in engine compartment and accessible through engine R.H. side door is used to **drain** the air dryer (Fig. 26).

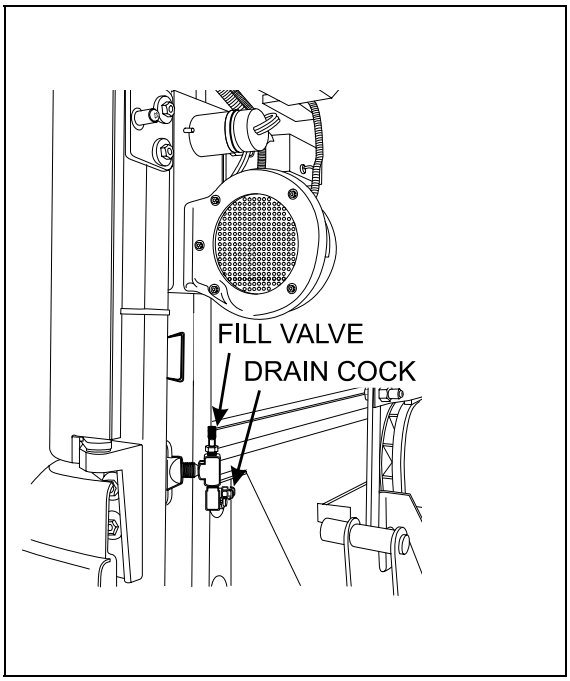

FIGURE 26: REAR VALVE LOCATION 12162

14.1.2 Primary Air Tank

The primary air tank is located above R.H. wheel of drive axle.

To increase primary air tank volume, a supplementary air tank is added in series to the primary air tank. This supplementary tank is located underneath vehicle forward of tag axle.

These tank are provided with a bottom drain valve (Fig. 25). It is recommended to purge them by their bottom drain valve every 12,500 miles (20 000 km) or once a year, whichever comes first.

14.1.3 Secondary Air Tank

This tank is located in front wheelhousing, between air springs. The tank is installed vertically and is provided with a bottom drain valve (Fig. 25).

It is recommended to purge the tank by its bottom drain valve, every 12,500 miles (20 000 km) or once a year, whichever comes first.

14.1.4 Accessory Air Tank

The accessory air tank is installed next to the secondary air tank. The tank is installed vertically and is provided with a bottom drain valve (Fig. 25).

It is recommended to purge the tank by its bottom drain valve, every 12,500 miles (20 000 km) or once a year, whichever comes first.

A remote drain valve is located in front service compartment (Fig. 27) underneath the accessory air filter. Refer to Section 12, paragraph "4. Accessory Air Filter" of the maintenance manual for daily purge procedure.

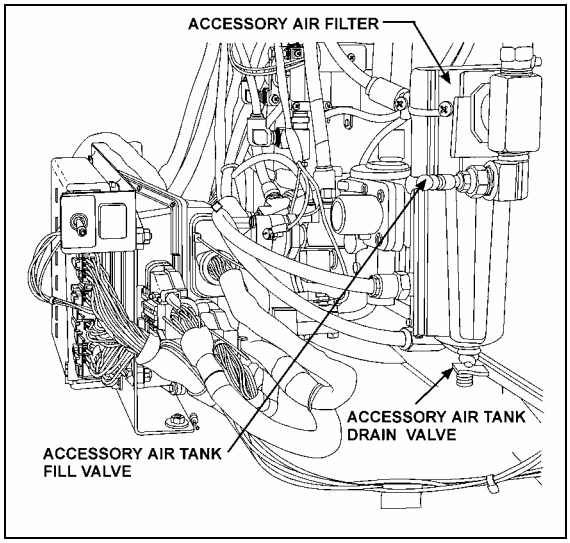

FIGURE 27: FRONT VALVE LOCATION 12144

14.1.5 Expansion Air Tank

Two expansion tanks are located in front wheelhousing. These air tanks are located behind secondary and accessory air tank. Also, six expansion tanks are located near rear air springs (Fig. 25). Expansion tanks are connected in series with air springs. Expansion tanks are used to lower the stiffness of the air spring. They are provided with a bottom drain valve.

It is recommended to purge them, with all other tanks, every 12,500 miles (20 000 km) or once a year, whichever comes first.

14.2 EMERGENCY FILL VALVES

The vehicle is equipped with two air system emergency fill valves to supplement the air system when air pressure is low and engine cannot be operated.

The rear valve is located in engine compartment and accessible from engine R.H. side door (Fig. 28).

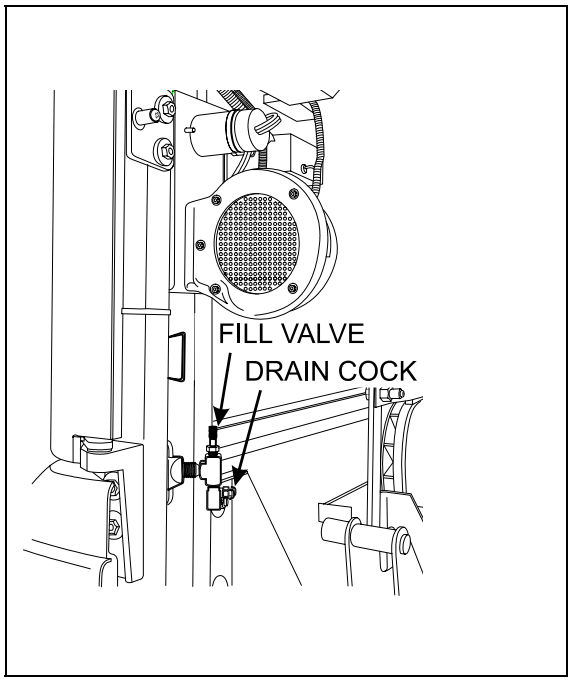

FIGURE 28: REAR VALVE LOCATION 12162

Caution: *No other point should be used to supply air system. The maximum allowable air pressure is 125 psi (860 kPa).*

The front valve is located in the front service compartment close to accessory air filter (Fig. 29).

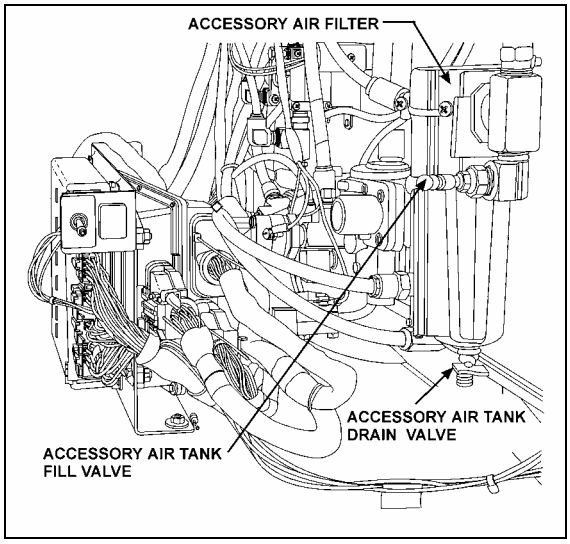

FIGURE 29*:* FRONT VALVE LOCATION 12144

These two air valves are fitted with the same valve stems as standard tires, and can be filled by any standard external air supply line.

The rear valve will supply air for all systems (brakes, suspension and accessories) while the front valve will supply air for accessories only.

Caution: *Air filled through these two points will pass through the standard air filtering system provided by Prévost. Do not fill air through any other points.*

15. HUB UNIT AND SWIVEL ASSEMBLY

Refer to GKN AXLES LIMITED KIRKSTALL DIVISION, Service Manual for axle type S82, annexed at the end of this Supplement.

16. TORQUE TABLE

DESCRIPTION	QTY	REFERENCE	TORQUE (DRY) lbf•ft / N•m	
Pitman Arm to Steering Gear Fixing Nut	1	8	405-445	550-605
Drag Link to Pitman Arm Stud Nut*	1	---	160-300	220-410
Drag Link to Bell crank Stud Nut*	1	---	160-300	220-410
Drag Link Socket End Clamp Bolt Nut	2	---	60-80	80-110
Relay Rod to Bell crank Stud Nut*	1	---	160	220
Relay Rod to Idler Arm Stud Nut*	1	5	160	220
Tie Rod to Bell crank Stud Nut*	1	---	160	220
Tie Rod to Idler Arm Stud Nut*	1	5	160	220
Tie Rod to Steering Arm Stud Nut*	2	3	160-215	220-290
Tie Rod End Clamp Bolt Nut	4	3	60-80	80-110
Steering Arm to Swivel Nut*	4	---	190-275	260-375
Torque Rod Stud Nut	2	4	160-215	220-290
Idler Arm and Bell Crank Mounting Bracket Nut	8	5	100-110	135-150
Idler Arm and Bell Crank Cap Screws	8	9	8	11
Torque Rod Mounting Bracket Nut	4	6	215-230	290-310
Torque Rod Clamp Nut	4	4	53-59	72-80
Air Spring Nut	3	18	20-25	27-34
Upper A-Arm Stud Nut*	2	18	350-400	475-540
Lower A-Arm Bracket Nut	8	18	215-230	290-310
Jacking Point Bracket Nut	8	19	70-80	95-110
Shock Absorber Pin	2	19	500-550	680-750
Shock Absorber Pin Nut	2	19	70-80	95-110
Shock Absorber Mounting Stud Nut	2	19	70-80	95-110
Bushing Collar Nut	8	20	70-80	95-110
Sway Bar Link Upper Nut (Front Suspension)	2	20	215-225	290-305
Sway Bar Link Upper Nut (Rear Suspension)	2	20	100-120	136-163
Sway Bar Link Lower Nut	2	20	70-80	95-110
Sway Bar Pin	2	20	350-400	475-545

DESCRIPTION	QTY	REFERENCE	TORQUE (Lubricated) (Loctite #242 Blue) lbf•ft / N•m	
Steering Gear to Mounting Bracket Bolt	5	8	275	375

- **Tighten nut to specified torque, then advance to next aligning cotter pin slot and install a new cotter pin.**

17. SPECIFICATIONS

Front Axle Air Springs

Make ..... Goodyear Tire and Rubber
Diameter ..... 12 inches
Air Inlet ..... 1/2''- 14 NPTF
Supplier number 1R12-377
Prévost number 630151

Shock Absorbers

Collapsed length ..... 14.20 inches
Extended Length ..... 22.45 inches
Piston diameter ..... 2 1/16 inches
Stroke ..... 8 ¼ inches
Prévost number 630163

Height Control Valve

Make ..... Barksdale
Supplier number ..... 52321POAQ3-Q26 and 52321POAQ3-Q62
Prévost number ..... 630156 and 630157

Steering Gear Box

Make ..... ZF-Servocom
Supplier number 8098-988-571
Prévost number 661044

Power Steering Hydraulic Pump

Make ..... TRW
Supplier number PS251615L0200
Prévost number 661009

Shim (Camber Adjustment)

Thickness ..... 3.175 mm
Prévost number 160993
Thickness ..... 6.35 mm
Prévost number 160992

Sway bar bushing (Drive Axle)

Make ..... Prévost
Prévost number 130953

SECTION 18: BODY

1. VEHICLE EXTERIOR 18-5

2. STRUCTURE 18-10

3. EXTERIOR MAINTENANCE 18-10

3.1 CORROSION PREVENTION 18-10

4. FIBERGLASS REPAIR 18-11

4.1 REPAIR USING FIBERGLASS CLOTH 18-11
4.2 REPAIR USING FIBERGLASS PASTE 18-12
4.3 TYPICAL FIBERGLASS REPAIR PROCEDURE 18-12

5. PAINTING 18-13

5.1 NEW PAINT CARE 18-13
5.2 PAINT TOUCHUP 18-14
5.3 PAINTING 18-14
5.3.1 Safety 18-14
5.3.2 Surface Preparation and Paint Application 18-14

6. BODY REPAIR 18-15

6.1 FRONT FACE 18-15
6.1.1 Prévost Car Embossed Body Panel 18-15
6.1.2 Front Face Body Panel and Molding 18-17
6.1.3 Spare Wheel Compartment Door Body Panel 18-18
6.1.4 Windshield 18-19
6.2 ENTRANCE DOOR OR FRONT SERVICE DOOR BODY PANEL 18-20
6.2.1 Entrance Door or Front Service Door Lower Body Panel 18-21
6.3 BAGGAGE COMPARTMENT OR REAR SERVICE COMPART. DOOR BODY PANEL 18-22
6.4 MTH SIDE PANEL REMOVAL AND INSTALLATION 18-25
6.5 LATERAL FIXED WINDOW 18-25
6.6 DRIVER'S WINDOW AND UPPER LATERAL WINDOW 18-32
6.7 ENGINE COMPARTMENT DOOR BODY PANEL 18-33

7. ENTRANCE DOOR 18-35

7.1 COACH ENTRANCE DOOR 18-35
7.1.1 Operation 18-36
7.1.2 Emergency Exit Valves 18-36
7.1.3 Door Cycle Speed Adjustment 18-37
7.1.4 Horizontal and Vertical Adjustment 18-38
7.1.5 Seal Compression Adjustment 18-38
7.1.6 Door Seal Replacement 18-38
7.1.7 Troubleshooting 18-39
7.1.8 Lubrication 18-40
7.2 ENTRANCE DOOR (MTH) 18-40
7.2.1 Keyless entry system 18-40
7.2.2 Door adjustment 18-40
7.2.3 Horizontal and Vertical Adjustments 18-40
7.2.4 Seal Compression Adjustment 18-40
7.2.5 Door Seal Replacement 18-41
7.2.6 Door Lubrication 18-41
7.2.7 Door Latch mechanism 18-41

8. BUMPER REMOVAL AND INSTALLATION 18-41

8.1 FRONT BUMPER 18-41
8.2 REAR BUMPER REMOVAL 18-42

9. DRIVER'S OR ENTRANCE DOOR POWER WINDOW 18-42

9.1 DRIVER'S POWER WINDOW 18-42
9.1.1 Window Removal and Installation 18-42
9.1.2 Regulator Removal and installation 18-42
9.2 ENTRANCE DOOR POWER WINDOW 18-43
9.2.1 Window Removal and Installation 18-43
9.2.2 Regulator Removal and Installation 18-43

10. ROOF ESCAPE HATCH 18-43

10.1 REPAIR 18-44
10.2 SEALING 18-44
10.3 ESCAPE HATCH PANEL ASSEMBLY 18-45
10.4 ESCAPE HATCH FRAME 18-45

11. PASSENGER SEATS 18-45

11.1 ROTATING SEATS 18-45
11.2 REMOVING FIXED SEATS 18-45
11.3 UPHOLSTERY MAINTENANCE 18-46
11.3.1 Routine Cleaning 18-46
11.3.2 Dry Cleaning 18-46
11.3.3 Cleaning With Covers in Place 18-46

12. COACH SIDE WINDOWS 18-47

12.1 EMERGENCY EXIT WINDOWS 18-47
12.1.1 Emergency Exit Release Bar 18-47
12.1.2 Emergency Exit Window Adjustment 18-48
12.1.3 Emergency Exit Window Replacement 18-48

13. BODY PANELS AND DOORS 18-48

14. BAGGAGE COMPARTMENT DOORS 18-48

14.1 DOOR REMOVAL 18-49
14.2 PANTOGRAPH ARMS REMOVAL AND INSTALLATION 18-49
14.3 DOOR INSTALLATION 18-49

15. ENGINE COMPARTMENT DOORS 18-49

16. RADIATOR DOOR ADJUSTMENT 18-50

17. ENGINE COMPARTMENT R. H. SIDE DOOR 18-50

18. CONDENSER DOOR ADJUSTMENT 18-51

19. EVAPORATOR DOOR ADJUSTMENT 18-51

20. FUEL FILLER DOOR 18-52

21. FRONT SERVICE COMPARTMENT DOOR 18-52

22. L.H. SIDE REAR SERVICE COMPARTMENT DOOR 18-52

23. R.H. SIDE REAR SERVICE COMPARTMENT OR MAIN POWER COMPARTMENT DOOR 18-53

24. FENDERS **18-53**

25. REAR CAP **18-53**

26. FRONT CAP **18-53**

27. SIDE PANELS **18-54**

28. REAR VIEW MIRRORS (RAMCO) **18-54**

28.1 ADJUSTMENT 18-54
28.2 DISASSEMBLY 18-54
28.3 ASSEMBLY 18-54
28.4 REPLACEMENT OF MIRROR GLASS 18-54
28.5 HEATED / REMOTE CONTROLLED REAR VIEW MIRRORS 18-54
28.5.1 Mirror Control *18-55*
28.5.2 Disassembly *18-55*
28.5.3 Assembly *18-55*
28.5.4 Convex & Flat Mirror Removal *18-55*

29. VEHICLE JACKING POINTS **18-55**

29.1 HYDRAULIC JACK 18-56

30. TOWING THE VEHICLE **18-56**

30.1 LIFTING AND TOWING 18-57
30.2 TOWING WITHOUT LIFTING 18-57

31. SPECIFICATIONS **18-59**

ILLUSTRATIONS

FIGURE 1: XL2-40 CONVERTED VEHICLE EXTERIOR VIEW (TYPICAL) 18-5
FIGURE 2: XL2-45 CONVERTED VEHICLE EXTERIOR VIEW (TYPICAL) 18-6
FIGURE 3: XL2-45E CONVERTED VEHICLE EXTERIOR VIEW (TYPICAL) 18-7
FIGURE 4: XL2-40 COACH EXTERIOR VIEW (TYPICAL) 18-8
FIGURE 5: XL2-45 COACH EXTERIOR VIEW (TYPICAL) 18-9
FIGURE 6: FIBERGLASS REPAIR 18-12
FIGURE 7: FIBERGLASS REPAIR 18-12
FIGURE 8: FIBERGLASS REPAIR 18-13
FIGURE 9: FIBERGLASS REPAIR 18-13
FIGURE 10: FIBERGLASS REPAIR 18-13
FIGURE 11: FRONT FACE BODY PANELS INSTALLATION 18-15
FIGURE 12: VIEW OF FRONT FACE 18-16
FIGURE 13: ENTRANCE DOOR BODY PANEL 18-21
FIGURE 14: GLUING JIG SETUP DIAGRAM 18-23
FIGURE 15: DRIVER'S OR UPPER LATERAL WINDOW 18-33
FIGURE 16: ENGINE COMPARTMENT DOOR BODY PANEL INSTALLATION 18-35
FIGURE 17: DOOR CYLINDER AND DAMPER 18-35
FIGURE 18: COACH ENTRANCE DOOR 18-36
FIGURE 19: ENTRANCE DOOR CONTROL SWITCH 18-36
FIGURE 20: EMERGENCY EXIT VALVE 18-37
FIGURE 21: DAMPER 18-37
FIGURE 22: UPPER DOOR HINGE 18-38
FIGURE 23: SEAL COMPRESSION ADJUSTMENT 18-38
FIGURE 24: ENTRANCE DOOR (MTH) 18-40
FIGURE 25: ENTRANCE DOOR (MTH, TYPICAL) 18-41
FIGURE 26: FRONT BUMPER HANDLE 18-42
FIGURE 27: FRONT BUMPER 18-42
FIGURE 28: FRONT BUMPER REMOVAL 18-42
FIGURE 29: REAR BUMPER 18-42
FIGURE 30: DRIVER'S POWER WINDOW 18-43
FIGURE 31: ENTRANCE DOOR POWER WINDOW 18-43
FIGURE 32: ESCAPE HATCH 18-44
FIGURE 33: ESCAPE HATCH 18-44
FIGURE 34: ARMREST 18-46
FIGURE 35: SEAT PEDESTAL ASSEMBLY 18-46
FIGURE 36: XL2-40 COACH 18-47
FIGURE 37: XL2-45 COACH 18-47
FIGURE 38: EMERGENCY EXIT WINDOW 18-48
FIGURE 39: BAGGAGE COMPARTMENT DOOR 18-48
FIGURE 40: BAGGAGE DOOR CATCH STRIKER 18-49
FIGURE 41: ENGINE COMPARTMENT DOORS 18-50
FIGURE 42: RADIATOR DOOR 18-50
FIGURE 43: ENGINE COMPARTMENT R. H. SIDE DOOR 18-51
FIGURE 44: CONDENSER DOOR 18-51
FIGURE 45: EVAPORATOR DOOR 18-52
FIGURE 46: FUEL FILLER DOOR 18-52
FIGURE 47: L.H. SIDE REAR SERVICE COMPARTMENT DOOR 18-53
FIGURE 48: R.H. SIDE REAR SERVICE COMPARTMENT OR MAIN POWER COMPARTMENT DOOR 18-53
FIGURE 49: REAR VIEW MIRROR (RAMCO) 18-54
FIGURE 50: JACKING POINTS ON FRAME 18-55
FIGURE 51: JACKING POINTS ON IND. SUSPENSION 18-55
FIGURE 52: JACKING POINTS ON FRONT AXLE 18-56
FIGURE 53: JACKING POINTS ON DRIVE AXLE 18-56
FIGURE 54: JACKING POINTS ON TAG AXLE 18-56
FIGURE 55: TOW EYES 18-58

1. VEHICLE EXTERIOR

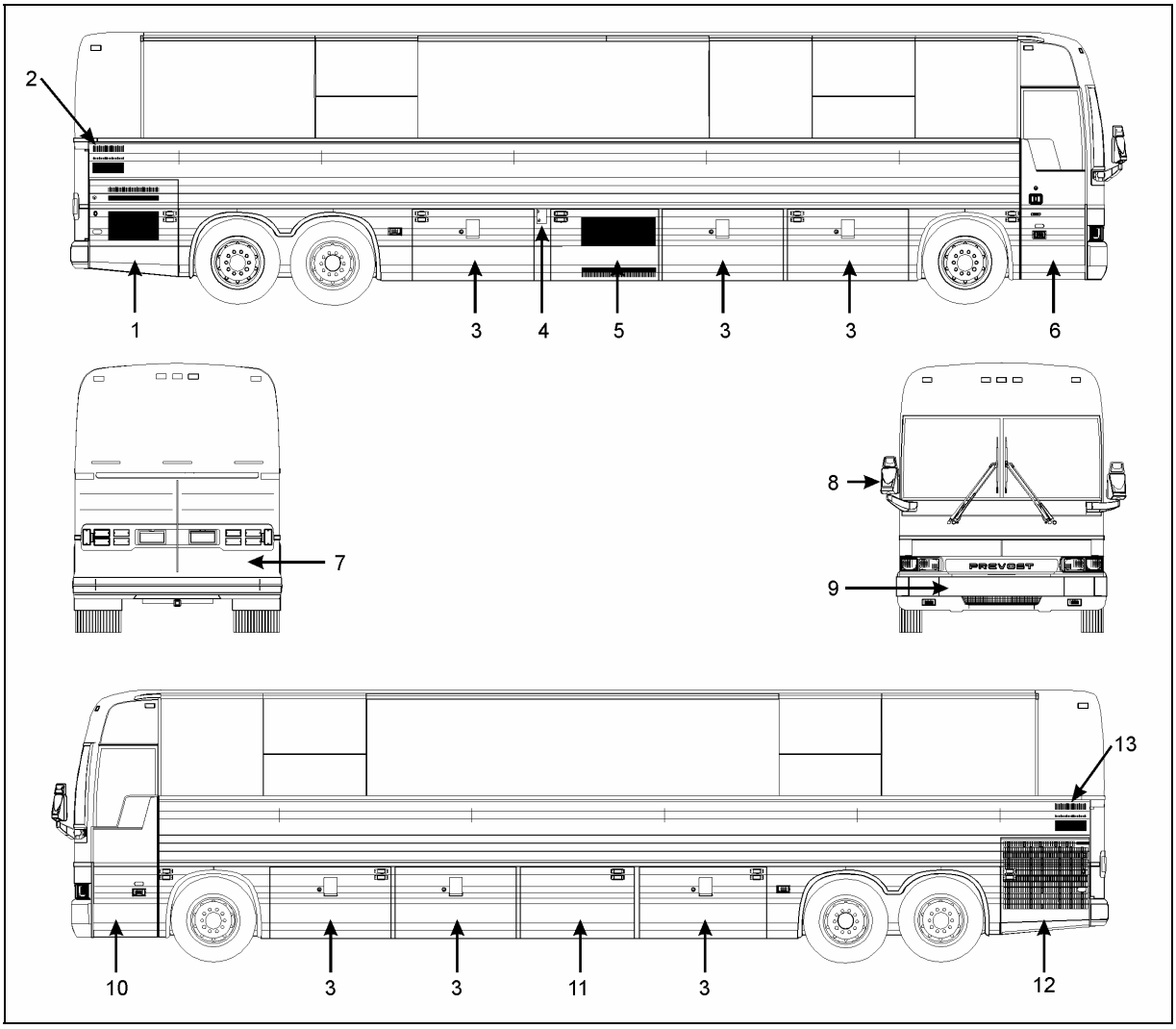

FIGURE 1: XL2-40 CONVERTED VEHICLE EXTERIOR VIEW (TYPICAL) 18365

1. Engine compartment R.H. side door
2. Engine air intake duct
3. Baggage compartment
4. Fuel filler door
5. Condenser or Baggage compartment
6. Entrance door
7. Engine compartment rear doors
8. Rear-view mirror
9. Reclining bumper
10. Front service compartment
11. Evaporator or Baggage compartment
12. Radiator door
13. Engine air intake duct

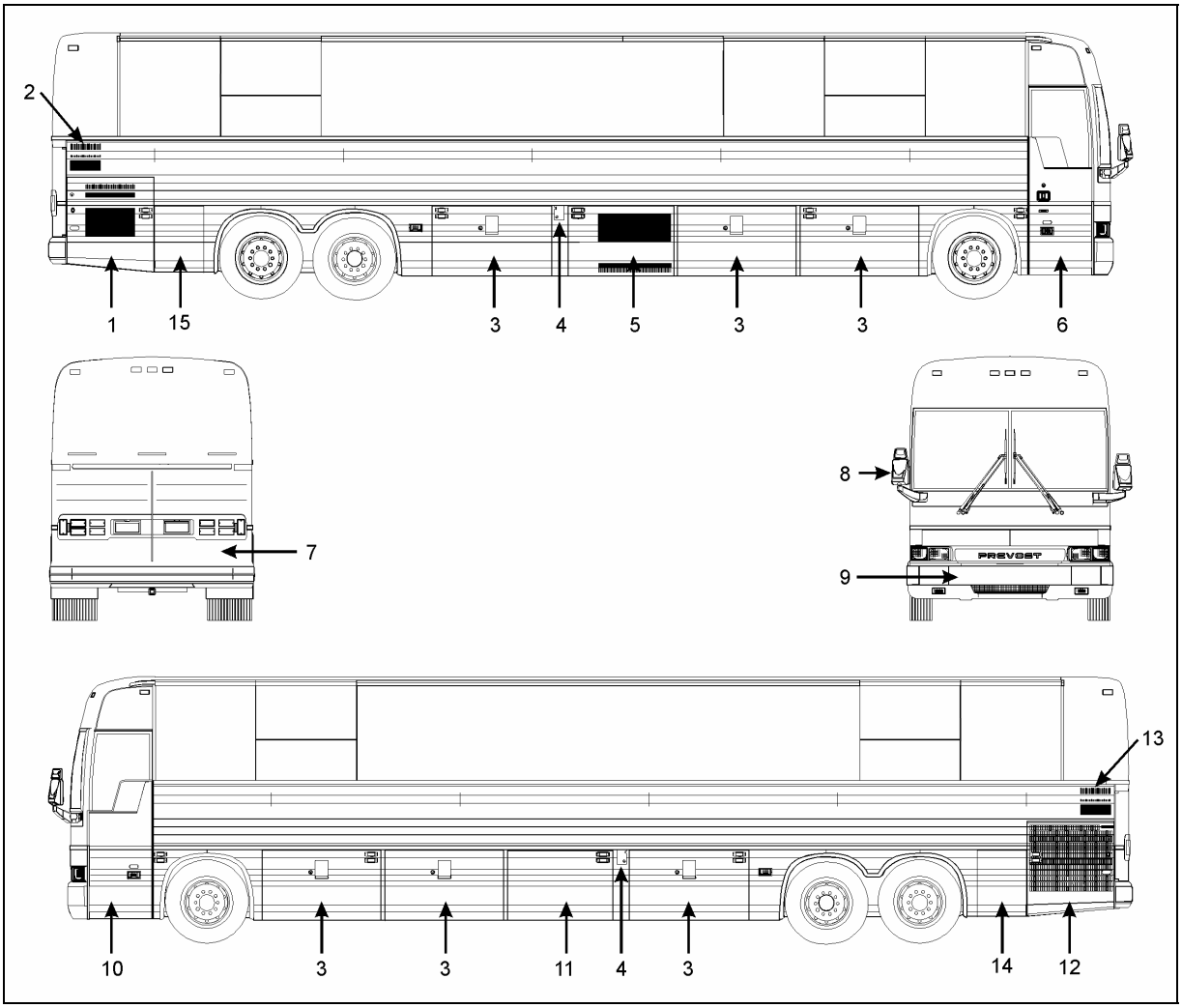

FIGURE 2: XL2-45 CONVERTED VEHICLE EXTERIOR VIEW (TYPICAL) 18362

1. Engine compartment R.H. side door
2. Engine air intake duct
3. Baggage compartment
4. Fuel filler door
5. Condenser or Baggage compartment
6. Entrance door
7. Engine compartment rear doors
8. Rear-view mirror
9. Reclining bumper
10. Front service compartment
11. Evaporator or Baggage compartment
12. Radiator door
13. Engine air intake duct
14. L.H. side rear service compartment
15. R.H. side rear service compartment

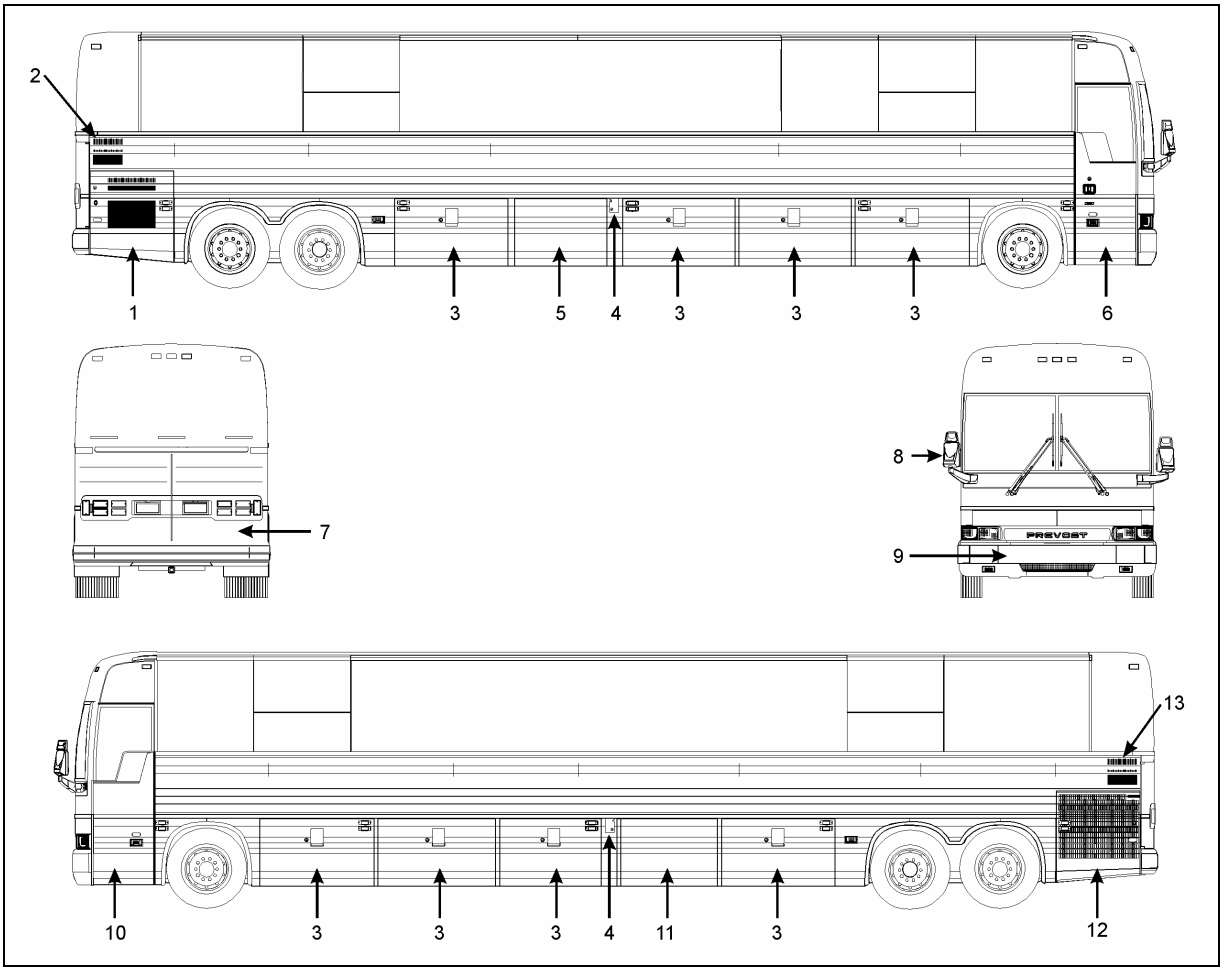

FIGURE 3: XL2-45E CONVERTED VEHICLE EXTERIOR VIEW (TYPICAL) 18369

1. Engine compartment R.H. side door
2. Engine air intake duct
3. Baggage compartment
4. Fuel filler door
5. Condenser or Baggage compartment
6. Entrance door
7. Engine compartment rear doors
8. Rear-view mirror
9. Reclining bumper
10. Front service compartment
11. Evaporator or Baggage compartment
12. Radiator door
13. Engine air intake duct

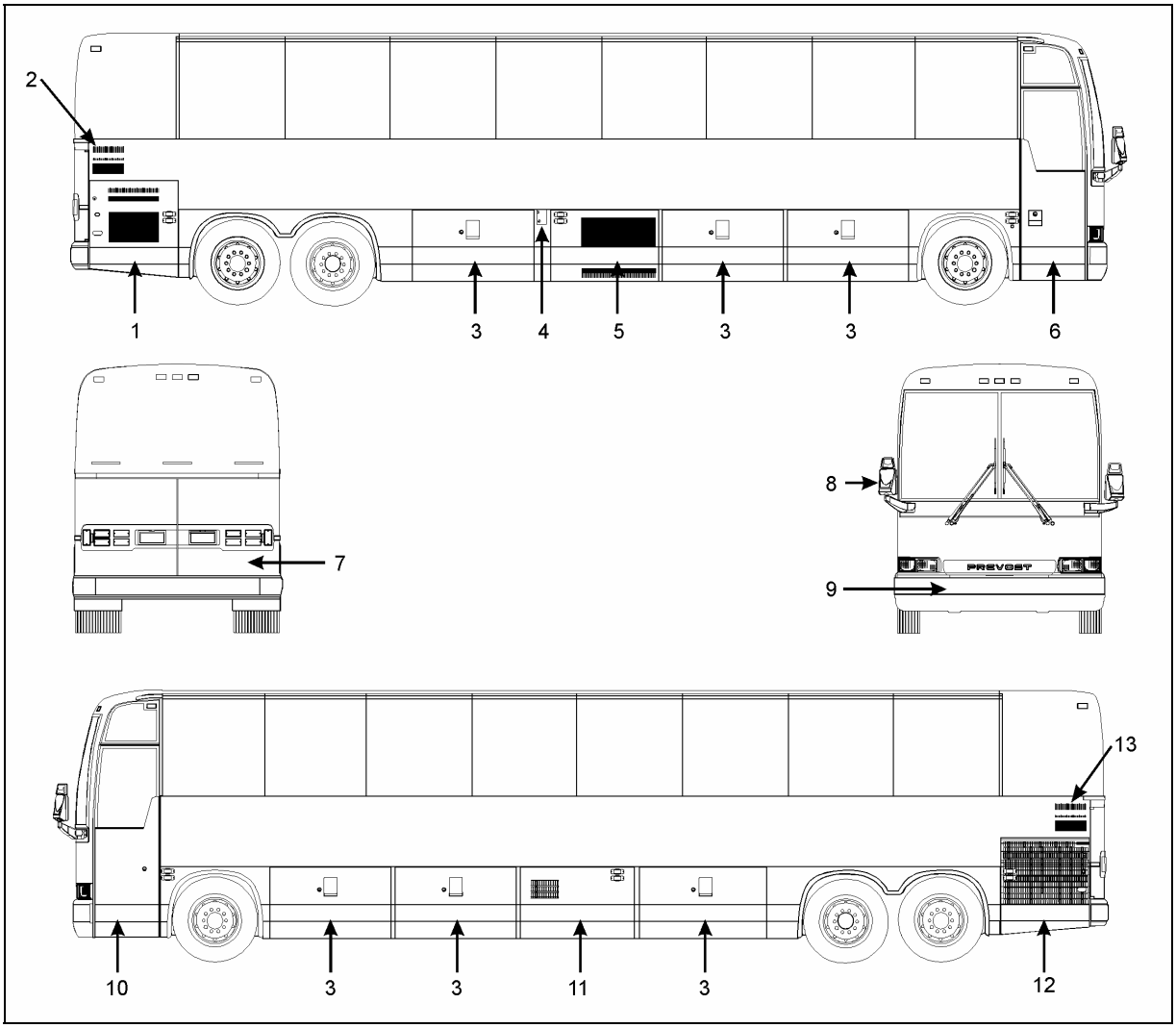

FIGURE 4: XL2-40 COACH EXTERIOR VIEW (TYPICAL) 18364

1. Engine compartment R.H. side door
2. Engine air intake duct
3. Baggage compartment
4. Fuel filler door
5. Condenser compartment
6. Entrance door
7. Engine compartment rear doors
8. Rear-view mirror
9. Reclining bumper
10. Front service compartment
11. Evaporator compartment
12. Radiator door
13. Engine air intake duct

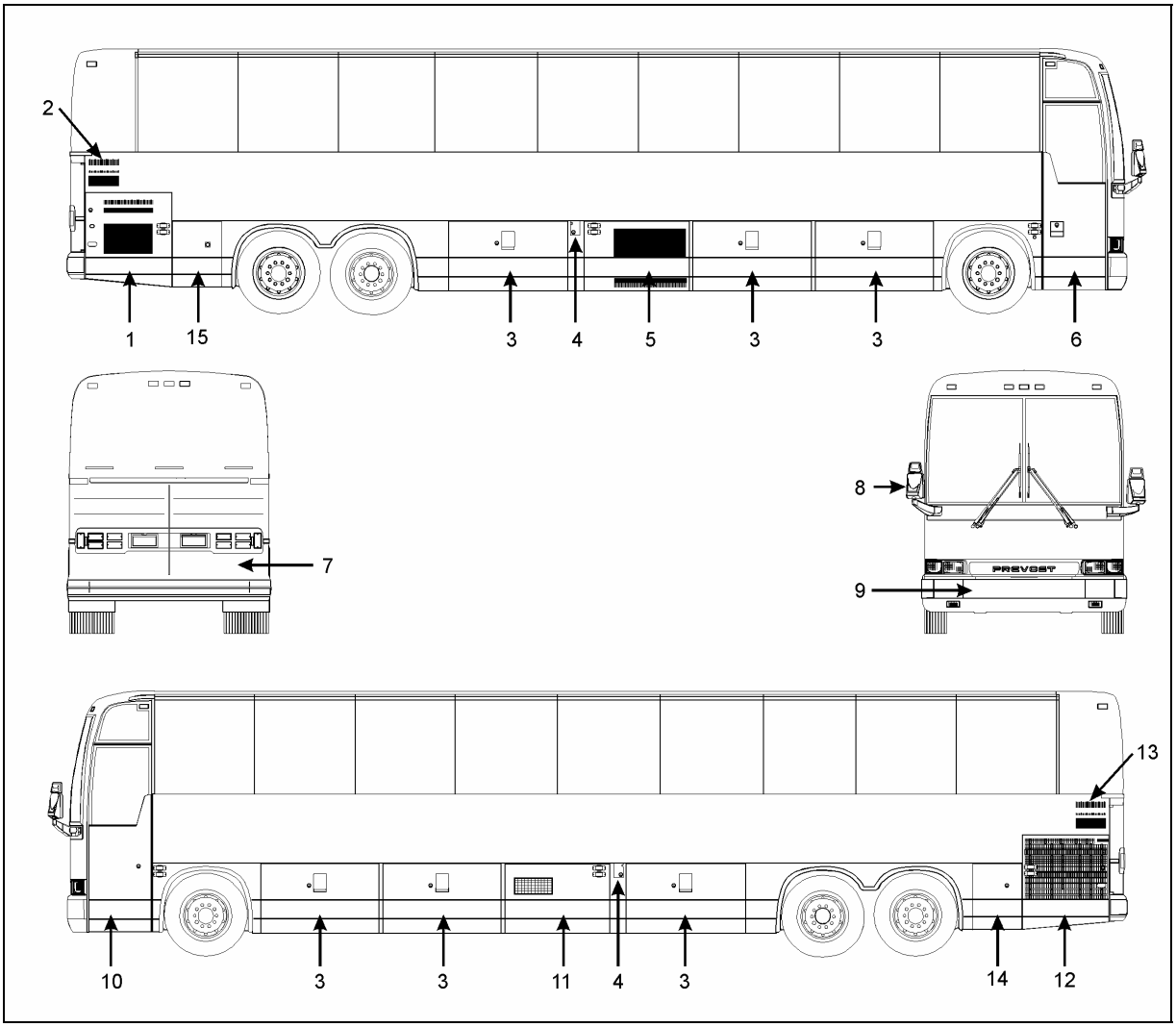

FIGURE 5: XL2-45 COACH EXTERIOR VIEW (TYPICAL) 18367

1. Engine compartment R.H. side door
2. Engine air intake duct
3. Baggage compartment
4. Fuel filler door
5. Condenser compartment
6. Entrance door
7. Engine compartment rear doors
8. Rear-view mirror
9. Reclining bumper
10. Front service compartment
11. Evaporator compartment
12. Radiator door
13. Engine air intake duct
14. L.H. side rear service compartment
15. Main Power compartment

2. STRUCTURE

The body of the XL2 vehicles is an integral structure made of 14, 16 and 18 gauge welded and braced high tensile steel and stainless steel members. All stainless exterior panels are glued to anti-corrosion coated members. The complete structure is protected against corrosion prior to assembly. The front and rear caps are made of molded fiberglass. The main roof is made of high tensile aluminum panels riveted to the roof structure. The floor is made of 2 layers of ½" (13 mm) thick plywood separated by a 1/8" (3 mm) insulation to reduce power train and road noises.

Welding

The following welding rods should be used when making welding repairs to the structure:

Application	Diameter	A.W.S.
Stainless steel to stainless steel or high strength steel alloy, light gauge	3/32" (2,4 mm)	No 308
Stainless steel to stainless steel or high strength alloy, heavy gauge	1/8-5/32" (3,2-4 mm)	No 308
High strength steel alloy to high strength steel alloy, light gauge	3/32-1/8" (2,4-3,2 mm)	No 6011
High strength steel alloy to high strength steel alloy, heavy gauge	3/32-5/32" (2,4-4 mm)	No 7018

Since welding is a procedure that may be carried out either as specific instructions from Prévost or by an independent decision of the owner, the following information pertaining to welding should be read before beginning any welding procedure. The prohibitions and requirements outlined below must be followed during welding procedure:

1. Welding must be done only by a qualified and experienced person.
2. Adequate ground contacts and shields must be positioned as required to protect components from damage due to heat, contact by weld splatter, arcing, or other potentially damaging events associated with welding.
3. The following precautions are to be taken to protect the electronic control components. Refer to section 00, paragraph 3: “PRECAUTIONS TO BE OBSERVED BEFORE WELDING” in this manual.
4. Always wear the appropriate safety equipment.
5. Weld in clean and well ventilated area, and always have an appropriate fire extinguisher within your reach.

3. EXTERIOR MAINTENANCE

Regular washing to remove dust and dirt is recommended. See *"Operator's Manual"* for more details on washing and cleaning your vehicle.

3.1 CORROSION PREVENTION

Preventive maintenance is a key factor in avoiding corrosion and must be considered as part of the regular service intervals. The entire underside of the vehicle is sprayed with a heavy application of asphalt base undercoating.

The operating environment the vehicle is subjected to will largely influence the amount of dirt and corrosion that will accumulate over a given period. Corrosion is one of the most costly factors of part failure and shortened part life. It is, however, an item that can be controlled when it is conscientiously looked after and the proper steps are taken in a timely manner.

Certain areas of the coach are more vulnerable to corrosion than others, and it is these areas that should be addressed. For example, the rear baggage compartment bulkhead in the rear wheelhousing area contains many key components and should be examined regularly for corrosion. Other areas include the front wheelhousing area and the engine compartment.

Road splash will affect undercarriage, condenser coil and engine compartment. These areas must be thoroughly cleaned to remove dirt accumulations from flanges, channels and ledges. These places accumulate dirt and salt and hold it in direct contact with steel and aluminum surfaces. Use an understructure high pressure spray as part of a regular wash. Damaged undercoating or paint should be promptly repaired before corrosion can start.

Frequency of wash periods depends on operating conditions. During periods of exposure to salt, daily washing as described above is recommended. If underbody parts show evidence of rust or corrosion, treat as follows:

1. Remove dirt, grease and oil by solvent washing.
2. Remove corrosion as well as all loose coating by cleaning with a wire brush or sandblasting.

Caution: *Sandblasting can be used for cleaning bulkheads, brackets and other structural members. It should not be used for exterior side paneling. Extreme care should be taken not to sandblast excessively.*

3. Apply correct primer, paint and undercoating after removing all corrosion to prevent further damage.

4. FIBERGLASS REPAIR

All repairs to fiberglass parts consist of filling the damaged area with fiberglass cloth and resin or strand fiberglass and resin. The repair is allowed to harden, then finishing operations may be performed. Use of the various materials is determined by the type of repair to be made. Large holes, torn sections and separate joints require the adhesive qualities of the resin and the reinforcing qualities of the fiberglass. Small dents, scratches or pits can be repaired using resin and strand fiberglass and filler mixed into paste. Instructions for either mix are explained under their respective headings in this section.
For best results when making repairs, temperature should be between 70 and 75 °F (21-24 °C). Some people experience a skin reaction to resins. In such cases, wipe resin off with denatured alcohol or a good thinner. Use of protective hand cream is recommended.

Warning: *Always wear a respirator and goggles when grinding or sanding.*

Extreme care must be taken if the sander is electrically operated, as dust from some resins is combustible when subjected to sparks or open flames. The proper tool for sanding resin is a low speed, air driven disc sander with a water attachment or a dry sander having a vacuum bag. Either will eliminate flying glass and resin dust.
The following additional tools and materials will assist in making repairs: hacksaw blade, assorted files, emery paper or cloth (150 or finer), scissors or tin snips, wax paper or cellophane sheets, a 3" (75 mm) paint roller, paint brush, putty knife, acetone and one or more heat lamps.

4.1 REPAIR USING FIBERGLASS CLOTH

Where necessary, sand paint away around damaged area and scrape away undercoating, if any, and wipe clean with solvent. Grind or file the damaged area to form a "V" at the broken or cracked portion. Sides of "V" should have a shallow pitch for maximum bonding area.

Note: *Roughening the surface improves adhesion of resin.*

If part is warped from original shape, use clamping equipment to straighten the surface. Preheat area to be repaired with one or two heat lamps placed 18 to 24 inches (450-610 mm) from repair.

Caution: *Temperature should not exceed 140 °F (60 °C) during 30 minutes in order to avoid distortion.*

Cut fiberglass cloth with scissors or tin snips, 1 to 3 inches (25-75 mm) larger than area to be repaired. Build area to desired height.

Mix resin and hardener following instructions on their containers. Saturate layers of fiberglass with mixture and place laminates over damaged area. Smooth out wrinkles and make sure general contour of area is maintained. Bubbles and wrinkles can be eliminated with a roller.

Caution: *The pot life of the mix is approximately 15 minutes. Any accidental contamination to the skin, clothing, tools, etc. must be removed within this period. Use acetone to remove uncured resin.*

Heat resin material again by placing heat lamps 18 to 24 inches (450-610 mm) from repaired area. Allow 12 to 15 minutes for repair to cure. After repair is cured, grind, file or sand to contour. Files other than body files may be more suitable. Featheredge and finish sanding.

If small pits or irregularities appear after making repair, correct by using a liberal amount of

chopped strand or filler mixed with resin to form a paste. Refer to heading *"Repair using Fiberglass Paste"* in this section.

4.2 REPAIR USING FIBERGLASS PASTE

Fiberglass paste is used for repairing small dents, scratches, and pits. Paste is made by mixing resin, hardener and fiberglass strand or filler to the consistency of putty. Where necessary, sand paint away around damaged area. On underside of coach, scrape away undercoating from damaged area, and wipe clean with solvent.

Preheat the area to be repaired using heat lamps. Mix desired quantities of resin and hardener according to manufacturer's instructions. Add powdered fiberglass strand into mixture to thicken it into a putty state.

Note: *If repair is made on a vertical surface, adding powdered filler material to mixture will reduce tendency of hot resin to flow or run.*

Apply the material with a putty knife or similar object, building material up to the desired contour. For deep filling and on vertical surfaces, several layers of material may be used.

A hacksaw blade, held flat to adjacent contour and then moved in a sawing action across the repair when the resin is in a gel state, will remove excess resin from repair. Finish repair with the same procedure as when using fiberglass cloth.

4.3 TYPICAL FIBERGLASS REPAIR PROCEDURE

Remove all loose particles or damaged material using a power sander or rasp. Clean area, overlapping hole approximately 1" to 1-½" (25-40 mm) all around. Remove all dirt, grease and paint from area to ensure good bonding surface. Feather the cleaned area all around (Fig. 6).

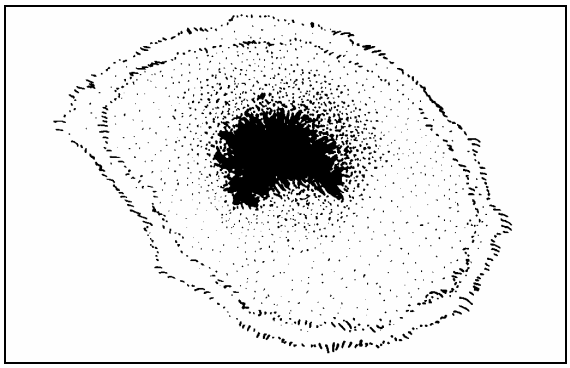

FIGURE 6: FIBERGLASS REPAIR 18089

Cut a piece of fiberglass mat slightly larger than area being repaired. Impregnate mat with general purpose polyester resin catalyzed normally. Use a clean paint brush to apply the polyester resin. Apply impregnated mat over hole and press onto surface with brush to obtain good adherence. Another coat of general purpose polyester resin can be applied at this time (Fig. 7).

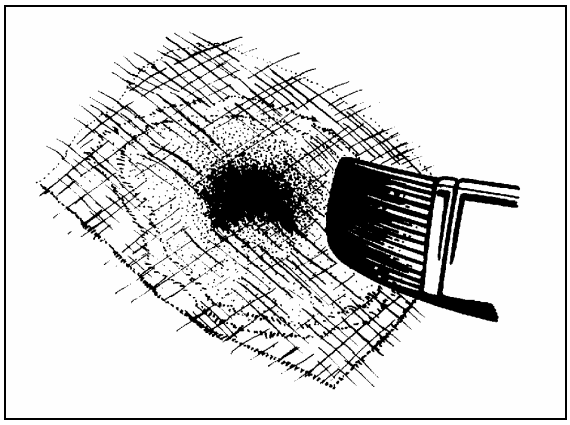

FIGURE 7: FIBERGLASS REPAIR 18090

Note: *Remove all air between surfaces being joined. Allow area to harden and sand surface to remove any wax.*

Apply another mat, followed by a cloth patch, and another mat. All layers must be thoroughly impregnated with polyester resin, brushed well and free of air. Apply more layers of mat and cloth as required until the desired strength and thickness is obtained, minimum two 1-½ oz (43 g) mats and one 9 oz (255 g) cloth (Fig. 8).

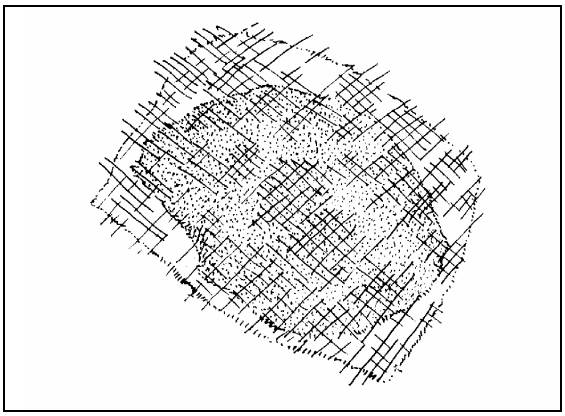

FIGURE 8: FIBERGLASS REPAIR 18091

Allow area to harden and contour the area with coarse sandpaper #100 (Fig. 9).

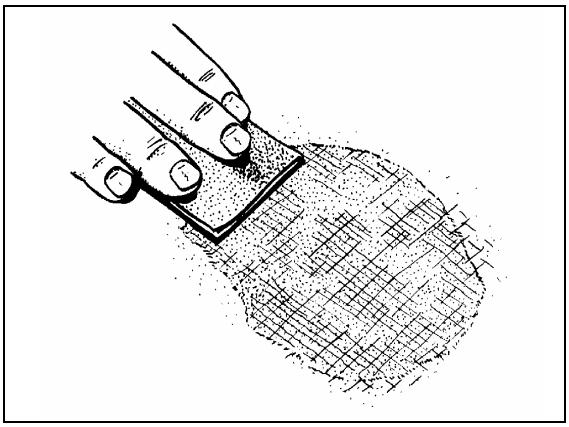

FIGURE 9: FIBERGLASS REPAIR 18092

Cover the area with a layer of resin putty and allow to dry for approximately 15 to 20 minutes (Fig. 10).

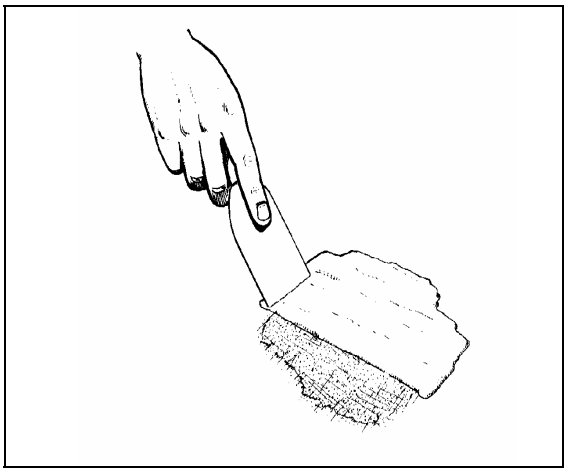

FIGURE 10: FIBERGLASS REPAIR 18093

Smooth off surface with coarse sandpaper #100 to desired shape. Further smooth surface with fine sandpaper #120 until repaired surface matches surrounding area paneling. Prime and paint the area to match surrounding paintwork.

5. PAINTING

5.1 NEW PAINT CARE

Our paint supplier recommends that you follow these simple precautions the first months of your new vehicle's life.

Caution: *Apply these recommendations after repainting vehicle.*

During the first 30 days:

- Do not use a commercial bus wash. Stiff brushes or sponges could mar the finish and damage the surface. Wash the vehicle by hand only and with cool water and a very mild bus wash solution. Be careful to use only a soft cloth or sponge;
- Wash vehicle in the shade, never in direct sunlight;
- Do not "dry wipe" vehicle –always use clean water. Dry wiping could scratch the finish;
- Avoid extreme heat and cold. Park vehicle in the shade whenever possible;
- Do not park under trees which drop sap or near factories with heavy smoke fallout. Tree sap and industrial fallout may mar or spot a freshly painted surface;
- Trees are also likely to attract birds. Bird droppings are highly acidic and will damage a freshly painted surface. Bird droppings, tree sap and industrial fallout should be washed off as soon as possible;
- Do not spill oil, gasoline, antifreeze, transmission fluid or windshield solvent on new finish. IMMEDIATELY rinse off any such spill with clean water, DO NOT WIPE;
- Do not drive on gravel roads. Paint finish easily chips during the first 30 days;
- Do not scrape ice or snow from the surface. A snow scraper can act like a paint scraper if the finish is new. Brush off loose material with a soft snow brush.

During the first 90 days:

- Do not wax or polish the vehicle. This will allow the finish to dry and harden completely.

5.2 PAINT TOUCHUP

When paint touchup or partial repainting is necessary, refer to the vehicle's paint scheme for color codes and paint brand.

Prévost recommends using the original paint brand to ease color matching.

In the event you sand through to the gelcoat surface you should prime the area with Standox "Non Stop Fill Primer (ST-11000)".

If you sand through to metal surface, first prime with Standox "Etch Primer (ST-11858)" then with Standox "Non Stop Fill Primer (ST-11000)".

Caution: *Be sure to heed all paint manufacturer's recommendations, especially concerning paint dilution and application.*

5.3 PAINTING

The standard paint used on the exterior of the vehicle is Standox Basislack. It is a high gloss polyurethane enamel finish designed for exposure to extreme conditions. Other types of paint may be called for as options by owner but are not dealt with in this section.

5.3.1 Safety

Care should be exercised in storing, handling, mixing, and applying paint and chemicals listed in this manual. The topcoat, primer, solvent, catalysts, accelerators, and cleaners are highly volatile and/or toxic if not properly used. Observe all safety instructions marked on the different packagings, as well as the following:

1. Do not smoke in the paint room or in adjacent area exposed to residue fumes.
2. Wear respirators approved by the governing safety and health regulations.
3. Maintain adequate ventilation at all times.
4. Dispose of any leftover paint mix properly.
5. Wear rubber gloves, rubber apron, and face shield during all phases of paint and chemical handling.

5.3.2 SURFACE PREPARATION AND PAINT APPLICATION

	Aluminum and / or Stainless Steel	Fiberglass	Comments
Surface Preparation	Sand using P-150 grit sandpaper. It is recommended to sandblast rivets and panel edges with OLIMAG 35-70 blast media.	Sand using P-180 or P-240 sandpaper.	Do not use paint remover over aluminum or fiberglass.
Cleaning	STANDOX silicone remover ST-11654 (68-2989)		
Priming	STANDOX Reactive Etch Primer ST-13908 * Wait 30 minutes then apply STANDOX Non-Stop Füllprimer ST-11000 (68-2973)	STANDOX Non-Stop Füllprimer ST-11000 (68-2973)	Refer to product Technical Data sheet for proper mixing
Basecoat	Refer to paint scheme or coach record for proper color code and paint brand. We recommend using the same paint brand to ease color matching.		Refer to product Technical Data sheet for proper mixing
Clearcoat	STANDOX 2K MS Rapid Clear ST-11760 (68-2979) Allow 16 hours for drying		Refer to product Technical Data sheet for proper mixing

If assistance or technical information on STANDOX products is needed, please dial: 1 (800) 551-9296

6. BODY REPAIR

Note: *The purpose of this procedure is to explain the steps to be followed in order to get a good adherence. These steps are of the uppermost importance to obtain 100 % adherence. For a complete description of the procedure, refer to the applicable video.*

6.1 FRONT FACE

6.1.1 Prévost Car Embossed Body Panel

Removal

For removal of embossed body panel, you will need :

Olfa knife,
Razor sharp window scraper.

- Lower spare wheel compartment door.
- Insert from underneath a knife with a thin sharp blade (Olfa type), cut lower Sika bead (refer to figures 11 and 12).

Note: *Sika bead is located 1 inch (25 mm) from bottom of body panel.*

- Make several passes with the knife to ensure Sika bead is truly cut which will facilitate bending of the body panel.
- Bend body panel upwards in order to access the upper bead. Upper bead is located about ¼" (4 mm) from top of body panel.
- Cut upper bead and double-face self adhesive tape.
- Use a sharp scraper type tool to remove the Sika bead and double-face self adhesive tape residue from the fiber glass surface.

Note: *To ensure maximum adherence of Sika glue, do not leave any Sika bead or double-face self adhesive tape residue.*

Caution: *You only have 10 minutes to install the body panel once the adhesive is applied before the adhesive starts to dry.*

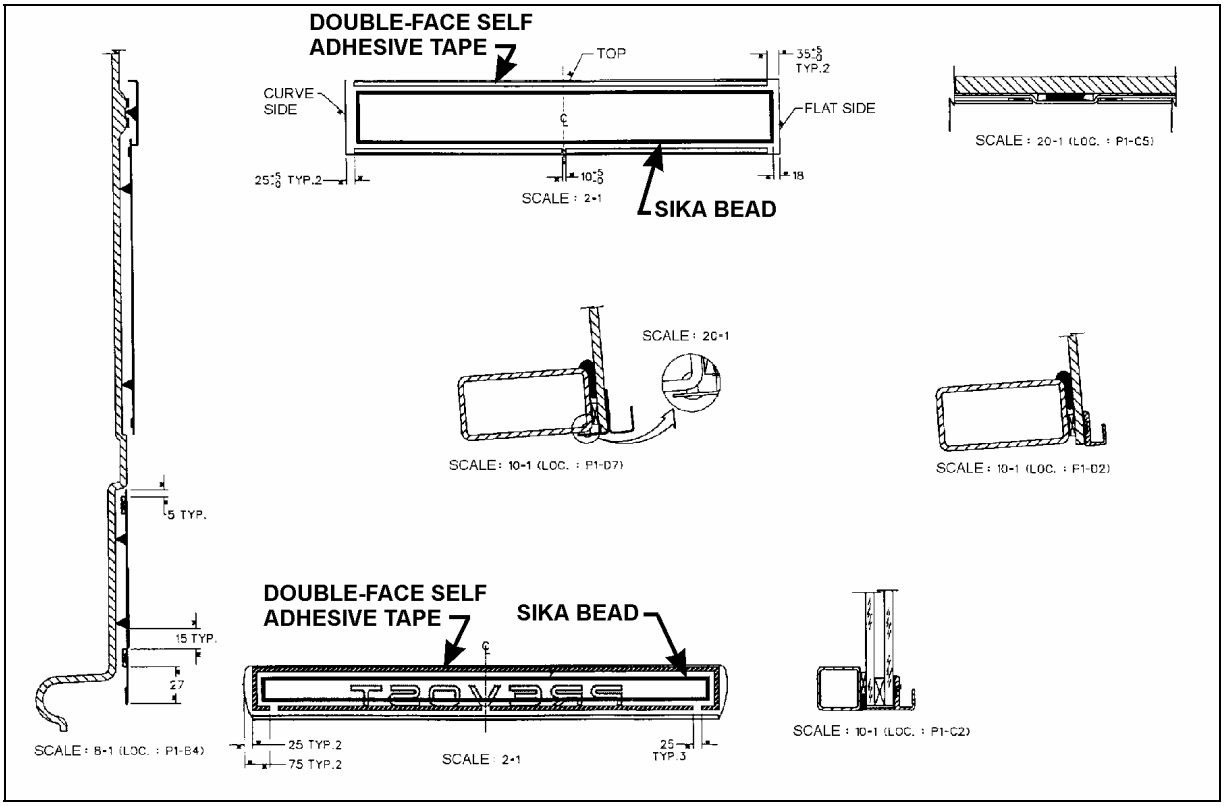

FIGURE 11: FRONT FACE BODY PANELS INSTALLATION

Installation

Preparation of stainless steel surface.

The purpose of this procedure is to show you the proper way to install the Prévost embossed body panel onto the XL2 vehicle.

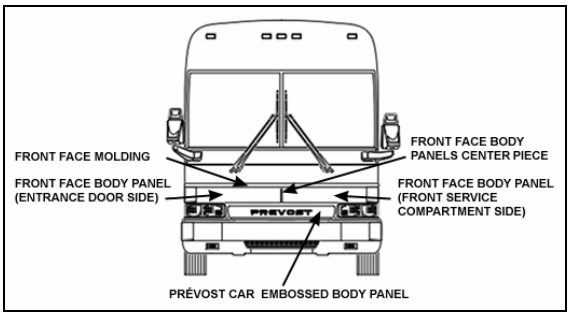

FIGURE 12: VIEW OF FRONT FACE

First of all you must prepare the stainless steel panel surface (“Gelcoat” scratch side) before installing it onto the fiber glass surface.

You will need for this preparation:

Latex gloves, because we will be using adhesive.
“Scotch Brite” pad for scratching.
Tack cloth for removing any residue from scratching.
“Sika cleaner 205” for stainless steel surface treatment. Allow 2 minutes for drying in the case of stainless steel. It is important to check the expiration date on product.
You will be using “Chix” cloth for the application of “Sika cleaner 205”.
Once the surface is treated, you will apply a double-face self adhesive tape “Pro-foam 1/8 by ½” to mechanically hold the stainless steel body panel in position until the adhesive is cured.
And you will be using “SiKaflex 252“ adhesive sealant.

Refer to figure 11 for more information on procedure.

- First of all, remove protective plastic lamination.
- Using a scratch pad “Scotch Brite”, scratch a 2 inch wide surface around the perimeter of the panel where the adhesive will be applied. The purpose being to create scratches onto the surface to increase adherence.
- Use a tack cloth to remove any dust or residue.
- Before applying Sika cleaner, fold “Chix” cloth twice for proper width. Apply an even coat onto the treated surface. Allow 2 minutes for drying in the case of stainless steel.
- After this treatment, a bluish tint will appear on the stainless steel surface due to alcohol evaporation and salt deposits which will increase adherence.

Note: *Discard waste according to applicable environmental regulations, use dangerous waste containers. For more information on the application of double-face self adhesive tape near the top edge, refer to figure 11.*

- Draw a line 4 mm (¼ “) from the top edge, using a felt-tip pen.
- Align “Pro-Foam” self adhesive tape with the previously traced line and cut the end.
- The second application of “Pro-foam” self adhesive tape is near the bottom edge.
- Draw a line 27 mm (1”) from bottom edge. Align “Pro-Foam” self adhesive tape with the previously traced line.
- Apply also a strip of self adhesive tape at each end of body panel.
- To prevent water accumulation, a 25 mm width dripping space must be provided underneath the “V” as well as two more at each end of the tape.

Sikaflex 252 Adhesive Sealant Application

- Check Sikaflex 252 adhesive sealant for expiration date.
- Sika bead is represented as checked lines, refer to figure 11 for more information.
- Sika bead must be uninterrupted to ensure maximum sealing. Cut ¼ of V shape nozzle length for proper flow of glue. Perforate cartridge tip.
- Apply Sika bead along the perimeter of body panel 15 mm (5/8”) from double-face self adhesive tape.
- Once the body panel is compressed, the Sika bead will spread until it touches the tape.

Note: *Sika adhesive bead height must be greater than double-face self adhesive tape.*

- Peel the back from the self adhesive tape. In order to prepare fiber glass surface, scratch surface of the vehicle where the adhesive

will be applied, use a tack cloth to remove any dust or residue.

***Caution**: Do not damage painted surface.*

- Apply masking tape to protect paint during surface treatment.
- Apply an even coat of Sika 205 cleaner onto the complete surface.
- Allow at least 10 minutes for drying in the case of fiber glass.
- Lightly compress the perimeter of Prévost embossed body panel, avoiding the center, then compress using a dry erasable marker board brush so as not to scratch or damage the stainless steel surface. Ideally two persons should perform this installation.
- Remove masking tape.

6.1.2 Front Face Body Panel and Molding

For removal of front face body panel and molding, you will need :

Drill with drill bits,
Lever or similar tool,
Olfa knife,
“C”-clamp,
Razor sharp window scraper.

Front Face Molding Removal

- First of all, pry loose the front face molding using the lever. Save molding if only the body panel needs to be changed.
- Using the Olfa knife, cut the Sika bead and the double-face self adhesive tape. Remove the Sika bead and self adhesive tape residue with the scraper.
- Refer to figure 11 for more information on procedure.

Front Face Body Panel Removal

- Using a drill and a 1/8” drill bit remove the rivets fixing the vertical molding. The stainless steel molding is located on the entrance door or service door frame side depending on body panel to be removed.
- Using the Olfa knife, cut the Sika bead and the double-face self adhesive tape. Remove the Sika bead and self adhesive tape residue with the scraper.
- Pry loose the front face body panel using the lever.
- While somebody cuts the Sika bead and double-face self adhesive tape, another person pulls the body panel using the “C”-clamp to exert tension.
- Using the window scraper, remove any Sika bead or self adhesive tape residue left on the fiber glass surface.

Preparation of New Front Face Body Panel

- In order to prepare stainless steel panel, use a tack cloth to remove any dust or residue.
- Using a scratch pad “Scotch Brite”, scratch a 2 inch wide surface around the perimeter of the panel where the adhesive will be applied.

***Note:** It is important to support underneath the curved surface so as not to change the angle of the body panel and therefore prevent deformation*

- Use again a tack cloth to remove any dust or residue from scratching.
- Check expiration date before applying Sika 205 cleaner.
- Fold “Chix” cloth twice for proper width.
- Apply an even coat onto the treated surface.
- Discard waste according to applicable environmental regulations, use dangerous waste containers.
- Allow 2 minutes for drying in the case of stainless steel.
- Draw a line 5 mm from the top edge, using a felt-tip pen (refer to figure 11).
- Apply double-face self adhesive tape 1/16 x ¼, 5 mm from top.
- Draw a line 25 mm from curved side edge and 35 mm from flat side edge.
- Align “Pro-Foam” self adhesive tape with the previously traced lines.
- Cut a portion of self adhesive tape in the center of body panel for draining purposes.

Preparation of Front Face molding

- In order to prepare stainless steel molding, use a tack cloth to remove any dust or residue.
- Using a scratch pad “Scotch Brite”, scratch surface of the molding where the adhesive will be applied.

Note: *It is important to support underneath the curved surface so as not to change the angle of the molding and therefore prevent deformation*

- Use again a tack cloth to remove any dust or residue from scratching.
- Check expiration date before applying Sika 205 cleaner.
- Fold “Chix” cloth twice for proper width.
- Apply an even coat onto the treated surface.
- Discard waste according to applicable environmental regulations, use dangerous waste containers.
- Allow 2 minutes for drying in the case of stainless steel.

Preparation of Vehicle Fiber Glass Surface

- In order to prepare fiber glass surface, scratch surface of the vehicle where the adhesive will be applied, use a tack cloth to remove any dust or residue.

Caution: *Do not damage painted surface.*

- Apply masking tape to protect paint during surface treatment.
- Apply an even coat of Sika 205 cleaner onto the two surfaces.
- Allow at least 10 minutes for drying in the case of fiber glass.
- Apply 1/8” by ½” double-face self adhesive tape onto each fiber glass boss where the front face molding will be installed.

Sikaflex 252 Adhesive Sealant Application

- Check Sikaflex 252 adhesive sealant for expiration date.
- Cut ¼ of V shape nozzle length for proper flow of glue. Perforate cartridge tip.
- Apply Sika bead along the perimeter of body panel ½” from double-face self adhesive tape.
- Peel the back from the self adhesive tape.

Caution: *You only have 10 minutes to install the body panel before the adhesive starts to dry.*

Front Face Body Panel Installation

- To hold in position the body panel during drying process, apply ¼ by 1/32” self adhesive tape onto the front face body panel center piece and peel back. Ideally two persons should perform this installation.
- Starting from the middle of the vehicle, compress the front face body panel using a dry erasable marker board brush so as not to scratch or damage the stainless steel surface.
- Open entrance door being careful not to move the body panel. Fix vertical stainless steel molding using 1/8” stainless steel rivets.
- Apply Sika bead between the two double-face self adhesive tape previously installed on each fiber glass boss.
- Install horizontal front face molding, aligning it with the door molding and compress using a dry erasable marker board brush.
- Remove masking tape.

6.1.3 Spare Wheel Compartment Door Body Panel

For the removal of spare wheel compartment door body panel,

You will need :

A hammer,
Screwdriver,
Locking pliers,
Putty knife,
Heat gun,
And isopropyl alcohol.

- Lower and remove front bumper.
- Remove spare wheel compartment door.
- First of all, using a lever or rigid screwdriver, pry loose body panel edge.

- Using a pair of locking pliers, gradually separate stainless steel body panel from door frame.
- Use the screwdriver to detach completely the stainless steel body panel from door frame.

Door Frame Preparation

- Start cleaning the door frame by removing double-face self adhesive tape.
- Use a heat gun and putty knife to remove the dried off Ciba 8535 epoxy glue residue.

Warning: *Make sure that heat gun nozzle does not get any closer than 4 inches from the surface.*

Warning: *Because of its great toxicity, care should be taken not to use a buffer or other sanding method for glue removal.*

- Then, using a scratch pad "Scotch Brite", scratch the perimeter of door frame where the adhesive will be applied.
- Wear latex gloves and use a "Chix" cloth with isopropyl alcohol in order to remove any residue from scratching left onto the stainless steel surface.

Note : *Apply evenly around the perimeter of the panel. Use two clothes, first one applies product while second one immediately dries surface off before product evaporation.*

Body Panel Preparation

- Using a scratch pad "Scotch Brite", scratch a 2 inch wide surface around the perimeter of the panel where the adhesive will be applied.
- Use a tack cloth to remove any dust or residue.
- Clean the perimeter of the panel using isopropyl alcohol. Use two clothes, first one applies product while second one immediately dries surface off before product evaporation.

Ciba 8535 Epoxy Glue Application

For this application, you will need a mixing nozzle for epoxy glue cartridges.

- Cut first part of mixing nozzle.
- Use "Ciba 8535" epoxy glue.
- Remove cartridge tip and install mixing nozzle.
- Heat Ciba glue cartridges to reduce viscosity and speed up process.
- Insert cartridges into the appropriate tool.
- Apply glue in center and around perimeter of frame.
- Apply self adhesive tar paper strips to reduce vibration. This should be done before applying glue to facilitate the installation.
- Once the application of glue is done, leave the mixing nozzle onto the Ciba cartridges for the preservation of glue. Next time you need this product, use a new mixing nozzle.

Stainless Steel Body Panel Installation

- Stainless steel body panel must be installed within 45 minutes.
- Align body panel with door frame and lightly press perimeter of body panel.
- Allow to dry for 6 hours before handling.

Note : *If for any reason you must remove the body panel from the door frame and the 6 hours have elapsed, you must wait **7 days** so that glue has time to cure.*

6.1.4 Windshield

For the removal or installation of windshield, you will need :

A screwdriver or pneumatic driver tool,
A plastic spatula to lift the rubber seal lip,
A metal rod or screwdriver to clean the seal groove,
A filler insertion tool,
Goggles and protective gloves.

- From inside of vehicle, remove center post and interior finishing panels surrounding the windshield. In this case, we are replacing the R.H. side windshield.
- From outside of vehicle, remove filler located inside rubber seal to ease damaged windshield removal.
- From inside of vehicle, push against the top L.H. side corner of windshield for the removal of a R.H. side windshield. If the L.H. side windshield had to be removed, you

would have to push against the top R. H. side corner.

Note: *We are referring to the L.H and R.H. side as viewed from the inside of the vehicle.*

- At the same time, another person gradually lifts the rubber lip from the vehicle exterior using a plastic spatula from top to bottom.
- Remove the entire damaged windshield and broken glass if applicable.
- Using a screwdriver or metal rod, remove black butyl sealant residue from rubber seal then clean.

Windshield Installation

Note : *Rubber seal may have to be replaced if it was used on several windshield replacements.*

- Spray rubber seal with soapy water to ease windshield insertion.
- Slide windshield into rubber seal groove starting with the bottom curved side edge. Using a plastic spatula, move the rubber seal lip aside to gradually insert the wind-shield into the groove.
- Spray soapy water on a regular basis to ease this operation.
- Using the same type of plastic spatula, repeat the same operation from inside of vehicle, gradually inserting the windshield into the groove.

Note: *Make sure windshield bottom edge is well inserted into the rubber seal groove before proceeding with the sides.*

- Then, working from both sides of windshield bottom to top, gradually move the rubber seal lip aside to insert the windshield into the groove. Use also soapy water on the inside of vehicle to insert the windshield into the rubber seal groove.
- Insert the top curved corner then finish with the top of windshield.
- From outside of vehicle, apply black butyl sealant around the perimeter of windshield between the rubber seal and the glass surface.
- Spray filler and rubber seal groove generously with soapy water.
- Using the special filler insertion tool, insert the filler into the rubber seal groove.
- Gradually insert filler into the rubber seal groove ensuring to leave a 2 inch excess length at the filler extremity.
- Every 6 inches or so, it is important to compress the filler due to its tendency to contract during drying process.
- When filler insertion is almost complete, cut filler leaving ¼" of excess length to thwart filler contraction over time then insert filler into groove.
- Reinstall center post and interior finishing panels.
- Clean windshield surface of butyl residue.

6.2 ENTRANCE DOOR OR FRONT SERVICE DOOR BODY PANEL

For the removal of entrance door or front service door body panel, you will need :

Pneumatic "Zip gun" type tool;
Razor sharp window scraper;

- Before removing body panel, you can to ease repair uninstall entrance door or front service door from vehicle. If applicable, remove reflector, keyless system keyboard and cornering light.
- You must also remove horizontal finishing molding located underneath the window. This molding is glued and will have to be replaced because it will be damaged at removal.
- Remove interior finishing panel to access rub rail fixing bolts, then remove rub rail.
- Using the "**Zip Gun**", cut Sika bead located ¼ inch (7-8 mm) from each body panel edge and around cornering light.
- Separate body panel from door.
- Remove from door surface Sika bead and double-face self adhesive tape residue using a razor sharp window scraper.
- Use a tack cloth to remove any dust or residue.

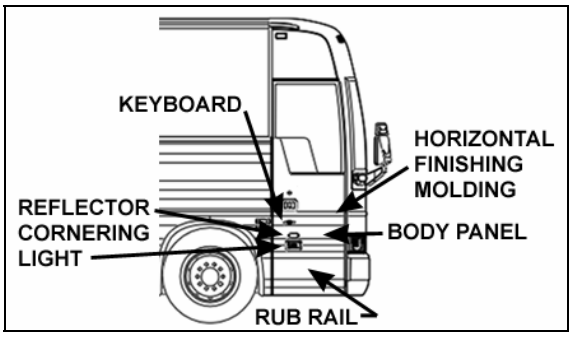

FIGURE 13: ENTRANCE DOOR BODY PANEL

Door Surface Preparation

- First of all, check Sika 205 cleaner expiration date.
- Before applying Sika cleaner, fold "Chix" cloth twice for proper width.
- Apply an even coat onto the door frame perimeter and allow to dry for 2 minutes (maximum 2 hours).
- Discard waste according to applicable environmental regulations, use dangerous waste containers.

Stainless Steel Body Panel Preparation

- Check that new body panel is the required one and is free of defects or scratches.
- Wear latex gloves and use a "Chix" cloth with isopropyl alcohol in order to remove any dirt or oily film left onto the stainless steel surface.

Note : *Apply evenly around the perimeter of the panel. Use two clothes, first one applies product while second one immediately dries surface off before product evaporation.*

- Using a scratch pad "Scotch Brite", scratch a 2 inch wide surface around the perimeter of the panel where the adhesive will be applied. The purpose being to create scratches onto the surface to increase adherence.
- Use again a tack cloth to remove any dust or residue.
- Before applying Sika cleaner, fold "Chix" cloth twice for proper width.
- Apply an even coat onto the treated surface.
- Allow 2 minutes for drying in the case of stainless steel (maximum 2 hours).
- Apply a double-face self adhesive tape 1/8 by ½ inch on each side and at the top of body panel and around cornering light. Apply tape 1/8 inch from body panel edges and flush with cornering light perimeter.
- Peel back from double-face self adhesive tape.

Sikaflex 252 Adhesive Sealant Application

- Check Sikaflex 252 adhesive sealant for expiration date.
- Using a "V" shape nozzle, apply Sika bead ¼ inch (6-7 mm) from double-face self adhesive tape on all three sides of body panel and around cornering light.
- Once the body panel is compressed, the Sika bead will spread until it touches the tape.

Note: *Sika adhesive bead height must be greater than double-face self adhesive tape.*

Note : *You only have 15 minutes to install body panel once the adhesive is applied.*

- Peel the back from the self adhesive tape.
- Carefully center and align body panel edges with the door fiber glass surface.
- Ideally two persons should perform this installation.
- Lightly compress the body panel along the double-face self adhesive tape, then compress using a dry erasable marker board brush so as not to scratch or damage the stainless steel surface.
- Apply masking tape on both body panel sides.
- Using a caulking nozzle and "SIKAFLEX 221" adhesive, fill the cavity to seal both body panel sides and around cornering light.
- Wearing surgical gloves, smooth down the joint with your finger.
- Remove masking tape and protective plastic lamination.

6.2.1 Entrance Door or Front Service Door Lower Body Panel

For the removal of entrance door or front service door lower body panel, you will need :

Pneumatic “Zip gun” type tool;
Razor sharp window scraper;

- Remove interior finishing panel to access rub rail fixing bolts, then remove rub rail.
- Remove two lower body panel fixing rivets.
- Using the “**Zip Gun**”, cut Sika bead located on each lower body panel side.
- Remove lower body panel.
- Remove Sika bead residue using a razor sharp window scraper.
- Use a tack cloth to remove any dust or residue.

Door Surface Preparation

- First of all, check Sika 205 cleaner expiration date.
- Before applying Sika cleaner, fold “Chix” cloth twice for proper width.
- Apply an even coat onto the door frame perimeter and allow to dry for 2 minutes.
- Discard waste according to applicable environmental regulations, use dangerous waste containers.

Stainless Steel Body Panel Preparation

- Check that new body panel is the required one and is free of defects or scratches.
- Wear latex gloves and use a “Chix” cloth with isopropyl alcohol in order to remove any dirt or oily film left onto the stainless steel surface.

Note : *Apply evenly around the perimeter of the panel. Use two clothes, first one applies product while second one immediately dries surface off before product evaporation.*

- Using a scratch pad “Scotch Brite”, scratch a 2 inch wide surface on each side of the panel where the adhesive will be applied. The purpose being to create scratches onto the surface to increase adherence.
- Use again a tack cloth to remove any dust or residue.
- Before applying Sika cleaner, fold “Chix” cloth twice for proper width.
- Apply an even coat onto the treated surface.
- Allow 2 minutes for drying in the case of stainless steel.

Sikaflex 252 Adhesive Sealant Application

- Check Sikaflex 252 adhesive sealant for expiration date.
- Using a “V” shape nozzle, apply Sika bead 1 inch (25 mm) from both lower body panel side edges.

Note : *You only have 15 minutes to install body panel once the adhesive is applied.*

- Insert lower body panel bottom edge under the door and underneath the upper panel and carefully center and align lower body panel side edges with the door fiber glass surface.
- Ideally two persons should perform this installation.
- Lightly compress the body panel along the Sika bead, then compress using a dry erasable marker board brush so as not to scratch or damage the stainless steel surface.
- Fix lower body panel using two rivets.
- Apply masking tape on both lower body panel sides.
- Using a caulking nozzle and “SIKAFLEX 221” adhesive, fill the cavity to seal both body panel sides.
- Wearing surgical gloves, smooth down the joint with your finger.
- Remove masking tape and protective plastic lamination.

6.3 BAGGAGE COMPARTMENT OR REAR SERVICE COMPARTMENT DOOR BODY PANEL

For the removal and installation of baggage compartment or rear service compartment door stainless steel body panel, you will need :

A drill with drill bits;
Pneumatic “Zip gun” type tool;
Razor sharp window scraper or putty knife;

- Open damaged compartment door and unfasten rub rail fixing bolts. Remove rub rail.

- Unfasten bolts and disconnect cable if necessary in order to remove door from vehicle.
- Preferably install the door onto a work surface where it can be solidly fixed.

Door Lower Panel

Door lower panel is riveted only, not glued. If panel needs to be changed, remove fixing rivets using a drill and drill bits. Line up new panel and secure using 6 stainless steel rivets.

Body Panel Removal

- In the following procedure, only the door upper part needs to be changed.

.

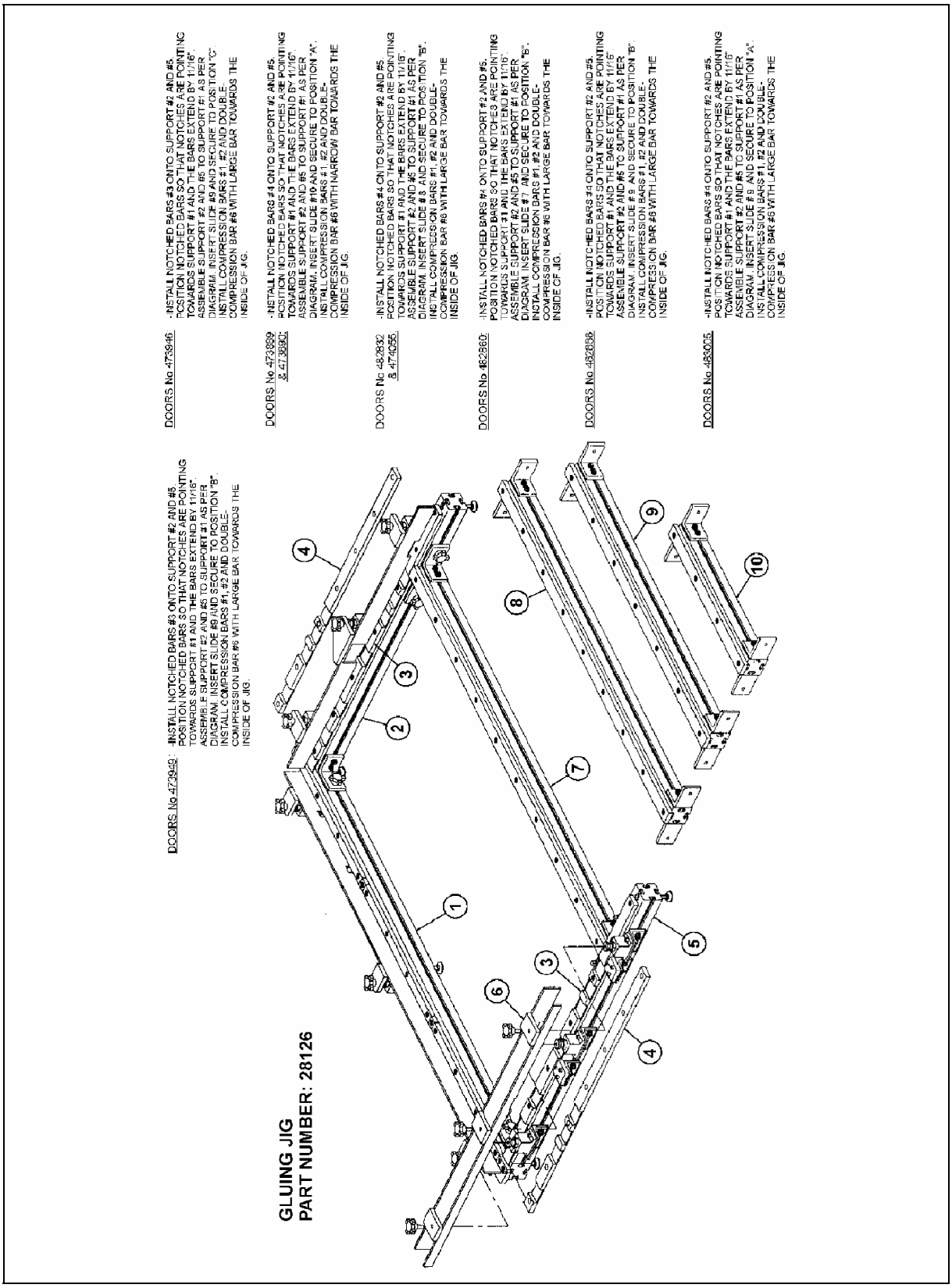

FIGURE 14: GLUING JIG SETUP DIAGRAM

- Using a drill with drill bits, remove the door upper part fixing rivets.
- 9 rivets are located in the door handle opening and 2 at the door upper edge.
- Using the “Zip Gun”, cut Sika bead located ½ inch from the door panel perimeter edge.
- Wearing gloves, goggles and ear plugs, pry loose body panel using a “Zip gun” or lever starting from the door lower part.
- Use a second person equipped with a pair of locking pliers to bend the body panel as you cut the Sika bead. Bend body panel enough to reach around the handle and continue to detach completely the stainless steel body panel from door frame
- Using the window scraper, remove any Sika bead or self adhesive tape residue left on the fiber glass.

Body Panel Preparation

- Using a scratch pad “Scotch Brite”, scratch a 2 inch wide surface on the panel two sides and bottom part where the adhesive will be applied. The purpose being to create scratches onto the surface to increase adherence.
- Use a tack cloth to remove any dust or residue.
- Before applying Sika 205 cleaner, fold “Chix” cloth twice for proper width.
- Apply an even coat onto the treated surface.
- Allow 5 minutes for drying in the case of stainless steel.

Door Frame Preparation

- Using the window scraper, remove any Sika bead residue left on the door frame surface.
- First of all, check Sika 205 cleaner expiration date.
- Before applying Sika cleaner, fold “Chix” cloth twice for proper width. Apply an even coat onto the treated surface.
- Discard waste according to applicable environmental regulations, use dangerous waste containers.
- Allow 2 minutes for drying in the case of stainless steel.

Note: *In the case of baggage compartment door, apply wax paste around handle opening frame and at door frame upper part.*

Gluing Jig Installation

- For best results, it is important that gluing jig installation for baggage and rear service door be performed properly according to part number and dimensions.
- For more information, refer to gluing jig setup diagram (Fig. 14).

Rear Service Door

- Lay down stainless steel body panel into the gluing jig as per setup diagram. Ensure it is lined up and set square with the reference marks.
- Heat Sikaflex 255 adhesive for at least 15 minutes, apply adhesive as per previously removed panel.
- Carefully lay down door metallic frame onto the stainless steel body panel inserting the upper part into the panel curved lip.
- Install compression bars to compress and hold body panel during curing process.
- Once cured, apply masking tape on both body panel sides.
- Using a caulking nozzle and “SIKAFLEX 221” adhesive, fill the cavity to seal both body panel sides.
- Wearing surgical gloves, smooth down the joint with your finger.
- Remove masking tape and protective plastic lamination.

Baggage Compartment Door

- Install gluing jig for a baggage compartment door. Refer to the included setup diagram according to part number and door dimensions.
- Lay down stainless steel body panel into the gluing jig as per setup diagram. Ensure it is lined up and set square with the reference marks.
- Heat Sikaflex 255 adhesive for at least 15 minutes, apply adhesive as per previously removed panel.
- Apply Sika 221 around handle opening frame.

- Carefully lay down door metallic frame onto the stainless steel body panel inserting the upper part into the panel curved lip.
- Carefully flip door frame and body panel over and install 9 rivets in the door handle opening and 2 at door upper part.
- Flip door frame and body panel over again and install compression bars to compress and hold body panel during curing process.
- Once cured, apply masking tape on both body panel sides.
- Using a caulking nozzle and “SIKAFLEX 221” adhesive, fill the cavity to seal both body panel sides.
- Wearing surgical gloves, smooth down the joint with your finger.
- Remove masking tape and protective plastic lamination.

6.4 MTH SIDE PANEL REMOVAL AND INSTALLATION

For the removal and installation of stainless steel side panel, you will need :

Alcohol
Scotchbrite 7446 B
SikaFlex 221
SikaFlex 252
Ciba 8535 Adhesive
Rivets 1/8 (504107)
Screws #10-32x1” (500659)
Blue cloth (682383)
Thinner
Scotch Brite pad COARSE (680617) for the belt sander
Chix cloth

Belt sander
Locking pliers
Orbital sander
Screwdriver
C-clamps 6” to 8”
Waterproof gloves
Conforming jig
Goggles
Straight edge #28241
Drill
Air gun for SikaFlex and Ciba 8535 adhesive.
Go-No-Go jig #28258

Side Panel Removal

- Insert screwdriver into snap-on finishing molding joint. Bend finishing molding enough to be able to fix a pair of locking pliers. Using the pair of locking pliers, pull the stainless steel molding and at the same time gradually cut Sika bead with a sharp knife.

Note: *Be careful not to damage the adjacent surfaces.*

- Using a hammer and punch, drive out rivet shanks from top and bottom finishing molding supports. Use a #11 titanium drill bit to remove rivet heads.
- Use the pair of locking pliers to remove top and bottom finishing molding supports.
- Insert a flat screwdriver between the side panel and the vehicle chassis, in the top left and right corners. Make sure to separate side panel from backers at each end.

Note: *Be careful not to damage the adjacent surfaces.*

- Use the c-clamp to peel the side panel from the back structural panel.
- Use a heat gun and putty knife to remove the dried off epoxy glue Ciba 8535 residue.

Warning: *Make sure that heat gun nozzle tip is at least 4” from surface.*

Because of its great toxicity, care should be taken not to use a buffer or other sanding method for glue removal.

- Check panel horizontal supports for straightness using a straight edge. Take measurements with a ruler.

Note: *Tolerance : 1mm towards the outside and 1.5mm towards the inside (tool #28241).*

Vehicle Surface Preparation

- Inspect all surfaces of the vehicle where the adhesive will be applied. Make sure no primer, masking tape, grease etc. residue is present. Use paint thinner if applicable to remove residue.
- Clean horizontal supports with paint thinner where the adhesive will be applied. Using the arrows as a reference, clean as per picture.

Note: *Change cloth as soon as it becomes soiled. Use two cloths (Use a Chix cloth to apply thinner and a blue cloth to immediately dry surface off before product evaporation.*

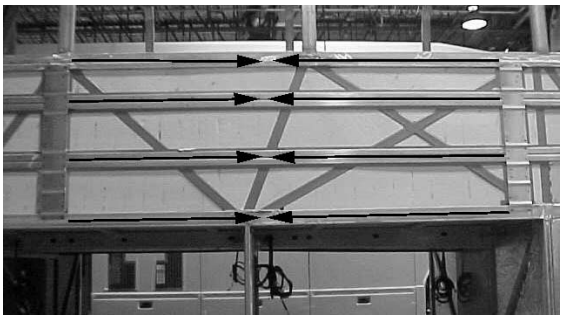

- Clean vertical "backers" with paint thinner.

Note: *Change cloth as soon as it becomes soiled. Use two cloths (Use a Chix cloth to apply thinner and a blue cloth to immediately dry surface off before product evaporation.*

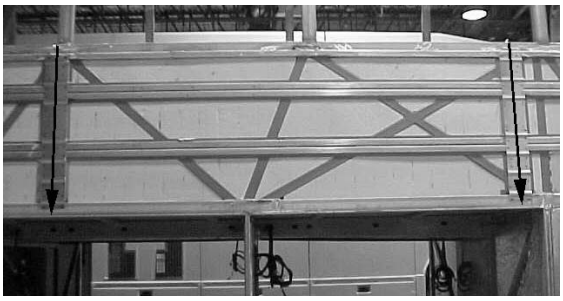

- Use a belt sander with COARSE grit pad to sand top and bottom horizontal tubes as well as horizontal supports.

Note: *Make sure the whole surface is sanded (100%). Use a new belt for each vehicle.*

- Use the orbital sander to sand vertical backers (Scotch Brite grit 7446B) or use a disc grinder with a 2” coarse grit disc. Sand a 1 7/8” to 2 ¼” width surface.

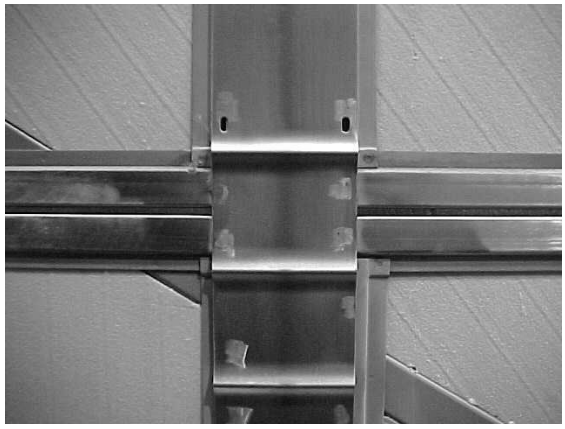

Note: *Make sure to sand each backer side only. Use a new Scotch Brite pad for each vehicle.*

- Use isopropyl alcohol in order to remove any residue from scratching left onto the stainless steel panel. Using the arrows as a reference, clean as per previous pictures.

Note: *Change cloth as soon as it becomes soiled. Use two cloths (Use a Chix cloth to apply thinner and a blue cloth to immediately dry surface off before product evaporation.*

Side Panel Positioning

- Install side panel onto the vehicle, align and center panel with adjacent panels and temporary fix using two 1/8 ‘’ rivets at top (2 for side panels and 3 for engine air intake panels).

Note: *Make sure that side panel is centered or that gap is between 3 and 4.5 mm with adjacent panels.*

- Install conforming jig vertical supports onto the panel and drill holes into the temporary fixed vertical supports.
- Remove vertical supports and side panel.

Vehicle Surface Preparation

- Use isopropyl alcohol in order to remove any residue from scratching left onto the stainless steel panel. Using the arrows as a reference, clean as per picture.

Note: *Change cloth as soon as it becomes soiled. Use two cloths (Use a Chix cloth to apply thinner and a blue cloth to immediately dry surface off before product evaporation.*

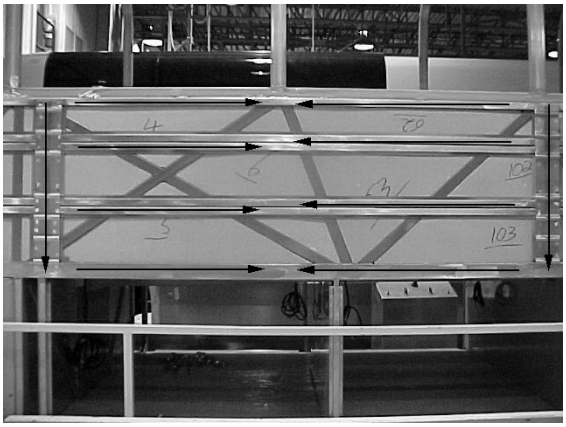

- Clean vertical "backers" with isopropyl alcohol.

Note: *Change cloth as soon as it becomes soiled. Use two cloths (Use a Chix cloth to apply thinner and a blue cloth to immediately dry surface off before product evaporation.*

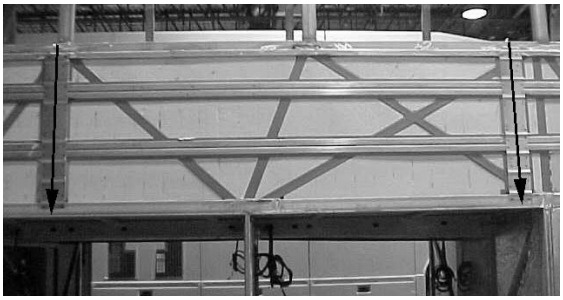

- Install a neoprene foam tape at the center of panel horizontal supports and at each end if needed.

- Repeat treatment with alcohol as per first steps.

Note: *Change cloth as soon as it becomes soiled. Use two cloths (Use a Chix cloth to apply thinner and a blue cloth to immediately dry surface off before product evaporation.*

- Install panel on the workstation.

Note: *Check that new panel is the required one and is free of defects or scratches.*

- Use a tack cloth to remove any dust or residue from the panel thus preventing contamination of glue or prepared surfaces.
- Wear latex gloves and use cloths with isopropyl alcohol in order to remove any dirt or oily film left onto the stainless steel surface.

Note: *Use two cloths (Use a Chix cloth to apply alcohol and a blue cloth to immediately dry surface off before product evaporation).*
Allow sufficient time for product to evaporate.

- Use an orbital sander or belt sander (coarse grit) to scratch contact surfaces where the adhesive will be applied. Scratch the inside of creases by hand using a scratch pad Scrotch Brite.

Note: *Use 7446B grit pad. Use a new Scotch Brite pad for each vehicle.*

- Use isopropyl alcohol in order to remove any residue from scratching left onto the stainless steel panel. Repeat until cloth is clean.

Note: *Use two cloths (Use a Chix cloth to apply alcohol and a blue cloth to immediately dry surface off before product evaporation).*
Allow sufficient time for product to evaporate.

- Install a neoprene foam tape at each side panel end. Make sure foam tape reaches bottom of creases.

Note: *Install neoprene foam tape 1 mm from panel edge.*

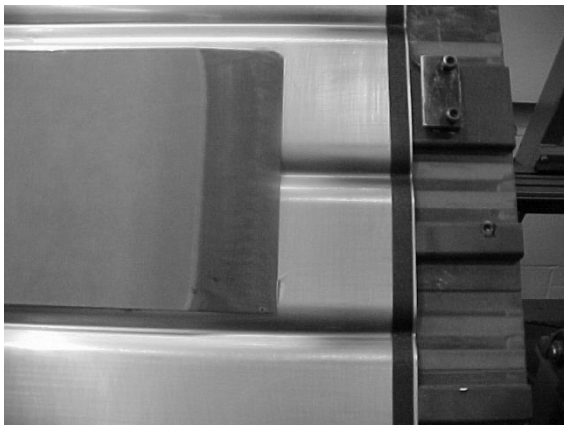

Preparation of Ciba 8535 Epoxy Glue Cartridges

- Before applying glue, heat Ciba glue cartridges to reduce viscosity and speed up process. Make sure glue temperature is correct and you have sufficient cartridges.

Note: *You need about 7 cartridges for a large side panel. Use a constant and controlled source of heat. Maximum temperature is 120 °F.*

- Perforate cartridge tip and install mixing nozzle. Cut mixing nozzle at 3rd notch.
- Insert cartridge into the gun.

Engine Air Intake Panel Installation

To know the time allotted between glue application and final installation; refer to table at the end of paragraph 6.4.

Always check color of glue before applying (charcoal grey). If the color turns black or white during application, remove this portion using a putty knife and clean with alcohol.

- If more than one hour has elapsed between the first cleaning with isopropyl alcohol and the application of glue or if in doubt, clean panel and vehicle surface again using isopropyl alcohol.

Note: *Use two cloths (Use a Chix cloth to apply alcohol and a blue cloth to immediately dry surface off before product evaporation).*
Allow sufficient time for product to evaporate.

- Before applying glue, heed this procedure:

  If a new mixing nozzle is used, install mixing nozzle onto the cartridge and insert into the gun. Take a sample of glue before applying. When changing cartridge without changing the mixing nozzle, take a sample of glue then install mixing nozzle onto the cartridge.

- Apply beads (¼″ minimum dia.) (Ciba 8535) as per picture.

- Seal each vertical "backer" end.

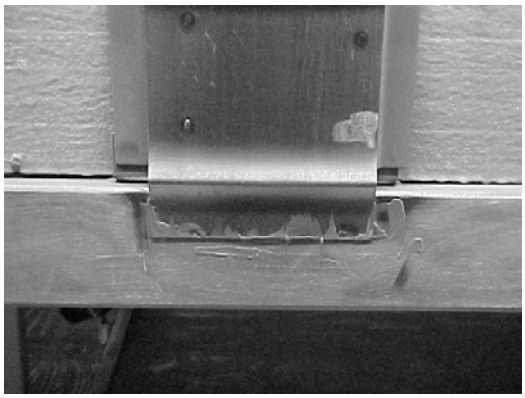

- Seal top and bottom part of vertical backer using Ciba 8535.
- Apply Ciba glue onto the engine air intake panel.

Note: *Check size of bead using go-no-go jig #28258 (bead of glue must touch three sides of jig).*

- Install air intake panel using rivets and conforming jigs.

Side Panel Installation

To know the time allotted between glue application and final installation; refer to table at the end of paragraph 6.4.

Always check color of glue before applying (charcoal grey). If the color turns black or white during application, remove this portion using a putty knife and clean with alcohol.

- If more than one hour has elapsed between the first cleaning with isopropyl alcohol and the application of glue or if in doubt, clean panel and vehicle surface again using isopropyl alcohol.

Note: *Use two cloths (Use a Chix cloth to apply alcohol and a blue cloth to immediately dry surface off before product evaporation).*

Allow sufficient time for product to evaporate.

- Seal each vertical "backer" end.

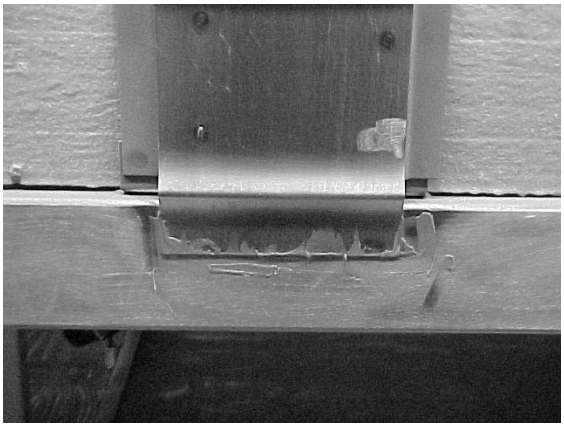

- Seal top and bottom part of vertical backer using Ciba 8535.
- If applicable, apply Ciba 8535 adhesive bead onto the awnings reinforcement plate (minimum height of 3/16″).

MTH W5 ONLY

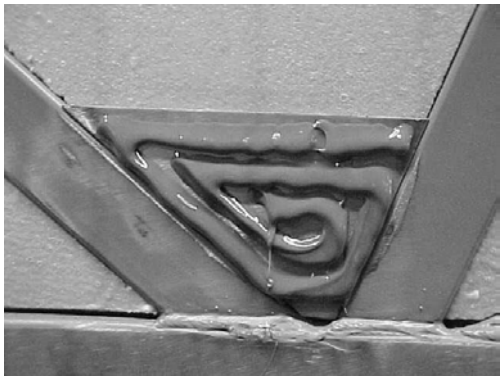

- Apply glue beads onto the side panel. Do not forget to fill the first panel and last panel creases.

Note: *Check size of bead using go-no-go jig #28258 (bead of glue must touch three sides of jig).*

- Apply Ciba 8535 beads onto each horizontal support.

Note: *Check size of bead using go-no-go jig #28258 (bead of glue must touch three sides of jig).*

- Carefully install panel onto the vehicle and hold it in place using the pre-drilled holes and 1/8” rivets. Check positioning using backers.

Note: *Make sure that side panel is centered or that gap is between 3 and 4.5 mm with adjacent panels.*
Do not apply pressure at center of panel when installing.

- Fix conforming jig vertical supports onto the panel using the pre-drilled holes and screws. If needed, use snap-on finishing molding supports as shims.

Note: *28 psi ±2 air pressure and check gap between panels.*

- Install horizontal pressure bars onto the vertical supports. When installing last panel, write down time and date of installation.
- Wait allotted curing period (refer to table).
- Remove conforming jigs. To ensure side panel upper joint watertightness, apply masking tape on side panel near the edge. Use a caulking nozzle and Sikaflex 252 adhesive to seal the joint.

Note: *Clean using Sika 205. Allow 5 minutes minimum for drying.*
Wear surgical gloves and smooth down the joint with your finger.

- Clean excess of Ciba glue in the joints.
- Remove temporary installed 1/8” rivets.
- If the first or last side panel was replaced, the vertical joint must be redone. Apply masking tape on each side of side panel joint. Use a caulking nozzle and grey Sikaflex 221 adhesive to fill the cavity between the panel and vehicle back plate.

Note: *Clean using Sika 205. Allow 5 minutes minimum for drying.*
Wear surgical gloves and smooth down the joint with your finger.

Molding Supports Preparation And Installation

- Using locating jigs, drill 1/8 inch holes and fasten screws to temporary fix molding support.
- In the case of bottom molding support, use a #11 drill bit, drill rivet holes into the molding support every 4 inches.

Note: *Make sure new holes do not fall into previous holes.*

- In the case of top molding support, use a #11 drill bit, drill rivet holes into the molding support every 8 inches.

Note: *Make sure new holes do not fall into previous holes.*

- Remove molding supports and metal burrs.
- Bottom molding support. Apply Sika 205 cleaner on back of molding support and on vehicle surface.

Note: *Allow 5 minutes minimum for drying. Because Sika 205 cleaner can stain stainless steel, make sure to apply locally only.*

- If applicable, apply Sika 221 into engine air intake panel top rivet holes (installed at section 6 point 5.00).
- Top molding support. If applicable, verify the presence of foam tape at bottom of fiber-glass panel. Foam tape prevents friction between top molding and fiberglass.
- Top molding support. Install and rivet.
- Bottom molding support. Apply Sika 221 into the support cavity on the overall length. Install and rivet.
- Apply Sika 205 inside snap-on molding support.

Note: *Allow 5 minutes minimum for drying.*

Snap-On Finishing Moldings Installation

- Apply Sika 205 inside snap-on molding.

Note: *Allow 5 minutes minimum for drying.*

- Apply a 1 foot long Sika 252 adhesive bead at each molding support end and one every 5 feet or so.

Note: *Use a triangular nozzle. Sika bead height must be higher than molding support edges..*

- Install snap-on finishing molding onto molding support.

Note: *Do not press against center of finishing molding when installing, use edges only.*

Note: *When installing a stainless steel panel onto an aluminum structure, you have a maximum of **3 hours** between sanding and the application of glue.*

TABLE OF ALLOTTED CURING PERIODS

(NO HEAT CONFORMING JIGS)

Room Temperature	Conforming Jig Installation Time	Complete stop of vehicle (without moving)	Time before moving vehicle $\pm 10^{o}$F with room temperature	Polishing after the application of adhesive or before vehicle back in operation	Time allotted between glue application and final installation
87°F	4 HRS	8HRS	8HRS	16HRS	25m

77°F	6HRS	12HRS	12HRS	24HRS	45m
72°F	7HRS	14HRS	14HRS	28HRS	50m
67°F	8HRS	16HRS	16HRS	32HRS	1HR
<67°F	*NO APPLICATION OF ADHESIVE IS ALLOWED*				

6.5 LATERAL FIXED WINDOW

Depending on the method chosen for fixed side window removal or installation, you may need:

Drill equipped with a sharp pointed rod into which a small hole was drilled;
Razor sharp window scraper;
Braided windshield wire and a pair of handles;
Gloves, goggles or face shield.

Fixed Window Removal

1st Method

Note *: This method is used only in the case of a regular fixed side window. For the fixed upper portion of awning or sliding windows, you must use method number 2.*

- Apply a sticky plastic film onto all of window outside surface for safety reason.
- Using a drill equipped with the special sharp pointed rod, drill through the window seal into one of the bottom corners, from a 30º angle with reference to the vehicle.
- This procedure requires accuracy and it is possible not to succeed on the first attempt. From the inside of vehicle, a second person ensures the rod passes through.
- Remove the rod, thread the wire into the small hole. Reinsert the rod and the wire into the hole far enough so that the person inside the vehicle can pull the rod using a pair of pliers.
- Attach the wire ends to the specially designed handles.
- Pull in turn from the inside and the outside of vehicle to gradually cut the Sika bead on the window perimeter.
- When you reach top corner, detach wire from the outside handle, secure it to a fish wire or rod and thread it underneath the aluminum molding behind the rivets.
- Detach wire from fish wire and continue cutting using the handle.
- Cut Sika bead until you come back to starting point, then you can remove the window by carefully pushing it out from the inside of vehicle.

2nd Method

- Apply a sticky plastic film onto all of window outside surface.
- To limit as much damage as possible, remove any interior molding in the way. Install a plastic film on the window interior surface and secure using masking tape onto all of window perimeter.

Note : *Do not stretch plastic film and leave enough play to be able to push window out without tearing the plastic film.*

- Using a ball peen hammer, hit one of the window bottom corners from the **outside**.
- Carefully push window out and lift it up sufficiently to separate it from the aluminum molding.
- Attach the windshield wire to a fish wire and thread it underneath the aluminum molding behind the rivets.
- Detach wire from fish wire and continue cutting using the handle.
- Make a notch at each window top corner to make sure you pass underneath the remaining pieces of glass.

- Remove the aluminum molding and clean up the frame using the window scraper.
- Before starting window frame treatment, make sure window frame is truly clean and free of pieces of glass.
- First of all, check Sika 205 cleaner expiration date.
- Before applying Sika cleaner, fold “Chix” cloth twice for proper width.
- Apply an even coat onto the window frame and allow to dry for 10 minutes.
- Discard waste according to applicable environmental regulations, use dangerous waste containers.
- Apply masking tape before applying Sika glue to protect paint and adjacent window during surface treatment.

Window Surface Treatment

- Use “Spray Away” or “ESSEX GC-800” window cleaner (Prévost #683926) around window perimeter and edges to remove any oily film while inspecting for damages.
- Wipe clean using a dry cloth.
- Repeat previous step using a second dry cloth to ensure window is truly clean and allow to dry for 1 minute.
- Install two stops into the aluminum extrusion one inch from each window edge.

Preparation Of Window When Using Sikatack Ultrafast 2 Adhesive

- Check “SIKA 205” product expiration date.
- Before applying Sika cleaner, fold “Chix” cloth twice for proper width.
- Apply an even coat onto the window casement and allow to dry for 2 minutes.
- Apply Sika 206 G+P primer onto the window casement and allow to dry for 10 minutes.

Fixed Side Window Installation Using Sikatack Ultrafast 2

- Use “Sikatack Ultrafast 2” adhesive.
- Check product expiration date.
- Always heat adhesive first for 15 minutes in an oven.

Note : *You only have 10 minutes to install window once the SIKA ULTRAFAST 2 product is applied.*

- Using a triangular nozzle, apply a Sikatack Ultrafast 2 bead on all of window frame perimeter. Apply a second bead on frame top.
- Two persons may then install window by inserting the top part into the aluminum extrusion and then carefully rest the window casement against the frame aligning the bottom part.
- Install two stops into the aluminum extrusion one inch from each window edge.

Window Temporary Fixing Using Sikatack Ultrafast 2 Adhesive

1st Method

- From the outside, lean a straight edge against each window side to guide the person in charge of the suction jig installation. The window must be on the same level than the adjacent one(s).
- From the inside, remove finishing molding, install the cups onto the glass surface, 6 inches from bottom of window and screw down the jig ends onto the frame metallic structure to adjust depth.

Note *: The person outside the vehicle must guide throughout this procedure.*

- Finally, maximum watertightness is achieved when you notice the bead running over towards the inside.
- Allow drying for at least 6 hours.

2nd Method

- From the outside, use a ram or a jack equipped with a padded surface at one end and secured to the other end.
- This equipment must be easily adjustable and compress the window against the frame.
- Lean the padded surface 6 inches from the bottom of window, use a straight edge and adjust the equipment so that the window is level with the adjacent one(s).
- Finally, maximum watertightness is achieved when you notice the bead running over towards the inside.

- Allow drying for at least 6 hours.

6.6 DRIVER'S WINDOW AND UPPER LATERAL WINDOW

For the removal of driver's window or upper lateral window, you will need :

Pneumatic «Zip gun» type tool;
Razor sharp window scraper;
"Olfa" knife;
Face shield.

- In the case of driver's window only, open front service compartment door.
- Mark the position of the driver's window for future reference.
- From inside of vehicle, cut Sika bead around window perimeter using a "Zip gun" while another person hold the window from the outside.

Note: *Wear ear plugs during this operation.*

- Then, move outside of vehicle and cut Sika bead to free window while somebody else hold the window from the inside.
- Carefully remove window from frame, ask for help if needed.
- Using a razor sharp window scraper, remove from window frame Sika bead and double-face self adhesive tape residue.
- First of all, check Sika 205 cleaner expiration date.
- Before applying Sika cleaner, fold "Chix" cloth twice for proper width.
- Apply an even coat onto the inside of window frame and allow to dry for 2 minutes (maximum 2 hours).
- Discard waste according to applicable environmental regulations, use dangerous waste containers.
- Apply masking tape before applying Sika glue to protect paint and adjacent window during surface treatment.

Window surface treatment

- Use Spray Away or "ESSEX GC-800" window cleaner (Prévost #683926) around window perimeter and edges to remove any oily film while inspecting for damages.
- Wipe clean using a dry cloth.
- Repeat previous step using a second dry cloth to ensure window is truly clean and allow to dry for 1 minute.
- Check "SIKA 205" product expiration date.
- Before applying Sika cleaner, fold "Chix" cloth twice for proper width.
- Apply an even coat onto the inside of window frame and allow to dry for 2 minutes.

Driver's Window Installation

- Use "Sikatack Ultrafast 2" adhesive.
- Check product expiration date.
- Always heat adhesive first for 15 minutes in an oven.

Note : *You only have 10 minutes to install window once the SIKA ULTRAFAST 2 product is applied.*

- Apply a double-face self adhesive tape 1/8 by ¼ inch inside window frame to prevent glue from reaching the inside of the vehicle and to mechanically hold the window until the adhesive is cured. Peel the back from the tape.
- To support the window, position two "Quick Grip" type pliers at the base of the frame.
- Using the caulking nozzle, seal the top edge with SIKA ULTRAFAST 2.
- Change for a triangular nozzle with a 15 mm opening, apply a Sika bead on all 4 window edges beside the double-face self adhesive tape.
- Center and align the window base using the two pliers while pressing firmly the window perimeter against the frame.
- If this has not been done already, apply masking tape near the window edge adjacent to front face before doing finishing joint. Using a caulking nozzle and Sika Utrafast 2 adhesive, complete a finishing joint and scrape the excess with a plastic scraper.

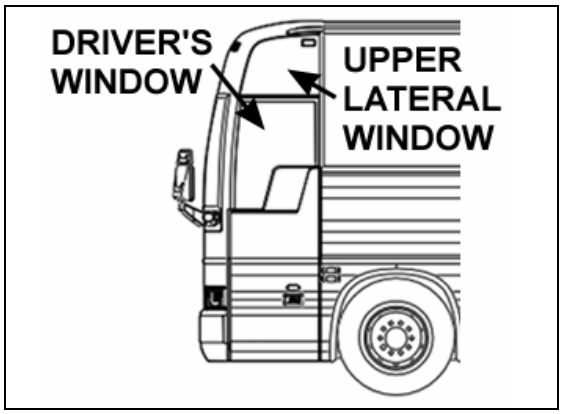

FIGURE 15: DRIVER'S OR UPPER LATERAL WINDOW

- Complete a second finishing joint at the window top making sure there are no cavity.
- Carefully remove masking tape.
- Wet "Ultrafast 2" adhesive every 15-20 minutes using water to accelerate the curing process.
- Do not move the vehicle for 2 hours.

Upper Lateral Window Installation

- Use "Sikatack Ultrafast 2" adhesive.
- Check product expiration date.
- Always heat adhesive first for 15 minutes in an oven.

Note : *You only have 10 minutes to install window once the SIKA ULTRAFAST 2 product is applied.*

- Apply a double-face self adhesive tape 1/8 by ¼ inch inside window frame to prevent glue from reaching the inside of the vehicle and to mechanically hold the window until the adhesive is cured. Peel the back from the tape.
- Remove the lens from the clearance light.
- Change for a triangular nozzle with a 15 mm opening, apply a Sika bead on all 4 window edges beside the double-face self adhesive tape.
- Center the window while pressing firmly the window perimeter against the frame.
- If this has not been done already, apply masking tape before doing finishing joint. Using a caulking nozzle and Sika Utrafast 2 adhesive, complete a finishing joint and scrape the excess with a plastic scraper.
- Carefully remove masking tape.
- Wet "Ultrafast 2" adhesive every 15-20 minutes using water to accelerate the curing process.
- Do not move the vehicle for 2 hours.

6.7 ENGINE COMPARTMENT DOOR BODY PANEL

For the removal of engine compartment door body panel, you will need :

A pneumatic "Zip gun" type tool,
Razor sharp window scraper to remove Sika adhesive residue,
A pair of locking pliers,
And isopropyl alcohol.

- Remove damaged engine compartment door from vehicle (refer to Maintenance Manual, in this section).
- Install the damaged door onto an appropriate support.
- Wearing gloves, goggles and ear plugs, pry loose body panel using a "Zip gun" or lever starting from the edge opposite the curved side.

Caution: *Do not damage painted surface.*

- Use the "Zip gun" to detach completely the stainless steel body panel from door frame.
- Use a second person equipped with a pair of locking pliers to pull the body panel as you cut the Sika bead.

Warning: *Be very careful when pulling the body panel, somebody could get hurt if the body panel suddenly detach from the door surface without notice.*

Note: *Refer to figure 16 for more information on procedure.*

Door Frame Preparation

- Using the window scraper, remove any Sika bead or self adhesive tape residue left on the fiber glass surface.
- First of all, check Sika 205 cleaner expiration date.

- Before applying Sika cleaner, fold “Chix” cloth twice for proper width. Apply an even coat onto the treated surface.

Note : *Make sure not to get any Sika cleaner onto the surrounding painted surfaces.*

- Discard waste according to applicable environmental regulations, use dangerous waste containers.
- Allow 2 minutes for drying in the case of fiber glass (maximum 2 hours).

Body Panel Preparation

- Check that new body panel is the required one and is free of defects or scratches.
- Wear latex gloves and use a “Chix” cloth with isopropyl alcohol in order to remove any dirt or oily film left onto the stainless steel surface.

Note : *Apply evenly around the perimeter of the panel. Use two clothes, first one applies product while second one immediately dries surface off before product evaporation.*

- Then, using a scratch pad “Scotch Brite”, scratch the perimeter of door where the adhesive will be applied.

Note : *It is important to support underneath the curved surface so as not to change the angle of the body panel and therefore prevent deformation.*

- Use a tack cloth to remove any dust or residue.
- Apply an even coat of Sika cleaner onto the treated surface and allow 2 minutes (max. 2 hours) for drying in the case of stainless steel.
- Refer to figure 15 and apply a double-face self adhesive tape 1/16 by ½ inch.
- Always leave a length of self adhesive tape on each side of the body panel, sufficient enough to be able to peel the back from the tape when installing the body panel.

Sikaflex 221 Adhesive Application

- Use a “V” shape nozzle, cut the tip and apply Sika bead ¾ inch (15 mm) from double-face self adhesive tape.
- Before applying body panel, draw a line onto the door fiber glass surface, 3 mm from bottom of body panel curved side edge.

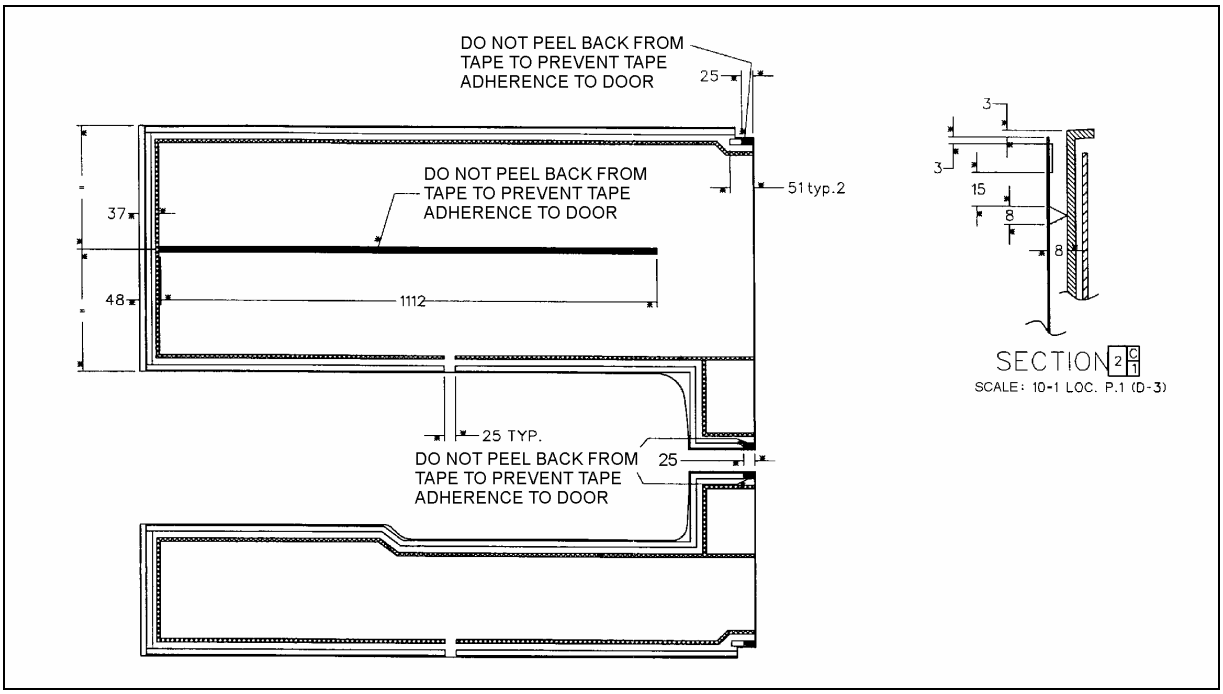

FIGURE 16: ENGINE COMPARTMENT DOOR BODY PANEL INSTALLATION

- Ideally two persons should perform this installation.
- Carefully center and align body panel with the line located 3 mm from bottom while the second person keep the self adhesive tape extremities outside the body panel.
- Peel the back from the self adhesive tape located underneath the curved side and fix the body panel using the special positioning pliers.
- Once the curved side edge is aligned with the line located 3 mm from bottom, lightly compress the body panel along the double-face self adhesive tape starting from the top towards the bottom, peeling the back from the tape at the same time.
- Repeat for each body panel side.
- Finally, compress using a dry erasable marker board brush so as not to scratch or damage the stainless steel surface.

7. ENTRANCE DOOR

7.1 COACH ENTRANCE DOOR

An air operated “sedan type” entrance door, with an air door cylinder and damper assembly are installed under the right hand dash. The opening and closing door speed cycle is adjustable by a damper mounted in parallel with the door cylinder on the door hinge (Fig. 17). Door activation is controlled by a relay panel, located near the defroster and wiper motors. The accessory air reservoir supplies air to this system.

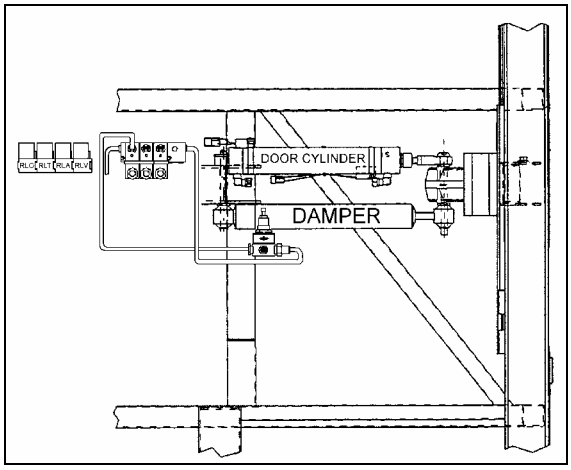

FIGURE 17: DOOR CYLINDER AND DAMPER

The door is held in the closed position during coach operation by a two air cylinder locking mechanisms (Fig. 18). Air cylinders with return spring in the cylinder body are used. Air cylinders are controlled by an electrically

operated solenoid valve energized by a rocker switch located under the right hand dashboard.

To open the door, initial movement of the rocker switch de-energizes the air lock solenoid valve, venting the door locking cylinders. The return locking spring pulls the door lock away from the latch, unlocking the door. Door movement starts only when pressure in the central air door lock is below 10 psi. The “air cylinder open solenoid valve” opens and allows air to flow to the door cylinder, “the air cylinder close solenoid valve” exhausts air from the rod side of the cylinder.

To close the door, initial movement of the switch energizes the “air cylinder close solenoid valve” and air flows to the cylinder by its rod side port. The “air cylinder open solenoid valve” exhausts air from cylinder. When entrance door latch is grounded with the door frame, the air lock solenoid valve is de-energized and loads the door lock cylinders. The cylinder moves the door lock in a position which engages a latch on the entrance door, holding the door positively closed.
Emergency exit valve, which opens the air valve circuit should be used only in emergencies, or when the door control system does not function properly.

Refer to the air system schematic diagram annexed at the end of section 12, “Brakes” and to page 22 of the wiring diagram.

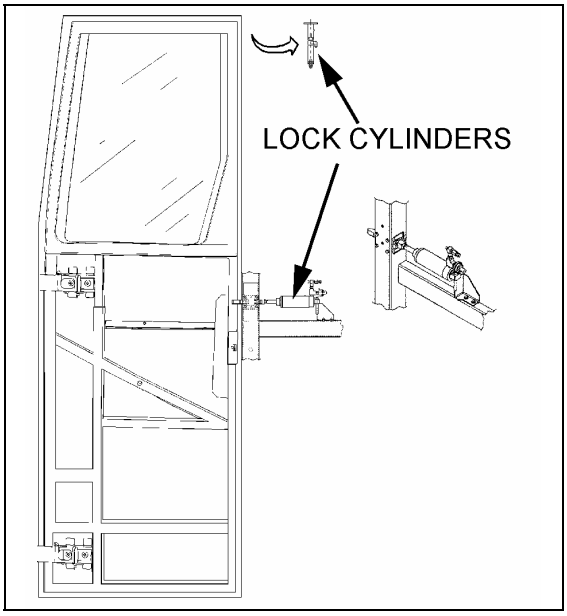

FIGURE 18: COACH ENTRANCE DOOR

7.1.1 Operation

The air-operated door is controlled from inside the coach by two push-button switches located on the R.H. dashboard.

Opening and closing of the door from outside the coach is accomplished by a momentary toggle switch located near the coach model nameplate (Fig. 19).

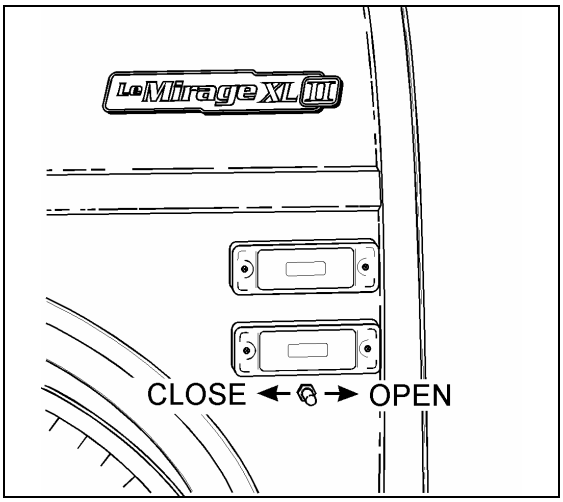

FIGURE 19: ENTRANCE DOOR CONTROL SWITCH

To close the door, the switch must be pushed towards the rear of the coach and held in position until the door has completed its movement.

To open the door, the switch must be pushed towards the front of the coach and held in position. When the door reaches the fully opened position, the system will keep pressure in the cylinder locking the door in that position. The door can be stopped in any position by releasing the switch. The door is not locked in position when not fully opened or closed.

If the door has been locked with the key, a lever on the door can be moved to unlock.

7.1.2 Emergency Exit Valves

From inside the vehicle, an emergency exit valve located near the door on the dash panel, releases the pressure from the lock cylinder. From the exterior, an emergency exit valve located in the front service compartment, also releases the air from the lock cylinder.

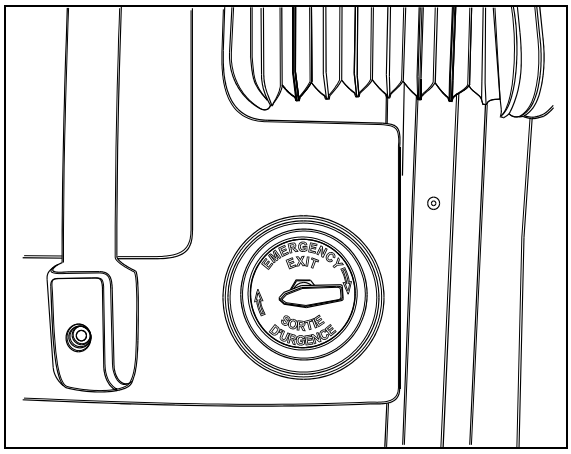

FIGURE 20: EMERGENCY EXIT VALVE 18321

Without Air and/or Without Electricity
If the air pressure drops while the coach has or hasn't any electricity, the spring loaded cylinders will unlatch the door. In such a case, unlock the door by moving the lever on the door or by using the key, then open the door manually.

With Air but Without Electricity
From inside the vehicle, turn the emergency exit valve to the "UNLOCK" position. Move the lever. From the exterior, turn the emergency exit valve to the "UNLOCK" position. Open the door. Close it, lock with the key and reset the outside emergency exit valve to the "NORMAL" position.

7.1.3 Door Cycle Speed Adjustment

To do any adjustment, remove the two panels located next to the door hinge, as well as the door's upper hinge control.

Caution: *It is important to make sure that damper does not reach end of stroke when door is completely closed or opened. The door cylinder must stop the door on opening. Screw or unscrew rod end to adjust if necessary.*

To adjust opening and closing cycle speed on damper (Fig. 21):

1. Remove the damper from the vehicle and hold it vertically with the lower eye or pin attachment in a vice. Use clamp plates to prevent damage.
2. Fully close the damper while turning the dust cap or piston rod slowly CCW until it is felt that the cams of the adjusting nut engage in the recesses of the foot valve assembly (Fig. 21).

Note: *In figure 21, if there is an indentation (B) in the dust cap (C) and the cover shows two holes (A), the damper is fitted with a bump rubber (D). If so, fully extend the damper and insert a round bar or screwdriver through the holes. Push the bump rubber down and remove. Remove the split plastic collar (E) (if fitted) from the piston rod.*

3. The damper may have already been adjusted. Therefore check whether the damper is adjusted or not by keeping it closed and gently turning further CCW, counting at the same time the half-turns until a stop is felt. Stop turning and do not force.
4. While keeping the damper closed, make two CW half-turns. In case of prior adjustment, add the number of half-turns previously counted. The total range is about five half-turns. Pull the damper out vertically without turning for at least 3/8" (1cm) to disengage the adjusting mechanism. The dust cap or piston rod may now be turned freely.

Note: *Where a bump rubber was installed, refit same inside the dust cap and by fully closing the damper, the rubber will seat again at top of the dust cap. Refit the split plastic collar E (Fig. 21)*

5. The damper can now be refitted in the vehicle.
6. Reinstall panels and entrance door hinge cover.

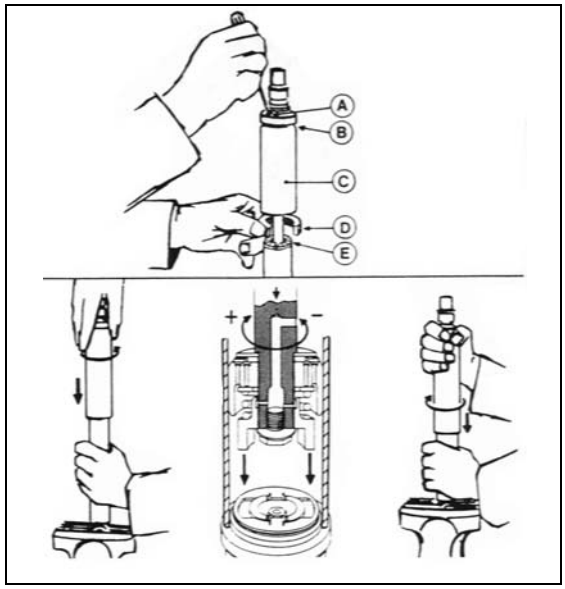

FIGURE 21: DAMPER

7.1.4 Horizontal and Vertical Adjustment

Before attempting to correct any door operating problem by adjusting any part of the air cylinder assembly, first perform the following mechanical checks and procedure.
Check around the perimeter of the door for binding. If any binding is found, adjust as follows:

1. Remove the screws and the plastic molding covering each of the hinges.

Note: *Ask an assistant to help you to perform the following adjustments.*

2. Remove the Allen button head screw and the washer retaining the rod end with bearing to the upper hinge. See figure 22.
3. Support the door with a wooden block and a hydraulic jack.
4. Loosen the horizontal bolts retaining the door to the hinges. Adjust the door horizontally and vertically with the jack. Tighten the bolts to 30-36 ft-lbf (40-50 N•m). Remove the jack and the wooden block.

Caution: *Make sure the front side door does not interfere with the exterior panel.*

5. Pull and fasten the rod end to the hinge with the washer and the button screw.
6. Screw the plastic moldings covering the hinges.

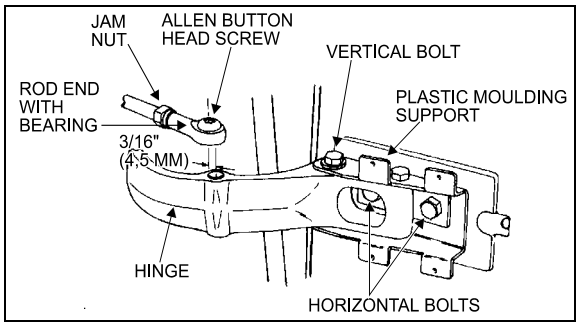

FIGURE 22: UPPER DOOR HINGE 18058

7.1.5 Seal Compression Adjustment

1. Turn the emergency exit valve to the “UNLOCK” position and close the door.
2. From the outside of vehicle, insert a straight edge in the gap along the door outside perimeter. Measure the distance between the door frame and the door outside surface at the door four corners (refer to figure 23).

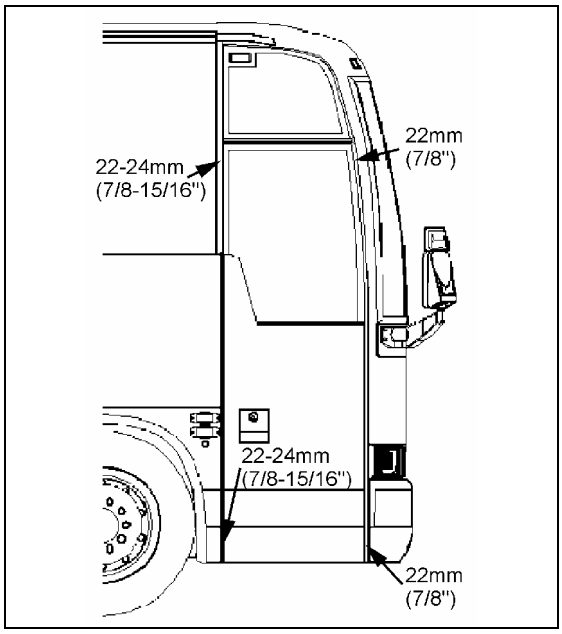

FIGURE 23: SEAL COMPRESSION ADJUSTMENT

Note: *The front measurements are the most important. If required, ask an assistant to help you to perform the following adjustments.*

3. If required loosen the bolts retaining the door to the hinges. Adjust the bolts to obtain the proper seal compression.

7.1.6 Door Seal Replacement

1. Inspect the seal; if cracked or torn, it must be replaced:
2. Remove the old seal and with a sharp edge knife, scrape tape left on the fiberglass door surface.
3. Sand the surface of the door where a new seal will be applied with 240 grit sandpaper.
4. Clean the surface with alcohol.

Caution: *Wear rubber gloves and do not smoke when cleaning.*

5. Peel of protective paper from the seal. Position the seal flush with the top, sides and lower edges of the door.
6. Progress slowly all around the door.
7. Cut the seal and glue both ends with LOCTITE 414 glue.

8. To assure bonding, press a small roller on top of the new seal.

7.1.7 Troubleshooting

SYMPTOM	PROBABLE CAUSE	REMEDY
DOOR WILL NOT OPEN FROM EXTERIOR SWITCH.	Manual door locks engaged.	Release manual door locks.
	Upper and lower solenoid locks do not disengage.	Check voltage at solenoid locks when door is open. If the voltage is 24 volts then replace solenoid #641217. Else, check circuit power.
	Relay module do not receive current.	Reset breaker "ON" or check batteries power supply.
	Opening solenoid door does not receive current.	Check voltage at opening solenoid door. If the voltage is 24 volts then replace it. Else replace control relay.
	Switch malfunction.	Replace switch.
DOOR WILL NOT CLOSE FROM EXTERIOR SWITCH.	Switch malfunction.	Replace switch.
	Solenoid failure.	Check voltage at solenoid. If the voltage is 24 volts then replace solenoid. Else replace control relay.
DOOR WILL NOT OPEN FROM INTERIOR SWITCH.	Manual door locks engaged.	Release manual door locks (open position) from vehicle exterior.
	Upper and lower solenoid locks do not disengage.	Check voltage at solenoid locks when door is open. If the voltage is 24 volts then replace solenoid #641217. Else, check circuit power and replace control relay.
	Module relay does not receive electric current.	Reset breaker "ON" or check batteries power supply.
	Door opening solenoid does not receive current.	Check voltage at door opening solenoid. If the voltage is 24 volts then replace it. Else replace control relay.
	Switch malfunction.	Replace switch.
	Upper lock stays engaged	Lubricate upper lock assembly. Check wear and replace parts if necessary.
DOOR WILL NOT CLOSE FROM INTERIOR SWITCH.	Switch malfunction.	Replace switch.
	Door closing solenoid does not receive electric current.	Check voltage at door closing solenoid. If the voltage is 24 volts then replace it. Else replace control relay.
DOOR WILL NOT OPEN AFTER DRAINING AIR FROM SYSTEM BY EMERGENCY VALVE(S).	Manual door locks engaged.	Release manual door locks (open position) from vehicle exterior.
	Damper cylinder blocks the door.	Adjust or replace damper cylinder.
	The upper lock blocks the door.	Adjust upper lock. Lubricate upper latch bolt. Adjust upper latch height.
DOOR LOCKS STAY ENGAGED WHEN DOOR IS OPEN.	Power supply is cut at solenoid.	Place switch in open position.
	Lock solenoid does not disengage.	Check voltage at solenoid lock when door is OPEN. If the voltage is 24 volts then replace solenoid #641217. Else, check circuit power and replace control relay.
DOOR DO NOT LOCK WHEN DOOR IS CLOSED.	Emergency valve is open.	Close emergency valve.
	Lock solenoid stays electrified.	Check latch bolt ground on door frame. If needed clean locks for better contact. Check ground circuit.
	Lock solenoid works in reverse.	Reverse air hoses at solenoid locks.
	Relay does not function.	Replace relay.

7.1.8 Lubrication

Part	Lubricant	Frequency
Latches Upper door catch Door cylinder rod end with bearing grease fitting	Low temperature grease	Every six months
Door locking mechanism	White grease	Every six months
Key hole Damper pins Hinges	Low viscosity oil	Every six months

7.2 ENTRANCE DOOR (MTH)

There are three ways of unlocking the entrance door from the inside of vehicle. The two first consist in actuating the rocker switch on the dashboard, but this last operation will also unlock the baggage compartments. Finally, you can unlock the door by sliding its lock lever to the left. If the orange tab on the door lock lever is visible, the door is unlocked.

You may lock/unlock the entrance door from the outside with the lock key provided with the vehicle. Turn key CCW to lock and CW to unlock the entrance door.

7.2.1 Keyless entry system

With this system, you can lock or unlock the entrance door as well as the baggage and service compartment doors. The keyboard is located below the entrance door handle. The module is pre-programmed by the manufacturer and this code can not be deleted. Moreover, you can program your own entry code. Refer to the “Owner’s Manual” for instructions on how to program your own entry code.

When you use the keyless entry system, the keyboard and stepwell lights illuminate. Do not push the buttons with a key, pencil or any other hard object as it could damage the buttons.

Although each button is provided with two digits separated by a vertical line, there is only one contact per button. Always press the center of the button (between the two digits, on the vertical line).

If you let more than five seconds pass between each button press, the system shuts down, and you have to enter your code again. If the keyless entry system does not work properly, use the key to lock or unlock entrance or compartment doors. To know more about the keyless system, refer to the “Owner’s Manual”.

Note: *You must unlock the entrance door before you unlock with the appropriate key any baggage or service compartment doors.*

7.2.2 Door adjustment

Check around the perimeter of the door for binding. If any binding is found, adjust as follows:

7.2.3 Horizontal and Vertical Adjustments

1. Remove the screws and the plastic molding covering each of the hinges.

Note: *Ask an assistant to help you to perform the following adjustments.*

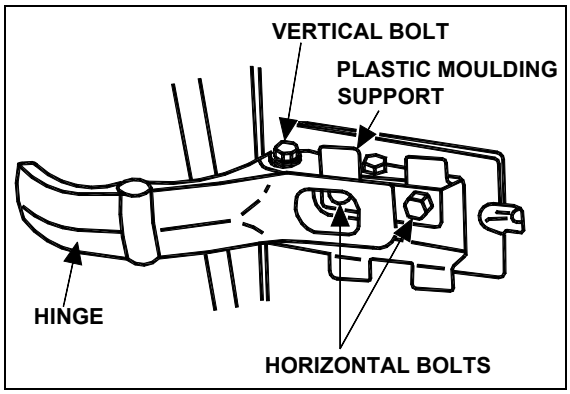

FIGURE 24: ENTRANCE DOOR (MTH) 18058

2. Support the door with a wooden block and a hydraulic jack.
3. Loosen the horizontal bolts retaining the door to the hinges. Adjust the door horizontally and vertically with the jack. Tighten the bolts to 30-36 ft-lbf (40-50 N•m). Remove the jack and the wooden block.
4. Check door fit.
5. Using the screws, fasten the plastic trim to cover the hinges.

7.2.4 Seal Compression Adjustment

1. Close the door, from the outside of vehicle, insert a straight edge in the gap along the door outside perimeter. Measure the distance between the door frame and the door outside surface at the door four corners (refer to figure 23).

Note: *The front measurements are the most important. If required, ask an assistant to help you to perform the following adjustments.*

2. If required loosen the bolts retaining the door to the hinges. Adjust the bolts to obtain the proper seal compression.

7.2.5 Door Seal Replacement

1. Inspect the seal; if cracked or torn, it must be replaced:
2. Remove the old seal and with a sharp edge knife, scrape tape left on the fiberglass door surface.
3. Sand the surface of the door where a new seal will be applied with 240 grit sandpaper.
4. Clean the surface with alcohol.

Caution: *Wear rubber gloves and do not smoke when cleaning.*

5. Peel of protective paper from the seal. Position the seal flush with the top, sides and lower edges of the door.
6. Progress slowly all around the door.
7. Cut the seal and glue both ends with LOCTITE 414 glue.
8. To assure bonding, press a small roller on top of the new seal.

7.2.6 Door Lubrication

Part	Lubricant	Frequency
Latches Upper door catch	Low temperature grease	Every six months
Door locking mechanism	White grease	Every six months
Key hole Hinges	Low viscosity oil	Every six months

7.2.7 Door Latch mechanism

Generally, when the latch mechanism malfunctions, a number of causes may be responsible for this situation. No single procedure will correct this situation. It is best to remove the protective cover and to look for binding, used or bent parts. Operate the latch mechanism and try to find where any binding occurs. Replacing a part or slightly bending a rod should be enough. Remember, having a global understanding of the mechanical activity will generally lead you to the cause of the problem, and ultimately to an easy repair.

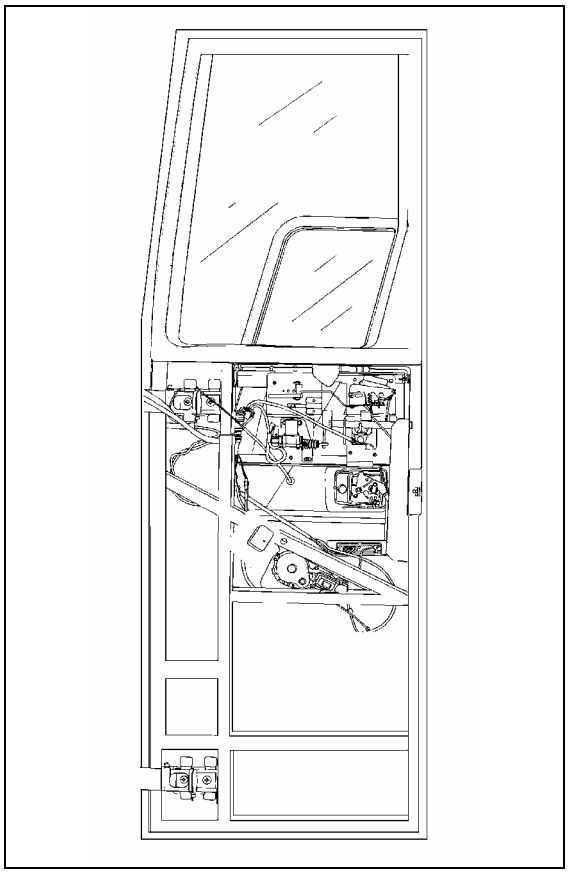

FIGURE 25: ENTRANCE DOOR (MTH, TYPICAL)

8. BUMPER REMOVAL AND INSTALLATION

8.1 FRONT BUMPER

The front bumper is hinged to give access to the spare wheel and tire compartment. Pull the handle forwards to open the spare wheel and tire compartment. Bumper must first be tilted down before its removal. Two people are required to remove and install the front bumper. Safely support the bumper and remove the two bolts on each bumper side to separate the bumper from the spare wheel compartment door. To install bumper, reverse the removal procedure.

Warning: *Front bumper is heavy. Use proper lifting equipment to support the bumper during the removal and installation operations to avoid personal injury.*

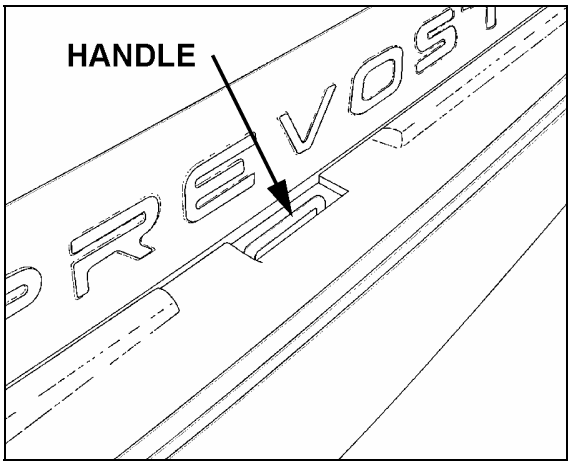

FIGURE 26: FRONT BUMPER HANDLE

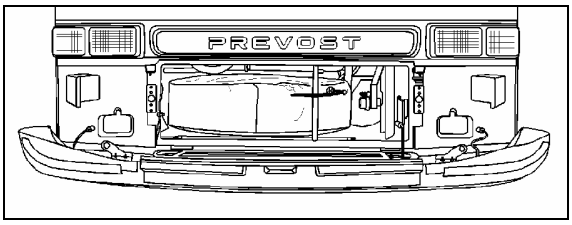

FIGURE 27: FRONT BUMPER

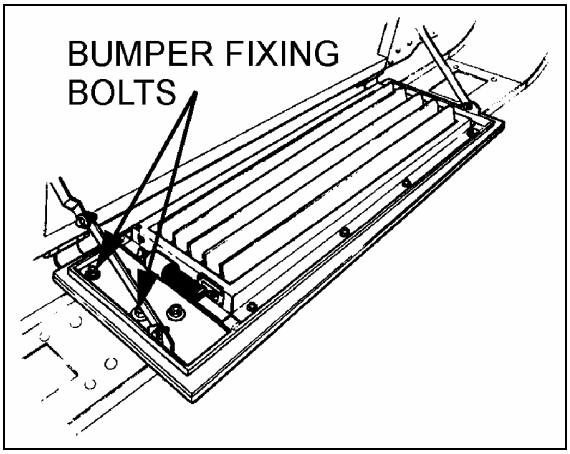

FIGURE 28: FRONT BUMPER REMOVAL

8.2 REAR BUMPER REMOVAL

MTH and coach model rear bumpers are very similar, so is their removal and installation.

1. Remove three bolts on each side holding bumper to vehicle and remove bumper.
2. To install bumper, reverse the procedure.

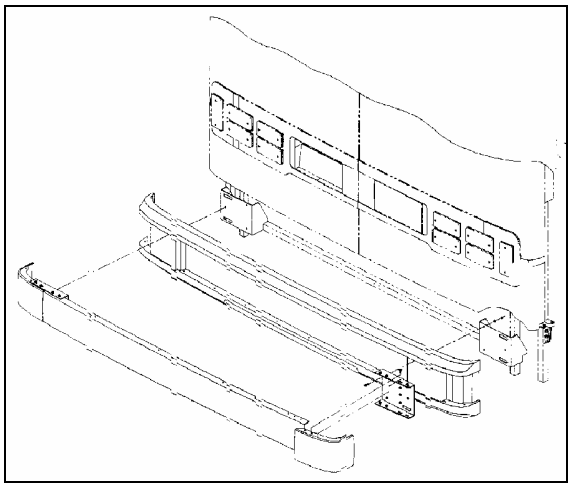

FIGURE 29: REAR BUMPER

9. DRIVER'S OR ENTRANCE DOOR POWER WINDOW

Driver's and entrance door power windows are similar, only the door opening mechanism is different. If the window or regulator is defective, it must be replaced. The following instructions refer to figure 30 or 31:

9.1 DRIVER'S POWER WINDOW

9.1.1 Window Removal and Installation

1. Open the door and remove the door finishing panel.
2. Remove the screws holding the window to the lifting mechanism. Move aside the holding plate.
3. Lower the window completely to detach from the opening.
4. Reverse the procedure to install.

9.1.2 Regulator Removal and installation

1. Open the door and remove the door finishing panel.
2. Remove the screws holding the window to the lifting mechanism. Move aside the holding plate.
3. Unfasten the two bolts fixing the regulator assembly. Disconnect connector from regulator.
4. Reverse the procedure to reinstall.

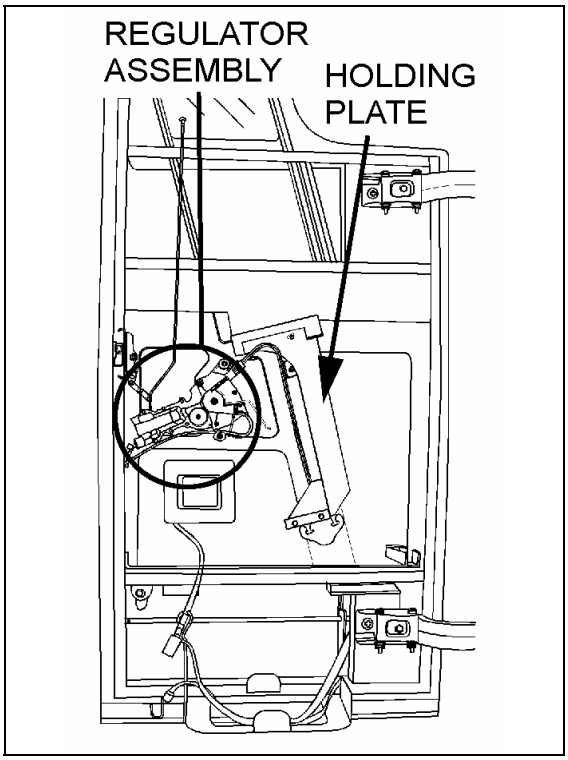

FIGURE 30: DRIVER'S POWER WINDOW

9.2 ENTRANCE DOOR POWER WINDOW

9.2.1 Window Removal and Installation

1. Open the door and remove the door finishing panel.
2. Remove the four bolts fixing the entrance door locking mechanism support to the door.
3. Remove the screws holding the window to the lifting mechanism. Move aside the holding plate.
4. Remove the assembly by slipping it under the vehicle structural members.
5. Lower the window completely to detach from the opening.
6. Reverse the procedure to reinstall.

9.2.2 Regulator Removal and Installation

1. Open the door and remove the door finishing panel.
2. Remove the screws holding the window to the lifting mechanism. Move aside the holding plate.
3. Unfasten the two bolts fixing the regulator assembly. Disconnect connector from regulator.
4. Remove the regulator assembly by slipping it under the vehicle structural members.
5. Reverse the procedure to reinstall.

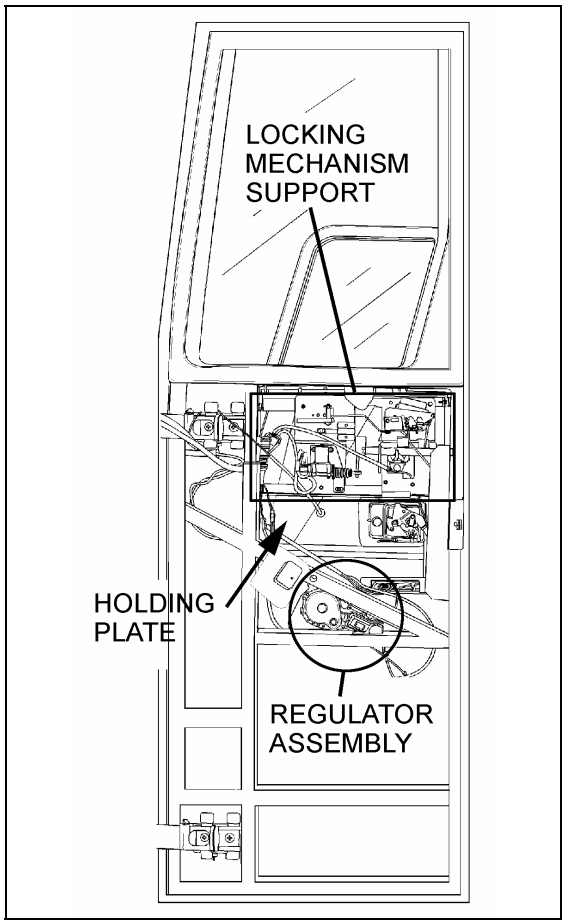

FIGURE 31: ENTRANCE DOOR POWER WINDOW

10. ROOF ESCAPE HATCH

The vehicle can be equipped with one or two escape hatches. The escape hatch is designed to provide years of reliable service with a minimum of maintenance. All components are rust proof, and moving parts are Teflon coated to eliminate need for lubrication. Should water infiltrate the vehicle from the escape hatch, refer to the heading "Sealing" in this section for procedures on how to seal this area.

Caution: *Use of lubricants, paints, or other coatings such as graffiti deterring sprays are not recommended.*

Suggested maintenance includes periodic inspection of fasteners for evidence of loosening due to tampering, and regular cleaning with mild soap and water.
Although there are other cleaning solutions available, some contain solvents and other chemicals that can attack the high strength materials used in the production of the escape hatch.

Caution: *Ensure that cleaning solutions are compatible with the materials used on the escape hatch.*

Graffiti removing cleaners often contain acetone, ether, lacquer thinner, or other solvents known to destroy the high strength properties of many plastics. Use of these cleaners must be avoided. Graffiti-resisting coatings often leave a sticky residue that interferes with smooth up/down movement of the hatch mechanism. Some of these coatings also contain solvents that will reduce the strength of certain components.

Caution: *Use of these coatings is at considerable risk and should be avoided.*

10.1 REPAIR

All components used in the production of the escape hatch are available as service parts, except for one hinge that represents a possible hazard when improperly reattached to a hidden tapping plate, itself often damaged whenever the hinge is damaged. The tapping plate is permanently laminated between the inner and outer cover assemblies, and it cannot be inspected or replaced. It is therefore necessary to replace the entire assembly following damage to the hinge. See figure 32.

Caution: *Hinge assembly is critical and hinge should never be removed from cover assembly. Fasteners used in this assembly are special and have critical torque requirements and tamper-resistant heads to discourage tampering.*

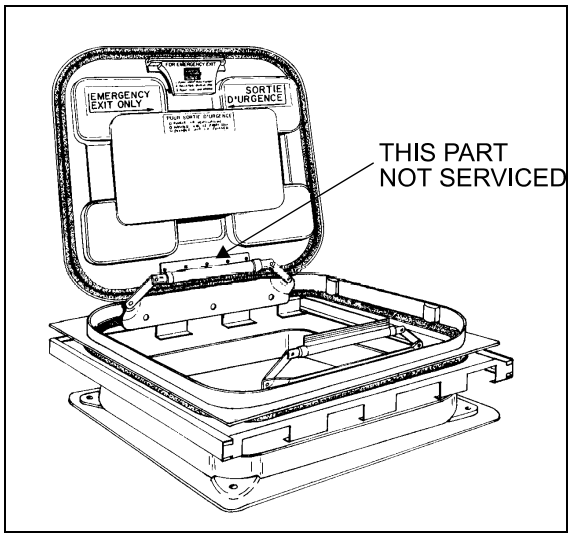

FIGURE 32: ESCAPE HATCH 18104

10.2 SEALING

1. Open and tilt up the escape hatch cover.
2. Join the 2 ends of the rubber seal.

Caution: *Seal joint should be toward rear of vehicle.*

3. Apply rubber adhesive CA-40 (Prévost # 681285) in the gap between the seal ends.
4. Apply Sikaflex 221 sealant (Prévost # 680532) along the outline of the escape hatch on the roof of vehicle.

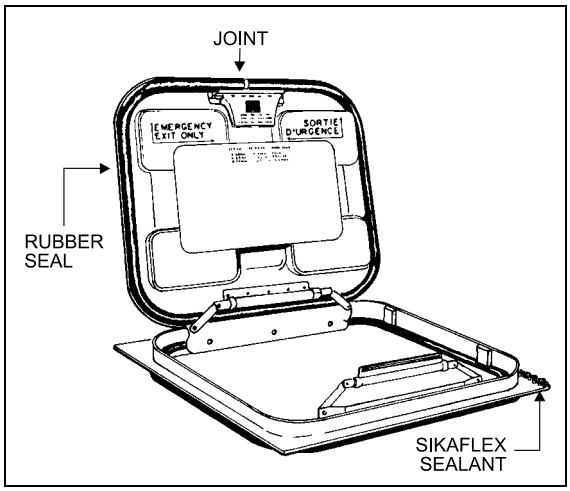

FIGURE 33: ESCAPE HATCH 18105

10.3 ESCAPE HATCH PANEL ASSEMBLY

The frame of the escape hatch is riveted to the roof of the vehicle. The escape hatch panel assembly can be replaced as a unit and a new panel assembly installed in the existing frame. To remove the panel assembly, remove the 4 bolts fastening the 2 hinges to the escape hatch frame and retain the 4 flat washers. Reinstall the panel assembly by fastening the 2 hinges with the 4 bolts and flat washers removed earlier.

Caution: *When installing, roof escape hatch's hinge must be toward the front of vehicle, to prevent the hatch from being ripped out if accidentally opened while vehicle is running.*

10.4 ESCAPE HATCH FRAME

When necessary, the escape hatch frame can be removed and replaced in the following way:

1. Support the frame from inside the vehicle.
2. Remove rivets.
3. Cut the rubber seal with a sharp edge knife and remove the hatch frame.
4. On vehicle top, using the knife, remove as much as possible the remaining rubber seal.
5. Drill holes (if needed) in the new metal frame.
6. Clean both vehicle top and new hatch frame with SIKA 205.
7. Apply rubber adhesive SIKA 221 under the hatch frame surface.
8. Install the frame in place and fix it with rivets.
9. Remove excess adhesive and clean all around.

11. PASSENGER SEATS

XLII-40 and XLII-45 coaches can be equipped with any of 3 basic seat models and installed in a variety of seating arrangements:

1. The *"Tourismo 2"* seat is the base model and is available in heights of 40" (102 cm) and 42" (107 cm). Seating arrangement includes 2 card tables which can be folded and removed, and pivoting seats ahead of each card table. Each pair of seats is built on a welded steel frame fastened to the side wall and on a track-mounted pedestal.
2. The *"Silhouette"* seat is an optional model with each pair also built on a welded steel frame and mounted the same way as the *"Tourismo 2"* seat. Standard seating arrangement with "Silhouette" seat includes 2 card tables and 2 pivoting seats. Seating capacity is the same as with the *"Tourismo 2"* seat.
3. The *"V.I.P."* seat model is an optional seat. *"V.I.P."* seats are mounted on one row of paired seats built on a common frame on one side of the vehicle, and a row of single seats on the other side of the vehicle with an off-center aisle. Each *"V.I.P."* seat has its own set of armrests.

Each seat has a easily removable bottom cushion. Upholstery is clipped on the cusion frame for cleaning or replacement. To remove the fabric, simply unclip from the frame. The *"Tourismo 2"* and *"Silhouette"* seats have 3 armrests. The aisle and center armrests can be folded up and down manually, while the window armrest is fixed.

11.1 ROTATING SEATS

1. Remove 1 wing nut holding each seat bottom cushion from under the seat frame.
2. Lift front part of cushions and remove cushions.
3. Remove 4 wing screws fastening seat assembly to seat frame.
4. Pull seat toward aisle and rotate.
5. Align mounting holes and reinstall 4 wing screws.
6. Reinstall seat bottom cushions with wing nuts.

11.2 REMOVING FIXED SEATS

Note: *Seats on one row are not interchangeable with seats of the other row.*

To remove fixed seats, proceed as follows:

1. Remove 1 nut holding each seat bottom cushion from under the front part of the seat frame.

2. Lift front part of cushions and remove cushions.
3. Remove 4 finishing screws holding plastic cover between side wall and seat frame.
4. Remove 2 cap screws, nuts, and washers holding seat frame to side wall and retain the 2 holding brackets. See figure 24.
5. Remove 2 nuts and washers holding seat frame to pedestal rods. See figure 25.

Note: *Bottom end of rod is coated with Locktite and threaded in a steel block which slides in the floor track. Removal of rod is possible if loosened from block. Otherwise, slide rod and block assembly to the front end of track after removing all seats located in front.*

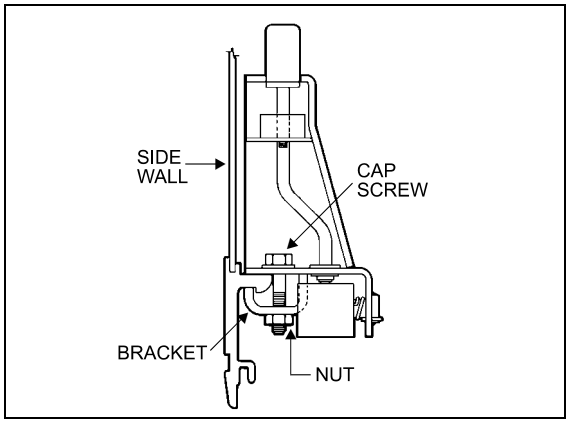

FIGURE 34: ARMREST 18106

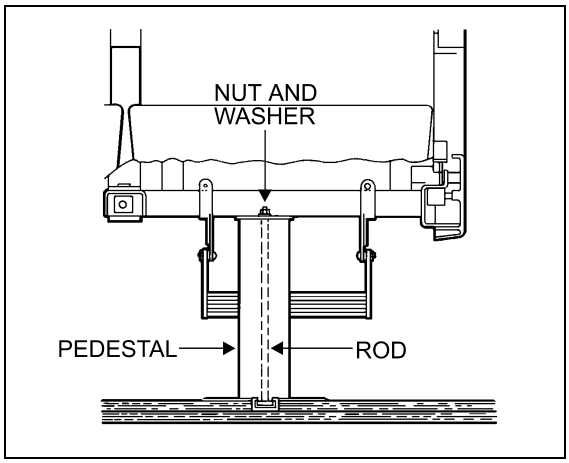

FIGURE 35: SEAT PEDESTAL ASSEMBLY 18107

6. Remove seat assembly.
7. Reverse the above procedure to install seat assembly.

Note: *On newer vehicles, the rod consists of a carriage bolt inserted in a square plate sliding in the floor track. Removal is possible only by the front or rear end of track.*

11.3 UPHOLSTERY MAINTENANCE

Coach seats are lightweight, with foam-padded backs and cushions. For both appearance and wearability, best results are obtained if upholstery is cleaned at regular intervals before dirt, dust and grit have been ground into the fabric. Seat fabric is made of 50% wool, 33% cotton, 9% nylon, and 8% acrylic.

11.3.1 Routine Cleaning

All that is required to remove the dirt is a gentle beating with the hand or the back of a brush. This will bring the dirt to the surface where it is easily removed with a vacuum or brush in the direction of the pile which can easily be recognized by running a hand lightly over the pile. If the fabric become excessively dirty, particles of grit will cause gradual wear, reducing the life span of the fabric.

11.3.2 Dry Cleaning

If covers are to be removed for cleaning, dry cleaning is recommended since washing might cause some shrinkage, preventing the covers from being reapplied to the seats without damage. Other than spot cleaning the covers while they are in place, dry cleaning is not recommended, since the resulting fumes could be hazardous in the confines of the coach and the solvent could be detrimental to the foam padding of the seats.

11.3.3 Cleaning With Covers in Place

The most effective and economical method to clean the fabric seat covers is by washing with either an approved foam upholstery cleaner or with a mild household detergent.
Thoroughly vacuum the upholstery. Remove any spots or stains before the seats are washed to avoid a cleaning ring.
Dilute household detergent or liquid foam cleaner according to directions on the container. Pour a small quantity into a flat pan and work into a thick foam with a sponge or brush.

Apply only the foam to the fabric with a sponge or brush. Clean a small area of the fabric at a time with the foam. DO NOT SOAK. Rub vigorously. Sponge the suds from the fabric with a clean sponge or cloth moistened with water. Rinse the sponge or cloth often and change the water when it becomes dirty.
Allow the upholstery to dry completely before the coach goes back into service. To speed up drying, excess moisture can be blown off the fabric with compressed air.

Caution: *Oil in the air line will soil the fabric. Blow the line clear and test air discharge against a plain white piece of paper. It is also effective to press the edge of a flat hardwood stick down on the cushion and slowly draw it across the fabric.*

Even very soiled areas can be returned to their original appearance by a thorough cleaning, but a regular schedule of cleaning that keeps the upholstery reasonably clean at all times will greatly enhance the life span of upholstery.

12. COACH SIDE WINDOWS

Eight passenger side windows are provided on each side on XL2-40, while the XL2-45 have nine. They are made of fixed, single or double-glazed, heat absorbing AS-3 glass. Windows are mounted in painted aluminum extrusions, which hold the glass in place from the top rail of the coach. The extrusion also serves as a hinge to allow the window to swing open when needed. The single-glazed windows are made of tinted tempered safety glass, while the double-glazed windows are made of tinted tempered safety glass outside and clear tempered glass inside.

12.1 EMERGENCY EXIT WINDOWS

Three of the windows on each side serve as emergency exits on the XLII-40, while there are three of them on curb side of the XLII-45, and four on driver's side. See figures 36 and 37. Except for the top window side, the three other glass sides are unprotected, which causes the workers to be exceptionally careful when manipulating or installing such windows. In addition, when it becomes necessary to lay down the unprotected edges of the glass window, never use a steel or concrete floor support. It is recommended to use a wooden support, even better, a padded surface.

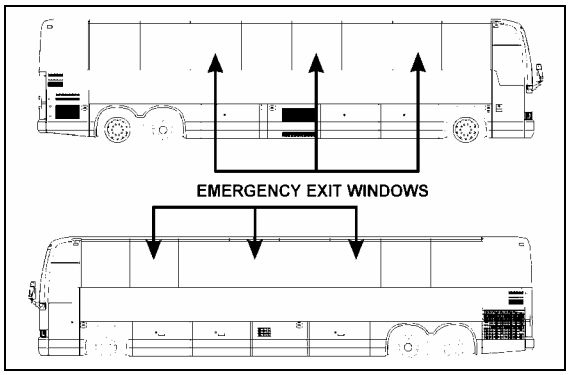

FIGURE 36: XL2-40 COACH 18418

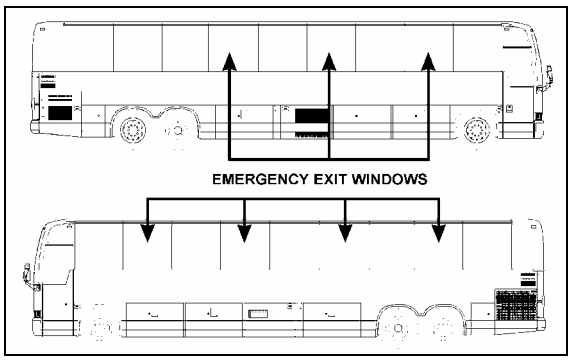

FIGURE 37: XL2-45 COACH 18419

An emergency exit window can be opened by pulling the lower part of the release bar to disengage the safety latches, and then by pushing out the window frame (Fig. 38).
Emergency operating instruction decals are affixed under each emergency exit window. To close the window, pull back the window and push down the release bar.

12.1.1 Emergency Exit Release Bar

The emergency exit release bar system is generally maintenance free.
It has been designed to answer the twenty pound resistance criteria for opening the emergency window. If this handle should be replaced:

1. remove the screws and bolts securing it to the emergency exit window;
2. to install a new release bar, reverse the procedure.

Note: *Check the legal twenty pound maximum resistance to be sure to comply to regulations.*

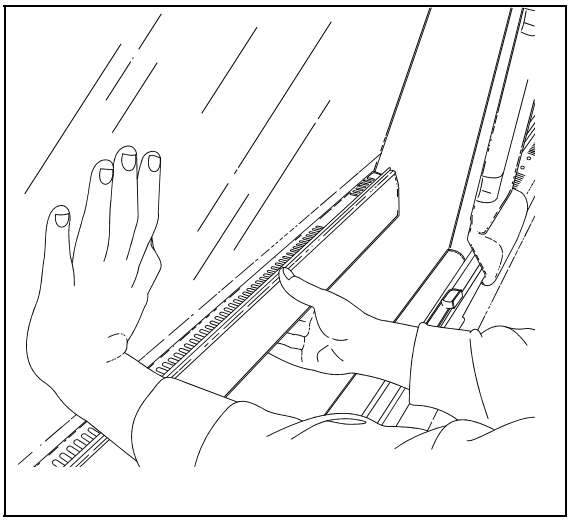

FIGURE 38: EMERGENCY EXIT WINDOW

12.1.2 Emergency Exit Window Adjustment

Emergency exit windows should be checked periodically for easy opening and closing. Pulling the lower part of the release bar with both hands placed near the safety latches should disengage both locks on the window simultaneously. The tension required to release the window should not exceed twenty pounds (9 kg) of force.
The release bar mechanism itself has been designed such as no adjustments are necessary.
If too much effort is required to disengage the locks when pulling the release bar or if the window doesn't close tightly or rattles, check for interference by foreign objects or nearby parts into mechanism, such as the microswitch, rubber seal, wires, etc. Correct situation immediately.

Note: *Tangs on the lock must be in a horizontal position.*

12.1.3 Emergency Exit Window Replacement

1. Lift the bar release system;
2. Remove the stop blocks from the top exterior of the window.
3. Push the glass window out ninety degrees (90°).

Warning: *The window may fall out.*

4. The window is free and can be unhooked.
5. Reverse the procedure to install a new emergency exit window.

13. BODY PANELS AND DOORS

Each of the doors should be checked for proper operation. This includes latching. Also, inspect each of the doors for damage, missing, or loose parts. Repair or replace those parts as needed. Unless otherwise noted, body panels and doors should be aligned and centered with surrounding panels. In general, a gap of ¼ inch (6 mm) is desirable between panels.

14. BAGGAGE COMPARTMENT DOORS

The baggage compartment doors on the vehicle are of identical design. The doors are pantograph, vertical-lift type and are fully sealed. Each door has a flush-mounted latch handle. To open, lift latch handle, then pull door outward and up. The door is held open by 2 gas-charged cylinders. To close, leave latch handle in the open position, pull downward on door and push down on latch to secure door. The door lower arm is spring loaded to secure effort required to close the door (Fig. 39).

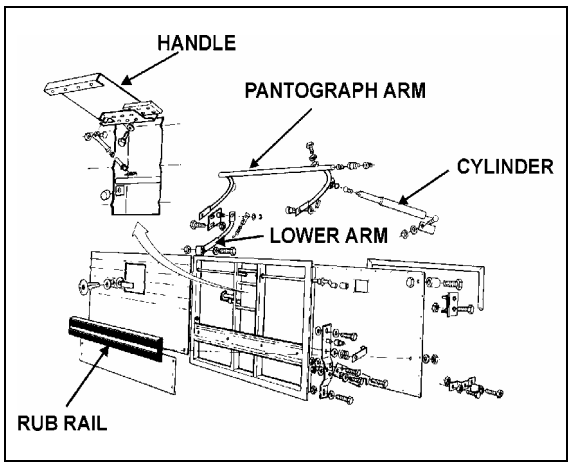

FIGURE 39: BAGGAGE COMPARTMENT DOOR 18145

If a door does not remain in the fully open position, one or both cylinders on that door is (are) defective. To test the cylinders, first support the door in the open position with proper equipment. Disconnect the rod end of one cylinder and retract the rod. If strong resistance is felt, the cylinder is in good condition and can be reinstalled. If the rod retracts with little effort, the cylinder is defective and should be replaced

at once. Use the same procedure to test the other cylinder on that door.

14.1 DOOR REMOVAL

Caution: *Two people are required to remove the baggage compartment doors.*

1. Maintain the door halfway open by placing a wooden block between one of the pantograph arms and the upper frame.
2. Remove cap screw, lock washer and flat washer retaining lower arm to door
3. Remove spring pins and lock washers fastening the pantograph arms to the door.

Warning: *Support the door properly to prevent it from falling.*

4. Spread the pantograph arms away from the door and remove door.
5. Inspect all pivot points and bushings for wear and damage. Check tension of gas-charged cylinders and replace if necessary.

14.2 PANTOGRAPH ARMS REMOVAL AND INSTALLATION

1. Disconnect rod end of gas-charged cylinders from the pantograph arms.
2. Loosen jam nut and cap screw locking the horizontal member of the pantograph to the pivot pin.
3. Slide pantograph assembly to the right and remove assembly from the vehicle.
4. To install, perform the removal instructions in reverse.

14.3 DOOR INSTALLATION

1. Use a wooden block to support the pantograph arms horizontally.
2. Support the door and insert each pantograph arm into the pivot pins on the side of the door.
3. Install washer and spring pin to fasten each arm to its pivot pin.
4. Fasten lower arm to the door with flat washer, lock washer and cap screw.
5. Remove wooden block and close baggage compartment door.

Door should be adjusted to leave a gap of 3/16" (5 cm) above the top edge of the door. To adjust, loosen the bolts retaining lock plate support and position the door correctly. Tighten the bolts after the adjustment.
If the baggage door locks to tightly or too loosely, the position of the catch striker is misadjusted. To adjust, loosen the catch striker retaining bolts, position the striker correctly and tighten the retaining bolts.
If the lower part of the baggage door does not close evenly with the side of the vehicle, adjust the lock plates by loosening their retaining bolts and positioning the locking plates correctly (Fig. 40).

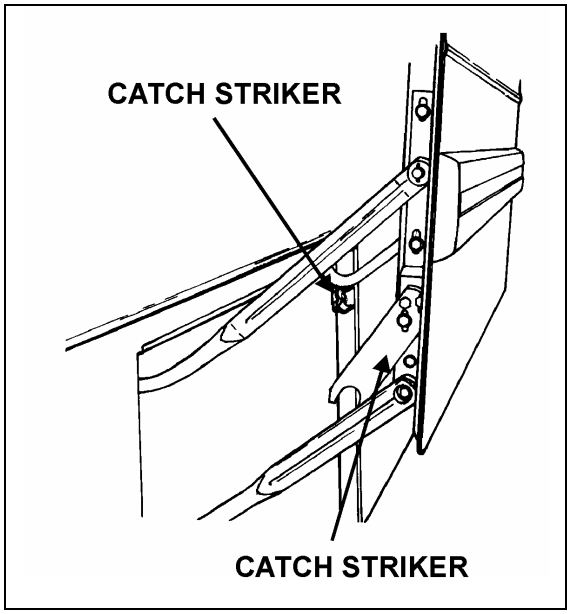

FIGURE 40: BAGGAGE DOOR CATCH STRIKER 18146

15. ENGINE COMPARTMENT DOORS

Engine compartment doors may be adjusted for proper fit by untightening hinge bolts:

1. Loosen the bolts, (1, 2 Fig. 41) holding the hinge to the vehicle structure to shift the door "UP or DOWN".
2. Loosening the bolts (3, Fig. 41) allows the door to be shifted "LEFT or RIGHT" and "IN or OUT".

3. Adjust the doors position depending on the gap needed between exterior finishing panels.
4. Tighten the bolts.
5. Check that the doors swing freely and close properly. It may be necessary to adjust the door latch to get proper fit and operation.

To adjust the latch mechanism (4, Fig. 41) and the striker pin:

1. Open the doors to access the striker pin.
2. Slightly loosen the striker pin.
3. Using a hammer, adjust the striker pin to center it in the door latch mechanism.
4. Tighten the striker pin.
5. Check doors fit and operation.

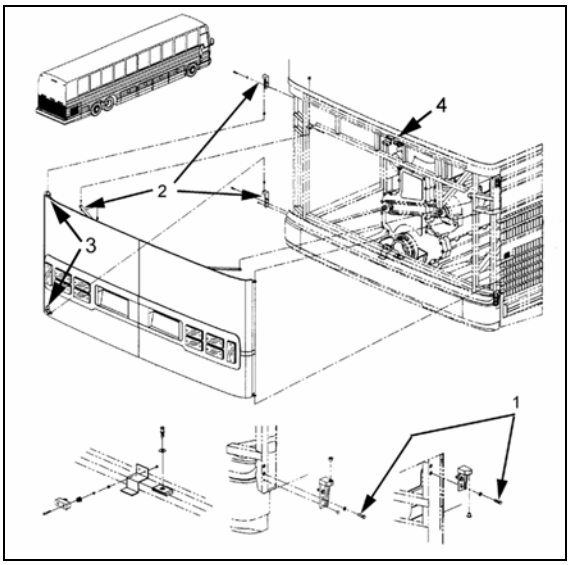

FIGURE 41: ENGINE COMPARTMENT DOORS

16. RADIATOR DOOR ADJUSTMENT

Radiator door may be adjusted for proper fit by untightening hinge bolts:

1. Loosen the bolts, (1, Fig. 42) holding the hinge to the vehicle structure to shift the door "IN or OUT" and "UP or DOWN".
2. Loosening the bolts (2, Fig. 42) allows the door to be shifted "LEFT or RIGHT" and "UP or DOWN".
3. Adjust the door position depending on the gap needed between exterior finishing panels.
4. Tighten the bolts.
5. Check that the door swings freely and closes properly. It may be necessary to adjust the door latch to get proper fit and operation.

To adjust the latch mechanism (3, Fig. 42) and the striker pin:

1. Open the door to access the striker pin.
2. Slightly loosen the striker pin.
3. Using a hammer, adjust the striker pin to center it in the door latch mechanism.
4. Tighten the striker pin.
5. Check door fit and operation.

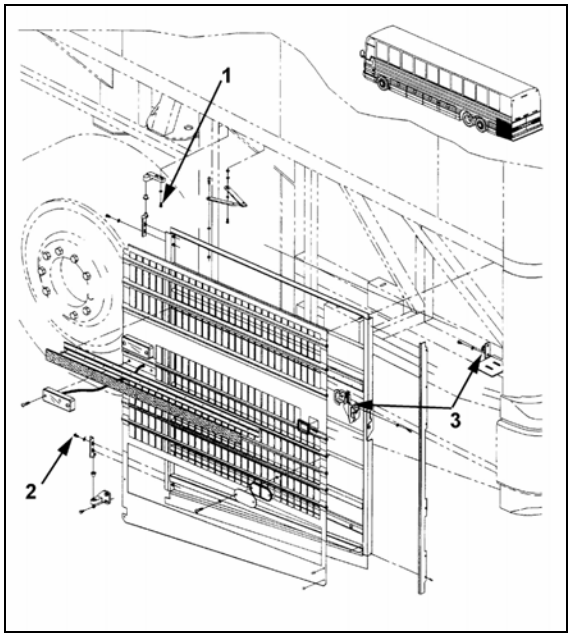

FIGURE 42: RADIATOR DOOR

17. ENGINE COMPARTMENT R. H. SIDE DOOR

Engine compartment R. H. side door may be adjusted for proper fit by untightening hinge bolts:

1. Loosen the bolts, (1, Fig. 43) holding the hinge to the vehicle structure to shift the door "IN or OUT" and "UP or DOWN".

2. Loosening the bolts (2, Fig. 43) allows the door to be shifted "LEFT or RIGHT" and "UP or DOWN".
3. Adjust the door position depending on the gap needed between exterior finishing panels.
4. Tighten the bolts.
5. Check that the door swings freely and closes properly. It may be necessary to adjust the door latch to get proper fit and operation.

To adjust the latch mechanism (3, Fig. 43) and the striker pin:

1. Open the door to access the striker pin.
2. Slightly loosen the striker pin.
3. Using a hammer, adjust the striker pin to center it in the door latch mechanism.
4. Tighten the striker pin.
5. Check door fit and operation.

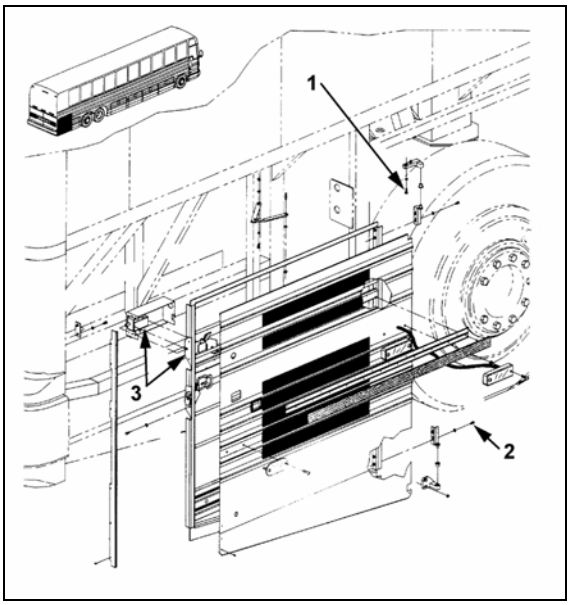

FIGURE 43: ENGINE COMPARTMENT R. H. SIDE DOOR

18. CONDENSER DOOR ADJUSTMENT

1. Open the condenser door.
2. Loosen the screws fixing the hinge to hinge attachment or hinge to door assembly. Loosening the screws allows the condenser door assembly to be shifted "LEFT or RIGHT" and "UP or DOWN" or “IN and OUT”.
3. Adjust condenser door assembly position at the hinge.
4. Tighten the screws.
5. Respect the required gap between exterior finishing panels.
6. Check that the door swings freely and closes properly. It may be necessary to adjust the door latch to get proper fit and operation.

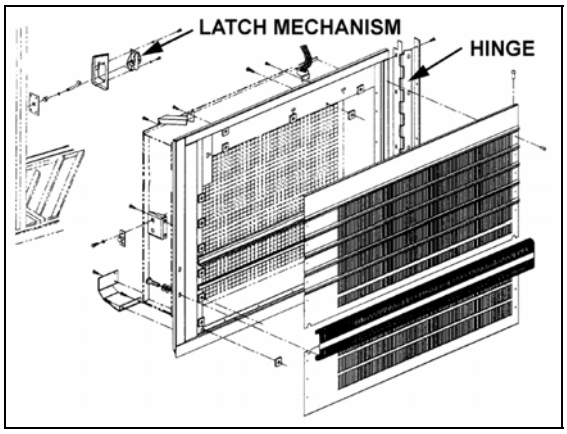

FIGURE 44: CONDENSER DOOR

19. EVAPORATOR DOOR ADJUSTMENT

1. Open the evaporator door.
2. Loosen the screws fixing the hinge to hinge attachment or hinge to door assembly. Loosening the screws allows the evaporator door assembly to be shifted "LEFT or RIGHT" and "UP or DOWN" or “IN and OUT”.
3. Adjust evaporator door assembly position at the hinge.
4. Tighten the screws.
5. Respect the required gap between exterior finishing panels.
6. Check that the door swings freely and closes properly. It may be necessary to adjust the door latch to get proper fit and operation.

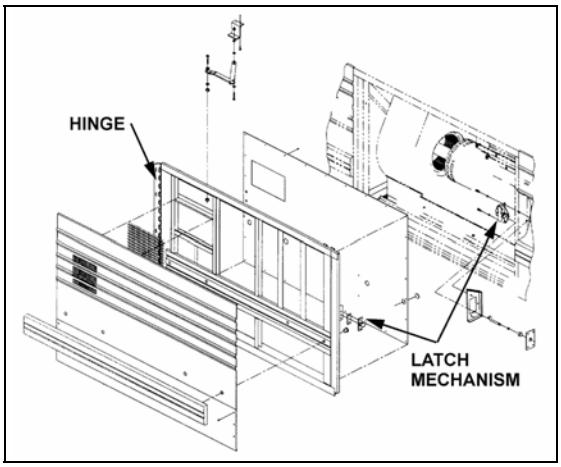

FIGURE 45: EVAPORATOR DOOR

20. FUEL FILLER DOOR

1. Open the fuel filler door.
2. Loosen the screws holding the panel to hinge assembly.
3. Adjust the fuel filler door position according to distance required between exterior finishing parts.
4. Tighten the nuts.
5. Check that the door swings freely and closes properly.

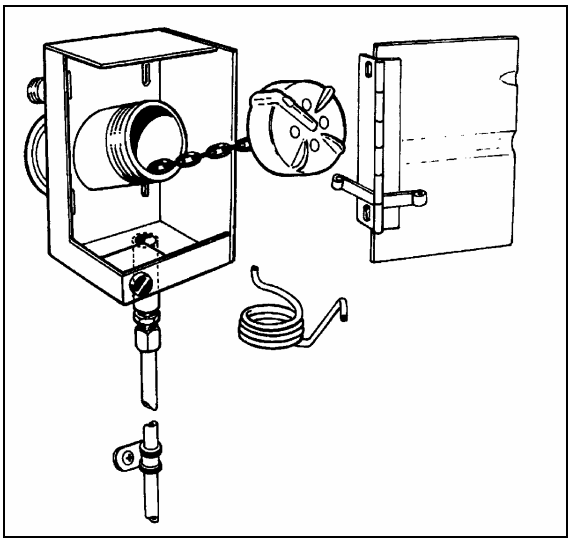

FIGURE 46: FUEL FILLER DOOR

21. FRONT SERVICE COMPARTMENT DOOR

For adjustment of the front service compartment door, refer to paragraph 7 in this section.

22. L.H. SIDE REAR SERVICE COMPARTMENT DOOR

1. Open the L. H. side rear service compartment door.
2. Loosen the screws fixing the hinge to hinge attachment or hinge to door assembly. Loosening the screws allows the L. H. side rear service compartment door assembly to be shifted "LEFT or RIGHT" and "UP or DOWN" or “IN and OUT”.
3. Adjust L. H. side rear service compartment door assembly position at the hinge.
4. Tighten the screws.
5. Respect the required gap between exterior finishing panels.
6. Check that the door swings freely and closes properly. It may be necessary to adjust the door latch to get proper fit and operation.

To adjust the latch mechanism and the striker pin:

1. Open the door to access the striker pin.
2. Loosen slightly the striker pin.
3. Using a hammer, adjust the striker pin to center it in the door latch mechanism.
4. Tighten the striker pin.

Check door fit and operation.

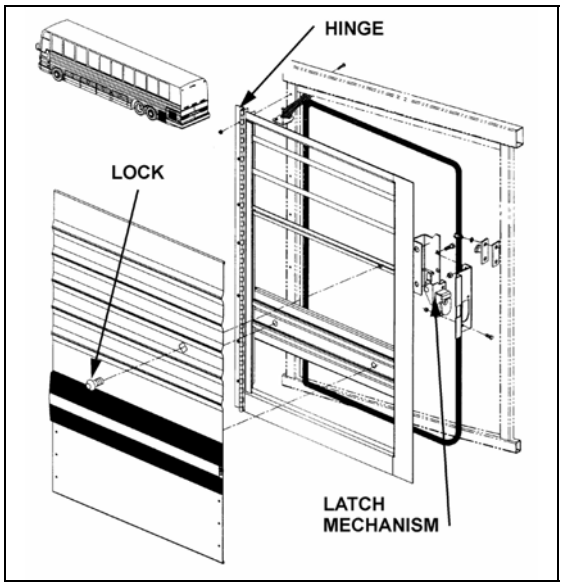

FIGURE 47: L.H. SIDE REAR SERVICE COMPARTMENT DOOR

23. R.H. SIDE REAR SERVICE COMPARTMENT OR MAIN POWER COMPARTMENT DOOR

To adjust the R. H. side rear service compartment (MTH) or main power compartment (Coaches) door:

1. Open the compartment door.
2. Loosen the screws fixing the hinge to hinge attachment or hinge to door assembly. Loosening the screws allows the compartment door assembly to be shifted "LEFT or RIGHT" and "UP or DOWN" or “IN and OUT”.
3. Adjust compartment door assembly position at the hinge.
4. Tighten the screws.
5. Respect the required gap between exterior finishing panels.
6. Check that the door swings freely and closes properly. It may be necessary to adjust the door latch to get proper fit and operation.

To adjust the latch mechanism and the striker pin:

1. Open the door to access the striker pin.
2. Loosen slighly the striker pin.
3. Using a hammer, adjust the striker pin to center it in the door latch mechanism.
4. Tighten the striker pin.

Check door fit and operation.

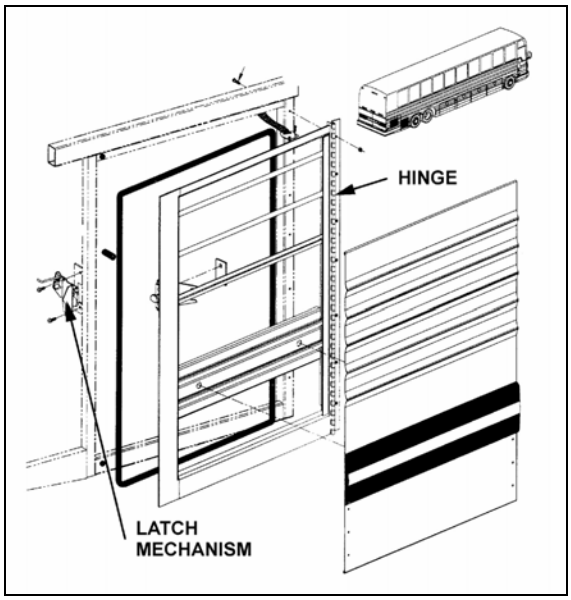

FIGURE 48: R.H. SIDE REAR SERVICE COMPARTMENT OR MAIN POWER COMPARTMENT DOOR

24. FENDERS

On the "XL2" series vehicle, rear fenders are hinged for maintenance on brakes and suspension. Each rear fender panel has two mechanical spring loaded holding devices fixing it to the vehicle’s structure. Push the spring type rod sideways to disengage the lock.
Front rubber fender may be removed using the following procedure:
Remove the nuts on the inside of the fender. Remove the fender from the vehicle. To reinstall, reverse the procedure.

25. REAR CAP

The fiberglass rear cap does not need any maintenance except painting as needed. It is held in place with adhesive. If ever it has to be replaced, make an appointment at a Prévost service center near you. For minor damages, refer to section 4 "Fiberglass Repair" and section 5 "Painting".

26. FRONT CAP

The fiberglass front cap does not need any maintenance except painting as needed. It is held in place with adhesive. If ever it has to be replaced, make an appointment at a Prévost service center near you. For minor damages, refer to section 4 "Fiberglass Repair" and section 5 "Painting".

27. SIDE PANELS

The XL2 series coaches have a one piece stainless steel panel on each side. A visual check must be performed every six (6) months. The verification is limited to a visual check around the perimeter of the side panel to see if there is any pealing off of the side panel.
In the affirmative stop driving the vehicle. Call Prévost Car Inc. immediately to take corrective action.

Warning: *DO NOT attempt to repair yourself. NEVER use rivets or mechanical fasteners of any kind to attach panel.*

28. REAR VIEW MIRRORS (RAMCO)

Your vehicle is equipped with two exterior mirrors.
The mirrors may be equipped with an optional electric heating system which serves to minimize ice and condensation on the mirror glass in extreme weather conditions. Integral thermostats are installed in both mirrors to avoid continuous heating. Use the appropriate switch on the dashboard to activate the defroster system on both mirrors simultaneously. The mirrors can easily be adjusted by using the remote controls located on the L.H. side control panel. The mirrors have easy to replace glass in case of breakage. Remote control motors can also be replaced.

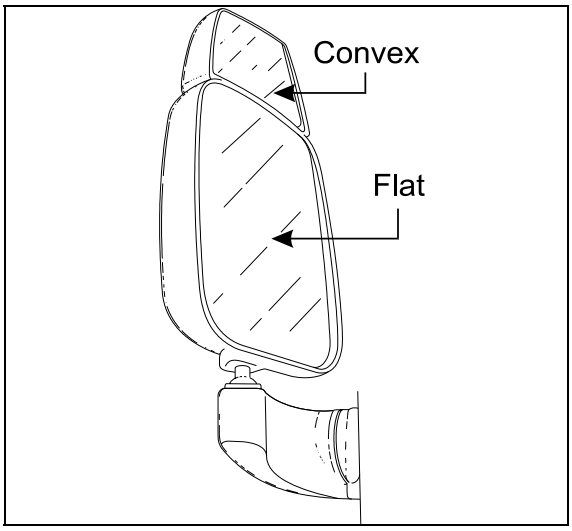

FIGURE 49: REAR VIEW MIRROR (RAMCO) 18398A

28.1 ADJUSTMENT

At the base of the mirror arm, loosen the mounting bolt to swing arm in or out.
To pivot the mirror head, loosen the setscrews on each side of the ball stub at the base of the mirror head to facilitate the adjustment.

28.2 DISASSEMBLY

At end of mirror arm, loosen the setscrews to relieve tension on the ball stem. Remove the ball stem from the arm.
Remove the four screws fastening the mirror arm base to the coach.

28.3 ASSEMBLY

Mount the mirror arm base to the coach.
Insert the ball stem into the mirror arm and tighten the socket setscrews.

Note: *Position the ball cup halves so the joint between them lies on the centerline of the arm. Ensure that the setscrews are not on the joint between the cup halves.*

28.4 REPLACEMENT OF MIRROR GLASS

Remove the broken glass.
Position new glass in mirror head and press to lock the Velcro in place.

28.5 HEATED / REMOTE CONTROLLED REAR VIEW MIRRORS

Heated/remote controlled external rear view mirrors may be provided to prevent the mirrors from frosting up in cold weather.
The remote controlled external rear view mirrors attach to support arms using a pivot collar secured by setscrews. Loosening the setscrews allows the whole head assembly to turn on the support arm for initial adjustment. A mounting bolt and washer hold the arm support to the mounting bracket. The arm support can be moved to position the mirror head into or away from the coach body.
The mirror heat switch is located to the left of the driver on the dashboard. This switch must be activated before the mirror heating element will energize. Once energized, the mirror heating element is kept at a sustained temperature (between 60-80°F) by a thermostat. Refer to wiring diagram annexed in the technical publication box.

Caution: *Do not attach stick-on type convex mirror accessories to the heated mirror glass. This could impede uniform heat distribution on the mirror surface which could break the mirror.*

28.5.1 Mirror Control

The remote control pointer knob(s) for the mirrors is (are) mounted on the L.H. side control panel. The harness to the mirror head runs through the arm support. The remote motor is mounted to the mirror head behind the mirror glass.
Turn pointer knob to the left for mirror head adjustments and to the right for convex mirror adjustment, then push down on either of the button's (4) sides to adjust the selected mirror viewing angle.

28.5.2 Disassembly

At end of mirror arm, loosen the setscrews to relieve tension on the ball stud. Remove the ball stud. Remove the ball stud from the arm and gently pull the harness out until the connector is exposed.
Remove the four screws fastening the mirror arm base to the coach. Slide the harness free of the mirror arm base.

28.5.3 Assembly

Attach a stiff wire (snake) to the end of the harness and insert the wire through the mirror arm base and arm, gently pull the harness through the arm and disconnect the "snake".
Connect the mirror head harness. Insert the harness connector back into the mirror arm.
Insert the ball stud into the mirror arm and tighten the socket setscrews.

Note: *Position the ball cup halves so the joint between them lies on the centerline of the arm. Ensure that the setscrews are not on the joint between the cup halves.*

28.5.4 Convex & Flat Mirror Removal

The mirror glass assembly is mounted to the control mechanism or to mirror base with Velcro strips. Remove the mirror glass by gently pulling the lens to release the Velcro. Disconnect the heater grid at the two connectors.
Connect the connectors of the new mirror's grid to the harness. Install the lens by positioning the lens in the mirror frame and pressing to lock the Velcro in place.

29. VEHICLE JACKING POINTS

The vehicle can be lifted by applying pressure under body jacking points or front and drive axle jacking points. When it is necessary to lift the vehicle, care should be taken to ensure that the pressure is applied only on the specified areas. Equipment for lifting the front of the vehicle must have a combined lifting capacity of at least 13,000 lb. (5 900 kg). Equipment for lifting the rear of the vehicle must have a combined lifting capacity of at least 25,000 lb. (11 400 kg).

Warning: *DO NOT tow or jack vehicle with people on board.*

Warning: *When it is necessary to raise the vehicle, care should be taken to ensure that pressure is applied only at the points indicated in figures 50, 51, 52, 53 and 54.*

Warning: *Extra lift capacity may be required if luggage or any other type of load (e.g. conversion equipment) are onboard the vehicle.*

Caution: *The suspension of the vehicle must be in the normal ride position before jacking. The "Level Low" system on a motorcoach must be in the "DRIVE" position prior to turning the ignition key "OFF".*

Twelve jacking points are located on the vehicle: three are located on each side of the frame and two are located under each axle. Refer to the following illustrations for the location of jacking points.

FIGURE 50: JACKING POINTS ON FRAME 11020

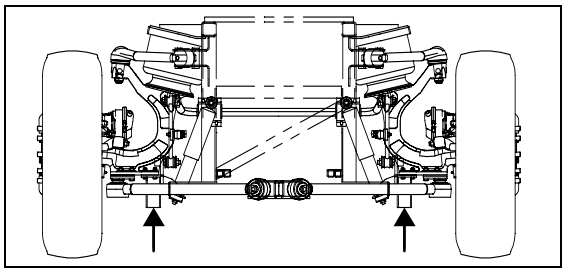

FIGURE 51: JACKING POINTS ON IND. SUSPENSION 16095

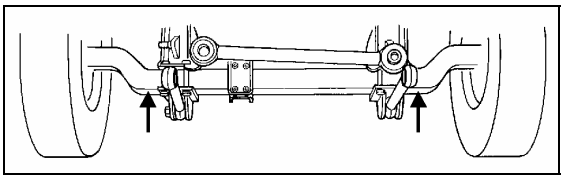

FIGURE 52: JACKING POINTS ON FRONT AXLE 18084

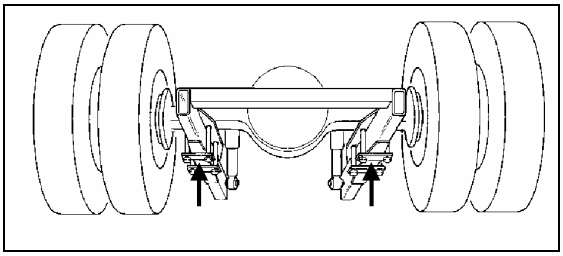

FIGURE 53: JACKING POINTS ON DRIVE AXLE OEH3B762

Warning: *Always unload or retract the tag axle before jacking the vehicle from the front and drive axle jacking points to prevent damage to suspension components.*

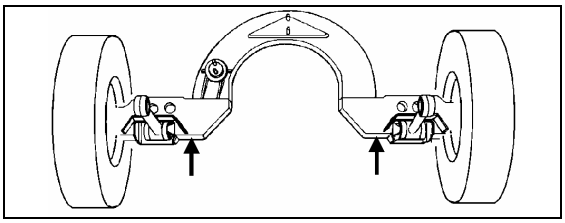

FIGURE 54: JACKING POINTS ON TAG AXLE OEH3B764

Warning: *The jacking points on the tag axle must be used for raising the tag axle only.*

Several kinds of hydraulic jacks can be used. Only jack at the specified jacking points. Jack must support the following capacities:

Front axle: 13,000 lbs. (5 900 kg);

Drive axle: 25,000 lbs. (11 365 kg).

29.1 HYDRAULIC JACK

To raise: turn release valve clockwise. Insert handle in socket and raise by pumping.

To lower: remove handle and turn the release valve slowly counterclockwise.

Always keep ram and extension screw retracted when jack is not in use.

Service: Check oil level when jack fails to raise to full height. Lower ram completely with release valve open and jack in upright position, remove filler plug and refill to level of filler hole with hydraulic jack oil. Never use brake fluid.

Warning: *Jack is intended for lifting only. Do not get under the vehicle or load for any reason unless it is properly supported with safety stands and securely blocked.*

Warning: *Do not overload jack above rated capacity. Prevent "side loading", make sure load is centered on ram. Do not push or tilt load off jack.*

30. TOWING THE VEHICLE

The vehicle can be transported on a low bed semi-trailer of adequate gross axle weight capacity. When transporting a vehicle, apply parking brake and shut down the engine. Block all wheels and secure vehicle with tie-downs. Check that overall height will clear obstacles on the route to follow, and obtain required permits.
The vehicle can also be towed by lifting the front axle or by towing from the front with all wheels on the ground. These two methods are described below under their respective headings. Whatever the method used, the vehicle should be towed by truck operators authorized and experienced in towing highway coaches.
Observe normal precautions including, but not limited to, the ones listed below when towing the vehicle:

- Make sure the parking brake is released before towing.
- Do not allow passengers to ride onboard the towed vehicle.
- Tow the vehicle at a safe speed as dictated by road and weather conditions.
- Accelerate and decelerate slowly and cautiously.

To prevent damage to the vehicle, use the two tow eyes located under the back bumper and/or fixed to the vehicle's frame between the front axle and the front bumper. Use only a solid link tow bar and a safety chain to tow the vehicle. If required, connect an auxiliary air supply to the vehicle so brakes can be operated while towing.

Warning: *During a towing operation, the driver should be alone inside the vehicle.*

Caution: *To prevent damage to the drive train components, disconnect axle shafts or driveshaft before towing. Do not attempt to push or pull-start a vehicle equipped with an automatic transmission.*

Note: *Make sure axle shafts or driveshaft are installed correctly after towing. Tighten axle shaft and driveshaft nuts to the correct torque settings. Do not invert shafts.*

30.1 LIFTING AND TOWING

The towed vehicle must be lifted from under the front axle only. The tow truck must be equipped with the proper lifting equipment to reach under the front axle since no other lifting points are recommended. Lifting and towing from any other point are unauthorized as it may cause serious damage to the structure. Do not unload or raise the tag axle when lifting and towing to prevent overloading the drive axle.

1. Remove both drive axle shafts to prevent damage to the transmission. Plug axle tube to prevent oil loss. Refer to Rockwell's *"Maintenance manual no.5"* annexed at the end of Section 11, Rear axle, in this manual for correct procedure.

Caution: *Transmission lubrication is inadequate when towing. With either automatic or semi-automatic transmission, the drive axle shafts must be removed to avoid serious damage to the transmission.*

2. Operate the engine when towing to maintain brake system air pressure. If the engine cannot be operated, connect an external air pressure line from the tow truck to the emergency fill valve in the engine compartment.
3. The emergency fill valve in the front service compartment does not supply air pressure to the brake system. The air pressure must be a minimum of 75 psi (520 kPa), and the line should be attached to the air line with a clip-on chuck.

Caution: *Do not tow the vehicle without external air pressure applied to the emergency fill valve if the engine does not operate. Without brake system air pressure, the brakes may apply automatically if system air drops below 40 psi (275 kPa). If failure prevents releasing the parking brakes with air pressure, disengage the parking brakes mechanically.*

4. Lift the vehicle from under the front axle, and adequately secure the underside to the tow vehicle lifting attachment with chains.
5. Observe safety precautions when towing.

30.2 TOWING WITHOUT LIFTING

Caution: *When towing vehicle without lifting, use only a tow truck with a solid link tow bar and related equipment. All other means of towing are unauthorized. Tow only from the front of the vehicle.*

1. Remove both drive axle shafts to prevent damage to the transmission. Plug axle tube to prevent oil loss. Refer to Rockwell's *"Maintenance manual no.5"* annexed at the end of Section 11, Rear axle, in this manual for correct procedure.

Caution: *Transmission lubrication is inadequate when towing. With either automatic, semi-automatic or manual transmission, the drive axle shafts must be removed to avoid serious damage to the transmission.*

2. Operate the engine when towing to maintain brake system air pressure. If the engine cannot be operated, connect an external air pressure line from the tow truck to the emergency fill valve in the engine compartment. The emergency fill valve in the front service compartment does not supply air pressure to the brake system. The air pressure must be a minimum of 75 psi (520 kPa), and the line should be attached to the air line with a clip-on chuck.

Caution: *Do not tow the vehicle without external air pressure applied to the emergency fill valve if the engine does not operate. Without brake system air pressure, the brakes may apply automatically if system air drops below 40 psi (275 kPa). If failure prevents releasing the parking brakes with air pressure, disengage the parking brakes mechanically.*

3. Position the tow truck so that the tow bar contacts the front bumper of the vehicle.
4. Attach the tow truck chains only in the tow eyes of the vehicle under the bumper and take up all the slack.
5. Attach safety chains as applicable.
6. Observe safety precautions when towing.

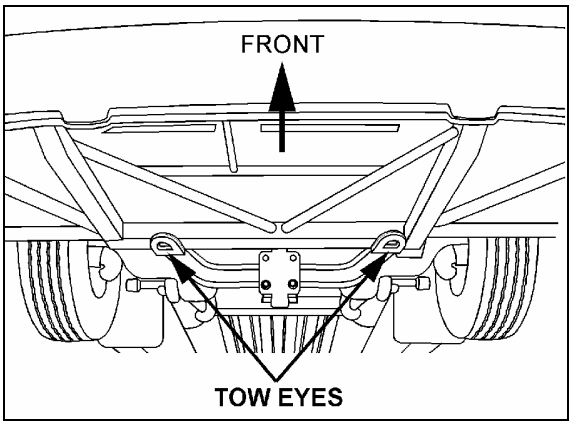

FIGURE 55: TOW EYES

31. SPECIFICATIONS

Door cylinder

Manufacturer ..... Bimba
Type ..... Pneumatic
I.D. ..... 1½" (mm)
Stroke ..... 8" (mm)
Prévost number 780595

Damper

Manufacturer ..... Koni
Prévost number 780565

Lock cylinder (upper)

Manufacturer ..... Bimba
Type ..... Air, single action, 1/8 NPT, hexagonal rod
I.D. ..... 7/8" (22 mm)
Stroke ..... 1" (25 mm)
Supplier number D-51127-A
Prévost number 641392

Lock cylinder (central)

Manufacturer ..... Bimba
Type ..... Air, single action, ¼ NPT
I.D. ..... 1¾" (45 mm)
Stroke ..... 1" (25 mm)
Supplier number 241-P
Prévost number 641209

Manifold solenoid

Manufacturer ..... Norgren
Type ..... 4 ports, 1/8 NPT
Voltage ..... 24 VDC
Power consumption ..... 6 watts
Maximum pressure ..... 150 psi (1035 kPa)
Prévost number 641448

Solenoid valve (Latching valve)

Manufacturer ..... Humphrey
Model 310
Operating range ..... 0 to 125 psi (0 to 860 kPa)
Voltage ..... 24 VDC
Voltage tolerance ..... +10%, -15% of rated voltage
Power consumption ..... 4 watts
Leak rate (max allowed) ..... 0.245 in3/min @ 100 psi (4cc/min @ 690 kPa)
Type of operation ..... Direct solenoid
Lubrication ..... Not required (factory pre-lubed)
Filtration ..... 40 micron recommended
Prévost number 641412

Pressure switch assembly

Prévost number 452831

SECTION 22: HEATING AND AIR CONDITIONING

CONTENTS

1. HEATING AND AIR CONDITIONING 22-5

2. AIR CIRCULATION 22-5

2.1 DRIVER'S AREA 22-5
2.2 CENTRAL AREA 22-6

3. DRIVER'S HVAC SYSTEM OPERATION 22-6

3.1 VEHICLES EQUIPPED WITH A HGB-1000 TECUMSEH COMPRESSOR 22-6
3.2 VEHICLES EQUIPPED WITH A CENTRAL SYSTEM 22-6

4. CENTRAL HVAC SYSTEM OPERATION 22-7

4.1 PARCEL RACK A/C (XL2 COACHES) 22-8

5. HVAC UNIT MAINTENANCE 22-8

5.1 COIL CLEANING 22-8
5.2 DRIVER'S HVAC UNIT AIR FILTER 22-8
5.3 MAIN HVAC UNIT AIR FILTER 22-8
5.4 PARCEL RACK FAN AIR FILTER 22-9

6. DIAGNOSIS OF MAIN HVAC UNIT PROBLEMS 22-9

6.1 TROUBLESHOOTING MODE 22-9
6.2 CONTINUITY CHECK 22-10

7. EVAPORATOR MOTOR 22-10

7.1 REMOVAL 22-10
7.2 INSTALLATION 22-11
7.3 CHECKING OPERATION OF BRUSH IN HOLDER 22-11
7.4 BRUSH WEAR INSPECTION AND REPLACEMENT 22-11
7.5 CHECKING COMMUTATOR 22-11
7.6 SPEED CONTROLLER MODULE 22-11

8. AIR CONDITIONING SYSTEM 22-11

8.1 A/C CYCLE 22-11
8.2 REFRIGERANT 22-12
8.2.1 Procurement 22-12
8.2.2 Precautions in Handling Refrigerant 22-12
8.2.3 Treatment in Case of Injury 22-13
8.2.4 Precautions in Handling Refrigerant Lines 22-16
8.2.5 Auxiliary System Refrigerant Lines 22-16
8.3 PUMPING DOWN 22-16
8.4 ADDING REFRIGERANT (VAPOR STATE) 22-17
8.5 EVACUATING SYSTEM 22-17
8.5.1 Double Sweep Evacuation Procedure 22-17
8.5.2 Evacuating System Before Adding Refrigerant (Driver's or Auxiliary System) 22-19
8.6 CHARGING SYSTEM 22-20
8.7 REFRIGERANT SYSTEM CLEAN-OUT AFTER COMPRESSOR FAILURE 22-20
8.7.1 Determining Severity of Failure 22-21

8.7.2 Clean-out after Minor Compressor Failure 22-21
8.7.3 Clean-out After Major Compressor Failure 22-21

9. A/C SYSTEM COMPONENTS 22-22

9.1 COMPRESSOR (CENTRAL SYSTEM) 22-22
9.1.1 Belt Replacement 22-22
9.1.2 Pulley Alignment 22-22
9.1.3 Longitudinal Compressor Alignment 22-22
9.1.4 Horizontal Compressor Alignment 22-22
9.1.5 Vertical Compressor Alignment 22-23
9.1.6 Compressor Maintenance 22-23
9.1.7 Troubleshooting Guide 22-23
9.2 MAGNETIC CLUTCH 22-24
9.2.1 HVAC Control Unit and Clutch Operation 22-24
9.3 COMPRESSOR (DRIVER'S SYSTEM ONLY) 22-24
9.3.1 Clutch Pulley Removal 22-25
9.3.2 Clutch Maintenance 22-25
9.3.3 Belt Replacement 22-25
9.3.4 Pulley Alignment 22-25
9.3.5 Oil Verification (Tecumseh Compressor) 22-26
9.4 CONDENSER 22-26
9.4.1 Condenser Fan Motors 22-26
9.4.2 Condenser Fan Motor Removal 22-26
9.4.3 Preliminary Disassembly 22-27
9.4.4 Disassembly 22-27
9.5 RECEIVER TANK 22-27
9.6 FILTER DRYER 22-27
9.6.1 Replacement 22-28
9.6.2 Moisture Indicator 22-28
9.7 LIQUID REFRIGERANT SOLENOID VALVE 22-28
9.7.1 Manual Bypass 22-29
9.7.2 Coil Replacement 22-29
9.7.3 Valve Disassembly 22-29
9.7.4 Valve Reassembly 22-29
9.8 BY-PASS VALVE 22-30
9.9 EXPANSION VALVE 22-30
9.9.1 Central System 22-30
9.9.2 Driver's System 22-33
9.10 TORCH BRAZING 22-33
9.11 TROUBLESHOOTING 22-34
9.11.1 Expansion Valve 22-34
9.11.2 A/C 22-35
9.12 TEMPERATURES & PRESSURES 22-37
9.13 LEAK TESTING 22-38

10. HEATING SYSTEM 22-38

10.1 DRAINING HEATING SYSTEM 22-41
10.1.1 Draining Driver's Heater Core 22-41
10.1.2 Draining Main Heater Core 22-41
10.2 FILLING HEATING SYSTEM 22-42
10.3 BLEEDING HEATING SYSTEM 22-42

10.4 SOLDERING....22-43
10.5 DRIVER'S WATER SOLENOID VALVE....22-43
10.5.1 Improper Operation....22-43
10.5.2 Coil Replacement....22-43
10.5.3 Valve Disassembly....22-43
10.5.4 Valve Reassembly....22-43
10.6 CENTRAL HOT WATER SOLENOID VALVE ACTUATOR....22-46
10.6.1 Description....22-46
10.6.2 Valve Disassembly....22-46
10.6.3 Valve Reassembly....22-47
10.6.4 Valve Troubleshooting....22-47
10.7 WATER RECIRCULATING PUMP....22-48
10.7.1 Description....22-48
10.7.2 Removal....22-49
10.7.3 Disassembly....22-49
10.7.4 Brushes....22-52
10.7.5 Bearings....22-52
10.7.6 Commutator....22-52
10.7.7 Miscellaneous....22-53
10.7.8 Assembly....22-53
10.7.9 Installation....22-53
10.8 WATER FILTER....22-54
10.8.1 Description....22-54
10.8.2 Maintenance....22-54
10.8.3 Servicing (Vehicles with central A/C system)....22-55
10.8.4 Servicing (Vehicles with driver's A/C system)....22-55
10.9 BY-PASS SOLENOID WATER VALVE (OPTIONAL)....22-55
10.9.1 To Remove or Change the Coil....22-56
10.9.2 To Take the Valve Apart....22-56
10.10 PREHEATING SYSTEM (OPTIONAL)....22-56
10.10.1 Operation....22-57
10.10.2 Preheating System Timers....22-57
10.10.3 Timer Operating Instructions (Espar)....22-58
10.10.4 Timer Operating Instructions (Webasto)....22-60
10.10.5 Timer Operating Instructions (Webasto)....22-61
10.10.6 Troubleshooting and Maintenance....22-63

11. SPECIFICATIONS....22-65

ILLUSTRATIONS

FIGURE 1: ADJUSTABLE AIR DUCT 22-5
FIGURE 2: DRIVER'S AIR CIRCULATION 22-5
FIGURE 3: CENTRAL HVAC SYSTEM AIR CIRCULATION 22-6
FIGURE 4: DRIVER'S HVAC SYSTEM CONTROL UNIT 22-6
FIGURE 5: CENTRAL HVAC SYSTEM CONTROL UNIT 22-7
FIGURE 6: THERMISTOR SENSOR 22-7
FIGURE 7: LOCATION OF OUTSIDE TEMPERATURE SENSOR 22-7
FIGURE 8: LOCATION OF A/C JUNCTION BOX IN EVAPORATOR COMPARTMENT 22-7
FIGURE 9: A/C JUNCTION BOX 22-7
FIGURE 10: EVAPORATOR COIL CLEANING 22-8
FIGURE 11: CONDENSER COIL CLEANING 22-8
FIGURE 12: DRIVER'S AREA AIR FILTERS 22-8
FIGURE 13: MAIN HVAC UNIT AIR FILTER 22-9
FIGURE 14: CABIN SYSTEM AIR FILTER REMOVAL 22-9
FIGURE 15: HVAC COMPARTMENT 22-10
FIGURE 16: EVAPORATOR MOTOR ASSEMBLY 22-11
FIGURE 17: REFRIGERANT CIRCUIT (CENTRAL AND AUXILIARY SYSTEMS) 22-14
FIGURE 18: REFRIGERANT CIRCUIT (DRIVER'S AUXILIARY SYSTEM) 22-15
FIGURE 19: DOUBLE SWEEP EVACUATION SET-UP 22-19
FIGURE 20: LOCATION OF SERVICE PORT 22-19
FIGURE 21: AIR PRESSURE REGULATOR 22-22
FIGURE 22: BELT TENSIONER 22-22
FIGURE 23: COMPRESSOR ALIGNMENT 22-23
FIGURE 24: COMPRESSOR ALIGNMENT 22-23
FIGURE 25: PULLEY INSTALLATION 22-24
FIGURE 26: A/C COMPRESSOR 22-26
FIGURE 27: CONDENSER FAN MOTOR 22-26
FIGURE 28: A/C CONDENSER COMPARTMENT 22-27
FIGURE 29: RECEIVER-FILTER LOCATION (XL2-45) 22-28
FIGURE 30: DRIVER'S EVAPORATOR LIQUID SOLENOID VALVE 22-29
FIGURE 31: REFRIGERANT SOLENOID VALVE 22-29
FIGURE 32: BY-PASS VALVE LOCATION 22-30
FIGURE 33: BY-PASS VALVE 22-30
FIGURE 34: EXPANSION VALVE 22-31
FIGURE 35: SUPERHEAT ADJUSTMENT INSTALLATION 22-31
FIGURE 36: HIGH & LOW SWING TEMPERATURE AT REMOTE BULB 22-32
FIGURE 37: CENTRAL HEATING SYSTEM COMPONENTS 22-39
FIGURE 38: DRIVER'S HEATING SYSTEM COMPONENTS (VEHICLES EQUIPPED WITH DRIVER'S SYSTEM ONLY) 22-40
FIGURE 39: CEILING OF THE SPARE WHEEL COMPARTMENT 22-41
FIGURE 40: DRIVER'S HVAC UNIT 22-41
FIGURE 41: HEATER LINE SHUTOFF VALVE 22-41
FIGURE 42: ENGINE COMPARTMENT 22-42
FIGURE 43: HEATER LINE SHUT-OFF VALVES 22-42
FIGURE 44: EVAPORATOR COMPARTMENT 22-42
FIGURE 45: DRIVER'S WATER SOLENOID VALVE 22-45
FIGURE 46: CENTRAL WATER SOLENOID VALVE 22-46
FIGURE 47: PUMP LOCATION (SHELL) 22-48
FIGURE 48: WATER RECIRCULATING PUMP (CONVERTED VEHICLE - CENTRAL A/C) 22-50
FIGURE 49: WATER RECIRCULATING PUMP (COACH - CENTRAL A/C OR DRIVER'S A/C) 22-51
FIGURE 50: WATER FILTER 22-55
FIGURE 51: L.H. SIDE REAR SERVICE COMPART. 22-56
FIGURE 52: ESPAR 22-58
FIGURE 53: WEBASTO 22-60
FIGURE 54: WEBASTO 22-61

1. HEATING AND AIR CONDITIONING

The coach's interior is pressurized by its Heating, Ventilation, Air Conditioning (HVAC) units. Air flow and controls divide the vehicle in two sections: driver's and Central (passenger) sections. Vehicles equipped with a Central System are provided with a special air duct which allows a variable percentage of outside fresh air to be drawn into the vehicle and then mixed with recirculated air.

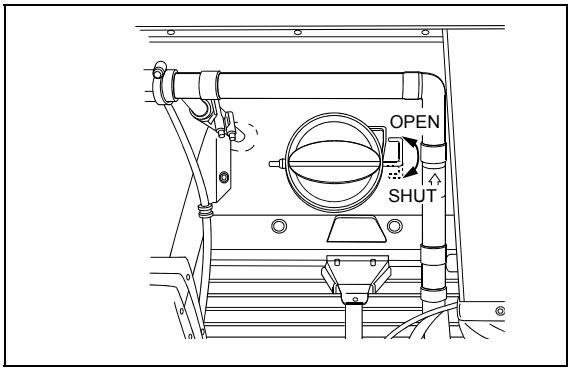

FIGURE 1: ADJUSTABLE AIR DUCT 22175

The adjustable air intake damper is located in the evaporator compartment (see *"18. BODY"* for compartment location). The damper should normally be left open. However, under extreme temperature conditions, it can be closed to block the addition of ambient air and heat or cool the air inside vehicle as desired. As soon as extreme heating or cooling is no longer required, the damper should be reopened. The interior of vehicle should always be slightly pressurized to prevent dust and moisture from entering vehicle. The HVAC systems have been designed to allow circulation of some outside fresh air, so windows should be kept closed at all times. In the event of ventilation failure, emergency escape hatch(es) (see *"18. BODY"*) can be used to provide air circulation, by simply pushing hatch upwards.

Note: *Auxiliary A/C system (if so equipped) operates independently from main system, it has its own condenser, evaporator and compressor.*

Note: *Driver's HVAC system operates independently from main system, even though it uses the same compressor.*

Note: *Vehicles equipped with a HGB-1000 Tecumseh compressor (driver's or auxiliary A/C) have a time delay relay installed on the electrical circuit with a reaction time of 48 seconds before magnetic clutch is engaged.*

2. AIR CIRCULATION

2.1 DRIVER'S AREA

Fresh air is taken from a plenum behind the front bumper and enters the mixing box through an adjustable damper. Returning air is taken through a front dash panel into the mixing box. The "Driver A/C-Heating Recirc.-Fresh Air" control is located on the R.H. dashboard control panel. Mixed air goes through cooling and heating coils, fans and discharge ducts.

Both right and left discharge ducts defrost one half of the windshield. The driver can also, with the "Main Windshield Defroster" control divert some air flow to the console, from which he can direct vent to his knees and/or upper body with adjustable HVAC register and to his feet with the appropriate button (see operator's manual).

Two additional air outlets are installed on vehicles equipped with the Central HVAC ducting system. One is located in the stepwell for snow melting. The other air outlet is located behind the driver, on his L.H. side. This air outlet can be rotated to direct Air flow.

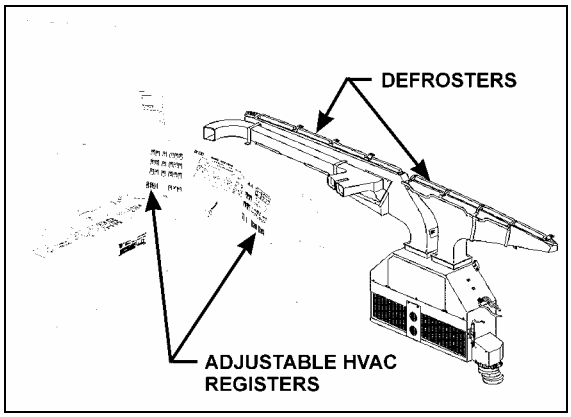

FIGURE 2: DRIVER'S AIR CIRCULATION 22171

2.2 CENTRAL AREA
(Passenger/Cabin)

Fresh air enters the vehicle on the L.H. side, through the manually adjustable damper (Fig. 1) located in evaporator compartment. The damper can be fully opened for normal operation or closed for extreme weather or highly polluted areas (Refer to the XL2 Operator's Manual for more details). Return air is drawn from inside the vehicle through the register duct (Fig. 3).

A double blower fan unit, which is activated by the evaporator motor, draws mixed air through an air filter, cooling and heating coils, then forces this air in the ventilation ducts along the walls, and finally exhausts it just below side windows.

XL2 coaches are also equipped with a parcel rack ventilation system, a three-position rocker switch 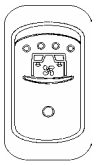 (0FF - 1st speed - 2nd speed) located on R.H. dashboard panel controls the speed of both fans. Return air is drawn just below the middle side windows through an air filter into the parcel rack fan; discharge air is fed to the rotating registers through the ventilation duct.

The parcel rack registers are used to control air flow for the passenger seats. One register per seat direct air flow by pointing or rotating register. Open or close register to adjust air flow.

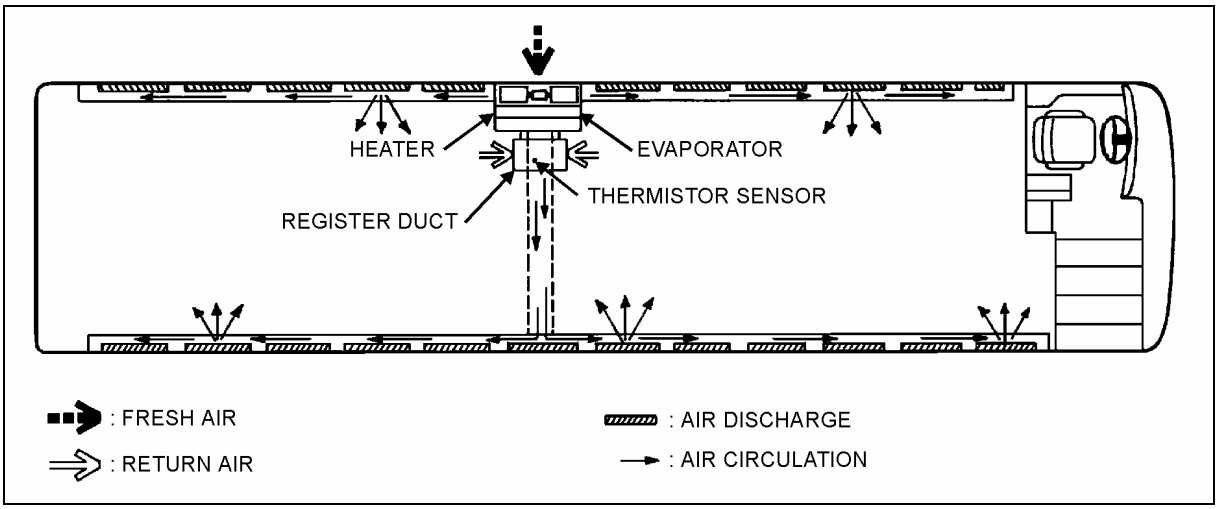

FIGURE 3: CENTRAL HVAC SYSTEM AIR CIRCULATION 22063

3. DRIVER'S HVAC SYSTEM OPERATION

The temperature control in the driver's area is provided directly by the HVAC control unit mounted on the dashboard R.H. panel (Fig. 4 and 5).

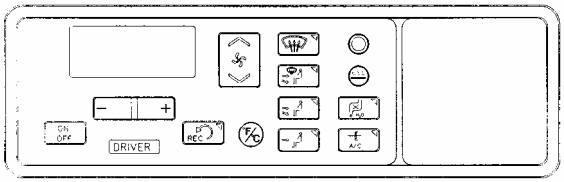

FIGURE 4: DRIVER'S HVAC SYSTEM CONTROL UNIT 22184

Note: *The driver's area air temperature sensor is located behind the grill of the R.H. side console or inside the footwell, at the ceiling at the right of the steering column (Refer to fig.12).*

3.1 VEHICLES EQUIPPED WITH A HGB-1000 TECUMSEH COMPRESSOR

This system is completely independent, it has its own condenser, evaporator and compressor.

3.2 VEHICLES EQUIPPED WITH A CENTRAL SYSTEM

The driver's HVAC unit piping is paralleled with the main HVAC unit piping. Both units use the same refrigerant and coolant, and are linked to the same condenser and compressor, even if they are individually controlled. It requires the main HVAC unit to engage the A/C compressor magnetic clutch. Consequently, the driver's unit cannot be operated in the A/C mode alone.

4. CENTRAL HVAC SYSTEM OPERATION

The HVAC control unit located on the dashboard R.H. panel, enables the selection of the temperature in the passenger area (or the living space for a converted vehicle) (refer to the Operator's Manual for details).

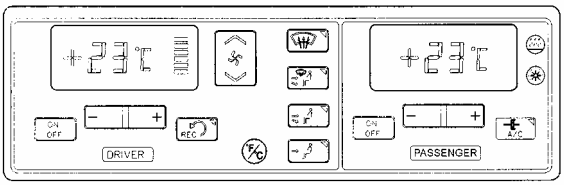

FIGURE 5: CENTRAL HVAC SYSTEM CONTROL UNIT 22184

Temperature control is provided in conjunction with a thermistor sensor inside register duct, located amidships on L.H. side of vehicle (Figs. 3 & 6).

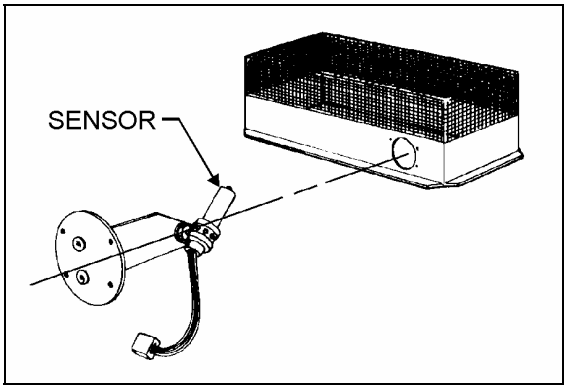

FIGURE 6: THERMISTOR SENSOR 22064

The flow of water to the vehicle's main heater core is controlled by an electric water valve which is open or closed depending on selected temperature. A red LED, located on HVAC control unit, illuminates when heating mode is selected. A green LED illuminates when compressor clutch is in operation.

The evaporator fan motor, located in evaporator compartment, is protected by a 120 amps, manually resettable circuit breaker. The condenser fans, located in the condenser compartment, also have circuit protection via 40 amps manually resettable circuit breakers. The breakers are located in the A/C junction box in the evaporator compartment.

Note: *The outside temperature sensor is located behind the front bumper on the L.H. side.*

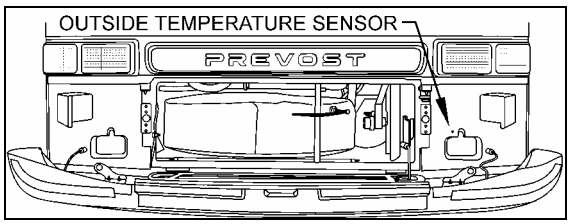

FIGURE 7: LOCATION OF OUTSIDE TEMPERATURE SENSOR 22195

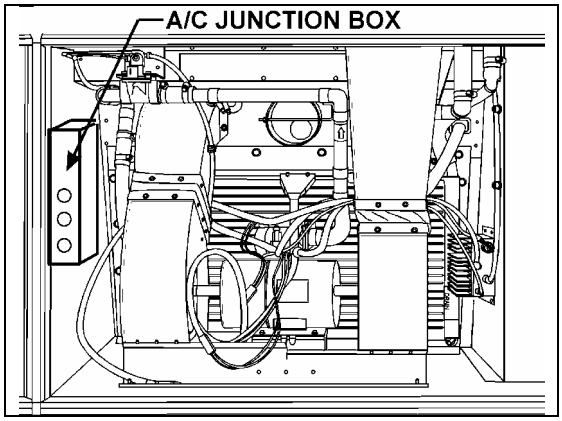

FIGURE 8: LOCATION OF A/C JUNCTION BOX IN EVAPORATOR COMPARTMENT 06414

To operate A/C system when vehicle is stationary, run engine at fast idle. During operation of A/C system, windows should be kept closed and door(s) not left open longer than necessary. In order to prevent battery discharge, A/C & heating system will not operate when charging system is malfunctioning.

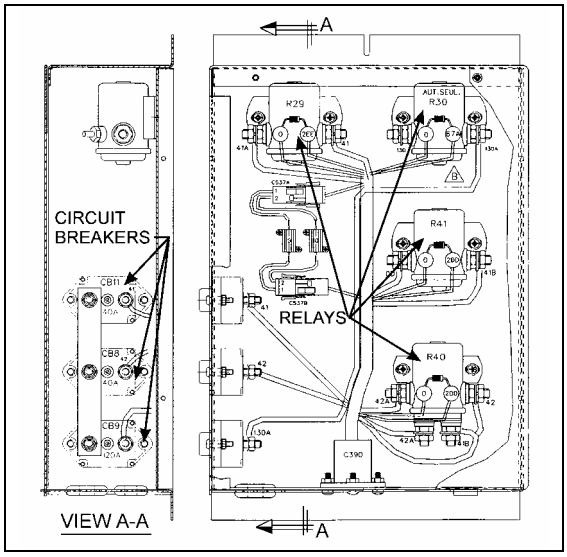

FIGURE 9: A/C JUNCTION BOX 06317

4.1 PARCEL RACK A/C (XL2 COACHES)

Optional small A/C evaporator coils may be added to both parcel racks existing air system. These auxiliary A/C system components are separate and completely independent of driver's and central systems and permits a wider temperature range in the passenger's area. The three-position rocker switch used to control the fans, also controls the A/C system.

5. HVAC UNIT MAINTENANCE

No special maintenance is required on the central, driver's and auxiliary HVAC units, with the exception of cleaning their respective coils and air filters, plus periodic inspection for broken drains, hoses and charging of system.

5.1 COIL CLEANING

Note: *Squeeze rubber hose located underneath the appropriate compartment to eliminate the accumulated water and dirt when you make routine maintenance.*

Check the external surface of the coil at regular intervals for dirt or any foreign matter.
For the driver's HVAC unit, flush the coil from inside. For the evaporator, back flush the coil (Fig. 10) every 12,500 miles (20 000 km) or once a year, whichever comes first.

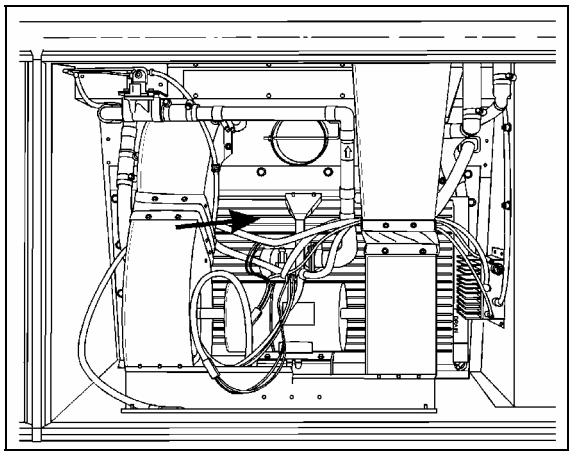

FIGURE 10: EVAPORATOR COIL CLEANING 22178

For the condenser coil, back flush the coil (Fig. 11) every 6,250 miles (10 000 km) or twice a year, whichever comes first.

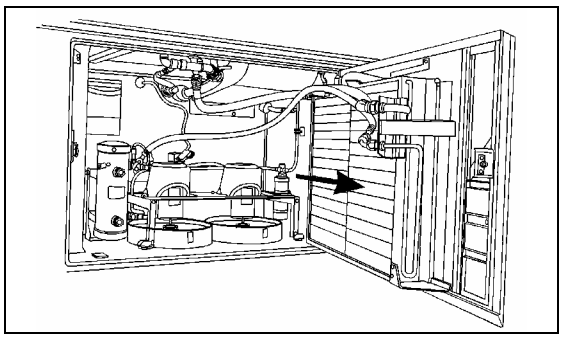

FIGURE 11: CONDENSER COIL CLEANING 22174

Caution: *Use a water jet or water mixed with low air pressure to clean the coil.*

Caution: *Direct the pressure straight through the coil to prevent bending of fins and do not use extremely high pressure. Do not use hot water, steam or caustic soap.*

5.2 DRIVER'S HVAC UNIT AIR FILTER

The driver HVAC system is located behind the dashboard's R.H. side lateral plastic panel. To gain access to the A/C filters, unscrew the R.H. lateral console's grill located at the top step of the entrance door steps. Slide out the R/A and F/A filters. To clean filters back flush with water, then dry with air, every 12,000 miles (20 000 km) or once a year, which-ever comes first (Fig. 12).

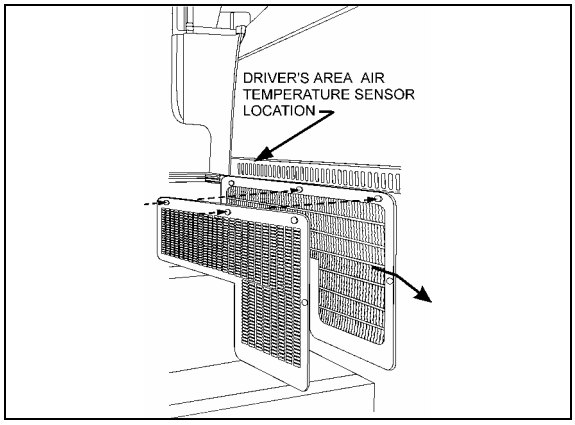

FIGURE 12: DRIVER'S AREA AIR FILTERS 22193

5.3 MAIN HVAC UNIT AIR FILTER

The main or cabin air filter is located in the evaporator compartment. To access the filter on XL2 coaches, open baggage compartment door located in front of the evaporator compartment (L.H. side). Open access panel by turning the

three screws of panel ¼ of a turn, unsnap both fasteners on top of filter, and slide out filter (Fig. 13). On MTH, to gain access, open evaporator compartment door. Remove filter panel by unscrewing the six fixing screws. Slide out the filter for cleaning (Fig. 14). To clean filter, back flush with water or soapy water, then dry with air every 12,000 miles (20 000 km) or once a year, whichever comes first.

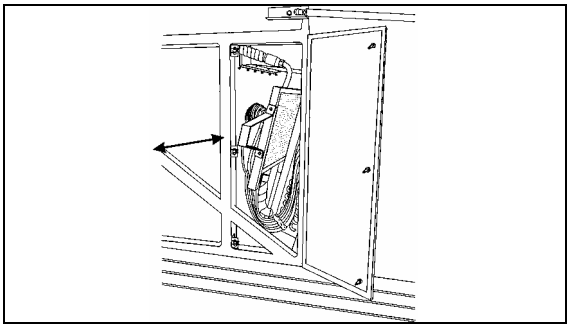

FIGURE 13: MAIN HVAC UNIT AIR FILTER 22179

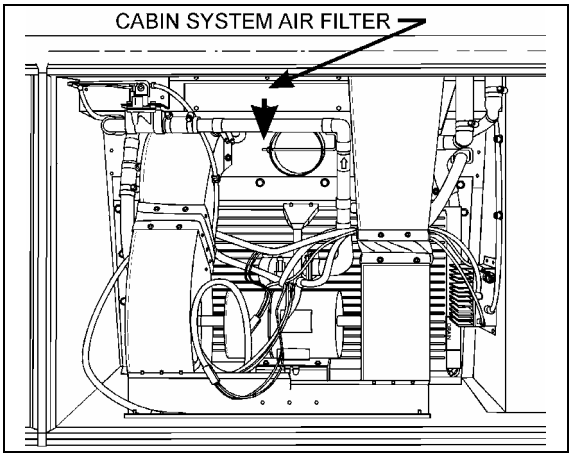

FIGURE 14: CABIN SYSTEM AIR FILTER REMOVAL 22178

***Caution**: Do not use high pressure water jet to avoid damaging filter.*

***Caution:** Be sure not to reverse filter upon installation*

5.4 PARCEL RACK FAN AIR FILTER

A/C condenser coils may be installed in both parcel rack air systems. Only the air filters are serviceable. The air filters are accessible from inside the parcel racks. Slide out the filters, then back flush with water, dry with air and replace. This procedure should be done every 12,000 miles (20,000 km) or once a year, whichever come first.

For A/C unit, ball valves are added on supply and return lines in the condenser compartment. They have service port to evacuate the A/C parcel rack circuit. When work has to be done on a evaporator coil unit, it will be easier to remove it and repair it on a bench.

6. DIAGNOSIS OF MAIN HVAC UNIT PROBLEMS

6.1 TROUBLESHOOTING MODE

Troubleshooting the HVAC system is made easier when entering the *"Troubleshooting Mode"*. The Troubleshooting Mode is used while driving the vehicle to diagnose a low or high pressure in the HVAC system.

To enter the Troubleshooting Mode, proceed as follows:

1. Check that HVAC system in passenger section is OFF.
2. First press A/C and hold, then press ON OFF and hold both buttons for 2 seconds.
3. Passenger section display should indicate 00 to show that Troubleshooting Mode is activated.

***Note:** To return to Normal Operating Mode, turn the HVAC system OFF in the passenger section.*

Low Pressure

The Telltale panel located in center dashboard should indicate LO PRESS when pressing A/C on the passenger section panel if a low pressure condition is present.

***Note:** The telltale indicator will only illuminate if Troubleshooting Mode was entered and a low pressure condition is present.*

High Pressure

The Telltale panel located in center dashboard should indicate HI PRESS when pressing A/C on the passenger section panel if a high pressure condition is present.

Note: *The telltale indicator will only illuminate if Troubleshooting Mode was entered and a high pressure condition is present.*

6.2 CONTINUITY CHECK

A continuity check is automatically performed at HVAC system start-up. If an open or short-circuit occurs, the corresponding switch LED or the display will blink for 10 seconds. The probes are checked at least every 5 minutes.

Circuit	Switch LED or Display
F/A damper driver	Driver Rec
Damper mix Driver “Liquid Solenoid Valve”	Driver air 4th switch Driver display “Set Point” (AC)
Driver “Hot Water Valve”	Driver display “Set Point” (HE)
Passenger “Hot Water Valve”	Passenger display “Set Point” (HE)
A/C Clutch Relay	A/C Clutch
Exterior Probe	Display “Text”. (---)
Driver interior probe	Driver display “Set Point” (---)
Passenger interior probe	Passenger display “Set Point” (

7. EVAPORATOR MOTOR

(Central HVAC system only)

The evaporator motor is installed in the evaporator compartment (L.H. side of vehicle) (Fig. 15). It is a 28.5 volt, 1.5 HP (1.1 kW) motor which activates a double blower fan unit. An evaporator motor speed controller is installed in the evaporator compartment as standard equipment (MTH only).

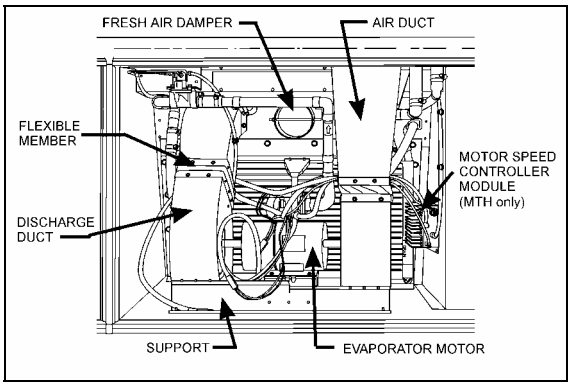

FIGURE 15: HVAC COMPARTMENT 22178

7.1 REMOVAL

1. Set the battery master switch to the *“OFF”* position.
2. Open the last L.H. side baggage compartment door. Pull the black release button located on the L.H. side in order to unlock and open the evaporator compartment door.
3. Identify the L.H. side discharge duct inside compartment and remove the Phillips head screws retaining the flexible member to duct.
4. Repeat step 3 for the R.H. side air duct.
5. Disconnect the discharge air sensor connector. Remove the cable tie securing wire.
6. From under the vehicle, remove the eight bolts retaining the evaporator fan motor support. Remove the complete unit from the evaporator compartment (Fig. 16).

Caution: *Never support evaporator motor by its output shafts while moving it.*

7. On a work bench, unscrew the fan square head set screws, the Phillips head screws retaining cages to support and slide out the assemblies from the evaporator motor output shaft.

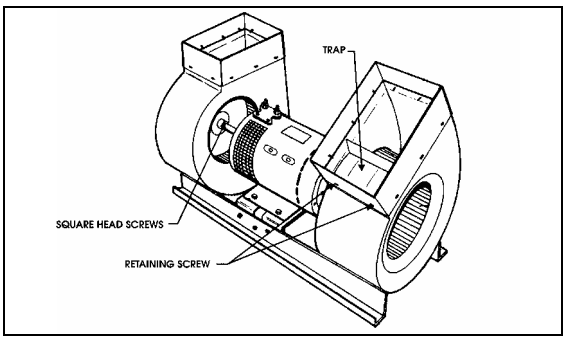

FIGURE 16: EVAPORATOR MOTOR ASSEMBLY 22036

7.2 INSTALLATION

To reinstall the evaporator motor, reverse "Evaporator Motor Removal" procedure.

7.3 CHECKING OPERATION OF BRUSH IN HOLDER

Lift brush slightly 1/8 inch (3 mm) and release it. Brush must produce a dry noise.

7.4 BRUSH WEAR INSPECTION AND REPLACEMENT

Replace the brushes if less than ¾ inch (19 mm). New brush length is 1-¼ inch. Clean brushes with a clean cloth impregnated with gasoline or alcohol.

Warning: *Cleaning products are flammable and may explode under certain conditions. Always handle in a well ventilated area.*

To replace brushes, proceed as follows:

1. Set battery master switch to the “OFF” position.
2. Remove the protective screen band from the motor housing by pulling down the spring loaded fastener.
3. Remove and replace brushes as per the standard procedure.
4. Reverse installation procedure.

7.5 CHECKING COMMUTATOR

The surface must be polished. A brown-black colored surface is normal and indicates a good switching. Ensure there is no evidence of arcing or metal chips.

7.6 SPEED CONTROLLER MODULE

The evaporator motor speed controller module is mounted on the R.H. side wall inside the evaporator compartment (MTH only) (Fig. 15). The purpose of this electronic module is to limit the evaporator motor speed to 75% of its full rated speed throughout the heating mode and cooling mode. The module will then gradually increase the motor speed.

8. AIR CONDITIONING SYSTEM

The schematic of Figure 17 shows the central and auxiliary A/C system and its components. The central system is equipped with a 6 cylinder, 05G-134A Carrier compressor with an air conditioning capacity of 7½ tons. The receiver tank and filter dryer are mounted inside the condenser compartment.

XL2 Coaches may be supplied with central and auxiliary A/C system (Fig. 17). XL2 Converted vehicles (Shells) may be supplied with central or driver's A/C system only (Fig. 17 and 18). Auxiliary and driver's A/C systems come with a 2 cylinder, HGB-1000 Tecumseh compressor with an air conditioning capacity of 2 tons.

8.1 A/C CYCLE

Refrigeration may be defined as "the transfer of heat from a place where it is not wanted to a place where it is unobjectionable". Components required for a closed circuit refrigeration system are shown in Figures 17 and 18.

The air conditioning system used on XL2 series vehicle is of the *"Closed"* type using *"R-134a".*

1. The refrigerant flowing to the compressor, is compressed to high pressure and reaches a temperature higher than the surrounding air. It is passed through the air-cooled fins and tubes of the condenser causing the hot, high pressure gas to be condensed into a liquid form.
2. The liquid refrigerant flows to the receiver tank, then through a filter dryer where moisture, acids and dirt are removed. It is passed through a moisture indicator which indicates if any moisture is present in the system.

3. By its own pressure, the liquid refrigerant flows through a thermal expansion valve where the pressure drop causes the refrigerant to vaporize in a vapor-liquid state at a low temperature pressure.
4. The cold low pressure refrigerant passes through the main and the driver's evaporator coils which absorbs heat from the air passing over the fins and tubes, and changes into gas. In this form, the refrigerant is drawn into the compressor to repeat the air conditioning cycle.
5. The success of the air conditioning system depends on retaining the conditioned air within the vehicle. All windows and intake vents should be closed. An opening of approximately 8 in^2 (5162 mm^2) could easily neutralize the total capacity of the system.
6. Other causes of inadequate cooling are dirty coils or filter. Dirt acts as an insulation and is also serves as a restriction to the air flow.
7. The refrigeration load is not constant and varies. It is also affected by outside temperature, relative humidity, passenger load, compressor speed, the number of stops, etc.
8. The compressor will load or unload depending on operating conditions.

8.2 REFRIGERANT

The A/C system of this vehicle has been designed to use Refrigerant 134a as a medium. Regardless of the brand, only R-134a must be used in this system. The chemical name for this refrigerant is Ethane, 1, 1, 1, 2-Tetrafluoro.

Warning: *Refrigerant in itself is nonflammable, but if it comes in contact with an open flame, it will decompose.*

8.2.1 Procurement

Refrigerant is shipped and stored in metal cylinders. It is serviced in 30 and 100 pound (13,6 and 45 kg) cylinders. Approximately 24 pounds (10,9 kg) are used in the system. If vehicle is equipped with only a driver's A/C system, then 5.6 lbs (2,6 kg) are used and approximately 4 lbs (1,8 kg) are used in an auxiliary A/C system.

It will be impossible to draw all the refrigerant out of the cylinder. However, the use of warm water when charging the system will assure the extraction of a maximum amount of refrigerant from the cylinder.

8.2.2 Precautions in Handling Refrigerant

1. Do not leave refrigerant cylinder uncapped.
2. Do not subject cylinder to high temperatures, do not weld or steam clean near system or cylinder.
3. Do not fill cylinder completely.
4. Do not discharge vapor into an area where a flame is exposed.
5. Do not expose the eyes to liquid refrigerant.

All refrigerant cylinders are shipped with a heavy metal screw cap. The purpose of the cap is to protect the valve and safety plug from damage. It is a good practice to replace the cap after each use of the cylinder for the same reason. If the cylinder is exposed to the sun's radiant heat pressure increase resulting may cause release of the safety plug or the cylinder may burst.

For the same reason, the refrigerant cylinder should never be subjected to excessive temperature when charging a system. The refrigerant cylinder should be heated for charging purposes by placing it in 125°F (52°C) water. Never heat above 125°F (52°C) or use a blowtorch, radiator, or stove to heat the cylinder. Welding or steam cleaning on or near any refrigerant line or components of the A/C system could build up dangerous and damaging pressures in the system.

If a small cylinder is ever filled from a large one, never fill the cylinder completely. Space should always be allowed above the liquid for expansion. Weighing cylinders before and during the transfer will determine the fullness of the cylinders

Warning: *One of the most important precautions when handling refrigerant consists in protecting the eyes. Any liquid refrigerant which may accidentally escape is approximately -40°F (-40°C). If refrigerant comes in contact with the eyes, serious injury could result. Always wear goggles to protect the eyes when opening refrigerant connections.*

8.2.3 Treatment in Case of Injury

If liquid refrigerant comes in contact with the skin, treat the injury as if the skin was frost-bitten or frozen. If liquid refrigerant comes in contact with the eyes, consult an eye specialist or doctor immediately. Give the following first aid treatment:

1. Do not rub the eyes. Splash eyes with cold water to gradually bring the temperature above the freezing point.
2. Apply drops of sterile mineral oil (obtainable at any drugstore) in the eyes to reduce the possibility of infection. The mineral oil will also help in absorbing the refrigerant.

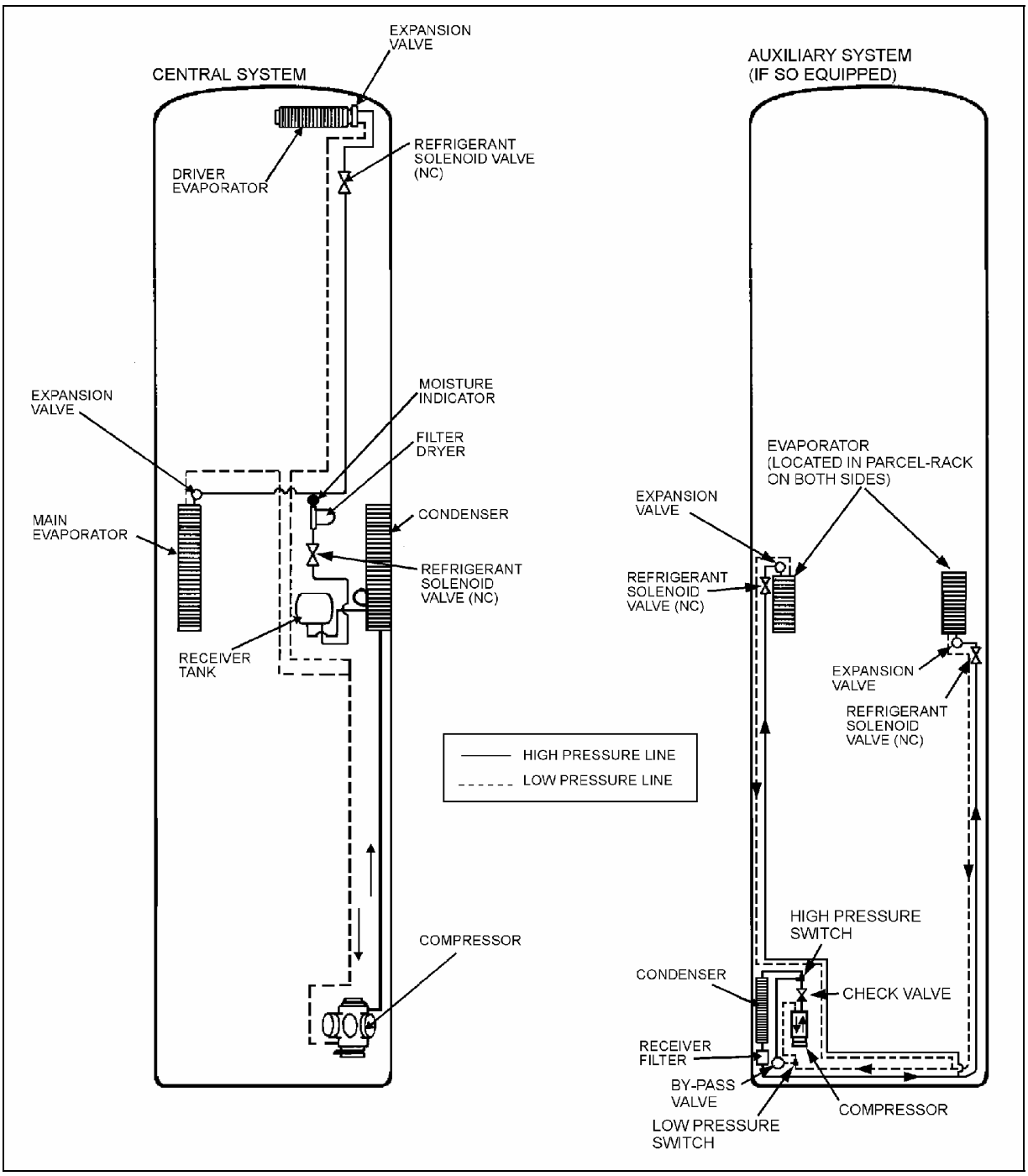

FIGURE 17: REFRIGERANT CIRCUIT (CENTRAL AND AUXILIARY SYSTEMS) 22196

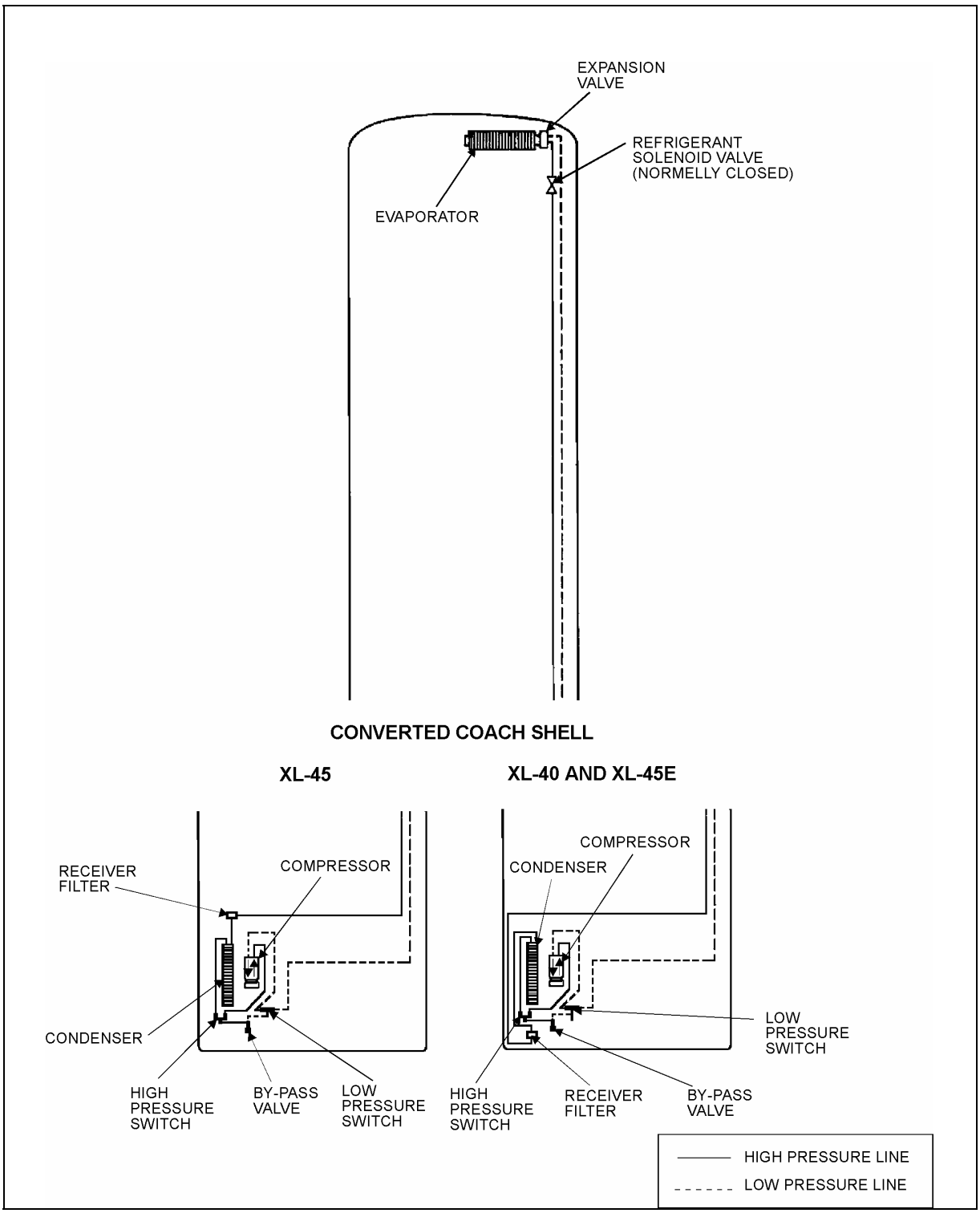

FIGURE 18: REFRIGERANT CIRCUIT (DRIVER'S AUXILIARY SYSTEM) 22071

8.2.4 Precautions in Handling Refrigerant Lines

1. All metal tubing lines should be free of kinks, because of the resulting restrictions on the flow of refrigerant. A single kink can greatly reduced the refrigeration capacity of the entire system.
2. The flexible hose lines should never be allowed to come within a distance of 2-½" (6,3 cm) from the exhaust manifold.
3. Use only sealed lines from parts stock.
4. When disconnecting any fitting in the refrigeration system, the system must first be discharged of all refrigerant. However, proceed very cautiously, regardless of gauge readings. If there happens to be liquid refrigerant in the line, disconnect fittings very slowly, keeping face and hands away so that no injury can occur. If pressure is noticed when fitting is loosened, allow it to bleed off very slowly.

***Warning**: Always wear safety goggles when opening refrigerant lines.*

5. In the event that any line is opened to the atmosphere, it should be immediately capped to prevent entrance of moisture and dirt.
6. The use of the proper wrenches when making connections on O-ring fittings is important. The use of improper wrenches may damage the connection. The opposing fitting should always be backed up with a wrench to prevent distortion of connection lines or components. When connecting the flexible hose connections, it is important that the swaged fitting and the flare nut, as well as the coupling to which it is attached, be held at the same time using three different wrenches to prevent turning the fitting and damaging the ground seat.
7. The O-rings and seats must be in perfect condition. The slightest burr or piece of dirt may cause a leak.
8. O-rings should be coated with refrigeration oil and installed on the line before the line is inserted into the fitting to prevent damaging the O-ring. If leaks are encountered at the couplings or connectors, no attempt should be made to correct the leaks by tightening the connections beyond the recommended torque. The O-rings are designed to seal at the specified torque and overtightening the connection does not result in a satisfactory and permanently sealed connection. The connection must be disassembled and the cause of the leak (damaged O-ring, defective lines, etc.) corrected. Use new O-ring.

8.2.5 Auxiliary System Refrigerant Lines

- From the inside of the coach, remove the mirror located inside the lavatory to access the Y connector separating the system two sides. Also a small access panel located in front of the lavatory entrance door, near the ceiling enables to reach the R.H. side supply and return line fittings.
- The L.H. side supply and return line fittings are accessible by removing the rearmost overhead storage compartment separator.

8.3 PUMPING DOWN

This procedure is intended to reduce refrigerant loss, on central system only, by isolating it in the compressor and the receiver tank, as well as in their connecting line, in order to carry out repairs on other sections of the air conditioning system (lines and components).

***Note:** Before attempting any repair between compressor and receiver tank, use a recovery unit to remove refrigerant from the system.*

***Note:** On vehicles equipped with an auxiliary or driver's A/C system only, it is not possible to isolate refrigerant except to add oil. See Tecumseh compressor "Oil Verification", further in this section.*

***Warning:** To prevent any injury, when air conditioning system must be opened, refer to previous paragraph "PRECAUTIONS IN HANDLING REFRIGERANT".*

***Caution:** The filter dryer must be changed each time a line in the system is opened.*

Procedure

1. Energize passenger side liquid solenoid valve.
2. Run the system for 10 minutes, shut it OFF, then close the receiver tank outlet valve by turning it clockwise, backseat the suction service valve on the compressor, install an appropriate pressure gauge set, and turn the valve forward ¼ turn to enable a visual check of the suction pressure.
3. Disconnect the *"Low Pressure Switch"* connector (mounted near the A/C compressor, and install a jumper wire.

Note: *This jumper wire will allow the clutch to remain engaged after pressure drops below 15 psi (103,5kPa).*

4. Start the engine, press the *"Passenger ON/OFF"* switch then the A/C switch, adjust *"A/C Temperature"* control to maximum A/C.
5. Run the compressor until pressure reaches 1-2 psi (7-14 kPa).

Note: *During this operation, care must be taken not to fill the receiver tank over the upper sight glass. If so, stop process immediately. Always allow refrigerant piping and units to warm up to the ambient air temperature before opening system or sweating will take place inside the lines.*

5. Stop engine, and close compressor outlet valve by turning it clockwise until valve is properly seated.
6. Close compressor suction valve by turning it clockwise until it is properly seated.
7. Wait until pressure gauge reaches 1 to 2 psi (7 to 14 kPa). To accelerate procedure, lightly open compressor suction valve until pressure reaches this value.

8.4 ADDING REFRIGERANT (VAPOR STATE)

Use the suction service valve on the compressor to add a small quantity of refrigerant to the system. Backseat the valve and connect a charging line from the refrigerant cylinder to the valve. Tighten connection at level of refrigerant cylinder and open tank end slightly to purge air from the charging line. Tighten the charging line at the compressor. Screw in the stem of suction valve approximately two turns. Start the engine and run at fast idle. Add sufficient refrigerant to bring the level in lower sight glass of receiver tank to mid-point. Always charge the system with the cylinder upright and the valve on top to avoid drawing liquid out of the cylinder.

8.5 EVACUATING SYSTEM

1. Open both receiver valves by turning "out" (normal position).
2. Remove the caps from the two 90° adapters on the suction, discharge valves and connect two hoses to the vacuum.
3. Place the two compressor valves, suction and discharge, in neutral position by turning each one 3 to 4 turns "in" from the "out" position.
4. Open the solenoid valve by energizing or manually bypass.
5. Start the vacuum pump. Open the large (suction) shutoff valve and close the small vacuum gauge valve.
6. The pressure will drop to approximately 29 inches vacuum (14.2 psi or 97,9 kPa) (the dial gauge only gives a general idea of the absolute system pressure.
7. Backseat the compressor valves by turning "out" all the way.
8. Shut down the vacuum pump.
9. Remove the hoses.
10. Reinstall the caps at the suction valve take-off points.

8.5.1 Double Sweep Evacuation Procedure

1. Remove any remaining refrigerant from the system using a refrigerant recovery machine.
2. Connect the evacuation manifold, vacuum pump, hoses and micron gauge to the unit.
3. With the unit service valves closed (back seated) and the vacuum pump and the thermistor valves open, start the pump and draw the manifold and hoses into a very

deep vacuum. Shut the vacuum pump off and see if the vacuum holds. This is to check the setup for leaks.

4. Midseat the system service valves.
5. Open the vacuum pump and the thermistor valves. Start the pump and evacuate to a system pressure of 2000 microns.
6. Close the vacuum pump and the thermistor valves, turn off the vacuum pump (closing the thermistor valve protect the valve from damage).
7. Break the vacuum with clean refrigerant (or dry nitrogen) and raise the pressure to approximately 2 PSIG. Monitor the pressure with the compound gauge.
8. Remove the refrigerant with the recovery machine.
9. Repeat steps #5 – 8 one time.
10. After the second “sweep”, change the filter drier (if you have not done so) and evacuate to 500 microns.
11. Evacuating the system below 500 microns on systems using the Carrier 05G compressor may risk drawing air into the system past the carbon shaft seal.
12. Check to insure that vacuum holds. (If the pressure continues to rise, it indicates a leak or moisture in the system).
13. Charge the system with the proper amount of refrigerant using recommended charging procedures.

Note: *This method will aid in preventing unnecessary system failures by ensuring that the refrigeration system is free of contaminants.*

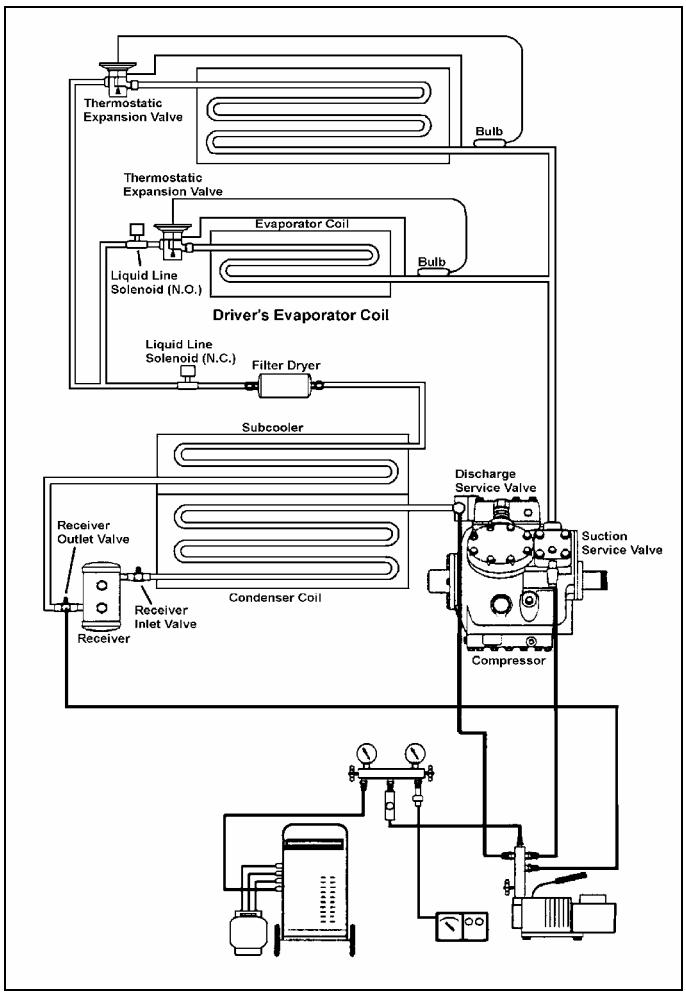

FIGURE 19: DOUBLE SWEEP EVACUATION SET-UP

8.5.2 Evacuating System Before Adding Refrigerant (Driver's or Auxiliary System)

When a system has been opened, to check for leaks or if there are any questions about the air or moisture in the system, evacuate the system. XL2-40 Coaches, XL2 MTH-40 and 45E equipped with a driver's or auxiliary system must use the service port located just above rear L.H. side door in engine compartment to perform the evacuation (Fig. 20).

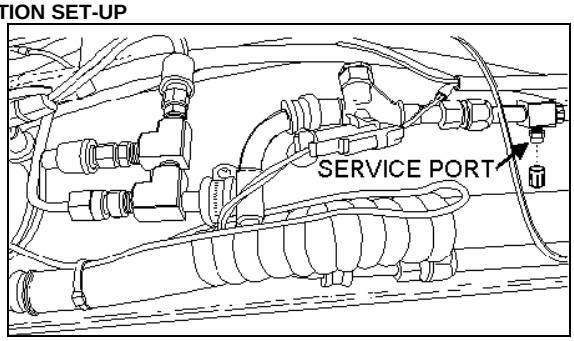

FIGURE 20: LOCATION OF SERVICE PORT 22194

1. Connect two hoses equipped with a micron gauge between the compressor suction valve, the service port and the vacuum pump.
2. With the unit service valves closed (back seated) and the vacuum pump valves open, start the pump and draw the manifold and

hoses into a very deep vacuum. Shut the vacuum pump off and see if the vacuum holds. This is to check the setup for leaks.

3. Place the compressor suction valve and service port in neutral position by turning each one 3 to 4 turns “in” from the “out” position.
4. Start the vacuum pump and evacuate to a system pressure below 500 microns.
5. Shut down the vacuum pump.
6. Check to insure that vacuum holds. (If the pressure continues to rise, it indicates a leak or moisture in the system).
7. Backseat the compressor suction valve and service port by turning “out” all the way.
8. Charge the system with the proper amount of refrigerant through the service port near the check valve using recommended charging procedures.
9. Remove the hoses.

8.6 CHARGING SYSTEM

When a system has been opened or if there are any questions about the air or moisture in the system, evacuate the system. Charging of an evacuated system may be accomplished by forcing liquid R-134a directly into the receiver tank. This may be accomplished by placing the refrigerant cylinder upside down on a scale with the valves at the bottom. This ensures that only liquid will enter the receiver tank.

When charging an empty system, weigh the amount of refrigerant put into the system. This will eliminate any possibility of overfilling. A nominal charge requires 24 pounds (10,9 kg). If the vehicle is equipped with an auxiliary system, a full charge requires 5.6 lbs (2,6 kg), if the vehicle is equipped with a driver's system only, the system requires 4 lbs (1,8 kg).

1. Backseat the two compressor shutoff valves ("out").
2. Install the test gauges at the shutoff valves noting that the 400 psi (2758 kPa) gauge is connected to the discharge.
3. Turn in the two shutoff valves 3 to 4 turns.
4. Open the lower receiver valve by turning “out” all the way.
5. Backseat the upper receiver valve by turning out all the way.
6. Remove the cover cap from the service fitting in the top receiver valve.
7. Attach a charging hose to the R-134a tank. Open the tank valve slightly permitting R-134a to escape thus purging the hose of air.
8. Connect the charging hose to the service fitting.
9. Open the R-134a tank valve.
10. To build up pressure in the receiver tank, heat the receiver tank with a heating blanket.
11. Turn in the upper receiver valve several turns. The R-134a will now enter the system.
12. The proper charge of R-134a is 24 lbs (10.89 kg). When the scale indicates this amount of charge, backseat the receiver valve and close the R-134a tank valve.
13. Disconnect the charging hose. Replace the cover caps.
14. The system is now ready for operation.

Caution: *The evacuation of the system must be made by authorized and qualified personnel only. Refer to local laws for R-134a recuperation.*

8.7 REFRIGERANT SYSTEM CLEAN-OUT AFTER COMPRESSOR FAILURE

Although the vast majority of reciprocating refrigerant compressors manufactured today are extremely reliable, a small percentage do fail. These failures usually result in minor or extensive system contamination depending on the severity of the failure. When an open type compressor becomes damaged internally, this provokes small particles of bearings, steel, brass, copper, and aluminum and, in severe cases, carbonized oil, which could contaminate the system. To prevent repeated failures, the problem which caused the failure should be

corrected, and depending upon the severity of the failure, the system should be thoroughly cleaned out using one of the clean-out procedures mentioned.

8.7.1 Determining Severity of Failure

The severity of compressor failure can be categorized as minor or major. A failure is considered minor when the contamination is limited to the compressor with little or no system contamination. A major failure, or burnout, results in extensive system contamination as well as compressor damage. Extensive system contamination can be determined by withdrawing a small sample of compressor oil and checking its color, odor and acidity. A Virginia Chemical "TKO" one step acid test kit is one of several compressor oil test kits that may be used. A high acid content would indicate a major failure or burnout. A small amount of refrigerant gas may be discharged. A characteristic burned odor would also indicate severe system contamination.

8.7.2 Clean-out after Minor Compressor Failure

1. Be sure to correct the problem which caused the failure.
2. Change liquid line filter dryer
3. Run the unit for 2 hours on high speed cool only.
4. Check compressor oil level to ensure compressor is not overcharged with oil. Sometimes a significant amount of oil is pumped out of the compressor to other parts of the system when a compressor fails. This oil will return to the replacement compressor when it is started, causing an overcharge of oil in the sump of the replacement compressor. In this case, it is important that the oil level be adjusted to the proper level.
5. Withdraw a sample of the compressor oil and check its color, odor, and acidity, using instructions supplied above. If the oil is contaminated, change the oil and filter dryer, and repeat the procedure until the system is clean.

8.7.3 Clean-out After Major Compressor Failure

1. Reclaim the refrigerant into a refrigerant bottle through a filter dryer to filter out contaminants.
2. Remove the failed compressor and repair it if possible.
3. Install new or repaired compressor.
4. Change the filter dryer.
5. Circulate clean R-134a or nitrogen with the reclaimer to clean out many of the contaminants collected in the coil valves, TXV (Thermal Expansion Valve), solenoid valves, check valves, and any other mechanical component that may have collected contaminants.
6. Evacuate and charge the system normally.
7. Run the unit for 8 hours and monitor the pressure drop across the filter dryer. Also check the liquid line dryer for signs of restriction. If the pressure drop across the filter dryer exceeds 12 to 14 psig (82,75 to 96,5 kPa) with a 40°F (5°C) evaporator coil temperature, stop the unit and change the liquid line and suction line filter dryer. After 4 or 5 hours of operation, stop the unit and replace the filter dryer.
8. After 8 hours of operation, stop the unit and remove a sample of the compressor oil and check its color, odor, and acidity, using instructions supplied above. If the oil is contaminated, replace the oil and repeat step 7. If the oil is not contaminated, change the filter dryer again and replace the moisture-liquid indicator.
9. After approximately 7 days of operation, recheck the compressor oil for cleanliness and acidity.

9. A/C SYSTEM COMPONENTS

9.1 COMPRESSOR (CENTRAL SYSTEM)

9.1.1 Belt Replacement

Warning: *Set the battery master switch to the "Off" position. For greater safety, set the engine starter selector switch in engine compartment to the "Off" position.*

1. Open engine compartment rear doors and locate the belt tensioner pressure releasing valve (Fig. 21), mounted above the engine R.H. side door next to the air pressure regulator, then turn handle counterclockwise in order to release pressure and tension on belts.
2. Slip the old belts off and the new ones on.
3. Reset belt tensioner pressure releasing valve (Fig. 21) to 55 psi (380 kPa) for Series 60 engines to apply tension on the new belts as explained in Section 12.

Note: *Both belts must always be replaced simultaneously to ensure an equal distribution of load on each of them.*

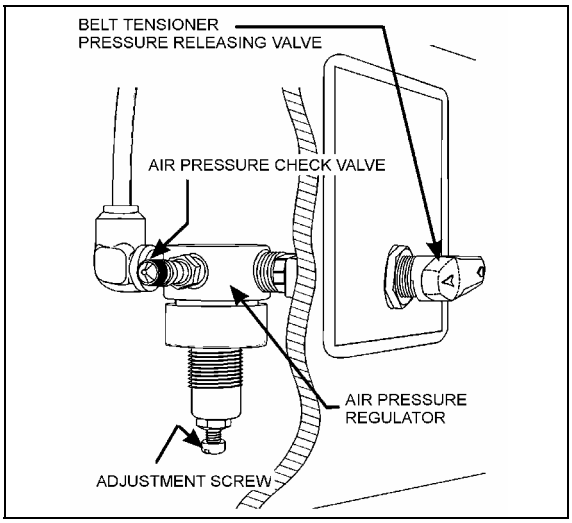

FIGURE 21: AIR PRESSURE REGULATOR 12175

Note: *For proper operation of the air bellows, adjust the* ***upper*** *tensioning bracket to provide a "2 3/8 - 2 ½" (60-64 mm) extension with the pneumatic system under normal pressure and the air pressure regulator set as per paragraph #3 (Fig. 22).*

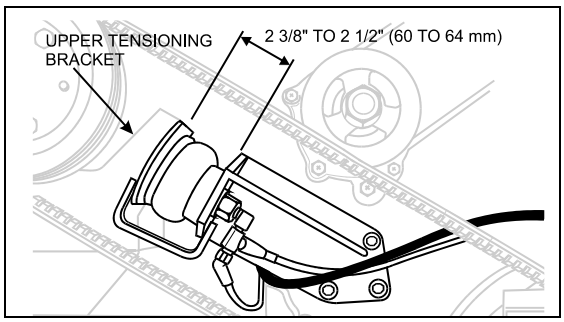

FIGURE 22: BELT TENSIONER 01059

9.1.2 Pulley Alignment

In order to avoid skipping, disengagement and a premature wear of compressor belt, it is necessary to align compressor pulley with the crankshaft pulley. Before performing the following procedure, release air from belt tensioners by means of the air pressure releasing valve. After completing these procedures reset belt tensioner air pressure regulator to 55 psi (380 kPa) for Series 60 engines.

9.1.3 Longitudinal Compressor Alignment

1. Rest an extremity of a straight edge of approximately 46 inches (117 cm) against the upper part of the outer face of crankshaft pulley, positioning the other end close to the compressor clutch pulley (Figs. 23 & 24).
2. Check the distance between each extremity of straight edge (1. Fig. 24) and the first drive belt. If they are different, loosen the compressor support bolts and with a hammer, knock support to slide it in order to obtain the same distance; then tighten bolts.

9.1.4 Horizontal Compressor Alignment

1. Rest an extremity of the straight edge against the upper part of the outer face of compressor pulley, positioning the other end close to the crankshaft pulley.
2. Check the distance between each extremity of straight edge (1, Fig. 24) and drive belt. If they are different, loosen the pillow block compressor bolts and with a hammer, knock compressor pillow block to slide it, in order

to obtain the same distance; then tighten bolts.

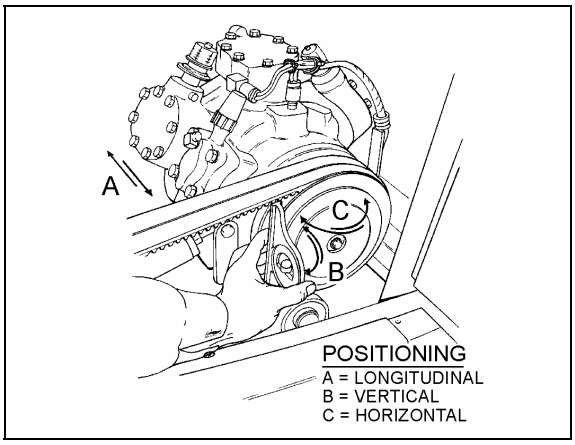

FIGURE 23: COMPRESSOR ALIGNMENT 22072

9.1.5 Vertical Compressor Alignment

Rest a short "angle and level indicator" on the outer side face of the crankshaft pulley, adjust the level indicator inclination at 0° and check if the compressor pulley is at same angle (Figs. 23 & 24). If it is not the same, shim under the appropriate pillow block in order to obtain the correct angle.

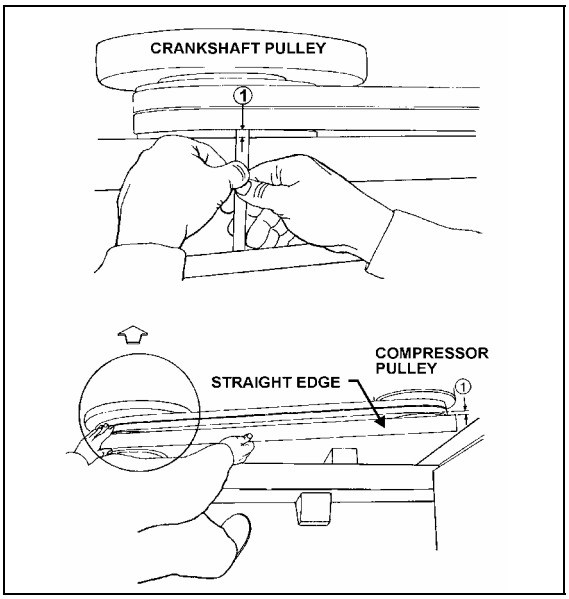

FIGURE 24: COMPRESSOR ALIGNMENT 22040

9.1.6 Compressor Maintenance

For the maintenance of the A/C compressor, see the *"Carrier Compressor Operation and Service Manual"* included at the end of this section.

Caution: *Use only Castrol SW 68 (POE) oils with refrigerant 134a.*

9.1.7 Troubleshooting Guide

A preliminary check may be made by simply feeling the cylinder heads with the unit in operation at ambient temperatures of 35°F (2°C) and over. The cylinder heads are internally divided into suction and discharge valves. The lower half of the cylinder head is the suction side, and it should be relatively cool to the touch, as opposed to the hot upper discharge side. If a valve plate or head gasket is blown, or a compressor unloader is stuck open, partially compressed refrigerant vapor will be circulated between the suction and discharge sides of the head. The affected cylinder head will then have a relatively even temperature across its surface and be neither as hot as the normal discharge temperature nor as cool as the normal suction temperature.

Blown Head Gaskets

Symptom:

- Loss of unit capacity at low temperature.
- Even cylinder head temperature.

Cause:

- Improperly torqued cylinder head bolts.
- Improperly positioned gasket at assembly.
- Warped cylinder head.
- Severe liquid refrigerant floodback.

Blown Valve Plate Gaskets

Symptom:

- Loss of unit capacity at medium and low temperatures.

- Very hot cylinder head surface.
- Higher than normal suction pressure.

Cause:

- Improperly torqued cylinder head bolts.
- Severe liquid refrigerant floodback.
- Oil slugging caused by an overcharge of oil or flood starts.
- Discharge valves not seated properly (liquid drainback during shutdown).

Broken Suction Valves

Symptom:

- Loss of unit capacity at all temperatures.
- Compressor unable to pull extremely low vacuum with suction service valve frontseated.

Cause:

- Repeated liquid refrigerant floodback.
- Flooded starts.
- Overcharge of oil.
- Discharge valves not seated properly (liquid drainback during shutdown).
- Expansion valve not controlling properly.

Unloader Valve Stuck Open

Symptom:

- Loss of unit capacity at all temperatures.
- Higher than normal suction pressure.
- Even cylinder head temperature.

Cause:

- Unloader body stem bent.
- Foreign material binding unloader piston or plunger.

9.2 MAGNETIC CLUTCH

Refer to Carrier service information entitled “Housing-Mounted Electric Clutch” at the end of this section for the description and maintenance of the magnetic clutch.

9.2.1 HVAC Control Unit and Clutch Operation

When A/C system is actuated using A/C switch, the corresponding switch LED will turn on, the A/C ON indicator LED ✳ will turn on and the clutch will engage.

Note: *If the outside temperature is inferior to 25°F (-4°C), the A/C ON indicator LED ✳ will turn off and the clutch will disengage. The indicator LED will turn back on and the clutch will reengage when the outside temperature reaches 35°F (2°C).*

The A/C ON indicator LED ✳ will also turn off and the clutch will disengage if a low (5 – 30 psi) or a high pressure (350 – 245 psi) condition is present.

Note: *You must first enter the Troubleshooting Mode to be able to visualize on the telltale panel the low or high pressure condition (refer to paragraph 6.1).*

Note: *The indicator LED will turn back on and the clutch will reengage 45 seconds after the low or high pressure condition was corrected.*

9.3 COMPRESSOR (DRIVER'S SYSTEM ONLY)

Clutch Pulley Installation

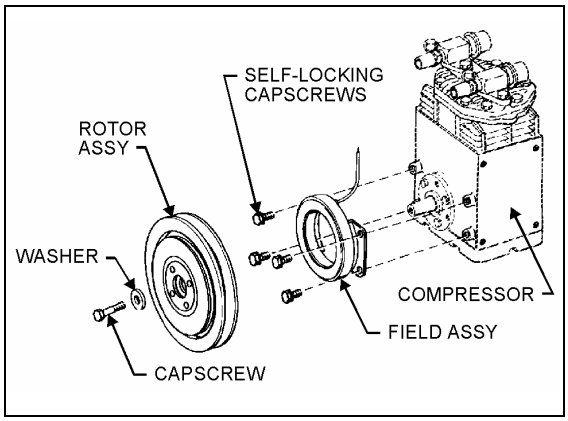

FIGURE 25: PULLEY INSTALLATION 22073

To install the clutch pulley, proceed as follows:

1. Position the field assembly against the compressor bosses, aligning the field

mounting holes with the bolt holes in the bosses (Fig. 25). Insert four (4) self-locking cap screws, supplied with the clutch, into the bolt holes of the compressor. Tighten the cap screws to a wrench torque of 7/10 lbf•ft (9,5/13,5 N•m). Take care not to strip the threads in the compressor body.

2. The compressor shaft must be clean and free of burrs. Check the Woodruff key for proper position and seating.
3. Slide the rotor pulley assembly onto the tapered shaft (aligning the keyway with the Woodruff key in the shaft). Secure the rotor pulley assembly with the washer and self-locking cap screw to a wrench torque of 15/20 lbf•ft (20/27 N•m).
4. Rotate the pulley assembly manually to ensure that there is no interference between the field and rotor. If interference is present, a rubbing noise can be heard as the pulley rotates. If interference is present, disassemble the clutch and repeat the installation of the field assembly.

9.3.1 Clutch Pulley Removal

To disassemble the rotor-pulley assembly from the compressor, remove the self-locking cap screw and washer and insert a 5/8-11 UNC-2B cap screw in the threaded portion of the hub. The pressure exerted by the cap screw on the end of the compressor shaft will force off the rotor pulley assembly without damaging the clutch or compressor. ***DO NOT USE*** a wheel puller on the outer diameter of the pulley, since this can result in damage to the clutch bearing.

9.3.2 Clutch Maintenance

The compressor clutch automatically compensates for wear, requiring no adjustment throughout the life of the clutch. ***DO NOT*** lubricate the unit. If the clutch should fail to operate, check the electrical circuit.

9.3.3 Belt Replacement

Warning: *Set the battery master switch to the "OFF" position, then for greater safety, set the engine starter selector switch in engine compartment to the "OFF" position.*

1. Open engine compartment rear doors.
2. Loosen tension retaining bolt.
3. Replace compressor belt.
4. Tighten belt to 60/65 lbf•in (6,5/7 N•m) (Fig. 26), using a belt tension gauge, as per *"Instruction Sheet IS94056"*, then tighten tension retaining bolt.

Note: *Since new belts stretch with normal wear, readjust tension after a run-in period of 500 miles (800 km), if necessary.*

9.3.4 Pulley Alignment

In order to avoid skipping, disengagement or premature edge wear of compressor belt, it is necessary to align fan gearbox and compressor pulleys.

1. Rest an extremity of a straight edge on fan gearbox pulley's flat surface, then place the other end of straight edge near compressor clutch pulley.
2. Check the distance between the straight edge and the belt at both pulleys *(Take note that pulleys outer edges do not have the same thickness)*. If they do not match, loosen fan gearbox pulley and adjust accordingly.

Note: *Fan gearbox pulley is of the "Tapered" type and will move out 1/16" (2 mm) after tightening.*

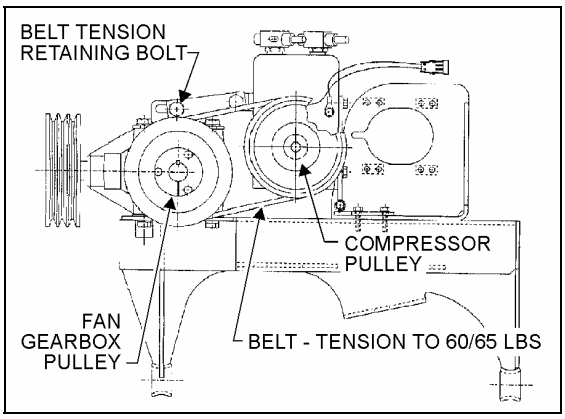

FIGURE 26: A/C COMPRESSOR (DRIVER'S OR AUXILIARY SYSTEM) 05018A

9.3.5 Oil Verification (Tecumseh Compressor)

To add oil, first evacuate the compressor as per the following instructions:

1. Backseat the suction and discharge valves on the compressor, install an appropriate pressure gauge set, then turn the valve clockwise until it is properly seated and also to enable a visual check of the suction pressure.
2. Evacuate the system through the pressure gauge set tube.
3. Unscrew oil fill plug (identified *"OIL"*) and insert a slightly arced, disposable gauge (wood, cardboard, etc.) down to the bottom. The oil level must be ½" (13 mm) from the bottom. This level is equivalent to 10 US oz (295 ml) of oil. For more information, see *"11. SPECIFICATIONS"* at the end of this section.
4. Backseat the suction and discharge valves, remove the pressure gauge set, then turn both valves clockwise, midway between frontseated and backseated position.

9.4 CONDENSER

The central A/C system condenser coil is hinge mounted on the R.H. side of the vehicle on the A/C condenser door (Fig. 28). The condenser coil for vehicles equipped with an auxiliary or a driver's A/C system only, is mounted on the outer face of engine radiator. Since condenser's purpose is to dissipate heat from the hot refrigerant, it is important to keep the cooling coils and fins clean. A clogged coil will cause high discharge pressure and insufficient cooling.

9.4.1 Condenser Fan Motors

Two fan motors (Fig. 27), 28.5 V - (0.6 HP - 0.42 kW) and cages are installed in the condenser compartment on R.H. side of vehicle in order to ventilate the condenser coil. They are mounted on a support, fastened to the floor. The fans pull outside air through the condenser coil and discharge it through an opening at bottom of compartment. When temperature drops inside condenser, the pressure in the refrigerant line also drops and it is, therefore, no longer required to cool condenser. Consequently, when pressure drops to 130 psi, the motors will run at low speed and if the pressure continues to drop to 90 psi, a pressure switch stops the motors so that fans do not operate needlessly. When pressure rises to 120 psi, the pressure switch reactivates the motors. If the pressure rises to 170 psi, the motors will switch to high speed.

For details about electrical wiring, refer to *"A/C and Heat system"* in the master wiring diagram.

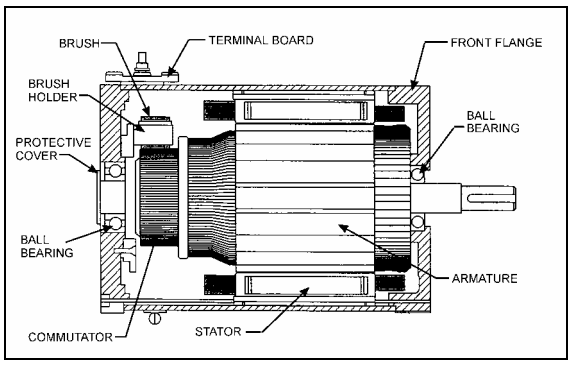

FIGURE 27: CONDENSER FAN MOTOR 22180

9.4.2 Condenser Fan Motor Removal

1. Set the battery master switch to the *"Off"* position.
2. Remove the two *"Phillips"* head screws retaining the fan motor protective cover to the square tubing. Remove the protective grill from mounting support.
3. Disconnect wiring from terminals on motor. Tag each wire to aid in identification at time of reconnection.

4. Support motor, and remove bolts which attach motor to mounting bracket. Remove the motor.

9.4.3 Preliminary Disassembly

1. Remove the brushes.
2. Unscrew the flange retaining screws on the shaft end side (opposite to the commutator end frame), and separate flange from frame (Fig. 27).
3. Remove flange and armature assembly by pushing bearing shaft toward the commutator end frame.
4. Separate flange from armature.

9.4.4 Disassembly

1. Perform preliminary disassembly.
2. Carefully note the position of the brush holder ring and the connections on the flange support.
3. Unscrew and remove the flange on the commutator end frame.
4. Remove the brush holder ring.
5. Finally, separate the following parts: brush holders, brush boxes, terminal board, bearings, etc…

9.5 RECEIVER TANK

The receiver tank is located in the condenser compartment (Fig. 28). The function of the receiver tank is to store the liquid refrigerant. During normal operation, the level of the refrigerant should be approximately at the mid-point of the lower sight glass.

In case of extreme pressure there will be a rise in the liquid receiver tank. A pressure relief valve will break at 450 psi (3103 kPa) and relieve the receiver tank pressure.

The receiver tank incorporates an inlet valve on the inlet side (upper section) which allows the tank to be isolated or serviced. An outlet valve on the outlet side (lower section) permits complete isolation from the rest of the system.

Note: *For vehicles equipped with an auxiliary or driver's A/C system only, see receiver-filter, as described below under "Filter Dryer".*

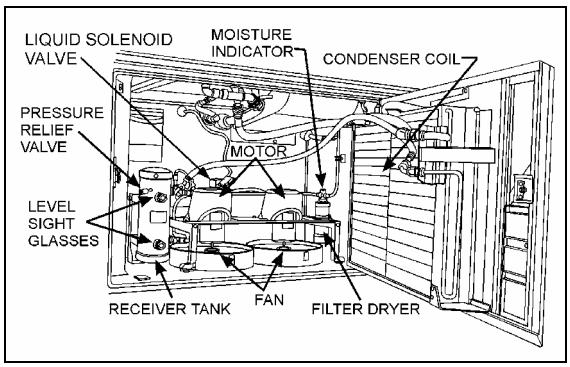

FIGURE 28: A/C CONDENSER COMPARTMENT 22174

9.6 FILTER DRYER

A filter dryer, also located in the condenser compartment, is installed on the liquid refrigerant line after the receiver tank. It is used to absorb moisture and foreign matter from refrigerant before it reaches the expansion valves.

The filter should be replaced if the system has been opened or after a prolonged exposure, when the moisture indicator sight glass turns to pink.

A receiver-filter, located close to engine compartment L.H. side rear door, is installed on vehicles equipped with an auxiliary A/C system or a driver's system only. Its function is similar to that of filter and receiver used on main systems. Replace only when system is opened or a problem occurs.

Note: *On XL2-45 vehicles, the receiver-filter is installed on wheel housing, inside L.H. side rear service compartment (Fig. 29).*

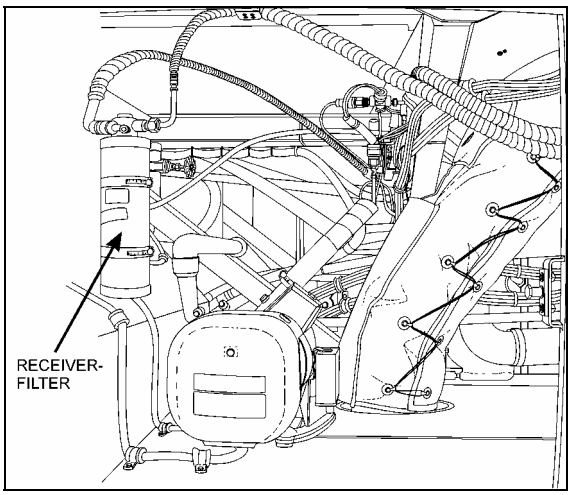

FIGURE 29: RECEIVER-FILTER LOCATION (XL2-45) 22176

9.6.1 Replacement

The filter is of the disposable type. When replacement is required, remove and discard the complete unit and replace with a new unit of the same type according to this procedure:

1. Isolate the refrigerant in the receiver tank by following the “Pumping Down” procedure explained in this section
2. Change the filter dryer as a unit.
3. Add a small quantity of refrigerant R-134a to the low side of the system. Check for leaks. Return the system to normal operation.

Caution: *Do not use carbon tetrachloride or similar solvents to clean parts. Do not use steam guns. Use mineral spirits or naphtha. All parts should be thoroughly cleaned. Use a stiff brush to wash dirt from grooves, holes, etc.*

Warning: *Cleaning products are flammable and may explode under certain conditions. Always handle in a well ventilated area.*

9.6.2 Moisture Indicator

The moisture sensitive element consists of a color changing ring which is reversible from pink to blue and vice versa as the moisture content in the refrigerant changes. Pink indicates a wet refrigerant, light violet (caution) and blue indicates a dry refrigerant.

Since temperature changes affect the solubility, color change will also vary with the refrigerant temperature. The following table shows the color change for R-134a at various moisture levels and liquid line refrigerant temperatures.

COLOR INDICATOR			
TEMPERATURE	BLUE (ppm)	LIGHT VIOLET (ppm)	PINK (ppm)
75°F (24°C)	Below 5	5-15	Above 15
100°F (38°C)	Below 10	10-30	Above 30
125°F (52°C)	Below 15	15-45	Above 45
p.p.m.= parts per million (moisture content)			

A moisture level of 15 p.p.m. for R-134a indicated in the blue color range of the above table is generally considered dry and safe. A color indication of light blue to light violet indicates the caution range of moisture level. For positive protection, the drying of the system should be continued until the color of the element turns to deep blue.

The liquid refrigerant is readily visible through the center opening of the moisture element where the presence of bubbles indicates a shortage of refrigerant or restriction in line.

Moisture is one of the main causes of chemical instability or contamination in air conditioning systems. If moisture is present, it can corrode the valves, condenser and evaporator coils, compressor and other components causing a malfunction and eventual failure of the system. Uncontrolled moisture in the system can result in very expensive multiple component replacements if not corrected at an early stage. The moisture indicator permits an early detection of moisture in the system and when corrected by a desiccant charge, system contamination is greatly minimized.

9.7 LIQUID REFRIGERANT SOLENOID VALVE

The flow of liquid refrigerant to the driver’s and main evaporators is controlled by a normally-closed solenoid valve. The driver’s liquid solenoid valve is located on the ceiling of the

spare wheel and tire compartment and is accessible through the reclining bumper.

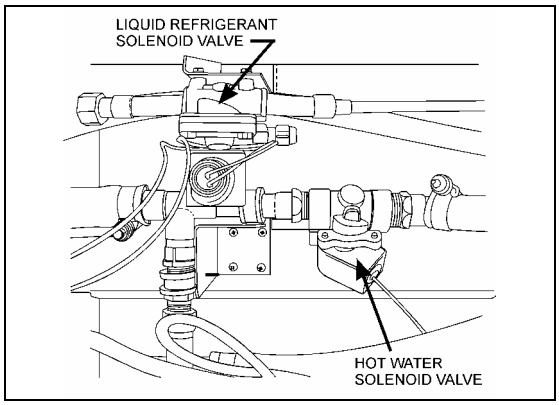

FIGURE 30: DRIVER'S EVAPORATOR LIQUID SOLENOID VALVE 22181

Note: *An identical refrigerant solenoid valve is used on the auxiliary A/C system and is located near the auxiliary A/C unit.*

9.7.1 Manual Bypass

This type of solenoid valve is equipped with a manual operating stem. The 3/16" square stem located on the bonnet is exposed when the seal cap is removed. To manually open valve, turn stem ½ turn counterclockwise. To manually close valve, turn stem clockwise until tight against seat. Manual stem must be in closed position for automatic electric operation.

9.7.2 Coil Replacement

1. Disconnect connector from the coil connector.
2. Take out the retaining screw at the top of the coil housing. The entire coil assembly can then be lifted off the enclosing tube.
3. Place the new coil and yoke assembly on the enclosing tube. Lay data identification plate in place.
4. Insert the coil retaining screw, rotate housing to proper position and tighten screw securely.
5. Connect connector from coil connector.

9.7.3 Valve Disassembly

1. Remove the coil as stated previously.
2. Pump down the system as stated earlier in this section.
3. Remove the four socket head screws which hold the body and bonnet together (Fig. 31).
4. Carefully lift off the bonnet assembly (upper part of the valve) so that plunger will not fall out. The diaphragm can now be lifted out.

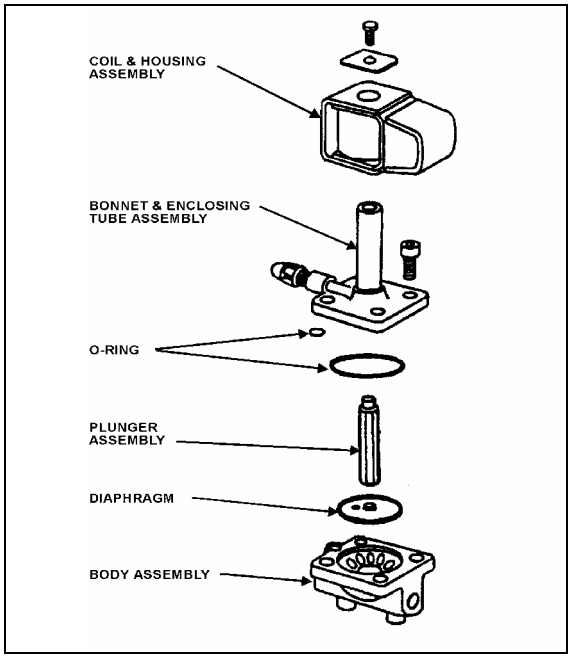

FIGURE 31: REFRIGERANT SOLENOID VALVE 22044

Note: *The above procedure must be followed before brazing solder-type bodies into the line.*

Caution: *Be careful not to damage the machined faces while the valve is apart.*

9.7.4 Valve Reassembly

1. Place the diaphragm in the body with the pilot port extension up.
2. Hold the plunger with the synthetic seat against the pilot port.
3. Make sure the bonnet O-rings are in place. Lower the bonnet assembly over the plunger, making sure that the locating sleeve in the bonnet enters the mating hole in the body.
4. Insert the four socket head screws and tighten evenly.

5. Replace the coil as stated previously.
6. Add a small quantity of refrigerant R-134a to the low side of the system. Check for leaks. Return the system to normal operation.

9.8 BY-PASS VALVE

A by-pass valve, used on auxiliary or driver's system only, is located just above rear L.H. side door in engine compartment (Fig. 32 and 33).

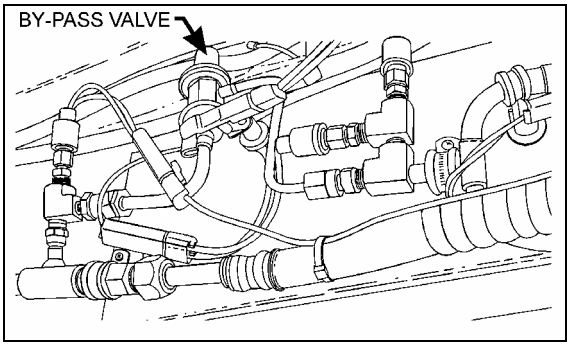

FIGURE 32: BY-PASS VALVE LOCATION 22182

Its function is to balance the Lo-side line and Hi-side line. The by-pass valve is factory adjusted but when valve is replaced, proceed as follows for adjustment:

1. Loosen jam nut.
2. Tighten adjusting screw flush to jam nut.
3. Tighten jam nut.

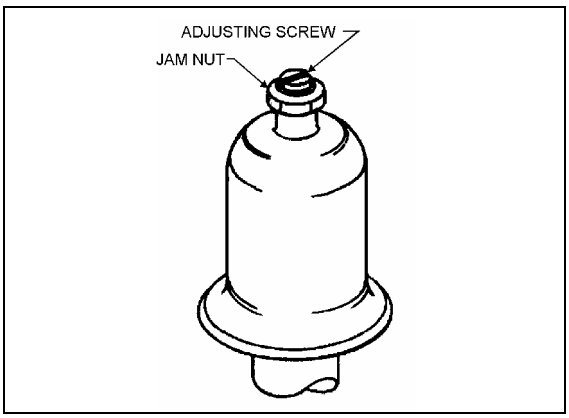

FIGURE 33: BY-PASS VALVE 22079

9.9 EXPANSION VALVE

9.9.1 Central System

The expansion valve for the central system is a thermo-sensitive valve with a remote control bulb head attached to the evaporator outlet line and is accessible by the evaporator coil access door (Fig. 10 & 34). The valve regulates the flow of refrigerant liquid into the evaporator coils and is controlled by the suction gas temperature leaving the evaporator. The bulb head senses the refrigerant gas temperature as it leaves the evaporator. High temperature will cause expansion and pressure on the power head and spring. Such action causes the assembly valve to open, allowing a flow of refrigerant liquid into the evaporator.

The remote bulb and power assembly is a closed system. The pressure within the remote bulb and power assembly corresponds to the saturation pressure of the refrigerant temperature leaving the evaporator and moves the valve pin in the opening direction. Opposed to this force, on the under side of the diaphragm and acting in the closing direction, is the force exerted by the superheat spring. As the temperature of the refrigerant gas at the evaporator outlet increases above the saturation temperature corresponding to the evaporator pressure, it becomes superheated. The pressure thus generated in the remote bulb and power assembly surpasses the combined pressures of the evaporator pressure and the superheat spring, causing the valve pin to move in the opening direction. Conversely, as the temperature of the **refrigerant** gas leaving the evaporator decreases, the pressure in the remote bulb and power assembly also decreases and the combined evaporator and spring pressures cause the valve pin to move in the closing position.

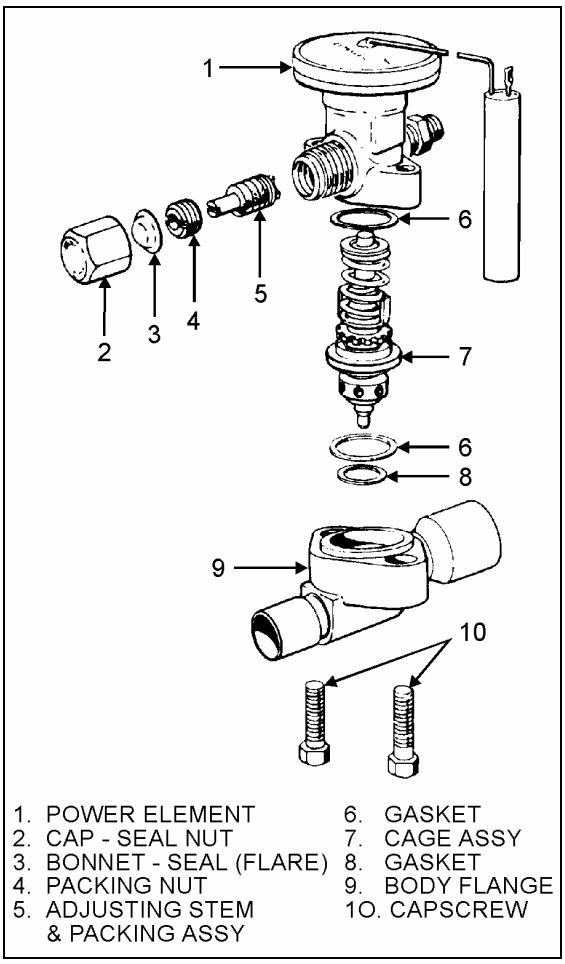

FIGURE 34: EXPANSION VALVE 22045

As the operating superheat is raised, the evaporator capacity decreases, since more of the evaporator surface is required to produce the superheat necessary to open the valve. It is obvious, then, that it is most important to adjust the operating superheat correctly and that a minimum change in superheat to move the valve pin to full open position, is of vital importance because it provides savings in both initial evaporator cost of operation. Accurate and sensitive control of the refrigerant liquid flowing to the evaporator is necessary to provide maximum evaporator capacity under load conditions. The spring is adjusted to give 12 to 16° F (-11.1 to -8.8 ° C) of superheat at the evaporator outlet. This ensures that the refrigerant leaving the evaporator is in a completely gaseous state when drawn into the suction side of the compressor. Liquid would damage the compressor valve, piston and heads if allowed to return in the suction line.

A vapor is said to be superheated when its temperature is higher than the saturation temperature corresponding to its pressure. The amount of the superheat is, of course, the temperature increase above the saturation temperature at the existing pressure.

As the refrigerant moves along in the evaporator, the liquid boils off into a vapor and the amount of liquid decreases until all the liquid has evaporated due to the absorption of a quantity of heat from the surrounding atmosphere equal to the latent heat of vaporization of the refrigerant. The gas continues along in the evaporator and remains at the same pressure. However, its temperature increases due to the continued absorption of heat from the surrounding atmosphere. The degree to which the gas refrigerant is superheated is related to the amount of refrigerant being fed to the evaporator and the load to which the evaporator is exposed.

Superheat Adjustment

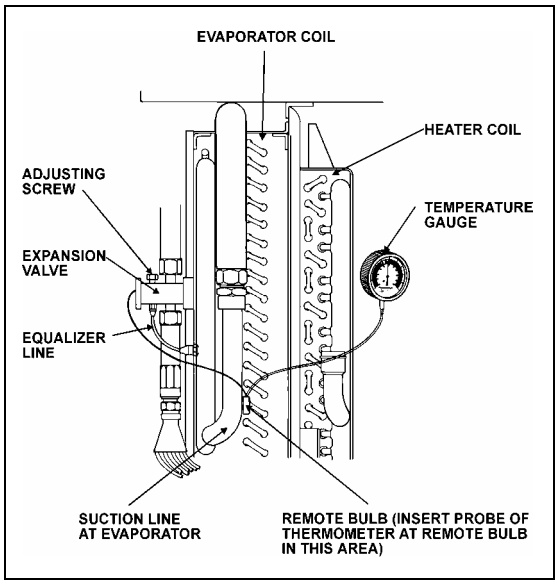

FIGURE 35: SUPERHEAT ADJUSTMENT INSTALLATION 22046

The starting method of adjusting the superheat is to unscrew completely the main evaporator expansion valve adjusting screw, then screw in 13 turns clockwise for 134A (Fig. 35). Afterwards, the following procedure should be followed:

1. Operate coach for at least one-half hour at fast idle with temperature control set at 82°F (27,7°C), Then set temperature to minimum to keep the compressor on 6 cylinders.
2. Install pressure gauge at the evaporator suction header. You may install the pressure gauge at compressor suction, but then add 3 psi to reading.
3. Install a remote reading thermometer to the evaporator outlet line near the existing remote bulb (Fig. 35).
4. Apply thermostatic tape around the bulb and evaporator outlet line to get a true reading of the line temperature.
5. Block condenser if necessary to keep pressure over 150 psi.
6. Check approximately 5 readings of pressure at 2-minute intervals and convert to temperature using the temperatures & pressures table (page 35). Likewise check the temperature reading at the remote bulb at the same 2-minute intervals and record the low and high swing readings of the needle (refer to Fig. 36).

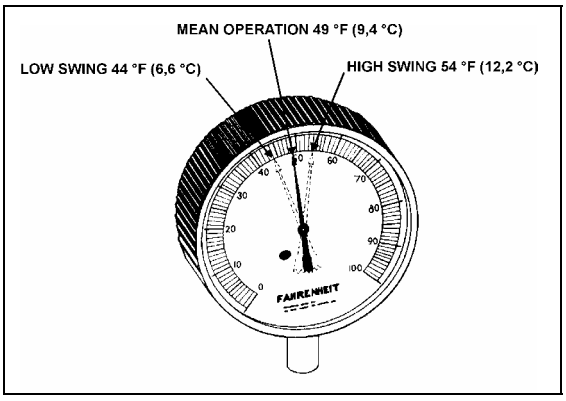

FIGURE 36: HIGH & LOW SWING TEMPERATURE AT REMOTE BULB 22047

Example of readings taken at fig. 36:

A/C pressure gauge converted to temperature at expansion valve fitting	Temperature on remote bulb	
40°F(4,4°C)	Low-swing 44°F (6,6°C)	High swing 54°F (12,2°C)
Formula for superheat 49°F-40°F=9°F (9,4°C-4,4°C = 5°C)	Average of low and high swing is 49°F (9,4°C)	

Note: *The low swing of the superheat should be a minimum of 4°F (2,2°C) higher at the remote bulb and have an average of 8 to 12°F (4 to 6°C) higher range at the bulb than the fitting at the expansion valve.*

Note: *To reduce the superheat, flow of refrigerant is increased by turning adjusting screw of expansion valve lower evaporator temperature counterclockwise. To increase temperature or increase superheat, flow of refrigerant is reduced by turning adjustment screw of expansion valve clockwise.*

6. Regulate suction pressure to temperature reading according to temperature chart or to the R-134a temperature scale on the pressure gauge.

Example: Suction pressure 30 psi (207 kPa) converted to 32°F (0°C) on chart. If temperature reading is 40°F (4,4°C), subtract 32°F (0°C) and the result will be 8°F (4,4°C) of superheat.

Caution: *Before proceeding to the expansion valve adjustment, check for restriction on suction side for plugged filter dryer and partially open valves. These conditions will give a high superheat.*

Maintenance

1. Pump down the system as previously indicated in this section.

2. Disconnect the external equalizer line from the under side of the power head, and unclamp the remote control bulb from the evaporator coil outlet line.

3. Remove the two cap screws holding the power assembly to the valve body flange. Lift off the power assembly and remove the cage assembly.

4. When reassembling, replace with the new gaskets in proper location. Make sure the two lugs on the cage assembly fit into grooves provided in the power assembly. Do not force the valves together. The cage must fit properly before tightening the body flange. Tighten bolts evenly.

5. Check for leaks.

Safety Instructions

1. Make sure the valve is installed with the flow arrow on the valve body corresponding to the flow direction through the piping system.

2. Before opening any system, make sure the pressure in the system is brought to and remains at the atmospheric pressure. Failure to comply may result in system damage and/or personal injury.

9.9.2 Driver's System

The function and operation of the expansion valve for the driver'' system are similar to the main system, but no superheat adjustment is required (see figures 17 and 18).

9.10 TORCH BRAZING

Use an electrode containing 35% silver.

Caution: *When using heat near a valve, wrap with a water saturated rag to prevent overheating of vital parts.*

Warning: *Before welding any part of refrigeration system, make sure the area is well ventilated.*

9.11 TROUBLESHOOTING

9.11.1 Expansion Valve

PROBABLE CAUSE	PROBABLE REMEDY
LOW SUCTION PRESSURE-HIGH SUPERHEAT	
EXPANSION VALVE LIMITING FLOW:	
Gas in liquid line due to pressure drop in the line or insufficient refrigerant charge.	Locate cause of line flash and correct by use of any of the following methods. Add R-134a. Replace or clean filter dryer.
Inlet pressure too low from excessive low condensing temperature. Resulting pressure difference across valve too small.	Increase head pressure. Verify pressure switch for fan speed control.
Superheat adjustment too high.	Adjust superheat as outlined under "Superheat Adjustment".
Power assembly failure or partial loss of charge.	Replace power assembly or replace valve.
Air filter screen clogged.	Clean or replace air filter screen.
Plugged lines.	Clean, repair or replace lines.
LOW SUCTION PRESSURE-LOW SUPERHEAT	
Uneven or inadequate evaporator loading due to poor air distribution or liquid flow.	Balance evaporator load distribution by providing correct air or liquid distribution.
HIGH SUCTION PRESSURE-HIGH SUPERHEAT	
Compressor discharge valve leaking.	Replace or repair valve.
HIGH SUCTION PRESSURE-LOW SUPERHEAT (DEFECTIVE UNLOADER)	
Valve superheat setting too low.	Adjust superheat as outlined under "Superheat Adjustment".
Compressor discharge valves leaking.	Replace or repair discharge valve.
Incorrect superheat adjustment.	Superheat adjustment 12 to 16°F.
FLUCTUATING DISCHARGE PRESSURE	
Insufficient charge.	Add R-134a to system.

PROBABLE CAUSE	PROBABLE REMEDY
HIGH DISCHARGE PRESSURE	
Air or non-condensable gases in condenser.	Purge and recharge system.
Overcharge or refrigerant.	Bleed to proper charge.
Condenser dirty.	Clean condenser.

9.11.2 A/C

TROUBLE	CAUSE
Low suction pressure and frosting at dryer outlet.	Clogged filter.
Low Oil Level.	Check for oil leaks and for leaking oil seal. Do not attempt to check oil level unless system has been stabilized at least 20 minutes. See oil level verification.
Excessively cold suction line.	Loss of contact between the expansion valve bulb and the suction line or sticking of the expansion valve. Check for foreign matter and clean, repair or replace the valve.
Excessively cold suction line and noisy compressor.	Check superheat adjustment. Check remote bulb contact. Check expansion valve for sticking.
Compressor squeaks or squeals when running.	Check oil level. Replace oil seal.
Noisy or knocking compressor.	Check for broken internal parts. Overhaul if required.
Compressor vibrates.	Check and tighten compressor mounting bolts and belt tension.
Low refrigerant level	Check for refrigerant leaks and add refrigerant if required.
Suction pressure rises faster than 5 pounds per minute after shutdown.	Check compressor valve for breakage or damage.
Insufficient cooling.	Check for refrigerant leaks. Check condition of air filter and motors.
Insufficient air flow.	Dirty or iced evaporator. Dirty air filter. Blowers inactive. Clogged ducts.
No flow of refrigerant through expansion valve.	Filter dryer is clogged. Remote bulb has lost charge or expansion valve is defective.
Expansion valve hisses. Bubbles in moisture and liquid indicator.	Gas in liquid line. Add refrigerant.
Loss of capacity Superheat too high.	Clogged filter. Obstructed or defective expansion valve. Reset superheat adjustment. Check for clogged external equalizer line, or filter dryer.

TROUBLE	CAUSE
Reduced air flow: a. Dirty or clogged air filter; b. Evaporator motor inoperative; or c. Plugged return air ducts.	Dirty or iced evaporator coil. Clean air filter screen. Check return ducts for obstructions. Check blower motor.
Frequent starting and stopping on low pressure control switch.	Lack of refrigerant. Check for leaks. Recharge.
Compressor intermittently starts and stops.	Intermittent contact in electrical control circuit. Compressor valves not in operating position.
Non-condensable in the refrigeration system.	Leak on system, system in vacuum in low temp. Specific symptom, pressure in system will not correspond to ambient temperature on shutdown. Only non-condensable will cause this. (Example: Pressure of idle R-134a system in 80°F (26.6°C) room should be 86.4 psi (595.7 kPa). See temperature chart in this section.) An evaporator just does a proper cooling job without sufficient air. Shortage of air can be caused by the following: • Dirty filters; or • Dirty coils.

Testing condenser pressure.

Note: R-134A pressure is function of the temperature variation.

Example, for an exterior temperature of 100°F.
Exterior temperature (100°F) + 30°F = 130°F. Refer to paragraph "10.11 Temperature & Pressure".
Note the corresponding pressure for a temperature of 130°F., 199.8 psi.
Read the condenser pressure, example 171.9 psi.
171.9 psi 199.8 psi, the pressure in the condenser is inferior to the pressure corresponding to the exterior temperature, then condenser pressure may be to low. Check for refrigerant leaks and add refrigerant if necessary. If the pressure corresponding to the condenser temperature is superior to the pressure corresponding to the exterior temperature, then air cooled condenser pressure may be to high. Most frequent causes are:

Reduced air quantity. This may be due to:

- Non-condensable in system;
- Dirt on the coil;
- Restricted air inlet or outlet;
- Dirty fan blades;
- Incorrect rotation of fan;
- Fan speed too low;
- Fan motor going out on overload; or
- Prevailing winds.
- Too much refrigerant in system. Remove refrigerant if necessary.

9.12 TEMPERATURES & PRESSURES

VAPOR-PRESSURE			
TEMPERATURE		PRESSURE	
°F	°C	psi	kPa
-100	-73.3	27.8	191.7
-90	-67.8	26.9	185.5
-80	-62.2	25.6	176.5
-70	-56.7	23.8	164.1
-60	-51.1	21.5	148.2
-50	-45.6	18.5	127.6
-40	-40.0	14.7	101.4
-30	-34.4	9.8	67.6
-20	-29	3.8	26.2
-10	-23	1.8	12.4
0	-18	6.3	43.4
10	-12	11.6	80
20	-7	18.0	124.1
30	-1	25.6	176.5
40	4	34.5	237.9
50	10	44.9	309.6
60	16	56.9	392.3
70	21.1	70.7	487.5
80	27	86.4	595.7
90	32.2	104.2	718.5
100	38	124.3	857.0
110	43.3	146.8	1012.2
120	49	171.9	1185.3
130	54.4	199.8	1377.6
140	60	230.5	1589.3
150	65.6	264.4	1823.0
160	71	301.5	2078.8

VAPOR-PRESSURE			
TEMPERATURE		PRESSURE	
°F	°C	psi	kPa
170	76.7	342.0	2358.1
180	82.2	385.9	2660.8
190	87.8	433.6	2989.7
200	93.3	485.0	3344.1
210	98.9	540.3	3725.4

9.13 LEAK TESTING

Some methods such as nitrogen pressure and soap, and electronic sniffer can be used for leak testing. However, the most common method used is a "Halide" torch consisting of an acetylene tank, a burner and a suction test hose. Proceed as follows:

Warning: *Do not inhale fumes from leak detector.*

The flow of acetylene to the burner causes a suction in the test line. Any gas refrigerant present will be drawn through the hose and into the burner where it decomposes into free acids.

These acids come in contact with the hot copper reaction plate in the burner, causing color reaction in the flame. A small concentration is indicated by a green tint and a large concentration by an intense blue. Do not confuse this change in color with the change caused by shutting off the air supply through the hose by holding the end too close to an object.

The procedure for testing is:

1. Adjust flame so that the top of the cone is approximately level or within one-half inch above the plate.

2. Probe end of suction test tube around all joints, valves, etc. When a leak has been found at a soldered joint, that section of the system must be pumped down. Do not solder as pressure will force hot solder out. If the system is empty, it is more economical to put in just enough R-134a to produce about 15 psi (103 kPa). The pressure can be raised to about 150 psi (1034 kPa) with dry nitrogen.

Note: *This gas is put into the suction and discharge shutoff valves at the compressor. The receiver valves must be opened. If no leaks are found, dump this mixture, evacuate the system and fill with refrigerant.*

10. HEATING SYSTEM

The schematics of Figures 37 and 38 show respectively, the central heating system and the driver's heating system with their components.

In addition to the normal heating provided by the engine, an optional preheating system (41 000 Btu/hr, 45 000 Btu/hr or 80,000 Btu/hr) may have been installed in the vehicle.

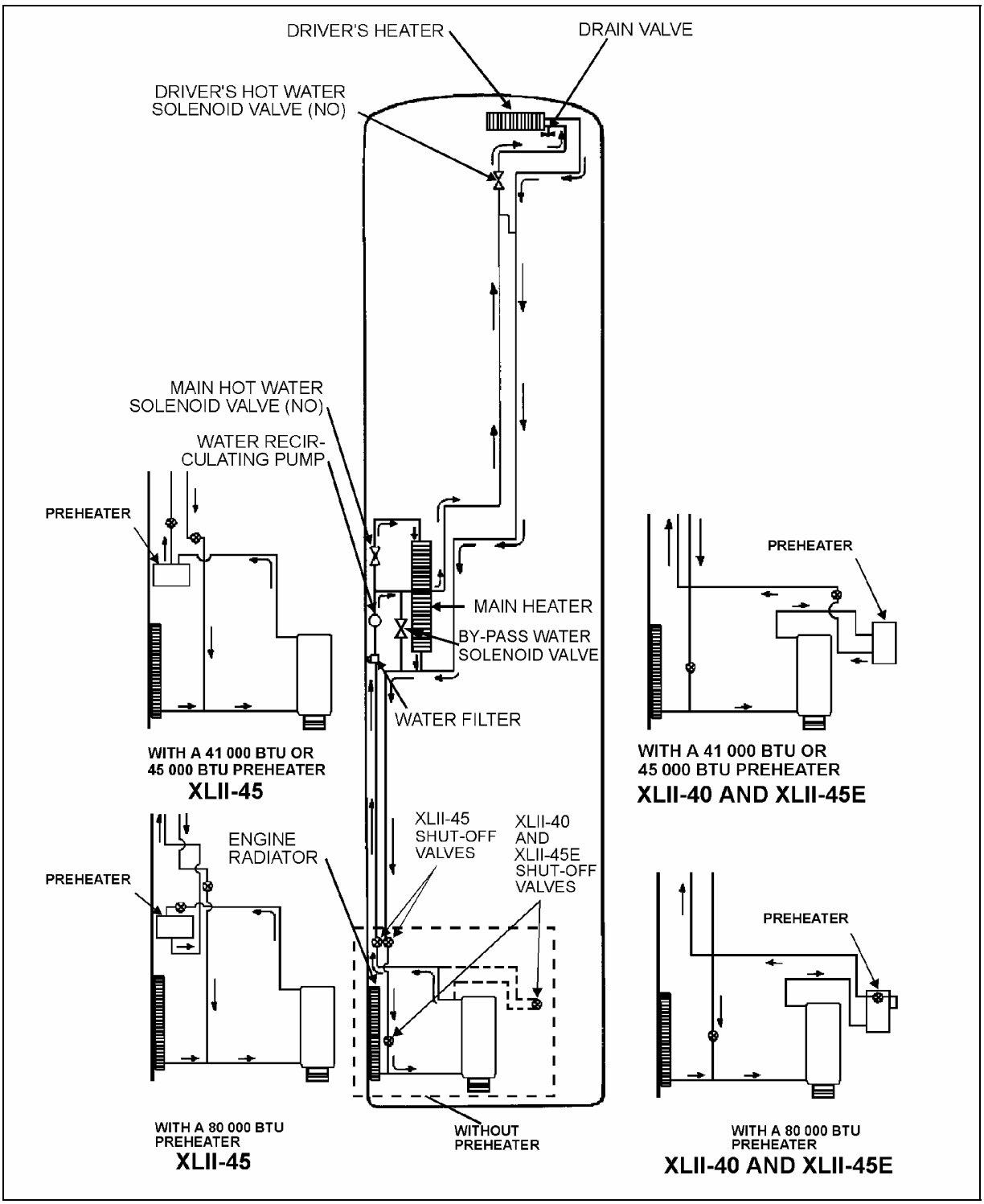

FIGURE 37: CENTRAL HEATING SYSTEM COMPONENTS 22197

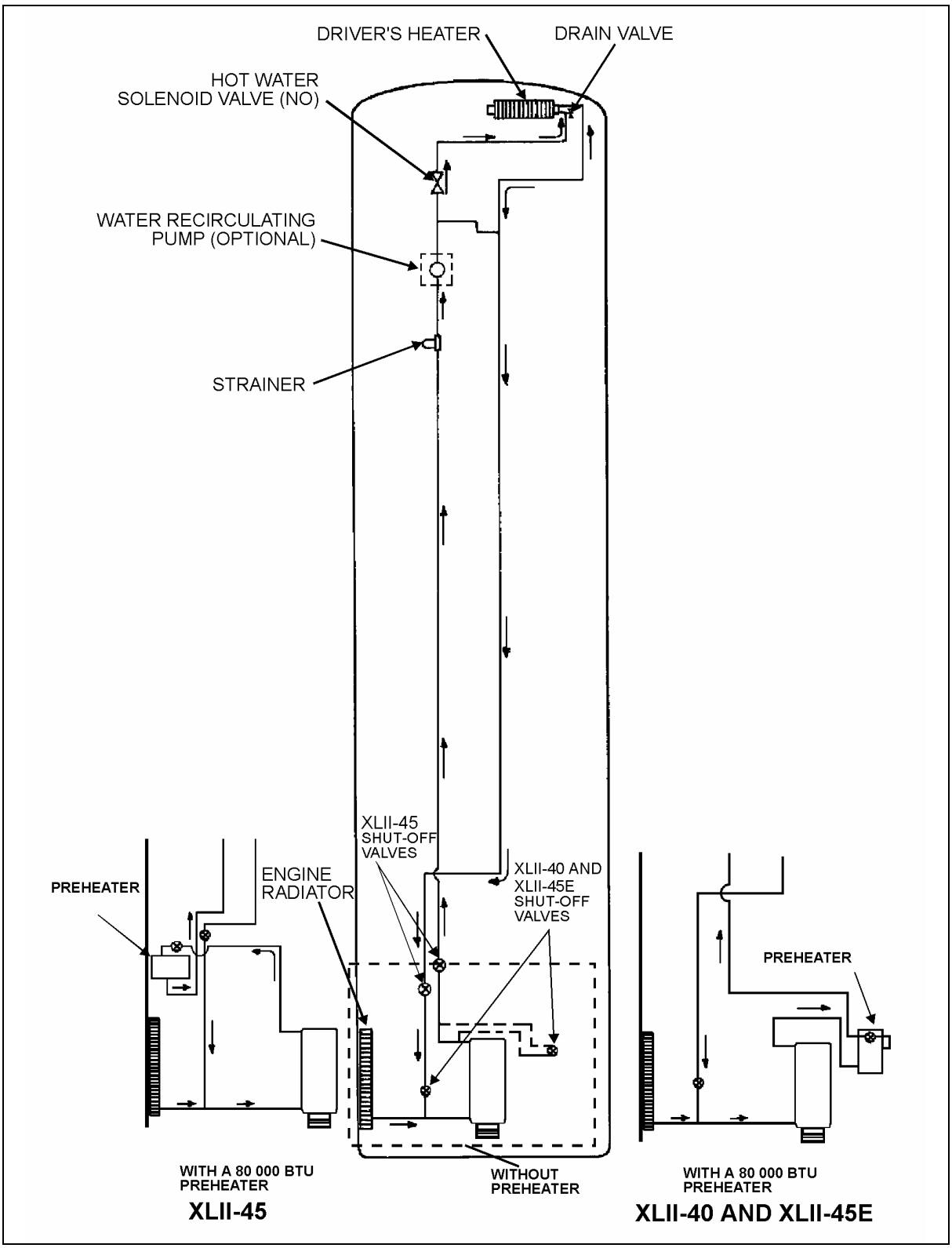

FIGURE 38: DRIVER'S HEATING SYSTEM COMPONENTS (VEHICLES EQUIPPED WITH DRIVER'S SYSTEM ONLY) 22198

10.1 DRAINING HEATING SYSTEM

To drain the entire system, refer to Section 05, *"Cooling"*. If only the driver's or main heater core must be drained, refer to the following instructions.

10.1.1 Draining Driver's Heater Core

1. Stop engine and allow engine coolant to cool.

2. Locate the normally open water solenoid valve on the ceiling of the spare wheel compartment (Fig. 39), disconnect its wiring connector, then connect a 24-volt external power source, using jumper cables, to close valve.

Warning: *Before proceeding with the following steps, check that coolant has cooled down.*

3. Loosen hose clamp, install an appropriate container to recover coolant, and disconnect silicone hose from water solenoid valve.

4. From inside of vehicle, remove the two finishing panels in front of unit. Remove the three screws fixing the unit front panel. Open the manual vent located inside the HVAC unit, on the driver's side (Fig. 40) to ensure an efficient draining.

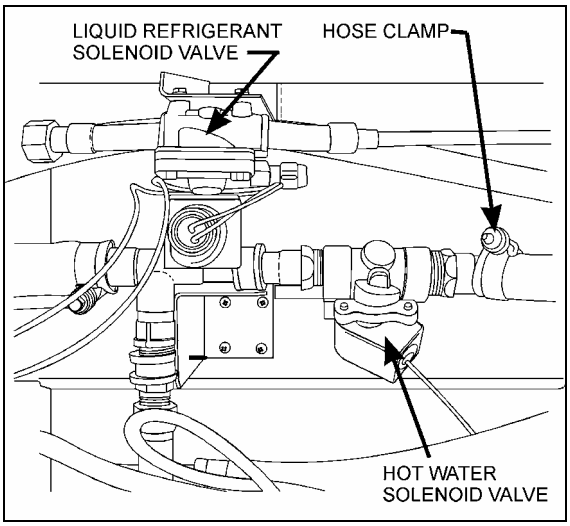

FIGURE 39: CEILING OF THE SPARE WHEEL COMPARTMENT 22181

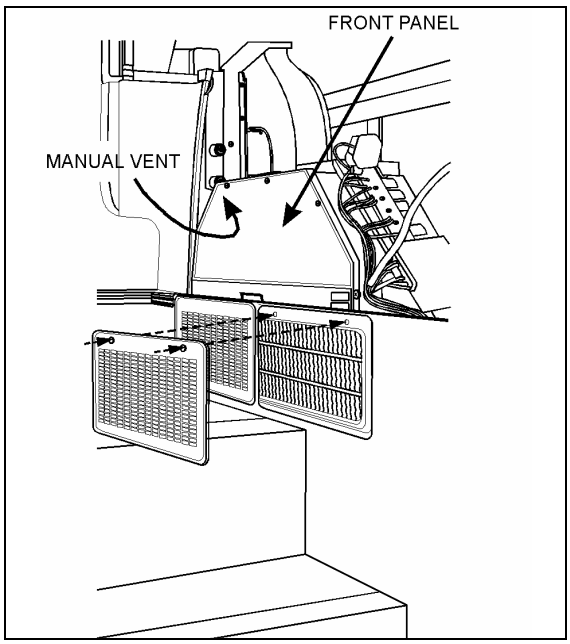

FIGURE 40: DRIVER'S HVAC UNIT 22172

10.1.2 Draining Main Heater Core

1. Stop engine and allow engine coolant to cool.

2. Close both heater line shutoff valves.

On XL2-40 & 45E vehicles, the valves are located in engine compartment. One is on the R.H. side of compartment and is accessible through engine compartment R.H. side door (Fig. 41).

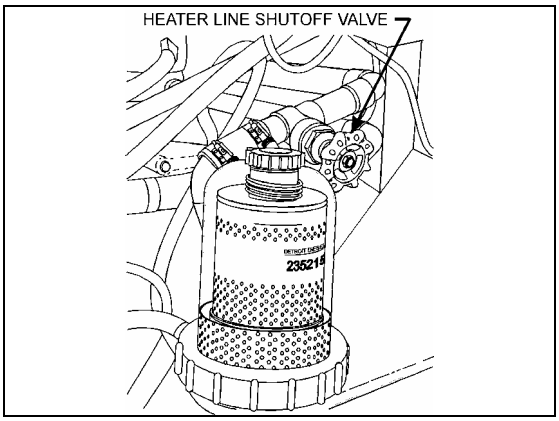

FIGURE 41: HEATER LINE SHUTOFF VALVE 05070

Another valve is located in the engine compartment under the radiator fan gearbox (Fig. 42).

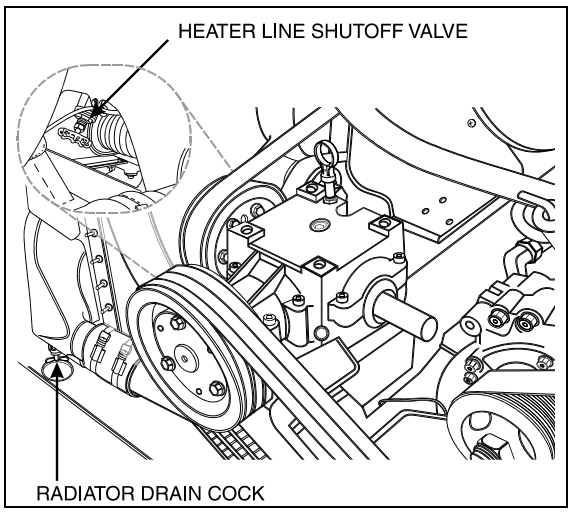

FIGURE 42: ENGINE COMPARTMENT 05078

On XL2-45 vehicles, the valves are located in the engine compartment, on the L.H. side of engine and are accessible through L.H. side rear service compartment (Fig. 43).

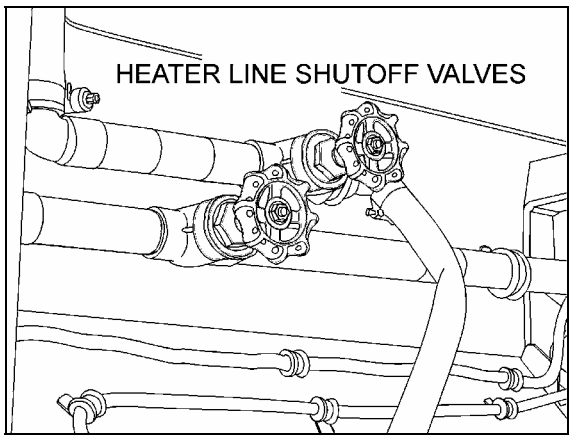

FIGURE 43: HEATER LINE SHUT-OFF VALVES 05067

3. Open the last L.H. side baggage compartment door, then pull the black release button located on the L.H. side in order to unlock and open the evaporator compartment door.

Warning: *Before proceeding with the following step, check that coolant has cooled down.*

4. Open drain cock in bottom of heater core, then open manual vent located on top of heater core (Fig. 44) in order to allow air to enter while draining.

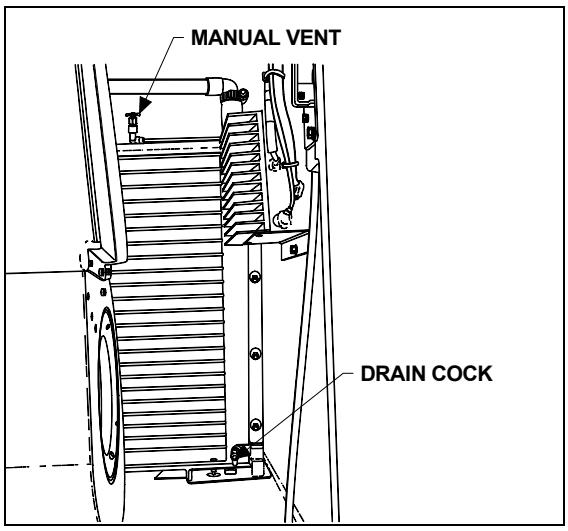

FIGURE 44: EVAPORATOR COMPARTMENT 22128

10.2 FILLING HEATING SYSTEM

1. Ensure that the drain hose is reconnected and the manual vents and drain cock are closed.
2. Open the surge tank filler cap and slowly fill the system to level of filler neck.
3. After initial filling, the water valves should be open and the water recirculating pump should be energized to assist in circulating coolant through the heating system. To perform this operation, start the engine, switch on the HVAC control unit, both driver and passenger sections, and set temperature to their maximum positions in order to request the heating mode in each of these sections.
4. When coolant level drops below the surge tank filler neck, slowly fill the system to level of filler neck.
5. Once the level has been stabilized, replace cap.

10.3 BLEEDING HEATING SYSTEM

Whenever the heating system has been drained and refilled, or the system has run low on coolant and coolant has been added, it is necessary to bleed air from heating system. Locate the manual vents illustrated in Figures 40 and 44, and open them momentarily until no air escapes from the lines.

10.4 SOLDERING

Before soldering any part of the system, make sure the area is well ventilated. Use (stay clean) flux sparingly and apply solder (95-5 round wire 1/8 inch [3,1 mm]). After completing repairs, test for leaks.

When using heat at or near a valve, wrap with a water saturated rag to prevent overheating of vital parts.

10.5 DRIVER'S WATER SOLENOID VALVE

A two-way normally open, internal pilot-operated solenoid valve designed for smooth closing is used to control the coolant flow through the driver's heating unit. It is mounted on the coolant inlet line of the driver's heating unit, and is accessible through the spare wheel compartment (see fig. 39). The valve cannot be manually bypassed.

10.5.1 Improper Operation

1. Faulty control circuit: Check the electric system by energizing the solenoid. A metallic clicking noise indicates that the solenoid is operating. Absence of clicking indicates a loss of power or a defective solenoid. Check for open breaker, open-circuited or grounded coil, broken lead wires.
2. Burned-out coil: Check for open-circuited coil. Replace coil if necessary.
3. Low voltage: Check voltage across the coil leads. Voltage must be at least 85% of nameplate rating.
4. Excessive leakage: Disassemble valve and clean all parts. Replace worn or damaged parts with a complete spare part kit for best results.

10.5.2 Coil Replacement

Turn off electrical power supply and disconnect lead wires. Proceed in the following manner:

1. Remove retaining cap or clip, spacer, name plate and housing.
2. Slip spring washer, insulating washer, coil and insulating washer off the solenoid base sub-assembly. Insulating washers are omitted when a molded coil is used.
3. Coil is now accessible for replacement. Reassemble by reversing sequence of disassembly. Refer to exploded view (Fig. 35) for identification and location of parts.

Note: *Solenoid must be completely reassembled, as the housing and internal parts complete the magnetic circuit.*

Caution: *When metal retaining clip disengages, it springs upwards.*

10.5.3 Valve Disassembly

1. Drain driver's heating unit as previously explained in this section under paragraph *"Draining Heating System".*
2. Disconnect connector from coil connector.
3. Disassemble valve in an orderly fashion paying careful attention to exploded view (Fig. 45) provided for identification of parts.
4. Remove retaining cap and slip the entire solenoid enclosure off the solenoid base subassembly.

Caution: *When metal retaining clip disengages, it springs upwards.*

5. Unscrew solenoid base sub-assembly and remove core, plugnut gasket, plugnut assembly and solenoid base gasket.
6. Remove the four bonnet screws and valve bonnet, disc holder subassembly, disc holder spring, diaphragm/spring subassembly and body gasket.
7. All parts are now accessible for cleaning or replacement. Replace worn or damaged parts with a complete spare part kit for best results.

Caution: *Do not damage valve seat in any manner, as its sealing feature will be affected, thus resulting in continuous leakage.*

10.5.4 Valve Reassembly

1. Reassemble in reverse order of disassembly, paying careful attention to

exploded view provided for identification and placement of parts (Fig. 45).

2. Replace body gasket and diaphragm/spring subassembly. Locate bleed hole in diaphragm/spring subassembly, approximately 45° from valve outlet.
3. Replace disc holder spring and holder subassembly.
4. Replace valve bonnet screws. Torque bonnet screws in a criss-cross manner to 95 ± 10 inch-pounds.
5. Install solenoid base gasket, plugnut assembly and plugnut gasket. Position core (small end up for A-C construction) on plugnut assembly. For D-C construction, be sure plugnut assembly and core are installed with mated ends together.
6. Replace solenoid base subassembly and torque to 175 ± 25 inch-pounds.
7. Refill heating system as previously stated under paragraph *"Filling Heating System*", then bleed air from the driver's heating unit as stated previously under paragraph *"Bleeding heating system".*
8. After maintenance, operate the valve a few times to be sure of proper opening and closing.

Note: *Should diaphragm/spring subassembly become disassembled, be sure to replace the diaphragm/spring support with lip facing upward towards the valve bonnet.*

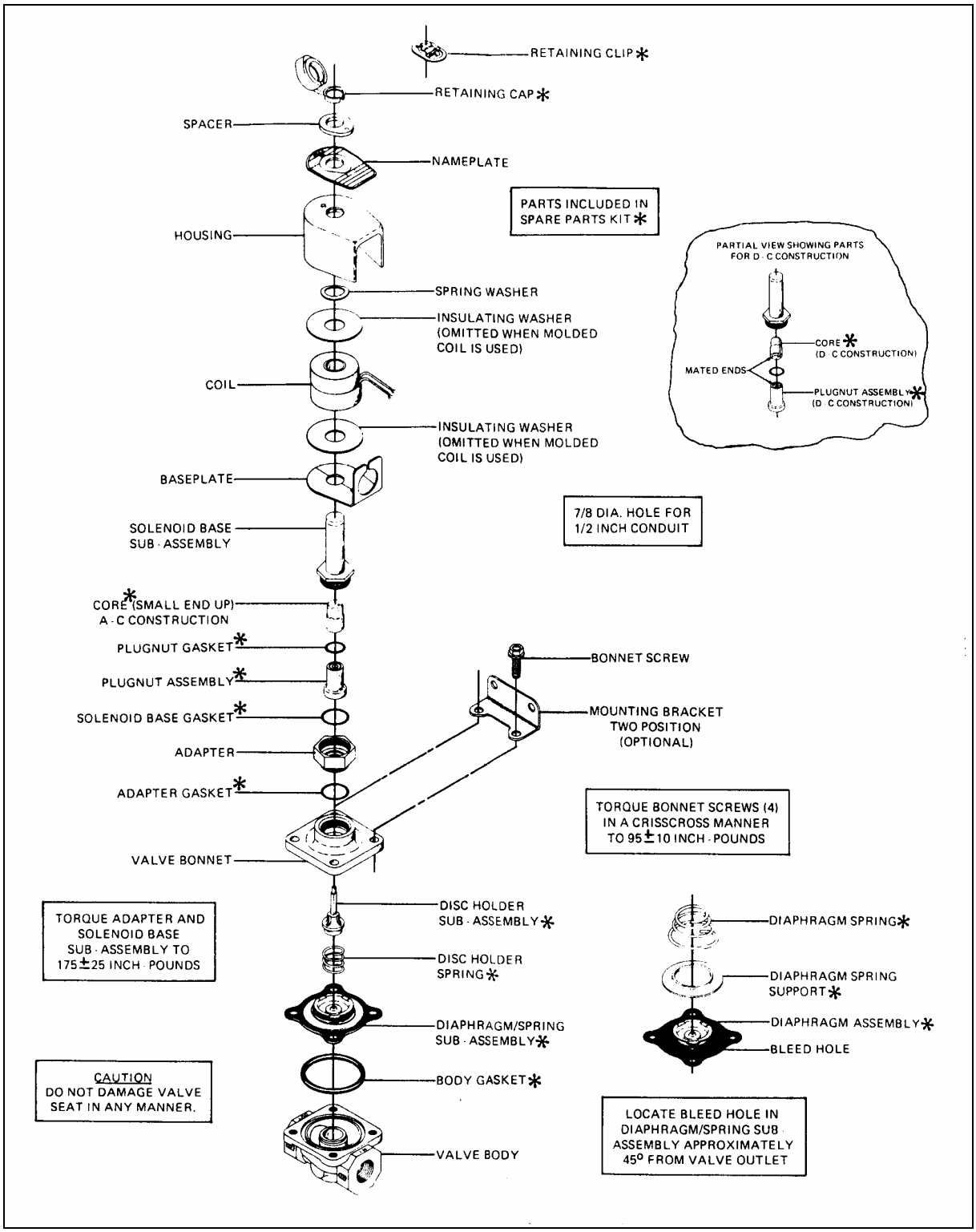

FIGURE 45: DRIVER'S WATER SOLENOID VALVE 22052

10.6 CENTRAL HOT WATER SOLENOID VALVE ACTUATOR

10.6.1 Description

The flow of hot water to the vehicle's central heater core is controlled by an electric water valve. The valve, located in the evaporator compartment, is designed so that the pilot valve within the assembly opens and closes a port which directs pressure to either the top or bottom of the valve diaphragm, thereby opening or closing the valve.

A delay action is built into the water valve through an orifice in the valve body and a modulating cup on the diaphragm assembly. When the vehicle is operating with no current to the water valve solenoid, inlet water pressure is directed to the upper side of the diaphragm, thereby keeping it open.

The pilot light closes, water pressure builds up through the orifice to the underside of the diaphragm and keeps the valve in closed position.

The central heater water valve requires a minimum amount of maintenance. The valve should be free of dirt sediment that might interfere with its operation. The diaphragm should be replaced once a year, before the heating season begins. No other maintenance is needed unless a malfunction occurs.

10.6.2 Valve Disassembly

1. Shut off supply pressure and electrical current to valve. The valve need not be removed from the line.
2. Disconnect wires. Unscrew housing nut. The nameplate, coil housing, flux plate, wave spring and coil can be removed (Fig. 46).
3. Unscrew the sleeve flange using a *Skinner wrench nut* while ensuring that wrench nut does not slip out of spanner holes.
4. From the sleeve, remove the retainer and seal assembly, stop assembly, plunger assembly and snubbers.
5. To disassemble the body cover, first remove the flange screws. Remove the spring, diaphragm and seal assembly, and O-ring from the body. If it is necessary to disassemble diaphragm assembly, remove lock nut, seal, diaphragm support plate, O-ring and screw.

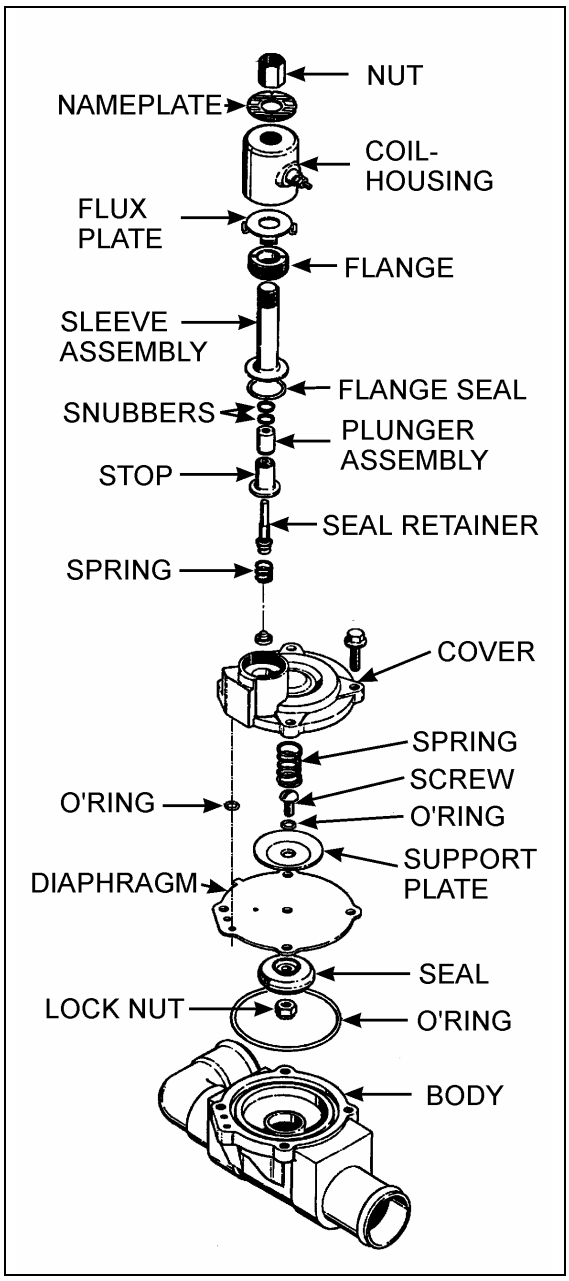

FIGURE 46: CENTRAL WATER SOLENOID VALVE 22183

10.6.3 Valve Reassembly

1. Assemble the diaphragm to the seal by placing the O-ring on the screw, then the support plate, the diaphragm and seal (Fig. 46). Add the nut, tighten and torque to 45-55 lbf•in (61-75 N•m).
2. Place the O-ring in the body cavity and add the diaphragm assembly, seal side facing down. Line up the diaphragm with the hole in the body. The diaphragm has three (3) holes in a row; one is a bolt hole, the middle hole is not used and the third hole is used as a passageway on the body. Make sure holes are aligned correctly. The correct position will have the diaphragm tab over the "A" port. Also ensure that O-ring is added to the passageway hole in the diaphragm.
3. Assemble the body cover, while observing pilot passageway: it must line up with diaphragm hole and body passageway. Add the diaphragm spring, ensuring that it sits on the spring seat. Add screws, tighten and torque to 80-110 lbf•in (108-149 N•m). Make sure O-ring is seated over diaphragm passageway hole.
4. Assemble stop, retainer and seal assembly, then add plunger assembly and snubbers. Place assembly in sleeve. Place seal in operator cavity in body cover. Place pilot spring on retainer with seal assembly and place in body cover.
5. Add flange over sleeve and using a wrench and *"Skinner"* wrench nut, tighten and torque to 130-150 lbf•in (176-203 N•m).
6. Place the coil in the housing. Pull the wires through the conduit . Mate the flux plate to the coil housing and place assembly over sleeve. Add the nameplate and nut. Tighten and torque to 30-43 lbf•in (41-58 N•m).

10.6.4 Valve Troubleshooting

PROBLEM	PROCEDURE
Valve fails to operate.	1. Check electrical supply with a voltmeter. It should agree with nameplate rating. 2. Check coil with an ohmmeter for shorts or open coil. 3. Check pressure at valve inlet. It must be at least equal to the minimum pressure stamped on the nameplate. It should not go below minimum while valve is operating.
Valve is sluggish or inoperative - voltage check out.	1. Check diaphragm for tears or abrasions. Replace if torn or abrased. 2. Check diaphragm for obstructed bleed holes. Wash with mild soap and water. 3. Check for clogged or obstructed bleed passageways. Passageways must be clean and free from all obstructions that restrict internal flow. Clean with solvent and compressed air. Do not put wire into passageway.
External leakage - valve leaks around sleeve assembly.	1. Remove flange seal and check for imperfections. Replace if defective. 2. Tighten and torque sleeve, using a wrench nut, to 130-150 lbf•in (176-203 N•m).
External leakage - valve leaks at flange joint between body and cover.	Retighten cover screws and torque to 80-110 lbf•in (108-149 N•m). If leakage persists, replacement of diaphragm assembly or flange O-ring may be required and/or bodies or covers with damaged sealing surfaces may have to be repaired or replaced.

Internal leakage - sticking valve leaks internally or plunger sticks in energized position.	1. Disassemble valve. Inspect plunger, stop & retainer, and seal assembly. Remove all dirt that may have collected or imbedded. 2. If seal is conspicuously swollen or hardened, replace retainer and seal assembly. (It is possible that a different type of insert material be used on application - submit complete details of application to factory). 3. Inspect diaphragm for dirt or imbedded material. If dirty, remove, wash in warm water and mild soap solution. 4. Inspect pilot and main orifices for leaks. If parts are found to be pitted, nicked or excessively worn, they should be replaced.
Valve fails to close.	1. Check that the plunger assembly, and the retainer & seal assembly, are free to travel. 2. Make sure that the plunger is free to travel to the end of its stroke and apply force on the retainer and seal assembly to seal the pilot orifice.
Buzzing noise.	1. Check voltmeter reading to make sure it corresponds with the nameplate rating. 2. Check pressure against nameplate rating. 3. Inspect for loose housing nut. Tighten and torque to 30-43 lbf•in (41-58 N•m). 4. Inspect the face of the plunger assembly and of the stop assembly. If there is a sign of damage, replace both assemblies.

10.7 WATER RECIRCULATING PUMP

10.7.1 Description

This vehicle is provided with a water recirculating pump which is located in the evaporator compartment (vehicles with central system) (Fig. 47) or in the reclining bumper compartment (optional with driver's system). The water recirculating pump consists of a centrifugal pump and an electric motor which are mounted on a common shaft in a compact assembly. A pilot between the pump end and motor cover ensures proper alignment of the complete assembly.

The motor is equipped with prelubricated sealed ball bearings which require no maintenance. A self-adjusting mechanical shaft seal is incorporated in this assembly to prevent coolant leakage between the pump cavity and armature shaft. This seal derives its lubrication from the liquid pumped, and **it will be destroyed if permitted to operate dry.**

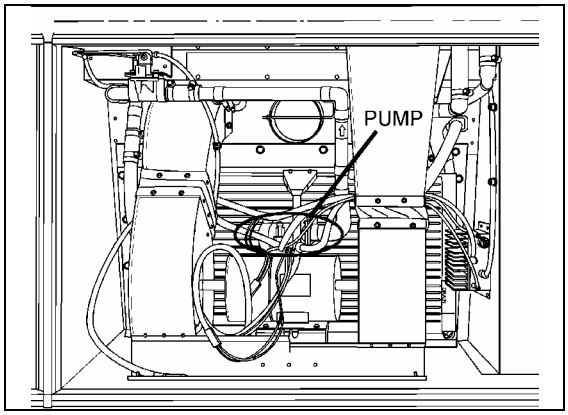

FIGURE 47: PUMP LOCATION (SHELL) 22178

The pump requires no periodic maintenance other than replacement of motor brushes. Replacement of motor brushes can be performed without removing the pump assembly. Visual inspection of the pump, to determine if the shaft seal is intact, should be made while the pump is in operation. If there is evidence of coolant leakage, the unit must be disassembled for corrective measures. Disassembly of the pump will be necessary only

in the case of a seal leak, bearing failure, or motor failure.

10.7.2 Removal

1. Stop engine and allow engine coolant time to cool.
2. Close shutoff valves. Refer to *"05 COOLING"* under heading *"Draining Cooling System"* for location of valves.
3. Disconnect the electrical wiring from the motor.

Warning: *Before proceeding with the following steps, make sure that coolant has cooled down.*

4. **Fig. 49 only:** Remove the drain plug at rear of pump and place a container to recover the residual coolant in the line.

Note: *On driver's A/C system, remove residual coolant through coolant strainer. Also check strainer's condition; clean or replace if necessary.*

5. **Fig. 49:** Disconnect water lines from pump at flange connections.
6. **Fig. 48:** Disconnect water lines from pump at connections between hoses and copper pipes (leave hoses connected to pump).
7. Remove the two clamps holding the pump motor to its mounting bracket. Remove the pump with the motor as an assembly.

10.7.3 Disassembly

-For converted vehicle (shell) central A/C pump, see Fig. 48.
-For coach central A/C pump, or driver's A/C pump, see Fig. 49.

1. **Fig. 48:** Remove two brush caps (5) and two brush assemblies (4). When removing brushes, note the position of the brush in the tube. Brush life is significantly decreased if brushes are not replaced properly.

1. **Fig. 49:** Remove two brush caps (16) and two brush assemblies (15). When removing brushes, note the position of the brush in the tube. Brush life is significantly decreased if brushes are not replaced properly.

2. **Fig. 48:** Remove the pump cover (item #11) by first removing the 4 head screws. Remove cover carefully to prevent damaging the O-ring (12) (disconnect hoses from cover only if required).

2. **Fig. 49:** Remove the pump cover (item #2) by first removing the 8 head screws. Remove cover carefully to prevent damaging the gasket (3).

3. **Fig. 48:** Remove O-ring (12).

3. **Fig. 49:** Remove gasket (3).

4. **Fig. 48:** Remove two hex nuts (7) retaining pump assembly to motor.

4. **Fig. 49:** Remove two hex nuts and lock washers (7 & 8) retaining pump assembly to motor.

5. **Fig. 49 only:** Remove the pump from the motor as follows:
   a. Install puller tool assembly (MP Co. Part No. 24702 or equivalent) to pump body (12) using four screws removed from the pump cover (2).
   b. Tighten the puller screw to press the motor shaft out of the impeller hub. The pump is now free from the motor.
   c. Remove the puller tool.

6. **Fig. 48:** Remove acorn nut (9) and gasket (10), then remove impeller (8) and components of the pump seal assembly (14).

6. **Fig. 49:** Remove impeller (4) and components of the pump seal assembly (5).

Caution: *Do not scratch or mar the sealing surface of this seat, as its sealing feature will be affected, thus resulting in continuous leakage.*

Inspection

Components removed from the recirculating pump and motor assembly should be compared with new parts to determine the degree of wear.

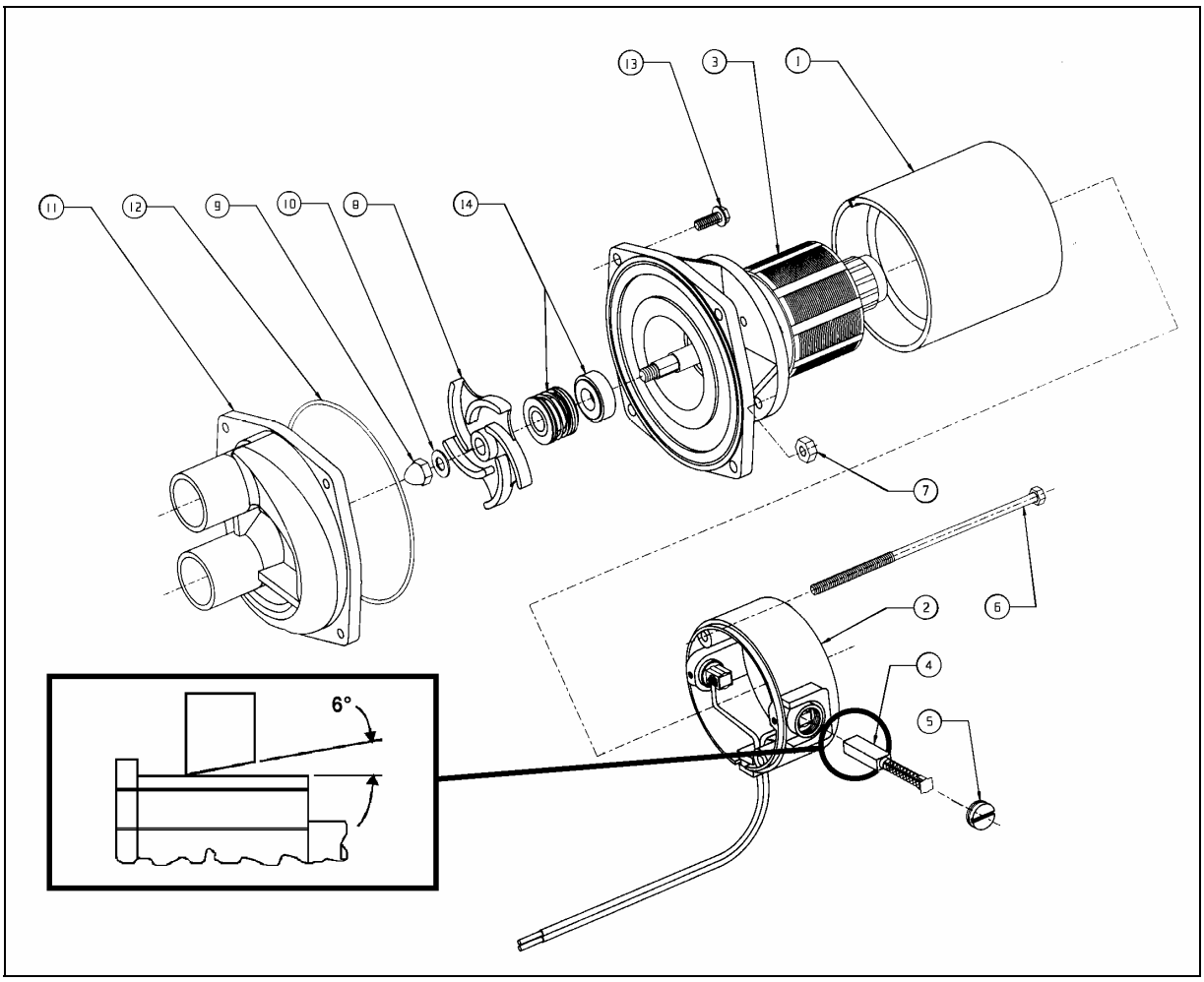

FIGURE 48: WATER RECIRCULATING PUMP (CONVERTED VEHICLE - CENTRAL A/C) 22091

ITEM	DESCRIPTION	QTY.	ITEM	DESCRIPTION	QTY.
	MOTOR			**IMPELLER**	
	Motor Ass'y - Items 1-7	1	8	Impeller	1
1	Stator	1	9	Acorn Nut	1
2	End Frame Assembly	1	10	Gasket	1
3	Armature adapter Ass'y	1		**COVER**	
4	Brush Assembly	2	11	Cover - Housing	1
5	Cap (brush holder)	2	12	O-ring	1
6	Case bolt 10-32 X 5	2	13	Screw	4
7	10-32 Hex Nut	2		**SEAL**	
			14	Seal Assembly	1

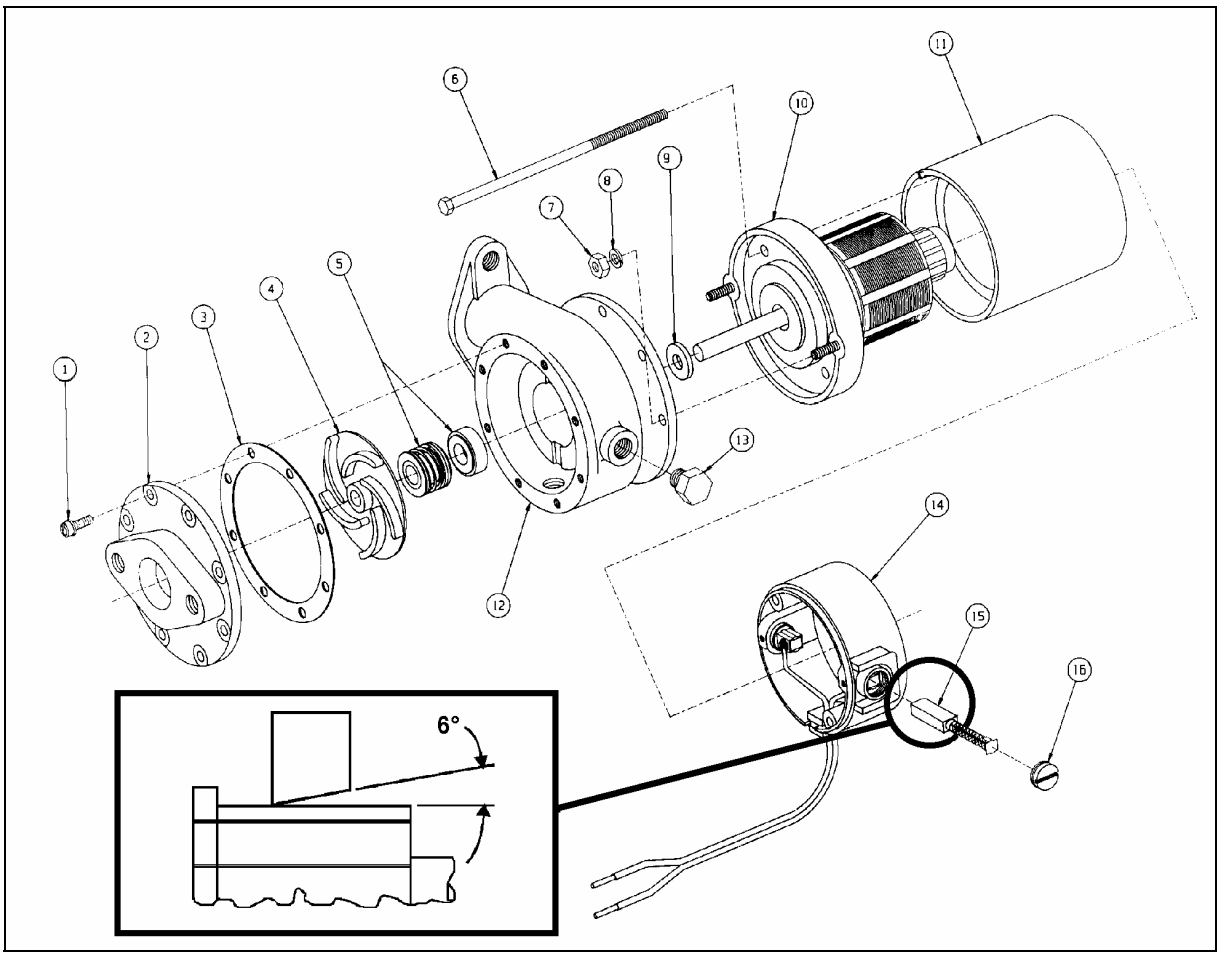

FIGURE 49: WATER RECIRCULATING PUMP (COACH - CENTRAL A/C OR DRIVER'S A/C) 22056

ITEM	DESCRIPTION	QTY.	ITEM	DESCRIPTION	QTY.
	MOTOR			**IMPELLER**	
	Motor Assembly	1	4	Impeller - Brass	1
11	Stator	1		**HOUSING**	
14	End Frame Assembly	1	12	Body - Brass	1
10	Armature adapter Assembly	1	2	Cover - Brass	1
15	Brush Assembly	2	1	Screw and Washer Assembly	8
16	Cap (brush holder)	2	3	Gasket	1
6	Case bolt 10-32 X 5	2	9	Slinger	1
7	10-32 Hex Nut	2	13	Drain Plug - 1/8" NPT Brass	2
8	#10 Lock Washer	2		**SEAL**	
			5	Seal Ass'y - Silicon Carbide/Carbon	1

10.7.4 Brushes

1. When removing brushes, note the position of the brush in the tube. Brush life is shortened if the brushes are not replaced properly.
2. Examine brushes for the following:

   a. Wear
   Replace the brushes if less than 25% of the usable brush is left (less than 0.300 inch [8 mm]).

   b. Chipped edges
   Chips can be caused by improper handling or installation. Badly chipped brushes should be replaced regardless of their length.

   c. Annealed brush spring
   This can be detected by noting the resiliency of the spring. Annealing is caused by failing to tighten the brush caps properly, thus not providing a good low resistance contact between the terminal and the brush tube. Replace brushes showing evidence of annealed springs.

   d. Frayed or broken pigtail
   An improperly installed brush may have the pigtail (shunt) pinched under the terminal or between the coils of the spring. If the pigtail is badly frayed or broken, replace the brush.

3. Observe the following factors when replacing brushes:

   a. The face of a new brush is carefully cut to cause proper seating during the *"wear-in"* period.

   b. Improper installation can harm both the brush and the commutator.

   c. Replacement brushes should be of the proper grade.

   d. New brushes have a six (6) degree angle. The brush should always be inserted so that the angle is open away from the pump end of the assembly (inset, Figs. 48 & 49).

   e. Brush performance will be affected if the spring and terminal are not properly placed in the brush tube. The spring should be free over its entire length and the terminal should make good contact with the metal brush tube insert.

10.7.5 Bearings

1. Rotate the motor shaft. If the ball bearings show evidence of wear, they should be replaced.

Note: *When removing the armature from the motor, the number of washers and their arrangement should be noted. Improper numbers and/or installation of washers can cause improper tracking of brushes, which will result in excessive preloading of bearings and noisy operation.*

2. To help prevent damaging the armature winding and/or the commutator, when removing the bearings, the use of a bearing puller is recommended.
3. Replacement bearings should be pressed into the same exact location as the original bearings.
4. It is recommended that a suitable sealant (such as Loctite or equivalent) be used between the shaft and the bearing, if the fit is not tight enough to prevent the shaft from spinning inside the inner race.
5. After replacing the bearings, check the position of the commutator in the motor by looking down into the brush tube. Neither the riser nor the edge of the commutator should be visible.

10.7.6 Commutator

1. The commutator is a precise assembly. Although it is solidly built and made of a fairly tough material, it can be easily ruined by careless handling.
2. The commutator should be refinished only on equipment which provides good concentricity and the proper finish.

3. The commutator should be refinished if a micrometer reading shows a difference between *"in track"* and *"off track"* diameter of 0.187" (4,7 mm) or more.
4. The commutator should be carefully undercut with a 0.025" (0,6 mm) or less slot width.
5. A 25 to 50 micromesh finish is desirable on a new or refinished commutator.
6. The commutator should not be touched with the fingers since sweat and body oils will rapidly discolor and oxidize its surface.

10.7.7 Miscellaneous

1. **Fig. 49 only:** Check the shaft slinger (9) to make sure it is tight on the motor shaft. If the slinger slips on the shaft, it should be replaced.
2. **Fig. 48:** Inspect seal assemblies (14) to determine wear. If the seal has leaked, or is badly worn, it is recommended that a complete new seal assembly be installed.
2. **Fig. 49:** Inspect seal assemblies (5) to determine wear. If the seal has leaked, or is badly worn, it is recommended that a complete new seal assembly be installed.
3. **Fig. 49 only:** The impeller (4) is a press fit on the armature shaft. This press fit must be maintained to prevent the impeller from slipping. Install a new impeller if necessary.

10.7.8 Assembly

1. **Fig. 49 only:** Install slinger (9) on the motor shaft.
2. **Fig. 49:** Assemble body (12) to the motor.
3. **Fig. 48:** Install seal assembly (14).
3. **Fig. 49:** Install seal assembly (5).
4. **Fig. 48:** Insert impeller (8) and secure with acorn nut (9) and gasket (10).
4. **Fig. 49:** Install impeller (4) in the following manner:
   a. Place the impeller on a flat surface with the vanes against the flat surface.
   b. Invert the motor and pump body assembly, then pilot the pump shaft into the impeller bore. **DO NOT HAMMER** on the motor shaft extension at rear of motor.
   c. Press on motor and pump body until the machined face of the pump body is flush with the face of the flat surface on which the impeller is resting. The face of the impeller vanes must now be flush with the machined face of the pump body.
5. **Fig. 48:** Install O-ring (12).
5. **Fig. 49:** Install gasket (3). This gasket serves both to seal the cover and to establish the proper clearance between the face of the impeller and the pump cover.
6. **Fig. 48:** Attach cover (11) to the pump body using four screws (13).
6. **Fig. 49:** Attach cover (2) to the pump body using eight screw and washer assembly (1).
7. **Fig. 48:** Install motor brushes assembly (4) and brush caps (5).
7. **Fig. 49:** Install motor brushes assembly (15) and brush caps (16).

10.7.9 Installation

Figure 48 pumps:

1. Connect water lines to pump (hoses to copper pipes). Use a soapy water solution to help insert water lines.
2. Position the pump and motor assembly on the mounting bracket. Position the mounting clamps over the motor and secure with mounting bolts.
3. Connect electrical wiring to the pump motor.

4. Open shutoff valves. Refer to *"05 COOLING"* under heading *"Draining Cooling System"* for location of valves.
5. Fill the cooling system as previously instructed in this section under *"10.2 Filling Heating System"*, then bleed the system as previously instructed in this section under *"10.3 Bleeding Heating System"*.

Figure 49 pumps:

1. Apply gasket cement to the pump body line adapter and to the line flanges, put the two gaskets in place, and connect water lines to the pump at the flange connections. Position the pump and motor assembly on the mounting bracket. Position the mounting clamps over the motor and secure with mounting bolts.
2. Apply pipe sealant on threads of drain plug, and screw it in place.
3. Connect electrical wiring to the pump motor.
4. Open shutoff valve. Refer to *"05 COOLING"* under heading *"Draining Cooling System"* for location of valves.
5. Fill the cooling system as previously instructed in this section under *"10.2 Filling Heating System"*, then bleed the system as previously instructed in this section under *"10.3 Bleeding Heating System"*.

10.8 WATER FILTER

10.8.1 Description

This vehicle is provided with a cleanable water filter, which is located in the evaporator compartment behind the R.H. side air duct. The filter uses the micronic principle of filtration which utilizes an accordion -pleated design for a maximum filtering area. A relief valve integrated to the filter element allows bypass of the filter in case of heavy restrictions.

Vehicles equipped with driver's A/C system only are provided with a water filter located in reclining bumper compartment.

10.8.2 Maintenance

Filter maintenance consists in changing the element at break-in 3000 miles (4 800 km), and subsequently every 50,000 miles (80 000 km) or once a year, whichever comes first.

Note: *Service water filter each time soldering is performed at any point on coolant piping; operate heating system a few minutes first, so that soldering residues are routed to the strainer.*

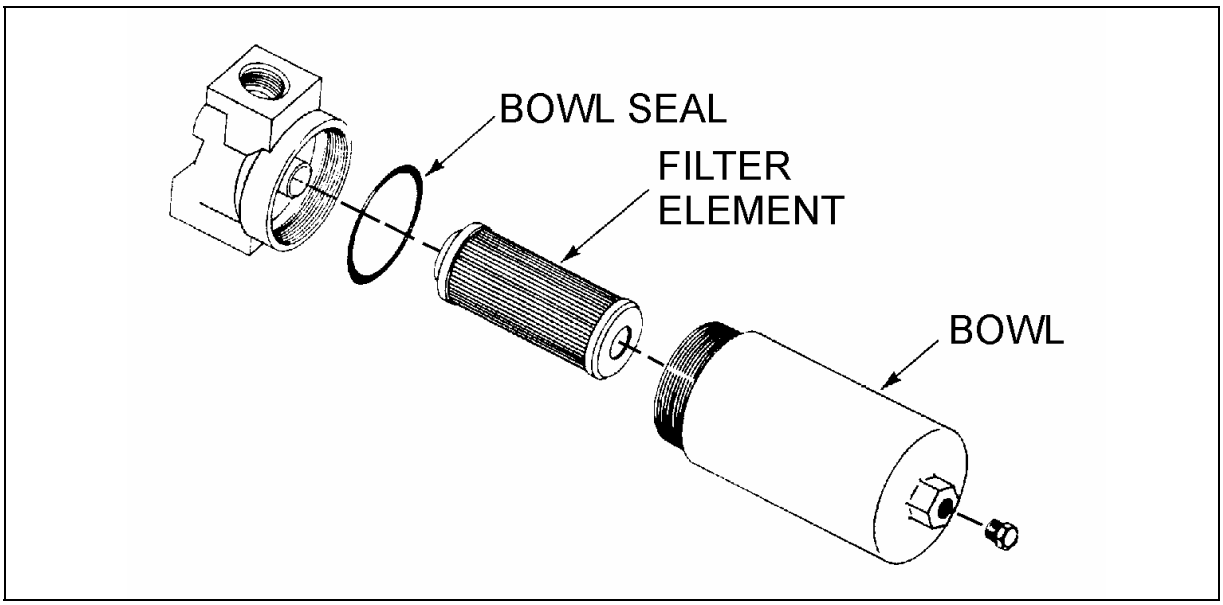

FIGURE 50: WATER FILTER 22057

10.8.3 Servicing (Vehicles with central A/C system)

1. Stop engine and allow engine coolant time to cool.
2. Close shutoff valves. Refer to *"05 COOLING"* under heading *"Draining Cooling System"* for location of valves.

Warning: *Before proceeding with the following steps, make sure that coolant has cooled down.*

3. Rotate bowl (Fig. 50) counterclockwise and remove.
4. Remove filter element (Fig. 50) from housing. Discard all disposable elements. These elements are not cleanable.
5. Place new, clean element in housing, centering it on location in the head.
6. Inspect bowl seal and replace if necessary.
7. Replace bowl. Rotate clockwise and hand tighten.
8. Correct coolant level in surge tank as instructed previously in this section under *"Filling Heating System"*.

10.8.4 Servicing (Vehicles with driver's A/C system)

1. Stop engine and allow engine coolant time to cool.
2. Close shutoff valves. Refer to *"05 COOLING"* under heading *"Draining Cooling System"* for location of valves.

Warning: *Before proceeding with the following steps, check that coolant has cooled down.*

3. Unscrew the filter retaining plug.
4. Remove strainer, then clean inside strainer housing.
5. Using water under pressure, flush the strainer from the outside.
6. Reinstall strainer, then tighten the retaining plug.
7. Open shut-off valves.
8. Correct coolant level in surge tank as instructed previously in this section under *"10.2 Filling Heating System"*.

10.9 BY-PASS SOLENOID WATER VALVE (OPTIONAL)

This valve is optional and is installed only on vehicles equipped with a preheater. The valve

is located in the evaporator compartment. This valve is similar to the driver's solenoid valve (refer to Fig. 45 for part names).

10.9.1 To Remove or Change the Coil

- Stop engine and allow engine coolant time to cool.
- Close shutoff valves. Refer to *"05 COOLING"* under heading *"4.7 Draining Cooling System"* for location of valves.

To remove the solenoid coil:

First take out the retaining screw at the top of the coil housing. The entire coil assembly can be lifted off the enclosing tube.

To reassemble:

Make sure that the parts are placed on the enclosing tube in the following order:

1. Be sure to change electrical data plate according to coil specifications change.
2. Place coil and yoke assembly on the enclosing tube. Lay data identification plate in place.
3. Insert the coil retaining screw, rotate housing to proper position and tighten screw securely.

10.9.2 To Take the Valve Apart

To disassemble:

This valves may be taken apart by removing the socket head screws which hold the body and bonnet together. After removing the screws, carefully lift off the bonnet assembly (upper part of the valve). Don't drop the plunger. The diaphragm can now be lifted out. Be careful not to damage the machined faces while the valve is apart.

Note: *The above procedure must be followed before brazing solder type bodies into the line.*

To reassemble:

Place the diaphragm in the body with the pilot port extension up. Hold the plunger with the synthetic seat against the pilot port. Make sure the bonnet O-rings are in place, the bonnet assembly over the plunger, and that the locating sleeve in the bonnet enters the mating hole in the body. Insert body screws and tighten uniformly.

10.10 PREHEATING SYSTEM (OPTIONAL)

On XL2-45 vehicles, the preheater is located inside engine compartment and is accessible through L.H. side rear service compartment (refer to figure 51). On XL2-40 and 45E vehicles, the preheater is located next to engine (curb side) and is accessible through engine R.H. side door.

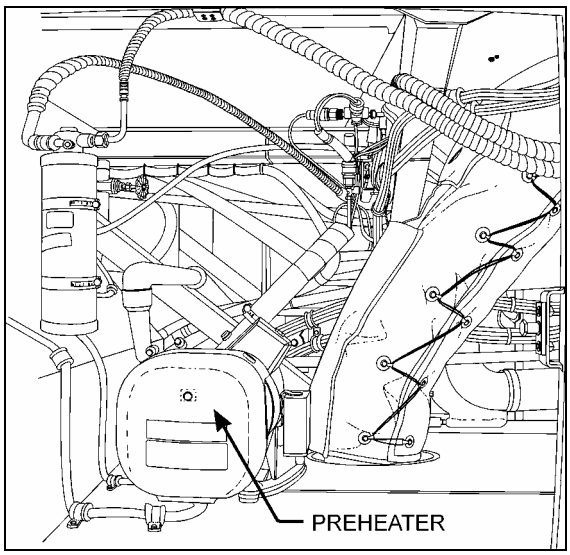

FIGURE 51: L.H. SIDE REAR SERVICE COMPART. 22176

This Auxiliary Preheating System is used for preheating and retaining the heat of water-cooled engines. It can be used before starting the engine to ease it's starting and to provide immediate inside heat upon operation of the heating system. It can also be used with engine running to maintain coolant heat and maintain the set temperature inside vehicle.

The heater operates independently from the vehicle engine. It is connected to the cooling and heating circuits, the fuel system and the electrical system of the vehicle.

The pilot lamp turns on when the heater is switched on. Combustion air flows in to flush out the combustion chamber and the water circulation pump is put into operation. The fuel metering pump conveys fuel in precise doses to

the combustion chamber where fuel and combustion air form a combustible mixture which is ignited by the glow plug.

Once the flame sensor has signaled to the control unit that combustion has taken place correctly, the glow spark plug and ignition coil are switched off.

The hot combustion gases are diverted at the end of the flame pipe, then pass through the indirect heating surfaces of the heat exchanger and transmit their heat to the water passing through the heat exchanger.

The heat is thermostatically controlled and operates intermittently, i.e. the switched-on times of the burner vary depending on the heat requirement. The water temperature depends on the setting of the built-in water thermostat.

The water circulation pump remains in operation as long as the heater is operating, even in the regulation intervals and during the delayed cutout of the switched-off heater. The pump can also be operated independently from the heater by means of an appropriate circuit. The heater can be switched on at any time, even during the delayed cutout period. Ignition takes place once this delay time is over.

When the heater is switched off, the fuel supply is interrupted. The flame goes out, and at the same time a delayed cutout of some 2.5 minutes begins. The combustion air still flowing flushes the remaining combustion gases out of the chamber and cools off the hot parts on the exhaust side of the heat exchanger, while the water circulation pump, still running, transmits the heat present in the heat exchanger, thus preventing local overheats. Once the delayed cutout time is over, both the combustion air blower and the water circulation pump switch off automatically. A cutout will take place in case of any failure of the preheater.

10.10.1 Operation

Switch on the heater. The operation indicator lamp comes on and the heater motor and circulating pump begin to run. After about 10-25 seconds the solenoid valve opens and fuel is sprayed into the combustion chamber. At the same time, the electronic ignition unit produces high voltage (8000 V) and the mixture of fuel and air in the combustion chamber is ignited by the spark on the ignition electrodes. The flame is indicated by the flame detector, then the electronic ignition unit stops producing high voltage and combustion continues by itself (spark on electrodes is required only to ignite the flame). At this moment, the heater is working and producing heat.

If the heater is switched off by the on/off switch, the solenoid valve interrupts fuel supply, combustion stops and indicator lamp turns off. Combustion air fan still blows air, cleaning the combustion chamber of any fumes and cooling down the combustion chamber. Coolant circulation pumps coolant, making a purge cycle for approximately 2-3 minutes, thus protecting the heater against overheating.

If the heater is not switched off by the on/off switch, the control thermostat will switch off the heater when coolant temperature reaches 165° ± 6°F (75° ± 3°C) and turns it on at 154° ± 9°F (68° ± 5°C). During this time, the heater (combustion) is off and the indication lamp and coolant pump are on. Combustion air fan blows air for 2-3 minutes and then turns off.

10.10.2 Preheating System Timers

The timer, located on L.H. lateral console is used to program the starting and stopping time of the preheating system. One of three possible timers may be installed in your vehicle (refer to the three following images). The system indicator light, located on the timer, illuminates when the system is functional.

Caution: *The preheating system should not operate for more than one hour before starting engine as this could discharge batteries.*

Warning: *Preheating system must not operate when vehicle is parked inside or during fuel fill stops.*

Note: *Preheating system uses the same fuel as the engine.*

In case of failure:

1. Shut off and turn on again.

2. Check main circuit breaker and overheating switch (Espar) or overheat fuse (Webasto).
3. Have system repaired in a specialized shop.

10.10.3 Timer Operating Instructions (Espar)

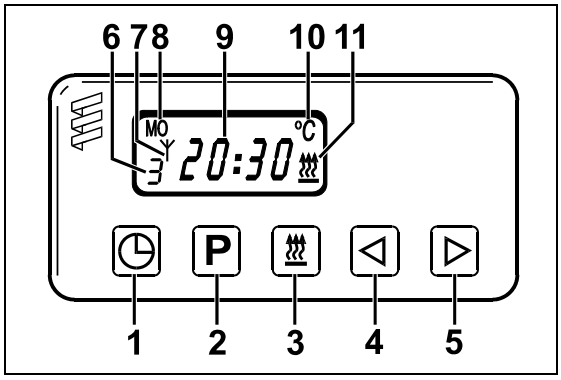

FIGURE 52: ESPAR 18326

These Instructions refer to the timer illustrated in figure 52.

1. Time
2. Program
3. Heating ON
4. Backwards
5. Forwards
6. Memory indicator
7. Symbol for remote control
8. Weekday/program day
9. Current time/program time
10. Temperature display
11. Status display

When the power supply has been connected, all the elements in the display flash - the time must be set. Heating cannot start until the time is set.

Setting Time and Weekday for the First Time

Briefly press (1). The time display 12:00 flashes.

Set the current time using (4) or (5). When the time display stops flashing, the time has been stored.

The weekday begins to flash. Set the current weekday using (4) or (5). When the weekday stops flashing, the weekday has been stored.

If the ignition is “ON”, the display continues to be displayed.

If the ignition is “OFF”, the display disappears after 10 seconds.

Changing Time and Weekday

Press and hold (1) until the time flashes.

Proceed as per instructions for setting time and day for the first time.

If only the time is to be set, you may skip setting the weekday by pressing (1) twice.

When the weekday has been set, press (1) to stop the display from flashing and to store the time and day.

HEATING WITHOUT PROGRAMMING (IGNITION “OFF”)

Press (3). The status display (11) will show heating symbol.

The default heating time is set to 120 minutes. It can be changed temporarily or permanently.

Temporarily Setting Heating Time

With heater on, press (4) to decrease time (minimum 1 minute) or (5) to increase time (maximum 120 minutes).

Permanently Setting Heating Time

With heater “OFF” (do not press (3), press and hold (4) (approx. 3 seconds), until display appears and flashes.

Set heating time (from 10 to 120 minutes) using (4) or (5).

When display disappears, the new heating time has been stored.

Switching Off Heating

Briefly press (3).

The heating symbol will disappear from status display (11).

System switches to automatic after-run for cooling.

HEATING WITHOUT PROGRAMMING (IGNITION “ON’)

To switch heating “ON”, press (3). The status display (11) will show heating symbol, as well as time and weekday.

Heating will remain “ON” until ignition is switched “OFF”.

If the ignition is switched “OFF”, the heating remains switched on for 15 minutes.

This time can be increased (max. 120 minutes) by pressing (5) or decreased (min. 1 minute) by pressing (4).

Switching Off Heating

Briefly press (3).

The heating symbol will disappear from status display (11).

System switches to automatic after-run for cooling.

PROGRAMMING START OF HEATING

3 switch-on times within the following 24 hours or one switch-on time in 7 days can be programmed. Only one switch-on time can be activated at one time.

Selecting and activating memory:
(starting from neutral status with display visible)

First memory – press (2) once.

Memory display: 1 (default time setting 12:00)

Second memory – press (2) twice.

Memory display: 2 (default time setting 12:00)

Third memory – press (2) three times.

Memory display: 3 (default time setting 12:00)

Neutral status (no memory activated) – press (2) repeatedly until memory display disappears.

Start of heating within 24 hours

Set the starting time:

1. Press (2) repeatedly until the desired memory display (1, 2 or 3) flashes.
2. Briefly press and release either (4) or (5). The program time flashes.
3. Set the heating start time using (4) or (5) (Setting is only possible if the program time is flashing).

To select another memory, press (2).

Start of heating after 24 hours (max. 7 days)

Set the starting time:

1. Press (2) repeatedly until the desired memory display (1, 2 or 3) flashes.
2. Briefly press and release either (4) or (5). The program time flashes.
3. Set the heating start time using (4) or (5) (Setting is only possible if the program time is flashing).

Set the program day:

4. The program day begins to flash approximately 5 seconds after the time has been set.
5. Set the heating day using (4) or (5).
6. The program time and day are stored when the time display disappears or when the current time appears.
7. The memory display indicates the activated memory. The flashing “heat-on” symbol (11) also indicates that a memorized start time is activated.

Checking activated memory

The program time of the displayed memory is displayed for about 5 seconds. The display then disappears or then switches to current time (if the ignition is “ON”).

The programmed time (and day) can be displayed by holding (2) down for five seconds.

Temperature display

If an ambient temperature sensor is connected (Espar # 25 1482 89 41 00) and the ignition is activated, the temperature can be permanently displayed by pressing (1) briefly. If the ignition is deactivated, the time temperature is displayed for 15 seconds when (1) is pressed twice.

PLEASE NOTE

Voltage dips are bridged by the heating time switch. After electrical failures, all elements of the display flash. Complete resetting is necessary.

If the ignition is activated, the current time and weekday are displayed permanently. If the time switch is deactivated, the display disappears after 15 seconds.

The remote control can also be operated with the use of an additional unit (receiver module).

If a fault occurs when heating is switched on and the diagnostic circuit is connected, the operating display shows a flashing heating symbol (11) and the fault code number is displayed (see table at the end of this section and contact a specialized shop).

If faults occur, we recommend the following:

1. Switch off and on (max. twice);
2. Check main fuse;
3. Check air channels for blockages;
4. Consult a specialized workshop.

10.10.4 Timer Operating Instructions (Webasto)

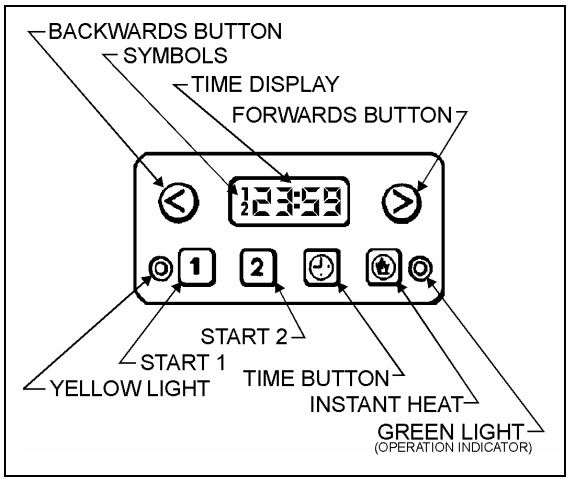

FIGURE 53: WEBASTO 18046

These instructions refer to the timer illustrated in figure 53.

Note: *Heater timer control pad may differ from the one described. Refer to your manufacturer's instruction booklet for detailed operating instructions.*

SETTING THE CLOCK

If the time display e.g. 18:33 is wrong, or if it flashes 8:88, hold and press either (backwards) or (forwards). The longer you hold the button down, the quicker the display changes. The last few minutes are set accurately by quick pushes. Adjust to get exact time, e.g. 23:59. The display fades after 20 seconds.

Present Time Display

Press at any time. Present time appears on the screen.

Manual Heating Start-Up

Press to switch the heater on or off immediately. The green light illuminates when the heater is on.

Programming Heating Start Time

Press [1] and the display shows the time at which the heater will start. You can alter the starting time by pressing either (backwards) or (forwards) button. The longer you hold the button down, the faster the display changes. The last few minutes are set accurately by quick pushes. The display fades after 20 seconds. Start time 1 remains on the display, and the yellow light stays on. Starting time #1 is now activated.

Button [2] allows you to program a second starting time:

Press button [2] which de-activates starting time 1, then proceed as with [1].

The activation of the second starting time is indicated by the symbol 2.

To Check (or activate) Start Time

Press button [1] or [2] briefly. The display shows the programmed starting time for 20 seconds. This also programs the timer to start the heater at the time shown.

To Cancel Heating Start Time

Press button [1] or [2] briefly. The appropriate number in the display goes out, together with the yellow light.

Note: *Switch on the preheating system briefly about once a month, even during the warm season.*

Caution: *When welding on the vehicle, disconnect the preheater module connector in order to protect this system from voltage surges.*

Caution: *To avoid running down the batteries, do not turn on the preheating system for more than one hour before starting the engine.*

Warning: *The preheating system uses the same fuel as the engine. Do not operate in a building or while refueling. Operate only in a well-ventilated area.*

10.10.5 Timer Operating Instructions (Webasto)

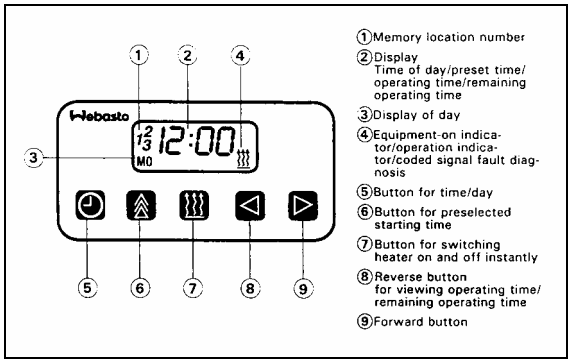

FIGURE 54: WEBASTO 18327

These instructions refer to the timer illustrated in figure 54. They are the same instructions provided in the Webasto 1529 instruction booklet, provided with your vehicle.

Remaining Operating Time

The remaining operating time refers to the period of time the heater still continues to remain in operation. It may be changed while the heater is in operation.

Setting the Digital Timer

After the power has been connected, all symbols on the digital display are flashing. The time of the day and the day of the week must be set.

All flashing symbols of the timer can be set by means of the Forward (9) or Reverse (8) buttons.

When buttons (8) and (9) are pressed for more than 2 seconds, the quick digit advance mode is activated.

Setting the Time and Day of the Week

1. Press button (5) for more than 2 seconds (time display flashes).
2. Press (8) or (9) button to set the time of day.
3. Wait 5 seconds. The time of day is stored (time of week flashes).
4. Press (8) or (9) button to set the correct day of week.
5. Wait 5 seconds. The day of week is stored.

Viewing the Time (Ignition ON)

Continuous display of current time and day of the week.

Viewing the Time (Ignition OFF)

Briefly press button (5) to display current time and day for 5 seconds.

SWITCHING HEATER ON (INSTANT HEATING)

With Ignition ON:

Press button (7). Heater is switched on (continuous operation) and continues to operate until button (7) is pressed again or ignition is switched off.

Note: *If the ignition is switched off while heater is in operation, the remaining operating time of 5 minutes flashes on the display and the heater will continue to operate for this period of time.*

With Ignition OFF:

Press button (7). Heater is switched on for preset operating time (the factory-set heater operating duration is 60 minutes)

SWITCHING HEATER OFF

Press button (7). The heater starts its after-run cycle and switches off thereafter.

Presetting Operating Duration

1. Press button (6). Memory location number flashes.

Note: *By repeatedly pressing button (6), starting time 2 or 3 can be preset.*

2. Press button (8) or (9) until correct startup time is set.
3. Wait 5 seconds. Preset starting time is stored and day of week flashes.
4. Press button (8) or (9) to select the correct startup day of week.
5. Wait 5 seconds. The startup day of week is stored.

The number of memory location remains on the display. The timer is now in the programmed mode and will switch the heater in a the preset time.

Note: *We recommend that memory locations 1 and 2 be used for presetting times within 24 hours of setting the timer. Memory location 3 can be used for a starting time within the next 7 days of setting the timer.*

Recalling Preset Times

Press (6) repeatedly until the desired memory location number and preset time are displayed.

Canceling Preset Time

Press button (6) repeatedly until no more memory location number is visible on the display.

Setting Operating Time

1. With heater off, press button (8). Operating time flashes.
2. Press button (8) or (9) to set the operating time (between 1 and 120 minutes)
3. Wait 5 seconds. Operating time is stored.

The heater remains in operation for the preset time (except for continuous operation).

Setting the Remaining Operating Time

1. With heater in operation, press button (8). Remaining operating time flashes.
2. Set remaining time with button (8) or (9).
3. Wait 5 seconds. Remaining operating time is stored.

Fault Diagnosis by Coded Light Signals

On heaters equipped with a fault diagnosis system using coded light signals, the equipment-on indicator/operation indicator flashes. Please consult your Webasto dealer.

10.10.6 Troubleshooting and Maintenance

The Espar preheater has a diagnostic code system, so the driver is prevented when something goes wrong. Codes are listed below.

Refer to the Webasto or Espar manuals for more information.

Note: *If there are no heater faults, the heater will go through a normal start cycle and regulate based on thermostat setting.*

Note: *Switch on the preheating system briefly about once a month, even during the warm season.*

Caution: *When welding on the vehicle, disconnect the preheater module connector in order to protect this system from voltage surges.*

Caution: *To avoid running down the batteries, do not turn on the preheating system for more than one hour before starting the engine.*

Warning: *The preheating system uses the same fuel as the engine. Do not operate in a building or while refueling. Operate only in a well-ventilated area.*

Number codes and faults are as follows:

ESPAR PREHEATER DIAGNOSTIC CODE LIST				
Code #	***Description***		***Code #***	***Description***
000	Normal Operation – No Faults		001	Warning – Over Voltage
002	Warning – Under Voltage		010	Over Voltage Shutdown
011	Under Voltage Shutdown		012	Overheat Switch Opened
013	Temperature at the Heat Exchanger Too High		020	Glow Plug Defective
022	Short Circuit in Glow Plug Relay		023	Open Circuit to Voltage Regulator
024	Short Circuit in Voltage Regulator		025	Short in Diagnostic Pins
032/033	Blower Motor Is Not Turning Blower Speed Control Relay Defective		034	Open Circuit To Water Control Relay
035	Open in Parts Control Relay		036	Short in Part Control Relay
037	Coolant Pump Motor Not Turning		038	Open in Fan Motor Relay
039	Short in Fan Motor Relay		040	Short Circuit in Water Control Relay
047	Short in Fuel Metering Pump		051	Flame Sensor Defect
052	No Start – Safety Rime Exceeded		053	Flame Out During Start Cycle
054	Flame Out in "High" Output Setting		055	Flame Out in Low Heat
056	Flame Out in Middle Heat		057	Flame Sensor Defect – Harness
060	Open Circuit in Air Temp. Sensor		061	Short Circuit in Air Temperature Sensor
062	Open Circuit, Operating Unit		063	Short Circuit, Operating Unit
064	Open Circuit to Flame Sensor		065	Short Circuit in Flame Sensor
090	Control Box Defective		091	External Power Supply Erratic

11. SPECIFICATIONS

Main evaporator motor

Make.....US MOTOR
Type T-17
Voltage ..... 28.5 V DC
Current draw ..... 57 amps
Horsepower..... 1.5
Revolution .....1750 rpm
Insulation.....Class F
Motor Life .....20 000 hours
Brush life .....10 000 hours
Motor supplier number D599V54PRC4
Motor Prevost number 562374
Brush supplier number..... 1197
Brush Prevost number 561202

Condenser fan motors

Make.....US MOTOR
Type TF-12
Voltage ..... 28.5 V DC
Current draw ..... 20 amps
Horsepower..... 0.57
Revolution .....1950 rpm
Insulation.....Class F
Motor .....20 000 hours
Brush life .....10 000 hours
Qty..... 2
Supplier number..... D591Y440PRC2
Prevost number.....562579
Brush supplier number.....9DB21003
Brush Prevost number 561914

Evaporator air filters (Central system) (Coach)

Make..... Permatron Corp.
Type ..... Polypropylene
Supplier number.....IN 1X10X37 EXACT
Prevost number..... All vehicles (Top) 373336
Prevost number..... XL-40 vehicles (Bottom) 373338
Prevost number..... XL-45 vehicles (Bottom) 373337

Evaporator air filters (Central system) (Shell)

Make..... Permatron Corp.
Supplier number.....IN 13X21X1 NOMINAL
Prevost number.....(Qty = 3) 871034

Driver's unit evaporator motors

Make.....MCC

Voltage ..... 24 V DC

Quantity 1

Supplier number.....25-0250

Prevost number.....871135

Driver's unit evaporator air filter

Make.....MCC

TYPE ..... Recirculating air 6-¼" x 28" Washable

Supplier number.....260593

Prevost number.....871147

Make.....MCC

TYPE ..... Fresh air 3-5/8" X 5-1/4" Washable

Supplier number.....260594

Prevost number.....871144

Refrigerant

Type .....Optional R-22 and Standard R-134a

Quantity (standard) ..... 24 lbs (10.89 Kg)

Quantity (A/C Aux. system located in overhead compartments).....4 lbs (1.8 Kg)

Compressor (Central system)

Make..... Carrier Transicold

Capacity, option R-134a ..... 41 CFM

Capacity, option R-22 ..... 37 CFM

Model, option R-134.....05G-134A

Model, option R-22.....05G-22

No. of cylinders 6

Bore..... 2” (50,8 mm)

Operating speed.....400 to 2200 rpm (1750 rpm. Nominal)

Minimum speed (for lubrification).....400 rpm

Nominal horsepower 15

Oil pressure at 1750 rpm ..... 15 to 30 psi (103-207 kPa)

Oil capacity.....1.13 U.S. gal (4,3 liters)

Weight ..... 142 lbs (64,5 kg)

Approved oils

-Castrol..... SW 68 (POE)

Supplier number, option R-134a 68PD541-104-38

Supplier number, option R-22 ..... 68PD537-104-39

Prevost number, option R-134a 950314

Prevost number, option R-22 950207

A/C Compressor (Driver's and auxiliary systems)

Make……..Tecumseh

Model……HGB-1000

Factory oil charge* ..... 10 US oz (295 ml)

System oil charge** (driver's system only) ..... 16 US oz (473 ml)

Weight ..... 24 lbs (10,9 kg)

Supplier number..... 99242-5

Prevost number..... 950219

Approved oils

- Castrol ..... SW 68 (POE)

- Mobil ……Arctic 1 (POE)

Compressor unloader valve

Make..... Carrier Transicold
Type .....Electric (AMC)
Voltage ..... 24 V DC)
Watts 15
Supplier number (without coil) 17-40407-20
Prevost number (without coil) 950095
Coil supplier number 22-50030 (1)
Coil Prevost numbert..... 950096

Magnetic clutch

Make..... Carrier Transicold
Type .....Housing mounted 9” dia., 2-B grooves
Voltage ..... 24 V DC
Coil resistance at 68 °F (20 °C) ..... 5.15 – 5.69 ohms
Supplier number..... 50-01122-90
Prevost number..... 950204

Compressor V belts

Make.....Dayco
Model (matching set of 2) BX97
Prevost number (with Delco 270/300 Amp Alternator) 506664

Compressor V belt

Make.....Dayco
Model..... BX100
Prevost number (with two BOSH Alternators) 506681

Condenser coil (Driver's and auxiliary systems)

Make..... Harrison division
Supplier number..... 3037438
Prevost number..... 950018

Condenser coil (Central system) (XL2-40 vehicles and, XL2-45 & 45E Shells)

Make..... Carrier Transicold

Aluminum

Supplier number.....68GF67-194-2

Prevost number..... 870654

Copper

Supplier number.....68GF67-194-3

Prevost number..... 870729

Condenser coil (Central system) (XL2-45 Coach)

Make..... Carrier Transicold

Aluminum

Supplier number.....68BC2-107

Prevost number..... 950259

Copper

Supplier number.....68BC2-107-1

Prevost number..... 950260

Evaporator coil (Central system)

Make..... Carrier Transicold

Supplier number..... 68BE2-105

Prevost number..... 871070

Receiver tank (with sight glasses)

Make..... HENRY

Maximum pressure..... 450 psig

Supplier number.....ARL-1217

Prevost number..... 950261

Receiver - dryer (Auxiliary system)

Make.....Arctic Traveler

Model..... 402566

Supplier number..... 74R1706

Prevost number..... 950048

Filter Dryer assembly

Make..... AC&R HENRY

Supplier number.....815031-XH9

Prevost number..... 950262

Moisture indicator

Make..... Henry

Supplier number..... MI-30-7/8S

Prevost number..... 950029

Driver's refrigerant liquid solenoid valve

Make..... Parker

Type ..... Normally closed with manual bypass

Voltage ..... 24 V DC

Amperage draw..... 0.67 amps

Watts 16

Supplier number (without coil) RB9MP3-MM
Prevost number (without coil) 95-0054

Coil supplier number ..... R23MM 24 V DC-CB

Coil Prevost number..... 950055

Repair kit Prevost number 950056

Driver's hot water solenoid valve

Make..... Asco

Type ..... Normally open (without manual bypass)

Voltage ..... 24 V DC

Current draw ..... 0.47 amp.

Watts 11.2

Pressure range..... 0 to 100 psi

Max. temperature ..... 220°F

Supplier number (with coil) 106-269-1

Prevost number (with coil) 870812

Coil Prevost number..... 870960

Repair kit Prevost number 870872

Hot water solenoid valve (Central system)

Make..... Honeywell
Type .....Normally open
Voltage ..... 24 V DC
Supplier number..... LH1C13024VDC
Prevost number..... 870873
Coil, supplier number AVD-D130-EA22
Coil, Prevost number..... 870865
Repair kit, Prevost number 870876

Water recirculating pump (Central system - Coach) & (Driver's system - Coach & Shell)

Make.....M.P. pumps
Voltage ..... 24 V DC
Supplier number..... 28689
Prevost number..... 871052

Water recirculating pump (Central system - Shell)

Make.....M.P. pumps
Voltage ..... 24 V DC
Housing ..... Aluminum
Supplier number..... 29232
Prevost number..... 871032

Water filter (Central system)

Make..... Parker
Supplier number (with element) 15CN1238WP
Prevost number (with element) 871028
Element supplier number 925566
Element Prevost number 871029

Water filter (small A/C system)

Make..... BRAUKMANN
Supplier number..... T300B
Prevost number..... 870807

Driver’s expansion valve

Supplier number, option R-134a 26-0190
Supplier number, option R-22 26-0384
Prevost number, option R-134a 950221
Prevost number, option R-22 950282

Expansion valve (Central system)

Make ..... Alco
Model ..... TCLE 5-1/2
Supplier number 21059366
Prevost number 950320

By-pass valve (Driver's and auxiliary systems)

Make ..... Alco
Model ACP-5
Supplier number 047284
Prevost number (Shell) 452586
Prevost number (Coach) 452512

Bypass solenoid water valve

Make ..... Parker Hanninfin
Bypass supplier number RB21ME7-MM
Bypass Prevost number 870886
Coil supplier number R-23MM24VDC-CB
Coil Prevost number 870886
Repair kit supplier number 76754
Repair kit Prevost number 870980

Preheating system

Make ..... Espar
Model ..... D 12 W
Capacity ..... 41 000 Btu/h (12 kW)
Heating medium ..... Coolant
Rated voltage ..... 24 V DC
Operating voltage ..... 20-28 V DC

Electric power consumption (without coolant recirc. Pump) ..... 55 watts
Fuel consumption ..... 0,8 US gallons/hr (1.65 liters/hr)
Supplier number 25 1860 05
Prevost number 871077

Preheating system

Make ..... WEBASTO
Model ..... DBW 2010
Capacity ..... 45 000 Btu/h (12 kW)
Heating medium ..... Coolant
Rated voltage ..... 24 V DC
Operating voltage ..... 20-28 V DC
Electric power consumption (without coolant recirc. Pump) ..... 60 watts
Fuel consumption ..... 0,4 US gallons/hr (1.5 liters/hr)
Supplier number .....
Prevost number 871085

Preheating system

Make ..... WEBASTO
Model ..... DBW 2020
Capacity ..... 80 000 Btu/h (23,3 kW)
Heating medium ..... Coolant
Rated voltage ..... 24 V DC
Operating voltage ..... 20-28 V DC
Electric power consumption (without coolant recirc. Pump) ..... 120 watts
Fuel consumption ..... 0,8 US gallons/hr (3 liters/hr)
Supplier number 666.640
Prevost number 871036

SECTION 23: ACCESSORIES

CONTENTS

1. AUDIO AND VIDEO EQUIPMENT DESCRIPTION 23-4

1.1 AMP-2000 (HIGH POWER AMPLIFIER) 23-5
1.1.1 Removal 23-6
1.2 AM/FM RADIO 23-6
1.2.1 AM/FM Radio Cassette and Disc CD Changer 23-6
1.2.2 Removal 23-6
1.3 CONTROL HEAD 23-6
1.3.1 Removal 23-7
1.4 VIDEO CASSETTE PLAYER (VCP) 23-7
1.4.1 Removal 23-7
1.4.2 Installation 23-7
1.5 BOOM-TYPE MICROPHONE 23-8
1.5.1 Removal 23-8
1.5.2 Installation 23-8
1.6 HANDHELD PRIORITY MICROPHONE 23-8
1.7 RUBBER COATED MICROPHONE 23-8
1.8 WIRELESS MICROPHONE 23-8
1.9 TV TUNER 23-8
1.10 KARAOKE 23-9
1.10.1 Karaoke Panasonic Sound System – DVD-A300 23-9
1.11 DRIVER'S SPEAKERS 23-9
1.12 MONITOR 23-9
1.12.1 Removal 23-9
1.12.2 Installation 23-9
1.13 SCENIC VIEWING SYSTEM 23-10
1.14 ROOF ANTENNA INSTALLATION 23-10

2. HUBODOMETER 23-10

2.1 DESCRIPTION 23-10
2.2 OPERATION 23-10
2.3 REMOVAL 23-10
2.4 INSTALLATION 23-10

3. BACK-UP CAMERA AND MONITOR 23-11

4. COLD STARTING AID (ETHER) 23-11

4.1 PREVENTIVE MAINTENANCE 23-11
4.2 TROUBLESHOOTING (IF SYSTEM IS NON-FUNCTIONING) 23-11
5.3 THERMAL CUTOUT VALVE QUICK TEST 23-12

5. DESTINATION SIGN 23-12

5.1 DESCRIPTION 23-12
5.2 MAINTENANCE 23-13
5.3 DESTINATION SIGN LIGHT REPLACEMENT 23-13
5.4 ELECTRIC MOTOR REMOVAL AND INSTALLATION 23-13
5.5 SIGN CURTAIN REPAIR 23-13

6. LAVATORY 23-13

6.1 DESCRIPTION 23-13

6.2 MAINTENANCE....23-14
6.3 VENTILATION FAN....23-14
6.3.1 Description....23-14
6.3.2 Maintenance....23-14
6.3.3 Removal and Installation....23-14
6.4 DOOR LOCK....23-15
6.5 LAVATORY LIGHT....23-15
6.6 LAVATORY NIGHT-LIGHT....23-15
6.7 EMERGENCY BUZZER....23-15
6.8 FRESH WATER TANK....23-16
6.8.1 Fresh Water Tank Draining....23-16
6.8.2 Fresh Water tank Filling....23-17
6.9 LIQUID SOAP DISPENSER....23-17
6.10 FLUSH PUSH-BUTTON....23-18
6.10.1 Pneumatic Timer Removal and Installation....23-18
6.10.2 Timer Adjustment....23-18
6.11 FLUSH PUMP....23-18
6.11.1 Flush Pump Removal....23-18
6.12 SUMP TANKS....23-18
6.12.1 Main Sump Tank Draining....23-18
6.12.2 Main Sump Tank Filling....23-18
6.12.3 Auxiliary sump Tank Draining....23-18

7. AIR HORN VALVE....23-19

7.1 AIR HORN VALVE MAINTENANCE....23-19

8. WINDSHIELD WIPERS AND WASHERS....23-19

8.1 GENERAL DESCRIPTION....23-19
8.2 WIPER ARM....23-20
8.2.1 Wiper Arms Positioning....23-20
8.3 WINDSHIELD WIPER MOTOR....23-22
8.3.1 Windshield Wiper Motor Replacement....23-22
8.4 TROUBLESHOOTING....23-22

9. SPECIFICATIONS....23-23

ILLUSTRATIONS

FIGURE 1: SOUND SYSTEM JUNCTION PLATE....23-4
FIGURE 2: AMP-2000 AMPLIFIER....23-5
FIGURE 3: PANASONIC CQ-R115SEUC....23-6
FIGURE 4: CONTROL HEAD....23-7
FIGURE 5: INSTALLATION IN PARCEL COMPARTMENT....23-7
FIGURE 6: VIDEO CASSETTE PLAYER....23-7
FIGURE 7: BOOM-TYPE MICROPHONE....23-8
FIGURE 8: HANDHELD PRIORITY MICROPHONE....23-8
FIGURE 9: RUBBER COATED MICROPHONE....23-8
FIGURE 10: WIRELESS MICROPHONE....23-8
FIGURE 11: TUNER CONTROLS DESCRIPTION....23-9
FIGURE 12: KARAOKE PANASONIC DVD-A300....23-9
FIGURE 13: MONITOR HOUSING REAR PANEL....23-9
FIGURE 14: INSTALLATION IN PARCEL COMPARTMENT....23-10
FIGURE 15: SCENIC VIEW CAMERA....23-10
FIGURE 16: HUBODOMETER....23-10
FIGURE 17: ENGINE....23-11
FIGURE 18: COLD STARTING AID....23-11
FIGURE 19: DESTINATION SIGN – ELECTRICAL....23-12
FIGURE 20: DESTINATION SIGN-ELECTRIC MOTOR....23-13
FIGURE 21; DESTINATION SIGN – ELECTRONIC....23-13
FIGURE 22: LAVATORY....23-14
FIGURE 23: VENTILATION FAN INSTALLATION....23-15
FIGURE 24: DOOR LOCK....23-15
FIGURE 25: FUNCTIONING OF LAVATORY....23-16
FIGURE 26: F/W TANK SERVICE VALVES....23-17
FIGURE 27: LIQUID SOAP DISPENSER....23-17
FIGURE 28: AIR HORN VALVE....23-19
FIGURE 29: WINDSHIELD WIPER INSTALLATION....23-19
FIGURE 30: MULTIFUNCTION LEVER....23-20
FIGURE 31: WINSHIELD WASHER RESERVOIR....23-20
FIGURE 32: WINDSHIELD WIPER (MOTOR SIDE)....23-20
FIGURE 33: WINDSHIELD WIPER (DRIVER SIDE)....23-20
FIGURE 34: WIPER ARMS POSITIONING....23-21
FIGURE 35: DRIVING MECHANISM (DRIVER SIDE)....23-21
FIGURE 36: DRIVING MECHANISM (MOTOR SIDE)....23-21

1. AUDIO AND VIDEO EQUIPMENT DESCRIPTION

The power amplifier is mounted on a sound system junction plate which is located in the first baggage compartment, L.H. side (Fig. 1), to access, open the first baggage compartment. In addition to the public address (PA) systems, options for AM/FM stereo radio and cassette player, CD changer, karaoke, wireless microphone, video system with monitors, scenic viewer and digital processor controller may be featured.

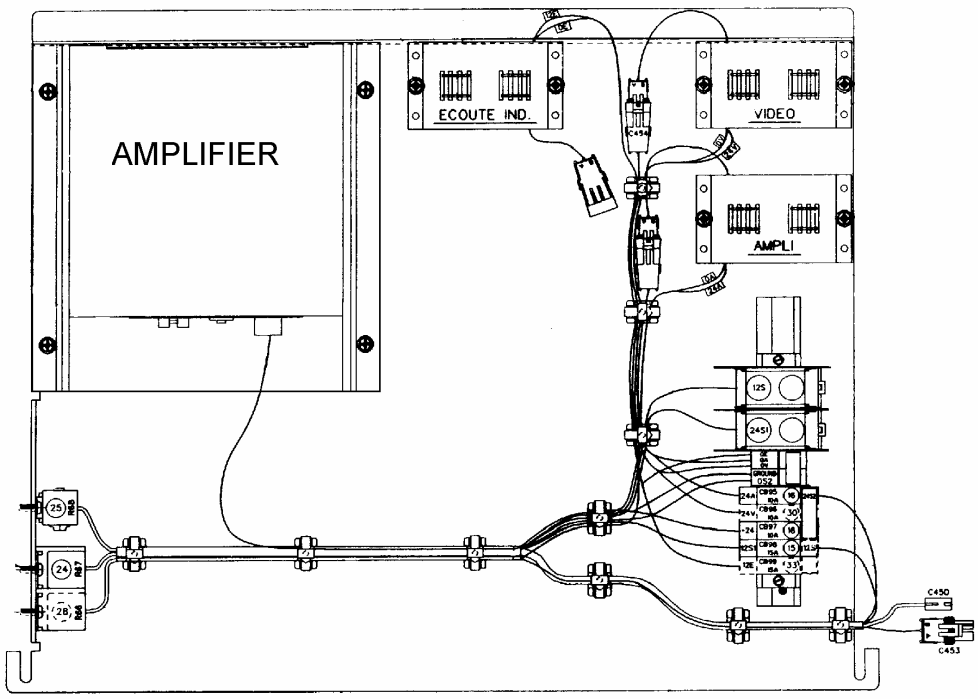

FIGURE 1: SOUND SYSTEM JUNCTION PLATE 23059

Each service module mounted to the underside of the parcel racks contains a 40-watt speaker. The speakers in the passenger section (twelve in XL2-40 or fifteen in XL2-45) are wired in stereo and are powered by the amplifier. A microphone outlet mounted in the driver's area is provided as standard equipment.

1.1 AMP-2000 (HIGH POWER AMPLIFIER)

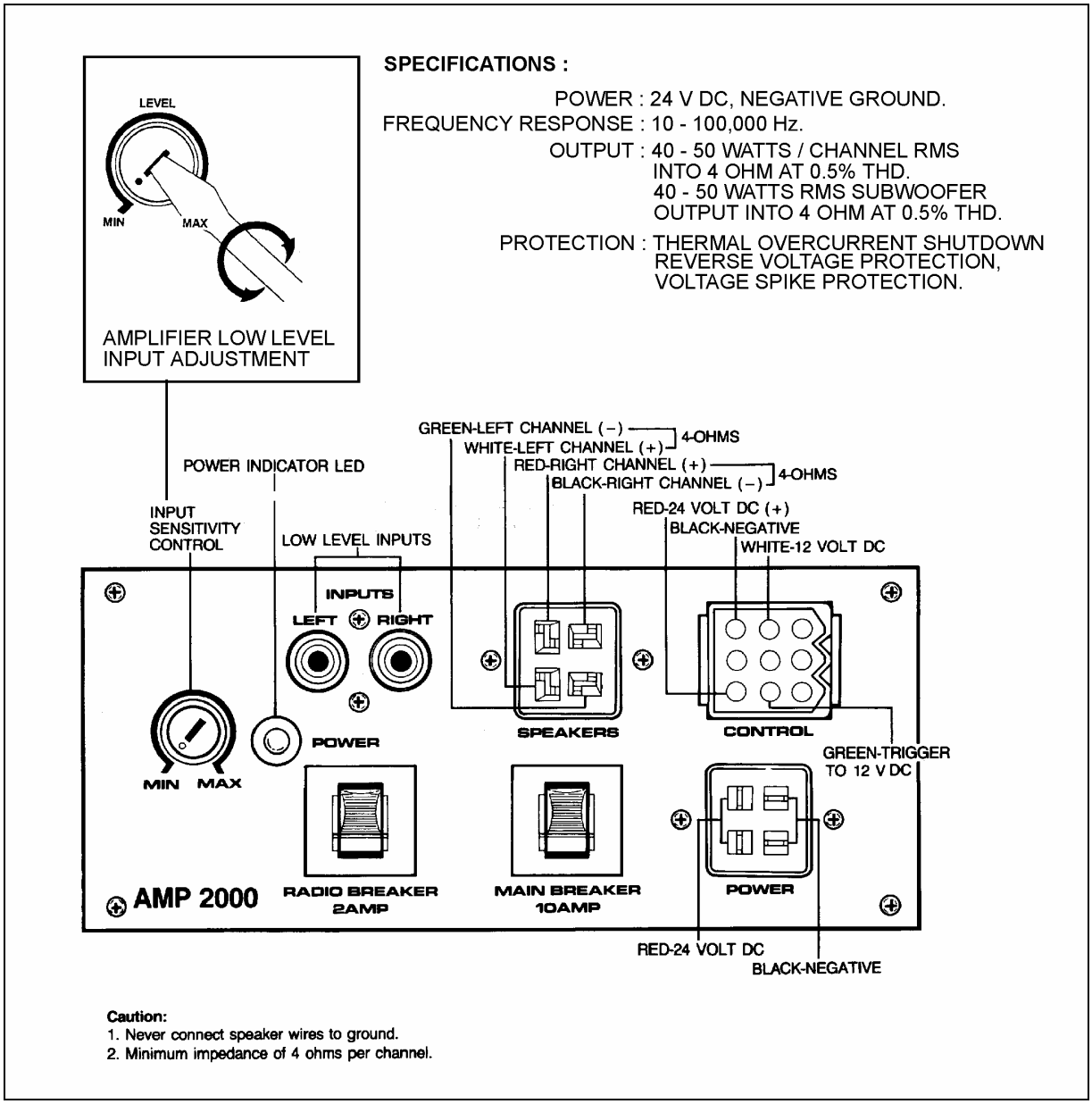

FIGURE 2: AMP-2000 AMPLIFIER 23081

The AMP-2000 brings an added dimension to your stereo equipment and increases the total output of the system. The amplifier will perform with any unit operating in a 24-volt with negative ground electric system. The AMP-2000 is located on the first baggage compartment ceiling. To access, open the first baggage compartment door.

The input sensitivity is adjustable from 100mV to 1V to match the output of the radio or tape deck. Set the volume control on the radio, then adjust the input control on the amplifier for an average listening level. This gives the best balance between radio output and system signal-to-noise ratio (Fig. 2).

Caution: *The low level input adjustment for this amplifier has been preset according to system specifications.*

1.1.1 Removal

Remove the amplifier as follows:

1. Set the battery master switch to the ''OFF'' position. Refer to Section 6: ''Electrical System'' for switch location.

2. Remove the sound system junction plate from its location. To perform this step, disconnect wiring connectors, remove cable ties and remove the bolts retaining the sound system junction plate.

3. Remove the four screws retaining the amplifier to its sound system junction plate.

4. Reverse the removal procedure to install the amplifier.

1.2 AM/FM RADIO

1.2.1 AM/FM Radio Cassette and Disc CD Changer

The audio system is composed of an AM/FM radio cassette player ''Panasonic, model CQ-R115SEUC (Fig. 3). Also, the vehicle may be equipped with a 6 or 12 disc CD changer and two additional Hi-Fi speakers in the driver's area. A roof antenna as well as different microphone outlets, can be installed as optional equipment.

FIGURE 3: PANASONIC CQ-R115SEUC 23218

Note: *Before attempting to solve an electrical problem on the sound system, refer to the master wiring diagrams.*

Instructions for proper use of the radio are included in the *''Panasonic Owner's Manual''* which is provided in the technical publication box delivered with the vehicle. The radio is a serviceable component and should only be serviced by a qualified electronics technician. Refer to *''Panasonic Service Centers''* guide included in the technical publication box.

1.2.2 Removal

To remove the radio from its location, proceed as follows:

1. Place the battery master switch in the ''OFF'' position.

2. Remove the dashboard panel cover.

3. Disconnect the electrical cable connectors from radio and unfasten back plate securing screw.

4. To separate the radio from its support, push in the dismounting pins included with the Panasonic Owner's Manual.

5. Push the unit through the front instrumentation panel.

5. Install a new unit by reversing the procedure.

1.3 CONTROL HEAD

The system 2000 (Fig. 4) is designed exclusively for coach operations. A complete system will control the following equipment:

- A specially designed 70 watt per channel RMS amplifier, capable of driving up to twenty-six, four ohm speakers.

- Six, custom designed ten-inch color monitors that incorporate a unique anti-theft locking slide mount. This makes installation and removal very easy.

- A specially modified VHS video cassette player that allows the operator convenient control over its functions.

- A digital audio processor that incorporates a centralized system control. The system 2000 microprocessor allows the operator to control up to three audio selections, permitting custom tailoring of each channel's sound quality. There are three microphone inputs for the PUBLIC ADDRESS SYSTEM (PAS), which are switchable between internal and external speakers. The unit contains a separate video section for the VCP that allows the driver to control his own separate audio selections.

Instructions for proper use of the control head are included in the ''*REI Operator's Manual''* which is provided in the technical publication box delivered with the vehicle.

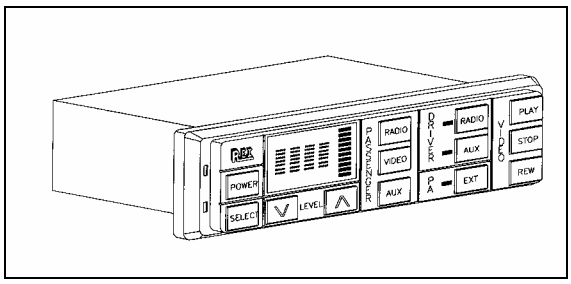

FIGURE 4: CONTROL HEAD 23070

1.3.1 Removal

To remove the control head from its location, proceed as follows:

1. Place the battery master switch in the ''OFF'' position.

2. Remove the dashboard panel cover.

3. Disconnect the electrical cable connectors from radio and unfasten back plate securing nut.

4. To separate the control head from its support, push in the dismounting pins included with the REI Operator's Manual.

5. Push the unit through the front instrumentation panel.

6. Install a new unit by reversing the procedure.

1.4 VIDEO CASSETTE PLAYER (VCP)

The VCP is located in the first parcel compartment on the driver's side (Fig 5 & 6). Instructions for proper use of the VCP are included in the *''Operator's Manual''* which is provided in the technical publication box.

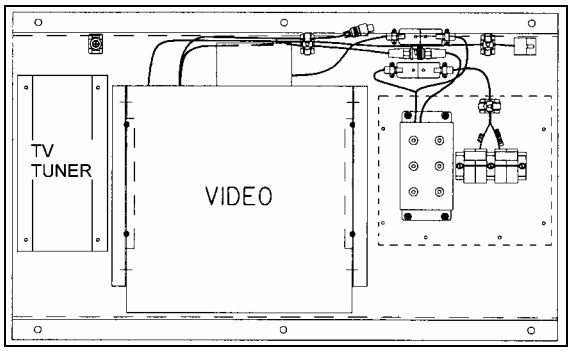

FIGURE 5: INSTALLATION IN PARCEL COMPARTMENT 23223

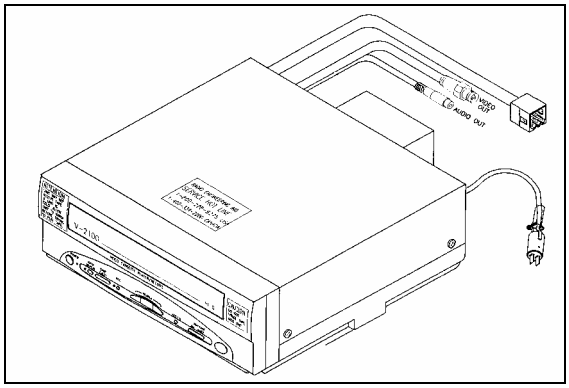

FIGURE 6: VIDEO CASSETTE PLAYER 23075

1.4.1 Removal

1. Place the battery master switch in the ''OFF'' position.
2. Remove the VCP/VCR mounting locknuts from rubber mounts.
3. Disconnect wiring.
4. Remove VCP/VCR unit from parcel compartment.

1.4.2 Installation

1. Install VCP/VCR unit into parcel compartment aligning rubber mount studs with mounting holes. Insert mount studs through mounting holes.

2. Install locknuts on mount studs.
3. Reconnect wiring.
4. Place the battery master switch in the ''ON'' position.

1.5 BOOM-TYPE MICROPHONE

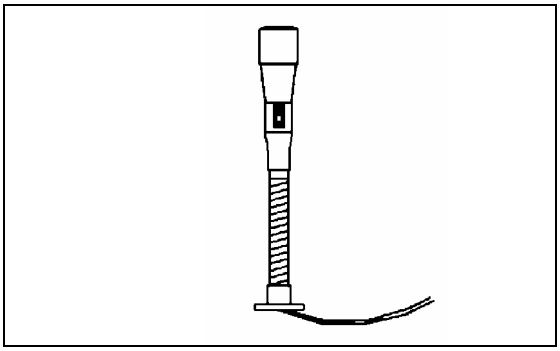

FIGURE 7: BOOM-TYPE MICROPHONE 23083

1.5.1 Removal

1. Place the battery master switch in the ''OFF'' position.
2. Remove the mounting screws at mounting flange.
3. Disconnect wiring.

1.5.2 Installation

1. Reconnect wiring.
2. Align mounting flange with holes and install screws.
3. Remove spacer block mounting screws.
4. Insert spacer block and install mounting screws.
5. Place the battery master switch in the ''ON'' position.

1.6 HANDHELD PRIORITY MICROPHONE

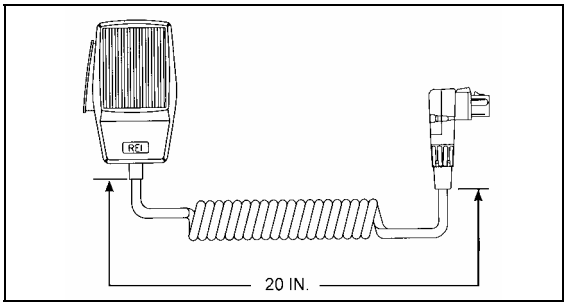

FIGURE 8: HANDHELD PRIORITY MICROPHONE 23216

1.7 RUBBER COATED MICROPHONE c/w 10 Feet cord and connector

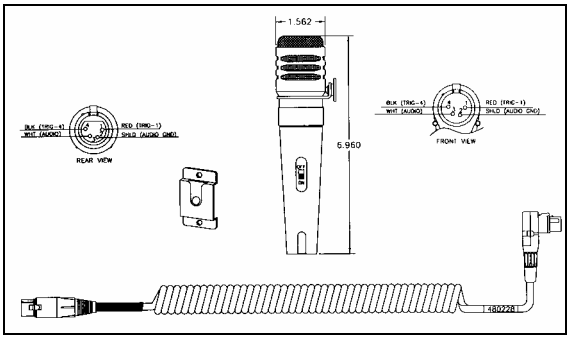

FIGURE 9: RUBBER COATED MICROPHONE 23217

1.8 WIRELESS MICROPHONE

The system 2000 16 channel wireless microphone, Receiver and Charging Cradle are custom designed units that allow for wireless PA communication from anywhere on the coach. The unit consists of a receiver mounted in the parcel area directly behind the driver, and a rechargeable hand-held microphone and charging unit. Instructions for proper use of the microphone are included in the *''REI Operating Manual''* which is provided in the technical publications box delivered with the vehicle.

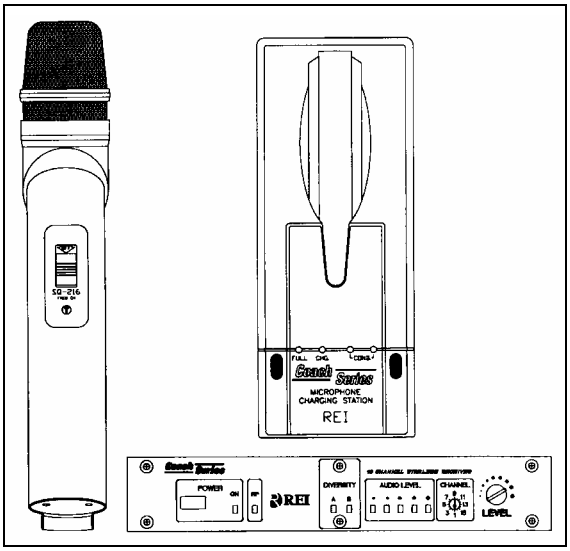

FIGURE 10: WIRELESS MICROPHONE 23226

1.9 TV TUNER

For TV tuner control descriptions, refer to fig. 11.

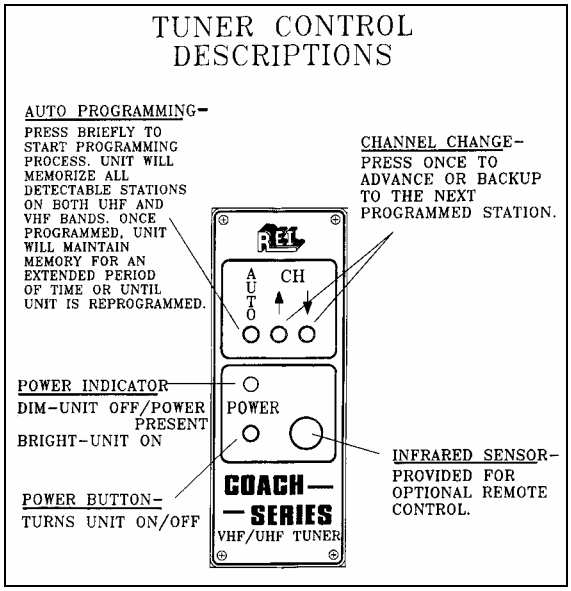

FIGURE 11: TUNER CONTROLS DESCRIPTION 23061

1.10 KARAOKE

The modified Panasonic DVD Player powers up automatically when the video system is activated. In addition to its normal functions controlled by the front panel, the unit can be controlled with the plug-in remote control, or the control head, which has access to the PLAY and STOP commands. A button on the front of the unit switches between normal PA mode and Sing-Along.

Instructions for proper use of the Karaoke system 2000 are included in the *''Operating Manual''* that is provided in the technical publications box delivered with the vehicle.

1.10.1 Karaoke Panasonic Sound System – DVD-A300

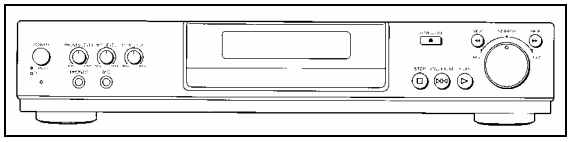

FIGURE 12: KARAOKE PANASONIC DVD-A300 23214

1.11 DRIVER'S SPEAKERS

The driver's speakers are mounted one on each side. This arrangement provides the driver with clear stereo sound. Controls for the driver's audio allow selection between the radio and the auxiliary audio (independent of the passenger's speakers) or muting the speakers.

1.12 MONITOR

For monitor adjustment, refer to figure 13.

1.12.1 Removal

The front and side, ten-inch color monitors are slide mounted and retained by key locks. A LED indicator is provided on the back to indicate when the unit is ''ON''. The red button is the monitor ON/OFF switch and the pin style button is the circuit breaker reset button.

1. Place the battery master switch in the ''OFF'' position.

2. Unlock the monitor slide and pull towards the front of the monitor.

3. After removal, cover mount location using the monitor cover assembly and lock.

1.12.2 Installation

1. Remove monitor cover assembly located over mounting bracket if needed.

2. Align the monitor mount with the slide and slide monitor into place.

3. Lock the monitor or cover to prevent removal.

Note: *Make sure connections are not bent or damaged. If monitor is not being replaced, immediately install the mounting cover.*

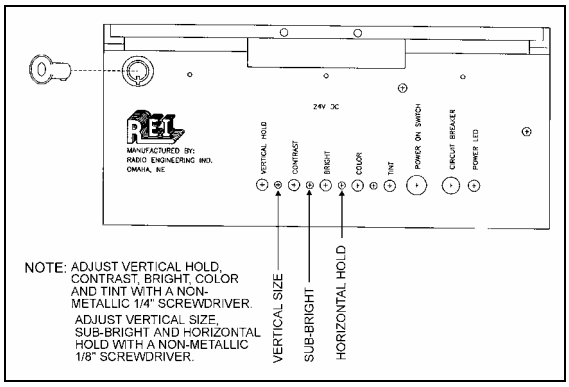

FIGURE 13: MONITOR HOUSING REAR PANEL 23076

1.13 SCENIC VIEWING SYSTEM

The scenic viewing system enables the passengers to view the road ahead of the vehicle. This system is composed of a camera, a dashboard mounted ON/OFF switch and the audio – video switching box located in the first parcel compartment on the driver's side (Figs. 14 & 15).

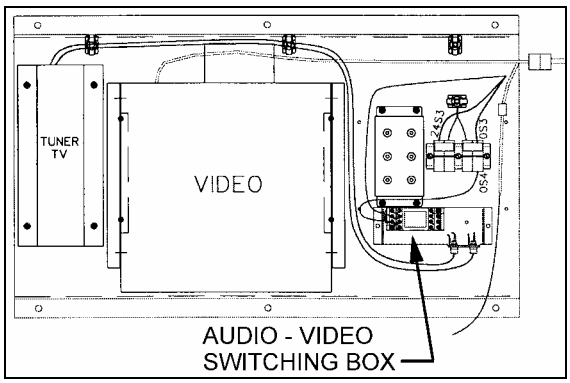

FIGURE 14: INSTALLATION IN PARCEL COMPARTMENT 23333

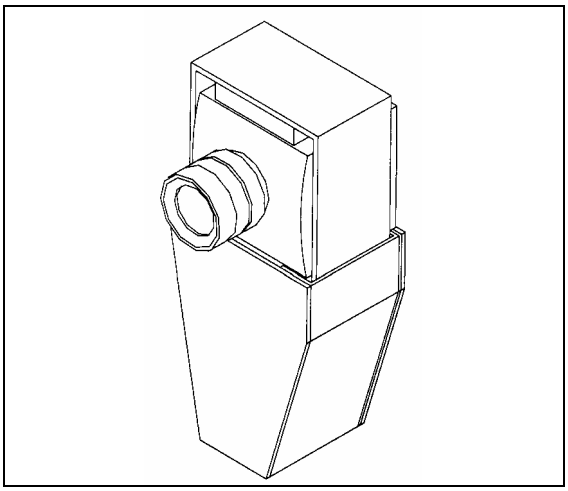

FIGURE 15: SCENIC VIEW CAMERA 23221

1.14 ROOF ANTENNA INSTALLATION

1. Find the desire location and drill a hole according to specification.
2. To remove dirt and grease, wash hole edge with alcohol.
3. If so equipped, remove foam padding ring from antenna to free the metal surface (foam can produce air bulbs in new rubber seal).
4. With SIKA 205, wash the vehicle hole edge and the antenna base surface, wait at least two (2) minutes for chemical evaporation.
5. Apply new seal SIKA 221 on both, vehicle hole edge and antenna base.
6. Fix the antenna in place.
7. Remove excess seal and complete a finishing joint all around the antenna base.

2. HUBODOMETER

2.1 DESCRIPTION

An optional wheel hubodometer (Fig. 16) may have been installed on the R.H. side of the drive axle. It indicates the total distance in miles or kilometers covered by the coach since it has left the factory, including road testing.

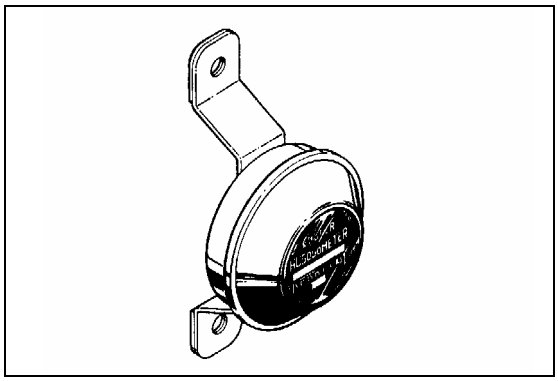

FIGURE 16: HUBODOMETER 23024

2.2 OPERATION

The hubodometer is calibrated for a specific wheel size (diameter). Wheel rotation causes a mechanism inside the hubodometer to record distance after a predetermined number of rotations. The unit should be serviced at a competent speedometer repair facility.

Note: *Do not use paint, solvent or thinner on hubodometer face or on plastic hubcaps. Do not weld on hubodometer.*

2.3 REMOVAL

To remove the unit, remove the two lock nuts and washers securing it to the wheel hub, and pull the unit off the studs.

2.4 INSTALLATION

Place the hubodometer unit over the wheel hub studs. Replace the lock washers and nuts. Torque stud nuts to 110-165 ft·lbf (150-225 N·m).

3. BACK-UP CAMERA AND MONITOR

An optional back-up camera is available which provides the driver with visual assistance when backing-up. The camera is automatically activated when the transmission is put in reverse gear and the ignition switch is "ON". The TV monitor is mounted on top of the dashboard. Refer to the Operator's Manual under "Controls & Instruments".

4. COLD STARTING AID (ETHER)

The vehicle can be equipped with an electrically-operated type ether cold starting aid designed to ease engine starting when temperature is low.

On vehicles equipped with cold starting aid, the system consists of the main following parts:

- Ether starting aid switch
- Ether cylinder
- Solenoid valve (24 V)
- Thermal cutout valve
- Atomizer

The control rocker switch is located on the dashboard. This switch is provided with a locking mechanism to avoid accidental use when engine is running. To activate the ether starting aid, proceed as follows:

1. Prior to cranking engine, press down rocker switch for three seconds to fill solenoid valve.
2. Release switch to discharge shot.
3. Allow three seconds for shot to discharge.
4. Start engine, use additional shots if necessary to keep engine running.

Caution: *This practice should be performed only when absolutely necessary. Excessive use of fluid could result in serious engine damage.*

The ether cylinder and solenoid valve assembly are mounted on the engine compartment wall and are accessible from the engine compartment R.H. side door.

The thermal cutout valve is mounted on the engine (radiator side). Its function is to prevent discharge of ether when engine is warm (over 90 F (32 C)). An atomizer is installed on top of the air intake duct (Fig. 17).

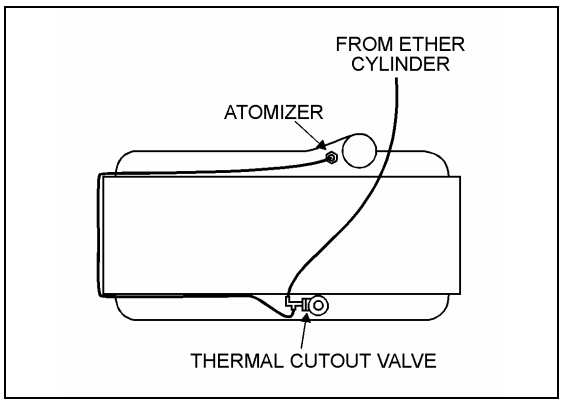

FIGURE 17: ENGINE 23032

4.1 PREVENTIVE MAINTENANCE

During the summer months, remove cylinder to avoid high temperature actuation of the cylinder safety relief device. Always screw valve cap into solenoid valve opening to prevent entrance of road dirt. When removing cylinder, be careful to prevent dirt from entering the valve.

4.2 TROUBLESHOOTING (IF SYSTEM IS NON-FUNCTIONING)

Warning: *During the following test, direct free end of tube away from personnel and all sources of ignition as this fuel is extremely flammable. Avoid breathing vapors and contacting fuel with skin. Never smoke during test.*

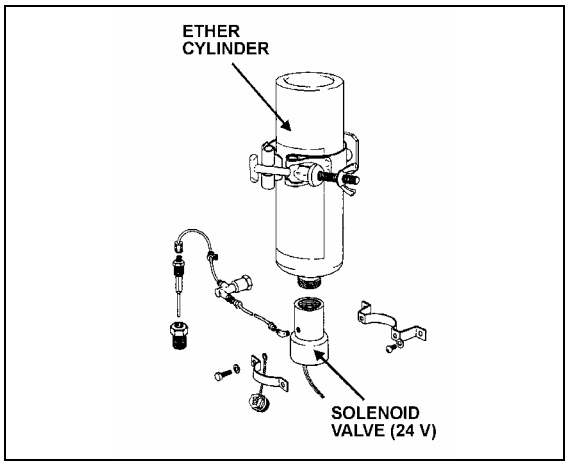

FIGURE 18: COLD STARTING AID 23048

1. Check cylinder for hand tightness and fuel supply (Fig. 18). Empty cylinder weight is approximately 17 oz (480 g); full cylinder weight is approximately 35 oz (990 g). If cylinder is empty, replace it. Before replacing cylinder, install new valve gasket in solenoid valve.

2. If still not functioning, disconnect tubing at solenoid valve fitting. Actuate solenoid valve. (Ask an assistant to actuate solenoid valve using the rocker switch on the dashboard).
   - If solenoid valve is non-functioning, check electric circuit, (refer to wiring diagrams). If sound, remove and replace the solenoid valve. If not, repair electric circuit.
   - If valve is functioning, reassemble valve fitting and connect tube. Disconnect tube at thermal cutout valve from port "Tube from valve".

3. Actuate the solenoid valve.
   - If fuel is not discharged from tube, remove tube and blow out or replace.
   - If fuel is discharged, connect tube to thermal cutout valve, and disconnect other tube.

4. Actuate the solenoid valve.
   - If fuel is not discharged, replace the cutout valve.

Note: *If engine coolant temperature is 90°F (32°C) or over, it is normal that fuel is not discharged as the valve is in closed position.*

   - If fuel is discharged, connect tube to thermal cutout valve, and disconnect tube from atomizer.

5. Actuate the solenoid valve.
   - If fuel is not discharged from tube, fuel line is clogged. Remove tube and blow out or replace.
   - If fuel is discharged, replace the atomizer.

5.3 THERMAL CUTOUT VALVE QUICK TEST

1. Engine coolant temperature must be below 90 F (32 C).

2. Temporarily disconnect tube at thermal cutout valve from port *"Tube to atomizer"*.

3. Actuate solenoid valve (Ask an assistant to actuate solenoid valve by means of the rocker switch on the dashboard). Fuel should be discharged through the thermal cutout valve.

Warning: *Avoid breathing vapors and contacting fuel with skin. Never smoke during test.*

4. Reconnect tube to thermal cutout valve.

5. Start engine, using cold starting aid if necessary. Stop engine when it reaches operating temperature.

6. Disconnect tube at thermal cutout valve as in step 2, and repeat step 3. No fuel should be discharged.

5. DESTINATION SIGN

5.1 DESCRIPTION

The destination sign is located at upper front of the vehicle. Two models are available.

ELECTRICAL DESTINATION SIGN (Optional)

The lighting is provided with a fluorescent tube, which is activated by means of a rocker switch located on the dashboard. The destination sign is electrically operated, two rocker switches mounted side by side on the destination sign control its motor. The unwinding speed control switch determines the rolling speed without actuating it. The selecting switch (momentary type) controls and actuates the rolling direction (fig. 19).

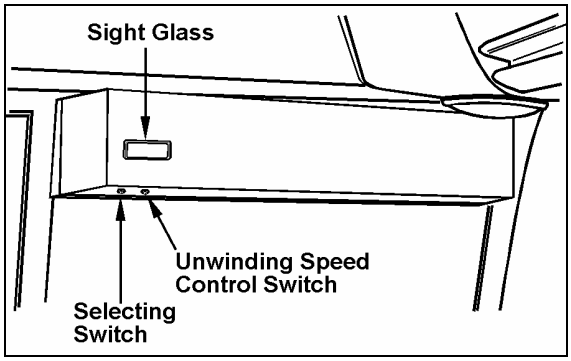

FIGURE 19: DESTINATION SIGN – ELECTRICAL 23122

5.2 MAINTENANCE

Inspect the following items regularly:

1. Check for free and easy mechanism movement.
2. Check for loose items on the sign mechanism, such as wire, loose clips, hanging tape, etc.
3. Check tension and condition of the two drive belts and replace as required.
4. Periodic lubrication is **NOT** recommended.

5.3 DESTINATION SIGN LIGHT REPLACEMENT

Refer to Section 06, Electrical System, paragraph "*13.4.7 Destination Sign Light - Bulb Removal and Replacement*" and "*13.4.8 Destination Sign - Fluorescent Removal and Replacement*".

5.4 ELECTRIC MOTOR REMOVAL AND INSTALLATION

To remove the electric motor:

1. Remove the six Phillips-head screws and washers retaining the destination sign cover, then carefully remove the cover from its location.
2. Disconnect wires from electrical motor.
3. Remove both screws retaining motor to destination sign frame (Fig. 20).
4. Slide motor upwards, then remove the drive belt.
5. Remove motor through the opening intended for this purpose.

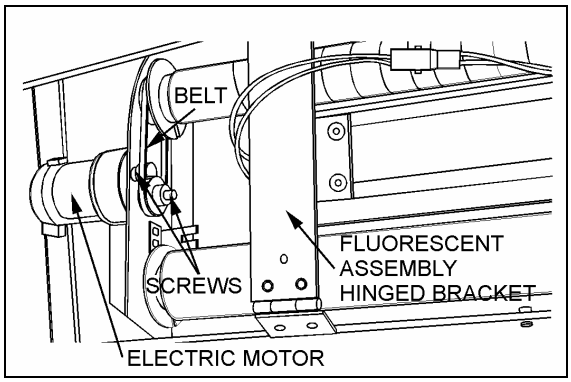

FIGURE 20: DESTINATION SIGN-ELECTRIC MOTOR 23034

6. Install the motor by reversing the above procedure.

5.5 SIGN CURTAIN REPAIR

In the event a destination sign curtain is torn, it can be repaired with 3M polyester tape or any equivalent cellophane tape. When repairing a tear, the tape should be used on both sides of the curtain.

ELECTRONIC DESTINATION SIGN (Optional)

To change the destination, depress the selecting switches until the desired destination appears in the LCD display.

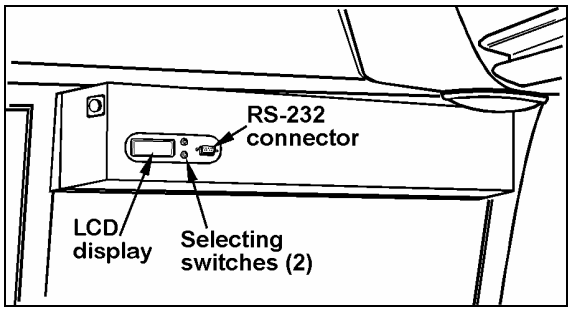

FIGURE 21; DESTINATION SIGN – ELECTRONIC 23123

Note: *The destination sign must be programmed with a computer connected to the RS-232 connector prior to first use. Follow the instructions on the computer disk to install and run the software.*

Note: *All destination sign models are equipped with lights (bulb light or fluorescent) which illuminates automatically when the headlight or fog light switch is activated.*

6. LAVATORY

6.1 DESCRIPTION

The lavatory is located in the rear R.H. corner of the coach. It is equipped with a chemical flush toilet, bathroom tissue dispenser, washbasin, towel dispenser, waste container, mirror, ashtray, and a cleaning cabinet. A liquid soap dispenser and moist towel dispenser are optional.

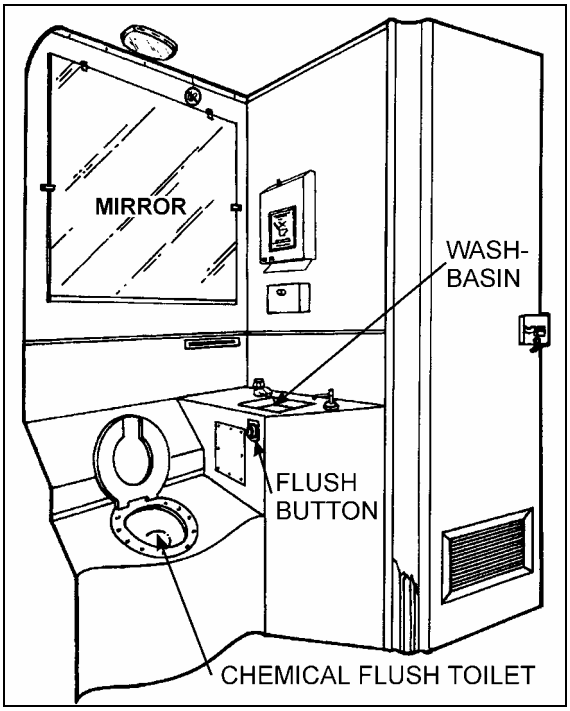

FIGURE 22: LAVATORY 23335

Locking the lavatory door from the inside will illuminate a fluorescent light in the lavatory and two outside signs to indicate occupation. One sign is located on the outer wall of the lavatory and another sign is located over the windshield. An indicator light on the dashboard will illuminate to inform the driver when the lavatory is occupied. A night-light is permanently lit in the lavatory when the ignition switch is in the ON position.

If emergency assistance is required, the lavatory occupant can actuate a buzzer that will sound in driver's area. The buzzer's push-button (c/w instruction label) is located on the inner curbside wall of lavatory.

The lavatory has it's own ventilation system that operates only when ignition switch is in the "ON" position. An auxiliary sump tank (Fig. 27) (optional) allows main tank to be drained by manually opening an interconnecting tank valve (4, Fig. 27). Lavatory can then be operated for longer periods until coach can be serviced at a facility equipped for disposal.

The fresh water tank, located behind compartment mirror (Fig. 26), is equipped with a thermal drain valve that will drain the tank when water temperature approaches the freezing point preventing damage to the tank (Fig. 26). The fresh water supplies water to the washbasin by gravity. Two tubes are connected on top of the tank. One serves as overflow as well as a vent tube and runs along the curbside wall to the engine R.H. side compartment (7, Fig. 27) while the other tube is connected to the fresh water fill connection which is also located in engine R.H. side compartment (2, Fig. 27). A third tube connected in the bottom of the fresh water tank allows fresh water to flow to the washbasin faucet. Water from washbasin drain tube flow to the main sump tank.

Also, a drain hole located on lavatory floor drain water splashed on the floor to the engine R.H. side compartment.

6.2 MAINTENANCE

The servicing procedure for the lavatory is described in the *"Operator's Manual"* included in the technical publications box delivered with the vehicle.

6.3 VENTILATION FAN

6.3.1 Description

The lavatory ventilation fan, mounted in engine compartment behind the oil reserve tank (Fig. 23), serves two purposes. It exhausts objectionable odors and provides a constant air circulation in the lavatory compartment by heating or cooling the lavatory with the vehicle ambient air. Air flows in the lavatory compartment through a vent grill located on the lavatory door and exhausts through a grill located next to the toilet.

Note: *This fan runs constantly when the ignition switch located on the dashboard is in the "ON" position.*

6.3.2 Maintenance

The frequency of preventive maintenance should be determined according to vehicle mileage and operating conditions. However, it is recommended to check this item every 50,000 miles (80 000 km) or once a year, whichever comes first.

Remove fan and motor assembly. Check for fan housing wheel and motor free operation. When defective motor occurs, new motor must be installed.

6.3.3 Removal and Installation

1. With the engine compartment rear doors opened, remove hose clamp securing duct to ventilation fan inlet, and disconnect duct.

2. Disconnect the ventilation motor wiring connector.
3. Remove the support bracket screw. Remove the three bolts fixing the ventilation fan housing support. Remove the ventilation fan assembly from its location.
4. The unit can now be disassembled and motor replaced.
5. Reverse previous steps to reinstall ventilation fan assembly on vehicle.

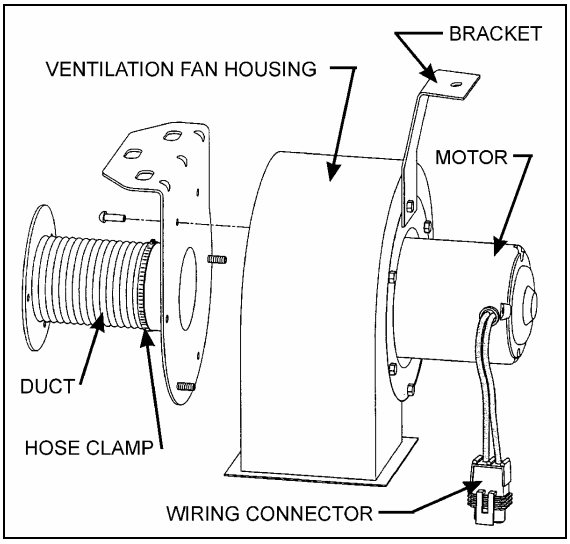

FIGURE 23: VENTILATION FAN INSTALLATION 23222

6.4 DOOR LOCK

Lavatory door lock has inside and outside handles, as well as an inside latch to lock door from inside the compartment. If the lock fails to release, the door can be opened from the outside using a special key which is supplied to the driver. Lock assembly can be removed from the door, then readily disassembled and parts replaced, if necessary (Fig. 24). A thin coat of lubricant on all moving parts will ensure trouble-free operation.

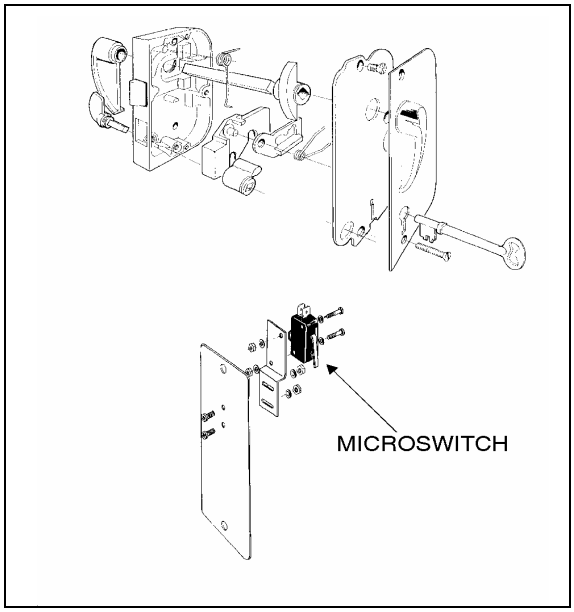

FIGURE 24: DOOR LOCK 23037

6.5 LAVATORY LIGHT

The lavatory light is installed on ceiling. A microswitch, which is mounted in the door exterior frame, is activated by the door lock mechanism upon locking to energize the circuit. This switch is readily serviced by removing the two Phillips-head screws securing the mounting plate to the door exterior frame.
Proceed as Section 06, Electrical System, *Dome, Rear Roof and Lavatory Lights*" for lights replacement.

6.6 LAVATORY NIGHT-LIGHT

The lavatory night-light is illuminated as soon as the ignition switch is set to the *"ON"* position. See Section 06, Electrical System, "*Parcel Rack / Lavatory Night Light - "Bulb Removal and Replacement*" for lights replacement.

6.7 EMERGENCY BUZZER

The lavatory emergency buzzer is mounted on the inner curb side wall of lavatory and sounds when the emergency call push-button switch in the lavatory compartment is activated. For specific wiring information, refer to wiring diagrams. To remove the emergency call push-button switch, proceed as follows:

1. Remove both phillips-head screws retaining pushbutton switch plate to wall.

2. Remove steel plate located on L.H. side of pushbutton switch.
3. Remove switch through this opening, taking care to disconnect electric wires.

6.8 FRESH WATER TANK

One panel allows access to the fresh water tank. It is located behind the toilet mirror. Remove the tank as follows:

1. Remove the mirror.
2. Remove the fresh water tank tubings, bolts, and different connectors.
3. Remove the tank from the wall.
4. Reverse previous steps to reinstall fresh water tank assembly on vehicle.

6.8.1 Fresh Water Tank Draining

The fresh water tank can be drained by simply opening the fresh water drain cock (Fig. 26). Don't forget to close cock when draining is done.

Note: *The fresh water reservoir is equipped with a thermal valve which is set to open at about 35°F, thereby automatically draining the reservoir in near-freezing temperatures.*

Routine draining and filling of lavatory tanks should be performed by maintenance personnel only. If engine or heating failure occurs in extreme weather conditions, emergency draining of water tanks should be performed under the most suitable conditions and should at all times be supervised by driver.

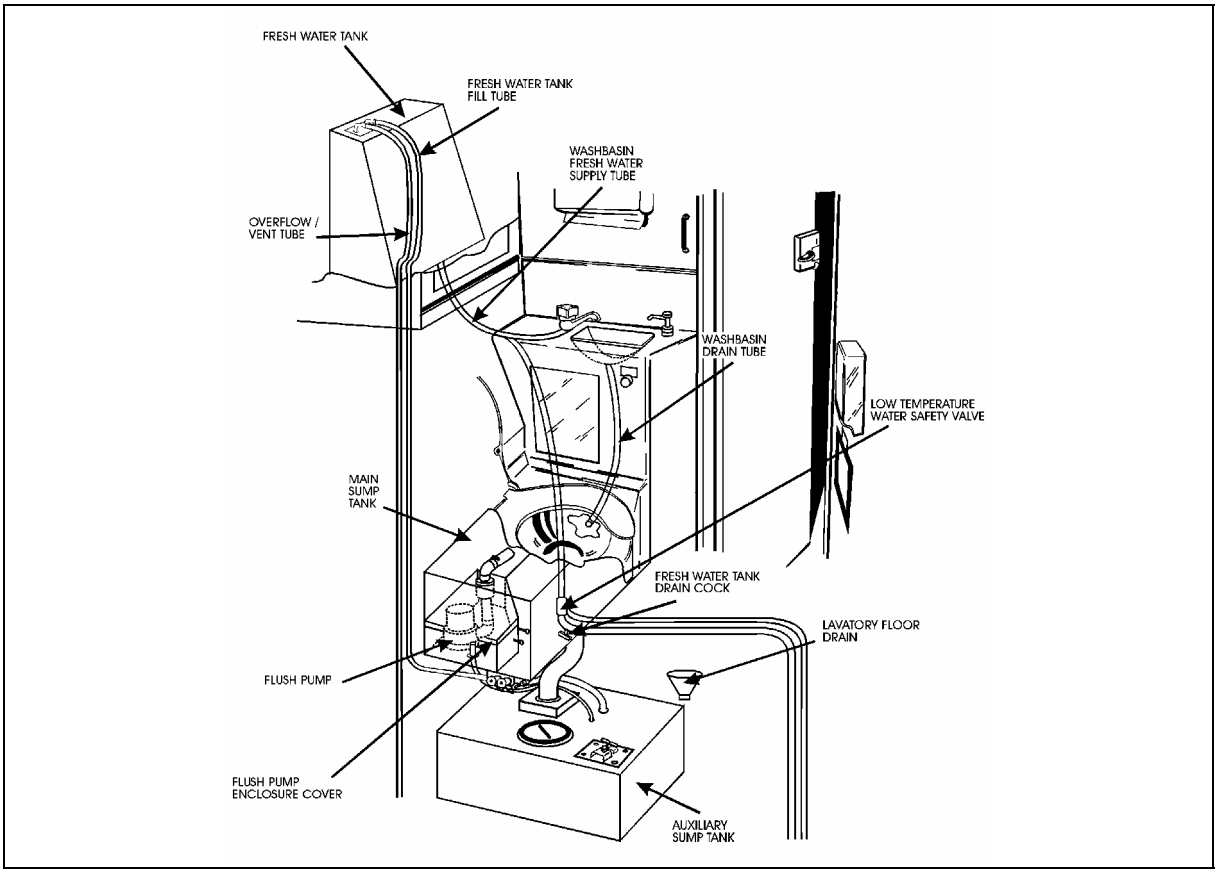

FIGURE 25: FUNCTIONING OF LAVATORY 23051

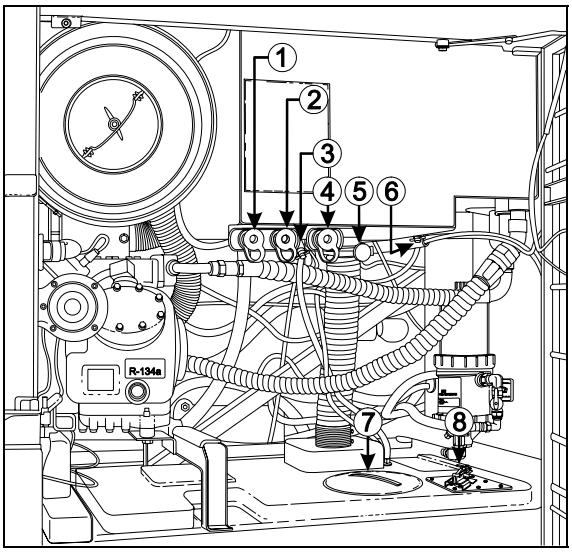

FIGURE 26: F/W TANK SERVICE VALVES 23025

1.....Fresh water tank fill connection
2..... Main sump tank fill connection
3.....Main sump tank overflow cock
4..... Cleaning kit hose connector
5.....Main sump tank drain valve
6..... Fresh water tank drain cock
7.....Auxiliary sump tank access cap
8.....Auxiliary sump tank drain valve

6.8.2 Fresh Water tank Filling

Connect the fresh water supply hose to the fresh water reservoir fill connection (Fig. 26) located in the curb-side engine compartment. Fill the reservoir until the overflow tube leaks, signaling that the reservoir is full.

Warning: *Never put antifreeze in fresh water tank; antifreeze is toxic.*

Warning: *If tank has not been drained for an extended period of time, draining and filling operations must be repeated three (3) times in order to clean tank and eliminate contaminated water.*

6.9 LIQUID SOAP DISPENSER

A liquid soap dispenser may have been installed as optional equipment. To refill dispenser, proceed as follows:

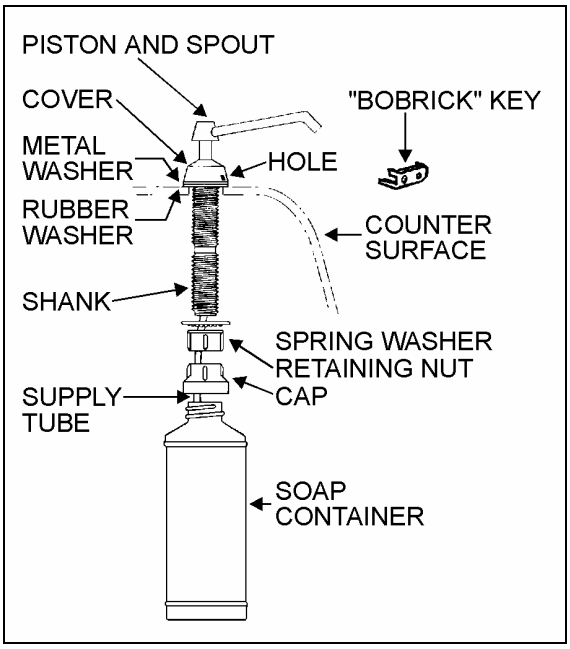

FIGURE 27: LIQUID SOAP DISPENSER 23039

1. Turn cover slightly clockwise until it stops.
2. Insert projection at end of *"BOBRICK"* key into rectangular hole in cover (Fig. 20). Push straight in. While holding *"BOBRICK"* key in, turn cover counterclockwise about 1/8 turn.

Caution: *Do not use "BOBRICK" key to turn cover.*

3. Lift out piston and spout, cover and supply tube.
4. Fill dispenser with soap. This model can dispense vegetable oil soaps, synthetic detergents, and lotion soaps.

Caution: *Never use abrasive cleaners.*

5. Replace supply tube, piston, and spout mechanism reversing the steps above.
6. Secure the cover by turning clockwise until lock snaps into position.

Note: *The dispenser requires priming when extremely viscous lotion soaps are used. Remove piston and spout, cover and supply tube assembly. Pump water into assembly, then replace into dispenser.*

6.10 FLUSH PUSH-BUTTON

The green flush push-button is located near the toilet. Press on push-button to actuate a pneumatic timer located on the other side of wall. This timer allows an electric current flow during a preset time to a pump into the sump tank.

6.10.1 Pneumatic Timer Removal and Installation

1. Unscrew and remove the flush push-button locking ring.
2. Remove steel plate located on L.H. side of pushbutton switch.
3. Remove pneumatic timer through this opening, taking care to disconnect electric wires.

Note: *Care must be taken to avoid losing the spacers installed on the mounting sleeve.*

4. Reverse the above procedure to reinstall timer. The recommended torque for the lock nut is 15 ft·lbf (21 N·m).

6.10.2 Timer Adjustment

Timer can be adjusted from 0.2 second to 3 minutes by turning the time adjustment screw clockwise to increase time, and counterclockwise to decrease time. To gain access to the time adjustment screw, repeat steps 1, 2 and 3 in the previous paragraph "*6.10.1 Pneumatic Timer Removal and Installation*".

6.11 FLUSH PUMP

The submersible-type flush pump is mounted inside an enclosure in the sump tank (Fig. 26). The enclosure is provided with a screened side which, serves as a strainer to prevent solid matters from entering the pump.
The pump requires no periodic maintenance other than cleaning of the strainer side using a water jet introduced through the circular cap opening, once the sump tank is completely drained. The pump can run dry periodically without damage. However, for maximum seal life, the run dry periods should be kept to a minimum.

Caution: *If vehicle is stored for an extended period of time, make sure to clean the strainer as solid matter will tend to pack, and will necessitate replacement of strainer.*

6.11.1 Flush Pump Removal

1. Remove the toilet to gain access to the pump enclosure.
2. Remove the flush pump enclosure cover
3. Unsnap the flush pump.

6.12 SUMP TANKS

6.12.1 Main Sump Tank Draining

When recirculating water in the toilet is soiled, drain main sump tank. If equipped with the optional auxiliary sump tank, drain the main sump tank contents into the auxiliary tank and perform the filling procedure of the main tank.

6.12.2 Main Sump Tank Filling

Open the main sump tank overflow cock and connect a water supply hose to the toilet sump tank fill connection. The main tank is full when water starts flowing through the clear overflow tube. Close main sump tank overflow cock when the tank is full.

Caution: *In cold weather, add 2 gallons (9 liters) of antifreeze (e.g.: ethylene glycol) in the toilet before filling main tank.*

6.12.3 Auxiliary sump Tank Draining

Remove drain cap located under auxiliary sump tank then pull the auxiliary sump tank drain valve lever up. Remove the access cap and flush tank with clean water. To close, push the valve lever completely down to its locking position. Reinstall access and drain caps.

Caution: *Lavatory tanks should be serviced only at suitably equipped stations.*

Note: *It is unlawful to dump sump tank contents in any location other than those designated as such.*

When a full draining is required, clean main tank by repeating the draining and filling operations while leaving the auxiliary sump tank drain cock opened. Close cocks and pour a pack of commercial toilet deodorant (Prévost part #900329) in toilet before adding the antifreeze and starting final filling of main tank.

Warning: *The toilet deodorant contains products that can be very irritating to skin. Use rubber gloves when handling and then clean toilet seat.*

Warning: *Antifreeze must comply with the effective environmental act.*

Caution: *When cold weather is expected and there is no antifreeze in the tank, both sump tanks must be drained.*

Note: *If there is no antifreeze solution in the tank, there is less risk of freezing if engine is operating due to the heat it produces.*

New vehicles do not have an antifreeze solution in the sump tanks at time of delivery.

7. AIR HORN VALVE

The air horn valve is located in the front service compartment and the air horn valve button is on the steering wheel center.

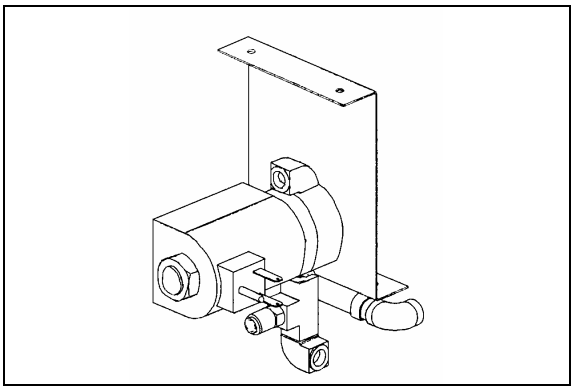

FIGURE 28: AIR HORN VALVE 23330

7.1 AIR HORN VALVE MAINTENANCE

When needed, the air horn valve can be serviced or replaced using the following procedure:

1. Unplug the cable connector;
2. Disconnect the air tubes;
3. Loosen the retaining bolts;
4. Service or replace the air horn valve;
5. Reinstall by reversing procedure.

8. WINDSHIELD WIPERS AND WASHERS

8.1 GENERAL DESCRIPTION

Note: *When installing a wiper motor, arm or blade, follow recommended procedures to prevent misalignment, binding or malfunction. Check the windshield washer liquid hoses, fittings and connectors to be sure they are properly connected and seal with no restriction to the flow of washer liquid. Check that wiper arms have the proper sweep position and the washer nozzles are aimed so that spray is within the proper wiper pattern.*

The windshield wipers are controlled by one electric wiper motor that is accessible for maintenance after removing the appropriate access panel beside the footwell (refer to figure 29).

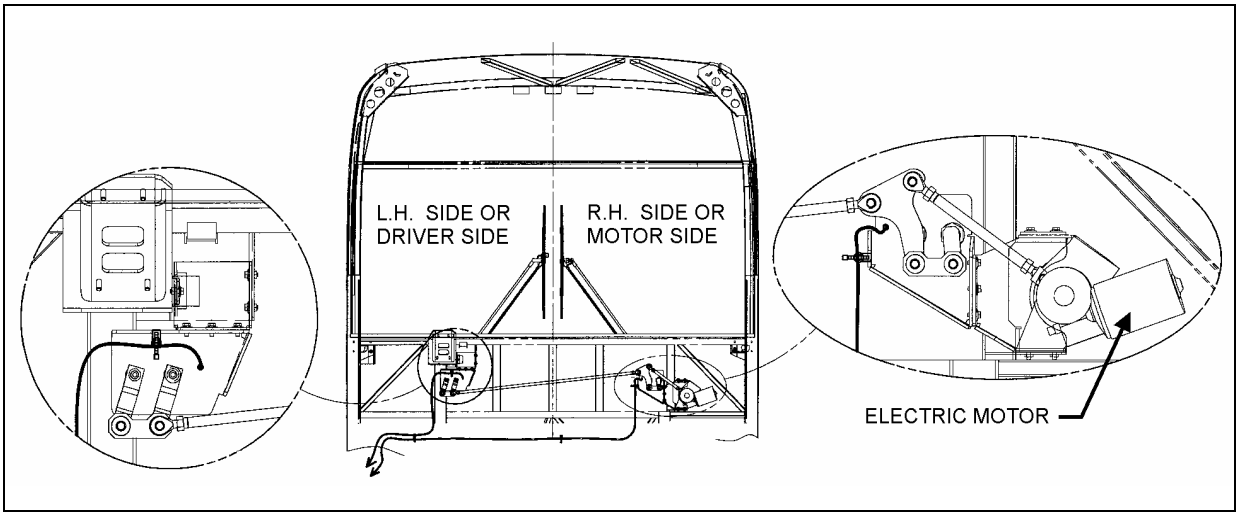

FIGURE 29: WINDSHIELD WIPER INSTALLATION 23331

Turn the multifunction lever forward to activate windshield wipers (item 2, fig. 30). The first position operates the wipers at low speed and the second position operates the wipers at high speed. Turning the lever backwards will operate the wipers in the intermittent mode.

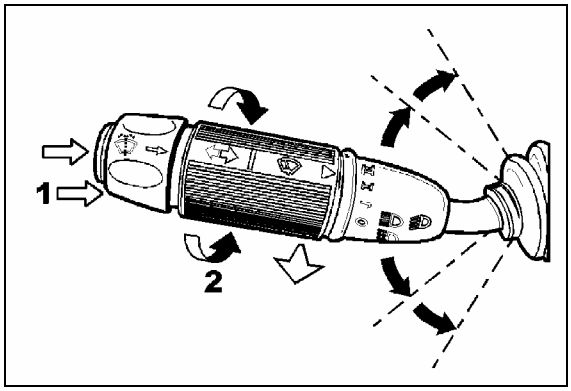

FIGURE 30: MULTIFUNCTION LEVER 23133

The windshield washer pumps are electrically operated and are controlled by a washer control ring on the multifunction lever (item 1, fig. 30).

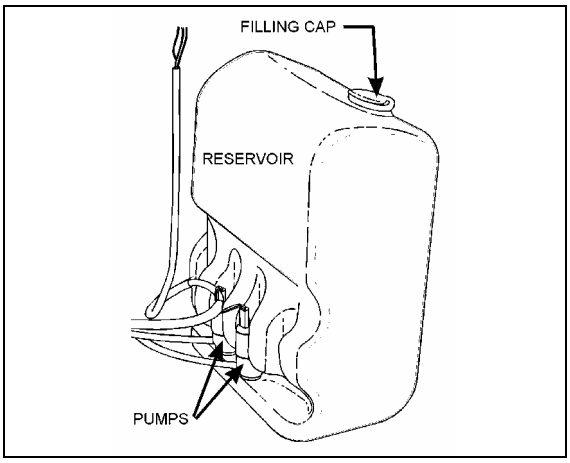

FIGURE 31: WINSHIELD WASHER RESERVOIR 23220

The windshield washer reservoir is located in the front service compartment (Fig. 31). This unit pumps the washer liquid to the spray nozzles where it is dispersed across the windshield.

8.2 WIPER ARM

Check operation of the wipers for proper blade sweep and angle.

Caution: *Do not attempt to manually move the wiper arms to make wiper blade sweep adjustments as damage to the wiper linkage or motor may occur. If it is necessary to adjust the sweep of blades, remove the arms and make adjustment by positioning the arms using serration on the wiper arm pivot shafts.*

8.2.1 Wiper Arms Positioning

1. Reinstall the wiper arms and position as shown in figure 34. Before positioning the wipers at their final position, tighten the nuts to 9 lbf-ft (12 Nm) at first.
2. To find the final position of the wiper arms, lift then release the wiper arm so if falls back on the windshield

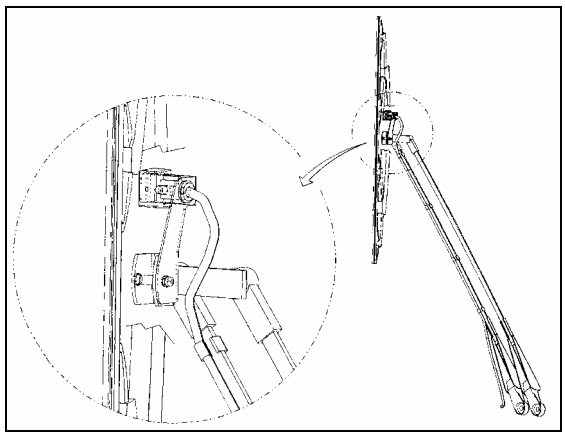

FIGURE 32: WINDSHIELD WIPER (MOTOR SIDE)23224

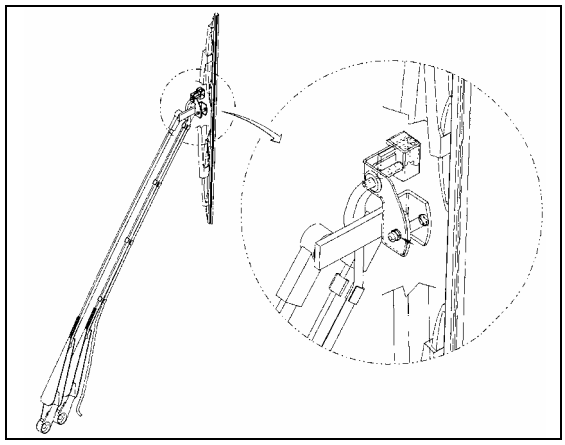

FIGURE 33: WINDSHIELD WIPER (DRIVER SIDE) 23225

3. When the final position is found, tighten the wiper arm nuts to 18 lbf-ft (25 Nm). Wait 30 minutes and tighten again to 18 lbf-ft.
4. Lower the protective cover.
5. Connect the windshield washer tubing at the base of the wiper arm.

6. Check the adjustment on a wet windshield.

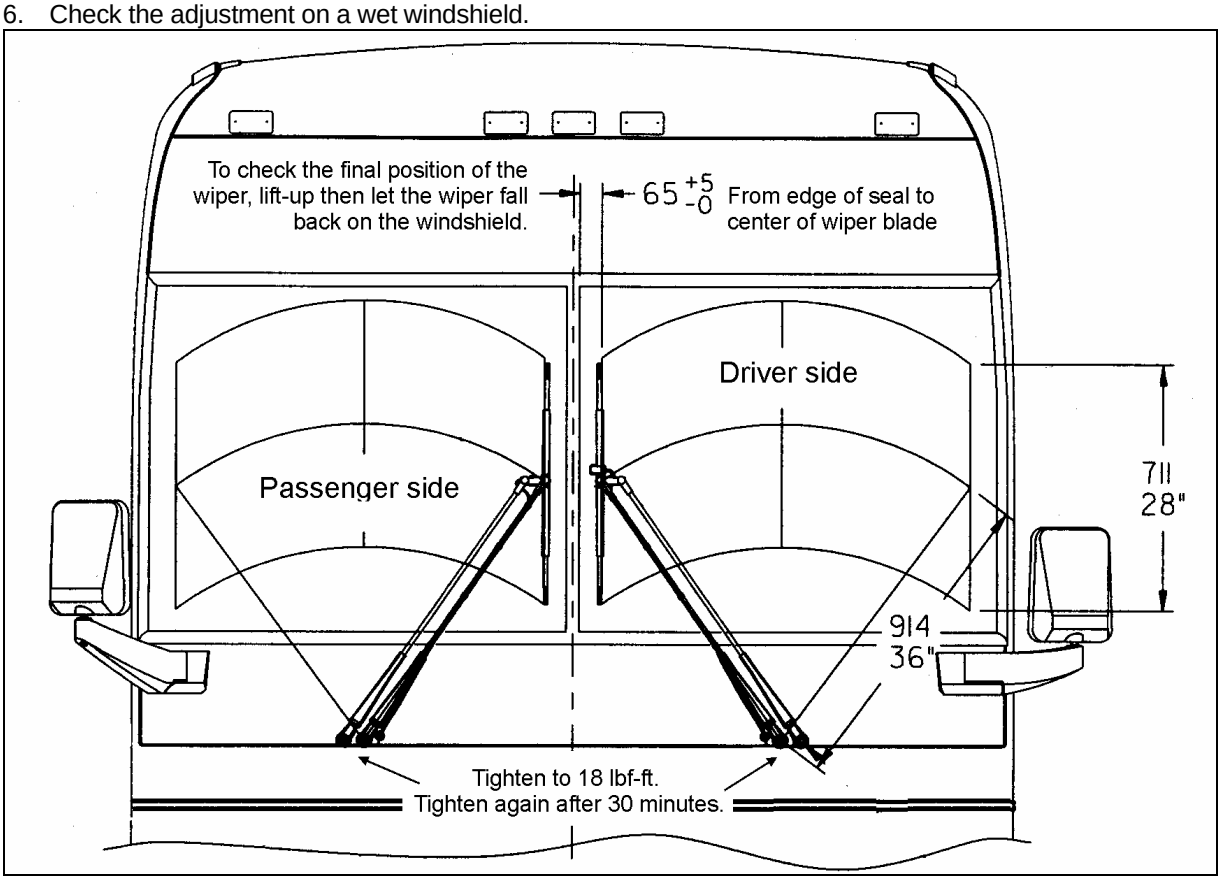

FIGURE 34: WIPER ARMS POSITIONING 23253

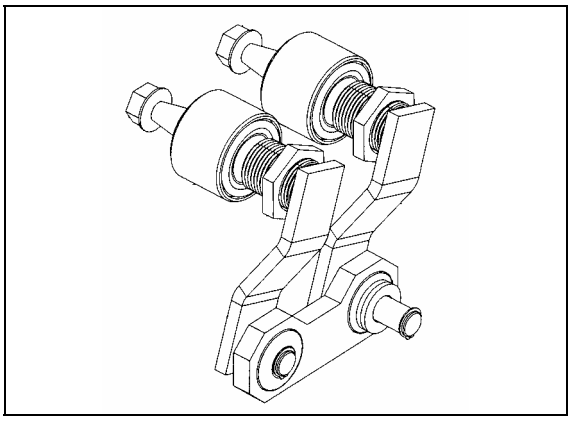

FIGURE 35: DRIVING MECHANISM (DRIVER SIDE) 23334

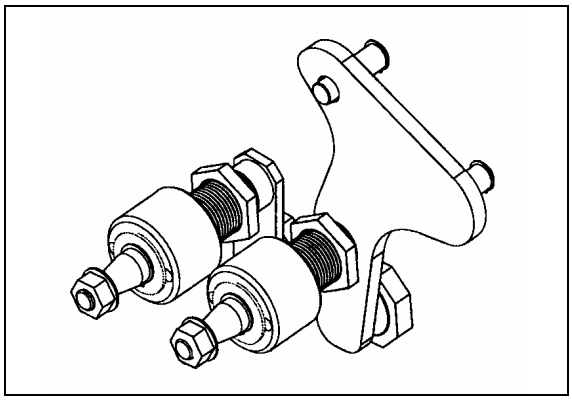

FIGURE 36: DRIVING MECHANISM (MOTOR SIDE) 23254

8.3 WINDSHIELD WIPER MOTOR

8.3.1 Windshield Wiper Motor Replacement

The windshield wiper motor is located at lower front of the vehicle, behind the defroster panel. Refer to figure 29 for motor location.

Warning: *Park vehicle safely, apply parking brake, stop engine and set battery master switch to the ''OFF'' position prior to working on the vehicle.*

1. Remove the Phillips-head screws retaining the defroster panels, and remove panels.
2. Disconnect wiring connector from the windshield wiper motor.
3. Loosen clamping screw retaining the lever at the end of the motor driving shaft.
4. Remove the three bolts holding the motor to the steel plate.
5. Remove the windshield wiper motor (Prévost #800328), reverse removal procedure to reinstall.

8.4 TROUBLESHOOTING

SYMPTOM	PROBABLE CAUSE	REMEDY
FAIL TO SPRAY WASHER FLUID	A. Reservoir empty. B. If below 32°F (0°C), improper washer fluid frozen. C. Contamination in tubing or nozzles. D. Tubing damage. E. Tubing bent (kinked) or off one or more connections.	A. Add proper fluid. B. Store coach or parts in heated area, then purge system with low-temperature solution. C. Remove with compressed air, if severely clogged, replace items. D. Replace section. E. Realign tubing and/or refit. Trim end to ensure proper fit or replace.
INADEQUATE SPRAYING	A. Tubing failure.	A. Replace tubing.
SLOW OPERATION	A. Improper solution. B. Jet stream improperly directed. C. Check if valve is stuck in the open position.	A. Replace with proper type solution. B. Reposition nozzles. C. Remove, clean or replace.

9. SPECIFICATIONS

AMPLIFIER

Make..... R.E.I.
Model..... AMP-2000
Power source ..... 24 volts DC Negative ground
Current ..... 8 Amps maximum
Frequency Response ..... 10-30,000 Hz
Output..... 90 watts/channel maximum power
..... 65 watts/channel RMS at 4 ohm @ 0.5 T.H.D.
Signal to noise ratio..... 86 dB
Supplier number..... 700189
Prévost number..... 900802

AM/FM RADIO CASSETTE PLAYER

Make..... Panasonic
Model..... CQ-R115SEUC
Power source ..... 12 volts
Supplier number..... 700590
Prévost number..... 900917

6 DISC CD CHANGER

Make..... R.E.I.
Supplier number..... 700467
Prévost number..... 900822

12 DISC CD CHANGER

Make..... R.E.I.
Supplier number..... 700473

SPEAKER

Make..... Robert Bosch
Max. power..... 90 watts
RMS power ..... 40 watts
Freq. response..... 45 Hz - 24 kHz
Sensitivity ..... 92 dB
Impedance ..... 4 ohms
Supplier number..... RPSPKR54
Prévost number..... 900765

CONTROL HEAD

Make..... R.E.I.
Model..... C-2000
Supplier number..... 700227
Prévost number..... 900803

VIDEO TAPE RECORDER

Make..... R.E.I.
Model..... SYS-2000
Supplier number..... 700454
Prévost number..... 900806

BOOM-TYPE MICROPHONE
Make..... R.E.I.
Supplier number..... 480076BK
Prévost number..... 900763

HANDHELD PRIORITY MICROPHONE
Make..... R.E.I.
Supplier number..... 480015
Prévost number..... 900808

RUBBER COATED MICROPHONE
Make..... R.E.I.
Supplier number..... 480228
Prévost number..... 900745

16 CHANNEL WIRELESS MICROPHONE
Make..... R.E.I.
Supplier number..... 700598
Prévost number..... 900954

16 CHANNEL WIRELESS MICROPHONE CHARGING STATION
Make..... R.E.I.
Supplier number..... 700532
Prévost number..... 900953

16 CHANNEL WIRELESS MICROPHONE RECEIVER
Make..... R.E.I.
Supplier number..... 700599
Prévost number..... 900952

TV TUNER
Make..... R.E.I.
Power source 24V
Supplier number..... 700471
Prévost number..... 900814

KARAOKE
Make..... Panasonic
Model..... DVD-A300
Supplier number..... 700565
Prévost number..... 900883

TV MONITOR
Make..... R.E.I.
Power source 24V
Supplier number..... 700182
Prévost number..... 900809

HUBODOMETER (US model: miles)
Make..... Stemco
Supplier number..... 650-0593
Prévost number..... 650002

HUBODOMETER (Canada model: km)

Make.....Stemco
Supplier number.....650-0025
Prévost number.....650117

ELECTRIC DESTINATION SIGN (FLUORESCENT TUBE)

Make..... General Electric
Length ..... 30" (76 cm)
Outside diameter..... 1" (25 mm)
Wattage.....20
Color..... Cool white
Quantity.....1
Supplier number.....F30T8 CW4
Prévost number.....830120

ELECTRONIC DESTINATION SIGN

Make.....Pocatec
Supplier number.....9000230
Prévost number.....940050

LAVATORY VENTILATION FAN MOTOR

Make..... Aurora
Type RG500EF
Voltage ..... 24 volts DC
Rotation.....R.H.
Supplier number.....131.40.50
Prévost number.....870844

LAVATORY FLUORESCENT TUBES

Make..... General Electric
Model.....F15T8CW
Length ..... 18" (45 cm)
Wattage.....15
Quantity.....2
Prévost number.....830102

EMERGENCY BUZZER SWITCH (PUSH BUTTON)

Make..... Cole Hersee Co.
Voltage .....24 V
Supplier number.....40224
Prévost number.....562117

FRESH WATER TANK

Make.....Prévost
Capacity ..... 18 US gal (68 liters)
Prévost number.....401591

FLUSH PUSH BUTTON PNEUMATIC TIMER

Make.....Furnas
Type .....Resettable
Time ..... 0,2 to 180 seconds
Supplier number.....55-AA
Prévost number.....900348

FLUSH PUMP

Make..... RULE 2000
Model number ..... 12 - 24 V
Power source ..... 24 volts DC
Capacity ..... 1450 GPH
Prévost number.....900960

AIR HORN

Make..... Allied Signal Inc.
Supplier number.....101493
Prévost number.....640093

AIR HORN VALVE

Make..... Allied Signal Inc.
Supplier number.....228672
Prévost number.....640128

WINDSHIELD WIPER MOTOR

Make..... BOSCH
Supplier number.....0390442401
Prévost number.....800328

WIPER (BLADE)

Make..... BOSCH
Supplier number.....3398110095
Prévost number.....800329

WIPER ARM

Make..... BOSCH
Supplier number..... 6002UWA060
Prévost number.....800331

SECTION 24: LUBRICATION

CONTENTS

1. LUBRICATION 24-2

1.1 FIRST SERVICE ON NEW VEHICLE 24-2

1.1.1 Differential 24-2

1.1.2 Coolant Strainer 24-2

1.1.3 Allison World Automatic Transmission 24-2

1.1.4 Eaton Fuller Autoshift Transmission 24-2

1.1.5 Engine 24-2

2. LUBRICATION AND SERVICE SCHEDULE 24-3

2.1 ENGINE OIL CHANGE INTERVALS 24-3

2.1.1 Engine Oil Reserve Tank 24-3

2.2 COLD WEATHER OPERATION 24-3

2.3 FLEXIBLE HOSE MAINTENANCE 24-3

2.3.1 Pre-Starting Inspection 24-3

2.3.2 Leaks 24-4

2.3.3 Service life 24-4

2.4 WALK-AROUND INSPECTION 24-7

2.5 LUBRICATION AND SERVICING SCHEDULE 24-8

2.6 LUBRICANT AND COOLANT SPECIFICATIONS 24-8

2.7 PART NUMBER SPECIFICATIONS 24-9

ILLUSTRATIONS

FIGURE 1: ENGINE OIL RESERVE TANK 24-3

FIGURE 2: LUBRICATION AND SERVICING POINTS ON RIGID SUSPENSION VEHICLES 24-5

FIGURE 3: LUBRICATION AND SERVICING POINTS ON IND. SUSPENSION VEHICLES 24-6

1. LUBRICATION

The efficiency and life expectancy of mechanical equipment is largely dependent upon proper lubrication and servicing. All mechanical components rely on a lubricating film between moving parts to reduce friction, prevent wear and oxidation. Proper lubrication also helps cool the parts and keep dirt particles away from mating surfaces. Efficient lubrication depends upon using the right type of lubricant, at specified intervals and by filling to correct capacities. Past experience shows that many service problems can be traced to an improper lubricant or to incorrect lubrication procedures.

A comprehensive maintenance and lubrication program is important to ensure the long service life this vehicle was designed for and to avoid costly repairs and associated downtime caused by premature part failure.

A lubrication schedule is included in this section to give the location of key service points on the vehicle as well as the lubricant specifications for each component to be serviced. Specific instructions on how to check and service different components are covered in their respective sections in this maintenance manual.

The recommended lubrication intervals are based on normal operating conditions and mileage accumulation.

Shorten the intervals if your vehicle operates in more severe conditions. Severe conditions include heavy towing, high vehicle weight or operation in mountainous areas. Some parts and equipment referred to in this section may not be installed on your vehicle. Check your vehicle's "Coach Final Record" for equipment list.

Dispose of used lubricants and filters in an environmentally safe manner, according to federal and/or local recommendations.

1.1 FIRST SERVICE ON NEW VEHICLE

Perform the following maintenance procedures after the first 3,000 miles (5 000 km) of operation (unless otherwise specified). Once initial maintenance is performed, refer to recommended intervals in the lubrication schedule.

Repeat a component's initial maintenance procedure when it has undergone a major repair.

1.1.1 Differential

Factory-filled oil in differential on new vehicle should be replaced after 3,000 miles (5 000 km) of initial operation or after major servicing.

1.1.2 Coolant Strainer

The coolant strainer is designed to recover the soldering residues trapped inside the coolant lines during their initial assembly; perform initial cleaning once vehicle has run approximately 3,000 miles (5 000 km), then according to the lubrication and servicing schedule.

Note: *If additional soldering has been performed on any point of coolant piping, clean coolant system strainer as outlined for a new vehicle at 3,000 miles (5 000 km).*

1.1.3 Allison World Automatic Transmission

Change oil and filter cartridges after first 5,000 miles (8,000 km) of initial operation, then according to the lubrication and servicing schedule.

1.1.4 Eaton Fuller Autoshift Transmission

No initial oil or filter change necessary. Refer to regular lubrication and servicing schedule.

1.1.5 Engine

Since engine break-in has been done in factory, there is no special break-in, so oil should be changed according to the lubrication and servicing schedule intervals. Since some oil consumption by engine is normal, check oil level daily with engine stopped and add to FULL mark on dipstick if necessary. Furthermore, the engine oil filter should be replaced each time the engine oil is changed.

2. LUBRICATION AND SERVICE SCHEDULE

Following this service schedule is the most economical and easiest way to ensure your vehicle performs at its best, safest and longest. Also, unscheduled maintenance will be minimized since inspection should expose potential problems before they become major ones.

2.1 ENGINE OIL CHANGE INTERVALS

The engine oil change intervals are related to the operating conditions, such as vehicle load, speed, etc., and may vary. It is recommended however, that the oil change be performed after every 12,500 miles (20 000 km).

The drain intervals may then be gradually increased or decreased with experience on a specific lubricant, considering the recommendations of the oil supplier (analysis of drained oil can be helpful), until the most practical service condition has been established.

Solvents should not be used as flushing oils. Dilution of the fresh refill oil supply can occur, which may be detrimental for the engine.

Engine oil temperature should be checked every 25,000 miles (40 000 km) to determine oil cooler efficiency. This check should be made by inserting a steel jacketed thermometer in the dipstick opening, immediately after stopping a hot, loaded engine. If the oil temperature exceeds the coolant temperature by more than 60 °F (33 °C), the oil cooler may be clogged.

For detailed oil specifications, refer to *"Detroit Diesel Series 60 Service Manual"* under heading *"Lubricating Oil for Detroit Diesel Engines"*.

2.1.1 Engine Oil Reserve Tank

An oil reserve tank with a capacity of 8.4 US quarts (8,0 liters) (optional) is connected to the crankcase by a hose with a shutoff valve, allowing oil to be added to crankcase by opening valve. Comparison of oil levels in sight gauge, before and after adding oil to crankcase, shows approximately how much oil has been added.

Filling of this tank can be made by opening the rear engine doors. The tank is mounted on R.H. side of engine compartment, over the A/C compressor.

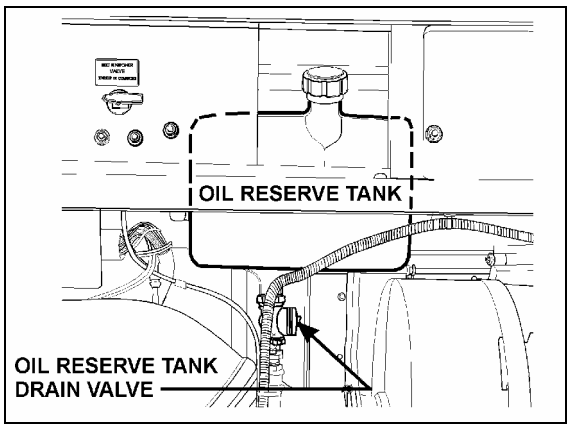

FIGURE 1: ENGINE OIL RESERVE TANK 01063

2.2 COLD WEATHER OPERATION

The proper selection of the engine oil grade will ease cold weather starting (refer to the lubrication and servicing schedule for the engine oil grade recommendation). Other practical considerations, such as the use of batteries, cables and connectors of adequate size, proper setting of voltage regulator, ether starting aid, oil and coolant heater systems, and proper fuel selection will ease cold weather starting.

2.3 FLEXIBLE HOSE MAINTENANCE

The performance of engine and equipment are greatly related to the ability of flexible hoses to supply lubricating oil, air, coolant, and fuel oil. Maintenance of hoses is an important step to ensure efficient, economical, and safe operation of the engine and related equipment.

2.3.1 Pre-Starting Inspection

Check hoses daily as part of the pre-starting inspection. Examine hose for leaks, and check all fittings, clamps, and ties carefully. Ensure that hoses are not resting on or touching shafts, couplings, heated surfaces including exhaust manifolds, any sharp edges, or other obviously damaging areas. Since all machinery vibrates and moves to a certain extent, clamps and ties

can fatigue with time. To ensure proper support, inspect fasteners frequently and tighten or replace them as necessary.

2.3.2 Leaks

Investigate leaks immediately to determine if fittings have loosened or cracked, and also if hoses have ruptured or worn through. Take corrective action immediately. Leaks are not only potentially detrimental to machine operation, but can also result in added expenses caused by the need to replace lost fluids.

Caution: *Personal injury and/or property damage may result from fire due to the leakage of flammable fluids, such as fuel or lube oil.*

2.3.3 Service life

The limited service life of a hose is determined by the temperature and pressure of the gas or fluid within it, the time in service, its installation, the ambient temperatures, amount of flexing, and the vibration it is subjected to. With this in mind, it is recommended that all hoses be thoroughly inspected at least every 500 operating hours or after 15,000 miles (24 000 km). Look for surface damage or indications of damaged, twisted, worn, crimped, brittle, cracked, or leaking lines. Hoses having a worn outer surface or hoses with a damaged metal reinforcement should be considered unfit for further service.

It is also recommended that all hoses in this vehicle be replaced during major overhaul and/or after a maximum of five service years. Quality of replacement hose assemblies should always be equal to or superior to those supplied by the Original Equipment Manufacturer.

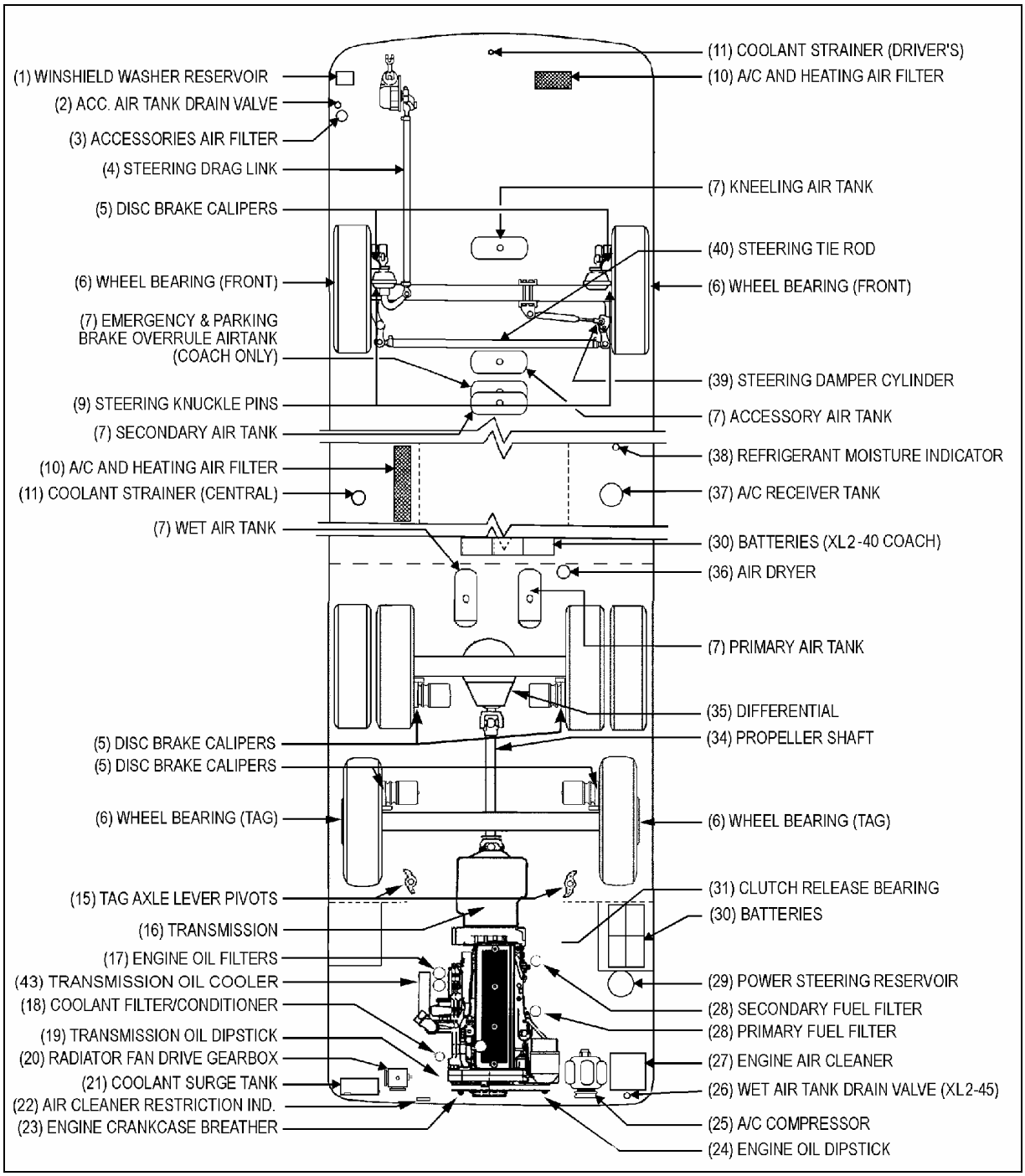

FIGURE 2: LUBRICATION AND SERVICING POINTS ON RIGID SUSPENSION VEHICLES 2409

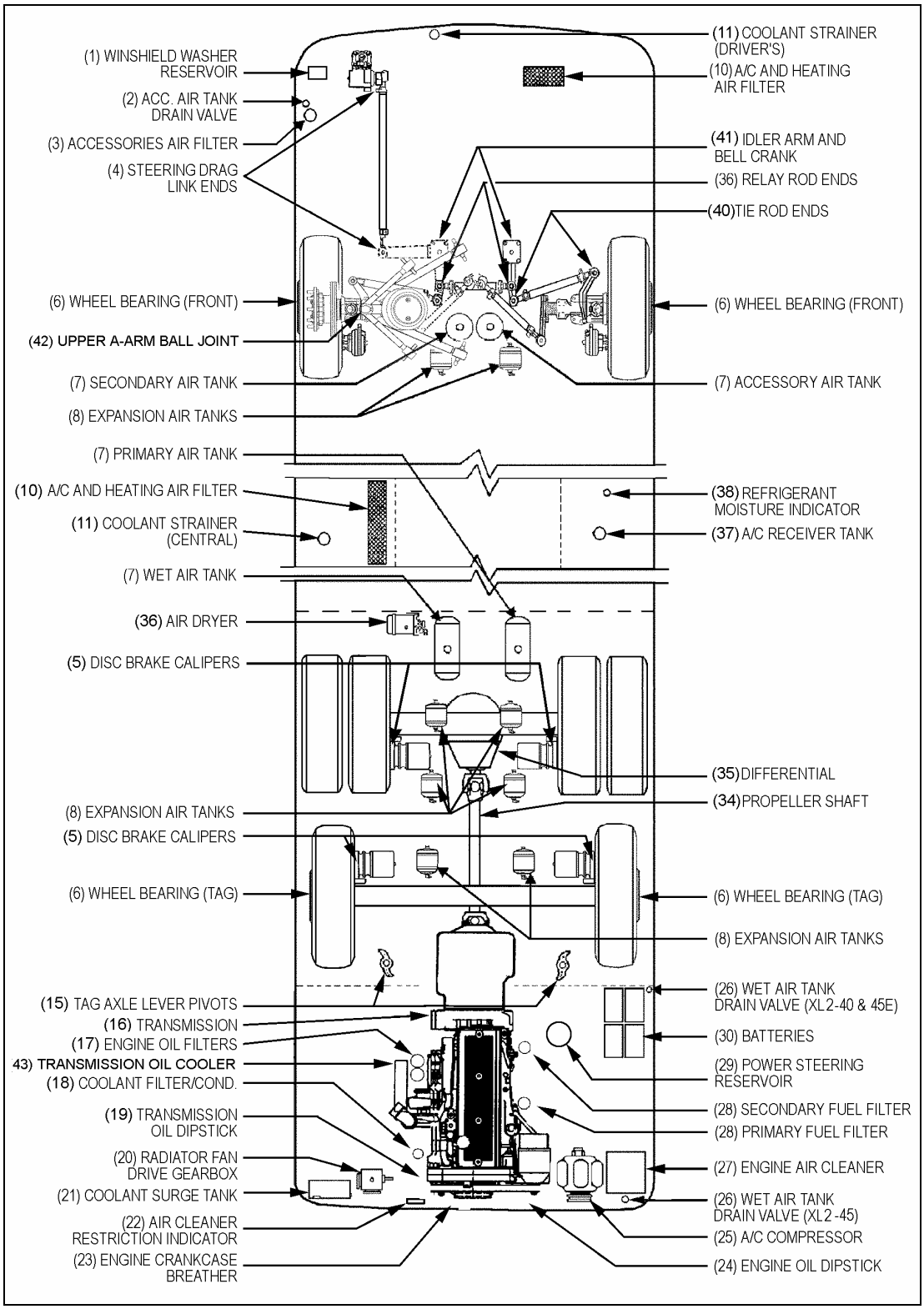

FIGURE 3: LUBRICATION AND SERVICING POINTS ON INDEPENDENT SUSPENSION VEHICLES 24008

2.4 WALK-AROUND INSPECTION

It is good practice to make a basic visual inspection of key areas on the vehicle every day (or before every trip for private coaches) and to correct any problem found.

OUTSIDE THE VEHICLE	
ITEM*	DESCRIPTION
---	Check for leaks under vehicle and in engine compartment.
---	Check that baggage and service compartment doors close properly.
---	Inspect tires and wheels for correct tire pressure, wear or damage and for missing wheel studs and nuts.
1	Check windshield washer fluid level and add if necessary.
---	Check condition of windshield wiper blades.
---	Verify proper operation of all road lights, signal lights, brake lights, marker lights and back-up lights; Replace light bulbs as required.
2, 26	Drain accumulated water in accessory and wet air tanks.

ENGINE COMPARTMENT	
ITEM*	DESCRIPTION
24	Check engine crankcase oil level; Add if necessary.
19	Check transmission oil level (can be checked from push-button shift selector); Add if necessary.
29	Check power steering reservoir fluid level; Add if necessary.
21	Check coolant surge tank fluid level; Add if necessary.
28	Drain accumulated water in primary fuel filter/water separator (if equipped). Visually check fuel filter cartridge (Fuel-Pro 382 equipped vehicles only).
22, 27	Check air cleaner restriction indicator; Replace air cleaner when red signals locks in full view.

INSIDE THE VEHICLE	
ITEM*	DESCRIPTION
---	Check for proper operation of the entrance door.
---	Check that emergency exit windows and roof escape hatches can be opened, then close all windows and hatches securely.
---	Verify proper operation of windshield wiper/washer.
---	Adjust and clean mirrors as needed for adequate rear-view vision.
---	Start engine and check for proper operation of all gauges and indicator lights.
---	Check for proper operation of electric and air horns and back-up alarm.
---	Perform a brake test. Check both primary and secondary pressure gauges.

* Item numbers refer to figures 2 and 3.

2.5 LUBRICATION AND SERVICING SCHEDULE

2.6 LUBRICANT AND COOLANT SPECIFICATIONS

ITEM*	DESCRIPTION	SPECIFICATIONS
24	Engine Oil	SAE Viscosity Grade: 15W40 API Classification: CH4
29	Power Steering Oil	Automatic Transmission Oil (Dexron-IIE or Dexron-III)
18, 21	Engine Coolant	Low silicate, ethylene glycol coolant 50% antifreeze/water solution is normally used Antifreeze concentration should be between 30% and 67%
25	A/C Compressor Oil	Polyolester Oil, HFC 134a compatible: Castrol SW-68 (POE) or equivalent
35 and 6	Differential Oil and Wheel Bearing Oil	Multigrade gear oil meeting MIL-L-2105-D: 85W/140. If temperature drops below 10°F (-12°C), 80W90 should be used. Below -15°F (-26°C), 75W90 should be used. (In extreme conditions or for better performance, full synthetic gear oil can be used.)
20	Fan Gearbox Oil	Synthetic oil: Mobil SHC 630
19	Automatic Transmission Oil	Dexron-IIE, Dexron-III or TranSynd
---	Multi Purpose Grease	Good quality lithium-base grease: NLGI No.2 Grade is suitable for most temperatures NLGI No.1 Grade is suitable for extremely low temperatures

* Item numbers refer to figures 2 and 3.

2.7 PART NUMBER SPECIFICATIONS

ITEM*	DESCRIPTION	PRÉVOST NO
17	Engine Oil Filters	#510458
29	Power Steering Reservoir Oil Filter	#660987
27	Engine Air Cleaner Filter	#530197
38	Refrigerant Filter Dryer Unit	#950262
28	Engine Primary Fuel Filter	#510137
28	Engine Primary Fuel Filter With Water Separator (Optional)	#531407
28	Engine Secondary Fuel Filter	#510128
28	Secondary “Racor” Fuel Filter	#531390
18	Engine Coolant Precharge Unit	#550629
18	Engine Coolant Filter/Conditioner	#550630
10	A/C And Heating Driver's Air Filter	#871147--871144
10	A/C And Heating Cabin's Air Filter	#871051
16	Allison World (WT) Automatic Transmission Oil Filter Kit	#571709
11	Coolant Strainer	#871029
3	Accessories Air Filter	#641340
36	Air Dryer Cartridge	#641244 or #641278
---	Alternator drive belt, 85-1/2 in. (2 alternators)	#506865
---	Alternator drive belt, 72 in. (1 alternator, limp home)	#506669
---	Fan gearbox drive belt	#506688
---	Compressor drive belt BX100	#506864
---	Windshield wiper blade	#800329

* Item numbers refer to figures 2 and 3.

LUBRICATION AND SERVICING SCHEDULE	Item	Months	DISTANCE TRAVELED[1] (miles/km)																															LUBRICANT &/OR PART[2]
			6 250 / 10 000	12 500 / 20 000	18 750 / 30 000	25 000 / 40 000	31 250 / 50 000	37 500 / 60 000	43 750 / 70 000	50 000 / 80 000	56 250 / 90 000	62 500 / 100 000	68 750 / 110 000	75 000 / 120 000	81 250 / 130 000	87 500 / 140 000	93 750 / 150 000	100 000 / 160 000	106 250 / 170 000	112 500 / 180 000	118 750 / 190 000	125 000 / 200 000	131 250 / 210 000	137 500 / 220 000	143 750 / 230 000	150 000 / 240 000	156250 / 250 000	162 500 / 260 000	168 750 / 270 000	175 000 / 280 000	181 250 / 290 000	187 500 / 300 000	193 750 / 310 000	200 000 / 320 000	
GENERAL																																		
Flexible hoses, thoroughly inspect all hoses	-	12								●								●								●								●	-------
Front discharge tube, qty:2, check to see if clogged [3]	-	3																																	-------
01 ENGINE																																		
Air cleaner, inspect, clean, replace element if required	27	6	●	●	●	●	●	●	●	●	●	●	●	●	●	●	●	●	●	●	●	●	●	●	●	●	●	●	●	●	●	●	●	●	Filter #530197
Engine, change oil and filters. Oil SAE 15W40, API CG4	17	12		●		●		●		●		●		●		●		●		●		●		●		●		●		●		●		●	Filter #510458
Engine crankcase breather, clean breather steel mesh	23	12								●								●								●								●	-------
03 FUEL																																		
Change primary & secondary fuel filters, fill with clean fuel before installation	28	12		●		●		●		●		●		●		●		●		●		●		●		●		●		●		●		●	Primary #510137 ; prim. w/sep #531390 ; secondary #510128
05 COOLING																																		
Radiator fan drive gearbox,check oil level, add if necessary	20	6	●	●	●	●	●	●	●	●	●	●	●	●	●	●	●	●	●	●	●	●	●	●	●	●	●	●	●	●	●	●	●	●	Mobil SHC 630 #180217
Radiator fan drive gearbox, change oil	20	12								●								●								●								●	Mobil SHC 630 #180217
Coolant filter/Conditioner, replace element	18	12		●		●		●		●		●		●		●		●		●		●		●		●		●		●		●		●	Filter #550630
Coolant surge tank, test coolant solution	21	12		●		●		●		●		●		●		●		●		●		●		●		●		●		●		●		●	-------
Cooling system, drain, flush and refill	18/ 21	24																																●	Engine coolant
06 ELECTRICAL																																		
Battery terminals, clean and coat terminals	30	12																																	Battery terminal coating

[1] Proceed to maintenance operation at distance indicated on odometer or specified number of month, whichever comes first.
[2] See paragraph 2.5 & 2.6 of this section for lubricant and part number specifications.
[3] Discharge tubes are rubber tubes located under vehicle

LUBRICATION AND SERVICING SCHEDULE	Item	Months	DISTANCE TRAVELED[1] (miles/km)																															LUBRICANT &/OR PART[2]
			6 250 / 10 000	12 500 / 20 000	18 750 / 30 000	25 000 / 40 000	31 250 / 50 000	37 500 / 60 000	43 750 / 70 000	50 000 / 80 000	56 250 / 90 000	62 500 / 100 000	68 750 / 110 000	75 000 / 120 000	81 250 / 130 000	87 500 / 140 000	93 750 / 150 000	100 000 / 160 000	106 250 / 170 000	112 500 / 180 000	118 750 / 190 000	125 000 / 200 000	131 250 / 210 000	137 500 / 220 000	143 750 / 230 000	150 000 / 240 000	156250 / 250 000	162 500 / 260 000	168 750 / 270 000	175 000 / 280 000	181 250 / 290 000	187 500 / 300 000	193 750 / 310 000	200 000 / 320 000	
07 TRANSMISSION																																		
Allison World Automatic transmission, change oil (standard oil) and filters	16	12		●		●		●		●		●		●		●		●		●		●		●		●		●		●		●		●	Oil Dexron-IIE or Dexron-III Filters #571709
Allison World Automatic transmission, change oil (only if filled with TranSynd synthetic fluid) and filters [3]	16	12								●								●								●								●	TranSynd Synthetic Fluid; Filters #571709
Eaton Automatic Transmission, change oil & filter after 250 000 miles (400 000 km)	16	24																																	Dexron-III
Transmission oil cooler, replace unit if vehicle is equipped with transmission retarder	43	24																																	Prévost #550712
09 PROPELLER SHAFT																																		
Grease one fitting on each universal joint and slip joint	34	6	●	●	●	●	●	●	●	●	●	●	●	●	●	●	●	●	●	●	●	●	●	●	●	●	●	●	●	●	●	●	●	●	Multipurpose grease
11 REAR AXLE																																		
Differential, check oil level, add if necessary	35	6	●	●	●	●	●	●	●	●	●	●	●	●	●	●	●	●	●	●	●	●	●	●	●	●	●	●	●	●	●	●	●	●	Multigrade gear oil
Differential, change oil, clean breathers	35	24																●																●	Multigrade gear oil
Tag axle lever pivot, grease one fitting on each pivot	15	6	●	●	●	●	●	●	●	●	●	●	●	●	●	●	●	●	●	●	●	●	●	●	●	●	●	●	●	●	●	●	●	●	Multi purpose grease
12 BRAKE & AIR																																		
Air tanks, drain water from all tanks	7	12		●		●		●		●		●		●		●		●		●		●		●		●		●		●		●		●	-------
Accessories air filter, change filter element	3	24																●																●	Filter element #641340
Air dryer, change cartridge	36	24																●																●	Cartridge #641244 or 641278
13 WHEELS, HUBS & TIRES																																		
Front axle wheel bearings, repack with grease or refill with gear oil	6	12								●								●								●								●	Multi purpose grease or SAE 85W140 oil
Tag axle wheel bearings, repack with grease or refill with gear oil	6	12								●								●								●								●	Multi purpose grease or SAE 85W140 oil

[1] Proceed to maintenance operation at distance indicated on odometer or specified number of month, whichever comes first.
[2] See paragraph 2.5 & 2.6 of this section for lubricant and part number specifications.

[3] When the transmission contains a mixture of fluids (defined as the quantity of non-TranSynd fluid remaining in the transmission after a fluid change combined with the quantity of TranSynd required to fill the transmission to the proper level), perform the fluid and filter change at 25 000 miles (40 200km) or 1 year, whichever comes first.

LUBRICATION AND SERVICING SCHEDULE	Item	Months	DISTANCE TRAVELED[1] (miles/km)																															LUBRICANT &/OR PART[2]
			6 250 / 10 000	12 500 / 20 000	18 750 / 30 000	25 000 / 40 000	31 250 / 50 000	37 500 / 60 000	43 750 / 70 000	50 000 / 80 000	56 250 / 90 000	62 500 / 100 000	68 750 / 110 000	75 000 / 120 000	81 250 / 130 000	87 500 / 140 000	93 750 / 150 000	100 000 / 160 000	106 250 / 170 000	112 500 / 180 000	118 750 / 190 000	125 000 / 200 000	131 250 / 210 000	137 500 / 220 000	143 750 / 230 000	150 000 / 240 000	156250 / 250 000	162 500 / 260 000	168 750 / 270 000	175 000 / 280 000	181 250 / 290 000	187 500 / 300 000	193 750 / 310 000	200 000 / 320 000	
14 STEERING																																		
Drag link ends, grease one fitting at each end	4	6	●	●	●	●	●	●	●	●	●	●	●	●	●	●	●	●	●	●	●	●	●	●	●	●	●	●	●	●	●	●	●	Multi purpose grease
Relay rod ends, grease one fitting at each end	36	6	●	●	●	●	●	●	●	●	●	●	●	●	●	●	●	●	●	●	●	●	●	●	●	●	●	●	●	●	●	●	●	Multi purpose grease
Steering tie rod ends, grease one fitting at each end	40	6	●	●	●	●	●	●	●	●	●	●	●	●	●	●	●	●	●	●	●	●	●	●	●	●	●	●	●	●	●	●	●	Multi purpose grease
Idler arm, grease fitting	41	6	●	●	●	●	●	●	●	●	●	●	●	●	●	●	●	●	●	●	●	●	●	●	●	●	●	●	●	●	●	●	●	Multi purpose grease
Bell crank, grease fitting	41	6	●	●	●	●	●	●	●	●	●	●	●	●	●	●	●	●	●	●	●	●	●	●	●	●	●	●	●	●	●	●	●	Multi purpose grease
Steering damper cylinder, grease one fitting at rod end	39	6	●	●	●	●	●	●	●	●	●	●	●	●	●	●	●	●	●	●	●	●	●	●	●	●	●	●	●	●	●	●	●	Multi purpose grease
Steering knuckle pins, grease two fittings per knuckle	9	6	●	●	●	●	●	●	●	●	●	●	●	●	●	●	●	●	●	●	●	●	●	●	●	●	●	●	●	●	●	●	●	Multi purpose grease
Power steering reservoir, replace oil and filter cartridges	29	12								●							●								●								●	Cartridge #660987
16 SUSPENSION																																		
Upper A-Arm Ball Joint, grease fitting	42	6	●	●	●	●	●	●	●	●	●	●	●	●	●	●	●	●	●	●	●	●	●	●	●	●	●	●	●	●	●	●	●	Molykote longterm 2/78 grease (preferably) or lithium NLGI no2 or no1
22 HEATING & AIR CONDITIONING																																		
A/C compressor, check oil level, add if necessary	25	6	●	●	●	●	●	●	●	●	●	●	●	●	●	●	●	●	●	●	●	●	●	●	●	●	●	●	●	●	●	●	●	Polyolester oil
A/C receiver tank, check refrigerant level, add if necessary	37	6	●	●	●	●	●	●	●	●	●	●	●	●	●	●	●	●	●	●	●	●	●	●	●	●	●	●	●	●	●	●	●	HFC 134A
Refrigerant moisture indicator, replace filter dryer unit according to moisture indicator (as needed)	38	6	●	●	●	●	●	●	●	●	●	●	●	●	●	●	●	●	●	●	●	●	●	●	●	●	●	●	●	●	●	●	●	Filter #950262
A/C and Heating air filters, clean or replace all elements	10	6		●		●		●		●		●		●		●		●		●		●		●		●		●		●		●		●	Driver #871147 , passenger #871051
Coolant strainer, check, clean, change cartridge if required	11	12								●								●								●								●	Cartridge #871029
Condenser discharge tube, qty:2, check to see if clogged [3]	-	3																																-------
Evaporator discharge tube, qty:6, check to see if clogged [3]	-	3																																-------

[1] Proceed to maintenance operation at distance indicated on odometer or specified number of month, whichever comes first.
[2] See paragraph 2.5 & 2.6 of this section for lubricant and part number specifications.
[3] Discharge tubes are rubber tubes located under vehicle