CONTENTS

1. FOREWORD **2**

2. SCHEMATICS **2**

3. PRECAUTIONS TO BE OBSERVED BEFORE WELDING **2**

4. SAFETY NOTICE **4**

4.1 DATA PLATES AND CERTIFICATIONS 4
4.1.1 Engine *4*
4.1.2 Transmission *5*
4.1.3 Drive Axle *5*
4.1.4 Front Axle *5*
4.1.5 Power Steering Pump *5*
4.1.6 Coach Final Record *6*
4.1.7 Safety Certification *6*
4.1.8 DOT Certification Label *6*
4.1.9 Fuel Tank Label *6*
4.1.10 Vehicle Identification Number (VIN) *6*

5. FASTENER STRENGTH IDENTIFICATION **8**

5.1 STANDARD TORQUE SPECIFICATIONS 9
5.2 SELF-LOCKING FASTENERS 11
5.3 RECOMMENDATIONS FOR REUSE 11
5.4 SIX LOBED SOCKET HEAD 11

ILLUSTRATIONS

FIGURE 1: VOLVO D13 ENGINE DATA PLATE 4
FIGURE 2: ALLISON TRANSMISSION 5
FIGURE 3: I-SHIFT TRANSMISSION 5
FIGURE 4: TYPICAL SERIAL & MODEL NUMBERS 5
FIGURE 5: ISS TYPICAL SERIAL & MODEL NUMBERS 5
FIGURE 6: I-BEAM AXLE TYPICAL SERIAL & MODEL NUMBERS 5
FIGURE 7: POWER STEERING PUMP 5
FIGURE 8: DOT CERTIFICATION PLATE 6
FIGURE 9 : VEHICLE I.D. 6
FIGURE 10 : VEHICLE IDENTIFICATION NUMBER 7
FIGURE 11 : THREAD NOTATION 8
FIGURE 12: BOLT STRENGTH MARKINGS 8
FIGURE 13 : SELF-LOCKING FASTENERS 11
FIGURE 14: METRIC - US STANDARD CONVERSION TABLE 10
FIGURE 15: CONVERSION CHART 11

1. FOREWORD

This manual includes procedures for diagnosis, service, maintenance and repair for components of the X3 series coaches and VIP and Le Mirage XLII Bus Shells listed on the front cover page. This manual should be kept in a handy place for ready reference by the technician. If properly used, it will meet the needs of the technician and owner.

Information provided in Section 1 through 26 pertains to standard equipment items, systems and components as well as the most commonly used optional equipment and special equipment offered on the vehicle models covered by this manual. At the beginning of each section: a Table of Contents and a list of illustrations give the page number on which each subject begins and where each figure is located. Vehicle operating information is provided in a separate Manual. Audio/Video system operator instructions are also included in a separate manual.

More specific information on engine and transmission operating, maintenance, and overhaul information is contained in the applicable engine or transmission service manual published by the engine or transmission manufacturer. Engine and transmission parts information is contained in the applicable engine or transmission parts catalog published by the engine or transmission manufacturer. All information, illustrations and specifications contained in this manual are based on the latest product information available at the time of publication approval. The right is reserved to make product changes at any time without notice.

NOTE

Typical illustrations may be used; therefore minor illustration difference may exist when compared to actual parts or other publications.

Prevost occasionally sends Maintenance Information, Warranty Bulletins, Safety Recalls or other literature to update users with the latest service procedures. They are issued, when required, to supplement or supersede information in this manual. Update sheet should be filled out and bulletins should be filed at the end of their respective section for future reference.

2. SCHEMATICS

Vehicle Air Schematics are provided at the end of Section 12, "Brake". SUSPENSION AIR SCHEMATICS are provided at the end of Section 16: "Suspension". Moreover, Electrical Schematics are provided in the technical publications box. Refer to those schematics for detailed circuit information or during diagnosis.

3. PRECAUTIONS TO BE OBSERVED BEFORE WELDING

CAUTION

Precautions are to be observed before welding to minimize the risk of major and costly damage caused to the vehicle electronic components.

NOTE

*For **X3 Series Coaches & VIP and Le Mirage XLII Bus Shells Multiplex** vehicles, also execute procedure no: PR060041 "MULTIPLEX MODULES DISCONNECTION PROCEDURE PRIOR TO WELDING" included at the end of this section.*

CAUTION

For vehicles equipped with a WCL system, disconnect electronic controller connector.

CAUTION

Cover electronic control components and wiring to protect from hot sparks, etc.

CAUTION

Position welding machine ground clamp as close as possible to the work. Ensure that the welding machine ground return clamp is well secured and makes a good electrical contact with a large metallic area of the chassis located as close as possible to the welding point.

CAUTION

Do not use TIG welding process on the vehicle. This high frequency current process can seriously damage the electronic components.

STEEL – STEEL WELDING

CAUTION

Before welding, perform multiplex modules disconnection procedure.

NOTE

Welding surfaces must be free of scale, slag, rust, paint, grease, humidity or other foreign material that would render welding impossible.

DANGER

Only a qualified and experienced person must do welding.

- FCAW (Flux Cored Arc Welding) process ;
- Electrode wire conforms to A5.20 AWS (American Welding Society) specifications ;
- E4801T-9-CH, type electrode wire with 0,045“ diameter (1,14 mm) ;

Material Thickness	Voltage	Current	Wire Feed Rate	Shielding Gas
1/8” to ½”	26 ± 2 volts	260 Amps	450 ipm. approx.	75% argon – 25% CO2 or 100% CO2

If necessary and with great care to prevent perforating the material, it is possible to use a conventional electric arc welding machine according to the following specifications:

- SMAW (Shielded Metal-Arc Welding) process ;
- Welding rod conforms to A5.1 of AWS (American Welding Society) specifications; E 7018 type welding rod with 1/8” diameter (3,2 mm).
- Current: 100 amperes to 150 amperes; optimum at 120 amps.

It is important to grind weld bead starts and stops and also to grind arc strikes from surfaces.

STEEL - STAINLESS STEEL OR STAINLESS STEEL - STAINLESS STEEL WELDING

CAUTION

Before welding, perform multiplex modules disconnection procedure.

NOTE

Welding surfaces must be free of scale, slag, rust, paint, grease, humidity or other foreign material that would render welding impossible.

DANGER

Only a qualified and experienced person must do welding.

- GMAW (Gas Metal-Arc Welding) process;
- Welding wire conforms to AWS (American Welding Standards) A5.9 specifications;
- 308LSi type welding wire with 0.035" diameter (0,9 mm);

STEEL - STAINLESS STEEL WELDING

Steel Thickness	SS Thickness	Voltage	Current	Wire Feed Rate	Shielding Gas
Less than 1/8”	Any type	20±1.5 volts	130±15 Amps	290 ipm approx.	90% He, 7.5% Ar, 2.5% CO2
1/8” and more	Any type	22±1.5 volts	160±15 Amps	330 ipm approx.	90% He, 7.5% Ar, 2.5% CO2

STAINLESS STEEL - STAINLESS STEEL WELDING

SS Thickness	Voltage	Current	Wire Feed Rate	Shielding Gas
Any type	20 ± 1.5 volts	130 ± 15 Amps	290 ipm approx.	90% He – 7.5% Ar, 2.5% CO2

If necessary and with great care to prevent perforating the material, it is possible to use a conventional electric arc welding machine according to the following specifications:

- SMAW (Shield Metal-Arc Welding) process;
- Welding rod conforms to AWS (American Welding Standards) A5.4 specifications; 308L-17 type welding rod with 3/32" diameter (2,4 mm);
- Current: - 50 amperes to 90 amperes, optimum at 60 amperes.

It is important to grind weld bead starts and stops and also to grind arc strikes from surfaces.

4. SAFETY NOTICE

This maintenance manual has been prepared in order to assist skilled mechanics in the efficient repair and maintenance of PREVOST vehicles.

This manual covers only the procedures as of manufacturing date.

Safety features may be impaired if other than genuine PREVOST parts are installed.

Torque wrench tightening specifications must be strictly observed. Locking devices must be installed or replaced by new ones, where specified. If the efficiency of a locking device is impaired, It must be replaced.

This manual emphasizes particular information outlined by the wording and symbols:

DANGER

Directs the operator's attention to unsafe practices which could result in serious personal injury or death.

WARNING

Directs the operator's attention to unsafe practices which could result in serious personal injury or severe damage to the vehicle.

CAUTION

Directs the operator's attention to unsafe practices where personal injury is not likely but damage to vehicle components could occur.

NOTE

Indicates supplementary information essential to the proper operation of the vehicle. Although, the mere reading of such information does not eliminate the hazard, understanding of the information will promote its correct use.

4.1 DATA PLATES AND CERTIFICATIONS

Delay and confusion can be avoided by placing the complete vehicle identification number of the vehicle and the serial numbers of the engine on parts orders and correspondence. Also, the transmission, axles, power steering pump chassis and other major components are identified by serial numbers.

4.1.1 Engine

- **Volvo D13 Engine**

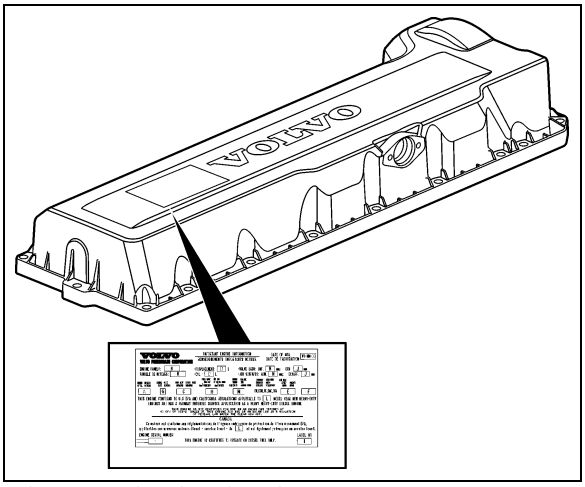

FIGURE 1: VOLVO D13 ENGINE DATA PLATE 00052

Volvo D13 engine serial and model numbers are stamped on the cylinder head (Fig. 1). Also, the

engine data plate certifies that the engine conforms to federal and any state exhaust emission regulations. It gives the operating conditions under which certification was made.

4.1.2 Transmission

The transmission identification plate is located on the oil level dipstick side of the transmission (WT) or on transmission (I-Shift) (Fig. 2 & 3). The identification plate shows the transmission serial number, part number (assembly number), and model number. Use all three numbers when ordering parts.

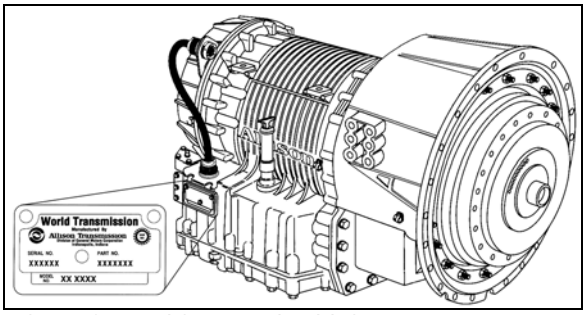

FIGURE 2: ALLISON TRANSMISSION 07076

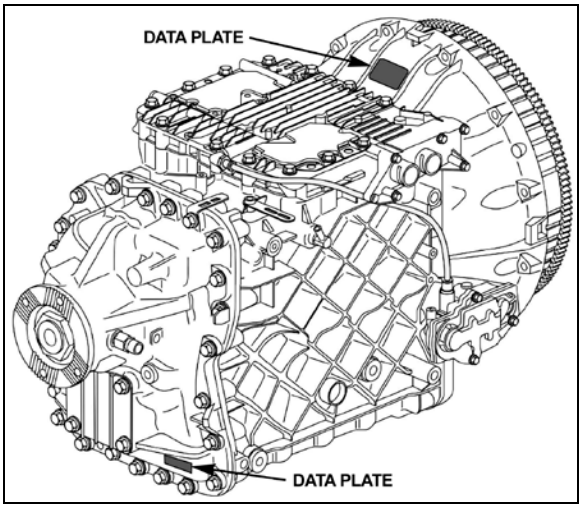

FIGURE 3: I-SHIFT TRANSMISSION

4.1.3 Drive Axle

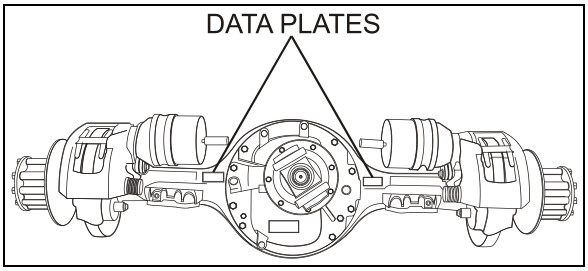

FIGURE 4: TYPICAL SERIAL & MODEL NUMBERS 00007

4.1.4 Front Axle

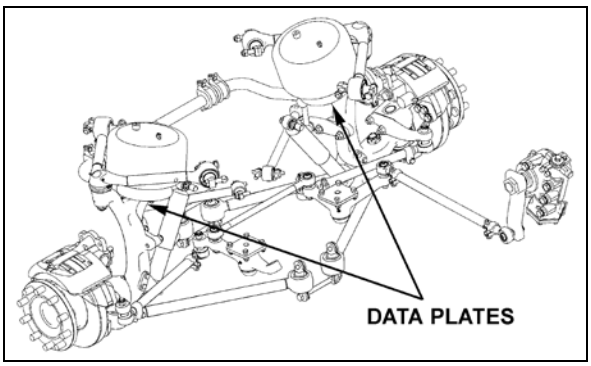

FIGURE 5: ISS TYPICAL SERIAL & MODEL NUMBERS 16136

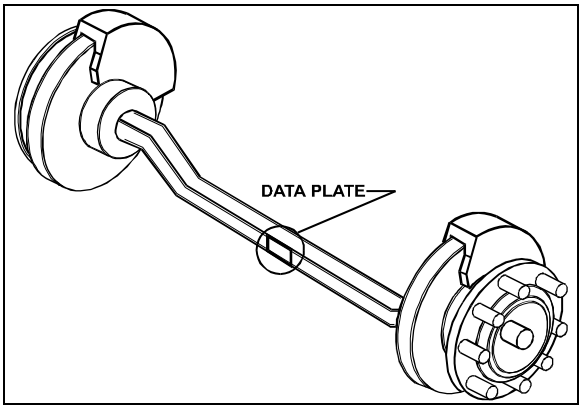

FIGURE 6: I-BEAM AXLE TYPICAL SERIAL & MODEL NUMBERS 00008

4.1.5 Power Steering Pump

- **Volvo D13 Engine**

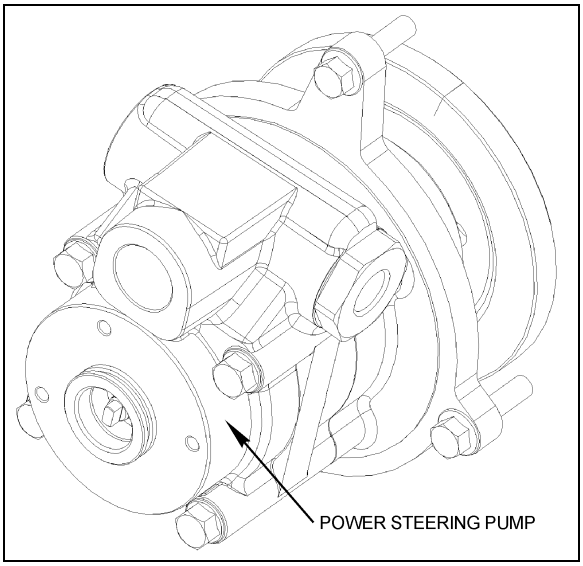

FIGURE 7: POWER STEERING PUMP

The power steering pump is mounted on the engine and located underneath the air compressor (Fig. 7).

4.1.6 Coach Final Record

The Coach Final Record is a record of all data pertaining to the assembly of the vehicle. This record is shipped to the new customer via a courier company. Retain this record in the company records office for reference and safe-keeping.

4.1.7 Safety Certification

Vehicle components meet specifications and standards as follows:

- Material and parts conform to ASTM and/or SAE standards in effect at the time of manufacture.

- All factory-installed interior materials meet FMVSS 302 for fire resistance.

- Certified according to Provincial, State and Federal Safety standards (Canadian and US) BMCSS, FMVSS, and CMVSS.

Other applicable certification labels are affixed to the component.

4.1.8 DOT Certification Label

This certifies that vehicles manufactured by Prevost Car Inc., comply with all Federal Motor Vehicle Safety Standards at the time of manufacture. Information such as date of manufacture, model year, gross vehicle weight rating, tire types and inflation pressure is also etched on this plate. The DOT Certification plate is affixed behind the driver's seat.

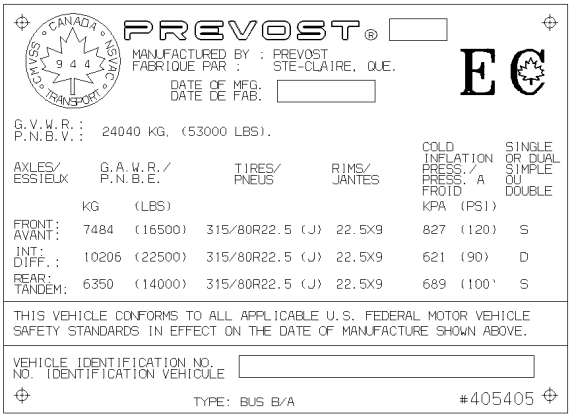
PREVOST®

CANADA 1944 CMVSS TRANSPORT

MANUFACTURED BY : PREVOST
FABRIQUE PAR : STE-CLAIRE, QUE.

DATE OF MFG.
DATE DE FAB.

E

G.V.W.R.:
P.N.B.V.: 24040 KG, (53000 LBS).

AXLES/ ESSIEUX	G.A.W.R./ P.N.B.E. KG	(LBS)	TIRES/ PNEUS	RIMS/ JANTES	COLD INFLATION PRESS./ PRESS. A FROID KPA	(PSI)	SINGLE OR DUAL SIMPLE OU DOUBLE
FRONT: AVANT:	7484	(16500)	315/80R22.5 (J)	22.5X9	827	(120)	S
INT: DIFF.:	10206	(22500)	315/80R22.5 (J)	22.5X9	621	(90)	D
REAR: TANDEM:	6350	(14000)	315/80R22.5 (J)	22.5X9	689	(100)	S

THIS VEHICLE CONFORMS TO ALL APPLICABLE U.S. FEDERAL MOTOR VEHICLE SAFETY STANDARDS IN EFFECT ON THE DATE OF MANUFACTURE SHOWN ABOVE.

VEHICLE IDENTIFICATION NO.
NO. IDENTIFICATION VEHICULE

TYPE: BUS B/A

#405405

FIGURE 8: DOT CERTIFICATION PLATE 00016

4.1.9 Fuel Tank Label

The fuel tank label is molded on the side of the fuel tank. To read this label, unscrew the fuel tank access panel nuts located at the left in the condenser compartment.

4.1.10 Vehicle Identification Number (VIN)

The seventeen digit vehicle identification number (VIN) is located on a plate (Fig. 9 & 10) located on the windshield frame pillar (driver's side). The VIN is visible from the outside of the vehicle. Make sure the correct vehicle identification number is given when ordering replacement parts. Using the VIN when ordering parts will facilitate processing.

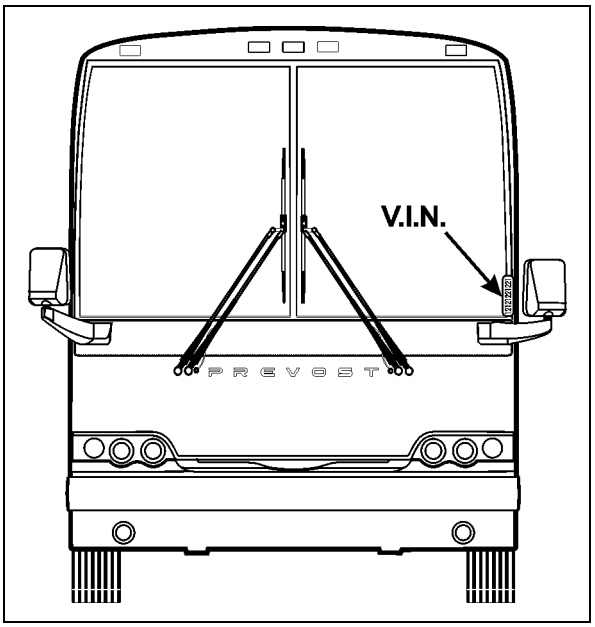

FIGURE 9 : VEHICLE I.D. 00048

NOTE
Record the VIN in the vehicle documentation and keep with company records. The VIN will normally be used for vehicle registration and for obtaining vehicle insurance coverage.

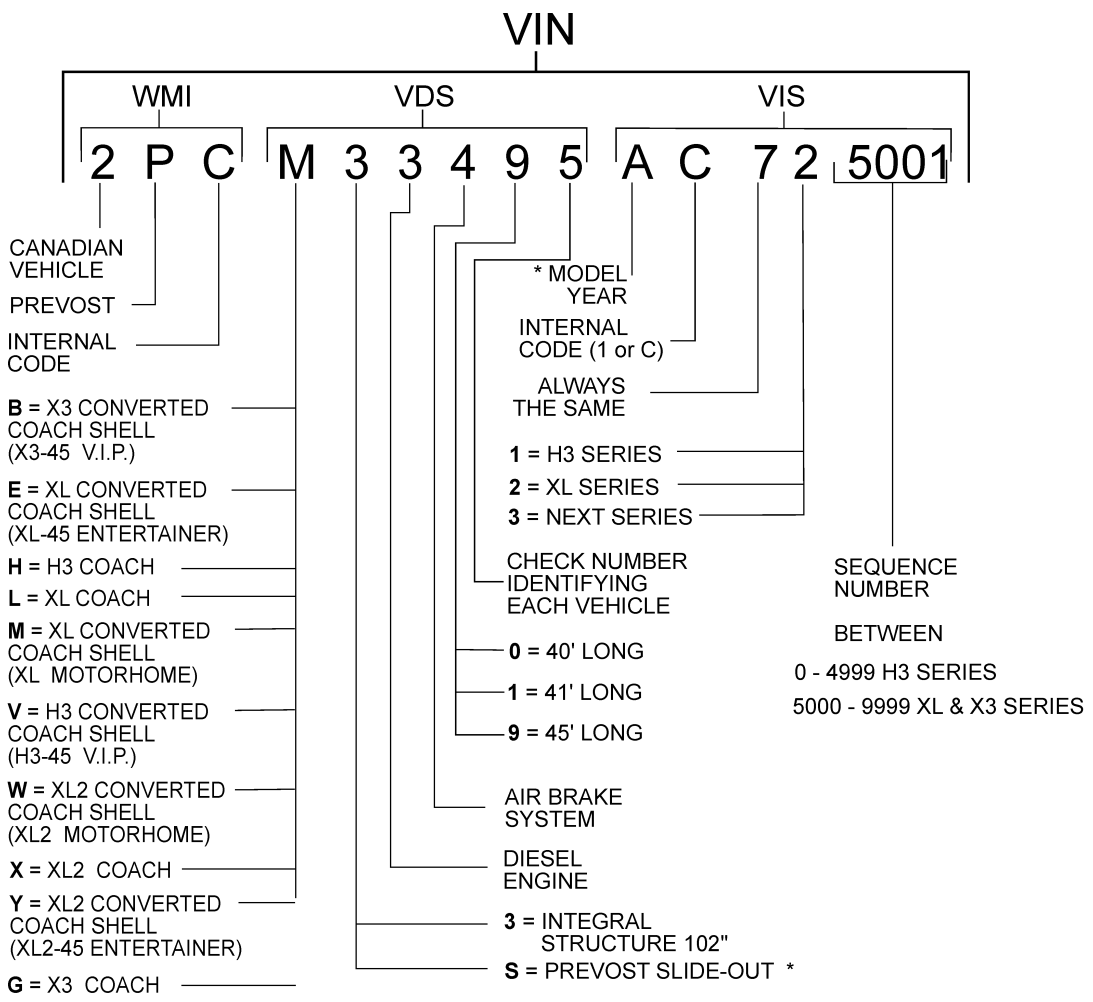

VIN Vehicle Identification Number: A structured combination of characters assigned to a vehicle by the manufacturer for identification purposes.

WMI World Manufacturer Identifier: Designating the manufacturer of the vehicle.

VDS Vehicle Descriptor Section: Provides information describing the general attributes of the vehicle.

VIS Vehicle Indicator Section: Combination of characters assigned by the manufacturer to distinguish one vehicle from another.

* Since A-1600 & A-9885

FIGURE 10 : VEHICLE IDENTIFICATION NUMBER 00056

YEAR	CODE	YEAR	CODE	YEAR	CODE
2000	Y	2006	6	2012	C
2001	1	2007	7	2013	D
2002	2	2008	8	2014	E
2003	3	2009	9	2015	F
2004	4	2010	A	2016	G
2005	5	2011	B	2017	H

5. FASTENER STRENGTH IDENTIFICATION

Most commonly used metric fastener strength property classes are 9.8 and 10.9 with the class identification embossed on the head of each bolt. Customary (inch) strength classes range from grade 2 to 8 with radial line identification embossed on each bolt head actual grade (i.e., a grade 7 bolt will have 5 embossed radial lines on the bolt head). Some metric nuts will be marked with single digit strength identification numbers on the nut face. Fig. 12 shows the different strength markings. When replacing metric fasteners, be careful to use fasteners of the same or greater strength than the original fasteners (the same number marking or higher). It is also important to select replacement fasteners of the correct size. Correct replacement fasteners are available through the parts division. Some metric fasteners available in after-market parts sources were designed to metric standards of countries other than the United States and may be of a lower strength, may not have the numbered head marking system, and may be of a different thread pitch.

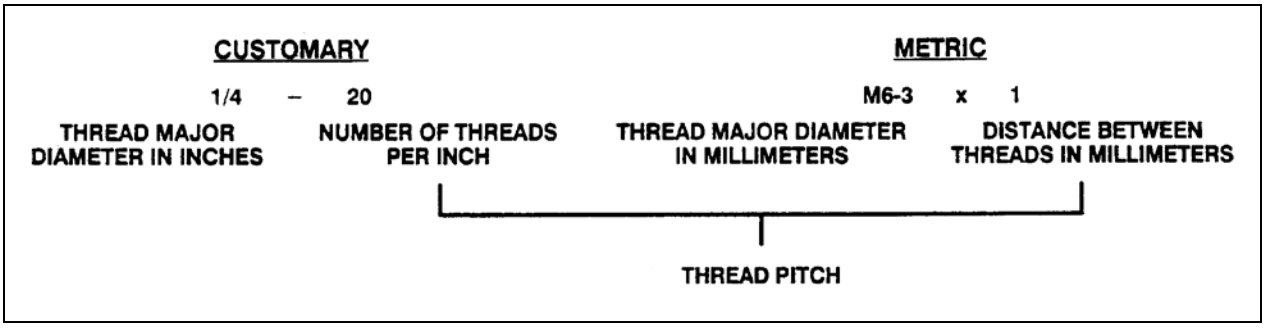

FIGURE 11 : THREAD NOTATION 00002

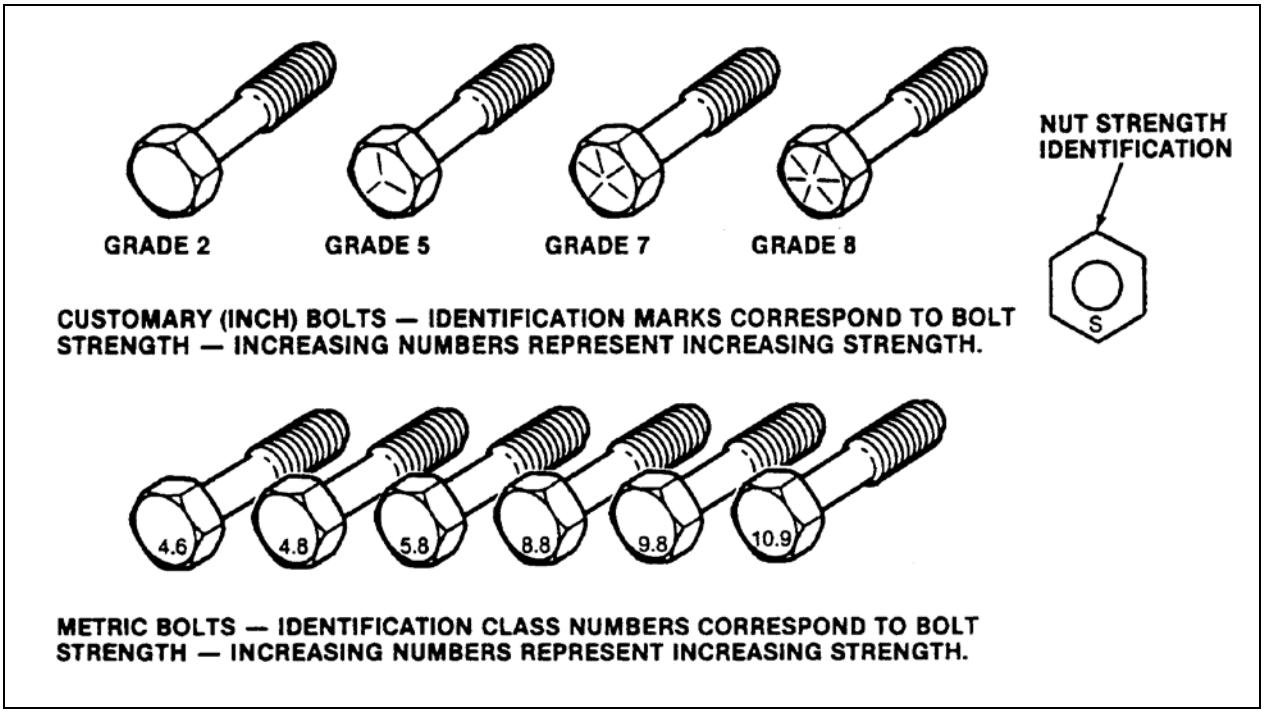

FIGURE 12: BOLT STRENGTH MARKINGS 00003

The metric fasteners used on the coach are designed to new standards and may not yet be manufactured by some non-domestic fastener suppliers. In general, except for special applications, the common sizes and pitches are:

- M 8 X 1.25;
- M 10 X 1.5;
- M 12 X 1.75;
- M 14 X 2;

5.1 STANDARD TORQUE SPECIFICATIONS

The following table lists the standard tightening torques for bolts and nuts, relating tightening torque to thread diameter. Use the following table as a general guide for tightening torques. Use this table only for the bolts and nuts which do not require a specific torque value. All of the values are for use with dry solvent-cleaned threads.

TYPE	DESCRIPTION	THREAD	GRADE	RECOMMENDED TORQUE, ±10% lbf-ft (dry) otherwise specified	
SAE	1/4-20	unc	5	100	lbf-in (dry)
SAE	1/4-20	unc	8	143	lbf-in (dry)
SAE	1/4-28	unf	5	115	lbf-in (dry)
SAE	1/4-28	unf	8	163	lbf-in (dry)
SAE	5/16-18	unc	5	210	lbf-in (dry)
SAE	5/16-18	unc	8	305	lbf-in (dry)
SAE	5/16-24	unf	2	120	lbf-in (dry)
SAE	5/16-24	unf	5	230	lbf-in (dry)
SAE	5/16-24	unf	8	325	lbf-in (dry)
SAE	3/8-16	unc	5	31	
SAE	3/8-16	unc	8	44	
SAE	3/8-24	unf	5	35	
SAE	3/8-24	unf	8	50	
SAE	7/16-14	unc	5	50	
SAE	7/16-14	unc	8	70	
SAE	7/16-20	unf	5	55	
SAE	7/16-20	unf	8	78	
SAE	1/2-13	unc	5	75	
SAE	1/2-13	unc	8	107	
SAE	1/2-20	unf	5	85	
SAE	1/2-20	unf	8	120	
SAE	9/16-12	unc	5	109	
SAE	9/16-12	unc	8	154	
SAE	9/16-18	unf	5	122	
SAE	9/16-18	unf	8	172	
SAE	5/8-11	unc	5	151	
SAE	5/8-11	unc	8	211	
SAE	5/8-18	unf	5	170	
SAE	5/8-18	unf	8	240	

TYPE	DESCRIPTION	THREAD	GRADE	RECOMMENDED TORQUE, ±10% lbf-ft (dry) otherwise specified
SAE	3/4-10	unc	5	266
SAE	3/4-10	unc	8	376
SAE	3/4-16	unf	5	298
SAE	3/4-16	unf	8	420
SAE	7/8-9	unc	5	430
SAE	7/8-9	unc	8	607
SAE	7/8-14	unf	5	470
SAE	7/8-14	unf	8	670
METRIC	M6 X 1		nut 9 / screw 8.8	7
METRIC	M6 X 1		nut 10 / screw 10.9	9
METRIC	M8 X 1.25		nut 9 / screw 8.8	16
METRIC	M8 X 1.25		nut 10 / screw 10.9	22
METRIC	M10 X 1.5		nut 9 / screw 8.8	32
METRIC	M10 X 1.5		nut 10 / screw 10.9	43
METRIC	M12 X 1.75		nut 9 / screw 8.8	60
METRIC	M12 X 1.75		nut 10 / screw 10.9	74
METRIC	M14 X 2		nut 9 / screw 8.8	90
METRIC	M14 X 2		nut 10 / screw 10.9	120
METRIC	M16 X 2		nut 9 / screw 8.8	140
METRIC	M16 X 2		nut 10 / screw 10.9	190
METRIC	M16 X 1.5		nut 10 / screw 10.9	230
METRIC	M20 X 2.5		nut 9 / screw 8.8	275
METRIC	M20 X 2.5		nut 10 / screw 10.9	450
METRIC	M20 X 1.5		nut 10 / screw 10.9	465
METRIC	M22 X 2.5		nut 9 / screw 8.8	345
METRIC	M22 X 2.5		nut 10 / screw 10.9	493
METRIC	M24 X 3		nut 9 / screw 8.8	475
METRIC	M24 X 3		nut 10 / screw 10.9	640

5.2 SELF-LOCKING FASTENERS

A self-locking fastener is designed with an interference fit between the nut and bolt threads. This is most often accomplished by distortion of the top thread of an all-metal nut or bolt or by using a nylon patch on the threads. A nylon insert or the use of adhesives may also be used as a method of interference between nut and bolt threads (Fig. 13).

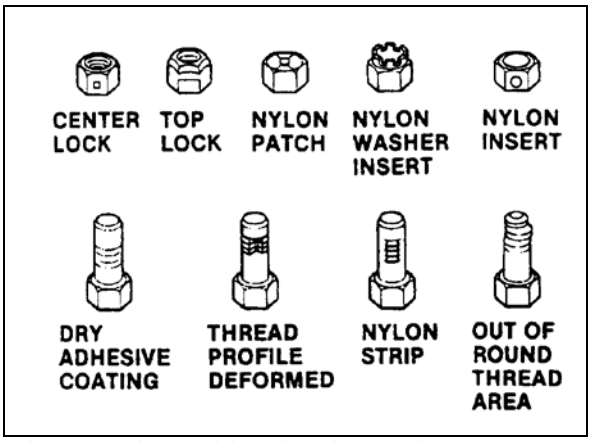

FIGURE 13 : SELF-LOCKING FASTENERS 00004

5.3 RECOMMENDATIONS FOR REUSE

Clean, rust-free self-locking fasteners may be reused as follows:

a) Clean dirt and other foreign matter from the fastener;

b) Inspect the fastener to ensure there is no crack, elongation, or other sign of fatigue or overtightening. If there is any doubt, replace with a new self-locking fastener of equal or greater strength;

c) Assemble parts and hand start fastener;

d) Observe that, before the fastener seats, it develops torque per the chart in table two. If there is any doubt, replace with a new self-locking fastener of equal or greater strength;

e) Tighten the fastener to the torque specified in the applicable section of this manual;

Fasteners which are rusty or damaged should be replaced with new ones of equal or greater strength.

SELF-LOCKING FASTENER TORQUE CHART

METRIC		6 & 6.3	8	10	12	14	16	20
NUTS AND ALL-METAL BOLTS	Nm	0.4	0.8	1.4	2.2	3.0	4.2	7.0
	Lbf-in	4.0	7.0	12	18	25	35	57
ADHESIVE OR NYLON COATED BOLTS	Nm	0.4	0.6	1.2	1.6	2.4	3.4	5.6
	Lbf-in	4.0	5.0	10	14	20	28	46

US STANDARD		¼	5/16	3/8	7/16	½	9/16	5/8	¾
NUTS AND ALL-METAL BOLTS	Nm	0.4	0.6	1.4	1.8	2.4	3.2	4.2	6.2
	Lbf-in	4.0	5.0	12	15	20	27	35	51
ADHESIVE OR NYLON COATED BOLTS	Nm	0.4	0.6	1.0	1.4	1.8	2.6	3.4	5.2
	Lbf-in	4.0	5.0	9.0	12	15	22	28	43

5.4 SIX LOBED SOCKET HEAD

Six lobed socket head (Torx) fasteners are used in some applications on vehicles covered in this manual. The tools designed for these fasteners are available commercially. However, in some cases, if the correct tool is not available, a hex socket head wrench may be used.

Multiply	by	to get equivalent number of:
LENGTH		
Inch	25.4	millimeters (mm)
Foot	0.305	meters (m)
Yard	0.914	meters
Mile	1.609	kilometers (km)
AREA		
Inch^2	645.2	millimeters^2 (mm^2)
	6.45	centimeters^2 (cm^2)
Foot^2	0.093	meters^2 (m^2)
Yard^2	0.836	meters^2
VOLUME		
Inch^3	16 387.0	mm^3
	16.387	cm^3
	0.016	liters (l)
Quart	0.946	liters
Gallon	3.785	liters
Yard^3	0.765	meters^3 (m^3)
MASS		
Pound	0.453	kilograms (kg)
Ton	907.18	kilograms (kg)
Ton	0.907	ton (t)
FORCE		
Kilogram	9.807	newtons (N)
Ounce	0.278	newtons
Pound	4.448	newtons
TEMPERATURE		
Degree Fahrenheit	(†°F − 32) ÷ 1.8	Degree Celsius (C)

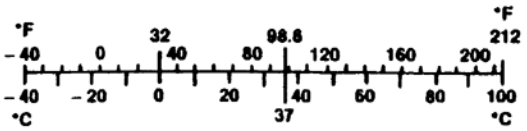

Multiply	by	to get equivalent number of:
ACCELERATION		
Foot/sec^2	0.305	meter/sec^2 (m/s^2)
Inch/sec^2	0.026	meter/sec^2
TORQUE		
Pound-inch	0.113	newton-meters (N·m)
Pound-foot	1.35	newton-meters
POWER		
Horsepower	0.746	kilowatts (kW)
PRESSURE OR STRESS		
Inches of water	0.249	kilopascals (kPa)
Pounds/sq. in.	6.895	kilopascals
ENERGY OR WORK		
BTU	1 055.0	joules (J)
Foot-pound	1.356	joules
kilowatt-hour	3 600 000.0 or 3.6 x 10^6	joules (J = one W's)
LIGHT		
Foot candle	1.076	lumens/meter^2 (lm/m^2)
VELOCITY		
Miles/hour	1.609	kilometers/hr (km/h)

FIGURE 14: METRIC - US STANDARD CONVERSION TABLE

00005

DECIMAL AND METRIC EQUIVALENTS

FRACTIONS	DECIMAL IN.	METRIC MM	FRACTIONS	DECIMAL IN.	METRIC MM
1/64	.015625	.39688	33/64	.515625	13.09687
1/32	.03125	.79375	17/32	.53125	13.49375
3/64	.046875	1.19062	35/64	.546875	13.89062
1/16	.0625	1.58750	9/16	.5625	14.28750
5/64	.078125	1.98437	37/64	.578125	14.68437
3/32	.09375	2.38125	19/32	.59375	15.08125
7/64	.109375	2.77812	39/64	.609375	15.47812
1/8	.125	3.1750	5/8	.625	15.87500
9/64	.140625	3.57187	41/64	.640625	16.27187
5/32	.15625	3.96875	21/32	.65625	16.66875
11/64	.171875	4.36562	43/64	.671875	17.06562
3/16	.1875	4.76250	11/16	.6875	17.46250
13/64	.203125	5.15937	45/64	.703125	17.85937
7/32	.21875	5.55625	23/32	.71875	18.25625
15/64	.234375	5.95312	47/64	.734375	18.65312
1/4	.250	6.35000	3/4	.750	19.05000
17/64	.265625	6.74687	49/64	.765625	19.44687
9/32	.28125	7.14375	25/32	.78125	19.84375
19/64	.296875	7.54062	51/64	.796875	20.24062
5/16	.3125	7.93750	13/16	.8125	20.63750
21/64	.328125	8.33437	53/64	.828125	21.03437
11/32	.34375	8.73125	27/32	.84375	21.43125
23/64	.359375	9.12812	55/64	.859375	21.82812
3/8	.375	9.52500	7/8	.875	22.22500
25/64	.390625	9.92187	57/64	.890625	22.62187
13/32	.40625	10.31875	29/32	.90625	23.01875
27/64	421875	10.71562	59/64	.921875	23.41562
7/16	.4375	11.11250	15/16	.9375	23.81250
29/64	.453125	11.50937	61/64	.953125	24.20937
15/32	.46875	11.90625	31/32	.96875	24.60625
31/64	.484375	12.30312	63/64	.984375	25.00312
1/2	.500	12.70000	1	1.00	25.40000

FIGURE 15: CONVERSION CHART 00006

PREVOST

MULTIPLEX MODULES DISCONNECTION PROCEDURE PRIOR TO WELDING

PROCEDURE NO: PR060041	REVISION 01 2010-12-01

Material: N/A

Equipment(s):
Phillips-head screwdriver
Ratchet handle
3/8" socket
Electric tape
Long nose pliers

Reference schematics: N/A

Safety rules:
- Wear safety goggles
- Set the battery master switch to the OFF position first

Recommendations: **This procedure should be performed by qualified personnel only.**

	Effective
Revision 00 : New procedure for cooling 2007 **Revision 01 : Modified for EPA 2010**	

SECTION 1 H3 Coaches & VIP			
1.00	**Location: Main power compartment and dashboard.** Set the battery master switch to the OFF position. Place the ignition switch to the OFF position.	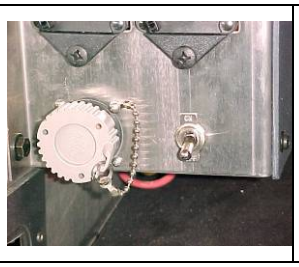	
1.05	**Location: Main power compartment** Trip rear junction box circuit breakers CB2, CB4, CB6 Push the red button to open the circuit	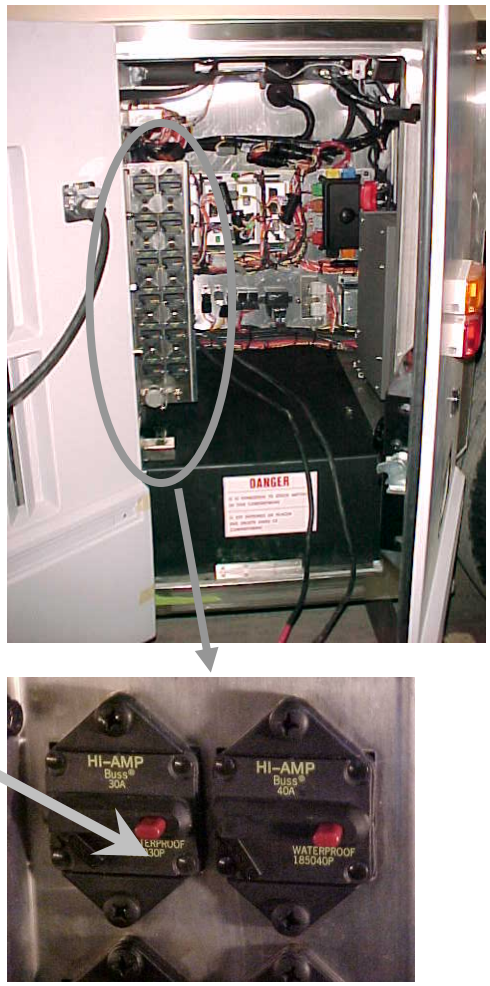	

1.10	**Location: Main power compartment** Remove the protective cover	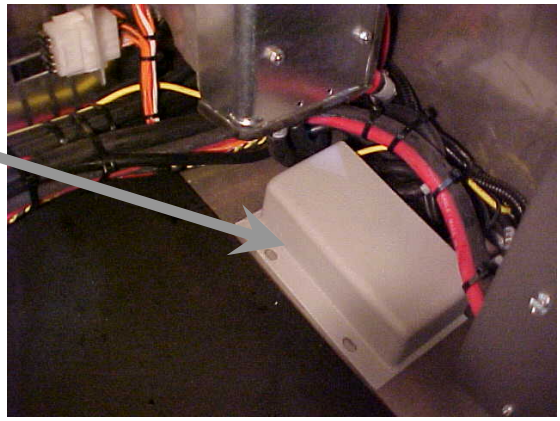
	⚠ WARNING ⚠ **LIVE WIRE** **This 12-volt terminal remains energized** Disconnect the electronic ground terminals from the stud.	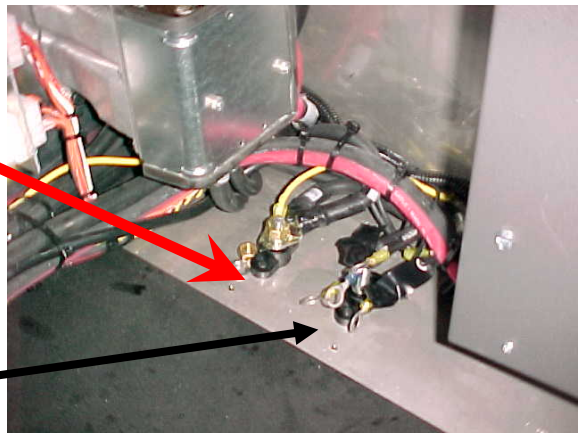
	Using electric tape, insulate the 2 largest gage wires. Make sure the ring terminals do not touch each others and the vehicle body. ***Note :*** ***With disconnection of the electronic ground terminals, disconnecting the engine ECM, transmission TCM and the dashboard electronic components (telltale module, HVAC module, radio, control head …) is not required.***	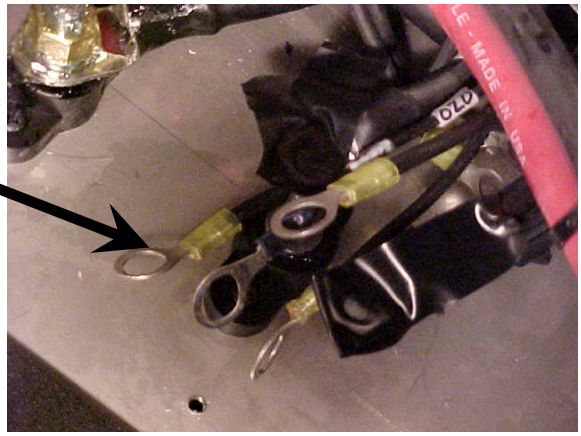

1.15	**Location: Main power compartment** Disconnect the electronic modules : Disconnect I/O A, I/O B modules Disconnect C397 Disconnect connector C717 Disconnect 3 connectors from I/O B and I/O A modules.	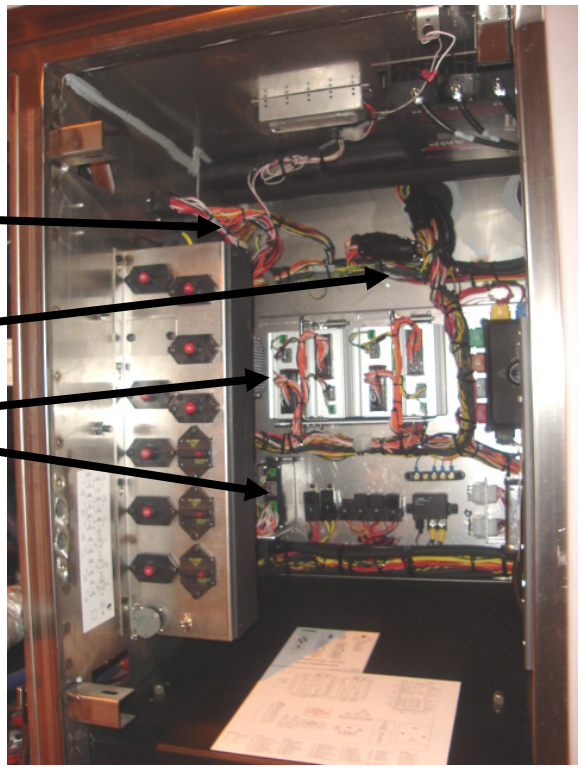
1.20 *	**Location: Front electrical compartment** **VIP + COACH:** Disconnect the I/O A, I/O B, ABS, master ID, VECU, CECM, BERU, Volvo Link, Gsecu modules. **VIP:** Disconnect all keyless module connectors. Disconnect 3 connectors from I/O B and I/O A modules	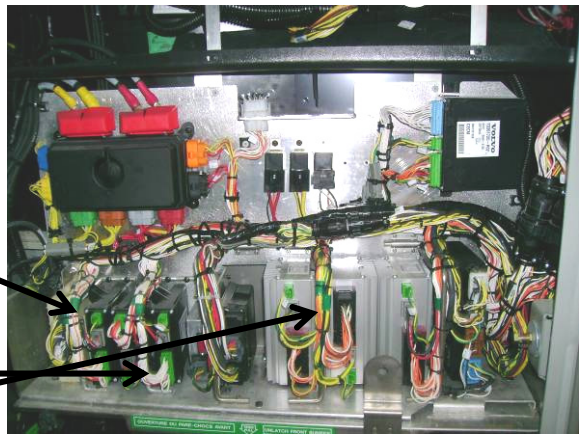

	Disconnect 4 connectors from the ABS module	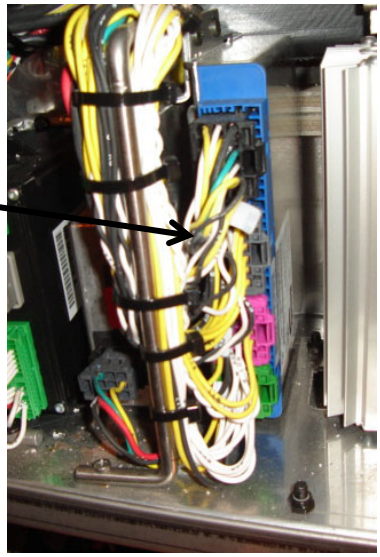
	Disconnect connector from master ID	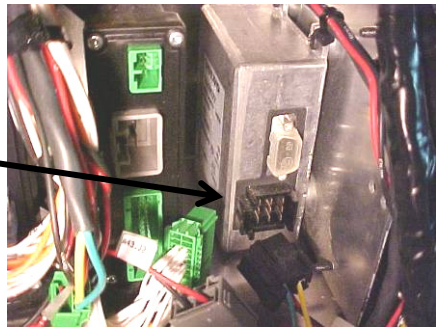
	Disconnect 3 connectors from VECU	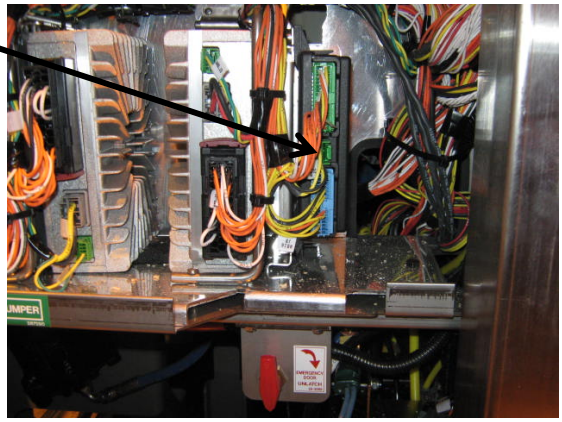
	Disconnect 3 connectors from CECM	

	Disconnect connector A 96 from BERU (OPTION)	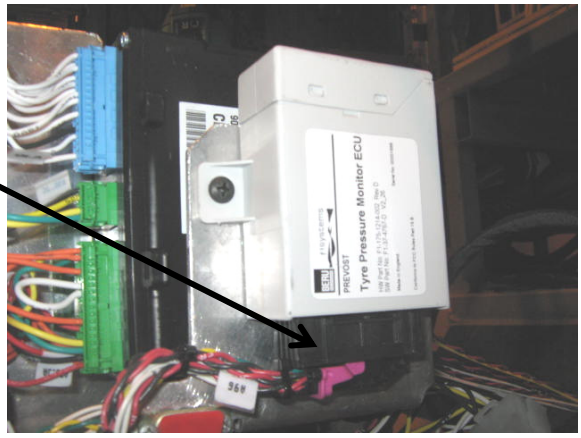
	Disconnect connector A 83 under Volvo Link module	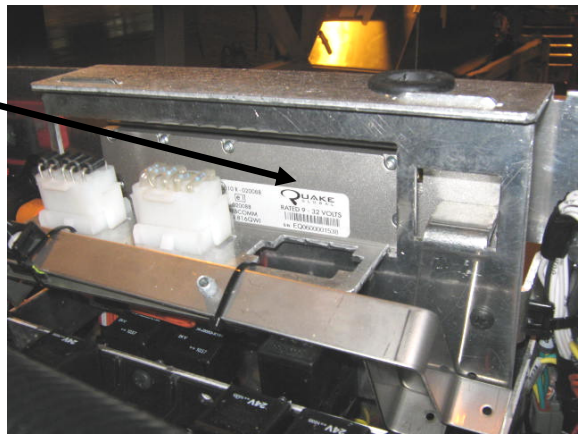
	I shift Disconnect connector A 108 from Gsecu module (OPTION)	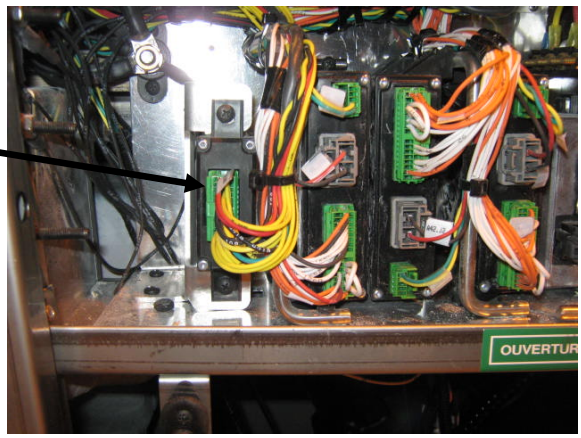

1.25	**Location: Pneumatic accessory panel inside right console** Remove the access panel on the right console (R.H. side of dashboard) Disconnect both I/O B modules	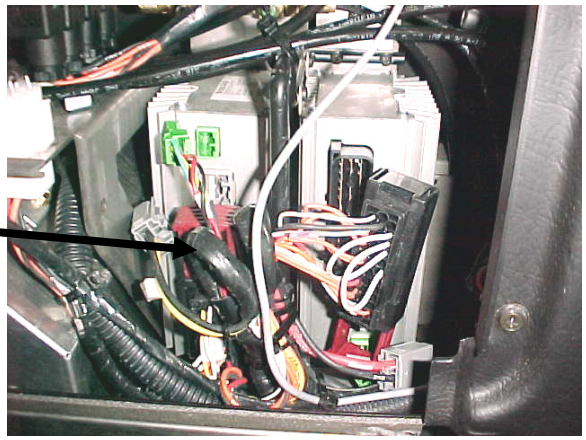
1.30 *	**Location: Condenser Compartment** Disconnect connector A 137	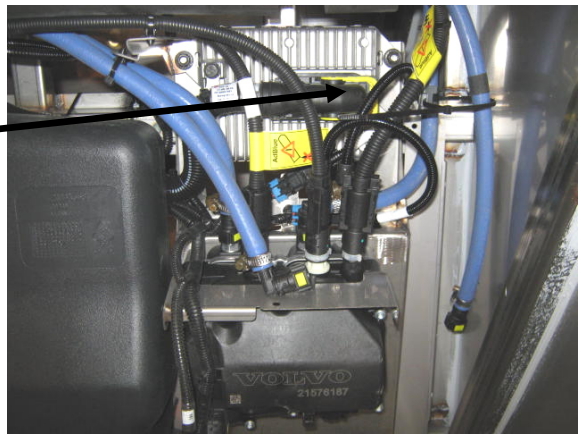
1.35	**Location: Evaporator compartment** Remove the protective cover and disconnect I/O B module	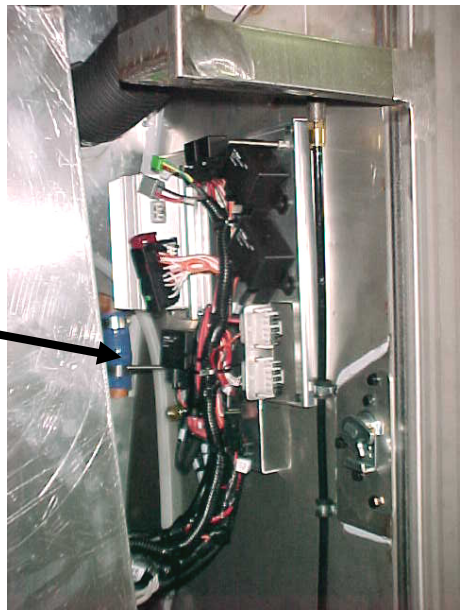

1.40	**Kidde Automatic Fire Detection and Suppression System (optional)**	
	Disconnect C466 Kidde AFSS module is located on the lateral control panel.	
1.45	When all the previous steps are done, you can do welding on the vehicle.	**ENSURE THAT THE WELDING GROUND RETURN CLAMP IS WELL SECURED AND MAKES A GOOD ELECTRICAL CONTACT WITH A LARGE METALLIC AREA OF THE CHASSIS LOCATED NEAR THE WELDING POINT AS MUCH AS POSSIBLE.**
1.50	**When welding is completed, reconnect all the modules.** Make sure that the connectors locking tab are well engaged!	**BE CAREFUL TO MAKE THE PROPER CONNECTIONS, IF NOT, SOME SYSTEMS OR COMPONENTS MAY NOT BE USABLE.**

SECTION 2 X3 Coaches, X3-45 VIP & XLII Bus Shells

2.00*	**Location: Rear Electrical Panel and Dashboard** Set the battery master switch to the OFF position **(X3 Coaches only)** Place the ignition switch to the OFF position.	
2.05*	**Location: Rear Junction Panel** Lift cover, trip circuit breakers CB2-CB4-CB6 located on junction panel. Push the red button to open the circuit	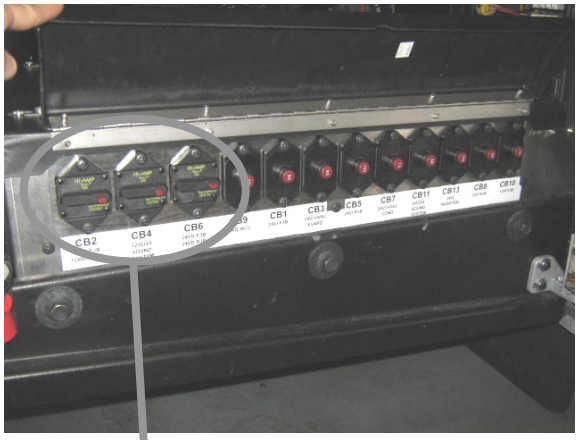 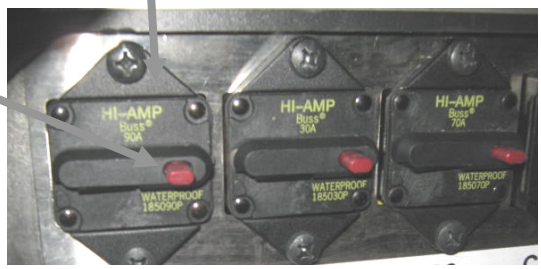

2.10*	**Location: Rear Electrical Panel** Disconnect the electronic ground terminals from this stud. Use electric tape; make sure that cables do not touch each others and the vehicle body. ***Note :*** ***With disconnection of the electronic ground terminals, disconnecting the engine ECM, transmission TCM and the dashboard electronic components (telltale module, HVAC module, radio, control head …) is not required.***	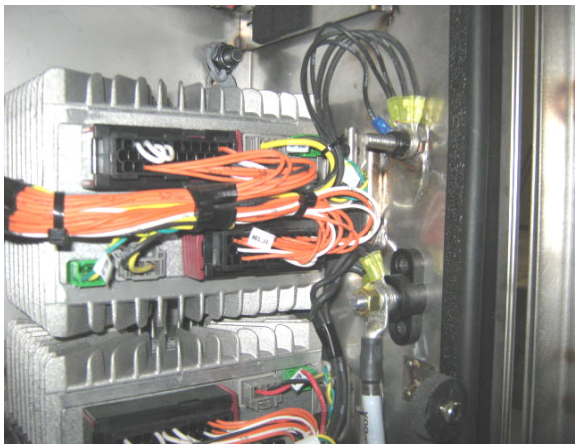
2.15*	**Location: Rear Electrical Panel** Disconnect the electronic modules: Disconnect all I/O A, I/O B modules. Disconnect C717 Disconnect 3 connectors from each I/O A module Disconnect 3 connectors from each I/O B module Disconnect C397	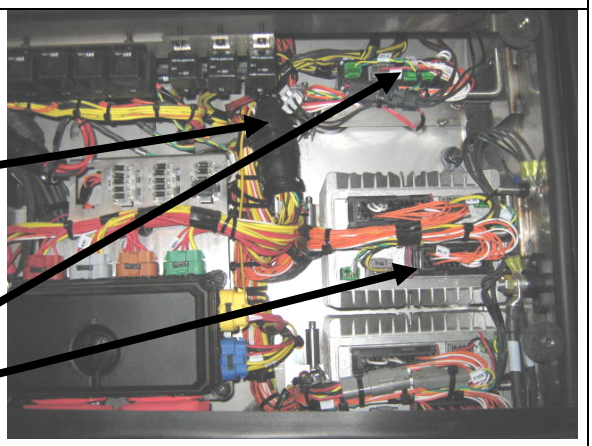 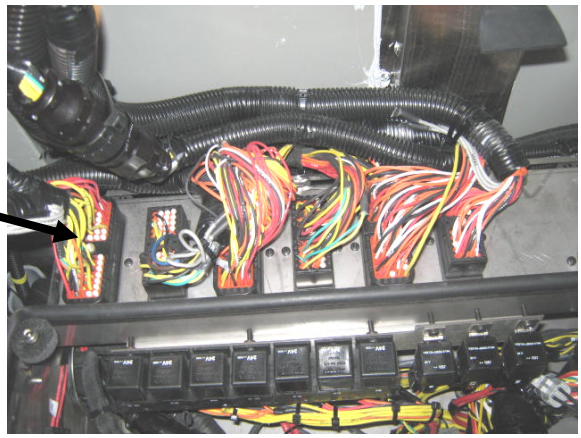

2.20 *	**Location: Front Electrical Compartment** **VIP + BUS:** Disconnect the I/O A, I/O B, ABS, master ID, VECU, CECM, BERU, Volvo Link, Gsecu modules. **VIP :** Disconnect all keyless module connectors Disconnect 3 connectors from I/O B and I/O A modules	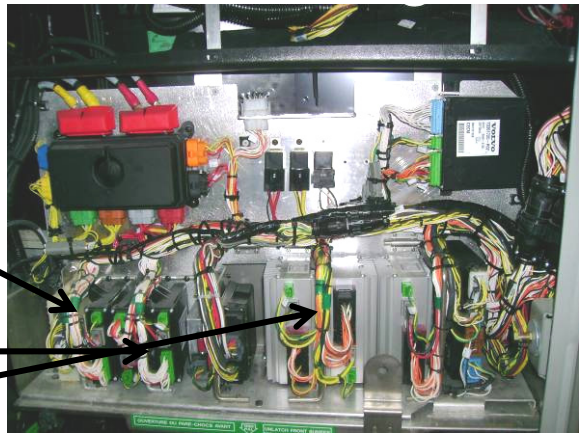
	Disconnect 4 connectors from the ABS module	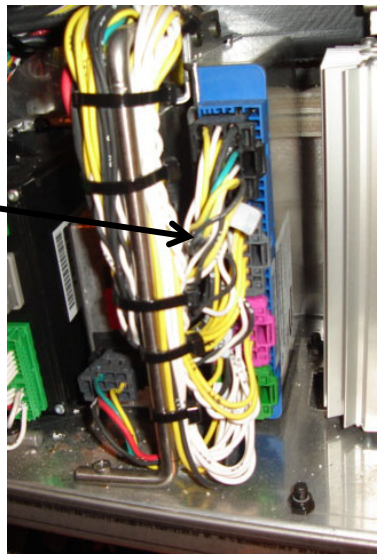
	Disconnect connector from master ID	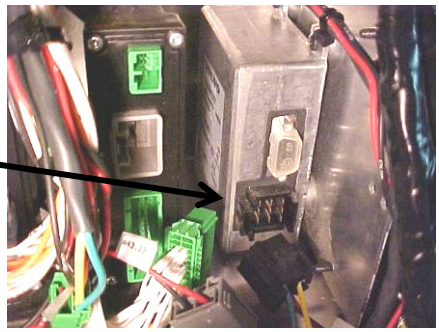

	Disconnect 3 connectors from VECU	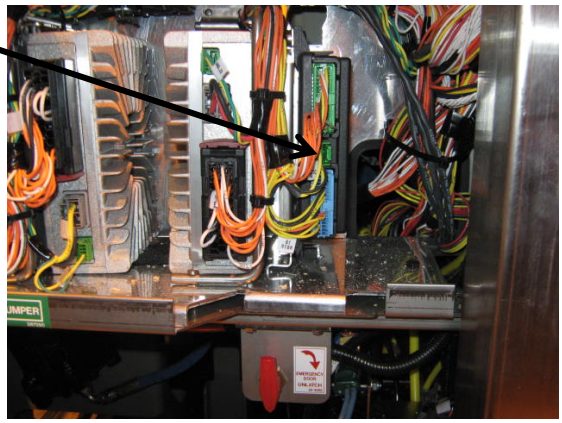
	Disconnect 3 connectors from CECM	
	Disconnect connector A 96 from BERU (option)	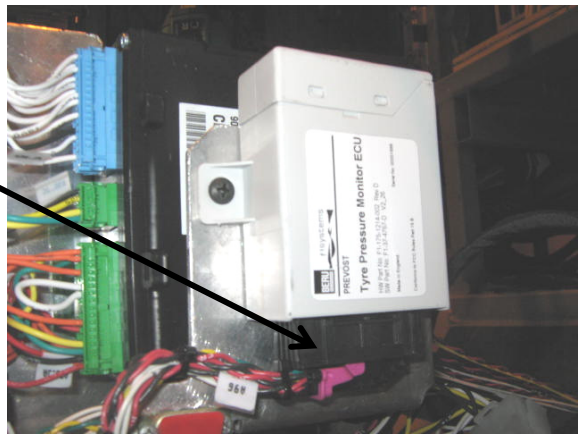
	Disconnect connector A 83 under Volvo Link module	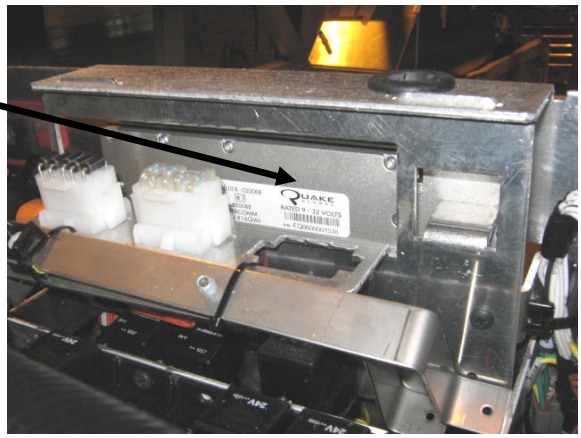

	Location: Front Electrical Compartment **I shift** Disconnect connector A 108 from Gsecu module (OPTION)	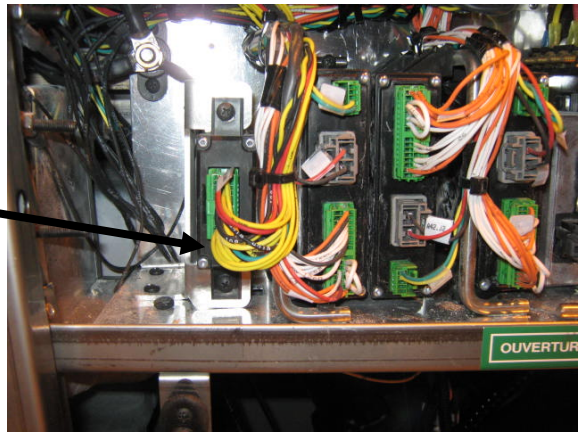
2.30	**Location: Pneumatic accessory panel inside right console** Remove the access panel on the right console (R.H. side of dashboard) Disconnect both I/O B modules	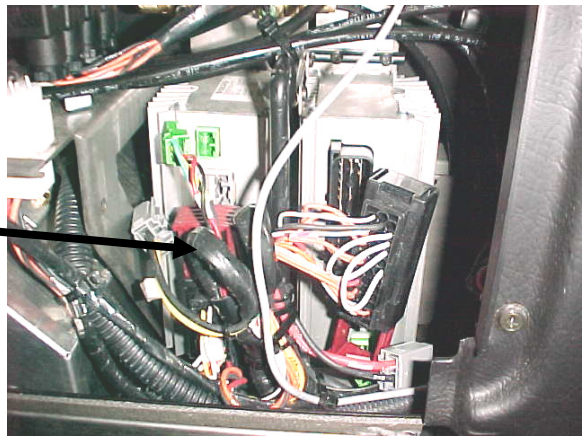
2.40	**Location: Condenser Compartment** Disconnect connector A 137	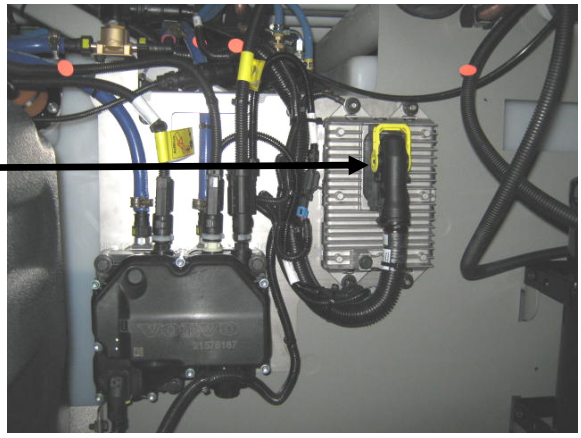

2.50	**Location: Evaporator Compartment** Disconnect A 54 module located inside the evaporator compartment, on the door.	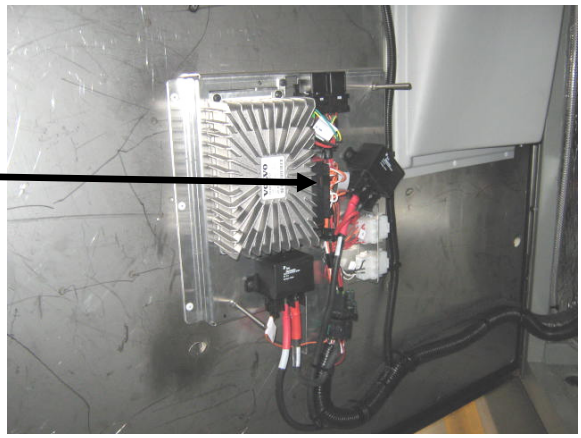
2.60	When all the previous steps are done, you can do welding on the vehicle.	**ENSURE THAT THE WELDING GROUND RETURN CLAMP IS WELL SECURED AND MAKES A GOOD ELECTRICAL CONTACT WITH A LARGE METALLIC AREA OF THE CHASSIS LOCATED NEAR THE WELDING POINT AS MUCH AS POSSIBLE.**
2.70	**When welding is completed, reconnect all the modules.** Make sure that the connectors locking tab are well engaged!	**BE CAREFUL TO MAKE THE PROPER CONNECTIONS, IF NOT, SOME SYSTEMS OR COMPONENTS MAY NOT BE USABLE**.

CONTENTS

1. VOLVO D13 ENGINE 2

1.1 SYSTEM OVERVIEW 2
1.2 ENGINE OVERVIEW 6
1.3 ENGINE OIL 7
1.3.1 General 7
1.3.2 Oil Quality 7
1.3.3 Oil Change Intervals 8
1.3.4 Oil Filters 8
1.3.5 Synthetic Lubrication 8
1.3.6 Oil Viscosity 8
1.3.7 Oil Additives 9
1.3.8 Oil Consumption 9
1.3.9 Oil Change 9
1.3.10 Oil Filters Change 10
1.3.11 Checking the Oil Level 11
1.4 POWER PLANT ASSEMBLY REMOVAL 11
1.5 POWER PLANT ASSY. INSTALLATION 14
1.6 ENGINE MOUNTS 15

2. ELECTRONIC FOOT PEDAL ASSEMBLY (EFPA) & THROTTLE POSITION SENSOR 16

3. SPECIFICATIONS 17

ILLUSTRATIONS

FIGURE 1: ENGINE SENSORS LOCATION 5
FIGURE 2: D13F ENGINE, TURBO SIDE (TYPICAL) 6
FIGURE 3: D13F ENGINE, ALTERNATOR SIDE (TYPICAL) 7
FIGURE 4: D13F OIL FILTERS 8
FIGURE 5: OIL FILTER WRENCH 10
FIGURE 6: OIL FITER REPLACEMENT 10
FIGURE 7: ENGINE OIL FILLING TUBE 11
FIGURE 8: ENGINE OIL LEVEL DIPSTICK 11
FIGURE 9: COOLER POSITION DURING ENGINE CRADLE INSERTION OR REMOVAL 12
FIGURE 10: BELT TENSIONER VALVE 12
FIGURE 11: ENGINE COMPARTMENT X3 COACHES (TYPICAL) 14
FIGURE 12: NORMAL OIL COOLER POSITION 14
FIGURE 13: VOLVO ENGINE POWER PLANT CRADLE INSTALLATION 15
FIGURE 14: ELECTRONIC FOOT PEDAL ASSEMBLY 17

1. VOLVO D13 ENGINE

1.1 SYSTEM OVERVIEW

NOTE
The "Premium Tech Tool" (PTT) is the preferred tool for performing diagnostic work. Contact your local dealer for more information.

The Engine Management System (EMS) controls many engine functions such as: fuel timing and delivery, engine protection functions, engine brake operation, EGR valve function and the turbocharger nozzle function. The Engine Electronic Control Unit (EECU) along with other supporting control units and sensors are responsible for monitoring and controlling these functions. These control units communicate through the J1939 high speed serial data line to share data.

In addition to their control functions, the modules have on-board diagnostic capabilities. The on-board diagnostics are designed to detect faults or abnormal conditions that are not within their operating parameters. When the system detects a fault or abnormal condition, the fault will be logged in one or both of the modules' memory. The vehicle operator will be advised that a fault has occurred by the illumination of a malfunction indicator lamp and a message in the driver information display, if equipped. The module may initiate the engine shutdown procedure if the system determines that the abnormal condition could damage the engine. In some situations, the system will enter the "limp home" mode. Limp home mode allows continued vehicle operation but, the system may substitute a sensor or signal value that may result in reduced engine performance.

Fault codes logged in the system memory, can later be read to aid in diagnosing the fault. These faults can be read via a diagnostic computer or through the instrument cluster display, if equipped. The "Premium Tech Tool" (PTT) is the preferred tool for performing diagnostic work. Using a diagnostic computer (or PTT) connected to the Serial Communication Port, expands the technicians diagnostic capabilities with additional data and tests.

For diagnostic software, contact your local dealer.

The following is a list of engine sensors that provide input to the EMS:

- Ambient Air Temperature Sensor
- Ambient Pressure sensor
- Boost Air Pressure (BAP) Sensor
- Camshaft Position (Engine Position) Sensor
- Crankshaft Position (Engine Speed) Sensor
- Differential Pressure DPF Sensor
- EGR Differential Pressure Sensor
- EGR Temperature Sensor
- Engine Coolant Level (ECL) Sensor
- Engine Coolant Temperature (ECT) Sensor
- Engine Oil Pressure (EOP) Sensor
- Engine Oil Level (EOL) Sensor
- Engine Oil Temperature (EOT) Sensor
- Exhaust Temperature Sensor (DPF Sensors)
- Fuel Pressure Sensor
- Intake Air Temperature And Humidity (IATH) Sensor
- Intake Manifold (Boost) Temperature Sensor
- Throttle Position (TP) Sensor
- Turbo Speed Sensor
- Variable Geometry Turbocharger (VGT) Position Sensor

Sensors

Ambient Air Temperature Sensor

The Ambient Air Temperature Sensor is used to detect the outside air temperature. The sensor modifies a voltage signal from the ECM. The modified signal returns to the ECM as the ambient air temperature. The sensor uses a thermistor that is sensitive to the change in temperature. The electrical resistance of the thermistor decreases as temperature increases.

The Ambient Air Temperature Sensor is located in the front of the vehicle.

Ambient (Atmospheric) Pressure Sensor

The Ambient (Atmospheric) Pressure Sensor contains a pressure sensitive diaphragm and an electrical amplifier. Mechanical pressure applied to the diaphragm causes the diaphragm to deflect and the amplifier to produce an electrical signal proportional to the deflection.

The Ambient (Atmospheric) Pressure Sensor is built into the Engine Management System (EMS) Module.

Camshaft Position Sensor

The Camshaft Position (Engine Position) Sensor is located in the rear face of the timing gear cover at the rear of the engine, near the bottom of the valve cover. It uses magnetic induction to generate a pulsed electrical signal. It senses the passage of seven (7) timing bumps on the edge of the camshaft dampener. Six of the holes correspond to the phasing of the electronic unit injectors, while the seventh hole indicates the top dead center position.

Crankshaft Position (Engine Speed) Sensor

The Crankshaft Position (Engine Speed) Sensor uses magnetic induction to generate a pulsed electrical signal. Notches are machined into the edge of the flywheel. When one of the notches passes close to the sensor, electric pulses result.

The Crankshaft Position (Engine Speed) Sensor also indicates when the crankshaft is at the top dead center position.

Differential Pressure DP Sensor

The differential pressure sensor is used for flow measurement of the Diesel Particulate Filter (DPF). This sensor has two pressure ports and senses the difference in pressure between the two ports. Measurement of the pressure before and after the DPF is used to calculate diesel filter regeneration.

The Differential Pressure DPF Sensor is located on the side of the Diesel Particulate Filter (DPF).

EGR Differential Pressure Sensor

The EGR differential pressure sensor is used for flow measurement of the Exhaust Gas Recirculation (EGR) valve. This sensor has two pressure ports and senses the difference in pressure between the two ports. Measurement of the pressure before and after the EGR valve is used to calculate EGR flow.

The EGR Differential Pressure Sensor is located on the left or right side of the engine.

EGR Temperature Sensor

The EGR temperature sensor detects exhaust gas temperature for EGR system. The sensor modifies a voltage signal from the control unit. The modified signal returns to the control unit as the exhaust temperature of the EGR system to confirm EGR operation. The sensor uses a thermistor that is sensitive to the change in temperature.

The EGR Temperature Sensor is located near the EGR valve.

Engine Coolant Level (ECL) Sensor

The Engine Coolant Level (ECL) Sensor is a switch. If engine coolant level falls below a calibrated point the contacts open and the driver will be notified of the low coolant level.

The Engine Coolant Level (ECL) Sensor is located in the cooling system reservoir tank.

Engine Coolant Temperature (ECT) Sensor

The Engine Coolant Temperature Sensor is located at the front of the engine. The sensor will indicate a high coolant temperature caused by problems like radiator blockage, thermostat failure, heavy load, or high ambient temperatures. This sensor is also used for cold start enhancement and for fan clutch engagement.

Engine Oil Pressure (EOP) Sensor

The Engine Oil Pressure Sensor contains a pressure sensitive diaphragm and a electrical amplifier. Mechanical pressure applied to the diaphragm causes the diaphragm to deflect and the amplifier to produce an electrical signal proportional to the deflection.

The Engine Oil Pressure Sensor is located on the oil filter assembly. The sensor monitors engine oil pressure to warn of lubrication system failure.

Engine Oil Level (EOL) Sensor

The Engine Oil Level Sensor is located in the oil pan.

Engine Oil Temperature (EOT) Sensor

The Engine Oil Temperature Sensor is a thermistor whose resistance varies inversely to temperature. The sensor has a negative temperature coefficient, which means the sensor resistance will decrease as the engine oil temperature increases.

The Engine Oil Temperature Sensor is located in the oil pan.

Exhaust Temperature Sensor (DPF Sensors)

The exhaust gas temperature sensor detects exhaust gas temperature for DPF protection as well as DPF regeneration control. The sensor modifies a voltage signal from the control unit. The modified signal returns to the control unit as the exhaust temperature at that specific location of the exhaust. The sensor uses a thermistor that is sensitive to the change in temperature.

The Exhaust Temperature Sensors are located in the DPF assembly.

Fuel Pressure Sensor

The fuel pressure sensor contains a diaphragm that senses fuel pressure. A pressure change causes the diaphragm to flex, inducing a stress or strain in the diaphragm. The resistor values in the sensor change in proportion to the stress applied to the diaphragm and produces an electrical output.

The Fuel Pressure Sensor is located on top of the fuel filter housing.

Intake Air Temperature and Humidity (IATH) Sensor

The Intake Air Temperature and Humidity (IATH) Sensor contains a thermistor and a capacitive sensor. The resistance of the thermistor varies inversely to temperature. The output of the capacitive sensor increases as the humidity of the surrounding air increases. By monitoring the signals from both portions of the sensor, the Engine Management System (EMS) Module calculates the temperature and humidity of the air passing through the air filter housing.

The Intake Air Temperature and Humidity (IATH) Sensor is located in the air intake tube just downstream from the air filter canister.

Intake Manifold (Boost) Temperature Sensor

The Intake Manifold (Boost) Temperature Sensor is a thermistor whose resistance varies inversely to temperature. The sensor has a negative temperature coefficient, which means the sensor resistance will decrease as the inlet air temperature increases.

The Intake Manifold (Boost) Temperature Sensor is located in the intake manifold.

Intake Manifold Pressure Sensor

The Intake Manifold Pressure Sensor contains a pressure sensitive diaphragm and an electrical amplifier. Mechanical pressure applied to the diaphragm causes the diaphragm to deflect and the amplifier to produce an electrical signal proportional to the deflection.

The Intake Manifold Pressure Sensor is located on the air inlet pipe before the intake manifold.

Throttle Position (TP) Sensor

The Throttle Position Sensor is a potentiometer that is mechanically linked to the accelerator pedal. A potentiometer is a variable resistor whose resistance will change as the pedal is pressed. As the resistance changes, the signal voltage of the sensor changes indicating the accelerator pedal position.

The Throttle Position Sensor is located above the accelerator pedal. The sensor is designed to improve the driver's control by reducing sensitivity to chassis motion. This sensor provides the driver's fuel request input to the VECU.

Turbo Speed Sensor

The Turbo Speed Sensor informs the EMS of the turbo shaft speed. The sensor does not read from the vanes, but reads from the shaft. The Engine Management System (EMS) Module uses this signal in conjunction with the VGT position sensor signal to control the speed of the turbocharger and therefore optimize the intake manifold pressure.

The Turbo Speed Sensor is mounted in the center of the turbocharger.

Variable Geometry Turbocharger Smart Remote Actuator (VGT SRA)

The Variable Geometry Turbocharger Smart Remote Actuator (VGT SRA) takes the position commands from the EMS, moves the nozzle of the turbocharger to the desired position, and performs all of the diagnostics and self checks on the actuator.

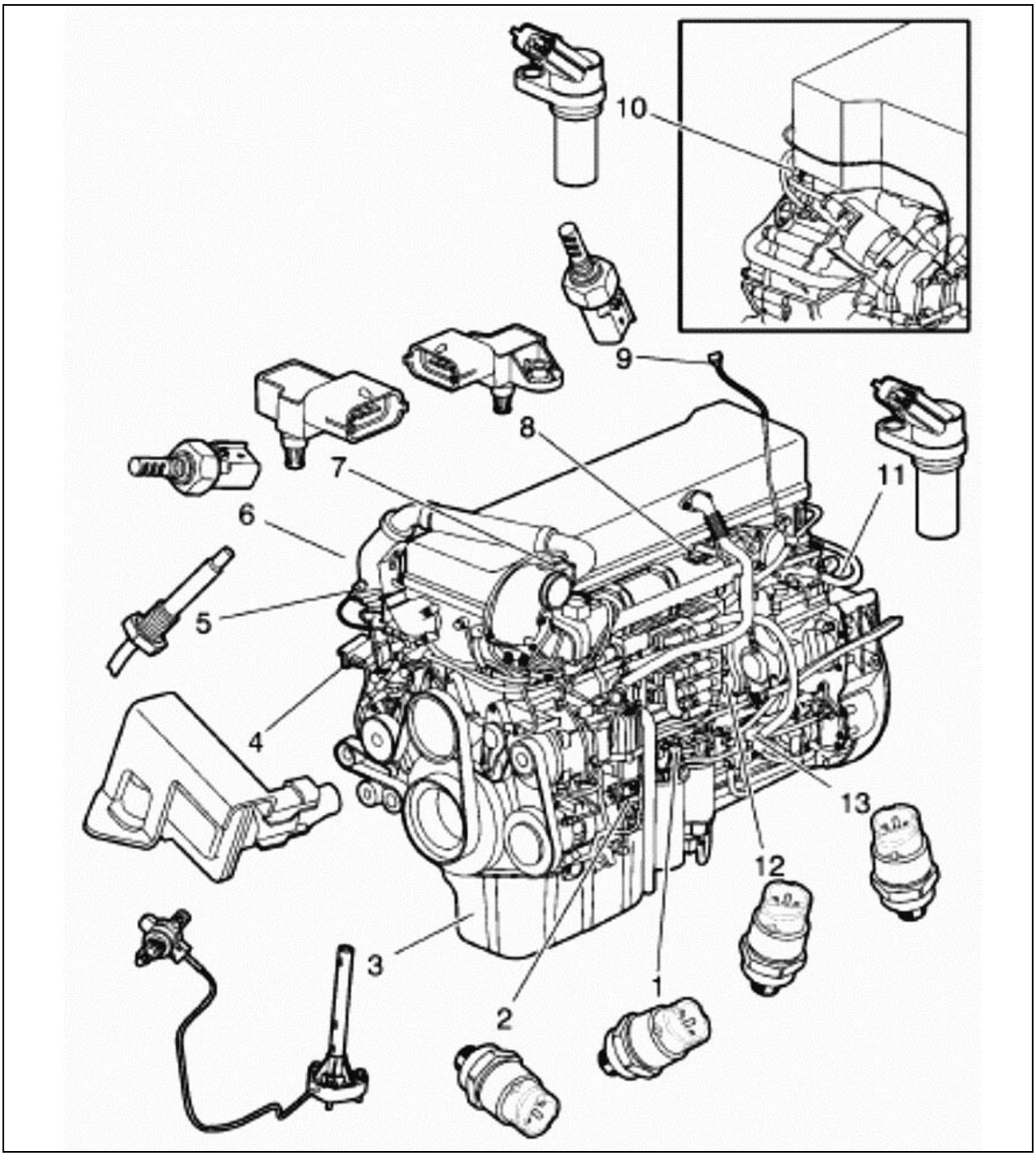

FIGURE 1: ENGINE SENSORS LOCATION

1	Fuel Pressure	8	Air Temperature
2	Crankcase Pressure	9	Humidity/Ambient Air Temperature
3	Oil Level/Temperature	10	Camshaft Speed
4	EGR Differential Pressure	11	Crankshaft Speed
5	EGR Temperature	12	Oil Pressure
6	Coolant Temperature	13	AFI Fuel Pressure
7	Boost Pressure		

1.2 ENGINE OVERVIEW

NOTE
For maintenance on or repair of engine components or engine-related components, please refer to Volvo Trucks Canada or Volvo Trucks North America Web Site under: Parts & Service, purchase engine literature, D13F engine.

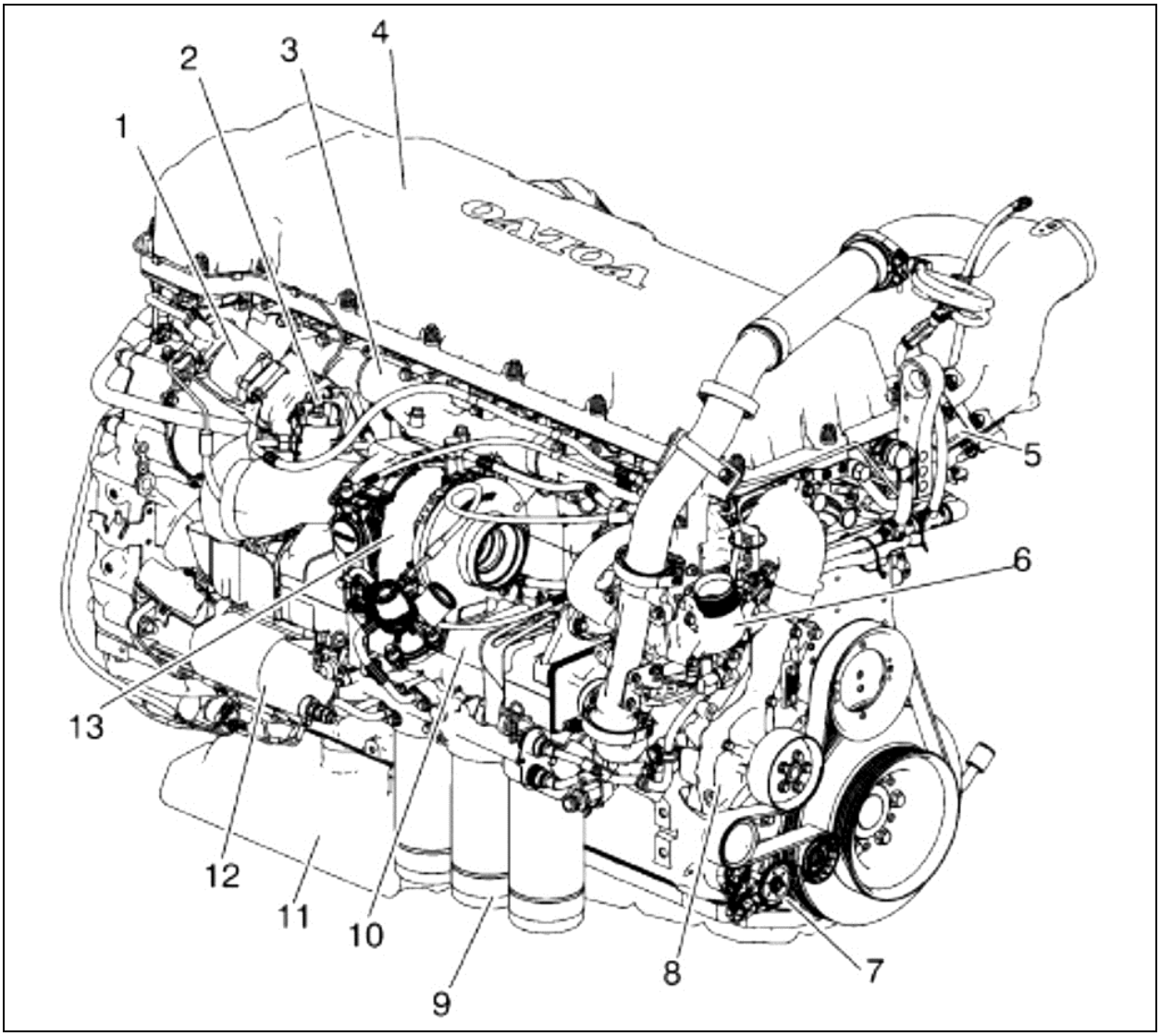

FIGURE 2: D13F ENGINE, TURBO SIDE (TYPICAL)

1. EGR Valve	**8. Coolant Pump**
2. Aftertreatment Fuel Injector	**9. Oil Filters**
3. Exhaust Manifold	**10. EGR Cooler**
4. Valve Cover	**11. Oil Pan**
5. Engine Preheater Element	**12. Starter Motor**
6. Thermostat Cover	**13. Turbocharger**
7. Belt Tensioner	

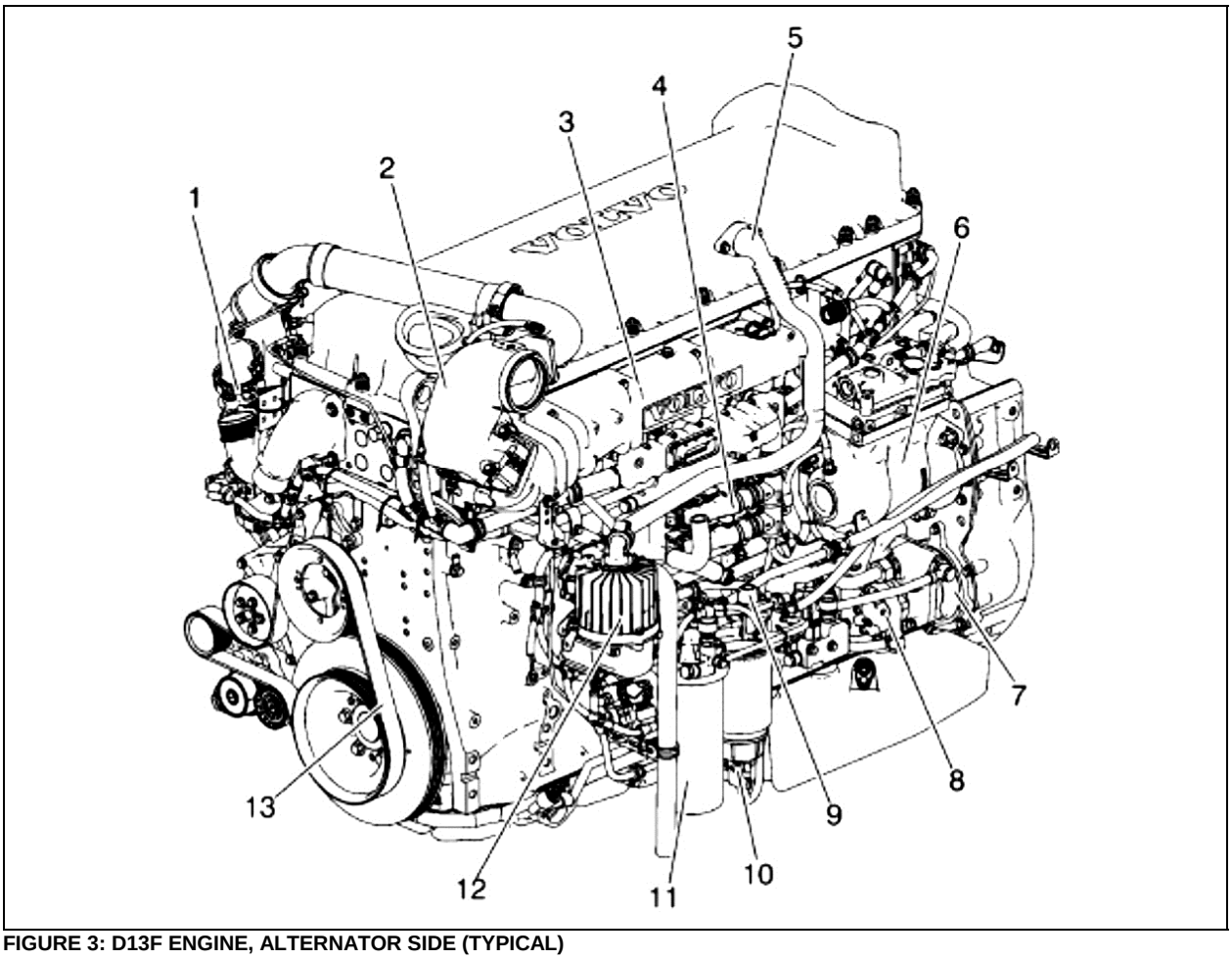

FIGURE 3: D13F ENGINE, ALTERNATOR SIDE (TYPICAL)

1. Venturi Pipe	**8. Fuel Pump**
2. EGR Mixing Chamber	**9. Hand Primer**
3. Intake Manifold	**10. Fuel/Water Separator**
4. Engine Electronic Control Unit (EECU)	**11. Fuel Filter**
5. Breather Tube	**12. Crankcase Ventilator**
6. Air Compressor	**13. Fan/Coolant Pump Belt**
7. Power Steering Pump	

1.3 ENGINE OIL

1.3.1 General

Keep the engine oil at the proper level and change it at the recommended intervals. Always replace the oil filters at the same time as when the oil is changed.

1.3.2 Oil Quality

Volvo North America recognizes engine oils that meet or exceed the standards given by American Petroleum Institute (API) for the oil classifications listed in this manual. Only oils licensed to carry the API symbol should be used. Lubricants meeting API standards have provided maximum engine life when used together with the recommended oil and oil filter change intervals.

EO-O Premium Plus (or VDS-4) diesel engine oil is mandatory for use in all 2010 emission compliant Volvo engines. These engines, which can be identified by the presence of an exhaust aftertreatment system using Selective Catalytic Reduction (SCR), also require the use of Ultra Low Sulfur Diesel (ULSD) fuel. EO-O Premium Plus oils exceed the new API service category CJ-4.

CAUTION

DO NOT add extra oil additives. Additives such as break-in oils, top oils, graphitizers, and friction-reducing liquids are not necessary and can harm the engine.

1.3.3 Oil Change Intervals

The length of time an engine can operate before an oil change depends on the quality oil used, the type of fuel used, fuel consumption, engine oil consumption, vehicle application, level of dust in the air, and fuel consumption. The change intervals given in this manual are maximum intervals. If the vehicle is operating in heavy-duty operation, dusty or off-road conditions, etc., reduce the intervals for more frequent oil changes.

NOTE

Use the information in the table below to determine the operating condition and usage applicable to your vehicle.

Engine Operating Condition	Medium	Heavy	Severe
Total Fuel Consumption (mpg)	More than 6	More than 4.7	More than 3.7
Total Fuel Consumption (L/100 KM)	Less than 39	Less than 50	Less than 64
Engine Oil and Filter Change Interval, miles (km) – 41 U.S. quarts (39L) Oil capacity	35,000 (55 000)	25,000 (40 000)	15,000 (24 000)
NOTE: If idle time is greater than 25%, use the next lower drain interval.			

NOTE

Oil filters should always be changed when changing the oil.

1.3.4 Oil Filters

There are three filters on the engine, one of which is a bypass filter. This should be changed at the same time as the full-flow filter(s).

CAUTION

Volvo branded oil filters are designed to provide the proper level of filtration and protection for Volvo engines. Filters that do not meet the same stringent requirements may void engine warranty.

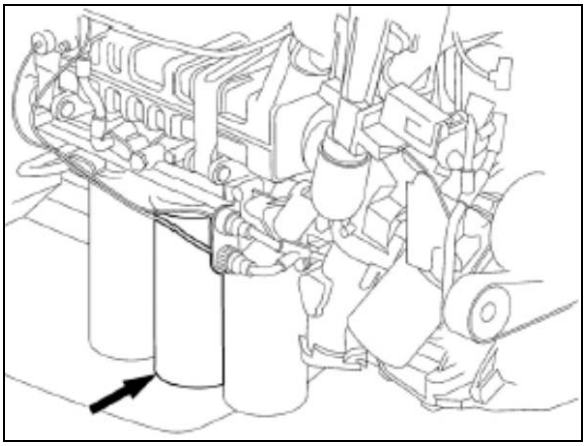

FIGURE 4: D13F OIL FILTERS

1.3.5 Synthetic Lubrication

Synthetic oils are offered by some oil suppliers as an alternative to the traditional, petroleum based oils for engines. These oils may be used in Volvo engines, provided they meet the quality levels specified on the previous pages, that is: both VDS-4 and EO-O Premium Plus.

The use of synthetic oils does not permit the extension of the recommended oil change intervals.

1.3.6 Oil Viscosity

The viscosity grade defines the thickness of the oil. The oil must be thin enough at low temperatures for easy cold starts and thick enough to protect at high temperatures. An oil is not fully defined until both the API quality classification and the viscosity grade are specified.

Choose the viscosity grade for the typical ambient temperature for the application. Multigrade oils have a broad range that suit operation in changing temperature.

Volvo North America recommends the viscosities shown in the viscosity/temperature table for Volvo engines.

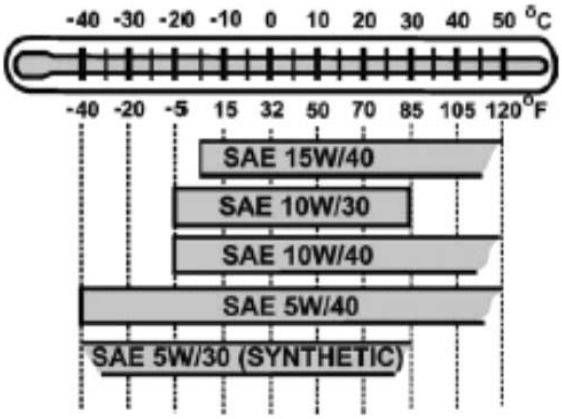

1.3.7 Oil Additives

CAUTION

Extra oil additives must never be added to any engine oil used. Additives such as break-in oils, top oils, graphitizers, and friction reducing liquids are not necessary and may even harm the engine.

Using oils to the quality standards recommended in this manual makes the use of extra oil additives unnecessary, as these oils already contain a balanced treatment of additives.

1.3.8 Oil Consumption

Once the engine is stopped, check the oil level daily. If the engine has just been stopped and it is warm, wait approximately five minutes to allow the oil to drain back to the oil pan before checking. Add oil as necessary.

CAUTION

DO NOT overfill engine with oil.

All diesel engines are designed to consume some oil, so it is normal to add oil periodically. An engine used in heavy-duty operation will consume more oil than one in normal operation.

1.3.9 Oil Change

WARNING

A hot engine or engine oil can be dangerous. Serious burns can result from contact with a hot engine or oil. Take precautions when draining the oil. Wear gloves or let the engine cool down before draining.

WARNING

When draining the oil, use the proper tools and keep away as far as possible. Raise the elbow so the forearm is parallel to the ground to prevent oil running down the arm, causing burns.

CAUTION

Always dispose of all lubricants (motor oil, coolant, gear box oils, etc) and filters according to Federal or local regulations. Used oil disposed of in nature or waterways contaminates our drinking water and kills wildlife.

WARNING

Prolonged contact with used engine oil may be harmful. Use rubber gloves when handling used oil. Wash skin thoroughly if it comes in contact with used oil.

It is important to drain as much oil as possible. Try to change oil immediately after driving, when the oil is warm. Always replace the oil filters when changing the oil.

Component	Capacity (L)
Oil pan	24 (min) – 32 (max)
Engine block	1
Filters (3)	6
Total oil fill (empty)	39

NOTE

Since about 1 liter of oil remains in the engine after draining, approximately 38 liters will be needed for a complete oil change.

1.3.10 Oil Filters Change

WARNING

Hot oil can cause severe burns. DO NOT allow hot oil to contact the skin. When changing oil, wear protective gloves.

CAUTION

Volvo-branded oil filters are designed to provide the proper level of filtration and protection for Volvo engines. Filters that do not meet the same stringent requirements may cause unsatisfactory results.

- Clean around the oil filter housing and remove the filters using the oil filter wrench or the oil filter socket.

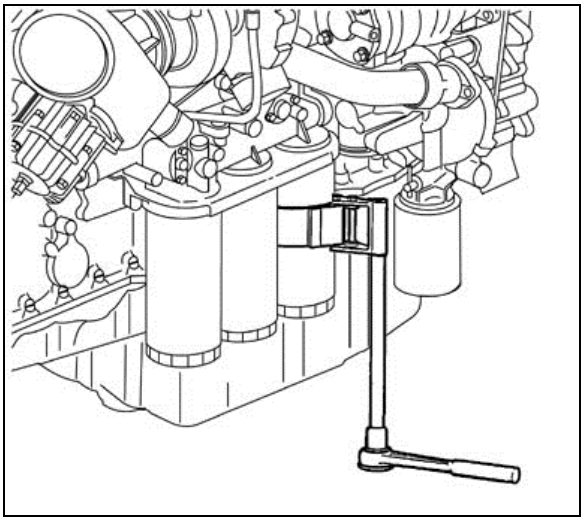

FIGURE 5: OIL FILTER WRENCH

- Prefill the new oil filters with approved engine oil. Also, lubricate the filter gaskets with engine oil (1). Hand tighten the oil filters until they contact the sealing surface of the oil filter housing (2). Manually tighten the oil filters an additional ¾ to 1 full turn (3).

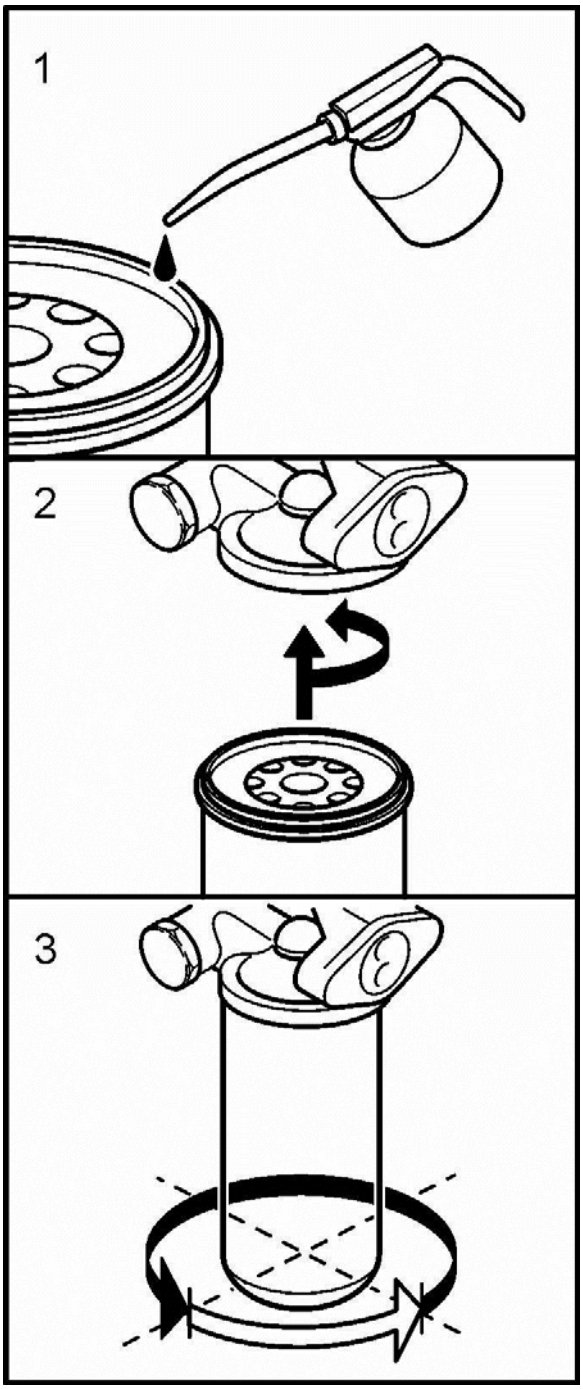

FIGURE 6: OIL FITER REPLACEMENT

- Start the engine and check for leaks around the oil filter housing and filters.
- Check the oil level. Add approved engine oil to the recommended level, if necessary. Do not overfill.

1.3.11 Checking the Oil Level

Ensure that the vehicle is parked on level ground before checking the oil level. Wait five minutes after shutting off the engine and then proceed with checking the oil.

CAUTION

DO NOT let the oil level fall below the marking on the dipstick. **DO NOT** overfill so the level is above the upper marking on the dipstick. This could lead to excessive oil temperature and/or poor crankcase breather performance. Add oil through the oil filler pipe as required in order to maintain level within the safe range.

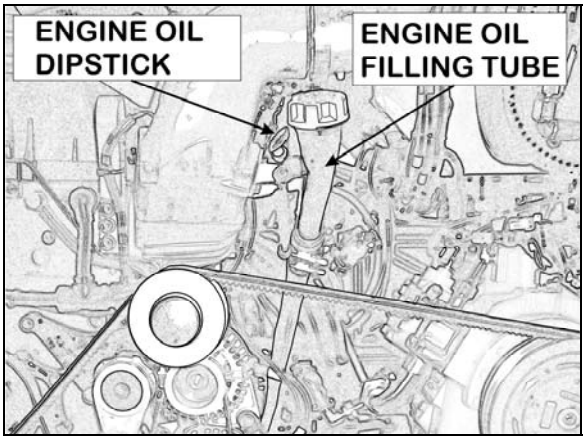

FIGURE 7: ENGINE OIL FILLING TUBE

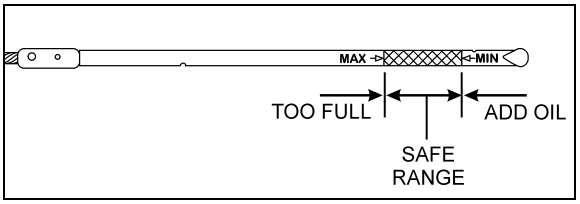

FIGURE 8: ENGINE OIL LEVEL DIPSTICK

1.4 POWER PLANT ASSEMBLY REMOVAL

To access the engine or engine-related components, the vehicle power plant assembly must be removed as a whole unit by means of a slide-out cradle. The power plant assembly includes the engine, transmission (including retarder if so equipped), air compressor, alternator and transmission oil cooler.

Remove the power plant assembly as follows:

CAUTION

Tag hoses and cables for identification before disconnecting in order to facilitate reinstallation.

Plug all openings to prevent dirt from entering the system.

NOTE

No parts within the EECU are serviceable. If found defective, replace the EECU as a unit.

- **First**

1. Shut off the heater line shut-off valves.
2. Disconnect the battery or batteries from the starting system by removing one or both of the battery cables from each battery system. With the electrical circuit disrupted, accidental contact with the starter button will not produce an engine start.

WARNING

Due to the heavy load of the rear bumper assembly, it must be adequately supported before attempting to remove it.

3. Remove the rear bumper assembly complete with hitch if applicable from the vehicle. Refer to Section 18, BODY, under "REAR BUMPER REMOVAL".
4. Using the quick-connect drain hose, drain the engine cooling system. Refer to Section 05, COOLING under "DRAINING COOLING SYSTEM".
5. If applicable, disconnect the block heater connector located near the EGR mixing chamber.

- **With Vehicle Raised**

1. Using a vehicle lift or jack, raise vehicle to access transmission fasteners and wire harness.
2. Disconnect propeller shaft.
3. Partially remove L.H. side transmission protective panel to access connectors.
4. On vehicles equipped with an automatic transmission provided with a hydraulic output retarder, disconnect steel-braided airline from pressure regulator output. The pressure regulator is mounted in the upper section of engine compartment backwall and is accessible through the engine compartment R.H. side door.

5. Untighten bolts A and C. Remove bolts B and D and pivot oil cooler towards transmission. Reinstall bolts B and D.

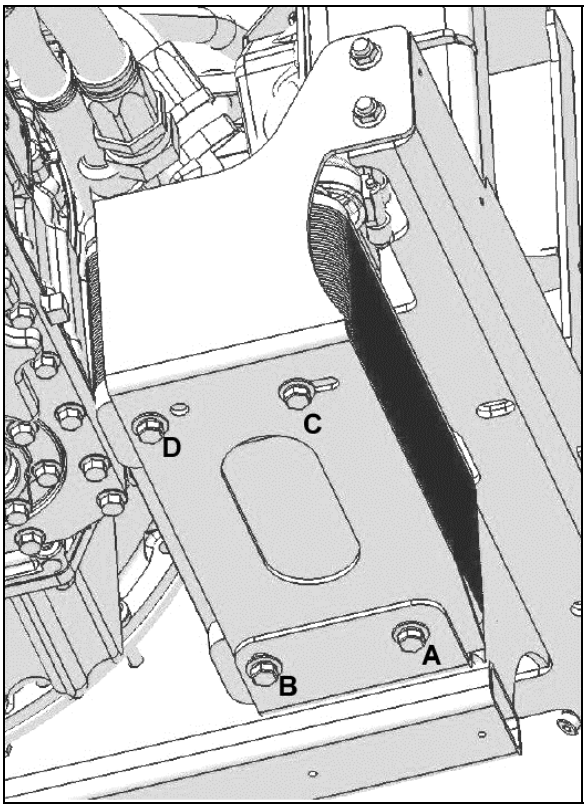

FIGURE 9: COOLER POSITION DURING ENGINE CRADLE INSERTION OR REMOVAL

6. From underneath, unfasten the bolts fixing the engine cradle.
7. Disconnect the engine coolant hose near the starter.
8. Disconnect air compressor suction and discharge hoses.

- **With Vehicle Lowered**

Lower the vehicle enough to access all components.

➢ Engine Compartment R.H. side

- If applicable, remove auxiliary sump tank to ease access.
- Disconnect cables from two chassis grounds located on diagonal member.
- Inside engine compartment, disconnect starter, alternators and heater cables. Also disconnect AFSS cable if applicable.
- Disconnect from engine, connector C398 and vehicle interface harness connector located above EECU connectors. Also disconnect DPF cable.
- Disconnect power steering pump hoses.
- Shut off fuel line shut-off valve.
- Close engine fuel supply shut-off valve on primary fuel filter or Fuel Pro. Disconnect the fuel line located above fuel filters and connected to inlet port. On vehicles equipped with the optional water-separator-fuel-filter, disconnect the connector and remove cable ties from cradle.
- Disconnect fuel return line located above fuel filters.
- Disconnect alternators cooling duct and put aside.

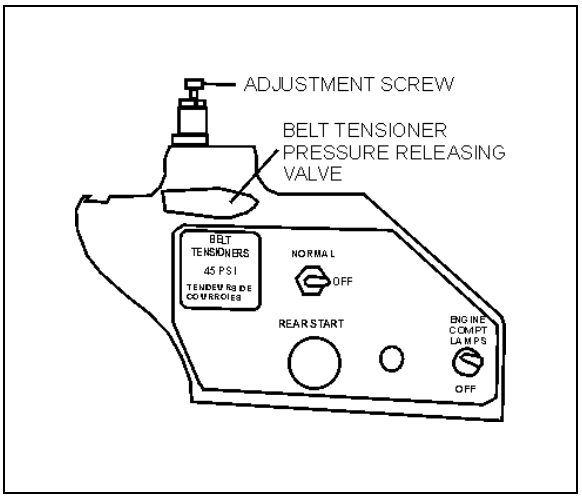

FIGURE 10: BELT TENSIONER VALVE 12200

- Locate the A/C compressor belt tensioner pressure releasing valve (Fig. 10). Turn pressure releasing valve handle counterclockwise in order to release pressure in belt-tensioner air bellows and loosen belts. Remove the belts.
- Disconnect and remove the engine-air intake duct mounted between air cleaner housing and turbocharger inlet.

⚠ CAUTION

To avoid damage to turbocharger, cover the turbocharger inlet opening to prevent foreign material from entering.

- Disconnect and remove the exhaust pipe mounted between the flexible coupling and the pipe going to the Diesel Oxidation Catalyst (DOC) and Diesel Particulate Filter (DPF) assembly. If necessary, refer to Section 4: EXHAUST SYSTEM under “EXHAUST AFTERTREATMENT SYSTEM OVERVIEW".
- Disconnect and remove the air intake duct mounted between the charge air cooler outlet and the engine intake.

➢ Engine Compartment L.H. side

- Disconnect fan driving shaft from radiator fan drive mechanism support.

CAUTION

To avoid damage to cooling fan right angle gearbox, make sure the power plant cradle clears the gearbox when pulling the engine out.

- Disconnect and remove section of coolant pipe assembly mounted between the radiator outlet and the water pump inlet.
- Disconnect and remove a section of coolant pipe assembly mounted between the thermostat housing and the radiator inlet.
- Disconnect the electric fan-clutch connector located near the cooling fan right angle gearbox.
- Disconnect and remove the air intake duct mounted between the turbocharger outlet and the air cooler inlet.
- Disconnect and remove surge tank hose connected to pump inlet pipe and hose connected to engine.
- Unfasten and put aside engine compartment lighting fixture and turbocharger fire suppression nozzle if applicable.
- Disconnect Exhaust Aftertreatment System control cable.

- **Last**

1. Inspect the power plant assembly to ensure that nothing will interfere when sliding out the cradle. Check for connections or hoses not mentioned in this list as some vehicles are equipped with special or aftermarket components.
2. Make sure the ten retaining bolts, washers and nuts securing the power plant cradle to the vehicle rear subframe are removed (Fig. 13).

NOTE

Check if any spacer(s) have been installed between power plant cradle and vehicle rear subframe, and if so, note position of each washer for reinstallation purposes.

3. Using a suitable equipment with a minimum capacity of 4,000 lbs (1 800 kg), slightly raise the power plant cradle.
4. Pull engine out slowly from the engine compartment. Make sure all lines, wiring and accessories are disconnected and are not tangled.

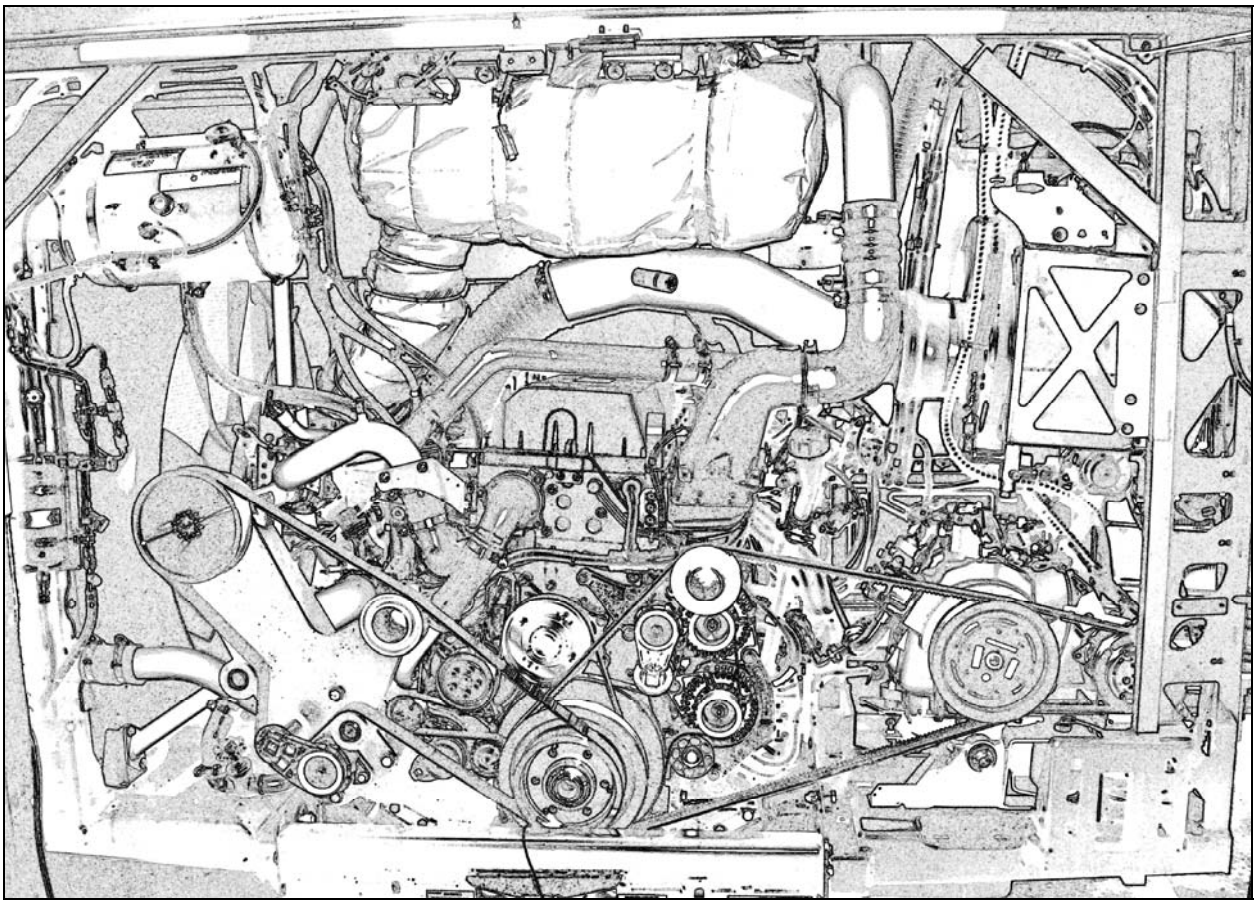

FIGURE 11: ENGINE COMPARTMENT X3 COACHES (TYPICAL) 01184_A

1.5 POWER PLANT ASSY. INSTALLATION

To install a power plant assembly, follow the same procedure as in "Power Plant Assembly Removal" except in reverse order, then proceed with the following:

1. Torque the power plant cradle mounting bolts to 190 lbf-ft (258 Nm).
2. Remove bolts B and D. Untighten bolts A and C then pivot oil cooler as per figure 12. Install bolts B and D and tighten all bolts.
3. Refill cooling system with saved fluid (refer to Section 05, COOLANT SYSTEM).
4. Once engine fuel system has been drained, it will aid restarting if fuel filters are filled with fuel oil (refer to Section 03, FUEL SYSTEM).
5. Start engine for a visual check. Check fuel, oil, cooling, pneumatic and hydraulic system connections for leakage. Test operation of engine controls and accessories.

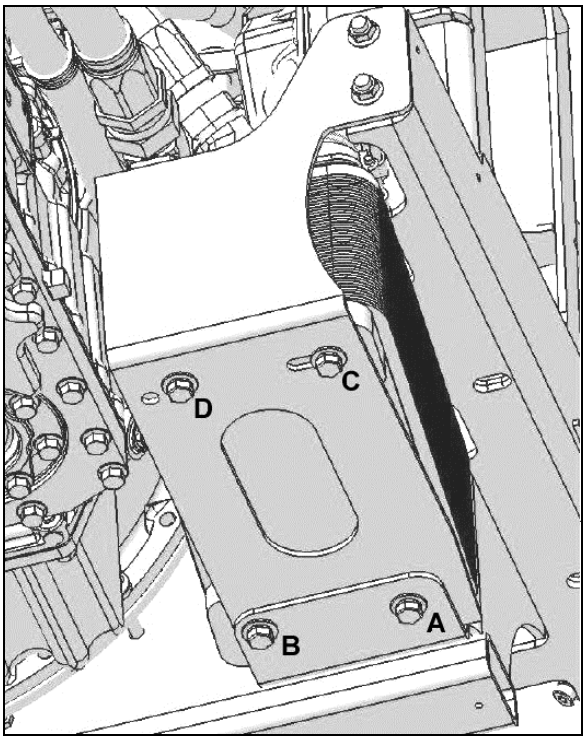

FIGURE 12: NORMAL OIL COOLER POSITION

1.6 ENGINE MOUNTS

The power plant assembly is mounted to the cradle by means of rubber mounts and supports.

Two engine support brackets are used at the front of the engine while two rubber mounts are mounted underneath the engine & radiator fan drive mechanism support and the engine & alternator support (Fig. 13).

It is recommended that new rubber mounts be installed at each major overhaul.

NOTE
Refer to the table on the following page for engine cradle tightening torques.

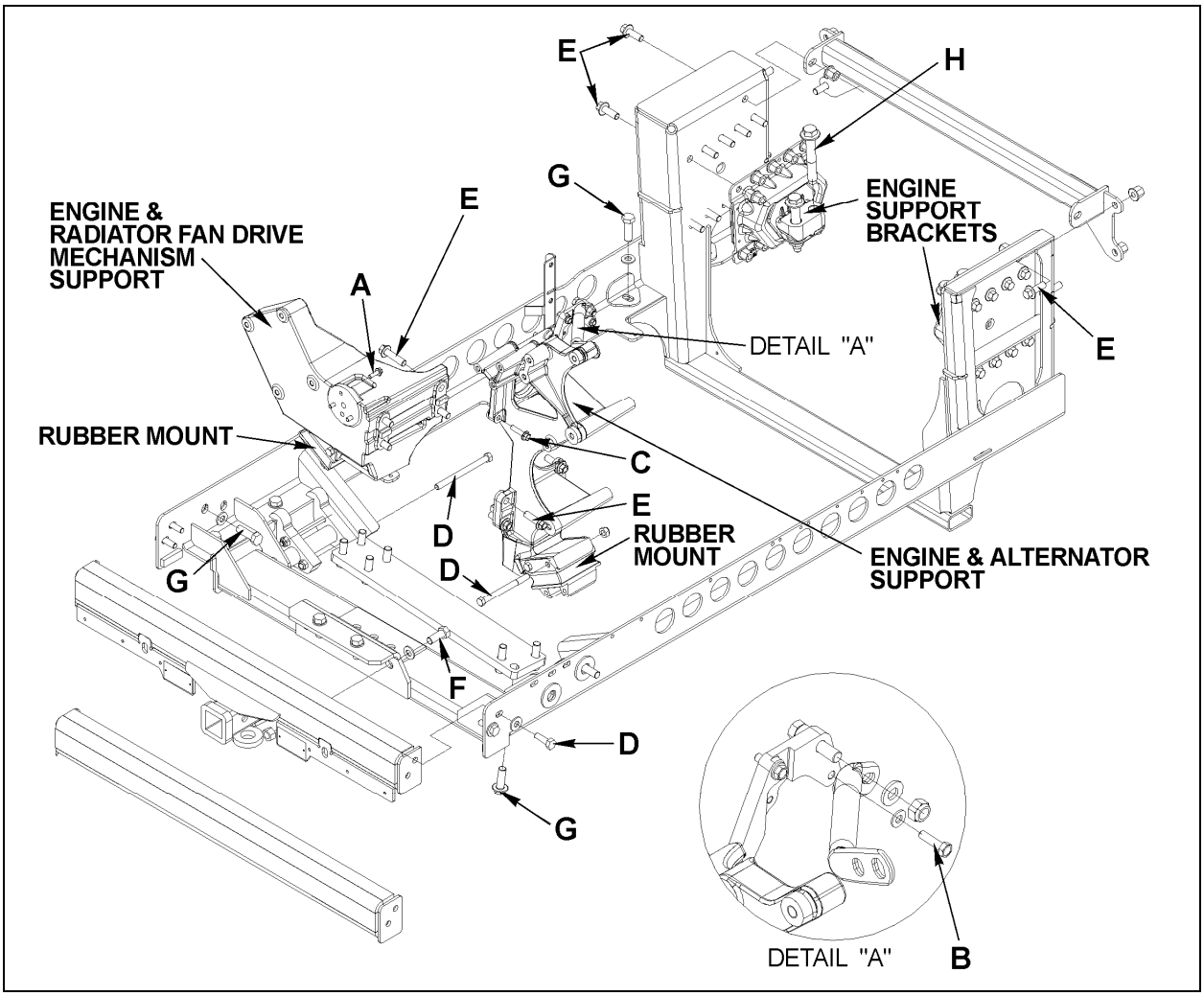

FIGURE 13: VOLVO ENGINE POWER PLANT CRADLE INSTALLATION

DRY TORQUES			
REFERENCE	DESCRIPTION	Lbf-Ft	Nm
A	SCREW, CAP HEXAGONAL HEAD M8 – 1.25 G8.8	16	22
B	SCREW, CAP HEXAGONAL HEAD M8 – 1.25 G10.9	22	30
C	SCREW, CAP HEXAGONAL HEAD M10 – 1.5 G10.9	43	58
D	SCREW, CAP HEXAGONAL HEAD M12 – 1.75 G8.8	60	81
E	SCREW, CAP HEXAGONAL HEAD M14 – 2.0 G8.8	90	122
F	SCREW, CAP HEXAGONAL HEAD M16 – 2.0 G8.8	140	190
G	SCREW, CAP HEXAGONAL HEAD M16 – 2.0 G10.9	190	258
H	SCREW, CAP HEXAGONAL HEAD M20 – 2.5 G10.9	450	610

2. ELECTRONIC FOOT PEDAL ASSEMBLY (EFPA) & THROTTLE POSITION SENSOR

The Electronic Foot Pedal Assembly (EFPA) connects the accelerator pedal to a Throttle Position Sensor (TPS). The (TPS) is a device, which sends an electrical signal to the Motor Control Module (MCM). The TPS varies in voltage depending on how far the pedal is depressed. The system is installed in the space normally occupied by a mechanical foot pedal. The (EFPA) has maximum and minimum stops that are built into the unit during manufacturing (Fig. 14). The (TPS) converts the operator's foot pedal input into a signal for the MCM.

When installed by the equipment manufacturer, the TPS should not require adjustment. If the TPS is suspected of being misadjusted, confirm that the sensor is installed in accordance with the manufacturer's specifications. It is recommended that the idle count be at 50 or higher with a full throttle count of up to 200.

The TPS is self-calibrating and therefore has no optimum closed throttle or wide open throttle count value. If the counts are within the 50 to 200 range, the sensor is properly set.

Monitor the (TPS) at the controls as you move it through its full stroke. Be sure there is no misalignment or obstruction preventing the smooth movement of the TPS through the full stroke. Using a diagnostic data reader, check that the idle and full throttle position counts do not fall within the error zones. The error zones occur when the idle position is less than 14 counts, or when the full throttle position is more than 233 counts. Should these conditions occur, the CPC will signal diagnostic codes of 21-12 for idle error and 21-23 for wide-open throttle error.

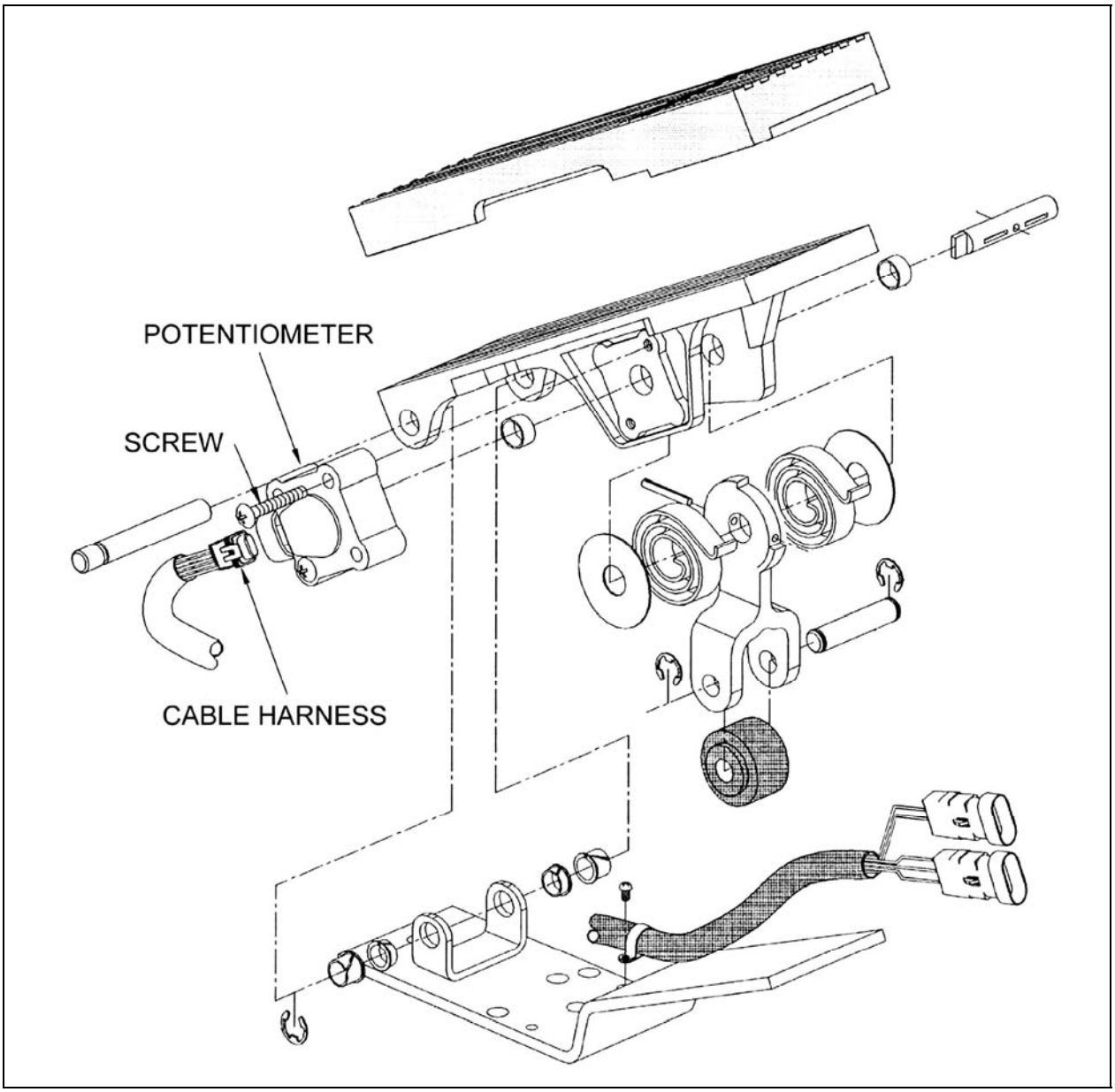

FIGURE 14: ELECTRONIC FOOT PEDAL ASSEMBLY 03035

3. SPECIFICATIONS

Volvo D13 Engine

Make ..... Volvo

Type ..... Diesel four cycle/in-line direct injection engine

Description ..... Turbo/Air to air charge cooled

No. of cylinders 6

Operating range ..... 1400-1800 RPM

X3-45 Coaches Peak Power Rating ..... 435 HP (324 kW)

X3-45 Coaches Peak Torque Rating ..... 1700 Ft-lb (2304 Nm)

Le Mirage XLII Entertainer Bus Shells and X3-45 VIP Peak Power Rating ..... 500 HP (373 kW)

Le Mirage XLII Entertainer Bus Shells and X3-45 VIP Peak Torque Rating .....1770 Ft-lb (2400 Nm)

Low Idle .....600 rpm

Fast Idle.....2150 rpm

Maximum full load revolutions.....1900 rpm

Engine oil level quantity

Oil Pan Capacity, Low Limit .....25 quarts/24 liters

Oil Pan Capacity, High Limit .....34 quarts/32 liters

Total Engine Oil Capacity with Filters .....41 quarts/39 liters

Lubricating oil filter elements

Type ..... By-pass

Prevost number..... 510938

Type .....Full Flow

Prevost number..... 488736

Torque specification

Engine oil filter..... Tighten ¾ of a turn to 1 full turn after gasket contact

Filters

Engine Air Cleaner Filter

Prevost number 530197

Engine Coolant Filter/Conditioner

Prevost number 20458771

SECTION 04: EXHAUST AND AFTERTREATMENT SYSTEM

CONTENTS

1. EXHAUST AFTERTREATMENT SYSTEM OVERVIEW 2

1.1 MAINTENANCE 2
1.2 FLEXIBLE COUPLING INSTALLATION 3

2. DIESEL PARTICULATE FILTER (DPF) 3

2.1 DIESEL PARTICULATE FILTER ASSEMBLY REMOVAL 4

3. CATALYTIC CONVERTER 5

3.1 REMOVAL 5
3.2 ASSEMBLING CATALYTIC CONVERTER 7

4. DIFFUSER ASSEMBLY 8

4.1 DIFFUSER ADJUSTMENT 8
4.2 MAINTENANCE 9

5. DIESEL EXHAUST FLUID (DEF) TANK AND INJECTION SYSTEM 9

5.1 DIESEL EXHAUST FLUID 10
5.2 DEF TANK CLEANING 10
5.3 PUMP ASSEMBLY FILTER ELEMENT REPLACEMENT 11

6. AFTERTREATMENT FUEL INJECTOR CLEANING 12

6.1 REPLACEMENT 12

7. TORQUE SPECIFICATIONS 13

ILLUSTRATIONS

FIGURE 1: EXHAUST SYSTEM 2
FIGURE 2: FLEXIBLE COUPLING 3
FIGURE 3: DIESEL OXIDATION CATALYST (DOC) & DIESEL PARTICULATE FILTER (DPF) ASSEMBLY 4
FIGURE 4: TAKING DOC AND DPF APART 5
FIGURE 5: CATALYTIC CONVERTER 6
FIGURE 6: DIFFUSER ASSEMBLY 8
FIGURE 7: DIFFUSER POSITION ADJUSTMENT 9
FIGURE 8: DEF TANK AND PUMP LOCATION 9
FIGURE 9: AFTERTREATMENT FUEL INJECTOR 12
FIGURE 10: FUEL LINE FITTING 13

1. EXHAUST AFTERTREATMENT SYSTEM OVERVIEW

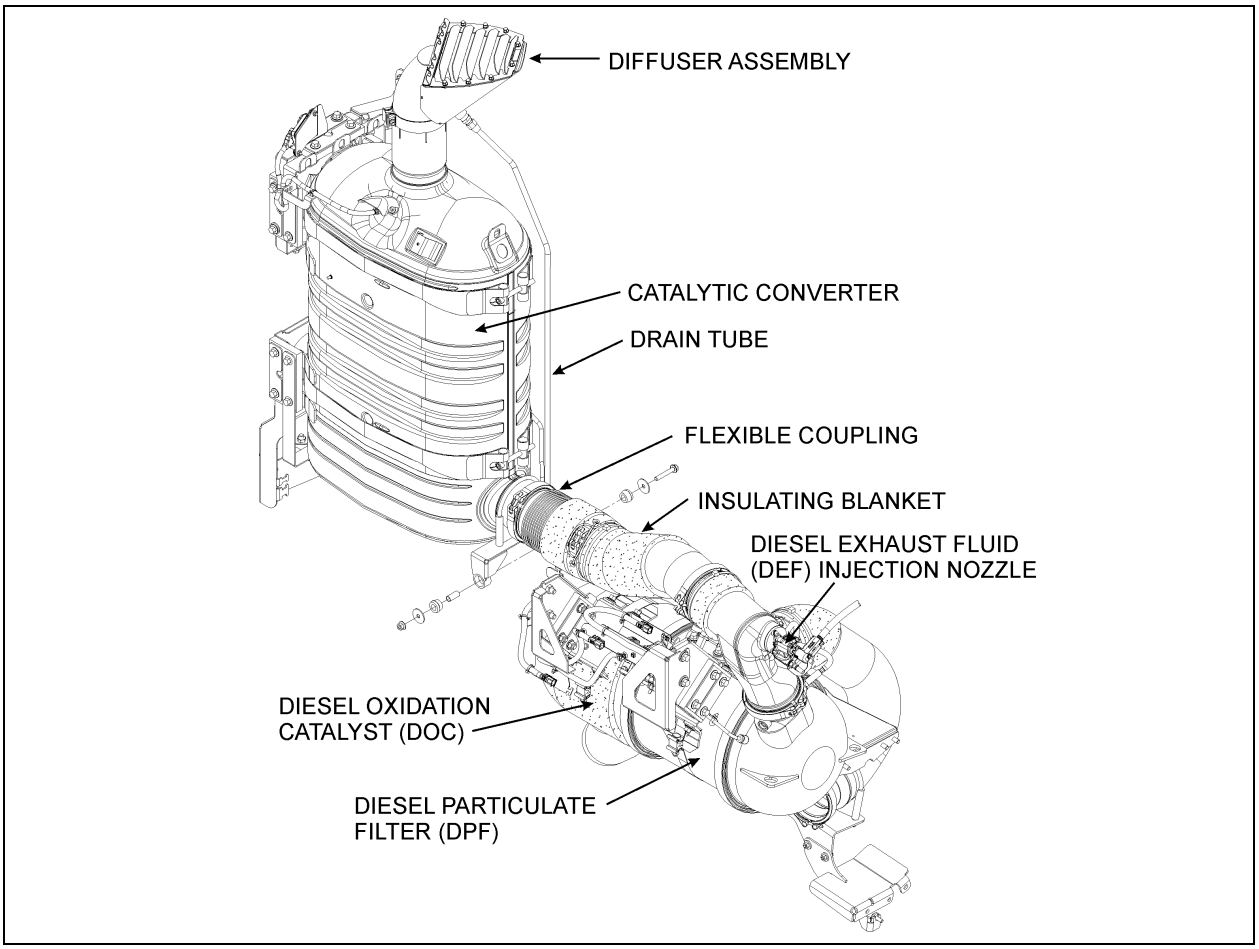

FIGURE 1: EXHAUST SYSTEM

The technology behind clean emissions is through the immediate aftertreatment of engine exhaust. The process for reducing NOx via aftertreatment is called Selective Catalytic Reduction (SCR). It requires a catalytic converter into which is injected Diesel Exhaust Fluid (DEF). The primary component of DEF is water; the active component is urea. Urea is a nitrogen compound that turns to ammonia when heated. When a urea-and-water solution is injected into the exhaust stream and passed over a catalyst, the urea reacts with the NOx to form nitrogen and water vapor – two clean and harmless components of the air we breathe. The aftertreatment system primary function is to capture and oxidize (regenerate) the particulate matter (soot) in the engine exhaust gases and to reduce NOx. To achieve this goal, the exhaust aftertreatment system is split into two main sections: the exhaust gases first enter the **Diesel Oxidation Catalyst (DOC)** and **Diesel Particulate Filter (DPF)** assembly to capture and regenerate the soot on a regular or passive basis, then the exhaust gases flow through the **catalytic converter** to reduce NOx to minimum level. Through constant monitoring of the exhaust gas temperature and the system back pressure, the engine management system (EMS) is able to manage regeneration.

The exhaust aftertreatment system is rubber mounted to the vehicle structure. This feature reduces the transmission of vibrations to the exhaust aftertreatment system thus resulting in extended life of the system, brackets and also noise reduction.

1.1 MAINTENANCE

Inspect the exhaust system periodically for restrictions and leaks. Figure 1 presents the major components of the exhaust system. Exhaust leaks are commonly the result of loose

clamp bolts, corroded or punctured pipes. In addition to excessive noise, a leaking exhaust system could allow toxic gases to enter the vehicle. Damage to surrounding components from hot gases could result as well. Replace damaged or corroded exhaust components immediately.

Inspect the exhaust system as follows:

- At vehicle inspection intervals ;
- Whenever a change is noticed in the sound of the exhaust system ;
- When components close to the exhaust system get unnaturally dirty ;
- Whenever the exhaust system is damaged.

Replace damaged or corroded exhaust system components without delay.

When operating the engine in a service garage or in a closed area, the exhaust must be vented to the outside. Place the shop vent hose over the exhaust outlet pipe.

DANGER

Avoid breathing exhaust gases since they contain carbon monoxide which is odorless and colorless but harmful. Carbon monoxide is a dangerous gas that can cause unconsciousness and can be lethal. If, at any time you suspect that exhaust fumes are entering the vehicle, locate and correct the cause(s) as soon as possible.

NOTE

The key to successful regeneration is high exhaust temperature for an extended period of time. For this reason, insulating blankets must remain permanently on the exhaust system.

If insulating blankets are removed from the system, the exhaust gases temperature may not be high enough to permit efficient particulate oxidation during passive regeneration, resulting in increased fuel consumption due to overuse of active or stationary regeneration.

1.2 FLEXIBLE COUPLING INSTALLATION

The flexible coupling contains a rigid interior pipe (Fig. 2). To allow appropriate flexibility once installed, be sure interior pipe is concentric to flexible part and that the flexible coupling is straight when installed. This piece of equipment handles vibration and thermal expansion.

CAUTION

Adequately support the exhaust system line. The load of the exhaust line **must not** be transferred to the turbocharger.

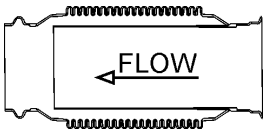

FIGURE 2: FLEXIBLE COUPLING 04022

2. DIESEL PARTICULATE FILTER (DPF)

Besides trapping soot, the **DPF** (**Diesel Particulate Filter**) also traps the ash that has been generated when additives in engine oil are burned. However, unlike soot, ash cannot be oxidized. The ash that accumulates in the filter will eventually cause an increase in exhaust back pressure. EMS will constantly monitor the ash accumulation and forecast the approximate time until DPF ash cleaning is required. This allows you the opportunity to plan for the DPF ash cleaning interval. If ash cleaning is not performed proactively, and the back pressure increases beyond the system limit, EMS will flag the amber warning light on the telltale panel, notifying the operator that an ash cleaning is required. Clean remanufactured DPF cartridge will be available through Prevost on an exchange basis. For most commuter vehicle applications and duty cycle, this will occur after approximately 4500 hours of operation.

WARNING

HOT SURFACES

Keep yourself clear of hot Aftertreatment System surfaces, particularly during and after active or stationary regeneration. Hot surfaces can cause serious burns.

Make sure Aftertreatment System components are cold before handling.

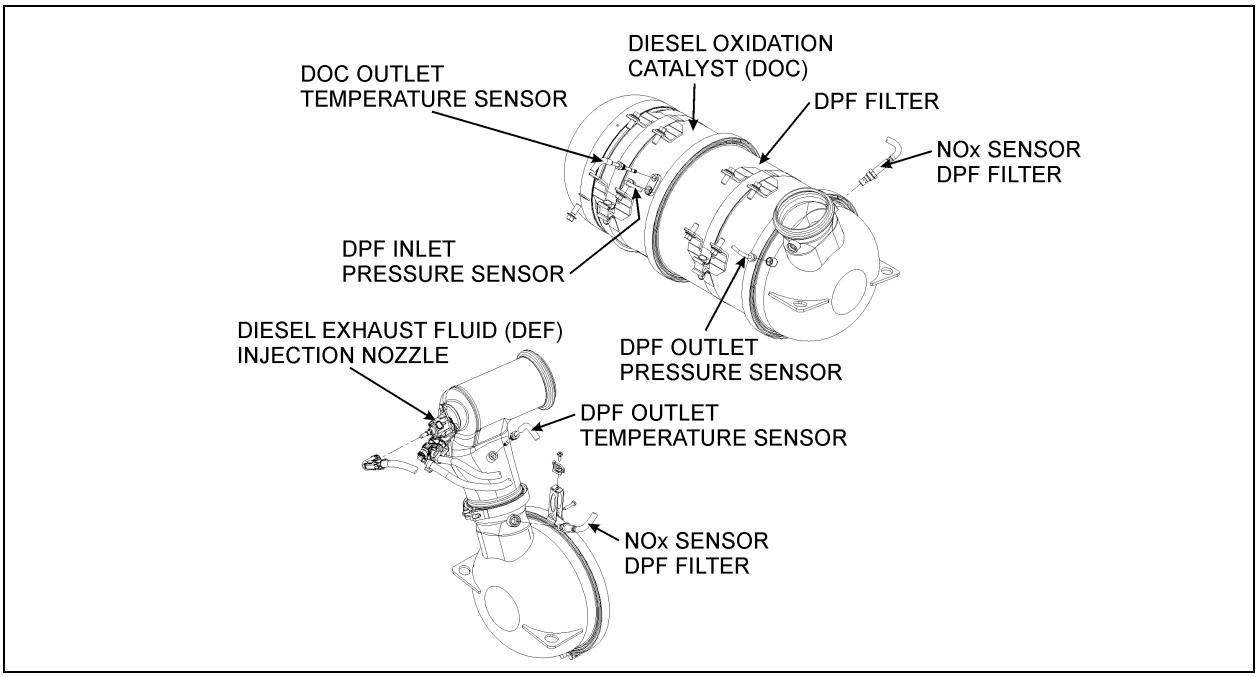

FIGURE 3: DIESEL OXIDATION CATALYST (DOC) & DIESEL PARTICULATE FILTER (DPF) ASSEMBLY 04016

WARNING

HOT EXHAUST

During stationary regeneration, exhaust gases temperature may get very hot at the diffuser outlet. Do not direct diffuser at combustible materials. Before initiating stationary regeneration, make sure that the diffuser outlet is clear of objects and that no one is working near the diffuser outlet. Stationary regenerations must be undertaken outdoors only.

Never initiate regeneration when exhaust gas collection system is in place.

WARNING

TOXICITY

Do not initiate a stationary regeneration in a closed area like a garage. **Stationary regeneration must be undertaken outdoors only.**

2.1 DIESEL PARTICULATE FILTER ASSEMBLY REMOVAL

To remove the DPF, proceed as follows:

CAUTION

External and internal temperatures remain hot long after engine has been shut down. Allow the Exhaust Aftertreatment System to cool before handling. Wear protective clothing and glove while servicing.

1. First, open the engine compartment doors;
2. Put insulating blanket aside;
3. Disconnect pressure, temperature and NOx sensors;
4. Support Diesel Oxidation Catalyst (DOC) and Diesel Particulate Filter (DPF) assembly;

CAUTION

HEAVY DEVICE

A suitable lifting or holding device is required. Properly support and attach lifting equipment to prevent the DOC and DPF assembly from falling when servicing.

5. Unfasten straps holding DOC and DPF assembly;
6. Carefully lower DOC and DPF assembly;
7. To make sure components are reinstalled in the same position, mark position of DOC,

DPF and V-band clamps in relation with one another before taking apart;

CAUTION

FRAGILE - HANDLE WITH CARE

Use extreme care when handling DPF cartridge as it could be damaged or destroyed by dropping or sudden impact.

Clean remanufactured DPF cartridge will be available on an exchange basis. For this reason, it is very important to maintain the cartridge in perfect condition. Damaged cartridge may not be refunded.

8. Also replace V-band clamps and gaskets when replacing DPF filtration module;

NOTE

When replacing the DPF cartridge, refer to the specifications on the DPF attached tag for proper replacement DPF selection.

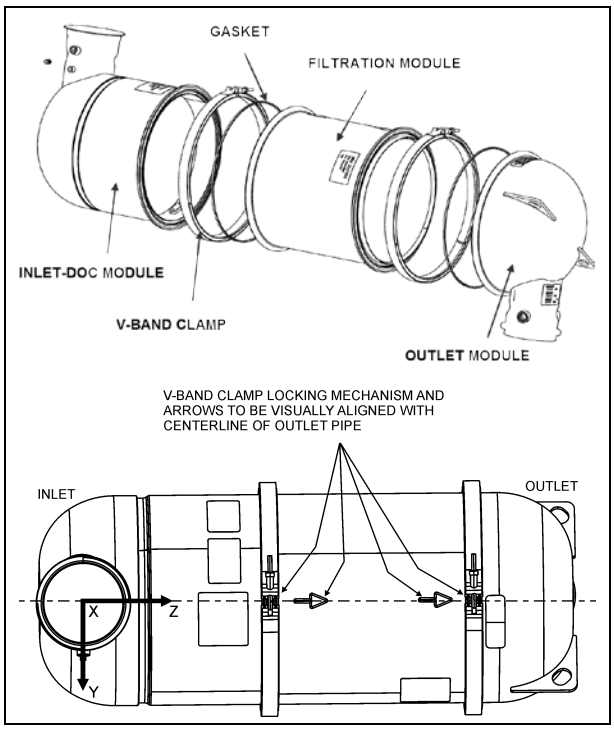

FIGURE 4: TAKING DOC AND DPF APART

9. Always put DOC and DPF filtration module back together again in a vertical position to facilitate gaskets positioning;

   For proper DPF assembly installation, inlet and outlet alignment is important. When reassembling the DPF, a straight edge must be used to align inlet and outlet.

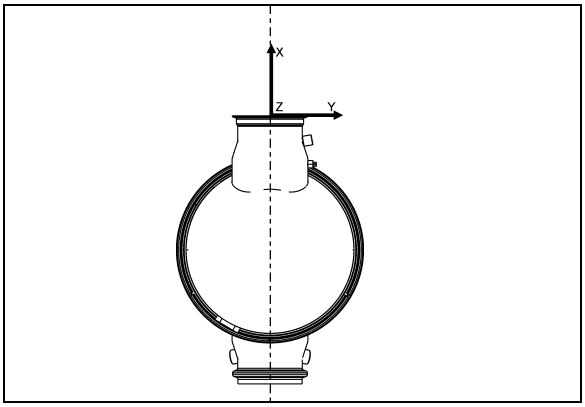

10. Torque V-band clamps to 20 lbf-ft;

CAUTION

Always torque clamps by hand.

11. With a rubber mallet, hit clamps forcefully around circumference to make sure gasket is fully seated;
12. Support Diesel Oxidation Catalyst (DOC) and Diesel Particulate Filter (DPF) assembly during reinstallation;
13. Reconnect pressure, NOx and temperature sensors;
14. Fasten straps holding DOC and DPF assembly;
15. Put insulating blanket back.

3. CATALYTIC CONVERTER

In the first instance, the catalytic converter of the Selective Catalytic Reduction (SCR) does not need any maintenance. Unless an accident or damage occurs in the vicinity of the engine compartment; the catalytic converter will not have to be replaced.

However if the catalytic converter must be replaced, use one of the two following procedures:

3.1 REMOVAL

Procedure # 1

Radiator must be removed in order to lower the catalytic converter for replacement.

- Set the starter selector switch to the *OFF* position.
- Shut off the heater line shut-off valves.
- Using the quick-connect drain hose, drain the engine cooling system. Refer to Section 05, COOLING under "DRAINING COOLING SYSTEM".

CAUTION

Tag hoses and cables for identification before disconnecting in order to facilitate re-installation. Plug all openings to prevent dirt from entering the system.

- Disconnect and remove section of coolant pipe assembly mounted between the radiator outlet and the water pump inlet.

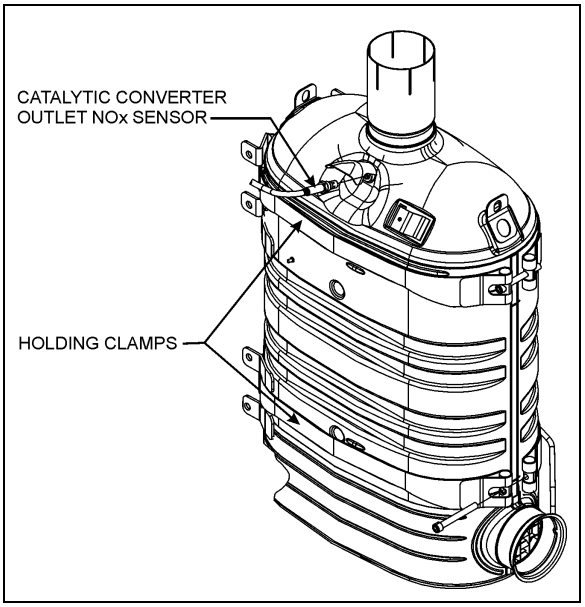

FIGURE 5: CATALYTIC CONVERTER

- Disconnect and remove a section of coolant pipe assembly mounted between the thermostat housing and the radiator inlet.
- Disconnect the electric fan-clutch connector located near the cooling fan right angle gearbox.
- Disconnect and remove the air intake duct mounted between the turbocharger outlet and the air cooler inlet.
- Open radiator door. Unfasten bolts and screws fixing radiator sealing frame.
- Remove radiator and air cooler assembly.

WARNING

Due to the heavy load of the radiator assembly, it must be adequately supported before attempting to remove it.

- Safely support catalytic converter from the top.
- Disconnect catalytic converter outlet NOx sensor.
- Remove clamps holding catalytic converter then lower.
- Remove or disconnect any piece of equipment or component that might be in the way or that might prevent removing the catalytic converter.

Procedure # 2

- Set the starter selector switch to the *OFF* position.
- Shut off the heater line shut-off valves.
- Remove DOC and DPF assembly (Refer to paragraph 2.1 in this Section).
- Remove pipe connecting DOC & DPF assembly to catalytic converter.
- Using the quick-connect drain hose, drain the engine cooling system. Refer to Section 05, COOLING under "DRAINING COOLING SYSTEM".

CAUTION

Tag hoses and cables for identification before disconnecting in order to facilitate re-installation. Plug all openings to prevent dirt from entering the system.

- Disconnect and remove section of coolant pipe assembly mounted between the radiator outlet and the water pump inlet.
- Disconnect and remove a section of coolant pipe assembly mounted between the thermostat housing and the radiator inlet.
- Disconnect and remove a section of air intake duct mounted between the air cooler outlet and the engine.
- Remove coolant surge tank.

- Release tension from drive belt (Refer to paragraph 12.1 and 15.1 in Section 05: Cooling System).
- Cut cable ties and disconnect electrical connector from fan clutch. Remove fan drive shaft fasteners at the gear box.
- Remove radiator fan drive mechanism support.
- Safely support catalytic converter from the top.
- Disconnect catalytic converter outlet NOx sensor.
- Remove clamps holding catalytic converter then lower.
- Remove or disconnect any piece of equipment or component that might be in the way or that might prevent removing the catalytic converter.

3.2 ASSEMBLING CATALYTIC CONVERTER

Before removing

- Mark, with a vertical line the angular position of the lower (both sides) and upper clamps with regard to the clamps support located on the catalytic converter.

Lower

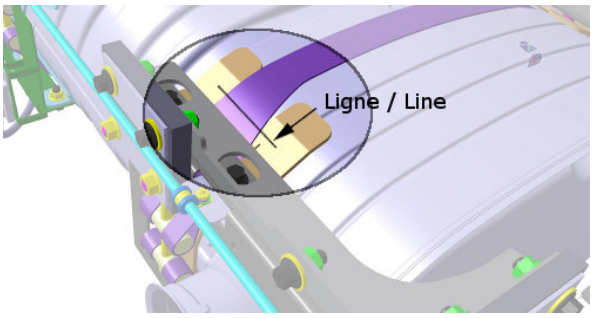

Upper

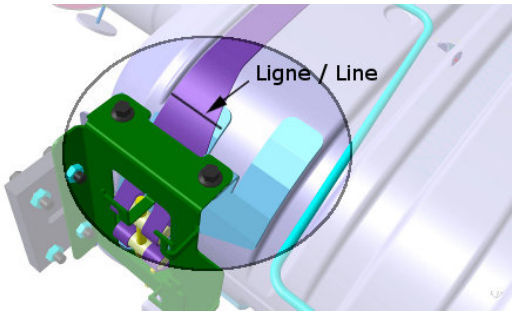

- Mark, with a vertical line the central position of the lower and upper clamps with regard to the emboss located at the bottom and at the top of the catalytic converter.

Lower

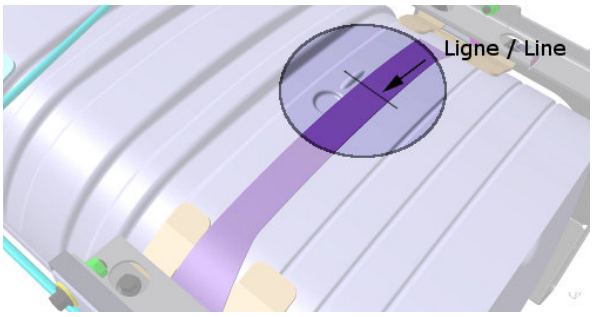

Upper

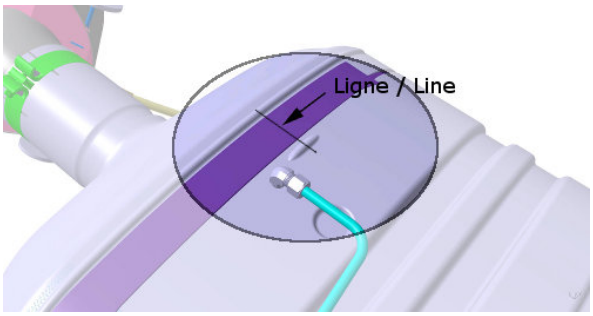

Assembling

- Position the upper clamps above the upper emboss and the lower clamps below the lower emboss of the catalytic converter.

Lower

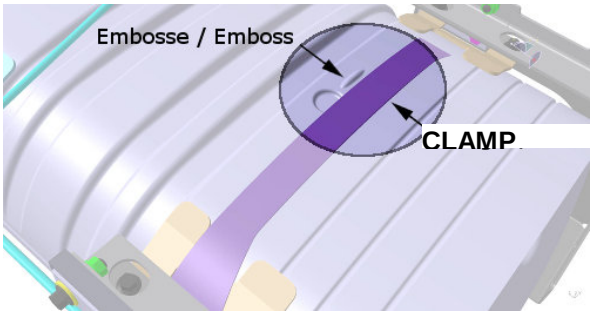

Upper

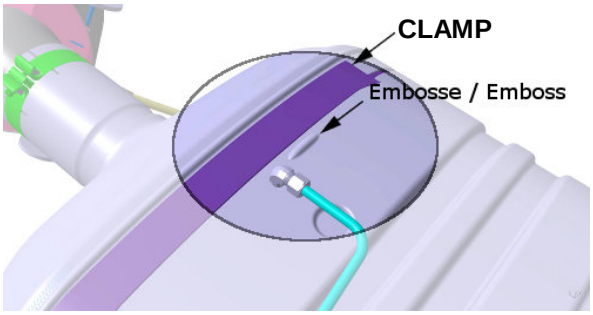

- Using the lines made earlier, line up the lower and upper clamps with regard to the emboss of the converter and afterward, line up the lines made earlier on the clamps with regard to the clamp supports on the catalytic converter.

Lower

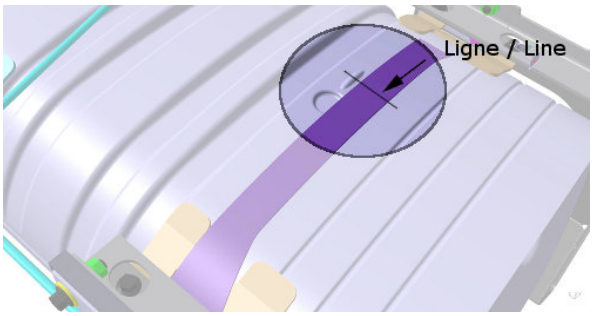

Upper

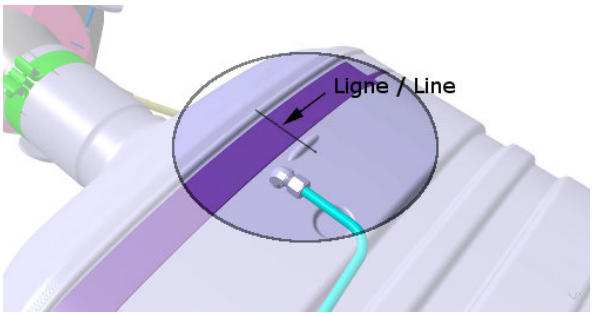

Lower

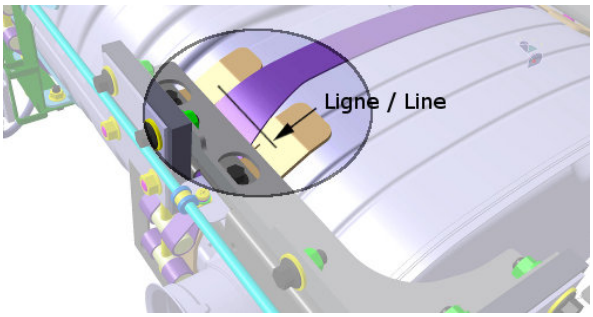

Upper

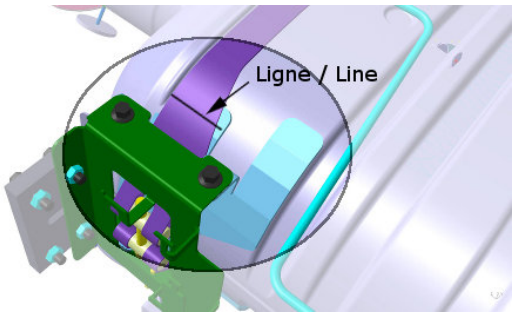

- Before tightening the parts, make sure that the catalytic converter lower support is well centered with the exhaust inlet of the catalytic converter.

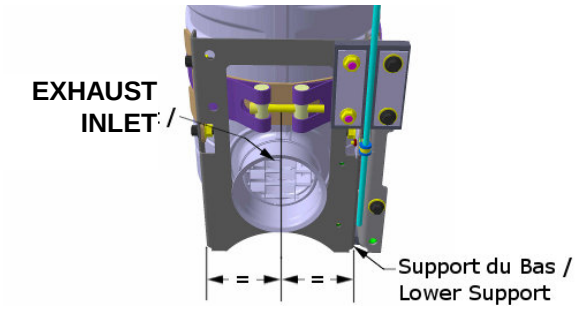

- While tightening the bolts, keep in mind to respect the alignment of the parts and keep the lower support as centered as possible with the catalytic converter exhaust inlet.

4. DIFFUSER ASSEMBLY

During stationary regeneration, exhaust gases temperature may get very hot at the DPF outlet. The diffuser decreases the exhaust gasses temperature by about half approximately, at 6 inches above the diffuser. The diffuser is an important component of the exhaust system and must remain on the vehicle at all times. Operating the vehicle without the diffuser may seriously damage the vehicle.

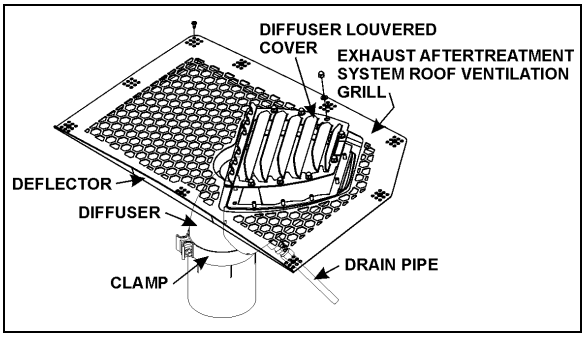

FIGURE 6: DIFFUSER ASSEMBLY 04014

4.1 DIFFUSER ADJUSTMENT

Should an adjustment of the diffuser position be necessary, first remove the exhaust aftertreatment roof ventilation grill.

CAUTION

To prevent paint damage and fiberglass overheating caused by hot exhaust gases, the diffuser louvered cover must be flush with the roof surface or may exceed the roof surface not more than 3/32" (2mm).

CAUTION

Tighten clamps properly in order to prevent any movement of the diffuser assembly. An impact wrench is necessary.

1. Loosen the clamp securing the diffuser assembly to the catalytic converter.

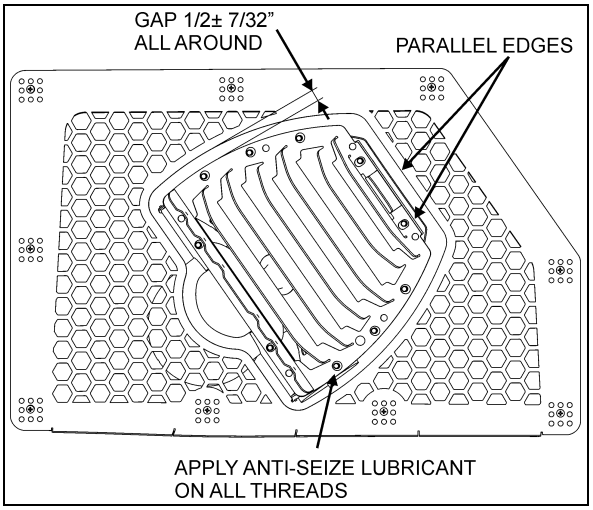

FIGURE 7: DIFFUSER POSITION ADJUSTMENT 04015_1

2. For proper angular position, make sure that the two edges shown on figure 7 are parallel with each other.
3. Using a straightedge, adjust the diffuser assembly level. The top surface of the warning plate fixed on the diffuser louvered cover must be flush with the roof surface or may exceed about 3/32".
4. Tighten the clamp securing the diffuser assembly to the catalytic converter.
5. Reinstall the exhaust aftertreatment system roof ventilation grill and deflector.

4.2 MAINTENANCE

At vehicle inspection intervals, inspect the diffuser assembly as follows:

- Inspect diffuser grille for stress cracking;
- Check for presence of foreign matter and debris inside the diffuser housing, remove and clean if applicable;
- Check for proper functioning of the rain cap inside the diffuser housing, make sure that it moves freely;
- Make sure that the water drain tube is not clogged. Pour a cup of water into the diffuser housing and assure that all the water is drained at once at the other end of the drain tube. If tube is clogged, remove tube and blow compressed air inside in reverse flow;
- Check that the warning plate "THIS DIFFUSER SURFACE MUST BE FLUSH WITH THE ROOF SURFACE" is still in place.

5. DIESEL EXHAUST FLUID (DEF) TANK AND INJECTION SYSTEM

The DEF tank and injection system control unit continuously vary the amount of DEF injected in response to the engine's current load conditions.

Diesel Exhaust Fluid (DEF) is stored in a 16 gallons plastic tank located aft of the condenser compartment.

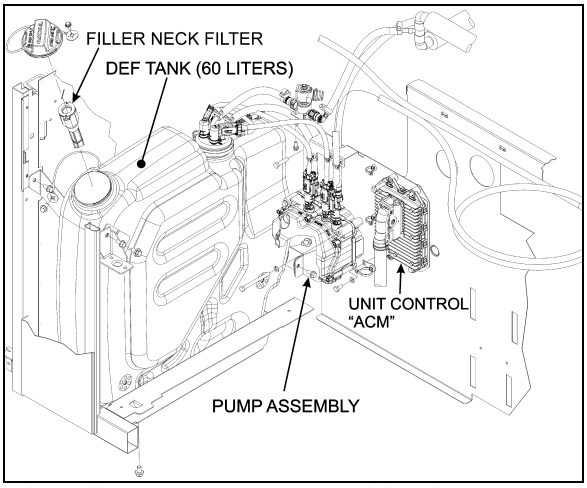

FIGURE 8: DEF TANK AND PUMP LOCATION

A pump located beside the DEF tank is used to pressurize the system and deliver the fluid.

A heating coil located inside the tank use engine coolant to keep the DEF warm during cold season.

DEF is injected into the exhaust gases through an injection nozzle located between the DPF and the catalytic converter (refer to figure 1).

In the catalytic converter, nitrogen oxides are transformed into harmless nitrogen gas and water.

The system notifies the driver when it is time to top up with DEF.

5.1 DIESEL EXHAUST FLUID

When handling DEF solution, it is important that electrical connectors to be connected or well encapsulated, otherwise there is a risk that the DEF will cause oxidation that cannot be removed. Water or compressed air will not help, since DEF quickly oxidizes certain metals. If a disconnected connector comes into contact with the DEF solution, it must be replaced immediately to prevent the DEF solution from creeping further into the copper wiring, which takes place at a speed of about 2.4 in (60 mm) per hour.

CAUTION

Diesel Exhaust Fluid (DEF) is a nontoxic aqueous solution of urea (32.5%) and ultra-pure water (67.5%). Urea is a compound of nitrogen that turns to ammonia when heated. The fluid is non-flammable, and is not dangerous when handled as recommended. However, it is highly corrosive to certain metals, especially copper and brass.

When detaching hoses and components, do not spill DEF on disconnected or unsealed connectors. If DEF is spilled on a disconnected or unsealed connector, the connector must be removed immediately and replaced.

Things to know about spilt diesel exhaust fluid (DEF):

- If urea solution comes into contact with the skin, rinse with plenty of water and remove contaminated clothing.
- If urea solution comes into contact with the eyes rinse for several minutes and call for medical help if necessary.
- If inhaled breathe fresh air and call for medical help if necessary.
- Do not allow the DEF solution to come into contact with other chemicals.
- The DEF solution is not flammable. If the DEF solution is exposed to high temperatures, it breaks down into ammonia and carbon dioxide.
- The DEF solution is highly corrosive to certain metals, including copper and aluminum.
- If the DEF solution is spilled onto the vehicle, wipe off the excess and rinse with water. Spilled DEF solution can form concentrated white crystals on the vehicle. Rinse off these crystals with water.

WARNING

DEF spilt onto hot components will quickly vaporize. Turn your face away!

5.2 DEF TANK CLEANING

Removing the DEF tank for cleaning is not necessary.

1. Put a suitable container under the DEF tank.
2. Remove the DEF tank drain plug through the DEF tank support pan access hole.
3. Let all of the DEF drain from the tank. Discard the used DEF according to local regulations.
4. Remove the DEF tank filler neck insert. To do so, release the retaining tab and remove filler neck insert. Replace old seal if damaged.

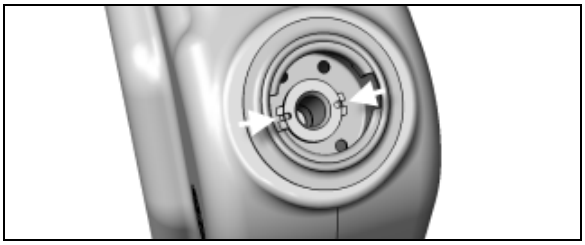

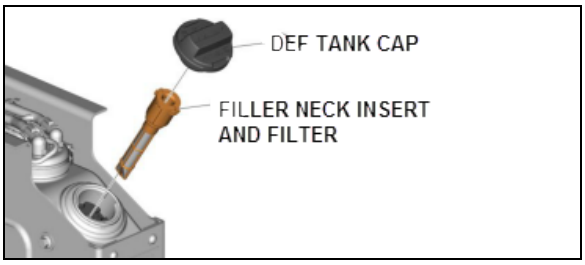

5. Flush the tank with hot water. Let all of the water drain from the tank.
6. Clean the filler neck insert screen with hot water.
7. Reinstall the filler neck insert until the retaining tabs snap into filler neck. Reinstall DEF tank drain plug.

MAINTENANCE

Drain and clean DEF tank and filler neck insert filter with hot water every 175,000 miles or once a year, whichever comes first.

5.3 PUMP ASSEMBLY FILTER ELEMENT REPLACEMENT

- Remove filter cover.

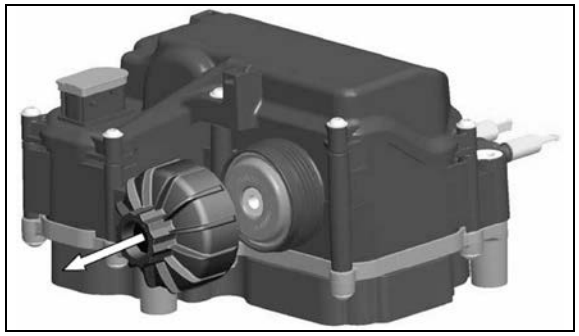

CAUTION

Contamination or damage of the sealing surface on the housing is not acceptable.

- Remove the equalizing element (a) and the filter element (b).

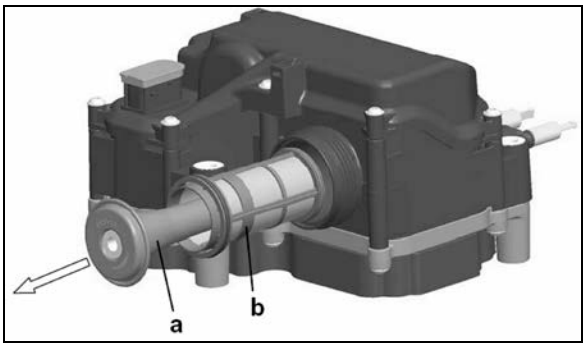

CAUTION

Protect filter area in the housing from contamination.

- Replace the filter element (a) and the equalizing element (b).

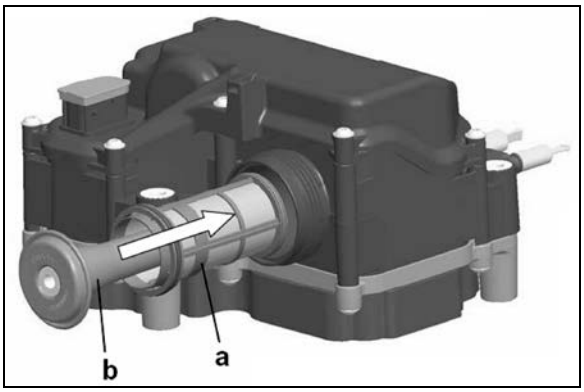

CAUTION

The sealing surfaces on the housing must be clean. No contamination or particles acceptable.

- Install filter cover. Torque to 16.5 lbf-ft.

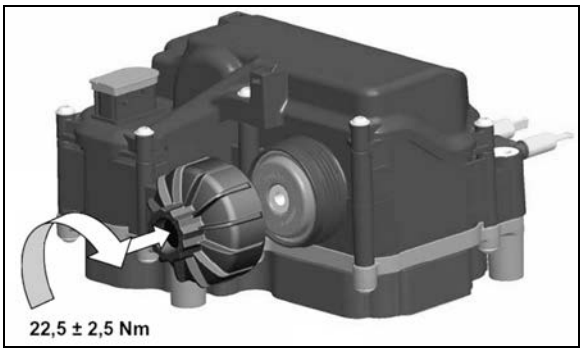

CAUTION

It must be checked if there are cracks around the area of the filter cover. No cracks in the material are allowed. If there are cracks in the housing, the entire Supply Module must be replaced! If there are cracks in the filter cover, the filter cover must be replaced.

MAINTENANCE

Replace pump assembly filter element every 150,000 miles or every three years, whichever comes first.

6. AFTERTREATMENT FUEL INJECTOR CLEANING

Proper functioning of the aftertreatment fuel injector a.k.a. aftertreatment hydrocarbon injector (AHI) is required in order to obtain efficient regeneration process of the DPF. Clogged aftertreatment fuel injector will result in clogged DPF.

In addition to the activation of the CHECK telltale, emission of diagnostic troubleshooting codes (DTC) by the engine ECM (MID128) will indicate malfunction of the aftertreatment system and/or aftertreatment fuel injector. DTC may be accessed through the Driver Information Display. Select DIAGNOSTICS menu then FAULT DIAGNOSTICS and ENGINE ECU submenus.

In the Driver Information Display, you can check the status of the aftertreatment system. Select AFTERTREATMENT menu then ATS STATUS. Then check the DPF soot level with SOOT LEVEL GAUGE.

6.1 REPLACEMENT

1. Remove fastener and p-clamp securing the line to the mounting bracket on the diffuser pipe.

WARNING

Fuel leaked or spilled onto hot surfaces or electrical components can cause a fire and result in component damage and serious personal injury.

2. Disconnect the line from the aftertreatment hydrocarbon injector fitting. Collect any residual fuel that might be in the line in a suitable container.

CAUTION

Do not kink the line. Kinking the line may result in leakage.

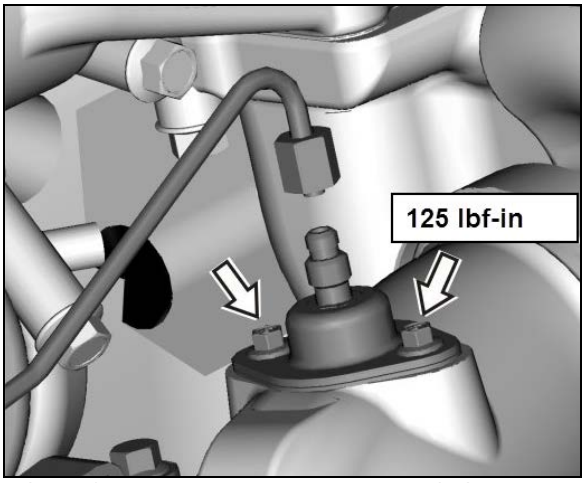

FIGURE 9: AFTERTREATMENT FUEL INJECTOR

3. Remove the aftertreatment hydrocarbon injector mounting fasteners. Remove the aftertreatment hydrocarbon injector from the diffuser pipe (which attaches to the turbocharger outlet).
4. Clean the sealing surface on the diffuser pipe before mounting the aftertreatment hydrocarbon injector.
5. Install the aftertreatment hydrocarbon injector onto the diffuser pipe (which attaches to the turbocharger outlet). Tighten the fasteners to **125 lbf-in**.

NOTE
The fasteners already include pre-applied high-temperature anti-seize compound.

6. Connect the line to the aftertreatment hydrocarbon injector. Tighten the line fitting to**135 lbf-in**.

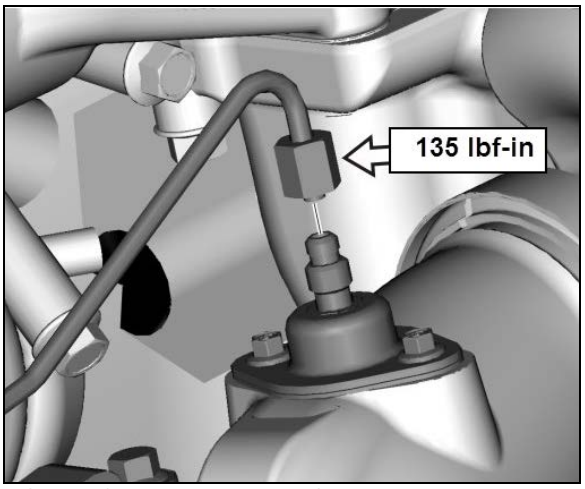

FIGURE 10: FUEL LINE FITTING

7. Install the P-clamp and fastener to secure the line to the mounting bracket on the diffuser pipe.
8. Start the service regeneration process. When fuel dosing starts, check for leaks starting on the hot side of the engine. Clear any diagnostic trouble codes, if needed.

NOTE
If fault tracing was performed using Guided Diagnostics, return to Guided Diagnostics for repair verification.

7. TORQUE SPECIFICATIONS

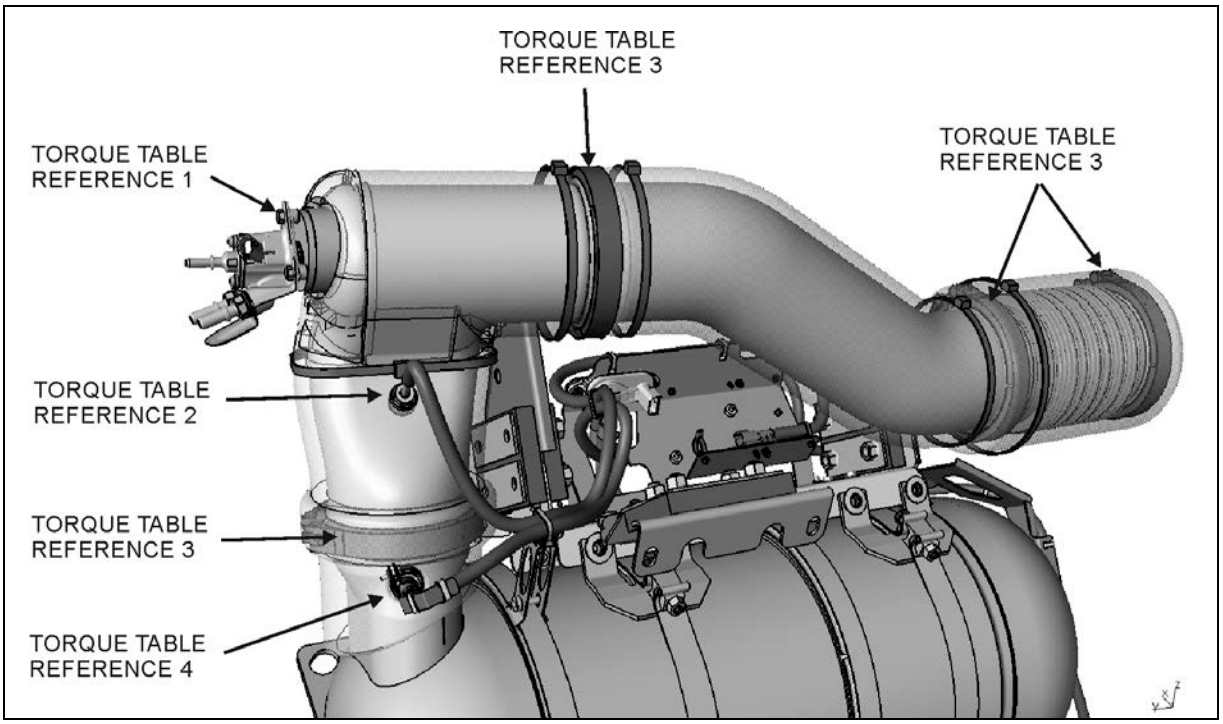
TORQUE TABLE
REFERENCE 3
TORQUE TABLE
REFERENCE 1
TORQUE TABLE
REFERENCE 3
TORQUE TABLE
REFERENCE 2
TORQUE TABLE
REFERENCE 3
TORQUE TABLE
REFERENCE 4

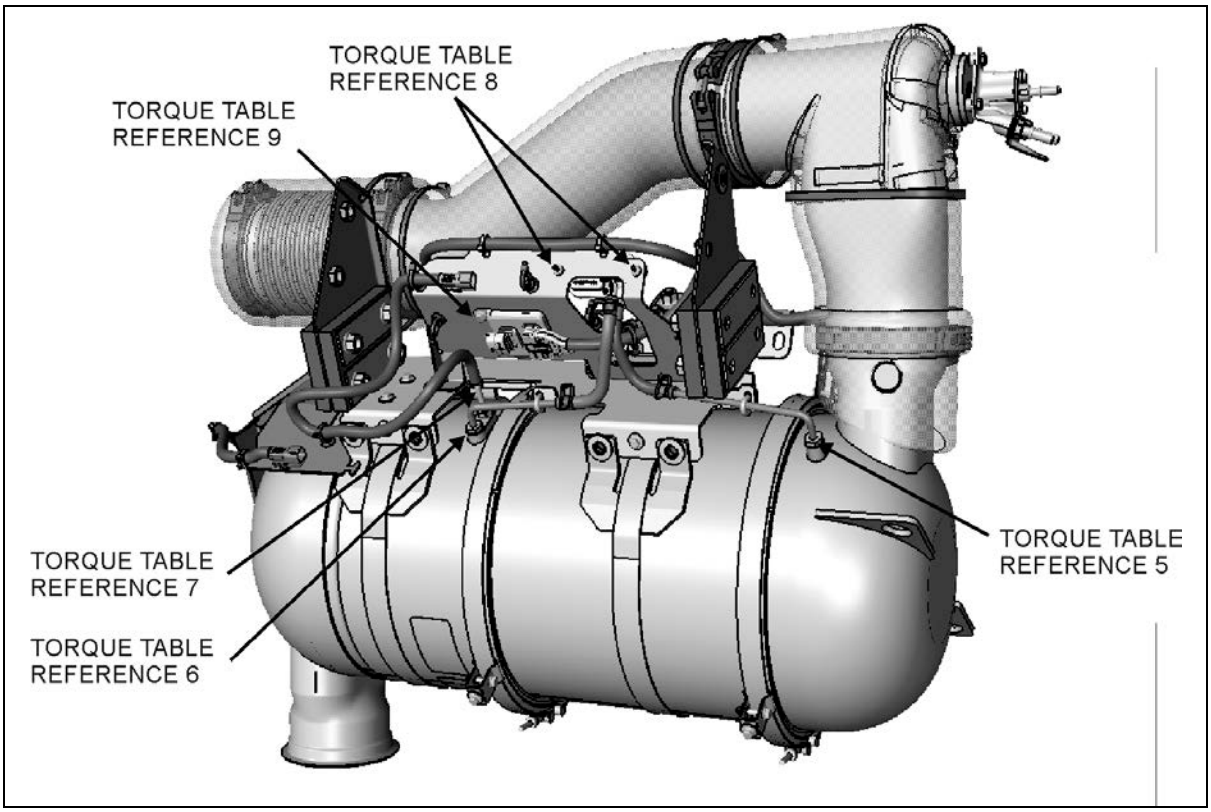
TORQUE TABLE
REFERENCE 8
TORQUE TABLE
REFERENCE 9
TORQUE TABLE
REFERENCE 5
TORQUE TABLE
REFERENCE 7
TORQUE TABLE
REFERENCE 6

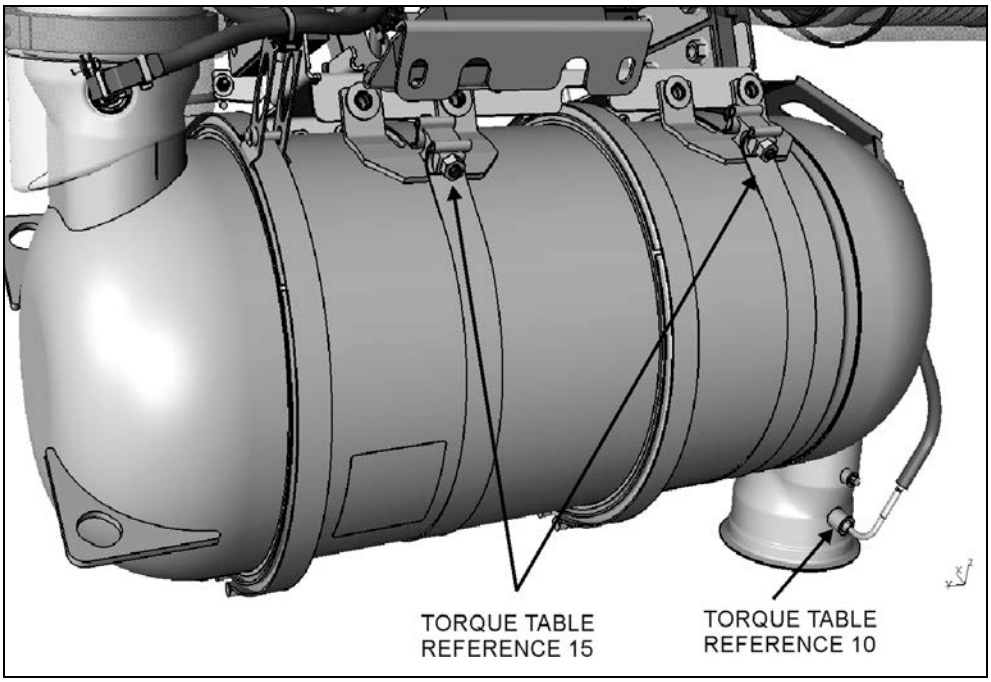
TORQUE TABLE
REFERENCE 15
TORQUE TABLE
REFERENCE 10

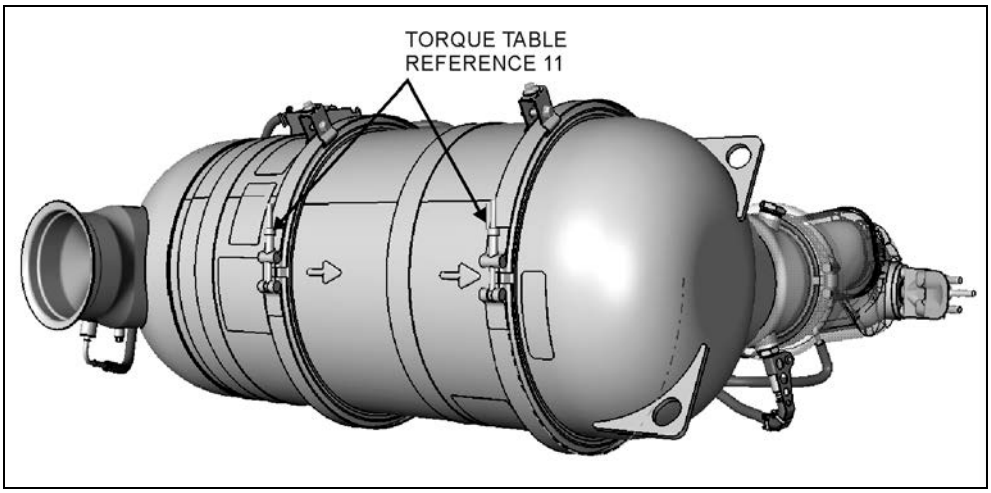
TORQUE TABLE
REFERENCE 11

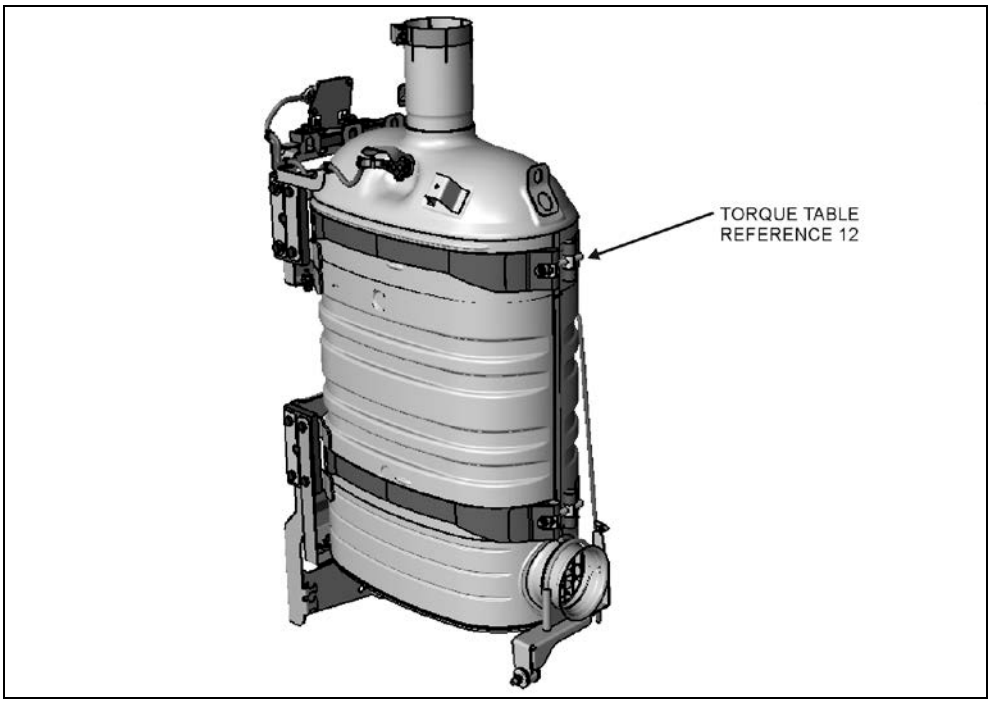
TORQUE TABLE
REFERENCE 12

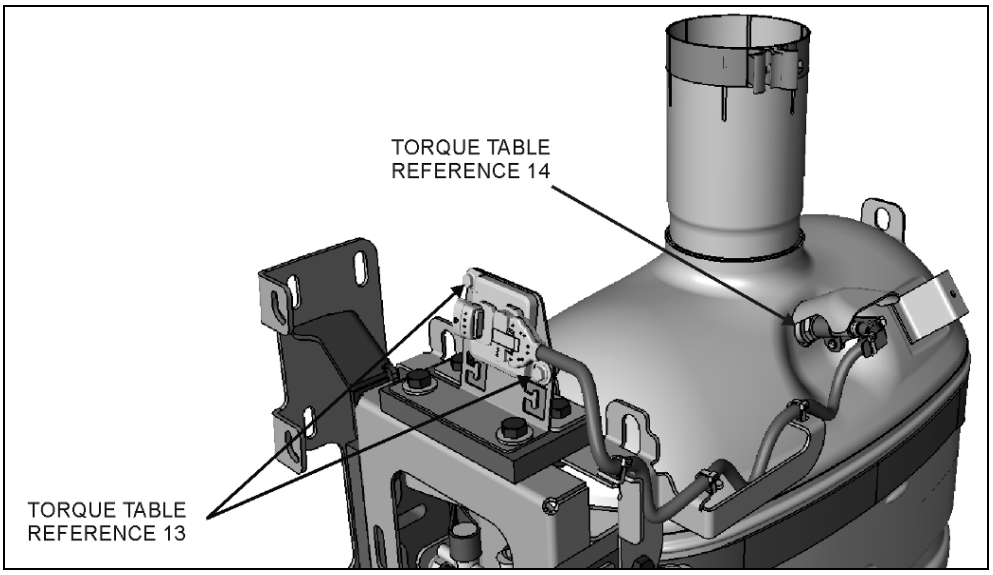
TORQUE TABLE
REFERENCE 14
TORQUE TABLE
REFERENCE 13

The following table lists the tightening torques for the bolts, nuts, etc. on the DPF assembly which do require a specific torque value. When no torque specifications are indicated, use the Standard Torque Specifications table found in Section 00: General Information of the Maintenance Manual.

SPECIFIC TORQUE TABLE			
DESCRIPTION	***QTY***	***REFERENCE***	***TORQUE DRY*** *(±10 lbf-ft)*
DEF injection nozzle mounting bolt	*3*	*1*	*7.5*
*DPF outlet temperature sensor **	*1*	*2*	*33*
V-band clamp 5 inch	*7*	*3*	*8*
*NOx sensor **	*1*	*4*	*37*
*DPF outlet pressure sensor **	*1*	*5*	*4*
*DPF inlet pressure sensor **	*1*	*6*	*4*
*Diesel Oxidation Catalyst (DOC) temperature sensor **	*1*	*7*	*33*
Cap screw	*2*	*8*	*4.5*
Cap screw	*-*	*9*	*7.5*
*DPF inlet temperature sensor **	*1*	*10*	*33*
V-band clamp	*2*	*11*	*20*
Strap – SCR tank	*4*	*12*	*33*
NOx sensor – SCR tank	*1*	*13*	*37*
Bolts – SCR tank	*2*	*14*	*7.5*
Strap – DPF tank	*2*	*15*	*20*

* Use Permatex 454G anti-seize lubricant or Loctite 76764 silver grade anti-seize

CONTENTS

1. DESCRIPTION 3

2. MAINTENANCE 4

2.1 General Recommendations 4
2.2 Vehicles Equipped With Volvo D13 Engine 4

3. HOSES 4

3.1 Constant-Torque Hose Clamps On Coolant Lines –Volvo D13 4
3.1.1 Installation 5
3.1.2 Maintenance 5
3.2 Constant-Torque Hose Clamps On Charge Air Cooler (CAC) 5
3.2.1 Maintenance 6

4. THERMOSTAT OPERATION 6

4.1 Thermostat Replacement 6
4.2 Checking Thermostat 6

5. COOLANT 6

5.1 Coolant Level Verification 6
5.2 Coolant Level Sensor 6
5.3 Thawing Cooling System 7
5.4 Cooling System Recommendations 7
5.5 Coolant Recommendations For Volvo D13 Engine 7

6. DRAINING COOLING SYSTEM 8

7. FILLING COOLING SYSTEM 9

8. FLUSHING 10

8.1 Cooling System Descalers 10
8.2 Reverse Flushing 10

9. SPIN-ON COOLANT FILTER 11

10. RADIATOR 11

10.1 Maintenance 12
10.2 Radiator Removal & Installation 12

11. CHARGE AIR COOLER LEAKAGE 15

12. COOLING FAN DRIVE MECHANISM 15

12.1 Drive Pulley And Universal Joint Shaft 15
12.2 Idler Replacement 15

13. VARIABLE SPEED COOLING FAN 16

13.1 Locking Radiator Fan For Emergency Operation 16
13.1.1 Electrical Locking 16
13.1.2 Mechanical Locking 17
13.2 Maintenance 17
13.3 Inspection 17
13.4 Fan Removal / Installation 18

14. FAN RIGHT ANGLE GEARBOX 18

14.1 MAINTENANCE 18
14.2 OIL CHANGE 18
14.3 REMOVAL / INSTALLATION 19

15. COOLING FAN DRIVE BELT 19

15.1 MOUNTING THE DRIVE BELT 19

16. SPECIFICATIONS 20

ILLUSTRATIONS

FIGURE 1: COOLANT SURGE TANK 3
FIGURE 2: COOLANT FLOW TO RADIATOR (VOLVO D13) 5
FIGURE 3: CONSTANT-TORQUE CLAMP 5
FIGURE 4: CHARGE AIR COOLER HOSE CLAMPS 5
FIGURE 5: VOLVO D13 THERMOSTAT HOUSING 6
FIGURE 6: LOCATION OF HEATER LINE SHUT-OFF VALVES IN ENGINE COMPARTMENT 8
FIGURE 7: EXTRACTING COOLANT 9
FIGURE 8: COOLANT FILTER (VOLVO D13) 11
FIGURE 9: RADIATOR DRAIN PLUG 12
FIGURE 10: ACCESS PANEL 12
FIGURE 11: RADIATOR SEALING FRAME 12
FIGURE 12: RADIATOR HOSE CLAMPS 13
FIGURE 13: CHARGE AIR COOLER HOSE CLAMPS 13
FIGURE 14: UPPER SUPPORT BRACKET & TUBE PROTECTOR 13
FIGURE 15: RADIATOR ASSEMBLY LOWER MOUNTING FASTENERS 13
FIGURE 16: DISCONNECTING FAN DRIVE SHAFT 14
FIGURE 17: POSITIONING FORKLIFT 14
FIGURE 18: REMOVING FASTENERS 14
FIGURE 19: REMOVING UPPER FAN DRIVE SUPPORT BRACKET 14
FIGURE 20: REMOVING FAN SHROUD FROM RADIATOR 14
FIGURE 21: COOLING FAN DRIVE MECHANISM 15
FIGURE 22: TIGHTENING SPECIFICATION 15
FIGURE 23: TIGHTENING SPECIFICATION (VOLVO D13 ENGINE) 16
FIGURE 24: IDLER MOUNTED ON THE CAST ALUMINUM SUPPORT 16
FIGURE 25: MECHANICAL LOCKING 17
FIGURE 26: RADIATOR FAN MOUNTING BOLTS 18
FIGURE 27: RIGHT ANGLE GEARBOX 18
FIGURE 28: RIGHT ANGLE GEARBOX MOUNTING 19
FIGURE 29: DRIVE BELT ROUTING (VOLVO D13 ENGINE) 19

1. DESCRIPTION

A radiator and thermo-modulated fan are used to effectively dissipate the heat generated by the engine. A centrifugal-type water pump is used to circulate the engine coolant.

One full blocking-type thermostat is used in the water outlet passage to control the flow of coolant, providing fast engine warm-up and regulating coolant temperature.

The engine coolant is drawn from the lower portion of the radiator by the water pump and is forced through the transmission cooler before going through the oil cooler and into the cylinder block.

From the cylinder block, the coolant passes up through the cylinder head and, when the engine is at normal operating temperature, it goes through the thermostat housing and into the upper portion of the radiator. The coolant then passes through a series of tubes where its heat is dissipated by air streams created by the revolving fan and the motion of the vehicle.

Upon starting a cold engine or when the coolant is below normal operating temperature, the closed thermostat directs coolant flow from the thermostat housing through the by-pass tube to the water pump. Coolant is recirculated through the engine to aid engine warm up.

When the thermostat opening temperature is reached, coolant flow is divided between the radiator inlet and the by-pass tube. When the thermostat is completely open, all of the coolant flow is to the radiator inlet.

The cooling system is filled through a pressure & filler cap on the surge tank (Fig. 1), the cap is also used to maintain pressure within the system. When system exceeds normal pressure rating (14 psi - 96.53 kPa), the cap releases air and if necessary, coolant through the overflow tube (Fig. 1). The thermostat is located in the housing bolted to the engine on the L.H. side.

The engine cooling system also provides hot coolant fluid for the vehicle heating system. Refer to section 22, *""HEATING AND AIR CONDITIONING"* in this manual for information relating to heating system water circulation.

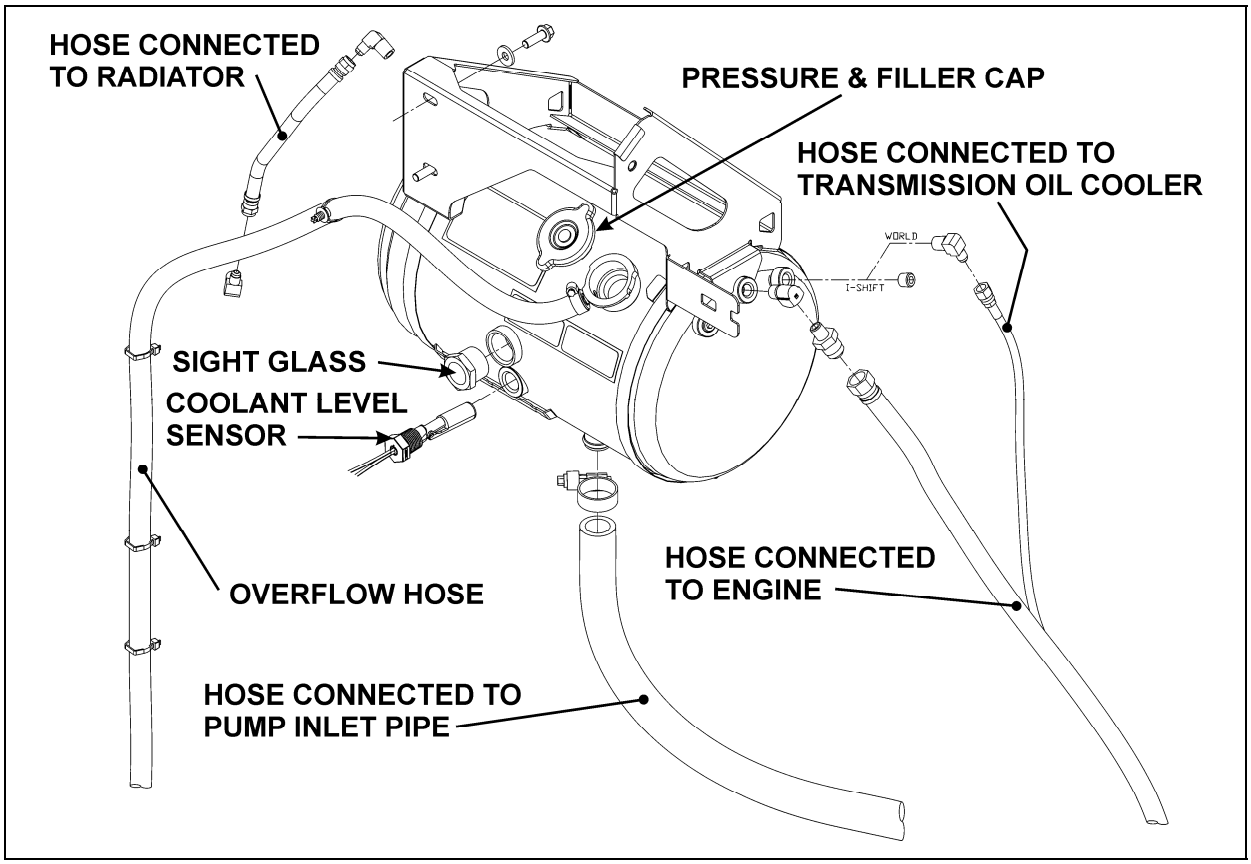

FIGURE 1: COOLANT SURGE TANK 05132

2. MAINTENANCE

2.1 GENERAL RECOMMENDATIONS

A systematic routine inspection of cooling system components is essential to ensure maximum engine and heating system efficiency.

- Check coolant level in the surge tank daily, and correct if required. Test antifreeze strength.
- Check belts for proper tension; adjust as necessary and replace any frayed or badly worn belts.
- Check radiator cores for leaks and make sure the cores are not clogged with dirt or insects. To avoid damaging the fins, clean cores with a low-pressure air hose. Steam clean if required.
- Inspect the water pump operation. A leaky pump sucks in air, increasing corrosion.
- Repair all leaks promptly. Unrepaired leaks can lead to trouble. Inspect and tighten radiator mounts periodically. Test and replace thermostat regularly.

NOTE

In order to ensure the integrity of the system, it is recommended that a periodic cooling system pressure check be made. Pressurize the cooling system to 103-138 kPa (15-20 psi) using Radiator and Cooling System Tester, J24460-1. Do not exceed 138 kPa (20 psi).

Any measurable drop in pressure may indicate a leak. Whenever the oil pan is removed, the cooling system should be pressure checked as a means of identifying any incipient coolant leaks. Make sure the cause of the internal leak has been corrected before flushing the contaminated system.

Leaks at the thermostat housing hose connections may be caused by deformation of connections or by rough surfaces on the castings of the hose mounting surfaces. It is recommended that *"Dow Corning RTV-102 Compound"* or any equivalent product be applied on cast surfaces prior to hose installation.

CAUTION

Castings should be clean and free of oil and grease before applying compound. No other sealer should be used with RTV-102 compound.

2.2 VEHICLES EQUIPPED WITH VOLVO D13 ENGINE

NOTE

For additional information concerning Volvo D13 engine components or engine-related components, consult Volvo Trucks Canada or Volvo Trucks North America Web Site under: Parts & Service. On Volvo web site, you will find detailed service procedures for parts replacement, repair and maintenance.

MAINTENANCE

Drain, flush, thoroughly clean and refill the system with Extended Life Coolant (ELC) every four years or every 600,000 miles (1 000 000 km), whichever comes first. Change the coolant filter once a year or every 150,000 miles (240 000 km), whichever comes first. When using ELC, **do not** use a filter that contains Supplemental Coolant Additives (SCA).

3. HOSES

Rotten, swollen, and worn out hoses or loose connections are frequent causes of cooling system problems.

Serious overheating is often caused by an old hose collapsing or from rotten rubber shedding from hoses and clogging the coolant passages.

Connections should be inspected periodically and hose clamps tightened. Replace any hose found to be cracked or swollen.

When installing a new hose, clean pipe connections and apply a thin layer of a non-hardening sealing compound. Replace worn out clamps or clamps that pinch hoses.

3.1 CONSTANT-TORQUE HOSE CLAMPS ON COOLANT LINES –VOLVO D13

All hose clamps of 1 3/8" ID and over, used on the heating and cooling systems, are of the *"Constant-torque"* type. These clamps are worm-driven, made of stainless steel, and supplied with a series of Belleville spring washers. They also feature an extended integral liner that covers the band slots to protect soft/silicone hoses from damage, and help maintain consistent sealing pressure.

This type of clamp is designed to automatically adjust its diameter to compensate for the normal expansion/contraction of a hose and metal connection that occurs during vehicle operation and shutdown. The constant-torque clamp virtually eliminates coolant losses due to *"Cold flow"* leakage and greatly minimizes clamp maintenance.

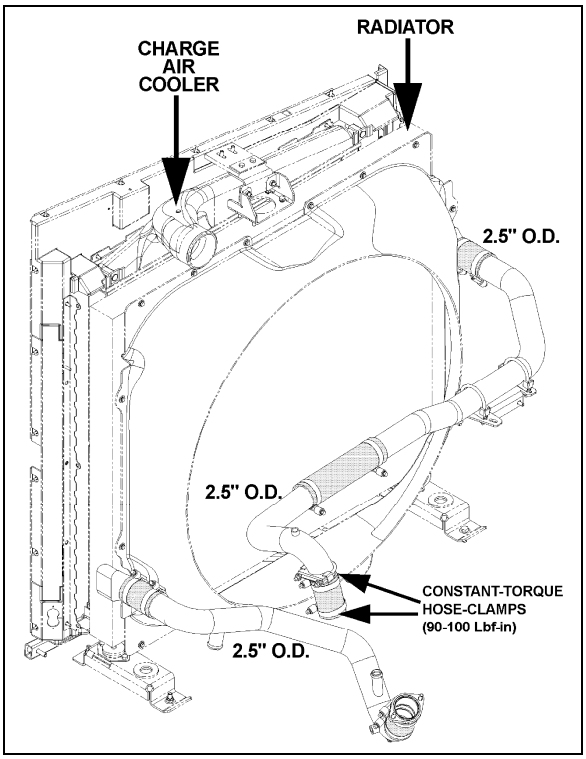

FIGURE 2: COOLANT FLOW TO RADIATOR (VOLVO D13)

3.1.1 Installation

A torque wrench should be used for proper installation. The recommended torque is 90 to 100 lbf-in. (10 to 11 Nm). The Belleville spring washer stacks should be nearly collapsed flat and the screw tip should extend ¼" (6 mm) beyond the housing (Fig. 3).

CAUTION

The hose clamps will break if over-torqued. Do not over-tighten, especially during cold weather when hose has contracted.

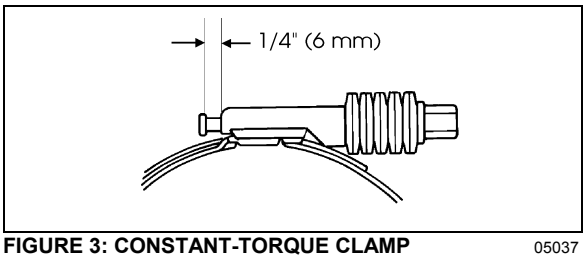

FIGURE 3: CONSTANT-TORQUE CLAMP 05037

3.1.2 Maintenance

The constant-torque clamps contain a *"Visual torque check" feature.* When the tip of the screw is extending ¼" (6 mm) out of the housing, the clamp is properly installed and maintains a leak-proof connection. Since the constant-torque clamp automatically adjusts to keep a consistent sealing pressure, there is no need to re-torque hose clamps on a regular basis. During vehicle operation and shutdown, the screw tip will adjust according to the temperature and pressure changes.

Checking for proper torque should be done at room temperature.

3.2 CONSTANT-TORQUE HOSE CLAMPS ON CHARGE AIR COOLER (CAC)

If for any reason such as an accident, hose clamps need to be changed; install and tighten hose clamps to 10±1 lbf-ft (dry) (Fig. 4).

CAUTION

The hose clamps will break if over-tighten. Do not over-tighten, especially during cold weather when hose has contracted.

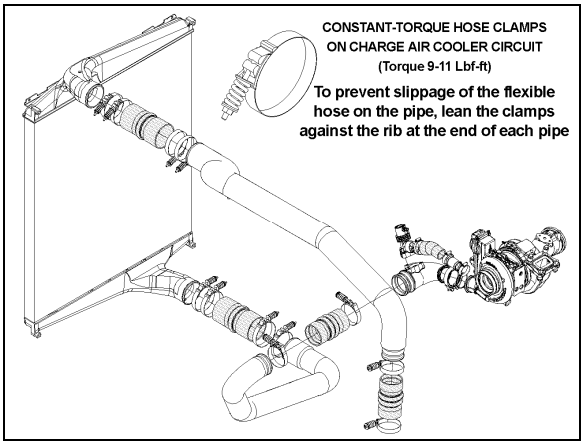

FIGURE 4: CHARGE AIR COOLER HOSE CLAMPS

3.2.1 Maintenance

Since the constant-torque clamp automatically adjusts to keep a consistent sealing pressure, there is no need to retorque hose clamps on a regular basis. During vehicle operation and shutdown, the screw tip will adjust according to the temperature and pressure changes.

Checking for proper torque should be done at room temperature.

4. THERMOSTAT OPERATION

4.1 THERMOSTAT REPLACEMENT

1. Drain the cooling system.
2. Remove the bolts, the thermostat housing and the thermostat. Carefully clean the thermostat seat and all cylinder head-to-thermostat housing mating surfaces.

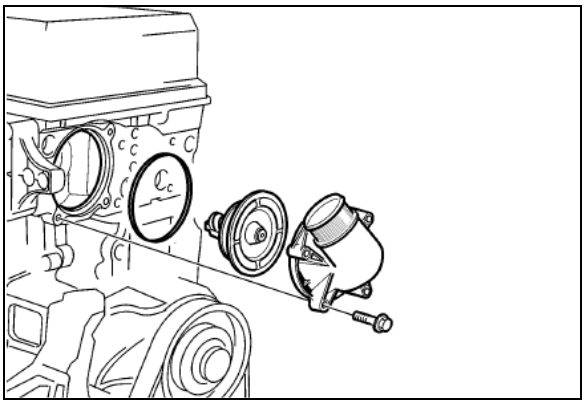

FIGURE 5: VOLVO D13 THERMOSTAT HOUSING

3. Install the new thermostat. Make sure that the rubber seal remains properly seated.
4. Position the thermostat housing to the cylinder head, install the bolts and torque-tighten to 24 ± 4 Nm (18 ±3 ft-lb).
5. Install the rubber radiator hose to the thermostat housing. Position the clamp and tighten to secure.
6. Fill the system with the recommended coolant.
7. Start the engine, check for leaks and proper operation. After shutdown, replenish fluids as necessary.

4.2 CHECKING THERMOSTAT

A function check must be carried out before installing a new thermostat.

NOTE

Check to be sure that the thermostat closes fully. This can be done by holding it up to the light to check that there is no visible gap at the opening point. If the thermostat does not close properly, replace it.

1. Warm up water in a receptacle to 75°C (167°F) and immerse the thermostat in the water. Use a piece of wire attached to the thermostat.

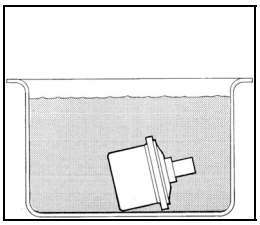

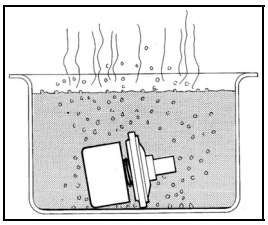

2. After at least 30 seconds, check that the thermostat is still closed.
3. Now warm the water to 100°C (212°F). After at least 30 seconds at the boiling point, check that the thermostat has opened at least 7mm (9/32in). If the thermostat has not opened, it must be replaced. A good thermostat starts to close at 95°C (203°F) and is fully closed at approximately 85°C (185°F).

5. COOLANT

5.1 COOLANT LEVEL VERIFICATION

Coolant level is correct when cold coolant is visible through the surge tank sight glass (Fig. 1). If coolant level is low, fill cooling system.

5.2 COOLANT LEVEL SENSOR

This warning device consists of a fluid level probe mounted on the surge tank. The probe sends a signal to the engine control module to indicate coolant level. If the coolant level drops below the probe, the *"Check Engine"* light flashes and a diagnostic code is registered (see section 01*" ENGINE"*).

CAUTION

Do not run engine with the “Check Engine” light flashing.

The level probe is mounted on the front of the surge tank.

5.3 THAWING COOLING SYSTEM

If the cooling system becomes frozen solid, place the coach in a warm area until the ice is completely thawed.

CAUTION

Under no circumstances should the engine be operated when the cooling system is frozen, as it will result in engine overheating due to insufficient coolant.

Once thawed, check engine, radiator and related components for damage caused by expansion of frozen coolant fluid.

5.4 COOLING SYSTEM RECOMMENDATIONS

Always maintain cooling system at the proper coolant level. Check daily.

The cooling system must be pressurized to prevent localized boiling of coolant. The system must be kept clean and leak-free. The filler and pressure caps must be checked periodically for proper operation.

The coolant provides a medium for heat transfer and controls the internal temperature of the engine during operation. In an engine having proper coolant flow, some of the combustion heat is conveyed through the cylinder walls and the cylinder head into the coolant. Without adequate coolant, normal heat transfer cannot take place within the engine, and engine temperature rapidly rises. Coolant must therefore be carefully selected and properly maintained.

Select and maintain coolant in order to meet the following basic requirements:

- Provide for adequate heat transfer.
- Provide protection from cavitation damage.
- Provide a corrosion and erosion resistant environment within the cooling system.
- Prevent formation of scale or sludge deposits in the cooling system.
- Be compatible with the cooling system hose and seal materials.
- Provide adequate freeze protection during cold weather operation.

When freeze protection is required, a mixture of suitable water and antifreeze containing adequate inhibitors will provide a satisfactory coolant fluid.

Freeze protection down to:	percentage of antifreeze in mixture
-13°F (-25°C)	40%
-22°F (-30°C)	46%
-36°F (-38°C)	54%
-51°F (-46°C)	60%

5.5 COOLANT RECOMMENDATIONS FOR VOLVO D13 ENGINE

Coolant mixture consisting of 50/50 antifreeze and deionized water solution should be used year-round to provide freeze and boil-over protection as well as providing a stable environment for seals and hoses.

When topping up coolant, use the same coolant mixture type as the mixture already in the cooling system. Do not mix two different types of coolant.

Do not use antifreeze formulated for automobile gasoline engines, these have a very high silicate content that will clog the radiator and leave unwanted deposits in the engine.

A decal (053487) located on the surge tank provides information on recommended coolants.

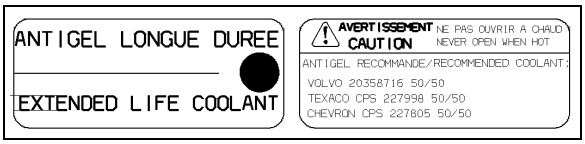

Recommended coolants for Volvo D13 engine:

- Prevost #685241 (pre-diluted 50/50 mixture);
- Texaco CPS#227998 (pre-diluted 50/50 mixture);
- Chevron CPS#2227805 (pre-diluted 50/50 mixture);
- Volvo 20358716 (pre-diluted 50/50 mixture);

CAUTION

On Volvo D13 engine, use **only** Extended Life Coolant (ELC). **Do not** add supplemental coolant additives (SCA) to extended life coolant. **Do not** use a coolant filter containing Supplemental Coolant Additives (SCA).

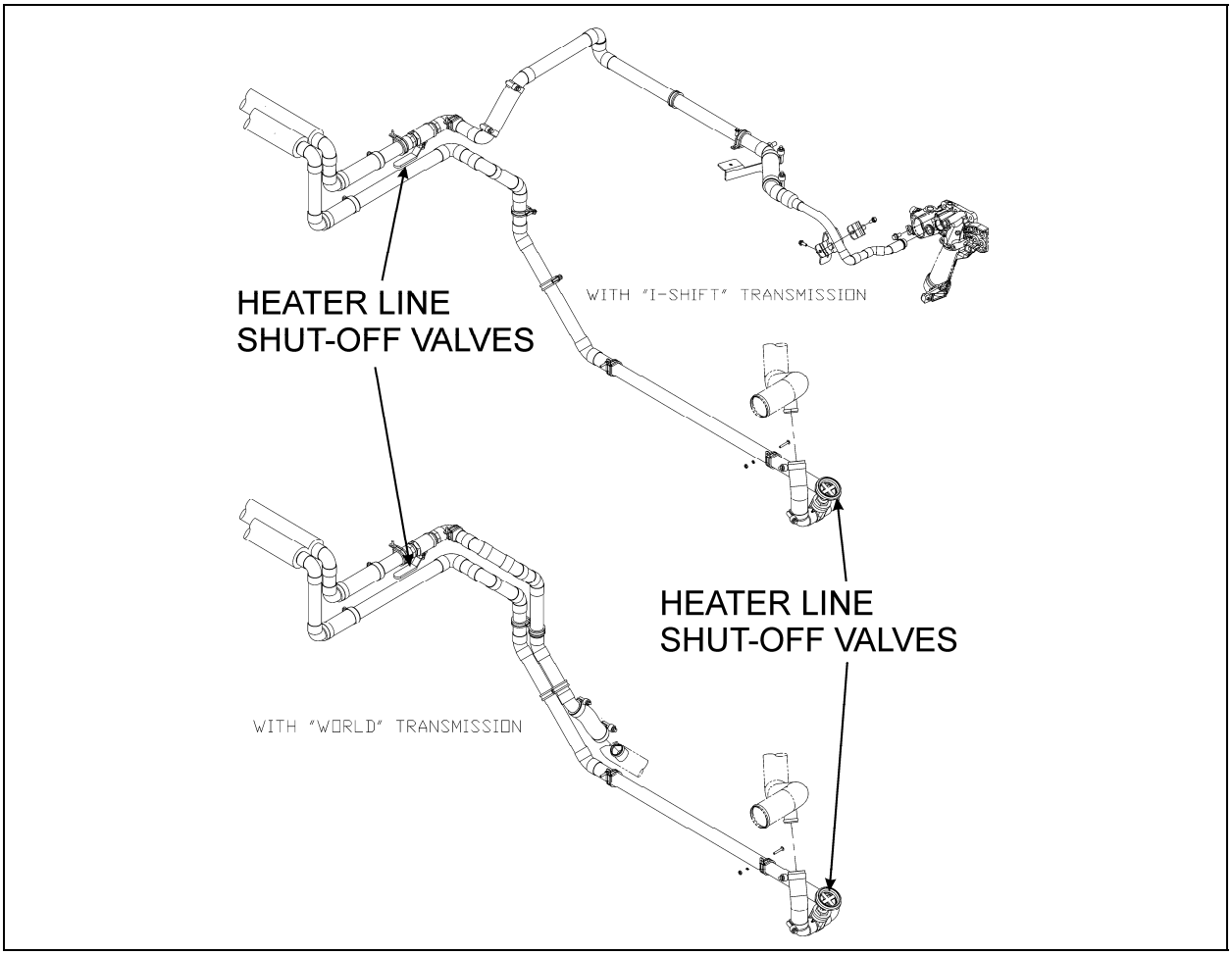

FIGURE 6: LOCATION OF HEATER LINE SHUT-OFF VALVES IN ENGINE COMPARTMENT 05105

CAUTION

Extended Life Coolant (ELC) will test as out of additives (SCA), but SCA should not be added. Shortened engine life may be the result of adding SCA.

6. DRAINING COOLING SYSTEM

Use the following procedures to drain the cooling system partially or completely.

To drain engine and related components:

1. Stop engine and allow engine to cool. Close both heater line shutoff valves.

On X3- 45 coaches & VIP, and also on XLII Entertainer Bus Shells, the valves are located in the engine compartment. One is located under the radiator fan drive mechanism support; another valve is on the L.H. side of the engine compartment in front of the radiator (Fig. 6).

NOTE

Refer to section 22 under "Preheating System" for information about preheater access and heater line shutoff valve.

WARNING

Before proceeding with the following steps, make sure the coolant has cooled down. The sudden release of pressure from a heated cooling system can result in loss of coolant and possible personal injury (scalding) from the hot liquid.

2. Close the shut-off valve on the coolant filter mounting head and remove filter (perform only if filter as to be replaced).
3. Open the shut-off valve on the coolant filter mounting head and drain the coolant into a suitable container. Close the shut-off valve.

4. Unscrew the surge tank pressure cap counterclockwise, ¼ turn to let air enter the system and permit the coolant to drain completely from system.
5. Connect coolant extractor (Fig. 7). Use coolant extractor to drain the coolant from the engine. An alternate method is to drain the coolant into a suitable container using the drain hose.

DANGER

Coolant is toxic; risk of poisoning. Do not drink coolant. Use proper hand protection when handling. Keep coolant out of reach of children and animals. Failure to follow these precautions can cause serious illness or death.

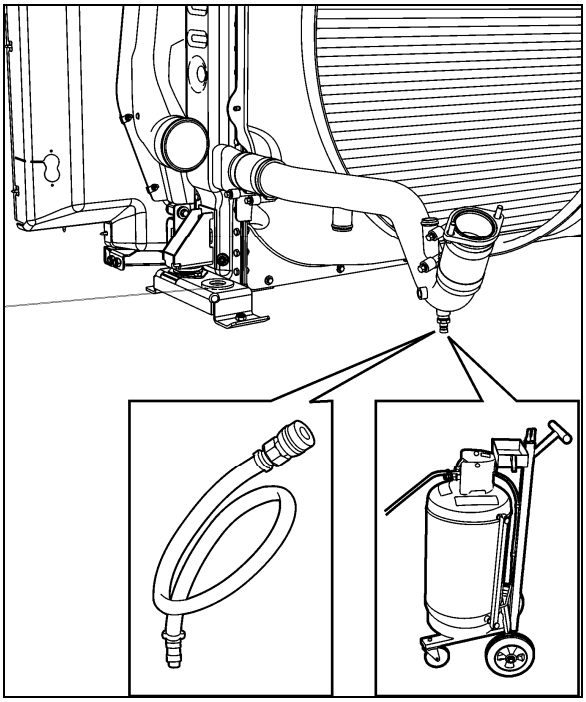

FIGURE 7: EXTRACTING COOLANT 05093

6. Open the radiator drain cock.
7. Remove the transmission oil cooler. Drain, flush and inspect. Refer to Section 7, "TRANSMISSION" for oil cooler maintenance or preventive replacement.

CAUTION

Drain water pump completely before extended storage to avoid possible water pump damage.

If freezing weather is anticipated and the engine is not protected with antifreeze, drain the cooling system completely when vehicle is not in use. Trapped water in the cylinder block, radiator or other components may freeze and expand resulting in damages. Leave the drain plugs open until the cooling system can be filled with coolant fluid. Do not run engine with cooling system empty.

To drain the entire system, do the previous steps while maintaining the shutoff valves in the open position; then follow the procedure under *"Draining Heating System"* in Section 22.

7. FILLING COOLING SYSTEM

If only the engine and related components were drained, maintain the two heater line shutoff valves in their closed position, then proceed as follows:

1. Close radiator drain cock.
2. Open the shut-off valve on the coolant filter mounting head.
3. Refill cooling system from the surge tank filler cap inlet with the recommended ethylene glycol-based antifreeze and water solution of the required concentration using the coolant extractor.

NOTE

Make sure the purge lines are properly connected and not obstructed. The purge lines (thermostat housing dome, radiator top tank, transmission oil cooler or delivery line) are required to ensure complete engine fill and proper purging of air in the system.

NOTE

The coolant level should remain within two inches of the surge tank filler neck.

4. Install the filler and pressure cap, then start the engine and run it at fast idle until reaching normal operating temperature. Check for leaks.

NOTE

If for any reason, the coolant level drops below the surge tank level probe, the Check Engine warning light will illuminate.

5. Stop engine and allow cooling.

6. Open the two heater line shutoff valves, check the coolant level in the surge tank, and then add as required.

CAUTION

Never pour cold coolant into a hot engine. The sudden change in temperature may crack the cylinder head or block.

If the entire system has been drained, redo the previous steps while maintaining the two heater line shutoff valves in the "Open" position. With engine running, activate the driver's and central heating systems to permit coolant circulation. Complete the procedure by bleeding the heater cores as explained in Section 22, under *"Bleeding Heating System".*

8. FLUSHING

If the cooling system is contaminated, flush the cooling system as follows:

1. Drain the coolant from the engine.
2. Refill with clean water.

CAUTION

If the engine is hot, fill slowly to prevent rapid cooling and distortion of the engine castings.

3. To thoroughly circulate the water, start and run the engine for 15 minutes after the thermostats have opened.
4. Fully drain system.
5. Refill with clean water and operate for 15 minutes after the thermostats have opened.
6. Stop engine and allow cooling.
7. Fully drain system.

Vehicles without coolant filters:

Fill with a 50/50-antifreeze/water solution and add required inhibitors.

Vehicles with coolant filters:

Fill with a 50/50-antifreeze/water solution. Replace coolant filter as per the Lubrication and Servicing Schedule in section 24 if required.

Dispose of spent fluids in an environmentally responsible manner according to regulations in effect in your area.

COOLING SYSTEM CAPACITY (approximation)

Includes heating system: 24 US gal (91 liters)

8.1 COOLING SYSTEM DESCALERS

If the engine overheats and the fan belt tension, coolant level and thermostat operation have been found to be satisfactory, it may be necessary to de-scale and flush the entire cooling system.

Remove scale formation by using a reputable and safe de-scaling solvent. Immediately after using the de-scaling solvent, neutralize with a neutralizing agent. It is important that product directions be thoroughly read and followed.

After using the solvent and neutralizer, fully drain the system, and then reverse flush the engine and radiator (see *"Reverse Flushing" in this section)* before filling the system with coolant solution.

8.2 REVERSE FLUSHING

After the engine and radiator have been thoroughly de-scaled, they should be reverse-flushed. The water pump should be removed and the radiator and engine reverse-flushed separately to prevent dirt and scale deposits from clogging the radiator tubes or being forced through the pump. Reverse flushing is accomplished by hot water, under pressure, being forced through the cooling system in a direction opposite to the normal flow of coolant, loosening and forcing deposits out.

The radiator is reverse flushed as follows:

1. Remove the radiator inlet and outlet hoses and replace existing radiator cap with a new one.
2. Attach a hose to the top of the radiator to lead water away from the engine.
3. Attach a hose at the bottom of the radiator and insert a flushing gun in the hose.
4. Connect the water hose of the gun to the water outlet and the air hose to the compressed air outlet.
5. Turn on the water and when the radiator is full, turn on the air in short blasts, allowing the radiator to fill between blasts.

NOTE

Apply air gradually. Do not exert more than 138 kPa (20 psi) air pressure. Too great a pressure may rupture a radiator tube.

6. Continue flushing until only clean water is expelled from the radiator.

The cylinder block and cylinder head water passages are reverse flushed as follows:

1. Remove the thermostats and the water pump.
2. Attach a hose to the water inlet of oil cooler housing to drain water away from engine.
3. Attach a hose to the water outlet at the top of the cylinder head (thermostat housing) and insert the flushing gun in the hose.
4. Turn on the water until the jackets are filled, and then turn on the air in short blasts. Allow jackets to fill with water between air blasts.
5. Continue flushing until the water from the engine runs clean.

If scale deposits in the radiator cannot be removed by chemical cleaners or reverse flushing as outlined above, it may be necessary to remove the upper tank and rod out the individual radiator tubes with flat steel rods. Circulate the water through the radiator core from the bottom to the top during this operation.

9. SPIN-ON COOLANT FILTER

The optional engine cooling system filter is used to filter out impurities such as scale or sand from the coolant and it also eliminates the process of adding inhibitors to the antifreeze/water solution. The filter is mounted onto the cooling fan drive mechanism aluminum casting (Fig. 8).

To replace a filter:

1. Close the filter shutoff cock on the filter mounting head and unscrew the old filter from mounting.

WARNING

Failure to relieve cooling system pressure may result in personal injury.

2. Remove and discard the filter. Recover the coolant remaining in the filter with a suitable container.
3. Clean the filter adapter with a clean, lint-free cloth.
4. Coat surface of gasket with clean antifreeze, tighten 2/3 to 1 turn after gasket makes contact with head.
5. Open the filter shutoff cock.
6. Start engine and check for leaks.

CAUTION

Do not exceed recommended service intervals.

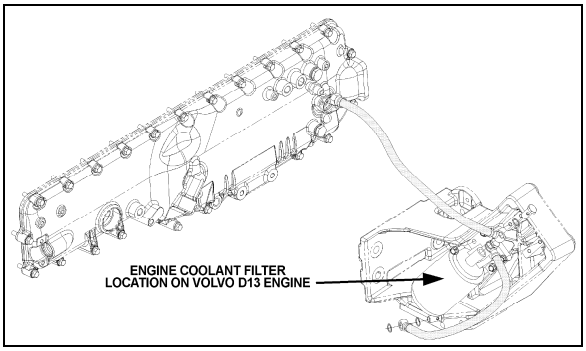

FIGURE 8: COOLANT FILTER (VOLVO D13) 05145

MAINTENANCE

VOLVO D13 ENGINE

Replace the coolant filter cartridge after 150,000 miles (240 000 km) or one year to prevent external rust damage to the filter walls. **Do not** use a coolant filter containing Supplemental Coolant Additives (SCA).

Coolant filter cartridge (Volvo D13): #20458771

10. RADIATOR

The radiator is mounted on the L.H. side of engine compartment. It is designed to reduce the temperature of the coolant under all operating conditions. It is essential that the radiator core be kept clean and free from corrosion and scale at all times.

10.1 MAINTENANCE

MAINTENANCE

Inspect the exterior of the radiator core every 25,000 miles (40 000 km) or once a year, whichever comes first. Clean with a quality grease solvent, such as a mineral spirits and dry with compressed air. Do not use fuel oil, kerosene, gasoline, or any caustic material. It may be necessary to clean the radiator more frequently if the vehicle is operated in extremely dusty or dirty areas. Refer to coolant system flushing and reverse flushing in this section for maintenance of radiator interior.

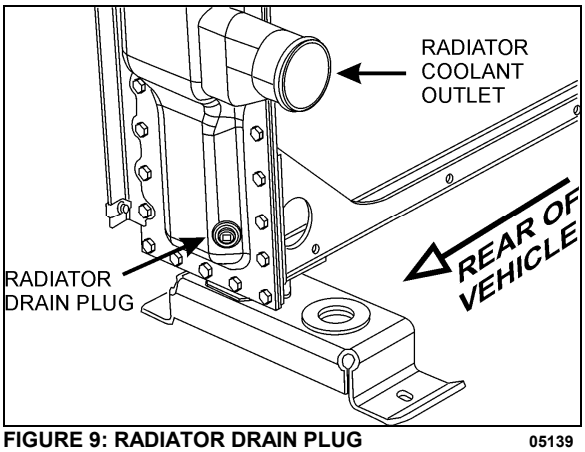

FIGURE 9: RADIATOR DRAIN PLUG 05139

10.2 RADIATOR REMOVAL & INSTALLATION

1. Apply the parking brake and shift the transmission to neutral. Shut off all electrical loads. Turn the ignition key to the OFF position.
2. Open engine compartment doors.
3. Set starter selector switch to the OFF position.
4. Connect coolant extractor (Fig. 7). Use coolant extractor to drain the coolant from the engine. An alternate method is to drain the coolant into a suitable container using the drain hose.
5. Raise L.H. side hinged rear fender.
6. Remove tag axle L.H. side wheel.

DANGER

Coolant is toxic; risk of poisoning. Do not drink coolant. Use proper hand protection when handling. Keep coolant out of reach of children and animals. Failure to follow these precautions can cause serious illness or death.

7. Unfasten 4 cap screws and remove access panel located behind tag axle L.H. side wheel (refer to figure 10).

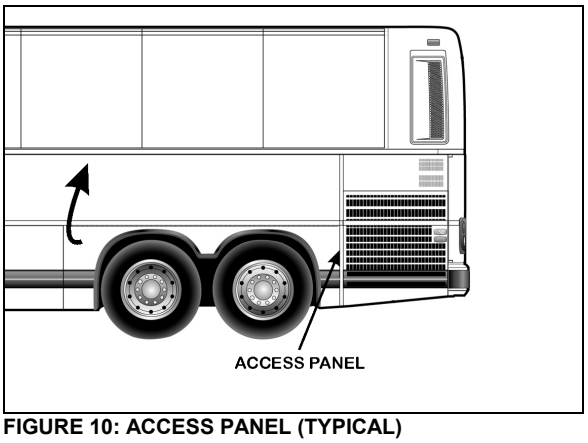

FIGURE 10: ACCESS PANEL (TYPICAL)

8. Open radiator door to access radiator assembly. Unfasten upper arm assembly.
9. Remove radiator sealing frame.

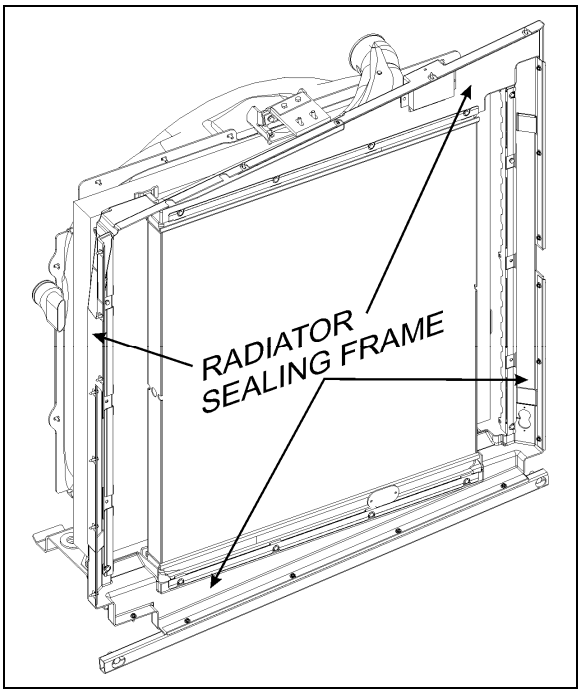

FIGURE 11: RADIATOR SEALING FRAME

10. Remove clamps and then break hoses from the front coolant and charge air pipes (Fig. 12 & 13).

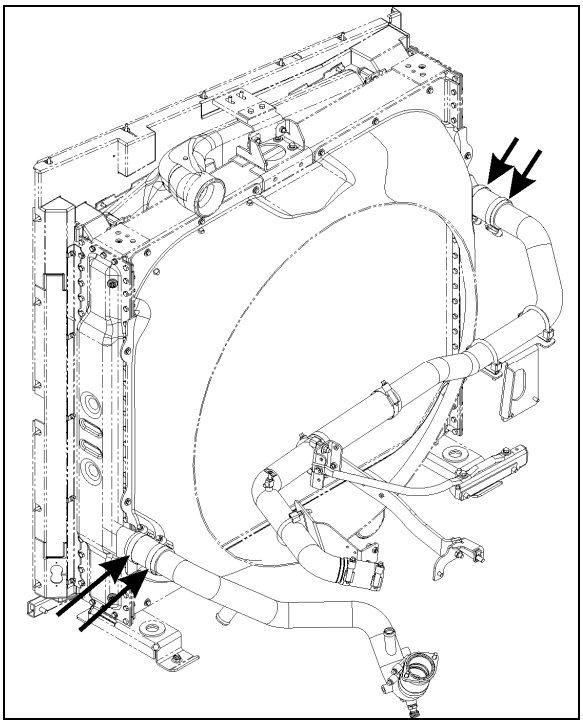

FIGURE 12: RADIATOR HOSE CLAMPS

11. Remove rear coolant and charge air hose clamps then break hoses loose (Fig. 12 & 13).

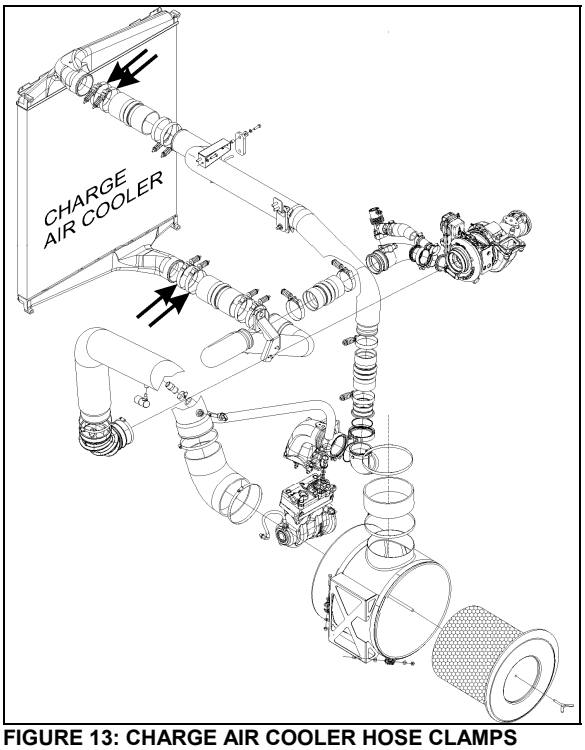

FIGURE 13: CHARGE AIR COOLER HOSE CLAMPS

12. Remove the upper radiator assembly support bracket (Fig. 14).

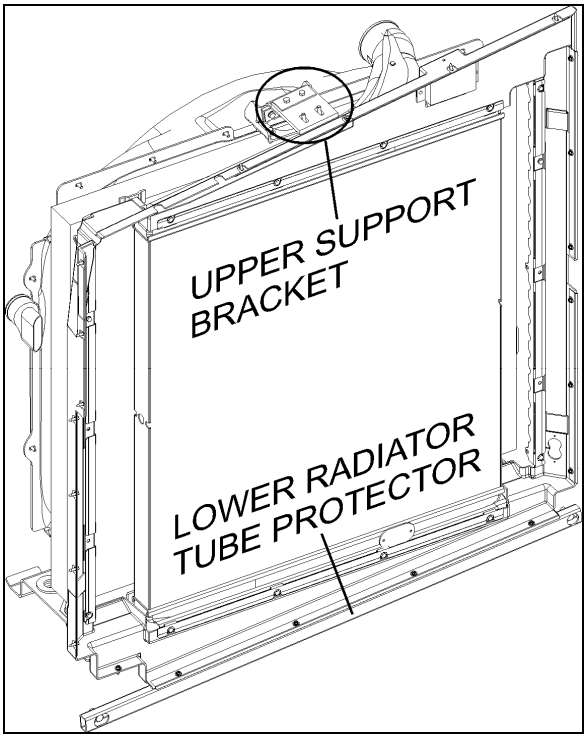

FIGURE 14: UPPER SUPPORT BRACKET & TUBE PROTECTOR

13. Remove the lower radiator assembly tube protector from the lower section (Fig. 14).

14. Remove all lower radiator assembly mounting fasteners.

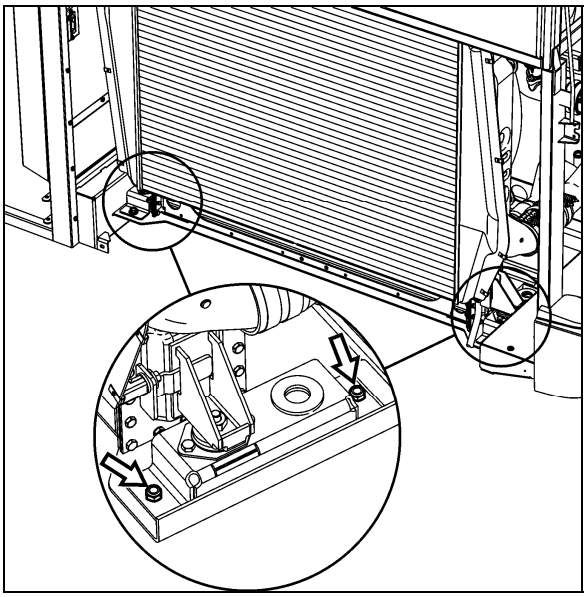

FIGURE 15: RADIATOR ASSEMBLY LOWER MOUNTING FASTENERS

15. Cut cable tie and disconnect electrical connector from fan clutch. Remove fan drive shaft fasteners at the gear box.

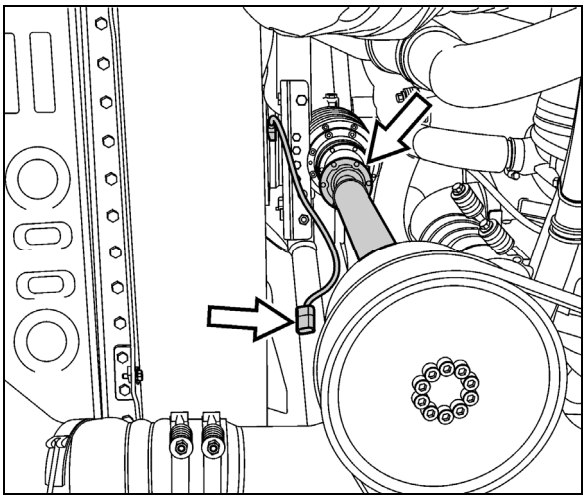

FIGURE 16: DISCONNECTING FAN DRIVE SHAFT

16. Position a forklift under the radiator assembly that is capable of safely lifting the radiator.

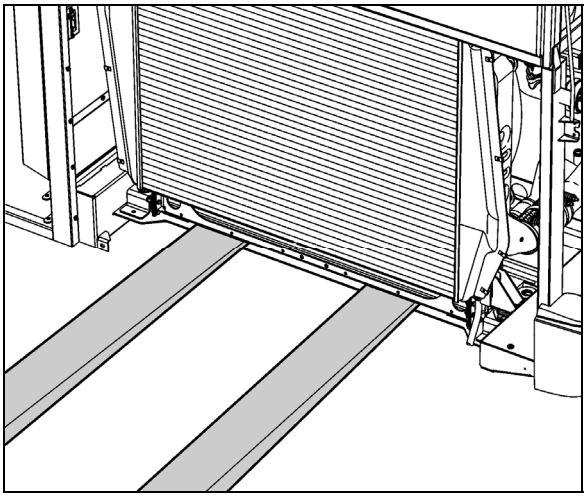

FIGURE 17: POSITIONING FORKLIFT

17. With assistance, slide radiator assembly out and onto the forklift. Transfer radiator assembly to a secure location.
18. Separate charge air cooler from radiator.
19. Lay radiator face down. Remove the fasteners that connect lower radiator mounts to radiator.

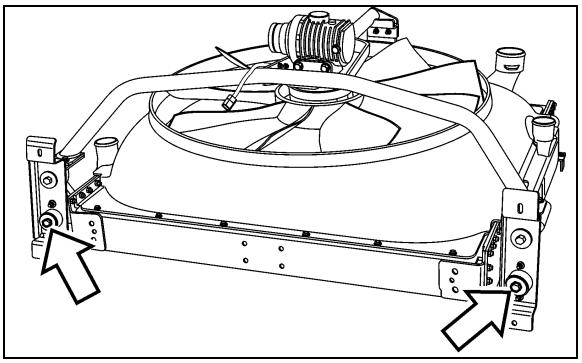

FIGURE 18: REMOVING FASTENERS

20. Remove upper fan drive support bracket from the upper section of the radiator.

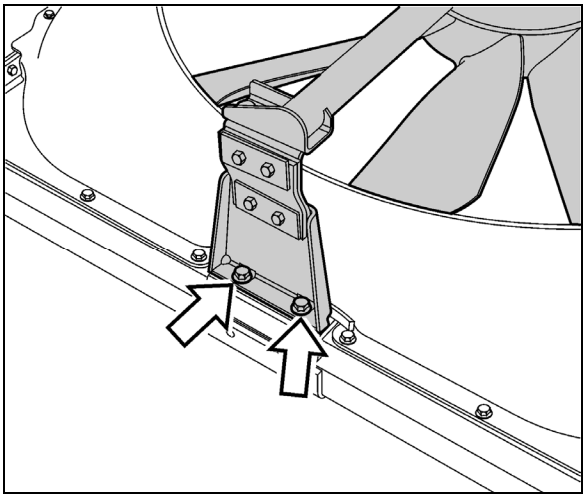

FIGURE 19: REMOVING UPPER FAN DRIVE SUPPORT BRACKET

21. With assistance, remove fan drive and drive frame from radiator.
22. Remove fan shroud from radiator.

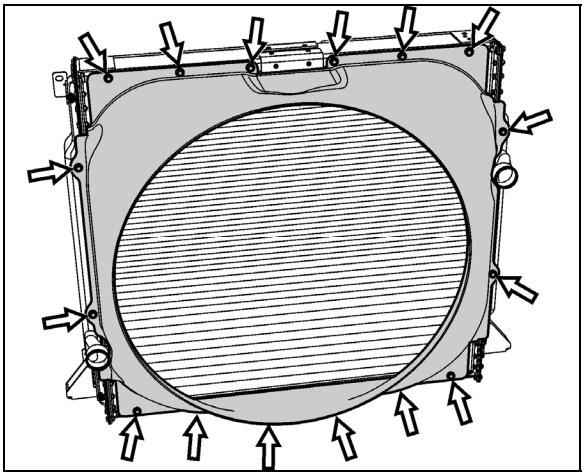

FIGURE 20: REMOVING FAN SHROUD FROM RADIATOR

23. Reverse removal procedure to reinstall radiator assembly.

11. CHARGE AIR COOLER LEAKAGE

Spec for CAC acceptable leakage:

"The CAC is considered acceptable if it can hold 30 psi (206 kpa) gauge pressure with less than 5 psi (34.5 kpa) loss in 15 seconds after turning off the hand valve."

NOTE
This spec does not apply if there is any evidence that the leak was caused by a foreign object impact.

12. COOLING FAN DRIVE MECHANISM

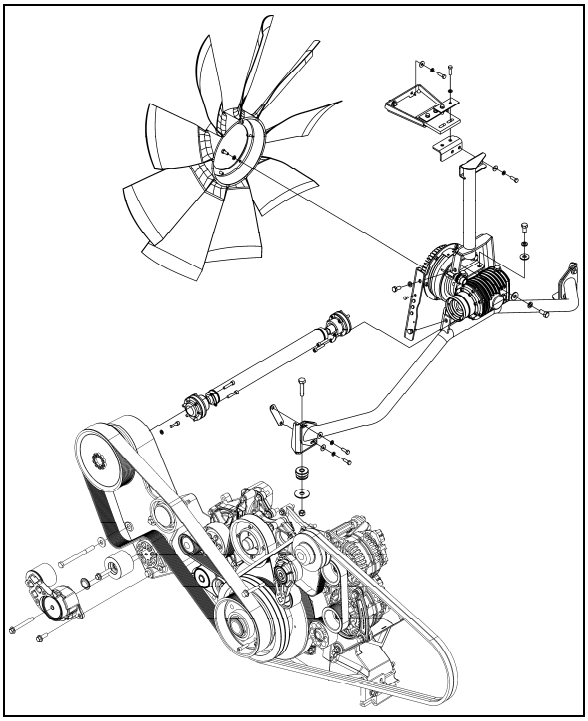

FIGURE 21: COOLING FAN DRIVE MECHANISM

12.1 DRIVE PULLEY AND UNIVERSAL JOINT SHAFT

To disconnect the universal shaft, proceed as follow:

WARNING

Set the ignition to the OFF position and remove the key from the contact switch to prevent accidental starting of the engine.

1. Unwrap the drive belt from around the pulley (see paragraph MOUNTING THE DRIVE BELT).
2. Dismount the drive pulley. Gain access to the 6 mounting bolts from behind the pulley, through the opening in the cast aluminum support (Fig. 22).
3. Unscrew and remove the universal joint shaft mounting bolts (6) at the right angle gearbox.
4. Slowly, move the shaft toward the rear of the vehicle.
5. Finally, dismount the universal joint shaft from the drive pulley (6 bolts).

Installation of the universal joint shaft is the same as removal, but in reverse order.

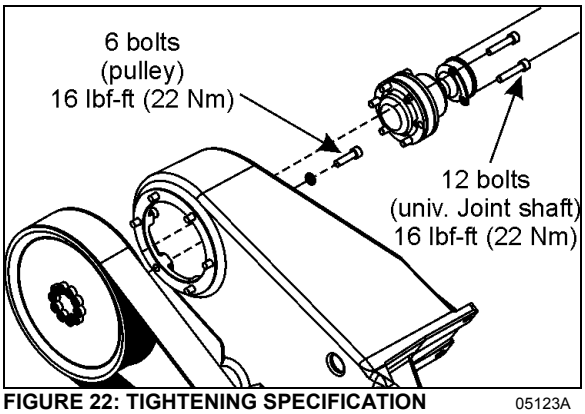

FIGURE 22: TIGHTENING SPECIFICATION 05123A

12.2 IDLER REPLACEMENT

If an idler is defective, replace as follow:

WARNING

Set the ignition to the OFF position and remove the key from the contact switch to prevent accidental starting of the engine.

1. Remove the protective cap (replace with a new one).
2. Unscrew the idler mounting bolt.
3. Replace idler with a new one.

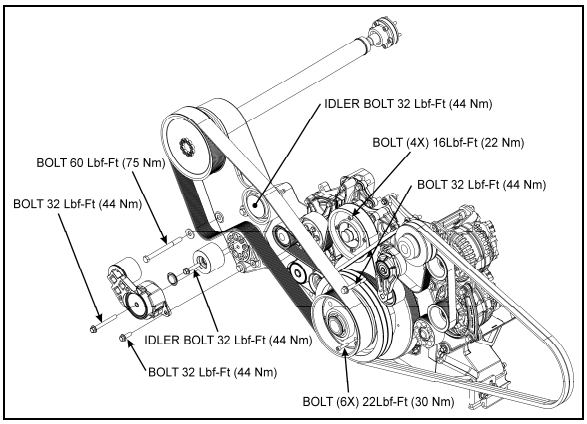

FIGURE 23: TIGHTENING SPECIFICATION (VOLVO D13 ENGINE)

CAUTION

When installing the idler, make sure it rests perfectly against the bearing surface on the cast aluminum support. If not, the drive belt may slip of the idler. See following figure.

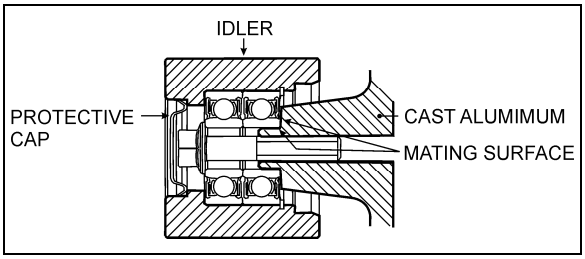

FIGURE 24: IDLER MOUNTED ON THE CAST ALUMINUM SUPPORT

4. Bolt the new idler on the cast aluminum support. Tighten to 32 lbf-ft (44 Nm).
5. Place a new protective cap.

13. VARIABLE SPEED COOLING FAN

The cooling fan clutch has two thermostatically controlled speeds, plus a neutral (clutch disengaged). The engine control module controls the speed by comparing data from engine coolant temperature, charge air temperature, Allison transmission oil temperature (if applicable) and small A/C High side pressure to a set of calibration data. The fan drive clutch is electromagnetic; the engine control module sends an electric current to regulate speed by activating one magnetic coil for the first speed and two magnetic coils for the second speed.

The settings are:

	Engine coolant temp.	Air intake temp.	Allison trans. oil temp.
temperature rising ⇧	208°F: fan engages in HIGH SPEED	194°F: fan engages in HIGH SPEED	230°F: fan engages in HIGH SPEED
	203°F: fan engages in LOW SPEED	176°F: fan engages in LOW SPEED	216°F: fan engages in LOW SPEED
temperature dropping ⇩	203°F: fan HIGH SPEED disengages	189°F: fan HIGH SPEED disengages	225°F: fan HIGH SPEED disengages
	198°F: fan LOW SPEED disengages	170°F: fan LOW SPEED disengages	210°F: fan LOW SPEED disengages

	Small A/C high side pressure
pressure rising ⇧	170 psi: fan engages in HIGH SPEED
	120 psi: fan engages in LOW SPEED
pressure dropping ⇩	130 psi: fan HIGH SPEED disengages
	90 psi: fan LOW SPEED disengages

WARNING

DO NOT work near the fan with the engine running or the ignition in the ON position. The engine fan can engage at any time without warning. Anyone near the fan when it turns on could be seriously injured.

13.1 LOCKING RADIATOR FAN FOR EMERGENCY OPERATION

13.1.1 Electrical Locking

If the cooling fan clutch does not function due to an electrical control system malfunction and the engine is overheating, execute the following procedure:

1. Set the ignition key to the ON position.
2. Activate the dashboard Telltale Light Test switch 3 times within 4 seconds.
3. In the engine compartment, set the starter selector switch to REAR START and then start the engine from the rear.

WARNING

Potential Accident Risk. Always use extreme caution when working in the vicinity of hot, rotating or moving parts.

While in this mode, the rear start push-button can be used to manually engage the fan clutch. The multiplex system knows when the engine is already running, and it will not activate the starter.

4. Press the push-button one time to engage the clutch to 1st speed, press a second time to engage to 2nd speed, press a third time to stop the fan, press once again to return to 1st speed.

NOTE

If the fan clutch does not engage using this procedure then the clutch is faulty or the wiring between the multiplex module and the clutch is faulty. Mechanically lock the fan as described hereafter in section 13.1.2.

13.1.2 Mechanical Locking

Once mechanically locked, the fan is rigidly connected to the drive mechanism and will rotate continuously, with no considerations for the cooling needs. This is an emergency situation and the vehicle shall not be operated in that situation for an extended period.

In case of a magnetic clutch malfunction:

1. Set the ignition to the OFF position and remove the key from the contact switch to prevent accidental starting of the engine.
2. Disconnect the fan clutch electrical connector.
3. Unscrew and remove the 4 spare bolts screwed to the angle on the fan gearbox mounting support.
4. Turn the fan blades in order to position the locking plate bores over the rotor's threaded sockets.
5. Screw in and tighten the spare bolts (Fig. 25).
6. Using the automatic belt tensioner, release tension on the drive belt in order to be able to rotate the fan clutch drive mechanism by hand.
7. Rotate the shaft to get access to the second locking plate and rotor threaded sockets.
8. Screw in and tighten the spare bolts.

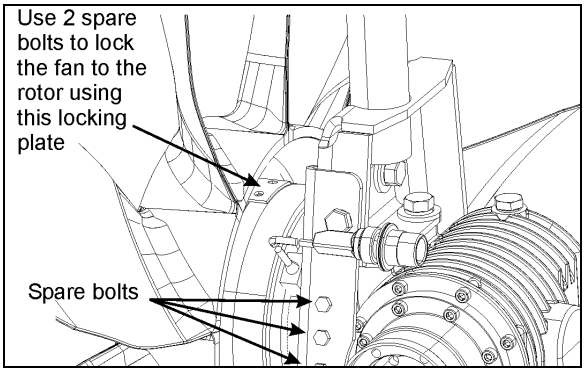

FIGURE 25: MECHANICAL LOCKING 05124

13.2 MAINTENANCE

1. Clean the fan and related parts with clean fuel oil and dry them with compressed air. Do not clean with steam or high-pressure jet.
2. Check the fan blades for cracks or other damage. Replace the fan if the blades are cracked or deformed.
3. Remove any rust or rough spots in the grooves of the fan pulley. If the grooves are damaged or severely worn, replace the pulley.
4. Do not restrict fan rotation during engine operation for any reason.
5. Do not operate fan-driving mechanism with a damaged fan assembly. Replace a damaged fan as soon as the fault is noted.
6. Immediately investigate and correct any operator complaint involving driving mechanism or cooling system performance.
7. When questions arise, obtain answers before proceeding. Assistance is available through the Prevost After-Sales Service Support serving your area.

13.3 INSPECTION

DANGER

Set the starter selector switch in engine compartment to the "Off" position to prevent accidental starting of the engine.

- Check security of fasteners securing fan blade assembly to fan clutch.
- Visually inspect fan driving mechanism, fan blade assembly, shroud, radiator, and surrounding area for evidence of contact between rotating and non-rotating parts.
- Check drive belt for fraying, cracking, and proper tension.
- Turn fan through at least 360° of rotation. It should turn smoothly with no resistance.

13.4 FAN REMOVAL / INSTALLATION

The fan is bolted to the magnetic clutch. To remove the fan:

- Unscrew and remove the mounting bolts and washers.

To reinstall the fan:

- If the fan is still in the radiator fan shroud, place 2 of the mounting bolts on the opposite side of the clutch, in reverse direction, in order to use them as guide pins to position the fan.
- Once properly positioned, screw the 4 remaining bolts back in and tighten properly (16 lbf-ft; 22 Nm).
- Finally, take the 2 bolts that were used as guide pins and screw them back in on the proper side of the clutch and tighten properly.

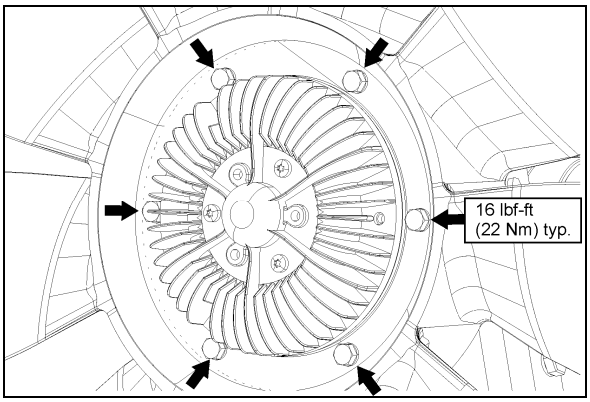

FIGURE 26: RADIATOR FAN MOUNTING BOLTS 05125

14. FAN RIGHT ANGLE GEARBOX

The radiator fan is belt driven from the engine crankshaft pulley through a drive belt, a universal joint shaft, a right angle gear and clutch assembly.

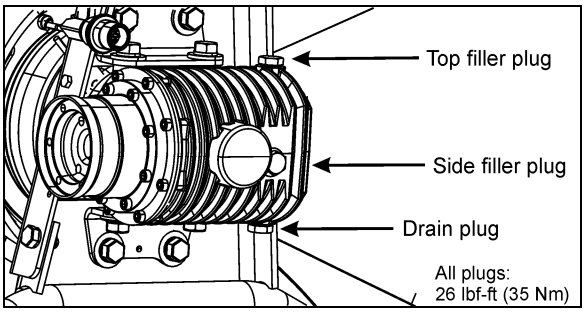

FIGURE 27: RIGHT ANGLE GEARBOX 05118

14.1 MAINTENANCE

MAINTENANCE

Change the right angle gearbox oil every 56,000 miles (90,000-km). Replace seals at every oil change.

Use **Shell transmission oil MA 75W90**.

14.2 OIL CHANGE

1. Stop engine and make sure that all engine safety precautions have been observed.
2. Set the ignition to the OFF position and remove the key from the contact switch to prevent accidental starting of the engine or set the rear start panel selector switch to the OFF position.
3. Remove the drain plug located underneath the right angle gearbox case and allow the oil to drain into a suitable container.
4. Replace the seal and screw the drain plug back in (torque: 26 lbf-ft).
5. Unscrew and remove the side filler plug.
6. Unscrew and remove the top filler plug.
7. Add gear lubricant. The oil level is correct once the top of the oil has reached the bottom of the side filling point.
8. Replace the seals and screw side and top filler plug back in (torque: 26 lbf-ft).
9. Clean gear case carefully.
10. Start the engine and allow running a few minutes. Stop the engine and check for leaks.

WARNING

Note that warranty may be voided if proper maintenance at oil change intervals is not respected.

14.3 REMOVAL / INSTALLATION

To remove the right angle gearbox, proceed as follow:

1. Set the ignition to the OFF position and remove the key from the contact switch to prevent accidental starting of the engine.
2. Disconnect the fan clutch electrical connector.
3. Dismount the fan and lean it against the radiator (refer to previous paragraph).
4. Disconnect the universal joint shaft.

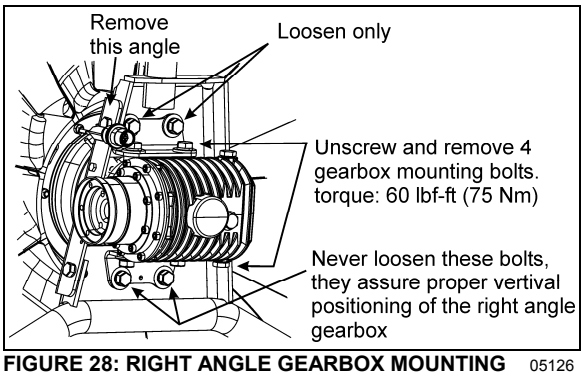

FIGURE 28: RIGHT ANGLE GEARBOX MOUNTING 05126

5. Dismount the angle (see fig. 28).
6. Loosen the gearbox support bracket top bolts.
7. Unscrew and remove 4 gearbox mounting bolts.
8. Slide the gearbox out of the support assembly.

Installation procedure is the same as removal but in reverse order. Tighten the 4 mounting bolts as specified.

15. COOLING FAN DRIVE BELT

15.1 MOUNTING THE DRIVE BELT

To install the cooling fan drive belt, proceed as follow:

WARNING

Set the ignition to the OFF position and remove the key from the contact switch to prevent accidental starting of the engine.

WARNING

Potential Accident Risk. Always use extreme caution when working in the vicinity of hot, rotating or moving parts.

1. Wrap the new drive belt around the fan drive mechanism pulley, the idlers and the automatic tensioner idler as shown on figure 29.
2. Using the special tool included with your vehicle (see inside the Warning Reflectors box located in the first curb-side baggage bay), rotate the automatic tensioner in clockwise direction to relieve tension on the belt and hold the tensioner in that position (Fig. 29).
3. Finally, place the drive belt around the engine crankshaft pulley.

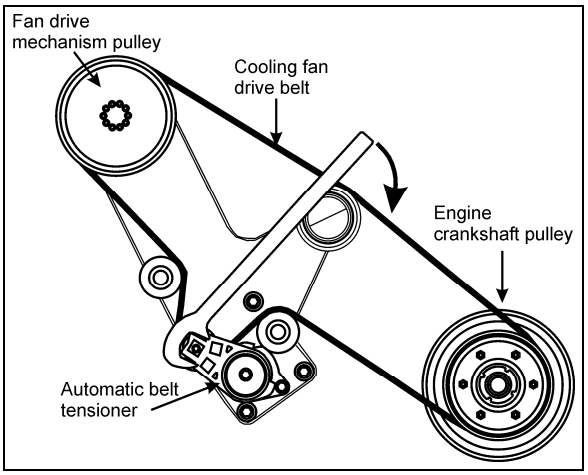

FIGURE 29: DRIVE BELT ROUTING (VOLVO D13 ENGINE)

4. Release the tensioner slowly and let it return to its natural position.

COOLING FAN DRIVE BELT

With Volvo D13 engine

Type: 14PK2526

Prevost number: 5060097

16. SPECIFICATIONS

Cooling System Capacity (Approximation)

Includes heating system..... 24 US gal (91 liters)

Thermostat - Volvo D13 Engine

Number used..... 1
Start to close..... 203°F (95°C)
Fully closed..... 185°F (85°C)

Cooling Fan Drive Belt – Volvo D13 Engine

Type.....Poly-Rib 14PK2526
Qty 1
Prevost number 5060097

Coolant - Volvo D13 Engine

Prevost Number 685241
Texaco CPS..... 227998
Chevron CPS 2227805

Coolant Filter Cartridge – Volvo D13 Engine

Number used..... 1
Type..... Spin-on
Prevost number 20458771

CONTENTS

1. GENERAL DESCRIPTION 4

1.1 WIRING DIAGRAMS 4
1.1.1 Using Wiring Diagrams 4
1.1.2 Testing Circuits 5
1.2 WIRE SIZES AND COLORS 5
1.3 SPARE WIRES 5
1.4 CLEANING CONNECTORS 6
1.5 CIRCUIT BREAKERS 6
1.5.1 X3-45 Coaches 6
1.5.2 X3-45 VIP & XLII Bus Shells 6
1.6 MULTIPLEX FUSES 7
1.7 RELAYS 7
1.8 PRECAUTIONS 7

2. X3 SERIES COACH, VIP & XLII ENTERTAINER BUS SHELL ELECTRICAL COMPARTMENTS .. 10

2.1 MAINTENANCE 11
2.2 REAR ELECTRICAL PANEL, JUNCTION PANEL, BATTERY COMPARTMENT & EQUALIZER 11
2.3 REAR ELECTRICAL PANEL 12
2.4 REAR JUNCTION PANEL 13
2.5 BATTERY COMPARTMENT 13
2.6 FRONT ELECTRICAL AND SERVICE COMPARTMENT 13
2.7 A/C JUNCTION BOX 14
2.8 ENGINE REAR START PANEL 14
2.9 ENTRANCE DOOR & WIPER CONTROL PANEL 14

3. BATTERIES 15

3.1 BATTERY DISCHARGE PROTECTION 16
3.2 MAIN BATTERY RELAYS 16
3.3 BATTERY REMOVAL AND INSTALLATION 16
3.4 BATTERY RATING 17
3.5 BATTERY TESTING 18
3.5.1 Visual Inspection 18
3.5.2 Removing Surface Charge 18
3.5.3 Load Test 18
3.5.4 Testing Battery Cables 19
3.6 BATTERY CHARGING 20
3.6.1 Battery Charging Guide 21
3.6.2 Emergency Jump Starting With Auxiliary (Booster) Battery. 21
3.7 CLEANING AND INSPECTION 22
3.8 COMMON CAUSES OF BATTERY FAILURE 22
3.9 TROUBLESHOOTING 23
3.10 "BAT" BATTERY VOLTAGE INCORRECT TELLTALE LIGHT 23
3.10.1 "Bat" Telltale Light Definitions 23

4. TROUBLESHOOTING AND TESTING THE MULTIPLEX VEHICLES 23

4.1 ELECTRICAL SYSTEM DIAGNOSTIC 23
4.2 PROBING VOLTAGE ON THE MULTIPLEX CIRCUITS 24
4.3 CAN NETWORK 24
4.3.1 CAN Connection On The Telltale Panel And The Hvac Control Unit 24
4.3.2 Spare CAN 25
4.4 TEST MODE FOR SWITCHES AND SENSORS 25
4.4.1 Information Available And Impact On The Functions In Switch/Sensor Test Mode 25
4.5 TEST MODE FOR ELECTRIC MOTORS 26
4.5.1 Test Sequence 26

4.6 CAN NETWORK LAYOUT AND TROUBLESHOOTING 27
4.7 TROUBLESHOOTING 28
4.8 ESSENTIAL FUNCTIONS TO OPERATE THE VEHICLE 33
4.8.1 Available Functions 33
4.9 LOWER PRIORITY MODULES FOR BREAKDOWN SERVICE 33
4.10 MULTIPLEX MODULES 33
4.10.1 CECM 33
4.10.2 MASTER ID 34
4.10.3 IO-A 34
4.10.4 IO-B 34
4.11 MULTIPLEX MODULES REPLACEMENT 34
4.11.1 Replacing IO-A Or IO-B Modules 34
4.11.2 Replacing The CECM Module 34

5. BOSCH ALTERNATORS 35

5.1 ALTERNATOR DRIVE BELT 35
5.2 ADJUSTMENT 35

6. BATTERY EQUALIZER 39

7. STARTER 39

8. ENGINE BLOCK HEATER 39

8.1 MAINTENANCE 39

9. EXTERIOR LIGHTING 39

9.1 HEADLIGHTS 39
9.1.1 Headlight Beam Toggle Switch 40
9.1.2 Maintenance 40
9.1.3 Headlight Adjustment 40
9.1.4 Sealed-Beam Unit 42
9.1.5 Front Turn Signal 42
9.1.6 Optional Xenon Headlamp 42
9.2 STOP, TAIL, DIRECTIONAL, BACK-UP, AND HAZARD WARNING LIGHTS 44
9.2.1 Lamp Removal and Replacement 44
9.2.2 Center Stoplights and Cyclops Light Removal and Replacement 44
9.3 LICENSE PLATE LIGHT 44
9.4 CLEARANCE, IDENTIFICATION AND MARKER LIGHTS 44
9.4.1 Clearance and Identification Light Removal and Replacement 44
9.5 FOG LIGHTS 44
9.5.1 Bulb Removal and Replacement 44

10. INTERIOR LIGHTING EQUIPEMENT 45

10.1 CONTROL PANEL LIGHTING 45
10.1.1 Switch Lighting 45
10.1.2 Telltale Light Replacement 45
10.1.3 Gauge Light Bulb Replacement 45
10.2 STEPWELL LIGHTS 46
10.2.1 Bulb Removal and Replacement 46
10.3 LAVATORY NIGHT-LIGHT 46
10.3.1 Bulb Removal and Replacement 46
10.4 DRIVER'S AREA LIGHTS 46
10.4.1 Bulb Removal and Replacement 46
10.5 PASSENGER SECTION LIGHTING 46
10.5.1 Fluorescent Tube Replacement 47
10.5.2 Removal and Replacement of In-Station Fluorescent Tubes 47

10.5.3 Removal and Replacement of Reading Lamp Bulb 47
10.6 ENGINE COMPARTMENT LIGHTING 48
10.7 LAVATORY LIGHT 48

11. LIGHT BULB DATA 48

12. SPECIFICATIONS 51

ILLUSTRATIONS

FIGURE 1: WIRE IDENTIFICATION 5
FIGURE 2: REAR ELECTRICAL JUNCTION PANEL 6
FIGURE 3: MULTIPLEX MODULE CONNECTORS PIN-OUT 8
FIGURE 4: ELECTRICAL COMPARTMENTS (X3-45 COACH) 10
FIGURE 5 ELECTRICAL COMPARTMENTS (X3-45 VIP)) 10
FIGURE 6: ELECTRICAL COMPARTMENTS (XLII ENTERTAINER BUS SHELL) 11
FIGURE 7: REAR ELECTRICAL PANEL, JUNCTION PANEL & BATTERY COMPARTMENT 11
FIGURE 8: REAR ELECTRICAL PANEL 12
FIGURE 9: REAR ELECTRICAL JUNCTION PANEL 13
FIGURE 10: BATTERY COMPARTMENT 13
FIGURE 11: FRONT ELECTRICAL COMPARTMENT 13
FIGURE 12: A/C JUNCTION BOX 14
FIGURE 13: REAR START PANEL 14
FIGURE 14: ENTRANCE DOOR & WIPER CONTROL PANEL 14
FIGURE 15: BATTERY CONNECTIONS 16
FIGURE 16: TEST INDICATOR 18
FIGURE 17: LOAD TEST 19
FIGURE 18: ALLIGATOR CLAMPS AND BATTERY 20
FIGURE 19: BOOSTER BLOCK 21
FIGURE 20: X3-45 COACHES CAN NETWORK LAYOUT 27
FIGURE 21: IO-B MODULE REMOVAL 34
FIGURE 22: ALTERNATOR DRIVE BELT 36
FIGURE23: TWIN BOSCH ALTERNATORS INSTALLATION (X3-45 COACH) 36
FIGURE 24: ELECTRIC HEATER PLUG LOCATION 39
FIGURE 25: HEADLIGHT ASSEMBLY 39
FIGURE 26: OPENING HEADLIGHT ASSEMBLY 40
FIGURE 27: ALIGNMENT OF HEADLIGHT AIMING SCREEN 41
FIGURE 28: HIGH-INTENSITY ZONE (SHADED AREA) OF A PROPERLY AIMED UPPER BEAM ON THE AIMING SCREEN 7.6 M (25FT) IN FRONT OF VEHICLE 41
FIGURE 29: HIGH-INTENSITY ZONE (SHADED AREA) OF A PROPERLY AIMED LOWER BEAM ON THE AIMING SCREEN 7.6 M (25FT) IN FRONT OF VEHICLE 41
FIGURE 30: AIM INSPECTION LIMITS FOR UPPER-BEAM HEADLIGHTS 41
FIGURE 31: AIM INSPECTION LIMITS FOR LOWER-BEAM HEADLIGHTS 41
FIGURE 32: XENON HEADLAMP LOCATION 43
FIGURE 33: SWITCH 45
FIGURE 34: VARIOUS LIGHTS LOCATION 46
FIGURE 35: PARCEL RACK LIGHTING 48
FIGURE 36: ENGINE COMPARTMENT LIGHT 48

1. GENERAL DESCRIPTION

These vehicles use a dual voltage system to obtain two different voltages (12 and 24 volts) for various electrical controls and accessories. The main power source incorporates four maintenance-free “Volvo” model 20359831 batteries connected in parallel-series. All batteries are kept uniformly charged by means of a 100 amp battery equalizer (standard), giving a maximum possible output supply of 100 amps on the 12 volt system. Both the 12 and 24 volt systems are controlled through individual main battery relays. Usually two 28 volt self-regulated alternators are installed and are belt driven from the engine, and can be reached through the engine compartment doors.

1.1 WIRING DIAGRAMS

A master wiring diagram of the electric circuits, covering standard and optional accessories and systems, is located in the technical publications box. Usually, a separate wiring diagram page is provided for each major function or system. In some cases, more than one circuit may appear on one wiring diagram page; when this occurs, each circuit covered in this page is listed in the wiring diagram index. Moreover, a circuit may appear on several pages; in such case, the number(s) at the extremity of the diagram title will indicate the sheet reference number. Refer to the *"Wiring Diagram Index*" to ensure that the correct diagram is being used to trace the circuit in question. In addition to the major functions page reference, the wiring diagram index contains the following information pages.

- The Multiplexed Device Index,
- The Arrangement-Harness drawing showing the harnesses arrangement and harness number on the vehicle,
- Glossary,
- Circuit number listing,
- Circuit breaker code,
- Connector code,
- Diode number code,
- Resistor number code,
- Fuse code.

1.1.1 Using Wiring Diagrams

Three methods are used to *"work"* with electric wiring diagrams.

Situation: You have identified the defective part (breaker, diode, relay, etc.), and you wish to locate its corresponding circuit.

Problem: Circuit breaker CB12 is released (open circuit) and you don't know which circuit is affected.

a) Refer to wiring diagram index, and look for *"Circuit breaker code"*, pages **F**.

b) At item CB12, you will find the location, the Prevost number, the breaker function, the breaker ampere rating and the page on which to find the corresponding diagram.

c) Refer to page 3.1.

d) When you have located CB12, follow the wiring up to the end and find the diagram page number and function on which the circuit continues.

Situation: You have a problem with a specific system and you want to find the corresponding diagram.

Problem: The last three (3) speakers on the R.H. side of vehicle are inoperative and you must trace the electric circuit.

a) Refer to wiring diagram index and look for *“Sound system”.*

b) You will find on page 35.1 & 35.2 the components as well as the electric wiring, thus providing you with a complete understanding of this circuit.

Situation: Using the message center display (MCD), you check on arrival if there are active errors in the vehicle electrical system. With the SYSTEM DIAGNOSTIC menu, highlight FAULT DIAGNOSTIC, highlight ELECTRICAL SYSTEM to request a diagnostic of the electrical system and then press the enter key. If applicable, the MCD shows the fault messages or fault codes recorded. When more than one fault is recorded, an arrow pointing down appears on the right of the display. Use the down arrow to see all the fault messages.

Problem: MCD displays the fault "Elec. Horn SW61 SW62; shorted to ground" as being active.

a) Refer to wiring diagram index, and look for *"Multiplexed Device Index"*, pages B1-B8.

b) In first column DEVICE ID, look for device SW61, SW62.

c) At device SW61,SW62, find the fault message, the minimum condition to activate, other inputs involved in logic, the multiplex module related to switch 61 and switch 62, the connector and pin number on the module and the page on which to find the corresponding diagram.

d) Once the problem corrected, the MCD still shows the fault as being active. You have to leave the FAULT DIAGNOSTIC menu, wait approximately 20 to 30 seconds and then return to FAULT DIAGNOSTIC to request a new diagnostic of the ELECTRICAL SYSTEM from the CECM. The MCD should display the fault as being inactive.

1.1.2 Testing Circuits

A careful study of the wiring diagrams should be made to determine the source and flow of current through each circuit. When a circuit is thoroughly understood, a point-to-point check can be made with the aid of the applicable wiring diagrams. Any circuit can be tested for continuity or short circuits with a multimeter or a suitable voltmeter.

All electrical connections must always be kept clean and adequately tight. Loose or corroded connections can result in discharged batteries, difficult starting, dim lights and improper functioning of other electric circuits. Inspect all wiring connections at regular intervals. Make sure knurled nuts on all amphenol-type plugs are securely tightened. Knurled nuts on the plastic amphenol-type connectors will click into a detent when properly tightened. Line connectors, who have the side locking tabs, must have the locks latched in place to ensure a proper electrical connection.

1.2 WIRE SIZES AND COLORS

Each wire in the electrical system has a specific size as designated on the wiring diagram. When replacing a wire, the correct size must be used. Never replace a wire with one of a smaller size. The vehicle electrical system is provided with different voltages. The insulation on each wire is distinctly colored in order to determine visually the wiring voltage and to assist in making connectors. The wires are color coded as follows:

Yellow	Multiplex modules communication CAN-H (twisted with green)
Green	Multiplex modules communication CAN-L (twisted with yellow)
Orange	Connected to multiplex outputs
White	Connected to multiplex inputs
Red	24 volt system
Yellow	12 volt system
Black	grounded wire
Blue	110 V ac system (live)
White	110 V ac system (neutral)
Green	110 V ac system (ground)
Orange	speakers (+) (**Coaches Only)**
Brown	speakers (-) (**Coaches Only)**
Grey	spare wire

NOTE

Wires are identified at each 2-4 inch (5-10 cm) intervals by a printed number.

Each wire on a diagram is patterned to assist in tracing and testing circuits. The wire number identifies the voltage rating, the wire identification number and the basic wire gauge as illustrated in figure 1.

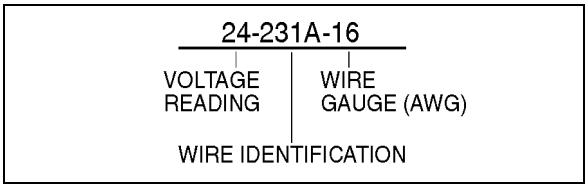

FIGURE 1: WIRE IDENTIFICATION 06048

1.3 SPARE WIRES

When the vehicle leaves the factory, and even in the case of a fully-equipped vehicle, an important number of unconnected spare wires are routed between the junction boxes. Consequently, for any connection of an additional accessory, refer to page D *"Spare wires"* in master wiring diagram to determine the number, the gauge and location of these wires.

CAUTION

Wire size is calibrated according to the breaker or fuse that protects it. When using a spare wire to replace a damaged wire, assure that the spare wire size is equal or larger than the wire being replaced. Using a wire too small for the breaker or fuse amperage might cause overheating of the wire.

NOTE

Spare wires are identified by a wire identification number and by the letters "SP", to designate "spare".

1.4 CLEANING CONNECTORS

When the pins and sockets of connectors become dirty, clean them with a good quality solvent containing HFC 134A refrigerant as its active ingredient. HFC 134A has two qualities that recommend it. First, it does not conduct electricity and therefore, will not cause shorting between connector pins and sockets. Second, it evaporates quickly, eliminating the possibility of condensation within the connectors.

Always shake out or gently blow out any excess HFC 134A before assembling a connector to its mating connector or hardware. HFC 134A trapped in the connector can affect the connector seal.

DANGER

HFC 134A is toxic. HFC 134A bases compounds should always be used in a well-ventilated area, never in a confined space. Use outdoor whenever possible.

1.5 CIRCUIT BREAKERS

Most electric circuits are protected by circuit breakers of the "Manual Reset" type. The main circuit breakers, as well as those protecting the A/C system, are located on the rear electrical junction panel and are accessible from the engine compartment curb-side door, on R.H. side of the vehicle.

This type of circuit breaker deenergizes the circuit without disconnecting any wire.

1.5.1 X3-45 Coaches

Circuit breakers CB2, CB4 & CB6 are different in the fact that you may open the circuit manually, to do so simply press down the red tab on breaker to open the circuit, repair defective circuit, and afterwards depress black button in center of breaker to close the circuit.

Smaller circuit breakers may be located in the VECF of the front service compartment.

CIRCUIT BREAKERS			
CB1	Front distribution	24 VI	90 amps
CB2	Distribution	12 VD	90 amps
CB3	HVAC - evaporator	24 VI	90 amps
CB4	Sound system	12 VD	30 amps
CB5	Rear distribution	24 VI	150 amps
CB6	Distribution	24 VD	70 amps
CB7	HVAC - condenser	24 VI	70 amps
CB8	Rear distribution	12 VI	40 amps
CB9	WCL or other option	24VD	50 amps
CB10	Front distribution	12 VI	70 amps
CB11	Sound system	24 VD	50 amps
CB13	Galley or other option	24 VI	90 amps

VD= volts direct. The electrical components connected to these circuit breakers are direct-connected to the battery.

VI= volts indirect. Electrical power is supplied via master relay R1 which engages when ignition key is in the ON or ACC position and battery master switch (master cut-out) is set to ON.

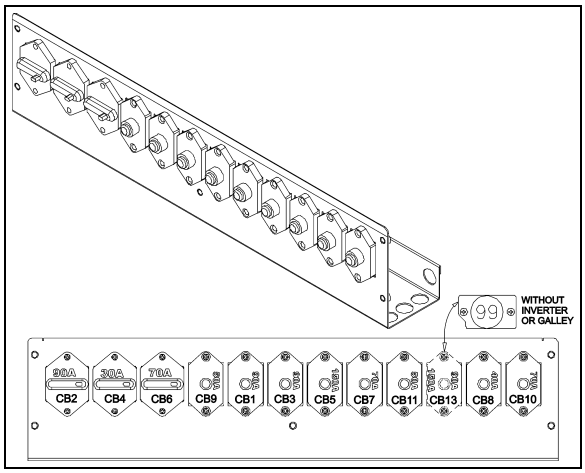

FIGURE 2: REAR ELECTRICAL JUNCTION PANEL 06621

1.5.2 X3-45 VIP & XLII Bus Shells

Circuit breakers CB1 & CB2 are different in the fact that you may open the circuit manually, to do so simply press down the blue tab on breaker to trip the circuit breaker, repair defective circuit, and afterwards toggle yellow lever upwards to reset the circuit breaker and close the circuit.

CIRCUIT BREAKERS			
CB1	Distribution	12 VD	150 amps
CB2	Distribution	24 VD	50 amps
CB3	Front distribution	24 VI	70 amps
CB4	HVAC - evaporator	24 VI	90 amps
CB5	HVAC - condenser	24 VI	70 amps
CB6	Slide-Out	24 VI	35 amps
CB7	Distribution	24 VI	60 amps
CB8	HVAC - condenser	12 VI	40 amps

CIRCUIT BREAKERS			
CB9	Distribution	12VI	70 amps

VD= volts direct. The electrical components connected to these circuit breakers are direct-connected to the battery.

VI= volts indirect. Electrical power is supplied via master relay R1 which engages when ignition key is in the ON or ACC position.

1.6 MULTIPLEX FUSES

The multiplex outputs are protected in current by an internal “soft-fuse”. Each output has programmed specific maximum amperage. When an output is shorted, the current gets above the limit and the soft-fuse intervenes to turn the output OFF. The output stays OFF until the "soft-fuse" is reset.

Turn the ignition key to the OFF position and turn to the ON position again. This resets all "soft-fuses".

There is also hardware fuses used to protect the incoming power to the multiplex modules. These fuses are located inside the VECF (Vehicle Electrical Center Front) and VECR (Vehicle Electrical Center Rear).

1.7 RELAYS

Relays are used to automatically energize or deenergize a circuit from a remote location. The relay draws a very low current to energize its coil. Once the coil is energized, it develops a magnetic field that pulls a switch arm closed or open, to either energize or deenergize a given component. As the control current required for the coil is very low, the relay allows a remote station to control a high energy circuit without running great lengths of costly high capacity cable, and also eliminates the need for high amperage switches and heavy connectors.

NOTE

Each relay is identified with “12V” or “24V” printed on its casing in order to identify the coil operating voltage.

CAUTION

The Multiplex vehicle uses a VF4 relay designed specially for Volvo that has different internal characteristics than the current VF4 relay. It is important to use only the new part marked Volvo as a replacement in Multiplex vehicles. Regular relays have an inadequate lifespan for Multiplex vehicles.

1.8 PRECAUTIONS

DANGER

Prior to working on a system inside vehicle, make sure to cut electrical power and air supply. A component could be supplied with electricity even if the ignition switch is set to the OFF position and/or a component could be pressurized even if air tanks are emptied. Always refer to the appropriate wiring and pneumatic diagrams prior to working on electrical and/or pneumatic systems.

NOTE

When the ignition switch is set to the OFF position, the electrical components are not energized except for the CECM (Chassis Electronic Control Module), engine MCM, transmission ECU, instrument cluster module, the battery equalizer, the preheater system, the wheelchair lift system and some Multiplex modules which are energized during 15 minutes after the ignition has been set to the OFF position. Prior to working on one of these electrical components, set the master cut-out switch located above the rear electrical panel to the OFF position.

If the vehicle will not be operated for a long period (more than 2 weeks), it is recommended, in order to prevent the batteries from discharging, to trip main circuit breakers (2, 4 and 6) located on the rear junction panel to stop the small current drawn by the radio preset station memory, the CECM memory and the instrument cluster clock. Note that the radio station presets will be erased, same thing for the diagnostic codes history and the instrument cluster clock will have to be reset.

CAUTION

Prior to arc welding on the vehicle, refer to "Multiplex Modules Disconnection Procedure Prior To Welding" in section 00 GENERAL of this manual to avoid serious damage to the vehicle components.

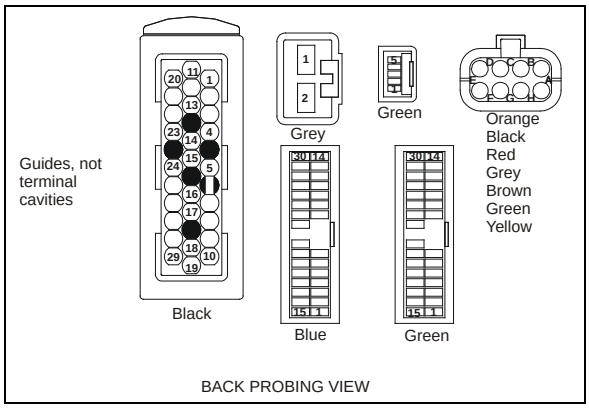

FIGURE 3: MULTIPLEX MODULE CONNECTORS PIN-OUT

06624

Multiplex modules	Connector type	Terminal removal
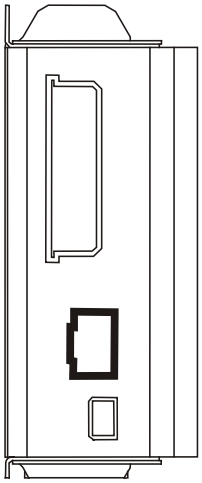 **IO-B** 06625	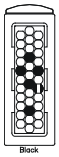 **AMP** 06628	EXTRACTOR/TOOL: Prevost #683594 Insert the extractor on the front of the connector. Remove the terminal by disengaging the flexible lock tabs on the terminal. Gently remove the terminal from the connector by pulling on the wire.
	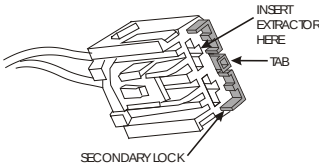 grey 06629 **YAZAKI**	EXTRACTOR/TOOL: Packard #12094430 Using a small flat blade screwdriver, open the hinged secondary lock. Insert the extractor on the front of the connector, over the terminal cavity. Remove the terminal by disengaging the flexible lock tab on the terminal. Gently remove the terminal from the connector by pulling on the wire.
	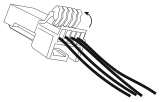 green 06630 **JAE**	EXTRACTOR/TOOL: Prevost #683766 Using a small flat blade screwdriver, open the hinged secondary lock. Insert the extractor on the front of the connector, over the terminal cavity. Remove the terminal by disengaging the flexible lock tab on the terminal. Gently remove the terminal from the connector by pulling on the wire.
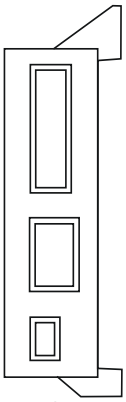 **IO-A** 06626	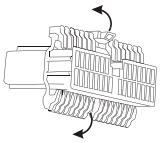 green, blue (CECM) **JAE** 06631	EXTRACTOR/TOOL: Prevost #683766 Using a small flat blade screwdriver, open both hinged secondary locks. Insert the extractor on the front of the connector, over the terminal cavity. Remove the terminal by disengaging the flexible lock tab on the terminal. Gently remove the terminal from the connector by pulling on the wire.
	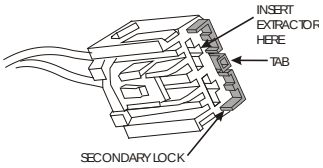 grey 06629 **YAZAKI**	EXTRACTOR/TOOL: Packard #12094430 Using a small flat blade screwdriver, open the hinged secondary lock. Insert the extractor on the front of the connector, over the terminal cavity. Remove the terminal by disengaging the flexible lock tab on the terminal. Gently remove the terminal from the connector by pulling on the wire.
	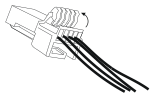 green 06630 **JAE**	EXTRACTOR/TOOL: Prevost #683766 Using a small flat blade screwdriver, open the hinged secondary lock. Insert the extractor on the front of the connector, over the terminal cavity. Remove the terminal by disengaging the flexible lock tab on the terminal. Gently remove the terminal from the connector by pulling on the wire.
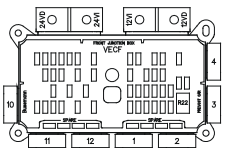 **VECF** 06627	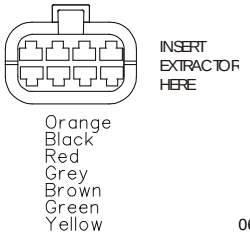 06632 **BUSSMAN**	EXTRACTOR/TOOL: Prevost #682256 (Packard 12094429) Remove the terminal by disengaging the flexible lock tab on the terminal. Gently remove the terminal from the connector by pulling on the wire.

2. X3 SERIES COACH, VIP & XLII ENTERTAINER BUS SHELL ELECTRICAL COMPARTMENTS

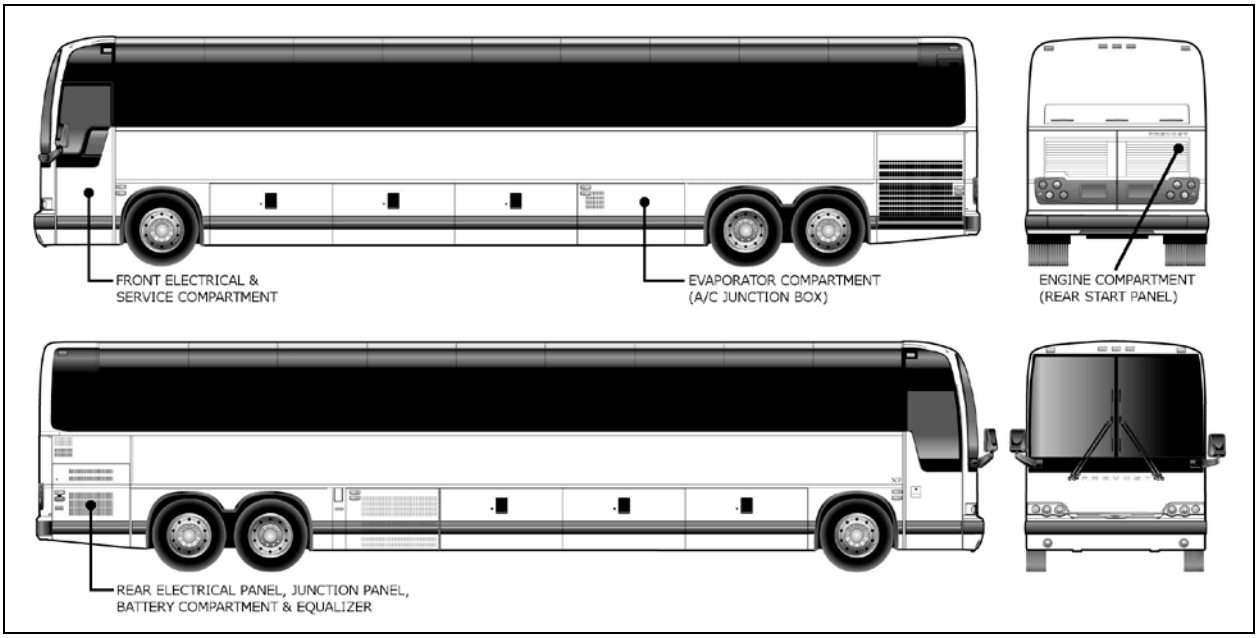

FIGURE 4: ELECTRICAL COMPARTMENTS (X3-45 COACH) 06672

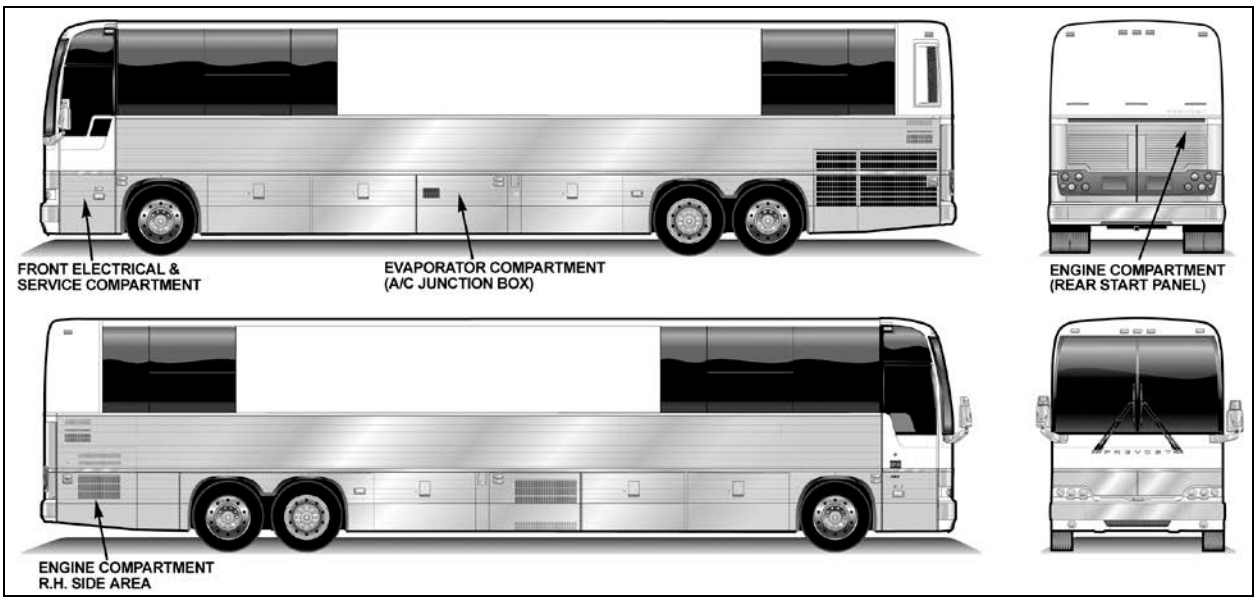

FIGURE 5 ELECTRICAL COMPARTMENTS (X3-45 VIP))

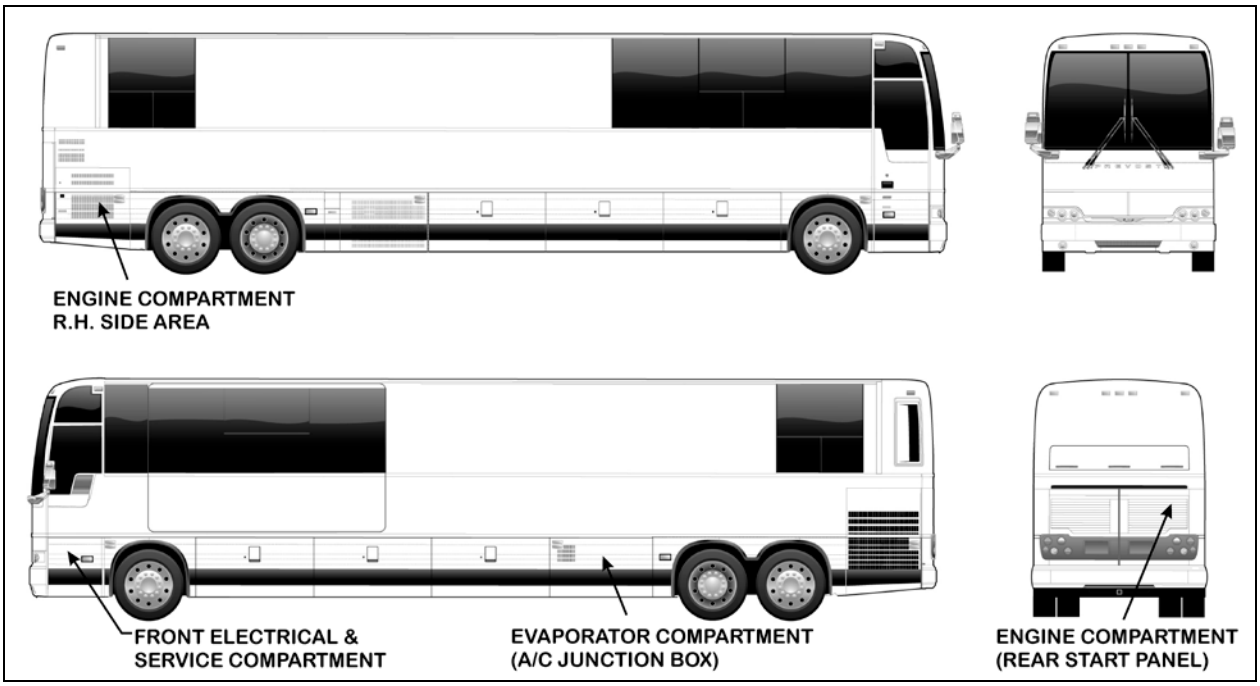

FIGURE 6: ELECTRICAL COMPARTMENTS (XLII ENTERTAINER BUS SHELL)

2.1 MAINTENANCE

A corrosion inhibitor has been sprayed on certain electrical components in order to protect them from corrosion. Refer to procedure SAV00002E at the end of this section for recommended products and where they are used.

CAUTION

Never put grease or other product on the multiplex modules connector terminals.

DANGER

Use sprayed sealer in a well ventilated area. Do not smoke. Avoid prolonged contact with skin and breathing of spray mist.

2.2 REAR ELECTRICAL PANEL, JUNCTION PANEL, BATTERY COMPARTMENT & EQUALIZER

The rear electrical panel, junction panel, battery compartment & battery equalizer are located on the R.H. side of the engine compartment and are accessible from the engine compartment curb-side door.

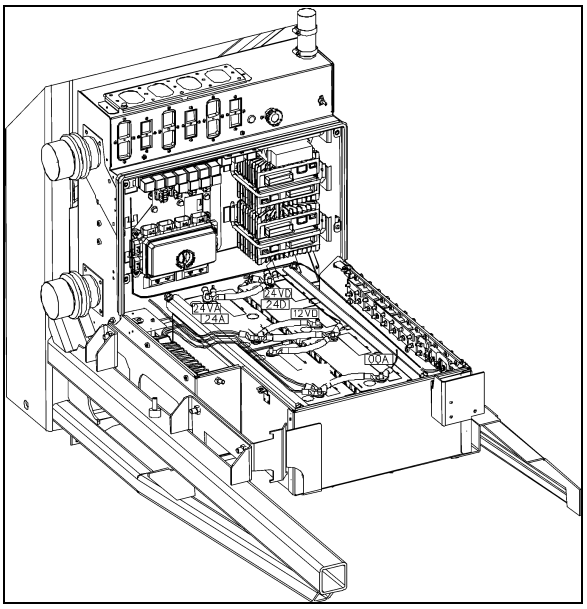

FIGURE 7: REAR ELECTRICAL PANEL, JUNCTION PANEL & BATTERY COMPARTMENT

2.3 REAR ELECTRICAL PANEL

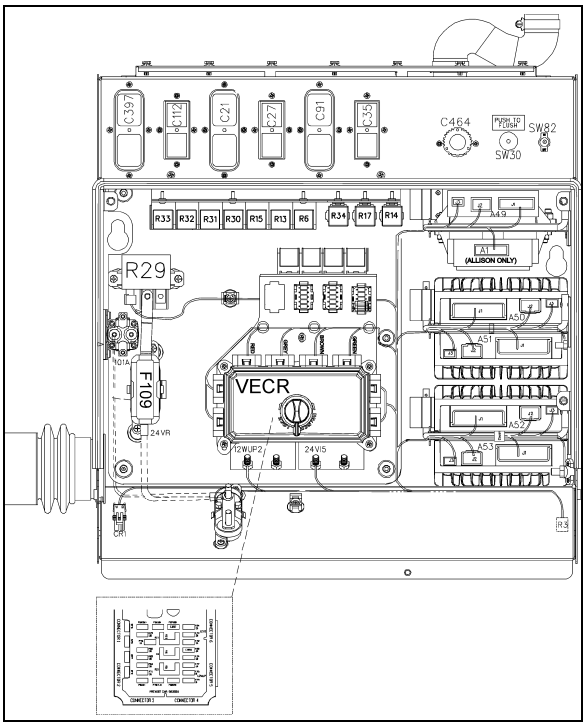

FIGURE 8: REAR ELECTRICAL PANEL

The rear electrical panel provides access to the following:

- Rear terminal block;
- Multiplex modules;
- Vehicle Electrical Center Rear (VECR)
- Relays and fuses;
- Transmission TCM;
- Battery master switch (Master cut-out);
- Diagnostic Data Reader (DDR) receptacle, (refer to “Other Features” chapter).

Rear Electrical Panel			
Multiplex Modules			
A49	I/O-A	A52	I/O-B
A50	I/O-B	A53	I/O-B
A51	I/O-B		

Relays			
R3	12V IGN & A/C (under CB4)	R21	24V Emergency cut-out
R5	24V Preheat / Charger	R29	Engine Air Heater
R6	24V Direct lights	R30	24V Lugg. Door Lock
R13	24V Indirect lights	R31	24V Luggage Door Lock
R14	24V Reading lights	R32	24V Luggage Door Unlock
R15	24V Aisle & Emerg. Lts	R33	24V Luggage Door Unlock
R17	24V 12V Rr wake-up	R34	12V 12VI Engine ECU

Fuses			
F50	Engine Pre-heating	F71	Hat Rack Lighting L & R
F51	Engine Pre-heating	F72	Power Mux A50
F52	Spare fuse	F73	Trailer / Urea
F53	HVAC Passenger	F74	ECU engine IGN
F54	Customer (24VD)	F75	Engine Door
F55	Aisle & emergency lights	F76	Customer (12VI)
F56	Indirect lights	F77	ECU transmission wake-up
F57	Indirect lights	F78	Spare fuse
F58	Direct lights	F79	Spare fuse
F59	Direct lights	F80	Power Mux A51
F60	Reading Lamp RH	F81	Excitation
F61	Reading Lamp LH	F85	Urea System
F62	Lavatory night light	F86	Air Dryer
F63	Engine Pre-heater	F87	Door Lock
F64	Galley	F88	Door lock
F65	Power Mux Module RJB	F89	Spare fuse
F66	Radiator Fan Clutch	F90	Urea System
F67	Power Mux A54	F91	Engine ECU
F68	Power Mux A54	F99	Engine ECU
F69	Retarder	F109	Engine Air Heater
F70	Customer (24VI)		

Resistors	
RES16	Rear marker lights : 100 ohms
RES17	Rear marker lights : 100 ohms

Diodes			
D6	Master relay	D37	Fan Clutch 1
D15	Wake-up mode	D49	Parcel Rack
D28	Unloader LH	D67	Rear Lights
D29	Unloader RH	D68	Rear Lights
D31	Main A/C Clutch	D69	Rear Lights
D33	Toilet flush pump	D70	Rear Lights
D36	Fan Clutch 2	DXX	Not used

2.4 REAR JUNCTION PANEL

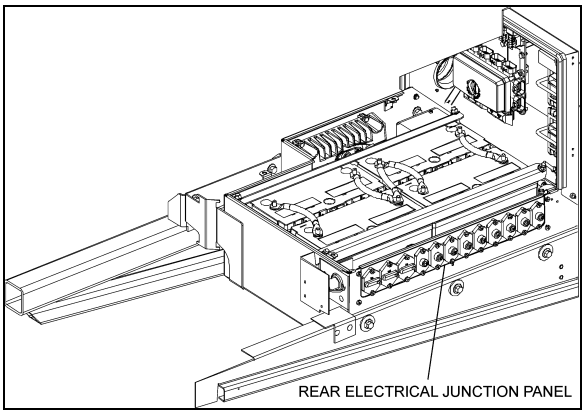

FIGURE 9: REAR ELECTRICAL JUNCTION PANEL 06634

2.5 BATTERY COMPARTMENT

The Battery Compartment provides access to the batteries (4), battery equalizer and master relay (R1).

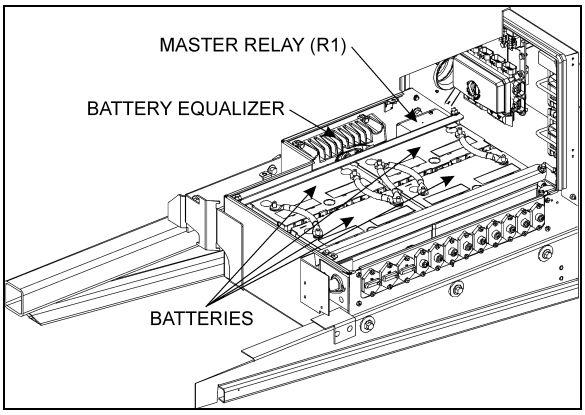

FIGURE 10: BATTERY COMPARTMENT

2.6 FRONT ELECTRICAL AND SERVICE COMPARTMENT

The front electrical and service compartment is located on L.H. side of vehicle, under the driver's window. It contains the following components (Fig. 9):

- Front terminal block;
- CECM;
- Vehicle Electrical Center Front (VECF) and Multiplex Modules;
- Relays and fuses;
- ABS Electronic Control Unit (ECU);
- Common Powertrain Controller (CPC);
- VECU with Volvo D13 engine;

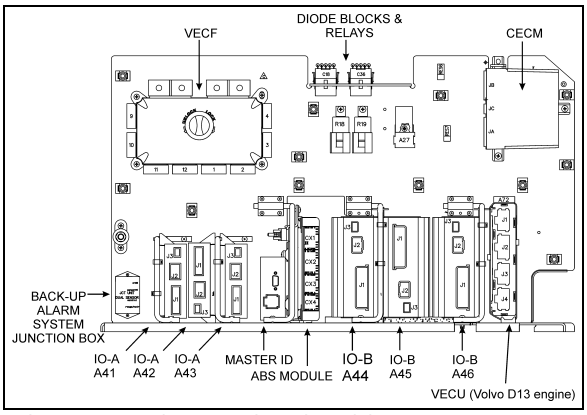

FIGURE 11: FRONT ELECTRICAL COMPARTMENT 06673

Front Electrical & Service Compartment			
Modules			
VECF	Vehicle Electrical Center Front	A43	I/O-A
A9	ABS-ECU	A44	I/O-B
A13	MASTER ID	A45	I/O-B
A36	CECM	A46	I/O-B
A41	I/O-A	A72	CPC
A42	I/O-A		
Relays			
R18	Wake-up 24V	R22	Engine brake
R19	Wake-up 12V	A27	Steering Control soft module
Fuses			
F1	CECM Power	F23	ABS
F2	Front start main switch	F24	Mirror
F3	Pre-heating & driver liquid solenoid valve	F25	Back-up camera
F4	Wireless microphone	F26	Spare fuse
F5	Wake-up mode 24V	F27	Customer
F6	Free/customer	F28	Driver's power window
F7	ABS & pre-heat control	F29	Instrument cluster & data reader
F8	Air horn	F30	Cigarette lighter & 12-volt accessory outlet
F9	Spare fuse	F31	Keyless entry module
F10	Spare fuse	F32	Spare fuse
F11	Sun visor	F33	Wake-up mode 12VD
F12	Power multiplex A41	F34	Wake-up mode 12VD
F13	Power multiplex A41	F35	12-volt accessory outlet
F14	Customer	F36	HVAC & telltale panel

F15	R22	F37	Spare fuse
F16	Defroster unit	F38	Digital Clock
F17	Spare	F39	Spare fuse
F18	Upper Defroster	F40	Spare fuse
F19	Pro Driver	F41	Spare fuse
F20	Witness red LED	F82	Lower wipers
F21	Power Mux A44	F83	Sound system
F22	ZF Steering Control	F84	Customer
Diodes			
D1	Accessories	D44	Ignition
D2	Driver Liq Sol Vlve	Dxx	Not used

2.7 A/C JUNCTION BOX

The A/C junction box is located inside the evaporator compartment on the X3-45 coach.

A/C Junction Box			
Multiplex Module			
A54	I/O-B		
Relays			
R10	Condenser Fan Sp. 2		
R12	Evaporator Fan		
R20	Water Pump Relay		
R26	Water Pre-heater Relay		
Diodes			
D9	HVAC	D10	Pre-Heater
D11	Pass. Liq. Sol.	D17	Lugg. 5th Compt
D19	Lugg. 2nd Compt	D20	Lugg. 1st Compt
D25	Evap. Fan	D30	Water Pump
D73	Opt.	D80	Opt.

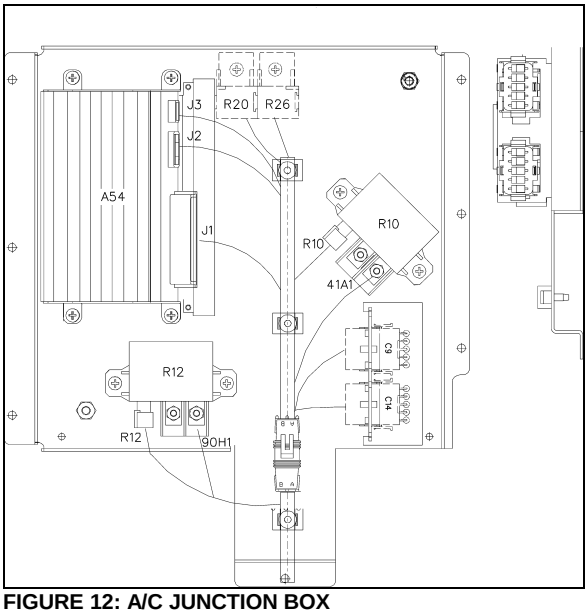

FIGURE 12: A/C JUNCTION BOX

2.8 ENGINE REAR START PANEL

This control panel is located in the R.H. side of engine compartment above the engine air filter. This control panel includes the engine starter selector switch, the rear start push button switch to start engine from engine compartment as well as the engine compartment lights switch.

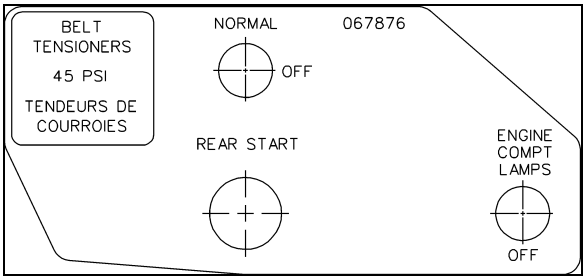

FIGURE 13: REAR START PANEL

> ***NOTE***
>
> *When the ignition key switch is set to the "OFF" position, the electrical supply from the batteries is cut off, with the exception of the Fire Detection System, the Engine & Transmission Electronic Controls, the Auxiliary Heating System, the Battery Equalizer and the Digital Clock.*

2.9 ENTRANCE DOOR & WIPER CONTROL PANEL

To access the entrance door & wiper control panel of the right console, remove the panel under the larger utility compartment at the base of the windshield.

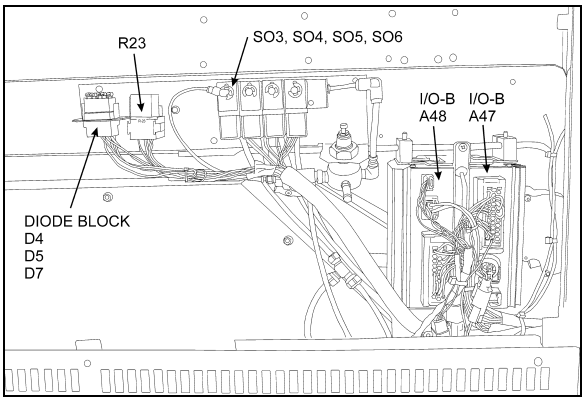

FIGURE 14: ENTRANCE DOOR & WIPER CONTROL PANEL 06619

Entrance Door & Wiper Control Panel			
Multiplex Modules			
A47	I/O-B	A48	I/O-B
Relays			
R23	Windshield wipers		

Solenoids			
SO3	Door unlock solenoid valve	SO5	Door opening solenoid valve
SO4	Door unlock solenoid valve	SO6	Door closing solenoid valve
Diodes			
D4	Windshield wipers speed 2	D7	Entrance door
D5	Windshield wipers speed 1		

3. BATTERIES

The vehicle is provided with four (4) maintenance-free 12 volt heavy-duty batteries connected in series-parallel (Fig. 4 & 8). The top-mounted negative and positive terminals are tightly sealed to prevent leaks. Water never needs to be added to this type of battery. There are no filler caps in the cover. The battery is sealed, except for small vent holes in the cover. The vents must not be restricted as they allow small amounts of gases produced in the battery to escape. The special chemical composition inside the battery reduces gassing to a very small amount at normal charging voltages. Besides reducing gassing, the special chemistry greatly reduces the possibility of overcharge damage.

The vents require keeping the battery in an upright position to prevent electrolyte leakage. Tipping the battery beyond a 45° angle in any direction can allow a small amount of electrolyte to leak out of the vent holes.

WARNING

DO NOT tip battery by more than 45° when carrying or installing the battery.

NOTE

Evidence of electrolyte leakage does not necessarily mean the battery is defective.

With special cables properly attached to batteries, the metal surfaces that carry the current are completely sealed from the atmosphere. This prevents terminal oxidation and corrosion that may cause starting and charging problems. If new cables are required, sealed terminal cable replacements should be used to retain the reliability of the original maintenance-free connections.

DANGER

All lead-acid batteries generate hydrogen gas, which is highly flammable. If ignited by a spark or flame, the gas may explode violently, causing spraying of acid, fragmentation of the battery, which may result in severe personal injuries. Wear safety glasses and do not smoke when working near batteries. In case of contact with acid, flush immediately with water.

The battery has four (4) major functions:

1. Providing a source of current for starting the engine;
2. Stabilizing the voltage in the electrical system;
3. Supplying current for a limited time, when electrical demands of the equipment exceed the power output of the alternator;
4. Providing a limited source of power for connected accessories, when the engine is not running.

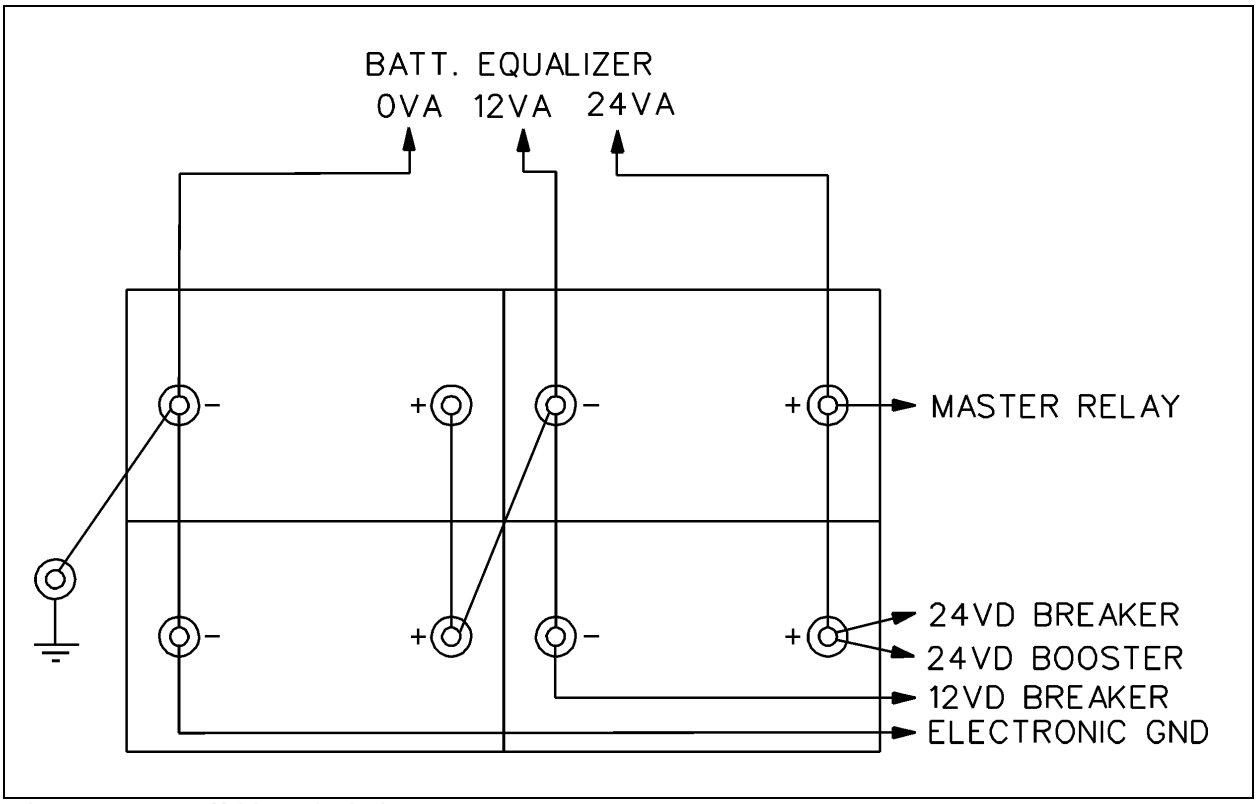

FIGURE 15: BATTERY CONNECTIONS

3.1 BATTERY DISCHARGE PROTECTION

To prevent discharge of the batteries when the engine in not running, some functions are automatically switched off if the batteries voltage drops below 24.4 volts for more than 30 seconds. The "BAT" telltale light blinks while this protection mode is active. Set the ignition key to the OFF position and then turn the ignition key to the ON position to reactivate the functions for a period of 30 seconds before they switch off again.

If a prolonged use of the functions with the engine not running is necessary, connect the battery to a charger.

3.2 MAIN BATTERY RELAYS

Main battery (master) relays (12V and 24V) are provided for this vehicle. The relays are located in the battery compartment and on the rear electrical panel. The 24-volt battery relay (R1) engages when ignition key is in the ON or ACC position and battery master switch (master cut-out) is flipped ON.

When the main battery relays (R1 & R3) are turned to the *OFF* position, all electrical supply from the batteries is cut off, with the exception of the following items.

- Battery equalizer check module;
- MCM;
- TCM (World transmission);
- Preheater electronic timer;
- Preheater and water recirculating pump;
- Sedan entrance door;
- Radio memory;
- CECM;
- Cluster memory.

3.3 BATTERY REMOVAL AND INSTALLATION

The batteries are located in the battery compartment on the R.H. side of the engine compartment and are accessible from the engine compartment curb-side door.

1. Remove the battery compartment protective cover.

CAUTION

To protect battery terminals and circuit breaker

bus bars against mist and corrosion, make sure that the battery protective cover is properly fitted and latched (five latches).

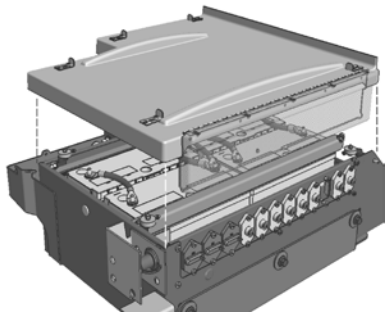

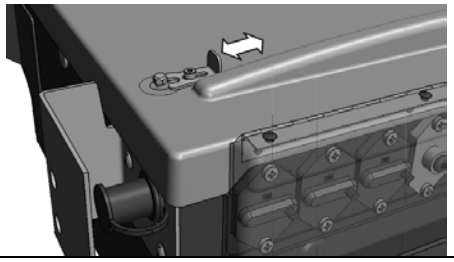

DANGER

To prevent possible electric shocks or sparking, the battery master switches should be in the "Off" position before disconnecting cables from the batteries.

2. Remove the supports, and unscrew terminal nuts of each defective battery.
3. Remove battery cables from the batteries.
4. Remove batteries.
5. Installation is the reverse of removal.

NOTE

When the battery cables have been removed from the batteries, wrap the battery terminals and cable ends with electric tape to prevent accidental grounding. The ground cables should always be disconnected first and replaced last.

NOTE

In replacing batteries, only batteries of the same specification should be used. Refer to "Specifications" at the end of this section for further details.

CAUTION

Ensure that connections are not reversed when reinstalling batteries, since damage to electrical system components will result.

NOTE

When reinstalling batteries, battery connections must be tightened to 13-15 lbf-ft (18-20) Nm). A torque wrench is required to ensure an accurate tightening torque.

DANGER

To prevent possible electric shock or sparking, the battery master switch must be set to the "Off" position before tightening an electrical connection.

NOTE

A protective coating should be applied on certain power connections that have been disconnected. Refer to Procedure PR00002E included at the end of this section to know the recommended products and where they are used.

3.4 BATTERY RATING

Each of the 12 volt batteries used on the vehicle has the following rating:

- Reserve capacity: 195 minutes
- Cold cranking (amps): 950 @ 0°F (-18°C)
- Cold cranking (amps): 745 @ -20°F (-29°C)
- Weight (filled): 59 lb (26,7 kg)

The reserve capacity is defined as the number of minutes a new, fully charged battery at 80°F (26,6°C) can be discharged at 25 amperes and maintain a minimum of 1.75 volts per cell (10.5 volts total for one 12 volts battery). This rating can be used as a basis for determining how long a vehicle might run after an alternator failure. The cold cranking rating is defined as the minimum discharge current a battery will deliver in amperes for 30 seconds at 0°F (-18°C) while maintaining a minimum of 1.2 volts per cell (7.2 volts total for one 12 volts battery). This rating

can be used as a basis for comparing starting performance.

3.5 BATTERY TESTING

The maintenance-free battery has a strong ability to withstand the damaging effects of overcharge. The test indicator in the cover is used only to determine if the battery can be tested in case of a cranking problem.

The test indicator in the battery cover is to be used with accepted diagnostic procedures only. It must not be used to determine if the battery is good or bad, charged or discharged. The test indicator is a built-in hydrometer in one cell that provides visual information for battery testing (Fig. 14).

It is important when observing the test indicator, that the battery be relatively level and has a clean indicator top to see the correct indication. Some lighting may be required in poorly lit areas. Under normal operation, two indications can be observed.

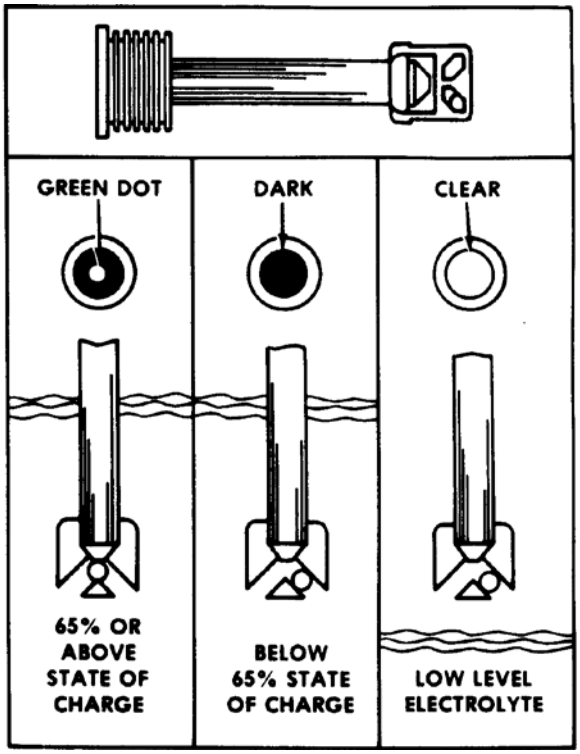

FIGURE 16: TEST INDICATOR 06096

Green Dot Visible

Any green appearance is interpreted as a *"green dot"*, and the battery is ready for testing. On rare occasions, following prolonged cranking, the green dot may still be visible when the battery is obviously discharged. Should this occur, charge the battery as described under *"Charging Procedure"* in *"Battery Charging"* later in this section.

Dark - Green Dot Not Visible

If there is difficulty cranking the engine, the battery should be tested as described in this section. On rare occasions, the test indicator may turn light yellow. In this case, the integral charging system should be checked. Normally, the battery is capable of further service; however, if difficult start has been reported, replace the battery. **DO NOT CHARGE, TEST, OR JUMP-START.**

3.5.1 Visual Inspection

1. Check the outside of the battery for a broken or cracked cover or case that could permit loss of electrolyte. If obvious physical damage is noted, replace the battery.
2. Check for loose terminal posts, cable connections, damaged cables, and for evidence of corrosion. Correct conditions as required before proceeding with tests.

3.5.2 Removing Surface Charge

Disconnect cables from the battery and attach alligator clamps to the contact lead pad on the battery as shown in figure 16. Connect a 300 ampere load across the terminal for 15 seconds to remove surface charge from the battery.

3.5.3 Load Test

This test is one means of checking the battery to determine its ability to function as required in the vehicle.
To make this test, use test equipment that will withstand a heavy electrical load from the battery, such as a carbon pile resistor or other suitable means.

1. Connect a voltmeter, ammeter, and a variable load resistance as illustrated in figure 15.

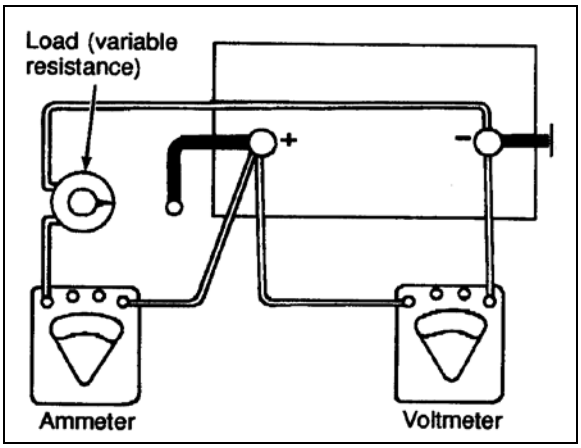

FIGURE 17: LOAD TEST 06064

CAUTION

Observe polarity of the meters and the battery when making connections, and select the correct meter range.

2. Apply a 290 amperes load to the battery for 15 seconds.
3. With an ammeter reading specified load, read voltage. The voltage should be at least 9.6 volts. Disconnect the load. If the voltmeter indicates 9.6 volts or more, the battery is good. If the voltmeter reading is less than 9.6 volts, replace the battery. This voltage is to be used for battery ambient temperatures of 70ºF (21ºC) and above. For temperatures below 70ºF (21ºC), refer to the following *"Voltage and Temperature Chart"*.

Voltage and Temperature Chart

Ambient Temperature	Minimum Voltage
70ºF (21ºC) and above	9.6
60ºF (16ºC)	9.5
50ºF (10ºC)	9.4
40ºF (4ºC)	9.3
30ºF (-1ºC)	9.1
20ºF (-7ºC)	8.9
10ºF (-12ºC)	8.7
0ºF (-18ºC)	8.5

NOTE

The accuracy of this test procedure is dependent upon close adherence to the proper load, time and temperature specifications.

3.5.4 Testing Battery Cables

Check all cable ring terminals and connections to determine if they are in good condition. Excessive resistance, generally caused by poor connections, produces an abnormal voltage drop which may lower voltage at the starter to such a low value that normal operation of the starter will not be obtained. An abnormal voltage drop can be detected with a low-reading voltmeter as follows:

DANGER

To prevent the engine from starting during these tests, remove fuses F78 and F79 located in the VECR of the rear electrical compartment. Once the tests are completed, reinstall F78 and F79.

1. Check voltage drop between grounded (negative) battery terminal and vehicle frame by placing one prod of the voltmeter on the battery terminal and the other on a good ground (unpainted surface) on the vehicle. With the starter cranking the engine at a temperature of 70ºF (21ºC), voltage reading should be less than 0.3 volt. If the voltage reading exceeds 0.3 volt, there is excessive resistance in this circuit.
2. Check voltage drop between the positive battery terminal and the starter positive terminal stud while the motor is operated. If the reading is more than 2.5 volts, there is excessive resistance in this circuit.

NOTE

If it is necessary to extend the voltmeter lead for this test, use a #16 (AWG) or larger wire.

3. Check voltage drop between the starter housing and a good ground on the vehicle. The reading should be less than 0.2 volt.

DANGER

Any procedure other than the following could cause personal injury or damages to the charging system resulting from battery explosion or electrical burns.

Wear adequate eye protection when working on or near the batteries. Ensure that metal tools or jumper cables do not contact the positive battery terminal (or a metal surface in contact with it) as a short circuit will result. Do not attempt to jump start a vehicle suspected of having a frozen battery because the battery may rupture or explode. Both the booster and discharged batteries must be treated carefully when using jumper cables. Follow exactly the

procedure outlined later in this section, being careful not to cause sparks.

3.6 BATTERY CHARGING

The batteries used on this vehicle can be charged either on or off the vehicle; however, when they are removed from the vehicle, it is recommended that an adapter kit, which is available from any "A/C DELCO" dealer, be used in charging sealed-terminal batteries. Use the booster block to charge the batteries when they are left on vehicle and **make sure that the main battery disconnect switch is set to the *"On"* position.**

DANGER

During charging of the batteries, an explosive gas mixture forms in each cell. Part of this gas escapes through the vent holes and may form an explosive atmosphere around the battery itself if ventilation is poor. This explosive gas may remain in or around the battery for several hours after it has been charged. Sparks or flames can ignite this gas causing an internal explosion, which may shatter the battery.

1. Do not smoke near a battery which is being charged or which has been recently charged.
2. Do not break live circuits at battery terminals because a spark usually occurs at the point where a live circuit is broken. Care must always be taken when connecting or disconnecting booster leads or cable clamps on chargers. Poor connections are a common cause of electric arcs, which cause explosions.
3. The electrical system on this vehicle is negative ground. Installing the batteries with the positive terminals grounded or incorrect use of the booster battery and jumper cables will result in serious damage to the alternator, batteries and battery cables.

The alligator clamps of the tester or charger must be placed between the terminal nuts and the lead pads of the terminal studs (Fig. 16) after the vehicle cables are detached. The alligator clamps should make firm contact with the lead pads.

NOTE

If this connection cannot be made because of the alligator clamp design, the load value for testing must be reduced from 290 to 260 amperes.

On rare occasions, such as those that occur following prolonged cranking, the green dot in the test indicator may still be visible when the battery is obviously discharged. Should this occur, a boost charge of 20 amperes-hour is recommended. Under normal operating conditions, do not charge battery if the green dot is visible. The battery should never be charged if the test indicator (hydrometer) is clear or light yellow. If this occurs, replace the battery.

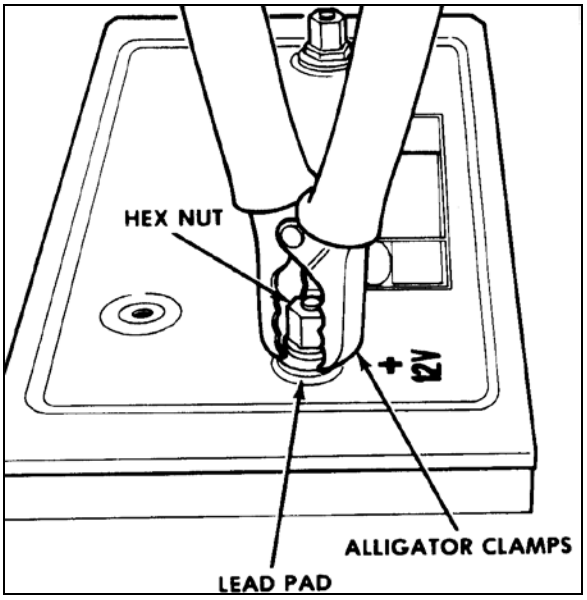

FIGURE 18: ALLIGATOR CLAMPS AND BATTERY 06065

A charge rate between 3 and 50 amperes is generally satisfactory for any maintenance-free battery as long as spewing of electrolyte does not occur or the battery does not feel excessively hot (over 125ºF (52ºC)). If spewing or violent gassing of electrolyte occurs or battery temperature exceeds 125ºF (52ºC), the charging rate must be reduced or temporarily stopped to allow cooling and to avoid damaging the battery.
Battery temperature can be estimated by touching or feeling the battery case. The battery is sufficiently charged when the green dot in the built-in hydrometer is visible. No further charging is required. Shake or tilt the battery at hourly intervals during charging to mix the electrolyte and see if the green dot appears.

WARNING

Always turn off the charger before connecting or disconnecting to a battery.

NOTE

The charge rate must be doubled when the batteries are charged by the booster block, because of the series-parallel circuit.

Battery charging consists of a charge current in amperes for a period of time in hours. Thus, a 25 ampere charging rate for 2 hours would be a 50 ampere-hour charge to the battery. Most batteries, whose load test values are greater than 200 amperes, will have the green dot visible after at least a 75 ampere-hour charge. In the event that the green dot does not appear, replace the battery.

3.6.1 Battery Charging Guide

Fast Charging Rate

20 amps @ 3-¾ hours
30 amps @ 2-½ hours
40 amps @ 2 hours
50 amps @ 1-½ hours

Slow Charging Rate

5 amps @ 15 hours
10 amps @ 7-½ hours
The time required for a charge will vary according to the following factors:

Size of Battery

For example, a completely discharged large heavy-duty battery requires more than twice the recharging time of a completely discharged small passenger car battery.

Temperature

For example, a longer time will be needed to charge any battery at 0°F (-18°C) than at 80°F (27°C). When a fast charger is connected to a cold battery, the current accepted by the battery will be very low at first, and then in time, the battery will accept a higher rate as it warms.

State of Charge

For example, a completely discharged battery requires more than twice as much charge than a half-charged battery. Since the electrolyte is nearly pure water and a poor conductor in a completely discharged battery, the current accepted is very low at first. Later, as the charging current causes the electrolyte acid content to increase, the charging current will likewise increase.

Charger Capacity

For example, a charger which can supply only 5 amperes will require a much longer period of charging than a charger that can supply 30 amperes or more.

3.6.2 Emergency Jump Starting With Auxiliary (Booster) Battery.

DANGER

Off-board battery charger with a start boost facility must not be used to jump start the vehicle. This could damage the electrical system. Do not jump start vehicles equipped with maintenance-free batteries if the test indicator is light yellow.

Booster Block

On X3-45 coaches, booster block is located near the batteries in the engine compartment on the R.H. side and is accessible through engine R.H. side door (Fig. 17).

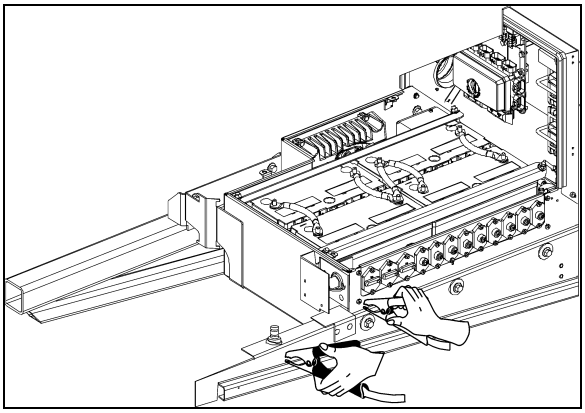

FIGURE 19: BOOSTER BLOCK

Both booster and discharged batteries should be treated carefully when using jumper cables. A vehicle with a discharged battery may be started by using energy from a booster battery or the battery from another vehicle.

DANGER

Jump starting may be dangerous and should be attempted only if the following conditions are met:

The booster battery or the battery in the other vehicle must be of the same voltage as the battery in the vehicle being started, and must be negative grounded.

If the booster battery is a sealed-type battery without filler openings or caps, its test indicator must be dark or a green dot must be visible. Do not attempt jump starting if the test

indicator of the booster battery or the discharged battery has a light or bright center.

DANGER

Follow the procedure exactly as outlined hereafter. Avoid making sparks.

Wear eye protection and remove rings, watches with metal bands and other metal jewelry.

Apply parking brake and place the transmission shift lever or push-button pads in Neutral (N) position in both vehicles. Turn off lights, heater and other electrical loads. Observe the charge indicator. If the indicator in the discharged battery is illuminated, replace the battery. **Do not** attempt jump starting when indicator is illuminated. If the test indicator is dark and has a green dot in the center, failure to start is not due to a discharged battery and the cranking system should be checked. If charge indicator is dark but the green dot does not appear in center, proceed as follows:

1. Connect one end of one red jumper cable to the positive (+) terminal of the booster power source and the other end to the positive (+) post of the booster power block, located on the R.H. side of the engine compartment (refer to fig. 17).
2. Connect one end of the remaining negative jumper cable (black) to the negative (-) terminal of the booster power source, and the other end of the black jumper cable to the negative (-) post of the booster power block.
3. Make sure the clips from one cable do not inadvertently touch the clips on the other cable. Do not lean over the battery when making connections. The ground connection must provide good electrical conductivity and current carrying capacity.
4. Start the engine in the vehicle that is providing the jump start. Let the engine run for a few minutes, then start the engine in the vehicle that has the discharged batteries.
5. When removing the jumper cables, perform the above procedure exactly in reverse order, and replace protective caps on booster block terminals.

DANGER

Any procedure other than the above could result in personal injury, property damage due to battery explosion, or damage to the charging system of the booster vehicle or of the boosted vehicle.

NOTE

Jumper cables must withstand 500 cranking amperes. If cable length is 20 feet (6m) or less, use 2/0 (AWG) gauge wires. If cable length is between 20-30 feet (6-9m), use 3/0 (AWG) wires.

3.7 CLEANING AND INSPECTION

The external condition of the battery and the battery cables should be checked periodically. The top of the battery should be kept clean and the battery hold-down clamp bolts should be kept properly tightened. For best results when cleaning the battery, wash first with a diluted solution of ammonia or soda to neutralize any acid present then wash out with clean water. The battery hold-down bolts should be kept tight enough to prevent the batteries from moving, but they should not be tightened to the point that excessive strain is placed on the battery hold-down cover (proper tightening torque: 45-55 lbf-in (5-6 Nm).

To insure good contact, the battery cable ring terminals should be tight on the battery posts. If the posts or cable ring terminals are corroded, the cables should be disconnected and the posts and clamps cleaned separately with a soda solution and a wire brush. Install cable ring terminals on battery posts and tighten to a torque of 10-15 lbf-ft (13-20 Nm). Replace protective caps to prevent corrosion and sparks.

3.8 COMMON CAUSES OF BATTERY FAILURE

When a battery fails, the cause of failure may be related to something other than the battery. For this reason, when a battery failure occurs, do not be satisfied with merely recharging or replacing the battery. Locate and correct the cause of the failure to prevent recurrence. Some common external causes of battery failure are as follows:

1. A defect in charging system such as high resistance or a faulty alternator or regulator. The dashboard ALTERNATOR telltale light illuminates if one of the alternators is defective.

ALTERNATOR telltale

2. A malfunction within the 12 volts system (equalizer).
3. Overloads caused by a defective starter or excessive use of accessories.
4. Dirt and electrolyte on top of the batteries causing a constant drain.
5. Hardened battery plates, due to battery being in a low state of charge over a long period of time.
6. Shorted cells, loss of active material from plates.
7. Driving conditions or requirements under which the vehicle is driven for short periods of time.
8. A constant drain caused by a shorted circuit such as an exposed wire or water infiltration in junction boxes causing ground fault.
9. Extended operation of preheating system with engine not running.
10. Failing to close disconnect switches during the night.

3.9 TROUBLESHOOTING

If a battery is known to be good and then has not performed satisfactorily in service for no apparent reason, the following factors may reveal the cause of trouble:

1. Vehicle accessories and disconnect switches inadvertently left on overnight.
2. Defects in the charging system, such as high wiring resistance, faulty alternator, regulator or battery equalizer.
3. A vehicle electrical load exceeding the alternator (or battery equalizer) capacity, with the addition of electrical devices, such as CB radio equipment, a cellular phone or additional lighting systems.
4. Defects in the electrical system, such as shorted or pinched wires.
5. Extended driving at a slow speed while using many accessories.
6. Loose or poor battery cable-to-post connections, previous improper charging of a run-down battery, or loose hold-down clamp bolts.
7. High-resistance connections or defects in the cranking system.

3.10 "BATTERY VOLTAGE WARNING" PICTOGRAM

If the "BATTERY VOLTAGE WARNING" (battery voltage incorrect) pictogram shows up in the DID (Driver Information Display), check the voltmeter gauge to determine if the battery voltage is too high or too low.

3.10.1 Voltage Gauge Definitions

Voltmeter drops below 24.4 volts dc

- Check alternator output.
- Check voltage regulator.
- Check battery connections.
- Check battery cells.
- Check battery equalizer connections.

Voltmeter exceeds 30 volts dc

- Check alternator output.
- Check voltage regulator.
- Check battery connections.

Battery Balance

NOTE
Allow at least 15 minutes to balance batteries after any corrective measure has been taken.

1. Batteries out of balance (difference greater than 1.5 volts between the two battery banks).
   - Check battery equalizer connections.
   - Check equalizer cables for proper gauge.
   - Check battery connections.
2. Demand for 12-volt power exceeding rated amperage output of battery equalizers causing batteries to go out of balance.
   - Reduce 12-volt load or install additional battery equalizer(s).

4. TROUBLESHOOTING AND TESTING THE MULTIPLEX VEHICLES

4.1 ELECTRICAL SYSTEM DIAGNOSTIC

Using the message center display (MCD), check if there are active errors in the vehicle electrical system. With the SYSTEM DIAGNOSTIC menu, highlight FAULT DIAGNOSTIC and then

highlight ELECTRICAL SYSTEM to request a diagnostic of the electrical system from the CECM. Press the enter key. If applicable, the MCD shows the multiplex device ID, the fault messages or fault codes recorded. When more than one fault is recorded, an arrow pointing down appears on the right of the display. Use the down arrow to see all the fault messages.

Once the problem corrected, the MCD still shows the fault as being active. You have to leave the FAULT DIAGNOSTIC menu, wait approximately 20 to 30 seconds and then return to FAULT DIAGNOSTIC to request a new diagnostic of the ELECTRICAL SYSTEM from the CECM. The MCD should display the fault as being inactive. The CECM can store up to 20 faults, i.e. the first 10 and the last 10. Middle faults will be erased. If the breakers are tripped, the fault history will be erased from the CECM memory.

NOTE
It is of the utmost importance to have a MCD (message center display) in working condition because it is the most important tool to achieve troubleshooting on a multiplex vehicle.

4.2 PROBING VOLTAGE ON THE MULTIPLEX CIRCUITS

Some Multiplex modules are supplied by 12 volts while others are supplied by 24 volts. The 12-volt or 24-volt information is found on the modules symbol in the wiring diagram. Before taking voltage readings to track the source of a problem, first verify if the module is supplied by 12V or 24V, if not, residual voltage on the module inputs/outputs can draw an erroneous conclusion.

Inactive Multiplex output = Residual voltage of 18% to 33% of supply voltage.

Inactive Multiplex input = Residual voltage of 50% of supply voltage.

NOTE
o *Verify on the wiring diagram whether the voltage is 12V or 24V,*
o *For a 12V module: an active voltage would be 12V or 0V but not in between. If you measure the intermediate tensions (ex. 6V, 2V, or 4V) this must be interpreted as if the input or the output is inactive.*
o *For a 24V module: an active voltage would be 24V or 0V but not in between. If you measure the intermediate tensions (ex. 12V, 4V, or 8V) this must be interpreted as if the input or the output is inactive.*

4.3 CAN NETWORK

The CAN network wiring is separated in sections and uses connectors that are not shared with other circuits. This allows sections of the network to be isolated to help locate short-circuit on the CAN.

In case of a short-circuit on the CAN network, this affects all the modules and they all act as “No response” in the error messages of the “ELECTRICAL SYSTEM” menu. To locate a short-circuit, proceed by disconnecting one module zone at a time while verifying if this makes inactive the errors in the modules still connected. Connector C1 (front electrical & service compartment) disconnects all the modules at the rear of the vehicle from the network. Connector C5 (front electrical & service compartment) disconnects all the modules from the entrance door & wiper control panel. Connector C3 (rear electrical panel) disconnects all the modules at the rear of the vehicle from the network.

Example: Disconnect C5 and C1 and then verify the status of the errors. If the front modules (A41 to A46) now give inactive errors, which means short-circuit is elsewhere than in the front electrical & service compartment.

4.3.1 CAN Connection On The Telltale Panel And The Hvac Control Unit

The telltale panel module and HVAC module are linked to the CECM by a CAN connection. In case of a CAN connection default, the telltale panel LCD display shows "CAN", and on the HVAC control unit, the temperature display indicates "---". To confirm a CAN connection default, check that the fan speed on the driver's section HVAC control unit cannot be adjusted.

Moreover, specific error messages from these 2 modules can be read in the ELECTRICAL SYSTEM menu.

NOTE
While downloading a new vehicle program in the CECM from a computer, the CAN network is temporarily interrupted and therefore a CAN reference appears in the telltale panel LCD

display.

4.3.2 Spare CAN

A spare CAN network is installed between the front and the rear of the vehicle. It has connectors installed at each end to facilitate swapping from the regular CAN network to the spare CAN network. Refer to the vehicle wiring diagram and section 4.6 for more information.

4.4 TEST MODE FOR SWITCHES AND SENSORS

The switch/sensor test mode provides useful information to diagnose problems complimentary to the electrical system diagnosis.

To enter this mode, activate the dashboard "Telltale Light Test" switch 3 times within 4 seconds. To exit the switch/sensor test mode, reactivate the test switch 1 time or turn OFF the ignition.

4.4.1 Information Available And Impact On The Functions In Switch/Sensor Test Mode

Telltale panel audible alarm emits a *beep* each time an OFF/ON transition is detected on a multiplex input. This allows quick verifying if the switches and sensors are detected or seen by the multiplex modules. When the vehicle is parked, the back-up alarm also emits a sound that allows verification of the sensors at the rear of the vehicle.

Certain inputs are doubled (ex. turn signal switch on multi-function lever, door operating buttons) and also other inputs activate at the same time (ex. kneeling switch and Kneeling proximity sensor switch). For these inputs, 2 *beeps* are emitted. If only one *beep* is heard, one of the inputs is defective.

SWITCHES AND SENSORS SUPPORTED BY THE SWITCH/SENSOR TEST MODE
HVAC control unit driver’s section ON/OFF
A/C door ajar open sensor
HVAC control unit driver recirculate switch
HVAC overhead compartment fan switch
HVAC control unit passenger’s section ON/OFF
Engine ether start switch
Radiator fan clutch switch
Engine front start enable switch
Engine rear start enable switch
Engine ignition front switch
Engine ignition rear switch
Entrance door inside closing switch
Entrance door outside opening /closing switch
Entrance door electric window down switch
Entrance door electric window up switch
Electric horn button
Kneeling down switch
Kneeling up switch
Lavatory emergency switch
Interior lighting switch, 2 positions
Driver’s area lighting switch
Reading lights switch
Multi-function lever LH turn signal
Multi-function lever RH turn signal
Fog lights switch
Hazard warning flashers switch
Multi-function lever courtesy blinkers switch
Headlights switch, 2 positions
Multi-function lever headlights beam toggle switch
Baggage compartment door lock/unlock switch
Tag axle signal
Wheelchair lift activation switch
Windshield lower wiper
Multi-function lever windshield wipers intermit.
Multi-function lever windshield wipers speed 1,2
Windshield wipers backup switch
Windshield washer switch

The following inputs, either certain options or sensors which are difficult to activate, are not supported by the switch/sensor test:

- Low-Buoy switch,
- Starter Sensor,
- ABS Warning input,
- WCL switch,
- Driver's Power Window Switch (up & down),
- Fog Lights Switch,
- Alternator Sensors 1 & 2,
- Retarder Active Signal,
- Radiator fan speed 1 & 2 signals.

When in switch/sensor test mode, the A/C compressor HI and LO pressure values are displayed one after the other instead of the outside temperature in the telltale panel LCD display. This feature can be used when the vehicle is traveling to check the A/C compressor pressure values, but no *beep* can be heard.

In test mode, with the parking brake applied and the passenger set point set to a value higher than 64°F (18°C), the circulator pump is not set to OFF as it would normally do when the outside temperature gets above 50°F (10°C). This feature allows verification of the pump when inside a garage. This is also useful when working on the heating system to remove air pockets trapped in the system.

When performing an A/C cooling test and having the water pump shut off in switch/sensor test mode is required, just set the passenger set point temperature to the minimum 64°F (18°C) to shut off the pump.

4.5 TEST MODE FOR ELECTRIC MOTORS

The test mode allows testing the motors and electric contactors without the need to have the engine running. Note that while in test mode, the engine cannot be started.

Prerequisite conditions for the motor test mode:

A. The battery charger must be connected to a 110-120 volt power supply. If not, the test will be interrupted when the voltage drops below 24.4 volts,

B. Engine not running,

C. Parking brake applied,

DANGER

Before starting the test sequence, make sure nobody is working in the evaporator or condenser compartment.

NOTE

A delay of 15 seconds during which the back-up alarm will sound is introduced prior the test start to advise people that may be working on the vehicle.

To enter this mode:

- Activate the dashboard Telltale Light Test switch 3 times within 4 seconds;
- Push the ON/OFF button on the driver's side HVAC control unit 5 times (that makes 3 transitions from OFF to ON),
- A *beep* can be heard indicating the motor test mode has started.

Using the test mode:

- During the entire test, the telltale panel audible alarm gives a signal each second to remind that the motor test mode is underway.

4.5.1 Test Sequence

Go to the condenser compartment.

- The condenser fans runs for 3 seconds at speed 1.
- 1 second delay.
- Speed 2 activates for 3 seconds.
- 3 seconds delay.
- Passenger's unit refrigerant solenoid valve activates 3 times at 1 second interval.

Then 5 *beeps* can be heard from the back-up alarm to indicate to go to the engine compartment (15 SECONDS DELAY).

In the engine compartment, the sequence is as follows:

- Toilet fan motor runs for 3 seconds.
- 1 second delay.
- A/C compressor clutch activates 3 times at 1 second interval.
- 1 second delay.
- Left compressor unloader activates 3 times at 1 second interval.
- 1 second delay.
- Right compressor unloader activates 3 times at 1 second interval.

5 *beeps* from the back-up alarm indicate to go to the engine radiator fan (5 SECONDS DELAY).

- Fan clutch is disengaged for 3 seconds (fan can be turned freely by hand).
- Fan clutch engages for 3 seconds in speed 1 (fan can be turned by hand but with a certain resistance).
- 3 seconds delay.
- Fan clutch engages for 3 seconds in speed 2 (cannot be turned but hand).
- 10 seconds delay.
- Auxiliary A/C clutch (parcel rack cooling system) activates 3 times at 1 second interval.

5 *beeps* from the back-up alarm indicate to go to the evaporator compartment (10 SECONDS DELAY).

In the evaporator compartment:

- o Evaporator fan motor runs at speed 1 for 3 seconds then runs at speed 2 for 3 seconds.
- o Hot water pump starts running for 5 seconds and hot water pneumatic valve activates 3 times at 1 second interval.

5 *beeps* from the back-up alarm indicate to go to the spare wheel compartment (20 SECONDS DELAY).

Inside the compartment:

- o Driver's refrigerant solenoid valve activates 3 times at 1 second interval.
- o 1 second delay.
- o Driver's water solenoid valve activates 3 times at 1 second interval.

5 *beeps* from the back-up alarm indicate to go to inside the vehicle (10 SECONDS DELAY).

Inside the vehicle:

- o Upper section defroster fan motor runs for 5 seconds.
- o 10 seconds delay.
- o Left and right overhead compartment fans start running one after the other for 5 seconds.
- o 1 second delay.
- o Overhead storage compartment refrigerant solenoid valve activates 3 times at 1 second interval.

This ends the test. Activate the dashboard Telltale Light Test switch one time to leave the motor test mode.

4.6 CAN NETWORK LAYOUT AND TROUBLESHOOTING

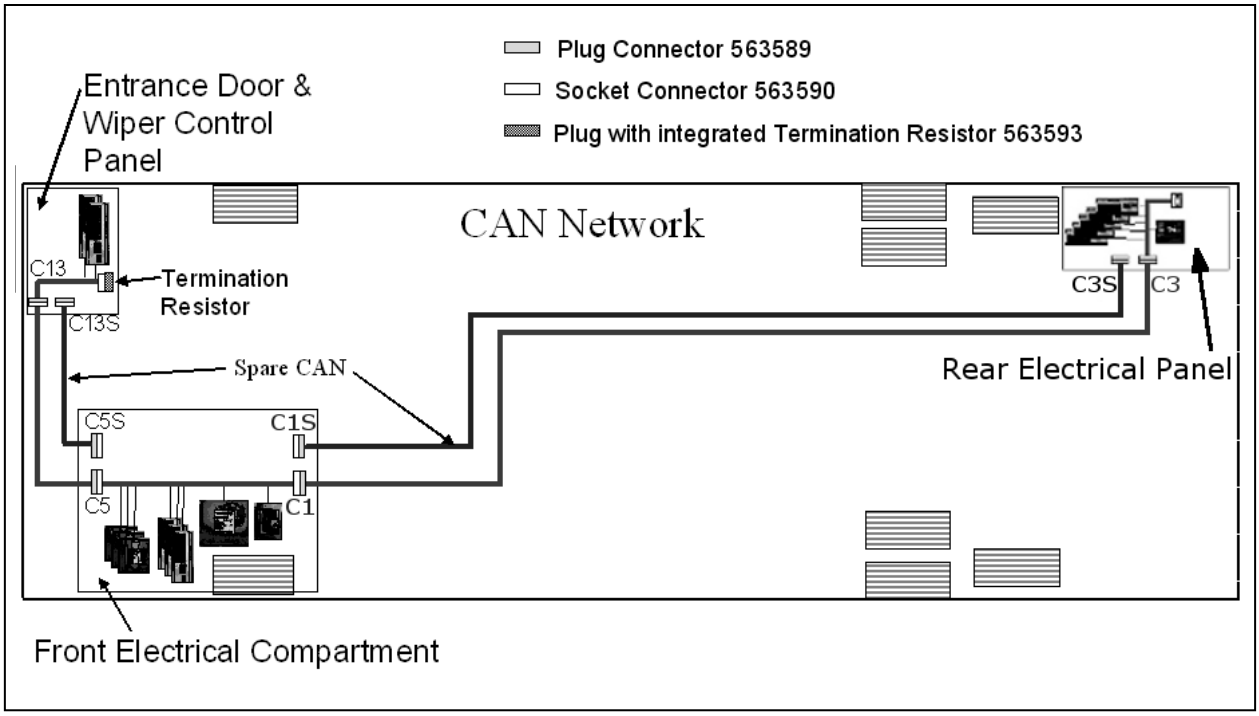

FIGURE 20: X3-45 COACHES CAN NETWORK LAYOUT 06637

4.7 TROUBLESHOOTING

Problem/Symptom	Probable Causes	Actions
Vehicle does not Start	Rear Start selector switch is not in the NORMAL position Master cut-out switch on the rear electrical panel is in the OFF position (down)	1. Check that the rear start selector switch is flipped up to NORMAL start position and master cut-out switch is flipped up to ON and retry cranking 2. Flip the rear start selector switch to “Rear Start” and start the vehicle from the rear
	CAN network problem (Multiplex) Module A53 not powered or is defective Engine ECM does not receive the ignition signal Engine ECM is not powered	If the vehicle does not start from the rear: 1. Verify that module A53 is powered: a) Check the SYSTEM DIAGNOSTIC menu of Driver Information Display (DID). Select FAULT DIAGNOSTIC and ELECTRICAL SYSTEM. The message “No Response ModA53, Active”, indicates a power problem on the module or a CAN network problem. b) Check / reset circuit breaker CB5 c) Check / replace fuse F65 d) Probe gray connector on module to see if it is powered. 2. Verify that the engine ECM is powered and get the ignition signal a) Check / reset circuit breaker CB8 Check / replace fuse F74 b) Check / reset circuit breaker CB2 Check / replace fuse F78
None of the Multiplexed functions are operating, including the basic limp-home functions (door opening, flashers, wipers in speed 1) Three dashes “---“ appear in the telltale panel instead of the outside temperature *Note: The sunshades are still functioning since these are not multiplexed*	The program version in the CECM is different than the program in the I/O modules and the CECM is forcing all I/O modules to stay inactive	1. Engage the auto-programming of the I/O modules: Turn the ignition key to the OFF position, flip the master cut-out switch on the rear electrical panel to OFF and ON and then turn the ignition key ON. The letters CAN will appear in the telltale LCD panel for about 3 minutes Everything shall get back to normal once the letters CAN are replaced with outside temperature display 2. Try disconnecting the green connector on the CECM and reconnect 3. If step 1 and 2 are ineffective, try disconnecting the Master ID module completely and repeat step 1 4. Try disconnecting the CECM

Problem/Symptom	Probable Causes	Actions
		completely, leave it disconnected and see if the limp-home functions (start of the vehicle from the engine compartment, wipers speed 1, flashers, etc) are functioning
Many secondary functions (not essential for driving) not functioning (interior lighting, driver's area lighting, wiper speed 2 and intermittent). Outside temperature display in the telltale LCD panel displays three dashes "---" Marker lights and clearance lights are turned ON when setting ignition to the ON position.	The CECM module does not receive 24 V power. The CAN network is not working. It could be caused by a short on the network, an open circuit, a problem with the CECM or the CECM being disconnected from the network.	1. Check / reset circuit breaker CB6 (3rd from the left on the junction panel) Check / replace fuse F1 2. Operate in limp-home mode by starting the vehicle from the engine compartment (REAR START). All functions essential to drive are available To close and lock the door, pull the door manually up to its closed position and it will lock by itself. The door opening button is still functioning
No temperature control in the passenger area Passenger temperature display indicates two dashes "--"	Problem with the temperature sensor located in the evaporator compartment air intake or the sensor wiring	Instruct the driver to manually control the temperature by playing with the passenger set point. Set above 22°C (72°F) to heat and below 22° C (72°F) to cool
Entrance door does not open nor close using the control buttons Defroster fan not functioning Windshield wipers not functioning in speed 1 or intermittent	Module A47 is not powered or is faulty	1. Check the SYSTEM DIAGNOSTIC menu of Driver Information Display (DID). Select FAULT DIAGNOSTIC and ELECTRICAL SYSTEM. The message “No Response ModA47, Active” indicates a power problem on the module. (A CAN network problem would show the same message but doesn't produce these symptoms). 2. Check / reset circuit breaker CB6 3. Check / replace fuse F5 4. Probe gray connector on module to see if it is powered. 5. Use the air release valves near the entrance door and in the front service compartment to lock / unlock the door
Windshield wipers not functioning in speed 1 or intermittent	No power on R23	Check / replace fuse F82
HVAC condenser fans not functioning in speed 1	Circuit breaker CB7 was manually tripped and not	Check / reset circuit breaker CB7

Problem/Symptom	Probable Causes	Actions
	reset	
HVAC condenser fans not functioning in speed 2	Circuit breaker CB7 was manually tripped and not reset	Check / reset circuit breaker CB7
Windshield washer not functioning Windshield upper section de-icing system not functioning Defroster fan is functioning but no heat or cooling available in the driver area.	Module A46 is not powered or is faulty	1. Check the SYSTEM DIAGNOSTIC menu of Driver Information Display (DID). Select FAULT DIAGNOSTIC and ELECTRICAL SYSTEM. The message “No Response ModA46, Active” indicates a power problem on the module. (A CAN network problem would show the same message but doesn't produce these symptoms). 2. Check / reset circuit breaker CB1 3. Check / replace fuse F12 or F13 4. Probe gray connector on module to see if it is powered.
Low beam headlights and front flasher on left side not functioning Electric horn not functioning	Module A45 is not powered or is faulty	1. Check the SYSTEM DIAGNOSTIC menu of Driver Information Display (DID). Select FAULT DIAGNOSTIC and ELECTRICAL SYSTEM. The message “No Response ModA45, Active” indicates a power problem on the module. (A CAN network problem would show the same message but doesn't produce these symptoms). 2. Check / reset circuit breaker CB2 3. Check / replace fuse F33 and F34 4. Probe gray connector on module to see if it is powered.
Low beam headlights and flasher on right side not functioning	Module A48 is not powered or is faulty	1. Check the SYSTEM DIAGNOSTIC menu of Driver Information Display (DID). Select FAULT DIAGNOSTIC and ELECTRICAL SYSTEM. The message “No Response ModA48, Active” indicates a power problem on the module. (A CAN network problem would show the same message but doesn't produce these symptoms). 2. Check / reset circuit breaker CB2 3. Check / replace fuse F33 and F34 4. Probe gray connector on module to see if it is powered.
Rear flashers not functioning	Module A51 is not powered or is faulty	1. Check the SYSTEM DIAGNOSTIC menu of Driver Information Display

Problem/Symptom	Probable Causes	Actions
Stoplights and center stoplights not functioning		(DID). Select FAULT DIAGNOSTIC and ELECTRICAL SYSTEM. The message “No Response ModA51, Active” indicates a power problem on the module. (A CAN network problem would show the same message but doesn't produce this symptom). 2. Check / reset circuit breaker CB2 3. Check / replace fuse F80 4. Probe gray connector on module to see if it is powered.
Engine is overheating and radiator fan clutch does not engage The A/C compressor clutch does not engage	Module A52 is not powered or is faulty	1. Check the SYSTEM DIAGNOSTIC menu of Driver Information Display (DID). Select FAULT DIAGNOSTIC and ELECTRICAL SYSTEM. The message “No Response ModA52, Active” indicates a power problem on the module. (A CAN network problem would show the same message but doesn't produce this symptom). 2. Check / reset circuit breaker CB5 3. Check / replace fuse F65 4. Probe gray connector on module to see if it is powered.
Evaporator fan not functioning	Circuit breaker CB3 tripped Module A54 is not powered or is faulty	1. Check / reset circuit breaker CB3 2. Check the SYSTEM DIAGNOSTIC menu of Driver Information Display (DID). Select FAULT DIAGNOSTIC and ELECTRICAL SYSTEM. The message “No Response ModA54, Active” indicates a power problem on the module. (A CAN network problem would show the same message but doesn't produce this symptom). 3. Check / reset circuit breaker CB5 4. Check / replace fuse F67 , F68 5. Probe gray connector on module to see if it is powered.
HVAC condenser fans not functioning in speed 1	Module A54 is not powered or is faulty	1. Check the SYSTEM DIAGNOSTIC menu of Driver Information Display (DID). Select FAULT DIAGNOSTIC and ELECTRICAL SYSTEM. The message “No Response ModA54, Active” indicates a power problem on the module. (A CAN network problem would show the same message but

Problem/Symptom	Probable Causes	Actions
		doesn't produce this symptom). 2. Check / reset circuit breaker CB5 3. Check / replace fuse F67 , F68 4. Probe gray connector on module to see if it is powered.
Sound system not functioning	Circuit breaker CB4 or CB11 was manually tripped and not reset	Check / reset circuit breaker CB4 or CB11
Fire alarm telltale light and audible alarm always ON and there is no fire or high temperature in the engine compartment	Short-circuited fire sensor or defective sensor	Prior to start the vehicle, cycle the ignition key to the ON position, OFF position and then ON position again and then start the vehicle. This will deactivate the fire alarm function. This has to be repeated each time the vehicle is re-started
The vehicle is parked and the electrical horn is activated to indicate a fire in the engine compartment but there is no fire	Short-circuited fire sensor or defective sensor	Cycle the ignition key between the ON and OFF position twice within 3 seconds. This will deactivate the fire alarm function. This has to be repeated each time the vehicle is parked
A single light, a group of LED lights or another function of the vehicle is not functioning	The multiplex outputs are protected in current by an internal “soft-fuse”. When an output is shorted, it turns OFF and stays OFF until the "soft-fuse" is reset	Turn the ignition key to the OFF position and turn to the ON position again. This resets all "soft –fuses"
No backlighting in the instrument cluster	Circuit breaker CB10 is tripped or fuse F20 blown	Check / reset circuit breaker CB10 Check / replace fuse F20
The radiator fan clutch does not function and the engine is overheating		1. Set the ignition key to the ON position. 2. Activate the dashboard Telltale Light Test switch 3 times within 4 seconds. 3. In the engine compartment, set the starter selector switch to REAR START and then start the engine from the rear. While in this mode, the rear start push-button can be used to manually engage the fan clutch. The Multiplex system knows when the engine is already running, and it will not activate the starter. 4. Press the push-button one time to engage the clutch in 1st speed, press a second time to engage in 2nd speed,

Problem/Symptom	Probable Causes	Actions
		press a third time to stop the fan, press once again to return to 1st speed. If the fan clutch does not engage using this procedure then the clutch is faulty or the wiring between the multiplex module and the clutch is faulty. Mechanically lock the fan clutch as described in section 05: COOLING SYSTEM of the maintenance manual.

4.8 ESSENTIAL FUNCTIONS TO OPERATE THE VEHICLE

Even with a defective CECM (Chassis Electronic Control Module) or a CAN network problem, essential base functions are maintained to rear start the vehicle from the engine compartment and drive in a secure manner.

However, many secondary functions are lost. In this case, the following directives must be followed.

- Never connect a battery charger when the ignition is at the ON position on a vehicle with a CAN defective or certain functions will start up by themselves,
- Disconnect the charger before starting the vehicle, if not the default functions will not activate,
- If the default mode does not activate, try to turn the ignition OFF while ensuring that no charger is connected and then restart the vehicle.

4.8.1 Available Functions

- Startup: Turn on the ignition in the driver's area and rear start the vehicle from the engine compartment,
- Opening the door: Functions normally,
- Closing the door: Manually pull on the door and it will lock automatically,
- Windshield wipers: Wipers functions at 1st speed only,
- Headlights: Low beams only,
- Directional signals: Rear and front only,
- Stoplights: 2 upper stoplights + high-mounted stoplight are functional,
- HVAC: Functional with set point fixed at 70°F (22°C), evaporator and condenser fixed at speed 1, defroster fixed at speed 4.

4.9 LOWER PRIORITY MODULES FOR BREAKDOWN SERVICE

Modules A43 (IO-A) and A44 (IO-B) affect lower priority functions. These modules can therefore be used as spare parts for breakdown service while on the road.

Functions lost if A43 is removed and used as spare part:

- High beams,
- Ability to turn on the parking lights only,
- “Watch your step” sign,
- Driver's area lighting,
- Tag axle activation,
- Courtesy lights.

Functions lost if A44 is removed and used as spare part:

- Fresh air damper mix trap control,
- Driver's area and entrance overhead light,
- Front clearance lights.

4.10 MULTIPLEX MODULES

4.10.1 CECM

The CECM plays the role of interface between the engine ECM, the transmission ECU, the telltale panel module and other IO-A, IO-B modules. When a multiplex module is being replaced, the CECM will inform the new module

of its role and function accordingly to the vehicle options.

4.10.2 MASTER ID

The Master ID works in conjunction with the CECM. It keeps the specific back-up program of the vehicle. So, a specific Master ID cannot be removed from a vehicle and installed on another vehicle.

4.10.3 IO-A

IO-A modules receive inputs and control outputs. IO-A's are used for all outputs of 1 amp or less.

4.10.4 IO-B

IO-B modules receive inputs and control outputs. IO-B's are used for outputs up to 30 amps.

4.11 MULTIPLEX MODULES REPLACEMENT

IO-A, IO-B and CECM multiplex modules can be replaced and reprogrammed without having to connect a computer to the vehicle.

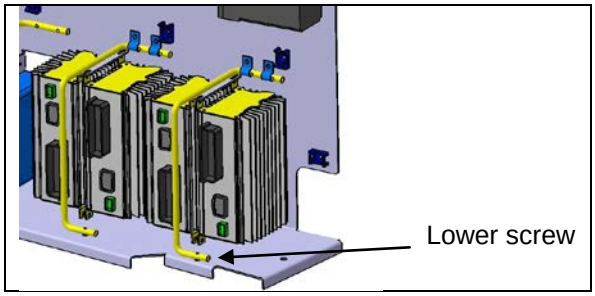

FIGURE 21: IO-B MODULE REMOVAL 06638

4.11.1 Replacing IO-A Or IO-B Modules

- o Set the ignition key to the ON position and leave it in that position at all time while performing this procedure.
- o On rear electrical junction panel, trip circuit breaker CB6.
- o Replace the module (for IO-B modules, disconnect the green connector first, then the grey one and finish with the black connector. To disconnect the black connector, slide downwards the red latch. Remove the lower screw that holds the cable attachment rod onto the floor portion of the panel and flip the rod up, this will relieve the IO-B module, (see Fig. 17).
- o Reset circuit breaker CB6. This engages the automatic reprogramming.
- o The telltale panel LCD display indicates "CAN" until the reprogramming is complete. Once completed, "CAN" disappears and the temperature reappears.
- o Check the SYSTEM DIAGNOSTIC menu of the message center display (MCD). Select FAULT DIAGNOSTIC and ELECTRICAL SYSTEM. Verify the fault message to be certain the module is reprogrammed. If the module is not reprogrammed, the message « Axx Not Responding » appears where Axx is the module number (Ex: A41, A42…etc).

4.11.2 Replacing The CECM Module

- o Set the ignition key to the ON position and leave it in that position at all time while performing this procedure.
- o On rear electrical junction panel, trip circuit breaker CB6.
- o Replace the module.
- o Reset circuit breaker CB6. This engages the program transfer from the Master ID to the CECM module (the back-up program is inside the Master ID. The Master ID will identify the CECM as being new and will send the correct program to it). The telltale panel LCD display indicates "CAN" during 3 minutes approximately. "CAN" disappears and "---" is displayed alternately with "CAN" (during that sequence, "---" will be displayed up to 6 times and the audible alarm will ring). Wait until "CAN" is replaced by "---" that remains for more than 10 seconds. At this point the MasterID module has finished loading the program in the CECM.
- o Go to the rear electrical junction panel and trip circuit breaker CB6 once again. Wait 1 second and reset it. This engages I/O's modules automatic reprogramming.
- o The telltale panel LCD display indicates "CAN" until the reprogramming is completed. Once completed, "CAN" disappears and the temperature reappears. Check the SYSTEM DIAGNOSTIC menu of the message center display (MCD). Select FAULT DIAGNOSTIC and ELECTRICAL SYSTEM. Check the error messages. All modules appear in error but are not active. If an active error appears for a module, this one was not reprogrammed. In this case, trip CB6 once again. Wait 1 second and reset CB6. Re-verify the error messages when "CAN" disappears from the telltale panel LCD display.

- o Do an error reset to remove all errors (requires Password) from non-active modules, leave the SYSTEM DIAGNOSTIC menu and reopen to verify there are no more errors.

5. BOSCH ALTERNATORS

Two 28 volt 120A, self regulated, belt driven, air-cooled HD 10 BOSCH alternators are used in the 24 volt electrical system.

If the alternators needed to be removed, reinstall as follows. Refer to figure 20 for installation and to figure 21 for tightening specifications:

1. If necessary, tighten screws (6) fixing alternators support assembly onto engine (1, figure 21). Torque tighten to 43 Lb-Ft, use some Loctite 243 blue (680038) onto the threads. Also tighten screw (1) fixing belt tensioner onto alternators support assembly (1, figure 21). Torque tighten to 43 Lb-Ft, use some Loctite 243 blue (680038) onto the threads.
2. If removed, reinstall screw (1) fixing alternators support assembly onto engine (2, figure 21). Torque tighten to 22 Lb-Ft, use some Loctite 243 blue (680038) onto the threads.
3. Mount the A/C compressor idler pulley onto alternators support assembly (3, figure 21). Torque tighten to 150 Lb-Ft, use some Loctite 243 blue (680038) onto the threads.

MAINTENANCE

On-highway applications

Replace Bosch HD10 alternator brushes after every 125,000 miles (200 000 km).

Other than on-highway applications

Check Bosch HD10 alternator brushes condition once a year and replace if necessary.

Brush length when new= 9/16 in (15 mm)

4. Install alternators arched support (1) onto engine (4, figure 21), torque tighten to 43 Lb-Ft. If removed, install alternators idler pulley (1) (4, figure 21) onto alternators arched support, torque tighten to 43 Lb-Ft. Also, mount the lower alternator and upper alternator onto alternators arched support, torque tighten to 43 Lb-Ft. If removed install stone guard below lower alternator.
5. Fix lower and upper alternators to alternators support assembly using bolts (2) (5, figure 21), torque tighten to 80 Lb-Ft.
6. Mount pulleys (6, figure 21) onto alternators. Torque tighten to 58 Lb-Ft.
7. Install alternators belt (figure 20).

NOTE

Final tightening of the pulleys can be performed once the belt is installed. This will help keep the pulley from turning when tightening.

5.1 ALTERNATOR DRIVE BELT

Removal

1. Insert a ¾'' socket drive into the automatic belt tensioner opening (Fig. 20).
2. Twist the tensioning arm to slacken belt.
3. Remove belt.

NOTE

Belts specifications may vary. For proper belt selection, always consult your vehicle Coach Final Record.

Installation

Installation of the alternator drive belt is the reverse of removal.

5.2 ADJUSTMENT

Correct belt tension is required to maximize belt life. The tensioning arm maintains proper belt tension, no adjustment is required.

MAINTENANCE

Check for wear and proper tension every 6,250 miles (10 000 km) or twice a year, whichever comes first.

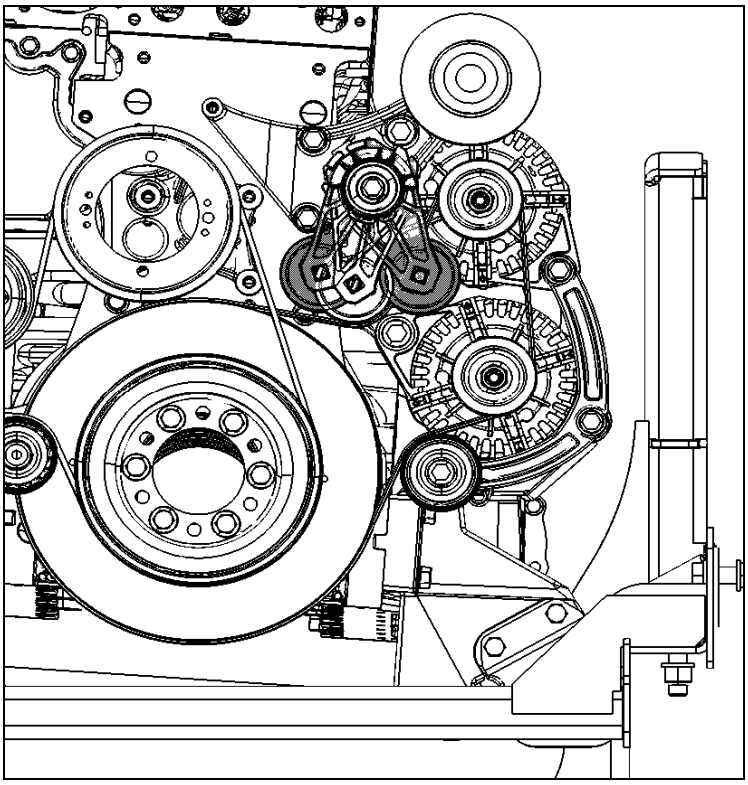

FIGURE 22: ALTERNATOR DRIVE BELT

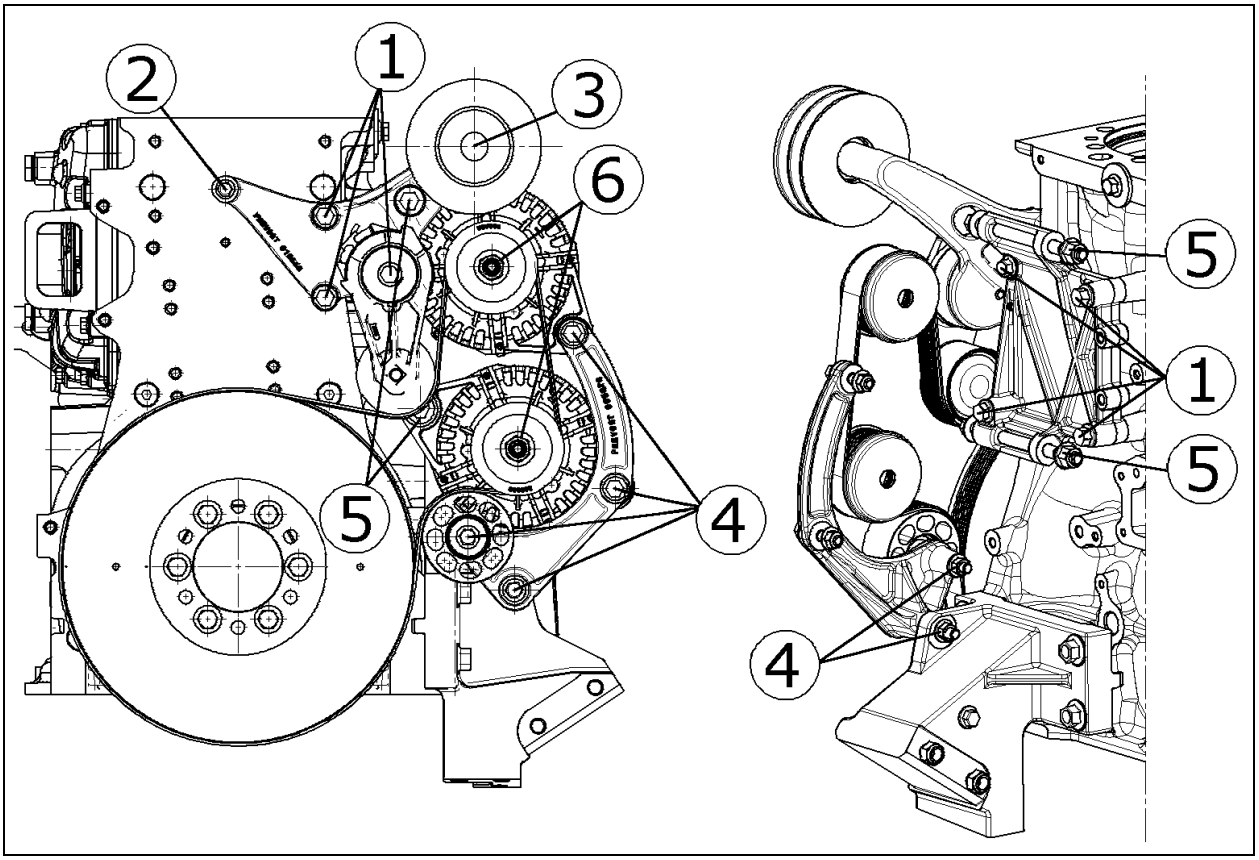

FIGURE23: TWIN BOSCH ALTERNATORS INSTALLATION (X3-45 COACH)

EPA 2010 ALTERNATORS AND COMPRESSORS LAYOUT		
X3-45 COACH		
2 X : HD-10 BOSCH ALTERNATOR 28V – 120 A – PART # 564119		LOCATION A
1 X : CENTRAL A/C SYSTEM CARRIER COMPRESSOR 05G		LOCATION B
(OPTIONAL WITH PARCEL RACK A/C) 1 X : AUXILIARY A/C SYSTEM ICE COMPRESSOR TM-16HD – PART # 950436		LOCATION C
X3-45 VIP & XLII BUS SHELL WITH CENTRAL A/C SYSTEM		
1ST OPTION	2 X : HD-10 BOSCH ALTERNATOR 28V – 120 A – PART # 564119	LOCATION A
	1 X : CENTRAL A/C SYSTEM CARRIER COMPRESSOR 05G	LOCATION B
2ND OPTION	2 X : HD-10 BOSCH ALTERNATOR 28V – 120 A – PART # 564119	LOCATION A
	1 X : CENTRAL A/C SYSTEM CARRIER COMPRESSOR 05G	LOCATION B
	1 X : HD-10 BOSCH ALTERNATOR 28V – 120 A - PART # 564119	LOCATION C
3RD OPTION	2 X : HD-10 BOSCH ALTERNATOR 28V – 120 A – PART # 564119	LOCATION A
	1 X : CENTRAL A/C SYSTEM CARRIER COMPRESSOR 05G	LOCATION B
	1 X : HD 10E BOSCH ALTERNATOR 14V – 200 A – PART # 564492	LOCATION C

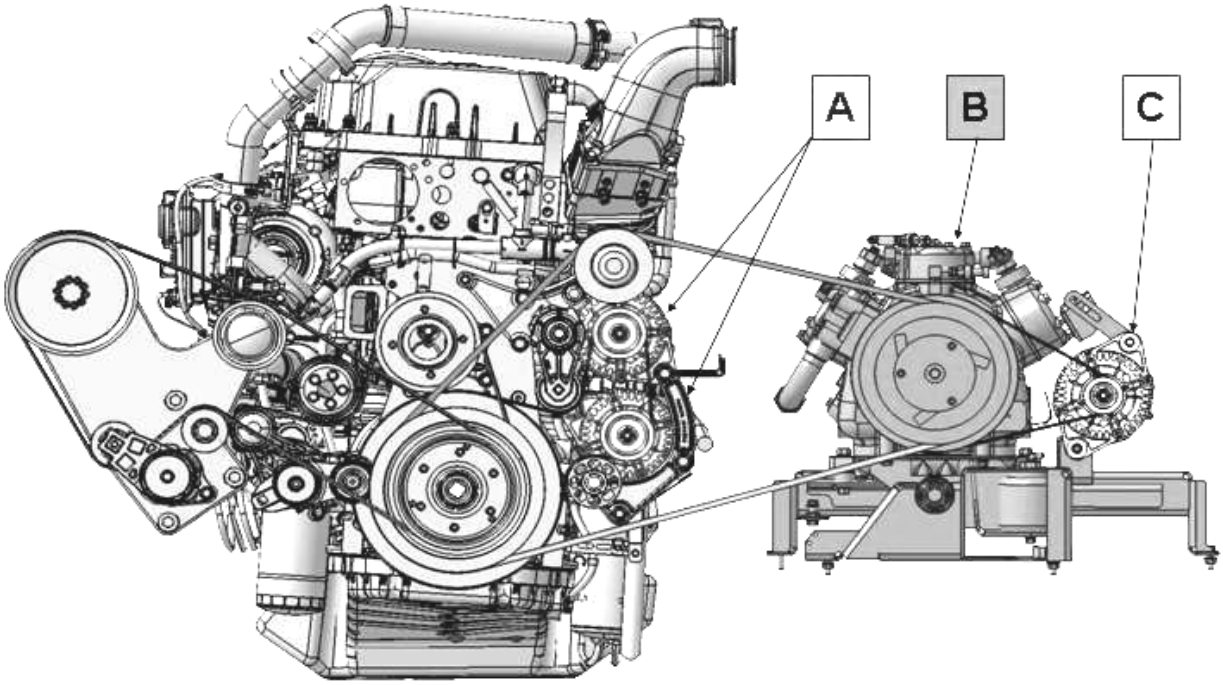

X3-45 VIP & XLII BUS SHELL WITH SMALL AUXILIARY A/C SYSTEM		
1ST OPTION	1 X : HD-10 BOSCH ALTERNATOR 28V – 120 A – PART # 564119	LOCATION A
	1 X : SMALL A/C SYSTEM ICE COMPRESSOR TM-16HD – PART # 950436	LOCATION B
2ND OPTION	2 X : HD-10 BOSCH ALTERNATOR 28V – 120 A – PART # 564119 (ONLY TOP ALTERNATOR CONNECTED)	LOCATION A
	1 X : SMALL A/C SYSTEM ICE COMPRESSOR TM-16HD – PART # 950436	LOCATION B
3RD OPTION	2 X : HD-10 BOSCH ALTERNATOR 28V – 120 A – PART # 564119 (ONLY TOP ALTERNATOR CONNECTED)	LOCATION A
	1 X : SMALL A/C SYSTEM ICE COMPRESSOR TM-16HD – PART # 950436	LOCATION B
	1 X : HD 10 BOSCH ALTERNATOR 28V – 120 A - PART # 564119	LOCATION C
4TH OPTION	2 X : HD-10 BOSCH ALTERNATOR 28V – 120 A – PART # 564119 (ONLY TOP ALTERNATOR CONNECTED)	LOCATION A
	1 X : SMALL A/C SYSTEM ICE COMPRESSOR TM-16HD – PART # 950436	LOCATION B
	2 X : HD 10 BOSCH ALTERNATOR 28V – 120 A - PART # 950436	LOCATION C
5TH OPTION	2 X : HD-10 BOSCH ALTERNATOR 28V – 120 A – PART # 564119 (ONLY TOP ALTERNATOR CONNECTED)	LOCATION A
	1 X : SMALL A/C SYSTEM ICE COMPRESSOR TM-16HD – PART # 950436	LOCATION B
	1 X : HD 10E BOSCH ALTERNATOR 14V – 200 A	LOCATION C

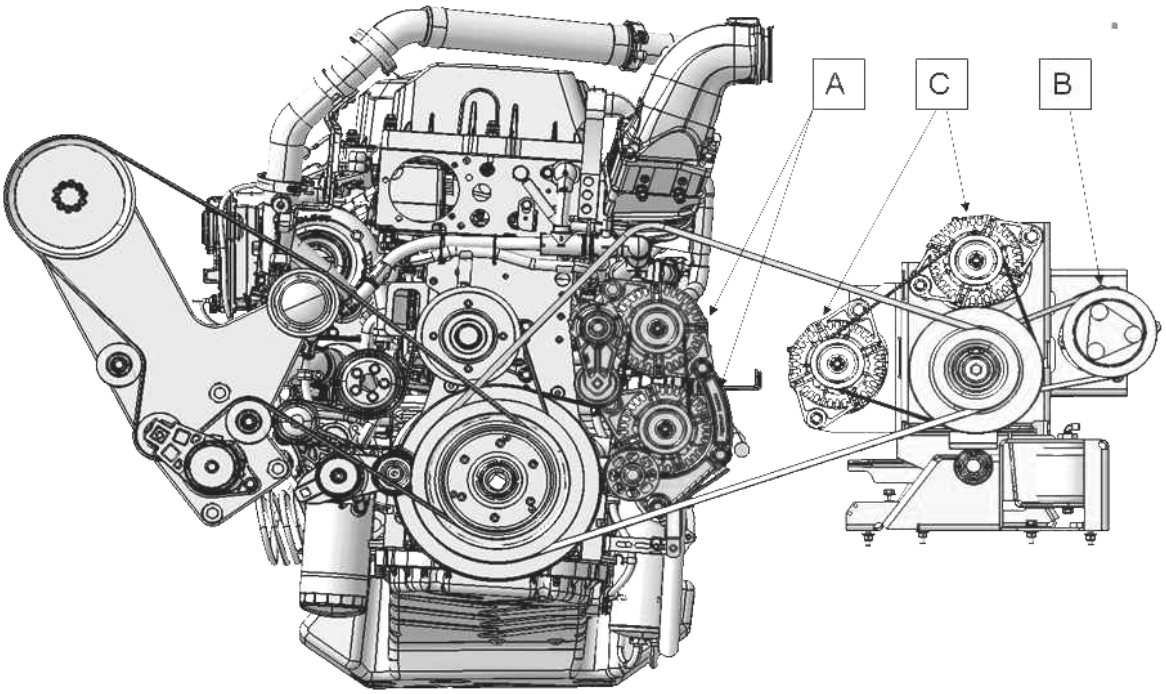

6. BATTERY EQUALIZER

Vanner "Vann-Guard 70-Series" Battery equalizer is located beside the batteries in battery compartment. Battery Equalizer Owner's Manual (100 amps) is annexed at the end of this section.

7. STARTER

Refer to Mitsubishi Electric Corporation (MELCO) Service bulletin ME003-P annexed at the end of this section for information and maintenance instruction on MELCO 105P70 starter.

CAUTION

Do not engage starter for more than 15 seconds at a time. If engine does not start within 15 seconds, release ignition key and let starter cool for one minute before attempting to restart.

8. ENGINE BLOCK HEATER

The vehicle may be equipped with an engine immersion-type electric block heater to assist cold weather starting. The heater male electric plug is easily accessible through the engine compartment R.H. side door (Fig. 22). To use it, connect the female plug of an electrical extension cord to the heater plug. The extension cord must be plugged into a 110-120 V AC power source only. The engine block heater should be used whenever the vehicle is parked for an extended period of time in cold weather and a suitable power source is available.

8.1 MAINTENANCE

This heater is non-serviceable except for the cord, and if faulty, must be replaced as a unit.

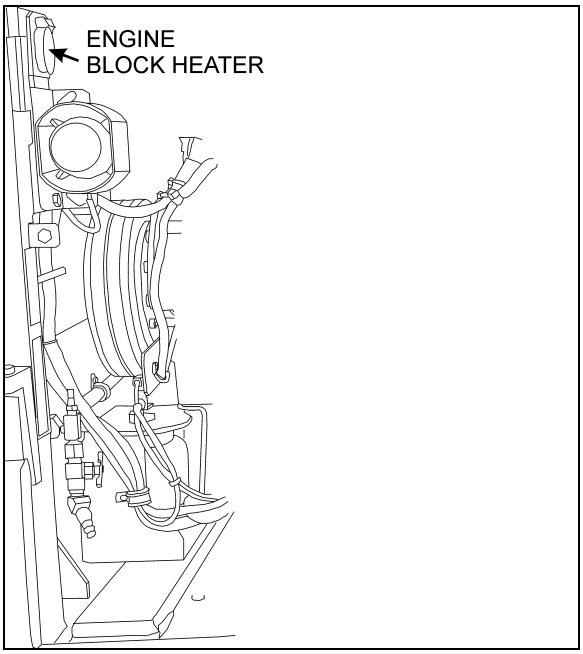

FIGURE 24: ELECTRIC HEATER PLUG LOCATION 06639

9. EXTERIOR LIGHTING

The circuit for exterior lights, as well as their control switches, relays and circuit breakers are shown on the applicable wiring diagrams. Wiring diagrams are located in the technical publication box.

9.1 HEADLIGHTS

Each headlight assembly consists of two headlamp module 90 mm (3½ inch) equipped with a 12-volt halogen bulb and one 100 mm (4 inch) 12-volt LED turn/signal lamp. Outer lamps have a double function (both low and high beam). Inner lamps are used for high beam or daytime running light. The inner or outer lamp uses the same single filament halogen bulb part number.

NOTE

If vehicle is equipped with optional Xenon headlamps, refer to paragraph 9.1.6.

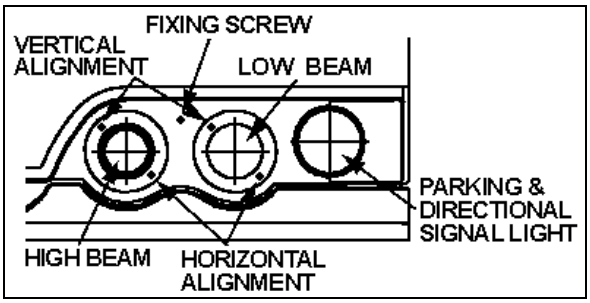

FIGURE 25: HEADLIGHT ASSEMBLY 06546

9.1.1 Headlight Beam Toggle Switch

The multifunction lever located on the steering column is used to select proper lighting. High beams or low beams can be selected by pulling the lever rearward. A high beam indicator on the central dashboard panel is illuminated when the high beam circuit is energized.

NOTE
Pulling the lever rearward while the lights are off will flash the headlights.

9.1.2 Maintenance

Clean headlights with soap and water and a good glass cleaner whenever dirty. For maximum illumination, headlight connections must be coated with a dielectric grease to prevent oxidation and proper voltage must be maintained. Low battery voltage, loose or dirty contacts in wiring system and poor ground contribute to a decrease in voltage. Check wiring and connections regularly and keep battery properly charged. When a headlight burns out, a new bulb must be installed. Headlights must be properly aimed to provide maximum allowable road illumination. When using mechanical aiming devices, follow manufacturer's instructions.

Headlight aim should be checked after installing a new bulb. Aiming can be performed without opening headlight assembly. Horizontal and vertical aiming of each module is provided by two adjusting screws that pivot the module in the housing for proper alignment (fig. 24). There is no adjustment for focus since the module is set for proper focus during manufacturing assembly.

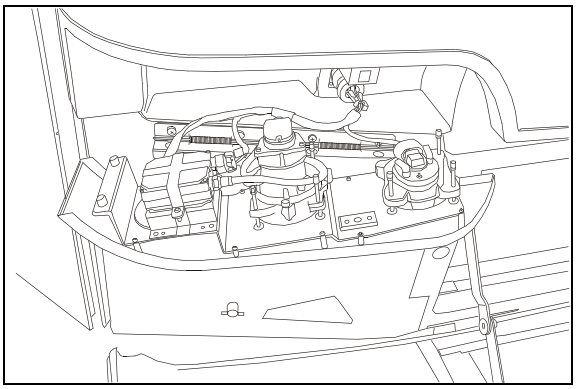

FIGURE 26: OPENING HEADLIGHT ASSEMBLY 06547

NOTE
Make sure headlight assembly is properly positioned into its housing before securing using fixing screw.

CAUTION
Use a soft cloth to clean the parking and front turn signal lamp.

9.1.3 Headlight Adjustment

1. Headlight aiming and inspection can be accomplished by visual means. This is done on a screen located at a distance of 25 feet (7,6 m) of the headlights. It should be of adequate size with a matte-white surface well shaded from extraneous light and properly adjusted to the floor area on which the vehicle stands. Provisions should be made for moving the screen or its vertical centerline so that it can be aligned with the vehicle axis. In addition to the vertical centerline, the screen should be provided with four laterally adjustable vertical tapes and two vertically adjustable horizontal tapes.
2. The four movable vertical tapes should be located on the screen at the left and right limits called for in the specification with reference to centerlines ahead of each headlight assembly.
3. The headlight centerlines shall be spaced either side of the fixed centerline on the screen by ½ the lateral distance between the light source centers of the pertinent headlights. The horizontal tapes should be located on the screen at the upper and lower limits called for in the specification with reference to the height of beam centers and the plane on which the vehicle rests, not the floor on which the screen rests (Fig. 25).

TABLE 1 – VERTICAL BEAM AIM GUIDELINES

Headlight (centerline) Mounting Height	Nominal Vertical Aim	Aim Inspection Limits for Vertical Aim
56 to 90 cm (22 to 36 inch)	0 Vertical	10 cm (4 inch) up to 10 cm (4 inch) down
90 to 120 cm (36 to 48 inch)	5 cm (2 inch) down	5 cm (2 inch) up to 15 cm (6 inch) down
120 to 140 cm (48 to 54 inch)	6.4 cm (4 inch) down	4 cm (1.5 inch) up to 16.5 cm (6.5 inch) down

4. The nominal vertical aim position on lower beam headlights shall be adjusted based on the headlight mounting height, from the

ground to the light source center of the headlight, according to table1.

5. High beam headlights are aimed so that the center of the high-intensity zone is located at the horizontal and straight ahead vertically (Fig. 26).
6. Low beam headlights are aimed so that the top edge (the cutoff) of the high-intensity zone is at the vertical location as per Table 1 and the left edge of the high-intensity zone is at the vertical centerline of the headlight (Fig. 27).
7. The inspection limits for high-beam headlights shall be with the center of the high-intensity zone from 10 cm (4 in) up to 10 cm (4 in) down; and, from 10 cm (4 in) left to 10 cm (4 in) right on a screen at 7.6 m (25 ft) (Fig. 28).

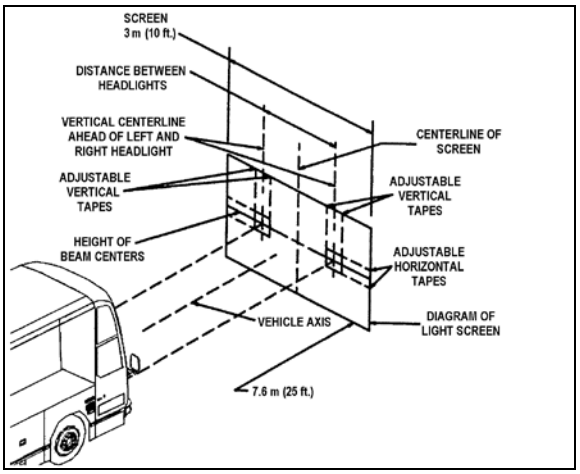

FIGURE 27: ALIGNMENT OF HEADLIGHT AIMING SCREEN 06502

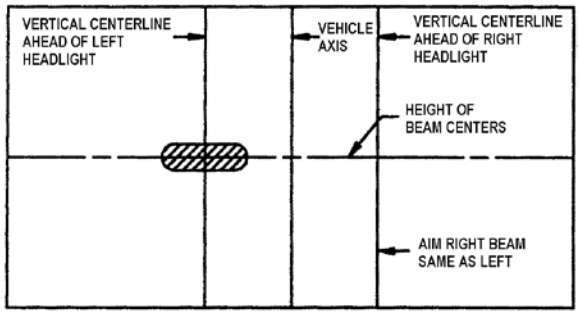

FIGURE 28: HIGH-INTENSITY ZONE (SHADED AREA) OF A PROPERLY AIMED UPPER BEAM ON THE AIMING SCREEN 7.6 M (25FT) IN FRONT OF VEHICLE 06503

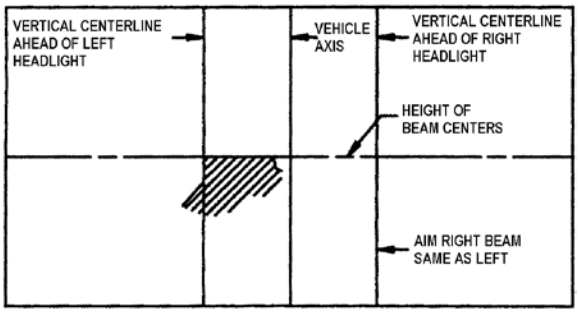

FIGURE 29: HIGH-INTENSITY ZONE (SHADED AREA) OF A PROPERLY AIMED LOWER BEAM ON THE AIMING SCREEN 7.6 M (25FT) IN FRONT OF VEHICLE 06504

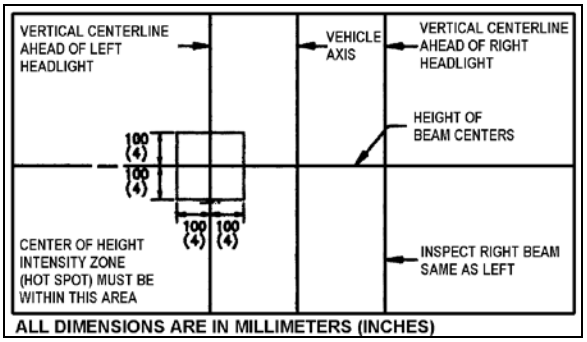

FIGURE 30: AIM INSPECTION LIMITS FOR UPPER-BEAM HEADLIGHTS 06505

7. The inspection limits in the vertical direction for low-beam headlights or the low beam of a dual-beam headlight, shall be as described in Table 1. In the horizontal direction, the left edge of the high-intensity zone shall be located from 10 cm (4 in) left to 10 cm (4 in) right of the vertical centerline of the beam. The viewing screen shall be located 7.6 m (25 ft) in front of the vehicle (Fig. 29).

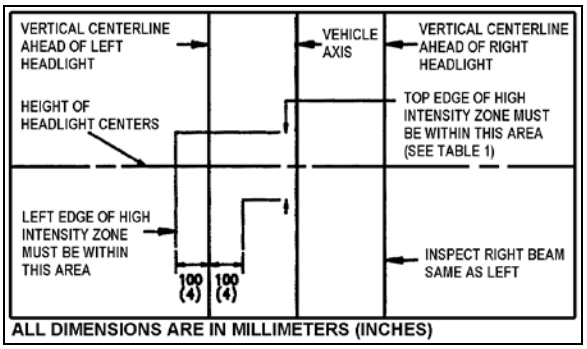

FIGURE 31: AIM INSPECTION LIMITS FOR LOWER-BEAM HEADLIGHTS 06506

9.1.4 Sealed-Beam Unit

Bulb Removal and Replacement

1. Pull the release handle located inside the front service compartment to tilt down the entire bumper assembly.
2. Remove the headlight screw fixing the headlight assembly, then tilt headlight assembly down (Fig. 23 and 24).
3. Remove connector from headlight bulb.
4. Remove the bulb by pushing and rotating it out of the socket.
5. Install the new bulb by reversing the previous procedure.

CAUTION

During this step, avoid contacting the bulb with the fingers not to alter the bulb life.

NOTE

Do not disrupt headlight adjustment screws.

Module Replacement

1. Pull the release handle located inside the front service compartment to tilt down the entire bumper assembly.
2. Remove the headlight screw fixing the headlight assembly, then tilt headlight assembly down (Fig. 23 and 24).
3. Remove connector from headlight bulb.
4. Unfasten three metal clips attaching headlight unit to support.
5. Install new module and fasten metal clips.
6. Install wiring connector on back of new sealed beam unit.
7. Tilt headlight assembly up into its housing then secure using fixing screw.

NOTE

Make sure headlight assembly is properly positioned into its housing before securing using fixing screw.

8. Perform alignment procedure.

NOTE

The headlight aim must be checked and adjusted even if it was properly adjusted before the sealed beam unit was replaced.

9.1.5 Front Turn Signal

The front turn signal is part of the front headlight assembly. The turn signal is a sealed unit (LED) located on each front corner and should be replaced as an assembly. Turn signal is visible from both front and side.

Removal and Replacement

1. Pull the release handle located inside the front service compartment to tilt down the entire bumper assembly.
2. Remove the headlight screw fixing the headlight assembly, then tilt headlight assembly down (Fig. 23 and 24).
3. Partially unfasten back plate fixing screws, then remove signal lamp.
4. Remove socket from signal lamp.
5. Install wiring connector on back of new signal lamp then install signal lamp.
6. Fasten back plate fixing screws then tilt headlight assembly up into its housing then secure using fixing screw.

NOTE

Make sure headlight assembly is properly positioned into its housing before securing using fixing screw.

9.1.6 Optional Xenon Headlamp

The outer lamps of each headlight assembly may be equipped with the optional Xenon lamps. These lamps improve visibility and provide better lifespan.

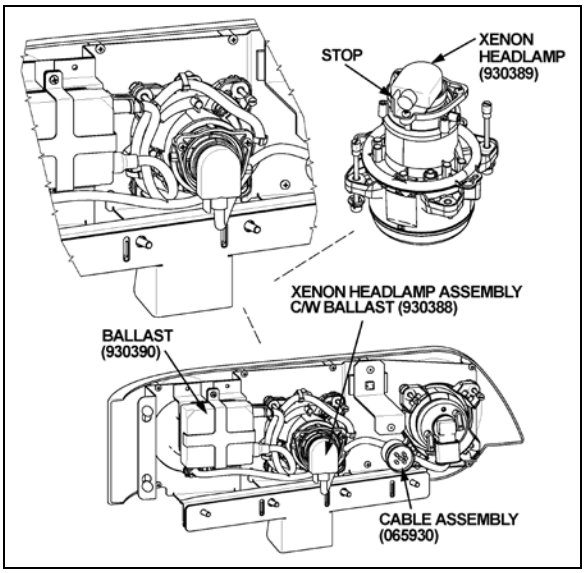

FIGURE 32: XENON HEADLAMP LOCATION 06549

Bulb Removal and Replacement

1. Pull the release handle located inside the front service compartment to tilt down the entire bumper assembly.
2. Remove the headlight screw fixing the headlight assembly, then tilt headlight assembly down (Fig. 23 and 24).
3. Remove main cable connector (066011).
4. Remove connector from headlamp bulb by turning counterclockwise.
5. Unscrew the three Phillips head screws, pull the retainer and bulb out.

CAUTION

To avoid breaking the bulb, make sure the socket is in proper position against the stop.

6. Install the new bulb by reversing the previous procedure.

CAUTION

During this step, avoid contacting the bulb with the fingers not to alter the bulb life.

NOTE

Do not disrupt headlight adjustment screws.

CAUTION

Never connect a voltmeter or V.O.M. to measure bulb voltage as instrument will be destroyed.

Troubleshooting and Safety

When switching on the Xenon headlamp using the rocker switch, a lamp short-circuit test is performed.

Current is detected in the lamp circuit before the ignition time and ignition prevented. Connection of the "hot" lamp to the body mass also prevents ignition. In both cases, the system is cut off within < 0.2 s and can only be restarted via the rocker switch.

In general, the maximum ignition time is < 0.2 s, which period is followed by cutoff. This would happen if a lamp was defected.

Lamp missing: system is cut off after < 0.2 s.

If lamp components or cables are damaged by force (accident) so that contact with hazardous parts is possible, the current in these lines is earthed by the vehicle body and - as with a defective household appliance - switched off when 30 mA are reached within < 0.2 s. the cutoff time is shortened by a more powerful defect current.

To protect the ballast, a counter in the electronic safety system ensures that a defective lamp can only be switched off 7 times consecutively after a successful ignition, after which the device is cut off. This prevents flutter and flashing. This counter is put out of action when the lamp cutoff time repetition interval is longer than 1.3 s so that temporary non-defect disturbances that result in immediate invisible re-ignition do not cause lamp cutoff.

A warning notice on the lamp plug makes you aware of the fact that the lamp is operated in this system on a higher voltage (you should therefore switch off the lamp before working on this part).

After taking out the lamp, the contact pins are in a practically idle state (< 34 Volt) after < 0.5 seconds so that there is no immediate danger of electric shock even if the warning is disregarded.

With this safety concept there is no danger to check the ballast with a new bulb. There is a

very high probability that the ballast is OK if the ballast can ignite the bulb.

One simple test to check the ballast would be to measure the Nominal current of 1.58 A after one minute for the 24V ballast.

9.2 STOP, TAIL, DIRECTIONAL, BACK-UP, AND HAZARD WARNING LIGHTS

A combination stoplight, taillight, directional signal light and back-up light assembly is mounted at the rear, on each side of the vehicle. Furthermore, when braking, two center stoplights (LED) and a cyclops light (LED) will illuminate simultaneously with the stoplights on the sides for increased safety. The L.H. and R.H. side center stop lights are also used as directional signal and marker lights.

The stop, tail, directional signal and back-up lights consist of individual LED lights mounted on the engine rear door, and each light is serviced individually as a complete unit. The back-up light uses a regular tungsten bulb.

The hazard warning flashing system uses the front, side and rear directional lights simultaneously. This system is energized by a switch on the L.H. dashboard.

9.2.1 Lamp Removal and Replacement

1. Open engine compartment rear door.
2. Remove the lamp support retaining screws (2), and then from the outside, remove the lamp and its support.
3. From the outside, install the new lamp with its support then fasten the retaining screws.

9.2.2 Center Stoplights and Cyclops Light Removal and Replacement

These (LED) lights are sealed unit and should be replaced as an assembly in accordance with the following procedure:

1. Unscrew both “Phillips” light screws then remove the light assembly.
2. Install new light assembly and secure using screws.

9.3 LICENSE PLATE LIGHT

Two LED units are mounted above the rear license plate(s) of vehicle. In case of burn out, the LED unit must be changed according to the following procedure.

1. Pry out the rubber seal with a small screwdriver. Pull on the LED unit and disconnect it.
2. Reconnect new LED unit, place rubber seal, and press on it until it is seated in position.

9.4 CLEARANCE, IDENTIFICATION AND MARKER LIGHTS

The vehicle is equipped with marker, identification and clearance lights (LED). The clearance lights are mounted at each corner of the coach near the top and the identification lights are in the upper center of rear and front sections.

The rear clearance and identification lights are red and the front ones are amber.

The amber marker lights are mounted along the sides of vehicle.

The side marker light is a sealed unit (LED) and should be replaced as an assembly in accordance with the following procedure:

1. Unscrew both *“Phillips”* light screws, and then remove the light assembly.
2. Position the new light assembly and install the “Phillips” screws.

9.4.1 Clearance and Identification Light Removal and Replacement

The clearance and identification light are sealed units (LED) and can be replaced in accordance with the following procedure:

1. Unscrew both “Phillips” light screws, and then remove the light assembly.
2. Position the new light assembly, and then install the “Phillips” screws.

9.5 FOG LIGHTS

Optional halogen fog lights can be mounted on this vehicle to give the driver better visibility in foggy weather, or to improve the range of vision just ahead of the coach.

9.5.1 Bulb Removal and Replacement

1. Pull on the release handle located in the front service compartment, near the door lower hinge. The bumper will lower gradually.
2. Unscrew the wing nut and pivot assembly upwards.
3. Unscrew the outer ring. Disconnect the light unit connection and remove the bulb.

4. Install the new bulb, reconnect the light unit and replace in its proper position.

CAUTION

During this step, avoid contacting the bulb with your fingers. This could alter the bulb life.

5. Reinstall the outer ring, pivot the assembly downwards.

Fasten the wing nut and securely close the bumper.

10. INTERIOR LIGHTING EQUIPEMENT

10.1 CONTROL PANEL LIGHTING

The instrument gauges and switches mounted on all control panels are energized whenever the exterior light switch is pushed to the first position. A control dimmer located on the dashboard is used to vary the brightness of the panel gauges, switches and indicator lights.
The gauge lights, panel lights, switch lights and indicator lights have a different bulb arrangement. Thus, the procedure to change a defective bulb can vary according to the application.

10.1.1 Switch Lighting

1. Slightly pull the switch with a defective LED away from the control panel.
2. Disconnect the electric cable from the switch.
3. To install a new switch, reverse the procedure (Fig. 31).

NOTE

Switches are lighted by the use of LED. When lighting on a switch fails, replace defective switch as a unit.

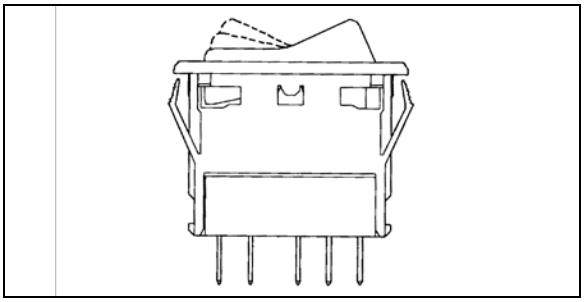

FIGURE 33: SWITCH 06321

10.1.2 Telltale Light Replacement

Telltale module is non-serviceable and must be replaced as a unit.

1. Unscrew and remove the top dashboard panel.
2. Remove the telltale back wire electric connectors.
3. Unscrew and remove the telltale module.
4. To replace the telltale module, reverse the procedure.

10.1.3 Gauge Light Bulb Replacement

1. For any gauge light bulb replacement, the dashboard panel must be removed in order to have access to the rear of gauges.
2. Remove bulb socket from the gauge, turn the defective bulb counterclockwise and pull it out of the gauge.
3. Push a new bulb and socket ASM and turn clockwise to lock in place.
4. Replace the rear dashboard housing.

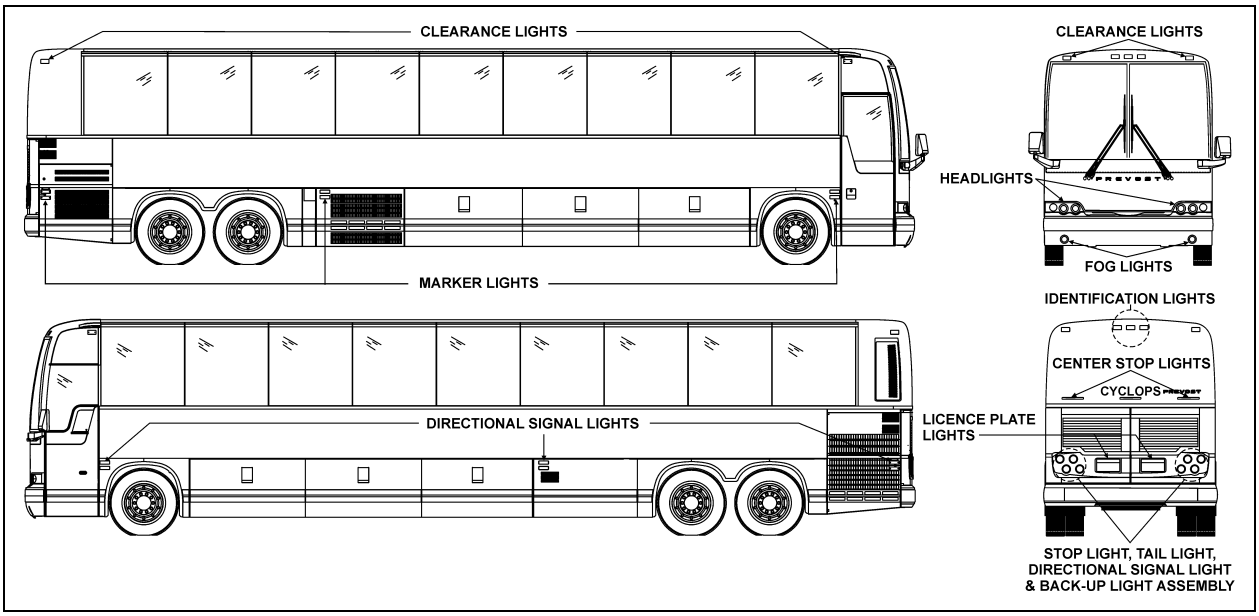

FIGURE 34: VARIOUS LIGHTS LOCATION 06640

10.2 STEPWELL LIGHTS

Two Stepwell lights are illuminated when the door opening system is activated.

10.2.1 Bulb Removal and Replacement

Proceed as follows to replace a defective bulb:

1. Unscrew the two Phillips-head screws retaining the lens to the wall, and remove it.
2. With the light lens removed, pull bulb from the lamp while applying lateral pressure.
3. Install the new bulb into the lamp.
4. Position the light lens and install it.

10.3 LAVATORY NIGHT-LIGHT

The lavatory night-light is illuminated as soon as the ignition switch is set to the *"ON"* position.

10.3.1 Bulb Removal and Replacement

1. Unscrew the two Phillips-head screws retaining the lens to the wall, and remove it.
2. With the light lens removed, pull bulb from the lamp while applying lateral pressure.
3. Install the new bulb into the lamp.
4. Position the light lens and install it.

10.4 DRIVER'S AREA LIGHTS

Two halogen ceiling lights are installed over the stepwell and the driver's area. These lights are frequently used for night-time operation when passengers board or leave coach.

10.4.1 Bulb Removal and Replacement

1. Unsnap the lamp with a flat head screwdriver and remove it.
2. Pull the defective bulb out of the socket.
3. Install the new bulb by pushing it in position.
4. Replace the lamp by snapping it back in place.

CAUTION

Do not touch halogen bulbs with bare hands as natural oils on skin will shorten bulb life span.

10.5 PASSENGER SECTION LIGHTING

The passenger section of coach is lit by two types of fluorescent tube lamps installed on the parcel racks. The aisle or indirect lights are located on front of parcel racks, and provide soft, indirect cabin lighting and parcel rack interior lighting. More powerful lighting for general and in-station applications is provided by fluorescent tubes located under the parcel racks, close to the windows. A dual power system is available for this lighting either from the 24 volt vehicle

power supply or from a 110 volt outlet supply. In order to save batteries during extended periods of in-station lighting, no current is drawn from the batteries as soon as the 110 volt circuit is connected.

Moreover, adjustable reading lamps are installed under the parcel racks for passenger accommodation.

10.5.1 Fluorescent Tube Replacement

Indirect Fluorescent Light

1. Open the parcel rack access door, if so equipped, unscrew the two Phillips screws (one each end). Let the hinged cover down.
2. Remove fluorescent tube from light socket.
3. Install a new fluorescent tube.
4. Lift the hinged cover and replace the two retaining screws (Fig. 33).

Parcel Rack Interior Lighting

1. Open the parcel rack access door, if so equipped, unscrew the two Phillips screws (one each end). Pull the hinged cover down.
2. Push on the bulb, turn and then, pull it from the socket.
3. Install a new bulb.
4. Lift the hinged cover and replace the two retaining screws.

10.5.2 Removal and Replacement of In-Station Fluorescent Tubes

1. Start by pulling out the corner of the lens then delicately peeling it out of its seat.

CAUTION

The lens is fragile. Be very careful when removing and handling.

2. Rotate and pull the fluorescent tube from its sockets.
3. Install a new fluorescent tube, rotating the tube to secure it in the sockets.
4. Replace the screen lens by first inserting one side in the seat, then push the other side in and snap it in place by running it in from one corner to the next.

10.5.3 Removal and Replacement of Reading Lamp Bulb

1. Engage the tool (#830164) over the lamp and turn one quarter turn counterclockwise. Then, remove the tool slowly.
2. Pull the bulb socket off the reading lamp unit.
3. Push and turn bulb counterclockwise, then pull it out of the socket.
4. Install new bulb in the socket, then push and turn clockwise to lock bulb in position.
5. Push the bulb socket in the reading lamp unit.
6. Position the reading lamp with the tool (#830164), turn one quarter turn clockwise.

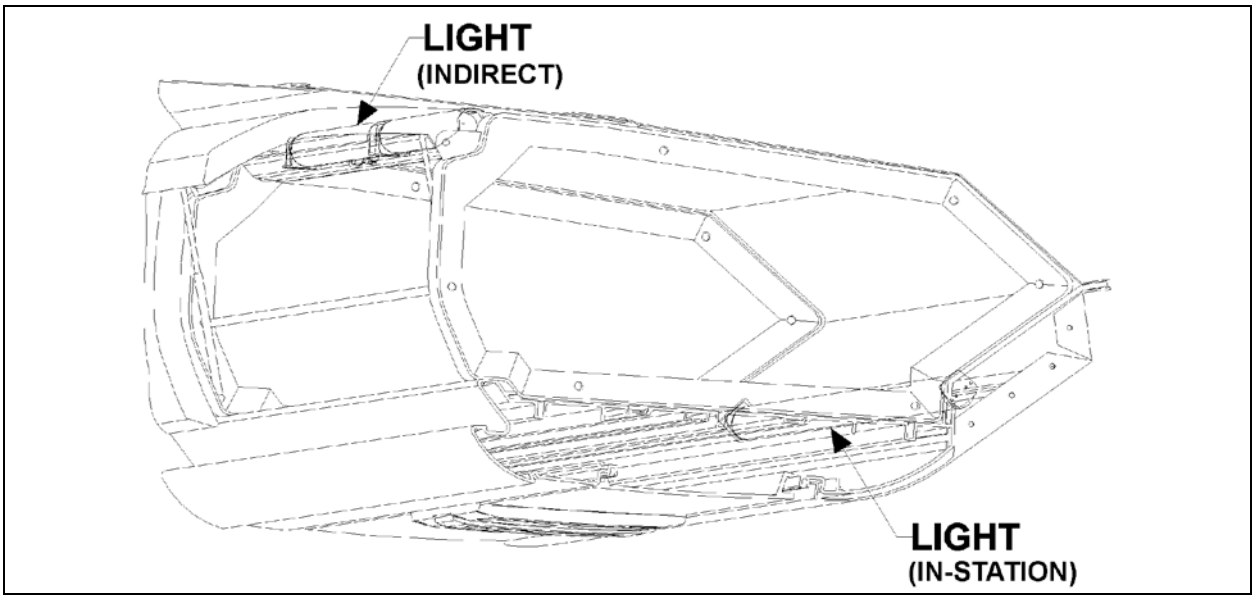

FIGURE 35: PARCEL RACK LIGHTING 06419

10.6 ENGINE COMPARTMENT LIGHTING

Two 24-volts LED module illuminate the engine compartment when the following conditions are met:

1. The engine compartment rear door or curbside door is open.
2. Ignition switch in ON or ACC position.
3. Engine compartment lighting switch on rear engine start panel in ON position.

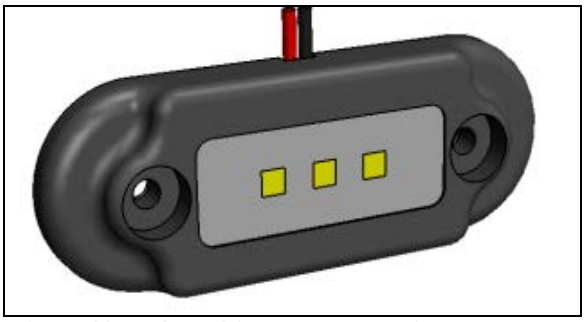

FIGURE 36: ENGINE COMPARTMENT LIGHT

Each light is sealed and can be replaced as follows:

4. Disconnect the light unit connection.
5. Remove the lamp.
6. Position new lamp.
7. Connect the light unit.
8. Make sure the retaining ring is installed properly.

10.7 LAVATORY LIGHT

The halogen lavatory light is installed on ceiling. A microswitch, mounted in the door exterior frame, is activated by the door lock mechanism upon locking to energize the circuit. This switch is readily serviced by removing the two Phillips-head screws securing the mounting plate to the door exterior frame.

Bulb removal and replacement:

1. Unsnap the lamp with a flat head screwdriver and remove it.
2. Pull the defective bulb out of the socket.
3. Install the new bulb by pushing it into position.
4. Replace the lamp by snapping it back in place.

CAUTION

Do not touch halogen bulbs with bare hands as natural oils on skin will shorten bulb life span.

11. LIGHT BULB DATA

When replacing a light bulb, special attention must be paid to the voltage rating (refer to light bulb data hereafter).

LIGHT BULB DATA					
APPLICATION	**PREVOST PART NO.**	**TRADE OR SAE NUMBER**	**WATTS OR CANDLE POWER**	**VOLTS**	**QTY**
EXTERIOR LIGHTING					
Hi/Lo-beam	930291	9004	65/45 W	12	2
Lo-Beam Xenon (optional)	930388	D2S	35 W	12	2
Docking & cornering	930319	9415	37.5W	12	4
Fog	930361	H3	55 W	12	2
License plate (sealed)	930266	TL 15206	---	12	2
Marker Light (red)	930340	Grote 47072-3	---	12	2
Marker Light (amber)	930341	Grote 47073	---	12	10
Identification (red)	930334	TL 25420R	---	12	3
Clearance (red)	930334	TL 25420R	---	12	4
Identification (amber)	930337	TL 25450Y	---	12	3
Clearance (amber)	930337	TL 25450Y	---	12	4
Front directional (hazard & marker)	562135	3057	32/3W	12	2
Rear directional	560589	1156	32 W	12	4
Stop	560589	1156	32 W	12	8
Back-up	560589	1156	32 W	12	4
Center stop	930330	HELLA 96208	---	12	2
Cyclops	930330	HELLA 96208	---	12	1
Tail	560123	67	4 W	12	4
Exterior compartment (except engine)	562278	6429	10 W	24	12
Engine compartment	930383	SEALED	25 W	12	2

LIGHT BULB DATA					
APPLICATION	**PREVOST PART NO.**	**TRADE OR SAE NUMBER**	**WATTS OR CANDLE POWER**	**VOLTS**	**QTY**
INTERIOR LIGHTING					
Instrument cluster lights	562838	2721 MFX	---	12	---
Telltale panel assy.	563333	---	---	---	1
Step light	562278	6429	10 W	24	2
Lavatory	830176	Q20MR16	20 W	12	1

LIGHT BULB DATA					
APPLICATION	**PREVOST PART NO.**	**TRADE OR SAE NUMBER**	**WATTS OR CANDLE POWER**	**VOLTS**	**QTY**
Parcel rack	560144	1820	1.6 W	12	A R
Driver's area	830176	Q20MR16	20 W	12	2
"EMERGENCY EXIT" decal	560601	456	2 W	24	A R
"LAVATORY OCCUPIED"	563108	168	3 W	12	1
"WATCH YOUR STEP"	561166	1820	1.6 cp	24	2
Aisle	560141	1251	3 W	24	A R
Reading	563349	303	6 W	24	A R
Fluorescent (In-Station)	830153	F32T8/SP41	32 W	---	A R
Destination sign fluorescent	830120	F30T8CW4	30 W	---	1
Fluorescent (Indirect)	830152	F13T5/CW	13 W	---	A R
Baggage Compartment	562411	#6424	5 W	24VDC	AR

12. SPECIFICATIONS

Battery

Make..... Volvo
Model..... 20359831
Type ..... Maintenance-free
Terminal type.....Top Stud
Group size 31
Volts 12
Load test amperage 290
Reserve capacity (minutes)..... 195

Cold cranking (in amps)
-At 0°F (-18°C)..... 950 (each battery)

Maximum dimensions (inches/mm)
-Length (including flange)..... 13.0/330,2
-Width..... 6.7/169,3
-Height (including top posts)..... 9.3/237,0
-Approximate weight (lbs/kg)..... 59/26,7

* *Battery tester cable clamps should be between terminal nuts and lead pads of terminals. If not possible, load value should be 210 amperes.*

Torque specifications

Battery cable to post.....10-15 Ft-lbs (13-20 Nm)

Alternator

Make..... BOSCH
Series ..... HD 10
Amperes..... 120
Volts 28.4
Output Power ..... 3 Kw
Ground .....negative
Prevost Number 564119

Battery equalizer

Make.....Vanner
Model..... Vann-Guard 70-Series
Amperes..... 100 amps

Starter

Make..... Mitsubishi Electric Corporation (MELCO)
Model Number..... M009T82479
Type 105P70
Voltage 24
Prevost Number 510752

No-load test
-Volts 23.5
-Max. current draw ..... 125 amperes
-Min. rpm .....3000 rpm

Starter solenoid

Make..... Mitsubishi Electric Corporation (MELCO)
Model Number..... 1115557
Pull In Voltage .....16 volts max.

ELECTRICAL CONNECTORS PROTECTION

PROCEDURE NO SAV00002E	NOVEMBER 2009 REVISION 02

Kent Sealer	
Sprayed sealer. It is used for structure ground connections. It prevents corrosion and ensures maximum contact. Refer to table for proper use. Apply this product once installation is finished.	 680324
Warning: *It is very important to be in a well ventilated area when applying this product.*	

Nyogel Grease	
Grease-type product. It is used to facilitate connectors or terminals insertion. Refer to table for proper use of Nyogel grease. It is preferable to apply Nyogel into the female part of connector. Apply this product as the last assembling operation.	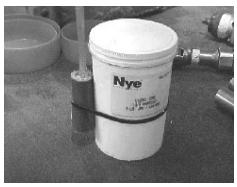 3 Oz. tube: 681095 Container 500g: 683409

"Color Guard" black rubber coating	
This product may be applied with a brush. It is used for structure ground connections or other connections that will most likely not be disconnected later on. Apply this product once installation is finished.	 684013
Warning *: Wear goggles and rubber gloves.*	

Vehicle Zoning

X3-MTH

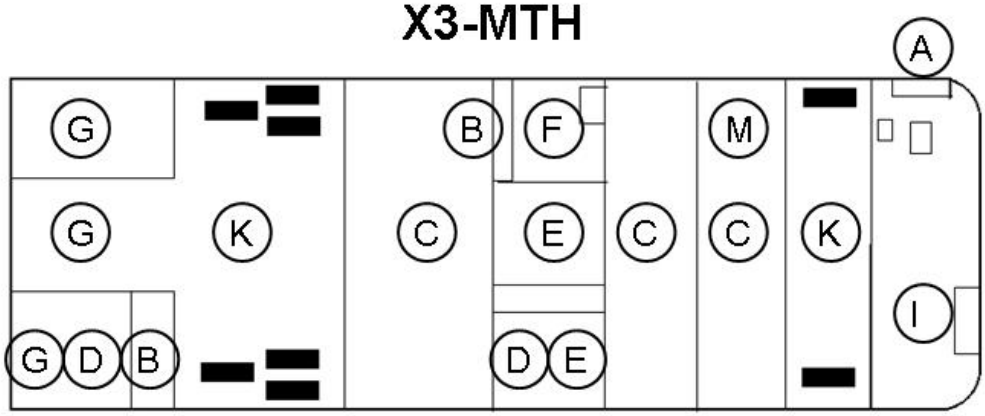

REAR FRONT

H3- VIP

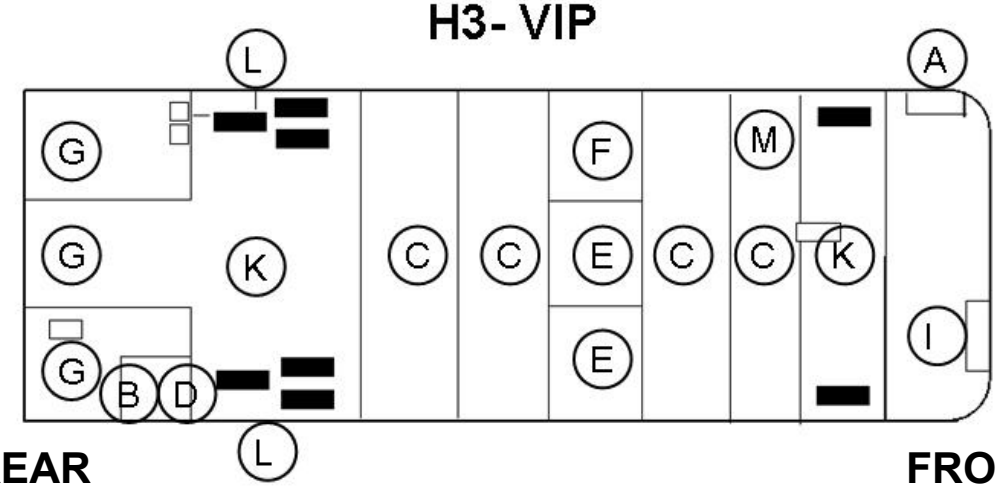

REAR FRONT

Electrical Connectors Protection Procedure Table

Zone	Component	Model				Product	Note
		MTH	X3	H3	VIP		
A- Front Elect. Compt	Diode Block	X	X	X	X	Nyogel	Accepted to ease connection
A- Front Elect. Compt	Customer Terminal Block	X	X	X	X	Nothing	
A Front Elect. Compt	Terminal Block Electronic Ground	X	X	X	X	Kent	
A- Front Elect. Compt	Structure Ground	X	X	X	X	Kent	
A- Front Elect. Compt	Electronic Module	X	X	X	X	Nothing	
A- Front Elect. Compt	VEC Power	X	X	X	X	Nothing	
A- Front Elect. Compt	70A Relay	X	X	X	X	Nyogel	Accepted to ease connection
A- Front Elect. Compt	Control Relay	X	X	X	X	Nyogel	Accepted to ease connection
A- Front Elect. Compt	All connectors except those specified in this zone	X	X	X	X	Nothing	
A- Front Service Compt	All connectors except those specified in this zone	X	X	X	X	Nothing	
B- Rear Elect. Compt/panel	Customer Terminal Block	X	X	X	X	Nothing	
B- Rear Elect. Compt/panel	Power Terminal Block		X			Nothing	
B- Rear Elect. Compt/panel	Circuit Breaker		X	X	X	Nothing	
B- Rear Elect. Compt/panel	Circuit Breaker	X				Kent	Surface only
B- Rear Elect. Compt/panel	Volvo Air Heater Fuse			X		Nothing	
B- Rear Elect. Compt/panel	Structure Ground		X	X	X	Kent	
B- Rear Elect. Compt/panel	Electronic Module	X	X	X	X	Nothing	
B- Rear Elect. Compt/panel	VEC Power		X	X	X	Nothing	
B- Rear Elect. Compt/panel	VEC Power	X				Kent	Surface only
B- Rear Elect. Compt/panel	70A Relay	X	X	X	X	Nyogel	Accepted to ease connection
B- Rear Elect. Compt/panel	Master Switch Relay		X	X	X	Nothing	
B- Rear Elect. Compt/panel	Master Switch Relay	X				Kent	Surface only
B- Rear Elect. Compt/panel	Control Relay	X	X	X	X	Nyogel	Accepted to ease connection
B- Rear Elect. Compt/panel	200A Power Relay	X	X	X	X	Nothing	
B- Rear Elect. Compt/panel	Power Relay Stud		X			Nothing	
B- Rear Elect. Compt/panel	All connectors except those specified in this zone	X	X	X	X	Nothing	
B- Rear Elect. Compt/panel	Vanner			X	X	Kent	

Zone	Component	Model				Product	Note
		MTH	X3	H3	VIP		
C- Baggage Compt	Structure Ground	X	X	X	X	Color Guard or Kent	
C- Baggage Compt	Door Switch	X	X	X	X	Nyogel	Accepted to ease connection
C- Baggage Compt	Door lock Actuator Module (switch and solenoid)	X	X	X	X	Nyogel	Accepted to ease connection
C- Baggage Compt	Electronic Module	X	X	X	X	Nothing	
C- Baggage Compt	Slide-out Motor	X			X	Nyogel	Accepted to ease connection
C- Baggage Compt	WCL Junction Panel		X	X		Nothing	
C- Baggage Compt	120V Inverter Connector	X	X	X	X	Nothing	
C- Baggage Compt	Stud inverter		X	X		Color Guard or Kent	
C- Baggage Compt	WCL Remote Control		X	X		Nyogel	Accepted to ease connection
C- Baggage Compt	All connectors except those specified in this zone	X	X	X	X	Nothing	
D- Battery Compt	Battery	X	X	X	X	Nyogel	
D- Battery Compt	Structure Ground	X	X			Color Guard or Kent	
D- Battery Compt	Electronic Module	X	X	X	X	Nothing	
D- Battery Compt	All connectors except those specified in this zone	X	X	X	X	Nothing	
D- Battery Compt	Battery Equalizer	X	X			Kent	
E- Condenser Compt	Fuel sender	X	X	X	X	Kent	
E- Condenser Compt	Structure Ground	X	X	X	X	Color Guard or Kent	
E- Condenser Compt	Door Switch	X	X	X	X	Nyogel	Accepted to ease connection
E- Condenser Compt	Condenser Motor	X	X	X	X	Nothing	
F- Evaporator Compt	Diode Block	X		X	X	Nyogel	Accepted to ease connection
F- Evaporator Compt	Structure Ground	X	X	X	X	Color Guard or Kent	
F- Evaporator Compt	Electronic Module	X		X	X	Nothing	
F- Evaporator Compt	Evaporator Motor	X	X	X	X	Color Guard or Kent	
F- Evaporator Compt	200A Power Relay	X		X	X	Nothing	
F- Evaporator Compt	All connectors except those specified in this zone	X		X	X	Nothing	

Zone	Component	Model				Product	Note
		MTH	X3	H3	VIP		
G- Engine Compt	120A Alternator	X	X	X	X	Color Guard	
G- Engine Compt	Booster Block (+)		X	X	X	Color Guard	
G- Engine Compt	Starter Terminal	X	X	X	X	Color Guard	
G- Engine Compt	Volvo Air Element Terminal	X	X	X	X	Color Guard	
G- Engine Compt	Customer Terminal Block	X				Nothing	
G- Engine Compt	Power Terminal Block		X			Color Guard	
G- Engine Compt	Breaker	X				Kent	
G- Engine Compt	Air Heater Fuse & Relay	X	X			Nyogel	Accepted here
G- Engine Compt	Engine Ground	X	X	X	X	Color Guard	
G- Engine Compt	Structure Ground	X	X	X	X	Color Guard	
G- Engine Compt	VEC Power	X				Kent	
G- Engine Compt	Master Switch Relay	X				Kent	
G- Engine Compt	Starter Relay	X	X			Color Guard	
G- Engine Compt	All connectors except those specified in this zone	X	X	X	X	Nothing	
H- Vehicle Exterior	ABS Sensor	X	X	X	X	Nothing	
H- Vehicle Exterior	Docking & Cornering Lamps	X	X	X	X	Nyogel	Accepted to ease connection
H- Vehicle Exterior	Marker Light	X	X	X	X	Nothing	
H- Vehicle Exterior	Mirror	X	X	X	X	Nothing	
H- Vehicle Exterior	Light Module	X	X	X	X	Nothing	
H- Vehicle Exterior	Stop light, Backup light, Directional Signal Light	X	X	X	X	Nothing	
I- Vehicle Interior	Diode Block	X	X	X	X	Nyogel	Accepted to ease connection
I- Vehicle Interior	Junction Block		X	X		Nothing	
I- Vehicle Interior	A3 & A4 Transmission Retarder Hand lever	X	X	X	X	Nyogel	Accepted to ease connection
I- Vehicle Interior	C258 & C259 Multi-function Lever Connector	X	X	X	X	Nyogel	Accepted to ease connection
I- Vehicle Interior	Audio - video Connection		X	X		Nothing	
I- Vehicle Interior	Defrost Compt Ground	X	X	X	X	Kent	
I- Vehicle Interior	Video Plate Direct Ground		X	X		Nothing	
I- Vehicle Interior	Structure Ground		X	X		Kent	
I- Vehicle Interior	Terminal Block Ground		X	X		Nothing	

Zone	Component	Model				Product	Note
		MTH	X3	H3	VIP		
I- Vehicle Interior	Dashboard Switch	X	X	X	X	Nothing	
I- Vehicle Interior	Electronic Module	X	X	X	X	Nothing	
I- Vehicle Interior	Slide-out Motor	X			X	Nyogel	Accepted to ease connection
I- Vehicle Interior	Wiper Motor	X	X	X	X	Nyogel	Accepted to ease connection
I- Vehicle Interior	200A Power Relay	X	X	X	X	Nothing	
I- Vehicle Interior	70A Relay	X	X	X	X	Nyogel	Accepted to ease connection
I- Vehicle Interior	Control Relay	X	X	X	X	Nyogel	Accepted to ease connection
I- Vehicle Interior	All connectors except those specified in this zone	X	X	X	X	Nothing	
I- Vehicle Interior	All components except those specified in this zone	X	X	X	X	Nothing	
K- Front & Rear Wheelhousing	All connectors except those specified in this zone	X	X	X	X	Nothing	
K- Front & Rear Wheelhousing	All components except those specified in this zone	X	X	X	X	Nothing	
L- Compartment above rear wheelhousing	All connectors except those specified in this zone			X	X	Nothing	
L- Compartment above rear wheelhousing	All components except those specified in this zone			X	X	Nothing	
M- Slide-out Panel	All connectors except those specified in this zone	X			X	Nothing	
M- Slide-out Panel	All components except those specified in this zone	X			X	Nothing	

CONTENTS

1. DESCRIPTION 3

1.1 ALLISON AUTOMATIC TRANSMISSION 3
1.1.1 Retarder (if applicable) 3
1.2 VOLVO I-SHIFT TRANSMISSION 3

2. WELDING PROCEDURES 4

3. MAINTENANCE 4

3.1 ALLISON TRANSMISSION 4
3.1.1 Manual Fluid Level Check 4
3.1.2 Cold Check 5
3.1.3 Hot Check 5
3.1.4 Fluid Level Check Using the Pushbutton Shift Selector 6
3.1.5 Importance of Proper Fluid Level 7
3.1.6 Keeping Oil Clean 7
3.1.7 Recommended Automatic Transmission Fluid 7
3.1.8 Oil Contamination 7
3.1.9 Metal Particles 8
3.1.10 Coolant Leakage 8
3.1.11 Control System Prognostics 8
3.1.12 Oil And Filter Change Interval 11
3.2 VOLVO I-SHIFT TRANSMISSION 13
3.2.1 Transmission Oil 13
3.2.2 Checking Oil Level 13
3.2.3 Oil Change Interval 14
3.2.4 Oil Change 14

4. ALLISON TRANSMISSION REMOVAL 15

5. TRANSMISSION OIL COOLER REMOVAL 16

5.1 TRANSMISSION WITHOUT RETARDER 16
5.2 TRANSMISSION WITH RETARDER 16

6. CLEANING AND INSPECTION OF ALLISON AUTOMATIC TRANSMISSION 16

6.1 BREATHER 16

7. ALLISON TRANSMISSION INSTALLATION 17

8. ALLISON AUTOMATIC TRANSMISSION TROUBLESHOOTING 18

8.1 4TH GENERATION TRANSMISSION CONTROL MODULE 18
8.2 DIAGNOSTIC TROUBLESHOOTING CODES (DTC) — ALLISON 4TH GENERATION CONTROLS 18
8.3 DIAGNOSTIC CODES – ALLISON 4TH GENERATION CONTROLS 19
8.4 DIAGNOSTIC CODE DISPLAY AND CLEARING PROCEDURE – ALLISON 4TH GENERATION CONTROLS 19
8.5 DIAGNOSTIC CODE RESPONSE 20
8.6 DIAGNOSTIC TROUBLESHOOTING CODES (DTC) LIST - ALLISON 4TH GENERATION CONTROLS 21

9. VOLVO I-SHIFT TRANSMISSION TECU FAULT CODES 24

10. VOLVO I-SHIFT TRANSMISSION GSECU FAULT CODES 64

11. SPECIFICATIONS 65

ILLUSTRATIONS

FIGURE 1: ALLISON TRANSMISSION 3
FIGURE 2: ALLISON TRANSMISSION CONTROL PAD 3
FIGURE 3: VOLVO I-SHIFT TRANSMISSION 4
FIGURE 4: OIL LEVEL DIPSTICK (AUTO. TRANS.) 4
FIGURE 5: COLD CHECK 5
FIGURE 6: HOT CHECK 6
FIGURE 7: DRAIN PLUG AND FILTERS 13
FIGURE 8: I-SHIFT TRANSMISSION OIL CHANGE 13
FIGURE 9: SIGHT GLASS FOR CHECKING OIL LEVEL 14
FIGURE 10: OIL FILTER HOUSING DRAIN PLUG 14
FIGURE 11: OIL FILTER 14
FIGURE 12: VOLVO ENGINE CRANKING POSITION 15
FIGURE 13: ALLISON OIL COOLER 16
FIGURE 14: AIR PRESSURE REGULATOR (TYPICAL) 18
FIGURE 15: TRANSMISSION CONTROL MODULE 18

1. DESCRIPTION

X3 Series coaches may be provided with either an Allison automatic transmission or a Volvo I-Shift transmission while X3-45 VIP and XLII Bus Shells are provided with an Allison automatic transmission.

1.1 ALLISON AUTOMATIC TRANSMISSION

The B500 and B500R (with retarder) Allison Transmissions have 6 speeds with two top range (fifth and sixth) overdrives. Total coverage is determined by dividing the highest gear ratio by the lowest gear ratio. Total coverage expresses the transmission gear ratio versatility. Transmissions with larger total coverage number have a wider variety of available ratios.

An electronic control allows the transmission to shift at exactly the right point on the engine's fuel consumption curve for best economy. Early lockup maintains the highest possible mechanical efficiency through the closely-spaced gear steps, culminating in two overdrive ratios. This combination allows progressive shifting techniques, where engine speeds are reduced for higher efficiency and lower fuel consumption.

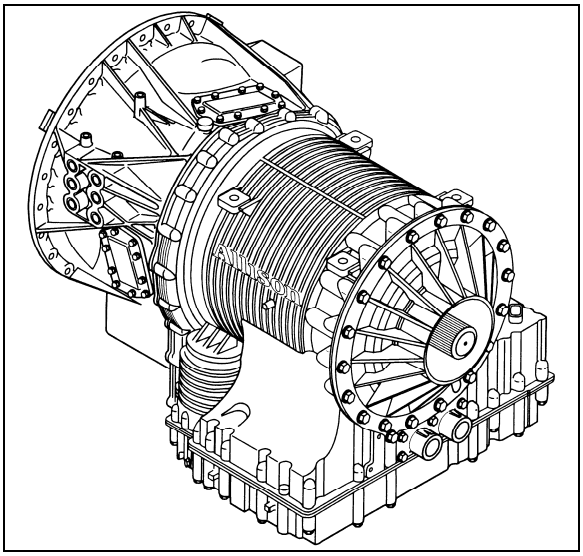

FIGURE 1: ALLISON TRANSMISSION 07136

Gear selection and torque converter modes are controlled by a microcomputer-based electronic transmission management system. It is fed information regarding throttle position, operator range selection, engine speed, turbine speed, transmission output speed and various system pressures from special electronic sensors. With this information, it computes shift points and clutch pressures to meet immediate needs. Using closed loop adaptive logic; the electronic control looks at a number of parameters during the shift, and makes minute adjustments to match the shift to desired profile stored in its memory. It then looks at these adjustments and resets the parameters, which allow the transmission to quickly compensate for variations in load, terrain or environment and to adjust for clutch wear and engine power changes. A Diagnostic Data Reader can be connected to the electronic control unit to provide a self-check of all systems in the transmission. Five-digit trouble codes greatly reduce the time it takes to pinpoint potential problems. (Refer to paragraph *"8. TROUBLESHOOTING"* in this section).

1.1.1 Retarder (if applicable)

This optional auxiliary braking device for the automatic transmission is integrated into the basic envelope of the transmission and transmits its braking force directly to the propeller shaft. It requires no additional length and adds only 75 pounds (34 kg) of weight. Operation of the retarder is controlled electronically by the driver's use of the brake and/or by hand control lever.

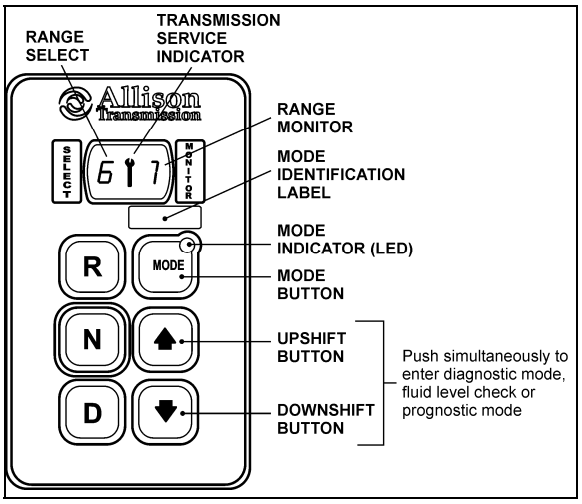

FIGURE 2: ALLISON TRANSMISSION CONTROL PAD 07142

When activated, fluid enters a cavity and provides resistance to the turning of rotor blades revolving with the output shaft. This effectively slows the vehicle to the point where the service brakes are needed only for final stopping. The retarder is fully modulated and is compatible with ABS.

1.2 VOLVO I-SHIFT TRANSMISSION

The Volvo I-Shift transmission is a single countershaft transmission with 12 forward gears and two reverse gears. The I-Shift is an automated mechanical transmission.

If the I-Shift transmission system is to be used, the vehicle must have an electronic engine control unit as well as CAN communication. Since the clutch is automated (clutch pedal no longer fitted), the driver no longer has to activate the clutch.

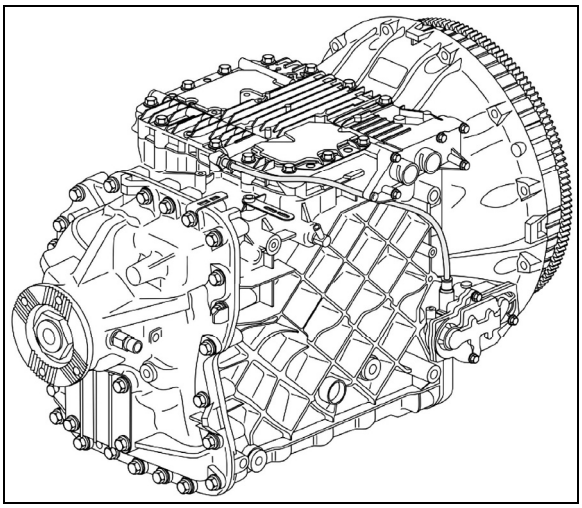

FIGURE 3: VOLVO I-SHIFT TRANSMISSION 07XXX

The transmitted torque (both engine and braking) will be interrupted during gear shifting, in both driving and coasting conditions. There is no clutch pedal and the gear shifting is controlled by the transmission or the driver through the pushbutton shift selector.

When in fully automatic mode, gears are selected and shifts made by the electronic control unit. The driver can still intervene if he wishes to. All system functions required are shown on the display, e.g. neutral, gear change, clutch overload and diagnosis information.

2. WELDING PROCEDURES

These procedures are intended only for vehicles equipped with transmission electronic controls. When frame or other welding is required on the vehicle, precautions are to be taken to protect the electronic control components. Refer to section 00: GENERAL INFORMATION, paragraph 3: “Precautions to be observed before welding” for complete procedure.

3. MAINTENANCE

3.1 ALLISON TRANSMISSION

To gain access to the dipstick, open the engine compartment rear doors; dipstick is located on the radiator side of the engine (Fig. 4).

3.1.1 Manual Fluid Level Check

DANGER

When checking the oil level, be sure that the parking brake and/or emergency brakes are set and properly engaged, and the wheels are chocked. Unexpected and possible sudden vehicle movement may occur if these precautions are not taken.

- Special care must be taken not to touch the engine coolant tubing and/or exhaust pipe, since this could cause severe burns.
- Do not wear loose clothing and, stay away from rotating parts during procedure; personal injury could occur.

Clean all dirt from around the end of the oil filler tube before removing the dipstick. Dirt or foreign matter must not be permitted to enter the oil system since it will cause valves to stick, undue wear of transmission parts, and clogged passages. Check the oil level using the procedures in Cold Check and Hot Check. Record any abnormal level on your *"Maintenance Records".*

Always check the oil level reading at least twice when the engine is running. Consistency is important in maintaining the accuracy of the reading. If inconsistent readings persist, check the transmission breather to ensure it is clean and free of debris.

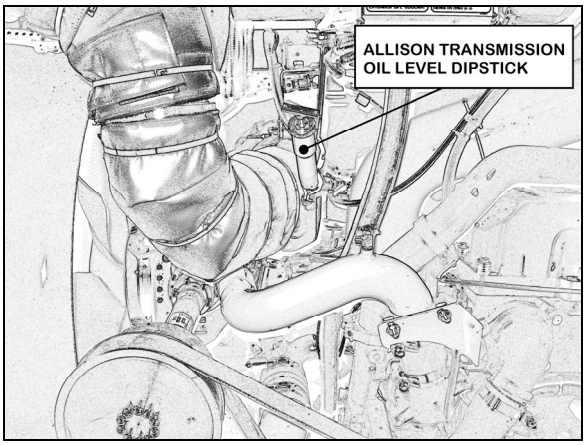

FIGURE 4: OIL LEVEL DIPSTICK (AUTO. TRANS.) 07113

3.1.2 Cold Check

The purpose of the **Cold Check** is to determine if the transmission has enough fluid to be operated safely until a **Hot Check** can be made.

1. If the engine has been shut down for an extended period of time, park the vehicle on a level surface and apply the parking brake.

> **CAUTION**
>
> The oil level rises as sump temperature increases. DO NOT fill above the "Cold Run" band if the transmission oil is below normal operating temperature. During operation, an overfull transmission can become overheated, leading to transmission damage.

2. Run the engine at idle in «N» (Neutral) for about one minute.
3. Shift to Drive (D) and operate the engine for 30 seconds at 1000-1500 rpm; then shift to Reverse (R) to clear the hydraulic system of air.
4. Move the vehicle to a level surface, put transmission in «N» (Neutral), and set the parking brake.
5. Finally shift to Neutral (N) and allow the engine to idle (500 - 800 rpm).
6. While the engine is running, remove the dipstick from the tube and wipe it clean (Figs. 4 & 5). Insert the dipstick into the fill tube, pushing down until it stops.

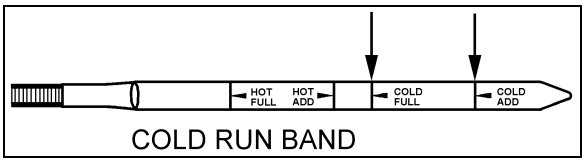

FIGURE 5: COLD CHECK 07050

7. Remove the dipstick and observe the fluid level. Repeat the check procedure to verify the reading. If the fluid on the dipstick is within the COLD CHECK band, the level is satisfactory for operating the transmission until the oil is hot enough to perform a **Hot Check**. If the fluid level **is not** within this band, add or drain fluid as necessary to bring the level within the COLD CHECK band.
8. Perform a **Hot Check** at the first opportunity after the normal operating temperature of 160ºF (71ºC) to 200ºF (93ºC) is attained.

> **CAUTION**
>
> **DO NOT** operate the transmission for extended periods of time until a **Hot Check** has verified proper fluid level. Transmission damage can result from extended operation at improper fluid level conditions.

> **CAUTION**
>
> Obtain an accurate fluid level by imposing the following conditions:
>
> - Engine is idling (500-800 rpm) in «N» (Neutral).
> - Transmission fluid is at normal operating temperature.
> - The vehicle is on a level surface.

3.1.3 Hot Check

> **CAUTION**
>
> The oil **must be hot** to ensure an accurate check for this procedure. The oil level rises as temperature increases.

To perform a **Hot Check**, do the following:

1. The **Hot Check** can be performed when the transmission oil reaches the normal operating temperature (160ºF to 200ºF / 71ºC to 93ºC). The transmission oil temperature can be checked with the dashboard message center display (MCD) when selecting the Gauge Mode (refer to the ‘’Operator’s Manual’’ for added information).
2. Park the vehicle on a level surface and shift to Neutral (N). Apply the parking brake and allow the engine to idle (500 - 800 rpm).
3. Remove the dipstick from the tube and wipe it clean. Insert the dipstick into the fill tube, pushing down until it stops.
4. Remove the dipstick and observe the fluid level. The safe operating level is anywhere within the HOT RUN band on the dipstick. Repeat the check procedure to verify the reading.
5. If the level **is not** within this band, add or drain fluid as necessary to bring the level within the HOT RUN band. (Fig. 6).

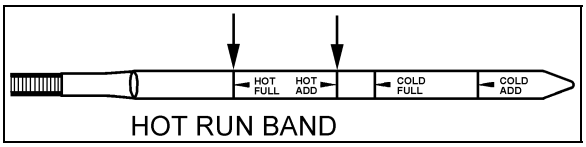

FIGURE 6: HOT CHECK 07049

6. Be sure fluid level checks are consistent. Check level more than once and if readings are not consistent, check to be sure the transmission breather is clean and not clogged. If readings are still not consistent, contact your nearest Allison dealer or distributor.

NOTE
The Cold Check is more appropriate for verifying the oil level after the first fill-up. In case of conflict, the Hot Check has priority over the Cold Check; ***the fluid level check using the pushbutton shift selector has priority over the Hot Check.***

3.1.4 Fluid Level Check Using the Pushbutton Shift Selector

Oil level codes are obtained as follows:

1. Park vehicle on a level surface, select «N» (neutral) on the pushbutton shift selector and apply parking brake.
2. Press simultaneously the ⬆ (Up) and ⬇ (Down) arrow buttons once.
3. Oil level codes are displayed in 2 minutes (e.g. display will flash and 8, 7, 6, 5, ...; countdown will occur during the 2 minutes) once the following parameters are met:

- **Waiting time, vehicle must be stationary for at least 2 minutes to allow the oil to settle;**
- **Engine at idle;**
- **Oil at normal operating temperature, between 140°F (60°C) and 220°F (104°C);**
- **Transmission in «N» (Neutral);**
- **Transmission output shaft stopped;**
- **Oil level sensor present and working.**

After 2 minutes, the display will flash one of the codes shown below:

CODE	CAUSE OF CODE
O L…O K	Oil level is correct
O L…L O… 1	Oil Level is LOw 1 quart
O L…L O… 2	Oil Level is LOw 2 quart
O L…L O… 3	Oil Level is LOw 3 quarts
O L…L O… 4	Oil Level is LOw 4 or more quarts
O L…H I… 1	Oil Level is HIgh 1 quart
O L…H I… 2	Oil Level is HIgh 2 quarts
O L…H I… 3	Oil Level is HIgh 3 or more quarts
O L… – (fc)	Oil Level is invalid. Source of invalid reading is defined by a two-character fault code (fc)

NOTE
Note that the quantities LO 4 and HI 3 are the largest values displayed and that the actual variation in oil level may exceed these numbers.

NOTE
Failure to meet one of the above parameters will stop the two minute countdown. One of the codes shown hereafter will indicate the cause of the countdown interruption. Once all parameters are met, the countdown will continue from where it left off.

If the fluid level check cannot be completed, an Invalid for Display fault is reported. This condition is reflected by the display of "OL", followed by "–", followed by one or two additional characters. The displayed characters define the cause of the fault, which may be either a system malfunction or an improper condition for conducting the check.

CODE	CAUSE OF CODE
OL…-…0X	Waiting period is not complete
OL…-…EL	Engine speed (rpm) too low
OL…-…EH	Engine speed (rpm) too high
OL…-…SN	N (neutral) must be selected
OL…-…TL	Sump oil temperature too low
OL…-…TH	Sump oil temperature too high
OL…-…SH	Output shaft rotation
OL…-…FL	Sensor failure

To exit the Oil Level Display Mode, press any range button: «R», «N» or «D» at any time.

3.1.5 Importance of Proper Fluid Level

It is important that the proper fluid level be maintained at all times because the transmission fluid cools, lubricates, and transmits hydraulic power. If the fluid level is too low, the converter and clutches do not receive an adequate supply of fluid. If fluid level is too high, the fluid can aerate, causing the transmission to shift erratically or overheat.

3.1.6 Keeping Oil Clean

Oil must be handled in clean containers, fillers, etc., to prevent foreign material from entering the transmission. Place the dipstick on a clean surface area while filling the transmission.

CAUTION

Containers or fillers that have been used to handle antifreeze or engine coolant must NEVER be used for handling transmission fluid. Antifreeze and coolant solutions contain ethylene glycol that, if introduced into the transmission, can cause the clutch plates to fail.

3.1.7 Recommended Automatic Transmission Fluid

Hydraulic fluids used in the transmission are important influences on transmission performance, reliability and durability. **Castrol TranSynd™ Synthetic Fluid** and **DEXRON-III®** fluids are recommended for on-highway applications.

- **TranSynd™** is a full synthetic transmission fluid developed by Allison Transmission and Castrol Ltd. This fluid meets Allison specifications for Severe Duty and Extended Drain Intervals. TranSynd™ is fully qualified to the Allison TES295 specifications and is available through Prevost Parts.

NOTE

*The prognostics package requires the use of TranSynd™ or an Allison approved TES-295 licensed fluid in the transmission and Allison High Capacity filters. If any other fluids or filters are used, Prognostic mode **must be disabled**. Prognostic information will not be accurate with any other fluids or filters and could result in missed maintenance activities resulting in transmission damage.*

- To be sure a fluid is qualified for use in Allison transmission, check for the **DEXRON-III®** license number on the container or consult the lubricant manufacturer. Consult your Allison Transmission dealer or distributor before using other fluid types.

Customers may use TranSynd™/TES 295 equivalent and extend drain intervals. Equivalent TranSynd™ fluid must meet or exceed TES 295 requirements. Customers may choose from a wide variety of approved Dexron-III® fluids.

Customers may choose from a wide variety of approved non-TES 295 like Dexron-III® or approved Schedule 1 TES-389 fluids.

The Transmission Fluid Operating Temperature Requirements table lists the minimum fluid temperatures at which the transmission may be safely operated without preheating. Preheat with auxiliary heating equipment or by running the equipment or vehicle with the transmission in «N» (Neutral) for a minimum of 20 minutes before attempting range operation.

Transmission Fluid Operating Temperature Requirements

Fluid type	Minimum operating temperature	
	Celsius	Fahrenheit
TranSynd™	-30	-22
DEXRON-III®	-25	-13

CAUTION

Disregarding minimum fluid temperature limits can result in transmission malfunction or reduced transmission life.

NOTE

The use of an arctic preheat kit is recommended at temperatures below -25ºF (-32ºC). If a preheat kit is not available, the TCM will restrict full operation until the sump temperature is increased.

3.1.8 Oil Contamination

At each oil change, examine the drained oil for evidence of dirt or water. A nominal amount of condensation will emulsify during operation of the transmission. However, if there is evidence of water; check the cooler (heat exchanger) for other signs of leakage. This, however, may also indicate leakage from the engine oil system.

3.1.9 Metal Particles

Metal particles in the oil (except for minute particles normally trapped in the oil filter) indicate damage has occurred in the transmission. When these particles are found in the sump, the transmission must be disassembled and closely inspected to find the source. Metal contamination will require complete disassembly of the transmission and cleaning of all internal and external circuits, coolers, and all other areas where the particles could lodge.

CAUTION

If excessive metal contamination has occurred, replacement of the oil cooler and replacement of all bearings within the transmission is recommended.

3.1.10 Coolant Leakage

If engine coolant leaks into the transmission oil system, immediate action must be taken to prevent malfunction and possible serious damage. The transmission must be completely disassembled, inspected, and cleaned. All traces of the coolant contamination must be removed. Friction clutch plates contaminated with ethylene glycol must be replaced.

3.1.11 Control System Prognostics

The transmission control system includes the provision for the user to monitor various transmission operating parameters. Transmission operating parameters monitored by the prognostics feature are:

- Oil Life Monitor
- Filter Life Monitor
- Transmission Health Monitor

NOTE

The prognostics package requires the use of TranSynd™ or an Allison approved TES-295 licensed fluid in the transmission and Allison High Capacity filters. If any other fluids or filters are used, Prognostic mode ***must be disabled****. Prognostic information will not be accurate with any other fluids or filters and could result in missed maintenance activities resulting in transmission damage.*

Refer to TES 295 Approved Fluids list, found under the Service/Fluids heading on the home page of the Allison Transmission web site.

www.allisontransmission.com

When a specified threshold is detected for any of the serviceable conditions, the TRANSMISSION SERVICE indicator is illuminated to alert the operator. Failure to attend to the service condition and reset the TRANSMISSION SERVICE indicator within a defined operating period will result in illumination of the CHECK TRANS light on the dashboard telltale panel, indicating the increased probability that the service condition will develop into a more serious condition.

To access the Prognostic Mode functions, simultaneously press the ⬆ (Up) and ⬇ (Down) arrow buttons repeatedly. See the reference table at the end of this section.

- Oil Life Monitor

The display message denotes the calculated remaining life of the transmission fluid. This value is based on the established life for the required baseline fluid, and then is continuously adjusted for cumulative effects of such operating parameters as operating time, retarder operation, output shaft revolutions and shift frequency.

Display: The display is a two-digit number, denoting percentage of the fluid life which remains. New fluid is displayed as 99%.

The TRANSMISSION SERVICE indicator will be illuminated, denoting a required change of transmission fluid, when the remaining fluid life reaches approximately 1–2 %. The indicator will be lit steadily upon each initialization of the TCM, and will remain on steady for approximately 1–2 minutes after the first selection of “D” (drive) range each time, until service is performed and the indicator is reset.

Failure to perform maintenance and reset the TRANSMISSION SERVICE indicator within a defined period will result in the illumination of the CHECK TRANS light on the dashboard telltale panel and diagnostic code P0897 Transmission Fluid at Limit will be set.

Reset: The TRANSMISSION SERVICE indicator can be reset by a message over the SAE J1939 communication interface, with the Allison DOC™ for PC diagnostic program, or by depressing and holding the MODE button for ten (10) seconds while the Oil Life Monitor function is displayed. It may also be reset by selecting N-D-N-D-N-R-N on the shift selector, pausing briefly (less than 3 seconds) between each

selector movement, with the ignition on and the engine not running.

CAUTION

Required calendar-based oil & filter change intervals (based on month) still apply because Oil Life Monitor function cannot measure time while ignition power is OFF.

If the Oil Life Monitor function has not indicated the need for a fluid change before 60 month (five years) have passed, it will be necessary to change the fluid and filters per calendar requirements and reset the system.

- Filter Life Monitor

The display message denotes operating status of the transmission main fluid filter, based on the measured pressure drop across the filter. The feature is not functional at transmission sump temperatures below 40 ºC (105 ºF). Both the main and lube filters **must be** changed when the TRANSMISSION SERVICE indicator shows the main filter should be changed.

Display: An acceptable filter life status is displayed as "OK". An unacceptable filter life status is displayed as "LO".

Once the programmed threshold for maximum filter pressure drop has been observed and verified, the diagnostic code P088A Transmission Filter At/Over Limit will be recorded to indicate that the filter has reached the end of its designed life. At the next initialization of the TCM, the TRANSMISSION SERVICE indicator will flash for approximately 1–2 minutes after the first selection of “D” (drive) range. Thereafter, the indicator will illuminate and flash upon each TCM initialization, continuing to flash for 1–2 minutes after the first selection of a drive range each time, until service is performed and the indicator is reset.

Failure to perform maintenance and reset the monitor after a calibration-defined number of warnings will result in the illumination of the CHECK TRANS light on the dashboard telltale panel and diagnostic code P088B will be recorded to indicate a highly deteriorated filter.

Reset: The feature will reset automatically when the main fluid filter has been changed and the pressure drop across the filter no longer exceeds the threshold value. A manual reset can be performed by depressing and holding the MODE button for ten (10) seconds while the Filter Life Monitor function is displayed. It may also be reset by selecting N-R-N-R-N-D-N on the shift selector, pausing briefly (less than 3 seconds) between each selector movement, with the ignition on and the engine not running.

- Transmission Health Monitor

The display message denotes clutch life status, as determined by monitored changes and the calculated running clearance of the transmission clutches C1, C2, C3, C4 & C5.

Display: An acceptable clutch life status is displayed as "OK". An unacceptable clutch life status is displayed as "LO". The specific clutch(es) for which the function indicates "LO" cannot be identified with the shift selector. Allison DOC™ for PC-Service Tool displays clutch condition as OK or NOT OK for each clutch, C1 through C5.

The TRANSMISSION SERVICE indicator will be illuminated, indicating the need for clutch maintenance, when the remaining clutch life reaches approximately 10%, or if the running clearance exceeds a maximum value which may indicate a non-wear-related issue. Thereafter, the indicator will be lit upon each initialization of the TCM, and will remain on steady during all vehicle operation until service is performed and the indicator is reset.

Failure to perform maintenance and reset the monitor after a number of warnings will result in the illumination of the CHECK TRANS light on the dashboard telltale panel and diagnostic code P2789 Clutch Adaptive learning at Limit will be set.

Reset: The feature will reset automatically upon elimination of the clutch clearance condition which initiated it. The indicator can also be manually reset using the Allison DOC™ for PC diagnostics program if necessary.

The following table illustrates how to access Oil Level Check, Prognostics & Diagnostic Troubleshooting Codes functions on the Allison pushbutton shift selector.

⬆ (up) & ⬇ (down) arrow buttons pressed simultaneously	Description	SELECT	MONITOR
1st press	**Allison transmission oil level check**	" - "	" - "
	Other codes will be displayed		
2nd press	**Oil Life Monitor**	**" O "**	**" M "**
	Oil life remaining will range from 99% down to 00%	Some number from 9 to 0	Some number from 9 to 0
3rd press	**Filter Life Monitor**	**" F"**	**" M "**
	Present life of filter is OK	" O "	" K"
	Present life of filter is low	" L"	" O"
4th press	**Transmission Health Monitor**	**" O "**	**" K"**
	Shows "OK" until remaining life of one or more of the clutch(es) wear enough so that the programming changes	" O "	" K"
	One or more of the clutches C1 through C5 have worn enough to change the program	" L"	" O"
5th press	**Display of diagnostic codes**	**" d "**	**" 1"**
	Other codes will be displayed		

TABLE 1

Recommended Fluid and Filter Change Intervals Using Dexron-III / Non-TranSynd™/Non-TES 295/Mixture							
Severe[3] **All vehicles equipped with retarder**				**General[4]** **All vehicles without retarder**			
Fluid	**Filters**			**Fluid**	**Filters**		
	Main	**Internal**	**Lube/ Auxiliary**		**Main**	**Internal**	**Lube/ Auxiliary**
12,000 Miles (20 000 km) 6 Months/ 500 Hrs	12,000 Miles (20 000 km) 6 Months/ 500 Hrs	Overhaul	12,000 Miles (20 000 km) 6 Months/ 500 Hrs	25,000 Miles 40 000 km 12 Months/ 1000 Hrs	25,000 Miles 40 000 km 12 Months/ 1000 Hrs	Overhaul	25,000 Miles (40 000 km) 12 Months/ 1000 Hrs

2 inch Control Module (1.75 approximately) – Requires High-Capacity Filter kit Allison P/N 571709

TABLE 2

Recommended Fluid and Filter Change Intervals[1] Using 100% TranSynd™/TES 295 Approved Fluid[2]							
Severe[3] All vehicles equipped with retarder				General[4] All vehicles without retarder			
Fluid	Filters			Fluid	Filters		
	Main	Internal	Lube/ Auxiliary		Main	Internal	Lube/ Auxiliary
150,000 Miles (240 000 km) 48 Months/ 6000 Hrs	75,000 Miles (120 000 km) 36 Months/ 3000 Hrs	Overhaul	75,000 Miles (120 000 km) 36 Months/ 3000 Hrs	300,000 Miles 480 000 km 48 Months/ 6000 Hrs	75,000 Miles (120 000 km) 36 Months/ 3000 Hrs	Overhaul	75,000 Miles (120 000 km) 36 Months/ 3000 Hrs

[1] Extended TrandSynd™/TES 295 fluid and filter change intervals are only allowed with Allison High-Capacity filters.

[2] Less than 100% concentration of TranSynd™/TES 295 approved fluid is considered a mixture and should utilize non-TES 295 change intervals. If the customer replaces non-TranSynd™/non-TES 295 fluid with TranSynd™/TES 295 equivalent, the change interval recommendations of non-TranSynd™/non-TES 295/mixture must be followed. Upon the next oil change, if the customer reinstall TranSynd™/TES 295 equivalent, the fluid & filter change recommendation outlined in 100% TES 295 approved fluids must be followed.

[3] Severe vocation= All retarder, On/Off highway, transit and intercity coach with duty cycle greater than one (1) stop per mile.

[4] General vocation= intercity coach with duty cycle less than or equal to one (1) stop per mile and all other vocations not listed in severe vocation.

TABLE 3

Recommended Fluid and Filter Change Intervals Using 100% TranSynd™/TES 295 Approved Fluid And Gold Series Filters							
Coaches equipped with retarder				Coaches without retarder			
Fluid	Filters			Fluid	Filters		
	Main	Internal	Lube/ Auxiliary		Main	Internal	Lube/ Auxiliary
	Initial Break-in 5,000 miles (8,000 km)/ 200 Hrs				Initial Break-in 5,000 miles (8,000 km)/ 200 Hrs		
50,000 Miles (80 000 km) 24 Months/ 2000 Hrs	50,000 Miles (80 000 km) 24 Months/ 2000 Hrs	Overhaul	50,000 Miles (80 000 km) 24 Months/ 2000 Hrs	150,000 Miles 240 000 km 48 Months/ 4000 Hrs	50,000 Miles 80 000 km 24 Months/ 2000 Hrs	Overhaul	50,000 Miles (80 000 km) 24 Months/ 2000 Hrs

3.1.12 Oil And Filter Change Interval

- Oil and Filter Change interval With Prognostics Mode Disabled

Allison transmissions are factory fill with **Castrol TranSynd™** fluid. Oil change must be performed with the vehicle on a flat and level surface and with parking brake applied. Oil and oil filter change frequency is determined by the severity of service and operating conditions of the transmission and by the filter equipment installed. See *"TABLE 1, TABLE 2 or TABLE 3"* for oil and filter change intervals. More frequent changes may be required when operations are subject to high levels of contamination or overheating. Filters must be changed at or before recommended intervals.

IMPORTANT NOTE

Allison Transmission recommends that customers use fluid analysis as the primary method for determining fluid change intervals. Many customers have a systematical annual transmission fluid change while, in many cases, fluid analysis could demonstrate that the transmission fluid is still in good condition and a fluid change is not required. In the absence of a fluid analysis program, the fluid change interval listed in TABLE 1, TABLE 2 & TABLE 3 should be used.

IMPORTANT NOTE

*Your transmission is equipped with **High Capacity filters**. High Capacity filters allow for increased fluid and filter change intervals in transmissions utilizing TES 295 approved fluid/TranSynd™. High Capacity filters eliminate the requirement of the initial 5000 miles (8000km) main filter change.*

Former Gold Series filter kits are completely cancelled and serviced with current High Capacity filter kits. However, if you are using stocked Gold Series filter kits with TES 295 approved fluid/TranSynd™, use TABLE 3 for oil and filter change intervals.

- Oil And Filter Change Interval With Prognostics Mode Enabled

Oil Life Monitor and Filter Life Monitor of the Prognostics mode provide indicators of required maintenance actions. They are designed to maximize fluid and filter utilization. **Prognostics enabled requires the use of 100% TranSynd™ or an Allison approved TES-295 transmission fluid and Allison High Capacity filters**. If any other fluids or filters are used, Prognostic mode **must be disabled**. Prognostic information will not be accurate with any other fluids or filters and could result in missed maintenance activities resulting in transmission damage.

IMPORTANT NOTE

The following schedule is to be used with Prognostics enabled.

*100% concentration of TES-295 Allison approved fluids and Allison High Capacity Filters is **required**. Less than 100% concentration of TES-295 Allison approved fluids are considered a mixture and shall not be used with Prognostics mode or this change schedule. Utilization of previous Non-TES 295 fluid/filter change intervals (Table 1) is required.*

	General or Severe Vocation
FLUIDS Prognostics enabled	Change fluid when indicated by TRANSMISSION SERVICE indicator or 60 month (five years) whichever occurs first. In addition, change filters with fluid.
FILTERS Prognostics enabled	Change filters (Main & Lube) when indicated by TRANSMISSION SERVICE indicator between fluid change or 60 month (five years) whichever occurs first.

- Changing The Transmission Oil And Oil Filters

The procedure for changing the transmission oil and oil filters is as follows:

Drain

1. The transmission should be at an operating temperature of 160ºF (71ºC) to 200ºF (93ºC) when the oil is drained. This will ensure quicker and more complete fluid drainage.

NOTE

Remove transmission protective panel located underneath transmission for easier access.

2. Remove the drain plug from under the transmission (Fig. 7) and allow the oil to drain into a suitable container. Check the condition of the oil as described previously.
3. To replace the integral filters, remove twelve bolts (6 on each cover), two filter covers, two O-rings, two square cut seals and the two filters from the bottom of the control module (Fig. 7).
4. To install filters, pre-lube and install the two O-rings, the two square cut seals followed by the filters (lube the O-ring in filter cartridge only) into the filter compartment. Index each filter/cover assembly to holes in channel plate/sump. Push the cover assembly in by hand to seat the seals.

CAUTION

Do not use bolts to draw the cover to sump. This can damage the cover, seal, or sump.

5. Install twelve bolts and both covers, and then tighten to 38-45 lbf-ft (51-61 Nm).

6. Inspect the drain plug and O-ring. Replace if necessary. Reinstall the drain plug and tighten to 18-24 lbf-ft (25-32 Nm).
7. Reinstall transmission protective panel

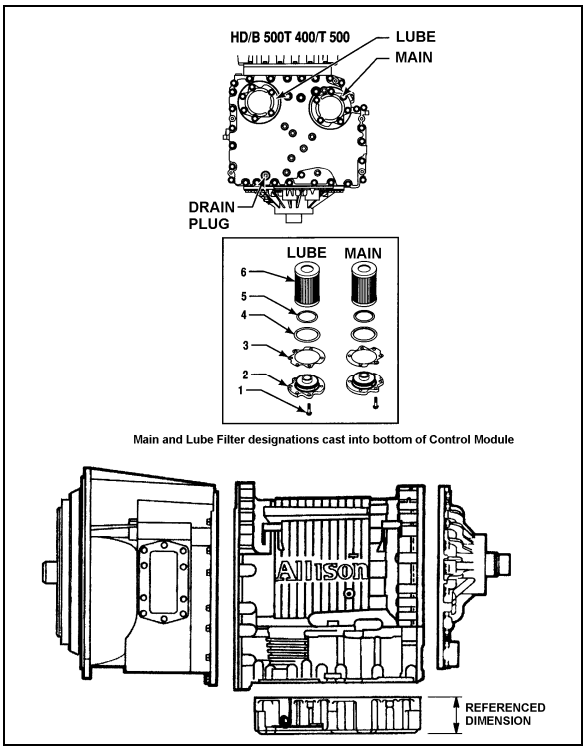

FIGURE 7: DRAIN PLUG AND FILTERS 07074

Fluid loss with filter change only

When changing main and lube filters at recommended intervals, approximate fluid loss for each filter as follows:

Main filter = 2 quarts (1.9 liters)
Lube filter =8 quarts (7.6 liters)

Refilling Transmission

The amount of refill fluid is less than the amount used for the initial fill. Fluid remains in the external circuits and transmission cavities after draining the transmission.

NOTE
Quantities listed above are approximations and do not include external oil cooler lines.

Using the oil level dipstick filler tube, refill with 24 US qts (23 liters) [28 US qts (26.5 liters) if equipped with retarder] and check the oil level using the **Fluid Level Check Using Pushbutton Shift Selector** procedure in this section.

3.2 VOLVO I-SHIFT TRANSMISSION

All information needed for the removal /installation or maintenance of the Volvo I-Shift transmission is included in the documents annexed at the end of this section.

3.2.1 Transmission Oil

⚠ **CAUTION**
Only use Castrol Syntrans SAE 75W85 (Prevost #684516) gearbox oil in the I-Shift transmission. Using non-approved oil can result in damage to transmission components.

⚠ **CAUTION**
Never reuse drained I-Shift oil. The oil must be replaced along with the oil filter. Reusing drained oil can result in damage to transmission components.

Keep the transmission oil at the proper level and change it at the Volvo recommended intervals. Always replace the oil filter when the oil is changed (#20779040). Always use the Volvo approved synthetic oil whenever adding or changing the transmission oil.

3.2.2 Checking Oil Level

Check the transmission oil level at each service interval. Park the vehicle on a level surface. Check the oil level through the sight glass on the side of the transmission. Add oil as necessary. Always use the correct Volvo approved synthetic oil (Castrol Syntrans SAE 75W85).

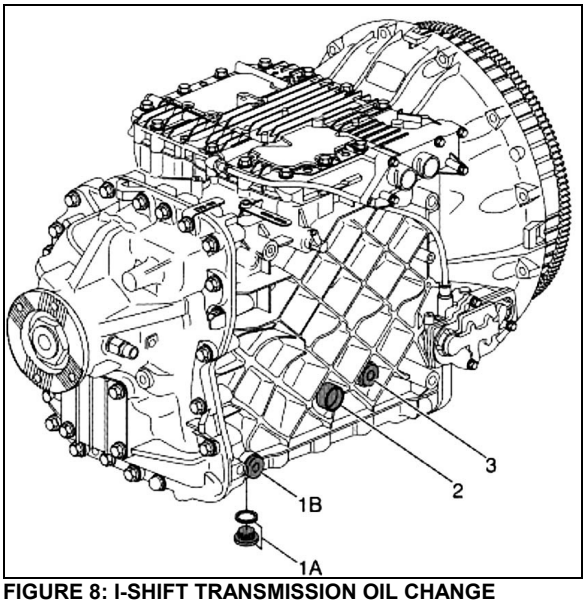

FIGURE 8: I-SHIFT TRANSMISSION OIL CHANGE

- Vehicle should be on horizontal ground when oil is changed;
- Do not check oil level straight after a journey (incorrect measurement). Undertake the check once the transmission oil has cooled down (lower than 104°F or 40 °C);
- Check oil level using transmission sight glass (2, Fig. 8) ;

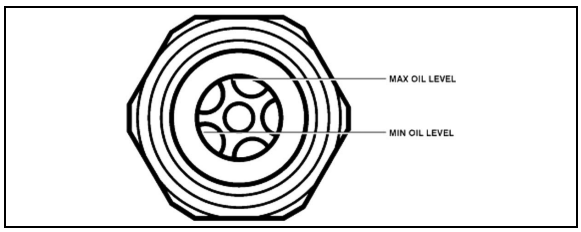

FIGURE 9: SIGHT GLASS FOR CHECKING OIL LEVEL

- Add oil through the oil filling point if necessary (3, Fig. 8) ;
- Torque tighten fill plug to 26±4 Lb-Ft (35±5 Nm).

3.2.3 Oil Change Interval

The length of time a transmission can operate before an oil change is required depends on the quality of the oil used and the vehicle application.

For on-highway applications, change the transmission oil every 800 000 km (500,000 miles) or every 5 years. This extended oil change interval only applies when using Castrol Syntrans SAE 75W85. Always replace the oil filter when the oil is changed. For all other vehicle applications or if not using Castrol Syntrans SAE 75W85, change the transmission oil every 400 000 km (250,000 miles) or every 3 years.

3.2.4 Oil Change

Approximately 15 liters (16 quarts) is needed for a complete oil change.

WARNING

Hot oil can cause burns. DO NOT allow hot oil to contact the skin. When changing oil, wear protective gloves.

Remove the drain plug from under the transmission (1A or 1B, Fig. 8) and allow the oil to drain into a suitable container.

Inspect the drain plug and O-ring. Replace if necessary. Reinstall the drain plug and tighten to 26±4 Lb-Ft (35±5 Nm).

CAUTION

Always dispose of all lubricants (engine oil, coolant, transmission oil, etc) and filters according to Federal or local regulations.

Change the oil filter (#20779040) at every oil change. Drain the oil filter housing before you remove the filter.

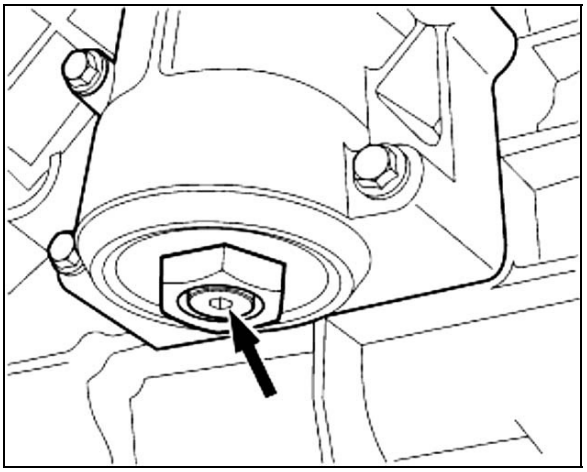

FIGURE 10: OIL FILTER HOUSING DRAIN PLUG

NOTE

Torque tighten oil filter housing drain plug to 12±1 Lb-Ft (16±2 Nm).

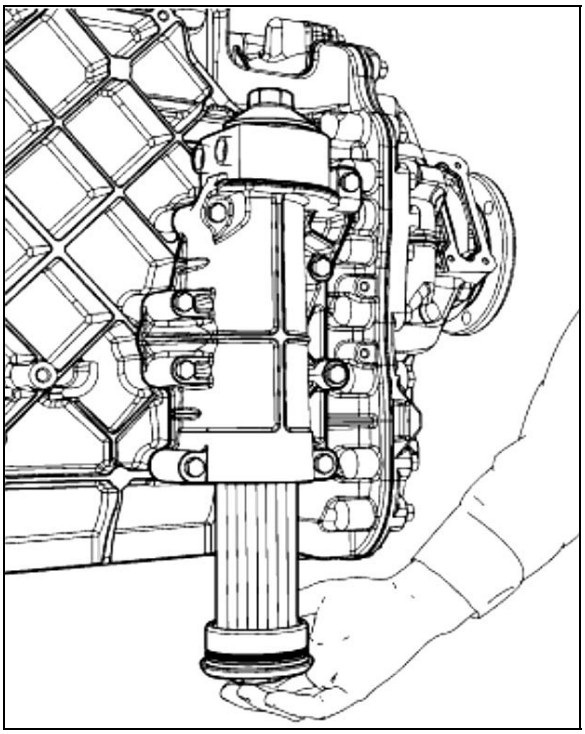

FIGURE 11: OIL FILTER

4. ALLISON TRANSMISSION REMOVAL

The following procedure deals with the removal of the Allison transmission without removing the power plant cradle from vehicle. The methods used to support the transmission and engine depend upon conditions and available equipment.

1. Select transmission's "NEUTRAL" position, apply parking brake, then set battery master switch to the "OFF" position.
2. Jack up vehicle, then place safety supports underneath body.

CAUTION

Only the recommended jacking points must be used as outlined in Section 18, "BODY".

NOTE

For more clearance between the tag axle and transmission, the tag axle may be unloaded and jacked up or retracted (if applicable).

3. Remove engine splash guards and protective panels surrounding transmission.
4. Remove cross member from under transmission.
5. Remove the transmission drain plug and allow oil to drain. Inspect the drain plug washer and replace it if necessary. Reinstall the drain plug and tighten to 33-41 lbf-ft (45-56 Nm) (see *"3.1.12 Oil and Filter Change"* in this section.

WARNING

It is better to drain oil when it is still warm. Avoid contact with oil since it can be very hot and cause personal injury.

6. Remove transmission dipstick and filler tube.
7. Disconnect propeller shaft from transmission and remove its safety guard. Refer to Section 09, *"PROPELLER SHAFT".*
8. Disconnect the two oil cooler hoses from transmission. Cover hose ends and fittings to prevent fluid contamination.

WARNING

A significant amount of oil may drain from oil lines when they are disconnected.

9. Disconnect all sensors on L.H. side of the transmission.
10. Disconnect main wiring harness.
11. Disconnect the air supply line (steel-braided hose) from retarder control valve (if applicable).
12. Remove any locking tie, clamp and bracket that may interfere with the removal of transmission.
13. Support transmission using a suitable transmission jack.

NOTE

Remove starter motor located on engine L.H. side. Removing the starter motor will allow access to unfasten the 12 converter-to-flexible plate attaching screws. Remove the plug located below starter motor and install cranking tool (88800014). Cranking the engine to gain access to the attaching screws may be done by turning the cranking tool using a suitable adapter (fig. 12).

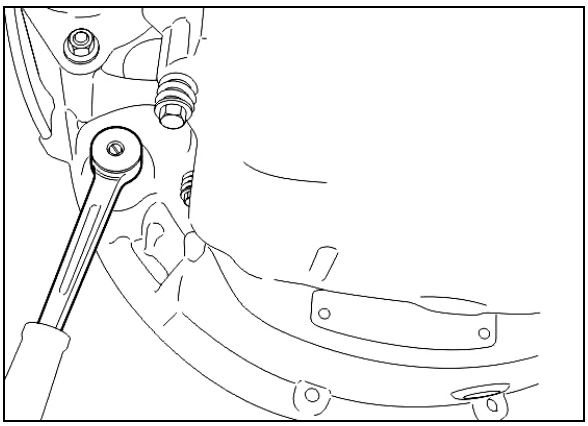

FIGURE 12: VOLVO ENGINE CRANKING POSITION

CAUTION

Do not rotate alternator shaft clockwise to avoid removing tension on belt.

14. Remove the 12 screws retaining the torque converter housing to the flywheel housing.

CAUTION

Make sure transmission-to-engine alignment is maintained when removing screws to avoid damaging torque converter housing.

15. Slowly pull transmission straight out to clear the engine.
16. Remove the transmission.

5. TRANSMISSION OIL COOLER REMOVAL

5.1 TRANSMISSION WITHOUT RETARDER

Stop engine and allow engine to cool. Close both heater line shutoff valves (refer to Section 05 *"Cooling"*).

To drain the cooling system, proceed as per Section 05 *"Cooling"*, paragraph 5: Draining. If the cooling system is contaminated, flush system as per Section 05 *"Cooling"*, paragraph 7: Flushing.

1. Remove the rear L.H. side tag axle wheel, then remove the rear L.H. side fender panel.
2. Disconnect the two transmission hoses from oil cooler. Cover hose ends and fittings to prevent fluid contamination (Refer to fig.13).

WARNING

A significant amount of oil may drain from oil lines when they are disconnected.

3. Unfasten the constant-torque hose clamps and remove the two hoses.
4. Unscrew the four holding nuts and remove the U-bolts, remove the oil cooler from engine compartment.
5. Reinstall transmission oil cooler by using reverse procedure.

5.2 TRANSMISSION WITH RETARDER

Stop engine and allow engine to cool. Close both heater line shutoff valves (refer to Section 05 *"Cooling"*).

1. To drain the cooling system, proceed as per Section 05 *"Cooling"*, paragraph 5: Draining. If the cooling system is contaminated, flush system as per Section 05 *"Cooling"*, paragraph 7: Flushing.
2. Remove the rear L.H. side tag axle wheel, then remove the rear L.H. side fender panel.
3. Disconnect the transmission hoses from oil cooler. Cover hose ends and fittings to prevent fluid contamination.

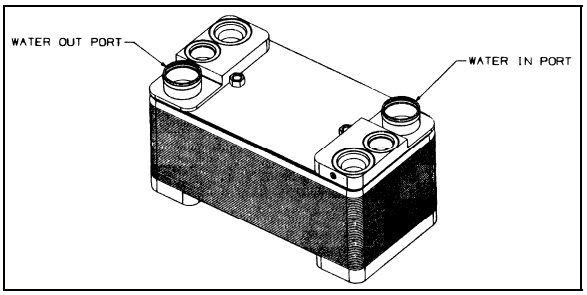

FIGURE 13: ALLISON OIL COOLER

WARNING

A significant amount of oil may drain from oil lines when they are disconnected.

4. Unfasten the constant-torque hose clamps and remove the two hoses.
5. Unscrew the holding bolts and nuts and remove the oil cooler from engine compartment.

6. CLEANING AND INSPECTION OF ALLISON AUTOMATIC TRANSMISSION

The exterior of the transmission should be cleaned and inspected at regular intervals. The length of service and severity of operating conditions will determine the frequency of such inspections. Inspect the transmission for:

1. Loose bolts (transmission and mounting components);
2. Oil leaks (correct immediately);
3. Loose, dirty, or improperly adjusted throttle sensor linkage;
4. Damaged or loose oil lines;
5. Worn or frayed electrical harnesses, improper routing;
6. Worn or out of phase drive line U-joint and slip fittings.

CAUTION

DO NOT pressure wash the transmission electrical connectors. Water and detergent will cause the contacts to corrode or become faulty.

6.1 BREATHER

The breather is located on the engine, flywheel side near the valve cover. It serves to prevent pressure build-up within the transmission and

must be cleaned to keep the passage opened. The prevalence of dust and dirt will determine the frequency at which the breather requires cleaning. Use care when cleaning the engine. Spraying steam, water or cleaning solution directly at the breather can force the water or solution into the transmission. Always use care when removing the hose connector from transmission to prevent the entry of foreign matter.

7. ALLISON TRANSMISSION INSTALLATION

NOTE

For more clearance between the tag axle and transmission, the tag axle may be unloaded and jacked up, or retracted (if applicable).

1. With the starter motor removed, align one of the 12 attaching screw holes in the flexible plate with the access opening.
2. Place the transmission on a transmission jack.
3. Install a headless guide bolt into one of the 12 threaded holes for flexible plate attaching screws in the flywheel.
4. Lubricate the flywheel center pilot boss with molybdenum disulfide grease (Molycote G, or equivalent).
5. Raise transmission and position the flywheel pilot boss into the flexible plate adapter. Align the guide bolt previously installed in the flywheel with the flexible plate hole facing the access opening in the flywheel housing.

DANGER

Severe damages and/or personal injury can occur if transmission is not adequately supported.

5. Seat the transmission against the engine flywheel housing. NO FORCE IS REQUIRED. If interference is encountered, move the transmission away from engine, then investigate the cause.

CAUTION

The torque converter housing must be seated against the flywheel housing prior to tightening any screws. DO NOT USE SCREWS TO SEAT THE HOUSING.

6. Start all torque converter housing screws, and then tighten four of them gradually and in a criss-cross sequence around the housing. Tighten the 12 remaining screws. Recommended torque is between 42-50 lbf-ft (57-68 Nm).
7. Remove the guide bolt through the access opening in the flywheel housing. Replace it with a self-locking screw, finger-tighten then start the remaining screws; tighten to 17-21 lbf-ft (23-28 Nm).

NOTE

Remove the plug located below starter motor and install cranking tool (88800014). Crank the engine to gain access to the threaded holes by turning the cranking tool using a suitable adapter (Refer to fig. 12).

Reinstall starter motor and connect cables.

Reinstall access plug below starter motor.

8. Remove jack from under transmission.
9. Connect all sensors.
10. Connect the main wiring harness.
11. Connect the air supply line (steel-braided hose) to the retarder control valve (if applicable).
12. Connect the two transmission oil cooler hoses as they were previously.
13. Reinstall clamps and brackets, and replace locking ties previously removed during removal procedure.
14. Install propeller shaft and its safety guard. Refer to Section 09, *"PROPELLER SHAFT".*
15. Install transmission dipstick and filler tube.
16. Install cross member under transmission.
17. Install engine splash guards.
18. Adjust the retarder pressure to 85 ± 3 psi with the air pressure regulator. For more information refer to Section 12, *"BRAKE AND AIR SYSTEM"*, under heading *"AIR PRESSURE REGULATOR".* The air pressure regulator is located in the engine compartment, on engine cradle R.H. side (Fig. 14).
19. Make sure that the drain plug is in place, and then remove the transmission dipstick and pour approximately 24 US quarts (23 L) of

automatic transmission fluid through the filler tube. Check and adjust oil level.

CAUTION

Do not overfill the transmission. Overfilling can cause oil aeration (milky appearance) and overheating. If overfilling occurs, drain oil as required to bring it to the proper level.

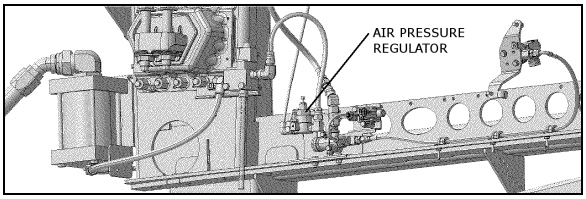

FIGURE 14: AIR PRESSURE REGULATOR (TYPICAL) 07130

8. ALLISON AUTOMATIC TRANSMISSION TROUBLESHOOTING

For complete information about Allison transmission troubleshooting, refer to ''Allison 4th Generation Controls – Troubleshooting Manual: 3000 and 4000 Product families (TS3989)".

8.1 4TH GENERATION TRANSMISSION CONTROL MODULE

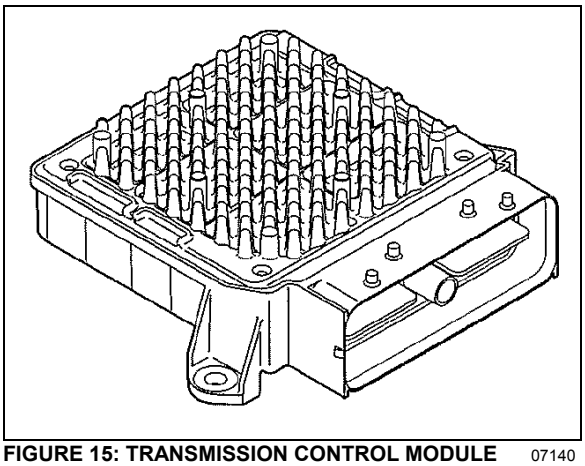

FIGURE 15: TRANSMISSION CONTROL MODULE 07140

The Allison transmission has a new Transmission Control Module (TCM) which involves specific diagnostic incident codes. The TCM unit is located in the coach rear electrical compartment.
TCM Replacement

The TCM is a non-serviceable electronic device. When it fails, it must be replaced using the following procedure:

- Open the coach rear baggage compartment then remove the rear electrical compartment door in order to get access to the TCM;
- Remove the electrical cable connectors;
- Unscrew the TCM unit;
- Replace by reversing the procedure.

CAUTION

Place the battery master switch to the ''OFF'' position.

8.2 DIAGNOSTIC TROUBLESHOOTING CODES (DTC) — ALLISON 4TH GENERATION CONTROLS

Diagnostic codes (DTC) are numerical indications relating to a malfunction in transmission operation. These codes are logged in a list in the TCM memory with the most severe or most recent code listed first. A maximum of five codes (numbered d1 to d5) may be listed in memory at one time. As codes are added, the oldest inactive code is dropped from the list. If all codes are active, the code with the lowest priority that is not included on the severity list is dropped from the list.

Diagnostic codes (DTC) and code information may be accessed through the pushbutton shift selector or using an Allison DOC™ diagnostic tool.

The TCM separately stores the active and inactive codes. An active code is any code that is current in the TCM decision-making process. Inactive codes are codes that are retained in the TCM memory and will not necessary affect the TCM decision-making process. Inactive codes are useful in determining if a problem is:

- Isolated ;
- Intermittent ;
- Result from a previous malfunction.

The TCM may automatically delete a code from memory if it has not recurred. If the MODE INDICATOR (LED) is not illuminated, the displayed code is not active. An illuminated MODE INDICATOR (LED) during normal operation signifies secondary shift mode operation.

8.3 DIAGNOSTIC CODES – ALLISON 4TH GENERATION CONTROLS

When the diagnostic mode is entered, the first code (position d1) is displayed as follows:

Example: Code P0722

Displayed as: **d1**…**P**…**07**…**22**

The code list position is the first item displayed, followed by the DTC. Each item is displayed for about one second. The display cycles continuously until the next code list position is accessed by pressing the **MODE** button. The following example shows how DTC P0722 is displayed on the pushbutton shift selector.

SELECT			MONITOR
	d	1	
		P	
	0	7	
	2	2	

- d1 (code list position) – The position which a code occupies in the list. Positions are displayed as « d1 » through « d5 » (code list position 1 through code list position 5).
- P0722 (DTC) – The diagnostic troubleshooting code number referring to the general condition or area of fault detected by the TCM.

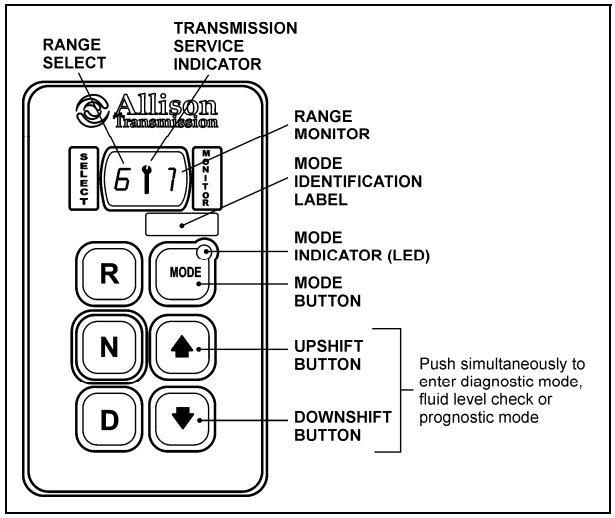

8.4 DIAGNOSTIC CODE DISPLAY AND CLEARING PROCEDURE – ALLISON 4TH GENERATION CONTROLS

Diagnostic codes can be read and cleared by two methods:

- Using an Allison DOC™ diagnostic tool. For specific instructions on how to use an Allison DOC™ diagnostic tool, refer to the User Guide.
- Using the pushbutton shift selector.

To begin the diagnostic process:

1. Bring the vehicle to a stop at a safe location.
2. Apply the parking brake.

To display stored codes:

1. Simultaneously press the ⬆ (Up) and ⬇ (Down) arrow buttons twice to access the Diagnostic Display Mode.

> *NOTE*
>
> *To access the Oil Level Display Mode,* simultaneously press the ⬆ *(Up) and* ⬇ *(Down)* arrow buttons *once. Consult paragraph: « ALLISON TRANSMISSION OIL LEVEL CHECK USING THE PUSHBUTTON SHIFT SELECTOR » at the end of this section.*

2. Observe the digital display for code (d1).
3. Press the MODE button to see the next code (d2) – repeat for subsequent codes (d3, d4 & d5).

> *NOTE*
>
> *Be sure to record all codes displayed before they are cleared. This is essential for troubleshooting.*

> *NOTE*
>
> *The Diagnostic Display Mode can be entered for viewing codes at any speed. Codes can only be cleared when the output speed = 0 and no output speed sensor failure is active*

Active indicators (MODE INDICATOR LED) and inactive codes can be cleared manually, while in the diagnostic display mode, after the condition causing the code is identified.

To clear active indicators and inactive codes:

1. While in Diagnostic Display Mode, press and hold the MODE button for 10 seconds to clear both active indicators and inactive codes.
2. Begin operating as normal. Have the transmission checked at the earliest opportunity by an Allison Transmission distributor or dealer.

NOTE
All active indicators are cleared at TCM power down. *Some codes will clear their active indicator when the condition causing the code is no longer detected by the TCM.*

The Diagnostic Display Mode can be exited by any of the following methods:

- Press simultaneously the ⬆ (Up) and ⬇ (Down) arrow buttons at the same time on the pushbutton shift selector.
- Press any range button «D», «N» or «R» on the pushbutton shift selector (the shift will be commanded if it is not inhibited by an active code).
- Wait until the calibrated time (approximately 10 minutes) has passed. The system will automatically return to the normal operating mode.
- Turn off power to the TCM (shut off the engine using the ignition key).

NOTE
If clearing a code while locked in a «D» (Drive) or «R» (Reverse) position (fail-to-range), the transmission will still be in «D» (Drive) or «R» (Reverse) when the clearing procedure is completed. «N» (Neutral) must be manually selected.

8.5 DIAGNOSTIC CODE RESPONSE

The following responses are used in the "Diagnostic Troubleshooting Code List and Inhibited Operation Description" table to command safe operation when diagnostic codes are sent.

DNS - Do Not Shift Response

Release lock up clutch and inhibit lock up operation.

Inhibit all shifts.

Turn *ON* the CHECK TRANS light.

Display the range attained.

Ignore any range selection inputs from the shift selector.

DNA - Do Not Adapt Response

The TCM stops adaptive shift control while the code is active.

SOL OFF - SOLenoid OFF Response

All solenoids are commanded *OFF* (turning solenoids “A” and “B” off electrically cause them to be on hydraulically).

RPR - Return to Previous Range Response

When the speed sensor ratio or C3 pressure switch test associated with a shift not successful, the TCM commands the same range as commanded before the shift.

NNC - Neutral No Clutches Response

When certain speed sensor ratio or C3 pressure switch tests are not successful, the TCM commands a neutral condition with no clutches applied.

8.6 DIAGNOSTIC TROUBLESHOOTING CODES (DTC) LIST - ALLISON 4TH GENERATION CONTROLS

DTC	Description	CHECK TRANS Light	Inhibited Operation Description
C1312	Retarder Request Sensor Failed Low	No	May inhibit retarder operation if not using J1939 datalink
C1313	Retarder Request Sensor Failed High	No	May inhibit retarder operation if not using J1939 datalink
P0122	Pedal Position Sensor Low Voltage	No	Use default throttle values. Freezes shift adapts.
P0123	Pedal Position Sensor High Voltage	No	Use default throttle values. Freezes shift adapts.
P0218	Transmission Fluid Over Temperature	No	Use hot mode shift schedule. Holds fourth range. TCC is inhibited. Freezes shift adapts.
P0561	System Voltage Performance		
P0562	System Voltage Low		
P0563	System Voltage High		
P0602	TCM Not Programmed	Yes	Lock in Neutral
P0610	TCM Vehicle Options (Trans ID) Error	Yes	Use TID A calibration
P0613	TCM Processor	No	All solenoids off
P0614	Torque Control Data Mismatch - ECM/TCM	Yes	Allows operation only in reverse and second range.
P0634	TCM Internal Temperature Too High	Yes	SOL OFF (hydraulic default)
P063E	Auto Configuration Throttle Input Not Present	Yes	Use default throttle values
P063F	Auto Configuration Engine Coolant Temp Input Not Present	No	None
P0658	Actuator Supply Voltage 1 (HSD1) Low	Yes	DNS, SOL OFF (hydraulic default)
P0659	Actuator Supply Voltage 1 (HSD1) High	Yes	DNS, SOL OFF (hydraulic default)
P0667	TCM Internal Temperature Sensor Circuit Range / Perform		
P0668	TCM Internal Temperature Sensor Circuit Low		
P0669	TCM Internal Temperature Sensor Circuit High		
P0701	Transmission Control System Performance		
P0702	Transmission Control System Electrical (TransID)	Yes	Use TID A calibration
P0703	Brake Switch Circuit Malfunction	No	No Neutral to Drive shifts for refuse packer. TCM inhibits retarder operation if a TPS code is also active.
P0708	Transmission Range Sensor Circuit High Input	Yes	Ignore defective strip selector inputs
P070C	Transmission Fluid Level Sensor Circuit – Low Input	No	None
P070D	Transmission Fluid Level Sensor Circuit – High Input	No	None
P0711	Transmission Fluid Temperature Sensor Circuit Performance	Yes	Use default sump temp
P0712	Transmission Fluid Temperature Sensor Circuit Low Input	Yes	Use default sump temp
P0713	Transmission Fluid Temperature Sensor Circuit High Input	Yes	Use default sump temp
P0716	Turbine Speed Sensor Circuit Performance	Yes	DNS, Lock in current range
P0717	Turbine Speed Sensor Circuit No Signal	Yes	DNS, Lock in current range
P0719	Brake Switch ABS Input Low	No	TCM assumes ABS is OFF

DTC	Description	CHECK TRANS Light	Inhibited Operation Description
P071A	RELS Input Failed On	Yes	Inhibit RELS operation
P071D	General Purpose Input Fault	Yes	None
P0720	Output Speed Sensor Circuit		
P0721	Output Speed Sensor Circuit Performance	Yes	DNS, Lock in current range
P0722	Output Speed Sensor Circuit No Signal	Yes	DNS, Lock in current range
P0726	Engine Speed Sensor Circuit Performance	No	Default to turbine speed
P0727	Engine Speed Sensor Circuit No Signal	No	Default to turbine speed
P0729	Incorrect 6th Gear Ratio	Yes	DNS, Attempt 5th, then 3rd
P0730	Incorrect Neutral Gear ratio		
P0731	Incorrect 1st Gear ratio	Yes	DNS, Attempt 2nd, then 5th
P0732	Incorrect 2nd Gear ratio	Yes	DNS, Attempt 3rd, then 5th
P0733	Incorrect 3rd Gear ratio	Yes	DNS, Attempt 4th, then 6th
P0734	Incorrect 4th Gear ratio	Yes	DNS, Attempt 5th, then 3rd
P0735	Incorrect 5th Gear ratio	Yes	DNS, Attempt 6th, then 3rd, then 2nd
P0736	Incorrect Reverse Gear ratio	Yes	DNS, Lock in Neutral
P0741	Torque Converter Clutch System Stuck Off	Yes	None
P0776	Pressure Control Solenoid 2 Stuck Off	Yes	DNS, RPR
P0777	Pressure Control Solenoid 2 Stuck On	Yes	DNS, RPR
P0796	Pressure Control Solenoid 3 Stuck Off	Yes	DNS, RPR
P0797	Pressure Control Solenoid 3 Stuck On	Yes	DNS, RPR
P0842	Transmission Pressure Switch 1 Circuit Low	Yes	DNS, Lock in current range
P0843	Transmission Pressure Switch 1 Circuit High	Yes	DNS, Lock in current range
P0847	Transmission Pressure Switch 2 Circuit Low		
P0848	Transmission Pressure Switch 2 Circuit High		
P088A	Transmission Fluid Filter Deteriorated		
P088B	Transmission Fluid Filter Very Deteriorated		
P0880	TCM Power Input Signal	No	None
P0881	TCM Power Input Signal Performance	No	None
P0882	TCM Power Input Signal Low	Yes	DNS, SOL OFF (hydraulic default)
P0883	TCM Power Input Signal High	No	None
P0894	Transmission Component Slipping	Yes	DNS, Lock in first
P0960	Pressure Control Solenoid Main Mod Control Circuit Open	Yes	None
P0961	Pressure Control Solenoid (PCS) MM System Performance		
P0962	Pressure Control Solenoid Main Mod Control Circuit Low	Yes	DNS, SOL OFF (hydraulic default)
P0963	Pressure Control Solenoid Main Mod Control Circuit High	Yes	None
P0964	Pressure Control Solenoid 2 (PCS2) Control Circuit Open	Yes	DNS, SOL OFF (hydraulic default)
P0965	Pressure Control Solenoid (PCS) 2 System Performance		
P0966	Pressure Control Solenoid 2 (PCS2) Control Circuit Low	Yes	DNS, SOL OFF (hydraulic default)
P0967	Pressure Control Solenoid 2 (PCS2) Control Circuit High	Yes	DNS, SOL OFF (hydraulic default)
P0968	Pressure Control Solenoid 3 (PCS3) Control Circuit Open	Yes	DNS, SOL OFF (hydraulic default)
P0969	Pressure Control Solenoid (PCS) 3 System Performance		
P0970	Pressure Control Solenoid 3 (PCS3) Control Circuit Low	Yes	DNS, SOL OFF (hydraulic default)

DTC	Description	CHECK TRANS Light	Inhibited Operation Description
P0971	Pressure Control Solenoid 3 (PCS3) Control Circuit High	Yes	DNS, SOL OFF (hydraulic default)
P0973	Shift Solenoid 1 (SS1) Control Circuit Low	Yes	DNS, SOL OFF (hydraulic default)
P0974	Shift Solenoid 1 (SS1) Control Circuit High	Yes	DNS, SOL OFF (hydraulic default)
P0975	Shift Solenoid 2 (SS2) Control Circuit Open	Yes	7-speed: Allow 2 through 6, N, R
P0976	Shift Solenoid 2 (SS2) Control Circuit Low	Yes	7-speed: Allow 2 through 6, N, R Inhibit TCC operation
P0977	Shift Solenoid 2 (SS2) Control Circuit High	Yes	7-speed: Allow 2 through 6, N, R
P0989	Retarder Pressure Sensor Failed Low	No	None
P0990	Retarder Pressure Sensor Failed High	No	None
P1739	Incorrect Low Gear Ratio	Yes	Command 2nd and allow shifts 2 through 6, N, R
P1891	Throttle Position Sensor PWM Signal Low Input	No	Use default throttle values
P1892	Throttle Position Sensor PWM Signal High Input	No	Use default throttle values
P2184	Engine Coolant Temperature Sensor Circuit Low Input	No	Use default engine coolant values
P2185	Engine Coolant Temperature Sensor Circuit High Input	No	Use default engine coolant values
P2637	Torque Management Feedback Signal (SEM)	Yes	Inhibit SEM
P2641	Torque Management Feedback Signal (LRTP)	Yes	Inhibit LRTP
P2670	Actuator Supply Voltage 2 (HSD2) Low	Yes	DNS, SOL OFF (hydraulic default)
P2671	Actuator Supply Voltage 2 (HSD2) High	Yes	DNS, SOL OFF (hydraulic default)
P2685	Actuator Supply Voltage 3 (HSD3) Low	Yes	DNS, SOL OFF (hydraulic default)
P2686	Actuator Supply Voltage 3 (HSD3) High	Yes	DNS, SOL OFF (hydraulic default)
P2714	Pressure Control Solenoid 4 (PCS4) Stuck Off	Yes	DNS, RPR
P2715	Pressure Control Solenoid 4 (PCS4) Stuck On	Yes	DNS, SOL OFF (hydraulic default)
P2718	Pressure Control Solenoid 4 (PCS4) Control Circuit Open	Yes	DNS, SOL OFF (hydraulic default)
P2719	Pressure Control Solenoid (PCS) 4 System Performance		
P2720	Pressure Control Solenoid 4 (PCS4) Control Circuit Low	Yes	DNS, SOL OFF (hydraulic default)
P2721	Pressure Control Solenoid 4 (PCS4) Control Circuit High	Yes	DNS, SOL OFF (hydraulic default)
P2723	Pressure Control Solenoid 1 (PCS1) Stuck Off	Yes	DNS, RPR
P2724	Pressure Control Solenoid 1 (PCS1) Stuck On	Yes	DNS, RPR
P2727	Pressure Control Solenoid 1 (PCS1) Control Circuit Open	Yes	DNS, SOL OFF (hydraulic default)
P2728	Pressure Control Solenoid (PCS) 1 System Performance		
P2729	Pressure Control Solenoid 1 (PCS1) Control Circuit Low	Yes	DNS, SOL OFF (hydraulic default)
P2730	Pressure Control Solenoid 1 (PCS1) Control Circuit High	Yes	DNS, SOL OFF (hydraulic default)
P2736	Pressure Control Solenoid 5 (PCS5) Control Circuit Open	Yes	Inhibit retarder operation
P2737	Pressure Control Solenoid (PCS) 5 System Performance		
P2738	Pressure Control Solenoid 5 (PCS5) Control Circuit Low	Yes	Allow 2 through 6, N, R. Inhibit retarder and TCC operation
P2739	Pressure Control Solenoid 5 (PCS5) Control Circuit High	Yes	Inhibit retarder operation
P2740	Retarder Oil Temperature Hot	No	None
P2742	Retarder Oil Temperature Sensor Circuit – Low Input	No	Use default retarder temp values
P2743	Retarder Oil Temperature Sensor Circuit – High Input	No	Use default retarder temp values
P2761	TCC PCS Control Circuit Open	Yes	Inhibit TCC operation

9. VOLVO I-SHIFT TRANSMISSION TECU FAULT CODES

FUNCTION	PID/SID	FMI J1587	ERROR	CONDITION	SYMPTOM	COMMENT
Brake switch	**PID65**	FMI14	Brake interlock active	***Activate:*** The gearlever is moved from neutral without prior application of the service brake ***Deactivate:*** The gearlever is returned to neutral or the vehicle speed is above 5km/h	White lamp is sent together with a pop-up message The transmission will not engage the selected gear (stays in neutral)	***Conditions for activation: (and)*** The brake interlock function is activated (VTNA vehicles only) The vehicle speed is below 5km/h The gear lever is moved from neutral or in folded position without prior activation of the service brake or parking brake ***Conditions for deactivation: (either)*** The vehicle speed is above 5km/h The gearlever is returned to neutral or folded position
Calibration memory	**SID253**	FMI13	Out of range	***Active:*** Flash CS dataset error or program code missing ***Deactivate:*** Flash CS OK	Yellow lamp is sent Cranking is inhibited Engine can not start	
Clutch cylinder slip point position	**PPID51**	FMI13	Calibration value out of range	***Activate:*** 1. The CS in NVRAM is not correct, or 2. The slip point has not been calibrated ***Deactivate:*** Slip point has been successfully calibrated	Yellow lamp is sent The vehicle can not drive	
Clutch load on plates	**PID50**	FMI0	Data valid but above normal operational range	***Activate:*** The calculated stored energy is above 200kJ. The energy calculation is time-based for VTNA and physical for others. ***Deactivate:*** 7.0s after activation and, energy below 180 kJ or neutral, or driving without clutch slip	Yellow lamp is sent Start gear changed to gear 1 in A/D, for RTC also in M The clutch is overheated The clutch is slowly engaged	Clutch load on plates are set without any filtering
Clutch load on plates		FMI11	Clutch protection active (unidentifiable error)	***Activate:*** Only activated for VTNA. Clutch slip more than 8.0s with vehicle movement less than 0.8m (e.g. hill holding event) ***Deactivate:*** 7.0s after activation and, acc pedal released more than 6.0s or neutral, or driving without clutch slip	Yellow lamp is sent Start gear changed to gear 1 in A/D, for RTC also in M There has been unnecessary clutch slip The clutch is slowly engaged	

FUNCTION	PID/SID	FMI J1587	ERROR	CONDITION	SYMPTOM	COMMENT
Clutch load on plates		FMI14	Special instructions	***Activate:*** If there is an attempt to start on a high range gear or above gear 4 in VTNA in manual mode ***Deactivate:*** The start gear is changed to an allowed gear	White lamp is sent Not possible to start	This fault code is not saved
Clutch plate wear condition	**PID36**	FMI0	Data valid but above normal operational range	***Activate:*** The clutch wear is more than or equal to "Service due position" ***Deactivate:*** The clutch disc is replaced and calibrated	Yellow lamp is sent If active during a long time the clutch may wear out and become damaged	
Clutch position sensor supply (SEPoC5V)	**PPID54**	FMI0	Data valid but above normal operational range	***Activate:*** Voltage is above normal range ***Deactivate:*** Voltage is within normal range	Yellow lamp is sent Reduced clutch performance Reduced gearbox comfort at start and marshalling Gear changes are slow	
Clutch position sensor supply (SEPoC5V)		FMI1	Data valid but below operational range	***Activate:*** Voltage is below normal range ***Deactivate:*** Voltage is within normal range	Yellow lamp is sent Reduced clutch performance Reduced gearbox comfort at start and marshalling Gear changes are slow	
Clutch system	**PSID27**	FMI0	Unintentional disengagement of the clutch	***Activate:*** 1. The clutch disengages when not commanded and, 2. There is no active fault code on the SEPoC and, 3. There is no active fault code for low air pressure and, 4. There is no active fault code on any of the clutch cylinder valves and, 5. The PCB temperature is above a specific limit ***Deactivate:*** The	Yellow lamp is sent Slow gear changes Low clutch performance	***Detailed conditions to activate/deactivate*** The following conditions must be fulfilled three times (only once if the fault code-filter is switched OFF) in a row in order to set the fault code: - The clutch has been engaged for less than 10s with inactive engagement valves - The clutch cylinder position has been at least 1mm below the engaged limit at some point during this time - The clutch leaves the engaged state - The clutch disengagement valves are inactive - There is no active fault code on any of the clutch

FUNCTION	PID/SID	FMI J1587	ERROR	CONDITION	SYMPTOM	COMMENT
				clutch response is OK		cylinder position sensor (SEPoC) the clutch valves - There is no active fault code for low air pressure - The PCB temperature is above 10 dgC *The fault is deactivated if any of the following conditions are fulfilled:* - The clutch has been engaged for more than 20s with inactive engagement valves - There is an active fault code for the clutch cylinder position sensor (SEPoC)
Clutch system		FMI1	Unintentional engagement of the clutch	***Activate:*** 1. The clutch engages when not commanded and, 2. There is no active fault code on the SEPoC and, 3. There is no active fault code for low air pressure and, 4. There is no active fault code on any of the clutch cylinder valves and, 5. The PCB temperature is above a specific limit ***Deactivate:*** The clutch response is OK	Yellow lamp is sent Slow gear changes Low clutch performance	***Algorithm for activation/deactivation*** The following sequence must be passed three times (only once if the fault code-filter is switched OFF) in order to activate: - The clutch is near the disengaged position - All clutch valves are deactivated - The initial average clutch position is calculated during 0.1s - Wait for 3s - The final average clutch position is calculated during 0.1s - If the position has moved more than 1mm in the engagement direction, the FMI is set, else if the clutch has moved less than 0.2mm in the engagement direction the FMI is reset. *Additional conditions for activation:* *- There is no active fault code on any of the clutch cylinder position sensor (SEPoC) the clutch valves low air pressure* *- The PCB temperature is above 10dgC*
Clutch system		FMI7	Mechanical system not responding properly	***Activate:*** 1. The clutch does not disengage/engage properly when commanded 2. There is no active fault code on the SEPoC and, 3. There is no active fault code for low air pressure and, 4. There is no active fault code on any of the	Yellow lamp is sent Slow gear changes Low clutch performance	***Detailed conditions to activate/deactivate*** One of the following conditions must be fulfilled three times in a row in order to activate the fault: - The clutch position is more than 2mm from the disengaged position, after control of the clutch to the disengaged position during 1.0 s - The clutch position is not in the interval [set point +3mm; set point -1mm] after control of the clutch to near the slip

FUNCTION	PID/SID	FMI J1587	ERROR	CONDITION	SYMPTOM	COMMENT
				clutch cylinder valves and, 5. The PCB temperature is above 10 dgC ***Deactivate:*** The clutch response is OK		point position during 1.0s - The clutch position is more than 2.5mm from the engaged position, after control of the clutch to the engaged position during 1.0s *The fault is deactivated after three successful occurrences, of control of the clutch to the requested position in 0.5s* The fault is also deactivated if - There is an active fault on the clutch position sensor - There is an active fault on any of the clutch valves - There is an active fault code for low air pressure - The PCB temperature is below 10 dgC
Clutch system		FMI12	Unintentional clutch slip	***Activate:*** The clutch can not transfer a specific torque without slipping ***Deactivate:*** The clutch can transfer a specific torque without slipping	Yellow lamp is sent The engine torque is reduced so that the clutch does not continue to slip	***Detailed conditions*** ***Activation:*** - Clutch slip is detected when the engine torque is already reduced below the "Clutch slip warning torque level" in an attempt to prevent clutch slip. The clutch slip warning level is 2500Nm for MD16 (TMF) variants and 2000Nm for other variants (SMF) - There is no active fault on any of: the sensor for the countershaft speed (SECS) the sensor for the clutch position (SEPoC) and the engine torque & engine speed is received from the engine ECU ***Deactivation:*** The clutch can transfer the maximum engine torque without slipping the fault is also deactivated at startup of the system
Clutch system		FMI11	Clutch drag	***Activate:*** The clutch transfers too much torque in disengaged position ***Deactivate:*** The clutch transfers no torque in disengaged position	Yellow lamp is sent The clutch wear is high	***Algorithm for activation/deactivation*** - Start the check when the counter shaft has been stopped with the brake during slip point calibration when the gearlever is in neutral during normal operation. - Release the brake and check the input shaft speed after 0.5s if input shaft speed > 300rpm, activate this fault code if input shaft speed < 300rpm, deactivate this fault code - Continue with the slip point calibration

FUNCTION	PID/SID	FMI J1587	ERROR	CONDITION	SYMPTOM	COMMENT
Digital input flash NVRAM programmin g enable (DIEE)	**PSID254**	FMI3	Voltage above normal or shorted high	***Activate:*** The voltage level for DIEE-pin is high ***Deactivate:*** The voltage for the DIEE-pin is low	Yellow lamp is sent Cranking is inhibited Engine can not start All communicatio n with the control unit is disabled except from programming of MSW	The boot-program does not save any fault codes
Digital input flash NVRAM programmin g enable (DIEE)		FMI3	Voltage above normal or shorted high	***Active:*** The voltage level for DIEE-pin is high ***Deactivate:*** The voltage for the DIEE-pin is low	Yellow lamp is sent	If the DIEE-pin is high during normal operation the fault code is saved.
Fast clutch valves low side (VAF-)	**PSID5**	FMI3	Voltage above normal or shorted high	***Activate:*** The low-side drive is short circuit to Ubatt ***Deactivate:*** The low-side drive is OK	Yellow lamp is sent Fast engagement/d isengagement disabled Reduced clutch performance Gear changes are slow	
Fast clutch valves low side (VAF-)		FMI6	Current above normal or grounded circuit	***Activate:*** 1. The low-side drive is short circuit to Gnd and 2. There is no active fault code for short circuit to Gnd on VAFE or VAFD ***Deactivate: T***he low-side drive is OK	Yellow lamp is sent Fast engagement/d isengagement disabled Reduced clutch performance Gear changes are slow	
Gearbox brake	**PSID28**	FMI7	Mechanical system not responding properly	***Activate:*** The gearbox brake does not brake when the valve is activated	Yellow lamp is sent Slow gear changes at standstill	***Detailed conditions*** The following conditions must be fulfilled for five activations (only one with the fault code-filter switched OFF) of the gearbox brake in order to activate the fault code: - The activation must last for at least 0.2s - There is no active fault code on the sensor for the split cylinder position (SEPoS) - The minimum valve of the derivative of the input shaft speed during activation is greater than -500 rpm/s - There is no active fault on any of the gearbox brake valve (VAGB) the sensor for the counter

FUNCTION	PID/SID	FMI J1587	ERROR	CONDITION	SYMPTOM	COMMENT
						shaft speed (SECS) the sensor for the split cylinder position (SEPoS) low air pressure. The following conditions must be fulfilled for one activation of the gearbox brake ***in order to deactivate:*** - The minimum value of the derivative of the countershaft speed during the activation is greater than -1000rpm/s The fault is also deactivated if there is an active fault on the countershaft speed sensor (SESC), on the gearbox brake valve (VAGB), or the split position sensor (SEPoS)
Gears 1/R engagement system	**PSID25**	FMI0	Unintentional disengagement of 1:st gear	***Conditions to set the fault code:*** -The 1/R cylinder leaves the 1:st position -The 1:st cylinder valves are inactive	Yellow lamp is sent Loss of torque	***Detailed conditions to activate/deactivate*** The following conditions must be fulfilled three times (only one time if the fault code filter is switched OFF) in a row in order to set the fault code: (engagement of another gear will reset the count) - The 1/R cylinder position indicates that the 1/R gear leaves the 1:st position - The 1:st cylinder valves are inactive - There is no active fault on any of the sensor for the position of the 1/R cylinder (SEPo1R) the valve for shift to 1:st gear the valve for shift to reverse gear - There is no active fault code for low air pressure *Note: T*he fault will always have the state inactive. Check the fault count and last occurrence to get more information.
Gears 1/R engagement system		FMI1	Unintentional disengagement of reverse gear	***Conditions to set the fault code:*** -The 1/R gear leaves the reverse position -The 1/R cylinder valves are inactive	Yellow lamp is sent Loss of torque	***Detailed conditions to activate/deactivate*** The following conditions must be fulfilled three times (only one time if the fault code-filter is switched OFF) in a row in order to set the fault code: (engagement of another gear will reset the count) - The 1/R cylinder position indicates that the 1/R gear leaves the reverse position - The 1/R cylinder valves are inactive - There is no active fault on any of the sensor for the position of the 1/R cylinder

FUNCTION	PID/SID	FMI J1587	ERROR	CONDITION	SYMPTOM	COMMENT
						(SEPo1R) the valve for shift to 1:st gear the valve for shift to reverse gear - There is no active fault code for low air pressure *Note: T*he fault will always have the state inactive. Check the fault count and last occurrence to get more information.
Gears 1/R engagement system		FMI2	Unintentional disengagement of neutral gear (1:st and reverse gear cylinder)	***Conditions to set the fault code:*** -The 1/R gear leaves the neutral position -The 1/R cylinder valves are inactive	Yellow lamp is sent Loss of torque	***Detailed conditions to activate/deactivate*** The following conditions must be fulfilled three times (only one time if the fault code-filter is switched OFF) in a row in order to set the fault code: (engagement of another gear will reset the count) - The 1/R cylinder position indicates that the 1/R gear leaves the neutral position - The 1/R cylinder valves are inactive - There is no active fault on any of the sensor for the position of the 1/R cylinder (SEPo1R) the valve for shift to 1:st gear the valve for shift to reverse gear - There is no active fault code for low air pressure *Note: T*he fault will always have the state inactive. Check the fault count and last occurrence to get more information.
Gears 1/R engagement system		FMI11	Blocked engagement of 1:st gear	***Conditions to set the fault code:*** -The 1:st gear can not engage -There is no active fault code on the SEPo1R -There is no active fault code for low air pressure -There is no active fault code on any of the 1:st and reverse gear cylinder valves	Yellow lamp is sent Loss of torque The 1:st gears will not be selected by the system for a short while. After five successful gear changes a new attempt to use 1:st gear may be made	***Detailed conditions to activate/deactivate*** The following conditions must be fulfilled three times (only one time if the fault code-filter is switched OFF) in a row in order to set the fault code:(engagement of another gear will reset the count) - The valve for reaching 1:st gear is activated for at least 0.8s - The 1/R cylinder position sensor indicates that 1:st position is not engaged - There is no active fault on any of the 1/R position sensor (SEPo1R) the valve for shift to 1:st gear the valve for shift to reverse gear - There is no active fault code for low air pressure The fault is deactivated if any of the following conditions are fulfilled:

FUNCTION	PID/SID	FMI J1587	ERROR	CONDITION	SYMPTOM	COMMENT
						- The 1/R position sensor indicates that 1:st position is engaged - There is an active fault code on any of the 1/R position sensor (SEPo1R) the valve for shift to 1:st gear the valve for shift to reverse gear
Gears 1/R engagement system		FMI12	Blocked engagement of reverse gear	***Conditions to set the fault code:*** -The reverse gear can not engage	Yellow lamp is sent The R gear can not engage, but the system will try to engage it as long as the gearlever is in the reverse position	***Detailed conditions to activate/deactivate*** The following conditions must be fulfilled three times (only one time if the fault code filter is switched OFF) in a row in order to set the fault code: (engagement of another gear will reset the count) - The valve for reaching the reverse gear is activated for at least 0.8s - The 1/R cylinder position sensor indicates that R position is not engaged - There is no active fault on any of the 1/R position sensor (SEPo1R) the valve for shift to 1:st gear the valve for shift to reverse gear - There is no active fault code for low air pressure. The fault is deactivated if any of the following conditions are fulfilled: - The 1/R position sensor indicates that R position is engaged - There is an active fault code on any of the 1/R position sensor (SEPo1R) the valve for shift to 1:st gear the valve for shift to reverse gear
Gears 1/R engagement system		FMI7	Blocked engagement of neutral gear (1:st and reverse gear cylinder)	***Conditions to set the fault code:*** -The neutral gear (1:st and reverse gear cylinder) can not engage	Yellow lamp is sent	***Detailed conditions to activate/deactivate*** The following conditions must be fulfilled three times (only one time if the fault code-filter is switched OFF) in a row in order to set the fault code: (engagement of another gear will reset the count) - The valve for reaching the reverse gear is activated for at least 0.8s - The 1/R cylinder position sensor indicates that neutral position is not engaged - There is no active fault code on any of the 1/R position sensor (SEPo1R) the valve for shift to 1:st gear the valve for shift to

FUNCTION	PID/SID	FMI J1587	ERROR	CONDITION	SYMPTOM	COMMENT
						reverse gear - There is no active fault code for low air pressure The fault is deactivated if any of the following conditions are fulfilled: - The 1/R position sensor indicates that neutral position is engaged - There is an active fault code on any of the 1/R position sensor (SEPo1R) the valve for shift to 1:st gear the valve for shift to reverse gear
Gears 2/3 engagement system	**PSID26**	FMI0	Unintentional disengagement of 2:nd gear	***Conditions to set the fault code:*** -The 2/3 cylinder position indicates that the 2/3 gear leaves the 2:nd position - The 2:nd cylinder valves are inactive	Yellow lamp is sent Loss of torque	***Detailed conditions to activate/deactivate*** The following conditions must be fulfilled three times (only one time if the fault code-filter is switched OFF) in a row in order to set the fault code: (engagement of another gear will reset the count) - The 2/3 cylinder position indicates that the 2/3 gear leaves the 2:nd position - The 2:nd cylinder valves are inactive - There is no active fault on any of the sensor for the position of the 2/3 cylinder (SEPo23) the valve for shift to 2:nd gear the valve for shift to 3:rd gear - There is no active fault code for low air pressure *Note:* The fault will always have the state inactive. Check the fault count and last occurrence to get more information.
Gears 2/3 engagement system		FMI1	Unintentional disengagement of 3:rd gear	***Conditions to set the fault code:*** -The 2/3 cylinder leaves the 3:rd position - The 3:rd cylinder valves are inactive	Yellow lamp is sent Loss of torque	***Detailed conditions to activate/deactivate*** The following conditions must be fulfilled three times (only once if the fault code-filter is switched OFF) in a row in order to set the fault code: (engagement of another gear will reset the count) - The 2/3 cylinder position indicates that the 2/3 gear leaves the 3:rd position - The 3:rd cylinder valves are inactive - There is no active fault on any of the sensor for the position of the 2/3 cylinder (SEPo23) the valve for shift to 2:nd gear the valve for shift to 3:rd gear - There is no active fault code for low air pressure

FUNCTION	PID/SID	FMI J1587	ERROR	CONDITION	SYMPTOM	COMMENT
						Note: The fault will always have the state inactive. Check the fault count and last occurrence to get more information.
Gears 2/3 engagement system		FMI2	Unintentional disengagement of neutral gear (2:nd and 3:rd gear cylinder)	***Conditions to set the fault code:*** -The 2/3 cylinder leaves the neutral position - The 2/3 cylinder valves are inactive	Yellow lamp is sent	***Detailed conditions to activate/deactivate*** The following conditions must be fulfilled three times (only once if the fault code-filter is switched OFF) in a row in order to set the fault code: (engagement of another gear will reset the count) - The 2/3 cylinder position indicates that the 2/3 gear leaves the neutral position - The 2/3 cylinder valves are inactive - There is no active fault on any of the sensor for the position of the 2/3 cylinder (SEPo23) the valve for shift to 2:nd gear the valve for shift to 3:rd gear - There is no active fault code for low air pressure *Note:* The fault will always have the state inactive. Check the fault count and last occurrence to get more information.
Gears 2/3 engagement system		FMI11	Blocked engagement of 2:nd gear	***Conditions to set the fault code:*** -The 2:nd gear can not engage	Yellow lamp is sent Loss of torque The 2:nd gear will not be selected by the system for a short while. After five successful gearshifts a new attempt to use 2:nd gear may be made	***Detailed conditions to activate/deactivate*** The following conditions must be fulfilled three times (only once if the fault code-filter is switched OFF) in a row in order to set the fault code: (engagement of another gear will reset the count) - The valve for reaching 2:nd gear is activated for at least 0.8s - The 2/3 cylinder position sensor indicates that 2:nd position is not engaged - There is no active fault on any of the 2/3 position sensor (SEPo23) the valve for shift to 2:nd gear the valve for shift to 3:rd gear - There is no active fault code for low air pressure *The fault is deactivated if any of the following conditions are fulfilled:* - The 2/3 position sensor indicates that 2:nd 2;nd position is engaged - There is an active fault code on any of the 2/3 position sensor (SEPo23) the valve for shift to 2:nd

FUNCTION	PID/SID	FMI J1587	ERROR	CONDITION	SYMPTOM	COMMENT
						gear the valve for shift to 3:rd gear
Gears 2/3 engagement system		FMI12	Blocked engagement of 3:rd gear	***Conditions to set the fault code:*** -The 3:rd gear can not engage	Yellow lamp is sent Loss of torque The 3:rd gear will not be selected by the system for a short while. After five successful gearshifts a new attempt to use 3:rd gear may be made	***Detailed conditions to activate/deactivate*** The following conditions must be fulfilled three times (only once if the fault code-filter is switched OFF) in a row in order to set the fault code: (engagement of another gear will reset the count) - The valve for reaching 3:rd gear is activated for at least 0.8s - The 2/3 cylinder position sensor indicates that 3:rd position is not engaged - There is no active fault on any of the 2/3 position sensor (SEPo23) the valve for shift to 2:nd gear the valve for shift to 3:rd gear - There is no active fault code for low air pressure *The fault is deactivated if any of the following conditions are fulfilled:* - The 2/3 position sensor indicates that 3:rd position is engaged - There is an active fault code on any of the 2/3 position sensor (SEPo23) the valve for shift to 2:nd gear the valve for shift to 3:rd gear
Gears 2/3 engagement system		FMI7	Blocked engagement of neutral gear (2:nd and 3:rd gear cylinder)	***Conditions to set the fault code:*** -The neutral gear (2:nd 3:rd gear cylinder) can not engage	Yellow lamp is sent	***Detailed conditions to activate/deactivate*** The following conditions must be fulfilled three times (only once if the fault code-filter is switched OFF) in a row in order to set the fault code: (engagement of another gear will reset the count) - The valve for reaching gear (2:nd and 3:rd gear cylinder) is activated for at least 0.8s - The 2/3 cylinder position sensor indicates that neutral position is not engaged - There is no active fault code on any of the 2/3 position sensor (SEPo23) the valve for shift to 2:nd gear the valve for shift to 3:rd gear - There is no active fault code for low air pressure *The fault is deactivated if any of the following conditions are fulfilled:* - The 2/3 position sensor

FUNCTION	PID/SID	FMI J1587	ERROR	CONDITION	SYMPTOM	COMMENT
						indicates that neutral position is engaged - There is an active fault code on any of the 2/3 position sensor (SEPo23) the valve for shift to 2:nd gear the valve for shift to 3:rd gear
J1708/J1587	**SID250**	FMI9	Abnormal update rate	***Activate:*** The FMI shall be set if any of the messages* have not been received on the bus for 30s ***Deactivate:*** The FMI shall be cleared if all messages* are sent on the bus *PID190, PID85 and PPID212	Yellow lamp is sent Fault codes can not be read On-vehicle tests can not be performed	
J1939	**SID231**	FMI2	Data erratic, intermittent or incorrect	***Active:*** This FMI shall be set if the CAN transceiver signals "bus-off" ***Deactivate:*** FMI cleared if CAN-transceiver does not signal "bus-off	Yellow lamp is sent Much reduced gear selection and gear change performance	
Missing data on J1939 form BECU	**PSID204**	FMI8	Abnormal frequency, pulse width or period	***Activate:*** The FMI shall be set if the wheel speeds from the BECU (MID136) are incorrect ***Deactivate:*** The FMI shall be cleared if the wheel speeds from the BECU (MID136) are correct	Yellow lamp Automatic gear selection enters backup mode with gear changes only at certain vehicle speeds	
Missing data on J1939 form BECU		FMI9	Abnormal update rate	***Activate:*** The FMI shall be set if message WSI from BECU (MID136) is not received within 1s ***Deactivate:*** The FMI shall be cleared if message WSI is received at normal rate	Yellow lamp Automatic gear selection enters backup mode with gear changes only at certain vehicle speeds	
Missing data on J1939 form GECU	**PSID207**	FMI9	Abnormal update rate	***Activate:*** The FMI shall be set if message VP6 from GECU (MID223) is not received within 1s ***Deactivate:*** The FMI shall be cleared if message VP6 is received at normal rate	Yellow lamp Slow response on manual gear changes and slow response when buttons are pressed on the gear lever.	

FUNCTION	PID/SID	FMI J1587	ERROR	CONDITION	SYMPTOM	COMMENT
Missing data on J1939 from the adaptive cruise control	**PSID211**	FMI9	Abnormal update rate	***Activate:*** The FMI shall be set if message ACC1 from ACC (MID219) is not received within 1s, and ACC is installed ***Deactivate:*** The FMI shall be cleared if message ACC1 is received at normal rate	Yellow lamp The retarder ACC function does not work	
Missing data on J1939 from the EMS	**PSID200**	FMI9	Abnormal update rate	***Activate:*** The FMI shall be set if message EEC1 from EECU is not received within 200ms ***Deactivate:*** The FMI shall be cleared if message EEC1 is received at normal rate	Yellow lamp is sent If there is no POWERTRAIN_CAN, automatic gear selection enters backup mode with gear changes only at certain vehicle speeds If there is no Powertrain_CAN and the engine does not receive any messages from the TECU, the gear changes will be slow	
Missing data on J1939 from the light control module (LCM)	**PSID210**	FMI9	Abnormal update rate	***Activate:*** The FMI shall be set if message VP37 from LCM (MID216) is not received within 10s ***Deactivate:*** The FMI shall be cleared if message VP37 is received at normal rate	Yellow lamp The start gear might be wrong Automatic gear selection performance might be reduced a certain time after start Automatic gear selection performance might be reduced a certain time after a trailer has been connected/disconnected	
Missing data on J1939 from the suspension ECU (ECS)	**PSID208**	FMI9	Abnormal update rate	***Activate:*** The FMI shall be set if message VW from ECS (MID150) is not received within 10s, and ECS is installed	Yellow lamp The start gear might be wrong after loading and unloading	

FUNCTION	PID/SID	FMI J1587	ERROR	CONDITION	SYMPTOM	COMMENT
				Deactivate: The FMI shall be cleared if message VW is received at normal rate		
Missing data on J1939 from VECU	**PSID201**	FMI8	Abnormal frequency, pulse width or period	***Activate:*** The FMI shall be set if the acc pedal pos or service brake-switch from the VECU (MID144) is incorrect ***Deactivate:*** The FMI shall be cleared if the acc pedal pos and service brake-switch from the VECU (MID144) are correct	Yellow lamp If pedal pos is undefined, automatic gear selection enters backup mode with gear changes only at certain vehicle speeds If pedal pos is undefined, gearbox comfort at start and marshalling might be reduced If service brake is undefined, automatic gear selection enters backup mode with gear changes only at certain vehicle speeds	
Missing data on J1939 from VECU		FMI9	Abnormal update rate	***Activate:*** The FMI shall be set if message VP2 from VECU (MID144) is not received within 100ms ***Deactivate:*** The FMI shall be cleared if message VP2 is received at normal rate	Yellow lamp Automatic gear selection enters backup mode with gear changes only at certain vehicle speeds Gearbox comfort at start and marshalling might be reduced	
Powertrain CAN	**PSID232**	FMI2	Data erratic, intermittent or incorrect	***Activate****:* The FMI shall be set if the CAN transceiver signals "busOFF" ***Deactivate****:* The FMI shall be cleared if the CAN-transceiver does not signal "busOFF"	Yellow lamp is sent Reduced automatic gear selection and gear change performance	This fault code is only valid for vehicles where a Pwertrain_CAN link exist between the TECU and the engine.
Powertrain CAN		FMI9	Abnormal update rate	***Activate:*** The FMI shall be set if message VP24/MID128 is not received	Yellow lamp is sent Reduced automatic gear selection	

FUNCTION	PID/SID	FMI J1587	ERROR	CONDITION	SYMPTOM	COMMENT
				within 100ms ***Deactivate:*** The FMI shall be cleared if message VP24/MID128 is received at normal rate	and gear change performance	
Program memory	**SID240**	FMI2	Data erratic, intermittent or incorrect	***Activate:*** Flash CS error or program code missing ***Deactivate***: Flash CS OK	Yellow lamp is sent Cranking is inhibited Engine can not start	
Range engagement system	**PSID24**	**FMI0**	Unintentional disengagement of low range	***Conditions to set the fault code:*** -The range cylinder leaves the low range position -The range cylinder valves are inactive	Yellow lamp is sent Loss of torque	***Detailed conditions to activate/deactivate***: The following conditions must be fulfilled three times (only once if the fault code-filter is switched OFF) in a row, in order to set the fault code: (engagement of another gear will reset the count) - The range cylinder position indicates that range gear leaves the low range position - The range cylinder valves are inactive - There is no active fault on any of the sensor for the position of the range cylinder (SEPoR) the valve for shift to high range the valve for shift to low range - There is no active fault code for low air pressure note: The fault will always have the state inactive. Check fault-count and last occurrence to get more information
Range engagement system		FMI1	Unintentional disengagement of high range	***Conditions to set the fault code:*** -The range cylinder leaves the high range position -The range cylinder valves are inactive	Yellow lamp is sent Loss of torque	***Detailed conditions to activate/deactivate***: The following conditions must be fulfilled three times (only once if the fault code-filter is switched OFF) in a row, in order to set the fault code: (engagement of another gear will reset the count) - The range cylinder position indicates that the range gear leaves the high range position - The range cylinder valves are inactive - There is no active fault on any of the sensor for the position of the range cylinder (SEPoR) the valve for shift to high range the

FUNCTION	PID/SID	FMI J1587	ERROR	CONDITION	SYMPTOM	COMMENT
						valve for shift to low range - There is no active fault code for low air pressure *note*: The fault will always have the state inactive. Check fault-count and last occurrence to get more information
Range engagement system		FMI11	Blocked engagement of low range	***Conditions to set the fault code:*** -The low range gear can not engage	Yellow lamp is sent Loss of torque	***Detailed conditions to activate/deactivate***: The following conditions must be fulfilled three times (only once if the fault code-filter is switched OFF) in a row, in order to set the fault code: (engagement of another gear will reset the count) - The low range can not engage within 3.8s - The gearbox oil temperature is above 10dgC - There is no active fault code on any of the sensor for the position of the range cylinder (SEPoR) low air pressure the range cylinder valves ***The fault is deactivated if any of the following conditions are fulfilled:*** - The range cylinder position sensor indicates that low range is engaged - The gearbox oil temperature is below 10dgC - There is an active fault on any of the sensor for the position of the range cylinder (SEPoR) low air pressure the range cylinder valves
Range engagement system		FMI12	Blocked engagement of high range	***Conditions to set the fault code:*** -The high range gear can not engage	Yellow lamp is sent Loss of torque	***Detailed conditions to activate/deactivate***: The following conditions must be fulfilled three times (only once if the fault code-filter is switched OFF) in a row, in order to set the fault code: (engagement of another gear will reset the count) - The high range gear can not engage within 3.8s - The gearbox oil temperature is above 10dgC - There is no active fault on any of the range position sensor (SEPoR) low air pressure the range cylinder valves - There is no active fault code for low air pressure ***The fault is deactivated if***

FUNCTION	PID/SID	FMI J1587	ERROR	CONDITION	SYMPTOM	COMMENT
						any of the following conditions are fulfilled: - The range cylinder position sensor indicates that high range is engaged - The gearbox oil temperature is below 10dgC - There is an active fault code on any of the range position sensor (SEPoR) low air pressure the range cylinder valves
Sensor for the 1:st and reverse gear cylinder (SEPo1R)	**PPID10**	FMI2	Data erratic, intermittent or incorrect	***Activate:*** The position sensor is distributing a temperature-signal from the sensor ASIC, if the value from this sensor deviates too much this fault code is triggered. ***Deactivate:***	Yellow lamp is sent Slow gear changes	***Detailed conditions to activate / deactivate:*** ***Activate:*** The position sensor is distributing a temperature-signal from the sensor ASIC, if the value from this sensor deviates too much this fault code is triggered, the diagnostics are based upon cross-reference between all four position-sensors. This means that if the value differs more than +/- 20dgC from the average-temp, if the temperature is out of boundary -60dgC to +160dgC or if the temperature changes at a rate higher than 10dgC during 15s, then this fault code is set. ***Deactivate:*** Fault code stays until a clear DTC command is received
Sensor for the 1:st and reverse gear cylinder (SEPo1R)		FMI3	Voltage above normal or shorted high	***Activate:*** Status from the ASIC is short circuit to Ubatt ***Deactivate***: Status is OK	Yellow lamp is sent Slow gear changes	
Sensor for the 1:st and reverse gear cylinder (SEPo1R)		FMI5	Current below normal or open circuit	***Activate:*** Status from the ASIC is open circuit ***Deactivate:*** Status is OK	Yellow lamp is sent Slow gear changes	
Sensor for the 1:st and reverse gear cylinder (SEPo1R)		FMI6	Current above normal or grounded circuit	***Activate:*** Status from the ASIC is short circuit to Gnd ***Deactivate:*** Status is OK	Yellow lamp is sent Slow gear changes	
Sensor for the 1:st and reverse gear cylinder (SEPo1R)		FMI13	Calibration value out of range	***Activate:*** The Checksum of the NVRAM is not correct, or the sensor has not been calibrated ***Deactivate:*** Sensor signal has been successfully calibrated	Yellow lamp is sent Cranking is inhibited Engine can not start	

FUNCTION	PID/SID	FMI J1587	ERROR	CONDITION	SYMPTOM	COMMENT
Sensor for the inclination of the gearbox (SEIG)	**PPID140**	FMI2	Data erratic, intermittent or incorrect	***Activate:*** 1. The sensor signal is above or below normal range and 2. The vehicle has been standing still for a specific time ***Deactivate:*** The sensor signal is in the normal range	Yellow lamp is sent The start gear might be wrong Gear selection performance might be reduced Downhill and uphill gear change performance may be reduced	
Sensor for the PCB temperature	**PPID55**	FMI0	Data valid but above normal operational range	***Activate***: temp above 125dgC ***Deactivate:*** temp below 125dgC	Yellow lamp is sent	
Sensor for the position of the 2:nd and 3:rd gear cylinder (SEPo23)	**PPID11**	FMI2	Data erratic, intermittent or incorrect	***Activate:*** The position sensor is distributing a temperature-signal from the sensor ASIC, if the value from this sensor deviates too much this fault code is triggered. ***Deactivate:***	Yellow lamp is sent Slow gear changes	***Detailed conditions to activate / deactivate:*** ***Activate:*** The position sensor is distributing a temperature-signal from the sensor ASIC, if the value from this sensor deviates too much this fault code is triggered, the diagnostics are based upon cross-reference between all four position-sensors. This means that if the value differs more than +/- 20°C from the average-temp, if the temperature is out of boundary -60°C to +160°C or if the temperature changes at a rate higher than 10°C during 15s, then this fault code is set. ***Deactivate:*** Fault code stays until a clear DTC command is received
Sensor for the position of the 2:nd and 3:rd gear cylinder (SEPo23)		FMI3	Voltage above normal or shorted high	***Activate:*** Status from the ASIC is short circuit to Ubatt ***Deactivate:*** Status is OK	Yellow lamp is sent Slow gear changes	
Sensor for the position of the 2:nd and 3:rd gear cylinder (SEPo23)		FMI5	Current below normal or open circuit	***Activate***: Status from the ASIC is open circuit ***Deactivate:*** Status is OK	Yellow lamp is sent Slow gear changes	
Sensor for the position of the 2:nd and 3:rd gear cylinder (SEPo23)		FMI6	Current above normal or grounded circuit	***Activate***: Status from the ASIC is short circuit to Gnd ***Deactivate***: Status is OK	Yellow lamp is sent Slow gear changes	

FUNCTION	PID/SID	FMI J1587	ERROR	CONDITION	SYMPTOM	COMMENT
Sensor for the position of the 2:nd and 3:rd gear cylinder (SEPo23)		FMI13	Calibration value out of range	***Activate:*** The Checksum of the NVRAM is not correct, or the sensor has not been calibrated ***Deactivate:*** Sensor signal has been successfully calibrated	Yellow lamp is sent Cranking is inhibited Engine can not start	
Sensor for the position of the range (SEPoR)	**PID31**	FMI2	Data erratic, intermittent or incorrect	***Activate:*** The position sensor is distributing a temperature-signal from the sensor ASIC, if the value from this sensor deviates too much this fault code is triggered. ***Deactivate:***	Yellow lamp is sent Slow gear changes	***Detailed conditions to activate / deactivate:*** ***Activate:*** The position sensor is distributing a temperature-signal from the sensor ASIC, if the value from this sensor deviates too much this fault code is triggered, the diagnostics are based upon cross-reference between all four position-sensors. This means that if the value differs more than +/- 20°C from the average-temp, if the temperature is out of boundary -60°C to +160°C or if the temperature changes at a rate higher than 10°C during 15s, then this fault code is set. ***Deactivate:*** Fault code stays until a clear DTC command is received
Sensor for the position of the range (SEPoR)		FMI3	Voltage above normal or shorted high	***Activate***: Status from the ASIC is short circuit to Ubatt ***Deactivate***: Status is OK	Yellow lamp is sent Slow gear changes	
Sensor for the position of the range (SEPoR)		FMI5	Current below normal or open circuit	***Activate***: Status from the ASIC is open circuit ***Deactivate***: Status is OK	Yellow lamp is sent Slow gear changes	
Sensor for the position of the range (SEPoR)		FMI6	Current above normal or grounded circuit	***Activate***: Status from the ASIC is short circuit to Gnd ***Deactivate***: Status is OK	Yellow lamp is sent Slow gear changes	
Sensor for the position of the range (SEPoR)		FMI13	Calibration value out of range	***Activate***: The Checksum of the NVRAM is not correct, or the sensor has not been calibrated ***Deactivate***: Sensor signal has been successfully calibrated	Yellow lamp is sent Cranking is inhibited Engine can not start	
Sensor for the position of the Split (SEPoS)	**PID32**	FMI2	Data erratic, intermittent or incorrect	***Activate:*** The position sensor is distributing a temperature-signal from the	Yellow lamp is sent Slow gear changes	***Detailed conditions to activate / deactivate:*** ***Activate:*** The position sensor is distributing a temperature-signal from the

FUNCTION	PID/SID	FMI J1587	ERROR	CONDITION	SYMPTOM	COMMENT
				sensor ASIC, if the value from this sensor deviates too much this fault code is triggered. ***Deactivate:***		sensor ASIC, if the value from this sensor deviates too much this fault code is triggered, the diagnostics are based upon cross-reference between all four position-sensors. This means that if the value differs more than +/- 20°C from the average-temp, if the temperature is out of boundary -60°C to +160°C or if the temperature changes at a rate higher than 10°C during 15s, then this fault code is set. ***Deactivate:*** Fault code stays until a clear DTC command is received
Sensor for the position of the Split (SEPoS)		FMI3	Voltage above normal or shorted high	***Activate:*** Status from the ASIC is short circuit to Ubatt ***Deactivate:*** Status is OK	Yellow lamp is sent Slow gear changes	
Sensor for the position of the Split (SEPoS)		FMI5	Current below normal or open circuit	***Activate***: Status from the ASIC is open circuit ***Deactivate***: Status is OK	Yellow lamp is sent Slow gear changes	
Sensor for the position of the Split (SEPoS)		FMI6	Current above normal or grounded circuit	***Activate:*** Status from the ASIC is short circuit to Gnd. ***Deactivate***: Status is OK	Yellow lamp is sent Slow gear changes	
Sensor for the position of the Split (SEPoS)		FMI13	Calibration value out of range	***Activate:*** The Checksum of the NVRAM is not correct, or the sensor has not been calibrated ***Deactivate:*** Sensor signal has been successfully calibrated	Yellow lamp is sent Cranking is inhibited Engine can not start	
Sensor for the pressure of the supply air (SEPrSA)	**PID37**	FMI0	Data vaild but above normal operational range	***Activate:*** 1. Sensor signal is in normal range 2. Pressure is above 10.0 [bar] ***Deactivate:*** 1. Sensor signal is in normal range 2. Pressure is below 10.0 [bar]	Yellow lamp is sent reduced clutch performance	
Sensor for the pressure of the supply air (SEPrSA)		FMI1	Data valid but below operational range	***Activate:*** 1. Sensor signal is in normal range 2. Pressure is below 5.0 [bar] ***Deactivate:*** 1. Sensor signal is in normal range 2. Pressure is above 5.0 [bar]	Yellow lamp is sent. The symbol for compressed air, gearbox is sent. Gear changes may be absent. Reduced clutch performance	

FUNCTION	PID/SID	FMI J1587	ERROR	CONDITION	SYMPTOM	COMMENT
Sensor for the pressure of the supply air (SEPrSA)		FMI3	Voltage above normal or shorted high	***Activate:*** The sensor signal is above normal range ***Deactivate:*** The sensor signal is in normal range	Yellow lamp is sent	
Sensor for the pressure of the supply air (SEPrSA)		FMI5	Current below normal or open circuit	***Activate:*** The sensor signal is below normal range ***Deactivate:*** The sensor signal is in normal range	Yellow lamp is sent	
Sensor for the speed on the counter shaft (SESC)	**PID161**	FMI1	Data valid but below operational range	***Activate:*** 1. The sensor signal is within normal range and, 2. The counter shaft speed differs from both the main shaft speed (SESM) and the vehicle speed received from the vehicle ECU when the counter shaft is rotating ***Deactivate:*** 1. The sensor signal is within normal range 2. The counter shaft speed and the main shaft speed are equal when the counter shaft is rotating	Yellow lamp is sent Reduced gear change performance Gearbox brake up shifts can not be used Slip point can not be updated which will give reduced performance at starts Start gear engagement only possible at standstill and when the vehicle speed is high enough to synchronize the main box with the engine	Detailed condition to activate: The following conditions must be fulfilled for a time of 2.0s in order to activate: A gear (not neutral) is engaged in the gearbox The value of the input shaft speed calculated from the main shaft speed sensor (SESM) is more than 300rpm, or the value of the input shaft speed calculated from the counter shaft speed sensor (SESC) is more than 300rpm -The values of the input shaft speed calculated from the counter shaft speed sensor (SESC) and the main shaft speed sensor (SESM) differ more than 50rpm -The values of the input shaft speed calculated from the counter shaft speed sensor (SESC) and the vehicle speed received from the vehicle ECU differ more than 30rpm -The values of the input shaft speed calculated from the main shaft speed sensor (SESM) and the vehicle speed received from the vehicle ECU differ less than 30rpm -There is no active fault on any of -The sensor for the main shaft speed (SESM) -The sensor for the position of the split cylinder (SEPoS) -The sensor for the position of the shift cylinder1R (SEPo1R) -The sensor for the position of the shift cylinder 23 (SEPo23) -The sensor for the position of teh range cylinder (SEPoR)

FUNCTION	PID/SID	FMI J1587	ERROR	CONDITION	SYMPTOM	COMMENT
						The fault is deactivated if the following conditions are fulfilled for a time of 2.0s: -A gear (not neutral) is engaged in the gearbox -The value of the input shaft speed calculated from the countershaft speed sensor (SESC) is more than 300rpm, or -the value of the input shaft speed calculated from the main shaft speed sensor (SESM) is more than 300rpm -The values of the input shaft speed calculated from the countershaft speed sensor (SESC) and the main shaft speed sensor (SESM) differ less than 50rpm The fault is also deactivated if the following conditions are fulfilled for a time of 2.0s: -A neutral gear is engaged in the gearbox -The engine speed is above 400rpm -The clutch is engaged -Direct or indirect split is engaged -The values of the input shaft speed is calculated from the counter shaft speed sensor (SESC) and the engine speed received from the engine ECU differ less than 50 rpm The fault is also deactivated if the signal from the countershaft speed sensor (SESC) is not within normal range or if there is an active fault code on any of: -The clutch position sensor (SEPoC) -The sensor for the position of the split cylinder (SEPoS) -The sensor for the position of the shift cylinder1R (SEPo1R) -The sensor for the position of the shift cylinder 23 (SEPo23) -The sensor for the position of teh range cylinder (SEPoR)
Sensor for the speed on the counter shaft (SESC)		FMI4	Voltage below normal or shorted low	***Activate:*** The sensor signal is below normal range. ***Deactivate:*** The sensor signal is within normal range	Yellow lamp is sent Reduced gear change performance Gearbox brake up shifts can not be used	

FUNCTION	PID/SID	FMI J1587	ERROR	CONDITION	SYMPTOM	COMMENT
					Slip point cannot be updated which will give reduced performance at starts Start gear engagement only possible at standstill and when the vehicle speeds is high enough to synchronize the main box with the engine	
Sensor for the speed on the counter shaft (SESC)		FMI5	Current below normal or open circuit	***Activate:*** The sensor signal is above normal range ***Deactivate:*** The sensor signal is within normal range	Yellow lamp is sent Reduced gear change performance Gearbox brake up shifts can not be used Slip point cannot be updated which will give reduced performance at starts Start gear engagement only possible at standstill and when the vehicle speed is high enough to synchronize the main box with the engine	
Sensor for the speed on the main shaft (SESM)	**PID160**	FMI1	Data valid but below operational range	***Activate:*** 1. Sensor signal is within normal range and 2. The main shaft speed differs from both the value of the countershaft speed and the vehicle speed received from the vehicle ECU ***Deactivate:*** *1. Sensor signal is within normal range and,* *2. The main shaft speed and the counter shaft speed are equal*	Yellow lamp is sent Reduced gear change performance Reduced gear change comfort	Detailed condition to activate: The following conditions must be fulfilled for a time of 2.0s in order to activate: A gear (not neutral) is engaged in the gearbox The value of the input shaft speed calculated from the main shaft speed sensor (SESM) is more than 300rpm, or the value of the input shaft speed calculated from the counter shaft speed sensor (SESC) is more than 300rpm. The values of the input shaft speed calculated from the main shaft speed sensor (SESM) and the counter shaft speed sensor

FUNCTION	PID/SID	FMI J1587	ERROR	CONDITION	SYMPTOM	COMMENT
				when the main shaft is rotating		(SESC) differ more than 50rpm The values of the input shaft speed calculated from the main shaft speed sensor (SESM) and the vehicle speed received from the vehicle ECU differ more than 30rpm. The values of the input shaft speed calculated from the counter shaft speed sensor (SESC) and the vehicle speed received from the vehicle ECU differ less than 30rpm. There is no active fault on any of the sensor for the countershaft speed (SECS) The sensor for the position of the split cylinder (SEPoS) The sensor for the position of the shift cylinder1R (SEPo1R) The sensor for the position of the shift cylinder 23 (SEPo23) The sensor for the position of teh range cylinder (SEPoR) The following conditions must be fulfilled for a time of 2.0s in order to deactivate: A gear (not neutral) is engaged in the gearbox The value of the input shaft speed calculated from the main shaft speed sensor (SESM) is more than 300rpm, or the value of the input shaft speed calculated from the counter shaft speed sensor (SESC) is more than 300rpm. The value of the input shaft speed calculated from the main shaft speed sensor (SESM) and the counter shaft speed sensor (SESC) differ less than 50rpm. The fault is also deactivated if The sensor signal (SESM) is not within normal range. There is an active fault on any of The sensor for the countershaft speed (SECS) The sensor for the position of the split cylinder (SEPoS) The sensor for the position of the shift cylinder1R (SEPo1R) The sensor for the position of the shift cylinder 23 (SEPo23) The sensor for the position of teh range cylinder (SEPoR)

FUNCTION	PID/SID	FMI J1587	ERROR	CONDITION	SYMPTOM	COMMENT
Sensor for the speed on the mainshaft (SESM)		FMI2	Data erratic, intermittent or incorrect	***Activate:*** The sensor indicates wrong traveling direction ***Deactivate:*** The sensor indicates correct traveling direction	Yellow lamp is sent Reduced gear change performance	Detailed conditions to activate The following conditions must be fulfilled for a time of 2.0s in order to activate: The input shaft speed calculated from the countershaft speed sensor (SESC) is above 300 rpm and the clutch is engaged or The input shaft speed calculated from the countershaft speed sensor (SECS) is above 600 rpm, the clutch position is more engaged than the slip point and the engine speed is received from the engine ECU and above 600rpm. A forward gear is engaged in the gearbox and the main shaft speed sensor (SESM) indicates reverse movement or a reverse gear is engaged and the main shaft speed sensor (SESM) indicates forward movement There is no other active fault on the sensor for the main shaft speed (SESM) There is no active fault on any of: -The sensor for the countershaft speed (SECS) -The sensor for the clutch position (SePoC) -The sensor for the position of the split cylinder (SePoS) -The sensor for the position of the shift cylinder (1R SEPo1R) -The sensor for the position of the shift cylinder (23 SEPo23) -The sensor for the range cylinder (SEPoR) The fault is deactivated if the following conditions are fulfilled for a time of 2,0s: The input shaft speed calculated from the counter shaft speed sensor (SECS) is above 300 rpm and the clutch is engaged or The input shaft speed calculated from the counter shaft speed sensor (SECS) is above 600 rpm, the clutch position is more engaged than the slip point and the engine speed is received from the engine ECU and above 600rpm A forward gear is engaged in the gearbox and the main shaft speed sensor (SESM) indicates forward movement

FUNCTION	PID/SID	FMI J1587	ERROR	CONDITION	SYMPTOM	COMMENT
						or A reverse gear is engaged and the main shaft speed sensor (SESM) indicates reverse movement. The fault is also deactivated if the main shaft speed sensor (SESM) signal is not within normal range, or if there is an active fault on any of the sensors: -The sensor for the countershaft speed (SECS) -The sensor for the clutch position (SePoC) -The sensor for the position of the split cylinder (SePoS) -The sensor for the position of the shift cylinder (1R SEPo1R) -The sensor for the position of the shift cylinder (23 SEPo23) -The sensor for the range cylinder (SEPoR)
Sensor for the speed on the main shaft (SESM)		FMI3	Voltage above normal or shorted high	***Activate***: Signal or supply voltage is above normal range ***Deactivate***: Signal and supply voltage is in normal range.	Yellow lamp is sent Reduced gear change performance Reduced gear change comfort	
Sensor for the speed on the main shaft (SESM)		FMI4	Voltage below normal or shorted low	***Activate:*** Signal and supply voltage is below normal range. ***Deactivate:*** Signal and supply voltage is within normal range	Yellow lamp is sent Reduced gear change performance Reduced gear change comfort	
Sensor for the speed on the main shaft (SESM)		FMI5	Current below normal or open circuit	***Activate: 1.***Signal voltage is below normal range and, 2. Supply voltage is in the normal range ***Deactivate:*** Signal and supply voltage is in the normal range	Yellow lamp is sent Reduced gear change performance Reduced gear change comfort	
Sensor for the temperature of the gearbox oil (SETeGO	**PID177**	FMI0	Data valid but above normal operational range	***Activate low:*** 1.The sensor signal is in normal range 2. Temperature is above 100dgC during 18000s ***Deactivate low:*** 1. The sensor signal is in normal range 2. Temperature is below 100dgC ***Activate medium:*** 1. The	***Low:*** Yellow lamp is sent Symbol for high gearbox oil temperature is lit ***Medium:*** Yellow lamp is sent Symbol for high gearbox oil temperature is	Gearbox oil temperature fault codes are only set if the vehicle has oil temperature sensor functionality installed

FUNCTION	PID/SID	FMI J1587	ERROR	CONDITION	SYMPTOM	COMMENT
				sensor signal is in normal range 2. Temperature above 120dgC during 600s ***Deactivate medium:*** 1. The sensor signal is in normal range 2. Temperature is below 120dgC ***Activate high:*** 1. The sensor signal is in normal range 2. Temperature is above 140dgC during 30s ***Deactivate high:*** 1. The sensor signal is in normal range Temperature is below 140dgC	lit ***High:*** Red lamp is sent Symbol for high gearbox oil temperature is lit	
Sensor for the temperature of the gearbox oil (SETeGO		FMI4	Voltage below normal or shorted low	***Activate:*** The sensor signal is below normal range ***Deactivate:*** The sensor signal is in normal range	Yellow lamp is sent	
Sensor for the temperature of the gearbox oil (SETeGO		FMI5	Current below normal or open circuit	***Activate:*** The sensor signal is above normal range ***Deactivate:*** The sensor signal is in normal range	Yellow lamp is sent	
Sensor position of the clutch (SEPoC and SEPoCINV)	**PID33**	FMI2	Data erratic, intermittent or incorrect	***Activate:*** The difference between clutch positions indicated by the sensor signal (SEPoC) and the inverted sensor signal (SEPoC INV) is to large and both signals is within normal range ***Deactivate:*** The difference between clutch positions indicated by the sensor signal (SEPoC) and the inverted sensor signal (SEPoC INV) is normal	Yellow lamp is sent Reduced clutch performance Reduced gearbox comfort at start and marshalling Gear changes are slow	The PID 33 fault code should not be set if there is an active fault code on the clutch position sensor supply (PPID 54) The clutch position sensor has four connectors: one supply, one ground and two connectors for the sensor signal. With correct input the input voltage of the sensor signal, the inverted sensor signal and the sensor supply, they will follow the nominal relation (Usepoc + Usepoc_inv) / Usepoc5V = 100%
Sensor position of the clutch		FMI3	Voltage above normal or shorted high	***Activate:*** Sensor signal is short circuit to Ubatt or sensor supply,	Yellow lamp is sent Reduced clutch	The PID 33 fault code should not be set if there is an active fault code on the clutch position sensor

FUNCTION	PID/SID	FMI J1587	ERROR	CONDITION	SYMPTOM	COMMENT
(SEPoC and SEPoCINV)				when at least one of the sensor signals is above normal range. ***Deactivate:*** No sensor signal is above normal range	performance Reduced gearbox comfort at start and marshalling Gear changes are slow	supply (PPID 54)
Sensor position of the clutch (SEPoC and SEPoCINV)		FMI5	Current below normal or open circuit	***Activate:*** 1. Open circuit on any of the sensor signals is detected when: one of the sensor signals is within normal range and the other sensor signal is below normal range 2. Open circuit on ground, detected when both the sensor signals are within the normal range and the sum of the sensor signals is above a specific value ***Deactivate: No*** activation condition is no longer fulfilled	Yellow lamp is sent Reduced clutch performance Reduced gearbox comfort at start and marshalling gear changes are slow	The PID 33 fault code should not be set if there is an active fault code on the clutch position sensor supply (PPID 54)
Sensor position of the clutch (SEPoC and SEPoCINV)		FMI12	Faulty device or component	***Activate:*** Both sensor signals are below normal when: 1. Status of the sensor ASIC reports internal fault on the sensor, or 2. Short circuit to Gnd on any of the sensor signals, or 3. Open circuit on supply, or 4. Short circuit between the two sensor signals ***Deactivate:*** Both sensor signals are not below normal level	Yellow lamp is sent Reduced clutch performance Reduced gearbox comfort at start and marshalling gear changes are slow	The PID 33 fault code should not be set if there is an active fault code on the clutch position sensor supply (PPID 54)
Sensor position of the clutch (SEPoC and SEPoCINV)		FMI13	Calibration value out of range	***Activate:*** 1. The CS in NVRAM is not correct 2. The cylinder has not been calibrated ***Deactivate:*** Sensor signal has been successfully calibrated	Yellow lamp is sent Cranking is inhibited Engine can not start	The PID 33 fault code should not be set if there is an active fault code on the clutch position sensor supply (PPID 54)
Slow clutch valves low side (VAS-)	**PSID6**	FMI3	Voltage above normal or shorted high	***Activate:*** The low-side drive is short circuit to Ubatt	Yellow lamp is sent Slow engagement/d	

FUNCTION	PID/SID	FMI J1587	ERROR	CONDITION	SYMPTOM	COMMENT
				Deactivate: The low-side drive is OK	isengagement disabled Reduced clutch performance, especially at start and marshalling	
Slow clutch valves low side (VAS-)		FMI6	Current above normal or grounded circuit	***Activate:*** 1. The low-side drive is short circuit to Gnd and 2. There is no active fault code for short circuit to Gnd on VASE or VASD ***Deactivate: T***he low-side drive is OK	Yellow lamp is sent Slow engagement /disengagement disabled Reduced clutch performance, especially at start and marshalling	
Split engagement system	**PSID23**	FMI0	Unintentional disengagement of indirect split	***Conditions to set the fault code:*** -The split cylinder position leaves the indirect position -The split cylinder valves are inactive	Yellow lamp is sent Loss of torque	***Detailed conditions to activate/deactivate***: The following conditions must be fulfilled three times (only once if the fault code-filter is switched OFF) in a row, in order to set the fault code: (engagement of another gear will reset the count) - The split cylinder position indicates that split gear leaves the indirect position - The split cylinder valves are inactive - There is no active fault on any of the sensor for the position of the split cylinder (SEPoS) the valve for shift to direct split the valve for shift to indirect split - There is no active fault code for low air pressure n*ote:* The fault will always have the state inactive. Check fault-count and last occurrence to get more information
Split engagement system		FMI1	Unintentional disengagement of direct split	***Conditions to set the fault code:*** -The split cylinder position leaves the direct position -The split cylinder valves are inactive	Yellow lamp is sent Loss of torque	***Detailed conditions to activate/deactivate***: The following conditions must be fulfilled three times (only once if the fault code-filter is switched OFF) in a row, in order to set the fault code: (engagement of another gear will reset the count) - The split cylinder position indicates that split gear leaves the direct position - The split cylinder valves are inactive - There is no active fault on

FUNCTION	PID/SID	FMI J1587	ERROR	CONDITION	SYMPTOM	COMMENT
						any of the sensor for the position of the split cylinder (SEPoS) the valve for shift to direct split the valve for shift to indirect split - There is no active fault code for low air pressure Note: The fault will always have the state inactive. Check fault-count and last occurrence to get more information
Split engagement system		FMI2	Unintentional disengagement of neutral split	***Conditions to set the fault code:*** -The split cylinder position leaves the neutral position -The split cylinder valves are inactive	Yellow lamp is sent	***Detailed conditions to activate/deactivate***: The following conditions must be fulfilled three times (only once if the fault code-filter is switched OFF) in a row, in order to set the fault code: (engagement of another gear will reset the count) - The split cylinder position indicates that split gear leaves the neutral position - The split cylinder valves are inactive - There is no active fault on any of the sensor for the position of the split cylinder (SEPoS) the valve for shift to direct split the valve for shift to indirect split - There is no active fault code for low air pressure *Note*: The fault will always have the state inactive. Check fault-count and last occurrence to get more information
Split engagement system		FMI11	Blocked engagement of indirect split	***Conditions to set the fault code:*** -The indirect split gear can not engage	Yellow lamp is sent Loss of torque Only direct split gears will be selected by the system for a short while. After five successful gearshifts a new attempt to use indirect split may be made	***Detailed conditions to activate/deactivate***: The following conditions must be fulfilled three times (only once if the fault code-filter is switched OFF) in a row, in order to set the fault code: - The split valve for reaching indirect split is activated for at least 0.8s - The split cylinder position sensor indicates that indirect position is not engaged - There is no active fault on any of the sensor for the position of the split cylinder (SEPoS) the valve for shift to direct split the valve for shift to indirect split - There is no active fault code for low air pressure ***The fault is deactivated if any of the following***

FUNCTION	PID/SID	FMI J1587	ERROR	CONDITION	SYMPTOM	COMMENT
						conditions are fulfilled: - The split cylinder position sensor indicates that indirect position is engaged - There is an active fault code on any of the sensor for the position of the split cylinder (SEPoS) the valve for shift to direct split the valve for shift to indirect split
Split engagement system		FMI12	Blocked engagement of direct split	***Conditions to set the fault code:*** -The direct split gear can not engage	Yellow lamp is sent Loss of torque Only indirect split gears will be selected by the system for a short while. After five successful gearshifts a new attempt to use direct split may be made	***Detailed conditions to activate/deactivate***: The following conditions must be fulfilled three times (only once if the fault code-filter is switched OFF) in a row, in order to set the fault code: - The split valve for reaching direct split is activated for at least 0.8s - The split cylinder position sensor indicates that direct position is not engaged - There is no active fault on any of the sensor for the position of the split cylinder (SEPoS) the valve for shift to direct split the valve for shift to indirect split - There is no active fault code for low air pressure ***The fault is deactivated if any of the following conditions are fulfilled:*** - The split cylinder position sensor indicates that direct position is engaged - There is an active fault code on any of the sensor for the position of the split cylinder (SEPoS) the valve for shift to direct split the valve for shift to indirect split
Split engagement system		FMI7	Blocked engagement of neutral split	***Conditions to set the fault code:*** -The neutral split gear can not engage	Yellow lamp is sent Eco roll is not available	***Detailed conditions to activate/deactivate***: The following conditions must be fulfilled three times (only once if the fault code-filter is switched OFF) in a row, in order to set the fault code: - The split valve for reaching neutral split is activated for at least 0.8s - The split cylinder position sensor indicates that neutral position is not engaged - There is no active fault on any of the sensor for the position of the split cylinder (SEPoS) the valve for shift to direct split the valve for shift to indirect split

FUNCTION	PID/SID	FMI J1587	ERROR	CONDITION	SYMPTOM	COMMENT
						- There is no active fault code for low air pressure ***The fault is deactivated if any of the following conditions are fulfilled:*** - The split cylinder position sensor indicates that neutral position is engaged - There is an active fault code on any of the sensor for the position of the split cylinder (SEPoS) the valve for shift to direct split the valve for shift to indirect split
TECU Power supply	**PID158**	FMI0	Data valid but above normal operational range	***Activate:*** 24V system: above 36V 12V system: above 19V ***Deactivate:*** 24V system: below 36V. 12V system: below 19V	Yellow lamp is sent	
TECU Power supply		FMI1	Data valid but below normal operational range	***Activate:*** 24V system: below 17V. 12V system: below 9V ***Deactivate:*** 24V system: above 17V 12V system: above 9V	Yellow lamp is sent Reduced gearbox performance	
Valve for activating the PTO number 1 (VAP1)	**PSID20**	FMI3	Voltage above normal or shorted high	***Activate***: The high side drive is short circuit to Ubatt ***Deactivate***: The high side drive is OK	Yellow lamp is sent The valve is activated The PTO can not be deactivated Reduced gear change comfort	PTO fault codes are only set if the PTO exists
Valve for activating the PTO number 1 (VAP1)		FMI5	Current below normal or open circuit	***Activate***: The high side drive is open circuit ***Deactivate***: The high side drive is OK	Yellow lamp is sent The valve can not be activated The PTO does not work	
Valve for activating the PTO number 1 (VAP1)		FMI6	Current above normal or grounded circuit	***Activate***: The high side drive is short circuit to Gnd ***Deactivate***: The high side drive is OK	Yellow lamp is sent The valve can not be activated The PTO does not work	
Valve for activating the PTO number 2 (VAP2)	**PSID21**	FMI3	Voltage above normal or shorted high	***Activate***: The high side drive is short circuit to Ubatt ***Deactivate***: The high side drive is OK	Yellow lamp is sent The valve is activated The PTO can not be deactivated Reduced gear change comfort	

FUNCTION	PID/SID	FMI J1587	ERROR	CONDITION	SYMPTOM	COMMENT
Valve for activating the PTO number 2 (VAP2)		FMI5	Current below normal or open circuit	***Activate***: The high side drive is open circuit ***Deactivate***: The high side drive is OK	Yellow lamp is sent The valve can not be activated The PTO does not work	
Valve for activating the PTO number 2 (VAP2)		FMI6	Current above normal or grounded circuit	***Activate:*** The high side drive is short circuit to Gnd ***Deactivate:*** The high side drive is OK	Yellow lamp is sent The valve can not be activated The PTO does not work	
Valve for fast disengagem ent of the clutch (VAFD)	**PSID3**	FMI3	Voltage above normal or shorted high	***Activate:*** 1. The high-side drive is short circuited to Ubatt and 2. there is no active fault code for short circuit to Ubatt on VAF- ***Deactivate:*** The high-side drive is OK	Yellow lamp is sent Fast engagement/d isengagement disabled Reduced clutch performance Gear changes are slow	
Valve for fast disengagem ent of the clutch (VAFD)		FMI5	Current below normal or open circuit	***Activate:*** The high-side drive is open circuit ***Deactivate:*** The high side drive is OK	Yellow lamp is sent Fast disengageme nt disabled Reduced clutch performance Gear changes are slow	
Valve for fast disengagem ent of the clutch (VAFD)		FMI6	Current above normal or grounded circuit	***Activate:*** The high-side drive is short circuit to Gnd ***Deactivate:*** The high-side drive is OK	Yellow lamp is sent Fast disengageme nt disabled Reduced clutch performance Gear changes are slow	
Valve for fast engagement of the clutch (VAFE)	**PSID1**	FMI3	Voltage above normal or shorted high	***Activate:*** 1. The high-side drive is short circuited to Ubatt and, 2. there is no active fault code for short circuit to Ubatt on VAF- ***Deactivate:*** The high-side drive is OK	Yellow lamp is sent Fast engagement/d isengagement disabled Reduced clutch performance Gear changes are slow	
Valve for fast engagement of the clutch (VAFE)		FMI5	Current below normal or open circuit	***Activate:*** The high-side drive is open circuit ***Deactivate:*** The high side drive is OK	Yellow lamp is sent Fast engagement disabled Reduced clutch performance Gear changes are slow	

FUNCTION	PID/SID	FMI J1587	ERROR	CONDITION	SYMPTOM	COMMENT
Valve for fast engagement of the clutch (VAFE)		FMI6	Current above normal or grounded circuit	***Activate:*** The high-side drive is short circuit to Gnd ***Deactivate:*** The high-side drive is OK	Yellow lamp is sent Fast engagement disabled Reduced clutch performance Gear changes are slow	
Valve for shifting to direct split (VADS)	**SID37**	FMI3	Voltage above normal or shorted high	***Activate:*** The high side drive is short circuit to Ubatt ***Deactivate:*** The high side drive is OK	Yellow lamp is sent The valve is activated Indirect and neutral split gears are missing Automatic gear selection enters faulty gearbox mode with gear changes only at certain vehicle speeds	
Valve for shifting to direct split (VADS)		FMI5	Current below normal or open circuit	***Activate:*** The high side drive is open circuit ***Deactivate:*** The high side drive is OK	Yellow lamp is sent The valve can not be activated Split gears are missing Automatic gear selection enters faulty gearbox mode with gear changes only at certain vehicle speeds	
Valve for shifting to direct split (VADS)		FMI6	Current above normal or grounded circuit	***Activate:*** The high side drive is short circuit to Gnd ***Deactivate:*** The high side drive is OK	Yellow lamp is sent The valve can not be activated Split gears are missing Automatic gear selection enters faulty gearbox mode with gear changes only at certain vehicle speeds	
Valve for shifting to gear 1 (VAG1)	**PSID12**	FMI3	Voltage above normal or shorted high	***Activate:*** The high side drive is short circuit to Ubatt ***Deactivate:*** The high side drive is OK	Yellow lamp is sent The valve is activated Gears are missing Automatic	

FUNCTION	PID/SID	FMI J1587	ERROR	CONDITION	SYMPTOM	COMMENT
					gear selection enters faulty gearbox mode with gear changes only at certain vehicle speeds	
Valve for shifting to gear 1 (VAG1)		FMI5	Current below normal or open circuit	***Activate:*** The high side drive is open circuit ***Deactivate:*** The high side drive is OK	Yellow lamp is sent The valve can not be activated Gears are missing Automatic gear selection enters faulty gearbox mode with gear changes only at certain vehicle speeds	
Valve for shifting to gear 1 (VAG1)		FMI6	Current above normal or grounded circuit	***Activate:*** The high side drive is short circuit to Gnd ***Deactivate:*** The high side drive is OK	Yellow lamp is sent The valve can not be activated Gears are missing Automatic gear selection enters faulty gearbox mode with gear changes only at certain vehicle speeds	
Valve for shifting to gear 2 (VAG2)	**PSID14**	FMI3	Voltage above normal or shorted high	***Activate:*** The high side drive is short circuit to Ubatt ***Deactivate:*** The high side drive is OK	Yellow lamp is sent The valve can not be activated Gears are missing Automatic gear selection enters faulty gearbox mode with gear changes only at certain vehicle speeds	
Valve for shifting to gear 2 (VAG2)		FMI5	Current below normal or open circuit	***Activate:*** The high side drive is open circuit ***Deactivate:*** The high side drive is OK	Yellow lamp is sent The valve can not be activated Gears are missing Automatic gear selection enters faulty	

FUNCTION	PID/SID	FMI J1587	ERROR	CONDITION	SYMPTOM	COMMENT
					gearbox mode with gear changes only at certain vehicle speeds	
Valve for shifting to gear 2 (VAG2)		FMI6	Current above normal or grounded circuit	***Activate:*** The high side drive is short circuit to Gnd ***Deactivate:*** The high side drive is OK	Yellow lamp is sent The valve can not be activated Gears are missing Automatic gear selection enters faulty gearbox mode with gear changes only at certain vehicle speeds	
Valve for shifting to gear 3 (VAG3)	**PSID15**	FMI3	Voltage above normal or shorted high	***Activate:*** The high side drive is short circuit to Ubatt ***Deactivate:*** The high side drive is OK	Yellow lamp is sent The valve can not be activated Gears are missing Automatic gear selection enters faulty gearbox mode with gear changes only at certain vehicle speeds	
Valve for shifting to gear 3 (VAG3)		FMI5	Current below normal or open circuit	***Activate:*** The high side drive is open circuit ***Deactivate:*** The high side drive is OK	Yellow lamp is sent The valve can not be activated Gears are missing Automatic gear selection enters faulty gearbox mode with gear changes only at certain vehicle speeds	
Valve for shifting to gear 3 (VAG3)		FMI6	Current above normal or grounded circuit	***Activate:*** The high side drive is short circuit to Gnd ***Deactivate:*** The high side drive is OK	Yellow lamp is sent. The valve can not be activated Gears are missing Automatic gear selection enters faulty gearbox mode with gear changes only	

FUNCTION	PID/SID	FMI J1587	ERROR	CONDITION	SYMPTOM	COMMENT
					at certain vehicle speeds	
Valve for shifting to gear reverse (VAGR)	**PSID13**	FMI3	Voltage above normal or shorted high	***Activate:*** The high side drive is short circuit to Ubatt ***Deactivate:*** The high side drive is OK	Yellow lamp is sent The valve is activated Gears are missing Automatic gear selection enters faulty gearbox mode with gear changes only at certain vehicle speeds	
Valve for shifting to gear reverse (VAGR)		FMI5	Current below normal or open circuit	***Activate:*** The high side drive is open circuit ***Deactivate:*** The high side drive is OK	Yellow lamp is sent The valve can not be activated Gears are missing Automatic gear selection enters faulty gearbox mode with gear changes only at certain vehicle speeds	
Valve for shifting to gear reverse (VAGR)		FMI6	Current above normal or grounded circuit	***Activate:*** The high side drive is short circuit to Gnd ***Deactivate:*** The high side drive is OK	Yellow lamp is sent The valve can not be activated Gears are missing Automatic gear selection enters faulty gearbox mode with gear changes only at certain vehicle speeds	
Valve for shifting to high range (VAHR)	**SID35**	FMI3	Voltage above normal or shorted high	***Activate:*** The high side drive is short circuit to Ubatt ***Deactivate:*** The high side drive is OK	Yellow lamp is sent The valve is activated Low range gears are missing Automatic gear selection enters faulty gearbox mode with gear changes only at certain vehicle speeds	

FUNCTION	PID/SID	FMI J1587	ERROR	CONDITION	SYMPTOM	COMMENT
Valve for shifting to high range (VAHR)		FMI5	Current below normal or open circuit	***Activate:*** The high side drive is Open circuit ***Deactivate:*** The high side drive is OK	Yellow lamp is sent The valve can not be activated Range gears are missing Automatic gear selection enters faulty gearbox mode with gear changes only at certain vehicle speeds	
Valve for shifting to high range (VAHR)		FMI6	Current above normal or grounded circuit	***Activate:*** The high side drive is short circuit to Gnd ***Deactivate:*** The high side drive is OK	Yellow lamp is sent The valve can not be activated Range gears are missing Automatic gear selection enters faulty gearbox mode with gear changes only at certain vehicle speeds	
Valve for shifting to indirect split (VAIDS)	**SID38**	FMI3	Voltage above normal or shorted high	***Activate:*** The high side drive is short circuit to Ubatt ***Deactivate:*** The high side drive is OK	Yellow lamp is sent The valve is activated Direct and neutral split gears are missing Automatic gear selection enters faulty gearbox mode with gear changes only at certain vehicle speeds	
Valve for shifting to indirect split (VAIDS)		FMI5	Current below normal or open circuit	***Activate:*** The high side drive is open circuit ***Deactivate:*** The high side drive is OK	Yellow lamp is sent The valve can not be activated Split gears are missing Automatic gear selection enters faulty gearbox mode with gear changes only at certain vehicle speeds	

FUNCTION	PID/SID	FMI J1587	ERROR	CONDITION	SYMPTOM	COMMENT
Valve for shifting to indirect split (VAIDS)		FMI6	Current above normal or grounded circuit	***Activate:*** The high side drive is short circuit to Gnd ***Deactivate:*** The high side drive is OK	Yellow lamp is sent The valve can not be activated Split gears are missing Automatic gear selection enters faulty gearbox mode with gear changes only at certain vehicle speeds	
Valve for shifting to low range (VALR)	**SID36**	FMI3	Voltage above normal or shorted high	***Activate:*** The high side drive is short circuit to Ubatt ***Deactivate:*** The high side drive is OK	Yellow lamp is sent The valve is activated High range gears are missing Automatic gear selection enters faulty gearbox mode with gear changes only at certain vehicle speeds	
Valve for shifting to low range (VALR)		FMI5	Current below normal or open circuit	***Activate:*** The high side drive is open circuit ***Deactivate:*** The high side drive is OK	Yellow lamp is sent The valve can not be activated Range gears are missing Automatic gear selection enters faulty gearbox mode with gear changes only at certain vehicle speeds	
Valve for shifting to low range (VALR)		FMI6	Current above normal or grounded circuit	***Activate:*** The high side drive is short circuit to Gnd ***Deactivate:*** The high side drive is OK	Yellow lamp is sent The valve can not be activated Range gears are missing Automatic gear selection enters faulty gearbox mode with gear changes only at certain vehicle speeds	
Valve for slow	**PSID4**	FMI3	Voltage above normal or	***Activate:*** 1. The high-side drive is	Yellow lamp is sent Slow	

FUNCTION	PID/SID	FMI J1587	ERROR	CONDITION	SYMPTOM	COMMENT
disengage-ment of the clutch (VASD)			shorted high	short circuit to Ubatt and 2. There is no active fault code for short circuit to Ubatt on VAS- ***Deactivate:*** The high-side drive is OK	engagement/dis-engagement disabled Reduced clutch performance, especially at start and marshalling	
Valve for slow disengage-ment of the clutch (VASD)		FMI5	Current below normal or open circuit	***Activate:*** The high-side drive is open circuit ***Deactivate:*** The high-side drive is OK	Yellow lamp is sent Slow disengagement disabled Reduced clutch performance	
Valve for slow disengage-ment of the clutch (VASD)		FMI6	Current above normal or grounded circuit	***Activate:*** The high-side drive is short circuit to Gnd ***Deactivate: T***he high-side drive is OK	Yellow lamp is sent Slow disengagement disabled Reduced clutch performance	
Valve for slow engagement of the clutch (VASE)	**PSID2**	FMI3	Voltage above normal or shorted high	***Activate:*** 1. The high-side drive is short circuit to Ubatt and 2. There is no active fault code for short circuit to Ubatt on VAS- ***Deactivate:*** The high-side drive is OK	Yellow lamp is sent Slow engagement/dis-engagement disabled Reduced clutch performance, especially at start and marshalling	
Valve for slow engagement of the clutch (VASE)		FMI5	Current below normal or open circuit	***Activate:*** The high-side drive is open circuit ***Deactivate:*** The high-side drive is OK	Yellow lamp is sent Slow engagement disabled Reduced clutch performance, especially at start and marshalling	
Valve for slow engagement of the clutch (VASE)		FMI6	Current above normal or grounded circuit	***Activate:*** The high-side drive is short circuit to Gnd ***Deactivate: T***he high-side drive is OK	Yellow lamp is sent Slow engagement disabled Reduced clutch performance, especially at start and marshalling	
Valve for the gearbox brake (VAGB)	**PSID22**	FMI3	Voltage above normal or shorted high	***Activate:*** The high side drive is short circuit to Ubatt ***Deactivate:*** The high side drive is OK	Red lamp is sent. The valve and the brake are activated The gearbox will be damaged if the vehicle	

FUNCTION	PID/SID	FMI J1587	ERROR	CONDITION	SYMPTOM	COMMENT
					drives. The prop shaft has to be removed to move the vehicle	
Valve for the gearbox brake (VAGB)		FMI5	Current below normal or open circuit	***Activate:*** The high side drive is open circuit ***Deactivate:*** The high side drive is OK	Yellow lamp is sent The valve can not be activated Shifting to the start gear takes long time	
Valve for the gearbox brake (VAGB)		FMI6	Current above normal or grounded circuit	***Activate:*** The high side drive is short circuit to Gnd ***Deactivate:*** The high side drive is OK	Yellow lamp is sent The valve can not be activated Shifting to the start gear takes long time	

10. VOLVO I-SHIFT TRANSMISSION GSECU FAULT CODES

PID/PPID SID/PSID	FMI	LAMP	CONTENT	TEXT	COMMENT	CONSEQUENCES
SID231	2	None	SAE J1939 Data Link	-	-	Redundancy on J1587
SID237	3	CHECK	Start enable device	Check Gear Selector System at next stop	Only for EMS1.xx vehicles	Start relay not working
SID240	2	CHECK	Program memory	Gear Selector System failure	Boot	Not possible to engage gear
SID250	9	None	SAE J1708 /J1587 data link	-	-	-
SID253	2	CHECK	Program memory	Gear Selector System failure	-	Not possible to engage gear
SID254	12	CHECK	Controller #1	Gear Selector System failure	-	Not possible to engage gear
PSID9	12	CHECK	Gear level position sensors	Check Gear Selector System at next stop	-	Not possible to engage/change gear
PSID36	7	CHECK	Output actuator (REPS)	Check Gear Selector System at next stop	-	Fault displayed after ignition OFF. Risk of battery discharge if main circuit breaker is not opened when vehicle is not used
PSID36	12	CHECK	Output actuator (REPS)	Check Gear Selector System at next stop	-	Gearbox not supplied

PID/PPID SID/PSID	FMI	LAMP	CONTENT	TEXT	COMMENT	CONSEQUENCES
PSID42	2	None	Ignition signals	-	-	Power supply always on
PSID200	9	None	Data Link, MID128	Check Gear Selector System at next stop	Only for AMT-C, Boot	Affects RT only (can be sent for VT)
PSID201	9	None	Data Link, MID144	Check Gear Selector System at next stop	Only for AMT-C, Boot	Affects RT only (can be sent for VT)
PSID205	9	None	Data Link, MID130	Check Gear Selector System at next stop	Boot	Affects RT only (can be sent for VT)
PSID214	9	None	Data Link, MID249	-	Only when second gear selector is installed, Boot	Not possible to switch to/from secondary gear lever

11. SPECIFICATIONS

ALLISON AUTOMATIC TRANSMISSION WITH OR WITHOUT RETARDER

X3-45 Coaches
Gross input power (maximum).....500 HP (373 kW)
Gross input torque (maximum) .....1525 Lbf-ft- (2068 Nm)
Rated input speed (minimum-maximum) .....1600-2300 rpm

X3-45 VIP & XLII BUS SHELLS
Gross input power (maximum).....525 HP (392 kW)
Gross input torque (maximum) .....1650 Lbf-ft (2237 Nm)
Rated input speed (minimum-maximum) .....1600-2300 rpm

Mounting:
Engine.....SAE #1 flywheel housing, flex disk drive

Torque converter:
Type ..... One stage, three element, polyphase
Stall torque ratio .....TC 551-1.8
Lockup clutch with torsional damper ..... Integral/standard

Gearing:
Type ..... Patented, constant mesh, helical, planetary

Ratio:
First 3.51:1
Second.....1.91:1
Third 1.43:1
Fourth.....1.00:1
Fifth 0.74:1
Sixth 0.64:1
Reverse 4.80:1

Ratio coverage:
6 speed 5.48:1

*** Gear ratios do not include torque converter multiplication.**

Oil System:
Oil type..... TRANSYND, DEXRON-III
Capacity (excluding external circuits) .....Initial fill 47 US qts (45 liters)
Oil change..... 24 US qts (23 liters)
Oil change (with retarder)..... 27.6 US qts (26 liters)

Oil Filters:
Make .....Allison Transmission
Type ..... Disposable cartridge
Prevost Part Number (2-filter replacement kit).....571709

VOLVO I-SHIFT TRANSMISSION

Oil System:
Oil type..... CASTROL SYNTRANS 75W85
Oil change..... 16 US qts (15 liters)

Oil Filter:
Make .....Volvo
Type ..... Disposable cartridge
Prevost Part Number.....20779040

CONTENTS

1. PROPELLER SHAFT **2**
1.1 DESCRIPTION 2
2. REMOVAL, DISASSEMBLY, REASSEMBLY AND INSTALLATION **2**
3. CLEANING, INSPECTION AND LUBRICATION **2**
3.1 CLEANING AND INSPECTION 2
3.2 LUBRICATION 2
4. EXPLANATION OF COMMON DAMAGES **4**
5. TROUBLESHOOTING **4**
6. SPECIFICATIONS **4**

ILLUSTRATIONS

FIGURE 1: PROPELLER SHAFT ASSEMBLY 3

1. PROPELLER SHAFT

1.1 DESCRIPTION

The propeller shaft transmits power from the transmission to the differential (Fig. 1). Refer to paragraph *"6. SPECIFICATIONS"* at the end of this section for propeller shaft length. The propeller shaft is "Dana Spicer Life Series SPL250" type with tubular shafts. It is provided with two heavy-duty universal joints (Fig. 1).

The propeller shaft has a half round end yoke at each end. The slip yoke is connected to the differential by a half round end yoke with two needle bearings.

The other extremity (tube yoke assembly) is connected to the transmission by a half round end yoke with two needle bearings (Allison transmission) or a flange yoke and companion flange with two needle bearings (I-Shift Transmission).

Furthermore, a slip joint on the propeller shaft compensates for variations in distance between the transmission and the differential, or between the output retarder (optional on the automatic transmission) and differential.

The rise and fall of the drive axle bring about these variations as the vehicle passes over uneven surfaces. The slip joint also eases removal of the transmission or the drive axle.

2. REMOVAL, DISASSEMBLY, REASSEMBLY AND INSTALLATION

Refer to *"SPICER LIFE SERIES DRIVESHAFTS Service Manual"* annexed to this section.

Where applicable:

- Remove or install propeller shaft safety guard.
- Screw bolts to the specified torque (Fig. 1).

3. CLEANING, INSPECTION AND LUBRICATION

3.1 CLEANING AND INSPECTION

Thoroughly clean grease from bearings, journal, lubricating grease fittings and other parts. Needle bearing assemblies may be soaked in a cleaning solution to soften hard grease particles.

It is extremely important that bearing assemblies be absolutely clean and blown out with compressed air, since small particles of dirt or grit can cause rapid bearing wear. Do not attempt to disassemble needle bearings.

Bearing journal areas should be inspected for roughness or grooving. If light honing does not remove roughness, the entire bearing assembly should be replaced. Excessive wear of the needle bearing is indicated if the needles drop out of the retainer, or if marks are present on the journal bearing surface. In such case, replace bearing assembly. Finally, inspect yokes for cracks, wear or distortion.

NOTE
Repair kits are available for overhaul of the propeller shaft assembly. Refer to Parts Manual, Section 9.

3.2 LUBRICATION

Lubricate propeller shaft universal joints periodically, every 100,000 miles (160 000 km) or every 6 months, whichever comes first. Apply grease gun pressure to the lube fitting. Use a good quality lithium-base grease such as: NLGI No.2 E.P. Grease (suitable for most temperatures). Refer to "Spicer Life Series Driveshafts Service Manual", under heading, "Lubrication Procedures – Universal Joints".

NOTE
Do not assume that bearing cavities have been filled with new grease unless it has expelled around all seals.

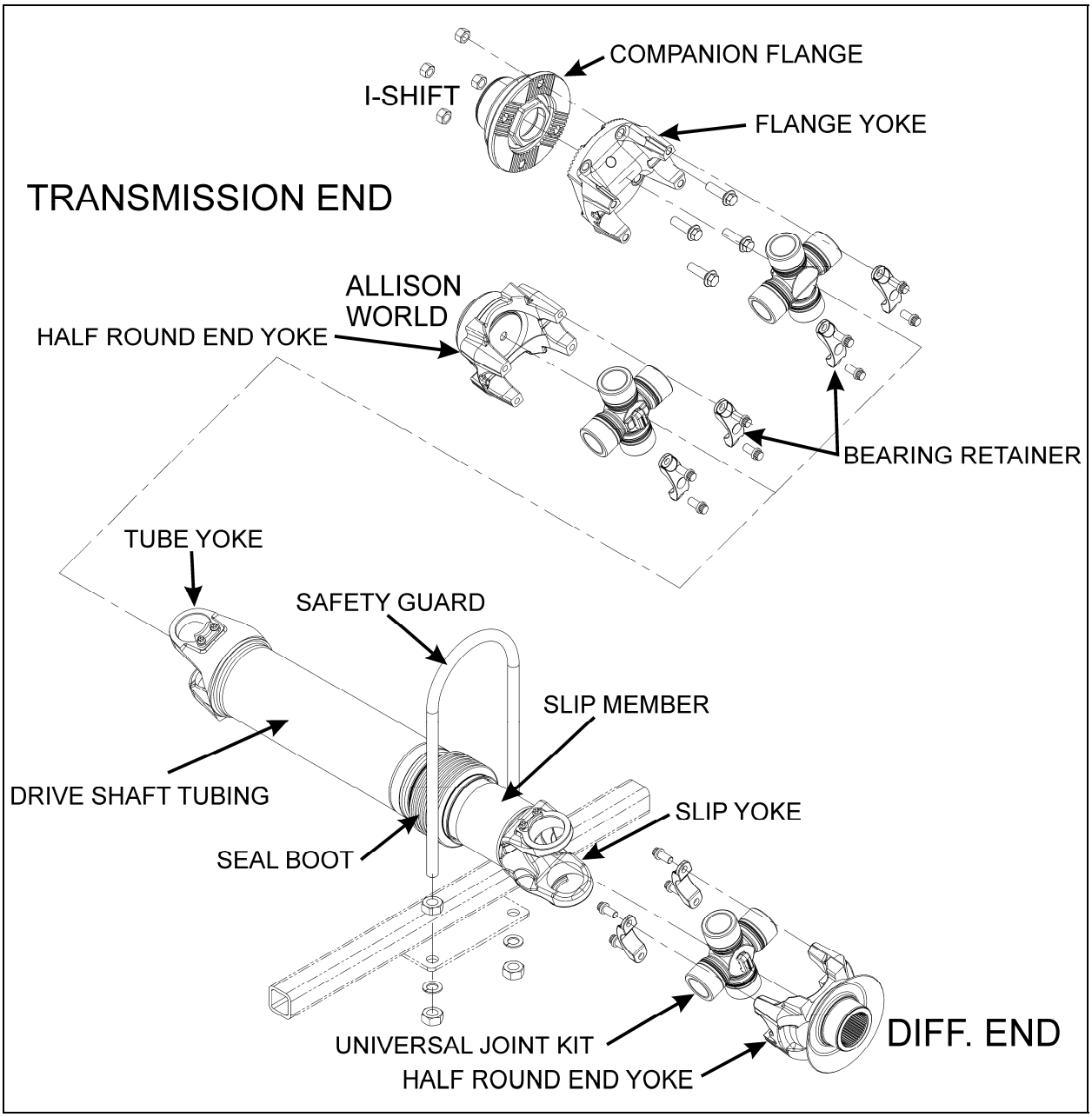

FIGURE 1: PROPELLER SHAFT ASSEMBLY 09002

4. EXPLANATION OF COMMON DAMAGES

1. Cracks: Stress lines due to metal fatigue. Severe and numerous cracks will weaken the metal until it breaks.

2. Galling: Scraping off of metal or metal displacement due to friction between surfaces. This is commonly found on trunnion ends.

3. Spalling (surface fatigue): Breaking off of chips, scales, or flakes of metal due to fatigue rather than wear. It is usually found on splines and U-joint bearings.

4. Pitting: Small pits or craters in metal surfaces due to corrosion. If excessive, pitting can lead to surface wear and eventual failure.

5. Brinelling: Surface wear failure due to the wearing of grooves in metal. It is often caused by improper installation procedures. Do not confuse the polishing of a surface (false brinelling), where no structural damage occurs, with actual brinelling.

6. Structural Overloading: Failure caused by a load greater than the component can stand. A structural overload may cause propeller shaft tubing to twist under strain or it may cause cracks or breaks in U-joints and spline plugs.

5. TROUBLESHOOTING

Refer to *"Spicer Life Series Driveshafts Service Manual".*

6. SPECIFICATIONS

PROPELLER SHAFT

ALL VEHICLES EQUIPPED WITH ALLISON WORLD TRANSMISSION

Make ..... Hayes-Dana Inc.
Series SPL250
Prevost number 580090
Length ..... 485 mm

X3-45 COACHES EQUIPPED WITH I-SHIFT TRANSMISSION

Make ..... Hayes-Dana Inc.
Series SPL250
Prevost number 580086
Length ..... 373 mm

CONTENTS

1. FRONT AXLE 2
1.1 DESCRIPTION 2
2. LUBRICATION 2
3. MAINTENANCE 4
4. REMOVAL AND REPLACEMENT 4
4.1 REMOVAL 4
4.2 REPLACEMENT 4
5. SERVICE INSTRUCTIONS FOR STEER AXLE 5
5.1 STEERING KNUCKLE (KING) PIN INSPECTION 5
5.1.1 Checking Lateral Slackness 5
5.1.2 Checking Vertical Slackness 6
6. FRONT WHEEL ALIGNMENT 6
6.1 INSPECTION BEFORE ALIGNMENT 6
6.2 MINOR FRONT WHEEL ALIGNMENT 6
6.3 MAJOR FRONT WHEEL ALIGNMENT 7
6.4 TURNING ANGLE ADJUSTMENT 7
6.4.1 R.H. Turn Adjustment 7
6.4.2 L.H. Turn Adjustment 7
6.5 HYDRAULIC STOP 8
6.6 FRONT WHEEL CAMBER 8
6.6.1 Camber Check 8
6.7 FRONT AXLE CASTER 8
6.8 FRONT WHEEL TOE-IN 9
6.8.1 Inspection and Adjustment 9
7. TROUBLESHOOTING 10
8. SPECIFICATIONS 11
9. TORQUE SPECIFICATIONS 12

ILLUSTRATIONS

FIGURE 1: FRONT AXLE ASSEMBLY 2
FIGURE 2: FRONT AXLE GREASING POINTS 2
FIGURE 3: CAMBER 8
FIGURE 4: CASTER 8
FIGURE 5: TOE-IN MEASUREMENT 9

1. FRONT AXLE

1.1 DESCRIPTION

The Dana Spicer S84U front axle is of the ''Reverse Elliot'' type manufactured by Dana Spicer Europe. The front axle consists of a girder section axle bed or beam with stub axles. Each stub axle is carried on a taper kingpin, with a plain phosphor bronze bushing at the top and at the bottom. The unitized hub bearings used on the NDS range of axles, are non-serviceable items. Bearings are pre-adjusted, lubricated and have seals fitted as part of the manufacturing process. The bearings are greased for life and there is no need or facility for re-lubrication. Brakes are manufactured by KNORR-BREMSE. Steering ball joints with hardened balls and rubbing pads incorporate compression springs which automatically take up any wear.

The tie rod simplifies toe-in adjustment. The maximum turning angle is set through stop screws installed on the inner side of the knuckle.

Steering stabilizer (damper) and steering drag link which are mounted on the front axle are described in Section 14; *''Steering''* of this manual.

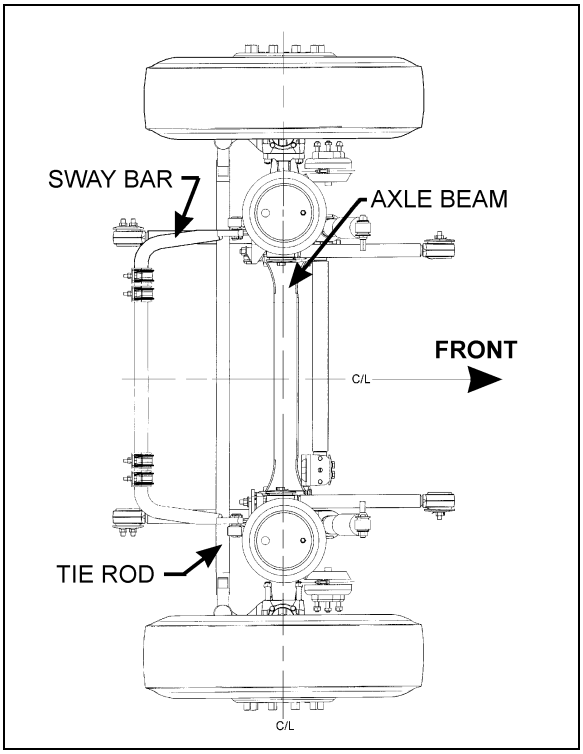

FIGURE 1: FRONT AXLE ASSEMBLY 10026

2. LUBRICATION

MAINTENANCE

Knuckle pins are provided with grease fittings for pressure lubrication. These grease fittings should be serviced every 6,250 miles (10 000 km) or every six months whichever comes first.

Good quality lithium-base roller bearing mineral grease NLGI No.1 and 2 like Shell Retinax LX are recommended.

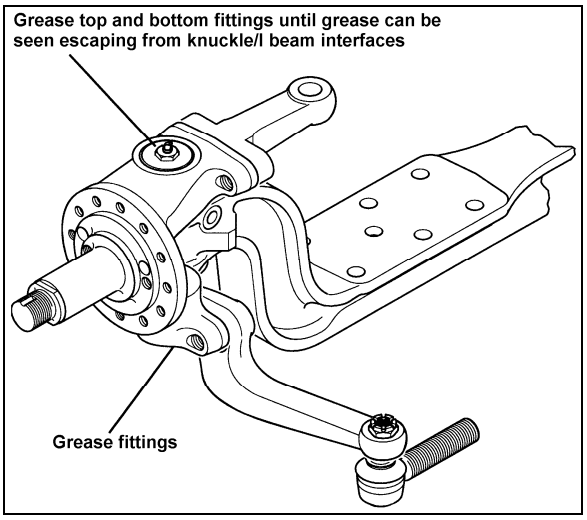

FIGURE 2: FRONT AXLE GREASING POINTS 10031

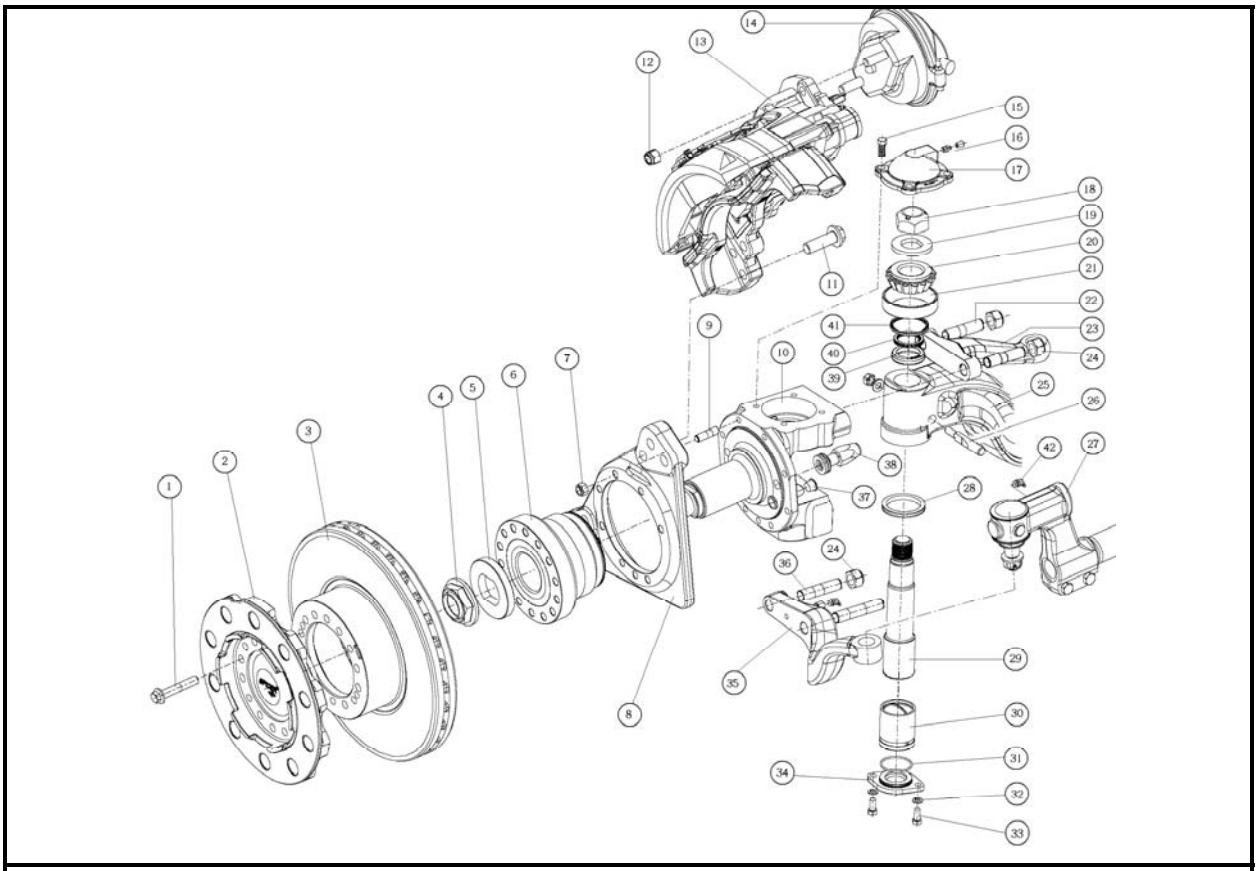

TYPICAL S84U AXLE

ITEM	DESCRIPTION		QTY	ITEM	DESCRIPTION		QTY
1	Flanged Bolt	161-197 lbf-ft	28	26	Draw key, Nut, Washer	51-62 lbf-ft	2
2	Hub		2	27	Tie Rod End		2
3	Brake Disc		2	28	V" Ring Seal		2
4	Stake Hub Nut	563-687 lbf-ft	2	29	Kingpin		2
5	Collet Washer		2	30	Kingpin - Bushing		2
6	Hub Bearing		2	31	O-Ring Seal		2
7	Nut – Self Lock	85-103 lbf-ft	16	32	Washer		4
8	Brake Mounting Bracket		2	33	Screw	26-32 lbf-ft	4
9	Stud		16	34	Cap - Knuckle Bottom		2
10	Knuckle		2	35	Bottom Steering Lever		2
11	Brake Fixing – Bolt	325-375 lbf-ft	12	36	Bottom Steering Lever - Stud		4
12	Nut – Self Lock	133-155 lbf-ft	4	37	Abs Sensor - Bush		2
13	Brake		1	38	Back Lock - Stop Bolt	85-103 lbf-ft	2
14	Brake Chamber		2		Front Lock - Stop Bolt	85-103 lbf-ft	1
15	Screw	51-62 lbf-ft	8	39	Sleeve - Knuckle Bearing		2
16	Grease Fitting		4	40	Shim .005"		8
17	Cap - Knuckle Top		2		Shim .010"		8
18	Nut – Self Lock	500-700 lbf-ft	2		Shim .015"		8
19	Washer		2		Shim .008"		4
20	Bearing Cone		2		Shim .006"		2
21	Bearing Cup		2	41	Oil Seal		2
22	Steering Lever - Stud		4	42	Grease Fitting		2
23	Steering Lever		2				
24	Nut - Self Lock		4				
25	Axle, I-Beam		1				

Additional torque specifications applicable to the front axle are grouped with information regarding the front suspension. Please refer to Section 16: SUSPENSION of this manual.

3. MAINTENANCE

A periodic inspection of the front axle assembly should be made to check that all bolts are tight, and that no damage and distortion have taken place. Suspension support stud nuts, U-bolt nuts, tie rod arms, steering arm nuts and stop screws should be checked and tightened, as required, to the torque specifications given at the end of this section. Also check the condition of the steering knuckle pins and bushings. In case of excessive looseness, the bushings and pins should be replaced.

Any looseness in the steering linkage, under normal steering loads, is sufficient cause to immediately check all pivot points for wear, regardless of accumulated mileage. Steering linkage pivot points should be checked each time the front axle assembly is lubricated. Any looseness can be visually detected while rotating the steering wheel in both directions.

Steering knuckles, knuckle pins and bushings can be overhauled or replaced without removing the axle from the vehicle. However, if extensive overhaul work is necessary, the axle assembly should be removed.

CAUTION

Should removal of a locking device be required when undergoing repairs, disassembly or adjustments, always replace with a new one.

4. REMOVAL AND REPLACEMENT

The following procedure deals with the removal of the front axle assembly. The method used to support the axle assembly and suspension components during removal and disassembly depends upon local conditions and available equipment.

4.1 REMOVAL

1. Raise the vehicle by its jacking points on the body (see Section 18, *"Body"* under heading 34; Vehicle Jacking Points) until vehicle body is approximately 20 inches (508 mm) from the floor. Place jack stands under frame. Remove the wheels (if required, refer to Section 13, *"Wheels, Hubs and Tires"*).

CAUTION

Use only the recommended jacking points as outlined in section 18 "Body".

2. Exhaust compressed air from the air supply system by opening the drain valve of each reservoir.
3. Install jacks under axle jacking points to support the axle weight.

WARNING

To help prevent injury caused by the axle rolling off the jacks, these should be equipped with U-adapters, or similar precautions must be taken.

4. Disconnect the steering drag link from the steering arm.
5. Remove the ABS sensors from their location in hubs (if applicable).
6. Disconnect the height control valve link from its support on the axle.
7. Disconnect air lines from front brake chambers, and cover line ends and fittings to prevent the entry of foreign matter.

CAUTION

Position the air lines and electric wires so they will not be damaged while removing the front axle assembly.

8. Proceed with steps a, b and c, while referring to Section 16: *"SUSPENSION".*
   a) Disconnect sway bar links from axle brackets.
   b) Remove shock absorbers.
   c) Disconnect five radius rods: one transversal and two longitudinal from subframe, and two upper rods from axle.
9. Remove the bolts and nuts fixing the axle to the left-hand and right-hand side air bellows mounting supports.
10. Using the jacks, slowly lower the axle assembly, and carefully pull away from underneath vehicle.

4.2 REPLACEMENT

Reverse front axle "*Removal*" procedure. Ensure cleanliness of air bellows support mounting plates.

NOTE

Refer to Section 16, ''Suspension'', Section 14, ''Steering'' and to paragraph 8 ''Specifications'' at the end of this section for applicable checks and recommended tightening torques.

5. SERVICE INSTRUCTIONS FOR STEER AXLE

5.1 STEERING KNUCKLE (KING) PIN INSPECTION

MAINTENANCE

An inspection should be made at intervals of 30,000 miles (48 000 km) or twice a year whichever comes first.

Aspects to be considered are:

- **Lateral slackness**
- **Vertical slackness**

NOTE

Before commencing checks, apply parking brake, raise wheels off ground and support axle on stands.

5.1.1 Checking Lateral Slackness

Following regular and thorough greasing practices will maximise bushing life. This procedure measures the upper & lower bushing wear due to side and vertical loading. While this is being carried out, the brake must be applied.

Upper Bushing Lateral Inspection

1. Mount dial indicator on the axle. Reference the upper part of the steering knuckle.
2. Move the tire and wheel assembly in and out with a push/pull motion and have an assistant record the dial indicator reading.
3. Replace the upper bushing if readings are in excess of 0.020" (0.5mm).
4. If displacement exceeds stated allowance then need for bush / bearing attention and possible renewal, is in evidence.

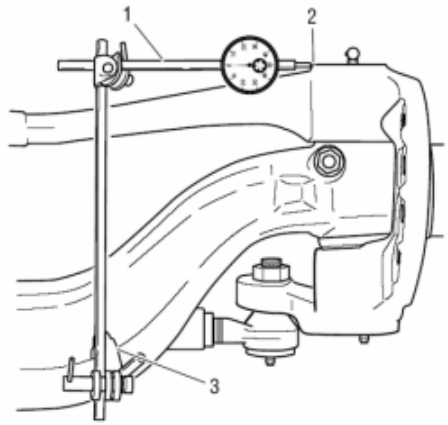

1 - Dial indicator
2 - Reference on top lip of steering knuckle
3 - Attach to axle beam

Lower Bushing Lateral Inspection

1. Mount dial indicator on the axle. Reference the base of the lower arm on the steering knuckle.
2. Move the tire and wheel assembly in and out with a push/pull motion and have an assistant record the dial indicator reading.
3. Replace the upper bushing if readings are in excess of 0.020" (0.5mm).
4. If displacement exceeds stated allowance then need for bush / bearing attention and possible renewal, is in evidence.

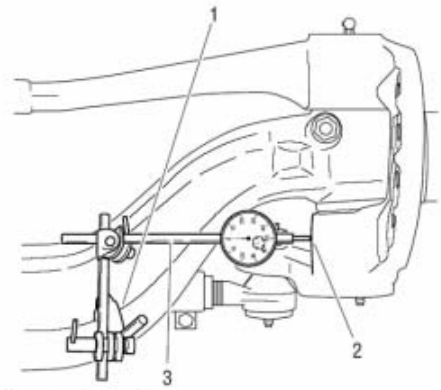

1 - Attach to axle beam
2 - Reference on lower steering knuckle
3 - Dial indicator

NOTE
To avoid inaccurate measurements, be careful not to let the knuckle turn while moving assembly in and out. Applying brakes will help lock wheel assembly. *Locate indicator on a smooth, flat surface for best reading.*

5.1.2 Checking Vertical Slackness

1. This is measured by a dial indicator anchored to axle beam and having its pointer placed vertical against swivel top.
2. Place a jack against underside of swivel and, while applying a lifting force, observe any movement on indicator dial.
3. **If vertical movement is evident and it exceeds 0.040" (1.02mm)** then readjustment of swivel is required by adjusting thickness of bearing adjusting washers.

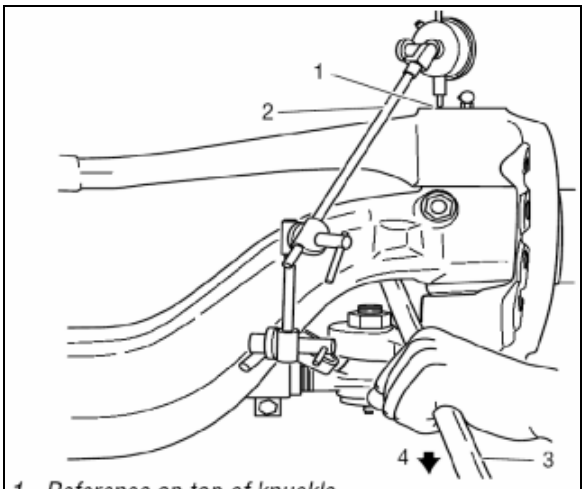

1 - Reference on top of knuckle
2 - Dial indicator
3 - Pry bar
4 - Pry knuckle downward

6. FRONT WHEEL ALIGNMENT

Correct front wheel alignment must be maintained for steering comfort and satisfactory tire life. Road shocks and vibrations, as well as normal stress and strains on the front-end system can, under normal operating conditions, result in loss of front wheel alignment.

Check the front wheel alignment when the following occurs:

1. Every 200,000 miles (320 000 km) or 24 months (normal maintenance);
2. When the vehicle does not steer correctly; or
3. To correct a tire wear condition.

There are two types of front wheel alignment: **minor alignment** and **major alignment**.

6.1 INSPECTION BEFORE ALIGNMENT

Check the following before doing a front wheel alignment:

1. Ensure that the vehicle is at normal riding height. See Section 16, *"Suspension"* under heading 7: *"Suspension Height Adjustment"*.
2. Ensure that front wheels are not the cause of the problem. See Section 13, *"Wheels, Hubs and Tires"*. Inspect the tires for wear patterns indicating suspension damage or misalignment.
   a. Make sure the tires are inflated to the specified pressure.
   b. Make sure the front tires are the same size and type.
   c. Make sure the wheels are balanced.
   d. Check wheel installation and straightness.
3. Check the wheel bearing adjustment. See Section 13, *"Wheels, Hubs and Tires".*
4. Check steering linkage for bending and pivot points for looseness.
5. Check knuckle pins for evidence of excessive wear.
6. Check radius rods for bending and rubber bushings for evidence of excessive wear.
7. Make sure all fasteners are tightened to the specified torque. Use a torque wrench for verification. As soon as the fastener starts to move, record the torque. Correct if necessary. Replace any worn or damaged fasteners.

6.2 MINOR FRONT WHEEL ALIGNMENT

Perform a minor front wheel alignment for all normal maintenance conditions.

Perform the minor front wheel alignment in the following sequence :

1. Inspect all the systems that affect the wheel alignment. See paragraph 6.1, *"Inspection Before Alignment"* in this section.

2. Check the hub bearings. See section 13, *''Wheels, hubs and Tires''* under heading 8: Front and Tag Axle Wheel Hubs.
3. Check and adjust the toe-in.

6.3 MAJOR FRONT WHEEL ALIGNMENT

Perform a major front wheel alignment to correct steering and tire wear conditions.

Perform the major front wheel alignment in the following sequence:

1. Inspect all systems affecting the wheel alignment. See paragraph 6.1, *''Inspection Before Alignment''* in this section.
2. Check the hub bearings. See section 13, *''Wheels, hubs and Tires''* under heading 8: Front and Tag Axle Wheel Hubs.

NOTE
If steering angle stoppers are changed, a special procedure is required for readjusting gearbox steering limiter. See paragraph 6.5 ''Hydraulic Stop'' in this section.

3. Check and adjust the turning angle adjustment.
4. Check the camber angle.
5. Check and adjust the caster angle.
6. Check and adjust the toe-in.

6.4 TURNING ANGLE ADJUSTMENT

The maximum turning angle is set through the two steering stop screws installed on the axle center. The turning angle is factory adjusted to accommodate the chassis design, and therefore, does not require adjustment on new vehicles. However, it should be checked and adjusted any time any component of the steering system is repaired, disassembled or adjusted.

Check if front tires rub against the frame or if the steering gear has been serviced.

Proceed with the following method to check the steering maximum turning angle :

6.4.1 R.H. Turn Adjustment

CAUTION
To prevent the steering damper from interfering with the adjustment of turning angles, make sure its fixing bracket is at the correct location on the axle center (refer to section 14 “Steering”).

1. Turn steering wheel to the right until the boss on the axle center touches the right stop screw.
2. Verify the nearest point of contact of the ball socket body with the air bellows support assembly. Measure the distance between those two points.
3. The distance between these two points should be approximately 1/8 inch (3 mm). If not, the steering stop screws must be readjusted.
4. Verify the nearest point of contact of the drag link with the tire. Measure the distance between those two points.
5. The distance should be 1 inch (25 mm) or more. If not, the steering stop screws must be readjusted.
6. This must be done for a full right turn.
7. If readjustment is required:
   a. Remove the swivel stop screw.
   b. Add to the stop screw the required number of washers to obtain the proper measure, tighten the stop screw afterwards. Two washers of different thickness are available: 1/16 inch and 3/16 inch.

6.4.2 L.H. Turn Adjustment

1. Turn steering wheel to the left until the boss on the axle center touches the left stop screw.
1. Verify the nearest point of contact of the ball socket body with the air bellows support assembly. Measure the distance between those two points.
2. The distance between these two points should be approximately 1/8 inch (3 mm). If not, the steering stop screws must be readjusted.
4. Check the stroke of the steering stabilizer cylinder (damper). It should not exceed 12.59 inches (320 mm).
5. The steering stopper screw must be in contact before the steering stabilizer reaches the end of the stroke.
6. This must be done for a full left turn.
7. If readjustment is required:
   a. Remove the swivel stop screw.

b. Add to the stop screw the required number of washers to obtain the proper measure, tighten the stop screw afterwards. Two washers of different thickness are available: 1/16 inch and 3/16 inch.

NOTE
If steering angle stoppers are changed, a special procedure is required for readjusting gearbox steering limiter. See paragraph 6.5 "Hydraulic Stop" in this section.

6.5 HYDRAULIC STOP

NOTE
Before steering limiter readjustment, verify vehicle wheel alignment and ensure that oil level is checked and that air bleeding is done.

Refer to *'ZF-Servocom Repair Manual"* annexed at the end of Section 14 *"Steering"* under heading *'Setting and Functional Test.*

6.6 FRONT WHEEL CAMBER

Wheel camber is the number of degrees the top of the wheel tilts outward (positive) or inward (negative) from a vertical angle (Fig. 4).

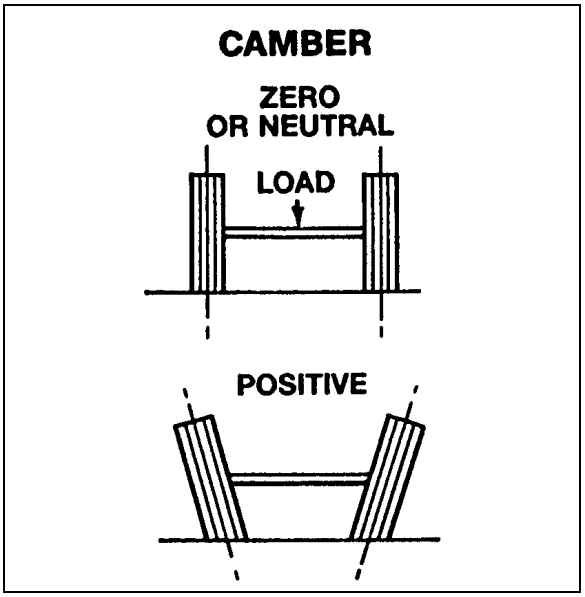

FIGURE 3: CAMBER 10006

The camber angle is not adjustable. Camber variations may be caused by wear at the wheel bearings, steering knuckle pins or by a bent knuckle or sagging axle center. Steering effort is affected by improper camber, and uneven tire wear will result. Excessive positive camber causes an irregular wear of tire at the outer shoulder and excessive negative camber causes wear at the inner shoulder.

6.6.1 Camber Check

For camber specifications, refer to paragraph 8: "SPECIFICATIONS" in this section

1. Use an alignment machine to check the camber angle.
2. If camber reading is not in the specifications, adjust the wheel bearings and repeat the check. If the reading is still not within specifications, verify the steering knuckle pins and axle center.
3. See instructions in "DANA SPICER Maintenance Manual Model NDS and Maintenance Manual NDS Axles" annexed at the end of this section.
4. Check the wheel lateral distortion as instructed in Section 13, *"Wheels, Hubs and Tires"* under heading, *"Checking for Distorted Wheel on Vehicle"*. If distortion is excessive, straighten or replace wheel(s).

6.7 FRONT AXLE CASTER

For caster specifications, refer to paragraph 8: "SPECIFICATIONS" in this section.

Positive caster is the rearward tilt from the vertical axis of the knuckle pin. Negative caster is the forward tilt from the vertical axis of the knuckle pin (Fig. 5). This vehicle is designed with a positive caster. The purpose of the caster angle is to give a trailing effect. This results in stabilized steering and a tendency for the wheels to return to the straight-ahead position after taking a turn.

Excessive caster results in hard steering around corners. A shimmy may also develop when returning to the straight ahead position (pulling out of curves).

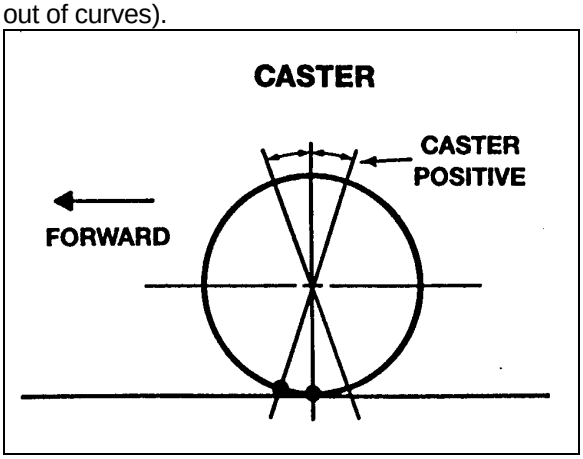

FIGURE 4: CASTER 10007

Insufficient caster will cause wandering and steering instability. Caster variations may be caused by a bent axle, tilting or distortion of the

side suspension supports, damaged radius rod bushings, or unequal tightening of the front and rear suspension support bolts. Incorrect caster must be corrected by replacing the damaged suspension parts. A precision instrument should be used to measure the caster.

NOTE
The caster of this vehicle is factory set and is not adjustable. However, if after replacing damaged parts or in case of improper caster due to irregular setting, the front axle caster needs adjustment; it can be adjusted by means of shims (Prevost #110663) on the left-hand side upper radius rod support in order to obtain minor adjustment.

6.8 FRONT WHEEL TOE-IN

Wheel toe-in is the degree (usually expressed in fractions of an inch) to which the forward part of the vehicle front wheels are closer together than the rear part, measured at wheel centerline height with the wheels in the normal ''straight-ahead'' position of the steering gear.

Incorrect toe-in results in excessive tire wear caused by side slippage and also steering instability with a tendency to wander. Toe-in may be measured from the center of tire tread or from the inside of the tires. Take measurements at both front and rear of axle (see ''A'' and ''B'' in fig. 6).

When setting toe-in adjustment, the front suspension must be neutralized; that is, all component parts must be in the same relative position when marking the adjustment as they will be when in operation.

To neutralize the suspension, the vehicle must be rolled forward, approximately ten feet.

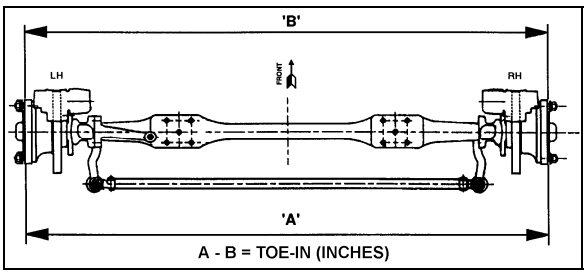

FIGURE 5: TOE-IN MEASUREMENT **10008B**

For toe-in specifications, refer to paragraph 8 ''Specifications'' in this section.

By rolling the vehicle forward, all tolerances in the front suspension are taken up and the suspension is then in its normal operating position. Neutralizing the front suspension is extremely important, especially if the vehicle has been jacked up in order to mark the tires. Otherwise, the front wheels will not return to their normal operating position due to the tires gripping the floor surface when the vehicle jack is lowered.

NOTE
''Toe-in'' measurements must be taken at the horizontal axis of the wheel centerline.

6.8.1 Inspection and Adjustment

Before checking front wheel toe-in, first check the camber angles and make the necessary corrections.

1. Measure the toe-in.
2. If the toe-in measurement is not within the specified tolerance, carry out the following procedure :
   a. Loosen the pinch bolt nuts and bolts on each tie rod end.
   b. Turn the tie rod until the specified toe-in measurement is obtained.
   c. Tighten the pinch bolt nuts alternately and progressively to 65-75 lbf-ft (88-102 Nm), thus securing all tie rod joints.

FRONT WHEEL ALIGNMENT SPECIFICATIONS			
Front Wheel Alignment	**Minimal**	**Nominal**	**Maximal**
Camber, (degrees) R.H. and L.H. *	-0.250	0.125	0.375
Caster, (degrees) R.H. and L.H.	2	2.75	3.5
Toe-in (A minus B), (degrees)	0.04	0.06	0.08

Refer to Section 16: Suspension for front wheel alignment with independent front suspension

NOTE
Camber angle changes with loading. The given numbers are for an empty vehicle.

7. TROUBLESHOOTING

CONDITION	CAUSE	CORRECTION
Tires wear out quickly or have uneven tire tread wear.	1. Tires have incorrect air pressure. 2. Tires out-of-balance. 3. Incorrect tag axle alignment. 4. Incorrect toe-in setting. 5. Incorrect steering arm geometry.	1. Put specified air pressure in tires. 2. Balance or replace tires. 3. Align tag axle. 4. Adjust toe-in specified setting. 5. Service steering system as necessary.
Vehicle is hard to steer.	1. Low pressure in the power steering system. 2. Steering gear not assembled correctly. 3. Steering linkage needs lubrication. 4. Kingpins binding. 5. Incorrect steering arm geometry. 6. Caster improperly adjusted. 7. Tie rod ends hard to move. 8. Worn thrust bearing.	1. Repair power steering system. 2. Assemble steering gear correctly. 3. Lubricate steering linkage. 4. Replace kingpins. 5. Service steering system as necessary. 6. Adjust caster as necessary. 7. Replace tie rod ends. 8. Replace thrust bearing.
Bent or broken steering arm, steering top lever or tie rod assembly.	1. Too much pressure in the power steering system. 2. Cut-off pressure of the power steering system improperly adjusted. 3. Vehicle not powered on correctly. 4. Power steering system not installed correctly.	1. Replace damaged part(s), adjust power steering system to specified pressure. 2. Make sure vehicle is powered on correctly. 3. Correctly install the power steering system. 4. Correctly install the power steering system.
Worn or broken steering ball stud.	1. Drag link fasteners tightened past specified torque. 2. Lack of lubrication or incorrect lubricant. 3. Power steering stops improperly adjusted.	1. Replace damaged part(s), tighten drag link fasteners to specified torque. 2. Lubricate linkage with specified lubricant. 3. Adjust stops to specified dimension.

Worn king pins and knuckle bushings.	1. Worn or missing seals and gaskets. 2. Incorrect lubricant. 3. Axle not lubricated at scheduled frequency. 4. Incorrect lubrication procedures. 5. Lubrication schedule does not match operating conditions.	1. Replace damaged part(s), replace seals and gaskets. 2. Lubricate axle with specified lubricant. 3. Lubricate axle at scheduled frequency. 4. Use correct lubrication schedule to match operating conditions. 5. Change lubrication schedule to match operating conditions.
Vibration or shimmy of front axle during operation.	1. Caster not adjusted properly. 2. Wheels and/or tires out-of balance. 3. Worn steering stabilizer cylinder.	1. Adjust caster. 2. Balance or replace wheels and/or tires. 3. Replace steering stabilizer cylinder.

8. SPECIFICATIONS

Front Axle

Make ..... DANA SPICER EUROPE

Model ..... NDS

Front Track ..... 84.4 inches (2 145 mm)

Rated load capacity..... 16,500 lbs (7 500 kg)

9. TORQUE SPECIFICATIONS

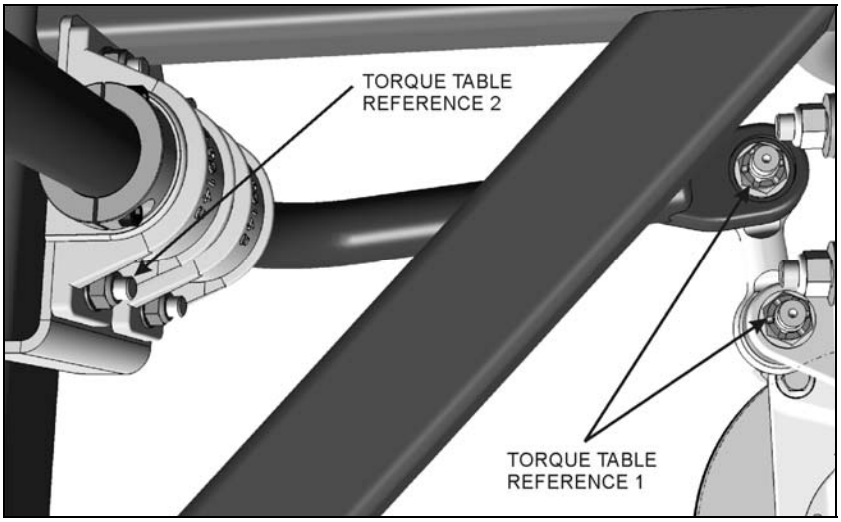

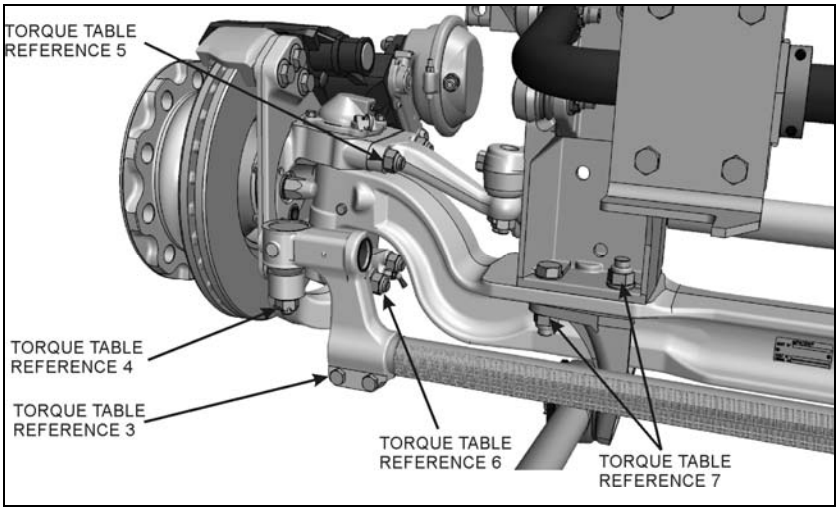

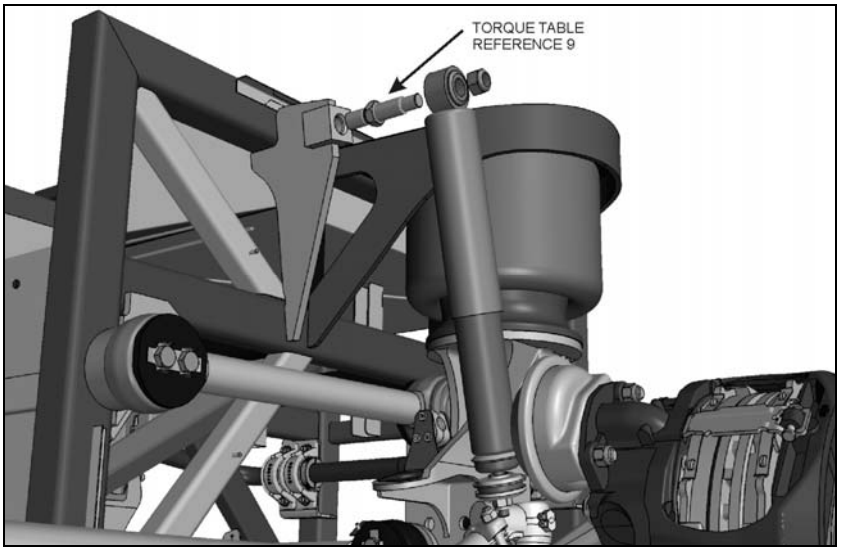

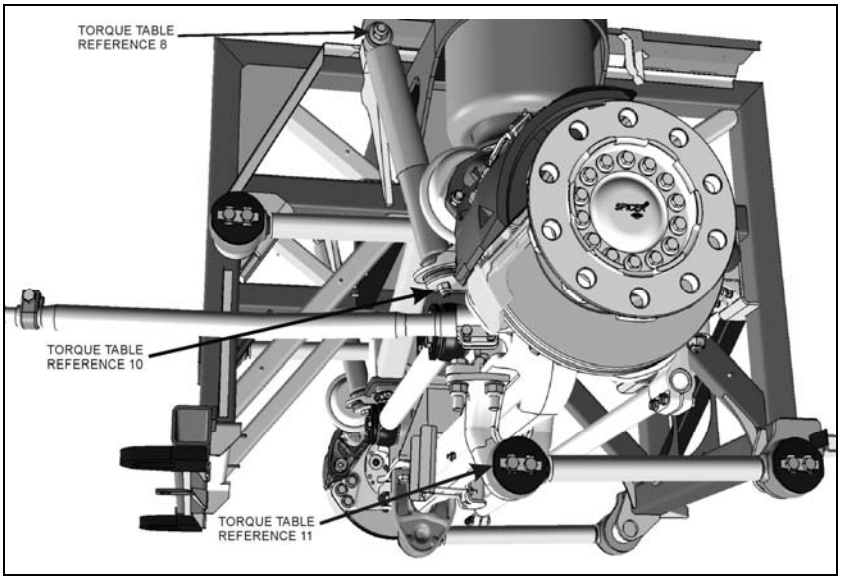
TORQUE TABLE
REFERENCE 8
TORQUE TABLE
REFERENCE 10
TORQUE TABLE
REFERENCE 11

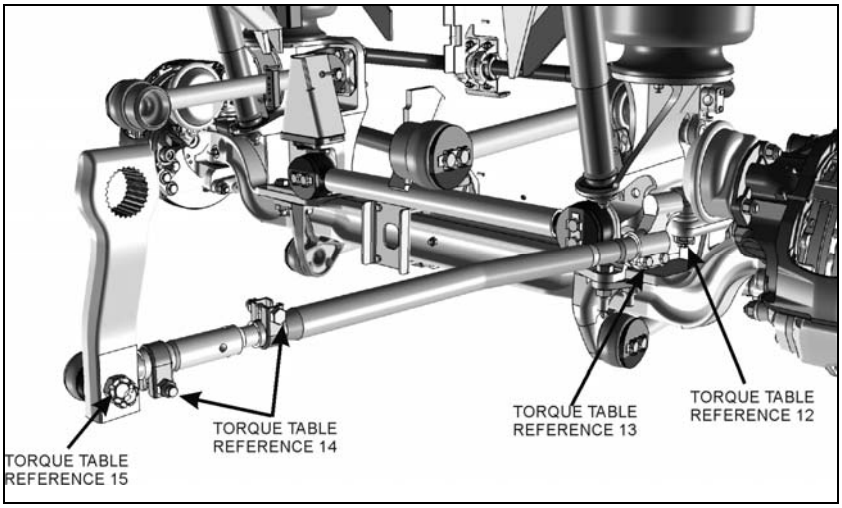
TORQUE TABLE
REFERENCE 15
TORQUE TABLE
REFERENCE 14
TORQUE TABLE
REFERENCE 13
TORQUE TABLE
REFERENCE 12

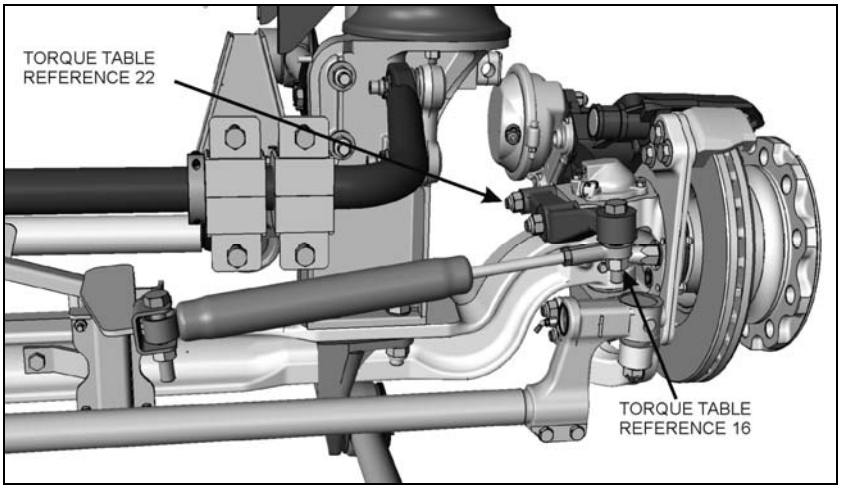
TORQUE TABLE
REFERENCE 22
TORQUE TABLE
REFERENCE 16

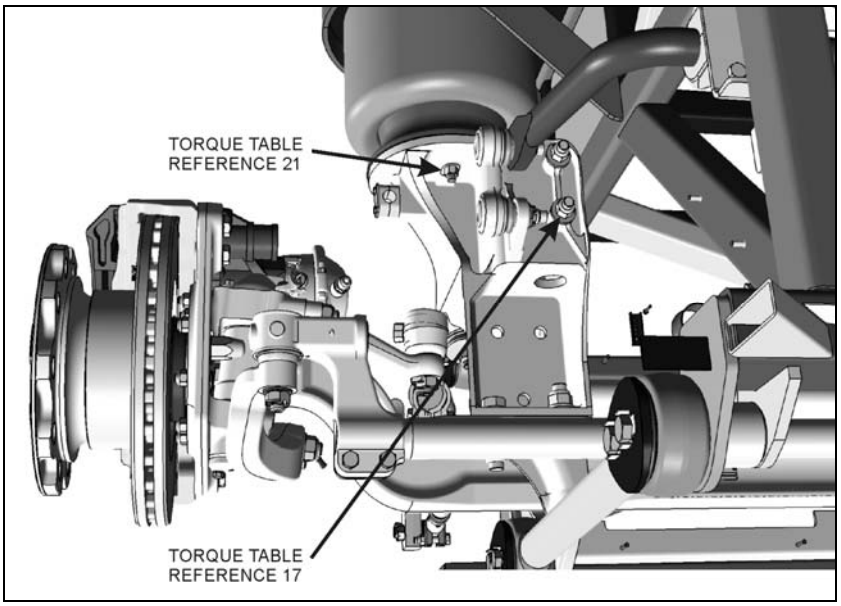
TORQUE TABLE
REFERENCE 21
TORQUE TABLE
REFERENCE 17

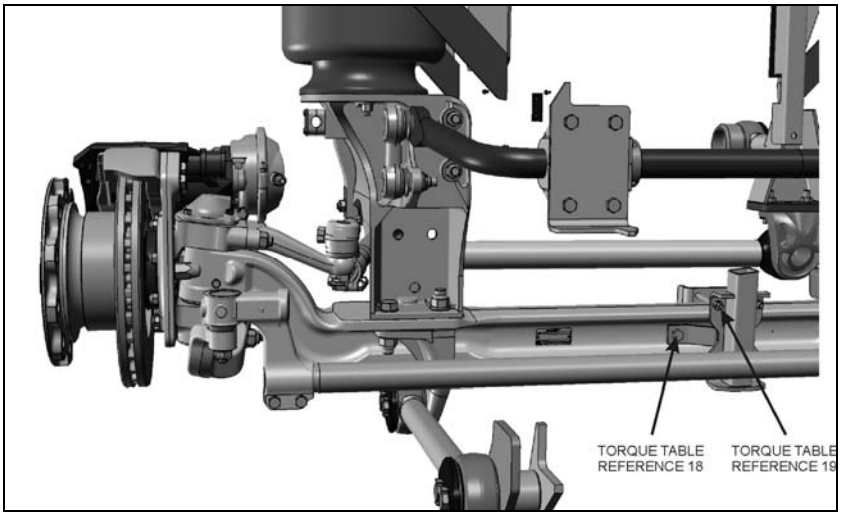
TORQUE TABLE
REFERENCE 18
TORQUE TABLE
REFERENCE 19

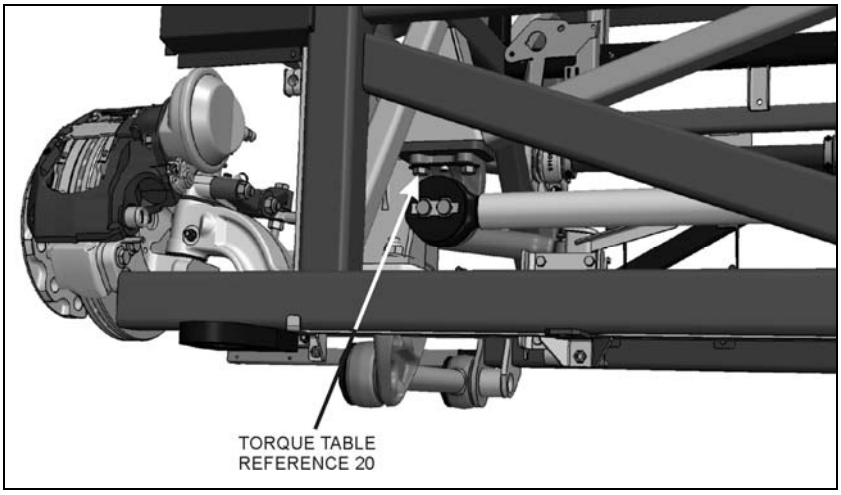
TORQUE TABLE
REFERENCE 20

The following table lists the tightening torques which do require a specific torque value. When no torque specifications are indicated, use the Standard Torque Specifications table found in Section 00: General Information of the Maintenance Manual.

SPECIFIC TORQUE TABLE 1 – FRONT I-BEAM AXLE SUSPENSION & STEERING				
DESCRIPTION	QTY	REFERENCE	TORQUE DRY (lbf-ft / Nm) threads must be free of oil or other lubricant	
SWAY BAR LINK UPPER AND LOWER NUTS	4	1	165-200	224-271
SWAY BAR BUSHING COLLAR (FRONT SUSPENSION)	8	2	80-100	108-136
TIE ROD END CLAMP PINCH BOLT	4	3	65-75	88-102
TIE ROD END BALL STUD NUT	2	4	150-200	203-271
STEERING ARM STUD NUT	2	5	520-575	705-780
TIE ROD ARM STUD NUT	4	6	520-575	705-780
I-BEAM AXLE MOUNT	8	7	230-280	311-378
SHOCK ABSORBER UPPER MOUNTING PIN STUD NUT	2	8	99-121	134-164
SHOCK ABSORBER PIN	2	9	350-400	475-545
SHOCK ABSORBER LOWER MOUNTING PIN NUT	2	10	60-75	81-102
RADIUS ROD RETAINING BOLT	20	11	140-155	190-210
DRAG LINK BALL STUD NUT	1	12	150-200	203-271
DRAG LINK CLAMP BOLT NUT	2	13	65-75	88-102
DRAG LINK SOCKET END CLAMP PINCH BOLT	2	14	50-60	68-81
DRAG LINK TO PITMAN ARM STUD NUT	1	15	150-200	203-271
STEERING DAMPER	2	16	100-120	135-160
RADIUS ROD SUPPORT	4	17	228-252	309-342
STEERING DAMPER BRACKET	1	18	39-45	53-61
STEERING DAMPER BRACKET	4	19	30-36	41-49
RADIUS ROD SUPPORT	2	20	200-220	271-298
AIR SPRING NUT	6	21	31-38	42-52
STEERING DAMPER ARM NUTS	2	22	285-315	386-427

For more torque specifications, see ‘Dana Spicer Maintenance Manual NDS Axles and Maintenance Manual Model NDS’’ annexed at the end of this section.

CONTENTS

1. DRIVE AXLE 2

1.1 DESCRIPTION 2
1.2 DCDL (DRIVER-CONTROLLED MAIN DIFFERENTIAL LOCK) 2
1.3 DRIVE AXLE LUBRICATION 2
1.4 MAINTENANCE 3
1.4.1 Checking and Adjusting the Oil Level 3
1.4.2 Draining and Replacing the Oil 3
1.4.3 Speed Sensors (Anti-Lock Brake system, ABS) 4
1.5 REMOVAL AND REINSTALLATION 4
1.6 DISASSEMBLY AND REASSEMBLY 4
1.7 GEAR SET IDENTIFICATION 5
1.8 ADJUSTMENTS 5
1.9 FASTENER TORQUE CHART 5
1.10 TIRE MATCHING 5
1.11 DRIVE AXLE ALIGNMENT 5
1.11.1 Procedure 5
1.12 AXLE SHAFT SEALING METHOD 7

2. TAG AXLE 7

2.1 UNLOADING TAG AXLE (COACH ONLY) 7
2.2 RETRACTING TAG AXLE 7
2.3 RETRACTING TAG AXLE FOR REPAIR PURPOSES 8
2.4 GREASE LUBRICATED WHEEL BEARINGS 8
2.5 REMOVAL AND INSTALLATION 8
2.5.1 Removing Tag Axle Only 8
2.5.2 Removing Tag Axle Along With Suspension Components 8
2.5.3 Removing Transversal radius Rod 9
2.6 TAG AXLE ALIGNMENT 9

3. SPECIFICATIONS 10

ILLUSTRATIONS

FIGURE 1: DRIVE AXLE 2
FIGURE 2: DIFFERENTIAL ASSEMBLY 2
FIGURE 3: DRIVER-CONTROLLED DIFFERENTIAL LOCK 2
FIGURE 4: DIFFERENTIAL HOUSING BOWL 3
FIGURE 5: JACKING POINTS ON FRAME 4
FIGURE 6: JACKING POINTS ON DRIVE AXLE 4
FIGURE 7: FRONT & DRIVE AXLE ALIGNMENT 6
FIGURE 8: TAG AXLE ALIGNMENT 6
FIGURE 9: AXLE SHAFT INSTALLATION 7
FIGURE 10: TORQUE SPECIFICATION 7
FIGURE 11: JACKING POINTS ON TAG AXLE 9
FIGURE 12: INSTALLING EXTRACTOR TOOL 9

1. DRIVE AXLE

1.1 DESCRIPTION

The Meritor drive axle is equipped with a single reduction standard carrier mounted in front of the axle housing. The carrier consists of a hypoid drive pinion, a ring gear set and gears in the differential assembly.

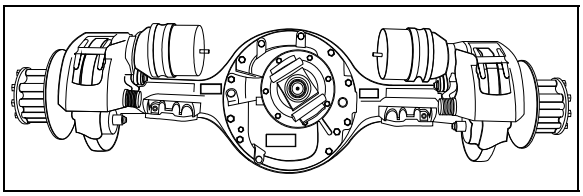

FIGURE 1: DRIVE AXLE 11019

A straight roller bearing (spigot) is mounted on the head of the drive pinion. All other bearings in the carrier are tapered roller bearings. When the carrier operates, there is a normal differential action between the wheels all the time.

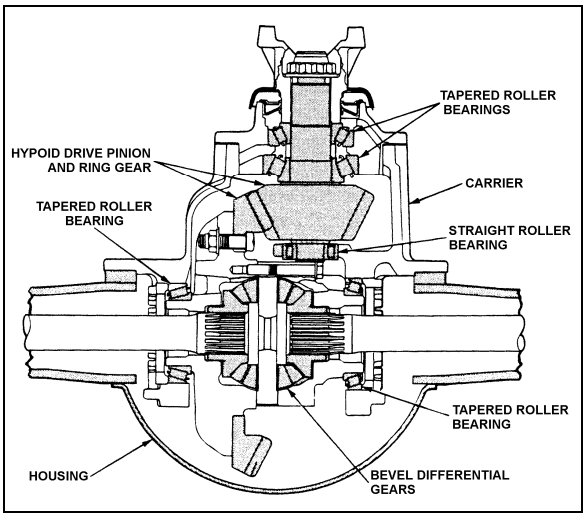

FIGURE 2: DIFFERENTIAL ASSEMBLY 11024

Several speed ratios are available for the drive axle. These ratios depend upon the motor and transmission. Also, special applications may suggest slightly different gear ratios.

1.2 DCDL (DRIVER-CONTROLLED MAIN DIFFERENTIAL LOCK)

Meritor Single-reduction carriers with driver-controlled main differential lock (DCDL) have the same type of gears and bearings as the standard-type carriers. The differential lock is operated by an air actuated shift assembly that is mounted on the carrier.

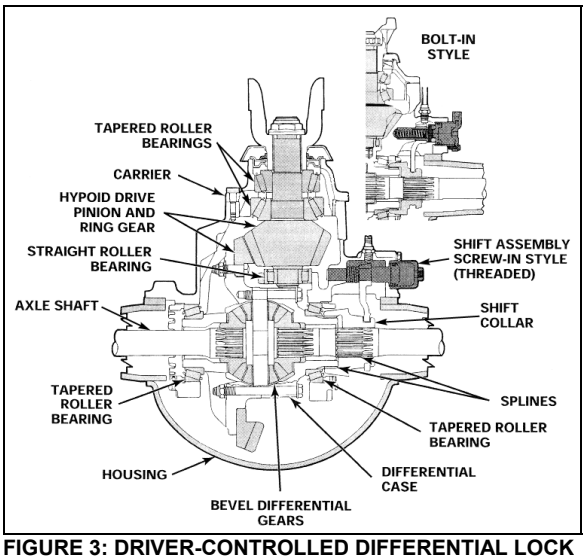

FIGURE 3: DRIVER-CONTROLLED DIFFERENTIAL LOCK 11028

1.3 DRIVE AXLE LUBRICATION

Use Multigrade gear oil 85W140 meeting MIL-PRF-2105-E, tested and approved to SAE J2360. If temperature drops below 10°F (-12°C), 80W90 should be used, and below -15°F (-26°C), 75W90 should be used. Additional lubrication information is covered in the Meritor Technical Bulletin *"Approved Rear Drive Axle Lubricants"* annexed to this section.

In extreme conditions, or for better performance, fill with synthetic gear oil.

MAINTENANCE

Check oil level and add (if necessary) every 25,000 miles (40 000 km) or according to the fleet maintenance interval, whichever comes first (Fig. 4).

MAINTENANCE

Change differential oil and clean the breathers, magnetic fill and drain plugs, every 100,000 miles (160 000 km) or once a year, whichever comes first.

If using full synthetic gear oil, change differential oil and clean the breathers, magnetic fill and drain plugs, every 250,000 miles (400 000 km) or every four years, whichever comes first.

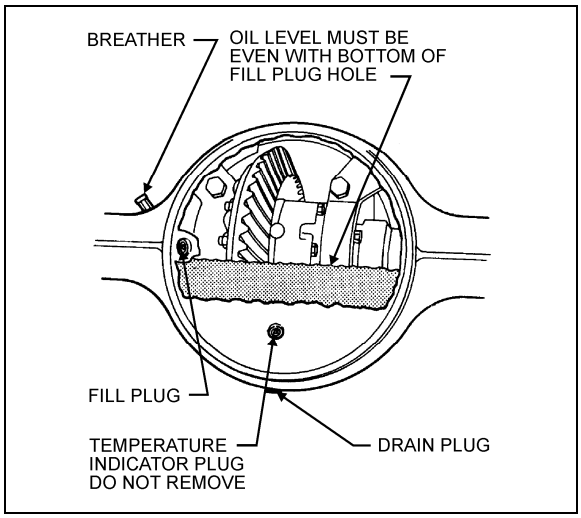

FIGURE 4: DIFFERENTIAL HOUSING BOWL 11007

1.4 MAINTENANCE

Proper vehicle operation begins with preventive maintenance, such as good differential use. The most common types of drive axle carrier failures are spinout, shock, fatigue, overheating and lubrication. Avoid neglecting these points since they would be the first steps to improper maintenance, expensive repairs, and excessive downtime.

Inspect the pinion oil seal, axle shaft flange and carrier housing gaskets for evidence of lubricant leakage. Tighten the bolts and nuts, or replace the gaskets and seals to correct leaks. Maintenance of the axle mountings consists primarily in a regular and systematic inspection of the air suspension units and radius rods, as directed in Section 16, *"Suspension".*

1.4.1 Checking and Adjusting the Oil Level

DANGER

Before servicing, park safely over a repair pit; apply parking brake, stop engine and set battery master switch to the "OFF" position.

1. Make sure the vehicle is parked on a level surface.

WARNING

Check the oil level when the axle is at room temperature. When hot, the oil temperature may be 190ºF (88ºC) or more and can cause burns. Also, a correct reading is not obtained when the axle is warm or hot.

2. Make sure the axle is "cold" or at room temperature.
3. Clean the area around the fill plug. Remove the fill plug from the differential axle housing bowl (Fig. 4).
4. The oil level must be even with the bottom of the hole of the fill plug.
   a. If oil flows from the hole when the plug is loosened, the oil level is high. Drain the oil to the correct level.
   b. If the oil level is below the bottom of the hole of the fill plug, add the specified oil.
5. Install and tighten the fill plug to 35-50 lbf-ft (48-67 Nm).

1.4.2 Draining and Replacing the Oil

DANGER

Before servicing, park safely over a repair pit, apply parking brake, stop engine and set battery master switch to the "OFF" position.

1. Make sure the vehicle is parked on a level surface. Put a large container under the axle's drain plug.

NOTE

Drain the oil when the axle is warm.

2. Remove the drain plug from the bottom of the axle. Drain and discard the oil in an environment friendly manner.
3. Install and tighten the drain plug to 35-50 lbf-ft (48-67 Nm).
4. Clean the area around the fill plug. Remove the fill plug from the differential housing bowl.
5. Add the specified oil until the oil level is even with the bottom of the hole of the fill plug. Allow the oil to flow through the axle and check the oil level again (lube capacity 41 pints [13,3 liters]).

CAUTION

The differential overheats when the oil temperature rises above 250ºF (120ºC).

6. Install and tighten the fill plug to 35-50 lbf-ft (48-67 Nm).

1.4.3 Speed Sensors (Anti-Lock Brake system, ABS)

For removing and installing the drive axle speed sensors (for anti-lock brake systems, ABS), refer to Section 12: *''Brake and Air System''* and to Rockwell WABCO Maintenance Manual: *"Anti-Lock Brake Systems For Trucks, Tractors and Buses"*, annexed at the end of section 12.

1.5 REMOVAL AND REINSTALLATION

The following procedure deals with the removal of the drive axle assembly and its attachments as a unit. The method used to support the axle during removal and disassembly depends upon local conditions and available equipment.

1. Raise vehicle by its jacking points on the body (fig. 5 or see Section 18, *"Body"* under heading *"Vehicle Jacking Points").* Place jack stands under frame. Remove drive axle wheels (if required, refer to Section 13, *"Wheels, Hubs And Tires".*

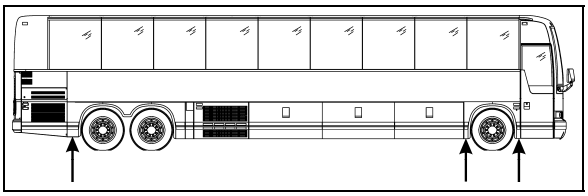

FIGURE 5: JACKING POINTS ON FRAME (TYPICAL) 18618

2. Exhaust compressed air from the air supply system by opening the drain cock on each air reservoir.
3. Disconnect the propeller shaft as directed in Section 9, *"Propeller Shaft",* in this manual.
4. On both sides of the vehicle, unscrew fasteners retaining front wheel housing plastic guards, and remove them from vehicle.
5. Disconnect both height control valve links from air spring mounting plate brackets then move the arm down to exhaust air suspension.
6. Remove cable ties securing the ABS cables (if vehicle is so equipped) to service brake chamber hoses. Disconnect the ABS cable plugs from the drive axle wheel hubs.

NOTE
When removing drive axle, if unfastening cable ties is necessary for ease of operation, remember to replace them afterwards.

7. Disconnect the brake chamber hoses.

NOTE
Position the hoses so they will not be damaged when removing the axle.

8. Install jacks under the axle jacking points to support the axle weight (refer to figure 6).

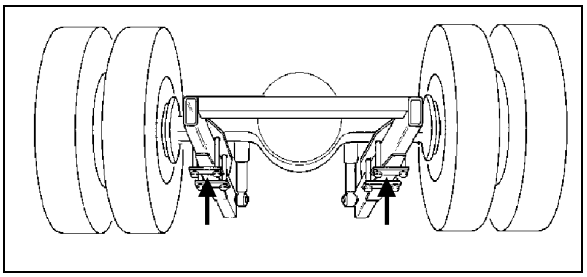

FIGURE 6: JACKING POINTS ON DRIVE AXLE 11005

9. Remove the four shock absorbers as outlined in Section 16, *"Suspension"* under heading *"Shock Absorber Removal".*
10. Remove the sway bar.
11. Remove the lower and upper longitudinal radius rod supports from vehicle sub-frame as outlined in Section 16, *"Suspension",* under heading *"Radius Rod Removal".*
12. Remove the transversal radius rod support from the vehicle sub-frame.
13. Remove the two retaining nuts from each of the four air bellows lower mounting supports.
14. Use the jacks to lower axle. Carefully pull away the jacks axle assembly from underneath vehicle.
15. Reverse removal procedure to reinstall drive axle.

NOTE
Refer to Section 16, "Suspension" for suspension components' proper tightening torques.

NOTE
Refer to section 13 "Wheels, Hubs And Tires" for correct wheel bearing adjustment procedure.

1.6 DISASSEMBLY AND REASSEMBLY

Disassembly and re-assembly procedures are covered under applicable headings in Meritor's *"MAINTENANCE MANUAL, NO. 5",* annexed to this section.

1.7 GEAR SET IDENTIFICATION

Gear set identification is covered under applicable heading in Meritor's *"MAINTENANCE MANUAL NO. 5",* annexed to this section.

1.8 ADJUSTMENTS

Adjustments are covered under applicable headings in Meritor's *"MAINTENANCE MANUAL NO. 5",* annexed to this section.

1.9 FASTENER TORQUE CHART

A differential fastener torque chart is provided in Meritor's *"MAINTENANCE MANUAL NO. 5",* annexed to this section.

1.10 TIRE MATCHING

Drive axle tire matching is covered under the applicable heading in Section 13, *"Wheels, Hubs And Tires"* in this manual.

1.11 DRIVE AXLE ALIGNMENT

NOTE
For *drive axle alignment specifications, refer to paragraph 3: ''Specifications'' in this section.*

The drive axle alignment consists in aligning the axle according to the frame. The axle must be perpendicular to the frame. The alignment is achieved with the use of shims inserted between the lower longitudinal radius rod supports and the frame.

Drive axle alignment is factory set and is not subject to any change, except if the vehicle has been damaged by an accident or if there are requirements for replacement.

If the axle has been removed for repairs or servicing and if all the parts are reinstalled exactly in the same place, the axle alignment is not necessary. However, if the suspension supports have been replaced or altered, proceed with the following instructions to verify or adjust the drive axle alignment.

NOTE
When drive axle alignment is modified, tag axle alignment must be re-verified.

1.11.1 Procedure

1. Park vehicle on a level surface, then chock front vehicle wheels.
2. Using two jacking points (which are at least 30 inches [76 cm] apart) on drive axle, raise the vehicle sufficiently so that wheels can turn freely at about ½ inch from ground. Secure in this position with safety stands, and release parking brake.
3. Install wheel mount sensors on front end and drive axle wheels (fig. 7).

NOTE
See reference numbers on wheel mount sensors (fig.7).

NOTE
Select axle specifications in the appropriate chart.

DRIVE AXLE ALIGNMENT

- With the system installed as in figure 7, adjust drive axle according to specifications' chart below.

DRIVE AXLE ALL VEHICLES			
Alignment / value	Minimum value	Nominal value	Maximum value
Thrust angle (deg.)	-0.04	0	0.04
Total Toe (deg.)	0.18 Toe-in	0	0.18 Toe-out

TAG AXLE ALIGNMENT

- Remove and reinstall all wheel mount sensors on the drive and tag axles (fig. 8);

NOTE
For an accurate alignment, the tag axle must be aligned with the drive axle.

NOTE
Reinstall wheel mount sensors as shown in figure 8.

- Adjust tag axle according to specifications' chart below in reference with drive axle.

TAG AXLE ALL VEHICLES			
Alignment / value	Minimum value	Nominal value	Maximum value
Parallelism (deg.)	-0.02	0	0.02
Total Toe (deg.)	0.18 Toe-in	0	0.18 Toe-out

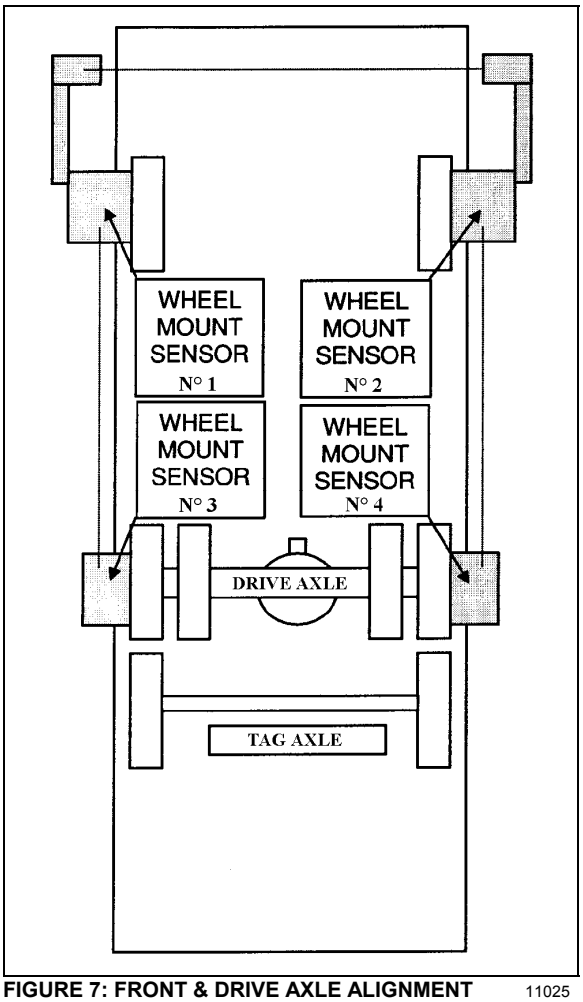

FIGURE 7: FRONT & DRIVE AXLE ALIGNMENT 11025

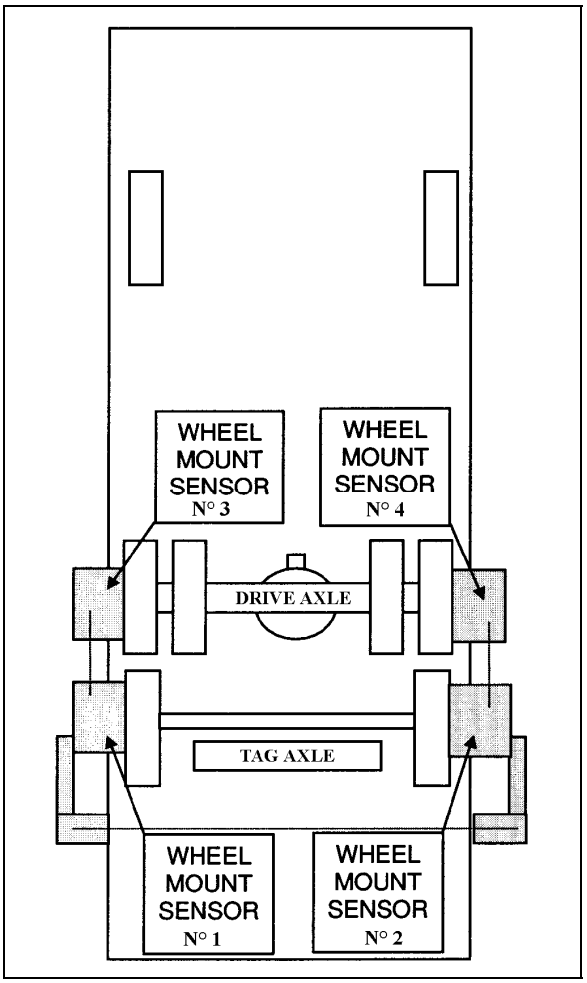

FIGURE 8: TAG AXLE ALIGNMENT 11026

NOTE
Refer to Section 16, "Suspension", for proper torque tightening of the longitudinal radius rod support nuts.

NOTE
When the drive alignment is changed, the tag alignment must also be adjusted.

1.12 AXLE SHAFT SEALING METHOD

The following method is to be used to ensure that axle shaft installation is fluid-tight:

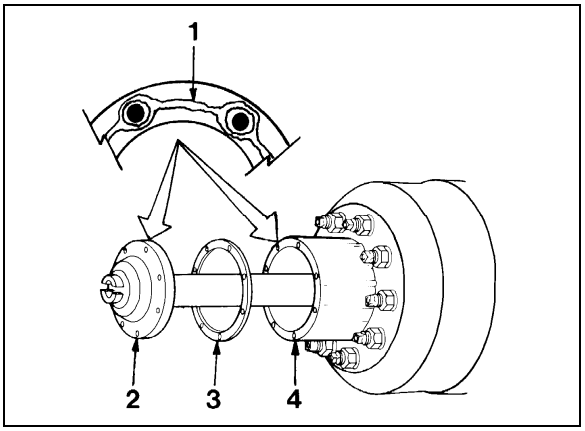

FIGURE 9: AXLE SHAFT INSTALLATION 11003

1 ..... Silicone sealant*
2 ..... Axle shaft
3 .....Gasket
4 .....Wheel hub

1. Clean the mounting surfaces of both the axle shaft flange and wheel hub where silicone sealant will be applied. Remove all old silicone sealant, oil, grease, dirt and moisture. Dry both surfaces.
2. Apply a continuous thin bead of silicone sealant* (Prévost P/N 680053) on the mounting surfaces and around the edge of all fastener holes of both the axle shaft flange and wheel hub.

* *GENERAL ELECTRIC Silicone Rubber Adhesive Sealant RTV 103 Black.*

WARNING

Carefully read cautions and instructions on the tube of silicone sealant and its packing.

3. Assemble components immediately to permit the silicone sealant to compress evenly between parts.
   a. Place a new gasket and then install the axle shaft into the wheel hub and differential carrier. The gasket and flange of the axle shaft must fit flat against the wheel hub.
   b. Install the tapered dowels at each stud and into the flange of the axle shaft. Use a punch or drift and hammer if needed.
   c. Install the lock washers and nuts on the studs. Tighten nuts to the correct torque value.

NOTE

Torque values are for fasteners that have a light application of oil on the threads (refer to Meritor Maintenance Manual).

9/16-18 plain nut: 110 - 165 lbf-ft (149 -224 Nm)

5/8-18 plain nut: 150 - 230 lbf-ft (203 - 312 Nm)

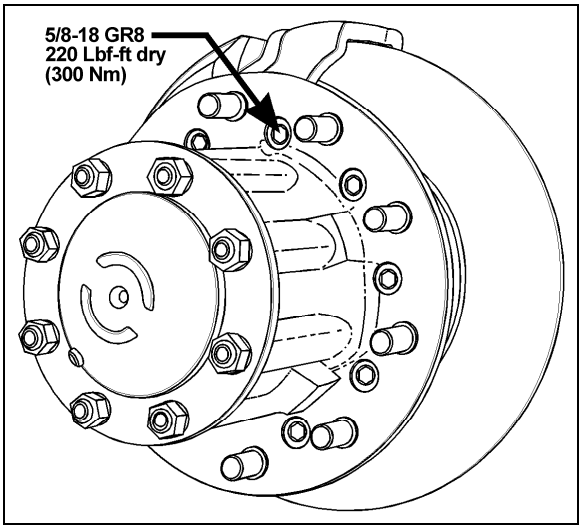

FIGURE 10: TORQUE SPECIFICATION

2. TAG AXLE

The tag axle is located behind the drive axle. It carries a single wheel and tire on each side.

2.1 UNLOADING TAG AXLE (COACH ONLY)

To reduce the turning radius, the air springs pressure will be automatically reduced by 75% when the coach is moving at speed lower than 5 mph (8 km/h) and with more than 1½ turn from the steering.

2.2 RETRACTING TAG AXLE

The standard tag axle retraction system is controlled by a valve located on the right lateral console and enables unloading and raising the tag axle (refer to the *"OPERATOR'S MANUAL"* for location of controls). This system has been designed for the following purposes:

1. Shortening of wheelbase, thus allowing tighter turning in tight maneuvering areas such as parking lots or when making a sharp turn.

2. Transferring extra weight and additional traction to the drive wheels on slippery surfaces.

The tag axle service brakes operate only when the axle is in normal driving (loaded) position.

CAUTION

Do not use tag axle in raised position for an extended period. Raising tag axle increases load on the drive axle, suspension and tires.

Do not drive vehicle with tag axle raised when speed is exceeding 12mph (20 km/h).

In order to prevent damage to the suspension, always raise the tag axle before lifting the coach.

2.3 RETRACTING TAG AXLE FOR REPAIR PURPOSES

- Connect an external air pressure line to the emergency fill valve in the engine compartment.
- Lift the axle by pushing the lever forward.

WARNING

Install a protective cover to prevent unfortunate lever operation while work is being carried out under the vehicle.

- Raise the vehicle using the lifts.

WARNING

Lift manufacturers recommend lowering the vehicle to the ground or installing some safety stands before activating the suspension to prevent the lifts from becoming unstable.

- For added safety, install nylon slings over tag axle shock absorbers.

2.4 GREASE LUBRICATED WHEEL BEARINGS

The unitized hub bearings used on the NDS range of axles, are non-serviceable items. Bearings are pre-adjusted, lubricated and have seals fitted as part of the manufacturing process. The bearings are greased for life and there is no need or facility for re-lubrication

Front and tag axle hub bearings need to be checked every 30,000 miles (48 000 km).

NOTE

For more information on front and tag axle wheel hub, refer to "DANA SPICER Maintenance Manual Model NDS and Maintenance Manual NDS Axles" annexed at the end of this Section.

2.5 REMOVAL AND INSTALLATION

2.5.1 Removing Tag Axle Only

The following procedure deals with the removal of the tag axle while keeping the air springs installed. The method used to support the axle and suspension components during removal and disassembly depends upon local conditions and available equipment.

- Connect an external air pressure line to the emergency fill valve in the engine compartment.
- Lift the axle by pushing the lever forward.

WARNING

Install a protective cover to prevent unfortunate lever operation while work is being carried out under the vehicle.

- Disconnect tag axle air springs pneumatic hoses and install valves or plugs.
- Raise the vehicle using the lifts.
- Dismount tag axle components.
- Before reinstalling air spring hoses, make sure there is no pressure left inside by opening the valves or unloading tag axle.

2.5.2 Removing Tag Axle Along With Suspension Components

The following procedure deals with the removal of the tag axle assembly along with the suspension components. The method used to support the axle and suspension components during removal and disassembly depends upon local conditions and available equipment.

1. Raise vehicle by its jacking points on the body (fig. 5 or see Section 18, *"Body"* under heading: *"Vehicle Jacking Points"*). Place jack under frame. Remove drive axle wheels (if required, refer to Section 13, *"Wheels, Hubs And Tires"*).

2. Exhaust compressed air from the air supply system by opening the drain cock on each air reservoir and deplete air bags by moving leveling valve arm down.
3. Install jacks under tag axle jacking points to support the axle weight (refer to figure 11).

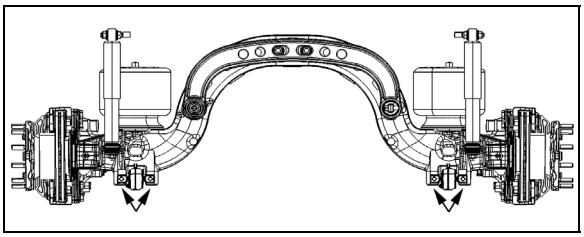

FIGURE 11: JACKING POINTS ON TAG AXLE 11029

4. Disconnect tag axle lifting chain collars from lower longitudinal radius rods.
5. Remove the propeller shaft as directed in Section 9, *"Propeller Shaft",* in this manual.
6. Disconnect the tag axle brake chamber hoses.

CAUTION

Position the hoses so they will not be damaged when removing axle.

7. Disconnect hose from the air spring upper mounting plate.
8. Remove the two shock absorbers as outlined in Section 16, *"Suspension",* under *"Shock Absorber Removal".*
9. Disconnect the lower longitudinal radius rods as outlined in Section 16, *"Suspension",* under *"Radius Rod Removal".*
10. Disconnect the transversal radius rod.
11. Disconnect the upper longitudinal radius rod.
12 Remove the air bellows retaining nuts from each of the two upper mounting plates.
13. Use the jacks to move the axle forward to clear the axle off the transmission. Lower the axle.

CAUTION

On vehicles equipped with an automatic transmission (with or without the output retarder), move tag assembly very carefully. Pay special attention to the U-shaped section, as the transmission end components may be easily damaged through a false maneuver.

14. Reverse removal procedure to reinstall tag axle.

NOTE

Refer to Section 16, "Suspension", for proper torque tightening of suspension components.

NOTE

Refer to section 13 "Wheels, Hubs And Tires" for correct wheel bearing adjustment procedure.

2.5.3 Removing Transversal radius Rod

Unfasten bolts and nuts fixing transversal radius rod ball joint to rear underframe.

Install extractor tool G32952 onto transversal rod.

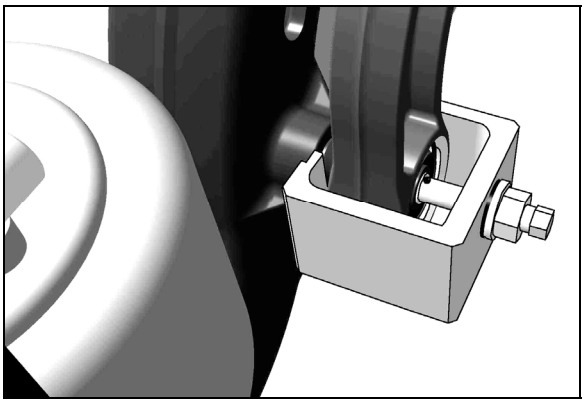

FIGURE 12: INSTALLING EXTRACTOR TOOL

CAUTION

It is strongly suggested to use the extractor tool in order to remove transversal radius rod.

Partially unscrew ball joint fixing bolt. Tighten extractor threaded rod.

Supporting the transversal radius rod at all times, gradually extract transversal radius rod from tag axle.

Reinstall by reversing procedure. Torque bolt to 190 Lb-Ft dry (255 Nm) dry.

2.6 TAG AXLE ALIGNMENT

The tag axle alignment consists in aligning the tag axle parallel to the drive axle position. Before aligning the tag axle, proceed with the drive axle alignment (paragraph 1.11). Tag axle alignment is achieved with the use of shims inserted between the lower longitudinal radius rod

supports and axle. Tag axle alignment is factory set and is not subject to any change, except if vehicle has been damaged by an accident or if there are requirements for parts replacement.

CAUTION

If this setting is altered significantly, it will cause excessive tire wear.

NOTE

It may be necessary to adjust the axle TOE as well as its alignment. In this case, insert shims (7 min. - P/N 121203 or 15 min. - P/N 121240) in between mounting plate and spindle, as required.

If axle has been removed for repair or servicing and if all parts are reinstalled exactly in their previous locations, axle alignment is not necessary. However, if the suspension supports have been replaced or have changed position, proceed with the following instructions to verify or adjust the tag axle alignment.

3. SPECIFICATIONS

Drive Axle

Make ..... Meritor
Drive track ..... 76.7 inches (1 949 mm)
Gear type ..... Hypoid
Axle type ..... Full floating
Lube capacity ..... 41 pints (19,3 liters)

Drive axle ratio

World Transmission	I-SHIFT Transmission
3.58:1	2.50:1
3.91:1	
4.10:1	

NOTE

The drive axle alignment consists in aligning the axle with reference to the frame. The axle must be perpendicular to the frame.

Tag Axle

Make ..... Prévost
Rear track ..... 83.6 inches (2 124 mm)
Axle type ..... Forged

NOTE

The tag axle alignment consists in aligning the tag axle parallel to the drive axle.

CONTENTS

1. AIR SYSTEM 4

2. BRAKES 4

3. AIR RESERVOIRS 4

3.1 MAINTENANCE 4
3.1.1 Wet (Main) Air Tank 4
3.1.2 Primary Air Tank 4
3.1.3 Accessory Air Tank 5
3.1.4 Secondary Air Tank 5
3.1.5 Kneeling Air Tank 5
3.1.6 Parking Brakes Overrule Air Tank 5
3.2 PING TANK 5

4. AIR SYSTEM EMERGENCY FILL VALVES 5

5. ACCESSORY AIR FILTER 6

5.1 FILTER ELEMENT REPLACEMENT 6
5.2 CLEANING 6

6. AIR GAUGES (PRIMARY, SECONDARY AND ACCESSORY) 6

7. AIR FILTER/DRYER 6

7.1 AIR FILTER/DRYER PURGE TANK 7

8. HALDEX CONSEP ® CONDENSER / SEPARATOR 7

8.1 MAINTENANCE 7

9. AIR LINES 7

9.1 COPPER PIPING 7
9.2 FLEXIBLE HOSES 8
9.3 NYLON TUBING 8
9.4 AIR LINE OPERATING TEST 8
9.5 AIR LINE LEAKAGE TEST 8
9.6 MAINTENANCE 8

10. PRESSURE REGULATING VALVES 8

10.1 MAINTENANCE 8
10.2 PRESSURE SETTING PROCEDURE 9

11. AIR COMPRESSOR 9

11.1 COMPRESSOR REMOVAL AND INSTALLATION 10

12. EMERGENCY/PARKING BRAKE CONTROL VALVE (PP-1) 10

13. EMERGENCY / PARKING BRAKES OVERRULE CONTROL VALVE (RD-3) 10

14. FLIP-FLOP CONTROL VALVE (TW-1) 11

15. DUAL BRAKE APPLICATION VALVE (E-10P) 11

15.1 BRAKE PEDAL ADJUSTMENT 11
15.1.1 Maintenance 11

16. STOPLIGHT SWITCHES 11

17. PARKING BRAKE ALARM SWITCH 12

18. BRAKE RELAY VALVE (R-12 & R-14) 12

19. QUICK RELEASE VALVES (QR-1) 12

20. SPRING BRAKE VALVE (SR-7) 12

21. PRESSURE PROTECTION VALVE (PR-4) 13

22. LOW PRESSURE INDICATOR (LP-3) 13

23. SHUTTLE-TYPE DOUBLE CHECK VALVE (DC-4) 13

24. EMERGENCY BI-FOLD ENTRANCE DOOR OPENING VALVES 14

25. AIR SYSTEM TROUBLESHOOTING 14

26. BRAKE OPERATION 14

27. AIR BRAKES 14

27.1 CHECKING DISC BRAKE PADS 15
27.1.1 Type A – Vehicles Equipped With a Rubber Bushing That is Axially Ribbed 15
27.1.2 Type B – Vehicles Equipped With a Wear Indicator 15
27.2 CALIPER RUNNING CLEARANCE 15
27.3 TORQUE SPECIFICATIONS 16

28. SAFE SERVICE PROCEDURES 16

29. AIR BRAKE TROUBLESHOOTING 17

30. BRAKE AIR CHAMBER 19

30.1 MAINTENANCE 19
30.2 EMERGENCY/PARKING BRAKE MANUAL RELEASE 19
30.3 BRAKE CHAMBER REMOVAL 20
30.4 BRAKE CHAMBER INSTALLATION 20
30.5 BRAKE CHAMBER DISASSEMBLY 20

31. ANTI-LOCK BRAKING SYSTEM (ABS) 21

31.1 TROUBLESHOOTING AND TESTING 21
31.2 ABS COMPONENTS 21
31.2.1 Electronic Control Unit (ECU) 21
31.2.2 ABS Modulator Valve 22
31.2.3 Sensors 22
31.2.4 Spring clip 23

32. FITTING TIGHTENING TORQUES 23

33. SPECIFICATIONS 24

ILLUSTRATIONS

FIGURE 1: I-BEAM FRONT SUSPENSION AIR RESERVOIRS LOCATION 4
FIGURE 2: REAR VALVE LOCATION (TYPICAL) 5
FIGURE 3: FRONT SERVICE COMPARTMENT 5
FIGURE 4: ACCESSORY AIR FILTER 6
FIGURE 5: HALDEX AIR FILTER DRYER 6
FIGURE 6: HALDEX CONSEP CONDENSER/SEPARATOR 7
FIGURE 7: AIR PRESSURE REGULATING VALVE 9
FIGURE 8: AIR PRESSURE REGULATOR 9
FIGURE 9: AIR COMPRESSOR LOCATION 9
FIGURE 10: PP-1 10
FIGURE 11: RD-3 11
FIGURE 12: TW-1 11
FIGURE 13: BRAKE PEDAL ADJUSTMENT 11
FIGURE 14: DELCO SWITCH 11
FIGURE 15: BENDIX SWITCH 12
FIGURE 16: R-12 12
FIGURE 17: R-14 12
FIGURE 18: QR-1 12
FIGURE 19: SR-7 13
FIGURE 20: PR-4 13
FIGURE 21: LP-3 13
FIGURE 22: DC-4 13
FIGURE 23: THREE-WAY VALVE 14
FIGURE 24: BRAKE PAD CHECK 15
FIGURE 25: BRAKE PAD WEAR INSPECTION 15
FIGURE 26: RUNNING CLEARANCE 16
FIGURE 27: TORQUE SPECIFICATION 16
FIGURE 28: TORQUE SPECIFICATION 16
FIGURE 29: FRONT AXLE BRAKE AIR CHAMBER 19
FIGURE 30: DRIVE AXLE BRAKE AIR CHAMBER 19
FIGURE 31: ABS ECU LOCATION 22
FIGURE 32: ABS MODULATOR VALVE 22
FIGURE 33: ABS SENSOR LOCATION 23
FIGURE 34: SPRING CLIP 23
FIGURE 35: HOSE FITTINGS 23
FIGURE 36: HOSE FITTING 24
FIGURE 37: HOSE FITTING 24
FIGURE 38: HOSE FITTING 24

1. AIR SYSTEM

The basic air system consists of an air compressor, reservoirs, valves, filters and interconnecting lines and hoses. It provides a means for braking; operating controls and accessories, and suspension (refer to Section 16, *"Suspension"*, for complete information on suspension description and maintenance). An air system schematic diagram is annexed in the technical publications box provided with the vehicle for better understanding of the system.

2. BRAKES

This vehicle uses both the service brake and emergency/parking brake. The service brake air system is divided into two independent circuits to isolate front brakes from rear brakes, thus providing safe braking in the event that one circuit fails. Front axle brakes operate from the secondary air system, while brakes on both the drive axle and tag axle operate from the primary air system.

NOTE
The tag axle service brake operates only when the axle is in normal ride position (loaded and down).

Furthermore, the brake application or release, which is speed up by a pneumatic relay valve (R-12), will start with the rear axles and will be followed by the front axle, thus providing uniform braking on a slippery road. The vehicle is also equipped with an Anti-Lock Braking System (ABS), which is detailed later in this section.

The drive axle is provided with spring-loaded emergency/parking brakes, which are applied automatically whenever the control valve supply pressure drops below 40 psi (275 kPa).

3. AIR RESERVOIRS

The air coming from the air dryer is first forwarded to the wet air tank, then to the primary (for the primary brake system), secondary (for the secondary brake system), and accessory (for the pneumatic accessories) air tanks (Fig. 1).

Two additional air reservoirs are installed on the vehicle: the kneeling air tank and the parking brakes overrule air tank.

3.1 MAINTENANCE

Ensure that the wet (main) air tank is purged during pre-starting inspection. In addition, it is good practice to purge this reservoir at the end of every working day. The remaining reservoirs must be purged at every 12,500 miles (or 20 000 km) or once every year, whichever comes first.

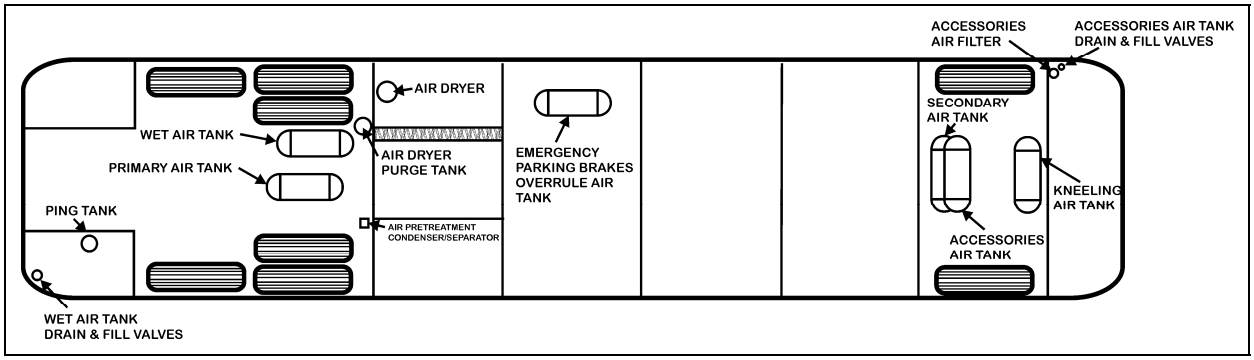

FIGURE 1: I-BEAM FRONT SUSPENSION AIR RESERVOIRS LOCATION 12213

3.1.1 Wet (Main) Air Tank

This reservoir, located above the L.H. wheel of drive axle in the rear wheelhousing, is provided with a bottom drain valve. A recommended purge using the bottom drain valve should be done every 12,500 miles (20 000 km), or once a year, whichever comes first.

3.1.2 Primary Air Tank

This reservoir is located above the R.H. wheel of the drive axle and is provided with a bottom drain valve (Fig. 1). It is recommended to purge the primary air tank every 12,500 miles (20 000 km) or once a year, whichever comes first.

3.1.3 Accessory Air Tank

The accessory air tank is installed close to the front axle and is provided with a bottom drain valve (Fig. 1).

Purge the reservoir by its drain valve every 12,500 miles (20 000 km) or once a year, whichever comes first.

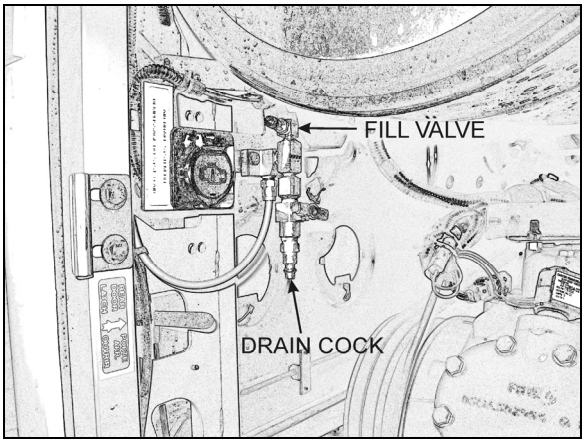

FIGURE 2: REAR VALVE LOCATION (TYPICAL) 12211

3.1.4 Secondary Air Tank

This tank is located in the front wheelhousing, behind the steering axle (Fig. 1). It is provided with a bottom drain valve.

Purge this reservoir every 12,500 miles (20 000 km) or once a year, whichever comes first.

3.1.5 Kneeling Air Tank

The kneeling air tank is located in the front wheelhousing (Fig. 1), and is provided with a bottom drain valve.

3.1.6 Parking Brakes Overrule Air Tank

The parking brakes overrule air tank is installed at the ceiling of the rear baggage compartment, on the L.H. side, and is provided with a bottom drain valve and drain tube.

3.2 PING TANK

The ping tank is located in the engine compartment; it is accessible through the engine compartment R.H. side door. It is used to dissipate heat and to reduce noise produced by the air compressor cycling on and off.

4. AIR SYSTEM EMERGENCY FILL VALVES

All vehicles come equipped with two emergency fill valves that enable system pressurization by an external source such as an air compressor. The rear valve is located in the engine compartment and is accessible from engine R.H. side door (Fig 2). It is positioned close to the door opening.

CAUTION

Maximum allowable air pressure is 125 psi (860 kPa). Air filled through these two points will pass through the standard air filtering system provided by Prevost. Do not fill system by any point on the system.

The front valve is located in the front service compartment close to R.H. side of door frame (Fig. 3).

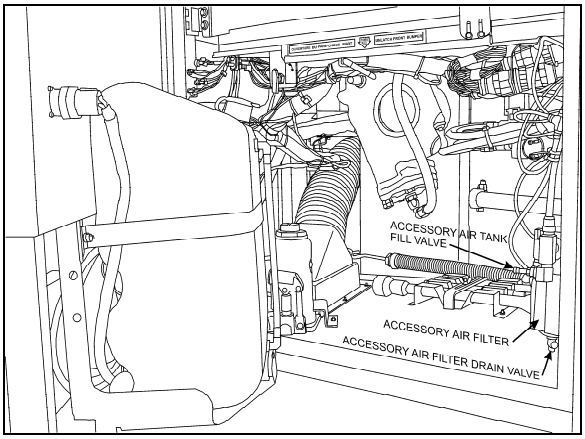

FIGURE 3: FRONT SERVICE COMPARTMENT 12210

These two air system emergency fill valves are fitted with the same valve stems as standard tires, and can be filled by any standard external air supply line.

The rear air system emergency fill valve will supply air for all systems (brakes, suspension and accessories) while the front fill valve will supply air for accessories only.

5. ACCESSORY AIR FILTER

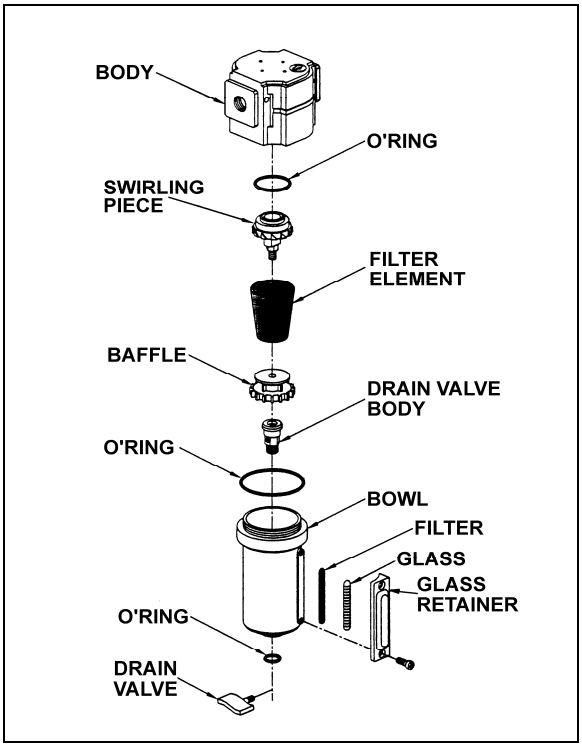

FIGURE 4: ACCESSORY AIR FILTER 12088

This filter is located inside the front service compartment (Fig. 3). Its main function consists in filtering the air supplied to the accessory air system, when connected to an external supply line. Ensure filter is purged whenever supplying the system with an external air line and at least every 12,500 miles (20 000 km). To purge, open drain valve (Fig. 4), let the moisture come out, then close the drain valve.

5.1 FILTER ELEMENT REPLACEMENT

Replace filter element whichever of the following occurs first: every 100,000 miles (160 000 km), every two years, or whenever differential pressure exceeds 15 psi (105 kPa) between filter inlet and outlet ports. Check condition of all three O'rings for damage. Replace when necessary (Fig. 4).

5.2 CLEANING

Clean filter body and bowl with a warm water and soap solution. Rinse thoroughly with clean water. Blow dry with compressed air making sure the air stream is moisture free and clean. Pay particular attention to the internal passages. Inspect all parts for damage and replace if necessary.

6. AIR GAUGES (PRIMARY, SECONDARY AND ACCESSORY)

The air pressure gauges, located on the dashboard (see *"Operator's Manual"*), are connected to the DC-4 double check valve, located on the pneumatic accessory panel in the front service compartment.

The latter is connected to the air lines running from the primary and secondary air tanks, as shown on the pneumatic system diagram provided in the technical publications box. The accessory air gauge is connected to the accessory air tank using the drain valve connector. The vehicle should never be set in motion until the buzzer alarm and warning lights turn off, i.e. when air pressure registers at least 66 psi (455 kPa). Moreover, if pressure drops below 66 psi (455 kPa), the *"Low air pressure"* warning lights will turn on, and the *"Low air pressure"* buzzer will sound. Stop the vehicle immediately, determine and correct the cause(s) of pressure loss. Check the gauges regularly with an accurate test gauge. Replace the gauge with a new unit if there is a difference of 4 psi (27 kPa) or more in the reading.

7. AIR FILTER/DRYER

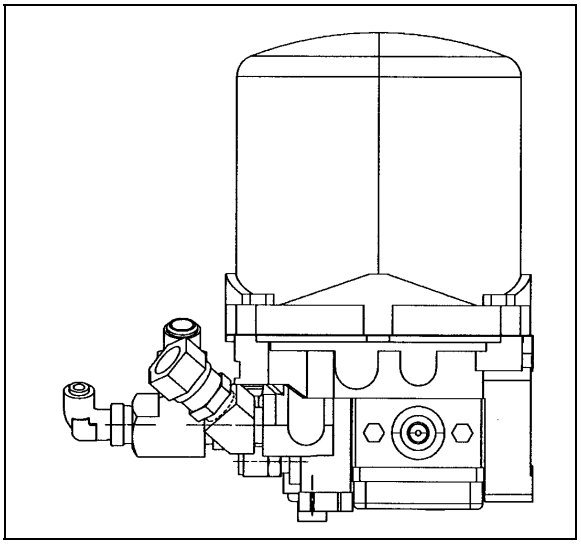

FIGURE 5: HALDEX AIR FILTER DRYER 12194

The air filter/dryer is either located in the rear wheelhousing, above the drive axle or aft of the evaporator compartment, inside the engine coolant heater compartment (Fig. 1 & 5). Its purpose is to remove moisture that could damage the air system before the air enters the system reservoir. The air filter/dryer also filters the air to remove dirt, compressor oil, and other contaminants that can damage the system.

Change cartridge every 100,000 miles (160 000 km) or once every two years, whichever comes first. The air dryer may be purged for maintenance purposes using the remote drain valve located in the engine compartment and accessible through the engine compartment R.H. side door. The valve is positioned close to the L.H. side of door opening (Fig. 2). The air filter/dryer has a built-in governor to maintain the system between 108 psig and 123 psig.

Maintenance and repair information is supplied in the maintenance information annexed to this section.

7.1 AIR FILTER/DRYER PURGE TANK

A tank is supplied to purge the air filter/dryer to remove moisture and contaminants.

8. HALDEX CONSEP ® CONDENSER / SEPARATOR

The Consep ® Air Pretreatment Condenser/ Separator is located in front of rear wheel-housing (Fig. 1 & 6). Within the vehicle's air brake system, the Haldex Consep condenses, separates and removes 90% of the oils, liquids and other contaminants, while treating up to 30 SCFM. It reduces corrosion and possible failure of air brake system components caused by contamination and significantly increases the air dryer desiccant life.

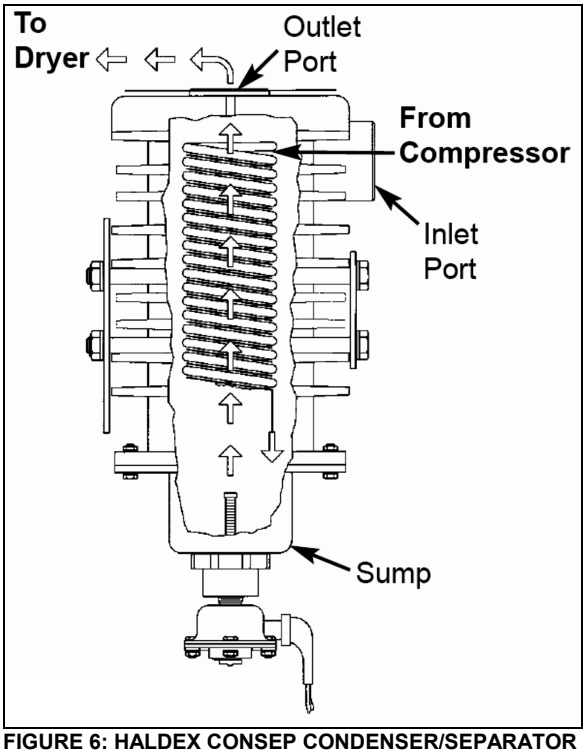

FIGURE 6: HALDEX CONSEP CONDENSER/SEPARATOR

8.1 MAINTENANCE

Mounted between the air compressor and the air dryer, the compact Consep requires little maintenance during its long service life. An automatic drain valve installed on the Consep saves time while ensuring that liquids are removed regularly for optimum performance. The drain valve's integrated filter prevents damage from large debris, while a built-in heater prevents freeze up.

The CONSEP must be inspected periodically for proper operation. The interval between inspections is determined by the type of service (every 6 months for City Transit). High compressor duty cycles and high temperatures can cause a buildup of carbon in the condenser, drain valve and filter. This contamination must be removed for proper operation.

Installation, Maintenance and Inspection information is supplied in the maintenance information annexed to this section under reference number L31167.

9. AIR LINES

Copper piping, nylon-reinforced tubing, and flexible hoses are used to connect the units in the pneumatic system, including air brake system, suspension system and accessory systems such as the entrance door, fresh air damper cylinder, air horns, etc. Furthermore, the nylon tubing is color coded to ease identification. Refer to the following table for the complete color identification code. Service instructions for each type of air line are also provided under the applicable headings.

Color	Circuit
Red	Secondary
Green	Primary and Delivery
Yellow	Parking Brake
Blue	Suspension
Black	Accessory

9.1 COPPER PIPING

A heat dissipation copper piping assembly is used to dissipate the heat coming from the compressor before it enters the air filter/dryer. Connections should be checked for leakage at least every 6,250 miles (10 000 km) or twice a year, whichever comes first. Tighten or replace when necessary. When replacing copper piping,

the parts must be free of burrs, copper cuttings, and dirt. Blow out piping with compressed air. Any such particles will destroy sealing seats in air control units. Also, new piping must be the same size as the old one.

9.2 FLEXIBLE HOSES

A flexible hose is used normally where it is impractical to use copper or nylon tubing due to constant flexing during operation, such as brake chamber hoses. Hose connections should be tested for leakage at least every 6,250 miles (10 000 km) or twice a year, whichever comes first and tightened or replaced if necessary. Any hose which is chafed, worn or kinked should be replaced.

Teflon-braided stainless steel hoses used in the engine compartment must be replaced only with similar hoses.

9.3 NYLON TUBING

Nylon tubing is used for air lines in areas where usage of this material is suitable. Nylon tubing is flexible, durable, and weather resistant. When replacing an air line, use nylon tubing only where it has been used previously.

Nylon air lines must never be routed in areas where temperature could exceed 200°F (93°C).

CAUTION

Nylon air lines should be used to replace existing nylon lines only, and must comply with the color identification code to ease pneumatic system troubleshooting.

9.4 AIR LINE OPERATING TEST

If any trouble symptom such as slow brake application or slow brake release indicates a restricted or clogged air line, disconnect the suspected tube or hose at both ends and blow through it to clear the passage.

Inspect tubing and hose for partial restriction that may be caused by dents or kinks. If such a condition is found, the tubing or hose should be replaced.

9.5 AIR LINE LEAKAGE TEST

With air system fully charged and the brakes applied, coat all tubing and hose connections with a soapy solution to check for air leakage. No leakage is permitted. Leakage can sometimes be corrected by tightening the connection. If this fails to correct the leakage, new fittings, nylon tubing, copper tubing, teflon-braided stainless steel and flexible hoses must be installed as applicable.

9.6 MAINTENANCE

Inspect all lines for cuts, swelling, kinks or other damage or deterioration. Check for lines being pinched by other components. Retaining clips and ties must be in place.

Any support or bracket should be in good condition and mounted firmly in position. Hose spring guards should be in usable condition and not distorted. Particular attention should be given to long lines. Any supporting component (clips, ties, grommets, etc.) must be secured to prevent against unnecessary vibration and eventual loosening of connection. Any detected leak should be repaired. Be sure nylon lines are not near areas of intense heat. Check for any missing grommets or loose material where chafing or cutting may occur. Replace with new material as required. In general, lines should be securely located in position and free from any binding condition which would hinder air flow.

10. PRESSURE REGULATING VALVES

There is one pressure regulator for the belt tensioners, and another one installed on vehicles equipped with the World transmission output retarder.

The belt tensioner pressure regulating valve is located in the engine compartment above the engine air filter and is used to limit the air pressure in belt tensioners to 45 ± 2 psi (310 ± 15 kPa) (Fig. 7).

The other regulator is located in the engine compartment, on the engine cradle R.H. side (accessible through the engine R.H. side door). It is used for transmission retarder and should be adjusted to 85 ± 3 psi (586 ± 20 kPa).

	Air Pressure (psi)	Air Pressure (kPa)
Belt Tensioner	45	310
Retarder	85	586

10.1 MAINTENANCE

Every 100,000 miles (160 000 km) or once every two years, whichever comes first, disassemble the regulating valve and wash all metal parts in

a cleaning solvent (Fig. 7). Examine the diaphragm; if cracked, worn or damaged, replace with a new one. If the valve is excessively grooved or pitted, it should be replaced. Replace any other part that appears worn or damaged. After reassembly, adjust to the specified pressure setting and check for air leakage.

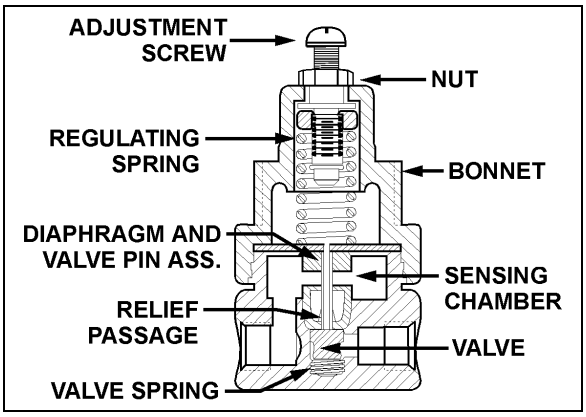

FIGURE 7: AIR PRESSURE REGULATING VALVE 12141A

10.2 PRESSURE SETTING PROCEDURE

Remove the dust cap from the pressure check valve (Fig. 8). Attach a pressure gauge at this port and check the pressure reading. If the pressure reading is incorrect, adjust as follows:

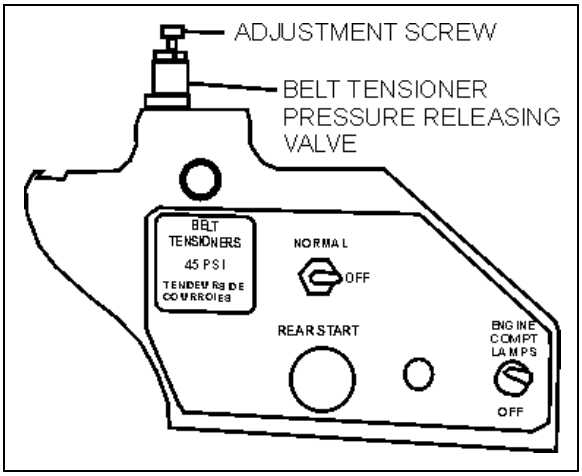

FIGURE 8: AIR PRESSURE REGULATOR 12200

1. Loosen the locking nut, turn the adjustment screw counterclockwise to decrease pressure by approximately 10 psi (70 kPa) below the required pressure.
2. Turn the adjustment screw clockwise to increase the pressure slowly until the required pressure setting is reached. Tighten the locking nut.
3. Remove pressure gauge and replace dust cap on the air pressure check valve.

11. AIR COMPRESSOR

The Wabco System Saver 636 Twin Cylinder air compressor is located on the alternator side of the engine, at the flywheel end (Fig. 9). Its function is to provide and maintain air under pressure to operate devices in brake and air systems.

The compressor is driven by the ring gear, and is water cooled. Engine coolant is fed to the compressor through a flexible hose tapped into the block water jacket and connected to the rear of the compressor. Coolant returns from the top of the compressor (governor side) through a flexible hose to the engine pump.

The air is taken from the air intake manifold and entered in the top of the compressor. The compressed air is pushed into the discharge line located on side of the compressor, which sends air to the air dryer. Lubricating oil is supplied to the compressor by a line from the cylinder block oil gallery connected to the air compressor. Lubricating oil returns to the engine crankcase through the air compressor drive assembly.

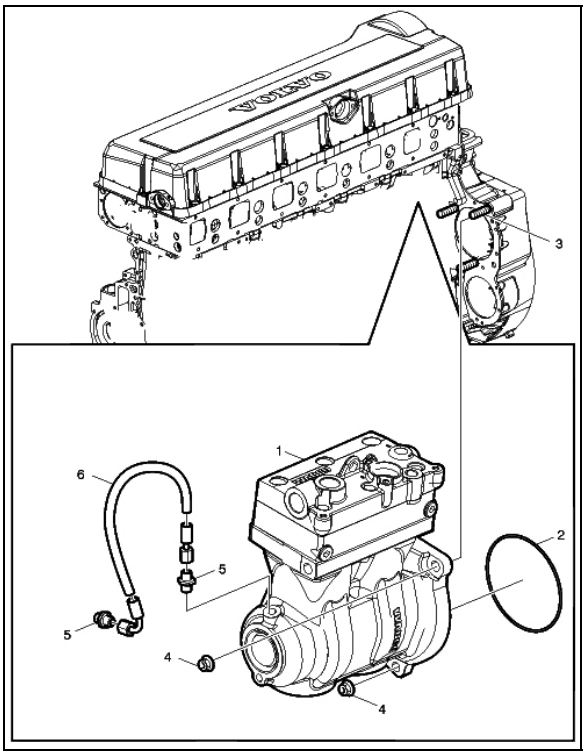

FIGURE 9: AIR COMPRESSOR LOCATION 03061

Maintenance and repair information on the Wabco 636 Twin Cylinder air compressor is supplied in the applicable booklet annexed at the end of this section.

Item	Description	Notes
1	Air Compressor	Wabco 636
2	O'Ring	
3	Stud (3)	M12
4	Flange Nut (3)	Torque to 15lb-ft (20 Nm)
5	Nipple (2)	
6	Hose Assembly	

11.1 COMPRESSOR REMOVAL AND INSTALLATION

1. Exhaust compressed air from air system by opening the drain valve of each air tank.
2. Drain the engine cooling system. See Section 5: "*Cooling System*".
3. Access the compressor by the engine R.H. side compartment. Identify and disconnect all air, coolant and oil lines from the compressor assembly.
4. Remove the three compressor flange mounting nuts.
5. Slide air compressor rearward to disengage the hub from coupling. Remove the air compressor.

Remove and retain the oil supply tube that runs between the compressor and the engine

Reverse removal procedure for installation.

12. EMERGENCY/PARKING BRAKE CONTROL VALVE (PP-1)

A push-pull control valve mounted on the L.H. lateral console is provided for parking brake application or release. The spring brakes are self-actuated whenever the control valve supply pressure drops below 40 psi (275 kPa). In the UP position, brakes are ON. In the DOWN position, brakes are RELEASED. A protective case around the knob prevents accidentally releasing the brakes.

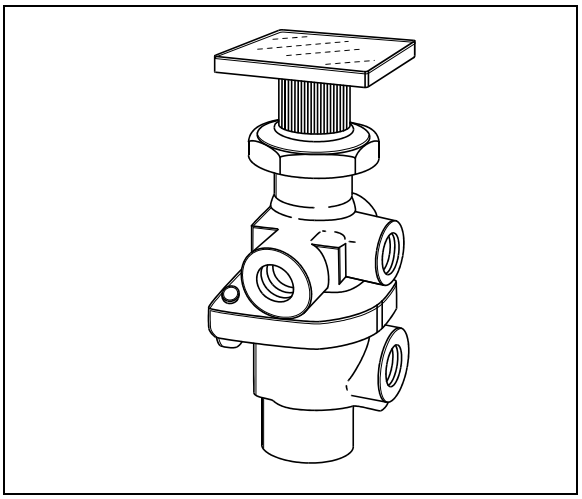

FIGURE 10: PP-1 12142

Maintenance and repair information on this valve is supplied in the applicable booklet annexed to this section under reference number SD-03-3611.

Remove the valve the following way:

1. Drain the air system.
2. Access this valve by tearing out the finishing panel, which holds the controls in place (Fig. 10).
3. Disconnect the air tubes.
4. Remove the retaining screws.
5. Service or replace the valve.
6. Installation is the reverse of removal.

13. EMERGENCY / PARKING BRAKES OVERRULE CONTROL VALVE (RD-3)

A RD-3 control valve is used with the parking brake overrule system. In the case of self-application of spring brakes due to a pressure drop, the brakes can be released by holding down this control valve. Maintenance and repair information on this valve is supplied in the applicable booklet annexed to this section under reference number SD-03-3611.

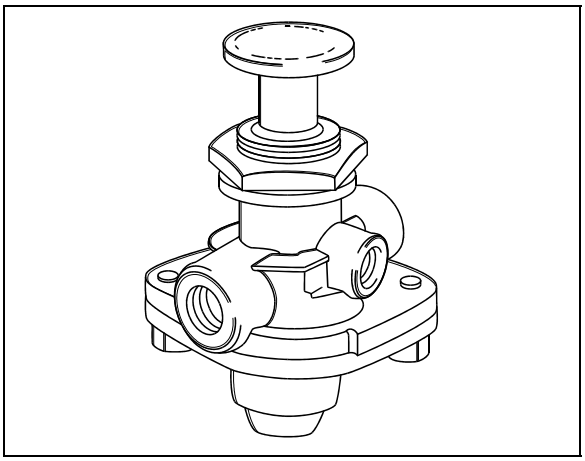

FIGURE 11: RD-3 12136

14. FLIP-FLOP CONTROL VALVE (TW-1)

A flip-flop control valve mounted on the L.H. lateral console is provided to unload tag axle air springs and to lift tag axle. It is a manually operated "on-off" valve. Maintenance and repair information on this valve is supplied in the applicable booklet annexed to this section under reference number SD-03-3602.

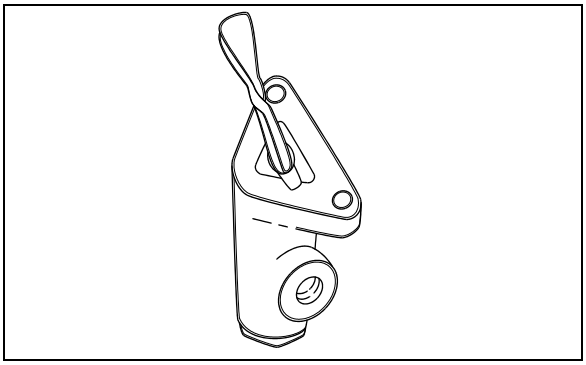

FIGURE 12: TW-1 12138

15. DUAL BRAKE APPLICATION VALVE (E-10P)

The E-10P dual brake valve is a floor mounted, foot-operated type brake valve with two separate supply and delivery circuits. This valve is located in the front service compartment (Fig. 13).

15.1 BRAKE PEDAL ADJUSTMENT

After brake pedal replacement or repair, adjust the pedal to its proper position according to the following procedure:

1. Replace the linkage, loosen threaded rod lock nuts and screw or unscrew the threaded adjustment rod in order to obtain a 45° brake pedal inclination (Fig. 13).
2. Tighten threaded rod lock nuts.

15.1.1 Maintenance

Maintenance and repair information on the E-10P dual brake application valve is supplied in the applicable booklet annexed to this section under reference number SD-03-830.

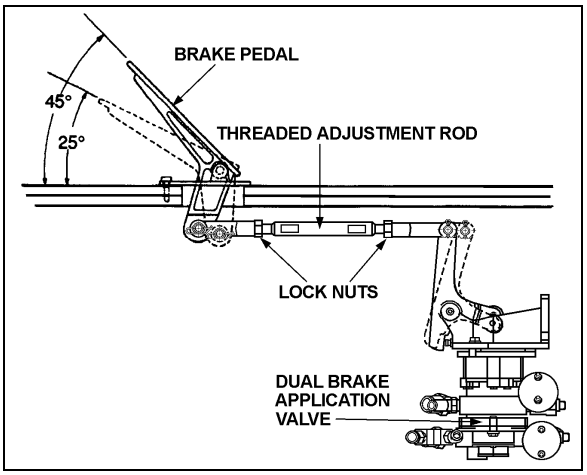

FIGURE 13: BRAKE PEDAL ADJUSTMENT 12208

16. STOPLIGHT SWITCHES

Two electro-pneumatic stoplight switches are mounted on the dual brake application valve (E-12). The upper one is used for the primary air circuit while the lower one is used for the secondary air circuit. Both switches are connected in parallel and have the same purpose, i.e. completing the electrical circuit and lighting the stoplights when a brake application is made. The upper switch (AC Delco) is designed to close its contact between 2 psi and 4 psi (14 kPa to 28 kPa) (Fig. 14), while the lower one (Bendix, SL-5) closes its contact at 4 psi (28 kPa) (Fig. 15). The switches are not serviceable items; if found defective, the complete unit must be replaced.

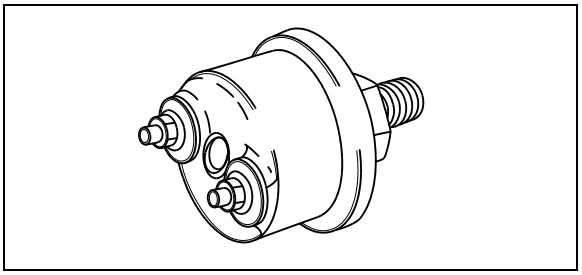

FIGURE 14: DELCO SWITCH 12139

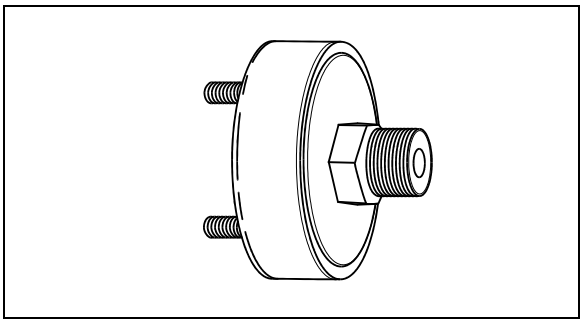

FIGURE 15: BENDIX SWITCH 12140

17. PARKING BRAKE ALARM SWITCH

Refer to the appropriate annexed booklet (Bendix, SL-5 Stop Light Switch; reference no. SD-06-2501).

The parking brake alarm uses the same switch as the stoplights. It is mounted on the spring brake valve and operates in conjunction with a NC relay to sound a warning alarm by completing the electrical circuit when the ignition switch is turned OFF with parking brake released.

18. BRAKE RELAY VALVE (R-12 & R-14)

The primary air system includes three brake relay valves being supplied by the dual brake valve, and which function is to speed up the application and release of the service brakes.

One Wabco R-14 valve located in the rear underframe supplies the drive axle service brake air line, while the other two R-12 valves supply independently both the tag axle right and left service brake air line and act as interlock valves. These valves are accessible from under the vehicle at the level of the tag axle. Maintenance and repair information on these valves is supplied in the applicable booklet annexed to this section under reference number SD-03-1064.

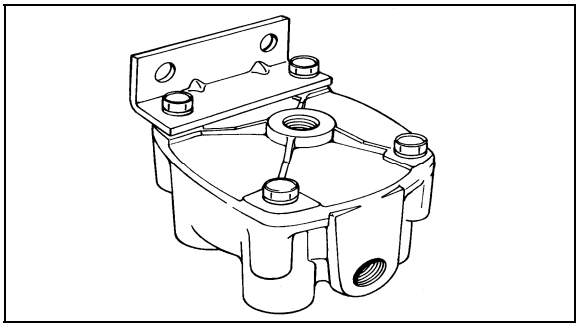

FIGURE 16: R-12 12074

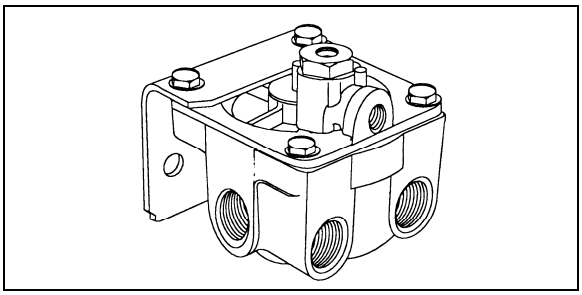

FIGURE 17: R-14 12207

19. QUICK RELEASE VALVES (QR-1)

The quick release valve is located on the front axle service brakes air line and permit rapid exhaust of air pressure from brakes, thus decreasing the brake release time.

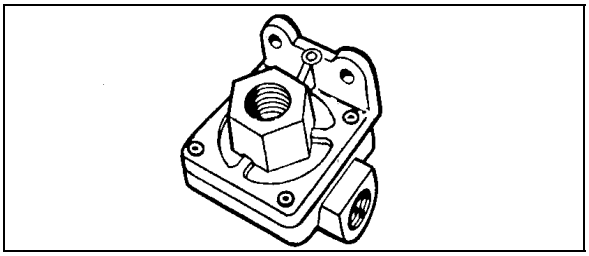

FIGURE 18: QR-1 12075

Maintenance and repair information on this valve is supplied in the applicable booklet annexed to this section under reference number SD-03-901.

20. SPRING BRAKE VALVE (SR-7)

The spring brake valve is located in the rear underframe. The SR-7 Modulating Valve is used in conjunction with a dual air brake system and spring brake actuator and performs the following functions:

- Provides a rapid application of the spring brake actuator when parking.
- Modulates the spring brake actuator application using the dual brake valve should a primary failure occur in the service brake system.
- Prevents compounding of service and spring forces.

Maintenance and repair information on the spring brake valve is supplied in the applicable booklet annexed to this section under reference number SD-03-9043.

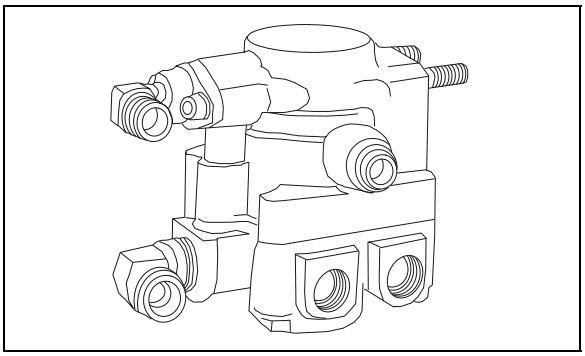

FIGURE 19: SR-7 12206

21. PRESSURE PROTECTION VALVE (PR-4)

Maintenance and repair information on the pressure protection valve is supplied in the applicable booklet annexed to this section under reference number SD-03-2010.

The air system includes two pressure protection valves (Fig. 20). One valve is installed on the manifold block, and insures at all times a minimum pressure of 70 psi (482 kPa) in the suspension air system in the event that a pressure drop occurs in either the suspension air system or accessory air system. This valve is located in the front service compartment beside the air filter.

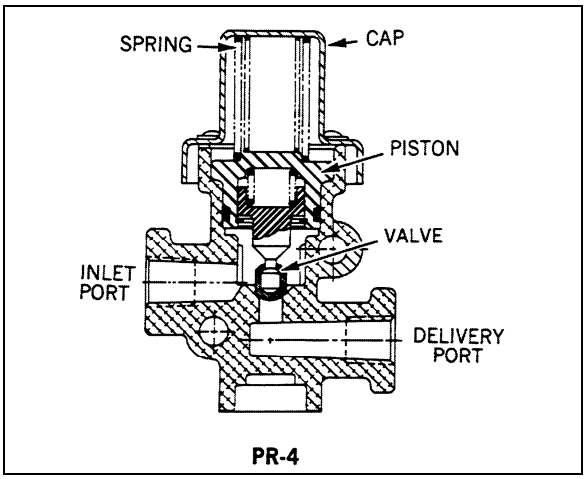

FIGURE 20: PR-4 12174

The other valve is installed on the accessory air tank, and insures a minimum pressure of 70 psi (482 kPa) in the accessory air system in the event that a pressure drop occurs in either the suspension air system or braking air system (refer to Fig. 1 for accessory air tank location).

22. LOW PRESSURE INDICATOR (LP-3)

Maintenance and repair information on the low pressure indicators is supplied in the applicable booklet annexed to this section under reference number SD-06-1600.

The air system includes two low pressure switches (Fig. 21), both located on the pneumatic accessory panel in the front service compartment. One serves for the parking brake signal, its pressure setting is 66 ± 6 psi (455 ± 40 kPa). The remaining pressure switch monitors the parking brake telltale panel indicator; its pressure setting is 30 psi (205 kPa).

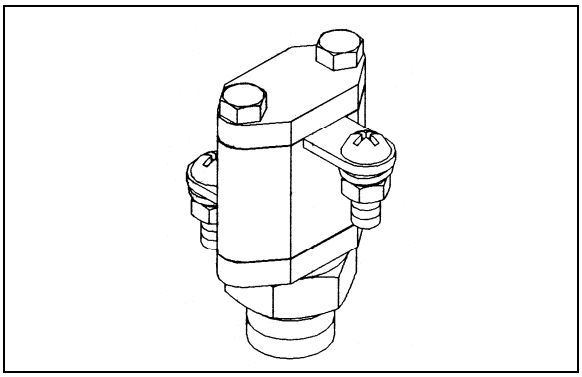

FIGURE 21: LP-3 12214

23. SHUTTLE-TYPE DOUBLE CHECK VALVE (DC-4)

Maintenance and repair information on the shuttle-type double check valve is supplied in the applicable booklet annexed to this section under reference number SD-03-2202.

The double check valve is located on the pneumatic accessory panel in the front service compartment. In the event of a pressure drop in either the primary or secondary system, this unit will protect the emergency /parking brake control valve and the intact portion of the air system from pressure loss.

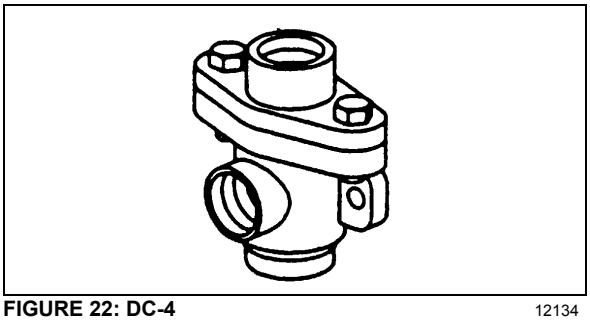

FIGURE 22: DC-4 12134

24. EMERGENCY BI-FOLD ENTRANCE DOOR OPENING VALVES

Two emergency door opening three-way valves are installed on the coach. One is in the front service compartment, readily accessible. The other one is below the R.H. dashboard panel. When used, the valve releases pressure in the entrance door locking cylinders, thus allowing the door to be manually opened.

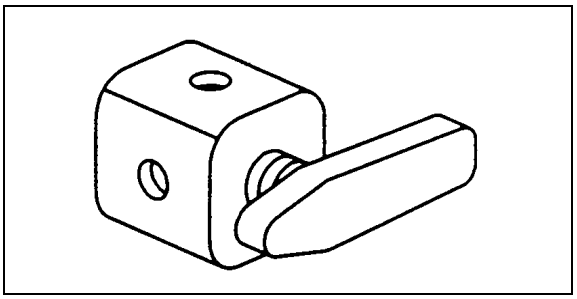

FIGURE 23: THREE-WAY VALVE 12186

25. AIR SYSTEM TROUBLESHOOTING

The following list has been designed to help in troubleshooting some of the most common problems in the air system and main causes. For air brakes troubleshooting, refer to "*Air Brakes Troubleshooting"* in this section. For more troubleshooting information, refer to the manufacturer's brochures annexed to this section.

Air pressure doesn't rise to, or doesn't maintain, a normal setting:

- Defective air gauge (registering incorrectly).
- Excessive leaking in air system.
- Reservoir drain cock open.
- Governor poorly adjusted or defective.
- Defective compressor.
- Worn compressor or excessive wear on piston and/or ring.
- Air pressure rises to normal setting too slowly.

Excessive leaking in air system:

- Clogged engine air cleaner.
- Worn compressor or excessive wear on piston and/or ring.
- Engine speed too low.

Air pressure rises above a normal setting:

- Defective air gauge (registering incorrectly).
- Governor poorly adjusted or defective.
- Restriction in line between governor and compressor unloading mechanism.

Air pressure drops quickly when engine is stopped:

- Leaks in compressor discharge valve.
- Leaks in governor.
- Leaks in air lines.
- Leaks in air system valves.

26. BRAKE OPERATION

The vehicle braking system uses both service and parking air-operated brakes. The air system is divided into two independent circuits to isolate the front axle brakes and the rear axle brakes (drive and tag), thus providing safe brake operation in the event that one circuit of the system fails. The primary circuit is connected to the drive and tag axle brakes, while the secondary circuit is connected to the front axle brakes. The tag axle service brakes operate only when the axle is in the normal driving (loaded) position. The spring-type emergency brakes are mounted on the drive axle, and will apply automatically if primary system pressure falls below 40 psi (276 kPa).

Furthermore, brake application or release, which is speed up by a pneumatic relay valve (R-12), will start with the rear axles and be followed by the front axle, thus providing uniform braking on a slippery surface. The vehicle is also equipped with an Anti-lock Brake System (ABS), detailed later in this section.

Brake and air system maintenance consists of periodic inspections. Check all parts for damage and brake adjustment (refer to subsequent headings in this section for more details). Ensure all fasteners are tight (refer to "*Specifications"* for recommended tightening torques).

27. AIR BRAKES

DISC BRAKES

Knorr-Bremse SN7000 disc brakes are used on all axles. The front and drive axle discs are actuated by 24 square inch effective area air brake chambers, while on tag axle, the brake

chambers have a 14 or 16 square inch effective area for service. The *Knorr-Bremse SN7000* brakes are supplied with automatic clearance (slack) adjusters as standard equipment for easier adjustment. For more information on disc brake components and scheduled maintenance, refer to Knorr-Bremse Service Manual at the end of this section.

27.1 CHECKING DISC BRAKE PADS

Brake pads have to be checked on a regular basis depending on the vehicle operation. The remaining thickness of the pads should never be less than 3/32 in (2 mm). When replacing brake pads, all four pads on an axle have to be changed at the same time. There is no inner or outer pad, since all pads are the same. Once removed, worn pads should be replaced in their original position.

27.1.1 Type A – Vehicles Equipped With a Rubber Bushing That is Axially Ribbed

The condition of the Pads can be visually determined, without removing the road wheel, by viewing the position of the wear marking “G” (change-over from the ribbed area to the flat area). New Condition (see “X”) Shown by the position of the wear marking ‘G’ on the Rubber Bush (6a). The wear limit (see “Z”) Shown by the new position of the wear marking “G” on the Rubber Bush (6a). This condition requires a check of the brake pad thickness and the brake disc with the wheel removed. If necessary change the Pads and/or the Disc - see Vehicle Manufacturer’s recommendations.

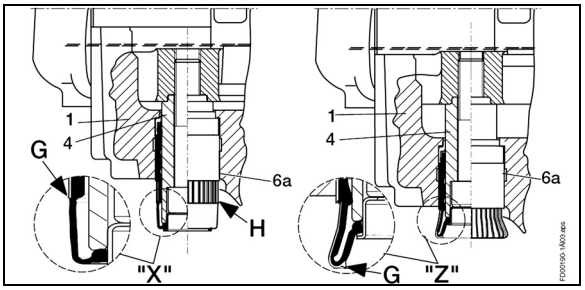

FIGURE 24: BRAKE PAD CHECK 12117

27.1.2 Type B – Vehicles Equipped With a Wear Indicator

The condition of the Pads can be visually determined without removing the road wheel by viewing the position of the caliper compared to the tip of the wear indicator (A).

If the side of the caliper lines up with the tip of the wear indicator, the brake pad thickness and the brake disc must be checked with the wheel removed. If necessary change the Pads (refer to Knorr-Bremse Service Manual at the end of this section) and/or the Disc - see Vehicle Manufacturer’s recommendations.

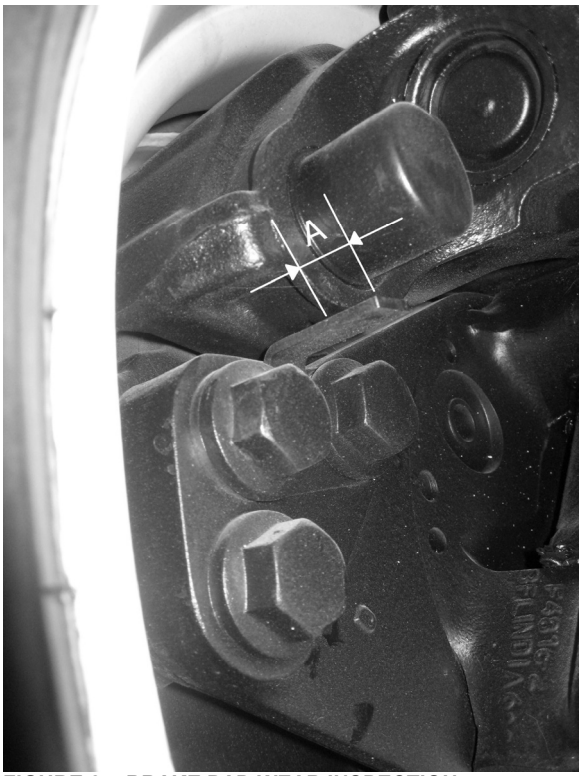

FIGURE 25: BRAKE PAD WEAR INSPECTION 12119

27.2 CALIPER RUNNING CLEARANCE

The Knorr/Bendix air disc brake is designed to move freely, with minimal force. By pushing and pulling the caliper in an axial direction by hand (see arrow A in Figure 26), a movement of 0.6 - 1.1 mm must be possible.

If, even using a high level of hand pressure (no tools), the caliper is not moveable, the caliper guidance must be further examined.

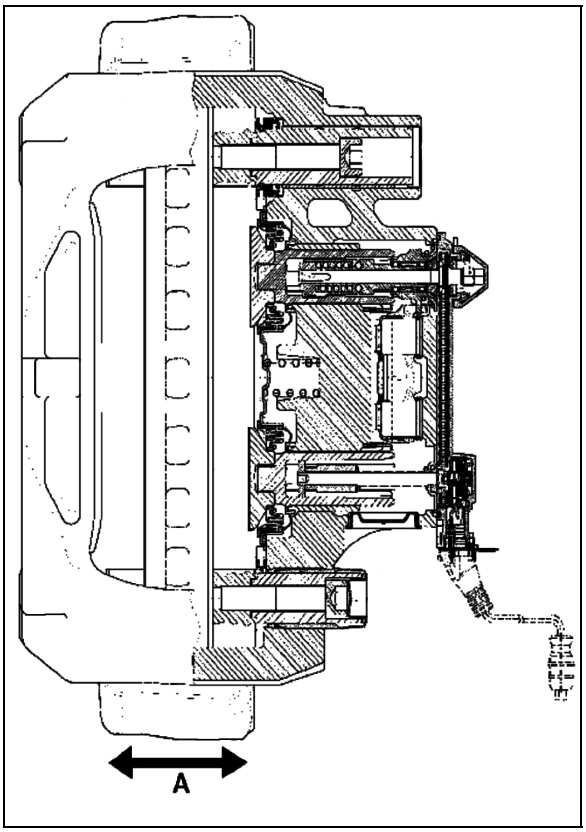

FIGURE 26: RUNNING CLEARANCE 12116

27.3 TORQUE SPECIFICATIONS

For proper caliper maintenance, refer to the following figures.

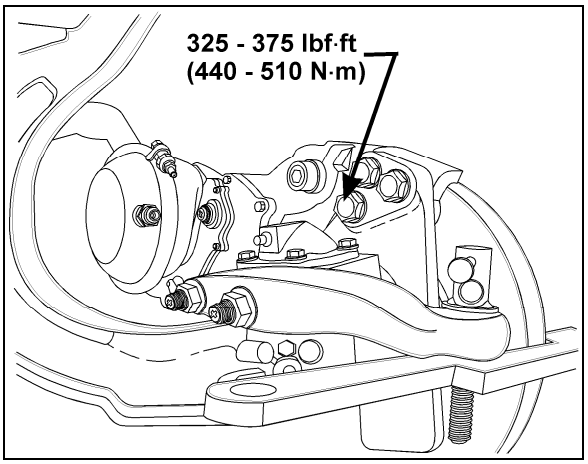

FIGURE 27: TORQUE SPECIFICATION 12145

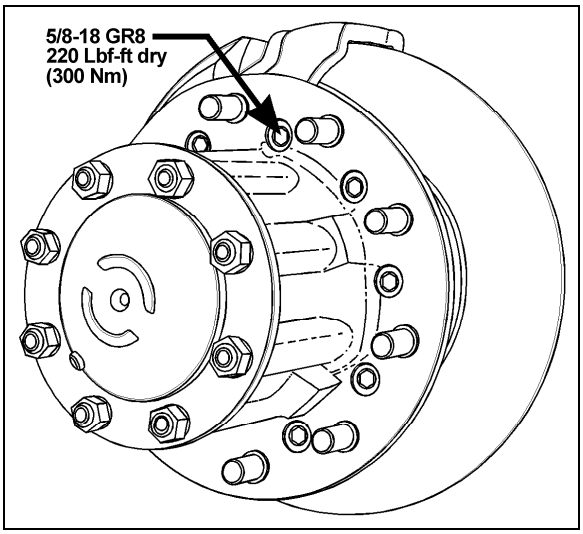

FIGURE 28: TORQUE SPECIFICATION 11030

28. SAFE SERVICE PROCEDURES

Most recently manufactured brake linings no longer contain asbestos fibers. Instead of asbestos, these linings contain a variety of ingredients, including glass fibers, mineral wool, aramid fibers, ceramic fibers, and carbon fibers. At present, OSHA (Occupational Safety and Health Administration) does not specifically regulate these non-asbestos fibers, except as nuisance dust. Medical experts do not agree about the potential long-term risks from working with and inhaling non-asbestos fibers. Nonetheless some experts think that long-term exposure to some non-asbestos fibers could cause diseases of the lung, including pneumoconiosis, fibrosis, and cancer. Therefore, lining suppliers recommend that workers use caution to avoid creating and breathing dust when working on brakes that contain non-asbestos fibers.

WARNING

Whenever possible, work on brakes in a separate area away from other operations.

Always wear a respirator approved by NIOSH (National Institute of Occupational Safety and Health) or MSHA (Mine Safety and Health Administration) during all brake service procedures. Wear the respirator from removal of the wheels through assembly.

WARNING

NEVER use compressed air or dry brushing to clean brake parts or assemblies. OSHA recommends that you use cylinders that enclose the brake. These cylinders have vacuums with high efficiency (HEPA (Health and Environment Protection Agency)) filters and workmans' arm sleeves. But, if such equipment is not available, carefully clean parts and assemblies in the open air.

Clean brake parts and assemblies in the open air. During disassembly, carefully place all parts on the floor to avoid getting dust into the air. Use an industrial vacuum cleaner with a HEPA filter system to clean dust from the brake drums, backing plates and other brake parts. After using the vacuum, remove any remaining dust with a rag soaked in water and wrung until nearly dry.

If you must grind or machine brake linings, take additional precautions because contact with fiber dust is higher during these operations. In addition to wearing an approved respirator, do such work in an area with exhaust ventilation.

When cleaning the work area, NEVER use compressed air or dry sweeping to clean the work area. Use an industrial vacuum with a HEPA filter and rags soaked in water and wrung until nearly dry. Dispose of used rags with care to avoid getting dust into the air. Use an approved respirator when emptying vacuum cleaners and handling used rags.

Wash your hands before eating, drinking or smoking. Do not wear your work clothes home. Vacuum your work clothes after use and then launder them separately, without shaking, to prevent fiber dust from getting into the air.

Material safety data sheets on this product, as required by OSHA, are available from Rockwell and Knorr-Bremse.

29. AIR BRAKE TROUBLESHOOTING

The following tests and check lists have been designed to identify the cause(s) of a sluggish performance and/or leaks in the system. These tests require very little time to perform, and give you a general idea of the system condition. Each test is provided with a corresponding check list which will guide you to the most common causes of problems.

Before performing any test, check all air lines for kinks or dents, and hoses for signs of wear, drying out or overheating.

WARNING

When working on or around a brake system and its related components, the following precautions should be observed:

Always block vehicle wheels. Stop engine when working under a vehicle. Keep hands away from chamber push rods and slack adjusters as they may apply when system pressure drops.

Never connect or disconnect a hose or line containing air pressure. It may whip as air escapes. Never remove a component or pipe plug unless you are sure all system pressure has been depleted.

Never exceed recommended air pressure and always wear safety glasses when working with air pressure. Never look into air jets or direct them at anyone.

Never attempt to disassemble a component until you have read and understood the recommended procedures. Some components contain powerful springs and injury can result if not properly disassembled. Use only proper tools and observe all precautions pertaining to the use of those tools.

Always clean connecting piping and/or fittings, and coat pipe threads with Teflon pipe sealant before installing any air brake system component.

Pressure Build-Up / Low Pressure Warning / Cutoff Point / Air Filter/Dryer Built-in Governor Cutout

CONDITION: Vehicle leveled, parking brake applied.

1. Completely drain wet, primary and secondary air reservoirs only.
2. Start engine and run at fast idle. Low pressure warning lights should be *"On"*.
3. Start checking pressure at 50 psi (344 kPa).
4. Low pressure warning lights and buzzer should go off at or above 60 psi (415 kPa).

5. At 85 psi (586 kPa), run engine at full rpm, then check that build up time to 100 psi (690 kPa) is 30 seconds or less.
6. Air filter/dryer built-in governor cut-out. Cuts out at the correct pressure of 123 psi ±3 (847±21 kPa).
7. Air filter/dryer built-in governor cut-in. Cuts in around 110 psi (758 kPa).

For common corrections, refer to the following check list:

High or Low Warning Cutoff Point

- Perform a telltale light and gauge test. Replace entire cluster if found defective.

High or Low Air Filter/Dryer Built-in Governor Cutout Point

- Perform a telltale light and gauge test. Replace entire cluster if found defective.

OR

- Repair or replace air filter/dryer as necessary after checking that compressor unloader mechanism operates correctly.

More than 30 seconds to build-up pressure from 85 to 100 psi (585 - 690 kPa) at full engine RPM

- Perform a telltale light and gauge test. Replace entire cluster if found defective.
- Check compressor strainer or inlet line. If restricted, clean or replace element or faulty line.
- Check compressor head or discharge line for carbonization or restriction. Clean or replace as necessary.
- If discharge valves leak, pull head and correct or replace cylinder head.
- If drive is slipping, replace gear.
- If inlet valves are stuck, open or leaking severely, replace unloader kit, inlet valves and/or seats as necessary.
- If drain cock is found open, close it.
- Listen for air leaks and repair.
- Redo list to check all items repaired or replaced.

Air Supply Reservoir Leakage

CONDITION**:** Full pressure, engine stopped, parking brake applied

1. Allow at least 1 minute for pressure to stabilize.
2. Stop engine, then check air pressure gauge for 2 minutes. Note any pressure drop.
3. Pressure should not drop by more than 3 psi (20 kPa) per minute.

For common corrections, refer to the following check list:

Excessive air loss:

- With the primary air system at normal operating pressure (95 - 125 psi (655 - 860 kPa)), coat all air line connections and pneumatic components with a water and soap solution. Bubbles will indicate an air leak, and none should be permissible. Repair or replace defective parts.
- Listen for leaks and correct as required.
- Redo test to check all items repaired or replaced.

Brake System Air Leakage

CONDITION**:** Full pressure, engine stopped, parking brake released.

1. Apply service (foot) brakes, allow at least 1 minute for pressure to stabilize.
2. Hold down foot valve for 2 minutes while observing air pressure gauge on the dash-board.
3. Pressure drop should not be more than 4 psi (27 kPa) per minute.

For common corrections, refer to the following check list.

Excessive leakage on brake service side:

- With the primary air system at normal operating pressure (95 - 125 psi (655 - 860 kPa)) and foot brake applied, coat all air line connections and brake pneumatic components with a water and soap solution. Bubbles will indicate an air leak, and none should be permissible. Repair or replace defective parts.
- Listen for leaks and correct as required.
- Redo test to check all items repaired or replaced.

IMPORTANT NOTE

To maintain your vehicle's air disc brakes at their original performance standard, we strongly recommend use of only genuine, approved service replacement parts on Bendix and Knorr-Bremse air disc brake systems.

If non-approved friction materials or replacement components are used, neither Prévost Car nor Bendix Spicer Foundation Brake LLC will accept any air disc brake-related warranty returns or claims.

For more information on this policy, refer to Bendix-Prévost product notification annexed at the end of Section 12 of Maintenance Manual.

30. BRAKE AIR CHAMBER

If this vehicle is equipped with *Knorr-Bremse SN7000* disc brakes on all axles, it also uses "Knorr-Bremse" brake chambers. The drive axle chambers consist of two separate air chambers, each having its own diaphragm and push rod. They are used as a service brake chamber, an emergency brake in case of air pressure loss and a spring-applied parking brake. Refer to figures 29 and 30.

The front and tag axle brake air chambers are used only for service brake duty (Fig. 29).

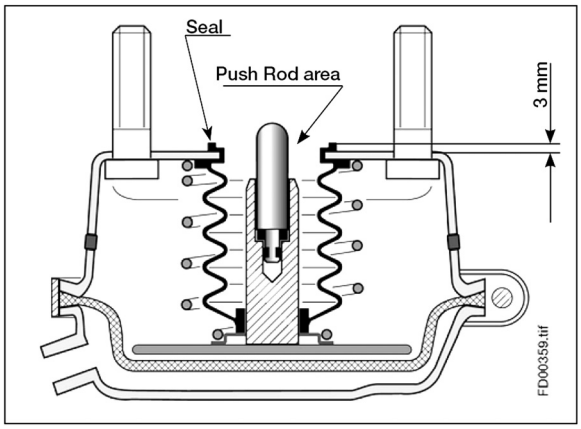

FIGURE 29: FRONT AXLE BRAKE AIR CHAMBER 12158

30.1 MAINTENANCE

Every 6,250 Miles (10 000 km) or twice a year, whichever comes first depending on type of operation:

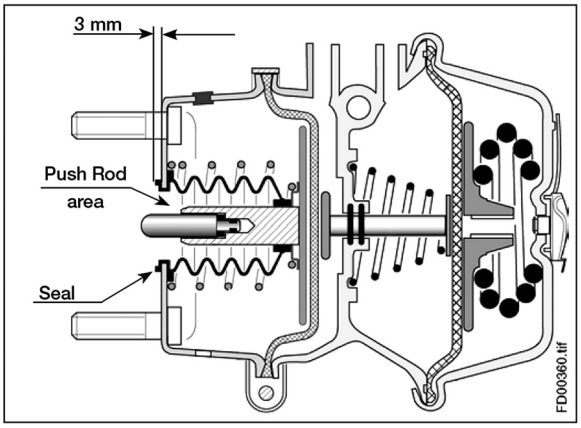

FIGURE 30: DRIVE AXLE BRAKE AIR CHAMBER 12126

Check all hoses and lines. They should be secure and in good condition.

Every 100,000 Miles (160 000 km) or once a year, whichever comes first depending on type of operation:

1. Disassemble and clean all parts.
2. Install new diaphragm or any other part if worn or deteriorated.

NOTE

When the diaphragm, spring, or both are replaced, they should be replaced in the corresponding chamber on the same axle.

3. Perform an airtighteness test:

a) Make and hold a full brake application.

b) Coat clamping ring(s) with a soapy solution. If leakage is detected, tighten clamping ring only enough to stop leakage. ***Do not overtighten*** as this can distort sealing surface or clamping ring. Coat area around push rod hole (loosen boot if necessary). No leakage is permitted. If leakage is detected, the diaphragm must be replaced.

30.2 EMERGENCY/PARKING BRAKE MANUAL RELEASE

DANGER

Never stand in the axis line of the spring brake chambers, especially when caging the spring.

Drive Axle

1. Block the wheels to prevent the vehicle from moving.

2. Remove the release stud tool from its storage place on drive axle brake air chamber.
3. Remove the access plug from the end of the spring chamber and then insert the release stud through the opening. Turn the release stud ¼ turn (clockwise) to anchor it into the spring plate. Install the flat washer and nut, then turn the nut clockwise to cage the spring. Repeat on the opposite side.

DANGER

Make sure the release stud is properly anchored in spring plate receptacle prior to caging the spring.

4. To manually reset the emergency/parking brake, turn the nut counterclockwise. Reinstall access plugs on the spring chambers, and release stud tools in their storage places.

30.3 BRAKE CHAMBER REMOVAL

WARNING

To prevent personal injuries, brakes should be inoperative prior to working on any of their components.

To prevent personal injuries, brake chambers should be made inoperative by releasing spring tension prior to disposal.

1. Block the wheels to prevent the vehicle from moving.
2. Safely support vehicle at the recommended body jacking points.
3. To gain access to a given brake air chamber, the corresponding wheel can be removed (refer to Section 13: *"Wheels, Hubs and Tires"*).
4. Exhaust compressed air from system by opening the drain valve of each reservoir.
5. For the drive axle brake chambers, manually release spring brakes (refer to "*Emergency/Parking Brake, Manual Release"* procedure in this section).
6. Disconnect air line(s) from brake chamber.
7. Remove the cotter pin connecting brake chamber and slack adjuster (drive axle).
8. Unbolt and remove the brake chamber from vehicle.

30.4 BRAKE CHAMBER INSTALLATION

Reverse removal procedure and then check brake adjustment.

CAUTION

Always clean air lines and fittings, and coat pipe threads with teflon pipe sealant before reconnecting air lines.

30.5 BRAKE CHAMBER DISASSEMBLY

DANGER

Spring brake chambers, on drive and tag axles contain an extremely high compressive force spring, which can possibly cause serious injury if special precautions are not taken when working around this area.

To avoid such injury, the following recommendations must be applied:

- Prévost recommends the installation of a new spring brake chamber if it is found to be defective.
- Spring brake chamber maintenance and/or repair must be performed by trained and qualified personnel only.
- Before manually releasing spring brakes, visually check spring brake for cracks and/or corrosion.
- On “MGM” brake chambers (drive axle), make sure the release stud is properly anchored in spring plate receptacle prior to caging the spring.
- Never stand in the axis line of the spring brake chambers, especially when caging the spring.

WARNING

To prevent personal injuries, brakes should be inoperative prior to working on any of their components.

1. Block the wheels to prevent the vehicle from moving.
2. Safely support vehicle at the recommended body jacking points.

NOTE
To gain access to a given brake air chamber, the corresponding wheel can be removed (refer to Section 13: "Wheels, Hubs and Tires").

3. Exhaust compressed air from air system by opening the drain valve of each reservoir.
4. For the drive axle brake chambers, manually release spring brakes (refer to "*Emergency/Parking Brake Manual Release"* procedure in this section).
5. Remove clamp ring, remove and discard the existing diaphragm. Install the new diaphragm squarely on body.
6. Reverse the procedure for assembly. Tap clamp ring to ensure proper seating. Check for proper operation before placing vehicle in service.

31. ANTI-LOCK BRAKING SYSTEM (ABS)

This device has been designed to ensure stability and permit steering control of vehicle during hard braking, and to minimize its stopping distance whatever the road conditions are. On slippery roads and generally in emergency situations, over-braking frequently induces wheel lock. The anti-lock braking system provides maximum braking performance while maintaining adequate steering control on slippery roads.

The ABS continuously monitors wheel behavior during braking. Sensors on each wheel of front and drive axles (tag axle is slave to drive axle) transmit data to a four channel electronic processor which senses when any wheel is about to lock. Modulator valves quickly adjust the brake pressure (up to 5 times per second) to prevent wheel locking. Each wheel is therefore controlled according to the grip available between its tire and the road.

With this device, the vehicle is brought to a halt in the shortest possible time, while remaining stable and under the driver's control.

Since the braking system has dual circuits, the ABS is also provided with a secondary system should a fault develop in the ABS. Anti-lock systems are a parallel system which does not hinder brake functioning in case of failure. Braking system functions in normal, non anti-lock controlled operation during ABS system failure.

The ABS system consists of two diagonally related circuits, only the half of the system which has sustained damage or other fault is switched off (i.e. wheels return to normal non-ABS braking). The other diagonal half remains under full ABS control.

NOTE
ABS is active on service brake, transmission retarder, Jake brake, but is inactive on emergency/parking brake.

NOTE
The ABS system is inoperative at speeds under 4 mph (6 Km/h). Illumination of ABS telltale indicator at these speeds is normal.

⚠ CAUTION
Disconnect the ECU or pull the ABS fuse before towing vehicle.

31.1 TROUBLESHOOTING AND TESTING

For troubleshooting and testing of the vehicle's anti-lock braking system, refer to Meritor Wabco Maintenance Manual MM-0112: *"Anti-Lock Braking System (ABS) for Trucks, Tractors and Buses"*, at the end of this section. Use dashboard Message Center Display (MCD) Diagnostic Mode for troubleshooting and repair.

31.2 ABS COMPONENTS

The main components of the ABS system are listed hereafter. Refer to each component for its specific function in the system and for proper maintenance.

31.2.1 Electronic Control Unit (ECU)

This control unit is located in the front electrical compartment, (refer to figure 31 for location). According to the data transmitted by the sensors (number of pulses/sec is proportional to the speed of each wheel), the electronic control unit determines which wheel is accelerating or decelerating. It then establishes a reference speed (average speed) from each wheel data, and compares the speed of each wheel with this reference speed to determine which wheel is accelerating or decelerating.

As soon as wheel deceleration or wheel slip threshold values are exceeded, the electronic control unit signals a solenoid control valve to limit the excessive brake pressure produced by the driver in the appropriate brake chamber.

Maintenance

No specific maintenance is required. The ECU is not serviceable. When found to be defective, replace.

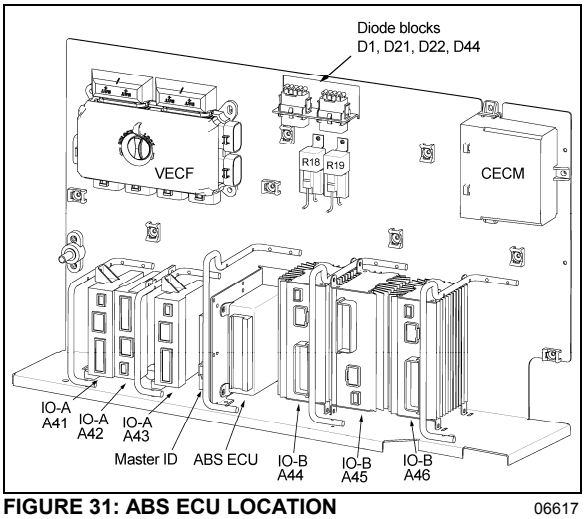

FIGURE 31: ABS ECU LOCATION 06617

CAUTION

In order to protect the ABS electronic control unit from voltage surges, always disconnect before performing any welding procedure on vehicle.

31.2.2 ABS Modulator Valve

This ABS system is equipped with four or five modulator valves, located between the brake chamber and the relay valve or quick release valve (Fig. 32). Note that on the basic ABS system, there is only one solenoid valve controlling the drive and tag axle wheels on the same side (tag axle is slave to drive axle).

This is an *"On/Off"* type valve, i.e., at brake application, the valve exhausts air from the brake chamber when the electronic unit senses that the corresponding wheel speed is decreasing in relation to the other wheels.

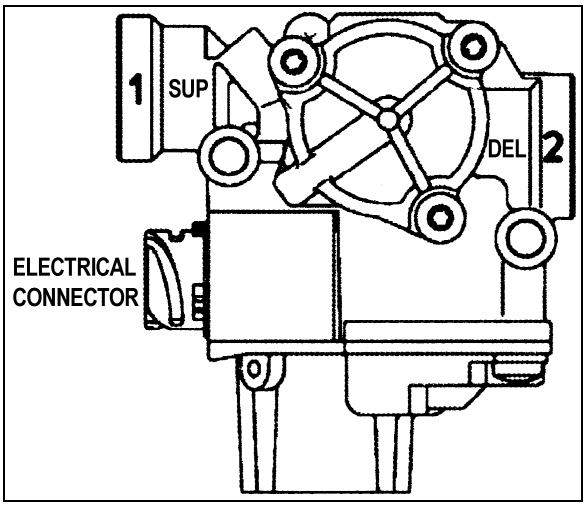

FIGURE 32: ABS MODULATOR VALVE 12221

Maintenance

Refer to Bendix Service Data sheet SD-13-4870 located at the end of this section.

31.2.3 Sensors

The sensors are mounted on the front, drive and tag axle (if applicable) wheel hubs (Fig. 33). The inductive sensors consist essentially of a permanent magnet with a round pole pin and a coil. The rotation of the toothed wheel alters the magnetic flux picked up by the coil, producing an alternating voltage, the frequency of which is proportional to wheel speed. When wheel speed decreases, magnetic flux decreases proportionately. Consequently, the electronic control unit will command the solenoid control valve to decrease the pressure at the corresponding brake chamber.

Maintenance

No specific maintenance is required for sensors, except if the sensors have to be removed for axle servicing. In such a case, sensors should be lubricated with special grease (Prévost #680460) before reinstallation. Refer to paragraph *"Sensor Installation"* for details.

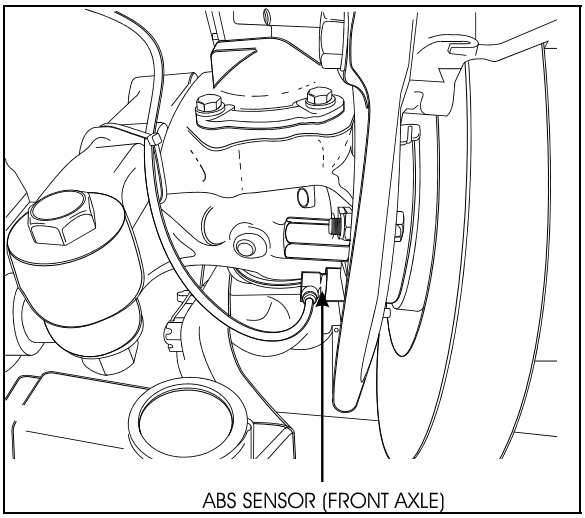

FIGURE 33: ABS SENSOR LOCATION 12153

> *NOTE*
>
> *The resistance value, when sensors are checked as a unit, must be equal to 1,75 k ohms. To check the sensors for proper output voltage after the sensors and toothed wheels have been assembled to the axle, connect a suitable AC voltmeter across the output terminals. With the hubs rotating at 30 rpm, the output voltages should read from 50 to 1999 mV to be acceptable.*

Sensor Installation

The following procedure deals with sensor installation on the axle wheel hubs. Read procedure carefully before reinstalling a sensor, as its installation must comply with operational tolerances and specifications.

1. Apply recommended lubricant (Prévost #680460) to spring clip and sensor.

> ⚠ **CAUTION**
>
> Use only this type of grease on the sensors.

2. Insert spring clip in the holder on hub. Make sure the spring clip tabs are on the inboard side of the vehicle. Push in until the clip stops.
3. Push the sensor completely inside the spring clip until it is in contact with the tooth wheel. Ensure mounting is rigid, as it is an important criterion for adequate sensor operation.

> *NOTE*
>
> *This installation should be of the "press fit" type.*

31.2.4 Spring clip

The spring clip retains the sensor in its mounting bracket close to the toothed pulse wheel. The gap between the sensor end and teeth is set automatically by pushing the sensor in the clip hard up against the tooth wheel, and the latter knocks back the sensor to its adjusted position (Fig. 34).

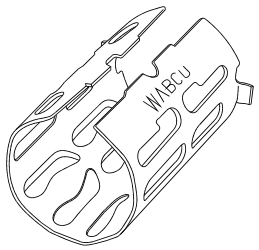

FIGURE 34: SPRING CLIP 12161

Maintenance

The spring clip requires no specific maintenance.

32. FITTING TIGHTENING TORQUES

45° Flare and Inverted Flare: Tighten assembly with a wrench until a solid feeling is encountered. From that point, tighten 1/6 turn (Fig. 35).

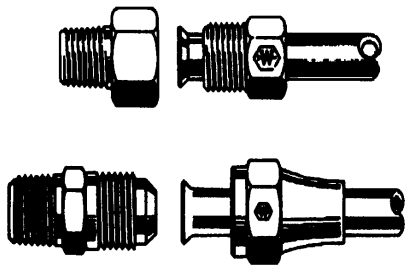

FIGURE 35: HOSE FITTINGS 12053

Compression: Tighten nut by hand (Fig. 36). From that point, tighten using a wrench the number of turns indicated in the chart hereafter.

Fitting size	Pipe diameter (inches)	Number of additional turns required following hand tightening
2	1/8	1 ¼
3	3/16	1 ¼
4	1/4	1 ¼
5	5/16	1 ¾
6	3/8	2 ¼
8	1/2	2 ¼
10	5/8	2 ¼
12	3/4	2 ¼
16	1	2 ¼

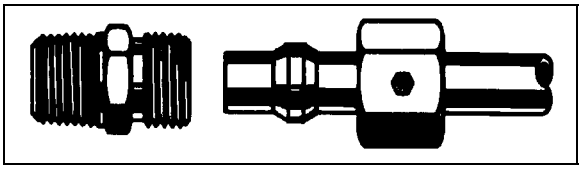

FIGURE 36: HOSE FITTING 12054

NTA-Type Plastic Tubing: Hand tighten nut (Fig. 37). From that point, tighten using a wrench the number of turns indicated in the following chart.

Tubing diameter (inches)	Number of additional turns required following hand tightening
1/4	3
3/8 to 1/2	4
5/8 to 3/4	3 ½

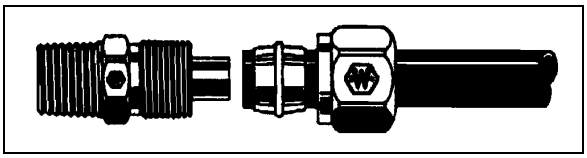

FIGURE 37: HOSE FITTING 12055

AB-Type Copper Piping: Hand tighten nut (Fig. 38). From that point, tighten with a wrench the number of turns indicated in the following chart.

Piping diameter (inches)	Number of additional turns required following hand tightening
1/4, 3/8, 1/2	2
5/8, 3/4	3

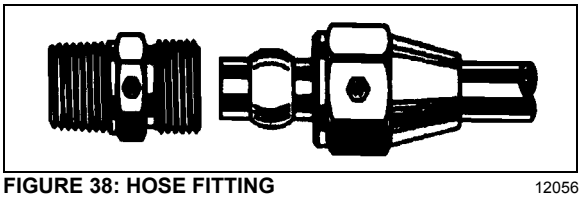

FIGURE 38: HOSE FITTING 12056

Pipe Tightening: All connections must be hand tightened. From that point, tighten a minimum of 2 ½ additional turns.

NOTE
Use Locktite (Prévost number 680098) pipe sealant to seal pipe thread.

33. SPECIFICATIONS

Air Compressor

Make.....Meritor Wabco
Model..... SS636
Capacity (at 1250 rpm) .....37.4 cfm (1,059 m^3/min.)
Prévost number.....

Air Dryer

Make.....Haldex
Model..... AT-87192
Prévost number.....70303498
Desiccant cartridge Prévost number.....3097369

Flip-Flop Control Valve

Make.....Bendix Westinghouse
Model..... TW-1

Type ..... On-Off
Prévost number 640136

Emergency/Parking Brake Control Valve

Make..... Bendix Westinghouse
Model..... PP-1
Automatic release pressure ..... 40 psi (275 kPa) nominal
Prévost number 641128

Dual Brake Application Valve

Make..... Bendix Westinghouse
Model..... E-10P
Prévost number 641856

Stoplight Switches

Make..... Bendix Westinghouse
Model..... SL-5
Contact close (ascending pressure) ..... 4 psi and more (28 kPa)
Prévost number 641462

Brake Relay Valves

Make..... Bendix Westinghouse
Model..... R-12
Supplier number .....
Prévost number .....

Brake Relay Valve

Make..... Meritor Wabco
Model..... R-14
Prévost number .....

Quick Release Valve

Make..... Bendix Westinghouse
Model..... QR-1
Prévost number 641429

Spring Brake Valve

Make..... Bendix Westinghouse
Model..... SR-7
Prévost number .....

Pressure Protection Valve

Make..... Bendix Westinghouse
Model..... PR-4
Nominal closing pressure ..... 70 psi (482 kPa)
Prévost number 641137

Shuttle-Type Double Check Valve

Make..... Bendix Westinghouse
Model..... DC-4
Prévost number 641015

Low Pressure Indicators

Make..... Bendix Westinghouse
Model..... LP-3
Contact close ..... 66 psi (455 kPa)
Prévost number 640975

Air Pressure Regulator

Make.....Norgren
Adjustable output range.....0-80/85 psi (0-552/586 kPa)
Recommended pressure setting.....75 psi (517 kPa)
Prévost number.....641472

Air Filter Element

Make.....Norgren
Type.....With manual drain
Prévost number.....641338

Front Wheel Brake Chambers

Make.....Knorr-Bremse
Type.....24
Prévost number (R.H.).....641414
Prévost number (L.H.).....641413

Drive Axle Brake Chambers

Make.....Knorr-Bremse
Type.....24 as service -24 as emergency
Prévost number.....641432

Piggy Back (On Drive Brakes)

Make.....Knorr-Bremse
Type.....24 as emergency
Prévost number.....641433

Tag Axle Brake Chambers

Make.....Knorr-Bremse
Type.....14
Prévost number.....642087

Tag Axle Brake Chambers

Make.....Knorr-Bremse
Type.....16
Prévost number.....642086

Brake Lining (All Axles)

Make.....Knorr-Bremse
Prévost number.....611049
Prévost number.....641226

ABS ANTILOCK BRAKING SYSTEM

ABS MODULATOR VALVE

Make.....Bendix
Voltage.....12 V
Prévost number.....642077

Sensor

Prévost number.....642085

Sensor (90°)

Prévost number.....642084

CONTENTS

1. WHEELS 3
1.1 X3-45 COACHES 3
1.2 X3-45 VIP & XLII BUS SHELLS 3
2. WHEEL MAINTENANCE 3
2.1 INSPECTION 4
2.2 SINGLE WHEEL REMOVAL 4
2.3 SINGLE WHEEL INSTALLATION 4
3. DUAL WHEELS 4
3.1 OUTER WHEEL REMOVAL 4
3.2 INNER WHEEL REMOVAL 4
3.3 INNER WHEEL INSTALLATION 4
3.4 OUTER WHEEL INSTALLATION 4
3.5 INSPECTION 5
4. ALUMINUM WHEEL ANTI-CORROSION PROTECTION 5
5. WHEEL STRAIGHTNESS TEST 5
6. WHEEL STUDS 6
6.1 DRIVE AXLE WHEEL STUDS 6
6.2 FRONT AND TAG AXLE WHEEL STUDS 6
7. HUB MOUNTED WHEELS 7
7.1 CARE OF WHEELS 7
8. FRONT AND TAG AXLE WHEEL HUBS 8
8.1 HUB BEARING INSPECTION 8
8.2 HUB BEARING REMOVAL 9
8.3 HUB BEARING INSTALLATION 9
9. DRIVE AXLE WHEEL HUBS 9
9.1 BEARING ADJUSTMENT 9
9.2 DISASSEMBLY AND REPAIR 10
10. SPARE WHEEL (COACHES ONLY) 10
10.1 PULLING OUT SPARE WHEEL 11
10.2 CHANGING A FLAT TIRE (COACHES ONLY) 11
10.3 CHANGING A FLAT TIRE (X3-45 VIP & XLII BUS SHELLS) 12
10.4 SPARE WHEEL MAINTENANCE 12
11. TIRE MAINTENANCE 12
11.1 INFLATION PRESSURE 12
11.2 TIRE MATCHING 14
11.3 WHEEL BALANCING 14
11.4 TIRE ROTATION 14
12. SPECIFICATIONS 15
12.1 X3-45 COACHES 15
12.2 X3-45 VIP & XLII BUS SHELLS 15

ILLUSTRATIONS

FIGURE 1: ALUM/STEEL WHEEL ARRANGEMENT 3
FIGURE 2: WHEEL ARRANGEMENT 3
FIGURE 3: TIGHTENING SEQUENCE 4
FIGURE 4: DIAL GAUGE INSTALLATION 6
FIGURE 5: DRIVE AXLE WHEELS 6
FIGURE 6: SINGLE WHEEL 6
FIGURE 7: FRONT & TAG AXLE WHEEL HUB 7
FIGURE 8: FRONT & TAG AXLE HUB AND ROTOR ASSEMBLY 8
FIGURE 9: WARNING REFLECTORS LOCATION 10
FIGURE 10: SPARE WHEEL COMPARTMENT 11
FIGURE 11: SPARE WHEEL AND TIRE 11
FIGURE 12: FRONT SERVICE COMPARTMENT 11
FIGURE 13: TIRE INFLATION 13
FIGURE 14: TIRE LIFE / INFLATION PRESSURE 14

1. WHEELS

The vehicle is equipped with hub-mounted wheels as standard equipment, all studs and nuts have right-hand threads Either steel wheels or optional aluminum-polished wheels may be installed on the vehicle. Both are mounted with radial tubeless tires.

1.1 X3-45 COACHES

All wheel dimensions are 22.50 X 9.0 inches (571.5 X 228.6 mm) for 315/80 R 22.5 tires except inner drive wheels ,which are always steel wheels and 22.50 X 8.25 inches (571.5 X 209.6 mm) for 315/80 R 22.5 tires. All other wheels can either be steel or aluminum wheels.

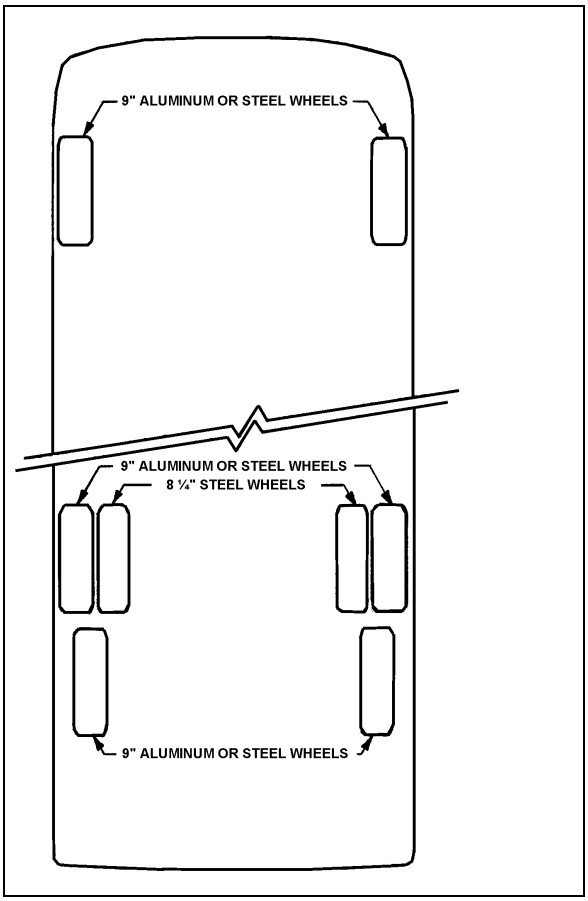

FIGURE 1: ALUM/STEEL WHEEL ARRANGEMENT 13001

1.2 X3-45 VIP & XLII BUS SHELLS

Drive axle wheel dimensions are 22.50 X 9.0 inches (571.5 X 228.6 mm) for 315/80 R 22.5 tires while front and tag axle wheels may either be 22.50 X 9.0 inches (571.5 X 228.6 mm) or 22.50 X 10.5 inches (571.5 X 266.7 mm) for 365/70 R 22.5 tires. Dura-Bright coating on aluminum wheels is optional.

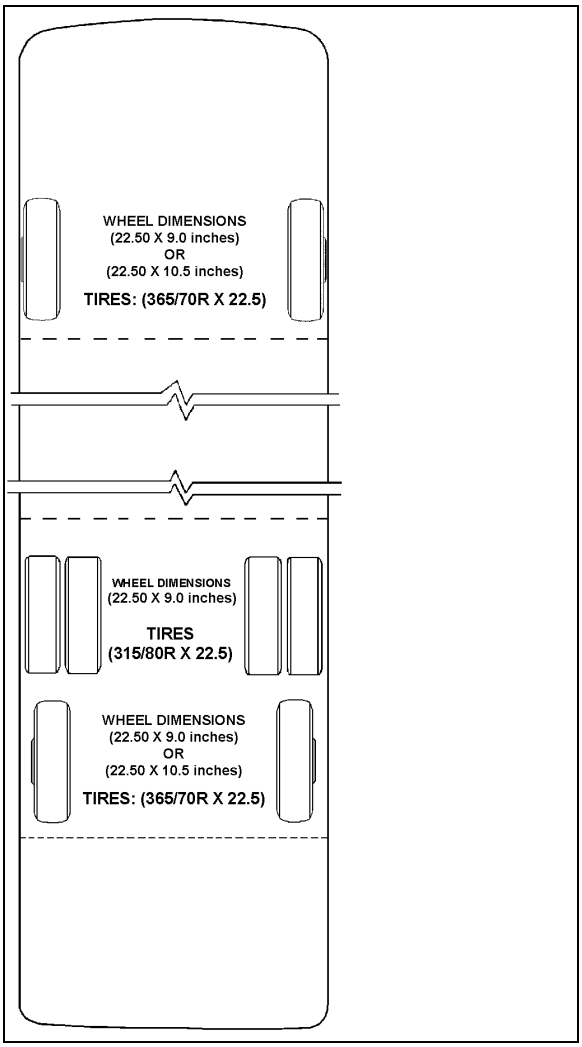

FIGURE 2: WHEEL ARRANGEMENT 13037

2. WHEEL MAINTENANCE

Wheel maintenance consists of periodic inspections. Check all parts for damage and make sure that wheel nuts are tightened to the proper torque. In the case of a new vehicle, or after a wheel installation, stud nuts should be tightened every 100 miles (160-km) for the first 500 miles (800-km) to allow setting in of clamping surfaces.

Wheel studs and nuts must be kept free from grease and oil. No lubricant whatsoever should be used. Cleanliness of the wheel and its rotor mating surfaces is important for proper wheel mounting.

However, for hub mounted wheels, it is recommended to add some rust protection lubricant on the pilot diameter of the hub (to facilitate future removal).

It is also important that wheel stud nuts be tightened alternately on opposite sides of the wheel. Refer to Figure 3 for the suggested tightening sequence.

2.1 INSPECTION

Tighten stud nuts progressively as shown in Figure 3. The final tightening should be done with a torque wrench. Tighten stud nuts to 450 - 500 lbf-ft (610 - 680 Nm) for aluminum as well as steel wheels.

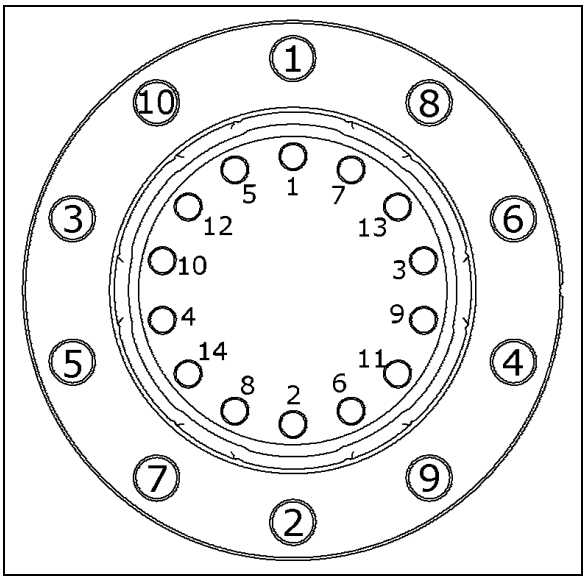

FIGURE 3: TIGHTENING SEQUENCE 13018

2.2 SINGLE WHEEL REMOVAL

1. Stop engine and apply parking brake.
2. Loosen wheel nuts about one turn (do not remove the nuts). This is not necessary if equipped with hydraulic powered gun.
3. Raise the vehicle by its jacking points on the body. See Section 18, *"Body",* under heading *"Vehicle Jacking Points";*
4. Unscrew wheel hex stud nuts and remove the wheel;

CAUTION

Always mark position of the wheel on the axle prior to removal in order to replace wheel at the same location, thus avoiding a new wheel balancing.

2.3 SINGLE WHEEL INSTALLATION

1. Mount the wheel over studs, being careful not to damage stud threads;
2. Screw in the hex stud nuts (refer to Figure 3 for sequence) so that wheel will position itself concentrically with hub. This is important, otherwise wheel may be eccentric with hub and will not run straight. In this initial step, slightly tighten the nuts to correctly position the wheel;
3. Tighten stud nuts progressively as shown in Figure 3. The final tightening should be done with a torque wrench. Tighten stud nuts to 450 - 500 lbf-ft (610 - 680 Nm) for aluminum as well as steel wheel.

CAUTION

Insufficient mounting-torque can result in damage to parts. Excessive mounting torque can cause studs to break and the wheel to crack in stud hole area.

3. DUAL WHEELS

3.1 OUTER WHEEL REMOVAL

Same as described in *"Single Wheel Removal"* procedure described previously.

3.2 INNER WHEEL REMOVAL

1. Remove outer wheel;
2. Remove inner wheel.

3.3 INNER WHEEL INSTALLATION

Mount the wheel over studs, being careful not to damage stud threads;

3.4 OUTER WHEEL INSTALLATION

With inner and outer wheels installed, tighten the stud nuts progressively as shown in Figure 3. The final tightening should be done with a torque wrench. Tighten stud nuts to 450 - 500 lbf-ft (610 - 680 Nm) for aluminum as well as steel wheel.

CAUTION

Insufficient mounting-torque can result in damage to parts. Excessive mounting torque can cause studs to break and the wheel to crack in stud hole area.

NOTE

On dual wheel assemblies, position the wheels with the tire valves 180º apart in order to have access to both the inner and outer valves.

3.5 INSPECTION

1. Loosen a hex stud nut three turns (Fig. 5);
2. Retighten the hex stud nut to 450 - 500 lbf-ft (610 - 680 Nm).

Repeat for each of the 10 *"hex stud nuts"* according to the tightening sequence in figure 3.

CAUTION

The actual length of thread engagement present in an assembled wheel can not always be determined by visual inspection of measurement of a tightened assembly. The relationship of the wheel cap nut seat to the end of the stud may vary. If there is any doubt that enough thread engagement is present, the number of engaged threads may be counted. Tighten all nuts in the regular manner, then loosen one to hand-tightness. The number of turns to disengage a 1-1/8-inch nut should be at least five full turns.

At least seven full turns should be required to disengage a ¾-inch nut or a M22 nut. Ideally, when torqued to the proper load, the stud should be flush with the face of the nut. The face of the nut may be recessed in nuts that are taller for improved wrenching. With most of the nuts in present use, a few unengaged threads at the outer end will cause no problem provided at least 5-7 full turns are required to disengage the nut depending on thread size.

4. ALUMINUM WHEEL ANTI-CORROSION PROTECTION

Clean wheels often by means of a high pressure water jet. Cleaning may be accelerated with mild soap. Do not use concentrated alkaline cleaning products.

When tire is removed, clean and inspect wheel thoroughly. Remove dirt and corrosion on rim by means of a wire brush. Do not use a wire brush on the outer surface of the wheel.

The following measures should be taken to maintain original appearance of the aluminum wheels:

1. Remove any tar from wheel surface with a good quality tar remover.
2. Spray Alcoa Cleaner (Prevost #683529) evenly on cool outer surface of wheel. Let work 15-20 minutes (keep wet by spraying more Cleaner if necessary).
3. Rinse thoroughly with clean water and let air dry. Heavy oxidation may require a repeat application of cleaner.
4. Apply Alcoa Polish (Prevost #683528) sparingly to a small area using a clean, soft cloth. Work polish into surface as you would a rubbing compound.
5. Buff, turning cloth frequently, until surface is clean and shiny. Let air dry. Use power buffer to improve ease of use and gloss uniformity.
6. On completely dry, clean and polished surface, generously apply Alcoa sealant (Prevost #683527). Rinse thoroughly with water while surface is still wet in appearance (have water source ready as the dry time is very short, usually less than 2 minutes).
7. For best results, finish by wiping the surface with a clean rag to remove excess water, then allow surface to dry.

Clean aluminum wheels as required to maintain original look.

WARNING

Wheel surfaces may have sharp or cutting edges that may cause injury to the hands. To prevent contact with sharp edges, it is strongly recommended to wear rubber gloves when washing or polishing wheels.

5. WHEEL STRAIGHTNESS TEST

1. Slightly raise axle to be checked and place a safety support underneath;
2. Check wheel lateral run-out. Install a dial gauge as shown in figure 4, then rotate the wheel by hand one full turn. As the wheel turns, note any variation on the dial gauge;

CAUTION

Damage to the dial gauge could occur if it strikes a wheel balancing weight.

3. If the variation in lateral run-out exceeds 0.0625 inch (1,6 mm), the wheel must be replaced.

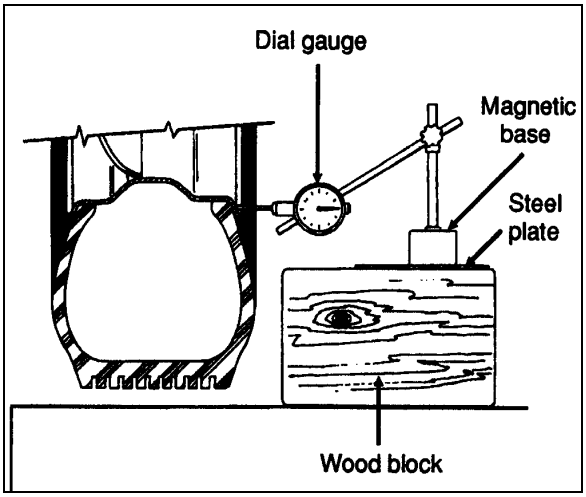

FIGURE 4: DIAL GAUGE INSTALLATION 13008

If doubt exists whether wheel or hub is distorted, hub may be checked as follows:

- Replace the existing wheel with a wheel known to be correct;
- Check wheel lateral run-out as outlined in step 2;
- If, within specifications, the hub is correct but the suspected wheel must be replaced.

WARNING

NEVER STRAIGHTEN ALUMINUM WHEELS. Never heat aluminum wheels to repair damages incurred after hitting a curb or resulting from other causes. The special alloy in wheels has been heat treated, and any uncontrolled heating could alter wheel structure. Furthermore, never weld aluminum-forged wheels for any reason whatsoever.

6. WHEEL STUDS

Stripped threads may be the result of excessive torquing or may have been damaged during wheel installation when placing the wheel over the studs. A stud having damaged threads must be replaced. Broken studs are a direct result of operating with loose stud nuts or improperly seated wheels. When a broken stud is replaced, the adjacent studs, on each side of the broken one must also be replaced since they could have been subjected to excessive strain and may be fatigued.

When installing wheel studs to hubs, check nuts retaining the wheel stud to wheel hub and replace if they are deformed, damaged or severely corroded. Install nut (and washer where applicable) to new stud. Torque to 450 - 500 Ft-lbs (610 - 680 Nm).

6.1 DRIVE AXLE WHEEL STUDS

Hub-mounted wheels are mounted with M22 x 1.5 studs and an M22 flange nut.

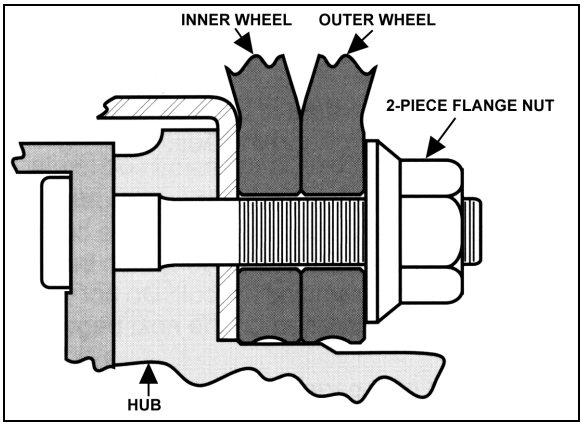

FIGURE 5: DRIVE AXLE WHEELS 13007

6.2 FRONT AND TAG AXLE WHEEL STUDS

Wheel is hub mounted on front and tag axle (M22 x 1.5 thread).

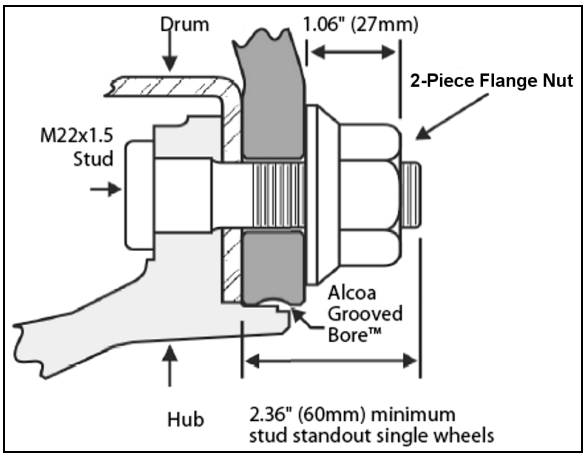

FIGURE 6: SINGLE WHEEL 13025

NOTE

Wheel studs and nuts must be kept free from grease and oil. No lubricant whatsoever should be used.

7. HUB MOUNTED WHEELS

Wheel surfaces in contact with hubs, nuts or other wheels should be kept free of all rust, grease and paint (except for initial “E” coat protection, applied to stop rusting and to facilitate wheel removal). The reason for this is to assure that all faces are clamped together without buildup of any coating. The threads of the wheel studs and the wheel nuts should be clean and undamaged.

NOTE
When painting wheels, make sure to mask all surfaces identified above.

Using a calibrated torque wrench, tighten wheel nuts to 450 - 500 lbf-ft (610 - 680 Nm) of torque. Do not use power tools or long bars for tightening. Tighten wheel nuts alternately as shown in figure 3.

NOTE
Tightening should not be done immediately after prolonged braking or when wheel ends are hot.

Check wheel nut torque at every 100 miles (160 km) for 500 miles (800 km) after fitting wheels. Let cool before checking. If any relaxation of the initial 450 - 500 lbf-ft (610 - 680 Nm) of torque has occurred, retighten. Relaxation of initial torque may occur because of the “bedding down” of the hub and wheel surfaces.

NOTE
Torque relaxation occurs when wheel ends are hot but should revert to original setting when cool. Retightening when hot will produce a higher torque reading than recommended.

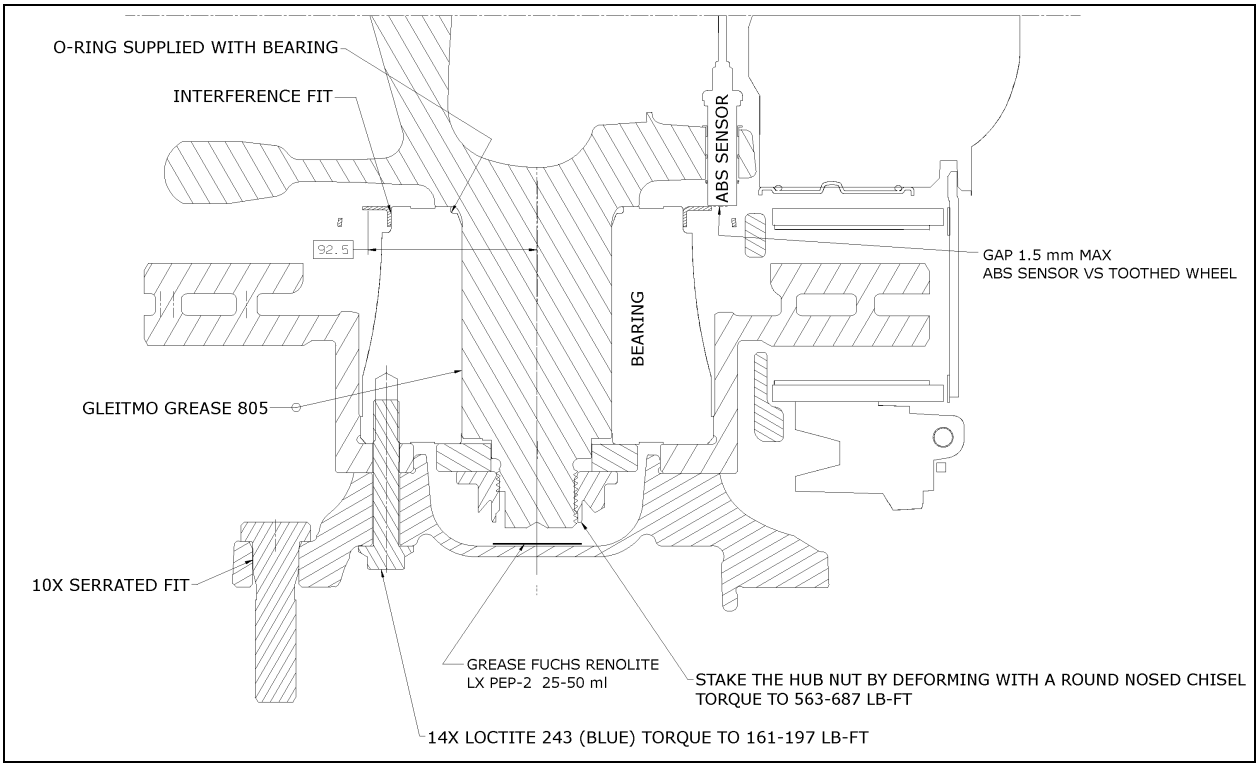

FIGURE 7: FRONT & TAG AXLE WHEEL HUB

7.1 CARE OF WHEELS

Check for cracks in wheels, especially around the fixing holes, studs, nuts and washers. If in doubt, renew.

Do not simply retighten very loose wheel fixings or wheels that are continually becoming loose. Find out why they are loose and whether any damage has been caused.

Use trained personnel and keep records of all attention to wheels and fixings, including which parts were renewed and when.

8. FRONT AND TAG AXLE WHEEL HUBS

The unitized hub bearings used on the NDS range of axles, are non-serviceable items. Bearings are pre-adjusted, lubricated and have seals fitted as part of the manufacturing process. The bearings are greased for life and there is no need or facility for re-lubrication

8.1 HUB BEARING INSPECTION

MAINTENANCE

An inspection should be made at intervals of 30,000 miles (48 000 km) or once a year whichever comes first.

- Apply parking brake, raise wheels off the ground and support axle on stands.
- When the wheels are raised, they should revolve quite freely without roughness.
- Place magnetic base of a dial indicator on brake caliper and position dial indicator stem against a convenient marked spot on face of hub flange.
- With dial indicator in position pull hard but steadily on hub flange and oscillate at same time until a steady reading is achieved.
- Without releasing the pressure, turn bearing so that dial indicator stem contacts marked spot and note reading on indicator.
- Push bearing flange hard and oscillate as before until a steady reading is achieved.
- Without releasing the pressure, turn bearing so that indicator stem again contacts the marked spot and note new reading on indicator.
- The difference between readings is the amount of mounted end play in bearing unit.
- The mounted end play figure should not exceed 0.050 mm (0.002”) for a new bearing and 0.20 mm (0.008”) for a bearing which has been in service.

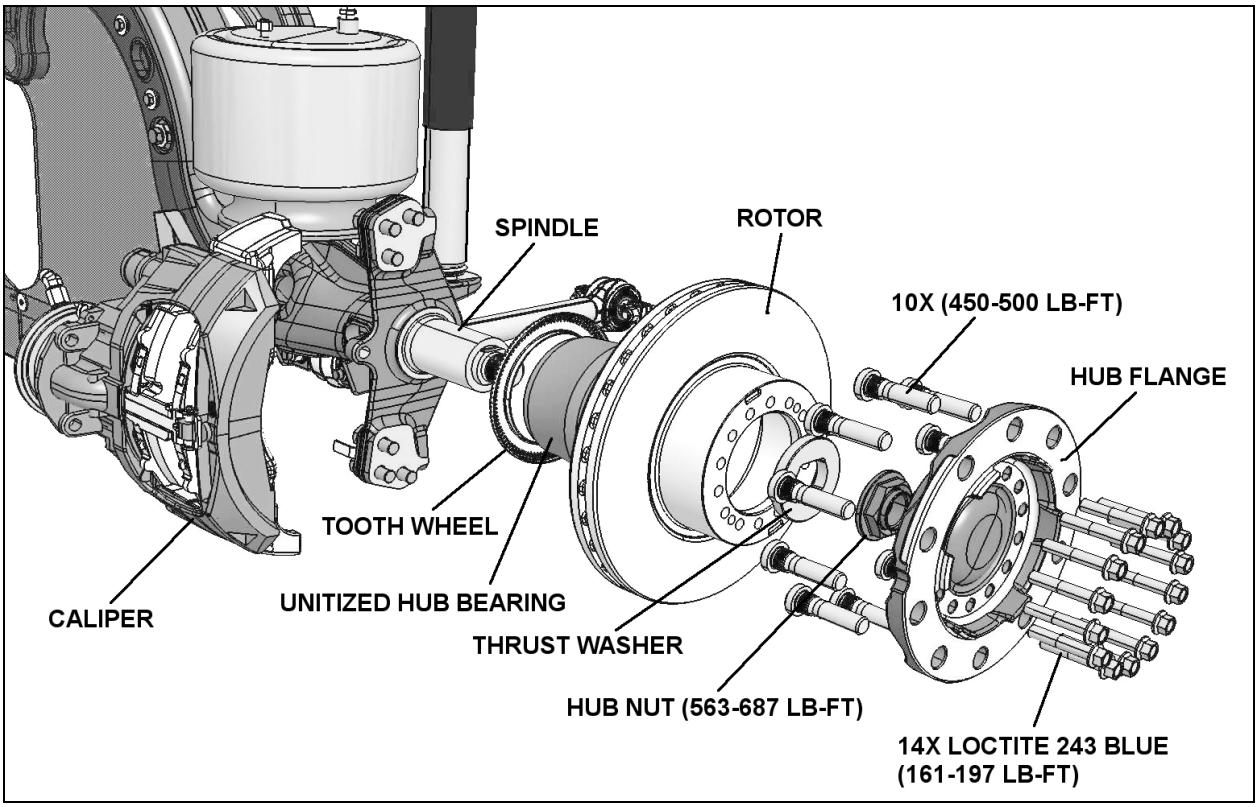

FIGURE 8: FRONT & TAG AXLE HUB AND ROTOR ASSEMBLY

NOTE
If original bearing unit is re-fitted, and end-float is measured at 1 mm, with hub not fully tightened to correct torque [563-687 lb-ft (763-931 Nm)], then the retaining clip within the unit is damaged and a new unit must be fitted.

NOTE
For more information on front and tag axle wheel hub, refer to "DANA SPICER Maintenance Manual Model NDS and Maintenance Manual NDS Axles" annexed at the end of Section 11.

8.2 HUB BEARING REMOVAL

- Stop engine and apply parking brake.
- Loosen wheel nuts about one turn (do not remove the nuts). This is not necessary if equipped with hydraulic powered gun.
- Raise the vehicle by its jacking points on the body. See Section 18, *"Body",* under heading *"Vehicle Jacking Points".*
- Unscrew wheel hex stud nuts (10) and remove the wheel.
- Unscrew hub flange hex cap screws (14).
- Remove hub flange and rotor.
- Unscrew hub nut.
- Remove hub nut and thrust washer.
- Remove unitized hub bearing by hand or use a puller if necessary.

8.3 HUB BEARING INSTALLATION

- Clean spindle using EFX degreaser (Prevost #685313).
- Lubricate part of spindle where bearing will be located, use Gleitmo 805 grease (Prevost #685274).
- Slide unitized hub bearing over spindle and position using insertion tool #491115.
- Clean thrust washer and hub nut using EFX degreaser.
- Install thrust washer and hub nut then torque hub nut to [563-687 lb-ft (763-931 Nm)].
- Stake the hub nut by deforming with a round nosed chisel.
- Clean hub bearing, rotor and hub flange clamping surfaces using EFX degreaser.
- Install rotor onto hub bearing.
- Add some grease (25-50 ml) (Fuchs Renolite LX PEP-2) (Prevost #685325) into the bottom of the hub flange cap. Mount hub flange onto rotor.
- Apply some Loctite 243 blue onto cap screw threads then secure hub flange and rotor to unitized hub bearing using cap screws (14). Torque to [161-197 Lb-Ft (218-267 Nm)] (Refer to figure 3 for tightening sequence).
- Mount the wheel over studs, being careful not to damage stud threads.
- Screw in the hex stud nuts (refer to Figure 3 for sequence) so that wheel will position itself concentrically with hub. This is important, otherwise wheel may be eccentric with hub and will not run straight. In this initial step, slightly tighten the nuts to correctly position the wheel.
- Tighten stud nuts progressively as shown in Figure 3. The final tightening should be done with a torque wrench. Tighten stud nuts to [450 - 500 lbf-ft (610 - 680 Nm)] for aluminum as well as steel wheel.

9. DRIVE AXLE WHEEL HUBS

Drive wheels use a single oil-seal assembly. They are lubricated from the oil supply in the differential housing. Bearings are tapered rollers, adjustable to compensate wear. Maintain differential oil level with general-purpose gear lubricant (refer to Section 24 *"Lubrication"* for proper oil grade selection) to ensure adequate oil supply to wheel bearings at all times.

9.1 BEARING ADJUSTMENT

To adjust drive wheel bearings:

1. Raise vehicle until both dual wheels can be turned freely (approximately 6 inches from the ground). Position jack stands under drive axle, then lower vehicle approximately 2 inches in order to avoid entire weight of the axle being supported by the suspension air bellows and the shock absorber pins.
2. Remove axle shaft as indicated in *"Meritor - Maintenance Manual No. 5"* under heading *"Single Reduction Differential Carriers"* annexed to *"Section 11"* of this manual.

Remove gaskets. Unscrew lock nut and remove adjusting nut lock ring.

3. To adjust, tighten adjusting nut until the wheel binds. Rotate the wheel while tightening so that all surfaces are in proper contact. Back off adjusting nut approximately, ¼ to 1/3 turn to assure 0.001/0.007" (0.0254/0.1778 mm) endplay and to ensure that wheel turns freely. Replace the lock ring, and adjust nut dowel pin in one of the holes. The ring may be turned over if necessary to allow more accurate bearing adjustment.
4. Tighten lock nut and check bearing adjustment. Replace the axle shaft using a new gasket.

9.2 DISASSEMBLY AND REPAIR

1. Jack vehicle as per “Bearing Adjustment" and remove axle shaft as indicated in *"Meritor - Maintenance Manual No. 5"* entitled *"Single Reduction Differential Carriers"* annexed to Section 11 of this manual.
2. Remove wheels and tires.

CAUTION

To replace wheel at the same location, always mark position of the wheel on the axle before removal, thus avoiding a new wheel balancing.

3. Remove lock nut, lock ring and adjusting nut from axle housing to prevent the outer bearing from falling out. Remove outer bearing cone and roller assembly.
4. Remove screws attaching inner oil seal retainer to hub, and remove inner oil seal assembly. Remove inner bearing cone and roller assembly. Bearing cups can be separated from the hub using a hammer and a long brass drift.
5. Thoroughly clean all parts. Bearing cone and roller assemblies can be cleaned in a suitable cleaning solvent using a stiff brush to remove old lubricant.
6. In case that excessive wear, deterioration, cracking or pitting is present on the bearing cups, rollers or cones, the bearings should be replaced. Seals should be replaced each time they are removed from the hub. To install new oil seal, use a suitable adapter and drive the seal into the retainer bore until it bottoms.
7. When installing wheel on spindle, center the wheel hub with spindle to avoid damaging the seal with the end of the spindle. Push wheel straight over the spindle until inside diameter of seal press fits on wiper ring. Fill hub cavity with general-purpose gear lubricant (refer to Section 24 *"Lubrication"* for proper oil grade selection). Lubricate, then install outer bearing cone. Adjust bearing and lock.
8. Assemble axle flange to axle using a new gasket. Apply sealant in stud area. After both wheels have been assembled according to above procedure, fill the differential with the recommended lubricant to the proper factory recommended level.

NOTE

During regular inspection, do not forget to check lubricant level in differential. Clean thoroughly or replace vent as required.

10. SPARE WHEEL (COACHES ONLY)

Tire failure is a rare event if tires are properly cared for. In case of a flat tire, move vehicle a safe distance away from traffic and apply parking brake. Remember to use the hazard flashers and according to the Highway Code regulations, set up the triangular reflectors (see *"Emergency Warning Reflectors"* in the Operator's Manual) at an adequate distance, to warn incoming motorists. This kit is located at the ceiling of the first baggage compartment, on the R.H. side.

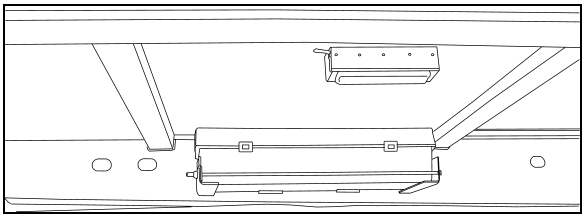

FIGURE 9: WARNING REFLECTORS LOCATION 23376

The spare wheel is stored in a dedicated compartment behind the front bumper. To access, pull the release handle located in the front service compartment. Although the bumper is heavy, sprung hinges permit one person operation.

When closing bumper compartment, make sure bumper is securely installed.

WARNING

This compartment has not been designed for storage. Never leave loose objects in this area

since they may interfere with steering linkage mechanism. Make sure bumper is safely locked in place after closing the compartment.

10.1 PULLING OUT SPARE WHEEL

To remove the spare, untighten the pressure screw holding the tire in place, then press down on the spring loaded locking pin located at the top of the retaining bracket and remove the bracket. Using the strap, pull the spare out of the compartment (refer to the following illustrations). Rollers ease manipulation. Remove the protective cover. Install the flat in place of the spare by reversing the procedure. Do not forget to have the flat repaired as soon as possible.

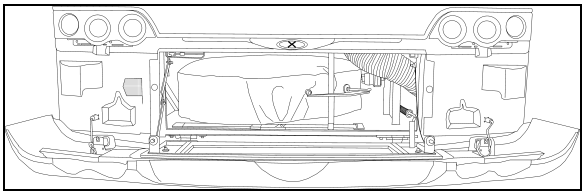

FIGURE 10: SPARE WHEEL COMPARTMENT 18614

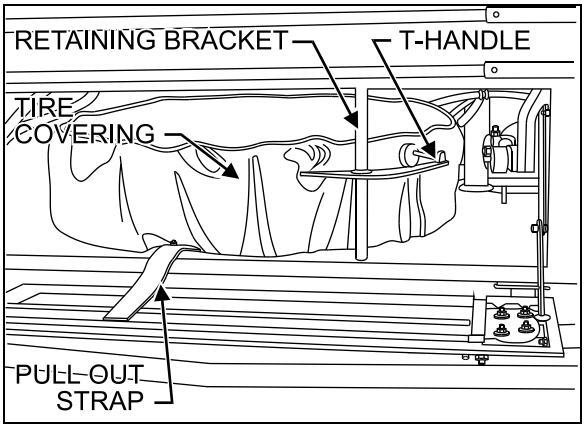

FIGURE 11: SPARE WHEEL AND TIRE 18415

NOTE

The jack and wheelnut wrench are stored in front service compartment.

The jack/tools kit stowed in the front service compartment contains a:

1. 30 ton hydraulic jack;
2. Wheel nut wrench and lever.

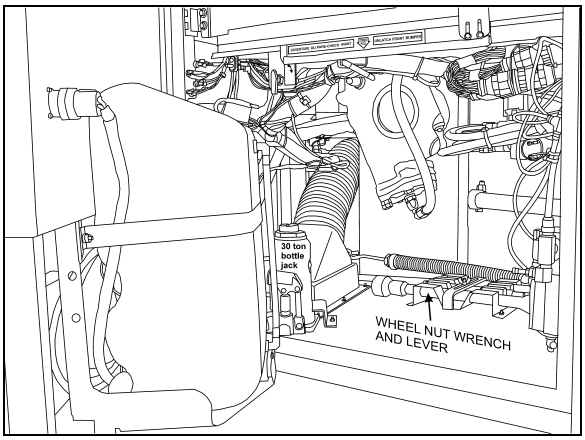

FIGURE 12: FRONT SERVICE COMPARTMENT 23377

NOTE

Check the inflation pressure of the spare tire periodically to keep it ready for use. Inflate spare tire to the pressure of the tire, which has the highest pressure on the vehicle. When installing, deflate to correct pressure if necessary.

10.2 CHANGING A FLAT TIRE (COACHES ONLY)

In case of flat tire, refer to appropriate procedure under “Wheel Maintenance" heading in this section.

NOTE

For hydraulic jack placement, refer to Section 18 "Body", under heading "Vehicle Jacking Points".

DANGER

Place jack on stable and level ground; if necessary, place a board under the jack. Do not raise the vehicle until you are sure the jack is securely engaged.

WARNING

To prevent personal injury and/or equipment damage, use only the recommended jacking points. Passengers must not remain inside vehicle while wheel is being replaced.

CAUTION

Adjust tire pressure according to the appropriate cold tire inflation-pressure.

NOTE

Store damaged wheel in spare tire compartment. Repair and balance the flat tire as soon as possible.

10.3 CHANGING A FLAT TIRE (X3-45 VIP & XLII BUS SHELLS)

In case of a flat tire, turn *ON* the hazard flashers and bring the vehicle to a stop on the side of the road. Apply the parking brake. Make sure the vehicle is parked safely away from traffic. Set up the triangular reflectors in accordance with applicable highway regulations.

We suggest that you **do not** attempt to change a wheel. First, the wheel and tire are very heavy and usually there is no space available to put the removed flat. Second, the wheel nuts, especially those on inner dual, can become very tight after being on for only a short time. Often a heavy air wrench is required to get these nuts loose. We suggest you get help via CB radio or cellular phone. There are tire service trucks all over the country that can bring a wheel and make the change safely.

NOTE

Bus shell vehicles contain no spare wheel. Access to compartment is obtained by pulling the release handle located in the front service compartment.

WARNING

The reclining bumper compartment has not been designed for storage. Never leave loose objects in this area since they may interfere with steering linkage mechanism. Make sure bumper is safely locked in place after closing the compartment.

10.4 SPARE WHEEL MAINTENANCE

Maintenance of the spare wheel and tire consists in ensuring that tire inflation pressure is the same as the tire on the coach that has the highest inflation pressure (refer to “Specifications” in this section for the recommended tire inflation pressure). Inspect rim to ensure that there is no important corrosion. In addition, check if spare wheel covering is in good condition and check that spare tire is securely fastened in compartment.

11. TIRE MAINTENANCE

The most critical factor in tire maintenance is proper inflation (Fig. 13). No tire is impervious to loss of air pressure. To avoid the hazards of under inflation, always maintain tires at their recommended inflation pressure. Improper inflation decreases tire life.

NOTE

X3-45 VIP & XLII Bus Shells vehicles, before being converted, are not at their maximum weight and tire pressures are adjusted at lower level than the maximum allowed appearing on the DOT plate. Tires pressure must be re-adjusted once converted.

An under inflated tire builds up heat that can cause sudden tire destruction, resulting in improper vehicle handling and possible loss of vehicle control. At least once a week, before driving (when tires are cold), check inflation pressure on all the tires, including the spare tire. This is especially important in cases when different drivers operate the vehicle.

WARNING

Failure to maintain correct tire inflation pressure may result in sudden tire destruction, improper vehicle handling, and will cause rapid and irregular tire wear. Inflation pressure should be checked weekly and always before long distance trips.

11.1 INFLATION PRESSURE

- Vehicles equipped with BERU TPMS

On vehicles equipped with the Beru Tire Pressure Monitoring System (TPMS), it is better to use the TPMS display as the primary reference to judge when tire pressure need adjustment.

The TPMS presents pressure readings of each tire as a +/- deviation from the wanted target.

If a tire reads within +/- 3 PSI no adjustment is needed.

If a tire reads -4 PSI and below, re-inflate by the marked amount.

If a tire reads +4 PSI and above , deflate by the marked amount.

Relying on the TPMS system is better than relying on a hand gage since the TPMS is

temperature compensated and remain accurate no matter if the tires are cold or hot.

Tires take up to 3 hours to get down to ambient temperature after a ride. A common mistake consist of checking pressure while the tires have not fully cooled down which leads into under-inflated tires. Relying on the TPMS eliminate this mistake.

Running tires at optimal pressure reduce tire wear, improve safety and fuel economy.

NOTE

It is more accurate to use the TPMS display to set the tire pressures than a pressure gauge.

The TPMS target pressures are factory set to equal the prevailing tire pressure at delivery time.

When tire pressures are increased to account for higher vehicle weight, the TPMS set point need to be increased accordingly.

- Vehicles not equipped with BERU TPMS

The condition and pressure of the tires can greatly affect both useful tire life and road safety.

At regular intervals, verify the tire pressures. Use an accurate tire pressure gauge when checking inflation pressures. Never exceed the maximum inflation pressure specified on each tire.

NOTE

Inflation pressure should be checked when tires are cold. Cold tire inflation pressure can be measured when a vehicle has not been driven for at least 3 hours or less than 1 mile (1.6 km). Driving, even for a short distance, causes tires to heat up and air pressure to increase. Check inflation pressure on all tires (including the spare tire) using an accurate tire gauge.

NOTE

The recommended tire inflation pressures are given in the applicable documents supplied with the vehicle. In addition, cold tire inflation pressures are listed on the Department of Transport's certification plate, affixed on the panel behind the driver's seat. For special tire selection, a "PREVOST COACH SPECIAL SPECIFICATION" chart is supplied with the vehicle and is affixed on the left wall near the driver's seat. Remember, tire inflation pressure must be adjusted according to vehicle loading - see table in "Coach Final Record"

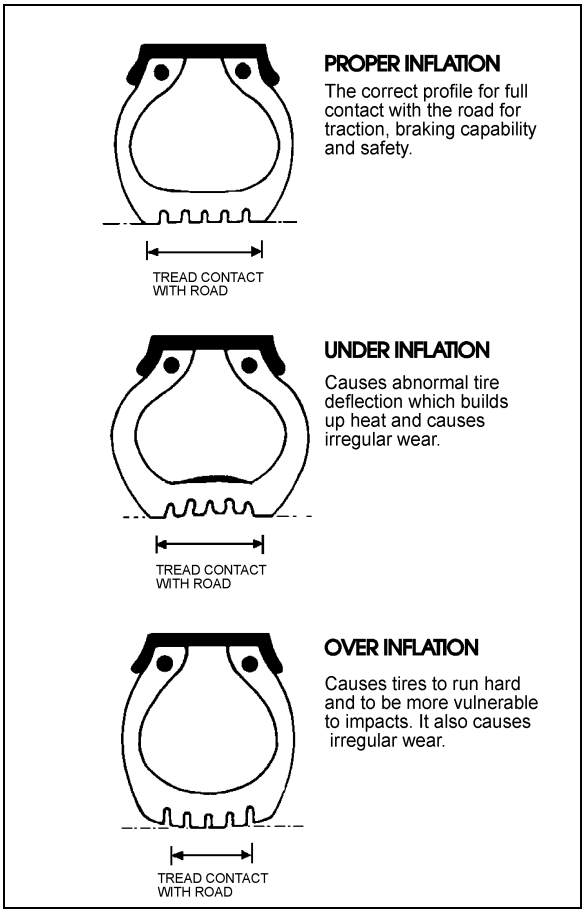

FIGURE 13: TIRE INFLATION 13009

CAUTION

Never bleed air from hot tires as tires will then be under inflated. Use an accurate tire gauge to check pressures (Do not kick tires as an inflation check. This is an unreliable method).

CAUTION

These tire pressures are established in accordance with the maximum allowable load on each axle. A lower pressure is recommended if the axle load is less than the above specifications. Weigh vehicle fully loaded and pressurize according to tire manufacturer's recommendations. For other tire and wheel specifications, see Prevost tire pressure tabulation in "Coach Final Record".

WARNING

Incorrect tire pressures cause increased tire wear and adversely affect road holding of the vehicle, which may lead to loss of vehicle control.

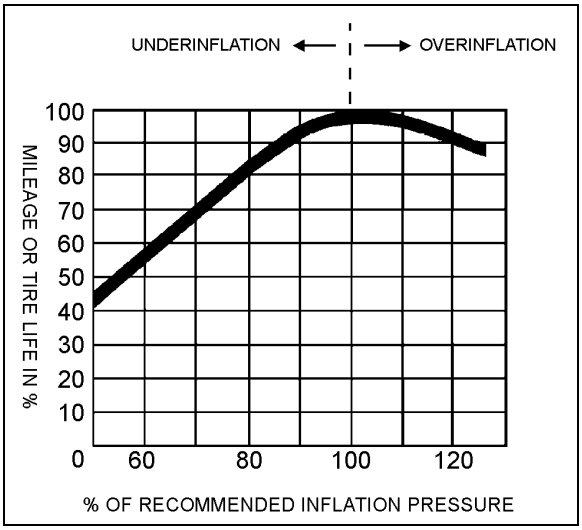

FIGURE 14: TIRE LIFE / INFLATION PRESSURE 13010

WARNING

Recommended tire inflation pressures and maximum allowable loads apply to speeds up to 65 mph (105 km/hr). Do not drive vehicle at a higher speed than 65 mph (105 km/h) or above the posted speed limit.

WARNING

All tires on the same axle should always be inflated to the same pressure. There should not be a difference in pressure between right and left tires on the same axle.

A 5-psi (35-kPa) underinflation in one front tire can not only reduce vehicle maneuverability, but will create steering hazards which can lead to an accident.

11.2 TIRE MATCHING

Unmatched tires on drive axle will cause tire wear and scuffing, as well as possible damage to the drive unit. Consequently, we recommend that tires be matched within 1/8" (3 mm) of the same rolling radius.

NOTE

It is recommended that all tires on coach be of the same type.

11.3 WHEEL BALANCING

Before balancing, wheels must be clean and free from all foreign matter. The tires should be in good condition and properly mounted. An unbalanced wheel can be due to a bent wheel or improper mounting. Before removing the wheel from the vehicle, check for swaying movement and if necessary, check the wheel lateral runout as outlined under heading *"Wheel Straightness Check".*

WARNING

When balancing wheel and tire assemblies, it is strongly recommended to closely follow instructions covering the operation of wheel balancer.

CAUTION

A maximum of 16-oz (450 g) of balancing weight is recommended. If more weight is necessary, check and correct the cause.

11.4 TIRE ROTATION

Radial tires should be rotated only when necessary. If the tires are wearing evenly, there is no need to rotate. If irregular wear becomes apparent or if the wear rate on the tires is perceptively different (from axle to axle), then tires should be rotated in such a manner as to alleviate the condition.

NOTE

There is no restriction on criss-cross rotation.

12. SPECIFICATIONS

12.1 X3-45 COACHES

STEEL WHEELS (except inner drive axle)

Wheel size ..... 9.0" X 22.5"

Wheel nut torque ..... 450 - 500 lbf-ft (610 - 680 Nm)

Tire size ..... 315/80 R 22.5

STEEL WHEELS (inner drive axle)

Wheel size ..... 8.25" X 22.5"

Wheel nut torque ..... 450 - 500 lbf-ft (610 - 680 Nm)

Tire size ..... 315/80 R 22.5

ALUMINUM WHEELS (All wheels are 9" X 22.5" except inner drive axle)

Wheel size ..... 9" X 22.5"

Wheel nut torque ..... 450 - 500 lbf-ft (610 - 680 Nm)

Tire size ..... 315/80 R 22.5

12.2 X3-45 VIP & XLII BUS SHELLS

DRIVE AXLE WHEELS

Wheel size ..... 9" X 22.5"

Wheel nut torque ..... 450 - 500 lbf-ft (610 - 680 Nm)

Tire size ..... 315/80 R 22.5

STANDARD FRONT AND TAG AXLE WHEELS

Wheel size ..... 9" X 22.5"

Wheel nut torque ..... 450 - 500 lbf-ft (610 - 680 Nm)

Tire size ..... 365/70 R 22.5

SPECIAL WHEELS FOR FRONT & TAG AXLES

Wheel size ..... 10.5" X 22.5"

Wheel nut torque ..... 450 - 500 lbf-ft (610 - 680 Nm)

Tire size ..... 365/70 R 22.5

RECOMMENDED TIRE INFLATION PRESSURE AT MAXIMUM LOAD (cold)

NOTE
Vehicle is delivered with the specific inflation pressure certification plate according to the tire selection.

WARNING

Special tire selection may lower maximum allowable speed limit, even below posted speed limit. For maximum safety, check with tire manufacturer.

CAUTION

Bus shell vehicles should be weighed fully loaded and tires pressurized according to tire manufacturer's recommendations.

WARNING

Recommended tire inflation pressures and maximum allowable loads apply to speeds up to 65 mph (105 km/hr). Do not drive vehicle at a higher speed than 65 mph (105 km/h) or above the posted speed limit.

ALUMINUM WHEEL CLEANING AND MAINTENANCE PRODUCTS

Aluminum Wheel Cleaner (22 Oz bottle)..... Prevost #683529
Aluminum Wheel Polish (16 Oz bottle) ..... Prevost #683528
Aluminum Wheel Sealer (13 Oz bottle)..... Prevost #683527

CONTENTS

1. STEERING SYSTEM 3
1.1 I-BEAM AXLE STEERING SYSTEM DESCRIPTION 3
1.2 INDEPENDENT FRONT SUSPENSION STEERING SYTEM DESCRIPTION 4
2. POWER STEERING GEAR 5
2.1 DESCRIPTION 5
2.2 POWER STEERING GEAR REMOVAL 6
2.3 POWER STEERING GEAR INSTALLATION 6
2.4 TROUBLESHOOTING 6
3. BLEEDING POWER STEERING HYDRAULIC SYSTEM 6
4. HYDRAULIC PRESSURE TEST 6
5. POWER STEERING HYDRAULIC PUMP 6
5.1 DESCRIPTION 6
5.2 REMOVAL AND INSTALLATION 6
6. STEERING COLUMN 7
6.1 REMOVAL 7
7. STEERING WHEEL 8
7.1 REMOVAL 8
7.2 INSTALLATION 9
7.3 CLOCKSPRING REPLACEMENT 9
8. TURNING ANGLE ADJUSTMENT 9
9. STEERING LINKAGE ADJUSTMENT 10
9.1 X3-45 COACHES 10
9.2 X3-45 VIP & XLII BUS SHELLS 10
10. PITMAN ARM 10
10.1 REMOVAL 10
10.2 INSTALLATION 11
10.3 ADJUSTMENT 12
10.4 TAG AXLE UNLOADING SWITCH ADJUSTMENT (X3-45 COACHES ONLY) 12
11. MAINTENANCE 12
11.1 POWER STEERING RESERVOIR AND FILTER 13
11.1.1 Oil Level Check Procedure 13
11.1.2 Filter Replacement 13
11.2 STEERING STABILIZER CYLINDER (DAMPER) (I-BEAM AXLE ONLY) 14
11.3 DRAG LINK 14
11.4 TIE ROD 15
11.5 DRAG LINK AND TIE ROD BALL JOINT INSPECTION FOR CORROSION 15
11.6 DROP TYPE BALL JOINT 15
11.6.1 Drop Type Ball Joint End Play 15
11.6.2 Dismantling Drop Type Ball Joint 16
11.6.3 Assembling Drop Type Ball Joint 16
11.7 STRAIGHT BODY TYPE BALL JOINT 16
11.7.1 Visual Inspection 16

11.7.2 Straight Body Type Ball joint End Play And Looseness 17

12. DRIVING TIPS 17

13. TROUBLESHOOTING 18

14. TORQUE SPECIFICATIONS 19

15. SPECIFICATIONS 19

ILLUSTRATIONS

FIGURE 1: I-BEAM AXLE STEERING SYSTEM SETUP 3
FIGURE 2: IFS STEERING SYSTEM SETUP 4
FIGURE 3: POWER STEERING GEAR 5
FIGURE 4: FRONT SERVICE COMPARTMENT 5
FIGURE 5: FUEL PUMP REMOVAL 6
FIGURE 6: FUEL PUMP DRIVE AXLE 7
FIGURE 7: POWER STEERING PUMP REMOVAL 7
FIGURE 8: STEERING COLUMN COVERS 7
FIGURE 9: STEERING COLUMN 8
FIGURE 10: REMOVING THE HORN PAD 8
FIGURE 11: STEERING HARNESS & HORN WIRE 8
FIGURE 12: LOCKING THE CLOCKSPRING IN PLACE 9
FIGURE 13: CLOCKSPRING INSTALLATION 9
FIGURE 14: PROPER CLOCKSPRING POSITION 9
FIGURE 15: STEERING STOP SCREW ON IFS 14063 9
FIGURE 16: STEERING STOP SCREW ON I-BEAM AXLE 10
FIGURE 17: I-BEAM FRONT AXLE PITMAN ARM ADJUSTMENT 11
FIGURE 18: IFS PITMAN ARM ADJUSTMENT 11
FIGURE 19: FIXING NUT PUNCH MARK 11
FIGURE 20: DRAG LINK INSTALLATION 12
FIGURE 21: TAG AXLE UNLOADING SWITCH ADJUSTMENT 12
FIGURE 22: HYDRAULIC FLUID RESERVOIR LOCATION 13
FIGURE 23: POWER STEERING FLUID RESERVOIR 14
FIGURE 24: STEERING STABILIZER (DAMPER) 14
FIGURE 25: DRAG LINK 14
FIGURE 26: TIE ROD 15
FIGURE 27: DROP TYPE BALL JOINT FOUND ON TIE ROD (2X) AND DRAG LINK (1X) 15
FIGURE 28: STRAIGHT BODY TYPE BALL JOINT 16
FIGURE 29: ADEQUATE CLAMPING CONDITION 17

1. STEERING SYSTEM

1.1 I-BEAM AXLE STEERING SYSTEM DESCRIPTION

The steering system consists of the steering wheel and column assembly, a vane-type hydraulic pump, reservoir, filter, interconnecting system lines and hoses, integral power steering gear, linkage and steering damper (Fig. 1). The steering linkage includes the pitman arm, drag link, steering arm, tie rod arms and tie rod.

Hydraulic components are added to transmit, increase and regulate steering control forces.

These elements are:

1. Steering stabilizer (damper);
2. A vane type hydraulic pump; and
3. Hydraulic reservoir and hoses.

The steering stabilizer reduces road shocks and vibrations in the system. The steering gearbox is self powered and provides movement with power assistance to the left wheel.

Steering stability and tire wear are influenced by wheels, hubs, tires, air suspension, brakes, front suspension and front end alignment which are all covered in their respective sections in this manual.

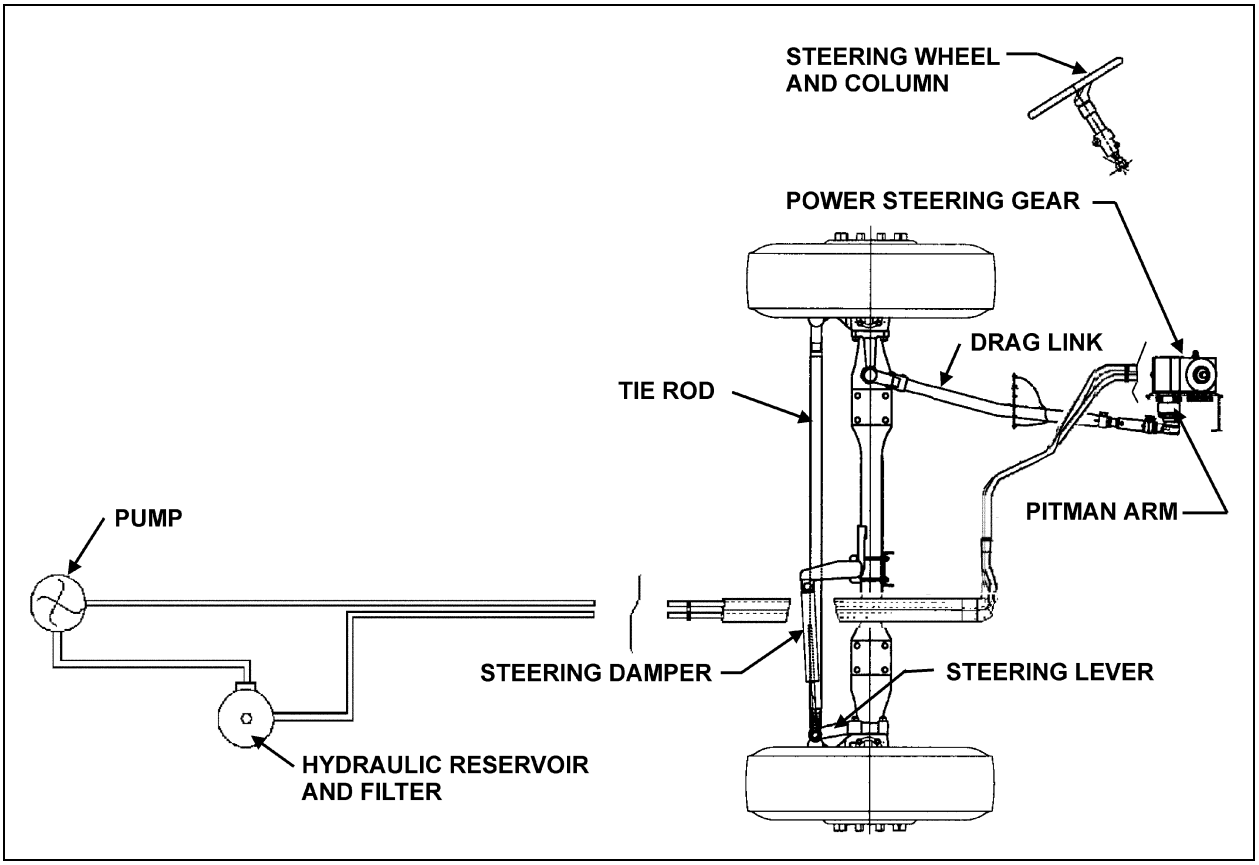

FIGURE 1: I-BEAM AXLE STEERING SYSTEM SETUP 14041

1.2 INDEPENDENT FRONT SUSPENSION STEERING SYTEM DESCRIPTION

The steering system consists of the steering wheel and column assembly, a vane-type hydraulic pump, reservoir, filter, interconnecting system lines and hoses, integral power steering gear and linkage (Fig. 2). The steering linkage consists of tie rods connected to the bell crank and the steering arm at the left side of the coach, and to the idler arm and steering arm at the right side of the coach. The bell crank and idler arm are connected by a relay rod. A drag link connected to the bell crank and the pitman arm, which is mounted to the steering gear, transfers the turning motion of the steering wheel to the steering arms.

Hydraulic components are added to transmit, increase and regulate steering control forces.

These elements are:

1. A vane type hydraulic pump; and
2. Hydraulic reservoir and hoses.
3. Hydraulic power cylinder (X3-45 VIP & XLII Bus Shells only).

NOTE
X3-45 VIP & XLII Bus Shells are also equipped with a hydraulic power cylinder. The hydraulic power cylinder provides an added source of assistance and being connected to the R.H. wheel, makes it such that the total steering forces are produced with minimal stress on mechanical linkages.

The steering gearbox is self powered and provides movement with power assistance to the left wheel.

Steering stability and tire wear are influenced by wheels, hubs, tires, air suspension, brakes, front suspension and front end alignment which are all covered in their respective sections in this manual.

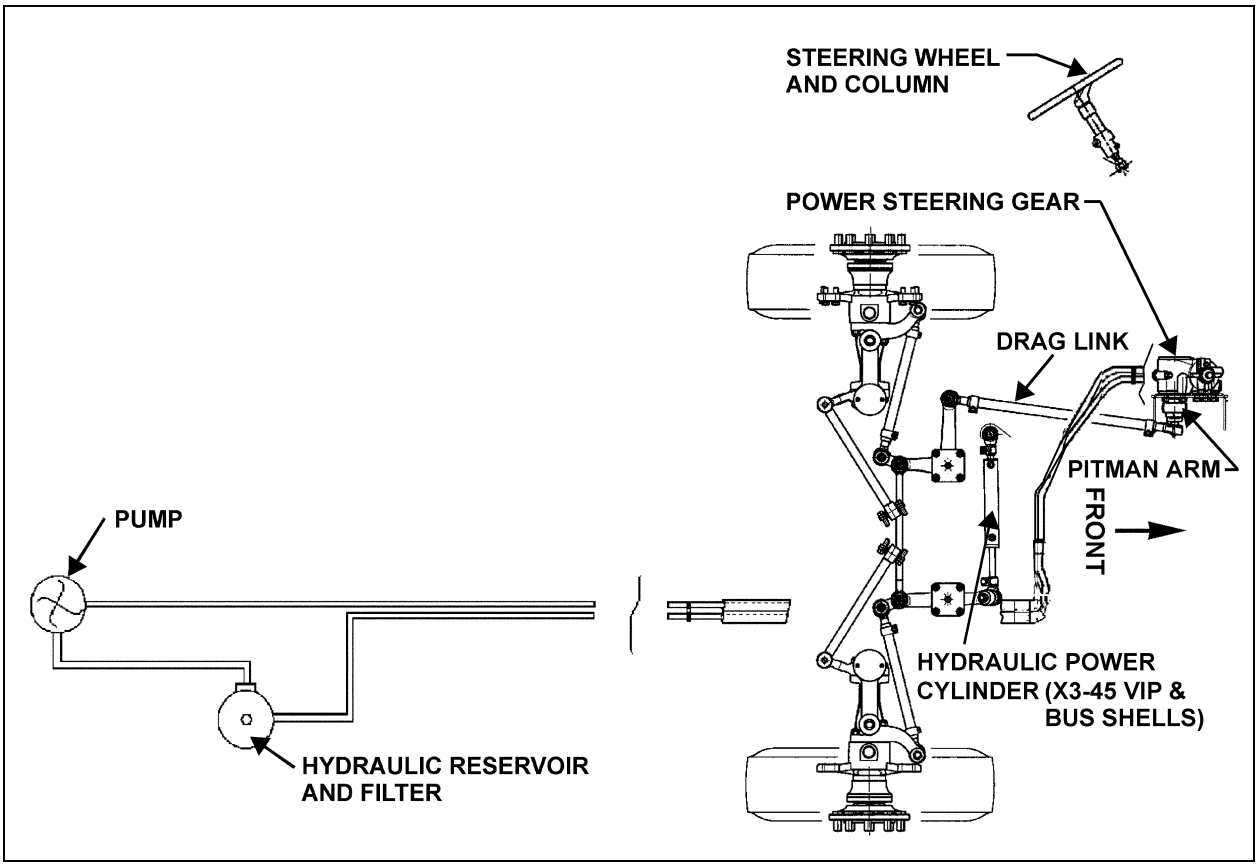

FIGURE 2: IFS STEERING SYSTEM SETUP 14076

2. POWER STEERING GEAR

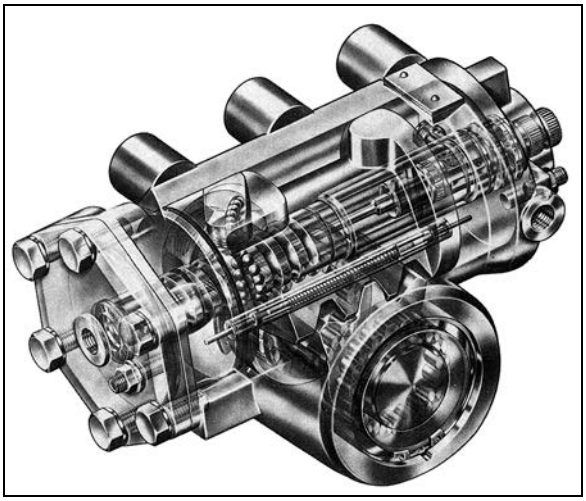

FIGURE 3: POWER STEERING GEAR 14035

2.1 DESCRIPTION

The power steering gear is located in the lower part of front service compartment (Figs. 3 & 4). The housing of the ZF-Servocom contains a control valve, working cylinder and a complete mechanical steering gear. The pressure oil for the steering is delivered by a motor-driven oil pump which is supplied with oil from an oil tank.

The housing is designed as a cylinder for the piston, which converts the rotation of the steering shaft and the worm into an axial movement and transfers this to the steering worm sector shaft. The serration of the sector shaft is straight-cut with a high surface quality in such a way that it is only possible to set a unique setting without play on installation in the straight-ahead driving area by means of the two eccentrically designed lateral housing covers.

The piston and worm are connected via a ball chain. When the worm is turned, the balls are collected by a circulating pipe at one end of the chain and fed in again at the other end, thus producing an endless ball chain.

The control valve consists of the valve slide in a needle bearing in the worm, with six control grooves on the circumference and the control sleeve on the worm, which also has six control grooves. The valve slide, designed with steering shaft connection, turns together with the worm as the steering wheel is turned.

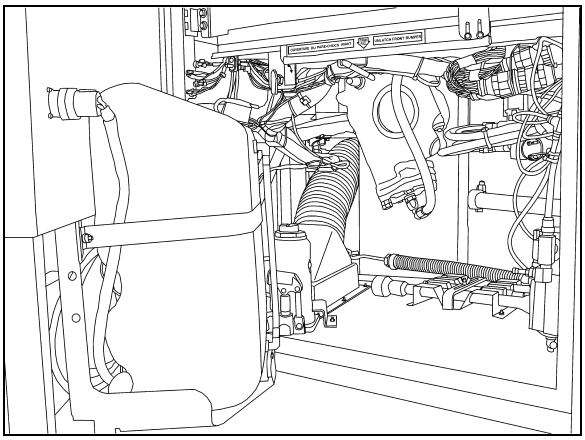

FIGURE 4: FRONT SERVICE COMPARTMENT 18611

A torsion bar, which is pinned with the valve slide and the worm, keeps the control valve in the neutral position as long as no opposing force is applied to the steering wheel. The steering housing contains a pressure relief valve, which limits the discharge pressure of the oil pump to the maximum value required. A replenishing valve can also be used, through which oil is sucked from the return if steering is not hydraulically boosted.

Compared with constant ratio, steering versions with variable ratio are more directly designed in the center area than outside the center area. The resulting smaller steering corrections benefit steering behavior in straight-ahead driving. At the same time, the indirect transmission means that there is a higher hydraulic torque available at the steering arm in parking movement. If the hydraulic assistance fails, the operating forces on the steering wheel are correspondingly lower in this area. This is achieved through a piston/steering worm sector shaft serration with differing modulus and angle of pressure.

Upon transfer of a torque from the steering shaft to the worm, or vice versa, the torsion bar is deformed in the elastic area so that there is torsion between the valve slide and the control sleeve. When the steering wheel is released, the torsion bar ensures that the valve is returned to the neutral position.

Refer to the *"ZF-SERVOCOM Repair Manual"* and "*ZF-SERVOCOM Operating, Servicing /Maintenance and Inspection Instructions"* annexed to this section for the functional aspects and maintenance procedure of the steering gear.

NOTE
Also available is the ZF-Servocomtronic, which provides variable assistance in function of speed.

2.2 POWER STEERING GEAR REMOVAL

WARNING

The steering gearbox weighs approximately 100 lbs (45 kg) dry. Exercise caution when handling.

1. Put a container into place, then disconnect both the inlet and outlet hoses from the power steering gear. Cover fittings to prevent fluid contamination.
2. Mark both the pitman arm and sector shaft with a line, then remove pitman arm. Refer to *"11.1 Pitman Arm Removal"* procedure.
3. Mark both the steering shaft universal joint yoke and steering gear input shaft with a line, then disconnect universal joint.
4. Unscrew and remove the power steering gear.

2.3 POWER STEERING GEAR INSTALLATION

Reverse *"Power Steering Gear Removal"* procedure paying particular attention to the following:

1. Tighten fasteners as recommended under paragraph 14: *"Torque Specifications".*
2. Bleed air from the system as per step 3, next.

2.4 TROUBLESHOOTING

Perform troubleshooting of the steering gear as outlined in the *"ZF-SERVOCOM REPAIR MANUAL"*, the *"ZF-SERVOCOM Operating, Servicing/Maintenance and Inspection Instructions*.

3. BLEEDING POWER STEERING HYDRAULIC SYSTEM

To bleed the power steering hydraulic system, refer to the *"ZF-SERVOCOM Repair Manual"* annexed to this section, under heading *"Setting And Functional Test"*.

4. HYDRAULIC PRESSURE TEST

Perform a pressure test as outlined in the *"ZF-SERVOCOM Repair Manual"* annexed to this section under heading *"Setting And Functional Test"*.

NOTE

For vehicles equipped with ZF-SERVOCOMTRONIC unit, refer to the supplement to the repair manual ZF-SERVOCOM.

5. POWER STEERING HYDRAULIC PUMP

5.1 DESCRIPTION

The power steering pump is a gear driven hydraulic unit which supplies hydraulic pressure for the operation of the steering gear. The pump is mounted on the engine, at the flywheel end and is also used for driving the fuel pump.

5.2 REMOVAL AND INSTALLATION

The pump is accessible through the engine compartment R.H. access door.

To remove the pump, proceed as follows:

- You must first remove the fuel feed pump.
- Clean around the fuel pump and fuel lines. Position a container to catch any fuel that might drain from the pump or lines.
- Remove the fuel pump.

NOTE

Only unfasten the bolts marked with arrows.

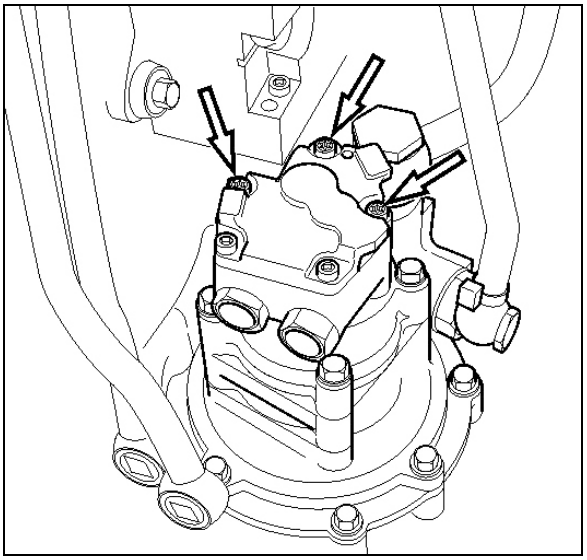

FIGURE 5: FUEL PUMP REMOVAL

CAUTION

Ensure to clean around the head of the bolts. Debris will prevent the tool from fitting properly and cause damage to the fasteners.

- Check that the adapter and fuel pump drive axle are not damaged.

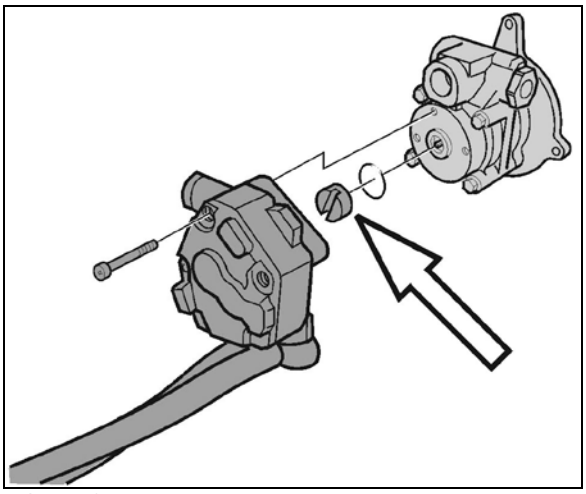

FIGURE 6: FUEL PUMP DRIVE AXLE

- Set the fuel pump aside.
- Clean around the power steering pump and loosen the steering lines. Position a container to catch any hydraulic fluid that might drain from the pump or lines.
- Unfasten the power steering pump bolts.

NOTE
Only unfasten the bolts marked with arrows.

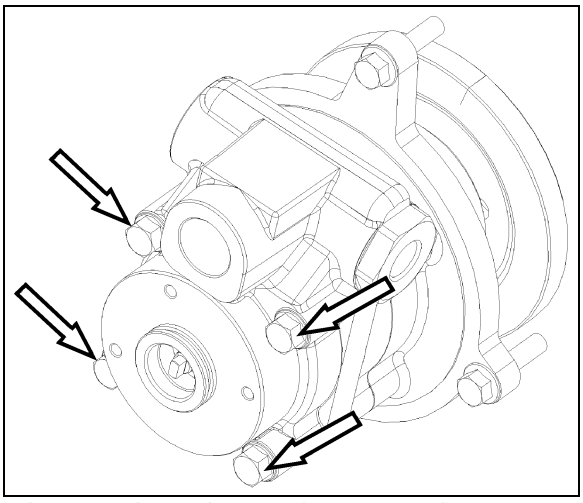

FIGURE 7: POWER STEERING PUMP REMOVAL

- Install the new power steering pump. Torque-tighten bolts to specification.

NOTE
Use a new gasket.

- Connect the hydraulic lines to the power steering pump.
- Install the fuel pump. Torque-tighten bolts to specification.

NOTE
Use a new sealing ring. Check that the fuel pump drive axle sits correctly in the power steering pump.

- Start the engine and let run for 5 minutes. Make sure that there are no leaks.

6. STEERING COLUMN

6.1 REMOVAL

To disassemble the steering column from system, refer to figure 8 & 9. The steering column has no lubrication points. The lower steering column U-joint is easily accessible through the front service compartment. The upper steering column U-joint and the steering slip joint are accessible from the front driver's area. To access these joints, proceed as follows:

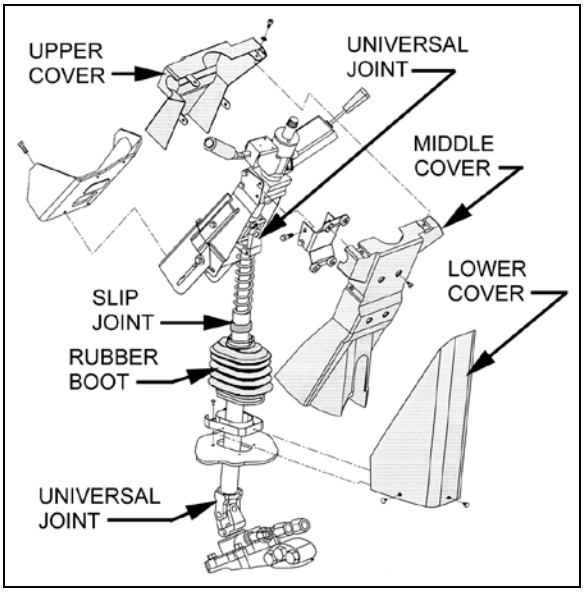

FIGURE 8: STEERING COLUMN COVERS 14040

1. From the front driver's compartment area, remove the three plastic fasteners on steering column lower cover. Remove the lower cover (Fig. 8).
2. Unscrew the four retaining screws on steering column middle cover.
3. Unscrew the four retaining screws fixing steering column upper cover to middle cover. Remove the steering column middle and upper covers.

4. Position the steering wheel in order to gain access to the joints.

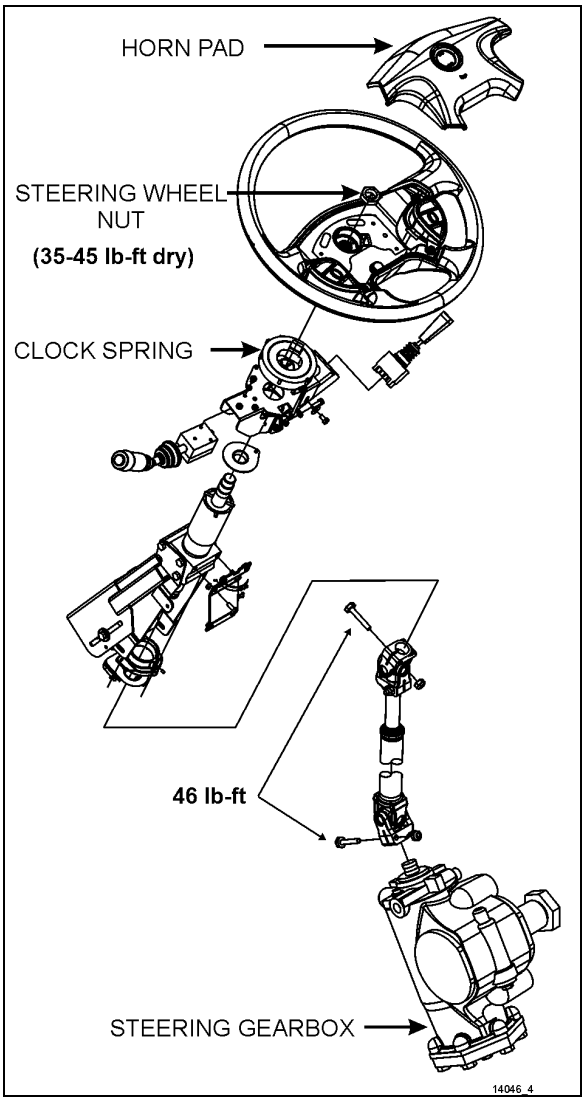

FIGURE 9: STEERING COLUMN

7. STEERING WHEEL

7.1 REMOVAL

NOTE
Before undertaking the steering wheel removal, assure that the front wheels are pointing straight ahead, aligned with the vehicle.

1. Set the battery master switch located in the rear electrical compartment to the *"OFF"* position.
2. Pull the horn pad straight up gently to detach it from the steering wheel (Fig. 10).
3. Disconnect the horn wire (white) connected to the horn pad and the steering wheel harness 4-pin connector.

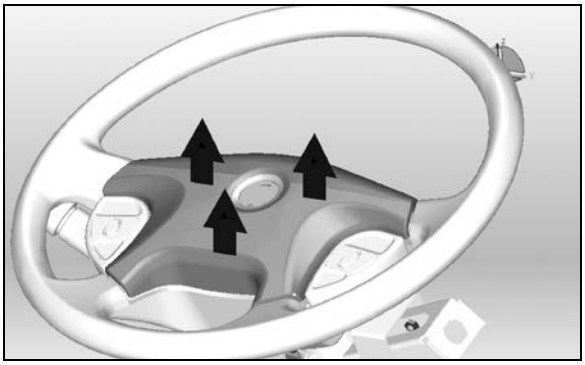

FIGURE 10: REMOVING THE HORN PAD

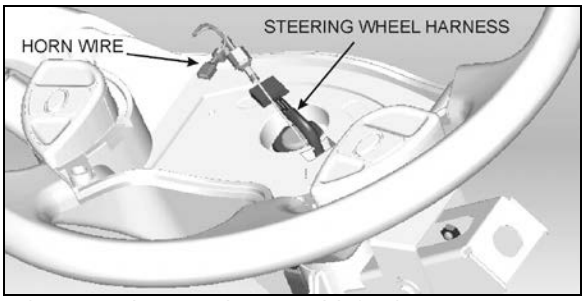

FIGURE 11: STEERING HARNESS & HORN WIRE

4. Unscrew the steering wheel nut. To simplify installation and ensure steering wheel alignment, mark the relationship of the spline shaft to the steering wheel hub (if marks don't already exist or don't line up).
5. Using an appropriate puller, separate the steering wheel from the spline shaft.
6. From behind the steering wheel, pull gently on the electrical wires passing through the rectangular opening in the steering wheel to finish removal of the steering wheel.
7. Once the steering wheel is removed, it is important to block any rotating movement of the clockspring in order to prevent it from losing its neutral position. Use two pieces of masking tape to lock it in place (Fig. 12).

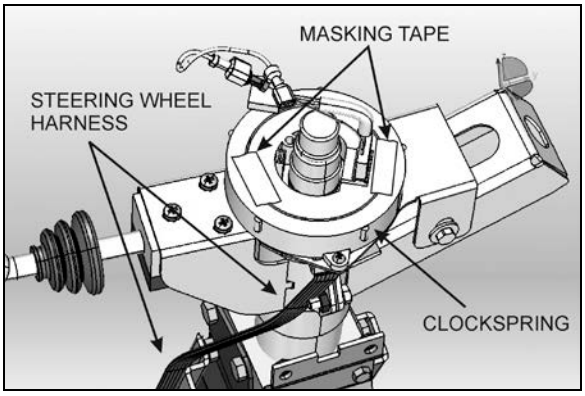

FIGURE 12: LOCKING THE CLOCKSPRING IN PLACE

NOTE
The clockspring mechanism permits a certain number of turns in each direction. At the moment of reinstalling the steering wheel, if the clockspring is not at its neutral position, the number of available turns will be reduced. This may damage the clockspring if the steering wheel is turned to its maximum amplitude.

7.2 INSTALLATION

1. Route the white horn wire and the 4-pin connector through the opening on the steering wheel.
2. Align the mark on the steering wheel hub with the mark on the spline shaft and slide the wheel onto the shaft.
3. Tighten wheel retaining nut to a torque of 35-45 lbf·ft.
4. Plug the 4-pin connector and connect the white horn wire to the center pad.
5. Reinstall the center pad and test for proper horn functioning.

7.3 CLOCKSPRING REPLACEMENT

1. Remove the steering wheel.
2. Remove the 2 clockspring mounting screws and then remove the clockspring. You will have to disconnect the clockspring harness connector located lower along the steering wheel column. If necessary, remove the steering column covers (Fig. 8).
3. Route the new clockspring harness through the opening in the clockspring support (Fig. 13). Plug the connector at the base of the steering wheel column and fix harness along the steering wheel column.

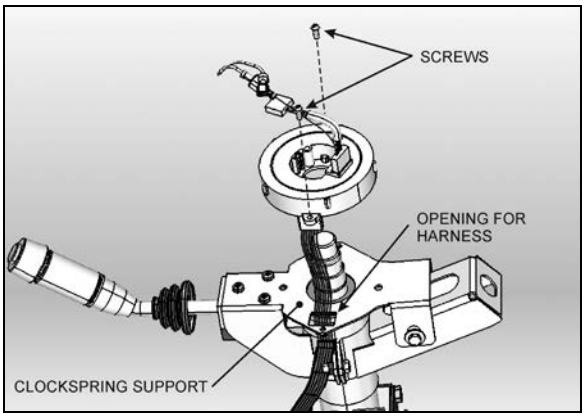

FIGURE 13: CLOCKSPRING INSTALLATION

4. Mount the clockspring in place with 2 screws.
5. Break the paper seal and rotate the center part of the clockspring about 50° clockwise (Fig. 14). This step is necessary for the installation of the steering wheel.

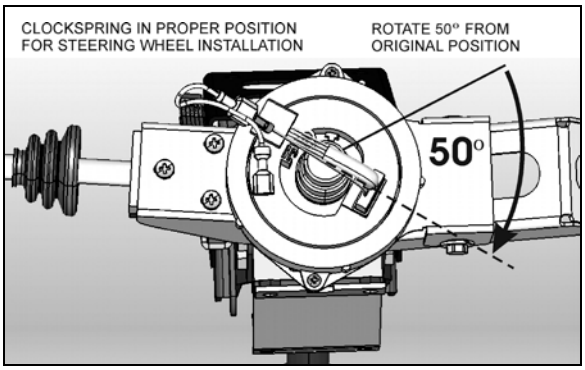

FIGURE 14: PROPER CLOCKSPRING POSITION

6. Reinstall the steering wheel.

8. TURNING ANGLE ADJUSTMENT

The maximum turning angle is set through two (2) steering stop screws installed on the knuckles, above the ABS wheel sensors. Steering stop screws are factory adjusted to accommodate the chassis design, and therefore, do not require adjustment on new vehicles. However, these should be checked and adjusted if necessary, any time a steering system component is repaired, disassembled or adjusted. Refer to section 10 *"Front Axle"* under heading *"6.4 "Turning Angle Adjusment".*

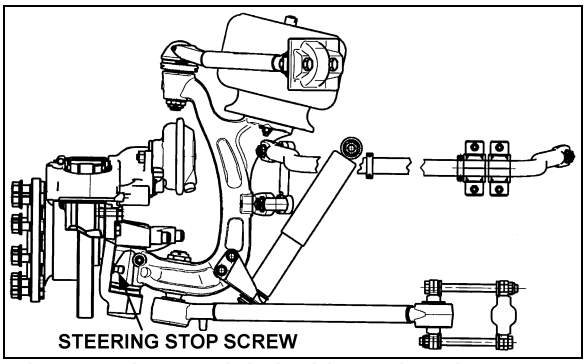

FIGURE 15: STEERING STOP SCREW ON IFS 14063

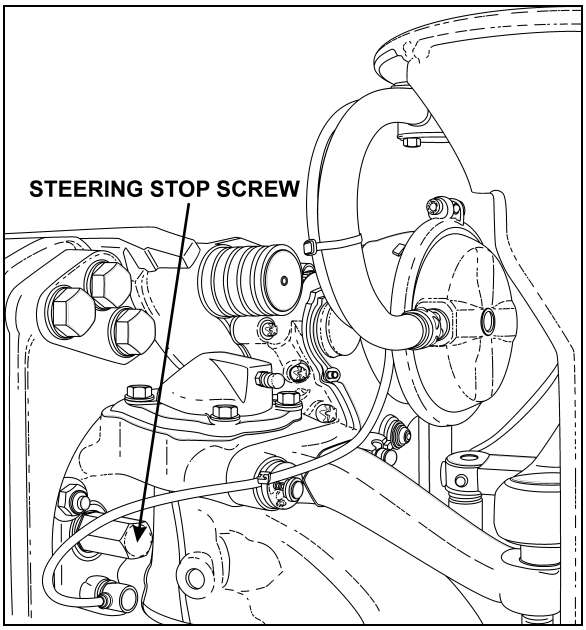

FIGURE 16: STEERING STOP SCREW ON I-BEAM AXLE

CAUTION

To prevent the steering damper from interfering with the adjustment of turning angles on vehicles equipped with I-Beam axle, make sure its fixing bracket is at correct location on the axle (refer to "12.2 Steering Stabilizer Cylinder (Damper)).

Hydraulic Stop

CAUTION

Never maintain the relief pressure for more than 5 seconds, since damage to the power steering pump may occur.

CAUTION

Reduce or shut off the power steering hydraulic pressure before the boss on the knuckle touches the stop screw. If not, the components of the front axle will be damaged (refer to "ZF-SERVOCOM Repair Manual" *and "ZF-SERVOCOM Operating, Servicing /Maintenance and Inspection Instructions" annexed to this section, under heading* "Setting The Steering Limiter").

9. STEERING LINKAGE ADJUSTMENT

Perform lubrication according to *"DANA SPICER NDS Axles Lubrication and Maintenance"* annexed to section 10 *"Front Axle".*

Drag link ends are provided with grease fittings. Under normal conditions, these should be serviced every 6,250 miles (10 000 km). Refer to section 24 *"Lubrication".*

Steering linkage pivot points should be checked each time they are lubricated. Looseness can be visually detected while rotating the steering wheel in both directions. Replace defective parts.

9.1 X3-45 COACHES

The steering linkage includes the pitman arm, drag link, steering arm, tie rod arms and tie rod.

CAUTION

Front wheel alignment should be checked and adjusted if necessary, any time a component of the steering system is repaired, disassembled or adjusted. Refer to section 10 "Front Axle" *under heading* 6. "Front Wheel Alignment".

9.2 X3-45 VIP & XLII BUS SHELLS

The steering linkage consists of tie rods connected to the bell crank and the steering arm at the left side of the bus shell, and to the idler arm and steering arm at the right side of the bus shell.

CAUTION

Front wheel alignment should be checked and adjusted if necessary, any time a component of the steering system is repaired, disassembled or adjusted. Refer to section 16 "Suspension" under heading: "Front End Alignment".

10. PITMAN ARM

10.1 REMOVAL

1. Remove cotter pin, nut and washers from drag link ball stud at pitman arm.
2. Disconnect drag link from pitman arm, using jaw style pullers (pressure screw type).

WARNING

Always wear approved eye protection when operating pullers.

CAUTION

Do not drive (hammer in) pitman arm on or off pitman shaft as this can damage the steering gear.

CAUTION

Heating of components to aid in disassembly is not allowed because it has a detrimental effect on axle components and steering linkages.

3. Using a cold chisel, undo punch mark that locks fixing nut to the pitman arm.
4. Remove pitman arm fixing nut.
5. Check the radial position of the pitman arm in relation to the sector shaft prior to removal of pitman arm.

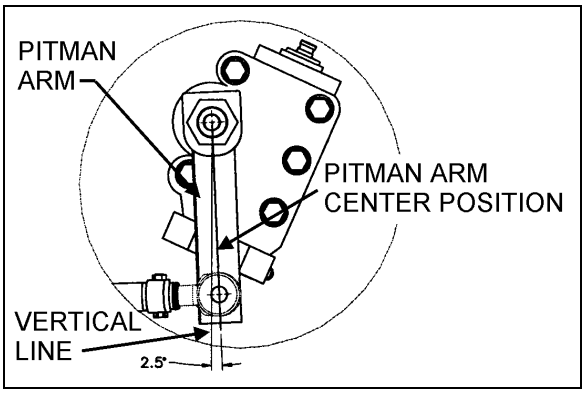

FIGURE 17: I-BEAM FRONT AXLE PITMAN ARM ADJUSTMENT 14037

6. Add reference marks to the arm and shaft if necessary to ensure correct alignment at reassembly.

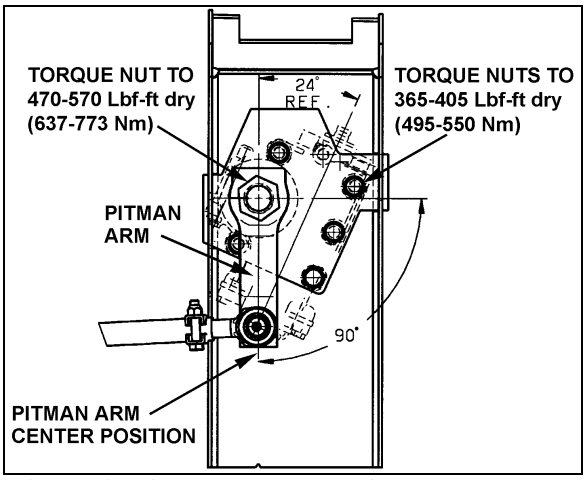

FIGURE 18: IFS PITMAN ARM ADJUSTMENT 14057

7. You must use a puller to remove pitman arm.

10.2 INSTALLATION

1. Position pitman arm on sector gear shaft with reference marks aligned.
2. Install fixing nut (Prevost #661050). Tighten nut to 470-570 lbf-ft (637-773 Nm).

NOTE

Use a new nut if the previously removed nut was punched.

3. Lock nut with sector shaft using a punch mark into the groove (Refer to figures 17 and 18).

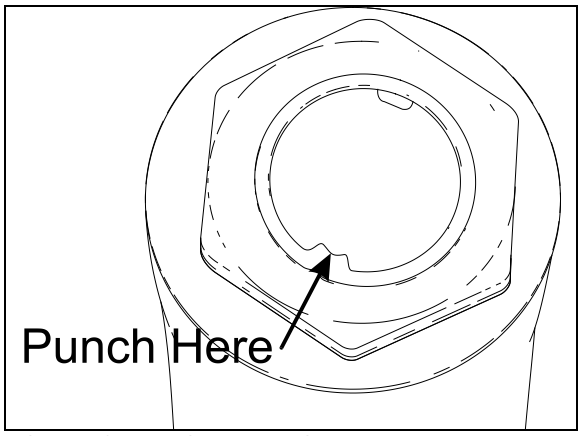

FIGURE 19: FIXING NUT PUNCH MARK 16098

4. Connect drag link to pitman arm while ensuring that rubber stabilizer is in place on the rod end. Install washers. Tighten nut to 150-200 lbf-ft (203-271 Nm). Afterwards, install a new cotter pin.

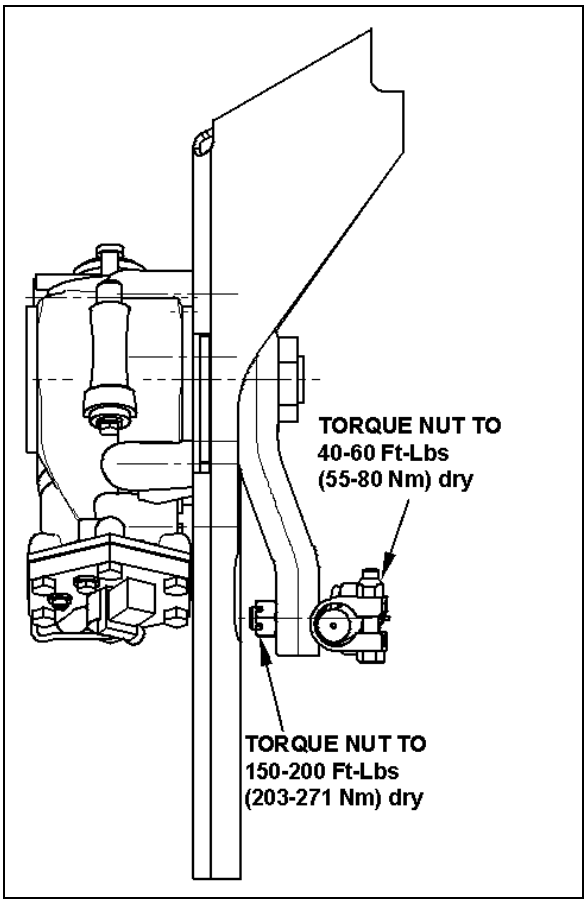

FIGURE 20: DRAG LINK INSTALLATION 14065

CAUTION

Input shaft marks must be aligned before adjusting pitman arm.

10.3 ADJUSTMENT

1. Disconnect the drag link from pitman arm. Center steering wheel by dividing the total number of steering wheel turns in two. Scribe a reference mark on steering gearbox at the center previously determined.
2. Using a protractor, check the angle of the pitman arm (refer to Fig. 17 and 18 for details).
3. The pitman arm should be adjusted with reference marks aligned or to an angle of 2.5º towards front of vehicle (I-Beam axle) or 90° (Independent Front Suspension) in relation with the vertical axis. If not, unscrew and remove fixing nut. Remove the pitman arm according to the procedure outlined under previous heading *"Pitman arm removal"*. Adjust to the proper angle.
4. When adjustment is achieved, replace fixing nut and torque to 470-570 lbf-ft (637-773 Nm).

10.4 TAG AXLE UNLOADING SWITCH ADJUSTMENT (X3-45 COACHES ONLY)

1. Make sure vehicle wheels are straight and facing forward.
2. Line up switch lever with reference to the bracket center (Refer to figure 21).

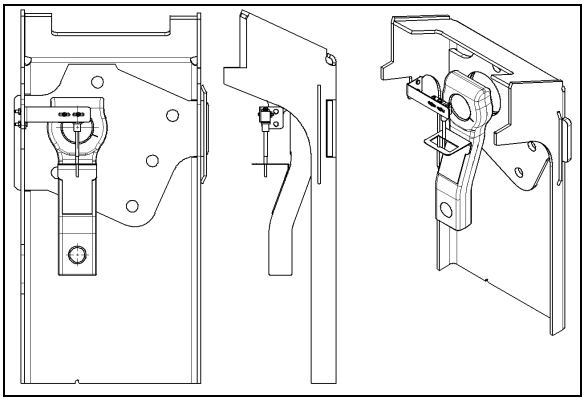

FIGURE 21: TAG AXLE UNLOADING SWITCH ADJUSTMENT 14061

11. MAINTENANCE

The power steering system requires little maintenance. However, the system should be kept clean to ensure maximum operating performance and troublefree service. Periodic inspections should also be made to check for leakage and all parts for damage or distortion. Insure all fasteners are tight (see *"14. Torque Specifications"* for recommended tightening torques.

When the slightest evidence of dirt, sludge or water is discovered in the system, disconnect fluid lines at the power steering gear to drain the system. Drain and refill the system with *"Dexron-IIE or Dexron-III"* automatic transmission oil.

Air in the hydraulic system will cause spongy action and noisy operation. When a hose has been disconnected or when fluid has been lost for any reason, the system must be bled. Bleed system as outlined under heading 3*: "Bleeding Power Steering Hydraulic System".*

CAUTION

Do not operate the pump without fluid in the power steering fluid reservoir.

If the steering linkage between the steering gear and the two front wheels is not properly adjusted,

or if it is bent, twisted or worn, the steering of the vehicle will be seriously impaired. Whenever a steering linkage part is repaired, replaced or adjusted, steering geometry and front wheel alignment must be checked and necessary corrections made. Refer to section 10 *"Front Axle"* under heading 6: *"Front Wheel Alignment"* or to section *16* "Suspension" *under heading:* "Front End Alignment".

At regular lubrication intervals, the steering linkage should be thoroughly inspected for worn or loose components.

After the vehicle has been operated continually and high mileage figures have been reached, overhaul of the various steering units will be required. General overhaul procedure normally requires removal of the entire assembly, cleaning and inspection of all parts and final assembly. Careful inspection of all parts during overhaul is very important and must not be neglected.

Lubrication fittings must all be cleaned before applying lubricant. Moreover, always be sure the equipment used in applying lubricant is clean. Every precaution should be taken to prevent entry of dirt, grit, lint or other foreign matter into lubricant containers. Replace fittings that have become broken or damaged. Lubrication intervals, as well as the recommended lubricants for the steering components, are given in the *"Lubrication And Servicing Schedule"* in Section 24 of this manual. The intervals given in the schedule are recommended for normal service. More frequent intervals may be required under severe operating conditions.

11.1 POWER STEERING RESERVOIR AND FILTER

The power steering reservoir is located on R.H. side of engine compartment and accessible through the engine compartment doors. (Fig. 22).

MAINTENANCE

At regular intervals, fluid level should be checked in the reservoir and filter assembly. Furthermore, the oil filter cartridge element in the power steering reservoir should be replaced every 50,000 miles (80 000 km) or once a year, whichever comes first.

11.1.1 Oil Level Check Procedure

1. Stop engine. Open engine compartment doors.
2. Unscrew and remove the dipstick located on top of reservoir and wipe with a clean rag.
3. Insert dipstick in reservoir. Remove it again to check fluid level (Fig. 23).
4. Adjust level to *"FULL"* mark using proper dipstick side depending on fluid temperature, use *"Dexron-IIE or Dexron-III"* automatic transmission oil.
5. Reinsert and tighten the dipstick.

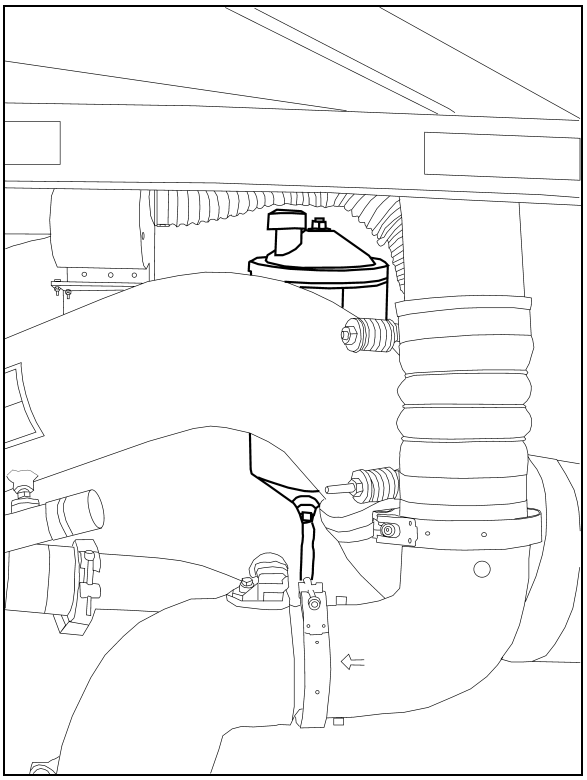

FIGURE 22: HYDRAULIC FLUID RESERVOIR LOCATION

11.1.2 Filter Replacement

1. Unscrew and remove the cover nut located on top of the power steering reservoir.
2. Remove the reservoir cover and the gasket.
3. Remove the retaining spring and finally the filter cartridge element.

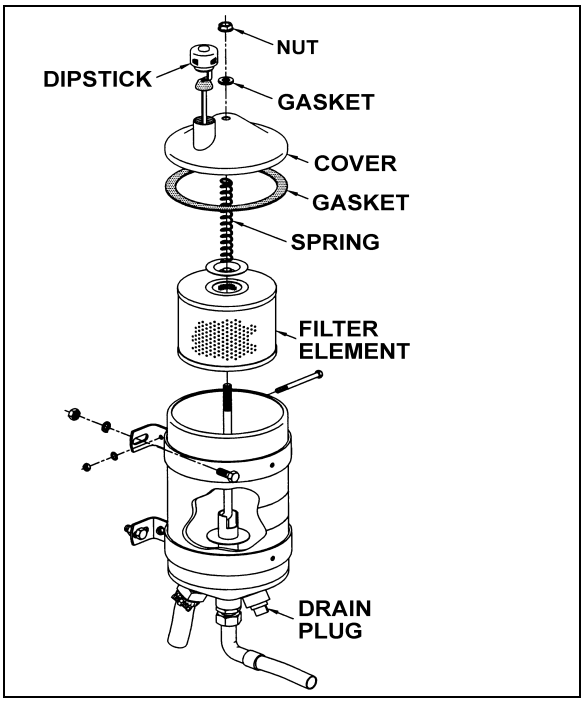

FIGURE 23: POWER STEERING FLUID RESERVOIR 14018A

11.2 STEERING STABILIZER CYLINDER (DAMPER) (I-BEAM AXLE ONLY)

The steering damper is located on R.H. side, at back of front I-Beam axle (Fig. 24).

The cylinder is nonadjustable and non-repairable. Check for oil leaks or lack of resistance. Disconnect the cylinder from axle, then carefully attempt to extend and collapse it manually.

MAINTENANCE

Steering damper ball joint (rod end) is provided with a grease fitting for pressure lubrication. Under normal conditions, it should be serviced every 6,250 miles (10 000 km) or twice a year, whichever comes first.

Check the ball joint for wear, and replace if necessary.

Good quality lithium-base grease NLGI No. 1 and 2 like Shell Retinax LX are recommended.

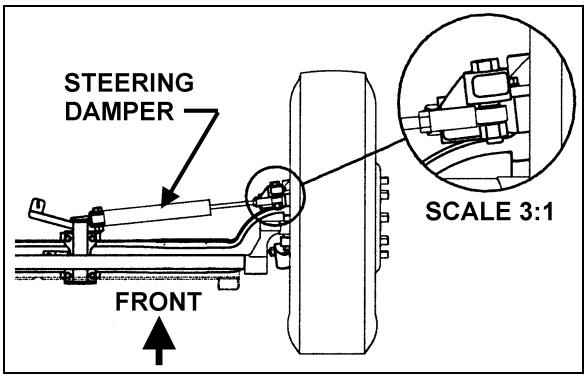

FIGURE 24: STEERING STABILIZER (DAMPER) 14042

11.3 DRAG LINK

Visually inspect drag link components for broken clamps, loose nuts and gauges on tube from rubbing parts.

MAINTENANCE

Drag link ends (ball joint) are provided with grease fittings for pressure lubrication. These grease fittings should be serviced every 6,250 miles (10 000 km) or every 6 months whichever comes first.

To prevent corrosion from forming around the ball pin (in particular, the drop type ball joint as it is exposed to dirt and water), remove the old grease bead and ensure sufficient grease is applied to purge the old grease and fill the joint and dust seal.

Good quality lithium-base mineral grease NLGI No. 1 and 2 like Shell Retinax LX are recommended.

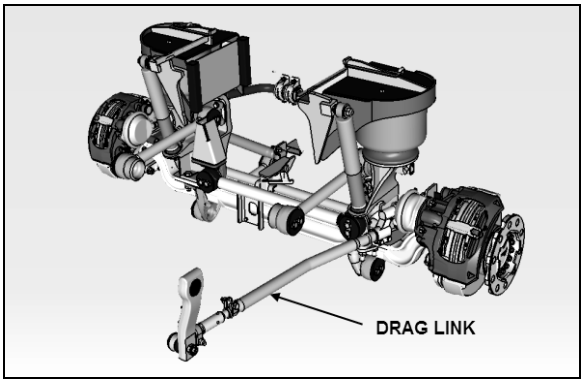

FIGURE 25: DRAG LINK

11.4 TIE ROD

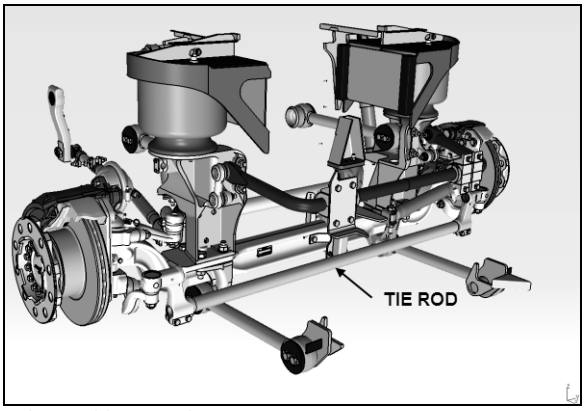

FIGURE 26: TIE ROD

MAINTENANCE

Tie rod ends (ball joint) are provided with grease fittings for pressure lubrication. These grease fittings should be serviced every 6,250 miles (10 000 km) or every 6 months whichever comes first.

To prevent corrosion from forming around the ball pin, remove the old grease bead and assure sufficient grease is applied to purge the old grease and fill the joint and dust seal.

Good quality lithium-base mineral grease NLGI No. 2 like Shell Retinax LX are recommended.

11.5 DRAG LINK AND TIE ROD BALL JOINT INSPECTION FOR CORROSION

Inspection of ball joints is important. Damaged sealing boots, salt and climatic conditions can cause loss of the corrosion protection coating applied at time of manufacturing.

MAINTENANCE

Inspect drag link end and tie rod end ball joints for corrosion once a year.

1. Carefully clean the sealing boot or dirt seal contact area to ensure that no contaminants can get under the sealing boot or dirt seal during the following inspection procedure.
2. Use an appropriate inspection tool (e.g. spatula with cut out) to push up (sealing boot) or down (dirt seal) the seal (without damaging it) until ball pin surface is visible. Degrease the ball pin surface and inspect carefully.
3. If there is corrosion of the ball pin or the sealing boot has deteriorated through ageing or is damaged, replace the ball joint.
4. If there is corrosion of the steering arm or tie rod arm area which is in contact with the sealing boot or dirt seal, clean and eliminate all surface irregularities.
5. If there is no corrosion or damage to the sealing boot or dirt seal, smear the steering arm and tie rod arm with Lithium grease and push seal back into its properly seated position.

When dismantling tie rod or drag link, ensure that no damage is caused to the sealing boots, dirt seals or ball joint housings.

11.6 DROP TYPE BALL JOINT

11.6.1 Drop Type Ball Joint End Play

If end play (direction of the ball pin axis) exceeds 0.047” (1.2 mm), readjustment is necessary.

Remove protective cap, using a suitable tool ie: a 1” x 1/8” x 9” long flat bar, tighten adjuster piece fully home (SOLID) locating thrust cup onto ball pin.

Still with tool located on adjuster piece, back off carefully (LEAST AMOUNT) until adjuster piece cotter pin is allowed to pass through body, then remove tool.

Reinstall protective cap.

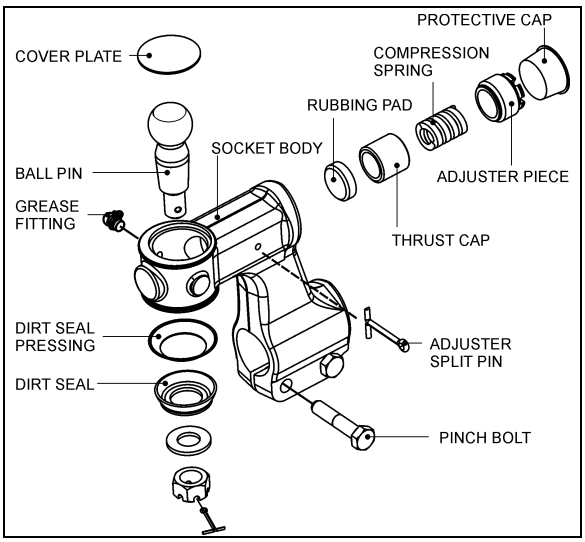

FIGURE 27: DROP TYPE BALL JOINT FOUND ON TIE ROD (2X) AND DRAG LINK (1X) 10029

11.6.2 Dismantling Drop Type Ball Joint

1. Remove dirt seal and dirt seal pressing from ball pin.
2. Slacken pinch bolt nut then unscrew and remove ball joint assembly from tie rod having first marked ball joint body and tie rod to enable tracking on re-assembly.
3. Remove adjuster split pin from ball joint body.
4. Remove cap then using a suitable tool ie: a piece or 1”x1/8”x 9” flat bar, unscrew and remove adjuster piece. Waggle ball pin to free thrust cap.
5. Remove compression spring and thrust cap from ball joint body.
6. Relieve peening on socket body top then using a hide faced mallet, tap ball pin out of body. This operation will also remove cover plate from body.
7. The rubbing pad can now be removed from body.

Thoroughly clean all parts and check for wear, renewing where necessary.

11.6.3 Assembling Drop Type Ball Joint

1. Apply a bead of Loctite 638 sealant to mating corner of rubbing pad in socket body then knock rubbing pad into its recess in ball joint body.
2. Thoroughly grease rubbing pad and ball pin with Shell Retinax LX or equivalent.
3. Insert ball pin into body.
4. Insert thrust cap, compression spring and adjuster piece into body.
5. Tighten adjuster piece fully home (SOLID) locating thrust cup onto ball pin.
6. Still with tool located on adjuster piece, back off carefully (LEAST AMOUNT) until adjuster piece split pin is allowed to pass through body, and that ball pin shank can be moved by moved of hand, then remove tool.

NOTE: If ball pin does not rotate when re-adjusted in line with above instructions, this suggests that ball pin has local worn flats. In this instance ball pin, thrust cup and rubbing pad MUST be replaced, if not FAILURE could occur in service, i.e. ball pin not being able to move in assembly when turning from lock to lock.

7. Fit cover plate into top of ball joint body, re-peen using a cold chisel to secure.
8. Screw assembled ball joint onto tie rod. Lining up marks on both body and tie rod previously made, or retracking using manual instructions.
9. Fit pinch bolts and nuts then tighten nuts alternately and progressively to 65- 75 lbf-ft (88-102 Nm.) thus securing ball joint to tie rod.
10. Fit dirt seal (pressing) and dirt seal (rubber) onto ball pin.
11. Locate ball joint and tie rod assembly with lever, carefully align and fit ball pin into hole in tie rod arm.

NOTE: Ball pin and ball pin tapers in bottom tie rod arms must be clean, dry and free from oil prior to assembly.

12. Fit pin washer onto ball pin.
13. Screw pin nut onto ball pin then tighten to 175 lbf-ft (237 Nm) torque.
14. Using a 2lb hammer, tap tie rod arm to "shock' ball pin into taper hole.
15. Re-torque pin nut to 175 lbf-ft (23 7Nm).
16. Fit split pin, if slot/hole are not in line, adjust up to next slot.

Pin nut torque 175 lbf-ft, max pin nut torque 200 lbf-ft.

17. Re-charge ball joint with Shell “Retinax LX” or equivalent grease through grease fitting.

11.7 STRAIGHT BODY TYPE BALL JOINT

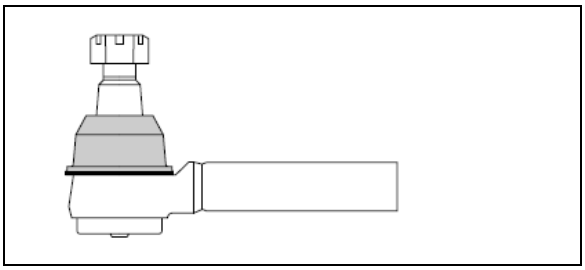

FIGURE 28: STRAIGHT BODY TYPE BALL JOINT

11.7.1 Visual Inspection

- Visually inspect for missing or damages grease fittings and replace if required.
- Damaged sealing boot or improper sealing requires seal replacement.

- Check ball joint connection for missing cotter pins.
- Check for looseness in the ball/socket assembly.

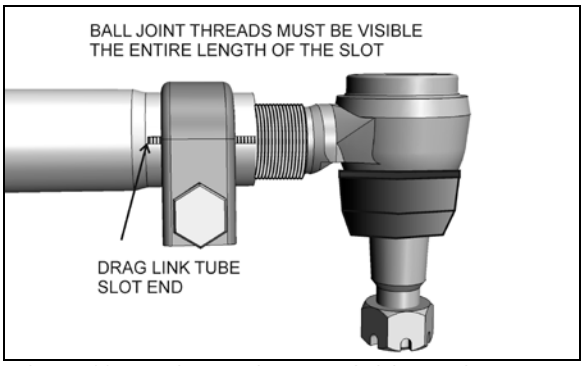

FIGURE 29: ADEQUATE CLAMPING CONDITION

For adequate clamping, the ball joint threads must be visible the entire length of the tube slot. If not, the drag link must be adjusted or replaced. It is either the wrong size, or improper adjustment was used to compensate for another problem (e.g. bent steering arm).

11.7.2 Straight Body Type Ball joint End Play And Looseness

What creates movement in sockets?

In each TRW straight body type ball joints, the compressive force of the spring creates resistive torque by applying a constant load on the bearing and stud.

As wear occurs on the components, the spring creates less resistive torque. With less torque, you no longer have the precise joint needed for optimum steering, but you do still have a safe linkage. **When all compression is lost, it's time to replace the linkage**. This wear can be caused by impact, lack of lubrication and normal wear.

1. With vehicle engine on, lightly rock the steering wheel while checking for looseness in any threaded joint. Observe any looseness in the two mating tapers or any movement of the ball pin nut. Any looseness requires further inspection. If either of the mating tapered parts show distortion or wear, both parts must be replaced.
2. With the engine off and wheels straight ahead and no force is being exerted on the linkage by the steering gear, push and pull the ball joint in and out <u>by hand</u> (approximately 100 lbs force) in the direction of the ball pin. If no movement is detected, the ball joint is safe. **Any movement detected <u>by hand</u> requires replacement of the ball joint.**

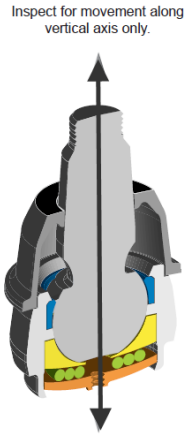

CAUTION

Do not use a wrench or other object to apply leverage when inspecting ball joint. Applying leverage can give distorted results and damage components.

12. DRIVING TIPS

In order to maximize power steering pump service life, do not attempt to turn the steering wheel when the vehicle is stationary, and especially when service brakes are applied (wheel locking will oppose the effect of steering geometry which tends to make the front wheels rotate in opposite directions).

Persisting in turning, or maintaining the steering wheel with an extra effort, could make the hydraulic system work at the relief pressure, and consequently, cause the hydraulic fluid to become overheated.

CAUTION

Never maintain the hydraulic system at the relief pressure for longer than 5/10 seconds to avoid damaging the power steering pump.

NOTE

Unequal or low tire pressure, oversize tires, and vehicle overloading are some of the causes that may increase steering effort.

13. TROUBLESHOOTING

CONDITION	CAUSE	CORRECTION
Tires wear out quickly or have uneven tire tread wear.	1. Tires have incorrect air pressure. 2. Tires out-of-balance. 3. Incorrect tag axle alignment. 4. Incorrect toe-in setting. 5. Incorrect steering arm geometry.	1. Put specified air pressure in tires. 2. Balance or replace tires. 3. Align tag axle. 4. Adjust toe-in specified setting. 5. Service steering system as necessary.
Vehicle is hard to steer.	1. Low pressure in the power steering system. 2. Steering gear not assembled correctly. 3. Steering linkage needs lubrication. 4. King pins binding. 5. Incorrect steering arm geometry. 6. Caster improperly adjusted. 7. Tie rod ends hard to move. 8. Worn thrust bearing.	1. Repair power steering system. 2. Assemble steering gear correctly. 3. Lubricate steering linkage. 4. Replace king pins. 5. Service steering system as necessary. 6. Adjust caster as necessary. 7. Replace tie rod ends. 8. Replace thrust bearing.
Bent or broken steering arm, steering top lever or tie rod assembly.	1. Too much pressure in the power steering system. 2. Cut-off pressure of the power steering system improperly adjusted. 3. Vehicle not powered on correctly. 4. Power steering system not installed correctly.	1. Replace damaged part(s), adjust power steering system to specified pressure. 2. Make sure vehicle is powered on correctly. 3. Correctly install the power steering system. 4. Correctly install the power steering system.
Worn or broken steering ball pin.	1. Drag link fasteners tightened past specified torque. 2. Lack of lubrication or incorrect lubricant. 3. Power steering stops improperly adjusted.	1. Replace damaged part(s), tighten drag link fasteners to specified torque. 2. Lubricate linkage with specified lubricant. 3. Adjust stops to specified dimension.
Worn king pins and knuckle bushings.	1. Worn or missing seals and gaskets. 2. Incorrect lubricant. 3. Axle not lubricated at scheduled frequency. 4. Incorrect lubrication procedures. 5. Lubrication schedule does not match operating conditions.	1. Replace damaged part(s), replace seals and gaskets. 2. Lubricate axle with specified lubricant. 3. Lubricate axle at scheduled frequency. 4. Use correct lubrication schedule to match operating conditions. 5. Change lubrication schedule to match operating conditions.
Vibration or shimmy of front axle during operation.	1. Caster not adjusted properly. 2. Wheels and/or tires out-of balance. 3. Worn steering stabilizer cylinder.	1. Adjust caster. 2. Balance or replace wheels and/or tires. 3. Replace steering stabilizer cylinder.

14. TORQUE SPECIFICATIONS

The torque specifications applicable to the front axle steering are grouped with information regarding the front suspension. Please refer to Section 16: SUSPENSION of this manual.

15. SPECIFICATIONS

Power Steering Gear

Make ..... ZF-SERVOCOMTRONIC
Prevost number 661044
F.E.W. ..... 16,600 lbs (7 545 kg)
Pressure rating ..... 2,175 psi (150 Bar)
Gear ratio (center) ..... 22.2 : 1
Gear ratio (extremities) ..... 26.2 : 1
Minimum pump flow for 1.5 hwt/sec ..... 4.22 gpm (16 lpm)

Power Steering Gear

Make ..... ZF-SERVOCOM
Prevost number 661045
F.E.W. ..... 16,600 lbs (7 545 kg)
Pressure rating ..... 2,175 psi (150 Bar)
Gear ratio (center) ..... 22.2 : 1
Gear ratio (extremities) ..... 26.2 : 1
Minimum pump flow for 1.5 hwt/sec ..... 4.22 gpm (16 lpm)

Power Steering Reservoir

Oil capacity ..... 4 US qts (3.7 liters)
Prevost number 660982
Make ..... Nelson Muffler

Steering Stabilizer Cylinder (Damper)

Extended length ..... 32.73±0.12"
Collapsed length ..... 20.26±0.12"
Stroke ..... 12.47±0.12"

CONTENTS

1. DESCRIPTION 5

2. FRONT I-BEAM AXLE SUSPENSION 5

2.1 AIR SPRINGS 5
2.1.1 Inspection 5
2.1.2 Removal 5
2.1.3 Installation 6
2.2 SHOCK ABSORBERS 6
2.2.1 Inspection 6
2.2.2 Removal 7
2.2.3 Installation 7
2.3 RADIUS RODS 8
2.3.1 Inspection 8
2.3.2 Radius Rod Removal 8
2.3.3 Bushing removal 8
2.3.4 Bushing installation 9
2.3.5 Radius Rod Installation 9
2.4 SWAY BAR 9
2.4.1 Removal 9
2.4.2 Installation 10
2.5 TORQUE SPECIFICATIONS 11

3. VEHICLES EQUIPPED WITH AN INDEPENDENT FRONT SUSPENSION (IFS) 15

3.1 STEERING LINKAGE 15
3.2 STEERING LINKAGE INSTALLATION SEQUENCE 20
3.3 PITMAN ARM REMOVAL 20
3.3.1 Removal 20
3.3.2 Installation 20
3.4 DRAG LINK 21
3.4.1 Adjustment 21
3.5 BELL CRANK AND IDLER ARM 21
3.5.1 Bell Crank and Idler Arm Removal 21
3.5.2 Bell crank or Idler Arm Ball Joint Disassembly 22
3.5.3 Bell Crank or Idler Arm Ball Joint Reassembly 22
3.6 RELAY ROD 23
3.6.1 Replacement 23
3.7 TIE RODS 23
3.7.1 Removal 23
3.7.2 Installation 24
3.8 STEERING ARMS 24
3.8.1 Removal 24
3.8.2 Installation 24
3.9 LUBRICATION FITTINGS 26
3.10 BALL JOINTS – GENERAL RECOMMENDATIONS 27
3.11 FRONT-END ALIGNMENT 27
3.11.1 Alignment Terminology 28
3.11.2 Front End Inspection 28
3.11.3 Front Wheel Camber 28
3.11.4 Front Wheel Toe-In 28
3.11.5 Front Wheel Caster 29
3.11.6 Major Damage 29
3.11.7 Alignment Specifications 29

3.12 LOWER AND UPPER A-ARM BAR PIN BUSHING REPAIR 33
3.12.1 Inspection 33
3.12.2 Stripping Down 33
3.12.3 Assembly 33
3.13 LOWER A-ARM BALL JOINT REPAIR 34
3.13.1 Stripping Down 34
3.13.2 Assembly 34
3.14 UPPER A-ARM BALL JOINT 35
3.14.1 Visual Inspection 35
3.14.2 Play Measurement 35
3.15 FRONT AIR SPRINGS 35
3.15.1 Inspection 35
3.15.2 Removal 36
3.15.3 Installation 36
3.16 SHOCK ABSORBERS 36
3.16.1 Shock Absorber Removal 37
3.16.2 Shock Absorber Installation 37
3.17 SWAY BAR 38
3.17.1 Removal 38
3.17.2 Installation 38
3.18 INDEPENDENT FRONT SUSPENSION HEIGHT ADJUSTMENT 38

4. REAR SUSPENSION 40

4.1 AIR SPRINGS 41
4.1.1 Inspection 41
4.1.2 Removal 41
4.1.3 Installation 41
4.2 SHOCK ABSORBERS 42
4.2.1 Inspection 42
4.2.2 Removal 43
4.2.3 Installation 43
4.3 RADIUS RODS 43
4.3.1 Rear Underframe Suspension 44
4.3.2 Tag Axle Suspension 45

5. SUSPENSION AIR SYSTEM 46

5.1 INSPECTION 46
5.2 AIR LINE TEST 46

6. SUSPENSION HEIGHT ADJUSTMENT 46

7. HEIGHT CONTROL VALVE 48

7.1 MAINTENANCE 48
7.2 REMOVAL AND INSTALLATION 48

8. AIR SYSTEM 49

8.1 AIR TANK MAINTENANCE 49
8.1.1 Wet Air Tank 49
8.1.2 Primary Air Tank 49
8.1.3 Secondary Air Tank 49
8.1.4 Accessory Air Tank 51
8.1.5 Expansion Air Tank 51
8.2 EMERGENCY FILL VALVES 51

9. HUB UNIT AND STEERING KNUCKLE ASSEMBLY 51

10. "LEVEL LOW" LEVELING SYSTEM 52

10.1 PRINCIPLES OF OPERATION 52
10.2 MAINTENANCE 52

11. FRONT KNEELING SYSTEM (X3-45 COACHES 0NLY) 52

11.1 PRINCIPLE OF OPERATION 53
11.2 MAINTENANCE 53
11.3 BELLOWS CONTROL SOLENOID VALVES 53
11.3.1 Removal and installation 53

12. HIGH-BUOY SYSTEM (X3-45 COACHES ONLY) 53

12.1 PRINCIPLES OF OPERATION 53
12.2 MAINTENANCE 54
12.3 HIGH-BUOY – PRESSURE REGULATING VALVE 54
12.3.1 Adjustment 54
12.3.2 Disassembly 54
12.3.3 Cleaning 54
12.3.4 Reassembly 54

13. LOW-BUOY SYSTEM (X3-45 COACHES ONLY) 55

13.1 PRINCIPLES OF OPERATION 55
13.2 MAINTENANCE 55

14. TROUBLESHOOTING 56

15. REAR SUSPENSION TORQUE SPECIFICATIONS 56

16. PARTS SPECIFICATIONS 60

ILLUSTRATIONS

FIGURE 1: FRONT I-BEAM AXLE SUSPENSION 5
FIGURE 2: AIR SPRING 5
FIGURE 3: SHOCK ABSORBER 7
FIGURE 4: TYPICAL SHOCK ABSORBER SETUP 8
FIGURE 5: TYPICAL RADIUS ROD SETUP 8
FIGURE 6: RADIUS ROD BUSHING REMOVAL 8
FIGURE 7: RADIUS ROD BUSHING INSTALLATION 9
FIGURE 8: RADIUS ROD INSTALLATION 9
FIGURE 9: I-BEAM FRONT AXLE SWAY BAR 9
FIGURE 10: INDEPENDENT FRONT SUSPENSION 15
FIGURE 11: IFS STEERING LINKAGE OVERVIEW 17
FIGURE 12: IFS - SUSPENSION COMPONENTS 17
FIGURE 13: IFS STEERING LINKAGE 18
FIGURE 14: STEERING GEARBOX INPUT SHAFT MARKS 20
FIGURE 15: STEERING GEARBOX OUTPUT SHAFT AND PITMAN ARM MARKS ALIGNED 20
FIGURE 16: FIXING NUT PUNCH MARK 21
FIGURE 17: BELL CRANK OR IDLER ARM HUB 22
FIGURE 18: BELL CRAN 22
FIGURE 19: BELL CRANK 23
FIGURE 20: STEERING LINKAGE NOMINAL LENGTHS 25
FIGURE 21: LUBRICATION FITTINGS LOCATION 26
FIGURE 22: ADEQUATE CLAMPING CONDITION 27

FIGURE 23: SHIMS AT THE LOWER AARMS 28
FIGURE 24: IFS PITMAN ARM ALIGNMENT 29
FIGURE 25: IFS NOMINAL DIMENSIONS 31
FIGURE 26: NOTE 2 INDICATES WHERE ADJUSTMENT MAY BE PERFORMED IF NEEDED 31
FIGURE 27: FRONT END ALIGNMENT DIAGRAM 32
FIGURE 28: A-ARM JOINT IDENTIFICATION 33
FIGURE 29: BAR PIN BUSHING 33
FIGURE 30: LOWER A-ARM BAR PIN BUSHING 34
FIGURE 31: UPPER A-ARM BAR PIN BUSHING 34
FIGURE 32: LOWER A-ARM BALL JOINT 35
FIGURE 33: UPPER A-ARM BALL JOINT 35
FIGURE 34: AIR SPRINGS 35
FIGURE 35: SHOCK ABSORBER 37
FIGURE 36: SWAY BAR (INDEPENDENT FRONT SUSPENSION) 38
FIGURE 37: HEIGHT CONTROL VALVE LOCATION 38
FIGURE 38: TYPICAL AIR SPRING CLEARANCE 39
FIGURE 39: FRONT HEIGHT CONTROL VALVE 39
FIGURE 40: REAR SUSPENSION COMPONENTS 40
FIGURE 41: REAR UNDERFRAME SUSPENSION 40
FIGURE 42: TAG AXLE SUSPENSION 40
FIGURE 43: AIR SPRING 41
FIGURE 44: SHOCK ABSORBER 43
FIGURE 45: TYPICAL SHOCK ABSORBER SETUP 43
FIGURE 46: TYPICAL RADIUS ROD SETUP 44
FIGURE 47: RADIUS ROD BUSHING REMOVAL 44
FIGURE 48: RADIUS ROD BUSHING INSTALLATION 45
FIGURE 49: TYPICAL RADIUS ROD SETUP 45
FIGURE 50: BALL JOINTS 45
FIGURE 51: TYPICAL AIR SPRING CLEARANCE 47
FIGURE 52: FRONT HEIGHT CONTROL VALVE 47
FIGURE 53: REAR HEIGHT CONTROL VALVE 48
FIGURE 54: IFS AIR TANKS LOCATION 50
FIGURE 55: I-BEAM FRONT SUSPENSION AIR TANKS LOCATION 50
FIGURE 56: REAR VALVE LOCATION 51
FIGURE 57: FRONT VALVE LOCATION 51
FIGURE 58: REGULATING VALVE 55
FIGURE 59: TORQUE SPECIFICATIONS – DRIVE AXLE 56
FIGURE 60: TORQUE SPECIFICATIONS – DRIVE AXLE 57
FIGURE 61: TORQUE SPECIFICATIONS – TAG AXLE 57
FIGURE 62: TORQUE SPECIFICATIONS – TAG AXL 58
FIGURE 63: TORQUE SPECIFICATIONS – REAR SUBFRAME 58

1. DESCRIPTION

The vehicle is provided with an air suspension system. The system consists of air springs, height control valves, radius rods, sway bars, tripod and shock absorbers (Fig. 1-6). The system operation is fully automatic and maintains a constant vehicle height regardless of load, or load distribution.

The vehicle can also be equipped with systems such as:

- Front Kneeling + Front High-Buoy;
- Front Kneeling + Full High-Buoy;
- Front Kneeling + Front High-Buoy and Low-Buoy Combination;
- Front Kneeling + Full High-Buoy and Low-Buoy Combination;

For a description of each of these systems, refer to the appropriate heading in this section

2. FRONT I-BEAM AXLE SUSPENSION

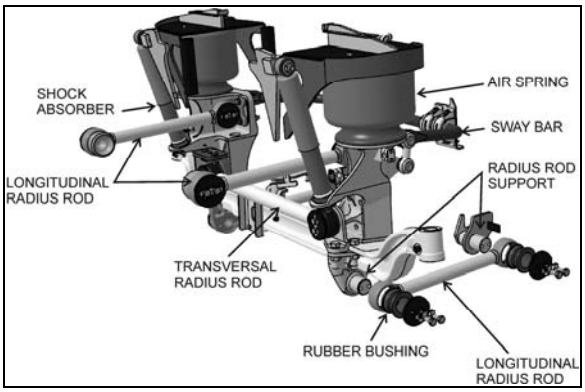

FIGURE 1: FRONT I-BEAM AXLE SUSPENSION 16105

2.1 AIR SPRINGS

The air springs are made from a special compound rubber molded to the proper contour and dimensions. The entire vertical load of the vehicle is supported by these springs. The I-beam front axle is provided with air springs that are attached to the subframe and to the axle (Fig. 3).

2.1.1 Inspection

1. Check operation of bellows.
2. Visually inspect bellows for evidence of cracks, punctures, deterioration, or chafing. Replace the bellows if any damage is evident.
3. With the primary air system at normal operating pressure (95 - 125 psi (655 - 860 kPa)), coat all suspension air line connections and bellows mounting areas with a water and soap solution. Bubbles will indicate an air leak, and none is permissible. Repair or replace defective parts.

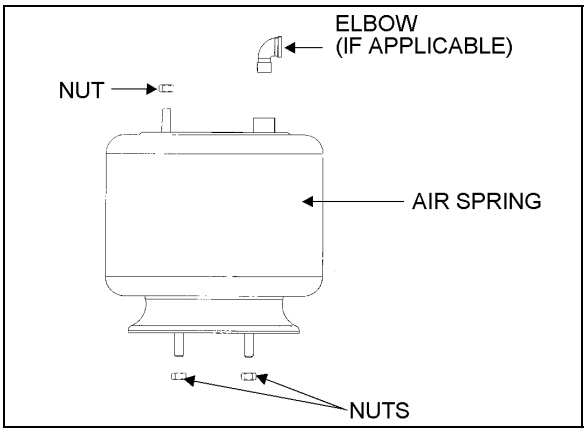

FIGURE 2: AIR SPRING 16052

NOTE
If air spring is removed from vehicle, bellows can be lightly inflated and submerged in water to detect any leakage. If any leakage is detected, replace bellows.

WARNING

To prevent personal injury, do not apply more than 10 psi (69 kPa) of air pressure to the uninstalled air spring.

2.1.2 Removal

NOTE
Front suspension air springs can be removed without removing the entire axle assembly.

1. Safely support vehicle at the recommended body jacking points. To gain access to a given air spring, the corresponding wheel can be removed as follows.
   a) Jack vehicle until the tire clears the ground, and place safety supports underneath body.

CAUTION

Only the recommended jacking points must be used as outlined in Section 18, “Body”.

b) Support the axle with a suitable hydraulic floor jack at the recommended jacking point.

c) Remove wheel.

2. Exhaust compressed air from accessory air tank by opening drain cock under reservoir.

3. Disconnect the height control valve link and pull down the overtravel lever to ensure all air is exhausted from air springs.

NOTE

While performing this step, do not change the height control valve overtravel lever adjustment.

4. Disconnect air line from air spring, remove elbow (if applicable), and cover both the line end and fitting to prevent the entry of foreign matter.

5. Remove the air spring upper nut, and then the two lower nuts. Remove air spring.

2.1.3 Installation

1. Compress air spring as necessary, then aligning studs with their holes, position air spring between both the lower and upper supports. Thread the lower nuts and the small upper nut a few turns.

NOTE

To facilitate air spring installation, compress it manually then put a piece of tape over the air line threaded fitting. This prevents air from getting back into the bag and keeps it compressed, thus enabling to place the bag in between the mounting plates and greatly easing installation.

2. Tighten and torque the lower stud nuts, and then the upper one according to Torque Table under heading Torque Specifications.

3. Thread the remaining upper nut (large nut) and tighten according to Torque Table under heading Torque Specifications.

4. Install elbow (if applicable), then connect air line.

5. Connect the height control valve link.

6. Build up air pressure in system.

NOTE

To accelerate this operation, air reservoirs can be filled from an exterior air supply connected to the accessory tank fill valve or to the emergency fill valve.

7. Check operation of bellows with the primary air system at normal operating pressure (95 – 125 psi (655 – 860 kPa)), coat the air line connections and air spring mounting areas with a water and soap solution. Bubbles will indicate an air leak, and none is permissible. Repair or replace defective parts.

8. Reinstall wheel.

9. Remove the hydraulic floor jack from under the axle, then lower vehicle to ground.

2.2 SHOCK ABSORBERS

Double-action, telescoping-type shock absorbers ensure a smooth ride and enhance vehicle stability on the road. All shock absorbers are eye-type mountings. The front axle is provided with two shock absorbers.

Shock absorbers are non-adjustable and non-repairable. Maintenance requirements involve replacement of the rubber mounting bushings, and tightening of all shock absorber pins at the proper torque of 500 - 550 lbf-ft (680 - 750 Nm) when shock absorber replacement occurs. If a shock absorber becomes inoperative, complete unit must be replaced.

CAUTION

When a shock absorber is found defective, always replace with a new set on affected axle, except if there has been a recent replacement of one unit. The following method will help in determining if both shock absorbers on the same axle have to be replaced.

2.2.1 Inspection

Loosen lower mounting of both shocks, and then carefully attempt to raise and lower the bottom portion of each shock. Note the rate of effort for distance of travel. Replace both shocks if a definite differential rate is found.

The shock must be bench checked in an upright, vertical position. If checked in any other position, air will enter the cylinder tube and make the shock absorber appear defective.

Proceed as follows to check shock absorbers:

1. With the shock absorber in a vertical position (top end up), clamp the bottom mount in a vise.

CAUTION

Do not clamp the reservoir tube or the dust tube.

2. Rotate the dust tube. Notice any binding condition (may be compared with new unit). Binding condition indicates a scored rod. Units with scored rods should be replaced.
3. Fully extend shocks and check for leaks in the seal cover area. Shock fluid is a very thin hydraulic fluid that has a characteristic odor and dark brown tint. A slight trace of shock fluid around the seal cover area is not a cause for replacement. The shock seal is designed to permit a very slight seepage to lubricate the rod. Units that leak should be replaced.
4. Visually check shock for dents that could cause the shock to bind. Also, check for a bent rod.
5. Extend and collapse shock several times to determine that it has control (resistance) in both rebound and compression.
6. Visually inspect the shock mountings and vehicle mounting for:
   a. Broken mounts;
   b. Extreme bushing wear;
   c. Shifted bushing or sleeve;
   d. Deep cracks in bushing material (shallow surface cracks are normal);
   e. Loose shock absorber pins;
   f. Presence of convex washers, and their position relative to the rubber bushing.

2.2.2 Removal

1. Remove nuts and washers from shock absorbers on upper and lower mounting pins, taking care to identify the inner and outer washers to ease reinstallation. Refer to figure 4 for details.
2. Remove the shock absorber assembly from pins.
3. Remove the two inner bushings from the shock absorber and discard them.

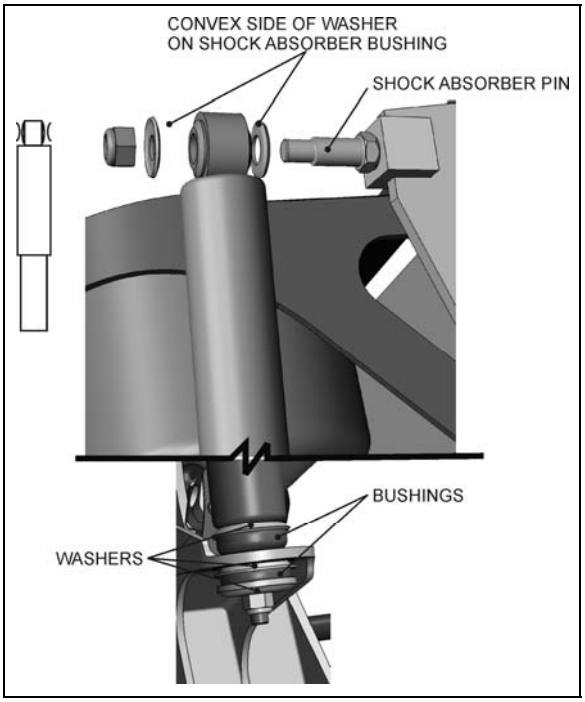

FIGURE 3: SHOCK ABSORBER 16008

2.2.3 Installation

1. Ensure that the shock absorber mounting pins are tight and that the threads are not stripped.
2. Install new rubber mounting bushings on shock absorbers (upper and lower).
3. Place the inner washers (with washer convex side facing the shock absorber rubber bushing) on each shock absorber pin (Fig. 4).

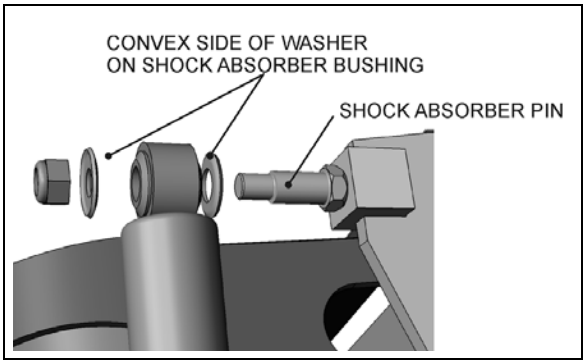

FIGURE 4: TYPICAL SHOCK ABSORBER SETUP 16009

4. Install the shock absorber eyes over the mounting pins, then the outer washers (with washer convex side facing the shock absorber rubber bushing) on each shock extremity.

NOTE
If shock absorber pins are removed, they must be reinstalled using "Loctite" (see "Parts Specifications" in this section).

5. Place the lower and upper mounting pin stud nuts and torque according to paragraph 13 Torque Specifications.

2.3 RADIUS RODS

Radius rods are used to secure the axles in the proper transversal and longitudinal positions. Four radius rods are provided on the front axle suspension (three longitudinal and one transversal). Refer to figures 1and 5 for details. These rods transmit both braking and driving forces from the axles to the vehicle body.

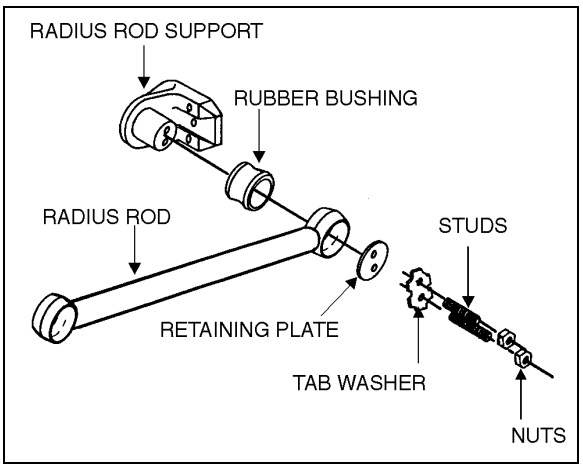

FIGURE 5: TYPICAL RADIUS ROD SETUP 16010

2.3.1 Inspection

The following instructions apply to all radius rods used on this vehicle:

1. Clean all parts thoroughly.
2. Inspect radius rods for distortion and cracks. We recommend the "Magnaflux" process to detect cracks in the radius rod. Any damaged part should be replaced with a new one.

NOTE
New bushings should be used when rods are replaced.

3. The radius rod bushings should be checked periodically for signs of shearing, deterioration, or damage. Any defective part should be replaced with a new one.

2.3.2 Radius Rod Removal

1. Flatten the tab washer which secures the two retaining nuts (or bolts), and then unscrew the nuts (or bolts) at each extremity of the radius rod (Fig. 5).
2. Remove the tab washer and the retaining plates and radius rod ends from anchor pins, and then remove the radius rod.

2.3.3 Bushing removal

1. Safely support the radius rod as shown in figure 6.

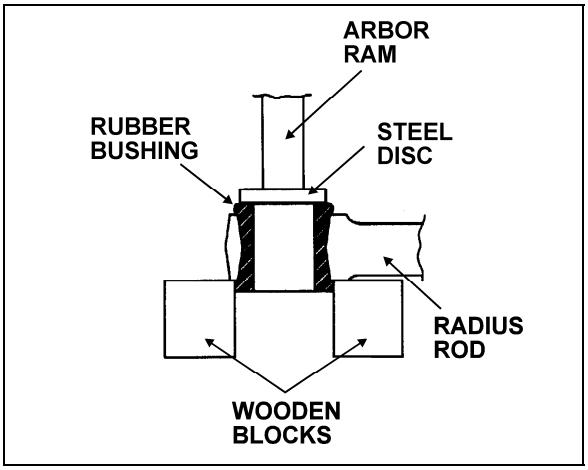

FIGURE 6: RADIUS ROD BUSHING REMOVAL 16011

2. Place a flat steel disc, slightly smaller than the outside diameter of the bushing (Fig. 6).
3. Using an arbor press or a suitable driving tool, press or drive the old bushing out of the rod and discard the bushing.

⚠ **CAUTION**
Make sure to prevent the steel disc from contacting the radius rod end.

2.3.4 Bushing installation

1. Lightly spray the inner and outer surfaces of radius rod bushing with water.

CAUTION

No lubricant whatsoever is to be used on the rubber bushing.

2. Safely support the radius rod, and place new bushing on top of the radius rod end (Fig. 7).
3. Place a block of wood on top of bushing and press on it manually.
4. If necessary, use an arbor press or a suitable driving tool. Press or drive the bushing into the radius rod end until it extends equally on both sides of the rod.
5. It is also possible to proceed differently. Place radius rod bushing on a plane surface. Spray a light coat of water on the inner and outer surfaces of radius rod bushing.
6. Take radius rod, align the bushing. Tap radius rod on bushing until latter is positioned correctly.

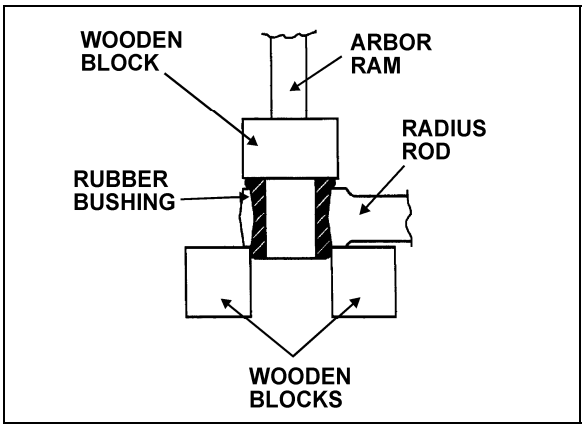

FIGURE 7: RADIUS ROD BUSHING INSTALLATION 16012

2.3.5 Radius Rod Installation

1. Lightly spray the radius rod support with water. Place the radius rod end over the radius rod support (Fig. 8).
2. Position the retaining plate. Install the tab washer and nuts (or bolts).

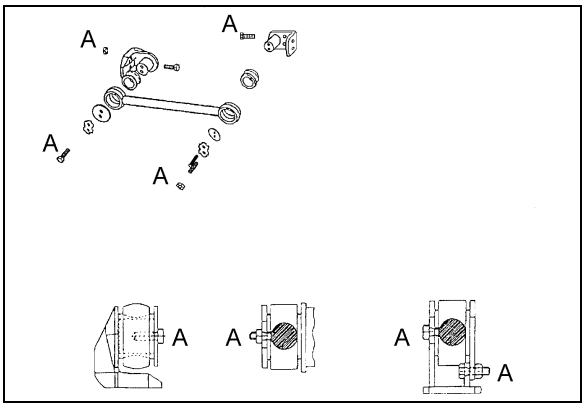

FIGURE 8: RADIUS ROD INSTALLATION 16028

CAUTION

Always use new tab washers at installation.

3. Tighten the nuts (or bolts) lightly, and repeat at the other end.
4. Refer to heading *"Suspension Height Adjustment"* later in this section, and set the vehicle to normal ride height.
5. With the vehicle at normal ride height, tighten all radius rod anchor pin nuts or bolts according to Torque Table 1.

CAUTION

It is extremely important upon reconnection of the rods that the proper clearance height between the axle and body be maintained. Otherwise, the rubber bushings in radius rod ends will become preloaded, thus reducing their life span.

2.4 SWAY BAR

A sway bar is provided on the front axle to increase vehicle stability. It controls lateral motion (swaying movement) of the vehicle (Fig. 10).

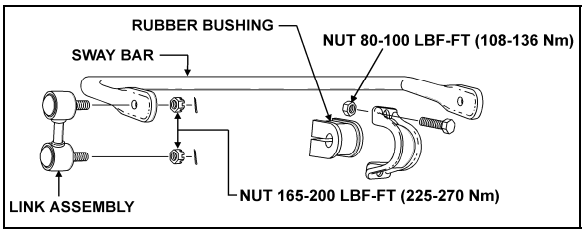

FIGURE 9: I-BEAM FRONT AXLE SWAY BAR

2.4.1 Removal

1. Disconnect the two links from sway bar.

2. Safely support the sway bar. Unbolt the four bushing collars from subframe.
3. Remove sway bar.

NOTE
Sway bar bushings are slit to ease their removal.

2.4.2 Installation

1. Loosely install the sway bar.
2. Tighten the eight bushing collar nuts according to Torque Table 1 under heading Torque Specifications.
3. Install two sway bar link upper and lower nuts and tighten according to Torque Table 1 under heading Torque Specifications.
4. Install a cotter pin on each nut and bend.

2.5 TORQUE SPECIFICATIONS – FRONT I-BEAM AXLE SUSPENSION AND STEERING

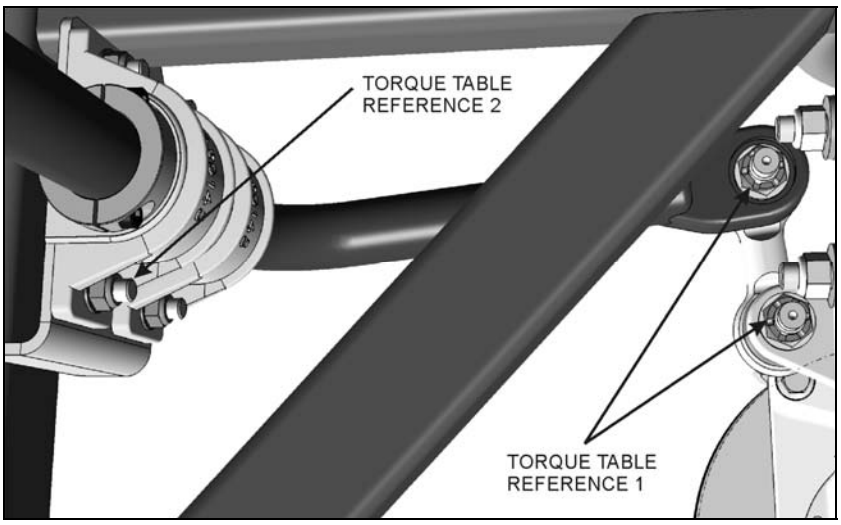

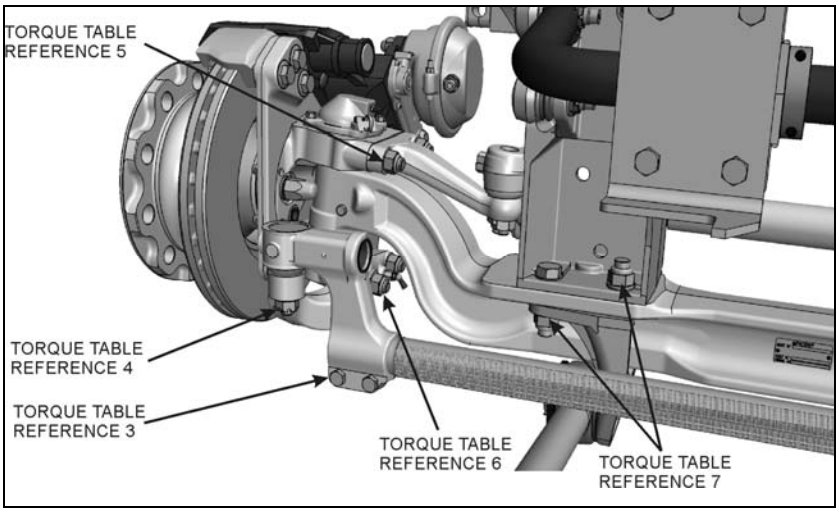

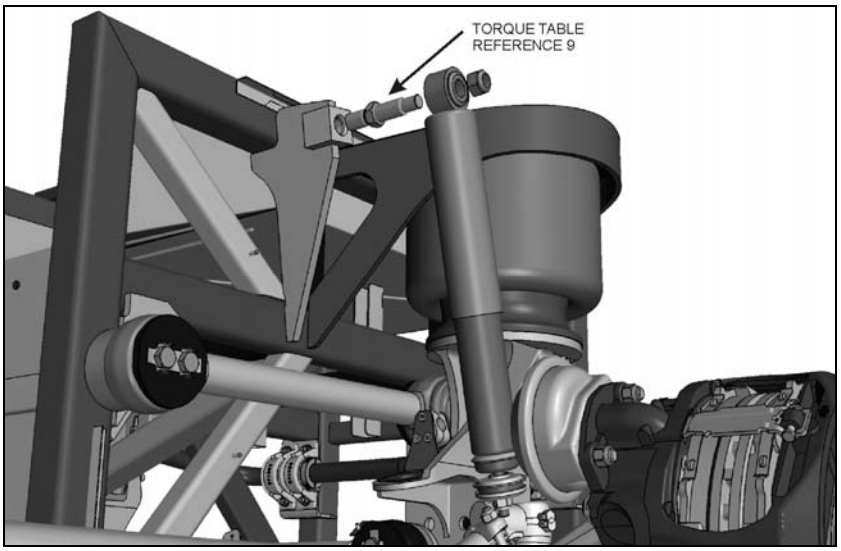

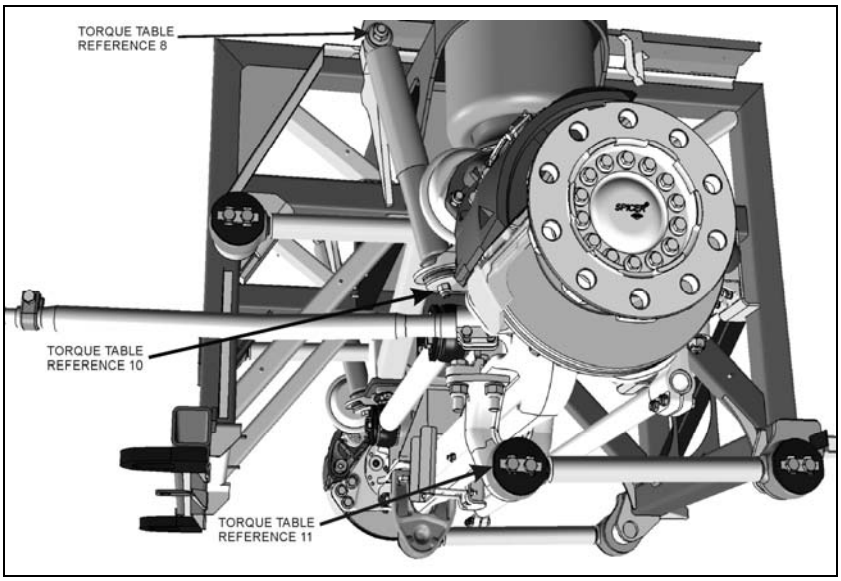
TORQUE TABLE
REFERENCE 8
TORQUE TABLE
REFERENCE 10
TORQUE TABLE
REFERENCE 11

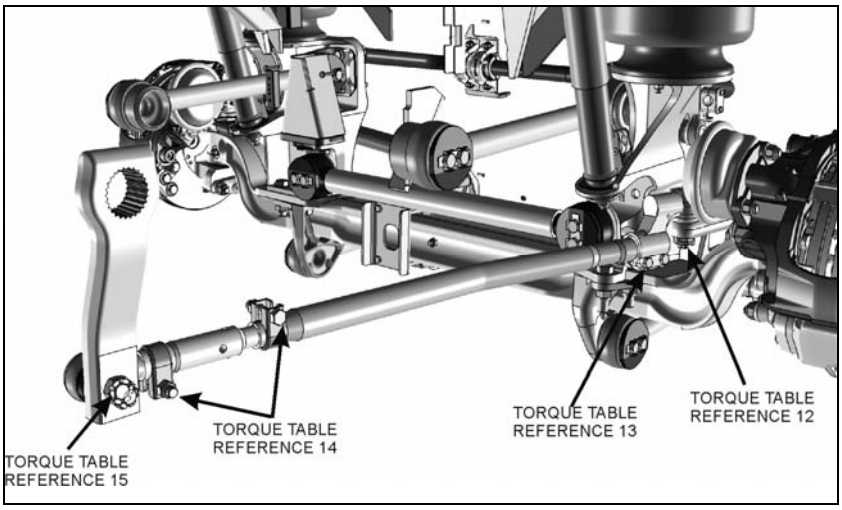
TORQUE TABLE
REFERENCE 15
TORQUE TABLE
REFERENCE 14
TORQUE TABLE
REFERENCE 13
TORQUE TABLE
REFERENCE 12

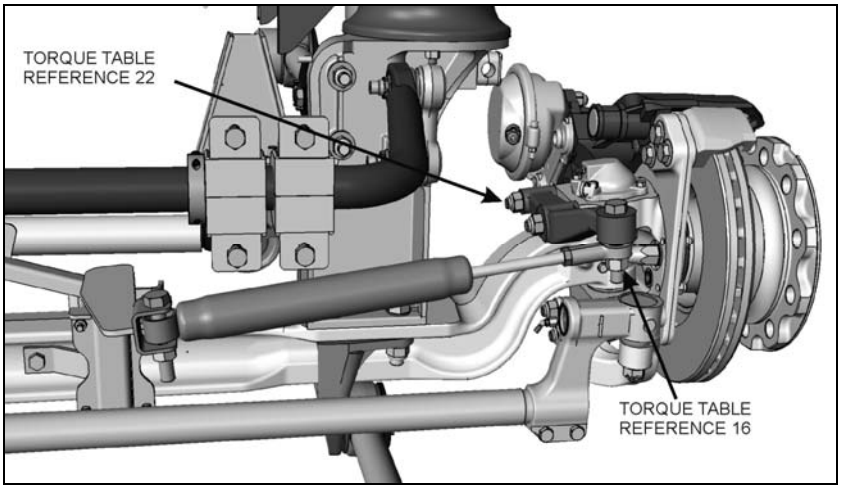
TORQUE TABLE
REFERENCE 22
TORQUE TABLE
REFERENCE 16

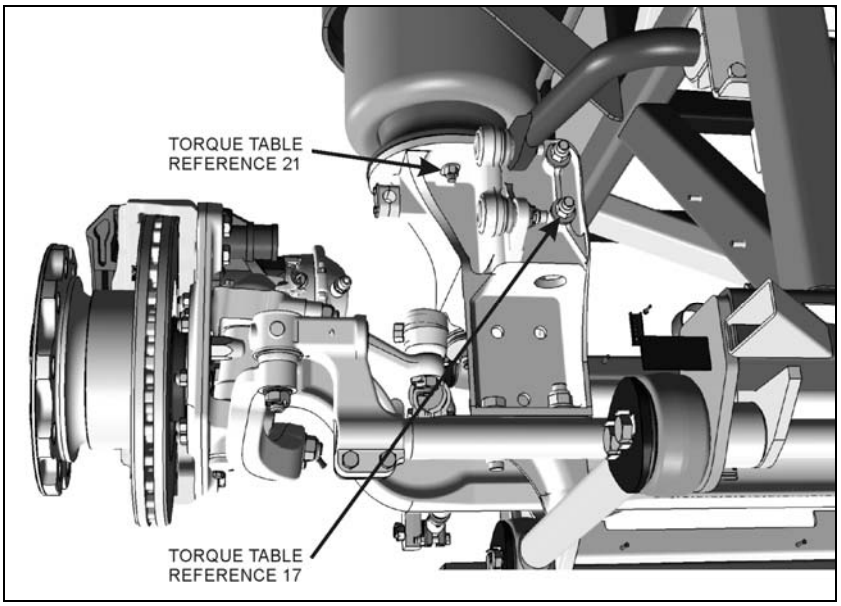
TORQUE TABLE
REFERENCE 21
TORQUE TABLE
REFERENCE 17

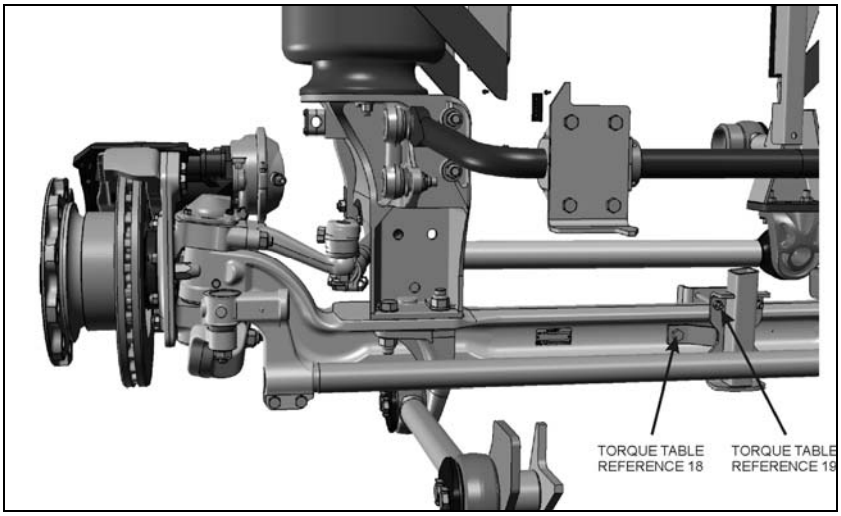
TORQUE TABLE
REFERENCE 18
TORQUE TABLE
REFERENCE 19

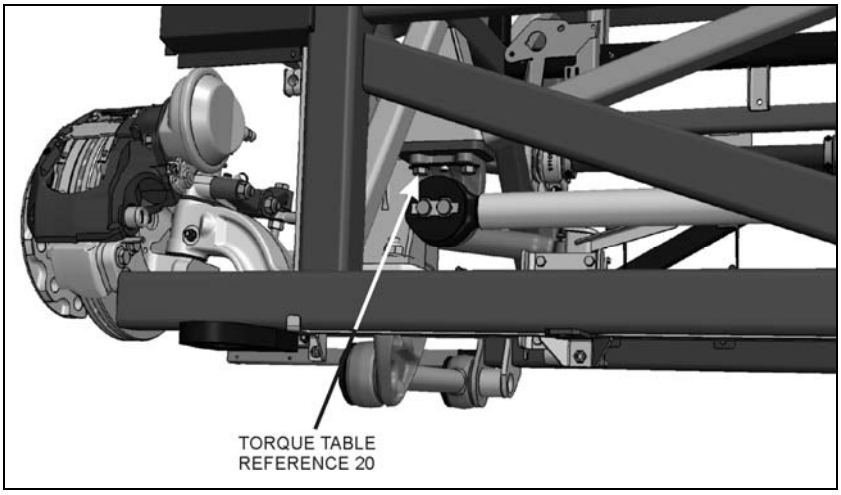
TORQUE TABLE
REFERENCE 20

The following table lists the tightening torques for fasteners requiring a specific torque value. When no torque specification is indicated, use the Standard Torque Specifications table found in Section 00: General Information of the Maintenance Manual.

SPECIFIC TORQUE TABLE 1 – FRONT AXLE SUSPENSION & STEERING				
DESCRIPTION	***QTY***	***REFERENCE***	***TORQUE DRY*** *(lbf-ft / Nm)*	
SWAY BAR LINK UPPER AND LOWER NUTS	*4*	*1*	*165-200*	*224-271*
SWAY BAR BUSHING COLLAR (FRONT SUSPENSION)	*8*	*2*	*80-100*	*108-136*
TIE ROD END CLAMP PINCH BOLT	*4*	*3*	*65-75*	*88-102*
TIE ROD END BALL PIN NUT	*2*	*4*	*150-200*	*203-271*
STEERING ARM STUD NUT	*2*	*5*	*520-575*	*705-780*
TIE ROD ARM STUD NUT	*4*	*6*	*520-575*	*705-780*
I-BEAM AXLE MOUNT	*8*	*7*	*230-280*	*311-378*
SHOCK ABSORBER UPPER MOUNTING PIN STUD NUT	*2*	*8*	*99-121*	*134-164*
SHOCK ABSORBER PIN	*2*	*9*	*350-400*	*475-545*
SHOCK ABSORBER LOWER MOUNTING PIN NUT	*2*	*10*	*60-75*	*81-102*
RADIUS ROD RETAINING BOLT	*20*	*11*	*140-155*	*190-210*
DRAG LINK BALL PIN NUT	*1*	*12*	*150-200*	*203-271*
DRAG LINK CLAMP BOLT NUT	*2*	*13*	*65-75*	*88-102*
DRAG LINK SOCKET END CLAMP PINCH BOLT	*2*	*14*	*50-60*	*68-81*
DRAG LINK TO PITMAN ARM STUD NUT	*1*	*15*	*150-200*	*203-271*
STEERING DAMPER	*2*	*16*	*100-120*	*135-160*
RADIUS ROD SUPPORT	*4*	*17*	*228-252*	*309-342*
STEERING DAMPER BRACKET	*1*	*18*	*39-45*	*53-61*
STEERING DAMPER BRACKET	*4*	*19*	*30-36*	*41-49*
RADIUS ROD SUPPORT	*2*	*20*	*200-220*	*271-298*
AIR SPRING NUT	*6*	*21*	*31-38*	*42-52*
STEERING DAMPER ARM NUTS	*2*	*22*	*285-315*	*386-427*

3. VEHICLES EQUIPPED WITH AN INDEPENDENT FRONT SUSPENSION (IFS)

This section contains information and specifications unique to the independent front suspension (IFS), including suspension and steering.

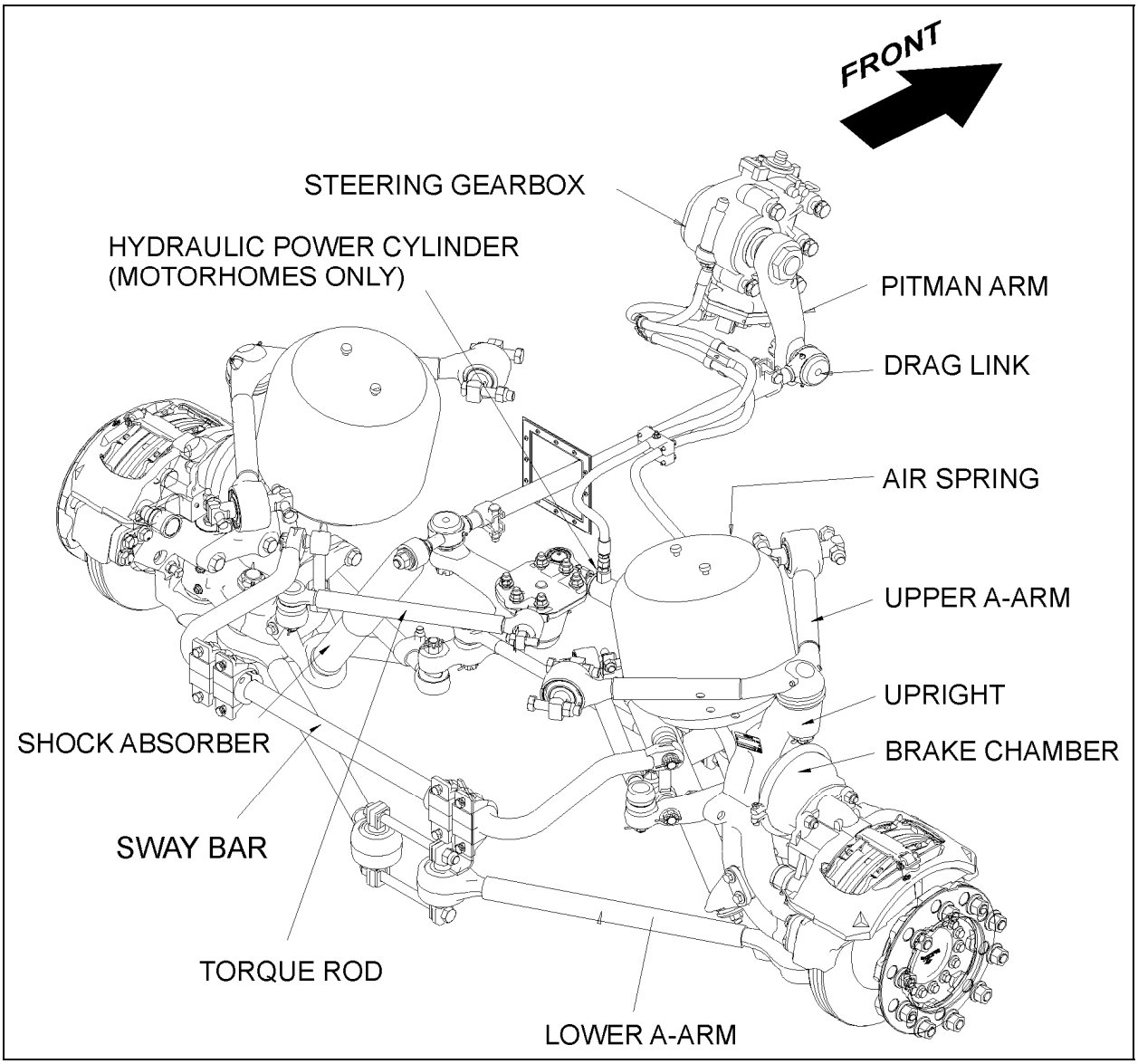

FIGURE 10: INDEPENDENT FRONT SUSPENSION 16124

3.1 STEERING LINKAGE

Turning motion of the steering wheel is transferred by the steering gear and steering linkage to the steering arms at the right and left front wheels. The steering linkage consists of tie rods connected to the bell crank and the steering arm at the left side of the vehicle, and to the idler arm and steering arm at the right side of the vehicle. The bell crank and idler arm are connected by a relay rod. A drag link connected to the bell crank and the pitman arm, which is mounted to the steering gear, transfers the turning motion of the steering wheel to the steering arms. X3-45 VIP & XLII Bus Shells are also equipped with a hydraulic power cylinder, which provides an added source of assistance and being connected to the R.H. wheel, makes it such that the total steering forces are produced

with minimal stress on mechanical linkages (Fig. 10).

Lower and upper A-arms are widely spaced. They are mounted on ball joints. Torque rods prevent rotation of the uprights around the lower and upper ball joints.

If the steering linkage is bent, twisted or worn, steering action of the vehicle will be seriously affected. Any time steering linkage components are replaced or adjusted, steering geometry and front wheel alignment must be checked as explained in this section.

Turning Angle

The maximum turning angle is set mechanically through the two steering stop screws installed on the swivel assembly. The turning angle mechanical stop is factory adjusted to accommodate the chassis design, and therefore, does not require adjustment on new vehicles.

However, turning angle should be checked and adjusted hydraulically, if necessary, any time a component of the steering system is repaired, disassembled or adjusted.

Turning angles are as follows:

Exterior: 49.5° ± 0.5°

Interior: 58° ± 0.5°

Before checking the turning angle, be sure the front end is properly aligned as described under paragraph "Front End Alignment" in this section.

To check steering maximum turning angle, proceed with the following method:

1. Check if front tires rub against the frame or if the steering gear has been serviced.

CAUTION

Clamp bolts are either in a vertical or horizontal position. Reinstall clamp bolts exactly as they were before removal as they might interfere with other components.

2. While performing a full left and right turn, check for proper position of the tie rod end clamp bolt and nut and drag link end clamps in order to avoid clamps interfering with close parts. Refer to figure 11 for location and positioning of clamp bolts and nuts. Reposition if required.

NOTE

Prior to steering limiter adjustment, verify vehicle wheel alignment, and ensure that oil level is adequate and that air bleeding is done.

3. If necessary readjust hydraulic steering limiter. Refer to these manuals annexed to the Maintenance Manual, Section 14: STEERING:

   - ZF-SERVOCOM Types 8090-8099 Single and Dual-Circuit Versions Repair Manual.
   - ZF-SERVOCOM Types 8090, 8095, 8097 and 8098 Design, Operation' Maintenance, Inspection.

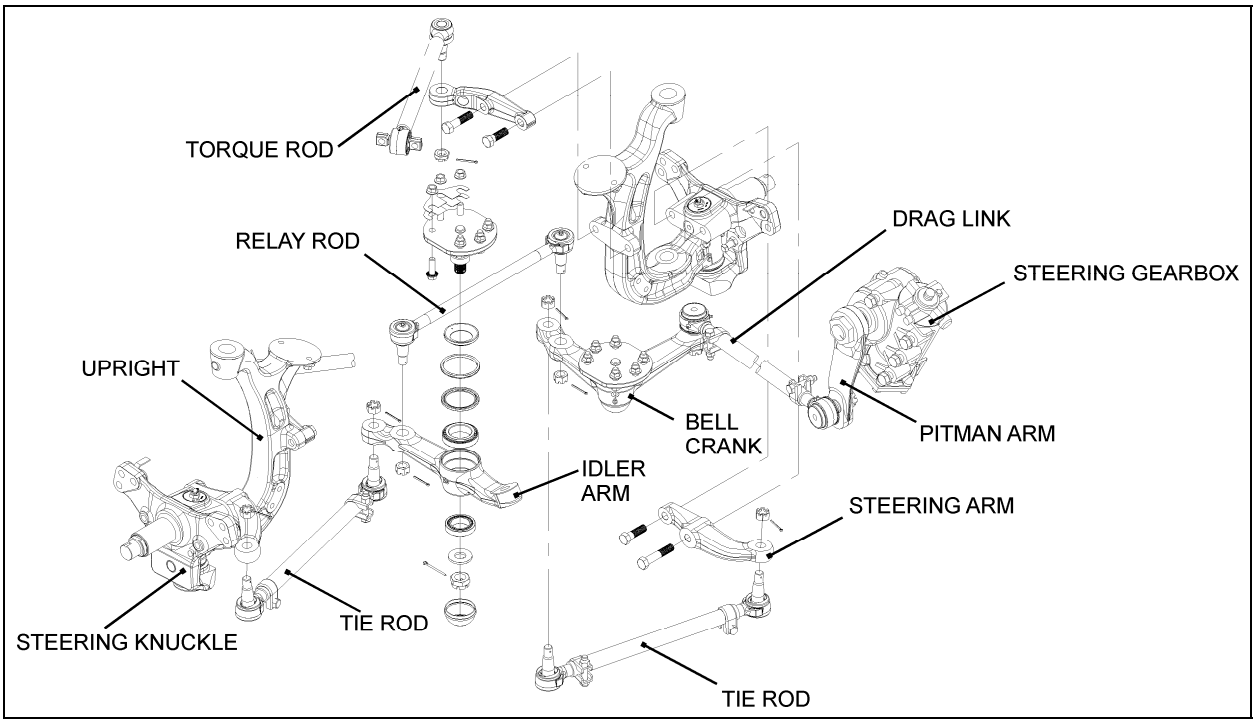

FIGURE 11: IFS STEERING LINKAGE OVERVIEW

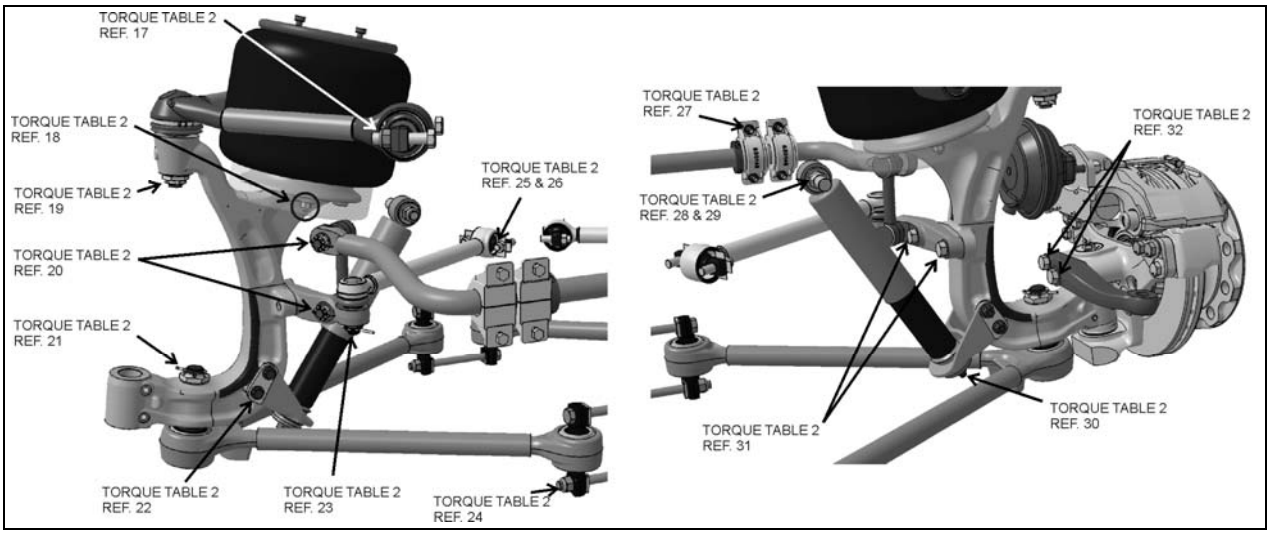

FIGURE 12: IFS - SUSPENSION COMPONENTS

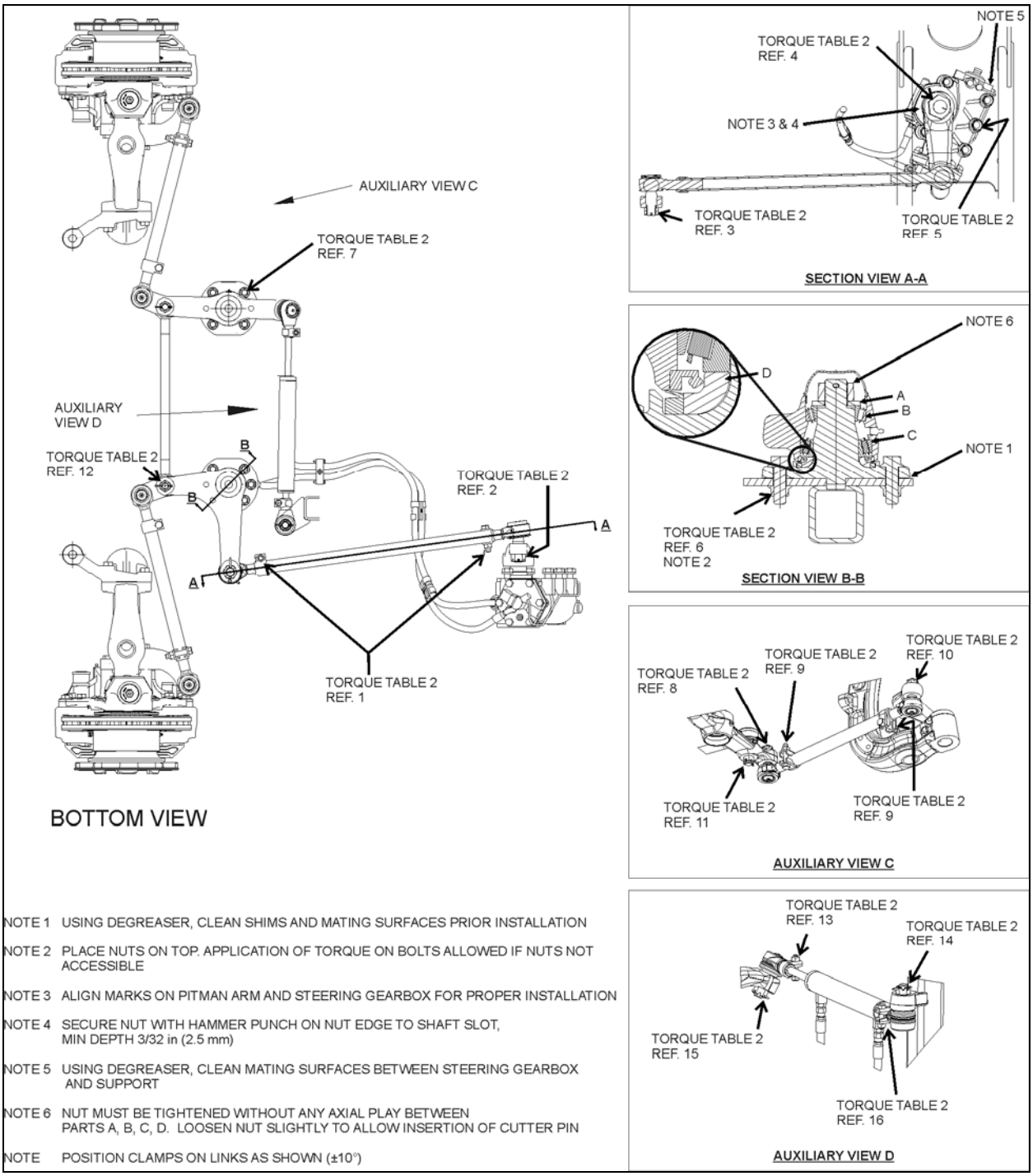

NOTE 1 USING DEGREASER, CLEAN SHIMS AND MATING SURFACES PRIOR INSTALLATION

NOTE 2 PLACE NUTS ON TOP. APPLICATION OF TORQUE ON BOLTS ALLOWED IF NUTS NOT ACCESSIBLE

NOTE 3 ALIGN MARKS ON PITMAN ARM AND STEERING GEARBOX FOR PROPER INSTALLATION

NOTE 4 SECURE NUT WITH HAMMER PUNCH ON NUT EDGE TO SHAFT SLOT, MIN DEPTH 3/32 in (2.5 mm)

NOTE 5 USING DEGREASER, CLEAN MATING SURFACES BETWEEN STEERING GEARBOX AND SUPPORT

NOTE 6 NUT MUST BE TIGHTENED WITHOUT ANY AXIAL PLAY BETWEEN PARTS A, B, C, D. LOOSEN NUT SLIGHTLY TO ALLOW INSERTION OF CUTTER PIN

NOTE POSITION CLAMPS ON LINKS AS SHOWN (±10°)

FIGURE 13: IFS STEERING LINKAGE

The following table lists the tightening torques which do require a specific torque value. When no torque specifications are indicated, use the Standard Torque Specifications table found in Section 00: General Information of the Maintenance Manual.

SPECIFIC TORQUE TABLE 2 – INDEPENDENT FRONT SUSPENSION				
DESCRIPTION	QTY	REFERENCE	TORQUE DRY threads must be free of oil or other lubricant	
			lbf-ft	Nm
Drag link socket end clamp pinch bolt	2	1	50-60	68-81
Drag link ball stud nut to pitman arm	1	2	245-270	332-366
Drag link ball stud nut to bell crank	1	3	245-270	332-366
Pitman arm to steering gear fixing nut	1	4	470-570	637-772
Steering gearbox to mounting bracket bolt	5	5	365-405	495-549
Bell crank spindle mounting nut	6	6	208-254	282-344
Idler arm spindle mounting nut	6	7	208-254	282-344
Tie rod end ball stud nut to idler arm or bell crank	2	8	150-200	203-271
Tie rod end clamp pinch bolt	4	9	50-60	68-81
Tie rod end ball stud nut to steering arm stud *	2	10	150-200	203-271
Relay rod stud nut to idler arm *	1	11	150-200	203-271
Relay rod stud nut to bell crank *	1	12	150-200	203-271
Hydraulic power cylinder end clamp pinch bolt	1	13	50-60	68-81
Hydraulic power cylinder to bracket stud nut*	1	14	150-200	203-271
Hydraulic power cylinder to idler arm stud nut*	1	15	150-200	203-271
Hydraulic power cylinder end clamp pinch bolt	1	16	50-60	68-81
Upper a-arm ball joint	4	17	230-255	312- 346
Air spring lower stud nut (6 air springs)	2	18	31-38	42- 51
Upper a-arm central ball joint (castellated hex nut)*	1	19	210-250	284-339
Sway bar link, upper and lower ball stud nuts (front suspension)*	2	20	165-200	224-271
Lower a-arm central ball joint (castellated nut)*	1	21	490-540	664- 732
Shock absorber support	4	22	145-165	196-224
Torque Rod ball stud nut*	1	23	150-200	203-271
Lower a-arm ball joint	4	24	270-300	366-407
Torque rod, nut	2	25	140-155	190-210
Torque rod, stud	2	26	90-110	122-150
Sway bar bushing collar (front suspension)	8	27	80-100	108-136
Shock absorber mounting stud nut	1	28	99-121	134-164
Shock absorber mounting stud	1	29	350-400	475-545
Shock absorber lower mounting pin nut	1	30	60-75	81-102
Torque rod lever bolt (M20-2.5)	2	31	520-575	705-780
Steering arm bolt (M22-2.5)	2	32	642-708	870-960

* Tighten nut to specified torque, then advance to next aligning cotter pin slot and install a new cotter pin.

3.2 STEERING LINKAGE INSTALLATION SEQUENCE

> *NOTE*
>
> *Whenever a steering linkage component has been removed and replaced, check steering geometry and front end alignment as directed in this Section. Check to insure that all stud nuts and mounting bolts and nuts have been tightened to prescribed torque.*

1. Position front wheels in straight ahead position.
2. Align the steering gearbox input shaft marks.
3. Afterwards, the pitman arm should be adjusted with output shaft and pitman arm reference marks aligned (for proper tightening torque, refer to Torque Table 2).

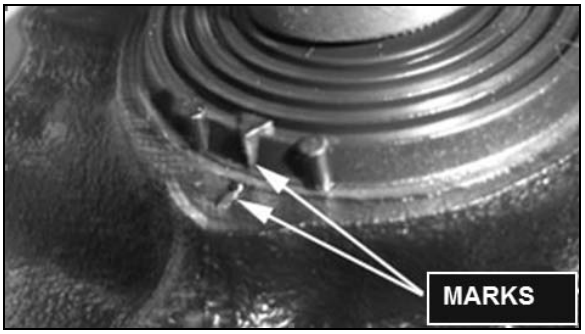

FIGURE 14: STEERING GEARBOX INPUT SHAFT MARKS

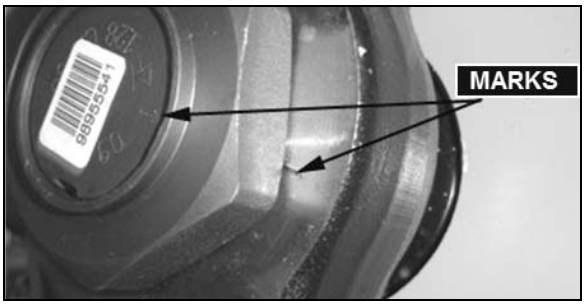

FIGURE 15: STEERING GEARBOX OUTPUT SHAFT AND PITMAN ARM MARKS ALIGNED

4. Locate centerline of vehicle then install relay rod in boss at steering bell crank and idler arm. Align center of relay rod with centerline of vehicle.
5. Install drag link to pitman arm and adjust opposite end of drag link to fit mounting stud hole in bell crank.
6. Install tie rods, and then adjust toe-in as per "Front End Alignment" in this Section.

3.3 PITMAN ARM REMOVAL

3.3.1 Removal

1. Remove cotter pin, nut and washer from drag link ball stud at pitman arm.
2. Disconnect drag link from pitman arm, using jaw style pullers (pressure screw type).

> **WARNING**
>
> Always wear approved eye protection when operating pullers.

> **CAUTION**
>
> Do not drive pitman arm on or off pitman shaft as this can damage the steering gear.

> **CAUTION**
>
> Heating of components to aid in disassembly is not allowed because it has a detrimental effect on axle components and steering linkages.

3. Remove pitman arm fixing nut.
4. Check the radial position of the pitman arm in relation to the sector shaft prior to removal of pitman arm.
5. Add reference marks to the arm and shaft if necessary to ensure correct alignment at reassembly.
6. Use a puller to remove pitman arm.

3.3.2 Installation

1. Position pitman arm on sector gear shaft with reference marks aligned.
2. Install fixing nut. Tighten nut (dry) as per Torque Table 2.

> *NOTE*
>
> *Use a new nut if the previously removed nut was punched.*

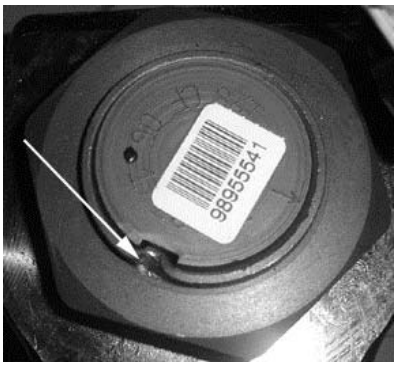

FIGURE 16: FIXING NUT PUNCH MARK 16098

CAUTION

Lock nut with sector shaft using a punch mark into the groove (Refer to figure 16).

3. Connect drag link to pitman arm. Install washers. Tighten nut (dry) as per Torque Table 2. Advance nut to next alignment cotter pin slot and install a new cotter pin.

3.4 DRAG LINK

Drag link assembly consists of three parts; a drag link and two end assemblies. Both end assemblies are identical and they are retained on the drag link with a clamp bolt and nut.

Stud nuts at the pitman arm and bell crank ends of the drag link must be kept tight or hole at ball stud end of drag link and hole in pitman arm may become enlarged as a result of excessive looseness. Subsequent tightening of stud nuts may draw studs too far into holes and dust cover parts may become damaged which can result in component failure.

Drag link end sockets are equipped with lubrication fittings and should be lubricated as directed in "Lubrication Fittings" in this section.

NOTE

The drag link nominal length is 41 17/32 inch (1055 mm) measured from the center of one ball socket to the other. Nominal length is given only for preliminary adjustment.

3.4.1 Adjustment

It should not be necessary to alter the length of the drag link except when a new link is installed or when removable end assembly has been replaced. If drag link adjustment is necessary, proceed as follows:

1. Position front wheels in straight ahead position.
2. Center steering gear as previously explained in paragraph "Steering Linkage Installation Sequence".
3. Remove cotter pin and stud from drag link at bell crank. Locate centerline of vehicle and center of relay rod. With center of relay rod aligned with centerline of vehicle, loosen clamp bolt at socket end (bell crank end) of drag link and adjust length of socket end assembly to fit in boss of bell crank.

NOTE

Do not change position of pitman arm.

4. Install stud nut and torque to proper torque. Align nut with cotter pin slot (tighten) and install a new cotter pin.
5. Torque mounting clamp bolt nut to nut to prescribed torque, then test the adjustment. Front wheels should turn from right to left extremities without noticeable binding at drag link ends.

3.5 BELL CRANK AND IDLER ARM

Bell crank and idler arm are equipped with one lubrication fitting and should be lubricated as directed in "Lubrication Fittings" in this Section.

3.5.1 Bell Crank and Idler Arm Removal

NOTE

Use a piece of wire to anchor loosen end of relay rod and tie rod in order to prevent placing an excessive load on opposite socket end.

Bell crank: Disconnect drag link, tie rod and relay rod from bell crank by removing cotter pins, stud nuts and washers from ball studs. Separate socket assemblies from the bell crank.

Idler arm: Remove cotter pins, nuts and washers from ball studs connecting relay rod and tie rod to idler arm. Separate socket assemblies from idler arm.

Remove nuts and washers from bolt attaching bell crank or idler arm mounting bracket to vehicle understructure. Remove bell crank or idler arm mounting spindle.

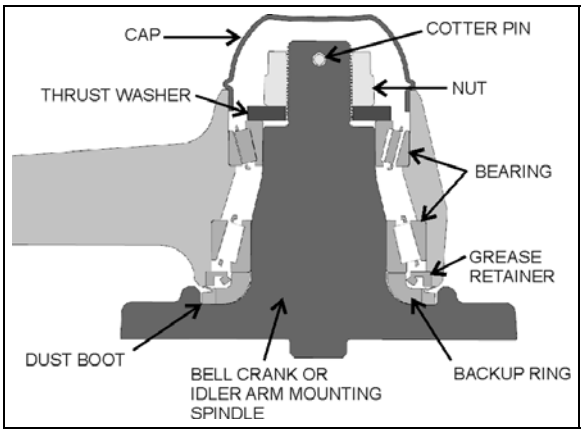

FIGURE 17: BELL CRANK OR IDLER ARM HUB

3.5.2 Bell crank or Idler Arm Ball Joint Disassembly

1. Remove adjacent link assemblies from bell crank or idler arm as previously described.
2. Remove the cap (Fig.17).
3. Remove the cotter pin, nut and tongue washer. Remove bearings, grease seal, bearing bushing and the bell crank or idler arm from its mounting spindle (Fig. 17).

3.5.3 Bell Crank or Idler Arm Ball Joint Reassembly

NOTE
For bearing installation use tool Prevost # 110684.

NOTE
Install grease seal according to figure 23. Grease must be able to exit the bell crank or idler arm mechanism. For grease seal installation use tool Prevost # 110683.

1. Clean parts thoroughly with degreaser.
2. Insert the small bearing outer race into appropriate bore (done on a press).

3. Insert the large bearing outer race into appropriate bore (done on a press).
4. Insert the large bearing into outer race and then, add grease retainer.

5. Apply good quality lithium grease (#680752) on backup ring and dust boot.

6. Install backup ring and dust boot on bell crank or idler arm spindle.
7. Apply a thin layer of grease on spindle shaft.
8. Install bell crank or idler arm onto its mounting spindle, while holding the bell crank or idler arm, slide on the small bearing assembly, thrust washer and secure using nut.

9. Tighten nut to 130 lbf-ft.
10. Rotate assembly 3 turns in each direction.

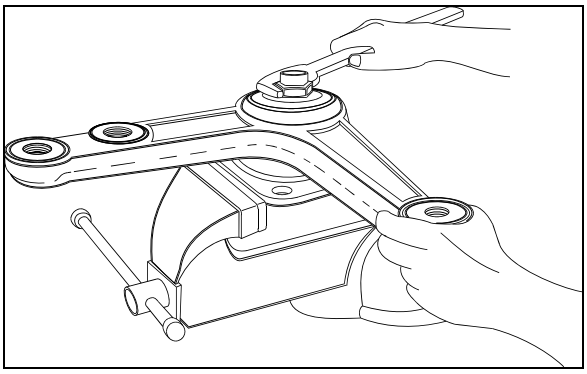

FIGURE 18: BELL CRANK 16044

11. Unscrew nut until bell crank or idler arm starts to turn with the application of 1 to 3 lbf load as shown on figure 19.
12. Check for loose bearings by applying an up and down load on bell crank or idler lever. The lever is not supposed to move in the vertical axis direction.

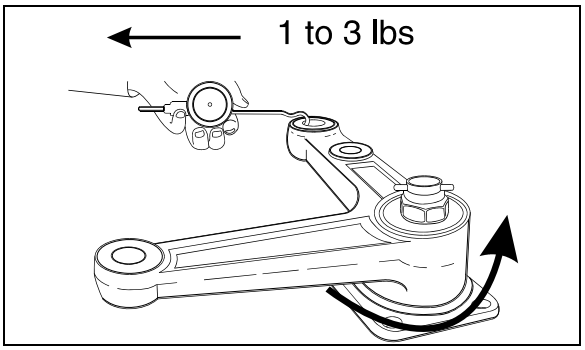

FIGURE 19: BELL CRANK 16045

13. Align nut with cotter pin slot (tighten) and install a new cotter pin.

NOTE
Bend cotter pin around the nut. Do not bend the cotter pin in the direction of the cap as it may interfere with the cap.

14. Install the cap.
15. **Bell crank:** Install drag link, tie rod and relay rod as directed herein under each specific subject.
16. **Idler arm:** Install hydraulic power cylinder, tie rod and relay rod as directed herein under each specific subject.
17. Adjust turning angle as previously directed under paragraph "**Turning Angle**" and check front end alignment as specified under heading “Front End Alignment".

3.6 RELAY ROD

Relay rod ends are equipped with lubrication fittings and should be lubricated as directed in paragraph "Lubrication Fittings" in this section.

NOTE
The relay rod is crimped in place and it is not possible to remove the ball joints.

3.6.1 Replacement

1. Remove cotter pins from bell crank and idler arm end of relay rod. Loosen nuts flush with end of studs.
2. Use a puller or place a sledge hammer behind the adjacent part to absorb shocks. Strike the studs with a brass hammer to loosen end assemblies.
3. Remove stud nuts and washers then remove studs.
4. Position relay rod studs into bell crank and idler arm then tap stud ends with a brass hammer to seat tapered surfaces.
5. Install washers and stud nuts. Tighten nuts to prescribed torque (refer to Torque Table 2). Align cotter pin slot (tighten) and install a new cotter pin.

3.7 TIE RODS

Tie rod ends are connected to the bell crank and left steering arm, and to the idler arm and right steering arm. Each tie rod assembly consists of three parts; a tube and two socket end assemblies. The tie rod ends are threaded into the tube and secured with clamp bolts. Right and left hand threads are provided to ease toe-in adjustment. Tie rod assemblies are inter-changeable from the right to the left side of the vehicle.

Tie rod end sockets require no maintenance other than periodic lubrication and inspection to see that ball studs are tight. Replace socket ends when there is excessive up and down motion, lost motion or end play at ball end of stud.

1. Periodically check bolt nut for tightness.
2. Inspect tie rod for bent condition and inspect tube for damaged threads. If tie rod is bent or threads are damaged, replace the assembly.
3. Lubricate tie rod end fittings as directed in paragraph "Lubrication Fittings" of this section.

3.7.1 Removal

1. Remove cotter pins and stud nuts which attach tie rod socket ends to bell crank and left steering arm (or idler arm) and right steering arm.
2. Remove tie rod ball stud by tapping on steering arm and bell crank or idler arm with hammer, while using a sledge hammer to absorb shocks.

NOTE
If tie rod end assemblies are damaged in any way, they must be replaced

3.7.2 Installation

1. Install socket end assemblies on tie rod. Be sure both ends are threaded an equal distance into the tube.
2. Make sure threads on stud and in stud nut are clean and not damaged.
3. Position ball studs (socket ends of tie rod) in holes in steering arm and bell crank or idler arm. Install a ball stud nut on each stud and tighten firmly.
4. Torque stud nuts to prescribed torque (refer to Torque Table 2). Align cotter pin slot (tighten) and install a new cotter pin.

NOTE
Adjust toe-in as directed in paragraph "Toe-In Adjustment" of this section.

5. Make sure tie rod ends are properly aligned with ball studs, and then torque tie rod end clamp bolts to prescribed torque (refer to Torque Table 2).

NOTE
If tie rod is not properly aligned with stud, binding will result.

3.8 STEERING ARMS

The left and right wheel steering arms are secured to a steering knuckle at one end and to a tie rod at the other end.

3.8.1 Removal

1. Remove wheel as directed in Section 13, "Wheel, Hubs and Tires" of the maintenance manual.
2. Remove cotter pin, washer and nut from stud securing tie rod to steering arm. Remove ball stud from steering arm by tapping on arm with a hammer, placing a sledge hammer underneath steering arm to absorb shocks.
3. Remove cotter pin and nut securing steering arm to steering knuckle assembly. Remove steering arm from steering knuckle.

3.8.2 Installation

1. Install steering arm onto steering knuckle.
2. Torque steering arm to steering knuckle fixing bolts. Torque bolt to prescribed torque (refer to Torque Table 2).
3. Position tie rod ball stud in steering arm and tap with a brass hammer to seat ball stud in steering arm. Install washer and nut on stud. Torque nut to prescribed torque (refer to Torque Table 2. Tighten nut to nearest cotter pin slot and install a new cotter pin.
4. Install wheel as directed in Section 13, "Wheel, Hubs and Tires" under paragraph "Installation" of the maintenance manual.

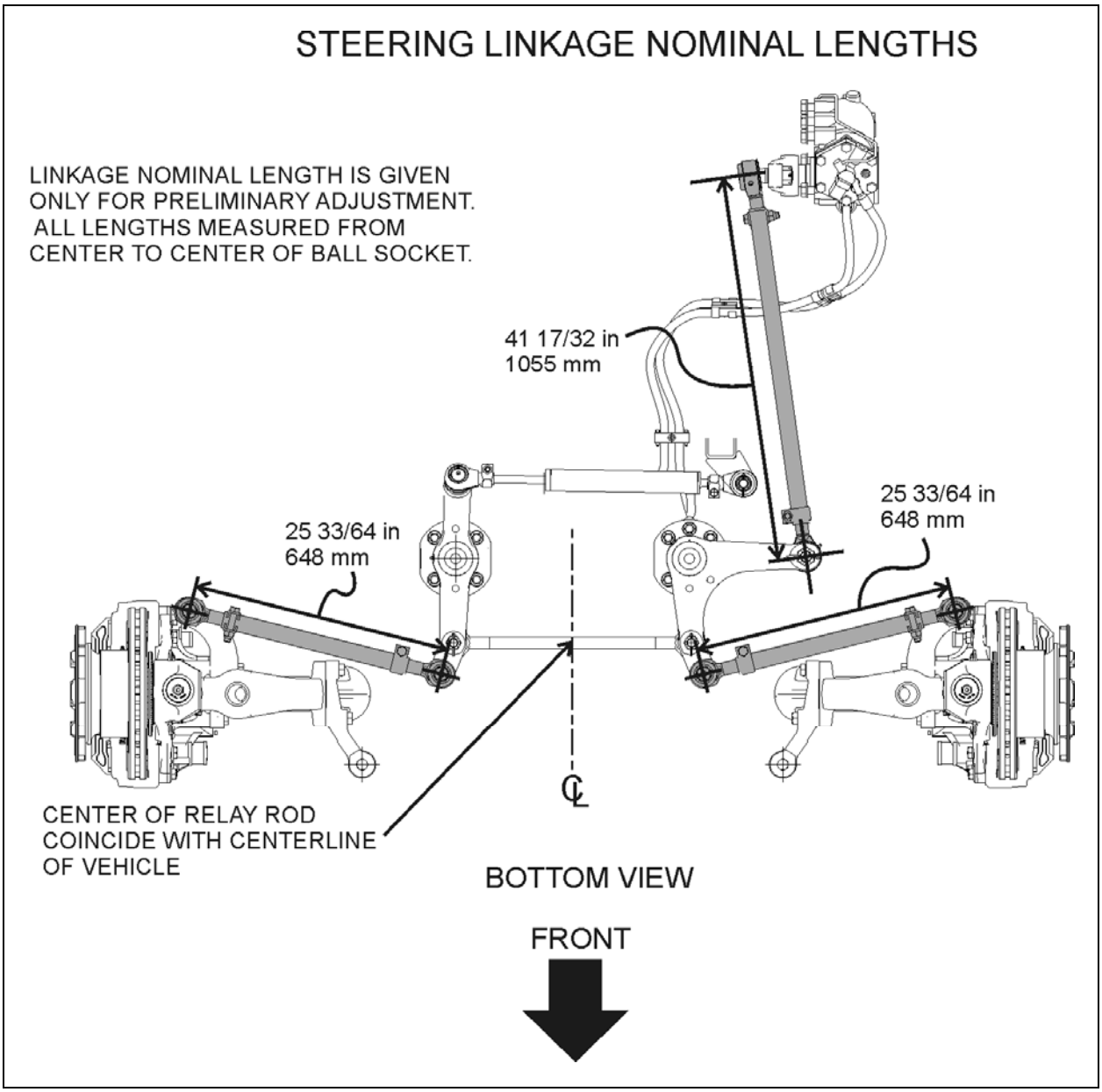

FIGURE 20: STEERING LINKAGE NOMINAL LENGTHS

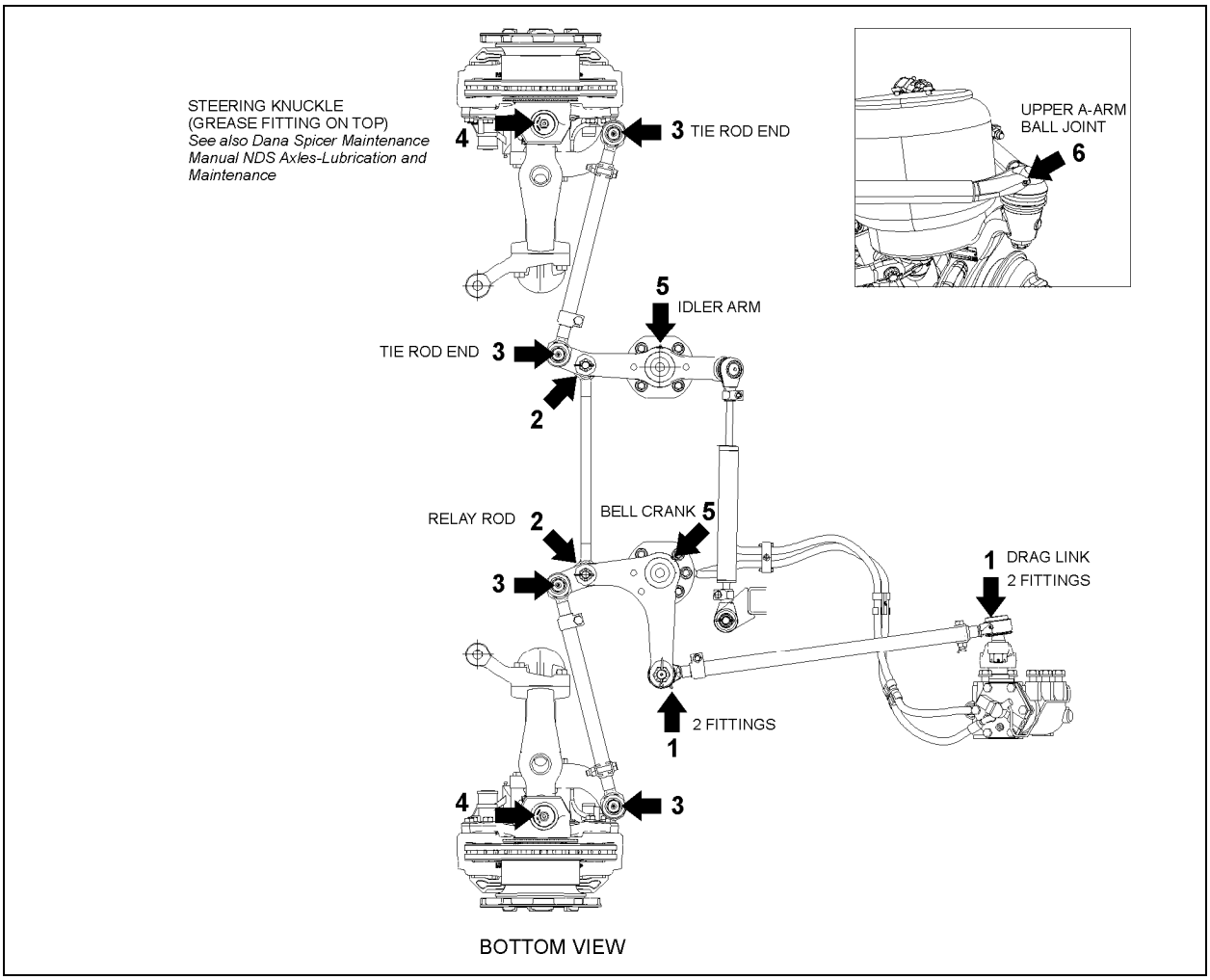

FIGURE 21: LUBRICATION FITTINGS LOCATION

3.9 LUBRICATION FITTINGS

All lubrication fittings must be clean before applying lubricant. Also, always be sure equipment used in applying lubricant is clean. Every precaution should be taken to prevent entry of dirt, grit, lint or other foreign matter into lubricant containers. Replace fitting when become broken or damaged.

Re-charge ball joint until grease can be seen escaping from socket. On ball joints fitted with a rubber boot, do not add to much grease as the rubber boot might expand and rupture.

Intervals of application given in the following paragraphs are recommended for normal service. More frequent intervals may be applied under severe operating conditions. In selecting proper lubricants, supplier reputation must be considered. The supplier must be responsible for product quality. Figure 21 shows approximate location of steering lubrication fittings.

16046

MAINTENANCE

1. **Drag Link Ends:** Lubricate at four fittings, two at each end of link, every 6,250 miles (10 000 km) with good quality lithium-base grease NLGI No. 2 (Shell Retinax LX or equivalent).
2. **Relay Rod Ends:** Lubricate at two fittings, one at each end of rod, every 6,250 miles (10 000 km) with good quality lithium-base grease NLGI No. 2 (Shell Retinax LX or equivalent).
3. **Tie Rod Ends:** Lubricate at four fittings, one at each end of both tie rods, every 6,250 miles (10 000 km) with good quality

lithium-base grease NLGI No. 2 (Shell Retinax LX or equivalent).

4. **Steering Knuckle (swivel assembly):** Refer to DANA SPICER MAINTENANCE MANUAL NDS AXLES Lubrication and Maintenance" annexed at the end of section 10.

5. **Idler Arm and Bell Crank:** Lubricate at two fittings, one on the idler arm and the other on the crank bell, every 6,250 miles (10 000 km) with good quality lithium-base grease NLGI No. 2 (Shell Retinax LX or equivalent). Apply grease gun pressure to the fitting until lubricant appears at the top seal.

6. **Upper A-Arm Ball Joint:** Lubricate at fitting until you see some grease on the relief valve nearby, every 6,250 miles (10 000 km) with good quality lithium-base grease NLGI No. 2 (Shell Retinax LX or equivalent).

3.10 BALL JOINTS – GENERAL RECOMMENDATIONS

Visual Inspection

- Visually inspect for missing or damages grease fittings and replace if required.
- Check ball joint connection for missing cotter pins.
- Check for looseness in the ball/socket assembly.

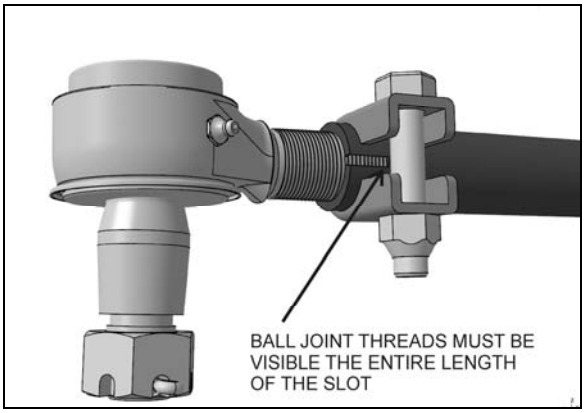

FIGURE 22: ADEQUATE CLAMPING CONDITION

For adequate clamping, the ball joint threads must be visible the entire length of the tube slot. If not, the drag link must be adjusted or replaced. It is either the wrong size, or improper adjustment was used to compensate for another problem (e.g. bent steering arm).

Damaged sealing boots, salt and climatic conditions can cause loss of the corrosion protection coating applied at time of manufacturing. To prevent corrosion from forming around the ball pin, remove the old grease bead and assure sufficient grease is applied to purge the old grease and fill the joint and dust seal (if applicable).

Good quality lithium-base mineral grease NLGI No. 2 like Shell Retinax LX is recommended.

3.11 FRONT-END ALIGNMENT

Proper front end alignment must be maintained to insure ease of steering and provide satisfactory tire life. When making front end alignment inspections, the vehicle must be level and empty with the full weight of the vehicle on the wheels.

Front end alignment inspections fall into two groups: regular service inspections performed at periodic intervals, and inspections to determine the extent of damage after a collision or severe service.

Regular service inspections concern toe-in, camber and caster.

Any variation from the specified alignment will indicate either a need for adjustment or a more thorough inspection to determine if parts replacement is required.

WARNING

During alignment, both camber and caster among other angles are adjusted. When adjusting these, we install or remove shims at the IFS lower A-arms. After performing alignment, make sure that the following is done:

- Installing a new lock nut after all shims are finalized.
- Torque replaced nuts as per Torque Table 2.
- Installing a longer bolt if less than 2 threads are remaining after the nut.
- Using a torque seal, leave a mark on the nut for future visual inspection.

3.11.1 Alignment Terminology

Wheel Camber: Camber is the number of degrees the top of the wheel is tilted inward or outward from a true vertical (fig. 27).

Wheel Toe-In: a slight forward convergence given to the wheels of motor vehicles to improve steering and equalize tire wear (D minus E, fig. 27).

Kingpin Inclination: The inclination of the kingpin from vertical toward the center of the vehicle at the top and outward at the bottom (B, fig. 27).

Front Axle Caster: The inclination of the kingpin from vertical in the fore and aft direction (C, fig. 27).

3.11.2 Front End Inspection

Before checking front end alignment, make the following inspection:

1. Check that the vehicle is at normal ride height (see paragraph "8. Suspension Height Adjustment").
2. Check the tires for proper inflation.
3. Check wheel installation and run-out.
4. Check wheel bearing adjustment.
5. Check tie rods and drag link ends for looseness.
6. Check kingpins for looseness.
7. Check if the length of the torque rod is 21 17/64" (540 mm) (Fig. 11). Check if the length of the relay rod is 23 19/64" (592 mm).

3.11.3 Front Wheel Camber

Positive camber is the outward inclination of the wheels at the top, negative or reverse camber is the inward inclination of the wheels at the top. Camber variations may be caused by wear at the wheel bearings, wheel spindle bushings, or bent suspension parts.

Check camber, with an accurate gauge. If camber is incorrect, check suspension parts for wear and replace worn parts. If wear is not perceptible, suspension parts may be bent or lower A-arm may be improperly shimmed.

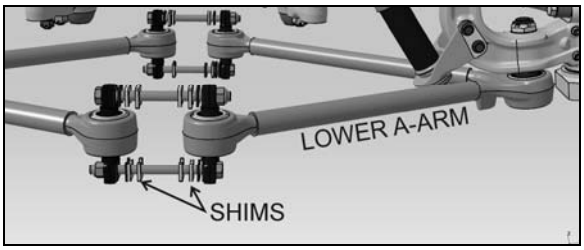

FIGURE 23: SHIMS AT THE LOWER AARMS

Check kingpin inclination. If kingpin inclination is incorrect, readjust the camber and check kingpin inclination again.

NOTE
Camber is more important than kingpin inclination, so adjust camber and verify kingpin inclination.

Shim the lower A-arm to adjust camber (figure 23 & 26). If the kingpin inclination is incorrect, the wheel kingpin assembly may be bent and therefore should be replaced.

Excessive positive camber results in irregular wear of the tires at the outer shoulders. Negative or reverse camber causes wear at the inner shoulders.

NOTE
Shim only the lower suspension arm to adjust the front wheel camber.

CAUTION

Once the perfect shim combination is achieved, always install new Stover nuts because the self-locking effect is lost after tightening and loosening of the nut. It is recommended to punch marks to detect loosening of the nuts during future visual inspections.

3.11.4 Front Wheel Toe-In

Toe-in is measured from the center of the tire treads. Measurements at the front and rear of the tires must be made at the same height from the floor. Incorrect toe-in results in excessive tire wear and steering instability with a tendency to wander.

Toe-In Check

1. Check the camber adjustment and adjust if necessary.

2. Hoist the front of the vehicle and spin the wheels marking the centerline of the tire treads.
3. Place the wheels in the straight ahead position and lower the vehicle to rest on the floor.
4. Roll the vehicle ahead several feet. This removes any slack caused by looseness in the wheel bearings or steering connections.
5. Check the distance between the tire centerlines at the front and rear of the front tires. These two measurements must be made at the same height above the floor. The front measurement must be 3/32 ±1/32 of an inch less than the rear measurement.

Toe-In Adjustment

1. Loosen the tie rod clamp bolts.
2. Using a pipe wrench, turn the tie rod tubes to obtain the toe-in measurement specified in step 5 under paragraph "Toe-in Check" (figure 26).
3. Tighten the tie rod clamp bolts and recheck toe-in.
4. Check that the angular relationship of the pitman arm to the steering gear is as shown in figure 24.

NOTE
Use only tie rods to adjust toe-in.

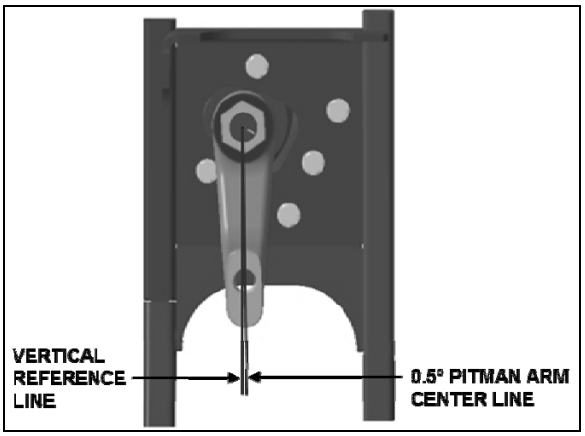

FIGURE 24: IFS PITMAN ARM ALIGNMENT 14056

3.11.5 Front Wheel Caster

Positive caster is the inclination of the top of the kingpins toward the rear of the vehicle. Negative or reverse caster is the inclination of the kingpins toward the front of the vehicle. This vehicle is designed with positive caster. The purpose of caster is to provide steering stability by keeping the wheels in a straight ahead position.

Caster variations may be caused by bent upper suspension A-arm, lower suspension A-arm, or kingpin housing. Caster should be adjusted with shims. Precision instruments should be used to measure caster. Shim bell crank and idler arm to adjust caster (figure 26).

Variations from the specified caster will affect steering stability, cause wandering, wheel shimmy, and reduce steer re-centering when pulling out of curves.

NOTE
On Independent Front Suspension, caster on right wheel must be equal or greater than caster on left wheel, without exceeding 0.3°.

3.11.6 Major Damage

If the suspension has sustained major damage, it may be necessary to shim the bell crank and the idler arm to avoid the bump steer or roll steer. Moreover refer to paragraph "Front End Alignment".

3.11.7 Alignment Specifications

See figure 26 & 27.

NOTE
On Independent Front Suspension, caster on right wheel must be equal or greater than caster on left wheel, with a maximum difference of 0.3°.

X3 VIP Shell & XLII Shell
INDEPENDENT FRONT SUSPENSION

Load	Minimum value		Nominal value		Maximum value	
	Non-converted	Converted	Non-converted	Converted	Non-converted	Converted
Right camber	0.20°	-0.20°	0.30°	0°	0.50°	0.20°
Left camber	0.20°	-0.20°	0.30°	0°	0.50°	0.20°
Right caster	2.55°		2.8°		3.05°	
Left caster	2.55°		2.8°		3.05°	
Total toe-in	0.02°	0.04°	0.04°	0.06°	0.06°	0.08°

X3-45 Coaches
WITH INDEPENDENT FRONT SUSPENSION

	Minimum value	Nominal value	Maximum value
Right camber	0.0°	0.150°	0.30°
Left camber	0.0°	0.150°	0.30°
Right caster	2.35°	2.6°	2.85°
Left caster	2.35°	2.6°	2.85°
Total toe-in	0.04°	0.06°	0.08°

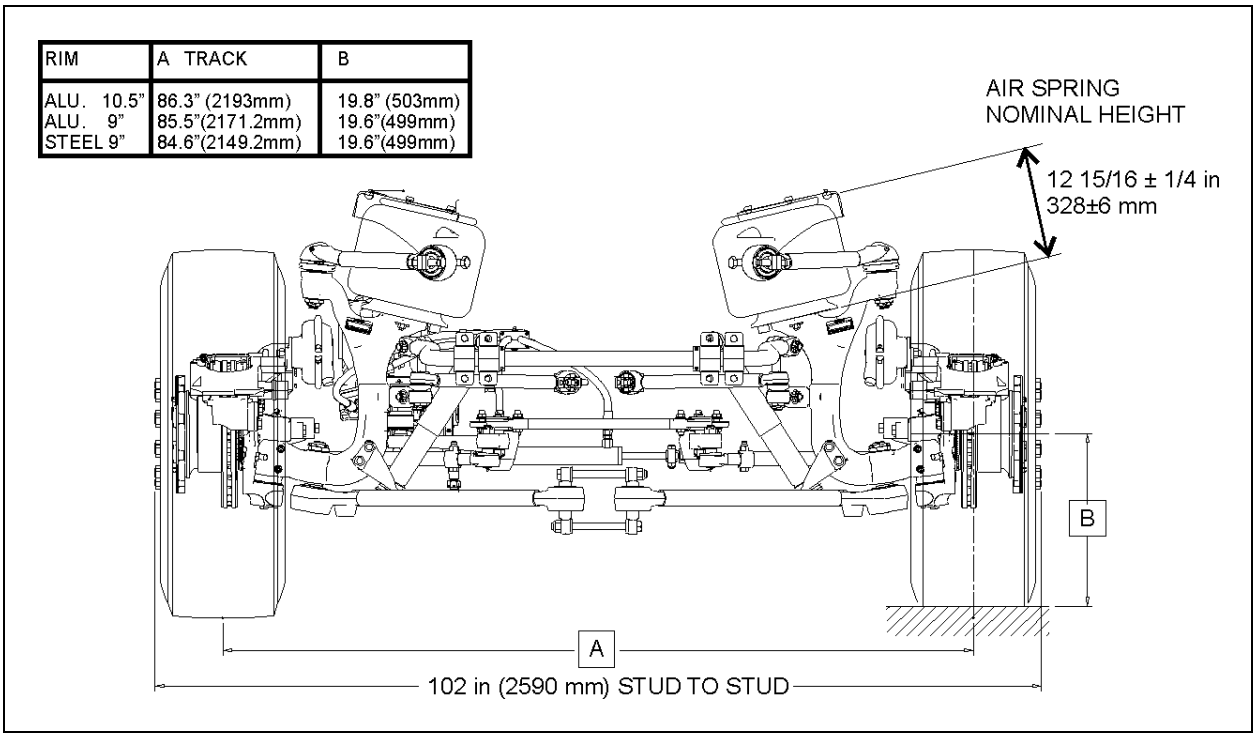

RIM	A TRACK	B
ALU. 10.5”	86.3” (2193mm)	19.8” (503mm)
ALU. 9”	85.5”(2171.2mm)	19.6”(499mm)
STEEL 9”	84.6”(2149.2mm)	19.6”(499mm)

FIGURE 25: IFS NOMINAL DIMENSIONS

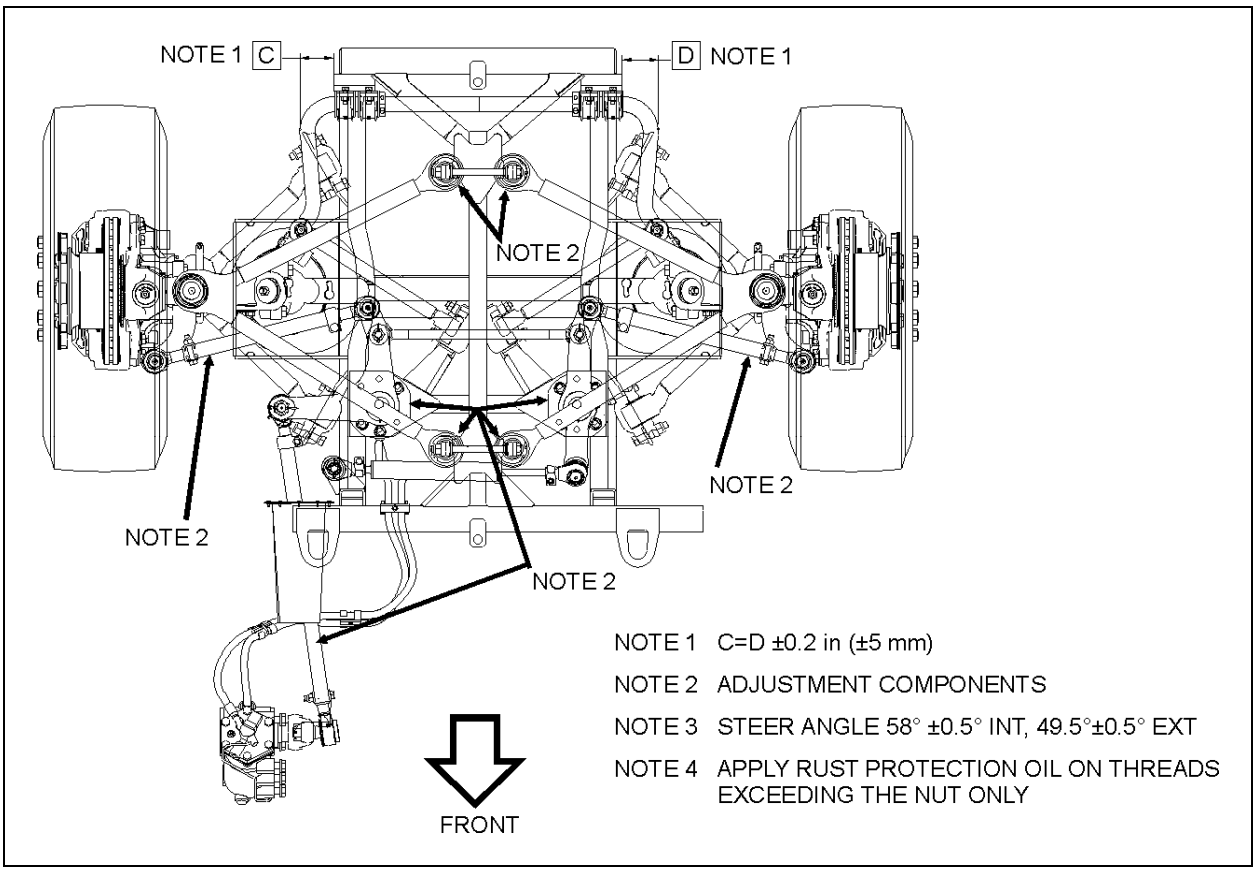

FIGURE 26: NOTE 2 INDICATES WHERE ADJUSTMENT MAY BE PERFORMED IF NEEDED WHEN PROCEEDING TO IFS ALIGNMENT

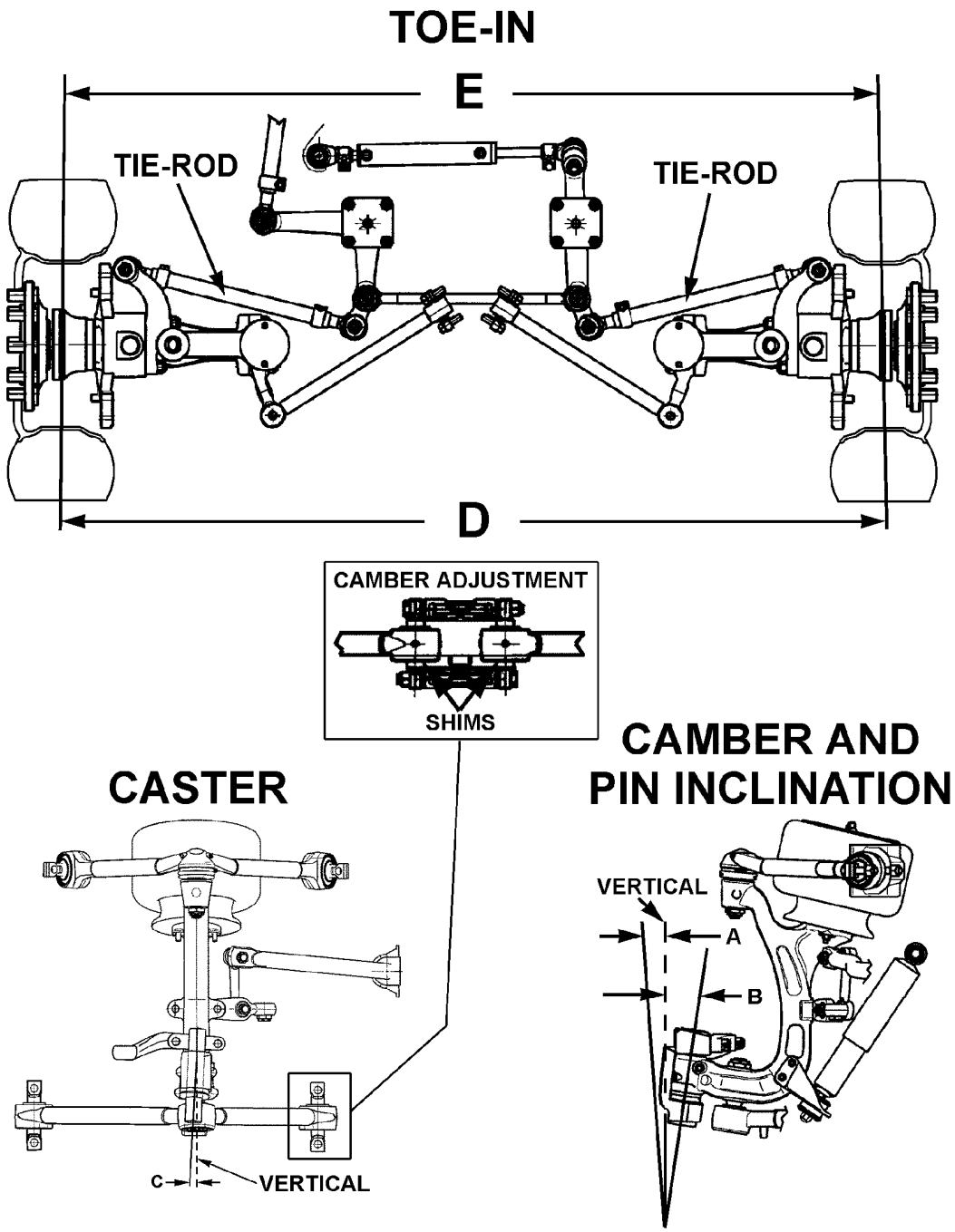

A	WHEEL CAMBER
B	KINGPIN INCLINATION
C	CASTER
D-E	TOE-IN

FIGURE 27: FRONT END ALIGNMENT DIAGRAM 16051

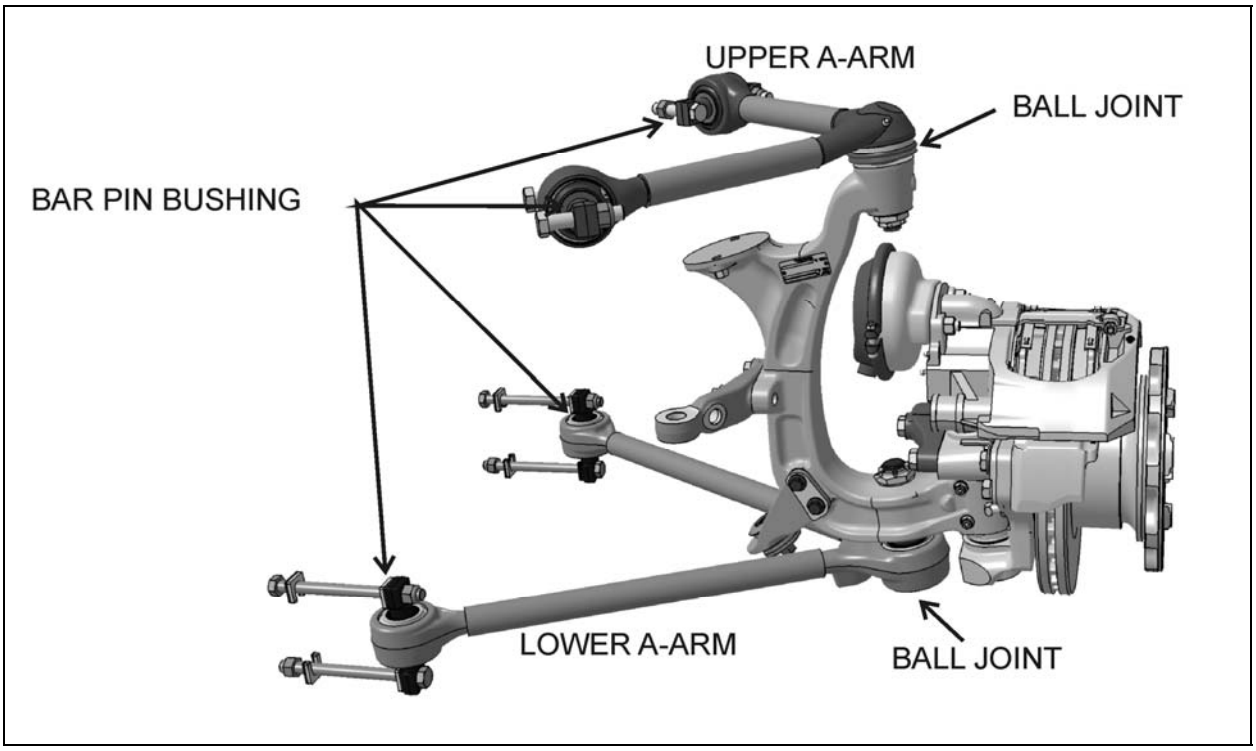

FIGURE 28: A-ARM JOINT IDENTIFICATION

3.12 LOWER AND UPPER A-ARM BAR PIN BUSHING REPAIR

The assembly work may be done only by a recognized specialized workshop. Ensure that old and new parts do not get mixed up with each other. It is for this reason that all the old parts are to be scrapped immediately after a joint has been stripped down. A complete repair set must be used for each joint repaired, i.e. use of only part of a repair set is not permissible.

3.12.1 Inspection

Take off the load from the joint by lifting the front of the vehicle. Apply a load on the joint in all of the degrees of freedom in an axial, radial, etc. sense with a suitable lever tool. After the load is taken off, the joint has to spring back into its starting position. Free play is not acceptable.

Separation of rubber from bar pin or external joint shell is in accordance with "normal wear characteristics".

When the following characteristics are noted, the joint is to be changed:

-Free play;

-Radial cracking of the external sheet-metal race.

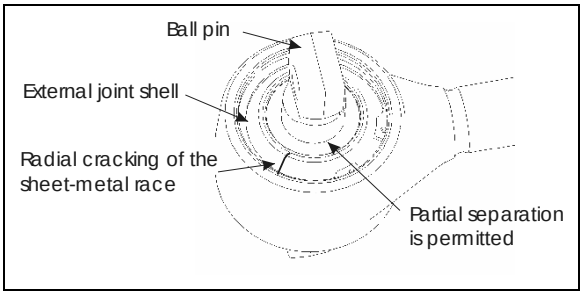

FIGURE 29: BAR PIN BUSHING

3.12.2 Stripping Down

Strip down the defective joint through removal of retaining ring, annular spacer and bar pin bushing assembly and thereafter clean out housing bore and locking circlips groove.

3.12.3 Assembly

Execute assembly of the new joint parts in the following sequence:

1. Complete moistening of the contact surface between housing bore and bar pin bushing through application of the grease.

NOTE
Apply grease, only in the case of repair kit (Prevost # 611114)).

2. Insert bar pin bushing assembly. In case of the two-bolt type, ensure that the bolt bores are in the correct position in relation to the axis of the tube.
3. Place joint in receiving fixture and mount annular assembly tool on the housing. Then locate annular spacer and retaining ring in the housing using axial load with the aid of assembly matrix. If the ends of the annular spacer are not in contact with each other, the thus formed opening must be located at 180° to the opening of the retaining ring. Pay attention during assembly to ensure that the retaining ring eyelets are located at each side of the housing shaft axis (retaining ring eyelet lug points to tube), and that retaining ring is properly engaged in the groove of the housing.
4. When repairing defective ball pin assemblies, the necked down-bolt must regularly be replaced with a new one.

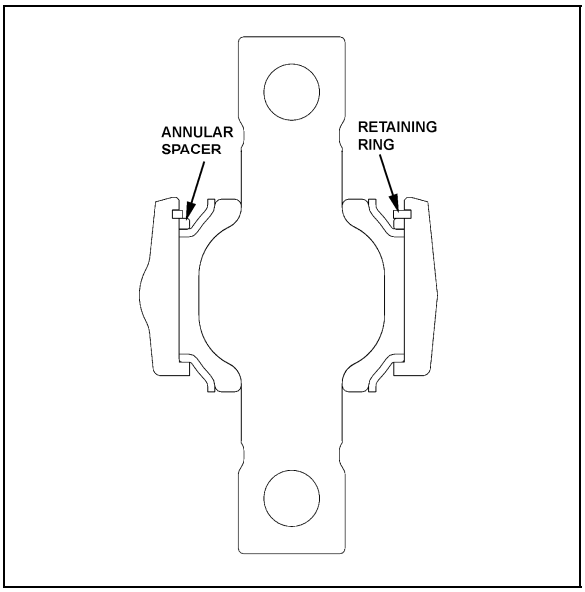

FIGURE 30: LOWER A-ARM BAR PIN BUSHING 16047

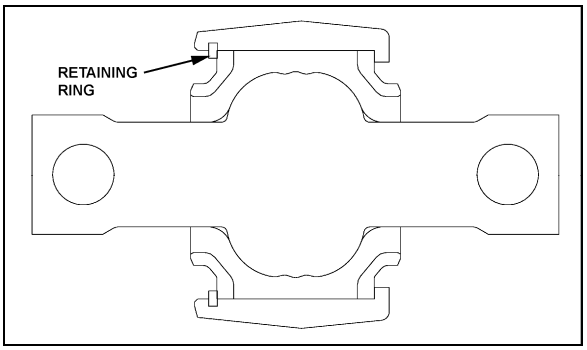

FIGURE 31: UPPER A-ARM BAR PIN BUSHING

3.13 LOWER A-ARM BALL JOINT REPAIR

Take off the load from the ball joint by lifting the front of the vehicle. Apply a load on the joint in all of the degrees of freedom in an axial, radial, etc. sense with a suitable lever tool. After the load is taken off, the joint has to spring back into its starting position. Free play is not acceptable.

Separation of rubber from ball pin or external joint bushing shell is in accordance with "normal wear characteristics".

When the following characteristics are noted, the joint is to be changed:

- Free play;
- Radial cracking of the external bushing shell.

3.13.1 Stripping Down

Strip down the defective joint through removal of retaining ring, annular spacer and ball pin/bushing, assembly and thereafter clean out housing bore and locking circlips groove

3.13.2 Assembly

Assemble the new component parts of the joint in the following sequence:

1. Complete moistening of the contact surface between housing bore and ball pin through application of the grease.
2. Place joint in receiving fixture and mount annular assembly tool on the housing. Then locate annular spacer and retaining ring in the housing using axial load with the aid of assembly matrix. If the ends of the annular spacer are not in contact with each other, the thus formed opening must be located at 180° to the opening of the retaining ring. Pay attention during assembly to ensure that the retaining ring eyelets are located at

each side of the housing shaft axis (retaining ring eyelet lug points to tube), and that retaining ring is properly engaged in the groove of the housing.

3. Faultlessly apply grease by mechanical means to bracket-outer core and ball-inner cone. Insert bracket outer cone in fixture with distance ring and then use press tool to apply pressure to press mount with ball-inner cone.

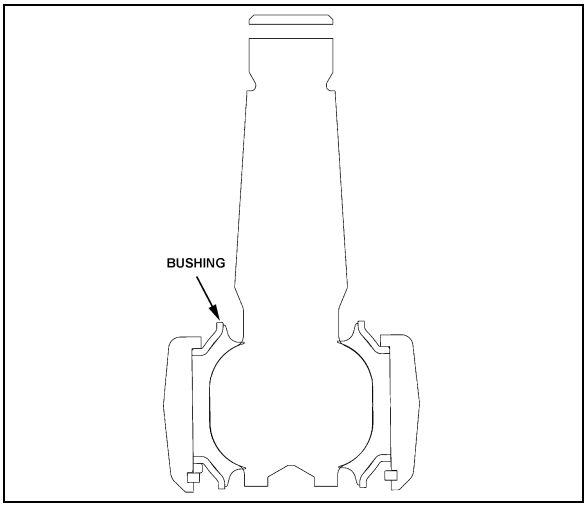

FIGURE 32: LOWER A-ARM BALL JOINT

3.14 UPPER A-ARM BALL JOINT

3.14.1 Visual Inspection

Check the condition of the sealing boot, in particular:

Check if the retainer ring, which secures the sealing boot at the conical section of the ball stud, is still present.

Check if grease is present on the external surface of the sealing boots. Escaped fluid and accumulations of grease on the sealing boot may be the result of the sealing boot's rupturing. In this case, the ball joint must be systematically replaced.

3.14.2 Play Measurement

1. Raise the vehicle and support through axle jacking points.
2. Using a caliper, measure dimension A on figure 33.
3. With a lever tool, exert sufficient force under the upper A-arm as to separate the upper A-arm from the upright in order to have the ball joint to its maximum extent. Measure dimension A again. If the difference between the two dimensions is greater than 0.060" (1.5mm), then the ball joint should be replaced.

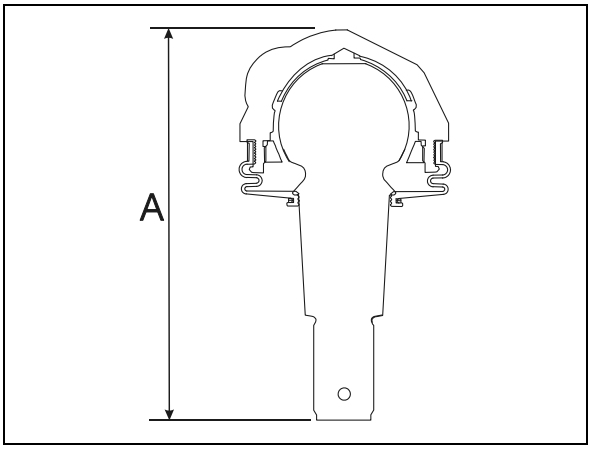

FIGURE 33: UPPER A-ARM BALL JOINT 16116

3.15 FRONT AIR SPRINGS

Two 14-inch *"rolling lobe"* type air springs are used with the independent front suspension, one at each wheel. These air springs are special and use the complete piston as an extra reservoir to lower the spring stiffness. Front air springs are attached to the subframe and to uprights.

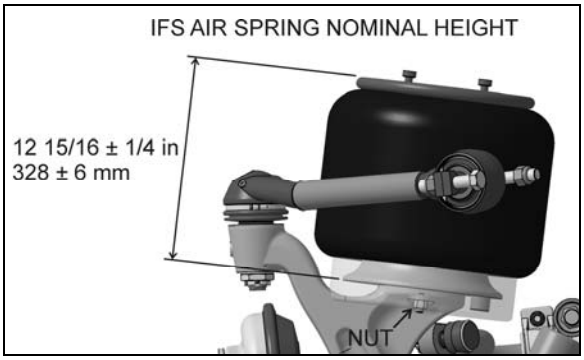

FIGURE 34: AIR SPRINGS 16052

3.15.1 Inspection

1. Check operation of bellows.
2. Visually inspect bellows for evidence of cracks, punctures, deterioration, or chafing. Replace the bellows if damage is evident.
3. With the primary air system at normal operating pressure (95 - 125 psi (655 - 860 kPa)), coat all suspension air line connections and bellow mounting areas with a water and soap solution. Bubbles will

indicate an air leak, and none is permissible. Repair or replace defective parts.

NOTE

If air spring is removed from vehicle, bellows can be lightly inflated and submerged in water to detect any leakage. If leakage is detected, replace bellows.

WARNING

To prevent personal injury, do not apply more than 10 psi (69 kPa) air pressure to the dismounted air spring.

3.15.2 Removal

NOTE

Front air springs can be removed without removing the entire suspension assembly.

1. Safely support vehicle at the recommended body jacking points and jack up body understructure.
2. To gain access to a given air spring, the corresponding wheel can be removed.

CAUTION

Only the recommended jacking points must be used as outlined in Section 18, "Body" in the maintenance manual.

3. Support the assembly with a suitable jack.
4. Exhaust compressed air from accessory air tank by opening drain cock under reservoir.
5. Disconnect the height control valve link and pull down the overtravel lever to ensure all air is exhausted from air springs.

NOTE

While performing this step, do not change the height control valve overtravel lever adjustment.

6. Disconnect air line from air spring, remove elbow (if applicable), and cover both the line end and fitting to prevent the entry of foreign matter.
7. Remove the air spring upper nut, and then the two lower nuts. Remove air spring and remove the back up plate from the top of the air spring.

3.15.3 Installation

NOTE

To facilitate air spring installation, compress it manually then put a piece of tape over the air line threaded fitting. This prevents air from getting back into the bag and keeps it compressed, thus enabling to place the bag in between the mounting plates and greatly easing installation.

1. Compress air spring as necessary, then aligning studs with their holes, position air spring between both the lower and upper supports. Thread the lower nuts and the small upper nut a few turns.
2. Tighten and torque the lower stud nuts, and then the upper nut as prescribed in Torque Table 2.
3. Install elbow (if applicable), then connect air line.
4. Connect the height control valve link.
5. Build up air pressure in system.

NOTE

To accelerate this operation, air reservoirs can be filled from an exterior air supply connected to the accessory tank fill valve or to the emergency fill valve.

6. Check operation of bellows and with the primary air system at normal operating pressure (95 - 125 psi (655 - 860 kPa), coat the air line connections and air spring mounting areas with a water and soap solution. Bubbles will indicate an air leak, and none is permissible. Repair or replace defective parts.
7. Remove the hydraulic floor jack from underneath shock absorber bracket.

3.16 SHOCK ABSORBERS

The two front shock absorbers are double-acting and telescopic type. Shock absorbers ensure a smooth ride and enhance vehicle stability on the road. Front shock absorbers have eye-type mountings on the upper side and bayonet type on lower side. Shock absorbers are non-adjustable and non-repairable.

CAUTION

When a shock absorber is found defective, always replace with a new set on affected axle, except if there has been a recent replacement of one unit. The following method will help in determining if both shock absorbers on the same axle have to be replaced.

3.16.1 Shock Absorber Removal

1. Remove the nut, washer and rubber joint from shock absorber mounting stud. Discard the rubber joints.
2. Remove the nut and washer from shock absorber mounting pin (upper side), taking care to identify the inner and outer washers to ease reinstallation. Refer to figure 35 for details.
3. Remove the shock absorber from the vehicle.
4. Remove inner: washers, rubber joint and bushings from the shock absorber. Discard bushings and rubber joint.

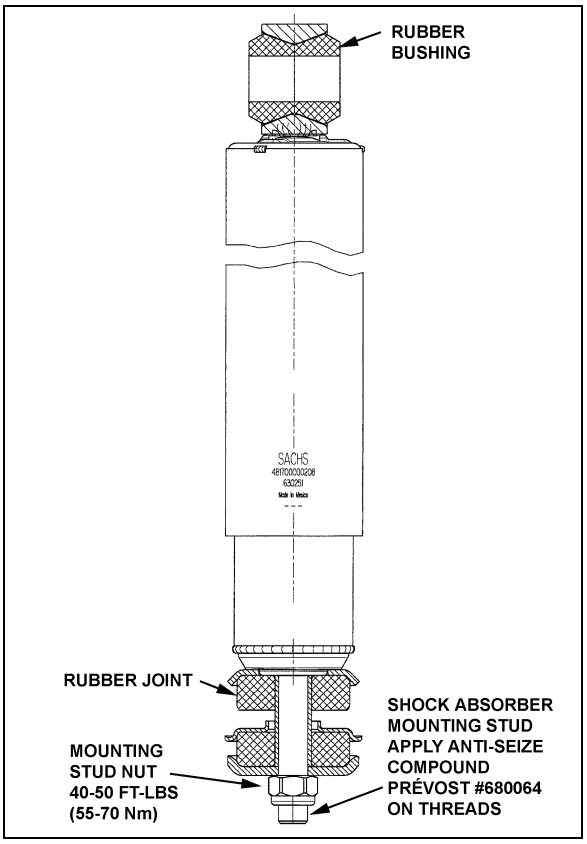

FIGURE 35: SHOCK ABSORBER 16112

3.16.2 Shock Absorber Installation

1. Check that the shock absorber mounting pin torque is proper (350-400 lbf-ft (475-545 Nm)). Ensure that the stud is clean and not stripped (upper side).
2. Install new rubber (mounting) bushing on shock absorber (upper side).
3. Place the inner washer on shock absorber pin (Fig. 35).
4. Install washer and rubber joint on shock absorber mounting stud (lower side).
5. Install the shock absorber as shown in figure 34 with the mounting stud protruding through the hole in the mounting bracket and the shock absorber eyes over the mounting pins. Install the outer washer.
6. Place a rubber joint and washer on the shock absorber mounting stud. Place the lower shock absorber mounting stud nut and torque to 40-50 lbf-ft (55–70 Nm).
7. Place the upper mounting pin stud nut and torque to 70-85 lbf-ft (95–115 Nm).

3.17 SWAY BAR

A sway bar is provided on the front and rear suspensions to increase vehicle stability. It controls lateral motion (swaying movement) of vehicle.

3.17.1 Removal

1. Disconnect the two links from sway bar.
2. Safely support the sway bar. Unbolt bushing collars from subframe.
3. Remove sway bar.

NOTE
Sway bar bushings are slit to ease their removal.

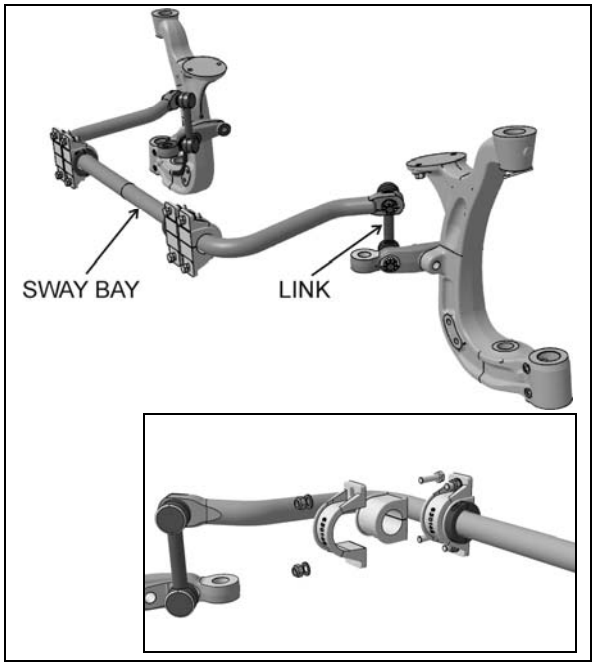

FIGURE 36: SWAY BAR (INDEPENDENT FRONT SUSPENSION) 16138_C

3.17.2 Installation

1. Loosely install the sway bar.
2. Torque bushing collar nuts as prescribed per Torque Table 2.
3. Torque sway bar link upper nuts as prescribed per Torque Table 2.
4. Torque sway bar link lower nuts as prescribed per Torque Table 2.

3.18 INDEPENDENT FRONT SUSPENSION HEIGHT ADJUSTMENT

VIP coach shells are equipped with "LEVEL-LOW" leveling system. The purpose of the "LEVEL-LOW" is to adjust suspension in three separate points; front, rear right and rear left air springs in order to level vehicle body. Three height control valves, automatically control air pressure in the three separate points (air springs) and maintains a constant vehicle height regardless of load, or load distribution. The control solenoid valve supplies air to the five way three-position air control valve, which bypasses the height control valve, and opens a passage to allow the air control and exhaust valve to release/supply air from airs springs. To improve road comfort, an expansion air tank is installed in series with each air spring.

The flow of pressurized air from the accessory air tank to the air springs is controlled by three height control valves. The two rear valves are mounted to the subframe and connected to the rear axles through an arm and link connection. The front valve is mounted to the subframe and connected to the front air tank support (fig. 37). These connections allow the valves to apportion air pressure in the springs to the vehicle load, maintaining normal ride height.

Immediate response height control valves increase or decrease the air pressure in the suspension system as required. One height control valve is located **at center of front sway bar**, and regulates air to front suspension air springs in order to maintain the vehicle at the required height. Two are located at the drive axle, one on each inner side of rear wheelhousing.

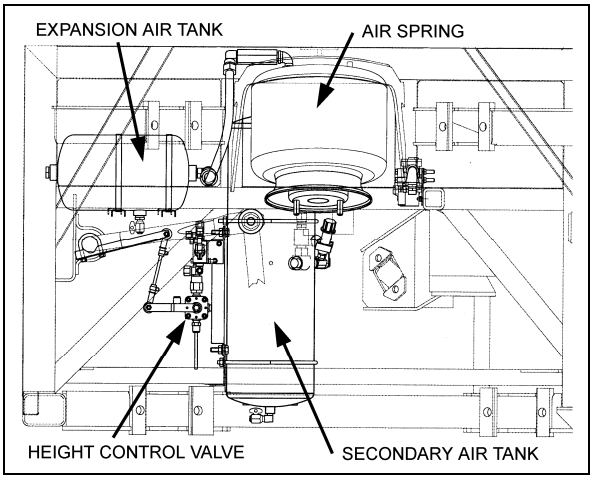

FIGURE 37: HEIGHT CONTROL VALVE LOCATION 16057

The appropriate vehicle body height is obtained by measuring the clearance of all the air springs installed on the vehicle. The two front air springs clearance should be 12 15/16 ± ¼ in (328 ± 6 mm). Refer to figure 38 to identify the correct area to take measurement. The rear air springs clearance should be 11 ½ ± ¼" (292 ± 6 mm) (refer to paragraph "6.0 Suspension Height Adjustment" for rear height control valves' adjustment). At this point, it should not be necessary to make an adjustment under normal service conditions. However, if an adjustment is required, change the position of the overtravel lever in relation to the overtravel control body. The lever should be moved up to raise vehicle height, and down to lower it. Check that main air pressure is at normal operating pressure and raise the vehicle to the specified height.

CAUTION

Always adjust on "fill cycle". If it is necessary to lower vehicle height, release sufficient air to be well below height, and adjust to height or fill cycle.

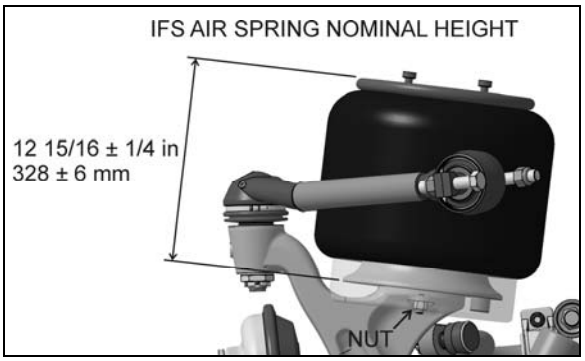

FIGURE 38: TYPICAL AIR SPRING CLEARANCE 16058

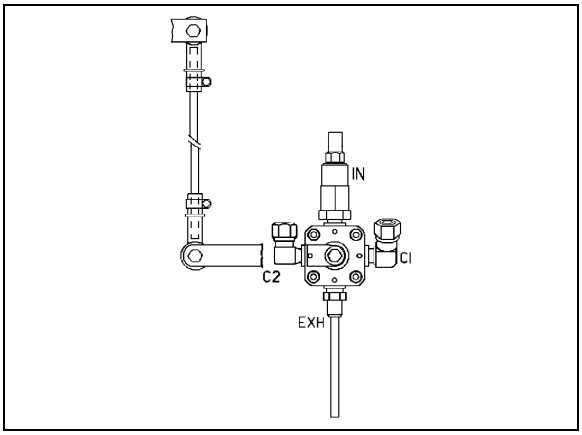

FIGURE 39: FRONT HEIGHT CONTROL VALVE 16100

The normal ride height is obtained by adjusting air spring clearance of both front and rear suspension as follows:

Front air spring clearance

1. With the vehicle at normal operating air pressure (100 - 125 psi (689 - 860 kPa)), measure air spring clearance. This clearance should be 12 15/16 ± ¼ in (328 ± 6 mm).

NOTE

The measurement should be taken from underneath the upper air spring support on subframe to top of air spring mounting surface on the upright. If adjustment is required, begin with the drive axle.

2. Loosen the clamp on the height control valve rubber coupling and bring it up or down (Fig. 39).

NOTE

Allow suspension to stabilize before taking reading.

When the desired height is obtained, tighten clamp.

Rear air springs clearance

Refer to «Suspension Height Adjustment".

4. REAR SUSPENSION

For a description of all these systems, refer to the appropriate heading in this section.

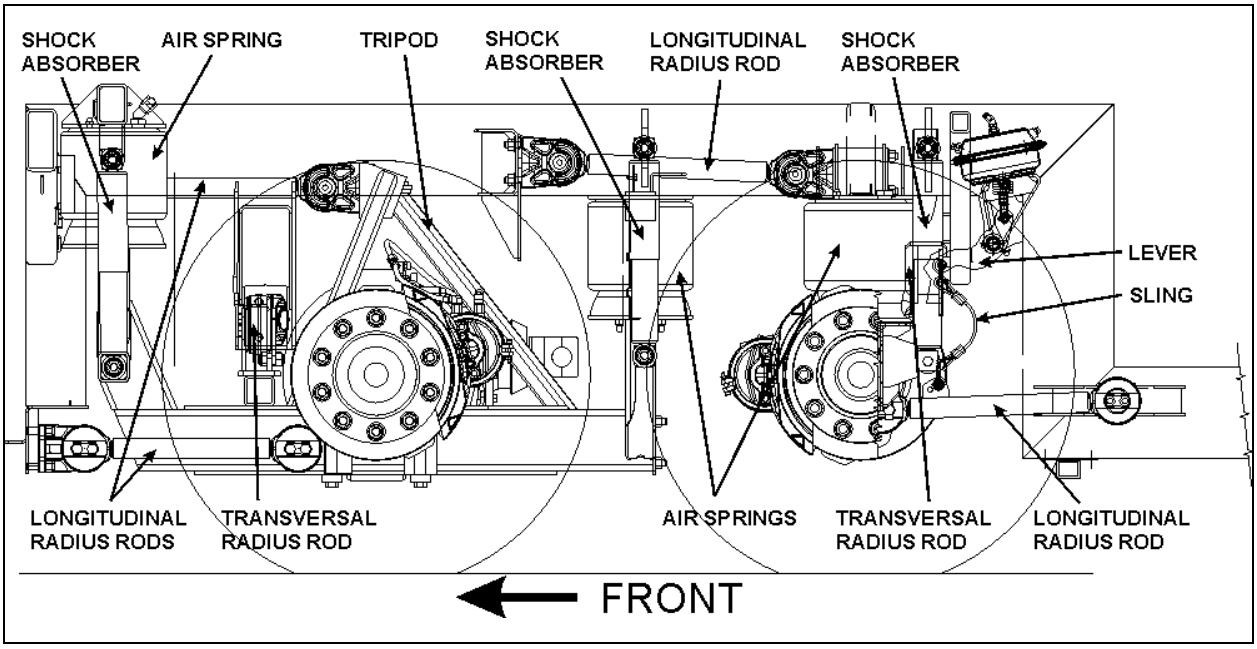

FIGURE 40: REAR SUSPENSION COMPONENTS

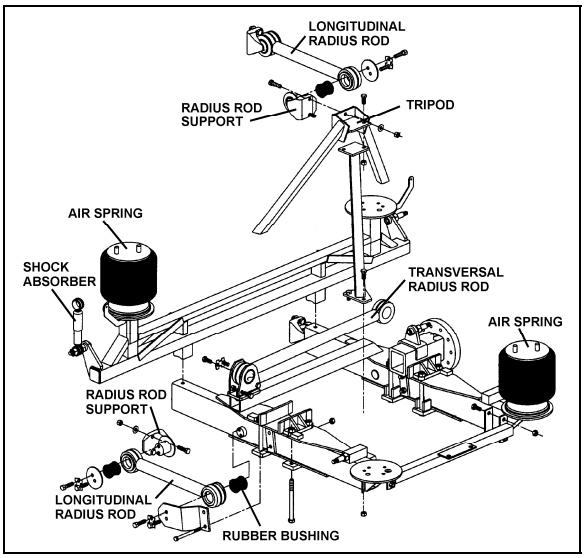

FIGURE 41: REAR UNDERFRAME SUSPENSION 16106

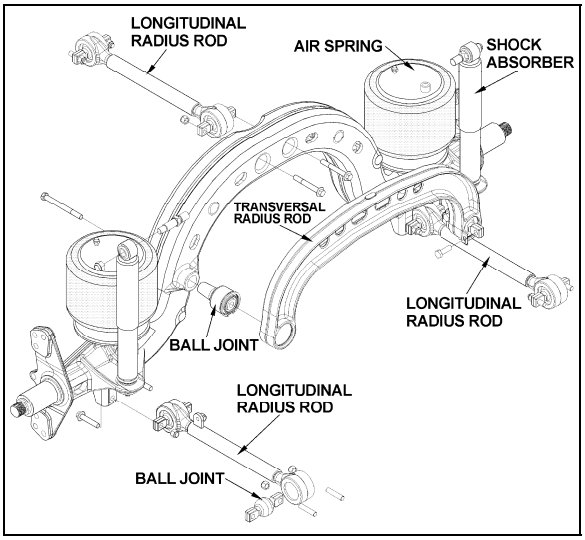

FIGURE 42: TAG AXLE SUSPENSION 16107

4.1 AIR SPRINGS

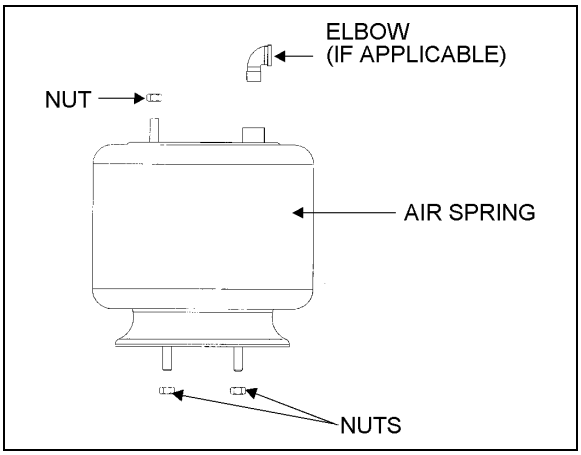

FIGURE 43: AIR SPRING 16052

The air springs are made from a special compound rubber molded to the proper contour and dimensions. The entire vertical load of the vehicle is supported by these springs. Each of the two axles is provided with air springs that are attached to the subframe and to the axles (Fig. 43).

4.1.1 Inspection

1. Check operation of bellows.
2. Visually inspect bellows for evidence of cracks, punctures, deterioration, or chafing. Replace the bellows if any damage is evident.
3. With the primary air system at normal operating pressure (95 - 125 psi (655 - 860 kPa)), coat all suspension air line connections and bellows mounting areas with a water and soap solution. Bubbles will indicate an air leak, and none is permissible. Repair or replace defective parts.

> ***NOTE***
>
> *If air spring is removed from vehicle, bellows can be lightly inflated and submerged in water to detect any leakage. If any leakage is detected, replace bellows.*

> **WARNING**
>
> To prevent personal injury, do not apply more than 10 psi (69 kPa) of air pressure to the uninstalled air spring.

4.1.2 Removal

> ***NOTE***
>
> *Suspension air springs (drive and tag axles) can be removed without removing the entire axle assembly.*

1. Safely support vehicle at the recommended body jacking points. To gain access to a given air spring, the corresponding wheel can be removed as follows.

   a) Jack vehicle until the tire clears the ground, and place safety supports underneath body.

> **CAUTION**
>
> Only the recommended jacking points must be used as outlined in Section 18, “Body”.

   b) Support the axle with a suitable hydraulic floor jack at the recommended jacking point.

   c) Remove wheel.

2. Exhaust compressed air from accessory air tank by opening drain cock under reservoir.
3. Disconnect the height control valve link and pull down the overtravel lever to ensure all air is exhausted from air springs.

> ***NOTE***
>
> *While performing this step, do not change the height control valve overtravel lever adjustment.*

4. Disconnect air line from air spring, remove elbow (if applicable), and cover both the line end and fitting to prevent the entry of foreign matter.
5. Remove the air spring upper nut, and then the two lower nuts. Remove air spring.

4.1.3 Installation

1. Compress air spring as necessary, then aligning studs with their holes, position air spring between both the lower and upper supports. Thread the lower nuts and the small upper nut a few turns.
2.

NOTE

To facilitate air spring installation, compress it manually then put a piece of tape over the air line threaded fitting. This prevents air from getting back into the bag and keeps it compressed, thus enabling to place the bag in between the mounting plates and greatly easing installation.

2. Tighten and torque the lower stud nuts, and then the upper one to 20 – 25 lbf-ft (27 – 34 Nm).
3. Thread the remaining upper nut (large nut) and tighten to 20 – 25 lbf-ft (27 – 34 Nm).
4. Install elbow (if applicable), then connect air line.
5. Connect the height control valve link.
6. Build up air pressure in system.

NOTE

To accelerate this operation, air reservoirs can be filled from an exterior air supply connected to the accessory tank fill valve or to the emergency fill valve.

7. Check operation of bellows and with the primary air system at normal operating pressure (95 – 125 psi (655 – 860 kPa)), coat the air line connections and air spring mounting areas with a water and soap solution. Bubbles will indicate an air leak, and none is permissible. Repair or replace defective parts.
8. Reinstall wheel.
9. Remove the hydraulic floor jack from under the axle, then lower vehicle to ground.

4.2 SHOCK ABSORBERS

Double-action, telescoping-type shock absorbers ensure a smooth ride and enhance vehicle stability on the road. All shock absorbers are eye-type mountings. The tag axle is provided with two shock absorbers while the drive axle is provided with four of them (Fig. 40 and 42).

Shock absorbers are non-adjustable and non-repairable. Maintenance requirements involve replacement of the rubber mounting bushings, and tightening of all shock absorber pins at the proper torque of 500 - 550 lbf-ft (680 - 750 Nm) when shock absorber replacement occurs. If a shock absorber becomes inoperative, complete unit must be replaced.

CAUTION

When a shock absorber is found defective, always replace with a new set on affected axle, except if there has been a recent replacement of one unit. The following method will help in determining if both shock absorbers on the same axle have to be replaced.

4.2.1 Inspection

Loosen lower mounting of both shocks, and then carefully attempt to raise and lower the bottom portion of each shock. Note the rate of effort for distance of travel. Replace both shocks if a definite differential rate is found.

The shock must be bench checked in an upright, vertical position. If checked in any other position, air will enter the cylinder tube and make the shock absorber appear defective.

Proceed as follows to check shock absorbers:

1. With the shock absorber in a vertical position (top end up), clamp the bottom mount in a vise.

CAUTION

Do not clamp the reservoir tube or the dust tube.

2. Rotate the dust tube. Notice any binding condition (may be compared with new unit). Binding condition indicates a scored rod. Units with scored rods should be replaced.
3. Fully extend shocks and check for leaks in the seal cover area. Shock fluid is a very thin hydraulic fluid that has a characteristic odor and dark brown tint. A slight trace of shock fluid around the seal cover area is not a cause for replacement. The shock seal is designed to permit a very slight seepage to lubricate the rod. Units that leak should be replaced.
4. Visually check shock for dents that could cause the shock to bind. Also, check for a bent rod.

5. Extend and collapse shock several times to determine that it has control (resistance) in both rebound and compression.
6. Visually inspect the shock mountings and vehicle mounting for:
   a) Broken mounts;
   b) Extreme bushing wear;
   c) Shifted bushing or sleeve;
   d) Deep cracks in bushing material (shallow surface cracks are normal);
   e) Loose shock absorber pins;
   f) Presence of convex washers, and their position relative to the rubber bushing.

4.2.2 Removal

1. Remove nuts and washers from shock absorbers on upper and lower mounting pins, taking care to identify the inner and outer washers to ease reinstallation. Refer to figure 44 for details.
2. Remove the shock absorber assembly from pins.
3. Remove the two inner bushings from the shock absorber and discard them.

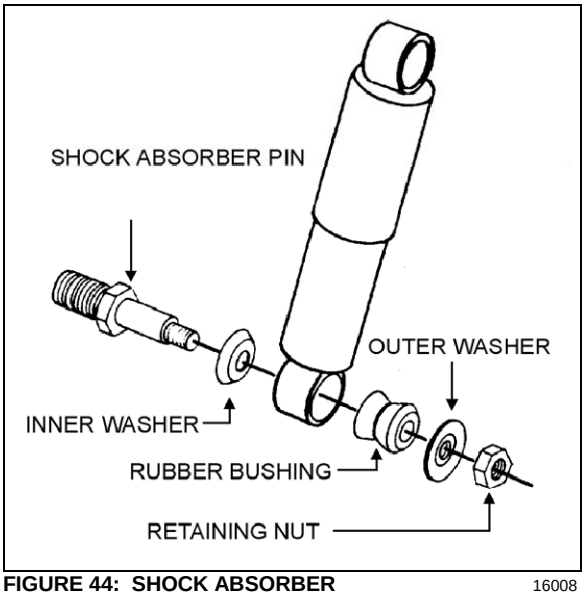

FIGURE 44: SHOCK ABSORBER 16008

4.2.3 Installation

1. Ensure that the shock absorber mounting pins are tight and that the threads are not stripped.
2. Install new rubber mounting bushings on shock absorbers (upper and lower).
3. Place the inner washers (with washer convex side facing the shock absorber rubber bushing) on each shock absorber pin (Fig. 44).
4. Install the shock absorber eyes over the mounting pins, then the outer washers (with washer convex side facing the shock absorber rubber bushing) on each shock extremity.

NOTE
If shock absorber pins are removed, they must be reinstalled using "Loctite" (see "Parts Specifications" in this section).

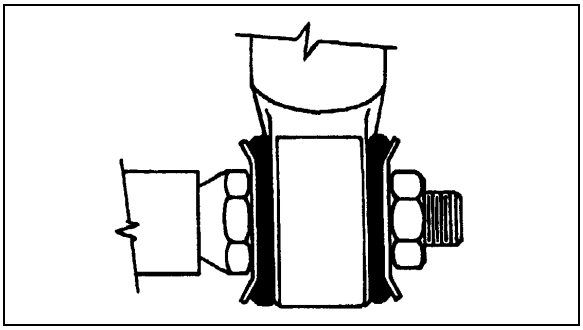

FIGURE 45: TYPICAL SHOCK ABSORBER SETUP 16009

5. Place the lower and upper mounting pin stud nuts and torque as prescribed in Torque Table 3.

4.3 RADIUS RODS

Radius rods are used to secure the axles in the proper transversal and longitudinal positions. Four radius rods are provided on the drive axle suspension (three longitudinal and one transversal) and also four on the tag axle with a layout similar to the drive axle. Refer to figures 40-42 for details. These rods transmit both braking and driving forces from the axles to the vehicle body.

4.3.1 Rear Underframe Suspension

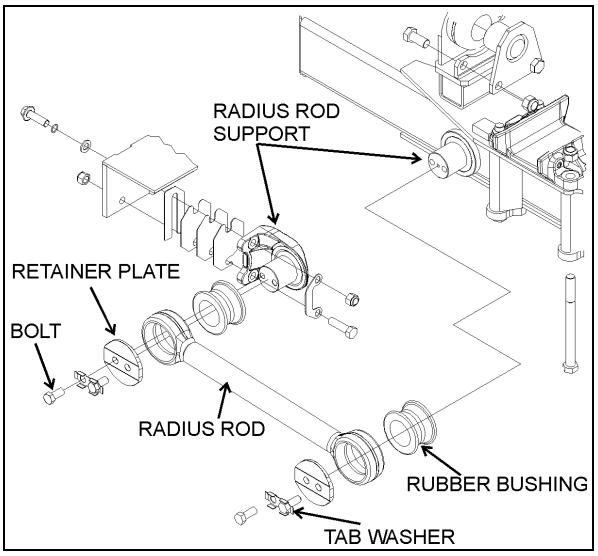

FIGURE 46: TYPICAL RADIUS ROD SETUP 16010

Radius Rod Inspection

The following instructions apply to the radius rods used on the rear underframe suspension:

1. Clean all parts thoroughly.
2. Inspect radius rods for distortion and cracks. We recommend the “Magnaflux” process to detect cracks in the radius rod. Any damaged part should be replaced with a new one.

NOTE
New bushings should be used when rods are replaced.

3. The radius rod bushings should be checked periodically for signs of shearing, deterioration, or damage. Any defective part should be replaced with a new one.

Radius Rod Removal

1. Flatten the tab washer which secures the two retaining nuts (or bolts), and then unscrew the nuts (or bolts) at each extremity of the radius rod (Fig. 46).
2. Remove the tab washer and the retaining plates and radius rod ends from anchor pins, and then remove the radius rod.

Bushing removal

1. Safely support the radius rod as shown in figure 47.

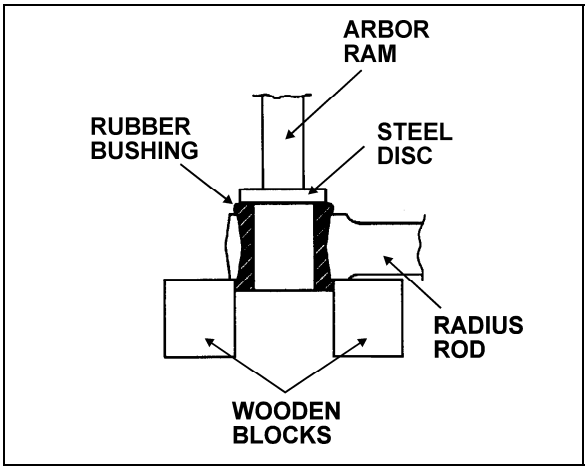

FIGURE 47: RADIUS ROD BUSHING REMOVAL 16011

2. Place a flat steel disc, slightly smaller than the outside diameter of the bushing (Fig. 47).
3. Using an arbor press or a suitable driving tool, press or drive the old bushing out of the rod and discard the bushing.

⚠ **CAUTION**
Make sure to prevent the steel disc from contacting the radius rod end.

Bushing installation

1. Lightly spray the inner and outer surfaces of radius rod bushing with water.

⚠ **CAUTION**
No lubricant whatsoever is to be used on the rubber bushing.

2. Safely support the radius rod, and place new bushing on top of the radius rod end (Fig. 48).
3. Place a block of wood on top of bushing and press on it manually.
4. If necessary, use an arbor press or a suitable driving tool. Press or drive the bushing into the radius rod end until it extends equally on both sides of the rod.

5. It is also possible to proceed differently. Place radius rod bushing on a plane surface. Spray a light coat of water on the inner and outer surfaces of radius rod bushing.
6. Take radius rod, align the bushing. Tap radius rod on bushing until latter is positioned correctly.

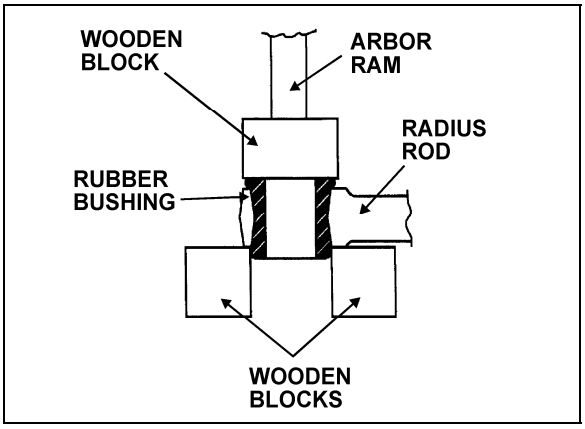

FIGURE 48: RADIUS ROD BUSHING INSTALLATION 16012

Radius Rod Installation

1. Lightly spray the radius rod support with water. Place the radius rod end over the radius rod support (Fig. 48).
2. Position the retaining plate. Install the tab washer and nuts (or bolts).

CAUTION

Always use new tab washers at installation.

3. Tighten the nuts (or bolts) lightly, and repeat at the other end.
4. Refer to heading *"Suspension Height Adjustment"* later in this section, and set the vehicle to normal ride height.
5. With the vehicle at normal ride height, tighten all radius rod anchor pin nuts or bolts as prescribed in Torque Table 3.

CAUTION

It is extremely important upon reconnection of the rods that the proper clearance height between the axle and body be maintained. Otherwise, the rubber bushings in radius rod ends will become preloaded, thus reducing their life span.

4.3.2 Tag Axle Suspension

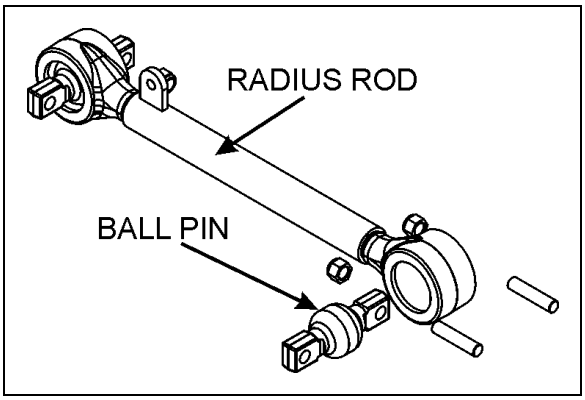

FIGURE 49: TYPICAL RADIUS ROD SETUP 16010

The assembly work may be done only by a recognized specialized workshop. Ensure that old and new parts do not get mixed up with each other. It is for this reason that all the old parts are to be scrapped immediately after a joint has been stripped down. A complete repair set must be used for each joint repaired, i.e. use of only part of a repair set is not permissible.

Radius Rod Inspection

Take off the load from the ball joint by lifting the rear of the vehicle. Apply a load on the joint in all of the degrees of freedom in an axial, radial, etc. sense with a suitable lever tool. After the load is taken off, the joint has to spring back into its starting position. Free play is not acceptable.

Separation of rubber from ball pin or external joint shell is in accordance with "normal wear characteristics".

When the following characteristics are noted, the joint is to be changed:

- Free play;
- Radial cracking of the external sheet-metal race.

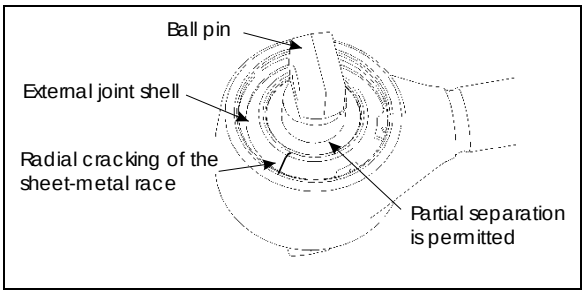

FIGURE 50: BALL JOINTS 16173

Stripping Down

Strip down the defective joint through removal of retaining ring, annular spacer and ball pin/bushing, assembly and thereafter clean out housing bore and locking circlips groove.

Radius Rod Assembly

Execute assembly of the new joint parts in the following sequence:

1. Complete moistening of the contact surface between housing bore and ball pin through application of the grease.

NOTE
Apply grease, only in the case of repair kit (Prevost # 611114)).

2. Insert ball pin/bushing, assembly. In case of the two-bolt type, ensure that the bolt bores are in the correct position in relation to the axis of the tube.
3. Place joint in receiving fixture and mount annular assembly tool on the housing. Then locate annular spacer and retaining ring in the housing using axial load with the aid of assembly matrix. If the ends of the annular spacer are not in contact with each other, the thus formed opening must be located at 180° to the opening of the retaining ring. Pay attention during assembly to ensure that the retaining ring eyelets are located at each side of the housing shaft axis (retaining ring eyelet lug points to tube), and that retaining ring is properly engaged in the groove of the housing.

When repairing defective ball pin assemblies, the necked down-bolt must regularly be replaced with a new one.

5. SUSPENSION AIR SYSTEM

The suspension air system has its own air reservoir (accessory tank) which is located in the reclining bumper compartment. Pressurized air from the main tank (wet tank) flows through a pressure protection valve (PR-4), to the accessory air tank and through an air filter which is located in front service compartment.

The pressure protection valve (PR-4) is mounted to the supply port of the tank. This valve controls the pressure at which compressed air is delivered to the accessory air tank. The valve remains closed until a preset pressure is reached (approximately 70 psi (485 kPa)). It then opens and passes air out the delivery port.

The main use for this valve is to protect the main air system by ensuring at all times a sufficient air pressure in the main system (i.e. air delivered to the accessories will be shut off in case of a decrease in pressure). Maintenance and repair information on the pressure protection valve is supplied in the applicable booklet, annexed to Section 12, *"Brakes and Air System"* under reference number SD-03-2010.

WARNING
Depressurize parts prior to removal.

5.1 INSPECTION

The following inspection should be performed at established service inspection periods. Performing these procedures will allow substandard performance to be discovered before the condition becomes bad enough to cause operator complaints and failure on a run.

1. Visually inspect the suspension air lines for evidence of chafing on metal parts or other damage.
2. Visually inspect the air springs for cracks, abrasion or other damage.
3. Replace any parts found to be damaged.

5.2 AIR LINE TEST

With the main air system at normal operating pressure, coat all suspension air line connections and air spring mountings with a solution of soap and water. Air leakage will produce soap bubbles. Any leak found must be corrected as no air leakage is permissible.

6. SUSPENSION HEIGHT ADJUSTMENT

The flow of pressurized air from the accessory air tank to the air springs is controlled by three height control valves. The two rear valves are mounted to the subframe and connected to the rear axles through an arm and link connection. The front valve is mounted to the subframe and connected to the front air tank support. These connections allow the valves to apportion air pressure in the springs to the vehicle load, maintaining normal ride height.

Immediate response height control valves increase or decrease the air pressure in the suspension system as required. One height control valve is located **at center of front sway bar**, and regulates air to front suspension air springs in order to maintain the vehicle at the required height. Two are located at the drive axle, one on each inner side of rear wheelhousing.

The appropriate vehicle body height is obtained by measuring the clearance of all the air springs installed on the vehicle. With the vehicle at normal operating air pressure, check the air spring clearance as illustrated in figure 51. This clearance should be:

- **11 ± ¼" (279 ± 6 mm)** for the front I-beam axle air springs;
- **12 15/16 ± ¼ in (328 ± 6 mm)** for the Independent Front Suspension air springs;
- The rear air springs clearance should be **11 ½ ± ¼" (292 ± 6 mm)** for the drive axle air springs.

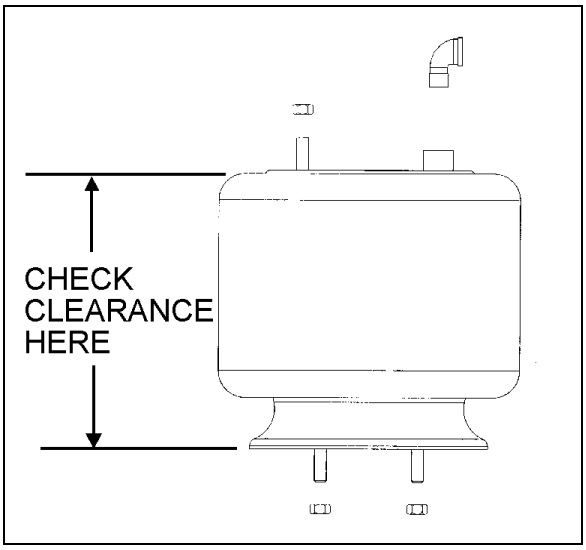

FIGURE 51: TYPICAL AIR SPRING CLEARANCE 16058

At this point, it should not be necessary to make an adjustment under normal service conditions. However, if an adjustment is required, change the position of the overtravel lever in relation to the overtravel control body. The lever should be moved up to raise vehicle height, and down to lower it. Check that main air pressure is at normal operating pressure and raise the vehicle to the specified height.

CAUTION

Always adjust on "fill cycle". If it is necessary to lower vehicle height, release sufficient air to be well below height, and adjust to height or fill cycle.

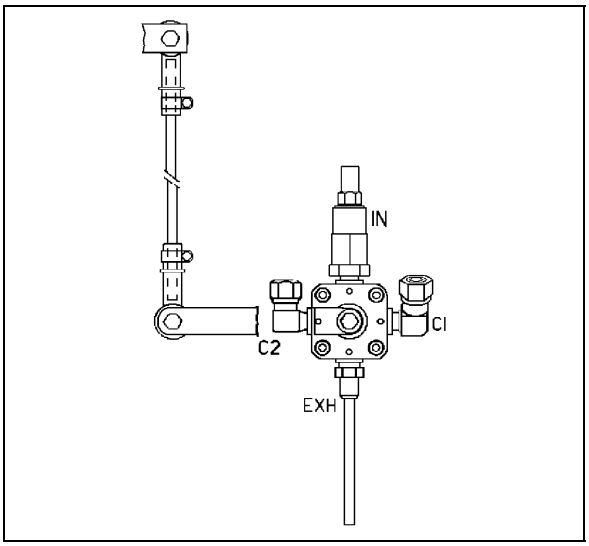

FIGURE 52: FRONT HEIGHT CONTROL VALVE 16100

The normal ride height is obtained by adjusting air spring clearance of both front and rear suspension as follows:

Front air spring clearance

3. With the vehicle at normal operating air pressure [100 - 125 psi (689 - 860 kPa)], measure air spring clearance. This clearance should be **11 ± ¼" (279 ± 6 mm)** for the front I-beam axle air springs and **12 15/16 ± ¼ in (328 ± 6 mm)** for the Independent Front Suspension air springs.

NOTE

The measurement should be taken from underneath the upper air spring support on subframe to top of the lower air spring support on axle (refer to figure 51 for more details). If adjustment is required, begin with the drive axle.

4. Loosen the clamp on the height control valve rubber coupling and bring it up or down (Fig. 52).

NOTE

Allow suspension to stabilize before taking reading.

When the desired height is obtained, tighten clamp.

Rear air spring clearance

1. With the vehicle at normal operating air pressure [100 - 125 psi (689 - 860 kPa)], measure air spring clearance. This clearance should be **11 ½ ± ¼" (292 ± 6 mm)**.

NOTE
The measurement should be taken from underneath the upper air spring support on subframe to top of the lower air spring support on axle (refer to figure 46 for more details).

2. Loosen the clamp on the height control valve rubber coupling and bring it up or down (Fig. 53).

NOTE
Allow suspension to stabilize before taking reading.

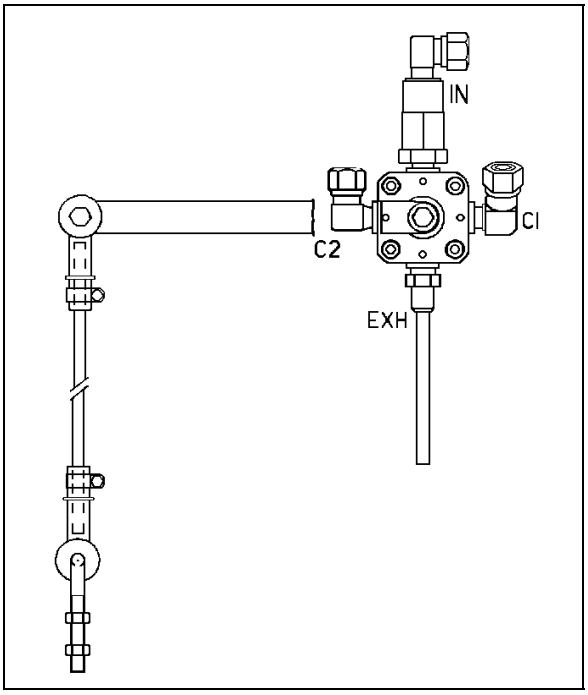

FIGURE 53: REAR HEIGHT CONTROL VALVE 16093

When the desired height is obtained, tighten clamp.

7. HEIGHT CONTROL VALVE

The height control valves automatically add air to, or release air from air springs to maintain constant suspension height regardless of load, or load distribution. Each valve adjusts independently according to the following conditions:

Loading Position

As the load increases and lowers the vehicle body, the overtravel lever commands the height control valve to add air to air springs.

Neutral Position

When vehicle body reaches the normal ride height, the height control valve overtravel lever reaches the "neutral" position and keeps both the supply and exhaust ports closed to ensure normal ride height is maintained. This condition remains static until the vehicle load is altered.

Unloading Position

As the load decreases and raises the vehicle body, the overtravel lever commands the height control valve to release air from air springs.

7.1 MAINTENANCE

The height control valve requires no periodic maintenance. Height control valve linkage operates on rubber bushings and no lubrication should be attempted at this location. Inspect the valve for loose joints, air leaks and worn bushings.

7.2 REMOVAL AND INSTALLATION

Before disconnecting a height control valve air line, securely support the vehicle by its jacking points on the body, and place safety supports underneath body. Refer to paragraph *"16. Vehicle Jacking Points"* in Section 18, *"Body"*.

1. Exhaust air from air system by opening all air tank drain cocks. Remove height control valves.
2. Disconnect overtravel lever from link and pull down lever to exhaust remaining air from air springs.
3. Disconnect air supply and delivery lines from the height control valve. Cover line ends with tape to prevent entry of foreign matter.
4. Remove the nuts retaining the height control valve to the mounting bracket, then remove valve assembly.

Reverse removal procedure to replace height control valve. After installation, check for leakage using a soap and water solution.

8. AIR SYSTEM

The basic air system consists of an air compressor, tanks, valves, filters and interconnecting lines and hoses (refer to Section 12, "Brake and Air System" for complete information). It provides a means for braking, operating controls and accessories, and suspension. An air system schematic diagram is annexed at the end of this section for better understanding of the system.

The air coming from the air dryer is first directed to the wet air tank, then to the primary (for the primary brake system), secondary (for the secondary brake system), and accessory (for the pneumatic accessories) air tanks (Fig. 54 and 55).

In addition, an expansion air tank may be installed in series with each air spring.

8.1 AIR TANK MAINTENANCE

Ensure that the accessories air tank is purged during pre-starting inspection. A good practice is to purge this tank at the end of every driving day by the remote air tank drain valve located in the front service compartment (Fig. 57).

Moreover, purge all tanks by their bottom drain valves at specified intervals.

8.1.1 Wet Air Tank

This tank is installed above the drive axle on the L.H. side, and is provided with a bottom drain valve. It is recommended to **purge** the wet air tank by its bottom drain valve every 12,500 miles (20 000 km), or once a year, whichever comes first.

A remote valve located in engine compartment and accessible through engine R.H. side door is used to **drain** the air dryer (Fig. 56).

8.1.2 Primary Air Tank

The primary air tank is located above the drive axle on the R.H. side.

This tank is provided with a bottom drain valve (Fig. 54 and 55). It is recommended to purge the primary air tank by its bottom drain valve every 12,500 miles (20 000 km) or once a year, whichever comes first.

8.1.3 Secondary Air Tank

This tank is located in front wheelhousing, between air springs. The tank may be installed vertically depending on type of front suspension and is provided with a bottom drain valve (Fig. 54 and 55).

It is recommended to purge the tank by its bottom drain valve, every 12,500 miles (20 000 km) or once a year, whichever comes first.

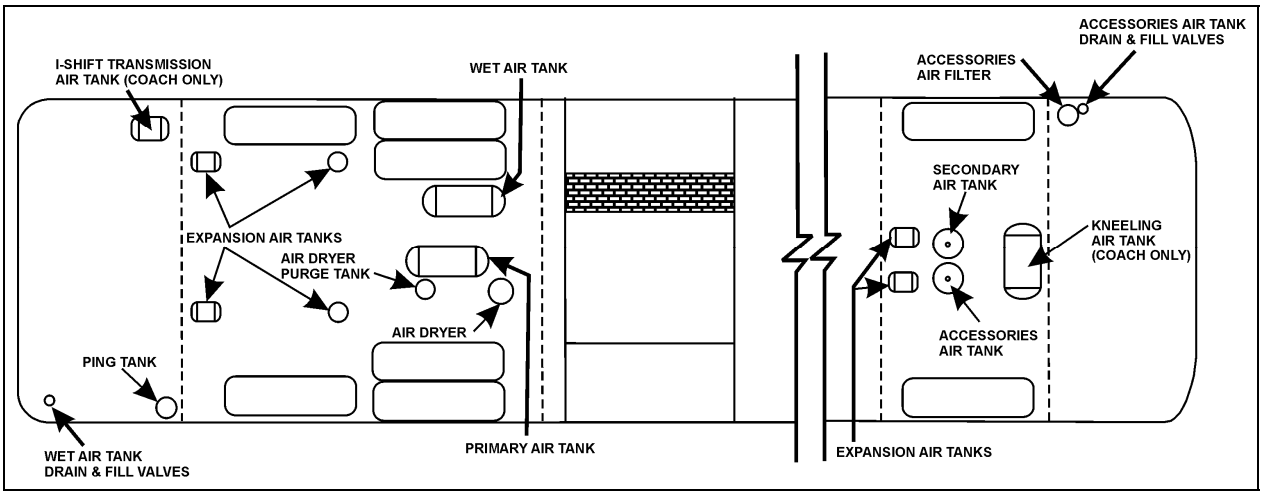

FIGURE 54: IFS AIR TANKS LOCATION

24034

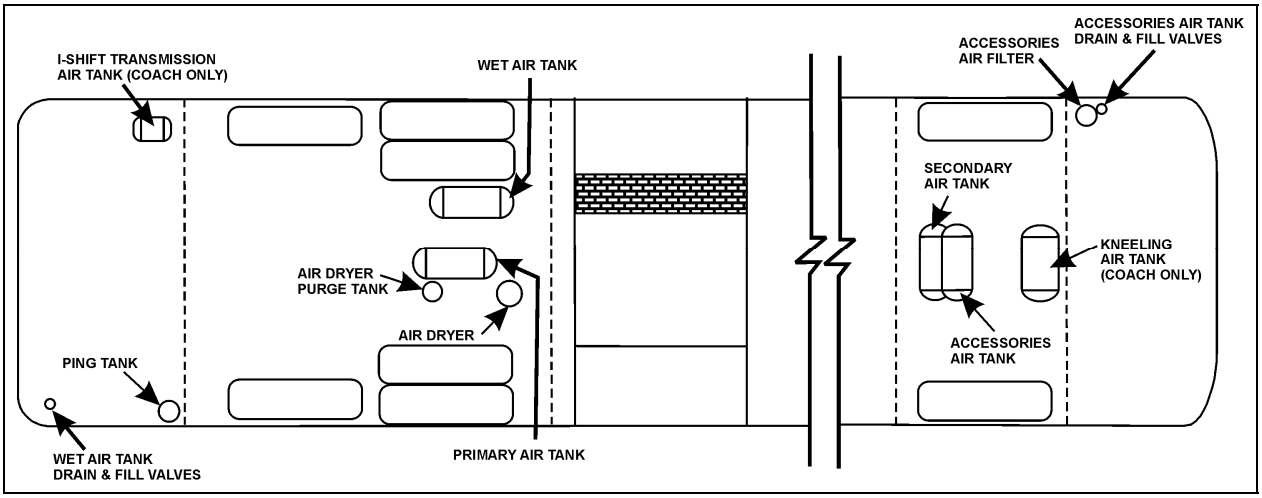

FIGURE 55: I-BEAM FRONT SUSPENSION AIR TANKS LOCATION

24035

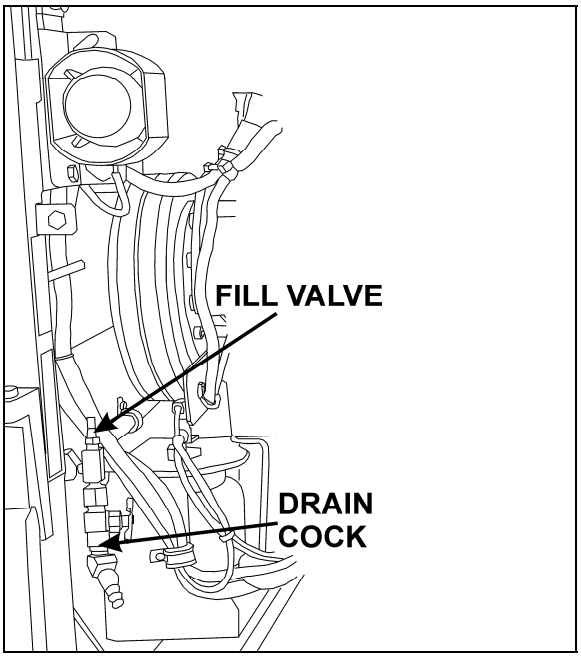

FIGURE 56: REAR VALVE LOCATION 12211

8.1.4 Accessory Air Tank

The accessory air tank is installed next to the secondary air tank. The tank may be installed vertically depending on type of front suspension and is provided with a bottom drain valve (Fig. 54 and 55).

It is recommended to purge the tank by its bottom drain valve, every 12,500 miles (20 000 km) or once a year, whichever comes first.

A remote drain valve is located in front service compartment (Fig. 57) underneath the accessory air filter. Refer to Section 12, paragraph "4. Accessory Air Filter" of the maintenance manual for daily purge procedure.

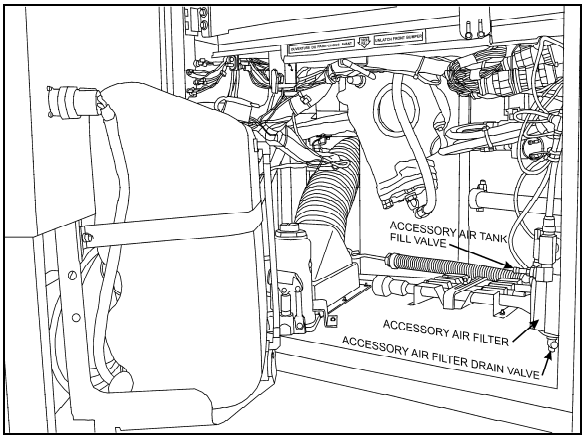

FIGURE 57: FRONT VALVE LOCATION
12210

8.1.5 Expansion Air Tank

Two expansion tanks will be installed in front wheelhousing if the IFS was chosen as an option. These air tanks are located behind secondary and accessory air tank. Also, six expansion tanks are located near rear air springs. Expansion tanks are connected in series with air springs. Expansion tanks are used to lower the stiffness of the air spring. They are provided with a bottom drain valve.

It is recommended to purge them, with all other tanks, every 12,500 miles (20 000 km) or once a year, whichever comes first.

8.2 EMERGENCY FILL VALVES

The vehicle is equipped with two air system emergency fill valves to supplement the air system when air pressure is low and engine cannot be operated.

The rear valve is located in engine compartment and accessible from engine R.H. side door (Fig. 56).

CAUTION

No other point should be used to supply air system. The maximum allowable air pressure is 125 psi (860 kPa).

The front valve is located in the front service compartment close to accessory air filter (Fig. 57).

These two air valves are fitted with the same valve stems as standard tires, and can be filled by any standard external air supply line.

The rear valve will supply air for all systems (brakes, suspension and accessories) while the front valve will supply air for accessories only.

CAUTION

Air filled through these two points will pass through the standard air filtering system provided by Prevost. Do not fill air through any other points.

9. HUB UNIT AND STEERING KNUCKLE ASSEMBLY

Refer to “DANA SPICER Service Manual General Information, Maintenance Manual Model NDS and Maintenance Manual NDS Axles” annexed to Section 10 of the maintenance manual.

10. "LEVEL LOW" LEVELING SYSTEM

X3-45 VIP & XLII Bus shells are equipped with a "LEVEL-LOW" leveling system. The purpose of the "LEVEL-LOW" is to adjust the suspension in three separate points (front, rear right and rear left air springs) in order to level the vehicle body. Three height control valves, automatically control air pressure in the three separate points (air springs) and maintain a constant vehicle height regardless of load, or load distribution. The control solenoid valve supplies air to the five way three-position air control valve, which bypasses the height control valve, and opens a passage to allow the air control and exhaust valve to release/supply air from airs springs. To improve road comfort, an expansion air tank is installed in series with each air spring.

In addition to the above suspension components the system also includes: sway bar, upper and lower A-arms, rods and shock absorbers.

NOTE
Only for preliminary adjustment, refer to figure 41. Torque rod length must be fixed to 21 17/64" (540 mm) and relay rod to 23 19/64" (592 mm).

CAUTION
Parts must be replaced by ones with the same part numbers or with equivalent parts, if replacement becomes necessary. Do not use parts of lesser quality or substitute design. Torque values must be used as specified during reassembly to assure proper retention of these parts.

The purpose of the *"level-low"* leveling system is to adjust the suspension in three separate points (front, rear right and rear left) in order to level the vehicle body. This system can be put into service when the ignition key is turned to the *"ON"* position, and must be used only when the parking brake is applied. The *"level-low"* warning light on the dashboard indicates that the selector switch is not in the *"OFF"* position. Level low system controls are located on L.H. side control panel.

10.1 PRINCIPLES OF OPERATION

DOWN:

The (front/rear right/rear left) control solenoid valve supplies air to the (front/rear right/rear left) five-way three-position air control valve, which bypasses the (front/rear right/rear left) height control valve, and opens a passage to allow the air control and exhaust valve to release air from (front/rear right/rear left) air springs.

UP:

The (front/rear right/rear left) control solenoid valve supplies air to the (front/rear right/rear left) five-way three-position air control valve, which bypasses the (front/rear right/rear left) height control valve, and opens a passage to allow the air control and exhaust valve to supply air to (front/rear right/rear left) air springs.

DRIVE:

When the ignition key is turned to the *"ON"* position with selector knob in the *"DRIVE"* position, the drive control solenoid valve supplies air to all five-way three-position air control valves, each one opening a passage to allow height control valves to accomplish their function.

When the ignition key is turned to the *"OFF"* position and selector knob to the *"DRIVE"* position, the air is entrapped between air springs and five-way three-position air control valves to ensure the adjusted level will be kept.

WARNING
Never move vehicle with selector knob in any other position than the "DRIVE" position.

10.2 MAINTENANCE

Since the kneeling action is issued from both the air system and electrical system, refer to Section: 12, *"Brake and Air System"* and Section 06, *"Electrical System*".

For diagnosis and understanding of the system, refer to wiring diagrams, and to the appropriate air system schematic diagram annexed to Section 12, *"Brake and Air System"*.

11. FRONT KNEELING SYSTEM (X3-45 COACHES 0NLY)

The kneeling system is used to lower the front of vehicle. This allows passengers to board the

vehicle with greater ease. The kneeling action is achieved by exhausting air from the front air springs (bellows). This system bypasses the height control valve to provide a fast up and down movement of the front suspension. Only seven seconds are required to lower vehicle from normal level to the lowered position, and approximately the same time to raise the vehicle back to normal level. The quick response is achieved by an auxiliary air tank installed beside the secondary air reservoir (for exact position, refer to Section 12, *"Brake and Air System").* This tank provides sufficient air supply to the kneeling system for some successive operations.

The system is provided with two safety features; first, a speed switch will enable the kneeling system to work only at less than 5 mph (8 km/h). Secondly, the parking brake is automatically applied, and a limit switch will keep it applied as long as the vehicle has not returned to a certain height where the driver will be able to manually remove the parking brake.

The purpose of the hi-buoy function in this system is to raise the front end of the vehicle to allow an extra ground clearance for particular situations. In driving condition, the height control valve is in operation and only the hi-buoy can be operated.

11.1 PRINCIPLE OF OPERATION

Refer to the air system schematic diagram annexed at the end of Section 12, *"Brake and Air System".*

DOWN (FRONT KNEELING):

Both the bellows control and bellows exhaust solenoid valves are energized, so the air control valves release air from front air springs. The height control valve is bypassed to ensure no air is forwarded to air springs while lowering the front suspension.

UP (FRONT HIGH-BUOY):

Only the bellows control solenoid valve is energized, so the air coming from the kneeling air tank is routed through air control valves, and up to front air springs.

The height control valve is bypassed until the kneeling proximity switch signals the kneeling module to cut off the bellows control solenoid valve, about 1" (25 mm) below normal ride height. The final height adjustment is achieved by the height control valve.

11.2 MAINTENANCE

Since the kneeling action is issued from both the air system and electrical system, refer to Section: 12, *"Brake and Air System"* and Section 06, *"Electrical System".*

For diagnosis and understanding of the system, refer to wiring diagrams, and to the appropriate air system schematic diagram annexed to Section 12, *"Brake and Air System".*

11.3 BELLOWS CONTROL SOLENOID VALVES

11.3.1 Removal and installation

1. On the rear side of steering compartment, locate both the bellows control and bellows exhaust solenoid valves.
2. Identify hoses and wires to ease reinstallation. Disconnect solenoid wires and the three flexible black hoses from solenoid valves.
3. Unscrew and remove the control solenoid valve and exhaust solenoid valve assembly. Place on a clean working place.

Reverse removal procedure to reinstall.

CAUTION

Any cable tie that has been cut during removal procedure should be replaced with a new one.

12. HIGH-BUOY SYSTEM (X3-45 COACHES ONLY)

The purpose of the rear high-buoy system is to raise the entire vehicle body about 4" (100 mm) in order to increase ground clearance to board a ferryboat, to jump a curb, etc. This system can be put into service during normal vehicle operation.

12.1 PRINCIPLES OF OPERATION

The rear high-buoy system is added over the front kneeling (with front high-buoy). The front end uses the same valves as the front kneeling (with front high-buoy). A solenoid valve is added to send air to the double shuttle valves for the rear end. It uses the same dash switch as the kneeling (with front high-buoy).

UP:

The air coming from the control valve flows through double shuttle valves, to supply air springs. The double shuttle valves prevent height control valves from releasing air from air springs.

DOWN:

The control valve, on the dashboard, cuts off air supply, so the double shuttle valves allow height control valves to accomplish their function. Height control valves release air from air springs until suspension returns to its normal position.

12.2 MAINTENANCE

Refer to the air system schematic diagram “Opt. Front Kneeling with Rear High-Buoy Combination” annexed at the end of this Section.

12.3 HIGH-BUOY – PRESSURE REGULATING VALVE

The regulating valve is located in the front service compartment. This valve should be adjusted to 90 psi (621 kPa).

12.3.1 Adjustment

1. Before turning on system air pressure, release jam nut (2, Fig. 58) then turn regulator adjustment counterclockwise until load is removed from the regulating spring.
2. Turn on system pressure.
3. Turn regulator adjustment clockwise until the desired outlet pressure is reached.
4. To avoid minor readjustment after making a change in pressure setting, always approach the desired pressure from a lower pressure. When reducing from a higher to a lower setting, first reduce the pressure at a lower pressure, and then increase it to the desired level of pressure.
5. Tighten jam nut (2, Fig. 58) to lock pressure setting.

12.3.2 Disassembly

1. Shut off inlet pressure and reduce pressure in inlet and outlet lines to zero. Turn regulator adjustment (1, Fig. 58) counterclockwise until all load is removed from regulating spring. Regulator can be disassembled without removal from air line.
2. Disassemble regulator in accordance with the item numbers on the exploded view.

12.3.3 Cleaning

1. Clean parts with warm water and soap. Dry parts and blow out internal passages in body using clean, dry compressed air.
2. Inspect parts. Replace those found to be damaged.

12.3.4 Reassembly

1. Lubricate O-ring (14 and 16, Fig. 58), valve stem (13, Fig. 58), tip of adjusting screw (1, Fig. 58), and the outer circumference and both sides of the thrust washer (9, Fig. 58) with a light coat of good quality O-ring grease.
2. Assemble the regulator as shown on the exploded view.

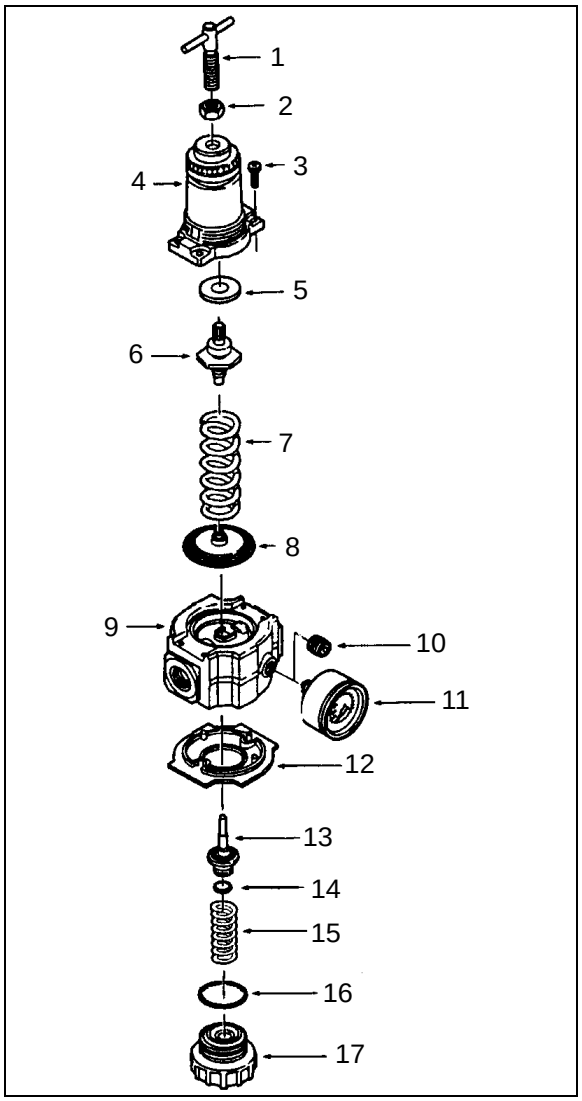

3.
4. **FIGURE 58: REGULATING VALVE** 16035

Torque Table	
Item	Torque in lbf-inch (Nm)
3 (Screw)	25-35 (2.8-3.9)
17 (Bottom plug)	20-25 (2.3-2.8)

13. LOW-BUOY SYSTEM (X3-45 COACHES ONLY)

The purpose of the low-buoy system is to lower the whole suspension by about 4” (100 mm) in order to reduce the overall height for low clearances. This system can be put into service during normal vehicle operation.

13.1 PRINCIPLES OF OPERATION

On X3 coaches, the rear low-buoy is added over the front kneeling system. The control valve on the left console panel sends an electric signal from its pressure switch to control the front suspension as if kneeling. It also removes air from a relay valve that exhausts air supply to all leveling valves and the quick release in the rear section. Air from the rear suspension can then be depleted through the check valve-quick release assembly.

Down:

The control valve, on the L.H. control panel, cuts off air supply, so air is released from air springs. A relay valve prevents height control valves from supplying air springs.

Up:

The control valve, on the L.H. control panel, supplies air to close the passage between both the delivery and supply ports. A relay valve opens and provides air springs until the suspension reaches the normal ride height.

13.2 MAINTENANCE

Refer to the air system schematic diagram “Opt. Front Kneeling with Rear Low-Buoy Combination” annexed at the end of this Section.

14. TROUBLESHOOTING

Condition	Cause	Correction
Bellows deflate over time	1. Defective check valve assembly. 2. Defective exhaust valve assembly. 3. Leak in air line and/or bellows. 4. Defective valve cover, rubber O-rings or gasket.	1. Replace check valve assembly. 2. Replace exhaust valve assembly. 3. Replace air line or bellows. 4. Replace valve cover, O-rings or gasket.
Bellows raise to full height and fail to exhaust air pressure	1. A clogged exhaust screen in height control valve assembly. 2. A combination clogged exhaust screen and defective air inlet valve assembly.	1. Remove and clean screen. 2. Clean exhaust screen and replace air inlet valve assembly.
Erratic valve action	1. Dirt or foreign matter in the air valve lever chamber. 2. Defectives valves.	1. Remove valve cover and blow out dirt. Install cover using new gasket. 2. Overhaul height control valve assembly
Vehicle body fails to level to satisfactory ride height	1. Improper height control valve overtravel lever adjustment	1. Adjust lever as directed.

15. REAR SUSPENSION TORQUE SPECIFICATIONS

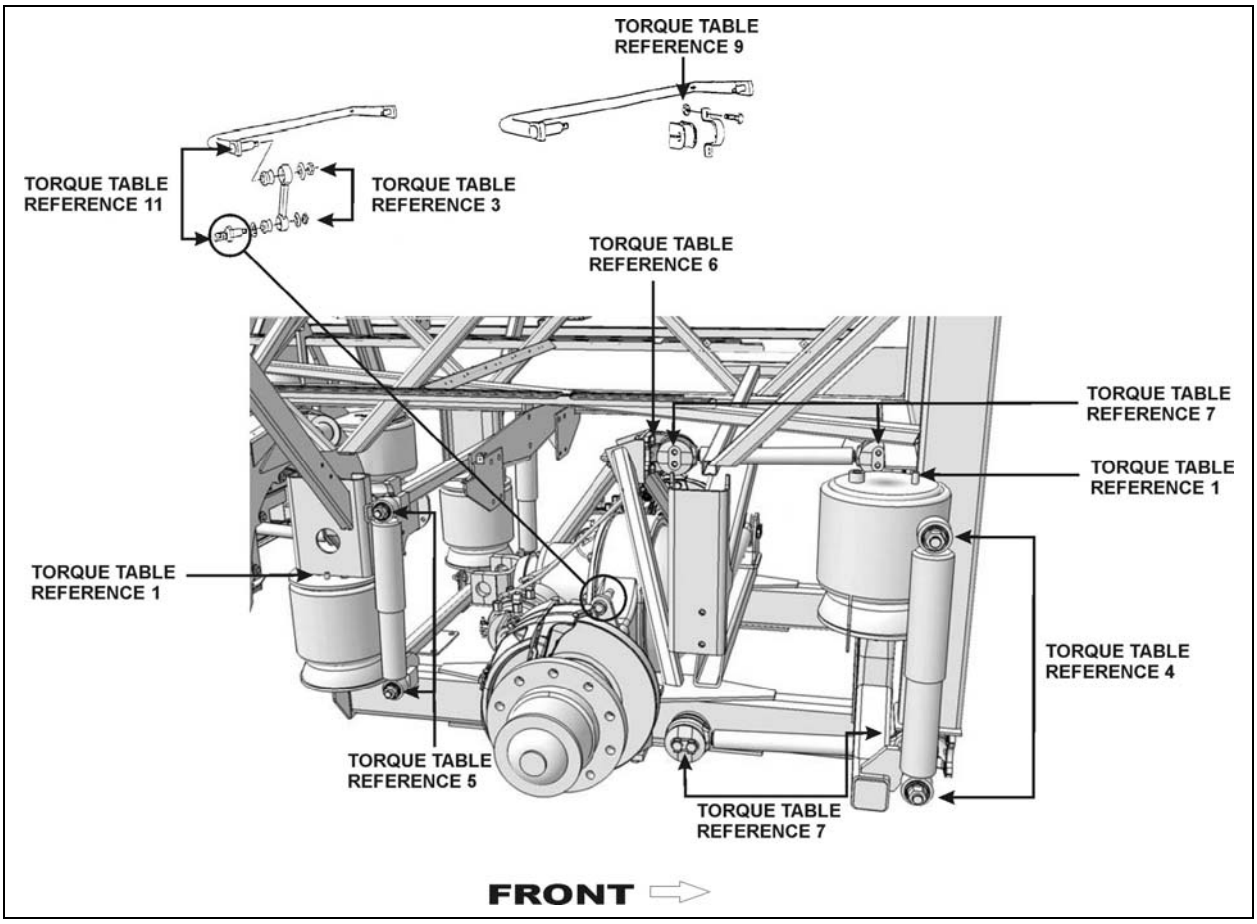

FIGURE 59: TORQUE SPECIFICATIONS – DRIVE AXLE 16158

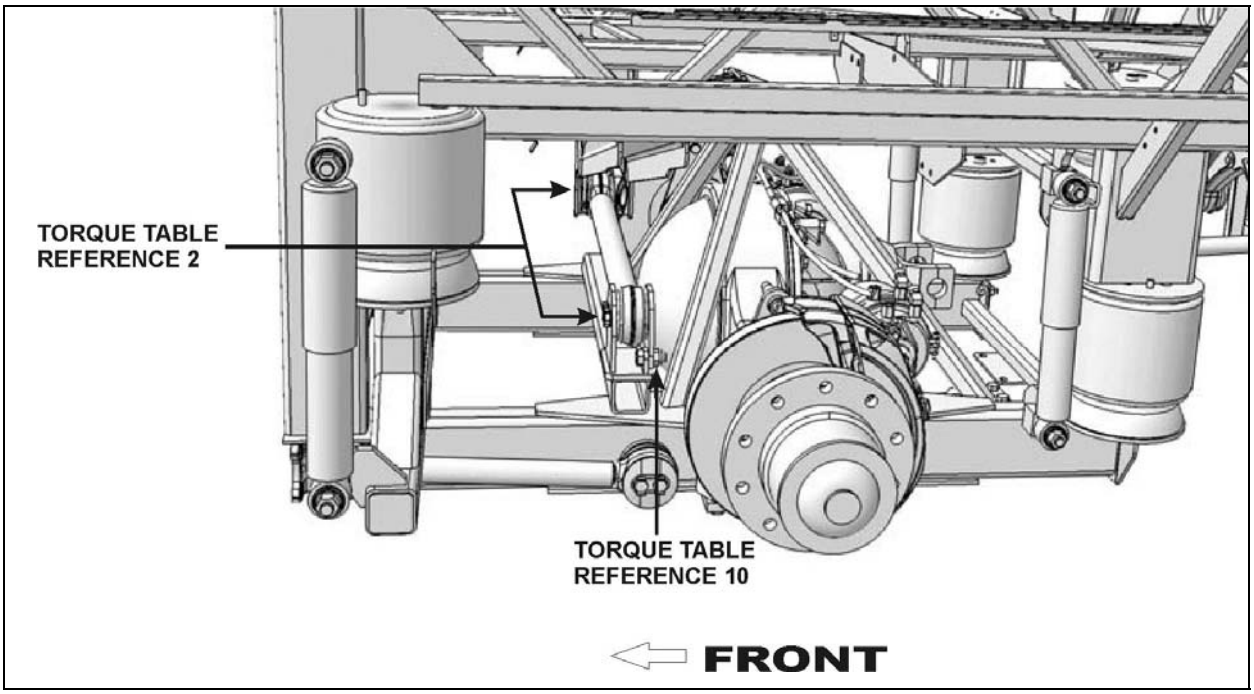

FIGURE 60: TORQUE SPECIFICATIONS – DRIVE AXLE 16159

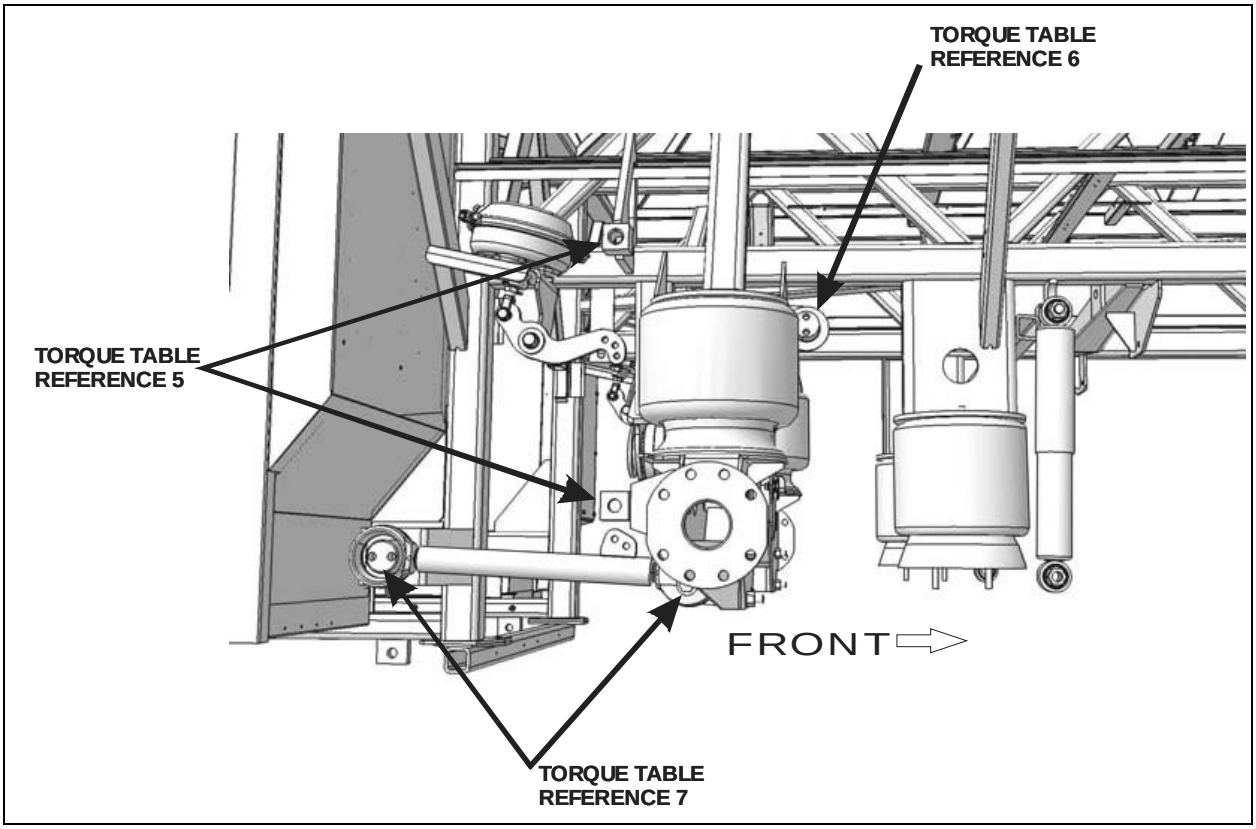

FIGURE 61: TORQUE SPECIFICATIONS – TAG AXLE 16160

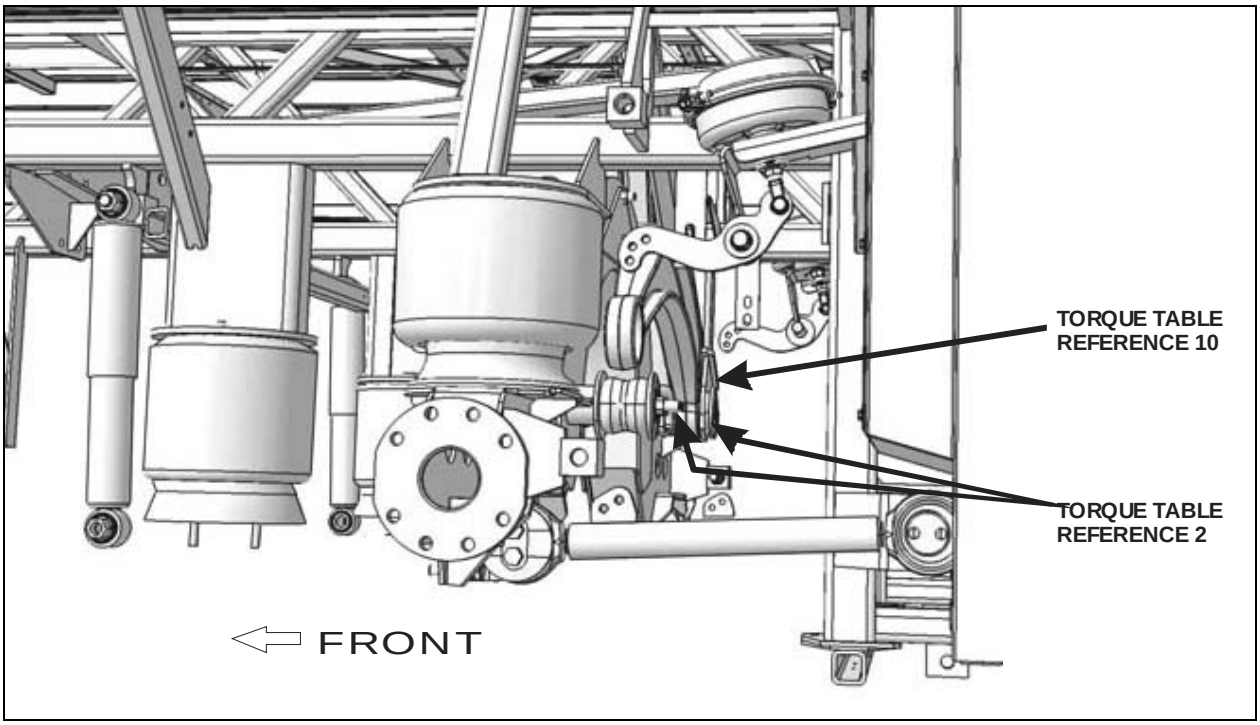

FIGURE 62: TORQUE SPECIFICATIONS – TAG AXLE 16161

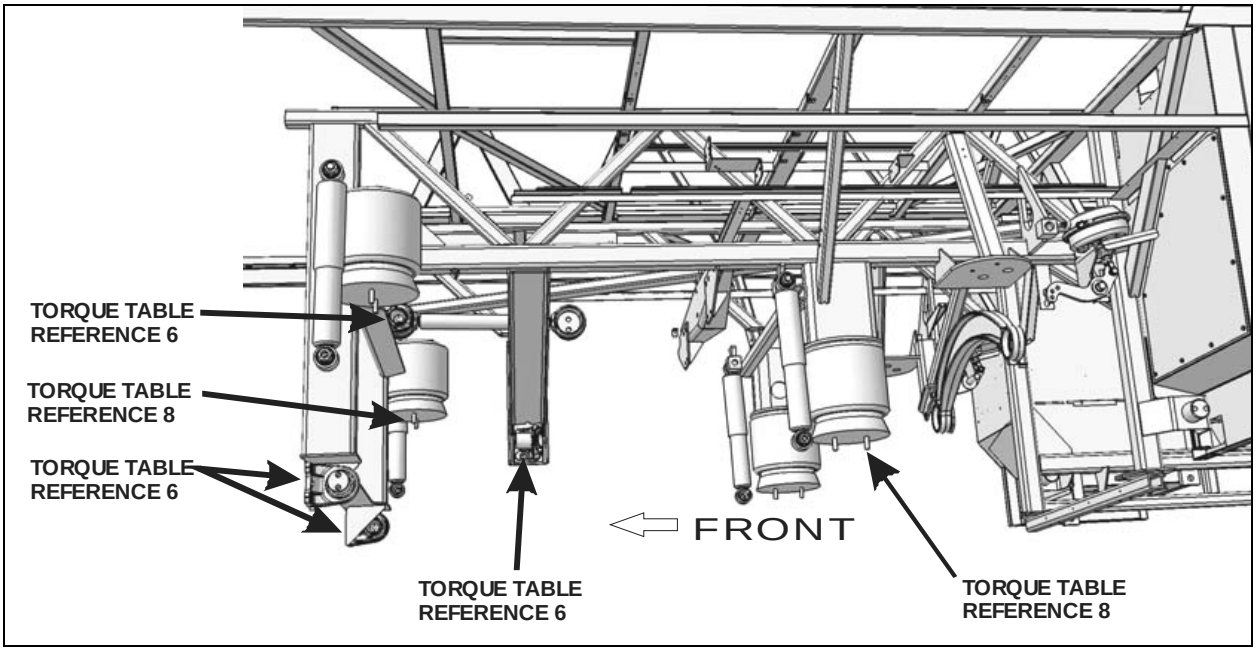

FIGURE 63: TORQUE SPECIFICATIONS – REAR SUBFRAME 16162

The following table lists the tightening torques of bolts and nuts requiring a specific torque value. When no torque specifications are indicated, use the Standard Torque Specifications table found in Section 00: General Information of the Maintenance Manual.

SPECIFIC TORQUE TABLE 3 – REAR SUSPENSION				
DESCRIPTION	**QTY**	**REFERENCE**	**TORQUE DRY** (lbf-ft / Nm)	
Air Spring Upper Stud Nut (8 air springs)	-	1	31-38	42-52
Transversal Radius Rod Retaining Bolts (Tag, drive & front axle)	-	2	140-155	190-210
Sway Bar Link Upper & Lower Nut	-	3	70-85	95-115
Shock Absorber Pin Nut (6 shock absorbers)	-	4	99-121	134-164
Shock Absorber Pin (8 shock absorbers) [1]	-	5	350-400	475-545
Radius Rod Support Nut/bolt (13 supports)	-	6	200-220	271-298
Radius Rod Retaining Bolts (10 longitudinal radius rods)	-	7	140-155	190-210
Air Spring Lower Stud Nut	-	8	31-38	42-52
Sway Bar Bushing Collar Bolt	-	9	80-100	108-136
Transversal Radius Rod Support Nut (Tag, drive & front axle)	-	10	228-252	309-342
Sway Bar Link Pin Stud	-	11	350-400	475-545

* Tighten nut to specified torque, then advance to next aligning cotter pin slot and install a new cotter pin.

NOTE
Apply corrosion-protective compound on exposed threads.

16. PARTS SPECIFICATIONS

Independent Front Suspension Air Springs

Make.....Goodyear Tire and Rubber
Model.....1400
Type .....Mae West
Diameter..... 14 inches
Air Inlet ..... 1/2''- 14 NPTF

I-Beam Front Axle and tag axle air springs

Make..... Goodyear Tire and Rubber
Model.....1200
Type ..... Mae West
Nominal diameter .....12" (304 mm)

Drive axle air springs

Make..... Goodyear Tire and Rubber
Model.....1100
Type .....Double Flare
Nominal diameter .....11.5" (292 mm)

Independent Front suspension shock absorbers

Make..... Arvin
Color.....Black
Piston Diam. .....1 5/8 inch
Collapsed length ..... 14.16 inches
Extended length ..... 22.44 inches

I-Beam Front suspension shock absorbers

Make.....Sachs
Color.....Black
Type NUV45X230HA
Ext. Diam. .....75 mm
Collapsed length .....14.88" (378 mm)
Extended length .....23.86" (606 mm)

Drive and tag axle shock absorbers

Make.....Sachs
Color.....Black
Type N45X225HA
Ext. Diam. .....75 mm
Collapsed length .....15.51" (394 mm)
Extended length .....24.37" (619 mm)

Height control valve (Front only)

Make..... Barksdale
Quantity used 1

Height control valve (Rear only)

Make .....Barksdale
Quantity.....2

Bellows control and exhaust solenoid valve assembly

Make .....Norgren

Solenoid valve manifold

Coil

Voltage..... 24 V DC
Current draw .....29 amperes

Valve (3-way, 2 positions)

Type .....N/C
Type ..... N/O

Radius rod bushing

Make .....Prevost

Loctite

Make ..... Loctite

Sway bar bushing (Front Suspension)

Make .....Prevost

Sway bar link

Make .....Tennaco Automotive

Shock absorber bushings

Make .....Monroe

Air regulator

Make .....Norgren
Recommended pressure sett. . 90 psi (621 kPa)

CONTENTS

1. VEHICLE EXTERIOR 4

2. VEHICLE STRUCTURE 5

3. VEHICLE EXTERIOR MAINTENANCE 5

3.1 CORROSION PREVENTION 5
3.2 PREVENTIVE MAINTENANCE SCHEDULE 6
3.3 RUST INHIBITOR APPLICATION 6

4. COMMON FIBERGLASS REPAIR PROCEDURE 11

4.1 REPAIR USING FIBERGLASS CLOTH 11
4.2 REPAIR USING FIBERGLASS PASTE 11
4.3 TYPICAL FIBERGLASS REPAIR PROCEDURE 12

5. COMMON PAINTING PROCEDURE 13

5.1 NEW PAINT CARE 13
5.2 PAINT TOUCHUP 13
5.3 PAINTING 14
5.3.1 Safety 14
5.3.2 Surface Preparation And Paint Application 14

6. X3-45 COACHES EXTERIOR FINISHING AND BODY REPAIR 15

6.1 ZONE 1 15
6.1.1 Front Bumper 15
6.1.2 Headlights 16
6.1.3 Rear View Mirrors (Rosco) 16
6.1.4 Windshield Wipers 18
6.1.5 Windshield 18
6.1.6 Bi-Fold Entrance Door 19
6.1.7 Front Electrical & Service Compartment Door 23
6.1.8 Front Cap 27
6.2 ZONE 2 28
6.2.1 Lateral Fixed Window 28
6.2.2 Emergency Exit Windows 29
6.2.3 Roof Escape Hatch 30
6.3 ZONE 3 32
6.3.1 Rear Cap 32
6.3.2 Engine Compartment Doors 32
6.3.3 Rear Bumper 33
6.3.4 Exhaust Aftertreatment System Access Door 33
6.4 ZONE 4 33
6.4.1 Rear Fender 34
6.4.2 Engine Compartment R. H. Side Door 34
6.4.3 Engine Radiator Door 34
6.5 ZONE 5 35
6.5.1 Baggage Compartment Doors 35
6.5.2 Baggage Compartment Floor 37
6.5.3 Evaporator Compartment Door 40
6.5.4 Condenser Compartment Door 41
6.5.5 Fuel Filler Door 41
6.6 ZONE 6 42
6.6.1 Front Fender 42

6.7 ZONE 7 42
6.7.1 X3 Smooth Side Panel Replacement Procedure 43
6.7.2 Side Crest 49
6.8 BODY PANEL AND WINDOW SPACING 50
6.9 PASSENGER SEATS 51
6.9.1 Rotating Seats 51
6.9.2 Removing Fixed Seats 51
6.9.3 Upholstery Maintenance 51
6.10 TARABUS FLOOR COVERING REPAIR OR REPLACEMENT 53
6.10.1 Front Steps Replacement Procedure 55
6.10.2 Welding Of Joint Between White Safety Strip And "Tarabus" Floor Covering 58
6.10.3 Repair Of A Welded Joint 61

7. VEHICLE JACKING POINTS 61

7.1 HYDRAULIC JACK 62

8. TOWING THE VEHICLE 62

8.1 LIFTING FROM THE FRONT 62
8.2 TOWING WITH A FRONT FLAT TIRE 64
8.3 MOVING A VEHICLE FROM THE REAR 65

ILLUSTRATIONS

FIGURE 1: X3 COACHES EXTERIOR VIEW 4
FIGURE 2: FIBERGLASS REPAIR 12
FIGURE 3: FIBERGLASS REPAIR 12
FIGURE 4: FIBERGLASS REPAIR 12
FIGURE 5: FIBERGLASS REPAIR 13
FIGURE 6: FIBERGLASS REPAIR 13
FIGURE 7: X3 COACHES ZONING 15
FIGURE 8: ZONE 1 15
FIGURE 9: FRONT BUMPER RELEASE HANDLE 16
FIGURE 10: FRONT BUMPER COMPARTMENT 16
FIGURE 11: FRONT BUMPER REMOVAL 16
FIGURE 12: REAR VIEW MIRROR (ROSCO) 16
FIGURE 13: OUTSIDE REAR-VIEW MIRROR 17
FIGURE 14: WINDSHIELD INSTALLATION USING ROPE 18
FIGURE 15: APPLICATION 0F SIKA 221 BLACK 19
FIGURE 16: ENTRANCE DOOR & WIPER CONTROL PANEL 19
FIGURE 17: ENTRANCE DOOR - VIEW FROM INSIDE 19
FIGURE 18: ENTRANCE DOOR OPERATING BUTTONS 20
FIGURE 19: ENTRANCE DOOR CONTROL SWITCH 20
FIGURE 20: ENTRANCE DOOR - VIEW FROM OUTSIDE 21
FIGURE 21: EXTERIOR UNLATCH AIR VALVE 21
FIGURE 22: INTERIOR UNLATCH AIR VALVE 21
FIGURE 23: DAMPER 22
FIGURE 24: DOOR PANEL ADJUSTMENTS 22
FIGURE 25: UPPER DOOR HINGE 23
FIGURE 26: SEAL COMPRESSION ADJUSTMENT 23
FIGURE 27: ZONE 2 28
FIGURE 28: X3-45 COACH 30
FIGURE 29: EMERGENCY EXIT WINDOW 30
FIGURE 30: ESCAPE HATCH 31
FIGURE 31: ESCAPE HATCH 32

FIGURE 32: ZONE 3 32
FIGURE 33: ENGINE COMPARTMENT DOORS 33
FIGURE 34: REAR BUMPER 33
FIGURE 35: ZONE 4 33
FIGURE 36: ENGINE COMPARTMENT R.H. SIDE DOOR 34
FIGURE 37: RADIATOR DOOR 34
FIGURE 38: ZONE 5 35
FIGURE 39: EVAPORATOR DOOR 41
FIGURE 40: CONDENSER DOOR 41
FIGURE 41: FUEL FILLER DOOR 41
FIGURE 42: ZONE 6 42
FIGURE 43: ZONE 7 42
FIGURE 44: SIDE CREST POSITIONING 49
FIGURE 45: BODY PANEL AND WINDOW SPACING (TYPICAL) 50
FIGURE 46: ARMREST 51
FIGURE 47: SEAT PEDESTAL ASSEMBLY 51
FIGURE 48: TARABUS FLOOR COVERING ADHESIVE APPLICATION 54
FIGURE 49: APPLICATION OF SIKA 221 GRAY 54
FIGURE 50: JACKING POINTS ON FRAME 62
FIGURE 51: REAR END JACKING POINTS 62
FIGURE 52: JACKING POINTS ON I-BEAM FRONT AXLE 62
FIGURE 53: JACKING POINTS ON DRIVE AXLE 62
FIGURE 54: JACKING POINTS ON TAG AXLE 62
FIGURE 55: TOW EYES UNDER VEHICLE 63
FIGURE 56: AXLE FORKS 63
FIGURE 57: FRONT TOWING AIR SUPPLY CONNECTORS 64

1. VEHICLE EXTERIOR

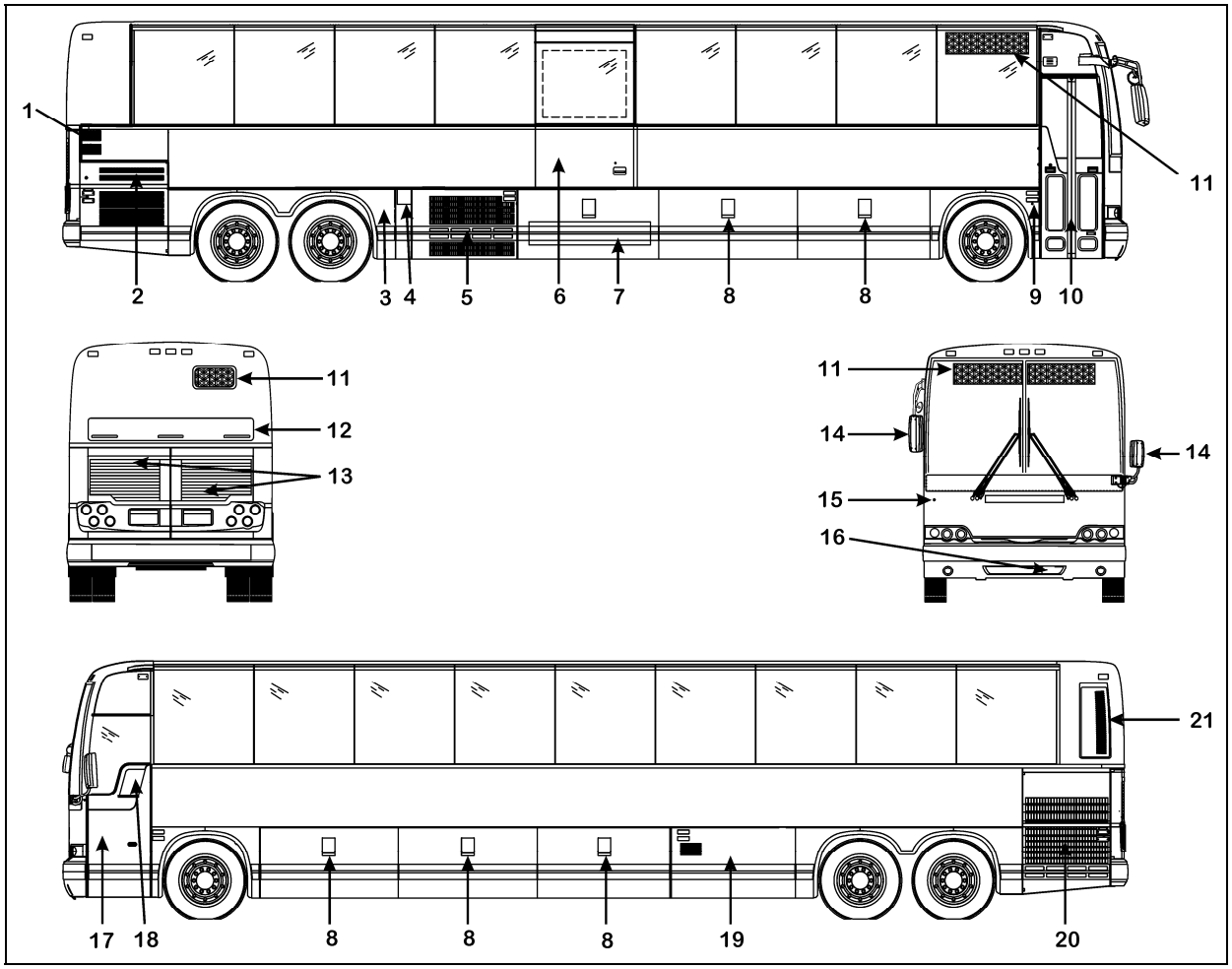

FIGURE 1: X3 COACHES EXTERIOR VIEW 18606

1. Engine air intake
2. Engine compartment curb-side door
3. Hinged rear fender
4. Fuel filler door
5. Condenser compartment
6. Wheelchair access door
7. Lift mechanism access door
8. Baggage compartment
9. Entrance door control switch
10. Bi-fold entrance door
11. Electronic destination sign or route number
12. Exhaust aftertreatment system access door
13. Engine compartment rear doors
14. Rear-view mirrors
15. Transmission retarder OFF indicator light
16. Front towing air supply connectors access door
17. Front electrical and service compartment
18. Driver’s power window
19. Evaporator compartment and engine coolant heater compartment
20. Radiator door
21. Catalytic converter access door

2. VEHICLE STRUCTURE

The body of the X3-45 coaches is an integral structure made of 14, 16 and 18 gauge welded and braced high tensile steel and stainless steel members. All stainless exterior panels are glued to anti-corrosion coated members. The complete structure is protected against corrosion prior to assembly. The front and rear caps are made of molded fiberglass. The main roof is made of high tensile aluminum panels riveted to the roof structure. The floor is made of 2 layers of ½" (13 mm) thick plywood separated by a 1/8" (3 mm) insulation to reduce power train and road noises.

Welding

Since welding is a procedure that may be carried out either as specific instructions from Prévost or by an independent decision of the owner, the following information pertaining to welding should be read before beginning any welding procedure. The prohibitions and requirements outlined below must be followed during welding procedure:

1. Welding must be done only by a qualified and experienced person.
2. Adequate ground contacts and shields must be positioned as required to protect components from damage due to heat, contact by weld splatter, arcing, or other potentially damaging events associated with welding.
3. The following precautions are to be taken to protect the electronic control components. Refer to section 00, paragraph 3: “PRECAUTIONS TO BE OBSERVED BEFORE WELDING” in this manual.
4. Always wear the appropriate safety equipment.
5. Weld in clean and well ventilated area, and always have an appropriate fire extinguisher within your reach.

3. VEHICLE EXTERIOR MAINTENANCE

Regular washing to remove dust and dirt is recommended. See *"Operator's Manual"* for more details on washing and cleaning your vehicle.

3.1 CORROSION PREVENTION

Preventive maintenance is a key factor in avoiding corrosion and must be considered as part of the regular service intervals. The entire underside of the vehicle is sprayed with a heavy application of asphalt base undercoating.

The operating environment the vehicle is subjected to will largely influence the amount of dirt and corrosion that will accumulate over a given period. Corrosion is one of the most costly factors of part failure and shortened part life. It is, however, an item that can be controlled when it is conscientiously looked after and the proper steps are taken in a timely manner.

Certain areas of the coach are more vulnerable to corrosion than others, and it is these areas that should be addressed. For example, the rear baggage compartment bulkhead in the rear wheelhousing area contains many key components and should be examined regularly for corrosion. Other areas include the front wheelhousing area and the engine compartment.

Road splash will affect undercarriage, condenser coil and engine compartment. These areas must be thoroughly cleaned to remove dirt accumulations from flanges, channels and ledges. These places accumulate dirt and salt and hold it in direct contact with steel and aluminum surfaces. Use an understructure high pressure spray as part of a regular wash. Damaged undercoating or paint should be promptly repaired before corrosion can start.

Frequency of wash periods depends on operating conditions. During periods of exposure to salt, daily washing as described above is recommended. If underbody parts show evidence of rust or corrosion, treat as follows:

1. Remove dirt, grease and oil by solvent washing.
2. Remove corrosion as well as all loose coating by cleaning with a wire brush or sandblasting.

CAUTION

Sandblasting can be used for cleaning bulkheads, brackets and other structural members. It should not be used for exterior side paneling. Extreme care should be taken not to sandblast excessively.

3. Apply correct primer, paint and undercoating after removing all corrosion to prevent further damage.

3.2 PREVENTIVE MAINTENANCE SCHEDULE

NOTE
TECTYL 185 GW rust inhibitor has been applied on your vehicle underbody, follow this procedure thoroughly. For future application of product, refer to paragraph 3.3 in this section.

DESCRIPTION	INTERVALS		MAINTENANCE	CORRECTIVE ACTION	REFERENCE
	MONTHS	KM MILES			
BODY, EXTERNAL WINDOW FRAME	6	40 000 25 000	VISUALLY INSPECT SEALING BEADS CONDITION	REPAIR OR REPLACE SEALING BEADS IF NECESSARY	
VEHICLE UNDERBODY	12	100 000 60 000	USE A LOW PRESSURE SPRAY TO CLEAN UNDER-STRUCTURE AND VISUALLY INSPECT FOR CALCIUM DEPOSIT, CORROSION OR ANY DIRT ACCUMULATED ONTO EXPOSED SURFACES. VISUALLY INSPECT SEALING BEADS CONDITION. VISUALLY INSPECT IF UNDERFLOOR IS PEALING. VISUALLY INSPECT WHEELHOUSING COATING. MAKE SURE DISCHARGE TUBES ARE FREE FROM OBSTRUCTIONS	APPLY UNDERCOATING LOCALLY AS NECESSARY. APPLY UNDERCOATING LOCALLY AS NECESSARY REMOVE ANY OBSTRUCTION OR REPLACE DEFECTIVE TUBE	
SUSPENSION AND UNDER-STRUCTURE	12	100 000 60 000	VERIFY THE CONDITION OF ALL SUSPENSION AND UNDERSTRUCTURE FASTENERS AND CLAMPS	TIGHTEN OR REPLACE DEFECTIVE OR MISSING FASTENERS	
FLOOR COVERING	3	20 000 12 500	VISUALLY INSPECT IF FLOOR COVERING IS SHOWING SIGNS OF DETERIORATION SUCH AS CUTS, BURNS, ETC. ALSO, VISUALLY INSPECT SEALANT ALONGSIDE TRACKS. INSPECT WALL PANELS FROM BOTTOM TO WINDOWS	REPAIR OR REPLACE DEFECTIVE COVERING. MAKE SURE PROPER SEALANT IS USED.	
FLOOR CLEANING			CLEAN FLOOR COVERING AS NECESSARY		

WARNING

Failure to follow this preventive maintenance schedule will result in warranty void.

3.3 RUST INHIBITOR APPLICATION

Material: Tectyl 185 GW R1KG21

Safety Rules: Use safety glasses
Supplied air hood
Solvent-resistant rubber gloves

1.0 Wash both wheelhousing mechanical parts before masking.	A water-hose nozzle is recommended. Water may be hot to reduce washing time especially during winter. If parts are soiled with oil, clean using R1KG21. Avoid rubber parts.
2.0 Dry all water sprayed parts. Surface temperature and dew point must be respected before applying rust inhibitor.	Air pressure system may be used, refer to annex 1 for surface temperature and dew point.
3.0 **Front wheelhousing** a) Mask all rubber joints. Braking system must also be protected (refer to arrows). Commercial aluminum foil may be used for masking.	
3.1 **Front wheelhousing** Front view	
3.2 **Front wheelhousing**	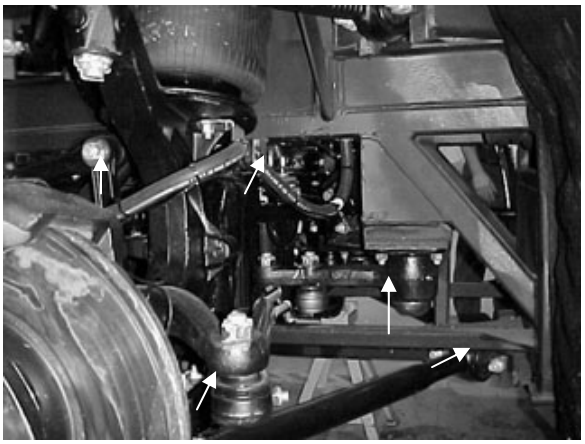

3.3 **Front wheelhousing** (Entire braking system)	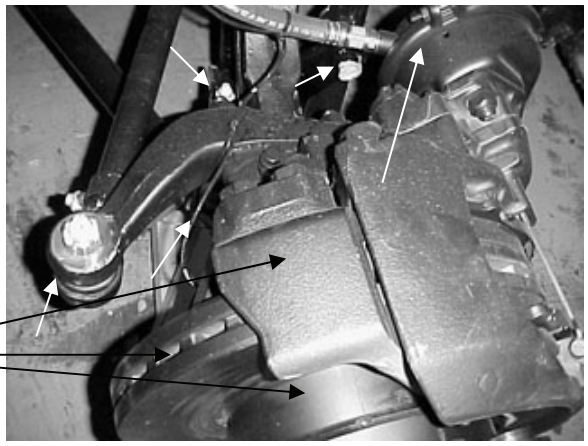
4.0 **Rear wheelhousing** a) Mask all rubber joints. Braking system must also be protected (refer to arrows). Commercial aluminum foil may be used for masking (Entire braking system)	
4.1 **Rear wheelhousing** (Entire braking system)	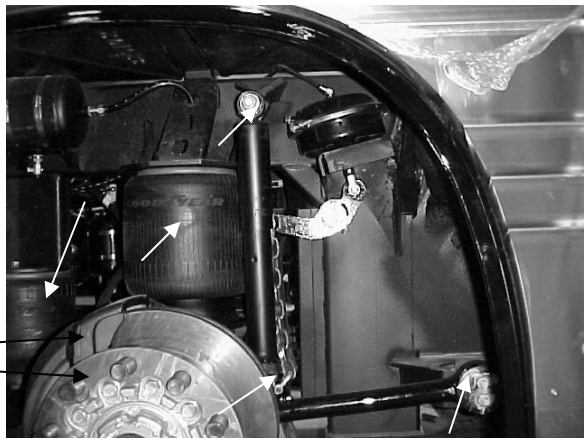

4.2 **Rear wheelhousing** (Entire braking system)	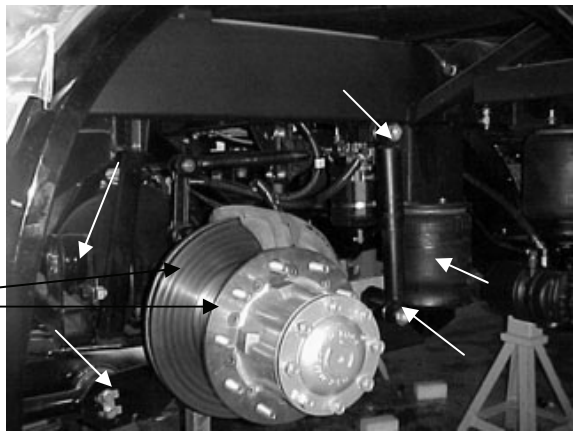
4.3 **Rear wheelhousing**	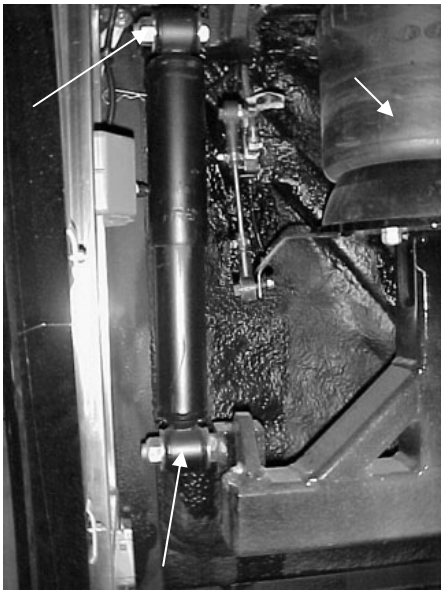
5.0 Close off wheelhousing using masking paper.	Prevent rust inhibitor from coming in contact with paint. To close off wheelhousing, a polythene sheet may be used.
6.0 Apply TECTYL 185 GW black rust inhibitor onto wheelhousing mechanical parts.	A spray gun and pumping system are required to apply the rust inhibitor. If the application is done inside a paint room, select high speed ventilation. **Minimum required thickness is 10 mils wet or 5 mils dry**.
7.0 Remove all masking material 30 minutes after application.	

ANNEX 1

1. Check and confirm that dew point and surface temperature are in accordance with to the following criteria:

   Surface temperature > 10°C

   Surface temperature > or = to dew point + 3°C

NOTE
Use the following table to determine dew point.

2. Check and confirm that TECTYL temperature is between 10°C and 35°C.

DEW POINT

	Relative Humidity (%)									
	10	20	30	40	50	60	70	80	90	100
Temp (c)										
0	---	-16	-11	-8	-5	-3	-1	0	1	3
1	---	-15	-10	-7	-5	-3	-1	1	2	4
2	---	-14	-10	-6	-4	-1	0	2	3	5
3	---	-13	-9	-5	-3	-1	1	2	4	6
4	---	-13	-8	-5	-2	0	2	4	5	7
5	---	-11	-7	-4	-1	1	3	5	6	8
6	---	-11	-8	-3	0	2	4	6	7	9
7	-18	-10	-6	-2	0	2	5	6	8	10
8	-17	-9	-5	-1	1	4	6	7	9	11
9	-16	-9	-4	-1	2	4	6	9	10	12
10	-16	-8	-3	0	3	5	7	10	11	13
11	-15	-7	-3	1	4	6	9	10	12	14
12	-14	-6	-1	2	5	7	10	11	13	15
13	-14	-6	-1	2	6	8	10	12	14	16
14	-13	-5	0	4	6	9	11	14	15	17
15	-12	-4	1	4	7	10	12	14	16	18
16	-11	-4	1	5	9	11	13	15	17	19
17	-10	-3	2	6	9	12	14	16	18	20
18	-10	-2	3	7	10	13	15	17	19	21
19	-9	-1	4	8	11	14	16	18	20	22
20	-9	0		5	9	12	15	17	19	21 23
21	-8	0		5	10	13	16	18	20	22 24
22	-7	1		6	11	14	16	19	21	23 25
23	-6	2		7	11	15	17	20	22	24 26
24	-6	2		8	12	16	19	21	23	25 27
25	-5	3		9	13	16	20	22	24	26 28
26	-4	4		10	14	17	20	23	25	27 29
27	-4	5		11	15	19	21	24	26	28 30
28	-3	6		11	16	19	22	25	27	29 31
29	-2	6		12	17	20	23	26	28	30 32
30	-1	7		13	17	21	24	27	29	31 33
31	-1	8		14	19	22	25	27	30	32 34
32	0	9		15	20	23	26	29	31	33 35

4. COMMON FIBERGLASS REPAIR PROCEDURE

All repairs to fiberglass parts consist of filling the damaged area with fiberglass cloth and resin or strand fiberglass and resin. The repair is allowed to harden, and then finishing operations may be performed. Use of the various materials is determined by the type of repair to be made. Large holes, torn sections and separate joints require the adhesive qualities of the resin and the reinforcing qualities of the fiberglass. Small dents, scratches or pits can be repaired using resin and strand fiberglass and filler mixed into paste. Instructions for either mix are explained under their respective headings in this section. For best results when making repairs, temperature should be between 70 and 75 °F (21-24 °C). Some people experience a skin reaction to resins. In such cases, wipe resin off with denatured alcohol or a good thinner. Use of protective hand cream is recommended.

WARNING

Always wear a respirator and goggles when grinding or sanding.

Extreme care must be taken if the sander is electrically operated, as dust from some resins is combustible when subjected to sparks or open flames. The proper tool for sanding resin is a low speed, air driven disc sander with a water attachment or a dry sander having a vacuum bag. Either will eliminate flying glass and resin dust.

The following additional tools and materials will assist in making repairs: hacksaw blade, assorted files, emery paper or cloth (150 or finer), scissors or tin snips, wax paper or cellophane sheets, a 3" (75 mm) paint roller, paint brush, putty knife, acetone and one or more heat lamps.

4.1 REPAIR USING FIBERGLASS CLOTH

Where necessary, sand paint away around damaged area and scrape away undercoating, if any, and wipe clean with solvent. Grind or file the damaged area to form a "V" at the broken or cracked portion. Sides of "V" should have a shallow pitch for maximum bonding area.

NOTE

Roughening the surface improves adhesion of resin.

If part is warped from original shape, use clamping equipment to straighten the surface. Preheat area to be repaired with one or two heat lamps placed 18 to 24 inches (450-610 mm) from repair.

CAUTION

Temperature should not exceed 140 °F (60 °C) during 30 minutes in order to avoid distortion.

Cut fiberglass cloth with scissors or tin snips, 1 to 3 inches (25-75 mm) larger than area to be repaired. Build area to desired height.

Mix resin and hardener following instructions on their containers. Saturate layers of fiberglass with mixture and place laminates over damaged area. Smooth out wrinkles and make sure general contour of area is maintained. Bubbles and wrinkles can be eliminated with a roller.

CAUTION

The pot life of the mix is approximately 15 minutes. Any accidental contamination to the skin, clothing, tools, etc. must be removed within this period. Use acetone to remove uncured resin.

Heat resin material again by placing heat lamps 18 to 24 inches (450-610 mm) from repaired area. Allow 12 to 15 minutes for repair to cure. After repair is cured, grind, file or sand to contour. Files other than body files may be more suitable. Featheredge and finish sanding.

If small pits or irregularities appear after making repair, correct by using a liberal amount of chopped strand or filler mixed with resin to form a paste. Refer to heading *"Repair using Fiberglass Paste"* in this section.

4.2 REPAIR USING FIBERGLASS PASTE

Fiberglass paste is used for repairing small dents, scratches, and pits. Paste is made by mixing resin, hardener and fiberglass strand or filler to the consistency of putty. Where it may be necessary, sand paint away around damaged area. On underside of coach, scrape away undercoating from damaged area, and wipe clean with solvent.

Preheat the area to be repaired using heat lamps. Mix desired quantities of resin and hardener according to manufacturer's instructions. Add powdered fiberglass strand into mixture to thicken it into a putty state.

NOTE
If repair is made on a vertical surface, adding powdered filler material to mixture will reduce tendency of hot resin to flow or run.

Apply the material with a putty knife or similar object, building material up to the desired contour. For deep filling and on vertical surfaces, several layers of material may be used.

A hacksaw blade, held flat to adjacent contour and then moved in a sawing action across the repair when the resin is in a gel state, will remove excess resin from repair. Finish repair with the same procedure as when using fiberglass cloth.

4.3 TYPICAL FIBERGLASS REPAIR PROCEDURE

Remove all loose particles or damaged material using a power sander or rasp. Clean area, overlapping hole approximately 1" to 1-½" (25-40 mm) all around. Remove all dirt, grease and paint from area to ensure good bonding surface. Feather the cleaned area all around (Fig. 4).

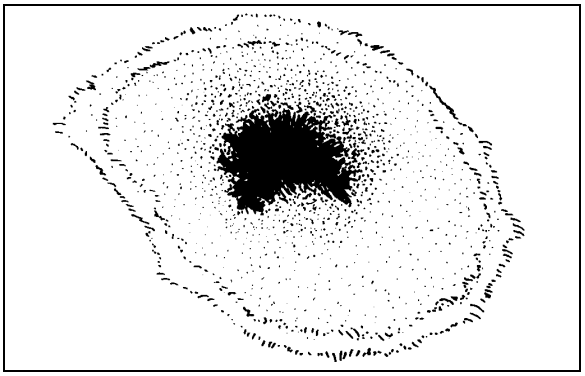

FIGURE 2: FIBERGLASS REPAIR 18089

Cut a piece of fiberglass mat slightly larger than area being repaired. Impregnate mat with general purpose polyester resin catalyzed normally. Use a clean paint brush to apply the polyester resin. Apply impregnated mat over hole and press onto surface with brush to obtain good adherence. Another coat of general purpose polyester resin can be applied at this time (Fig. 5).

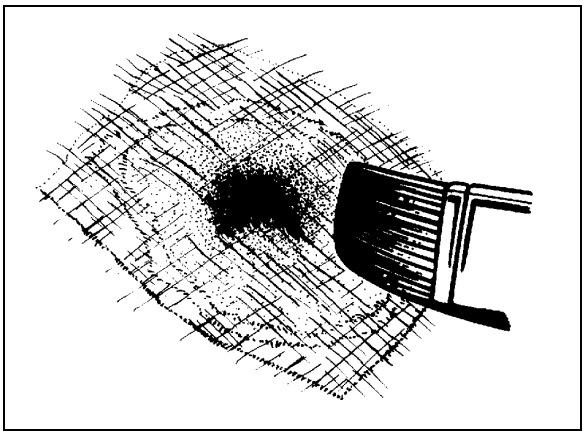

FIGURE 3: FIBERGLASS REPAIR 18090

NOTE
Remove all air between surfaces being joined. Allow area to harden and sand surface to remove any wax.

Apply another mat, followed by a cloth patch, and another mat. All layers must be thoroughly impregnated with polyester resin, brushed well and free of air. Apply more layers of mat and cloth as required until the desired strength and thickness is obtained, minimum two 1-½ oz (43 g) mats and one 9 oz (255 g) cloth (Fig. 6).

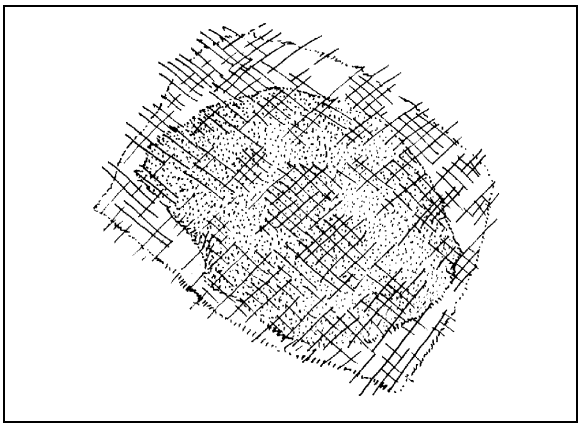

FIGURE 4: FIBERGLASS REPAIR 18091

Allow area to harden and contour the area with coarse sandpaper #100 (Fig. 7).

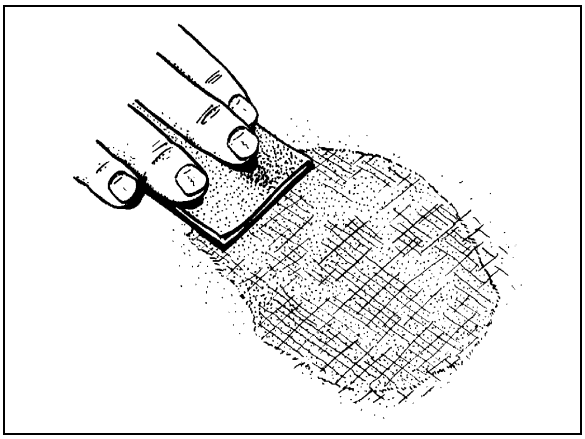

FIGURE 5: FIBERGLASS REPAIR 18092

Cover the area with a layer of resin putty and allow drying for approximately 15 to 20 minutes (Fig. 8).

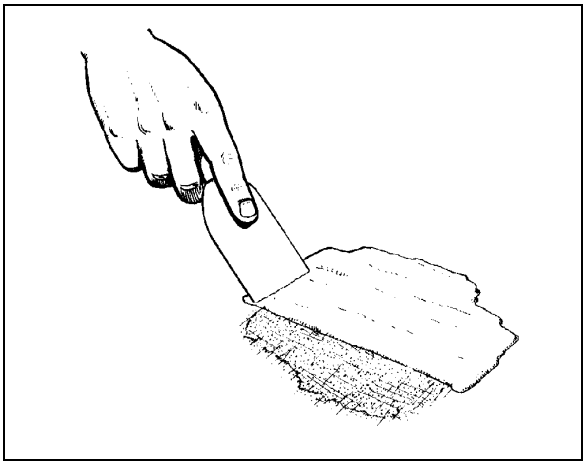

FIGURE 6: FIBERGLASS REPAIR 18093

Smooth off surface with coarse sandpaper #100 to desired shape. Further smooth surface with fine sandpaper #120 until repaired surface matches surrounding area paneling. Prime and paint the area to match surrounding paintwork.

5. COMMON PAINTING PROCEDURE

5.1 NEW PAINT CARE

Our paint supplier recommends that you follow these simple precautions the first months of your new vehicle's life.

CAUTION

Apply these recommendations after repainting vehicle.

During the first 30 days:

- Do not use a commercial bus wash. Stiff brushes or sponges could mar the finish and damage the surface. Wash the vehicle by hand only and with cool water and a very mild bus wash solution. Be careful to use only a soft cloth or sponge;
- Wash vehicle in the shade, never in direct sunlight;
- Do not "dry wipe" vehicle –always use clean water. Dry wiping could scratch the finish;
- Avoid extreme heat and cold. Park vehicle in the shade whenever possible;
- Do not park under trees which drop sap or near factories with heavy smoke fallout. Tree sap and industrial fallout may mar or spot a freshly painted surface;
- Trees are also likely to attract birds. Bird droppings are highly acidic and will damage a freshly painted surface. Bird droppings, tree sap and industrial fallout should be washed off as soon as possible;
- Do not spill oil, gasoline, antifreeze, transmission fluid or windshield solvent on new finish. IMMEDIATELY rinse off any such spill with clean water, DO NOT WIPE;
- Do not drive on gravel roads. Paint finish easily chips during the first 30 days;
- Do not scrape ice or snow from the surface. A snow scraper can act like a paint scraper if the finish is new. Brush off loose material with a soft snow brush.

During the first 90 days:

- Do not wax or polish the vehicle. This will allow the finish to dry and harden completely.

5.2 PAINT TOUCHUP

When paint touchup or partial repainting is necessary, refer to the vehicle's paint scheme for color codes and paint brand.

Prévost recommends using the original paint brand to ease color matching.

In the event you sand through to the gelcoat surface you should prime the area with Standox "Non Stop Fill Primer (ST-11000)".

If you sand through to metal surface, first prime with Standox “Etch Primer (ST-11858)” then with Standox “Non Stop Fill Primer (ST-11000)”.

CAUTION

Be sure to heed all paint manufacturer’s recommendations, especially concerning paint dilution and application.

5.3 PAINTING

The standard paint used on the exterior of the vehicle is Standox Basislack. It is a high gloss polyurethane enamel finish designed for exposure to extreme conditions. Other types of paint may be called for as options by owner but are not dealt with in this section.

5.3.1 Safety

Care should be exercised in storing, handling, mixing, and applying paint and chemicals listed in this manual. The topcoat, primer, solvent, catalysts, accelerators, and cleaners are highly volatile and/or toxic if not properly used. Observe all safety instructions marked on the different packaging, as well as the following:

1. Do not smoke in the paint room or in adjacent area exposed to residue fumes.
2. Wear respirators approved by the governing safety and health regulations.
3. Maintain adequate ventilation at all times.
4. Dispose of any leftover paint mix properly.
5. Wear rubber gloves, rubber apron, and face shield during all phases of paint and chemical handling

5.3.2 Surface Preparation And Paint Application

	Aluminum and / or Stainless Steel	Fiberglass	Comments
Surface Preparation	Sand using P-150 grit sandpaper. It is recommended to sandblast rivets and panel edges with OLIMAG 35-70 blast media.	Sand using P-180 or P-240 sandpaper.	Do not use paint remover over aluminum or fiberglass.
Cleaning	STANDOX silicone remover ST-11654 (68-2989)		
Priming	STANDOX Reactive Etch Primer ST-13908 * Wait 30 minutes then apply STANDOX Non-Stop Füllprimer ST-11000 (68-2973)	STANDOX Non-Stop Füllprimer ST-11000 (68-2973)	Refer to product Technical Data sheet for proper mixing
Basecoat	Refer to paint scheme or coach record for proper color code and paint brand. We recommend using the same paint brand to ease color matching.		Refer to product Technical Data sheet for proper mixing
Clearcoat	STANDOX 2K MS Rapid Clear ST-11760 (68-2979) Allow 16 hours for drying		Refer to product Technical Data sheet for proper mixing

If assistance or technical information on STANDOX products is needed, please dial: 1 (800) 551-9296

6. X3-45 COACHES EXTERIOR FINISHING AND BODY REPAIR

The following procedures explain the steps to be followed for proper repair, installation and replacement for various doors, panels and windows. The paragraph divides the vehicle into zones to facilitate the search; each zone is then sub-divided into components.

Refer to the appropriate zone then component for complete procedure.

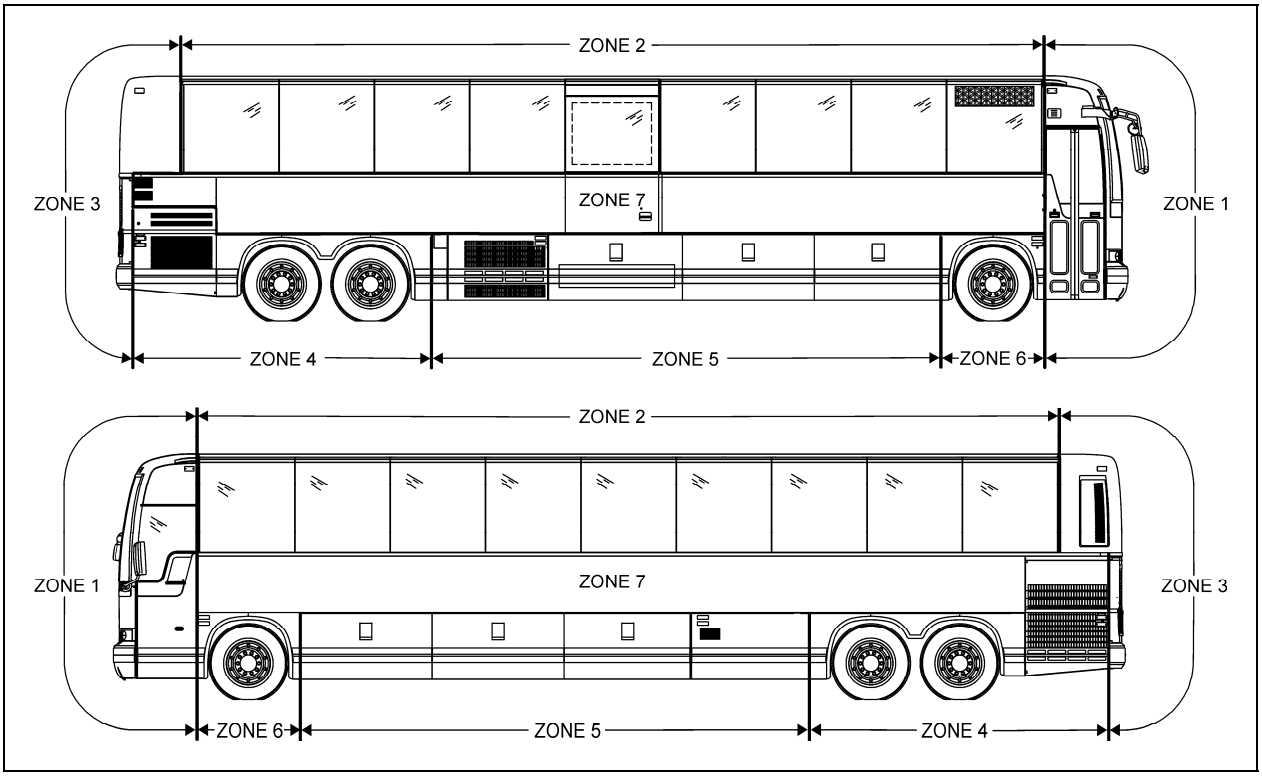

FIGURE 7: X3 COACHES ZONING 18623

6.1 ZONE 1

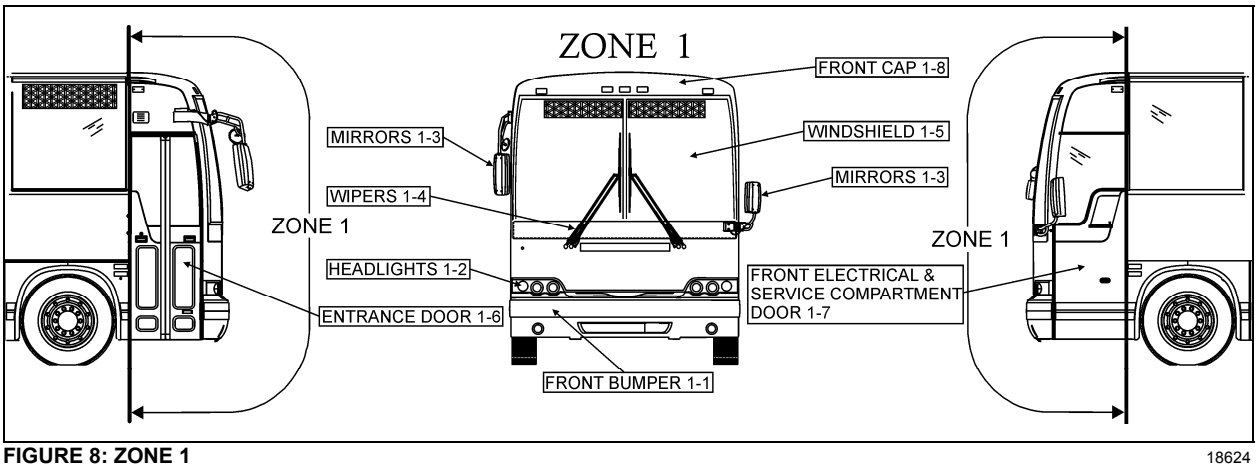

FIGURE 8: ZONE 1 18624

6.1.1 Front Bumper

The front bumper is hinged to give access to the steering gear and front towing quick connectors for maintenance purposes. Pull the handle located in the front service compartment to open the front bumper compartment. Bumper must first be tilted down before its removal. Two people are required to remove and install the front bumper. Safely support the bumper and

remove the two bolts on each bumper side to separate the bumper from the compartment door. To install bumper, reverse the removal procedure.

WARNING

Front bumper is heavy. Use proper lifting equipment to support the bumper during the removal and installation operations to avoid personal injury.

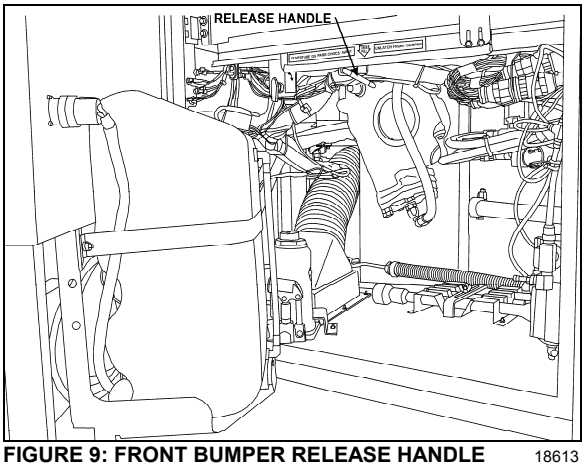

FIGURE 9: FRONT BUMPER RELEASE HANDLE 18613

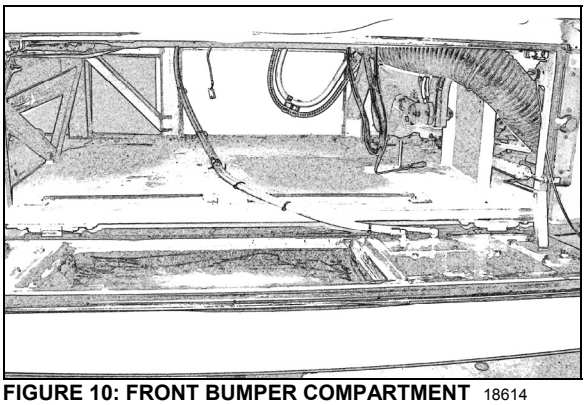

FIGURE 10: FRONT BUMPER COMPARTMENT 18614

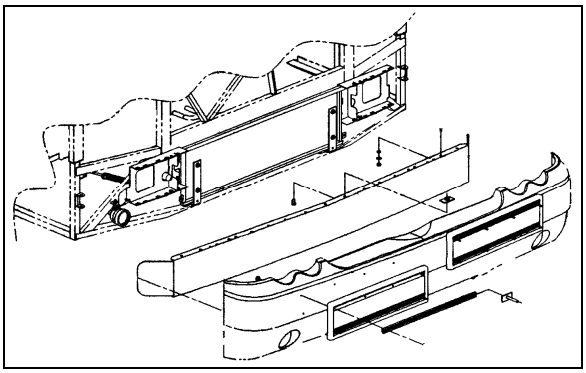

FIGURE 11: FRONT BUMPER REMOVAL 18565

6.1.2 Headlights

Refer to Paragraph Headlights, included in Section 06: Electrical of the Maintenance Manual for complete information on headlights.

6.1.3 Rear View Mirrors (Rosco)

Your vehicle is equipped with two Rosco exterior mirrors.

The mirrors can easily be adjusted by using the remote controls located on the L.H. side control panel. The mirrors have easy to replace glass in case of breakage. Remote control motors can also be replaced.

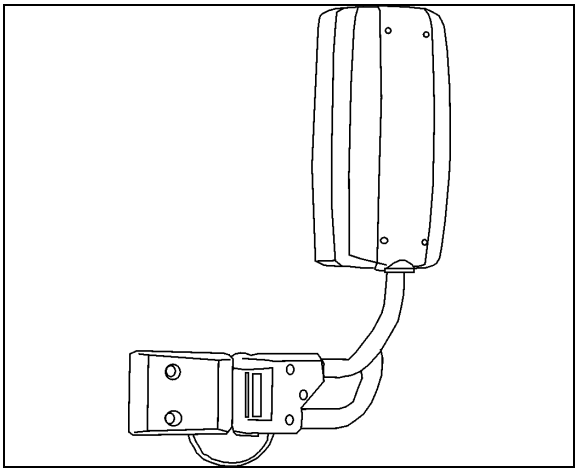

FIGURE 12: REAR VIEW MIRROR (ROSCO) 18398A

- **Adjustment**

At the base of the mirror arm, loosen the mounting bolt to swing arm in or out.

To pivot the mirror head, loosen the setscrews on each side of the ball stub at the base of the mirror head to facilitate the adjustment.

- **Disassembly**

At end of mirror arm, loosen the setscrews to relieve tension on the ball stem. Remove the ball stem from the arm.

Remove the four screws fastening the mirror arm base to the coach.

- **Assembly**

Mount the mirror arm base to the coach. Insert the ball stem into the mirror arm and tighten the socket setscrews.

NOTE
Position the ball cup halves so the joint between them lies on the centerline of the arm. Ensure that the setscrews are not on the joint between the cup halves.

- **Replacement of Mirror Glass**

Remove the broken glass.

Position new glass in mirror head and press to lock the Velcro in place.

- **Remote Controlled Rear View Mirrors**

The remote controlled external rear view mirrors attach to support arms using a pivot collar secured by setscrews. Loosening the setscrews allows the whole head assembly to turn on the support arm for initial adjustment. A mounting bolt and washer hold the arm support to the mounting bracket. The arm support can be moved to position the mirror head into or away from the coach body.

  - Mirror Control

The remote control pointer knob(s) for the mirrors is (are) mounted on the L.H. side control panel. The harness to the mirror head runs through the arm support. The remote motor is mounted to the mirror head behind the mirror glass.

Turn pointer knob to the left for mirror head adjustments and to the right for convex mirror adjustment, then push down on either of the button's (4) sides to adjust the selected mirror viewing angle.

  - Disassembly

At end of mirror arm, loosen the setscrews to relieve tension on the ball stud. Remove the ball stud. Remove the ball stud from the arm and gently pull the harness out until the connector is exposed.

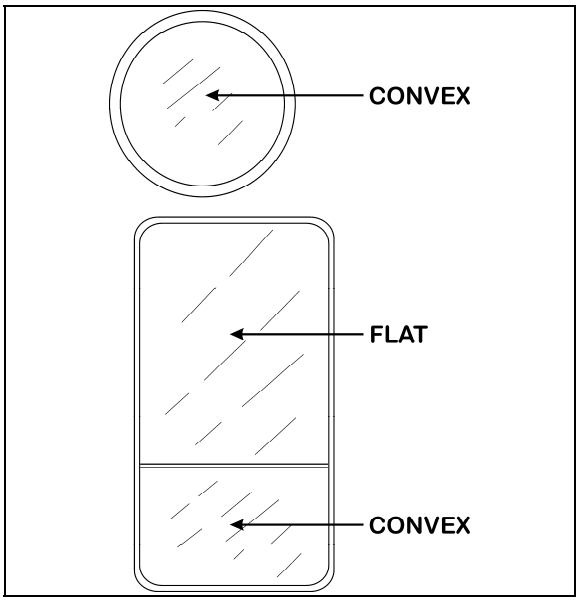

FIGURE 13: OUTSIDE REAR-VIEW MIRROR

Remove the four screws fastening the mirror arm base to the coach. Slide the harness free of the mirror arm base.

  - Assembly

Attach a stiff wire (snake) to the end of the harness and insert the wire through the mirror arm base and arm, gently pull the harness through the arm and disconnect the "snake".

Connect the mirror head harness. Insert the harness connector back into the mirror arm.
Insert the ball stud into the mirror arm and tighten the socket setscrews.

NOTE
Position the ball cup halves so the joint between them lies on the centerline of the arm. Ensure that the setscrews are not on the joint between the cup halves.

  - Convex & Flat Mirror Removal

The mirror glass assembly is mounted to the control mechanism or to mirror base with Velcro strips. Remove the mirror glass by gently pulling the lens to release the Velcro. Disconnect the heater grid at the two connectors.

Connect the connectors of the new mirror's grid to the harness. Install the lens by positioning the lens in the mirror frame and pressing to lock the Velcro in place.

6.1.4 Windshield Wipers

Refer to Paragraph 3 WINDSHIELD WIPERS AND WASHERS, included in Section 23: Accessories of the Maintenance Manual for complete information on windshield wipers.

6.1.5 Windshield

For the removal or installation of windshield, you will need:

A rope,

A plastic spatula to lift the rubber seal lip,

A metal rod or screwdriver to clean the seal groove,

A filler insertion tool,

Goggles and protective gloves.

- From inside of vehicle, remove center post and interior finishing panels surrounding the windshield. In this case, we are replacing the R.H. side windshield.
- From outside of vehicle, remove filler located inside rubber seal to ease damaged windshield removal.
- From inside of vehicle, push against the top L.H. side corner of windshield for the removal of a R.H. side windshield. If the L.H. side windshield had to be removed, you would have to push against the top R. H. side corner.

NOTE
We are referring to the L.H and R.H. side as viewed from the inside of the vehicle.

- At the same time, another person gradually lifts the rubber lip from the vehicle exterior using a plastic spatula from top to bottom.
- Remove the entire damaged windshield and broken glass if applicable.
- If applicable, using a screwdriver or metal rod, remove black butyl sealant residue from rubber seal then clean with Sika 205.

- **Windshield Installation**

NOTE
Rubber seal may have to be replaced if it was used on several windshield replacements.

- Spray rubber seal with soapy water to ease windshield insertion.
- Insert rope into rubber extrusion leaving enough length at each corner to make a loop. Spray soapy water onto rope and rubber extrusion (Fig. 14).
- Slide windshield into rubber seal groove starting with the bottom curved side edge. Using a plastic spatula, move the rubber seal lip aside to gradually insert the windshield into the groove.
- Spray soapy water on a regular basis to ease this operation.
- Using the same type of plastic spatula, repeat the same operation from inside of vehicle, gradually inserting the windshield into the groove.

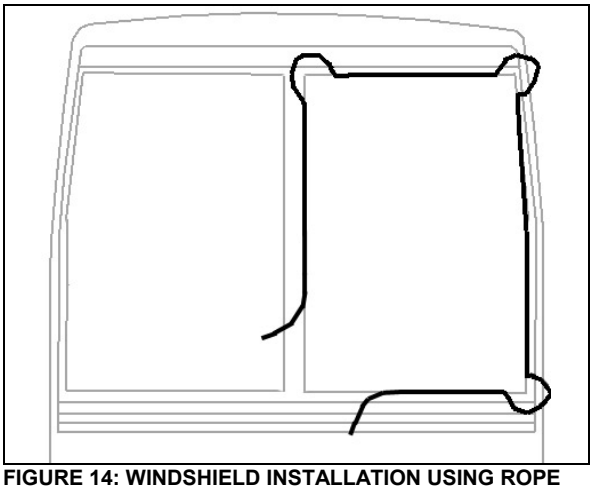

FIGURE 14: WINDSHIELD INSTALLATION USING ROPE

NOTE
Make sure windshield bottom edge is well inserted into the rubber seal groove before proceeding with the sides.

- Then, working from both sides of windshield bottom to top, gradually move the rubber seal lip aside to insert the windshield into the groove. Use also soapy water on the inside of vehicle to insert the windshield into the rubber seal groove.
- Insert the top curved corner then finish with the top of windshield.
- At the top of windshield, clean surface between fiberglass and rubber extrusion using Sika 205 (Fig. 16).
- Apply Sika 221 black between fiberglass and rubber extrusion

- Spray filler and rubber seal groove generously with soapy water.
- Using the special filler insertion tool, insert the filler into the rubber seal groove.
- Gradually insert filler into the rubber seal groove ensuring to leave a 2 inch excess length at the filler extremity.
- Every 6 inches or so, it is important to compress the filler due to its tendency to contract during drying process.
- When filler insertion is almost complete, cut filler leaving ¼" of excess length to thwart filler contraction over time then insert filler into groove.

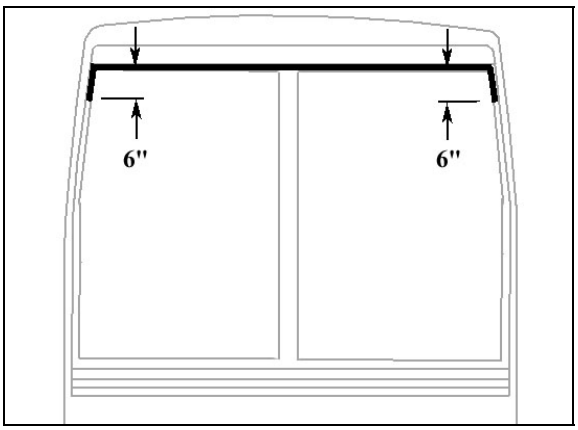

FIGURE 15: APPLICATION 0F SIKA 221 BLACK

- Reinstall center post and interior finishing panels.
- Clean windshield surface of butyl residue.

6.1.6 Bi-Fold Entrance Door

An air operated "bi-fold type" entrance door, with an air door cylinder and damper assembly installed under the right hand dash for the R.H. door panel opening. Another air door cylinder is installed behind the wall to the right of the first curb-side passengers' seat for the L.H. door panel opening. The opening and closing door speed cycle is adjustable by a damper mounted in parallel with the R.H. door panel cylinder on the door hinge. Door activation is controlled by a panel (Fig. 16), located near the defroster and wiper motors. The accessory air reservoir supplies air to this system.

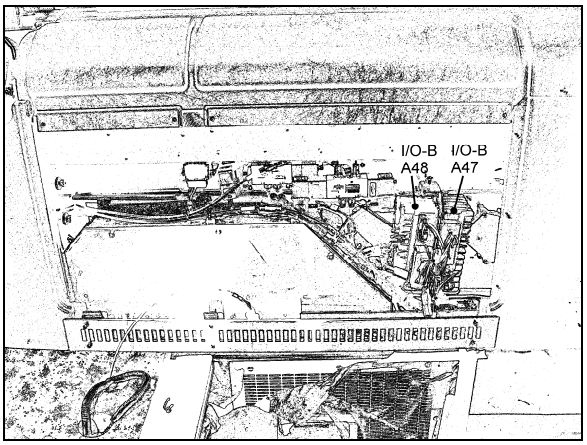

FIGURE 16: ENTRANCE DOOR & WIPER CONTROL PANEL 06619

The door is held in the closed position during coach operation by a two air cylinder locking mechanisms (Fig. 17).

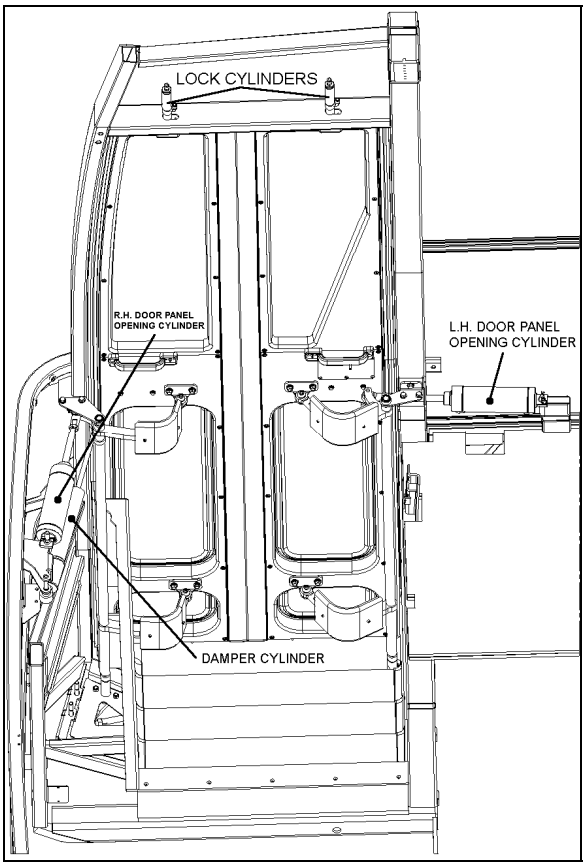

FIGURE 17: ENTRANCE DOOR - VIEW FROM INSIDE

Air cylinders with return spring in the cylinder body are used. Air cylinders are controlled by an electrically operated solenoid valve energized by a rocker switch located under the right hand dashboard.

To open the door, initial movement of the rocker switch de-energizes the air lock solenoid valve, venting the door locking cylinders. The return locking spring pulls the door lock away from the latch, unlocking the door. Door movement starts only when pressure in the central air door lock is below 10 psi. The “air cylinder open solenoid valve” opens and allows air to flow to the door cylinders, “the air cylinder close solenoid valve” exhausts air from the rod side of the cylinders.

To close the door, initial movement of the switch energizes the “air cylinder close solenoid valve” and air flows to the cylinders by their rod side ports. The “air cylinder open solenoid valve” exhausts air from cylinders. When entrance door latch is grounded with the door frame, the air lock solenoid valve is de-energized and loads the door lock cylinders. The cylinder moves the door lock in a position which engages a latch on the entrance door, holding the door positively closed.

Emergency exit valve, which opens the air valve circuit should be used only in emergencies, or when the door control system does not function properly.

Refer to the air system schematic diagram annexed at the end of section 12, “Brakes” and to page 29.1 of the wiring diagram.

- **Operation**

Lock or unlock the bi-fold entrance door from outside the vehicle by turning the key in the door lock (counterclockwise to lock, clockwise to unlock). The entrance door can be unlocked from the inside using the small lever located on the L.H. side panel.

The air-operated door is controlled from inside the coach by two push-button switches located on the R.H. dashboard.

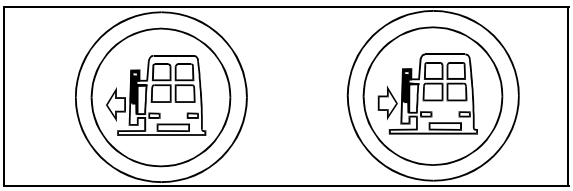

FIGURE 18: ENTRANCE DOOR OPERATING BUTTONS 06464

From the inside, open the door by pressing the door opening switch (L.H. button) on the R.H. dashboard panel. The door will open to full open position within 5 seconds.

Close by pressing and holding the door closing switch (R.H. button) on the dashboard. If the closing switch is released before the door is fully closed, the door will stop in that position.

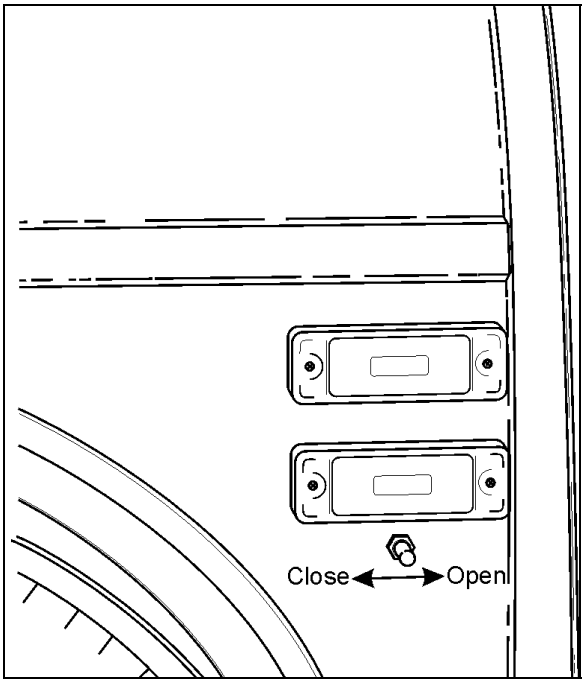

FIGURE 19: ENTRANCE DOOR CONTROL SWITCH 18599

Opening and closing of the door from outside the coach is accomplished by a momentary toggle switch located under the front R.H. side marker light (Fig. 19).

To close the door, the switch must be pushed towards the rear of the coach and held in position until the door has completed its movement. The door can be closed to any position by releasing the switch (or button, if inside) when the desired position is attained. However, the door is not locked in any position other than fully closed. The door can then be closed further by pushing or pulling on the door.

To open the door, the switch must be pushed towards the front of the coach and held in position. When the door reaches the fully opened position, the system will keep pressure in the cylinder locking the door in that position.

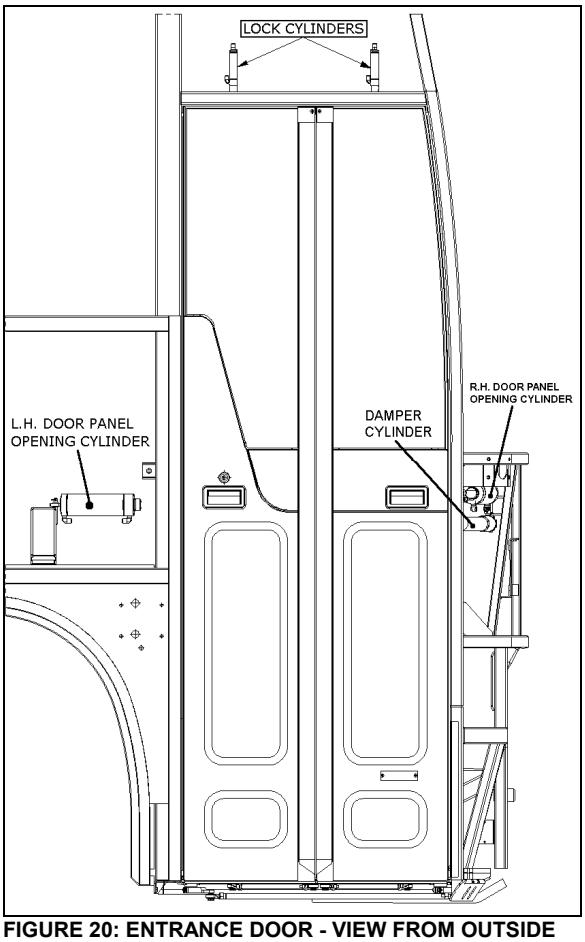

FIGURE 20: ENTRANCE DOOR - VIEW FROM OUTSIDE

- **Emergency Exit Valves**

From inside the vehicle, an emergency exit valve located on the dashboard R.H. side, releases the pressure from the lock cylinders. From the exterior, an emergency exit valve located in the front service compartment, also releases the air from the lock cylinders.

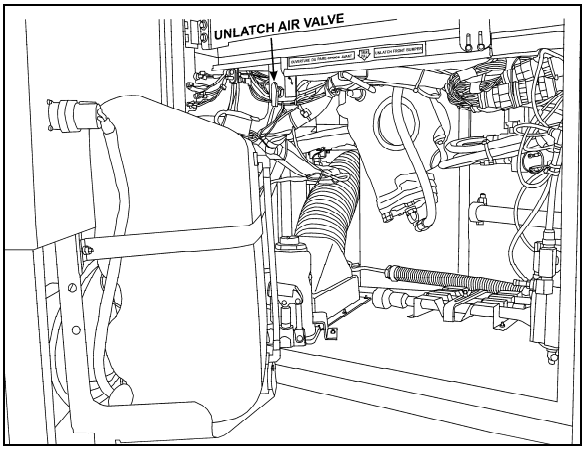

FIGURE 21: EXTERIOR UNLATCH AIR VALVE 12209

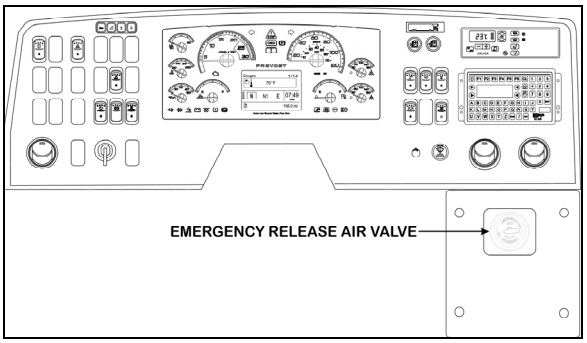

FIGURE 22: INTERIOR UNLATCH AIR VALVE 18330

Without Air and/or Without Electricity

If the air pressure drops while the coach has or hasn't any electricity, the spring loaded cylinders will unlatch the door. In such a case, unlock the door by moving the lever on the door or by using the key, then open the door manually.

With Air but Without Electricity

From inside the vehicle, turn the emergency exit valve to the "UNLOCK" position. Move the lever. From the exterior, turn the emergency exit valve to the "UNLOCK" position. Open the door. Close it, lock with the key and reset the outside emergency exit valve to the "NORMAL" position.

- **Door Cycle Speed Adjustment**

To do any adjustment, remove the panels located next to the R.H door panel hinges.

CAUTION

It is important to make sure that damper does not reach end of stroke when bi-fold entrance door is completely closed or opened. The door cylinders must stop the door on opening. Screw or unscrew rod end to adjust if necessary.

To adjust opening and closing cycle speed on damper (Fig. 23):

1. Remove the damper from the vehicle and hold it vertically with the lower eye or pin attachment in a vice. Use clamp plates to prevent damage.
2. Fully close the damper while turning the dust cap or piston rod slowly CCW until it is felt that the cams of the adjusting nut engage in the recesses of the foot valve assembly (Fig. 23).

NOTE
In figure 23, if there is an indentation (B) in the dust cap (C) and the cover shows two holes (A), the damper is fitted with a bump rubber (D). If so, fully extend the damper and insert a round bar or screwdriver through the holes. Push the bump rubber down and remove. Remove the split plastic collar (E) (if fitted) from the piston rod.

3. The damper may have already been adjusted. Therefore check whether the damper is adjusted or not by keeping it closed and gently turning further CCW, counting at the same time the half-turns until a stop is felt. Stop turning and do not force.
4. While keeping the damper closed, make two CW half-turns. In case of prior adjustment, add the number of half-turns previously counted. The total range is about five half-turns. Pull the damper out vertically without turning for at least 3/8" (1cm) to disengage the adjusting mechanism. The dust cap or piston rod may now be turned freely.
5. The damper can now be refitted in the vehicle.

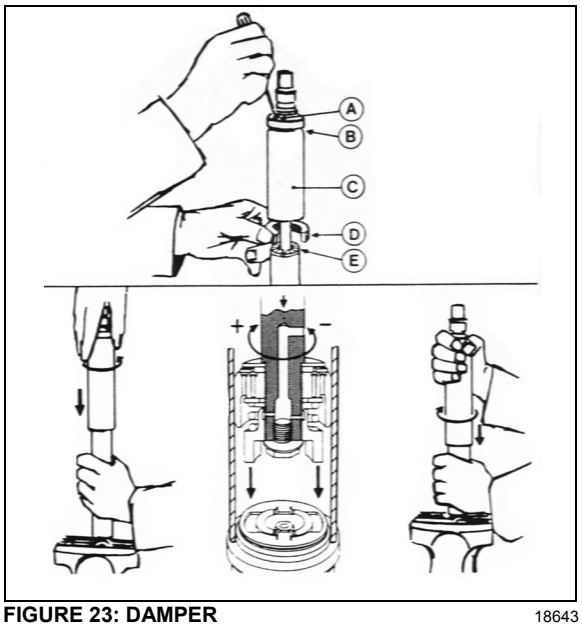

FIGURE 23: DAMPER 18643

NOTE
Where a bump rubber was installed, refit same inside the dust cap and by fully closing the damper, the rubber will seat again at top of the dust cap. Refit the split plastic collar E (Fig. 23).

6. Reinstall panels and R.H. entrance door panel hinge cover.

- **Entrance Door Panel Adjustments**

Before attempting to correct any bi-fold entrance door operating problem by adjusting any part of the air cylinder assembly, first perform the following mechanical checks and procedure.

Check around the perimeter of the door for binding. If any binding is found, adjust as follows:

- Horizontal and vertical adjustment

1. Support the door panel with a wooden block and a hydraulic jack.
2. Unfasten the bolts fixing the door panel plates. See figure 24

NOTE
Ask an assistant to help you to perform the following adjustments.

3. Adjust the door horizontally and vertically with the jack. Tighten the bolts. Remove the jack and the wooden block.

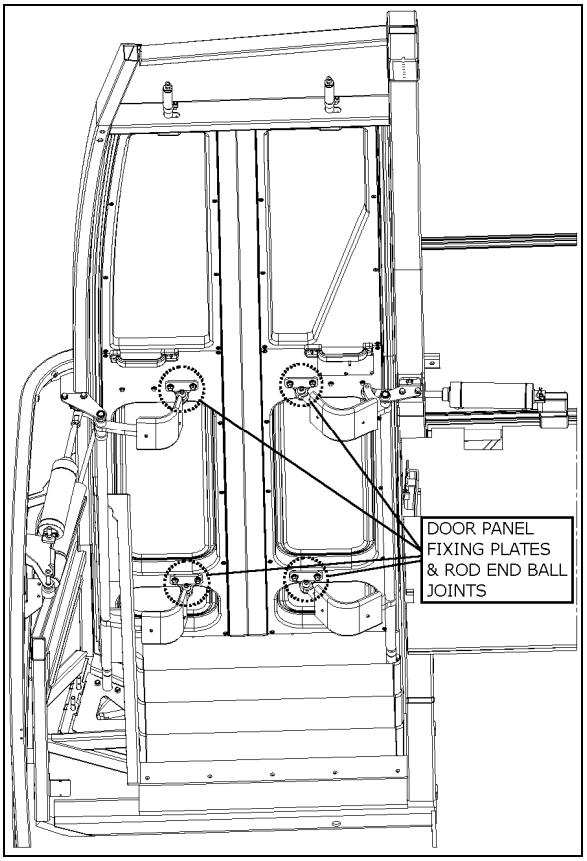

FIGURE 24: DOOR PANEL ADJUSTMENTS

- Depth adjustment

1. Support the door panel with a wooden block and a hydraulic jack.
2. Unfasten and then disconnect rod ends from door panel fixing plates. Screw or unscrew rod end in order to adjust door panel depth.
3. Tighten the bolts. Remove the jack and the wooden block

6.1.7 Front Electrical & Service Compartment Door

- **Door adjustment**

Check around the perimeter of the door for binding. If any binding is found, adjust as follows:

1. Remove the screws and the plastic molding covering each of the hinges.

NOTE
Ask an assistant to help you to perform the following adjustments.

2. Remove the Allen button head screw and the washer retaining the rod end with bearing to the upper hinge. See figure 25.
3. Support the door with a wooden block and a hydraulic jack.

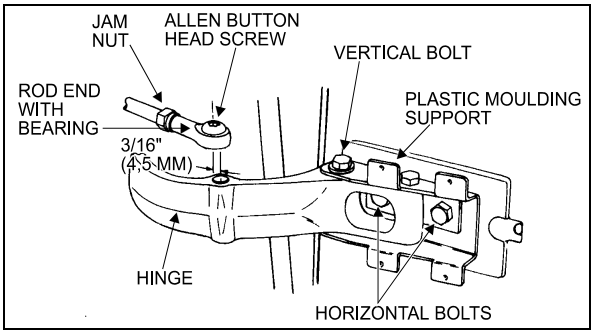

FIGURE 25: UPPER DOOR HINGE 18058

4. Loosen the horizontal bolts retaining the door to the hinges. Adjust the door horizontally and vertically with the jack. Tighten the bolts to 30-36 Lbf-ft (40-50 Nm). Remove the jack and the wooden block.

CAUTION
Make sure the front side door does not interfere with the exterior panel.

5. Pull and fasten the rod end to the hinge with the washer and the button screw.
6. Screw the plastic moldings covering the hinges.

- **Seal Compression Adjustment**

1. From the outside of vehicle, insert a straight edge in the gap along the door outside perimeter. Measure the distance between the door frame and the door outside surface at the door four corners (refer to figure 26).

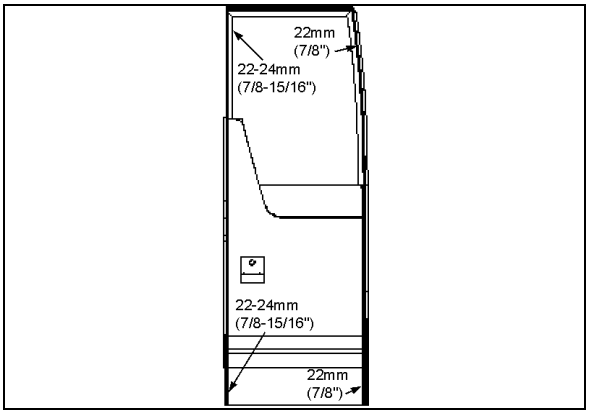

FIGURE 26: SEAL COMPRESSION ADJUSTMENT 18632

NOTE
The front measurements are the most important. If required, ask an assistant to help you to perform the following adjustments.

2. If required loosen the bolts retaining the door to the hinges. Adjust the bolts to obtain the proper seal compression.

- **Door Seal Replacement**

1. Inspect the seal; if cracked or torn, it must be replaced:
2. Remove the old seal and with a sharp edge knife, scrape tape left on the fiberglass door surface.
3. Sand the surface of the door where a new seal will be applied with 240 grit sandpaper.
4. Clean the surface with alcohol.

WARNING
Wear rubber gloves and do not smoke when cleaning.

5. Peel of protective paper from the seal. Position the seal flush with the top, sides and lower edges of the door.
6. Progress slowly all around the door.
7. Cut the seal and glue both ends with LOCTITE 414 glue.
8. To assure bonding, press a small roller on top of the new seal.

- **Lubrication**

Part	Lubricant	Frequency
Latches Upper door catch Door cylinder rod end with bearing grease fitting	Low temperature grease	Every six months
Door locking mechanism	White grease	Every six months
Key hole Damper pins Hinges	Low viscosity oil	Every six months

- **Body Panel and Window**

For the removal of front electrical & service compartment door body panel, you will need:

Pneumatic "Zip gun" type tool;

Razor sharp window scraper;

- Open service door.
- Remove interior finishing panels to access rub rail fixing bolts, then remove rub rail.
- Remove windshield washer reservoir, door lock and power window connector.
- Using the "**Zip Gun**", cut Sika bead located ¼ inch (7-8 mm) from each body panel edge.

NOTE
Wear ear plugs during this operation.

- Separate body panel from door.
- Using a razor sharp window scraper, remove from door frame Sika bead and double-face self adhesive tape residue.
- Clean door frame using anti-silicone.
- Using a scratch pad "Scotch Brite", scratch the perimeter of the door frame where the adhesive will be applied.
- Clean door frame again using anti-silicone.
- Apply some Sika 206 G+P onto door frame.

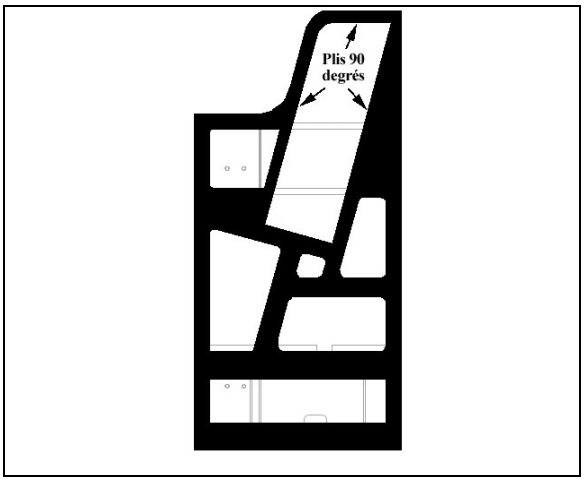

- Prepare new body panel using a scratch pad "Scotch Brite".
- Use a tack cloth to remove any dust or residue from the body panel surface.
- Clean body panel using anti-silicone.
- Apply some Sika 206 G+P onto body panel.

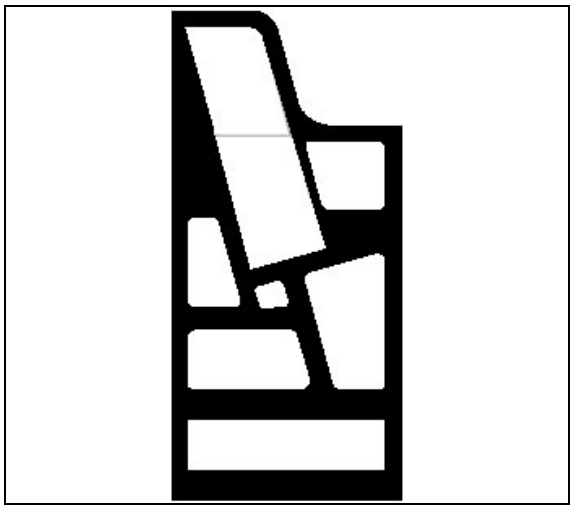

- Apply an even coat of Sika 255 onto the door frame.

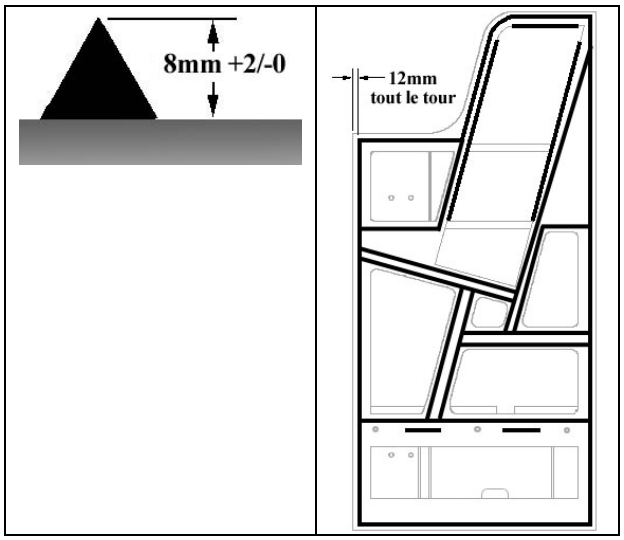

- Position body panel onto door frame and compress with your hands. Use a ruler.

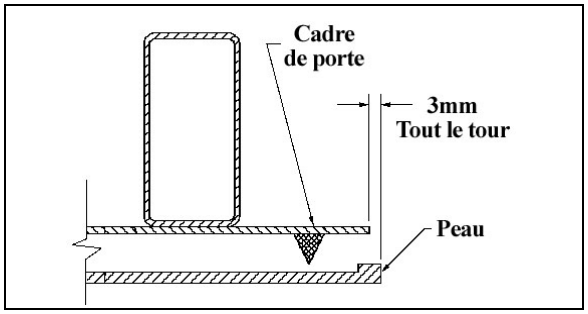

- Check body panel flatness using a 2-foot ruler (must be within 2mm).

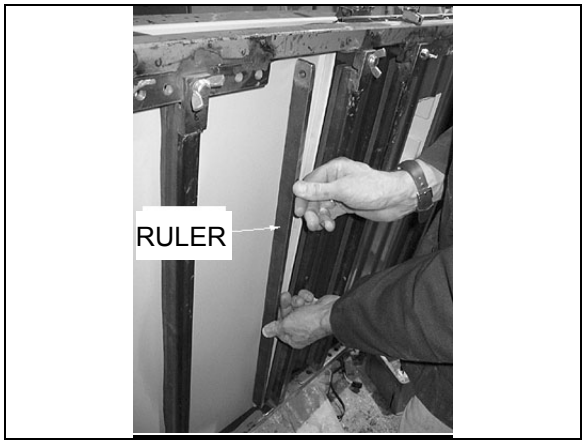

- Check proper power window sliding inside window frame.
- If applicable, remove excess of Sika adhesive all around door frame using Sika 208.
- From the inside of the door, apply some Sika 221 between door body panel and frame and on welding spots as per figure.

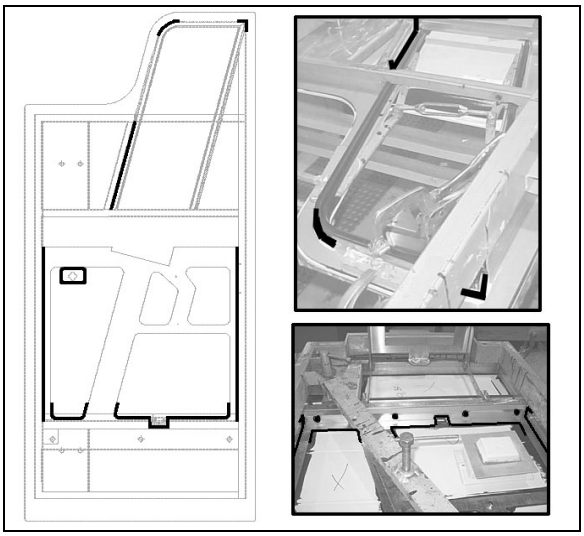

- Apply some #680066 glue inside fiber glass groove and fix power window wiper.

NOTE
Anti-friction side must be on glass side.

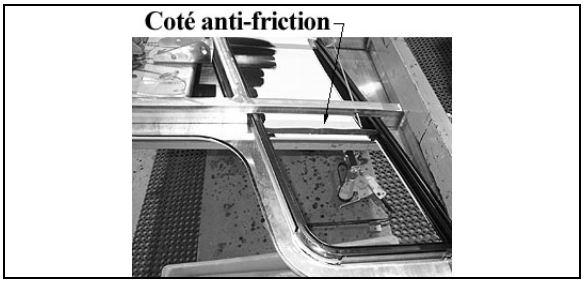

- From inside the door, apply some Sika 252 at the corners of window wiper.

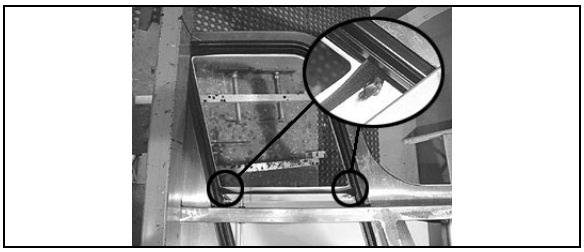

- Apply some #680066 glue inside finishing panel groove and fix power window wiper.

NOTE
Anti-friction side must be on glass side.

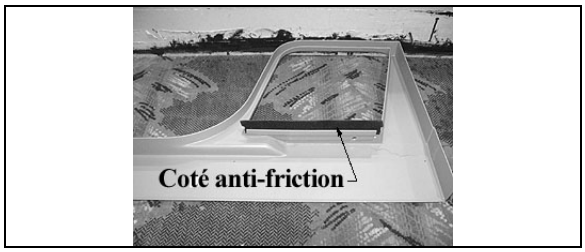

- Discard waste according to applicable environmental regulations, use dangerous waste containers.

Electrical Power Window

- Insert 2 seals in the window frame.
- Apply some #680066 glue at the intersection of the 2 seals and also sparingly in order to fix the seal to the window frame.

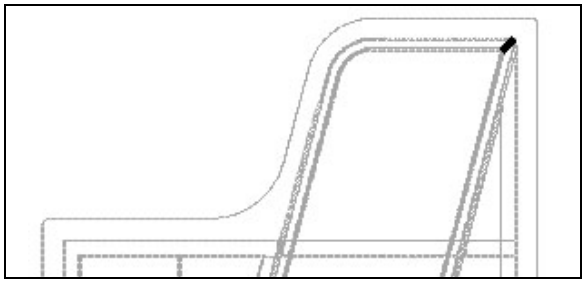

- Clean window using window cleaner.

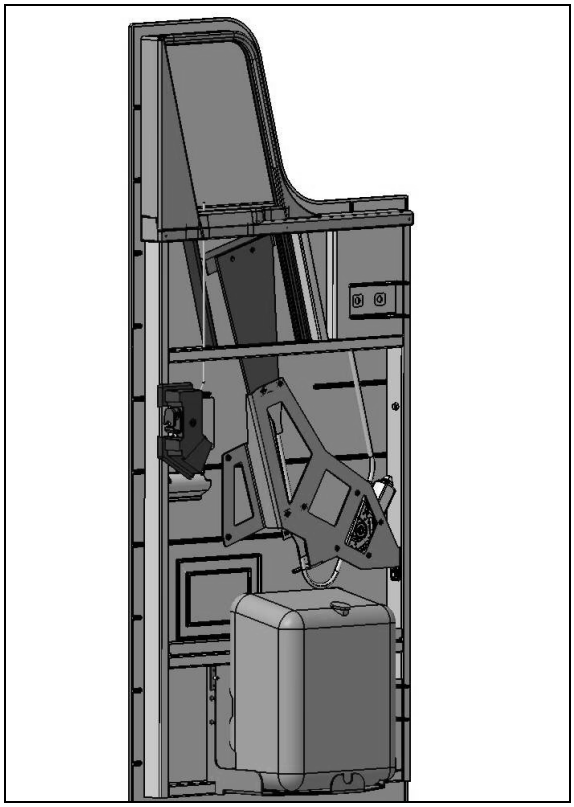

- Insert window into frame.
- Secure window pane to raising mechanism.
- Adjust window travel (6±3mm above window wiper).

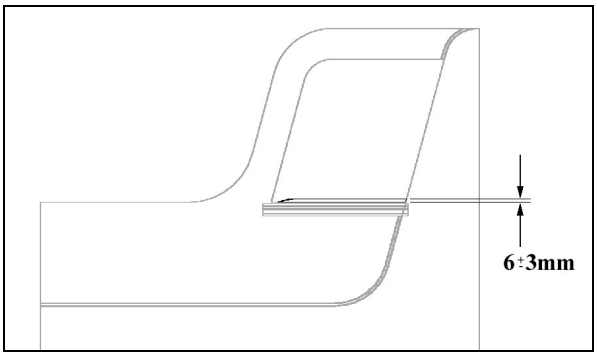

Driver's Window Gutter

- Dry fit the gutter on the vehicle. If required, straighten up gutter using a hammer and a wooden block.

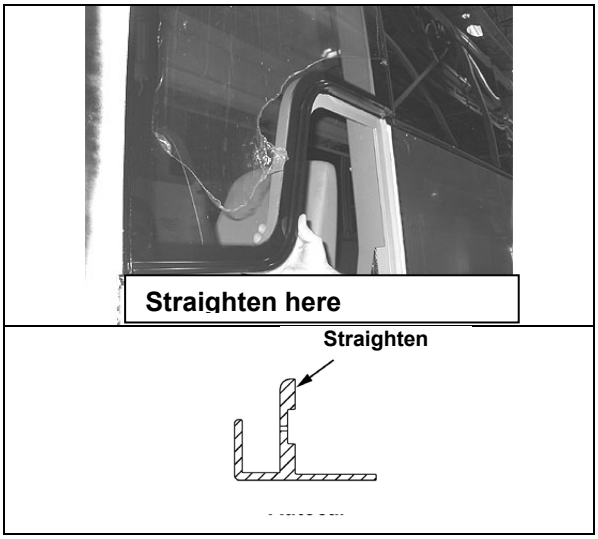

- If applicable, remove plastic film at the bottom of driver's window.
- Remove excess of Sika underneath driver's window.
- Clean bottom of driver's window using window cleaner.
- Apply Sika Aktivator at the bottom of driver's window.
- Install gutter under driver's window then compress in order to fix double face self-adhesive tape.

- Install 3 clamps and allow curing for 4 hours.

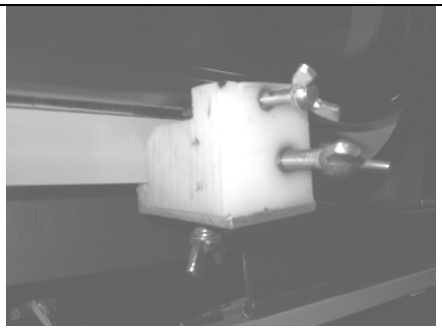

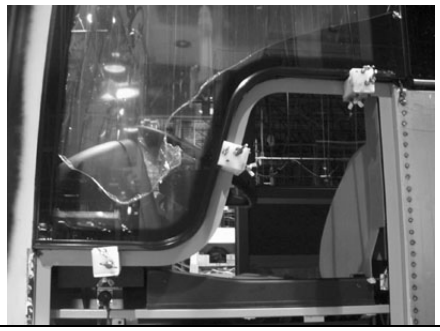

6.1.8 Front Cap

The fiberglass front cap does not need any maintenance except painting as needed. It is held in place with adhesive. If ever it has to be replaced, make an appointment at a Prévost service center near you. For minor damages, refer to section 4 "Fiberglass Repair" and section 5 "Painting".

6.2 ZONE 2

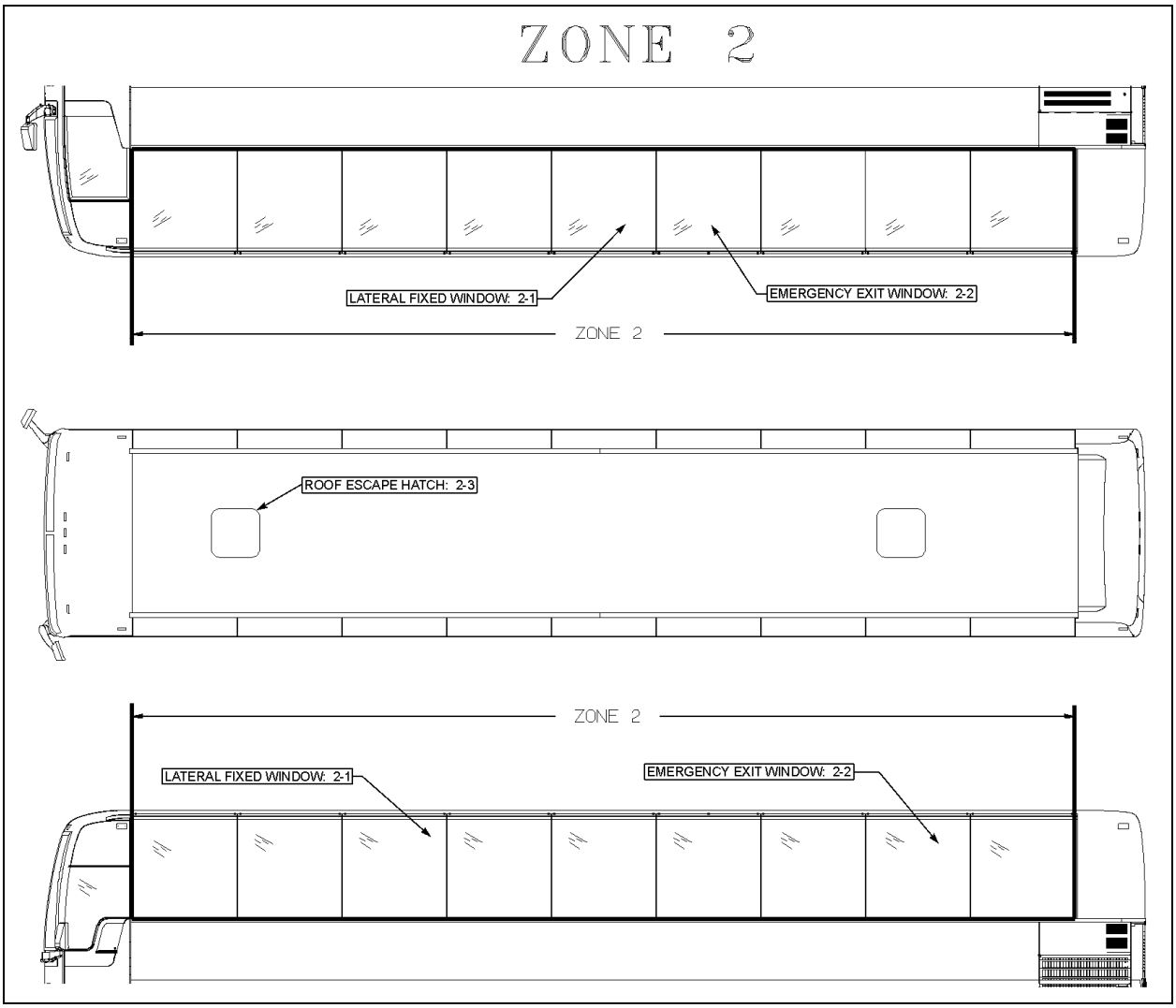

FIGURE 27: ZONE 2 18625

6.2.1 Lateral Fixed Window

Nine passenger side windows are provided on each side on X3-45. They are made of fixed, single or double-glazed, heat absorbing AS-3 glass. Windows are mounted in painted aluminum extrusions, which hold the glass in place from the top rail of the coach. The extrusion also serves as a hinge to allow the window to swing open when needed. The single-glazed windows are made of tinted tempered safety glass, while the double-glazed windows are made of tinted tempered safety glass outside and clear tempered glass inside.

For fixed side window removal or installation, you will need:

Hammer or;

Drill equipped with a sharp pointed rod into which a small hole was drilled;

Braided windshield wire and a pair of handles;

Gloves, goggles or face shield.

- **Fixed Window Removal**

  Method A

  - Apply a sticky plastic film onto window outside surface (thermos) and break window. For single pane, apply a sticky plastic film on both sides of window.

Method B

- Using a drill equipped with the special sharp pointed rod, drill through the window seal into one of the bottom corners, from a 30º angle with reference to the vehicle.
- This procedure requires accuracy and it is possible not to succeed on the first attempt. From the inside of vehicle, a second person ensures the rod passes through.
- Remove the rod, thread the wire into the small hole. Reinsert the rod and the wire into the hole far enough so that the person inside the vehicle can pull the rod using a pair of pliers.
- Attach the wire ends to the specially designed handles.
- Pull in turn from the inside and the outside of vehicle to gradually cut the Sika bead on the window perimeter.
- When you reach top corner, detach wire from the outside handle, secure it to a fish wire or rod and thread it underneath the aluminum molding behind the rivets.
- Detach wire from fish wire and continue cutting using the handle.
- Cut Sika bead until you come back to starting point, then you can remove the window by carefully pushing it out from the inside of vehicle.

- **Preparation of Structure and Installation of Window**

Preparation of Structure

- Remove old Sika adhesive.
- If primer was removed at the same time than Sika, perform the following steps:
  - Clean using anti-silicone.
  - Remove from structure old primer using a sander (120-150 grit).
  - Clean again using anti-silicone.
  - Apply 206 G+P primer.
- Reactivate 206 G+P primer.

Installation of Window

- Use window cleaner around window interior perimeter and edges to remove any oily film while inspecting for damages.
- Apply Sika Aktivator.
- Using a triangular nozzle (20mm X 10mm), apply Sika Ultrafast II onto structure.

NOTE
You only have 8 minutes to install window once the SIKA ULTRAFAST II product is applied.

- Install window.

⚠ CAUTION
To prevent damaging the Sika joint, do not raise the window once it as touched the bead.

- Before compressing window against Sika joint, install two stops into the aluminum extrusion one inch from each window edge.

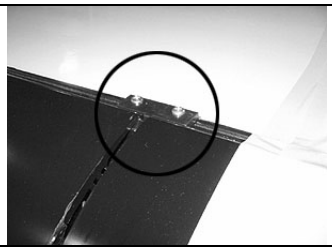

- Verify window alignment with reference to adjacent surfaces.
- Vehicle must remain stationary for 30 minutes at more than 23°C.

6.2.2 Emergency Exit Windows

Three of the windows on curb side of the X3-45 serve as emergency exits, while there are four on driver's side. See figure 28. Except for the top window side, the three other glass sides are unprotected, which causes the workers to be exceptionally careful when manipulating or installing such windows.

In addition, when it becomes necessary to lay down the unprotected edges of the glass window, never use a steel or concrete floor support. It is recommended to use a wooden support, even better, a padded surface.

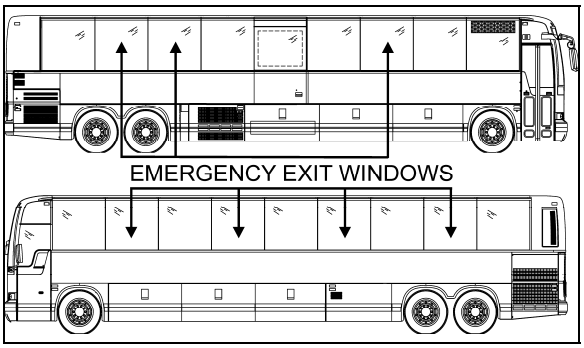

FIGURE 28: X3-45 COACH 18617

An emergency exit window can be opened by pulling the lower part of the release bar to disengage the safety latches, and then by pushing out the window frame (Fig. 29).

Emergency operating instruction decals are affixed under each emergency exit window. To close the window, pull back the window and push down the release bar.

- **Emergency Exit Release Bar**

The emergency exit release bar system is generally maintenance free. It has been designed to answer the twenty pound resistance criteria for opening the emergency window. If this handle should be replaced:

1. Remove the screws and bolts securing it to the emergency exit window;
2. Install a new release bar, reverse the procedure.

NOTE
Check the legal twenty pound maximum resistance to be sure to comply with regulations.

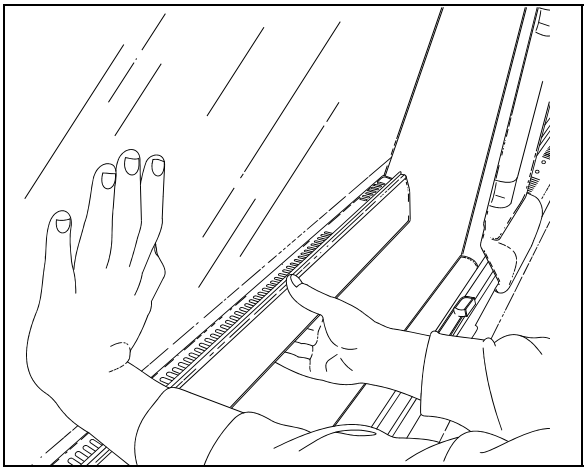

FIGURE 29: EMERGENCY EXIT WINDOW 18008

- **Emergency Exit Window Adjustment**

Emergency exit windows should be checked periodically for easy opening and closing. Pulling the lower part of the release bar with both hands placed near the safety latches should disengage both locks on the window simultaneously. The tension required to release the window should not exceed twenty pounds (9 kg) of force.

The release bar mechanism itself has been designed such as no adjustments are necessary.

If too much effort is required to disengage the locks when pulling the release bar or if the window doesn't close tightly or rattles, check for interference by foreign objects or nearby parts into mechanism, such as the microswitch, rubber seal, wires, etc. Correct situation immediately.

NOTE
Tangs on the lock must be in a horizontal position.

- **Emergency Exit Window Replacement**

1. Lift the bar release system;
2. Remove the stop blocks from the top exterior of the window.
3. Push the glass window out ninety degrees (90°).

WARNING
The window may fall out.

4. The window is free and can be unhooked.

Reverse the procedure to install a new emergency exit window.

6.2.3 Roof Escape Hatch

The vehicle is equipped with two escape hatches. The escape hatches are designed to provide years of reliable service with a minimum of maintenance. All components are rust proof, and moving parts are Teflon coated to eliminate need for lubrication. Should water infiltrate the vehicle from the escape hatch, refer to the heading "Sealing" in this paragraph for procedures on how to seal this area.

CAUTION

Use of lubricants, paints, or other coatings such as graffiti deterring sprays is not recommended.

Suggested maintenance includes periodic inspection of fasteners for evidence of loosening due to tampering, and regular cleaning with mild soap and water.

Although there are other cleaning solutions available, some contain solvents and other chemicals that can attack the high strength materials used in the production of the escape hatch.

CAUTION

Ensure that cleaning solutions are compatible with the materials used on the escape hatch.

Graffiti removing cleaners often contain acetone, ether, lacquer thinner or other solvents known to destroy the high strength properties of many plastics. Use of these cleaners must be avoided. Graffiti-resisting coatings often leave a sticky residue that interferes with smooth up/down movement of the hatch mechanism. Some of these coatings also contain solvents that will reduce the strength of certain components.

CAUTION

Use of these coatings is at considerable risk and should be avoided.

- **Repair**

All components used in the production of the escape hatch are available as service parts, except for one hinge that represents a possible hazard when improperly reattached to a hidden tapping plate, itself often damaged whenever the hinge is damaged. The tapping plate is permanently laminated between the inner and outer cover assemblies, and it cannot be inspected or replaced. It is therefore necessary to replace the entire assembly following damage to the hinge. See figure 30.

CAUTION

Hinge assembly is critical and hinge should never be removed from cover assembly. Fasteners used in this assembly are special and have critical torque requirements and tamper-resistant heads to discourage tampering.

- **Sealing**

1. Open and tilt up the escape hatch cover.
2. Join the 2 ends of the rubber seal.

CAUTION

Seal joint should be toward rear of vehicle.

3. Apply rubber adhesive CA-40 (Prévost # 681285) in the gap between the seal ends.
4. Apply Sikaflex 221 sealant (Prévost # 680532) along the outline of the escape hatch on the roof of vehicle.

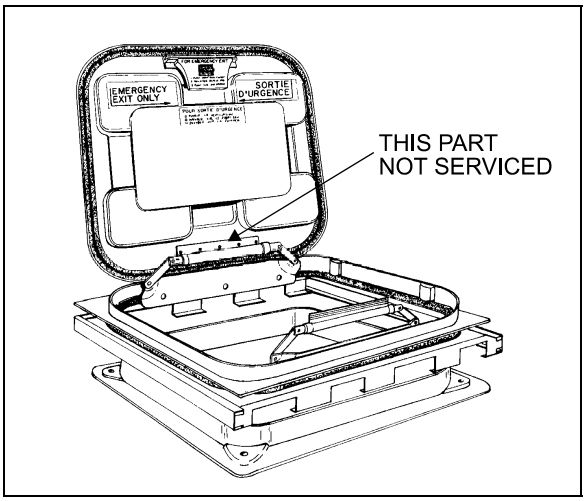

FIGURE 30: ESCAPE HATCH 18104

- **Escape Hatch Panel Assembly**

The frame of the escape hatch is riveted to the roof of the vehicle. The escape hatch panel assembly can be replaced as a unit and a new panel assembly installed in the existing frame. To remove the panel assembly, remove the 4 bolts fastening the 2 hinges to the escape hatch frame and retain the 4 flat washers. Reinstall the panel assembly by fastening the 2 hinges with the 4 bolts and flat washers removed earlier.

CAUTION

When installing, roof escape hatch's hinge must be toward the front of vehicle, to prevent the hatch from being ripped out if accidentally opened while vehicle is running.

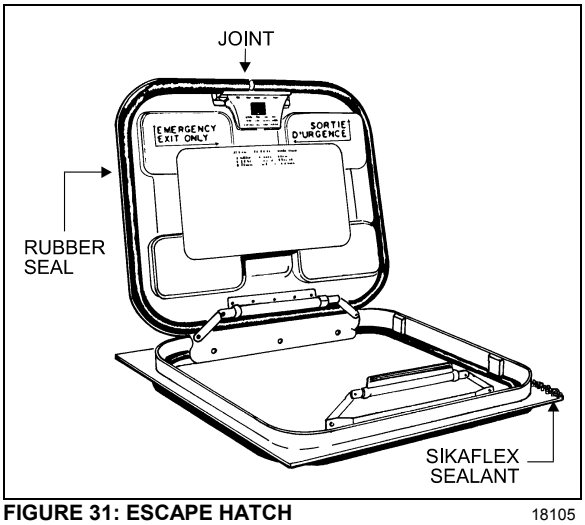

FIGURE 31: ESCAPE HATCH 18105

- **Escape Hatch Frame**

When necessary, the escape hatch frame can be removed and replaced in the following way:

1. Support the frame from inside the vehicle.
2. Remove rivets.
3. Cut the rubber seal with a sharp edge knife and remove the hatch frame.
4. On vehicle top, using the knife, remove as much as possible the remaining rubber seal.
5. Drill holes (if needed) in the new metal frame.
6. Clean both vehicle top and new hatch frame with SIKA 205.
7. Apply rubber adhesive SIKA 221 under the hatch frame surface.
8. Install the frame in place and fix it with rivets.
9. Remove excess adhesive and clean all around.

6.3 ZONE 3

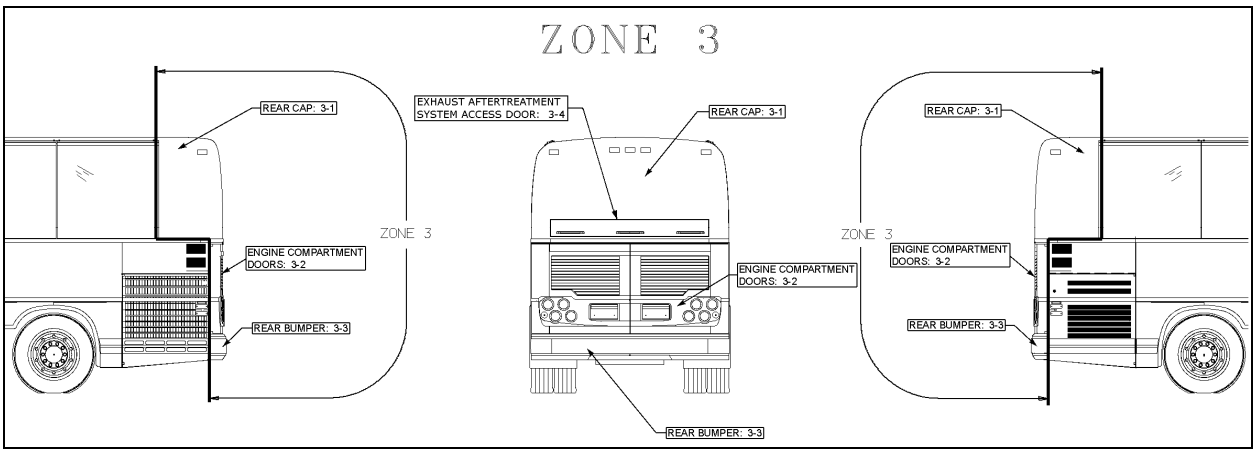

FIGURE 32: ZONE 3 18626

6.3.1 Rear Cap

The fiberglass rear cap does not need any maintenance except painting as needed. It is held in place with adhesive. If ever it has to be replaced, make an appointment at a Prévost service center near you. For minor damages, refer to Paragraph 4 "Common Fiberglass Repair Procedure" and Paragraph 5 "Common Painting Procedure".

6.3.2 Engine Compartment Doors

Engine compartment doors may be adjusted for proper fit by untightening hinge bolts:

1. Loosen the bolts, (1, 2 Fig. 33) holding the hinge to the vehicle structure to shift the door "UP or DOWN".
2. Loosening the bolts (3, Fig. 33) allows the door to be shifted "LEFT or RIGHT" and "IN or OUT".

3. Adjust the doors position depending on the gap needed between exterior finishing panels.
4. Tighten the bolts.
5. Check that the doors swing freely and close properly. It may be necessary to adjust the door latch to get proper fit and operation.

To adjust the latch mechanism (4, Fig. 33) and the striker pin:

1. Open the doors to access the striker pin.
2. Slightly loosen the striker pin.
3. Using a hammer, adjust the striker pin to center it in the door latch mechanism.
4. Tighten the striker pin.
5. Check doors fit and operation.

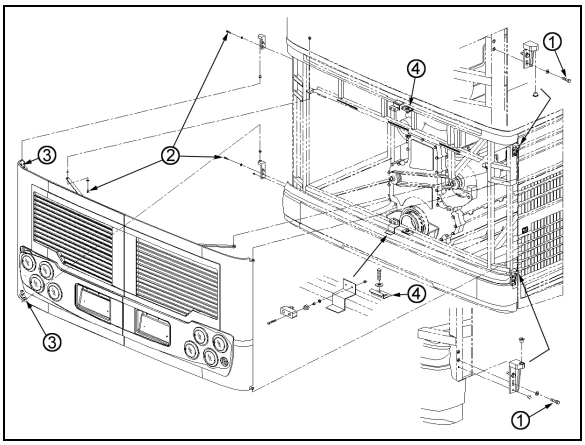

FIGURE 33: ENGINE COMPARTMENT DOORS 18633

6.3.3 Rear Bumper

Remove three bolts on each side holding bumper to vehicle and remove bumper.

To install bumper, reverse the procedure.

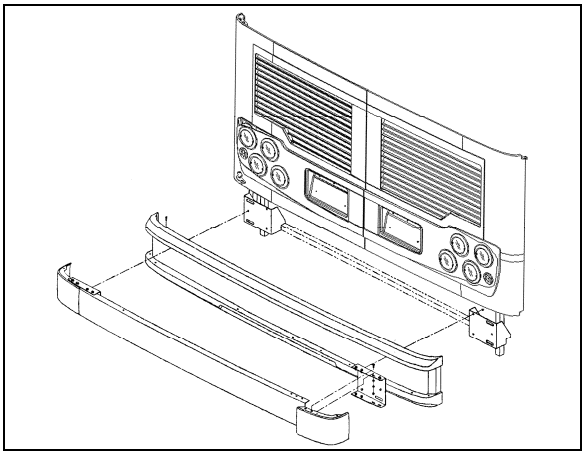

FIGURE 34: REAR BUMPER 18634

6.3.4 Exhaust Aftertreatment System Access Door

1. Open exhaust aftertreatment system access door.
2. Loosen the screws holding the panel to hinge assembly.
3. Adjust the door position according to distance required between exterior finishing parts.
4. Tighten the nuts.
5. Check that the door swings freely and closes properly.

6.4 ZONE 4

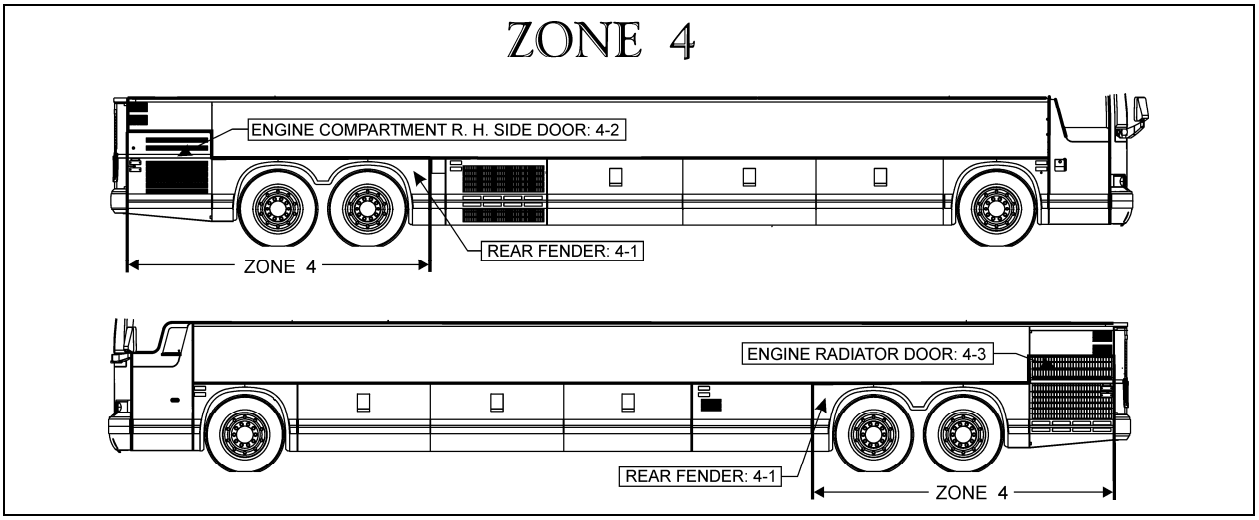

FIGURE 35: ZONE 4 18627

6.4.1 Rear Fender

On the "X3" series vehicle, rear fenders are hinged for maintenance on brakes and suspension. Each rear fender panel has two mechanical spring loaded holding devices fixing it to the vehicle's structure. Push the spring type rod sideways to disengage the lock.

6.4.2 Engine Compartment R. H. Side Door

Engine compartment R. H. side door may be adjusted for proper fit by untightening hinge bolts:

1. Loosen the bolts, (1, Fig. 36) holding the hinge to the vehicle structure to shift the door "IN or OUT" and "UP or DOWN".
2. Loosening the bolts (2, Fig. 36) allows the door to be shifted "LEFT or RIGHT" and "UP or DOWN".

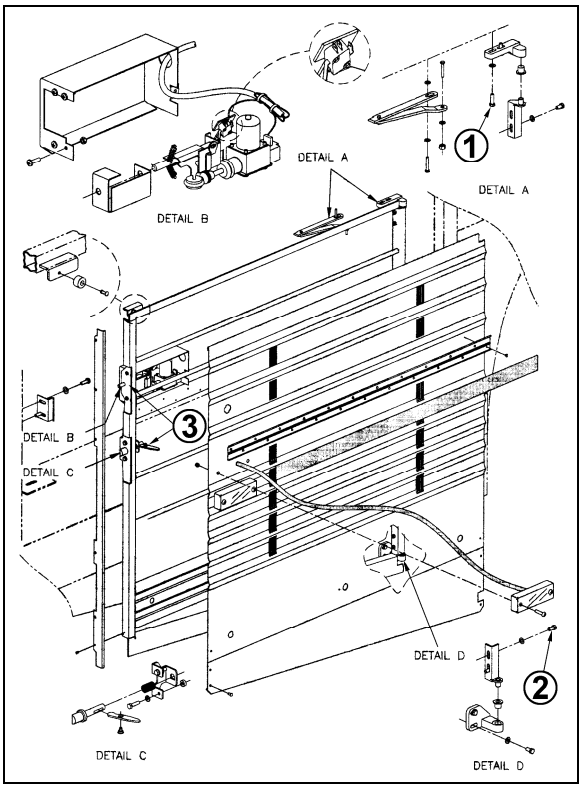

FIGURE 36: ENGINE COMPARTMENT R.H. SIDE DOOR 18635

3. Adjust the door position depending on the gap needed between exterior finishing panels.
4. Tighten the bolts.
5. Check that the door swings freely and closes properly. It may be necessary to adjust the door latch to get proper fit and operation.

To adjust the latch mechanism (3, Fig. 35) and the striker pin:

1. Open the door to access the striker pin.
2. Slightly loosen the striker pin.
3. Using a hammer, adjust the striker pin to center it in the door latch mechanism.
4. Tighten the striker pin.
5. Check door fit and operation.

6.4.3 Engine Radiator Door

Radiator door may be adjusted for proper fit by untightening hinge bolts:

1. Loosen the bolts, (1, Fig. 37) holding the hinge to the vehicle structure to shift the door "IN or OUT" and "UP or DOWN".
2. Loosening the bolts (2, Fig. 37) allows the door to be shifted "LEFT or RIGHT" and "UP or DOWN".

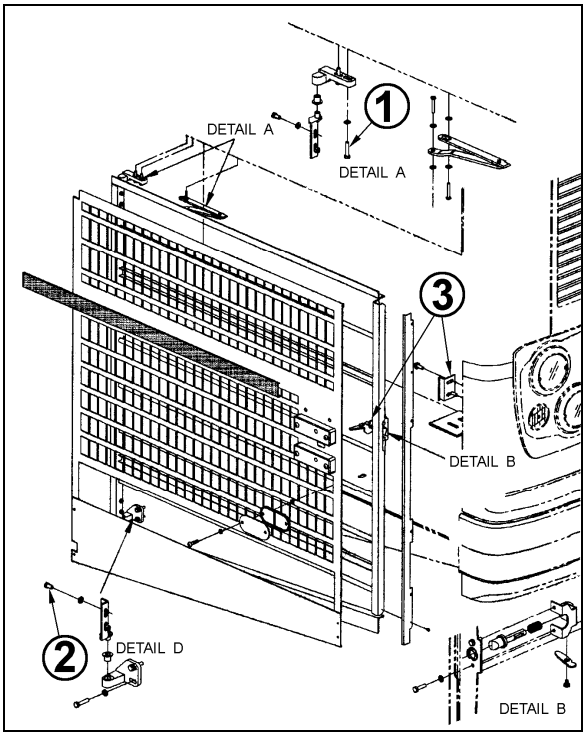

FIGURE 37: RADIATOR DOOR 18636

3. Adjust the door position depending on the gap needed between exterior finishing panels.
4. Tighten the bolts.

5. Check that the door swings freely and closes properly. It may be necessary to adjust the door latch to get proper fit and operation.

To adjust the latch mechanism (3, Fig. 37) and the striker pin:

1. Open the door to access the striker pin.
2. Slightly loosen the striker pin.
3. Using a hammer, adjust the striker pin to center it in the door latch mechanism.
4. Tighten the striker pin.
5. Check door fit and operation.

6.5 ZONE 5

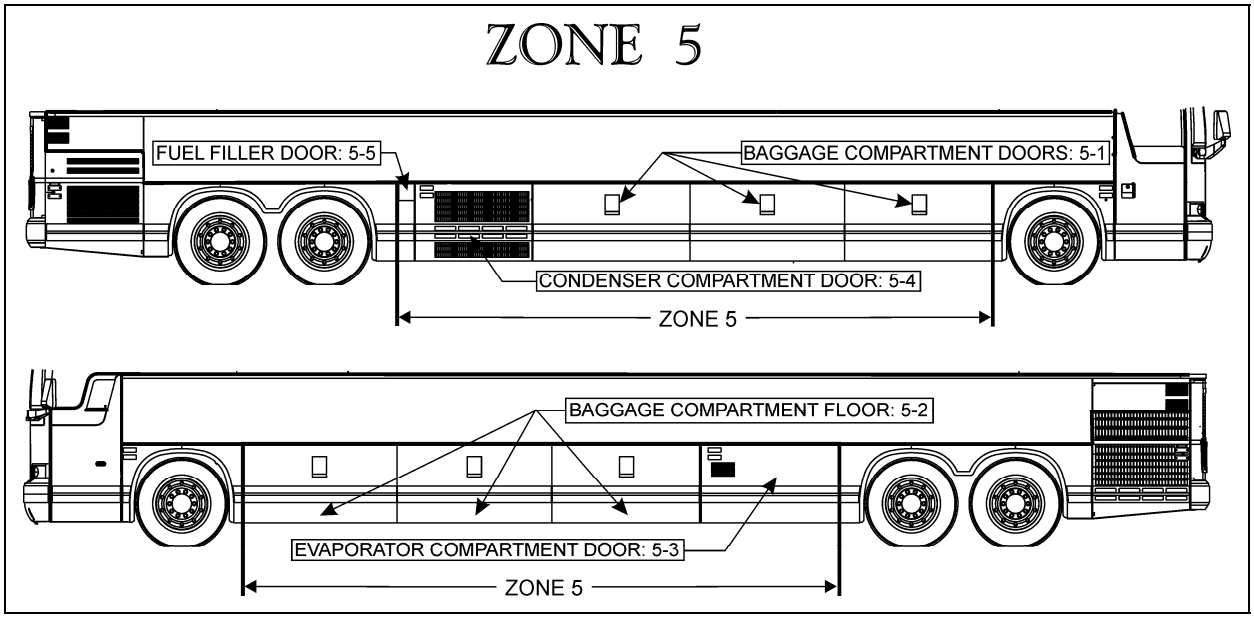

FIGURE 38: ZONE 5 18628

6.5.1 Baggage Compartment Doors

For the removal and installation of baggage compartment door stainless steel body panel, you will need:

A drill with drill bits;

Pneumatic “Zip gun” type tool;

Razor sharp window scraper or putty knife;

- Open damaged compartment door and unfasten rub rail fixing bolts. Remove rub rail.
- Unfasten bolts and disconnect cable if necessary in order to remove door from vehicle.
- Preferably install the door onto a work surface where it can be solidly fixed.

- **Door Lower Panel**

  Panel Removal

  - Using the “Zip Gun”, cut Sika bead located ½ inch from the door panel perimeter edge.
  - Wearing gloves, goggles and ear plugs, pry loose body panel using a “Zip gun” or lever starting from the door lower part.
  - Using the window scraper, remove any Sika bead or self adhesive tape residue left on the door frame.

  Lower Panel Preparation and Installation

  - Use a Chix cloth and anti-silicone to remove any dust or residue from door frame.
  - Prepare door frame using a scratch pad “Scotch Brite”.

- Clean door frame again using anti-silicone.
- Apply some Sika 206 G+P onto door frame.
- Clean door lower panel using anti-silicone.
- Prepare door lower panel using a scratch pad “Scotch Brite”.
- Clean door lower panel again using anti-silicone.
- Apply some Sika 206 G+P onto door lower panel.
- Using a triangular nozzle (8mm X 9mm), apply some Sika 255 onto door lower panel.

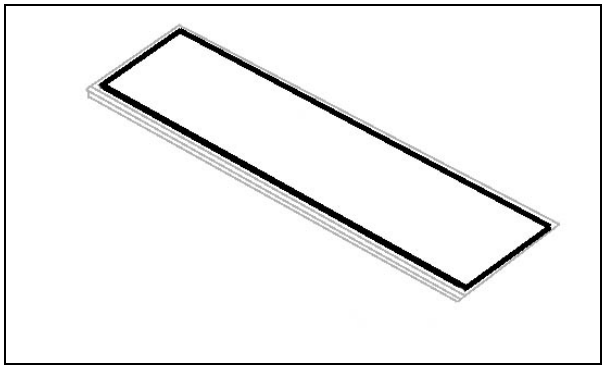

- Position and install door lower panel onto frame.
- Compress and hold for 8 hours.

- **Door Upper Panel**

Upper Panel Removal

- From the back of the baggage compartment door, remove handle housing fixing screws (6).
- Remove lock access panel
- Wearing gloves, goggles and ear plugs, pry loose body panel using a “Zip gun” or lever starting from the door lower part.
- Cut Sika bead around handle housing.
- Using the window scraper, remove any Sika bead or self adhesive tape residue left on the door frame.

Upper Panel Preparation and Installation

- Use a Chix cloth and anti-silicone to remove any dust or residue from door frame.
- Prepare door frame using a scratch pad “Scotch Brite”.
- Clean door frame again using anti-silicone.
- Apply some Sika 206 G+P onto door frame.
- Clean door upper panel using anti-silicone.
- Prepare door upper panel using a scratch pad “Scotch Brite”.
- Clean door upper panel again using anti-silicone.
- Apply some Sika 206 G+P onto door upper panel.
- Using a triangular nozzle (8mm X 9mm), apply some Sika 255 onto door lower panel.

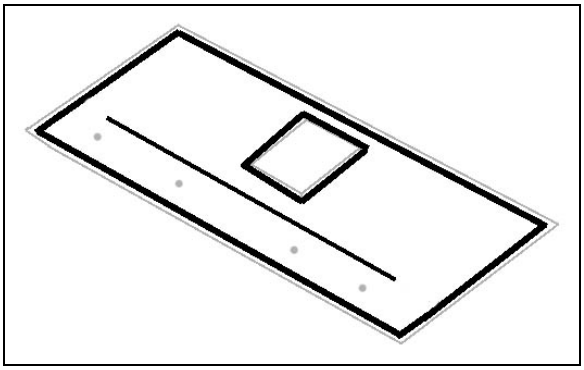

- Position and install door upper panel onto frame.

NOTE
Use rub rail fixing holes for upper panel proper positioning.

- Compress and hold for 8 hours.

Baggage Compartment Door Adjustment

- Adjust door to get a 7mm gap at the top.

NOTE
Adjustment is made using the side plates.

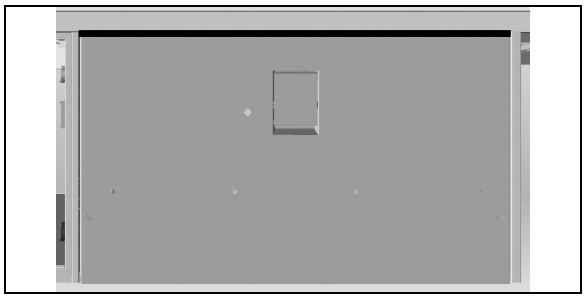

- Center door in the opening using the side plate shims.

NOTE
Adjustment is made using shims on the side plates. A total of 8 shims per door must be used e.g. 4 on L.H. side and 4 on R.H. side or 2 on L.H. side and 6 on R.H. side, etc.

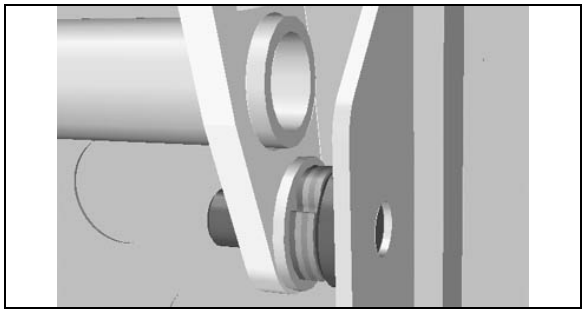

- Adjust door position and evenness with reference to adjacent panels and doors.

NOTE
Adjustment is made by moving IN or OUT the lock plates. Adjust one corner at a time.

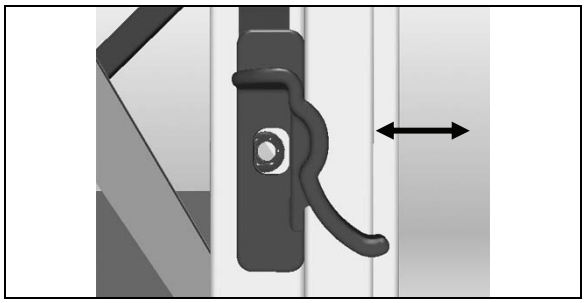

- Check handle adjustment. Handle must remain tight against its plastic housing.

NOTE
Adjustment is made by moving UP or DOWN the lock plates.

- Open baggage compartment door and adjust height using the catch plates.
- Tighten cylinder blocks fixing screws.

6.5.2 Baggage Compartment Floor

- **Repair of Mantex Urethane Covering**

Minor Repair

Use “Dupont IMRON” paint. Apply using a paint brush or roller depending on gravity.

Paint Code: #J4099U

Major Repair (Hole)

Chamfer the whole perimeter of the damaged area. If applicable, remove loose covering. Remove dust and particles.

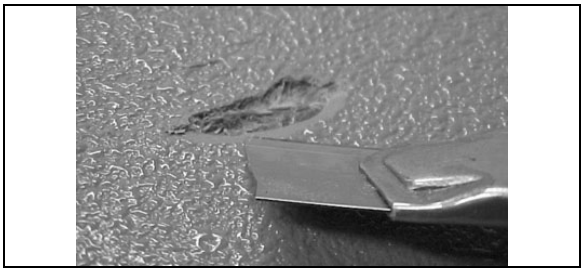

Cover and protect damaged area surroundings.

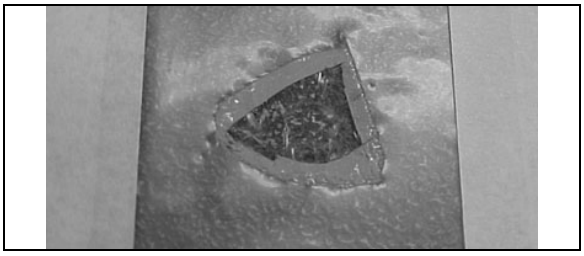

Using a plastic spatula, apply some Sika 221 grey onto the damaged area.

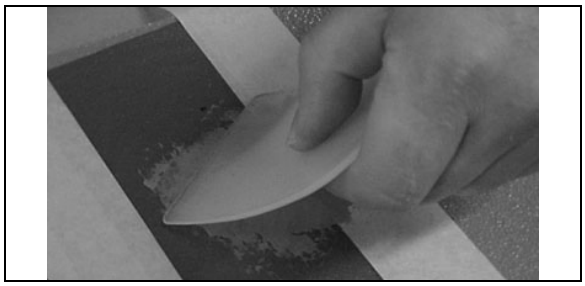

Remove masking tape and protection around damaged area.

Spray pure water onto Sika. Use a floor sample to create some texture onto the adhesive.

If possible spray some more water onto the adhesive to accelerate curing.

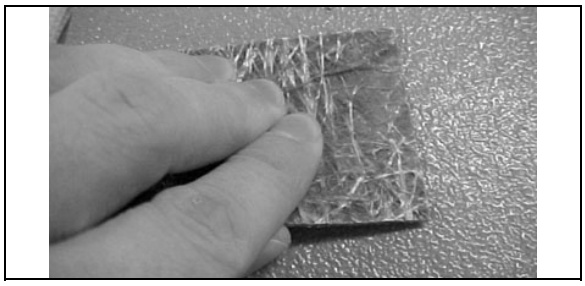

Allow drying for at least **2 hours** then repaint as per paragraph: Minor Repair.

- **Baggage Compartment Floor Installation**

  Preparation and Installation

Clean baggage compartment support structure using anti-silicone.

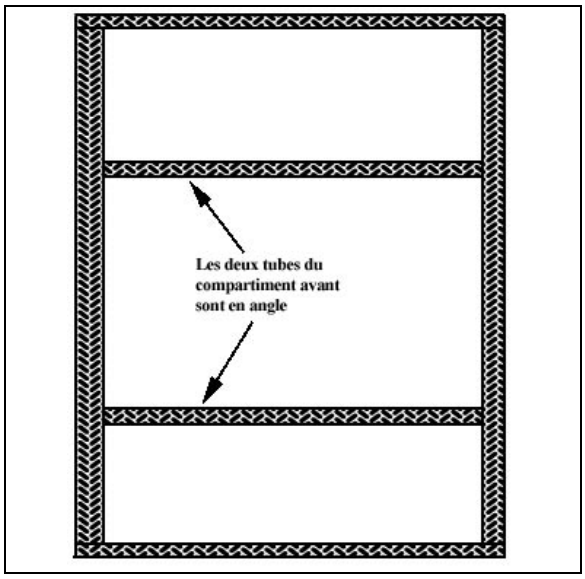

Glue spacers (790392) about 16-inch apart.

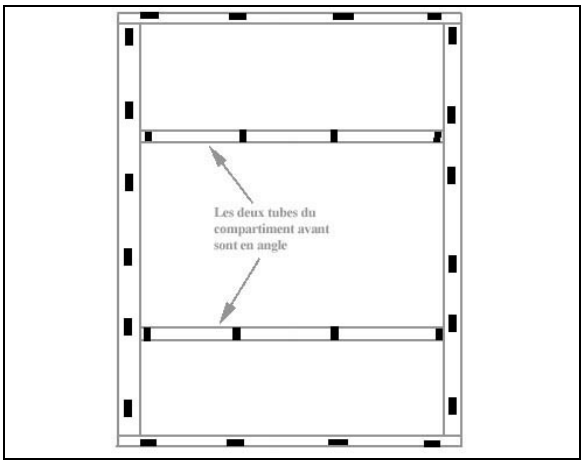

Rear baggage compartment without WCL.

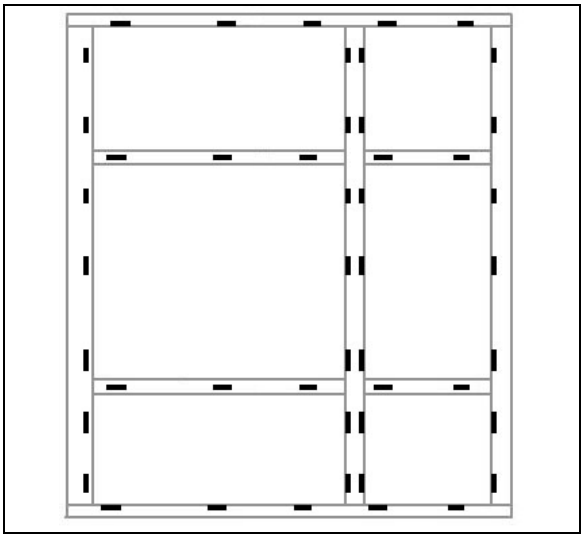

Rear baggage compartment equipped with WCL

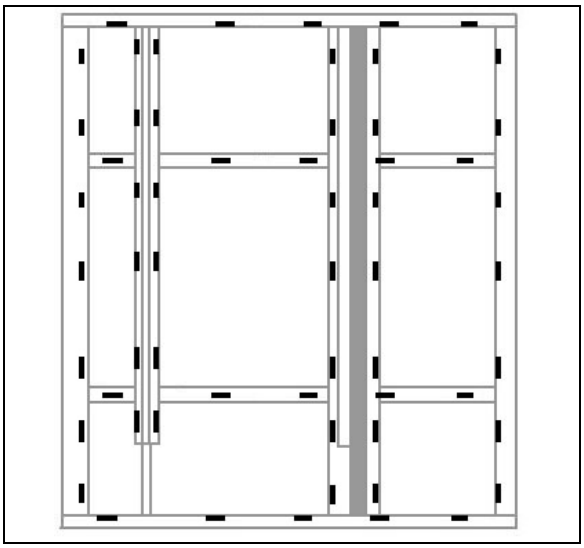

Prepare baggage compartment Mantex floor. Clean panel underside and edges.

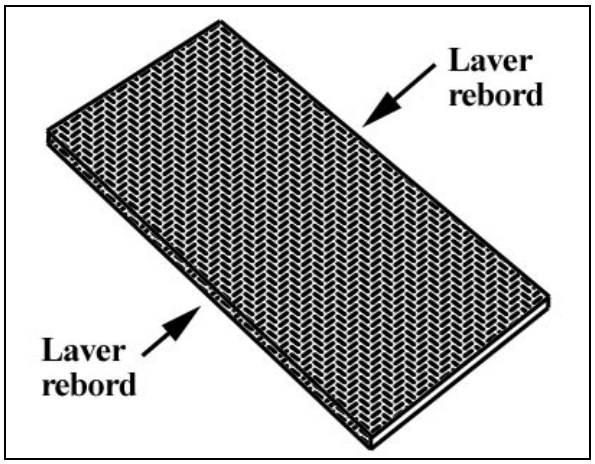

Using a triangular nozzle, apply “Simson” glue (685126) onto support structure.

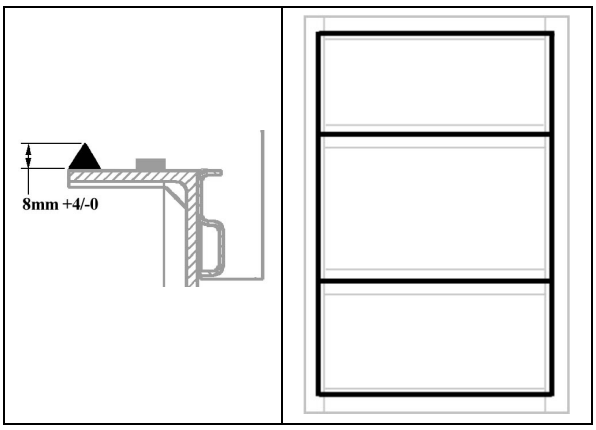

Rear baggage compartment without WCL.

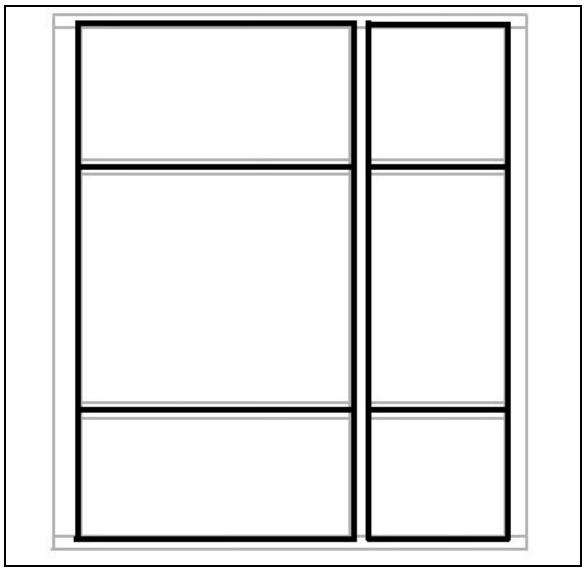

Rear baggage compartment equipped with WCL

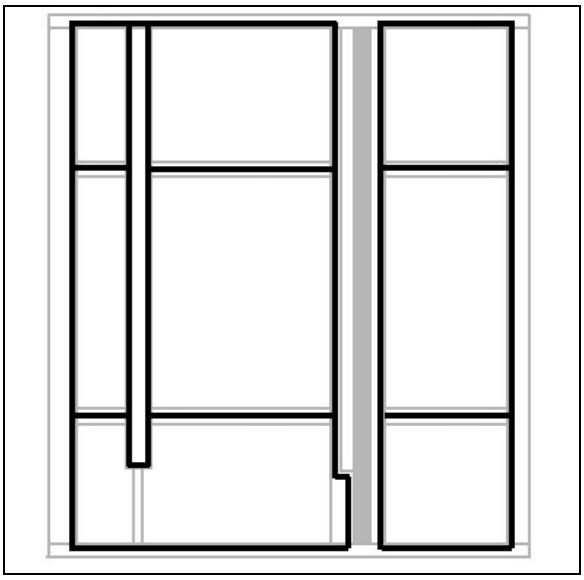

Carefully install panel onto support structure.

Evenly distribute and install conforming weights (6 to 8) (80 to 100 lbs **total**) onto panel for at least **4 hours**. Make sure panel does not move.

Finishing Joints

In the case of lateral finishing joint, apply some masking tape ¼“ from panel edge and ¼” above panel.

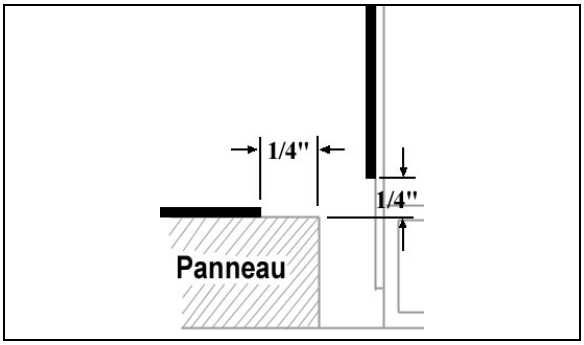

In the case of front finishing joint, apply some masking tape on each side of joint.

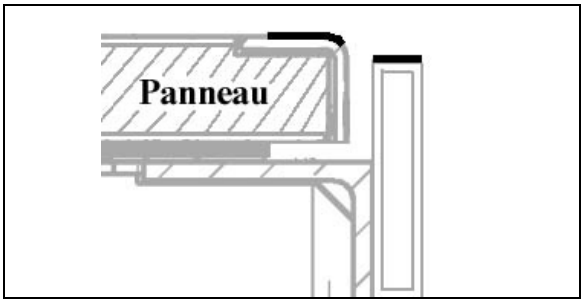

Clean with anti-silicone the area where the Simson glue will be applied.

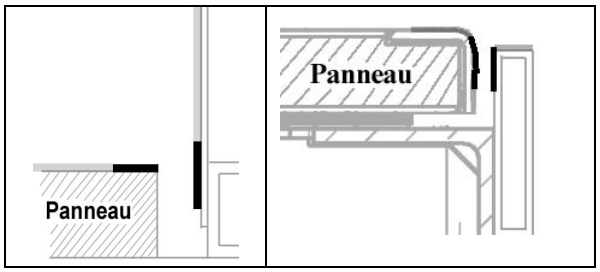

Apply some Simson glue to fill the gap.

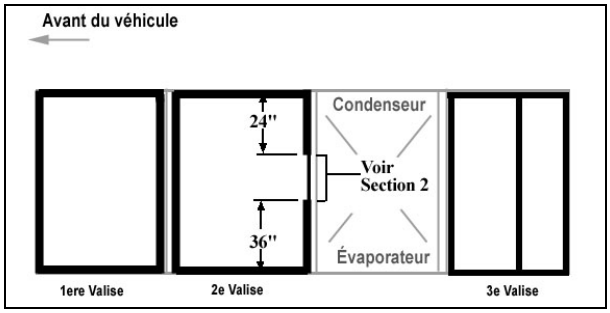

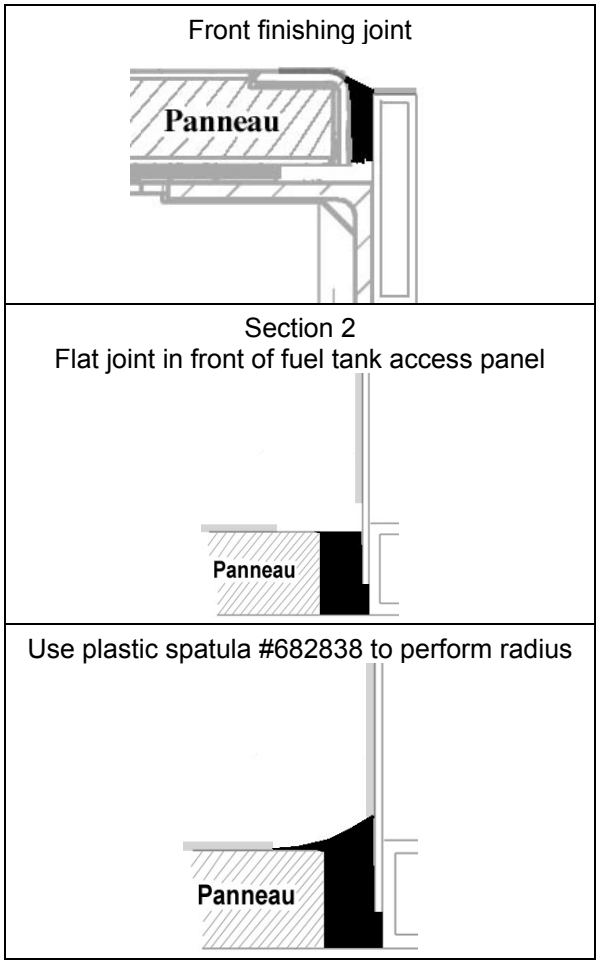

Rear baggage compartment equipped with WCL

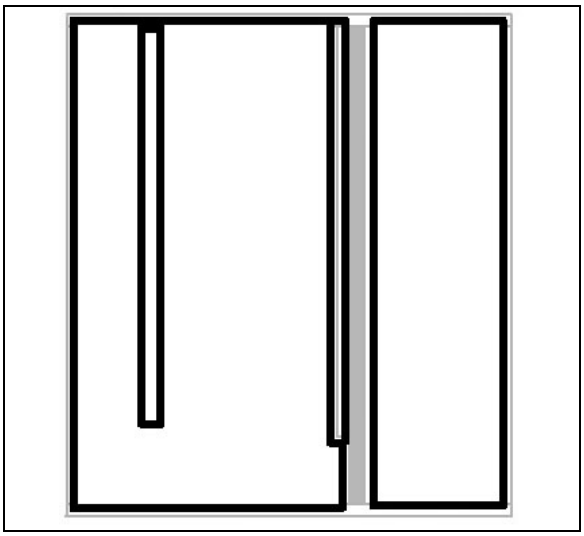

Rear baggage compartment without WCL.

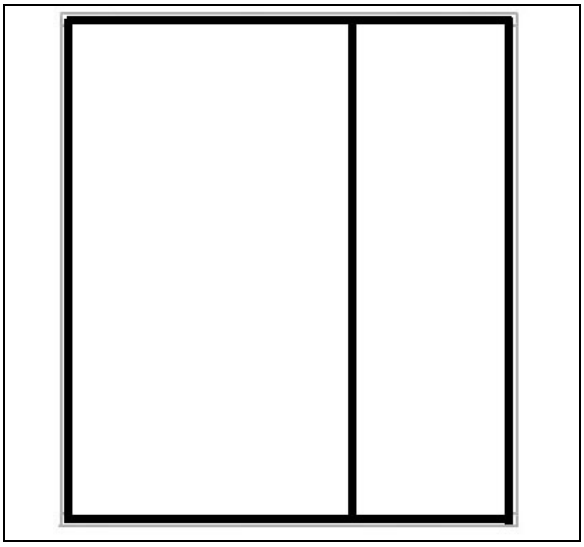

Remove masking tape.

Smooth down joints using soapy water.

6.5.3 Evaporator Compartment Door

1. Open the evaporator door.
2. Loosen the screws fixing the hinge to hinge attachment or hinge to door assembly. Loosening the screws allows the evaporator door assembly to be shifted "LEFT or RIGHT" and "UP or DOWN" or “IN and OUT”.
3. Adjust evaporator door assembly position at the hinge.
4. Tighten the screws.

5. Respect the required gap between exterior finishing panels.
6. Check that the door swings freely and closes properly. It may be necessary to adjust the door latch to get proper fit and operation.

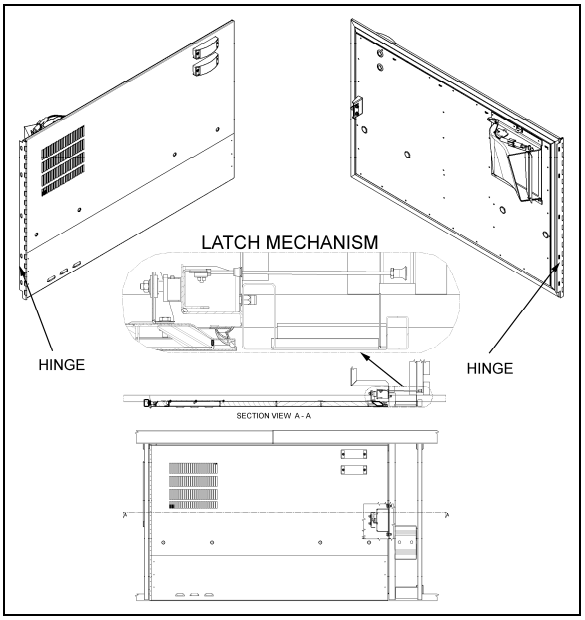

FIGURE 39: EVAPORATOR DOOR 18637

6.5.4 Condenser Compartment Door

1. Open the condenser door.
2. Loosen the screws fixing the hinge to hinge attachment or hinge to door assembly. Loosening the screws allows the condenser door assembly to be shifted "LEFT or RIGHT" and "UP or DOWN" or “IN and OUT”.
3. Adjust condenser door assembly position at the hinge.
4. Tighten the screws.
5. Respect the required gap between exterior finishing panels.
6. Check that the door swings freely and closes properly. It may be necessary to adjust the door latch to get proper fit and operation.

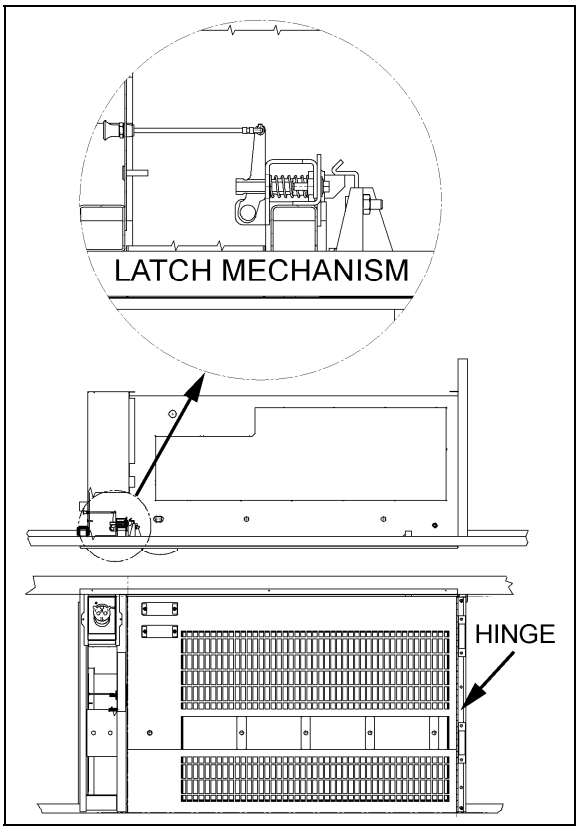

FIGURE 40: CONDENSER DOOR 18638

6.5.5 Fuel Filler Door

1. Open the fuel filler door.
2. Loosen the screws holding the panel to hinge assembly.
3. Adjust the fuel filler door position according to distance required between exterior finishing panels.
4. Tighten the nuts.
5. Check that the door swings freely and closes properly.

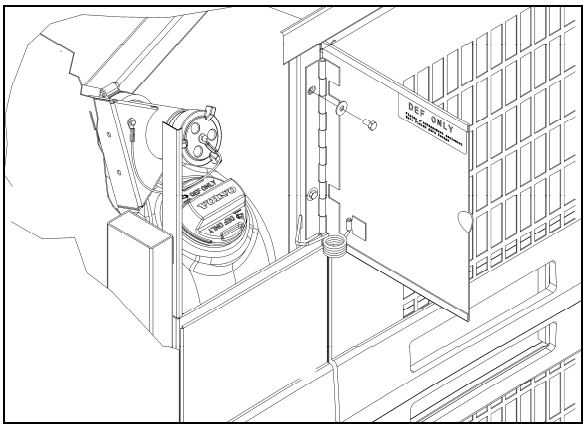

FIGURE 41: FUEL FILLER DOOR 03046

6.6 ZONE 6

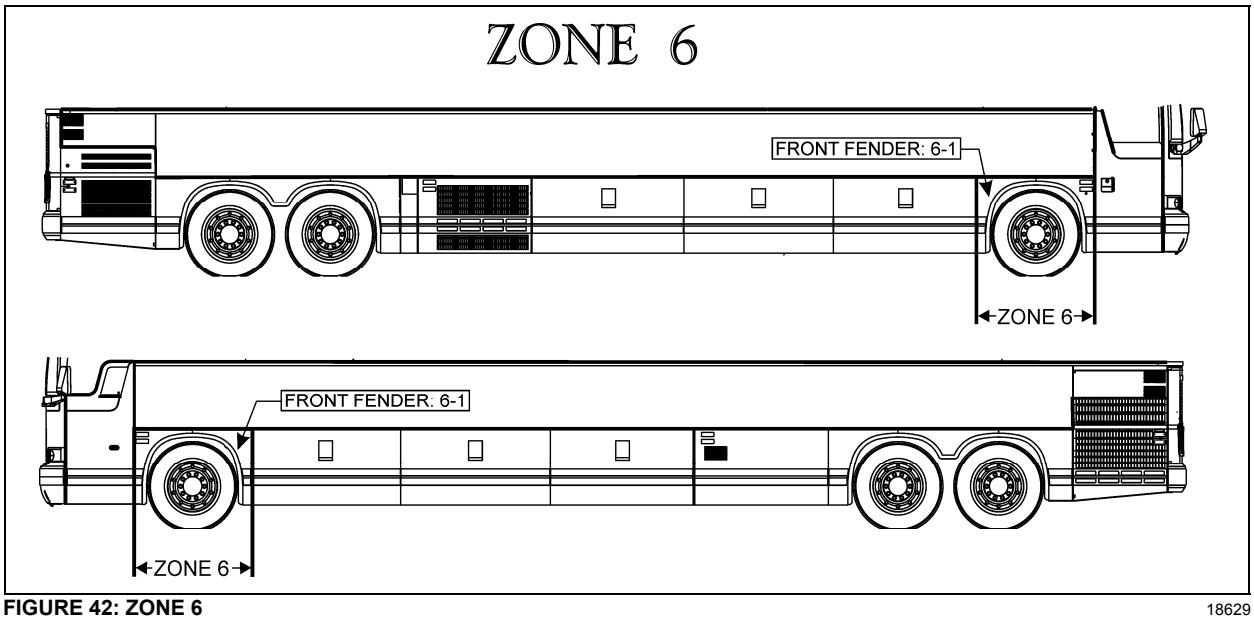

FIGURE 42: ZONE 6 18629

6.6.1 Front Fender

Front fender may be removed using the following procedure:

Remove the nuts on the inside of the fender. Remove the fender from the vehicle. To reinstall, reverse the procedure.

6.7 ZONE 7

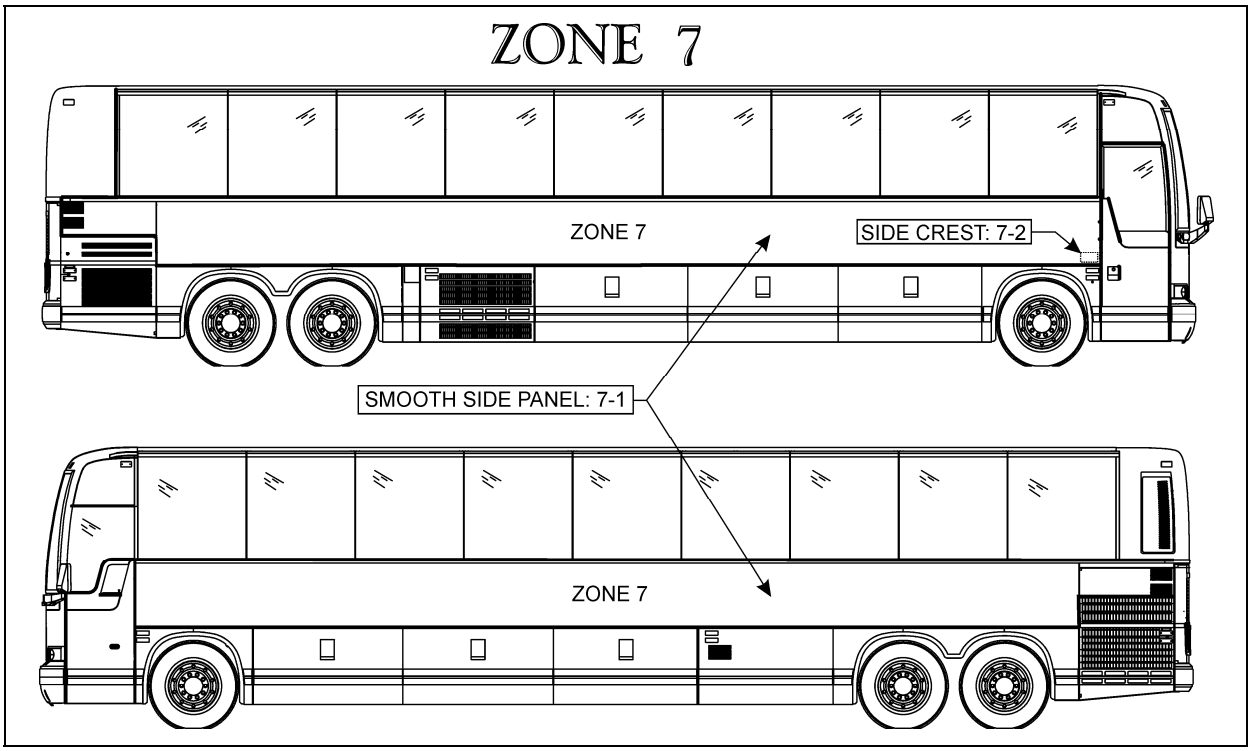

FIGURE 43: ZONE 7 18630

6.7.1 X3 Smooth Side Panel Replacement Procedure

Material:

Anti-silicone (682989)	√	Scotchbrite gray (680226)	√	Sika 221 gray	√
CHIX cloth (682384)	√	Sika 205 1liter (683097)	√	Sika 252 black	√
Blue cloth (682383)	√				

Equipment:

Glue gun	√	
Pencil	√	

SECTION 1 SMOOTH SIDE PANEL REMOVAL			
1.00	**REMOVAL**		
	A)	Remove finishing molding. Insert a screwdriver into snap-on finishing molding joint. Bend finishing molding enough to be able to fix a pair of locking pliers. Using the pair of locking pliers, pull the stainless steel molding and at the same time gradually cut Sika bead with a sharp knife.	Be careful not to damage the adjacent surfaces.
	B)	Using a hammer and punch, drive out rivet shanks from top and bottom and from front and rear finishing molding supports. Use a #11 titanium drill bit to remove rivet heads.	
	C)	Grind tig weld spots at each end of side panel.	
	D)	Safely support or temporary fix side panel.	**Warning: Panel weights over 200 pounds**
	E)	Insert a flat screwdriver between the side panel and the vehicle chassis, in the top left and right corners. Make sure to separate side panel from structure.	Be careful not to damage the adjacent surfaces.
	F)	Use the c-clamp to separate the side panel from the back structural panel and at the same time gradually cut Sika bead with a sharp knife.	Ideally, the hoist or chain block must be fastened to the floor while pulling from a 45° angle so as not to damage the vehicle structure
	G)	Remove as much glue as possible from the structure using a putty knife or pneumatic knife without damaging 206 G+P primer.	Never heat SikaFlex adhesive to remove.
	H)	Check panel horizontal supports for straightness using a straight edge. Take measurements with a ruler.	Tolerance : 1mm towards the outside and 1.5mm towards the inside.

SECTION 2 PREPARATION OF SURFACES			
2.00	**VEHICLE SURFACE PREPARATION**		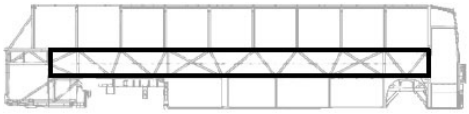
	A)	Clean using "anti-silicone" until all clothes come clean. See PR000001 section A.	
	B)	Use the belt sander (grit coarse) Use a new paper on each vehicle side.	
	C)	Clean using "anti-silicone" until all clothes come clean. See PR000001 section A.	
	D)	Apply – Sika 205 See PR000001 section B.	
2.05	**SIDE PANEL PREPARATION**		
	A)	Clean using “anti-silicone” until all clothes come clean. See PR000001 section A.	
	B)	Use the belt sander (grit coarse) Use a new paper on each vehicle side panel.	
	C)	Clean using “anti-silicone” until all clothes come clean. See PR000001 section A.	
	D)	Apply – Sika 205 See PR000001 section B.	

PR000001 Section A Alcohol or Anti-silicone

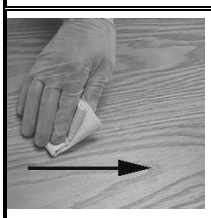

***1.* Apply**

CHIX cloth

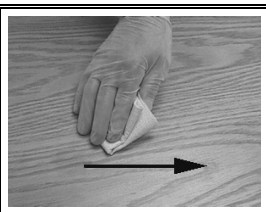

***2.* Dry immediately**

Blue cloth

***3.* Allow to dry**

Mandatory	**Minimum time : Wait for product to evaporate**
	After 2 hours: Start cleaning operation again
Before applying any other product	If surface seems dusty, greasy or with finger marks, start cleaning operation again.

Section B Sika 205

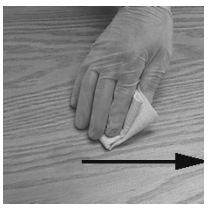

1. Apply

CHIX cloth

2. Allow drying

Mandatory	**Minimum time**	**- For a smooth surface (aluminum, stainless, steel, fiber glass (gelcoat side), etc.):**	**2 minutes**
		- Pour a porous surface (fiber glass (non gelcoat side), etc.)	**10 minutes**
	After 2 hours : Reactivate surface with Sika 205		
Before applying any other product	If surface seems dusty, greasy or with finger marks, start operation again.		

SECTION 3 SIDE PANEL INSTALLATION			
3.00	A)	Using a pencil, mark the double-face self adhesive tape position onto vehicle side.	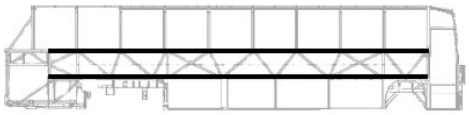
	B)	Apply 1/8 X ½"double-face tape as per marking.	
	C)	Compress tape	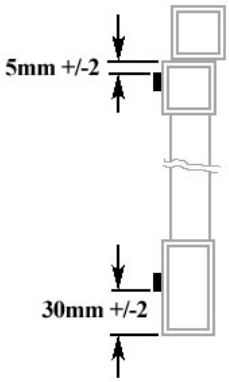
	D)	Remove protective film from double-face self adhesive tape center section.	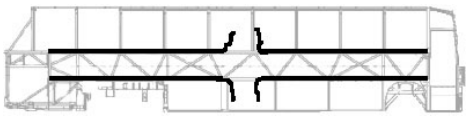

3.05		Install 1/8 X ½” foam tape onto middle reinforcement then compress.	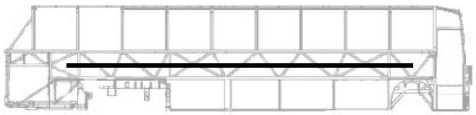
3.10		Apply Sika 252 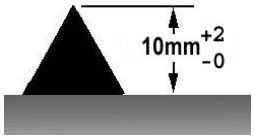 – Onto vehicle surface – Cut nozzle as per template – Use the guide for the application Bead must be continuous for the whole perimeter.	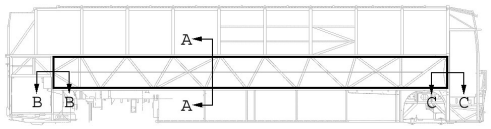 Section A-A | Section B-B | Section C-C 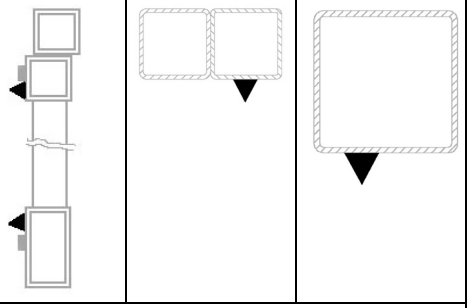
3.15	A)	Install side panel onto support jig.	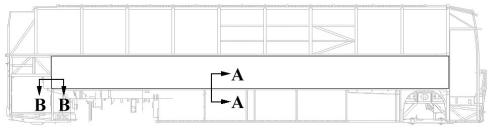
	B)	Position side panel in front of vehicle structure	**Section A-A** | **Section B-B** 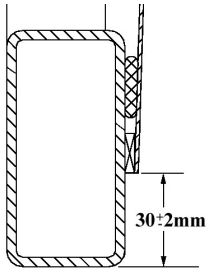 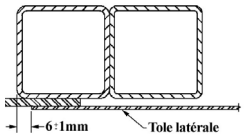
	C)	Perform final adjustment to make sure that side panel is true and square	– 30 mm. ± 2 with reference to bottom tubing – 6 mm ± 1 with reference to vertical tubing
	D)	Sand rear of side panel 2" wide	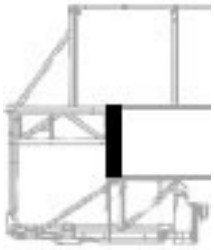
	E)	Perform tig spot welding (1” apart)	Quantity of "tig spot": 30 minimum.

3.20	A)	Install pulling equipment at the other end of side panel	
	B)	Make a final adjustment in height	
	C)	Sand front of side panel 2" wide	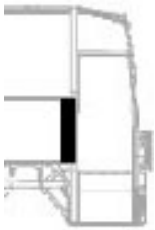
	D)	Pull side panel so that panel moves 1/8”	Make sure the equipment pulls along the whole width of side panel
	E)	Perform tig spot welding	Quantity of "tig spot": 30 minimum.
3.30	Remove pulling equipment		
3.40	A)	Remove protective film from double-face self adhesive tape.	
	B)	Compress top and bottom section of side panel	
3.50	A)	Cut excess of side panel. Make sure that cut is parallel with tubing.	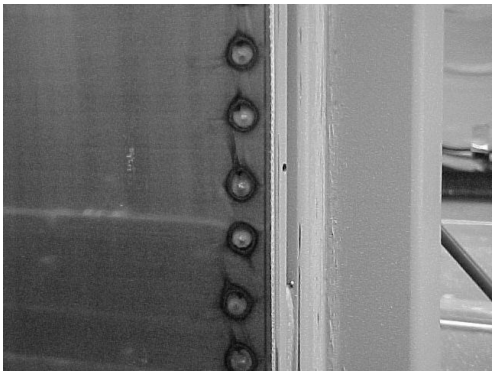
	B)	Grind side panel end to line up with door tubing.	
3.60	To seal each panel end, apply masking tape on each side of side panel joint. Use a caulking nozzle and grey Sikaflex 221 adhesive to fill the cavity between the panel and vehicle structure. Clean using Sika 205. Allow 5 minutes minimum for drying.		

	Wear surgical gloves and smooth down the joint with your finger.	

SECTION 4 ENGINE AIR INTAKE PANEL INSTALLATION		
4.00	Make sure that sealing of structure has been performed properly	
4.05	Prepare vehicle surface as for side panel.	Refer to step # 2.00
4.10	Prepare air intake panel as for side panel	Refer to step # 2.05

4.15	Install foam tape 1/8" X ¼" onto structure, as shown in picture	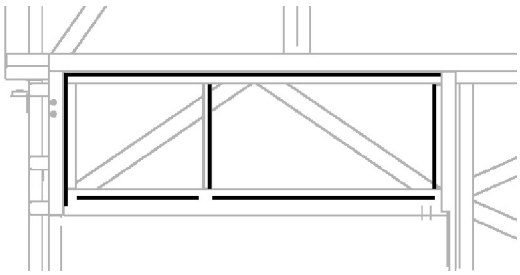
4.20	Install foam tape 1/16" X ¼ onto air intake panel pleat	
4.25	Apply a bead of 252 onto structure as per picture Important: Make sure bead is continuous Triangular bead: 10mm x 8mm	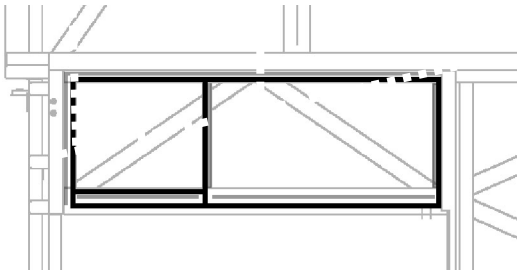
4.30	Install panel onto structure	Use a jig to make sure that panel is lined up with engine door tubing.
4.40	Use a brush to compress Sika bead	

5.00 *	**Finition Joint**		
	A)	Install a protective tape onto the tubing above welding	
	B)	Apply Sika 205 Use a plastic spatula inside a Chix cloth to ensure that Sika 205 reaches as far as the corner. See PR000001 section B.	
	C)	Apply Sika 252 black at the junction of both tubing. Smooth down the joint	
	D)	Remove protective tape	

6.7.2 Side Crest

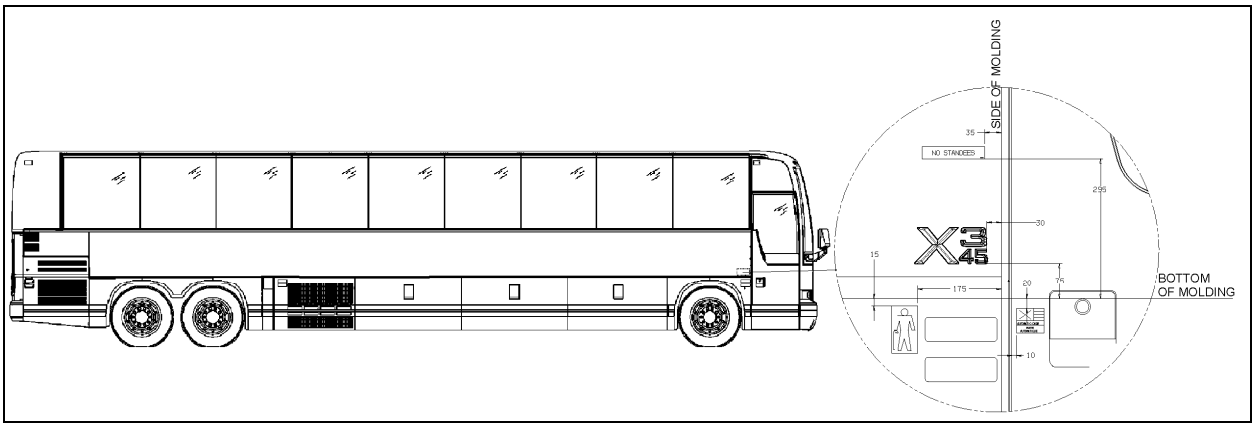

FIGURE 44: SIDE CREST POSITIONING 18639

- Clean vehicle surface using anti-silicone where the side crest and stickers will be applied.
- Using hands apply and compress side crest.
- Apply required stickers.

6.8 BODY PANEL AND WINDOW SPACING

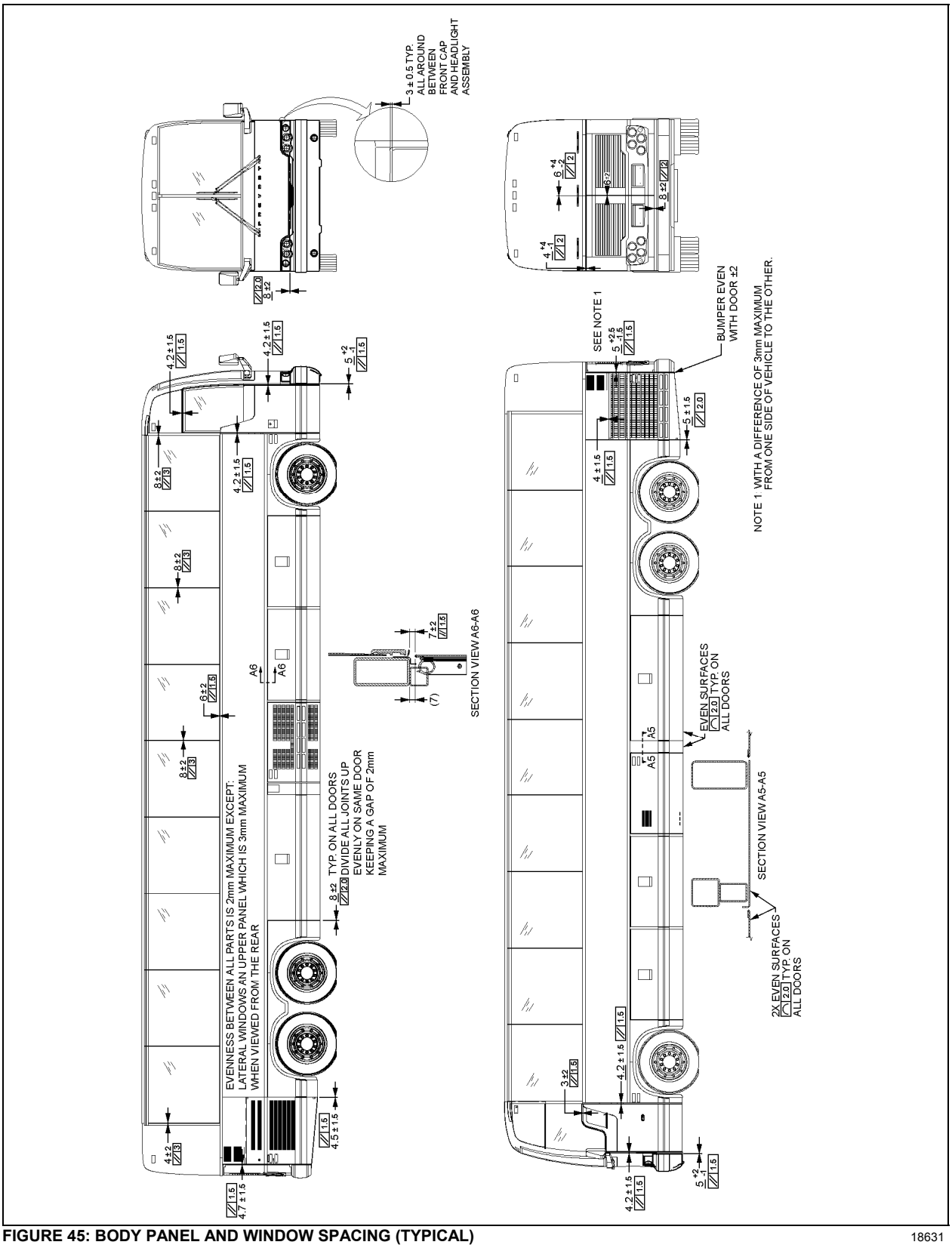

FIGURE 45: BODY PANEL AND WINDOW SPACING (TYPICAL) 18631

6.9 PASSENGER SEATS

X3 coaches are equipped with Torino G 4ONE seat models:

Each pair of seats is built on a welded steel frame fastened to the side wall and on a track-mounted pedestal.

The *"Torino G"* seats have 3 armrests. The aisle and center armrests can be folded up and down manually, while the window armrest is fixed.

6.9.1 Rotating Seats

1. Remove 1 wing nut holding each seat bottom cushion from under the seat frame.
2. Lift front part of cushions and remove cushions.
3. Remove 4 wing screws fastening seat assembly to seat frame.
4. Pull seat toward aisle and rotate.
5. Align mounting holes and reinstall 4 wing screws.
6. Reinstall seat bottom cushions with wing nuts.

6.9.2 Removing Fixed Seats

NOTE
Seats on one row are not interchangeable with seats of the other row.

To remove fixed seats, proceed as follows:

1. Remove 1 nut holding each seat bottom cushion from under the front part of the seat frame.
2. Lift front part of cushions and remove cushions.
3. Remove 4 finishing screws holding plastic cover between side wall and seat frame.
4. Remove 2 cap screws, nuts, and washers holding seat frame to side wall and retain the 2 holding brackets. See figure 46.
5. Remove 2 nuts and washers holding seat frame to pedestal rods. See figure 47.

NOTE
Bottom end of rod is coated with Locktite and threaded in a steel block which slides in the floor track. Removal of rod is possible if loosened from block. Otherwise, slide rod and block assembly to the front end of track after removing all seats located in front.

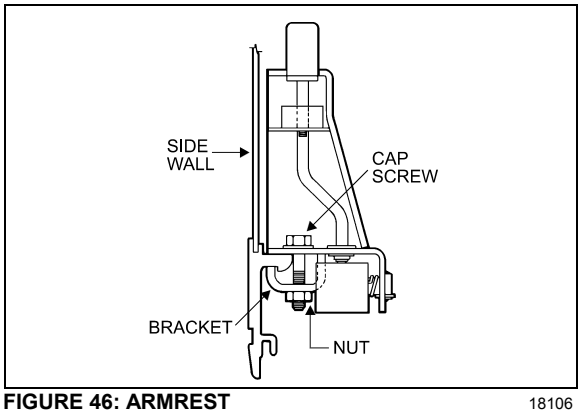

FIGURE 46: ARMREST 18106

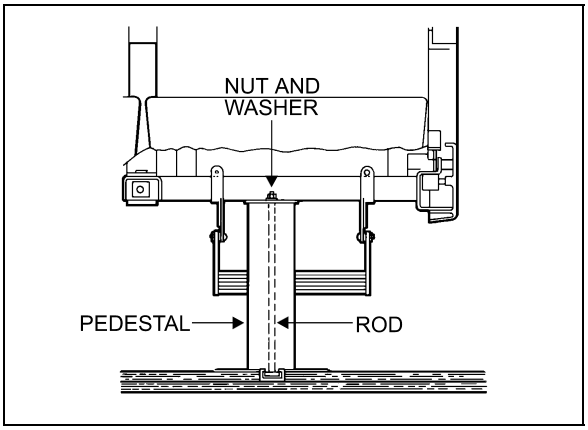

FIGURE 47: SEAT PEDESTAL ASSEMBLY 18107

6. Remove seat assembly.
7. Reverse the above procedure to install seat assembly.

NOTE
On newer vehicles, the rod consists of a carriage bolt inserted in a square plate sliding in the floor track. Removal is possible only by the front or rear end of track.

6.9.3 Upholstery Maintenance

Coach seats are lightweight, with foam-padded backs and cushions. For both appearance and wearability, best results are obtained if upholstery is cleaned at regular intervals before dirt, dust and grit have been ground into the

fabric. Seat fabric is made of 50% wool, 33% cotton, 9% nylon, and 8% acrylic.

- **Routine Cleaning**

All that is required to remove the dirt is a gentle beating with the hand or the back of a brush. This will bring the dirt to the surface where it is easily removed with a vacuum or brush in the direction of the pile which can easily be recognized by running a hand lightly over the pile. If the fabric becomes excessively dirty, particles of grit will cause gradual wear, reducing the life span of the fabric.

- **Dry Cleaning**

If covers are to be removed for cleaning, dry cleaning is recommended since washing might cause some shrinkage, preventing the covers from being reapplied to the seats without damage. Other than spot cleaning the covers while they are in place, dry cleaning is not recommended, since the resulting fumes could be hazardous in the confines of the coach and the solvent could be detrimental to the foam padding of the seats.

- **Cleaning With Covers in Place**

The most effective and economical method to clean the fabric seat covers is by washing with either an approved foam upholstery cleaner or with a mild household detergent.

Thoroughly vacuum the upholstery. Remove any spots or stains before the seats are washed to avoid a cleaning ring.

Dilute household detergent or liquid foam cleaner according to directions on the container. Pour a small quantity into a flat pan and work into a thick foam with a sponge or brush.

Apply only the foam to the fabric with a sponge or brush. Clean a small area of the fabric at a time with the foam. DO NOT SOAK. Rub vigorously. Sponge the suds from the fabric with a clean sponge or cloth moistened with water. Rinse the sponge or cloth often and change the water when it becomes dirty.

Allow the upholstery to dry completely before the coach goes back into service. To speed up drying, excess moisture can be blown off the fabric with compressed air.

CAUTION

Oil in the air line will soil the fabric. Blow the line clear and test air discharge against a plain white piece of paper. It is also effective to press the edge of a flat hardwood stick down on the cushion and slowly draw it across the fabric.

Even very soiled areas can be returned to their original appearance by a thorough cleaning, but a regular schedule of cleaning that keeps the upholstery reasonably clean at all times will greatly enhance the life span of upholstery.

6.10 TARABUS FLOOR COVERING REPAIR OR REPLACEMENT

On X3-45 coaches equipped with “Gerflor Natura Cedar 8813” covering, it is possible to replace or repair this covering. The purpose of this paragraph is to explain the steps to be followed to ensure the best results and adherence.

MATERIAL

Part No	Description	Qty
680028	Adhesive, Tarabus Floor Covering (White)	A/R
684655	Adhesive, Contact (3M)	3.8L
684654	Adhesive, Contact (3M)	18.9L
680532	Sikaflex 221 Gray	A/R

NOTE

Material can be obtained through regular channels.

1. Remove number of passenger seats required to perform repair.
2. Cut and remove damaged section of floor covering.

NOTE

It would be preferable to cut under two rows of seats so that repair is not as noticeable.

3. Clean plywood using a scraper.

NOTE

Make sure that no staples are sticking out beyond surface. Adjacent plywood sheets must be leveled.

4. Fill up holes and imperfections using MAPI PRP 110 then sand.
5. Remove dirt and adhesive residue.

CAUTION

Do not leave floor covering folded down except temporarily during installation.

6. Apply floor covering adhesive (680028) onto plywood using a serrated spreader with 1/8-inch serration. If required, apply contact adhesive (3M) (684655 or 684654) onto aluminum molding and also onto section of floor covering, which will be in contact with molding (refer to figure 47).

NOTE

Allow adhesive to dry (3 to 5 minutes).

7. Compress floor covering using a roller so as to remove any trapped air bubble.
8. Apply Sikaflex 221 gray sealant (680532) alongside passenger seat fixing tracks (refer to figure 48).

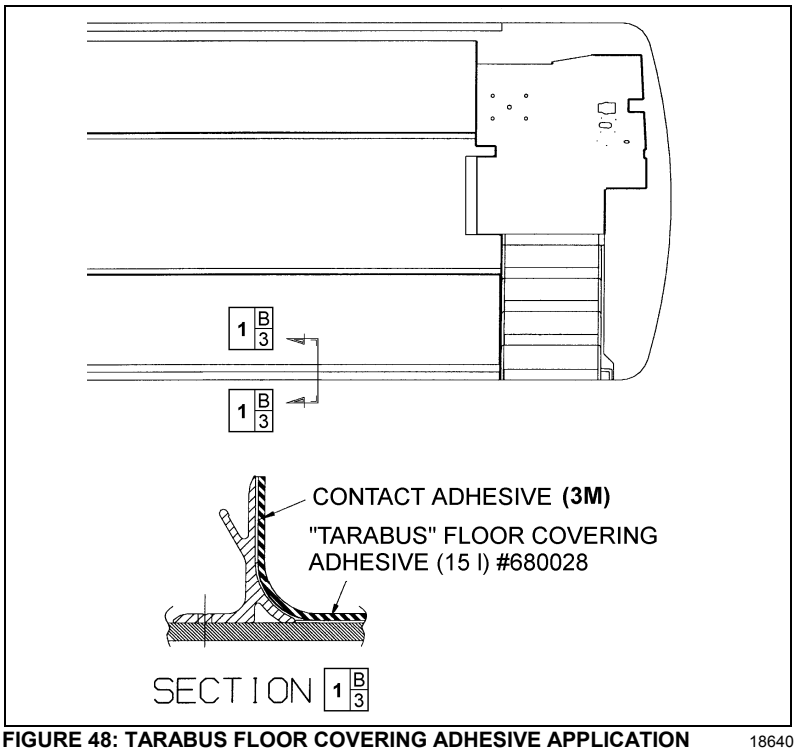

FIGURE 48: TARABUS FLOOR COVERING ADHESIVE APPLICATION 18640

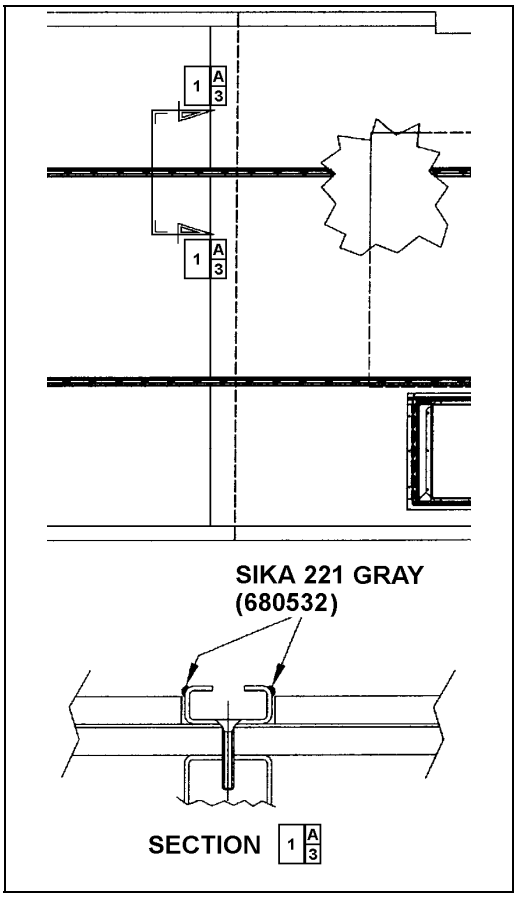

FIGURE 49: APPLICATION OF SIKA 221 GRAY 18641

6.10.1 Front Steps Replacement Procedure

MATERIAL

Part No	Description	Qty
682989	Anti-silicone	A/R
683097	Sika 205 (1 liter)	A/R
685101	Sika Remover 208	A/R
683916	Sika 215 (1 liter)	A/R

1. Cut and remove damaged step(s).
2. Remove dirt and adhesive residue.

NOTE
In wintertime, condensation and cold temperature may greatly influence bonding parameters. Working area must be at a temperature sufficient to prevent reaching condensation point. Mechanically preheat working area (heat lamp or heat gun) or wait until vehicle reaches room temperature.

PREPARATION OF "TARABUS" FLOOR COVERING

1. Sand under step using "Scotchbrite".
2. Clean using anti-silicone (refer to Section A).

Section A Alcohol or Anti-silicone

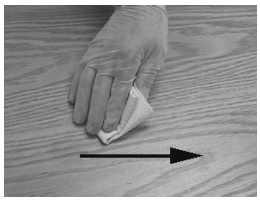

***1.* Apply**

CHIX cloth

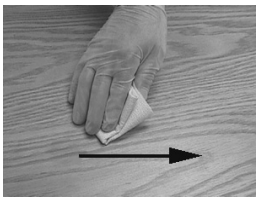

***2.* Dry immediately**

Blue cloth

***3.* Allow drying**	
Mandatory	**Minimum time : Wait for product to evaporate**
	After 2 hours: Start cleaning operation again
Before applying any other product	If surface seems dusty, greasy or with finger marks, start cleaning operation again.

3. Apply Sika Primer 215 (refer to Section D).

Section D Sika Primer 215

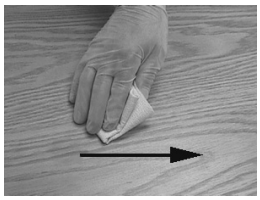

1. **Shake bottle to mix product**

2. **Apply a thin layer**

CHIX cloth

3. **Allow drying**		
Mandatory	**215**	**Minimum time : 20 minutes**
		After 2 hours : Remove dust using damp cloth (pure water)
Before applying any other product		If surface seems dusty, dust using damp cloth.
		If surface seems greasy or with finger marks, reactivate with Aktivator.

PREPARATION OF FIBERGLASS

1. Clean using anti-silicone (refer to Section A).
2. Apply Sika 205 (refer to Section B).

Section B Sika 205

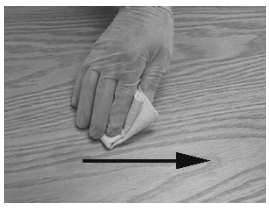

1. **Apply**

CHIX cloth

2. **Allow drying**			
Mandatory	**Minimum time**	**- For a smooth surface (aluminum, stainless, steel, fiberglass (gelcoat side), etc.):**	**2 minutes**
		- For a porous surface (fiberglass (non gelcoat side), etc.)	**10 minutes**
	After 2 hours : Reactivate surface with Sika 205		
Before applying any other product		If surface seems dusty, greasy or with finger marks, start operation again.	

X3 VEHICLES FRONT STEPS GLUING

1. Use step nosing to measure and cut necessary length of white safety strip.
2. Use a screw to check depth of countersinking in step nosing. Screw top must not stick out beyond the aluminum surface. Countersink if needed.

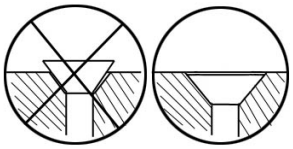

3. Apply some Sika 252 onto the step; make sure to cover the whole surface of the step. Use a serrated spreader with 1/8-inch serration to spread Sika.
4. Apply a bead of Sika 221 onto the perimeter of the step.
5. Install step and press with hands. If Sika overflows, clean with Sika 208. Repeat previous stages for each step if applicable.
6. Remove protective film from double-coated self adhesive tape located underneath step nosing, position step nosing then press. Drill and fix using screws.

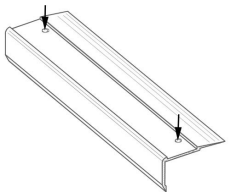

7. Clean top of step nosing using Sika 205 (refer to Section B).

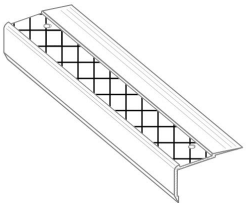

8. Apply some Sika 221 onto white safety strip, spread with a spatula to cover the whole surface.

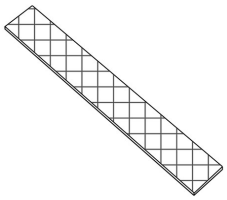

9. Position white safety strip then press using hands. If Sika overflows, clean with Sika 208.

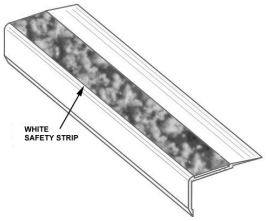

10. Temporarily fix white safety strip with a piece of duct tape, leaving 1 to 2 inches free at each end.

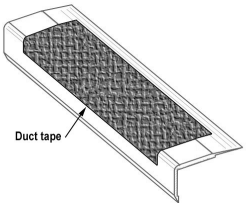

11. Apply some masking tape onto the step perimeter, clean using Sika 205 (refer to Section B) then apply a bead of Sika 252 black. Smooth out the joints then remove masking tape.
12. Install weights onto the steps. Minimum waiting time: 2 hours.

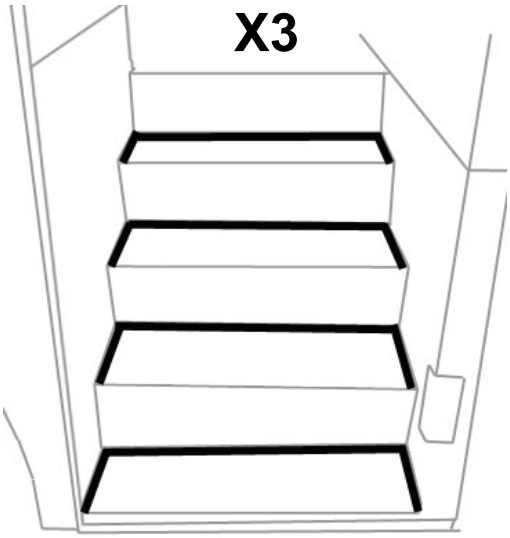

6.10.2 Welding Of Joint Between White Safety Strip And "Tarabus" Floor Covering

1. Pre-heat welding torch;

   Set welding torch to position #4.5 (temperature of 500 °C),

   Heating time: 5 minutes.

2. Before welding, visually ensure that a 1 to 1.5 mm gap exists between white safety strip and "Tarabus" floor covering. Use a knife if this is not the case.

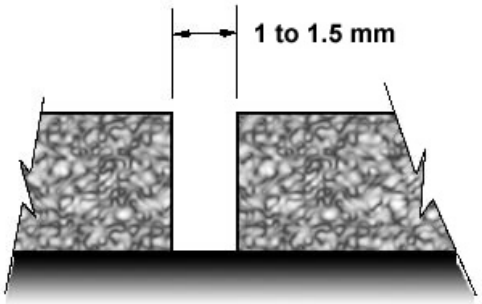

NOTE
There should be no excess of adhesive on top of surfaces, clean if required using "All-Sol".

3. Chamfer the joint.

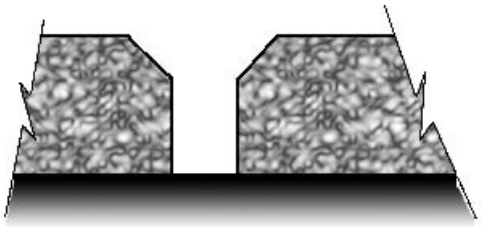

NOTE
The chamfer width must always be less than the filler bead diameter (between 2.5 and 3 mm).

4. Use chamfer knife. **Be careful not to overcut or to cut to the side to prevent damaging "Tarabus" covering.**

5. Add (about 6 inches) some length to the required length of filler bead to make the joint then cut.
6. Take position with welding torch. The proper position is with a slight slope to the rear.

7. Once the welding torch is ready, insert the filler bead into the nozzle and immediately start welding. Move in a regular manner while pressing slightly with torch.

8. The heel of the fast nozzle must not lean against "Tarabus" covering (always parallel to the surface).

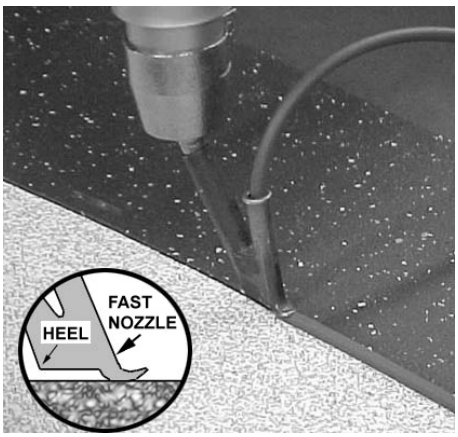

9. Allow cooling down of filler bead (about 5 minutes).

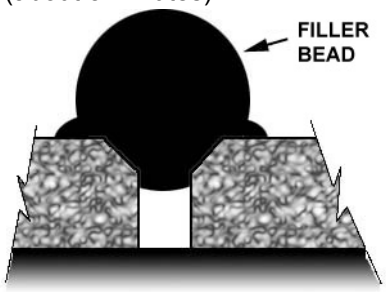

10. Shave filler bead to make it level to the floor. Use supplied knife designed for that purpose.

NOTE
To facilitate the cut, you can spray some soapy water onto the joint.

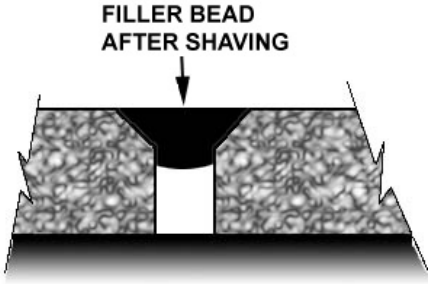

⚠ **CAUTION**
The procedure for turning the torch off must absolutely be followed. If this step is not taken, the element may burn.

11. Set temperature potentiometer to “0” position. Fan will evacuate residual heat. Leave the torch in operation as it is for 3 minutes.
12. Perform adhesion test using the tip of a flat screwdriver; apply a slight pressure on the joint.

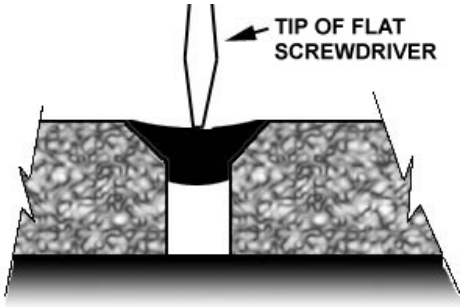

13. If welding was not performed properly, there will a loss of adhesion on one side. If this is the case, repair the joint.

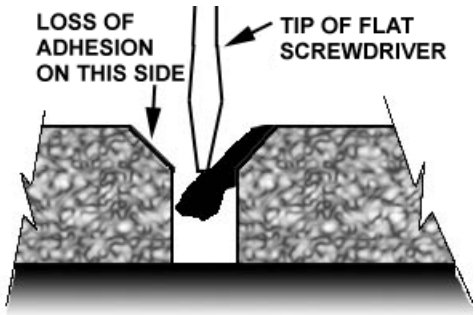

6.10.3 Repair Of A Welded Joint

NOTE
In wintertime, condensation and cold temperature may greatly influenced bonding parameters. Working area must be at a temperature sufficient to prevent reaching condensation point. Mechanically preheat working area (heat lamp or heat gun) or wait until vehicle reaches room temperature.

1. Using a knife, remove portion of joint to be repaired.

NOTE
Loss of adhesion may be local. If this is the case, repair may also be local.

2. Chamfer the joint again as indicated in paragraph 6.10.2, Section: Welding Of Joint Between White Safety Strip And “Tarabus” Floor Covering.
3. Re-weld the joint as indicated in paragraphs 6, 7 and 8. Use your thumb to hold the filler bead end.

WARNING

Nozzle is hot.

4. Always add an extra inch of filler bead at the beginning and at the end of repair.
5. Perform steps indicated in paragraphs 9, 10 and 11.

7. VEHICLE JACKING POINTS

The vehicle can be lifted by applying pressure under body jacking points or front and drive axle jacking points. When it is necessary to lift the vehicle, care should be taken to ensure that the pressure is applied only on the specified areas. Equipment for lifting the front of the vehicle must have a combined lifting capacity of at least 20,000 lb. (9 100 kg). Equipment for lifting the rear of the vehicle must have a combined lifting capacity of at least 40,000 lb. (18 200 kg).

WARNING

DO NOT tow or jack vehicle with people on board.

WARNING

When it is necessary to raise the vehicle, care should be taken to ensure that pressure is applied only at the points indicated in figures 50 to 54.

WARNING

Extra lift capacity may be required if luggage or any other type of load (e.g. extra equipment) are onboard the vehicle.

CAUTION

The suspension of the vehicle must be in the normal ride position before jacking.

Ten jacking points are located on the vehicle: two are located on each side of the frame and two are located under each axle. Refer to the following illustrations for the location of jacking points.

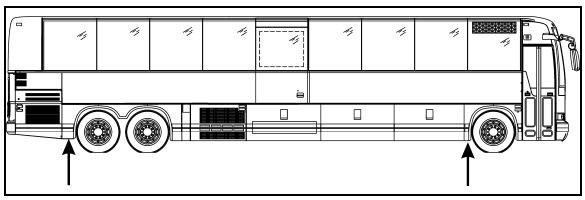

FIGURE 50: JACKING POINTS ON FRAME

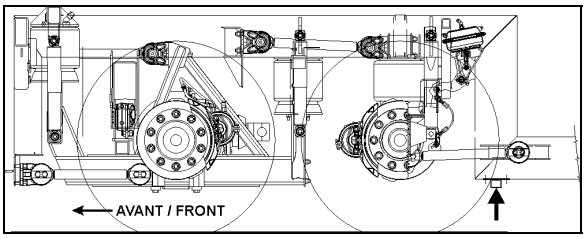

FIGURE 51: REAR END JACKING POINTS

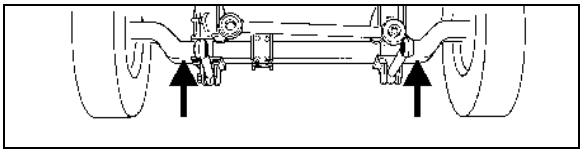

FIGURE 52: JACKING POINTS ON I-BEAM FRONT AXLE

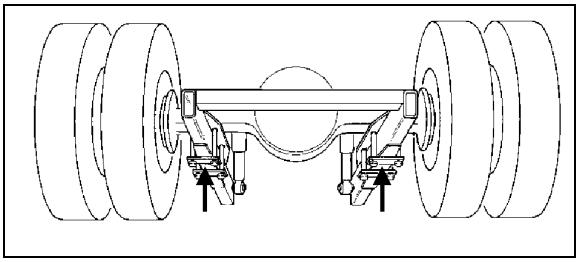

FIGURE 53: JACKING POINTS ON DRIVE AXLE OEH3B762

CAUTION

Always unload or retract the tag axle before jacking the vehicle from the front and drive axle jacking points to prevent damage to suspension components.

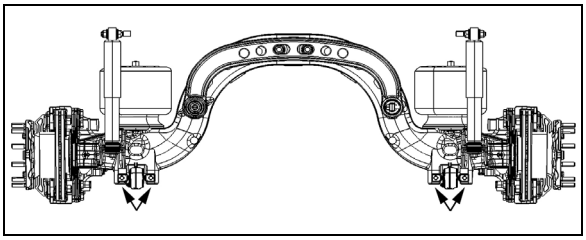

FIGURE 54: JACKING POINTS ON TAG AXLE OEH3B764

WARNING

The jacking points on the tag axle must be used for raising the tag axle only.

Several kinds of hydraulic jacks can be used. Only jack at the specified jacking points. Jack must support the following capacities:

Front axle: 20,000 lb. (9 100 kg);

Drive axle: 40,000 lb. (18 200 kg).

7.1 HYDRAULIC JACK

To raise: turn release valve clockwise. Insert handle in socket and raise vehicle by pumping.

To lower: remove handle and turn the release valve slowly counterclockwise.

Always keep ram and extension screw retracted when jack is not in use.

Service: Check oil level when jack fails to raise to full height. Lower ram completely with release valve open and jack in upright position, remove filler plug and refill to level of filler hole with hydraulic jack oil. **Never use brake fluid**.

DANGER

Jack is intended for lifting only. Do not get under the vehicle or load for any reason unless it is properly supported with safety stands and securely blocked.

DANGER

Do not overload jack above rated capacity. Prevent "side loading", make sure load is centered on ram. Do not push or tilt load off jack.

8. TOWING THE VEHICLE

8.1 LIFTING FROM THE FRONT

To prevent damage to the vehicle, use the two tow eyes fixed to the vehicle frame between the front axle and the front bumper. Use only a solid link tow bar and a safety chain to tow the vehicle.

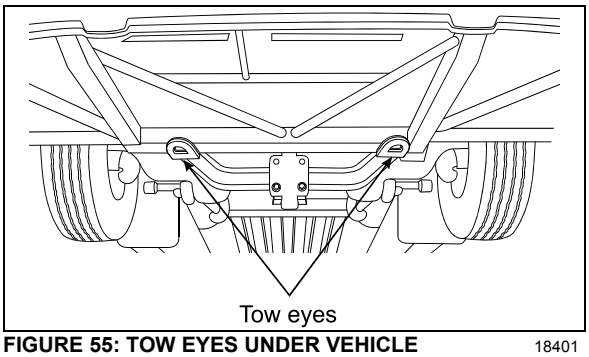

FIGURE 55: TOW EYES UNDER VEHICLE 18401

- Disconnect driveshaft or remove both drive axle shafts to prevent damage to the transmission. Plug axle tube to prevent oil loss. Refer to Rockwell's *"Maintenance manual no.5"* annexed at the end of Section 11: Rear Axle of the maintenance manual.

CAUTION

To prevent damage to the drive train components, disconnect axle shafts or driveshaft before towing. Do not attempt to push or pull-start a vehicle equipped with an automatic transmission.

Failure to disconnect the driveshaft, remove the drive axle shafts or lift the drive wheels off the ground before towing can cause serious transmission damage and void the warranty.

- The towed vehicle must be lifted from under the front end only. The tow truck must be equipped with the proper lifting equipment to reach under the tow eyes or the front axle since no other lifting points are recommended. Lifting and towing from any other point are unauthorized as it may cause serious damage to the structure. Do not unload or raise the tag axle when lifting and towing to prevent overloading the drive axle.

- Raise the front of the coach then install wooden blocks underneath front tires.
- Install axle forks and supports onto tow bar, position axle forks around beam and into tow eyes, insert chains into tow eyes to secure.

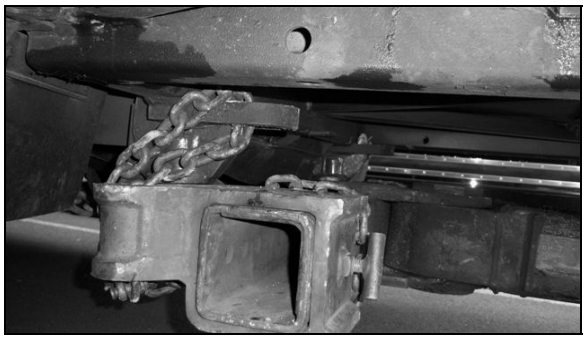

DANGER

Do not carry passengers while the coach is being towed.

- The coach can also be towed by installing axle forks on the front axle.

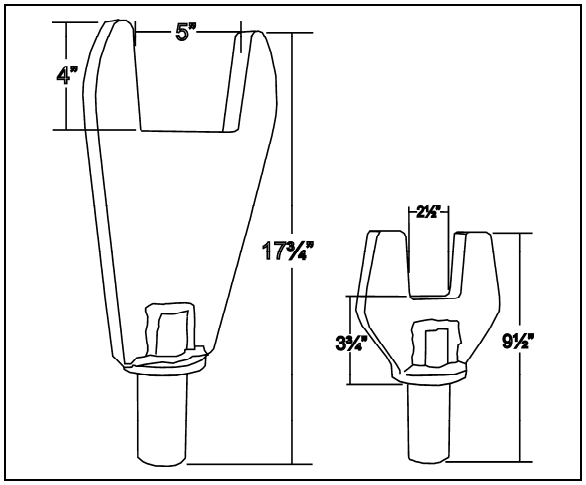

FIGURE 56: AXLE FORKS

- Install chains around tow bar and front axle.

CAUTION

Make sure a safe distance (27-28”) is kept between the front of the coach and the tow truck. This space ensures that coach does not suffer damages when being towed.

- Flip down the access door located in the front bumper, connect an auxiliary air supply to the two quick connectors so the emergency/ parking brakes don’t apply while towing.

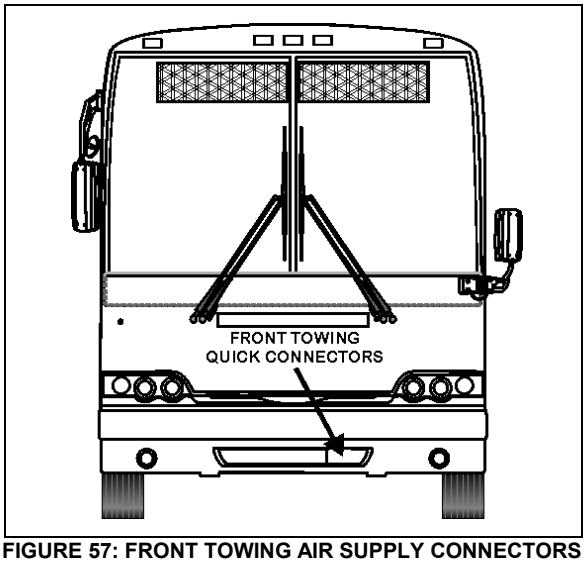

FIGURE 57: FRONT TOWING AIR SUPPLY CONNECTORS

8.2 TOWING WITH A FRONT FLAT TIRE

- In case of a flat tire, drive coach over a wooden block to be able to slide the tow bar underneath.

- Repeat previous steps for attaching tow bar to tow eyes or front axle using axle forks and chains.

8.3 MOVING A VEHICLE FROM THE REAR

The vehicle should not be towed from the rear unless an emergency situation occurs. If the vehicle has to be moved over a short distance as in a parking lot:

- Chock front vehicle wheels.

- Lift the vehicle rear end. Slide axle forks and supports onto tow bar and install onto engine cradle.

CAUTION

To prevent damage to the vehicle structure, it is not recommended to tow the vehicle from the rear. In case of damage to the drive train components, use a low bed semi-trailer to support the rear end.

DANGER

Do not carry passengers while the coach is being towed.

CAUTION

Make sure axle shafts or driveshaft are installed correctly after towing. Tighten axle shaft and driveshaft nuts to the correct torque settings. Do not invert shafts.

SECTION 22: HEATING AND AIR CONDITIONING

CONTENTS

1. HEATING AND AIR CONDITIONING 4

2. AIR CIRCULATION WITH CENTRAL HVAC SYSTEM 4

2.1 DRIVER'S AREA 4
2.2 CABIN OR PASSENGERS' AREA 4

3. AIR CIRCULATION WITH SMALL HVAC SYSTEM 5

4. SMALL HVAC SYSTEM OPERATION 5

5. CENTRAL HVAC SYSTEM OPERATION 5

5.1 DRIVER'S SECTION OPERATION 5
5.2 PASSENGERS' SECTION OPERATION 6
5.3 OVERHEAD COMPARTMENT A/C 8

6. HVAC UNIT MAINTENANCE 8

6.1 COIL CLEANING 8
6.2 DRIVER'S SECTION AIR FILTERS 9
6.3 PASSENGERS' SECTION AIR FILTER 9
6.4 OVERHEAD COMPARTMENT FAN AIR FILTER 10

7. HVAC SYSTEM PARTICULARITIES, TESTING AND TROUBLESHOOTING 10

7.1 HVAC SYSTEM AND TEST MODE FOR SWITCHES AND SENSORS 10
7.2 HVAC SYSTEM AND TEST MODE FOR ELECTRIC MOTORS 11
7.3 PARTICULARITIES 11
7.4 HVAC SYSTEM TROUBLESHOOTING 12

8. CENTRAL AIR CONDITIONING SYSTEM 13

8.1 A/C CYCLE 13
8.2 REFRIGERANT 14
8.2.1 Procurement 14
8.2.2 Precautions in Handling Refrigerant 14
8.2.3 Treatment in Case of Injury 14
8.2.4 Precautions in Handling Refrigerant Lines 16
8.2.5 Auxiliary System Refrigerant Lines 16
8.3 PUMPING DOWN 16
8.4 ADDING REFRIGERANT (VAPOR STATE) 17
8.5 EVACUATING SYSTEM 17
8.5.1 Double Sweep Evacuation Procedure 18
8.6 CHARGING SYSTEM 19
8.7 REFRIGERANT SYSTEM CLEAN-OUT AFTER COMPRESSOR FAILURE 19
8.7.1 Determining Severity of Failure 20
8.7.2 Clean-out after Minor Compressor Failure 20
8.7.3 Clean-out After Major Compressor Failure 20

9. CENTRAL A/C SYSTEM COMPONENTS 20

9.1 COMPRESSOR (CENTRAL SYSTEM) 20
9.1.1 Belt Replacement 20
9.1.2 Belt Tension Adjustment 21
9.1.3 Pulley Alignment 22
9.1.4 Longitudinal Compressor Alignment 22
9.1.5 Horizontal Compressor Alignment 22
9.1.6 Vertical Compressor Alignment 22

9.1.7 Compressor Maintenance *22*
9.1.8 Troubleshooting Guide *22*
9.2 MAGNETIC CLUTCH 23
9.3 EVAPORATOR MOTOR 23
9.3.1 Removal *23*
9.3.2 Installation *24*
9.4 CONDENSER 24
9.4.1 Condenser Fan Motors *24*
9.4.2 Condenser Fan Motor Removal *25*
9.5 RECEIVER TANK 25
9.6 FILTER DRYER 25
9.6.1 Replacement *25*
9.6.2 Moisture Indicator *26*
9.7 LIQUID REFRIGERANT SOLENOID VALVE 26
9.7.1 Manual Bypass *26*
9.7.2 Coil Replacement *26*
9.7.3 Valve Disassembly *27*
9.7.4 Valve Reassembly *27*
9.8 EXPANSION VALVE 27
9.8.1 Cabin or Passenger's Section HVAC Unit *27*
9.8.2 Driver's HVAC Unit *30*
9.9 TORCH BRAZING 30
9.10 TROUBLESHOOTING 31
9.10.1 Expansion Valve *31*
9.10.2 A/C *32*
9.11 TEMPERATURES & PRESSURES 34
9.12 LEAK TESTING 35

10. SMALL OR AUXILIARY AIR CONDITIONING SYSTEM COMPONENTS 35

10.1 COMPRESSOR 35
10.2 COMPRESSOR REMOVAL 35
10.2.1 When the compressor is operational *35*
10.2.2 When the compressor is inoperable *35*
10.2.3 Evacuating System Before Adding Refrigerant *36*
10.3 OIL ADDITION 36
10.4 COMPRESSOR OIL CONTAMINATION 36
10.5 OIL RETURN OPERATION 36

11. HEATING SYSTEM 39

11.1 CENTRAL HEATING SYSTEM 39
11.1.1 Draining Heating System *39*
11.1.2 Filling Heating System *40*
11.1.3 Bleeding Heating System *40*
11.1.4 Soldering *40*
11.1.5 Driver's Hot Water Pneumatic Valve Assembly *41*
11.1.6 Central Hot Water Pneumatic Valve Assembly *42*
11.1.7 Water Recirculating Pump *43*
11.1.8 Preheating System (Optional) *46*
11.2 SMALL HEATING SYSTEM 50
11.2.1 Draining Heating System *50*
11.2.2 Filling Heating System *50*
11.2.3 Driver's Hot Water Pneumatic Valve Assembly *50*
11.2.4 Water Recirculating Pump *50*

12. SPECIFICATIONS 53

ILLUSTRATIONS

FIGURE 1: DRIVER'S AIR CIRCULATION 4
FIGURE 2: PASSENGERS' AREA RECIRCULATION DAMPER 4
FIGURE 3: CENTRAL HVAC SYSTEM AIR CIRCULATION 5
FIGURE 4: PASSENGERS OVERHEAD COMPARTMENT VENTILATION SYSTEM 5
FIGURE 5: SMALL HVAC SYSTEM CONTROL UNIT 5
FIGURE 6: CENTRAL HVAC SYSTEM CONTROL UNIT 7
FIGURE 7: THERMISTOR SENSOR 7
FIGURE 8: EVAPORATOR COMPARTMENT 7
FIGURE 9: CONDENSER COMPARTMENT 7
FIGURE 10: A/C JUNCTION BOX 7
FIGURE 11: DRIVER'S HVAC UNIT COIL ACCESS PANEL 8
FIGURE 12: EVAPORATOR COIL ACCESS PANEL (TYPICAL) 8
FIGURE 13: EVAPORATOR COIL CLEANING 8
FIGURE 14: CONDENSER COMPARTMENT 9
FIGURE 15: DRIVER'S SECTION ACCESS GRILL 9
FIGURE 16: DRIVER'S SECTION AIR FILTERS 9
FIGURE 17: PASSENGERS' SECTION AIR FILTER 10
FIGURE 18: OVERHEAD COMPARTMENT FAN AIR FILTER 10
FIGURE 19: REFRIGERANT CIRCUIT (CENTRAL AND AUXILIARY SYSTEMS) 15
FIGURE 20: DOUBLE SWEEP EVACUATION SET-UP 18
FIGURE 21: AIR PRESSURE REGULATOR 21
FIGURE 22: BELTS ARRANGEMENT 21
FIGURE 23: BELTS ARRANGEMENT 21
FIGURE 24: IDLER PULLEY INSTALLATION ON VOLVO D13 ENGINE 21
FIGURE 25: A/C COMPRESSOR BELT ADJUSTMENT 21
FIGURE 26: COMPRESSOR ALIGNMENT 22
FIGURE 27: COMPRESSOR ALIGNMENT 22
FIGURE 28: EVAPORATOR COMPARTMENT 23
FIGURE 29: EVAPORATOR MOTOR ASSY FIXING BOLTS 24
FIGURE 30: EVAPORATOR MOTOR ASSEMBLY 24
FIGURE 31: CONDENSER FAN MOTOR 25
FIGURE 32: A/C CONDENSER COMPARTMENT 25
FIGURE 33: DRIVER'S EVAPORATOR LIQUID SOLENOID VALVE 26
FIGURE 34: REFRIGERANT SOLENOID VALVE 27
FIGURE 35: EXPANSION VALVE 28
FIGURE 36: SUPERHEAT ADJUSTMENT INSTALLATION 29
FIGURE 37: HIGH & LOW SWING TEMPERATURE AT REMOTE BULB 29
FIGURE 38: COMPRESSOR REMOVAL OR INSTALLATION 36
FIGURE 39: REFRIGERANT CIRCUIT (SMALL SYSTEM) 37
FIGURE 40: CENTRAL HEATING SYSTEM COMPONENTS 38
FIGURE 41: CEILING OF THE SPARE WHEEL COMPARTMENT 39
FIGURE 42: DRIVER'S HVAC UNIT 39
FIGURE 43: HEATER LINE SHUT-OFF VALVES 40
FIGURE 44: EVAPORATOR COMPARTMENT 40
FIGURE 45: DRIVER'S HOT WATER PNEUMATIC VALVE ASSEMBLY 41
FIGURE 46: PNEUMATIC WATER VALVE 41
FIGURE 47: CENTRAL HOT WATER PNEUMATIC VALVE ASSEMBLY 42
FIGURE 48: PNEUMATIC WATER VALVE 43
FIGURE 49: PUMP LOCATION (CENTRAL A/C) 43
FIGURE 50: WATER RECIRCULATING PUMP (CENTRAL A/C) 45
FIGURE 51: LOCATION OF PREHEATER 46
FIGURE 52: SPHEROS PREHEATER (104,000 BTU) 46
FIGURE 53: TIMER 47
FIGURE 54: CEILING OF THE SPARE WHEEL COMPARTMENT 51
FIGURE 55: SMALL HEATING SYSTEM COMPONENTS 52

1. HEATING AND AIR CONDITIONING

The interior of the vehicle is pressurized by its Heating, Ventilation, Air Conditioning (HVAC) system. Two HVAC systems are available: Small HVAC System and Central HVAC System. If the vehicle is equipped with a Central HVAC System; air flow and controls divide the vehicle in two areas: driver's area and passengers' or cabin area. The interior of the vehicle should always be slightly pressurized to prevent dust and moisture from entering vehicle. Each section has its own fresh air, returning air and discharge air ducting. The exhaust is mainly done through the lavatory ventilator (if equipped) and through normal air-tightness losses.

2. AIR CIRCULATION WITH CENTRAL HVAC SYSTEM

2.1 DRIVER'S AREA

Fresh air is taken from a plenum underneath the front service compartment and enters the mixing box through an ON/OFF damper. Return air is taken through the base of the dashboard panel utility compartments into the mixing box. Mixed air goes through cooling and heating coils, fans and discharge ducts.

Both right and left discharge ducts defrost one half of the windshield. The driver can also divert some air flow to the console, from which he can direct air to his knees and/or upper body with adjustable HVAC air registers and to his feet with the appropriate button (see Fig. 1 and Owner's or Operator's manual).

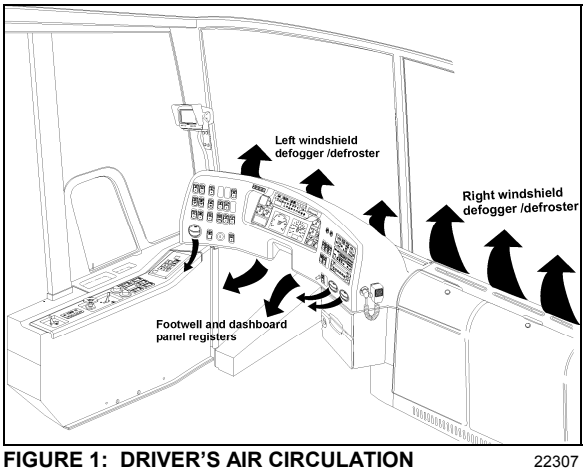

FIGURE 1: DRIVER'S AIR CIRCULATION 22307

X3-45 coaches are also equipped with a windshield upper section de-icing system. Also, one additional air register is located in the driver's area but supplied by the passengers' air ducting system. It is installed in the stepwell for step de-icing.

2.2 CABIN OR PASSENGERS' AREA

Fresh air enters the vehicle on the L.H. side, through the recirculation damper located inside the evaporator compartment door (Fig. 2). The damper can be fully opened for normal operation or closed for extreme weather or highly polluted areas (Refer to the Owner's or Operator's Manual for more details). The recirculation REC button is located on the HVAC control unit. Press down the button to partially close the fresh air damper. Return air is drawn from inside the vehicle through the register duct located on L.H. side of vehicle (Fig. 3).

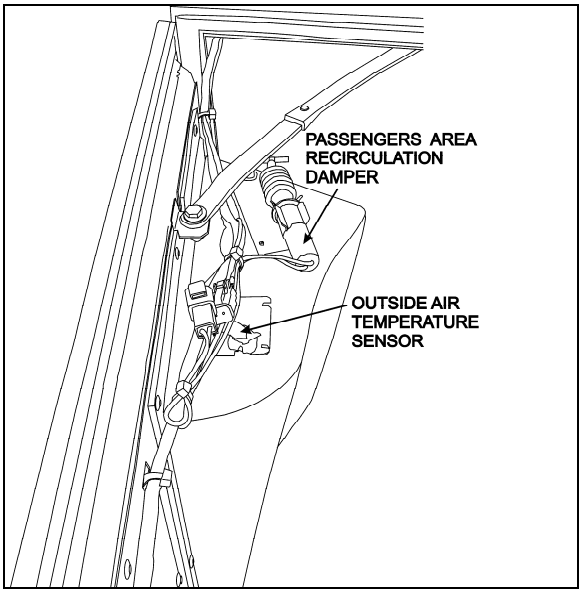

FIGURE 2: PASSENGERS' AREA RECIRCULATION DAMPER 22302

A double blower fan unit, which is activated by the evaporator motor, draws mixed air through an air filter, cooling and heating coils, then forces this air in the ventilation ducts along the walls, and finally exhausts it just below side windows.

X3-45 coaches are also equipped with an overhead compartment ventilation system, a three-position rocker switch (0FF - 1st speed - 2nd speed) located on R.H. dashboard panel controls the speed of both fans. Return air is drawn just below the middle side windows through an air filter into the overhead compartment fan; discharge air is fed to the rotating registers through the ventilation duct (Fig. 4).

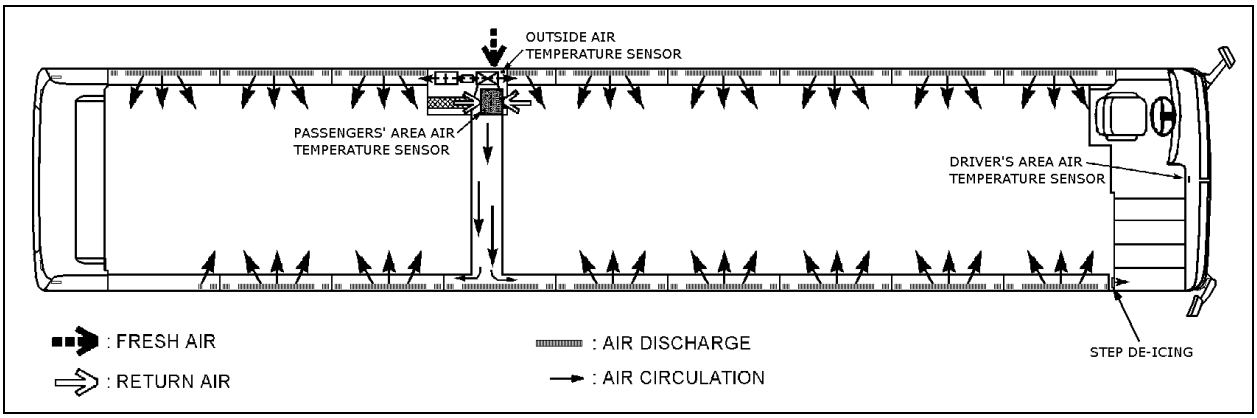

FIGURE 3: CENTRAL HVAC SYSTEM AIR CIRCULATION 22308

The overhead compartment air registers are used to control air flow for the passenger seats. One register per seat direct air flow by pointing or rotating register. Open or close register to adjust air flow.

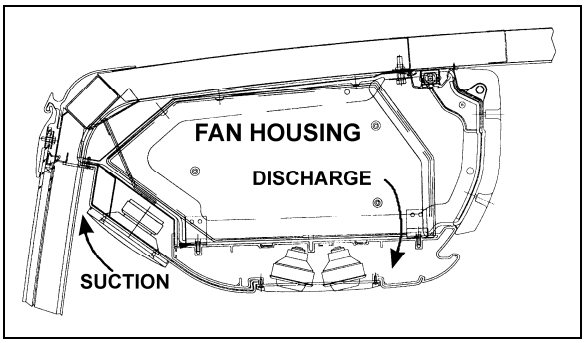

FIGURE 4: PASSENGERS OVERHEAD COMPARTMENT VENTILATION SYSTEM 22211

3. AIR CIRCULATION WITH SMALL HVAC SYSTEM

Fresh air is taken from a plenum behind the front bumper and enters the mixing box through an adjustable damper. Returning air is taken through the right console into the mixing box. The recirculation REC button is located on the HVAC control unit (Fig. 5). Mixed air goes through cooling and heating coils, fans and discharge ducts.

Both right and left discharge ducts defrost/defog one half of the windshield. The driver can divert his air flow to the dashboard, from which he can direct vent to his upper body with adjustable HVAC register and to his feet with the appropriate button (see fig. 1 and Owner's manual).

4. SMALL HVAC SYSTEM OPERATION

Only the temperature in the driver's area is controlled by the HVAC control unit mounted on the R.H. dashboard panel (Fig. 5).

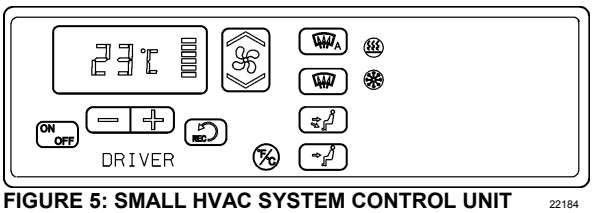

FIGURE 5: SMALL HVAC SYSTEM CONTROL UNIT 22184

Using the Up/Down type switch sets the fan speed and the speed chosen is displayed on the HVAC control unit.

NOTE
The driver's area air temperature sensor is located behind the grill of the R.H. side console.

NOTE
The outside air temperature sensor is located behind the front bumper on the L.H. side.

5. CENTRAL HVAC SYSTEM OPERATION

To operate the air conditioning system when vehicle is stationary, engine should run at fast idle. During operation of the air conditioning system, windows should be kept closed and door not left open longer than necessary. In order to prevent battery discharge, HVAC system will not operate if vehicle charging system is not working properly.

5.1 DRIVER'S SECTION OPERATION

The temperature control in the driver's area is provided directly by the L.H. portion of the HVAC

control unit mounted on the R.H. dashboard panel (Fig. 5).

The driver's HVAC section piping is paralleled with the cabin or passengers HVAC section piping. Both sections use the same refrigerant and coolant, and are linked to the same condenser and compressor, even if they are individually controlled. It requires the passengers HVAC section to engage the A/C compressor magnetic clutch. Consequently, the driver's section cannot be operated in the A/C mode alone.

NOTE
The driver's HVAC section turns on automatically at starting of the engine and uses the settings that were kept in memory before turning off of the system.

The A/C compressor starts automatically when the two following conditions are satisfied:

1. The outside temperature is above 32°F (0°C).
2. The cabin or passenger's area temperature has reached 7°F (4°C) under the set point.

Using the Up/Down type switch sets the fan speed and the speed chosen is illustrated on the window display.

NOTE
Upon starting, if the outside temperature is above 32°F (0°C) and then drops below 32°F (0°C), the compressor will keep running up to a temperature of 15°F (-9°C) to prevent condensation from forming on the windows.

NOTE
To perform a test of the driver's section windshield defroster, it is possible to run the system without running the engine.

The following 2% error chart and table can be used to troubleshoot the driver's area air temperature sensor and the outside air temperature sensor.

NOTE
The driver's area air temperature sensor is located behind the grill of the R.H. side console (Refer to fig.13).

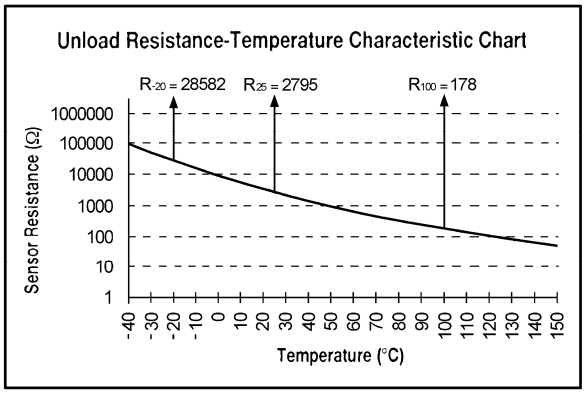

Temp °C	Temp °F	Resistance Ohms
-40	-40	100865
-35	-31	72437
-30	-22	52594
-25	-13	38583
-20	-4	28582
-15	5	21371
-10	14	16120
-5	23	12261
0	32	9399
5	41	7263
10	50	5658
15	59	4441
20	68	3511
25	77	2795
30	86	2240
35	95	1806
40	104	1465
45	113	1195
50	122	980
55	131	808
60	140	670
65	149	559
70	158	468
75	167	394
80	176	333
85	185	283
90	194	241
95	203	207
100	212	178
105	221	153
110	230	133
115	239	115
120	248	100
125	257	88
130	266	77
135	275	68
140	284	60
145	293	53
150	302	47

5.2 PASSENGERS' SECTION OPERATION

The R.H. portion of the HVAC control unit enables the selection of the temperature in the cabin or passenger's area (refer to the Owner's or Operator's Manual for details).

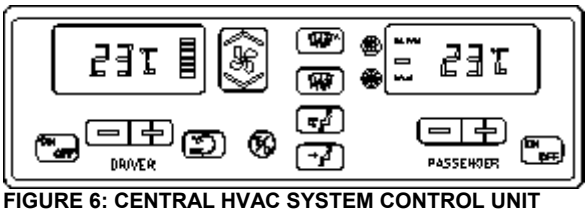

FIGURE 6: CENTRAL HVAC SYSTEM CONTROL UNIT

Temperature control is provided in conjunction with a thermistor sensor inside register duct, located on L.H. side of vehicle (Figs. 3 & 7).

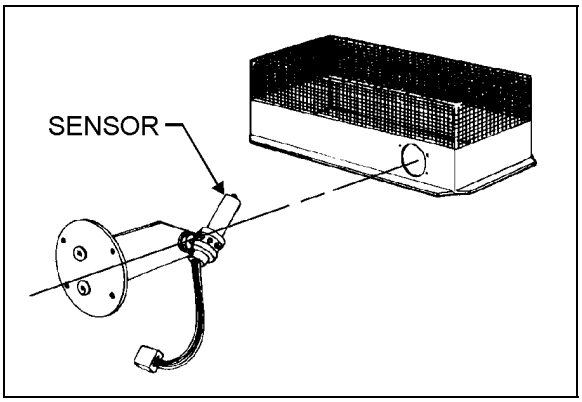

FIGURE 7: THERMISTOR SENSOR

The flow of water to the vehicle's main heater core is controlled by a pneumatic water valve which varies the cycling rate depending on selected temperature. A red LED, located on HVAC control unit, illuminates when heating mode is selected. A green LED illuminates when compressor clutch is in operation.

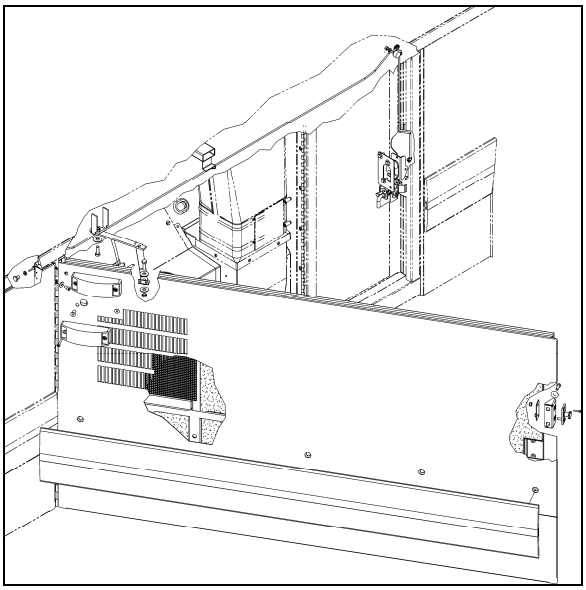

FIGURE 8: EVAPORATOR COMPARTMENT 22301

The evaporator fan motor, located in the evaporator compartment, is protected by a 90 amps, manually-resettable (CB3 or CB4) circuit breaker located on the rear junction panel and is accessible from the engine compartment curb-side door, on R.H. side of the vehicle (refer to Section 06, *"Electrical System"* in this manual for details).

The condenser coil mounted on the opposite side of the evaporator is ventilated by four axial fans. The fan motors are protected by a manually-resettable 70 amp circuit breaker (CB 5 or CB7) mounted on the rear junction panel and accessible from the engine compartment curb-side door.

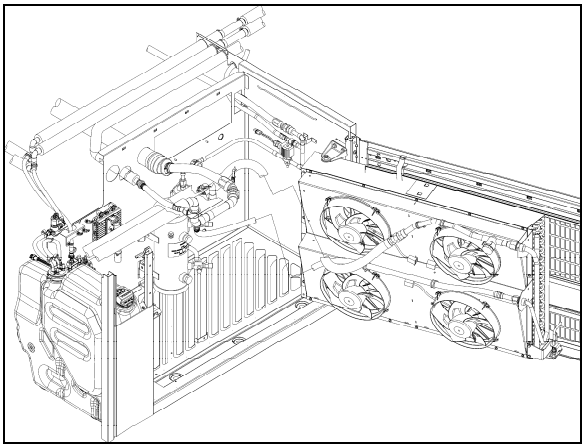

FIGURE 9: CONDENSER COMPARTMENT 22299

Furthermore, the following relays, diodes and multiplex module are located in the evaporator compartment (Fig. 10). They are mounted in the HVAC junction box located inside the evaporator compartment door.

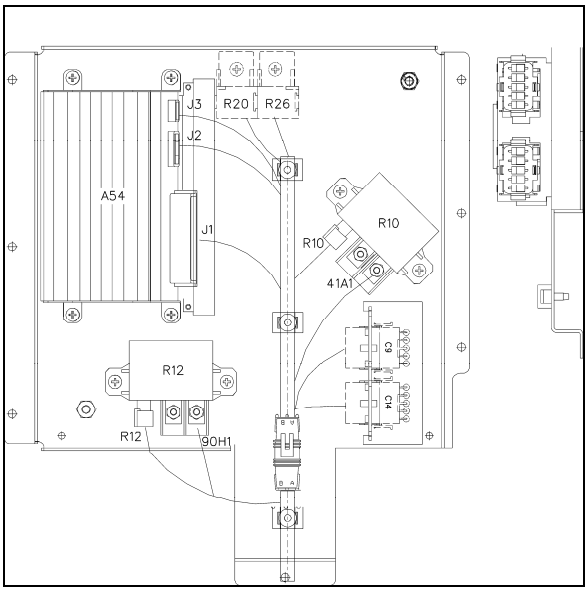

FIGURE 10: A/C JUNCTION BOX

A/C Junction Box			
Multiplex Module			
A54	I/O-B		
Relays			
R10	Condenser Fan Sp. 2		
R12	Evaporator Fan		
R20	Water Pump Relay		
R26	Water Pre-heater Relay		
Diodes			
D9	HVAC	D10	Pre-Heater
D11	Pass. Liq. Sol.	D17	Lugg. 5th Compt
D19	Lugg. 2nd Compt	D20	Lugg. 1st Compt
D25	Evap. Fan	D30	Water Pump
D73	Opt.	D80	Opt.

5.3 OVERHEAD COMPARTMENT A/C

On X3-45 coaches, optional small A/C evaporator coils may be added to both overhead compartments existing air system. These auxiliary A/C system components are separate and completely independent of central system and permit a wider temperature range in the passenger's area. The three-position rocker switch used to control the fans also controls the A/C system.

6. HVAC UNIT MAINTENANCE

No special maintenance is required on the passengers, driver's and auxiliary HVAC units, with the exception of cleaning their respective coils and air filters, plus periodic inspection for broken drains, hoses and charging of system.

NOTE
Squeeze rubber discharge tubes located underneath the appropriate compartment to eliminate the accumulated water and dirt when you make routine maintenance.

6.1 COIL CLEANING

Check the external surface of the coil at regular intervals for dirt or any foreign matter.

For the driver's HVAC unit, remove the grill and the access panels and back flush the coil from inside (Fig. 11).

For the passengers' section evaporator coil, remove the access panel and back flush the coil (Fig. 12 & 13) every 12,500 miles (20 000 km) or once a year, whichever comes first.

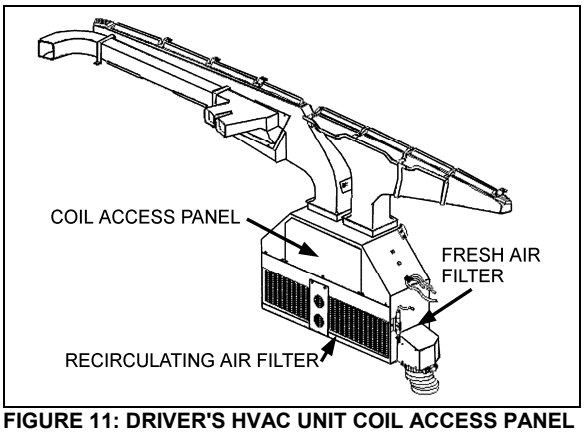

FIGURE 11: DRIVER'S HVAC UNIT COIL ACCESS PANEL

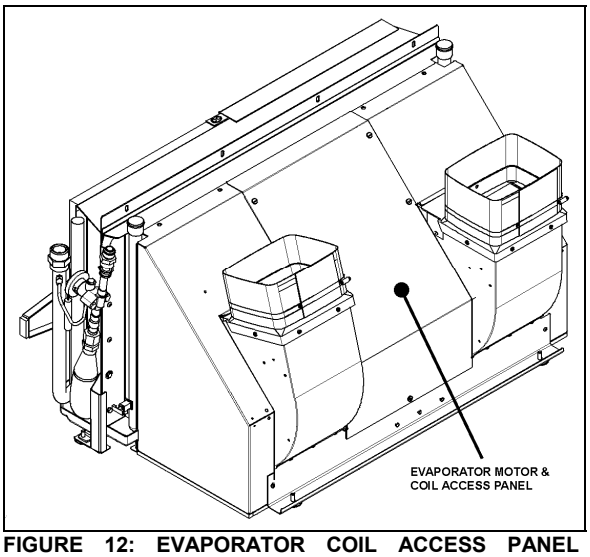

FIGURE 12: EVAPORATOR COIL ACCESS PANEL (TYPICAL) 22309

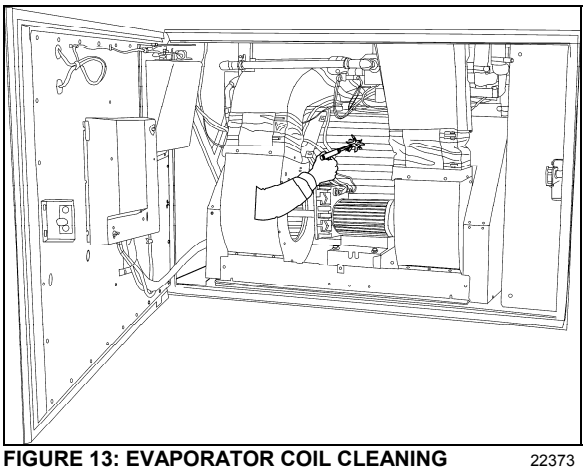

FIGURE 13: EVAPORATOR COIL CLEANING 22373

For the condenser coil, back flush the coil (Fig. 14) every 6,250 miles (10 000 km) or twice a year, whichever comes first.

CAUTION

Use a water jet or water mixed with low air pressure to clean the coil.

CAUTION

Direct the pressure straight through the coil to prevent bending of fins and do not use extremely high pressure. Do not use hot water, steam or caustic soap.

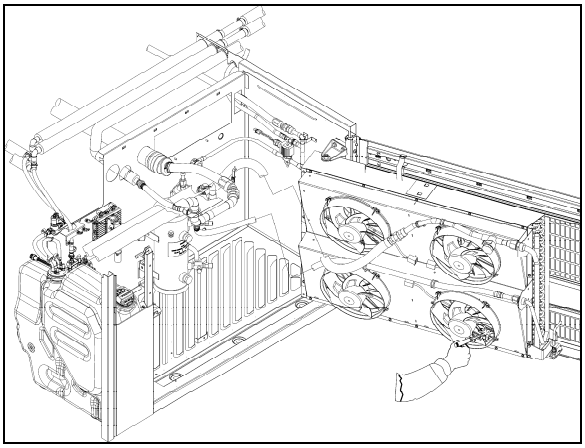

FIGURE 14: CONDENSER COMPARTMENT 22311

6.2 DRIVER'S SECTION AIR FILTERS

The driver HVAC system is located behind the dashboard's R.H. side lateral plastic panel. To gain access to the A/C filters, unscrew the R.H. lateral console's grill located at the top step of the entrance door steps. Slide out the recirculating air and fresh air filters. To clean filters back flush with water, then dry with air, every 12,500 miles (20 000 km) or once a year, which-ever comes first (Fig. 15 & 16).

NOTE

If the windshield is continuously fogged, check that the driver's air filter is not clogged.

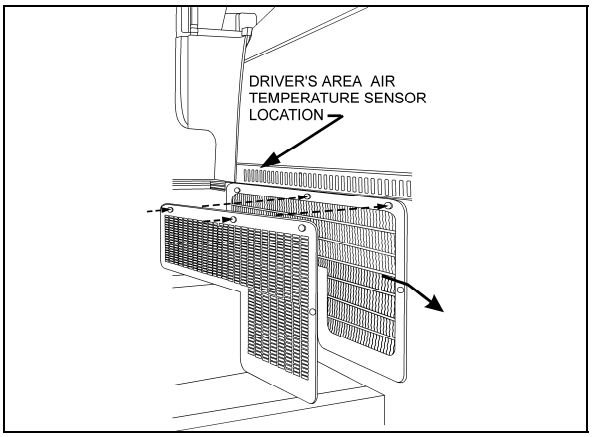

FIGURE 15: DRIVER'S SECTION ACCESS GRILL 22312

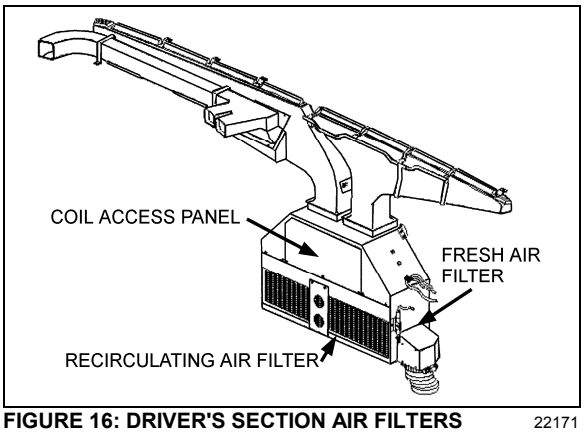

FIGURE 16: DRIVER'S SECTION AIR FILTERS 22171

6.3 PASSENGERS' SECTION AIR FILTER

The cabin or passengers' section air filter is located in the evaporator compartment. To access the filter, open baggage compartment door located forward of the evaporator compartment (L.H. side). Open access panel by turning the three screws of panel ¼ of a turn, unsnap both fasteners on top of filter, and slide out filter (Fig. 17). To clean filter, back flush with water or soapy water, then dry with air every 12,500 miles (20 000 km) or once a year, whichever comes first.

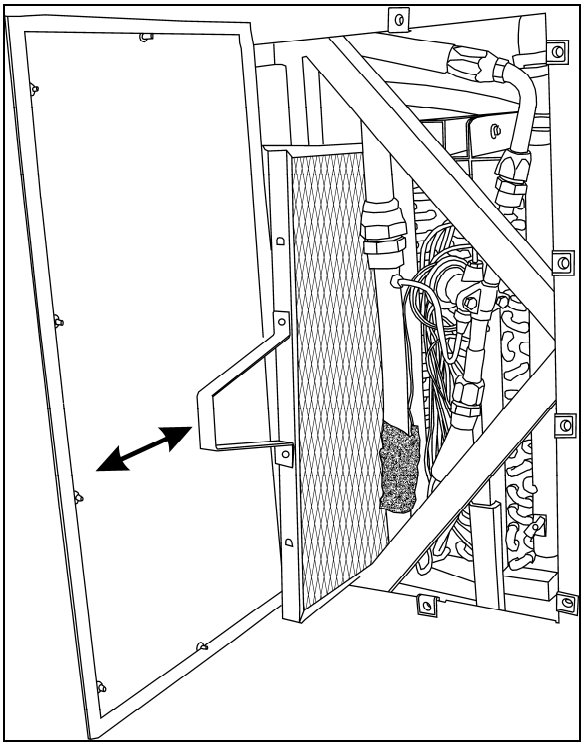

FIGURE 17: PASSENGERS' SECTION AIR FILTER 22306

CAUTION

Do not use high pressure water jet to avoid damaging filter.

CAUTION

Be sure not to reverse filter upon installation.

6.4 OVERHEAD COMPARTMENT FAN AIR FILTER

On X3-45 coaches, A/C evaporator coils may be installed in both overhead compartment air systems, only the air filters are serviceable. The air filters are accessible from inside the overhead compartments. Slide out the filters, then back flush with water, dry with air and replace. This procedure should be done every 12,500 miles (20,000 km) or once a year, whichever come first.

If A/C units were installed, ball valves are added on supply and return lines in the engine compartment. They have service port to evacuate the A/C overhead compartment circuit. When work has to be done on an evaporator coil unit, it will be easier to remove it and repair it on a bench.

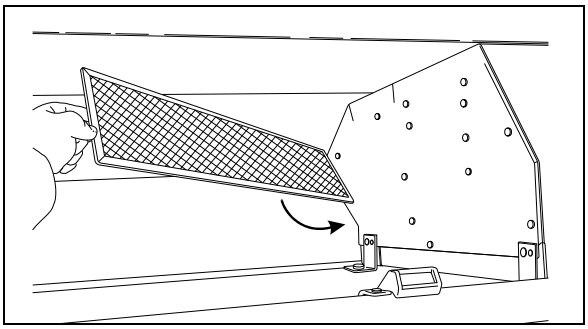

FIGURE 18: OVERHEAD COMPARTMENT FAN AIR FILTER 22201

7. HVAC SYSTEM PARTICULARITIES, TESTING AND TROUBLESHOOTING

Before undertaking any troubleshooting on the HVAC system, study the appropriate wiring diagrams to get a complete understanding of the HVAC components circuitry, read and understand section 06:ELECTRICAL of this manual under "Troubleshooting And Testing The Multiplex Vehicles" and "Test Mode For Switches And Sensors". The information included in these paragraphs is necessary for troubleshooting the HVAC system on Multiplex vehicles.

7.1 HVAC SYSTEM AND TEST MODE FOR SWITCHES AND SENSORS

When in switch/sensor test mode (see Section 06: ELECTRICAL for complete information), the A/C compressor HI and LO pressure values are displayed one after the other instead of the outside temperature in the telltale panel LCD display. This feature can be used when the vehicle is traveling to check the A/C compressor pressure values.

NOTE

When starting the A/C compressor wait 5 seconds before checking pressures in order to give the system a chance to build its pressure. During the first 5 seconds after startup, the compressor is active on 6 cylinders and the A/C valve is open regardless of the pressure readings.

In test mode, with the parking brake applied and the passenger set point set to a value higher than 64°F (18°C), the hot water circulating pump is not set to OFF as it would normally do when the outside temperature gets above 50°F (10°C). This feature allows verification of the pump when inside a garage. This is also useful

when working on the heating system to remove air pockets trapped in the system.

When performing an A/C cooling test and having the water pump shut off in switch/sensor test mode is required, just set the passenger set point temperature to the minimum 64°F (18°C) to shut off the pump.

7.2 HVAC SYSTEM AND TEST MODE FOR ELECTRIC MOTORS

The test mode allows testing the motors and electric contactors without the need to have the engine running (see Section 06: ELECTRICAL under "TEST MODE FOR ELECTRICAL MOTORS" for complete information).

Use this test mode for testing of the condenser motors, the A/C compressor clutch activation, left and right unloaders, evaporator motor, water pump, hot water solenoid valve and overhead compartment air register fan.

7.3 PARTICULARITIES

Conditions for engaging the 2nd speed on the evaporator motor (cooling demand).	The 2nd speed engages if the cabin or passenger's area temperature is 1 degree above the set point and it revert to speed 1 if the temperature gets equal or below the set point.
Conditions for hot water recirculating pump activation (heating demand).	The pump turns to OFF if the outside temperature is above 50°F (10°C), when there is less demand for heating. Note: To test a working pump, it is possible to keep it active even if the outside temperature is above 50°F (10°C). See paragraph 7.2 HVAC SYSTEM AND TEST MODE FOR ELECTRIC MOTORS.
The compressor unloaders are working based on pressure and also on the difference between the passenger's area temperature and the set point.	**2 left compressor cylinders:** Stop if: Cabin or passenger's area temperature is at less than 0.4°C degree above the set point or if the compressor output is above 280 psi, or if the compressor input is below 26 psi. Restart if: Cabin or passenger's area temperature is 0.9°C or more above the set point and the compressor pressure output is less than 220 psi and the compressor pressure input is above 34 psi. **2 right compressor cylinders:** Stop if: Cabin or passenger's area temperature is at less than 0.2°C above the set point or if the compressor input falls below 23 psi. Restart if: Cabin or passenger's area temperature is 0.7°C or more above the set point and the compressor input pressure is above 32 psi.
The A/C deactivation pressure is 320 psi.	In case of high pressure, the analog pressure sensor connected to the Multiplex module deactivates the compressor. There is also a « Pressure switch » adjusted to 350 PSI that acts to stop the compressor in the instance that the Multiplex module fails.

7.4 HVAC SYSTEM TROUBLESHOOTING

Problem/Symptom	Probable Causes	Actions
No temperature control in the cabin or passenger area Passenger temperature display indicates two dashes "--"	Problem with the temperature sensor located in the evaporator compartment air intake or the sensor wiring	Instruct the driver to manually control the temperature by playing with the passenger set point. Set above 22°C (72°F) to heat and below 22° C (72°F) to cool
Defroster fan not functioning	Module A47 is not powered or is faulty	1. Check the SYSTEM DIAGNOSTIC menu of the message center display (MCD). Select FAULT DIAGNOSTIC and ELECTRICAL SYSTEM. The message “Voltage Module A47, Value too Low, Active” confirms a power problem on the module 2. Check / reset circuit breaker CB2 or CB6 3. Check / replace fuse F5 4. Use the air release valves near the entrance door and in the front service compartment to lock / unlock the door
HVAC condenser fans not functioning in speed 1	Circuit breaker CB5 or CB7 was manually tripped and not reset Seized bearing Faulty brushes Bad wiring	Check / reset circuit breaker CB5 or CB7
HVAC condenser fans not functioning in speed 1	Module A54 is not powered or is faulty	1. Check the SYSTEM DIAGNOSTIC menu of the message center display (MCD). Select FAULT DIAGNOSTIC and ELECTRICAL SYSTEM. The message “Voltage Module A54, Value too Low, Active” confirms a power problem on the module 2. Check / reset circuit breaker CB5 or CB7 3. Check / replace fuse F67 , F68
HVAC condenser fans not functioning in speed 2	Circuit breaker CB5 or CB7 was manually tripped and not reset Seized bearing Faulty brushes Bad wiring	Check / reset circuit breaker CB5 or CB7
Defroster fan is functioning but no heat or cooling available in the driver’s area	Module A46 is not powered or is faulty Faulty speed control Bad wiring	1. Check the SYSTEM DIAGNOSTIC menu of the message center display (MCD). Select FAULT DIAGNOSTIC and ELECTRICAL SYSTEM. The message “Voltage Module A46, Value too Low, Active” confirms a power problem on the module. 2. Check / reset circuit breaker CB1 or CB7 3. Check / replace fuse F12

Problem/Symptom	Probable Causes	Actions
The A/C compressor clutch does not engage	Module A52 is not powered or is faulty	1. Check the SYSTEM DIAGNOSTIC menu of the message center display (MCD). Select FAULT DIAGNOSTIC and ELECTRICAL SYSTEM. The message “Voltage Module A52, Value too Low, Active” confirms a power problem on the module 2. Check / reset circuit breaker CB5 or CB7. 3. Check / replace fuse F65
Evaporator fan not functioning	Circuit breaker CB3 or CB4 tripped Module A54 is not powered or is faulty Faulty brushes	1. Check / reset circuit breaker CB3 or CB4 2. Check the SYSTEM DIAGNOSTIC menu of the message center display (MCD). Select FAULT DIAGNOSTIC and ELECTRICAL SYSTEM. The message “Voltage Module A54, Value too Low, Active” confirms a power problem on the module 3. Check / reset circuit breaker CB4 or CB5 4. Check / replace fuse F67 , F68

8. CENTRAL AIR CONDITIONING SYSTEM

The schematic of Figure 19 shows the central and auxiliary A/C systems and their components. The central system is equipped with a 6 cylinder, 05G Twin Port Carrier compressor with an air conditioning capacity of 7½ tons. The receiver tank and filter dryer are mounted inside the condenser compartment.

As an option, X3-45 Coaches may be supplied with an auxiliary A/C system (Fig. 19). Auxiliary A/C system comes with a 6 cylinder, ICE TM-16HD compressor with an air conditioning capacity of 2 tons.

X3-45 VIP and XLII Bus Shells may be supplied with a central or small A/C system (Fig. 19 and 43). For vehicles equipped with a small A/C system, refer to paragraph 10: SMALL OR AUXILIARY AIR CONDITIONING SYSTEM AND COMPONENTS further in this section.

8.1 A/C CYCLE

Refrigeration may be defined as "the transfer of heat from a place where it is not wanted to a place where it is unobjectionable". Components required for a closed circuit refrigeration system are shown in Figure 19.

The air conditioning system used on X series vehicles is of the *"Closed"* type using *"R-134a".*

1. The refrigerant flowing to the compressor is compressed to high pressure and reaches a temperature higher than the surrounding air. It is passed through the air-cooled fins and tubes of the condenser causing the hot, high pressure gas to be condensed into a liquid form.
2. The liquid refrigerant flows to the receiver tank, then passes through a filter dryer where moisture, acids and dirt are removed and then through a moisture indicator which indicates if any moisture is present in the system.
3. By its own pressure, the liquid refrigerant flows through a thermal expansion valve where the pressure drop causes the refrigerant to vaporize in a vapor-liquid state at a low temperature pressure.
4. The cold low pressure refrigerant passes through the passengers and the driver’s evaporator coils which absorbs heat from the air passing over the fins and tubes, and changes into gas. In this form, the refrigerant is drawn into the compressor to repeat the air conditioning cycle.
5. The success of the air conditioning system depends on retaining the conditioned air within the vehicle. All windows and intake vents should be closed. An opening of

approximately 8 in^2 (5162 mm^2) could easily neutralize the total capacity of the system.

6. Other causes of inadequate cooling are dirty coils or filter. Dirt acts as insulation and is also serves as a restriction to the air flow.
7. The refrigeration load is not constant and varies. It is also affected by outside temperature, relative humidity, passenger load, compressor speed, the number of stops, etc.
8. The compressor will load or unload depending on operating conditions.

8.2 REFRIGERANT

The A/C system of this vehicle has been designed to use Refrigerant 134a as a medium. Regardless of the brand, only R-134a must be used in this system. The chemical name for this refrigerant is Ethane, 1, 1, 1, 2-Tetrafluoro.

DANGER

Refrigerant in itself is nonflammable, but if it comes in contact with an open flame, it will decompose.

8.2.1 Procurement

Refrigerant is shipped and stored in 30 and 100 pound (13,6 and 45 kg) metal cylinders. Approximately 24 pounds (10,9 kg) are used in the central system. If vehicle is equipped with an auxiliary A/C system, then approximately 5.5 lbs (2,5 kg) will be needed.

It will be impossible to draw the entire refrigerant out of the cylinder. However, the use of warm water when charging the system will assure the extraction of a maximum amount of refrigerant from the cylinder.

8.2.2 Precautions in Handling Refrigerant

1. Do not leave refrigerant cylinder uncapped.
2. Do not subject cylinder to high temperatures, do not weld or steam clean near system or cylinder.
3. Do not fill cylinder completely.
4. Do not discharge vapor into an area where a flame is exposed.
5. Do not expose the eyes to liquid refrigerant.

All refrigerant cylinders are shipped with a heavy metal screw cap. The purpose of the cap is to protect the valve and safety plug from damage. It is a good practice to replace the cap after each use of the cylinder for the same reason. If the cylinder is exposed to the sun's radiant heat pressure increase resulting may cause release of the safety plug or the cylinder may burst.

For the same reason, the refrigerant cylinder should never be subjected to excessive temperature when charging a system. The refrigerant cylinder should be heated for charging purposes by placing it in 125°F (52°C) water. Never heat above 125°F (52°C) or use a blowtorch, radiator, or stove to heat the cylinder. Welding or steam cleaning on or near any refrigerant line or components of the A/C system could build up dangerous and damaging pressures in the system.

If a small cylinder is ever filled from a large one, never fill the cylinder completely. Space should always be allowed above the liquid for expansion. Weighing cylinders before and during the transfer will determine the fullness of the cylinders.

WARNING

One of the most important precautions when handling refrigerant consists in protecting the eyes. Any liquid refrigerant which may accidentally escape is approximately -40°F (-40°C). If refrigerant comes in contact with the eyes, serious injury could result. Always wear goggles to protect the eyes when opening refrigerant connections.

8.2.3 Treatment in Case of Injury

If liquid refrigerant comes in contact with the skin, treat the injury as if the skin was frost-bitten or frozen. If liquid refrigerant comes in contact with the eyes, consult an eye specialist or doctor immediately. Give the following first aid treatment:

1. Do not rub the eyes. Splash eyes with cold water to gradually bring the temperature above the freezing point.
2. Apply drops of sterile mineral oil (obtainable at any drugstore) in the eyes to reduce the possibility of infection. The mineral oil will also help in absorbing the refrigerant.

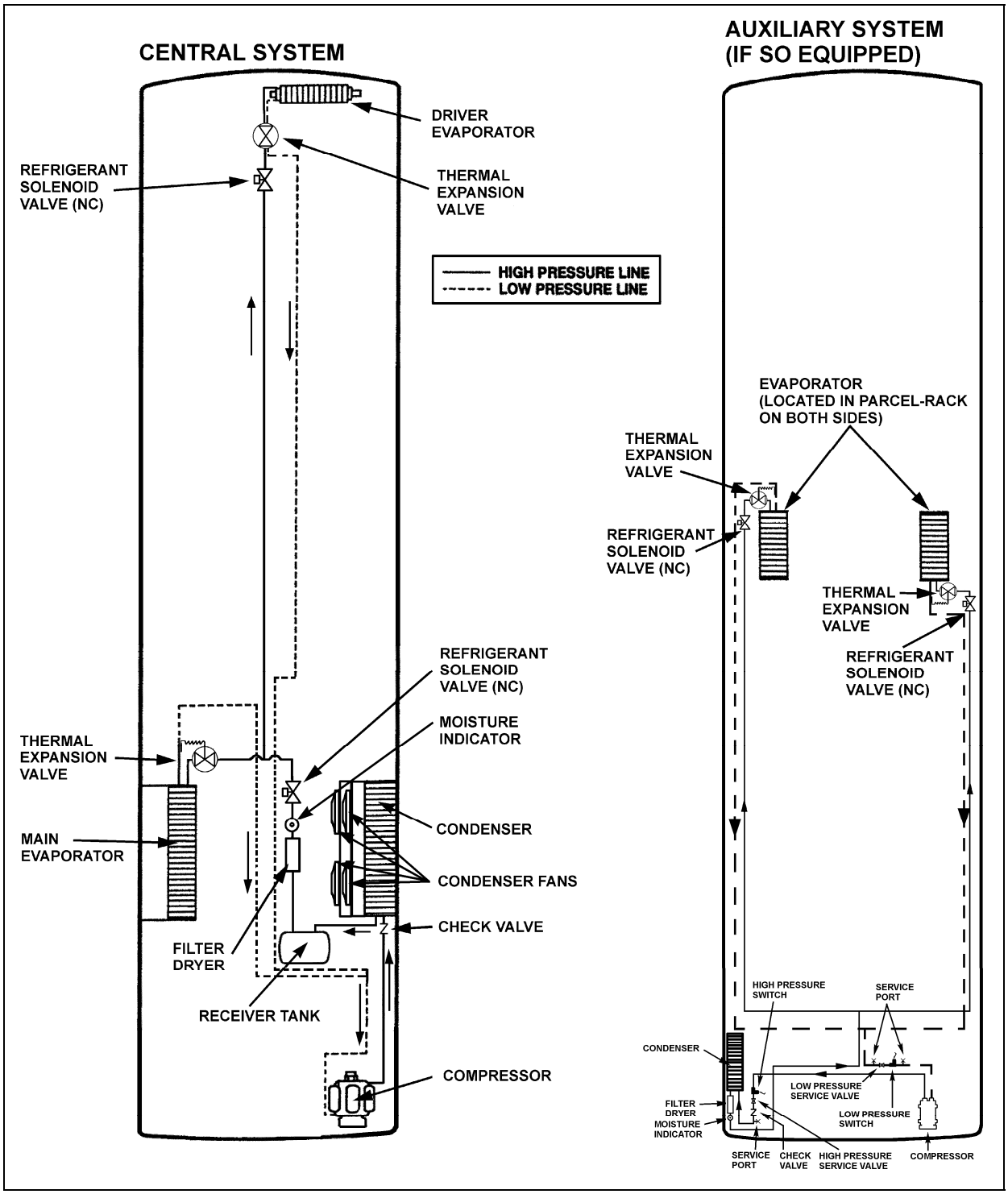

FIGURE 19: REFRIGERANT CIRCUIT (CENTRAL AND AUXILIARY SYSTEMS) 22313_2

8.2.4 Precautions in Handling Refrigerant Lines

1. All metal tubing lines should be free of kinks, because of the resulting restrictions on the flow of refrigerant. A single kink can greatly reduced the refrigeration capacity of the entire system.
2. The flexible hose lines should never be allowed to come within a distance of 2-½" (6,3 cm) from the exhaust manifold.
3. Use only sealed lines from parts stock.
4. When disconnecting any fitting in the refrigeration system, the system must first be discharged of all refrigerant. However, proceed very cautiously, regardless of gauge readings. If liquid refrigerant happens to be in the line, disconnect fittings very slowly, keeping face and hands away so that no injury can occur. If pressure is noticed when fitting is loosened, allow it to bleed off very slowly.

WARNING

Always wear safety goggles when opening refrigerant lines.

5. In the event that any line is opened to the atmosphere, it should be immediately capped to prevent entrance of moisture and dirt.
6. The use of the proper wrenches when making connections on O-ring fittings is important. The use of improper wrenches may damage the connection. The opposing fitting should always be backed up with a wrench to prevent distortion of connection lines or components. When connecting the flexible hose connections, it is important that the swaged fitting and the flare nut, as well as the coupling to which it is attached, be held at the same time using three different wrenches to prevent turning the fitting and damaging the ground seat.
7. The O-rings and seats must be in perfect condition. The slightest burr or piece of dirt may cause a leak.
8. O-rings should be coated with refrigeration oil and installed on the line before the line is inserted into the fitting to prevent damaging the O-ring. If leaks are encountered at the couplings or connectors, no attempt should be made to correct the leaks by tightening the connections beyond the recommended torque. The O-rings are designed to seal at the specified torque and overtightening the connection does not result in a satisfactory and permanently sealed connection. The connection must be disassembled and the cause of the leak (damaged O-ring, defective lines, etc.) corrected. Use new O-ring.

8.2.5 Auxiliary System Refrigerant Lines

1. From the inside of the coach, remove the mirror located inside the lavatory to access the Y connector separating the system two sides. Also a small access panel located in front of the lavatory entrance door, near the ceiling enables to reach the R.H. side supply and return line fittings.
2. The L.H. side supply and return line fittings are accessible by removing the rearmost overhead storage compartment separator.

8.3 PUMPING DOWN

This procedure is intended to reduce refrigerant loss, on the central system only, by isolating it in the compressor and the receiver tank, as well as in their connecting line, in order to carry out repairs on other sections of the air conditioning system (lines and components).

NOTE

Before attempting any repair between compressor and receiver tank, use a recovery unit to remove refrigerant from the system.

NOTE

On vehicles equipped with an auxiliary A/C system, refer to "ICE TM-16HD Service Manual".

WARNING

To prevent any injury, when air conditioning system must be opened, refer to previous paragraph "PRECAUTIONS IN HANDLING REFRIGERANT".

CAUTION

The filter dryer must be changed each time a line in the system is opened.

Procedure

1. Energize cabin or passengers ‘section liquid solenoid valve.
2. Run the system for 10 minutes, shut it OFF, then close the receiver tank outlet valve by turning it clockwise, backseat the suction service valve on the compressor, install an appropriate pressure gauge set, and turn the valve forward ¼ turn to enable a visual check of the suction pressure.
3. Disconnect the *“Low Pressure Switch”* connector (mounted near the A/C compressor, and install a jumper wire.

NOTE

This jumper wire will allow the clutch to remain engaged after pressure drops below 15 psi (103,5 kPa).

4. Start the engine, press the *“Passenger ON/OFF”* switch then adjust (lower) temperature control ⊖|⊕ to maximum A/C.
5. Run the compressor until pressure reaches 1-2 psi (7-14 kPa).

NOTE

During this operation, care must be taken not to fill the receiver tank over the upper sight glass. If so, stop process immediately. Always allow refrigerant piping and units to warm up to the ambient air temperature before opening system or sweating will take place inside the lines.

6. Stop engine, and close compressor outlet valve by turning it clockwise until valve is properly seated.
7. Close compressor suction valve by turning it clockwise until it is properly seated.
8. Wait until pressure gauge reaches 1 to 2 psi (7 to 14 kPa). To accelerate procedure, lightly open compressor suction valve until pressure reaches this value.

8.4 ADDING REFRIGERANT (VAPOR STATE)

Use the suction service valve on the compressor to add a small quantity of refrigerant to the system. Backseat the valve and connect a charging line from the refrigerant cylinder to the valve. Tighten connection at level of refrigerant cylinder and open tank end slightly to purge air from the charging line. Tighten the charging line at the compressor. Screw in the stem of suction valve approximately two turns. Start the engine and run at fast idle. Add sufficient refrigerant to bring the level in lower sight glass of receiver tank to mid-point. Always charge the system with the cylinder upright and the valve on top to avoid drawing liquid out of the cylinder.

8.5 EVACUATING SYSTEM

1. Open both receiver valves by turning “out” (normal position).
2. Remove the caps from the two 90° adapters on the suction, discharge valves and connect two hoses to the vacuum.
3. Place the two compressor valves, suction and discharge, in neutral position by turning each one 3 to 4 turns “in” from the “out” position.
4. Open the solenoid valve by energizing or manually bypass.
5. Start the vacuum pump. Open the large (suction) shutoff valve and close the small vacuum gauge valve.
6. The pressure will drop to approximately 29 inches vacuum (14.2 psi or 97,9 kPa) (the dial gauge only gives a general idea of the absolute system pressure.
7. Backseat the compressor valves by turning “out” all the way.
8. Shut down the vacuum pump.
9. Remove the hoses.
10. Reinstall the caps at the suction valve take-off points.

8.5.1 Double Sweep Evacuation Procedure

1. Remove any remaining refrigerant from the system using a refrigerant recovery machine.
2. Connect the evacuation manifold, vacuum pump, hoses and micron gauge to the unit.
3. With the unit service valves closed (back seated) and the vacuum pump and the thermistor valves open, start the pump and draw the manifold and hoses into a very deep vacuum. Shut the vacuum pump off and see if the vacuum holds. This is to check the setup for leaks.
4. Midseat the system service valves.
5. Open the vacuum pump and the thermistor valves. Start the pump and evacuate to a system pressure of 2000 microns.
6. Close the vacuum pump and the thermistor valves, turn off the vacuum pump (closing the thermistor valve protect the valve from damage).
7. Break the vacuum with clean refrigerant (or dry nitrogen) and raise the pressure to approximately 2 PSIG. Monitor the pressure with the compound gauge.
8. Remove the refrigerant with the recovery machine.
9. Repeat steps #5 – 8 one time.

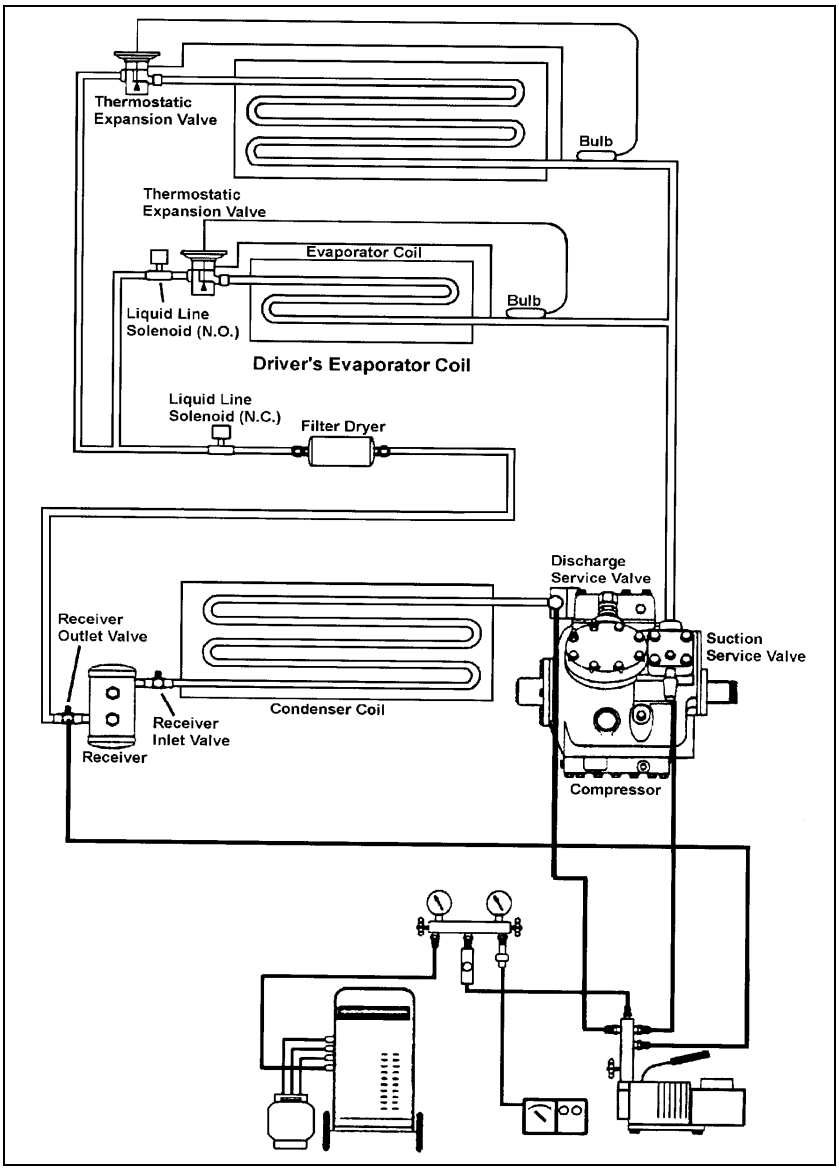

FIGURE 20: DOUBLE SWEEP EVACUATION SET-UP 22298

10. After the second “sweep”, change the filter drier (if you have not yet done so) and evacuate to 500 microns.
11. Evacuating the system below 500 microns on systems using the Carrier 05G compressor may risk drawing air into the system past the carbon shaft seal.
12. Check to insure that vacuum holds. (If the pressure continues to rise, it indicates a leak or moisture in the system).
13. Charge the system with the proper amount of refrigerant using recommended charging procedures.

NOTE
This method will aid in preventing unnecessary system failures by ensuring that the refrigeration system is free of contaminants.

8.6 CHARGING SYSTEM

When a system has been opened or if there are any questions about the air or moisture in the system, evacuate the system. Charging of an evacuated system may be accomplished by forcing liquid R-134a directly into the receiver tank. This may be accomplished by placing the refrigerant cylinder upside down on a scale with the valves at the bottom. This ensures that only liquid will enter the receiver tank.

When charging an empty system, weigh the amount of refrigerant put into the system. This will eliminate any possibility of overfilling. A nominal charge requires 24 pounds (10,9 kg). If the vehicle is equipped with an auxiliary system, a full charge requires 5.6 lbs (2,6 kg).

1. Backseat the two compressor shutoff valves ("out").
2. Install the test gauges at the shutoff valves noting that the 400 psi (2758 kPa) gauge is connected to the discharge.
3. Turn in the two shutoff valves 3 to 4 turns.
4. Open the lower receiver valve by turning “out” all the way.
5. Backseat the upper receiver valve by turning out all the way.
6. Remove the cover cap from the service fitting in the top receiver valve.
7. Attach a charging hose to the R-134a tank. Open the tank valve slightly permitting R-134a to escape thus purging the hose of air.
8. Connect the charging hose to the service fitting.
9. Open the R-134a tank valve.
10. To build up pressure in the receiver tank, heat the receiver tank with a heating blanket.
11. Turn in the upper receiver valve several turns. The R-134a will now enter the system.
12. The proper charge of R-134a is 24 lbs (10.89 kg). When the scale indicates this amount of charge, backseat the receiver valve and close the R-134a tank valve.
13. Disconnect the charging hose. Replace the cover caps.
14. The system is now ready for operation.

⚠ **CAUTION**
The evacuation of the system must be made by authorized and qualified personnel only. Refer to local laws for R-134a recuperation.

8.7 REFRIGERANT SYSTEM CLEAN-OUT AFTER COMPRESSOR FAILURE

Although the vast majority of reciprocating refrigerant compressors manufactured today are extremely reliable, a small percentage do fail. These failures usually result in minor or extensive system contamination depending on the severity of the failure. When an open type compressor becomes damaged internally, this provokes small particles of bearings, steel, brass, copper, and aluminum and, in severe cases, carbonized oil, which could contaminate the system. To prevent repeated failures, the problem which caused the failure should be corrected, and depending upon the severity of the failure, the system should be thoroughly cleaned out using one of the clean-out procedures mentioned.

8.7.1 Determining Severity of Failure

The severity of compressor failure can be categorized as minor or major. A failure is considered minor when the contamination is limited to the compressor with little or no system contamination. A major failure, or burnout, results in extensive system contamination as well as compressor damage. Extensive system contamination can be determined by withdrawing a small sample of compressor oil and checking its color, odor and acidity. A Virginia Chemical "TKO" one step acid test kit is one of several compressor oil test kits that may be used. A high acid content would indicate a major failure or burnout. A small amount of refrigerant gas may be discharged. A characteristic burned odor would also indicate severe system contamination.

8.7.2 Clean-out after Minor Compressor Failure

1. Be sure to correct the problem which caused the failure.
2. Change liquid line filter dryer.
3. Run the unit for 2 hours on high speed cool only.
4. Check compressor oil level to ensure compressor is not overcharged with oil. Sometimes a significant amount of oil is pumped out of the compressor to other parts of the system when a compressor fails. This oil will return to the replacement compressor when it is started, causing an overcharge of oil in the sump of the replacement compressor. In this case, it is important that the oil level be adjusted to the proper level.
5. Withdraw a sample of the compressor oil and check its color, odor, and acidity, using instructions supplied above. If the oil is contaminated, change the oil and filter dryer, and repeat the procedure until the system is clean.

8.7.3 Clean-out After Major Compressor Failure

1. Reclaim the refrigerant into a refrigerant bottle through a filter dryer to filter out contaminants.
2. Remove the failed compressor and repair it if possible.
3. Install new or repaired compressor.
4. Change the filter dryer.
5. Circulate clean R-134a or nitrogen using a pressurized metal cylinder or a reclaiming machine to clean out many of the contaminants collected in the coil valves, TXV (Thermal Expansion Valve), solenoid valves, check valves, and any other mechanical component that may have collected contaminants.
6. Evacuate and charge the system normally.
7. Run the unit for 8 hours and monitor the pressure drop across the filter dryer. Also check the liquid line dryer for signs of restriction. If the pressure drop across the filter dryer exceeds 12 to 14 psig (82,75 to 96,5 kPa) with a 40°F (5°C) evaporator coil temperature, stop the unit and change the liquid line and suction line filter dryer. After 4 or 5 hours of operation, stop the unit and replace the filter dryer.
8. After 8 hours of operation, stop the unit and remove a sample of the compressor oil and check its color, odor, and acidity, using instructions supplied above. If the oil is contaminated, replace the oil and repeat step 7. If the oil is not contaminated, change the filter dryer again and replace the moisture-liquid indicator.
9. After approximately 7 days of operation, recheck the compressor oil for cleanliness and acidity.

9. CENTRAL A/C SYSTEM COMPONENTS

9.1 COMPRESSOR (CENTRAL SYSTEM)

9.1.1 Belt Replacement

DANGER

Set the battery master switch to the “Off” position. For greater safety, set the engine starter selector switch in engine compartment to the “Off” position.

1. Open engine compartment rear doors and locate the belt tensioner pressure releasing valve (Fig. 21), mounted above the engine R.H. side door next to the air pressure regulator, then turn handle clockwise in

order to release pressure and tension on belts.

2. Remove the radiator fan driving mechanism belt (Refer to Section 05: Cooling).
3. Slip the old A/C compressor belts off and the new ones on.
4. Reset belt tensioner pressure releasing valve (Fig. 21) to 45 psi (310 kPa) to apply tension on the new belts as explained in Section 12.

NOTE
Both belts must always be replaced simultaneously to ensure an equal distribution of load on each of them.

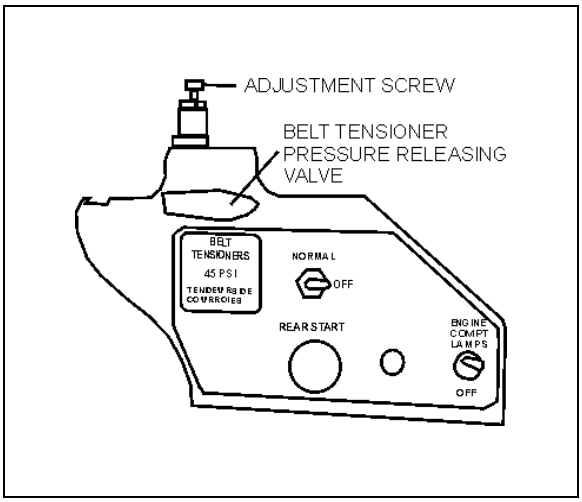

FIGURE 21: AIR PRESSURE REGULATOR

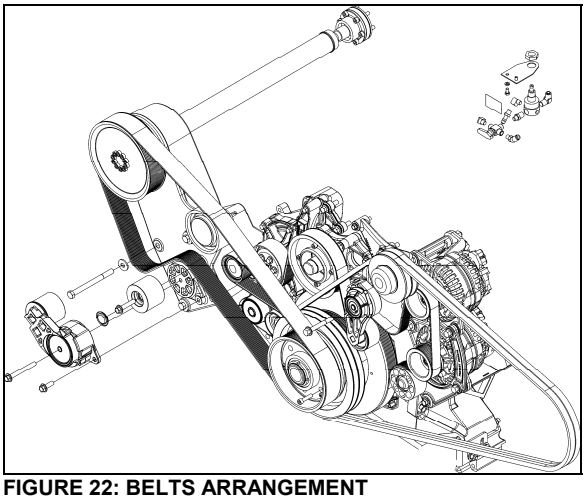

FIGURE 22: BELTS ARRANGEMENT

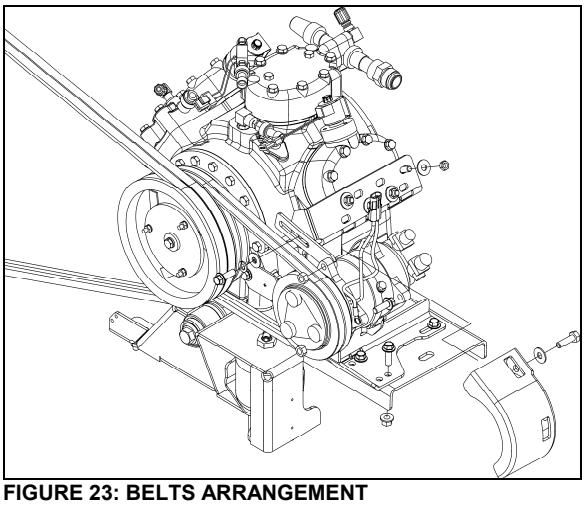

FIGURE 23: BELTS ARRANGEMENT

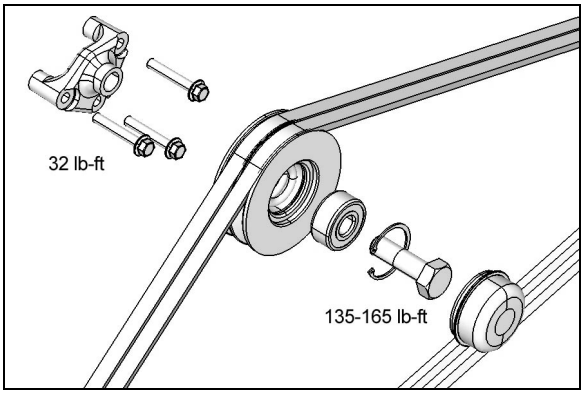

FIGURE 24: IDLER PULLEY INSTALLATION ON VOLVO D13 ENGINE

9.1.2 Belt Tension Adjustment

Belt tensioning is applied through air bellows which are adjusted by an air pressure regulating valve. The correct pressure of 45 psi (310 kPa) is set at the factory. Periodically verify the pressure at the regulating valve using a pressure gauge and correct if necessary.

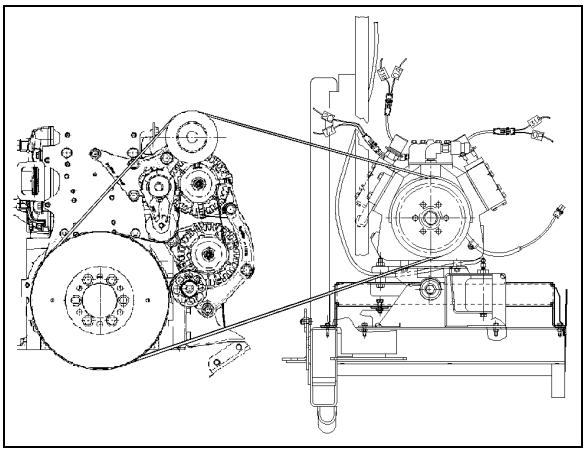

FIGURE 25: A/C COMPRESSOR BELT ADJUSTMENT 22288

9.1.3 Pulley Alignment

In order to avoid skipping, disengagement and a premature wear of compressor belt, it is necessary to align compressor pulley with the crankshaft pulley. Before performing the following procedure, release air from belt tensioner bellows by means of the air pressure releasing valve. After completing these procedures reset belt tensioner air pressure regulator to 45 psi (310 kPa).

9.1.4 Longitudinal Compressor Alignment

1. Rest an extremity of a straight edge of approximately 46 inches (117 cm) against the upper part of the outer face of crankshaft pulley, positioning the other end close to the compressor clutch pulley (Figs. 26 & 27).
2. Check the distance between each extremity of straight edge (1. Fig. 26) and the first drive belt. If they are different, loosen the compressor support bolts and with a hammer, knock support to slide it in order to obtain the same distance; then tighten bolts.

9.1.5 Horizontal Compressor Alignment

1. Rest an extremity of the straight edge against the upper part of the outer face of compressor pulley, positioning the other end close to the crankshaft pulley.
2. Check the distance between each extremity of straight edge (1, Fig. 27) and drive belt. If they are different, loosen the pillow block compressor bolts and with a hammer, knock compressor pillow block to slide it, in order to obtain the same distance; then tighten bolts.

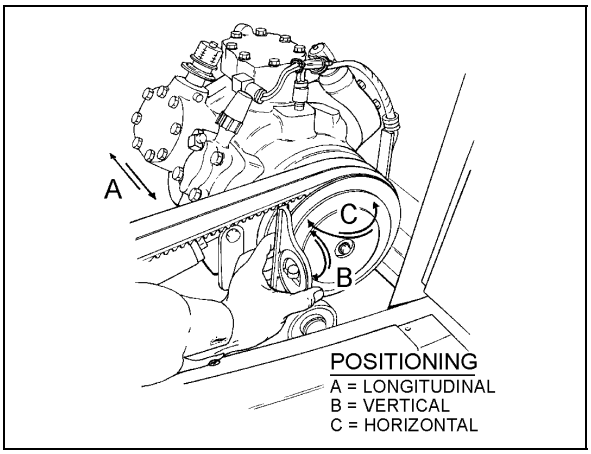

FIGURE 26: COMPRESSOR ALIGNMENT 22072

9.1.6 Vertical Compressor Alignment

Rest a short "angle and level indicator" on the outer side face of the crankshaft pulley, adjust the level indicator inclination at 0° and check if the compressor pulley is at same angle (Fig. 26). If it is not the same, shim under the appropriate pillow block in order to obtain the correct angle.

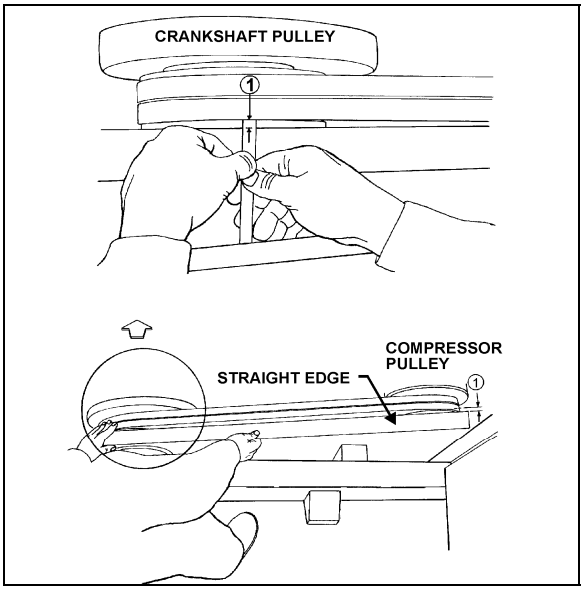

FIGURE 27: COMPRESSOR ALIGNMENT 22040

9.1.7 Compressor Maintenance

For the maintenance of the A/C compressor, see the *Carrier Compressor "WORKSHOP MANUAL* for MODEL 05G TWIN PORT COMPRESSOR" included at the end of this section.

CAUTION

Use only Castrol SW 68 (POE) oils with refrigerant 134a.

9.1.8 Troubleshooting Guide

A preliminary check may be made by simply feeling the cylinder heads with the unit in operation at ambient temperatures of 35°F (2°C) and over. The cylinder heads are internally divided into suction and discharge valves. The lower half of the cylinder head is the suction side, and it should be relatively cool to the touch, as opposed to the hot upper discharge side. If a valve plate or head gasket is blown, or a compressor unloader is stuck open, partially

compressed refrigerant vapor will be circulated between the suction and discharge sides of the head. The affected cylinder head will then have a relatively even temperature across its surface and be neither as hot as the normal discharge temperature nor as cool as the normal suction temperature.

Blown Head Gaskets

Symptom:

* Loss of unit capacity at low temperature.
* Even cylinder head temperature.

Cause:

* Improperly torqued cylinder head bolts.
* Improperly positioned gasket at assembly.
* Warped cylinder head.
* Severe liquid refrigerant floodback.

Blown Valve Plate Gaskets

Symptom:

* Loss of unit capacity at medium and low temperatures.
* Very hot cylinder head surface.
* Higher than normal suction pressure.

Cause:

* Improperly torqued cylinder head bolts.
* Severe liquid refrigerant floodback.
* Oil slugging caused by an overcharge of oil or flood starts.
* Discharge valves not seated properly (liquid drainback during shutdown).

Broken Suction Valves

Symptom:

* Loss of unit capacity at all temperatures.
* Compressor unable to pull extremely low vacuum with suction service valve frontseated.

Cause:

* Repeated liquid refrigerant floodback.
* Flooded starts.
* Overcharge of oil.
* Discharge valves not seated properly (liquid drainback during shutdown).
* Expansion valve not controlling properly.

Unloader Valve Stuck Open

Symptom:

* Loss of unit capacity at all temperatures.
* Higher than normal suction pressure.
* Even cylinder head temperature.

Cause:

* Unloader body stem bent.
* Foreign material binding unloader piston or plunger.

9.2 MAGNETIC CLUTCH

Refer to Carrier service information entitled “Housing-Mounted Electric Clutch” at the end of this section for the description and maintenance of the magnetic clutch.

9.3 EVAPORATOR MOTOR

The evaporator motor is installed in the evaporator compartment (L.H. side of vehicle) (Fig. 28). It is a 27.5 volt, 2 HP (1.5 kW) motor which activates a double blower fan unit.

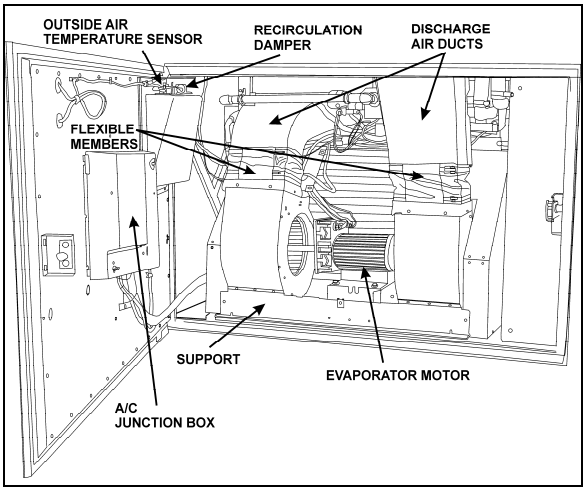

FIGURE 28: EVAPORATOR COMPARTMENT 22372

9.3.1 Removal

- Set the battery master switch (master cut-out) to the *“OFF”* position and trip circuit breakers CB3 or CB4.

- Open the last L.H. side baggage compartment door. Pull the black release button located on the L.H. side in order to unlock and open the evaporator compartment door.
- Remove the evaporator motor and coil access panel.
- Identify the L.H. side discharge duct inside compartment and remove the Phillips head screws retaining the flexible member to duct.
- Repeat step 4 for the R.H. side air duct.
- Disconnect the electrical motor speed control connections on the motor plate.
- From under the vehicle, remove the eight bolts retaining the evaporator fan motor support. Remove the complete unit from the evaporator compartment (Fig. 29 & 30).

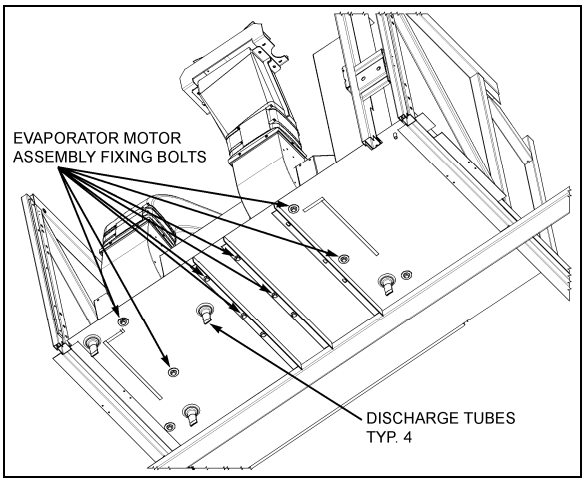

FIGURE 29: EVAPORATOR MOTOR ASSY FIXING BOLTS
22315

CAUTION

Never support evaporator motor by its output shafts while moving it.

- On a work bench, unscrew the fan square head set screws, the Phillips head screws retaining cages to support and slide out the assemblies from the evaporator motor output shaft.

9.3.2 Installation

To reinstall the evaporator motor, reverse "Evaporator Motor Removal" procedure.

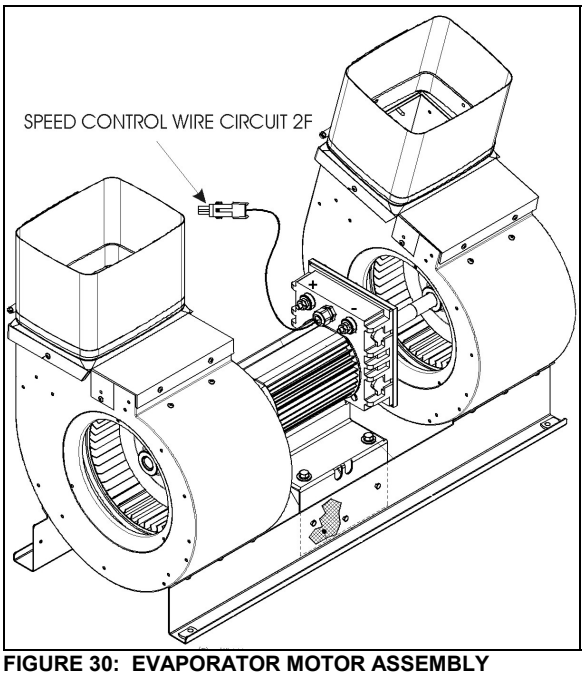

FIGURE 30: EVAPORATOR MOTOR ASSEMBLY

9.4 CONDENSER

The central A/C system condenser coil is hinge mounted on the R.H. side of the vehicle on the A/C condenser door (Fig. 32). The condenser coil for vehicles equipped with an auxiliary A/C system is mounted on the outer face of engine radiator. Since condenser's purpose is to dissipate heat from the hot refrigerant, it is important to keep the cooling coils and fins clean. A clogged coil will cause high discharge pressure and insufficient cooling.

9.4.1 Condenser Fan Motors

Four brushless fan motors (Fig. 31), 28.5 V - (0.6 HP - 0.42 kW) are installed in the condenser compartment on R.H. side of vehicle in order to ventilate the condenser coil. They are mounted on a support, fastened to the door. The fans pull outside air through the condenser coil and discharge it through an opening at bottom of compartment. When temperature drops inside condenser, the pressure in the refrigerant line also drops and it is, therefore, no longer required to cool condenser. Consequently, when pressure drops to 130 psi, the motors will run at low speed and if the pressure continues to drop to 90 psi, a pressure switch stops the motors so that fans do not operate needlessly. When pressure rises to 120 psi, the pressure switch reactivates the motors. If the pressure rises to 170 psi, the motors will switch to high speed.

For details about electrical wiring, refer to *"A/C and Heat system"* in the master wiring diagram.

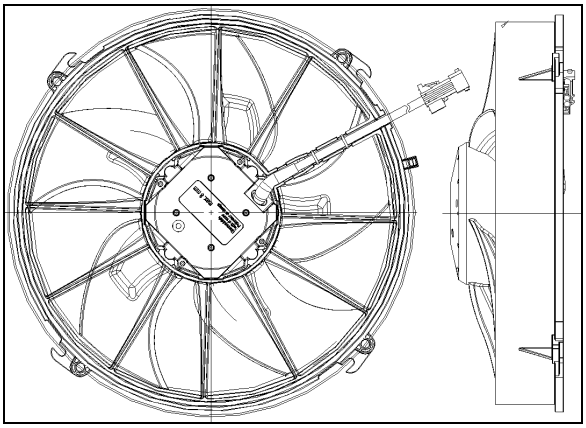

FIGURE 31: CONDENSER FAN MOTOR 22322

9.4.2 Condenser Fan Motor Removal

1. Set the battery master switch to the *"Off"* position.
2. Disconnect wiring from terminals on motor. Tag each wire to aid in identification at time of reconnection.
3. Remove the four hexagonal head cap screws retaining the fan motor assembly to the mounting support.
4. Remove the motor.

9.5 RECEIVER TANK

The receiver tank is located in the condenser compartment (Fig. 32). The function of the receiver tank is to store the liquid refrigerant. During normal operation, the level of the refrigerant should be approximately at the mid-point of the lower sight glass.

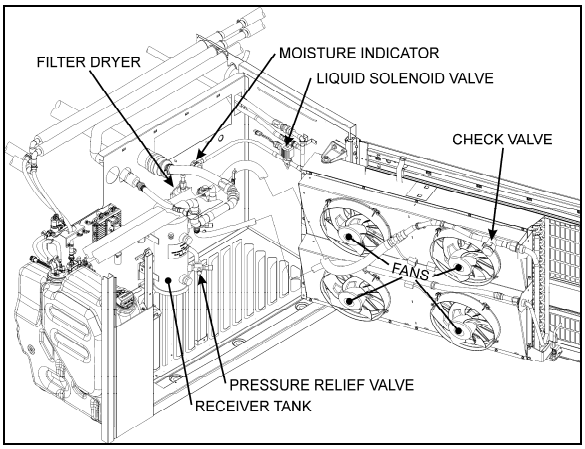

FIGURE 32: A/C CONDENSER COMPARTMENT 22323

In case of extreme pressure there will be a rise in the liquid receiver tank. A pressure relief valve will break at 450 psi (3103 kPa) and relieve the receiver tank pressure.

The receiver tank incorporates an inlet valve on the inlet side (upper section) which allows the tank to be isolated or serviced. An outlet valve on the outlet side (lower section) permits complete isolation from the rest of the system.

9.6 FILTER DRYER

A filter dryer, also located in the condenser compartment, is installed on the liquid refrigerant line after the receiver tank. It is used to absorb moisture and foreign matter from refrigerant before it reaches the expansion valves.

The filter should be replaced if the system has been opened or after a prolonged exposure, when the moisture indicator sight glass turns to pink.

A filter dryer, located close to the engine compartment L.H. side rear door, is installed on vehicles equipped with an auxiliary A/C system. Its function is similar to that of filter used on main systems. Replace only when system is opened or a problem occurs.

9.6.1 Replacement

The filter is of the disposable type. When replacement is required, remove and discard the complete unit and replace with a new unit of the same type according to this procedure:

1. Isolate the refrigerant in the receiver tank by following the "Pumping Down" procedure explained in this section
2. Change the filter dryer as a unit.
3. Add a small quantity of refrigerant R-134a to the low side of the system. Check for leaks. Return the system to normal operation.

CAUTION

Do not use carbon tetrachloride or similar solvents to clean parts. Do not use steam guns. Use mineral spirits or naphtha. All parts should be thoroughly cleaned. Use a stiff brush to wash dirt from grooves, holes, etc.

DANGER

Cleaning products are flammable and may explode under certain conditions. Always handle in a well ventilated area.

9.6.2 Moisture Indicator

The moisture sensitive element consists of a color changing ring which is reversible from pink to blue and vice versa as the moisture content in the refrigerant changes. Pink indicates a wet refrigerant, light violet (caution) and blue indicates a dry refrigerant.

Since temperature changes affect the solubility, color change will also vary with the refrigerant temperature. The above table shows the color change for R-134a at various moisture levels and liquid line refrigerant temperatures.

COLOR INDICATOR			
TEMPERATURE	BLUE (ppm)	LIGHT VIOLET (ppm)	PINK (ppm)
75°F (24°C)	Below 5	5-15	Above 15
100°F (38°C)	Below 10	10-30	Above 30
125°F (52°C)	Below 15	15-45	Above 45
p.p.m.= parts per million (moisture content)			

A moisture level of less than 15 p.p.m. for R-134a indicated in the blue color range of the above table is generally considered dry and safe. A color indication of light blue to light violet indicates the caution range of moisture level. For positive protection, the drying of the system should be continued until the color of the element turns to deep blue.

The liquid refrigerant is readily visible through the center opening of the moisture element where the presence of bubbles indicates a shortage of refrigerant or restriction in line.

Moisture is one of the main causes of chemical instability or contamination in air conditioning systems. If moisture is present, it can corrode the valves, condenser and evaporator coils, compressor and other components causing a malfunction and eventual failure of the system. Uncontrolled moisture in the system can result in very expensive multiple component replacements if not corrected at an early stage. The moisture indicator permits an early detection of moisture in the system and when corrected by a desiccant charge, system contamination is greatly minimized.

9.7 LIQUID REFRIGERANT SOLENOID VALVE

The flow of liquid refrigerant to the driver's and main evaporators is controlled by a normally-closed solenoid valve. The driver's liquid solenoid valve is located on the ceiling of the spare wheel and tire compartment and is accessible through the reclining bumper.

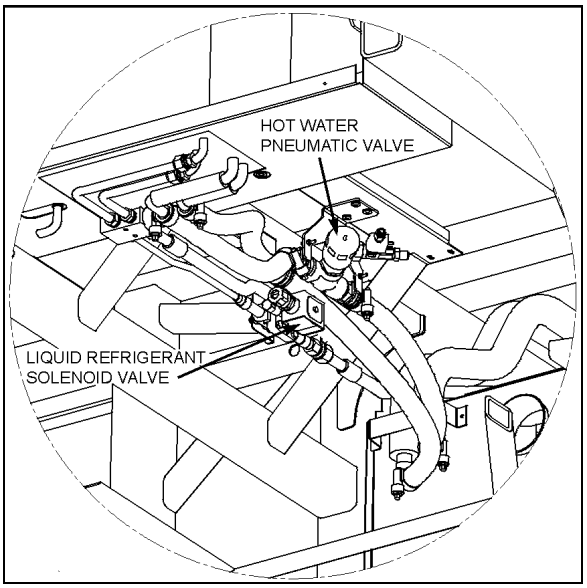

FIGURE 33: DRIVER'S EVAPORATOR LIQUID SOLENOID VALVE 22324

NOTE

An identical refrigerant solenoid valve is used on the auxiliary A/C system and is located near the auxiliary A/C unit.

9.7.1 Manual Bypass

This type of solenoid valve is equipped with a manual operating stem. The 3/16" square stem located on the bonnet is exposed when the seal cap is removed. To manually open valve, turn stem ½ turn counterclockwise. To manually close valve, turn stem clockwise until tight against seat. Manual stem must be in closed position for automatic electric operation.

9.7.2 Coil Replacement

1. Disconnect connector from the coil connector.

2. Take out the retaining screw at the top of the coil housing. The entire coil assembly can then be lifted off the enclosing tube.
3. Place the new coil and yoke assembly on the enclosing tube. Lay data identification plate in place.
4. Insert the coil retaining screw, rotate housing to proper position and tighten screw securely.
5. Connect connector from coil connector.

9.7.3 Valve Disassembly

1. Remove the coil as stated previously.
2. Pump down the system as stated earlier in this section.
3. Remove the four socket head screws which hold the body and bonnet together (Fig. 34).
4. Carefully lift off the bonnet assembly (upper part of the valve) so that plunger will not fall out. The diaphragm can now be lifted out.

NOTE
The above procedure must be followed before brazing solder-type bodies into the line.

CAUTION
Be careful not to damage the machined faces while the valve is apart.

9.7.4 Valve Reassembly

1. Place the diaphragm in the body with the pilot port extension up.
2. Hold the plunger with the synthetic seat against the pilot port.
3. Make sure the bonnet O-rings are in place. Lower the bonnet assembly over the plunger, making sure that the locating sleeve in the bonnet enters the mating hole in the body.
4. Insert the four socket head screws and tighten evenly.
5. Replace the coil as stated previously.
6. Add a small quantity of refrigerant R-134a to the low side of the system. Check for leaks. Return the system to normal operation.

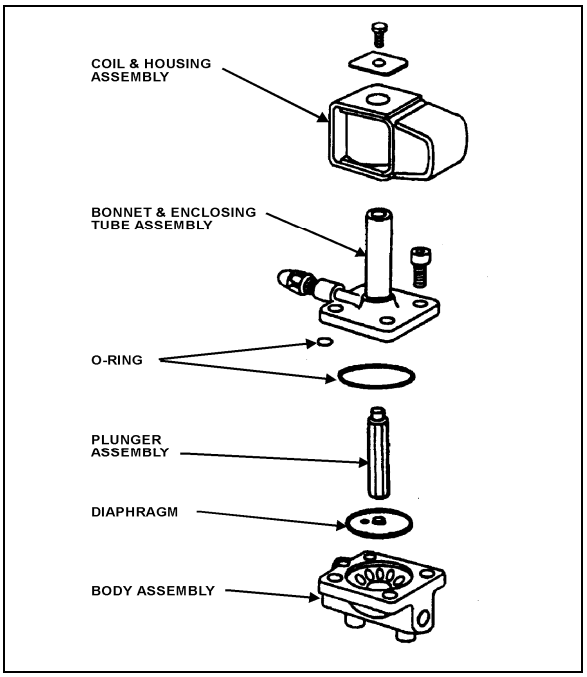

FIGURE 34: REFRIGERANT SOLENOID VALVE 22044

9.8 EXPANSION VALVE

9.8.1 Cabin or Passenger's Section HVAC Unit

The expansion valve for the cabin or passenger's section HVAC unit is a thermo-sensitive valve with a remote control bulb head attached to the evaporator outlet line and is accessible by the evaporator coil access door (Fig. 17 & 33). The valve regulates the flow of refrigerant liquid into the evaporator coils and is controlled by the suction gas temperature leaving the evaporator. The bulb head senses the refrigerant gas temperature as it leaves the evaporator. High temperature will cause expansion and pressure on the power head and spring. Such action causes the assembly valve to open, allowing a flow of refrigerant liquid into the evaporator.

The remote bulb and power assembly is a closed system. The pressure within the remote bulb and power assembly corresponds to the saturation pressure of the refrigerant temperature leaving the evaporator and moves the valve pin in the opening direction. Opposed to this force, on the under side of the diaphragm and acting in the closing direction, is the force exerted by the superheat spring. As the temperature of the refrigerant gas at the evaporator outlet increases above the saturation temperature corresponding to the evaporator

pressure, it becomes superheated. The pressure thus generated in the remote bulb and power assembly surpasses the combined pressures of the evaporator pressure and the superheat spring, causing the valve pin to move in the opening direction. Conversely, as the temperature of the **refrigerant** gas leaving the evaporator decreases, the pressure in the remote bulb and power assembly also decreases and the combined evaporator and spring pressures cause the valve pin to move in the closing position.

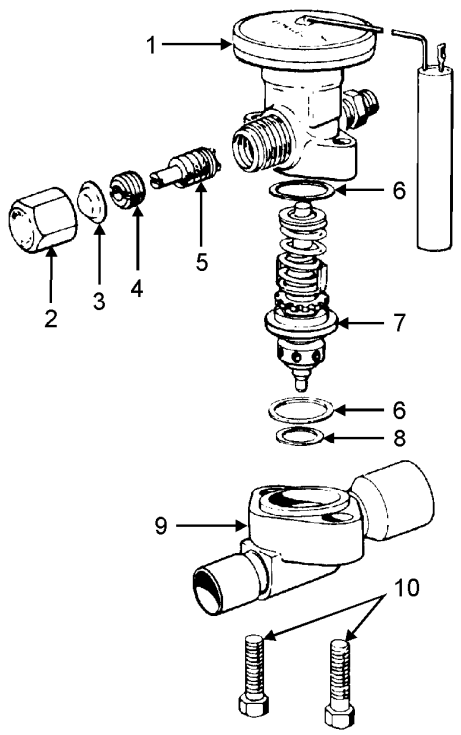

1. POWER ELEMENT
2. CAP - SEAL NUT
3. BONNET - SEAL (FLARE)
4. PACKING NUT
5. ADJUSTING STEM & PACKING ASSY
6. GASKET
7. CAGE ASSY
8. GASKET
9. BODY FLANGE
1O. CAPSCREW

FIGURE 35: EXPANSION VALVE 22045

As the operating superheat is raised, the evaporator capacity decreases, since more of the evaporator surface is required to produce the superheat necessary to open the valve. It is obvious, then, that it is most important to adjust the operating superheat correctly and that a minimum change in superheat to move the valve pin to full open position, is of vital importance because it provides savings in both initial evaporator cost of operation. Accurate and sensitive control of the refrigerant liquid flowing to the evaporator is necessary to provide maximum evaporator capacity under load conditions. The spring is adjusted to give 12 to 16° F (-11.1 to -8.8 ^{o} C) of superheat at the evaporator outlet.

This ensures that the refrigerant leaving the evaporator is in a completely gaseous state when drawn into the suction side of the compressor. Liquid would damage the compressor valve, piston and heads if allowed to return in the suction line.

A vapor is said to be superheated when its temperature is higher than the saturation temperature corresponding to its pressure. The amount of the superheat is, of course, the temperature increase above the saturation temperature at the existing pressure.

As the refrigerant moves along in the evaporator, the liquid boils off into a vapor and the amount of liquid decreases until all the liquid has evaporated due to the absorption of a quantity of heat from the surrounding atmosphere equal to the latent heat of vaporization of the refrigerant. The gas continues along in the evaporator and remains at the same pressure. However, its temperature increases due to the continued absorption of heat from the surrounding atmosphere. The degree to which the gas refrigerant is superheated is related to the amount of refrigerant being fed to the evaporator and the load to which the evaporator is exposed.

Superheat Adjustment

The starting method of adjusting the superheat is to unscrew completely the main evaporator expansion valve adjusting screw, then screw in 13 turns clockwise for 134A (Fig. 36). Afterwards, the following procedure should be followed:

1. Operate coach for at least one-half hour at fast idle with temperature control set at 82°F (27,7^{o}C), Then set temperature to minimum to keep the compressor on 6 cylinders.
2. Install pressure gauge at the evaporator suction header. You may install the pressure gauge at compressor suction, but then add 3 psi to reading.

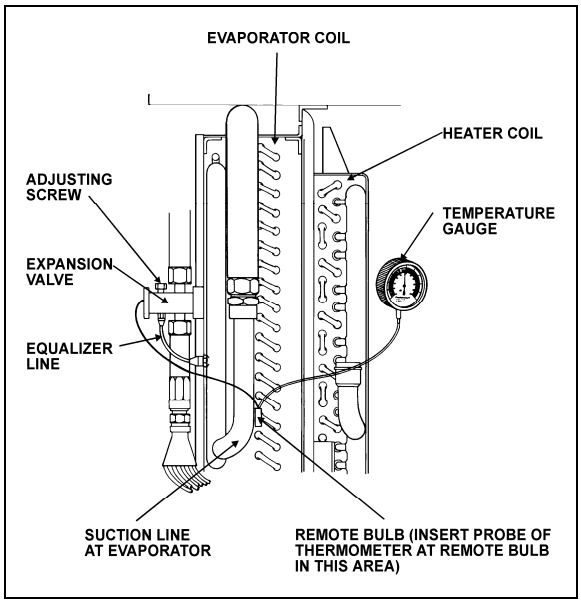

FIGURE 36: SUPERHEAT ADJUSTMENT INSTALLATION 22046

3. Install a remote reading thermometer to the evaporator outlet line near the existing remote bulb (Fig. 36).
4. Apply thermostatic tape around the bulb and evaporator outlet line to get a true reading of the line temperature.
5. Block condenser if necessary to keep pressure over 150 psi.

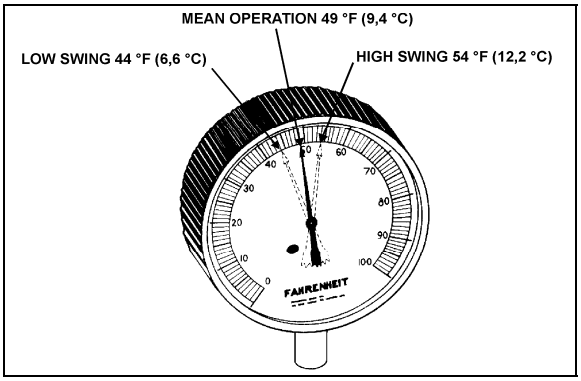

FIGURE 37: HIGH & LOW SWING TEMPERATURE AT REMOTE BULB 22047

6. Check approximately 5 readings of pressure at 2-minute intervals and convert to temperature using the temperatures & pressures table (page 35). Likewise check the temperature reading at the remote bulb at the same 2-minute intervals and record the low and high swing readings of the needle (refer to Fig. 37).

Example of readings taken at fig. 37:

A/C pressure gauge converted to temperature at expansion valve fitting	Temperature on remote bulb	
40°F (4,4°C)	Low-swing 44°F (6,6°C)	High swing 54°F (12,2°C)
Formula for superheat 49°F-40°F=9°F (9,4°C-4,4°C = 5°C)	Average of low and high swing is 49°F (9,4°C)	

NOTE

The low swing of the superheat should be a minimum of 4°F (2,2°C) higher at the remote bulb and have an average of 8 to 12°F (4 to 6°C) higher range at the bulb than the fitting at the expansion valve.

NOTE

To reduce the superheat, flow of refrigerant is increased by turning adjusting screw of expansion valve lower evaporator temperature counterclockwise. To increase temperature or increase superheat, flow of refrigerant is reduced by turning adjustment screw of expansion valve clockwise.

6. Regulate suction pressure to temperature reading according to temperature chart or to the R-134a temperature scale on the pressure gauge.

Example: Suction pressure 30 psi (207 kPa) converted to 32°F (0°C) on chart. If temperature reading is 40°F (4,4°C), subtract 32°F (0°C) and the result will be 8°F (4,4°C) of superheat.

CAUTION

Before proceeding to the expansion valve adjustment, check for restriction on suction side for plugged filter dryer and partially open valves. These conditions will give a high superheat.

Maintenance

1. Pump down the system as previously indicated in this section.

2. Disconnect the external equalizer line from the under side of the power head, and unclamp the remote control bulb from the evaporator coil outlet line.
3. Remove the two cap screws holding the power assembly to the valve body flange. Lift off the power assembly and remove the cage assembly.
4. When reassembling, replace with the new gaskets in proper location. Make sure the two lugs on the cage assembly fit into grooves provided in the power assembly. Do not force the valves together. The cage must fit properly before tightening the body flange. Tighten bolts evenly.
5. Check for leaks.

Safety Instructions

1. Make sure the valve is installed with the flow arrow on the valve body corresponding to the flow direction through the piping system.
2. Before opening any system, make sure the pressure in the system is brought to and remains at the atmospheric pressure. Failure to comply may result in system damage and/or personal injury.

9.8.2 Driver's HVAC Unit

The function and operation of the expansion valve for the driver's HVAC unit are similar to the cabin or passenger's HVAC unit but no superheat adjustment is required (see figures 19 and 33).

9.9 TORCH BRAZING

Use electrode containing 35% silver.

CAUTION

When using heat near a valve, wrap with water saturated rag to prevent overheating of vital parts.

DANGER

Before welding any part of refrigeration system, make sure the area is well ventilated.

9.10 TROUBLESHOOTING

9.10.1 Expansion Valve

PROBABLE CAUSE	PROBABLE REMEDY
LOW SUCTION PRESSURE-HIGH SUPERHEAT	
EXPANSION VALVE LIMITING FLOW:	
Gas in liquid line due to pressure drop in the line or insufficient refrigerant charge.	Locate cause of line flash and correct by use of any of the following methods. Add R-134a. Replace or clean filter dryer.
Inlet pressure too low from excessive low condensing temperature. Resulting pressure difference across valve too small.	Increase head pressure. Verify pressure switch for fan speed control.
Superheat adjustment too high.	Adjust superheat as outlined under "Superheat Adjustment".
Power assembly failure or partial loss of charge.	Replace power assembly or replace valve.
Air filter screen clogged.	Clean or replace air filter screen.
Plugged lines.	Clean, repair or replace lines.
LOW SUCTION PRESSURE-LOW SUPERHEAT	
Uneven or inadequate evaporator loading due to poor air distribution or liquid flow.	Balance evaporator load distribution by providing correct air or liquid distribution.
HIGH SUCTION PRESSURE-HIGH SUPERHEAT	
Compressor discharge valve leaking.	Replace or repair valve.
HIGH SUCTION PRESSURE-LOW SUPERHEAT (DEFECTIVE UNLOADER)	
Valve superheat setting too low.	Adjust superheat as outlined under "Superheat Adjustment".
Compressor discharge valves leaking.	Replace or repair discharge valve.
Incorrect superheat adjustment.	Superheat adjustment 12 to 16°F.
FLUCTUATING DISCHARGE PRESSURE	
Insufficient charge.	Add R-134a to system.
HIGH DISCHARGE PRESSURE	
Air or non-condensable gases in condenser.	Purge and recharge system.
Overcharge or refrigerant.	Bleed to proper charge.
Condenser dirty.	Clean condenser.

9.10.2 A/C

TROUBLE	CAUSE
Low suction pressure and frosting at dryer outlet.	Clogged filter.
Low Oil Level.	Check for oil leaks and for leaking oil seal. Do not attempt to check oil level unless system has been stabilized at least 20 minutes. See oil level verification.
Excessively cold suction line.	Loss of contact between the expansion valve bulb and the suction line or sticking of the expansion valve. Check for foreign matter and clean, repair or replace the valve.
Excessively cold suction line and noisy compressor.	Check superheat adjustment. Check remote bulb contact. Check expansion valve for sticking.
Compressor squeaks or squeals when running.	Check oil level. Replace oil seal.
Noisy or knocking compressor.	Check for broken internal parts. Overhaul if required.
Compressor vibrates.	Check and tighten compressor mounting bolts and belt tension.
Low refrigerant level	Check for refrigerant leaks and add refrigerant if required.
Suction pressure rises faster than 5 pounds per minute after shutdown.	Check compressor valve for breakage or damage.
Insufficient cooling.	Check for refrigerant leaks. Check condition of air filter and motors.
Insufficient air flow.	Dirty or iced evaporator. Dirty air filter. Blowers inactive. Clogged ducts.
No flow of refrigerant through expansion valve.	Filter dryer is clogged. Remote bulb has lost charge or expansion valve is defective.
Expansion valve hisses. Bubbles in moisture and liquid indicator.	Gas in liquid line. Add refrigerant.
Loss of capacity	Clogged filter. Obstructed or defective expansion valve.
Superheat too high.	Reset superheat adjustment. Check for clogged external equalizer line, or filter dryer.
Reduced air flow: a. Dirty or clogged air filter; b. Evaporator motor inoperative; or c. Plugged return air ducts.	Dirty or iced evaporator coil. Clean air filter screen. Check return ducts for obstructions. Check blower motor.
Frequent starting and stopping on low pressure control switch.	Lack of refrigerant. Check for leaks. Recharge.
Compressor intermittently starts and stops.	Intermittent contact in electrical control circuit. Compressor valves not in operating position.
Non-condensable in the refrigeration system.	Leak on system, system in vacuum in low temp. Specific symptom, pressure in system will not correspond to ambient temperature on shutdown. Only non-condensable will cause this. (Example: Pressure of idle R-134a system in 80°F (26.6°C) room should be 86.4 psi (595.7 kPa). See temperature chart in this section.)

TROUBLE	CAUSE
	An evaporator just does a proper cooling job without sufficient air. Shortage of air can be caused by the following: * Dirty filters; or * Dirty coils.

Testing condenser pressure.

NOTE: R-134A pressure is function of the temperature variation.

Example, for an exterior temperature of 100°F.
Exterior temperature (100°F) + 30°F = 130°F. Refer to paragraph "10.11 Temperature & Pressure".
Note the corresponding pressure for a temperature of 130°F, 199.8 psi.
Read the condenser pressure, example 171.9 psi.
171.9 psi & 199.8 psi, the pressure in the condenser is inferior to the pressure corresponding to the exterior temperature, in this case the condenser pressure may be too low. Check for refrigerant leaks and add refrigerant if necessary. If the pressure corresponding to the condenser temperature is superior to the pressure corresponding to the exterior temperature, then the air cooled condenser pressure may be too high. Most frequent causes are:

Reduced air quantity. This may be due to:
* Non-condensable in system;
* Dirt on the coil;
* Restricted air inlet or outlet;
* Dirty fan blades;
* Incorrect rotation of fan;
* Fan speed too low;
* Fan motor going out on overload; or
* Prevailing winds.
* Too much refrigerant in system. Remove refrigerant if necessary.

9.11 TEMPERATURES & PRESSURES

VAPOR-PRESSURE			
TEMPERATURE		PRESSURE	
°F	°C	psi	kPa
-100	-73.3	27.8	191.7
-90	-67.8	26.9	185.5
-80	-62.2	25.6	176.5
-70	-56.7	23.8	164.1
-60	-51.1	21.5	148.2
-50	-45.6	18.5	127.6
-40	-40.0	14.7	101.4
-30	-34.4	9.8	67.6
-20	-29	3.8	26.2
-10	-23	1.8	12.4
0	-18	6.3	43.4
10	-12	11.6	80
20	-7	18.0	124.1
30	-1	25.6	176.5
40	4	34.5	237.9
50	10	44.9	309.6
60	16	56.9	392.3
70	21.1	70.7	487.5
80	27	86.4	595.7
90	32.2	104.2	718.5
100	38	124.3	857.0
110	43.3	146.8	1012.2
120	49	171.9	1185.3
130	54.4	199.8	1377.6
140	60	230.5	1589.3
150	65.6	264.4	1823.0
160	71	301.5	2078.8
170	76.7	342.0	2358.1
180	82.2	385.9	2660.8

VAPOR-PRESSURE			
TEMPERATURE		PRESSURE	
°F	°C	psi	kPa
190	87.8	433.6	2989.7
200	93.3	485.0	3344.1
210	98.9	540.3	3725.4

9.12 LEAK TESTING

Some methods such as nitrogen pressure, soap and electronic sniffer can be used for leak testing. However, the most common method used is a "Halide" torch consisting of an acetylene tank, a burner and a suction test hose. Proceed as follows:

DANGER

Do not inhale fumes from leak detector.

The flow of acetylene to the burner causes suction in the test line. Any gas refrigerant present will be drawn through the hose and into the burner where it decomposes into free acids.

These acids come in contact with the hot copper reaction plate in the burner, causing color reaction in the flame. A small concentration is indicated by a green tint and a large concentration by an intense blue. Do not confuse this change in color with the change caused by shutting off the air supply through the hose by holding the end too close to an object.

The procedure for testing is:

1. Adjust flame so that the top of the cone is approximately level or within one-half inch above the plate.
2. Probe end of suction test tube around all joints, valves, etc. When a leak has been found at a soldered joint, this section of the system must be pumped down. Do not solder as pressure will force hot solder out. If the system is empty, it is more economical to put in just enough R-134a to produce about 15 psi (103 kPa). The pressure can be raised to about 150 psi (1034 kPa) with dry nitrogen.

NOTE

This gas is put into the suction and discharge shutoff valves at the compressor. The receiver valves must be opened. If no leaks are found, dump this mixture, evacuate the system and fill with refrigerant.

10. SMALL OR AUXILIARY AIR CONDITIONING SYSTEM COMPONENTS

10.1 COMPRESSOR

Consult the small Compressor Service Manual included at the end of this section.

WARNING

Read the cautionary information in the small Compressor Service Manual included at the end of this section.

10.2 COMPRESSOR REMOVAL

10.2.1 When the compressor is operational

* Perform the “OIL RETURN OPERATION” (Refer to paragraph 10.5).

10.2.2 When the compressor is inoperable

* Perform the “Refrigerant Recovery” operation.
* Slacken bolts A (Refer to figure 38).
* Remove bolts B & C (Refer to figure 38).
* Remove the compressor.

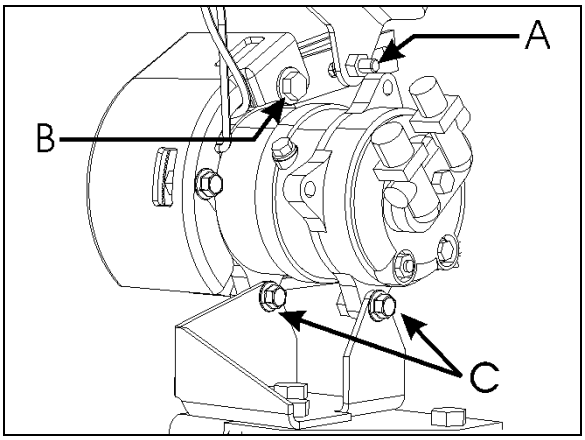

FIGURE 38: COMPRESSOR REMOVAL OR INSTALLATION 22349

10.2.3 Evacuating System Before Adding Refrigerant

When a system has been opened for repairs, change the filter dryer and evacuate the system. Vehicles equipped with a small or auxiliary A/C system must use high-pressure service port located on the other side of check valve and low-pressure port located alongside rear truss (Figures 19 and 39). It would be good practice to open solenoid valve.

1. Connect two hoses equipped with a micron gauge between the high-pressure service port, the low-pressure service port and the vacuum pump.
2. With the unit service valves open and the vacuum pump valves open, start the pump and draw the manifold and hoses into a very deep vacuum (700 microns).
3. Close manifold valve
4. Shut down the vacuum pump.
5. Check to insure that vacuum holds. (If the pressure continues to rise, it indicates a leak or moisture in the system).
6. Charge the system with the proper amount of refrigerant through the service port near the check valve using recommended charging procedures.
7. Remove the hoses.

10.3 OIL ADDITION

The chart below shows the approximate amount of oil to be added to the system when replacing a component.

Component replaced	Typical amount of oil
Evaporator	50 cm³ (1.7 ozs)
Condenser	30 cm³ (1.0 ozs)
Filter-Dryer	10 cm³ (0.3 ozs)

The amount of oil recovered with the refrigerant recovery should be added at the same time (25 ml of oil/lb of refrigerant)

10.4 COMPRESSOR OIL CONTAMINATION

Unlike engine oil, no cleaning agent is added to the compressor oil. Even if the compressor is run for a long time, the oil never becomes turbid as long as there is nothing wrong with the compressor or its method of use. Inspect the extracted oil for any of the following conditions:

- Dirt in the oil.
- Change to a varnish color.
- Presence of foreign substance, metal shavings, etc. in the oil. When the oil extracted from the compressor is as described above, replace the oil as follows:
    1. Clean the interior of the system with approved method (Paragraph 8.7)
    2. Replace the filter-dryer.
    3. Supply with new oil as specified in ICE (International Components Engineering) Compressor Service Manual included at the end of this section.

10.5 OIL RETURN OPERATION

There is a close affinity between oil and refrigerant. During normal operation, part of the oil recirculates with the refrigerant in the system. Therefore, when checking the amount of oil in the system or replacing any system component, the compressor must be run in advance to ensure return. This procedure is as follows:

- If the amount of refrigerant in the system has decreased, charge to the proper amount.
- Start the engine and select fast idle.
- Set the fan speed to full air/full A/C and let run for 20 minutes.

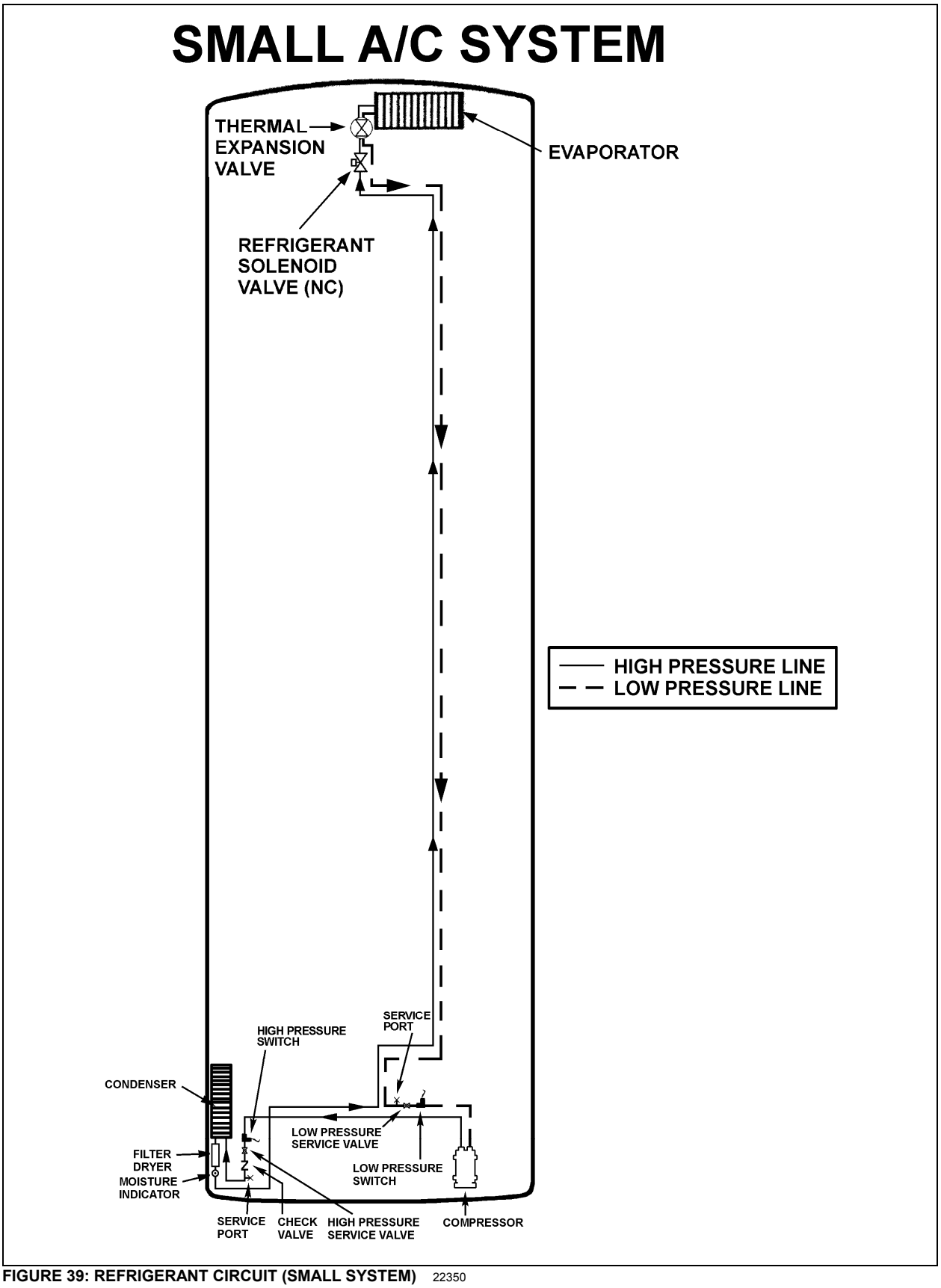

FIGURE 39: REFRIGERANT CIRCUIT (SMALL SYSTEM) 22350

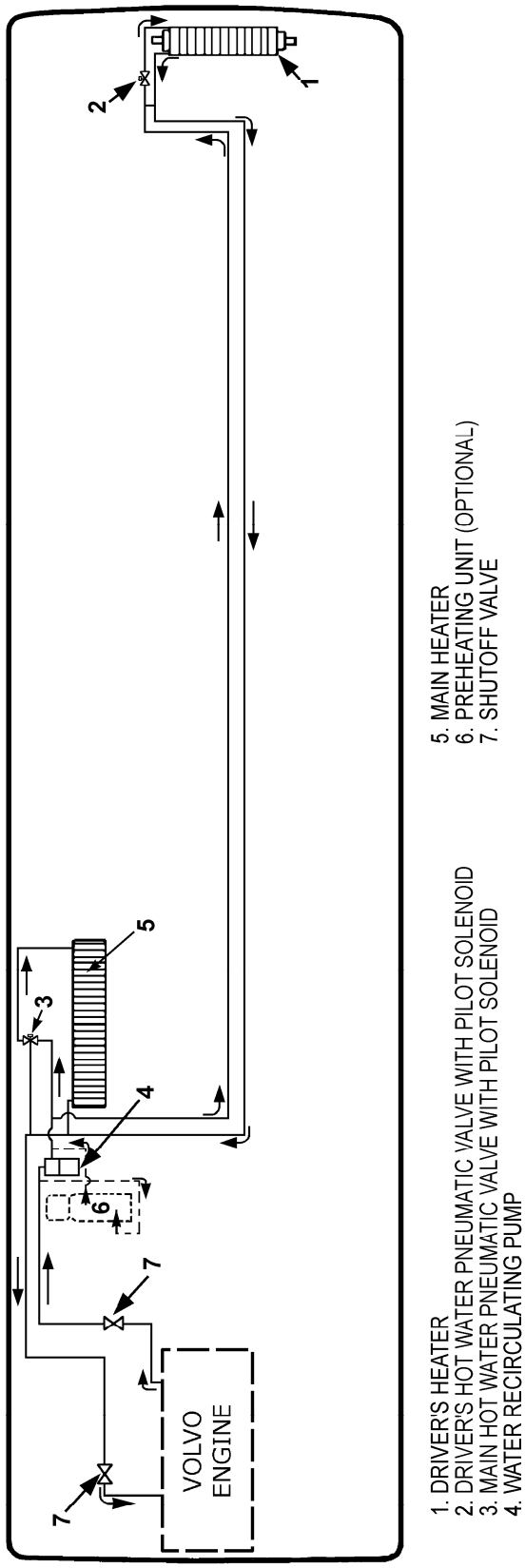

1. DRIVER'S HEATER
2. DRIVER'S HOT WATER PNEUMATIC VALVE WITH PILOT SOLENOID
3. MAIN HOT WATER PNEUMATIC VALVE WITH PILOT SOLENOID
4. WATER RECIRCULATING PUMP
5. MAIN HEATER
6. PREHEATING UNIT (OPTIONAL)
7. SHUTOFF VALVE

FIGURE 40: CENTRAL HEATING SYSTEM COMPONENTS

11. HEATING SYSTEM

As seen earlier in this section, the vehicle interior is pressurized by its Heating, Ventilation and Air Conditioning (HVAC) system. Two heating systems are available: Central Heating System and Small Heating System. The vehicle interior should always be slightly pressurized to prevent cold and moisture from entering. If the vehicle is equipped with a Central Heating System; air flow and controls divide the vehicle into two areas: driver's area and cabin or passenger's area.

The schematic of figure 40 shows the central heating system with its components.

In addition to the normal heating provided by the engine, a preheating system (104,000 Btu/hr) (optional) may have been installed in the vehicle.

11.1 CENTRAL HEATING SYSTEM

11.1.1 Draining Heating System

To drain the entire system, refer to Section 05, *"Cooling*". If only the driver's or main heater core must be drained, refer to the following instructions.

- **Draining Driver's Heater Core**

1. Stop engine and allow engine coolant to cool.
2. Locate the normally open water pneumatic valve on the ceiling of the spare wheel compartment (Fig. 41), move the pilot-solenoid valve red tab to close the valve.

WARNING

Before proceeding with the following steps, check that coolant has cooled down.

3. Loosen hose clamp, install an appropriate container to recover coolant, and disconnect silicone hose from water solenoid valve.
4. From inside of vehicle, remove the two finishing panels in front of unit. Remove the three screws fixing the unit front panel. Open the manual vent located inside the HVAC unit, on the driver's side (Fig. 42) to ensure an efficient draining.

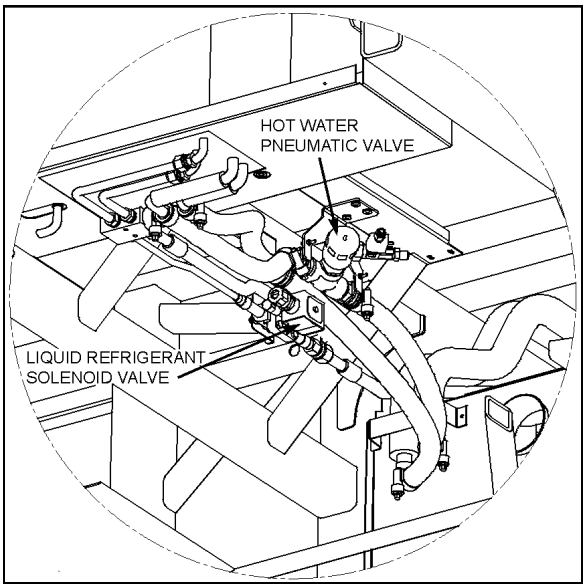

FIGURE 41: CEILING OF THE SPARE WHEEL COMPARTMENT

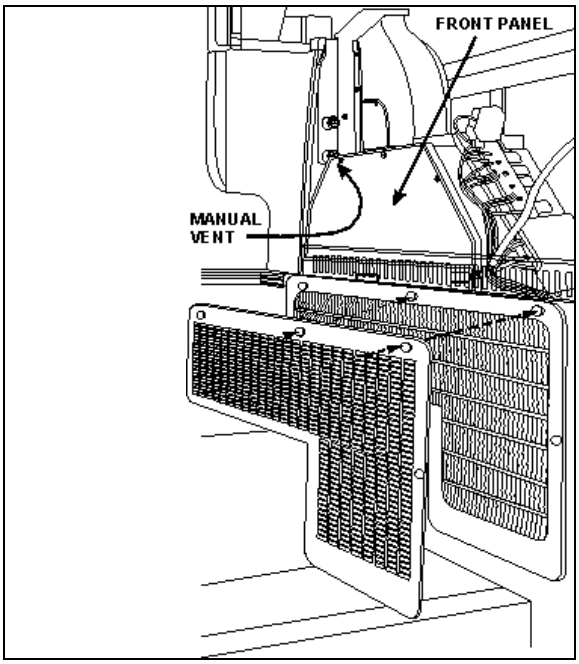

FIGURE 42: DRIVER'S HVAC UNIT

- **Draining Main Heater Core**

1. Stop engine and allow engine coolant to cool.
2. Close both heater line shutoff valves.

On X Series vehicles, the valves are located in the engine compartment. One is on the L.H. side of compartment in front of the radiator and the other valve is located under the radiator fan gearbox (Fig. 43).

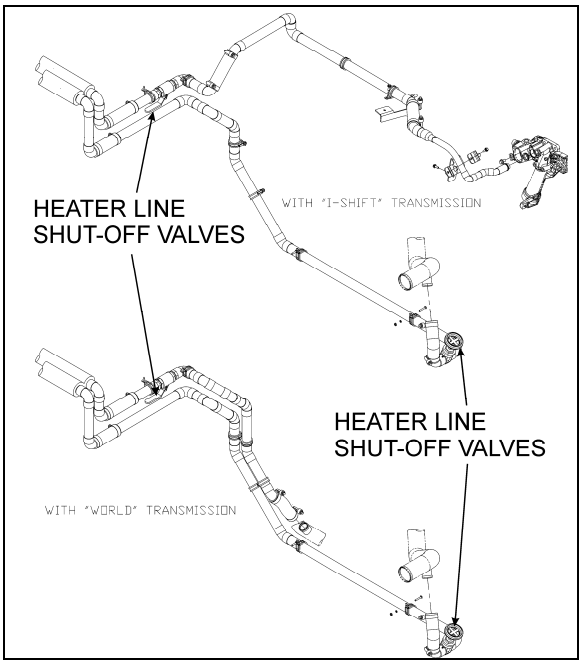

FIGURE 43: HEATER LINE SHUT-OFF VALVES

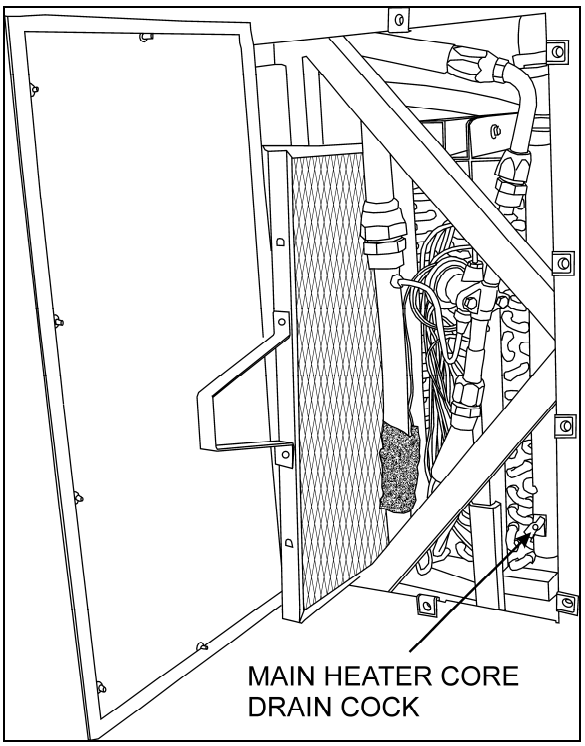

FIGURE 44: EVAPORATOR COMPARTMENT

3. The main heater core drain cock is located in the evaporator compartment. To access the valve on X Series vehicles, open baggage compartment door located in front of the evaporator compartment (L.H. side). Open access panel by turning the three screws of panel ¼ of a turn.

WARNING

Before proceeding with the following steps, check that coolant has cooled down.

4. Open drain cock in bottom of heater core, you can unfasten a hose connection on top of heater core (Fig.44) in order to allow air to enter while draining.

11.1.2 Filling Heating System

1. Ensure that the drain hose is reconnected and the manual vent and drain cock are closed.
2. Open the surge tank filler cap and slowly fill the system to level of filler neck.
3. After initial filling, the water shut-off valves should be open and the water recirculating pump should be energized to assist in circulating coolant through the heating system. To perform this operation, start the engine, switch on the HVAC control unit, both driver and cabin (passengers') sections, and set temperature to their maximum positions in order to request the heating mode in each of these sections.
4. When coolant level drops below the surge tank filler neck, slowly fill the system to level of filler neck.
5. Once the level has been stabilized, replace cap.

11.1.3 Bleeding Heating System

Whenever the heating system has been drained and refilled, or the system has run low on coolant and coolant has been added, it is necessary to bleed air from heating system. Locate the manual vent illustrated in Figure 42, and open momentarily until no air escapes from the line.

11.1.4 Soldering

Before soldering any part of the system, make sure the area is well ventilated. Use (stay clean) flux sparingly and apply solder (95-5 round wire 1/8 inch). After completing repairs, test for leaks.

When using heat at or near a valve, wrap with water saturated rag to prevent overheating of vital parts.

11.1.5 Driver's Hot Water Pneumatic Valve Assembly

- **Description**

The flow of hot water to the driver's heater core is controlled by a pneumatic NO water valve assembly. The valve, located at the ceiling of the spare wheel compartment, is designed so that the pilot solenoid valve, which is part of the assembly, opens and closes a port which directs air pressure to the actuator casing, thereby opening or closing the valve.

When the vehicle is operating with no current to the pilot solenoid valve, no air pressure is admitted to the actuator casing, the cylinder spring pushes up against the cylinder, thereby keeping the water valve open.

The driver's heater water valve requires a minimum amount of maintenance. The valve should be free of dirt sediment that might interfere with its operation. No other maintenance is needed unless a malfunction occurs.

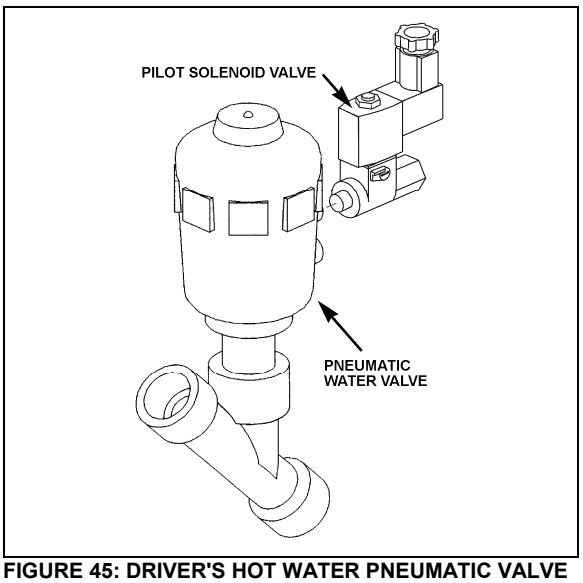

FIGURE 45: DRIVER'S HOT WATER PNEUMATIC VALVE ASSEMBLY

- **Pneumatic Water Valve Disassembly**

1. Shut off air supply pressure and electrical current to the pilot solenoid valve. Disconnect wires.
2. The water valve need not be removed from the line. Unscrew nipple, the actuator casing, tube, spindle and closure member can be removed (Fig. 46).
3. Remove the snap ring using a pair of pliers.
4. You can now access all seals for replacement

   Pneumatic water valve replacement seal kits:

   * Water Side: 871311
   * Actuator Side: 871312

- **Pneumatic Water Valve Reassembly**

1. Assemble the actuator casing, tube, nipple, spindle and closure member.
2. Tighten the nipple in place in the body cavity as per figure 46. Fasten pilot solenoid vale to the pneumatic water valve. Reconnect air supply pressure and electrical current to the pilot solenoid valve.
3. Check for proper operation.

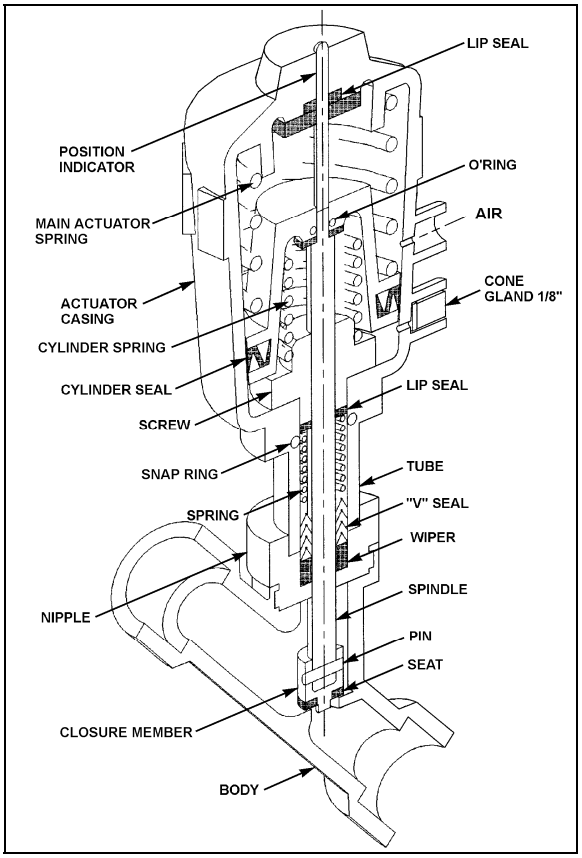

FIGURE 46: PNEUMATIC WATER VALVE

- **Pilot Solenoid Valve**

1. No maintenance is needed unless a malfunction occurs.
2. A pilot solenoid valve replacement seal kit is available: 871313.

- **Valve Troubleshooting**

PROBLEM	PROCEDURE
Valve fails to close	1. Check electrical supply with a voltmeter. It should agree with nameplate rating. 2. Check pressure at pilot solenoid valve inlet. It must be at least equal to the minimum pressure stamped on the nameplate. It should not go below minimum while valve is operating.
	1. Check that the closure member assembly, and that main actuator and cylinder springs are free to travel. 2. Check that there is no restriction to the air escaping from the actuator casing. 3. Make sure that pilot solenoid valve operates properly.

11.1.6 Central Hot Water Pneumatic Valve Assembly

- Description

The flow of hot water to the vehicle's central heater core is controlled by a 3-way pneumatic water valve assembly. The valve, located in the evaporator compartment, is designed so that the pilot solenoid valve, which is part of the assembly, opens and closes a port which directs air pressure to the actuator casing, thereby allowing the hot water to enter the main heater core or bypassing it.

When the vehicle is operating with no current to the pilot solenoid valve, no air pressure is admitted to the actuator casing, the cylinder spring pushes up against the cylinder, thereby allowing the hot water to enter the main heater core.

The central heater water valve requires a minimum amount of maintenance. The valve should be free of dirt sediment that might interfere with its operation. No other maintenance is needed unless a malfunction occurs.

- **Pneumatic Water Valve Disassembly**

1. Shut off air supply pressure and electrical current to the pilot solenoid valve. Disconnect wires.
2. The water valve need not be removed from the line. Unscrew nipple, the actuator casing, tube, spindle and closure member can be removed (Fig. 47).
3. Remove the snap ring using a pair of pliers.

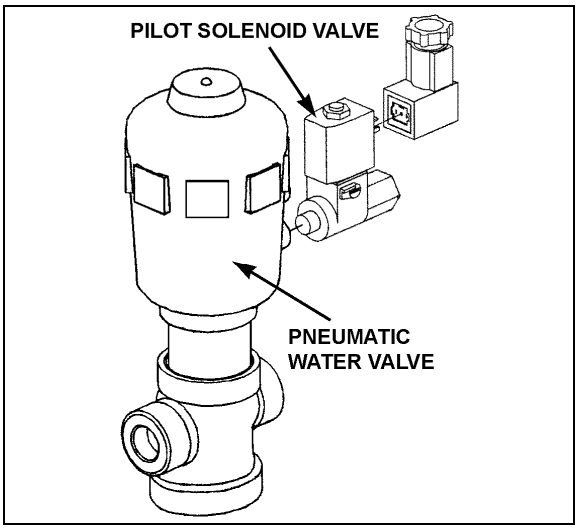

FIGURE 47: CENTRAL HOT WATER PNEUMATIC VALVE ASSEMBLY 22329

4. You can now access all seals for replacement

   Pneumatic water valve replacement seal kits:

   * Water Side: 871389
   * Actuator Side: 871388

- **Pneumatic Water Valve Reassembly**

1. Assemble the actuator casing, tube, nipple, spindle and closure member.
2. Tighten the nipple in place in the body cavity as per figure 48. Fasten pilot solenoid vale to the pneumatic water valve. Reconnect air supply pressure and electrical current to the pilot solenoid valve.
3. Check for proper operation.

- **Pilot Solenoid Valve**

1. No maintenance is needed unless a malfunction occurs.
2. A pilot solenoid valve replacement seal kit is available: 871390.

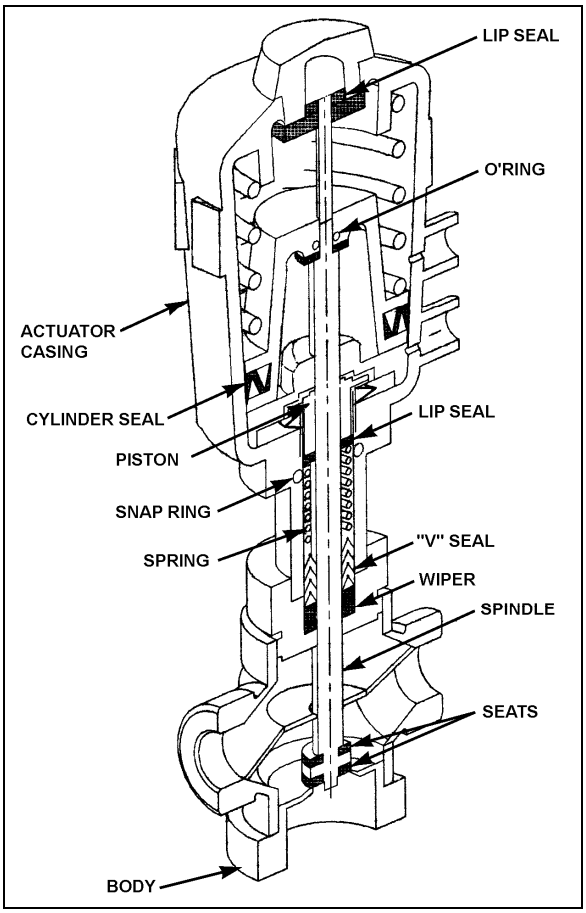

FIGURE 48: PNEUMATIC WATER VALVE 22330

- **Valve Troubleshooting**

PROBLEM	PROCEDURE
Valve fails to close	1. Check electrical supply with a voltmeter. It should agree with nameplate rating. 2. Check pressure at pilot solenoid valve inlet. It must be at least equal to the minimum pressure stamped on the nameplate. It should not go below minimum while valve is operating.
Valve fails to open.	1. Check that the closure member assembly, and that main actuator and cylinder springs are free to travel. 2. Check that there is no restriction to the air escaping from the actuator casing. 3. Make sure that pilot solenoid valve operates properly.

11.1.7 Water Recirculating Pump

This vehicle is provided with a water recirculating pump which is located in the engine coolant heater compartment (Fig. 49). The water recirculating pump consists of a centrifugal pump and an electric motor which are mounted in a compact assembly.

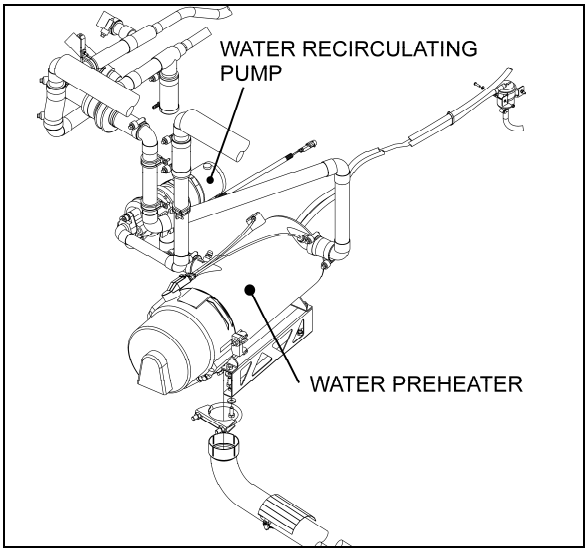

FIGURE 49: PUMP LOCATION (CENTRAL A/C) 22331

The (seal less) pump requires no periodic maintenance other than replacement of motor brushes. Replacement of motor brushes can be performed without removing the pump assembly. Inspection of the pump, to determine if the pump is working properly, should be made while the pump is in operation. If there is evidence that the pump is not operating as per specifications, the unit must be disassembled for corrective measures.

Disassembly of the pump will be necessary only in the case of a rotor failure or motor failure.

- **Removal**

1. Stop engine and allow engine coolant time to cool.
2. Close shutoff valves. Refer to *"05 COOLING"* under heading *"Draining Cooling System"* for location of valves.
3. Disconnect the electrical wiring from the motor.

WARNING

Before proceeding with the following steps, check that coolant has cooled down.

4. Disconnect water lines from pump at flange connections. Place a container to recover the residual coolant in the line.
5. Remove the two clamps holding the pump motor to its mounting bracket. Remove the pump with the motor as an assembly.

- **Disassembly**

1. Separate the housing (1) from the adapter (7) by first removing the 4 capscrews. Remove housing carefully to prevent damaging the O-ring (2).
2. Remove rotor assembly (4), washers (3) and shaft (5) from the adapter.

Inspection

Components removed from the recirculating pump and motor assembly should be compared with new parts to determine the degree of wear.

- **Brushes**

1. When removing brushes, note the position of the brush in the tube. Brush life is shortened if the brushes are not replaced properly.
2. Examine brushes for the following:

   a. Wear
   Replace the brushes if less than 25% of the usable brush is left (less than 0.300 inch [8 mm]).

   b. Chipped edges
   Chips can be caused by improper handling or installation. Badly chipped brushes should be replaced regardless of their length.

   c. Annealed brush spring
   This can be detected by noting the resiliency of the spring. Annealing is caused by failing to tighten the brush caps properly, thus not providing a good low resistance contact between the terminal and the brush tube. Replace brushes showing evidence of annealed springs.

   d. Frayed or broken pigtail
   An improperly installed brush may have the pigtail (shunt) pinched under the terminal or between the coils of the spring. If the pigtail is badly frayed or broken, replace the brush.

3. Observe the following factors when replacing brushes:

   a. The face of a new brush is carefully cut to cause proper seating during the *"wear-in"* period.
   b. Improper installation can harm both the brush and the commutator.
   c. Replacement brushes should be of the proper grade.
   d. Brush performance will be affected if the spring and terminal are not properly placed in the brush tube. The spring should be free over its entire length and the terminal should make good contact with the metal brush tube insert.

- **Assembly**

1. Install washer (3), shaft (5) and rotor assembly (4) into adapter (7).
2. Install O-ring (2) into housing (1) and assemble housing to the adapter.
3. Secure housing to adapter using 4 capscrews (6).

- **Installation**

1. Apply gasket cement to the line flanges, put the two gaskets in place, and connect water lines to the pump at the flange connections. Position the pump and motor assembly on the mounting bracket. Position the mounting clamps over the motor and secure with mounting bolts.
2. Connect electrical wiring to the pump motor.
3. Open shutoff valve. Refer to *"05 COOLING"* under heading *"Draining Cooling System"* for location of valves.
4. Fill the cooling system as previously instructed in this section under *"11.2 Filling Heating System"*, then bleed the system as previously instructed in this section under *"11.3 Bleeding Heating System"*.

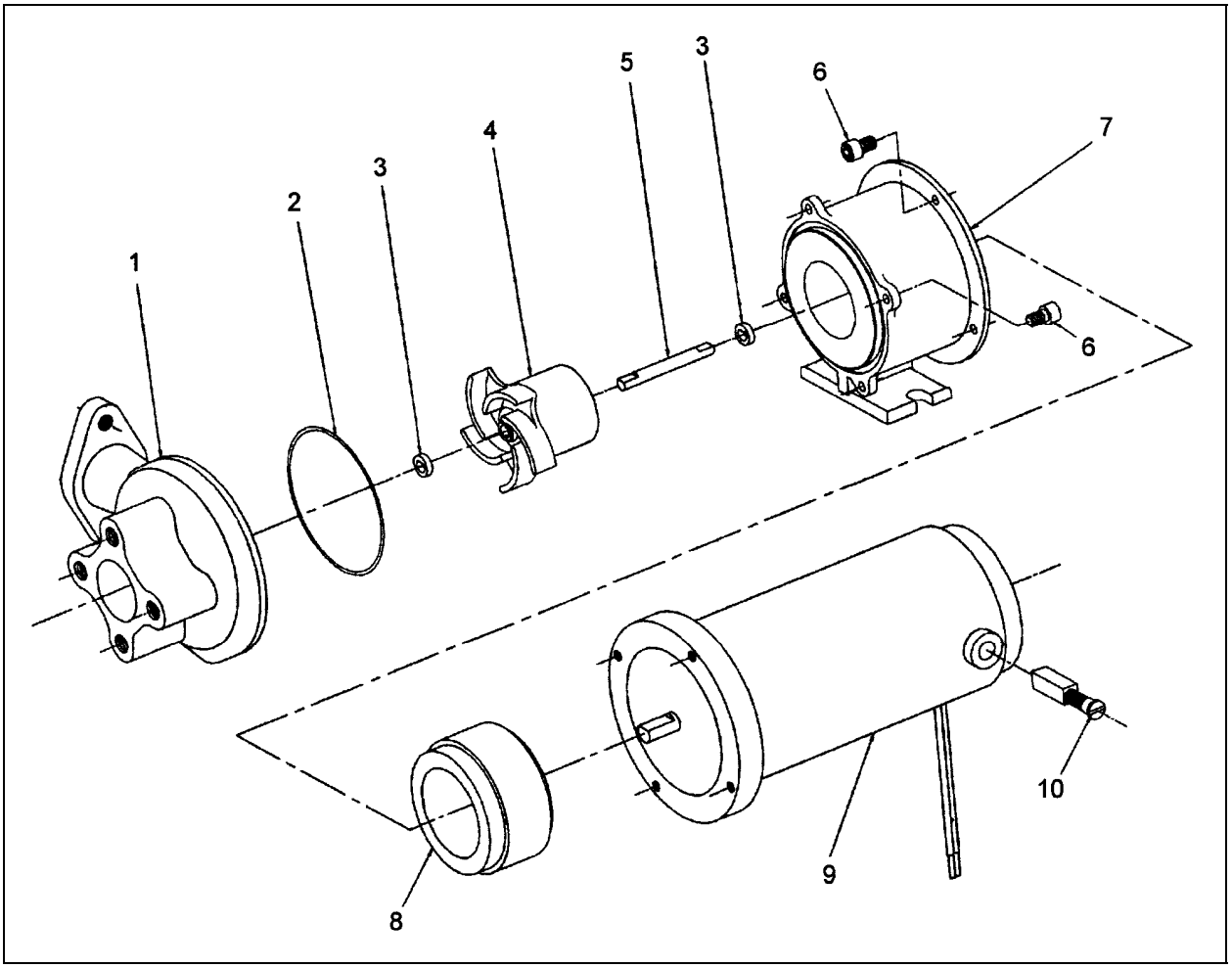

FIGURE 50: WATER RECIRCULATING PUMP (CENTRAL A/C) 22282

ITEM	DESCRIPTION	QTY.
1	Housing	1
2	O-Ring	1
3	Washer SS	2
4	Rotor Assembly	1
5	Shaft SS	1
6	Screw, Cap Hex Soc. Head 8-32 X 3/8	8
7	Adaptor	1
8	Drive Magnet	1
9	Motor Assembly 24V	1
10	Brush	2

11.1.8 Preheating System (Optional)

The vehicle may be equipped with the optional preheater located aft of the evaporator compartment, inside the engine coolant heater compartment and accessible through the evaporator compartment door (refer to Fig. 51).

This Auxiliary Preheating System is used for preheating and retaining the heat of water-cooled engines. It can be used before starting the engine to ease its starting and to provide immediate heat inside the vehicle upon operation of the system. It can also be used with engine running to maintain coolant heat and maintain the set temperature inside the vehicle.

The heater operates independently from the vehicle engine. It is connected to the cooling and heating circuits, the fuel system and the electrical system of the vehicle.

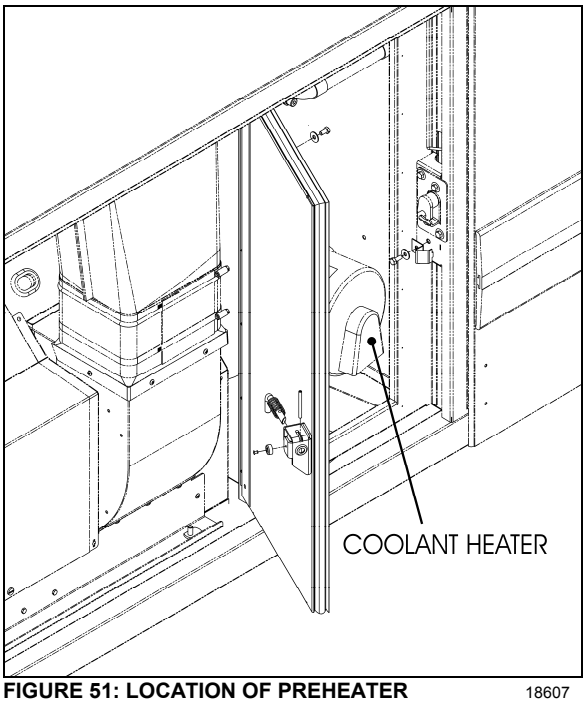

FIGURE 51: LOCATION OF PREHEATER 18607

The pilot lamp turns on when the heater is switched on. Combustion air flows in to flush out the combustion chamber and the water circulation pump is put into operation. The fuel metering pump conveys fuel in precise doses to the combustion chamber where fuel and combustion air form a combustible mixture which is ignited by the glow plug.

Once the flame sensor has signaled to the control unit that combustion has taken place correctly, the glow spark plug and ignition coil are switched off.

The hot combustion gases are diverted at the end of the flame pipe, then pass through the indirect heating surfaces of the heat exchanger and transmit their heat to the engine coolant passing through the heat exchanger.

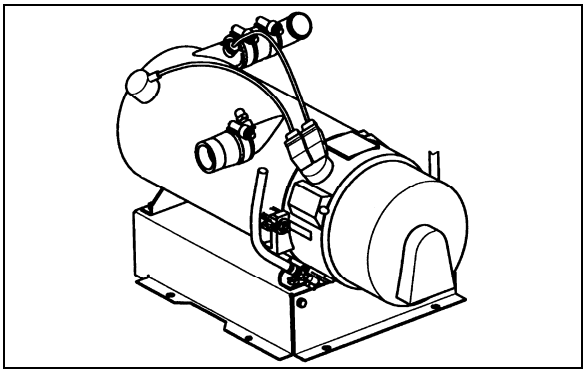

FIGURE 52: SPHEROS PREHEATER (104,000 BTU)

The heat is thermostatically controlled and operates intermittently, i.e. the switched-on times of the burner vary depending on the heat requirement. The water temperature depends on the setting of the built-in water thermostat.

The water circulation pump remains in operation as long as the heater is operating, even in the regulation intervals and during the delayed cutout of the switched-off heater. The pump can also be operated independently from the heater by means of an appropriate circuit. The heater can be switched on at any time, even during the delayed cutout period. Ignition takes place once this delay time is over.

When the heater is switched off, the fuel supply is interrupted. The flame goes out, and at the same time a delayed cutout of some 2.5 minutes begins. The combustion air still flowing flushes the remaining combustion gases out of the chamber and cools off the hot parts on the exhaust side of the heat exchanger, while the water circulation pump, still running, transmits the heat present in the heat exchanger, thus preventing local overheats. Once the delayed cutout time is over, both the combustion air blower and the water circulation pump switch off automatically. A cutout will take place in case of any failure of the preheater.

- **Preheater Fuel Filter**

The preheater fuel filter is located beside the preheater in the engine coolant heater compartment, and is accessible by opening the evaporator compartment door.

MAINTENANCE

Replace preheater fuel filter every 50,000 miles (80 000 km) or once a year, whichever comes first.

- **Operation**

Switch on the heater. The operation indicator lamp comes on and the heater motor and circulating pump begin to run. After about 10-25 seconds the solenoid valve opens and fuel is sprayed into the combustion chamber. At the same time, the electronic ignition unit produces high voltage (8000 V) and the mixture of fuel and air in the combustion chamber is ignited by the spark on the ignition electrodes. The flame is indicated by the flame detector, then the electronic ignition unit stops producing high voltage and combustion continues by itself (spark on electrodes is required only to ignite the flame). At this moment, the heater is working and producing heat.

If the heater is switched off by the on/off switch, the solenoid valve interrupts fuel supply, combustion stops and indicator lamp turns off. Combustion air fan still blows air, cleaning the combustion chamber of any fumes and cooling down the combustion chamber. Coolant circulation pumps coolant, making a purge cycle for approximately 2-3 minutes, thus protecting the heater against overheating.

If the heater is not switched off by the on/off switch, the control thermostat will switch off the heater when coolant temperature reaches 165° ± 6°F (75° ± 3°C) and turns it on at 154° ± 9°F (68° ± 5°C). During this time, the heater (combustion) is off and the indication lamp and coolant pump are on. Combustion air fan blows air for 2-3 minutes and then turns off.

- **Preheating System Timer**

The timer, located on L.H. lateral console is used to program the starting and stopping time of the preheating system. The system indicator light, located on the timer, illuminates when the system is functional.

CAUTION

The preheating system should not operate for more than one hour before starting engine as this could discharge batteries.

DANGER

Preheating system must not operate when vehicle is parked inside or during fuel fill stops.

NOTE

Preheating system uses the same fuel as the engine.

In case of failure:

1. Shut off and turn on again.
2. Check main circuit breaker and overheat fuse.
3. Have system repaired in a specialized shop.

- **Timer Operating Instructions**

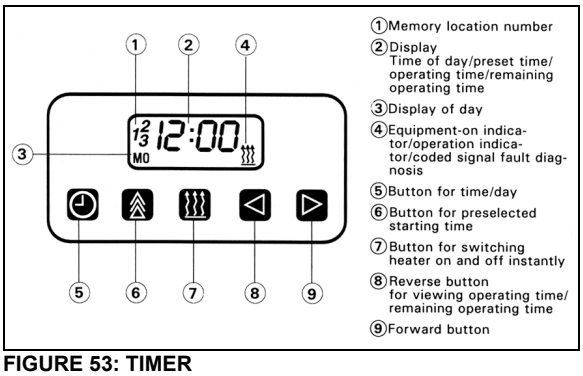

FIGURE 53: TIMER

These instructions refer to the timer illustrated in figure 53. They are the same instructions provided in the Spheros instruction booklet, provided with your vehicle.

Remaining Operating Time

The remaining operating time refers to the period of time the heater still continues to remain in operation. It may be changed while the heater is in operation.

Setting the Digital Timer

After the power has been connected, all symbols on the digital display are flashing. The time of the day and the day of the week must be set.

All flashing symbols of the timer can be set by means of the Forward (9) or Reverse (8) buttons.

When buttons (8) and (9) are pressed for more than 2 seconds, the quick digit advance mode is activated.

Setting the Time and Day of the Week

1. Press button (5) for more than 2 seconds (time display flashes).
2. Press (8) or (9) button to set the time of day.
3. Wait 5 seconds. The time of day is stored (time of week flashes).
4. Press (8) or (9) button to set the correct day of week.
5. Wait 5 seconds. The day of week is stored.

Viewing the Time (Ignition ON)

Continuous display of current time and day of the week.

Viewing the Time (Ignition OFF)

Briefly press button (5) to display current time and day for 5 seconds.

- **Switching Heater On (Instant Heating)**

With Ignition ON:

Press button (7). Heater is switched on (continuous operation) and continues to operate until button (7) is pressed again or ignition is switched off.

NOTE
If the ignition is switched off while heater is in operation, the remaining operating time of 5 minutes flashes on the display and the heater will continue to operate for this period of time.

With Ignition OFF:

Press button (7). Heater is switched on for preset operating time (the factory-set heater operating duration is 60 minutes)

- **Switching Heater Off**

Press button (7). The heater starts its after-run cycle and switches off thereafter.

Presetting Operating Duration

1. Press button (6). Memory location number flashes.

NOTE
By repeatedly pressing button (6), starting time 2 or 3 can be preset.

2. Press button (8) or (9) until correct startup time is set.
3. Wait 5 seconds. Preset starting time is stored and day of week flashes.
4. Press button (8) or (9) to select the correct startup day of week.
5. Wait 5 seconds. The startup day of week is stored.

The number of memory location remains on the display. The timer is now in the programmed mode and will switch the heater in at the preset time.

NOTE
We recommend that memory locations 1 and 2 be used for presetting times within 24 hours of setting the timer. Memory location 3 can be used for a starting time within the next 7 days of setting the timer.

Recalling Preset Times

Press (6) repeatedly until the desired memory location number and preset time are displayed.

Canceling Preset Time

Press button (6) repeatedly until no more memory location number is visible on the display.

Setting Operating Time

1. With heater off, press button (8). Operating time flashes.
2. Press button (8) or (9) to set the operating time (between 1 and 120 minutes).

The heater remains in operation for the preset time (except for continuous operation).

Setting the Remaining Operating Time

1. With heater in operation, press button (8). Remaining operating time flashes.
2. Set remaining time with button (8) or (9).
3. Wait 5 seconds. Remaining operating time is stored.

Operational Failure Symptoms via Fault/Flash code

On heaters equipped with a fault diagnosis system using coded light signals, the equipment-on indicator/operation indicator flashes. Refer to the following table.

Failure Symptom	Probable Cause	Check and Correct
1X Flash (F 01) No combustion after completion of start up sequence.	- Fuel system - Combustion air - Electronic ignition	- Fuel level - Type of fuel being used - Fuel filter - Fuel line connections (air bubbles in fuel lines) - Fuel nozzle plugged - Air intake or exhaust, restricted or plugged - Incorrect electrode gap
2X Flashes (F 02) Flame out during burner operation no restart possible	- Fuel supply (shortage of fuel)	- Restriction in the fuel system - Fuel filter - Fuel line connections (air bubbles in fuel lines) - Type of fuel being used
3X Flashes (F 03) Low voltage for more than 20 seconds	- Electrical system	- Load test batteries - Corrosion at connections - Loose connections
4X Flashes (F 04) Flame detector recognizes false flame signal during pre-start or shut-down cycle	- Defective flame detector	- Replace flame detector
5X Flashes (F 05) Flame detector	- Wiring - Defective flame detector	- Damaged wiring, open or short circuit - Replace flame detector
6X Flashes (F 06) Temperature sensor	- Wiring - Defective temperature sensor	- Damaged wiring, open or short circuit - Replace temperature sensor
7X Flashes (F 07) Fuel solenoid valve	- Wiring - Defective solenoid valve	- Damaged or corroded wiring, open or short circuit - Replace solenoid valve
8X Flashes (F 08) Combustion air fan motor	- Wiring - Wrong RPM - Defective combustion air fan motor	- Damaged wiring, open or short circuit - Replace combustion air fan - Replace combustion air fan
9X Flashes (F 09) Circulation pump motor	- Wiring - Defective circulation pump motor	- Damaged wiring, open or short circuit - Replace circulation pump motor
10X Flashes (F 10) Temperature limiter	- Overheat condition - Coolant flow - Wiring - Defective temperature limiter	- Reset temperature limiter - Coolant level or flow restriction - Air trapped in coolant circuit - Damaged or corroded wiring, open or short circuit - Replace temperature limiter
11X Flashes (F 11) Electronic ignition coil	- Wiring - Defective electronic ignition coil	- Damaged wiring, open or short circuit - Replace electronic ignition coil
12X Flashes (F 12) Heater lock out	- 3 repeated faults/flame-outs or 5 repeated start attempts	- Reinitialize control unit by switching heater on and disconnecting power.

- **Troubleshooting and Maintenance**

Refer to the Spheros manual for more information.

NOTE

If there are no heater faults, the heater will go through a normal start cycle and regulate based on thermostat setting.

NOTE

Switch on the preheating system briefly about once a month, even during the warm season.

CAUTION

When welding on the vehicle, disconnect the preheater module connector in order to protect this system from voltage surges.

CAUTION

To avoid running down the batteries, do not turn on the preheating system for more than one hour before starting the engine.

DANGER

The preheating system uses the same fuel as the engine. Do not operate in a building or while refueling. Operate only in a well-ventilated area.

11.2 SMALL HEATING SYSTEM

11.2.1 Draining Heating System

To drain the entire system, refer to Section 05, *"Cooling"*. If only the driver's HVAC unit heater core must be drained, refer to the following instructions.

- **Draining Driver's HVAC Unit Heater Core**

a) Stop engine and allow engine coolant to cool.

b) Locate the normally open hot water pneumatic valve on the ceiling of the spare wheel compartment (Fig. 54), move the pilot-solenoid valve red tab to close the valve.

WARNING

Before proceeding with the following steps, check that coolant has cooled down.

c) Loosen hose clamp, install an appropriate container to recover coolant, and disconnect silicone hose from hot water pneumatic valve.

d) From inside of vehicle, remove the two finishing panels in front of unit. Remove the three screws fixing the unit front panel. Open the manual vent located inside the HVAC unit, on the driver's side (Fig. 42) to ensure an efficient draining.

11.2.2 Filling Heating System

a) Ensure that the drain hose is reconnected and the manual vent is closed.

b) Open the surge tank filler cap and slowly fill the system to level of filler neck.

c) After initial filling, the water valve should be open and the water recirculating pump should be energized to assist in circulating coolant through the heating system. To perform this operation, start the engine, switch on the HVAC control module and set temperature to the maximum position in order to request the heating mode.

d) When coolant level drops below the surge tank filler neck, slowly fill the system to level of filler neck.

e) Once the level has been stabilized, replace cap.

11.2.3 Driver's Hot Water Pneumatic Valve Assembly

The small system driver's hot water pneumatic valve assembly is similar to the one installed in a central heating system.

Refer to figure 54 for hot water pneumatic valve location and to paragraph 11.1.5 for more information.

11.2.4 Water Recirculating Pump

The small system water recirculating pump is similar to the one installed in a central heating system.

Refer to figure 54 for pump location and to paragraph 11.1.7 for more information.

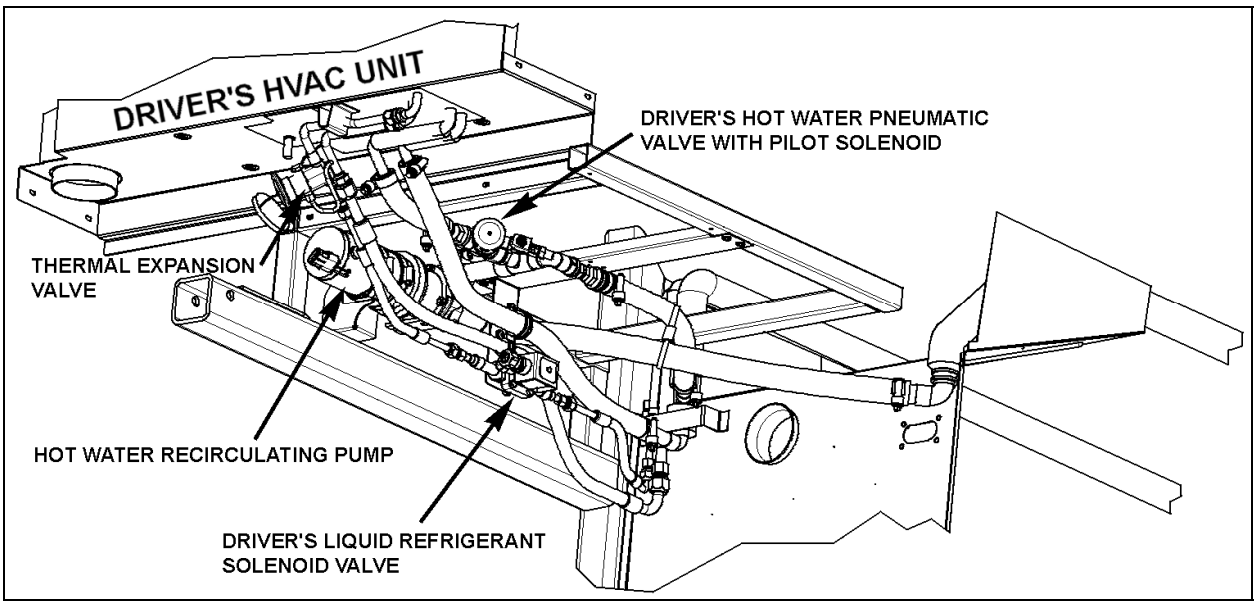

FIGURE 54: CEILING OF THE SPARE WHEEL COMPARTMENT

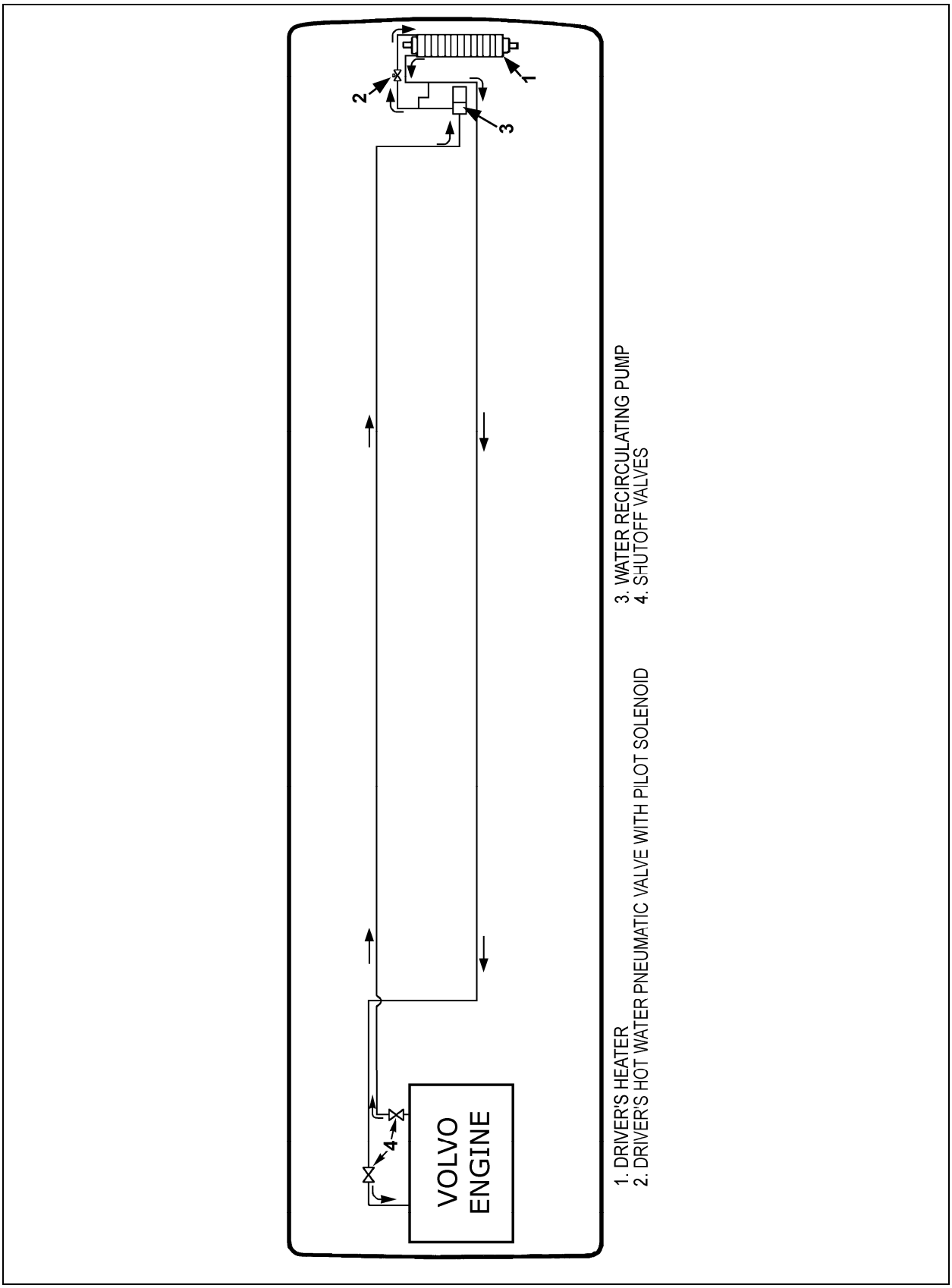

FIGURE 55: SMALL HEATING SYSTEM COMPONENTS

12. SPECIFICATIONS

Main evaporator motor

Make..... AMETEK ROTRON
Type .....BRUSHLESS DC MICROPROCESSOR CONTROLED
Voltage ..... 27.6 V DC
Current draw ..... 68 amps
Horsepower..... 2
Revolution ..... 1400 & 1700 rpm
Insulation.....Class F
Motor Prevost number..... 563586

Condenser fan motors

Make..... EBMPAPST
Type .....AXIAL BRUSHLESS
Voltage ..... 24 V DC
Qty..... 4
Prevost number..... 563461

Evaporator air filter (Central system)

Make..... Permatron Corp.
Type ..... Polypropylene
Prevost number..... 874272

Driver's unit evaporator motors

Make.....MCC
Voltage ..... 24 V DC
Quantity..... 1
Prevost number..... 871135

Driver's unit evaporator air filters

Make.....MCC
TYPE ..... Recirculating air 6-¼" x 28" Washable
Prevost number..... 871147

Make.....MCC
TYPE ..... Fresh air 3-5/8" X 5-1/4" Washable
Prevost number..... 871144

Refrigerant

Type R-134a
Quantity (standard) ..... 24 lbs (10.89 Kg)
Quantity (A/C Aux. system located in overhead compartments).....4 lbs (1.8 Kg)

Compressor (Central system)

Make..... Carrier Transicold
Capacity, option R-134a ..... 41 CFM
Capacity, option R-22..... 37 CFM
Model, option R-134.....05G-134A
Model, option R-22..... 05G-22
No. of cylinders 6
Bore..... 2” (50,8 mm)
Operating speed.....400 to 2200 rpm (1750 rpm. Nominal)
Minimum speed (for lubrification).....400 rpm
Nominal horsepower 15
Oil pressure at 1750 rpm ..... 15 to 30 psi (103-207 kPa)
Oil capacity..... 1.13 U.S. gal (4,3 liters)
Weight ..... 142 lbs (64,5 kg)
Approved oils
-Castrol..... SW 68 (POE)
Prevost number, option R-134a 950314
Prevost number, option R-22 950207

A/C Compressor (Small or Auxiliary system)

Make.....ICE (International Components Engineering)
Model..... TM-16HD
Prevost number..... 950436
Approved oil .....OIL-ICE (PAG)
Prevost number..... 950382

Compressor unloader valve

Make..... Carrier Transicold
Type .....Electric (AMC)
Voltage ..... 24 V DC)
Watts 15
Prevost number (without coil) 950095
Coil Prevost numbert..... 950096

Magnetic clutch

Make..... Carrier Transicold
Type .....Housing mounted 9” dia., 2-B grooves
Voltage ..... 24 V DC
Coil resistance at 68 ^{o}F (20 ^{o}C)..... 5.15 – 5.69 ohms
Prevost number..... 950204

Compressor V belt (Carrier)

Make.....Dayco

Model..... BX100

Prevost number (with two BOSH Alternators) 506864

Condenser coil (Auxiliary system)

Make.....Valeo

Prevost number.....

Condenser coil (Central system)

Make..... Carrier Transicold

Aluminum

Prevost number.....870654

Copper

Prevost number.....870729

Evaporator coil (Central system)

Make..... Carrier Transicold

Prevost number.....871070

Receiver tank (with sight glasses)

Make..... HENRY

Maximum pressure..... 450 psig

Prevost number.....950261

Moisture indicator

Make..... Henry

Prevost number.....950029

Driver's refrigerant liquid solenoid valve

Make..... Parker

Type ..... Normally closed with manual bypass

Voltage ..... 24 V DC

Amperage draw.....0.67 amps

Watts 16

Prevost number (without coil) 95-0054

Coil Prevost number.....950055

Repair kit Prevost number 950056

Hot water pneumatic valve (Central system)

Make..... Burkert

Type 3-WAY

Voltage ..... 24 V DC
Prevost number 871381
Seal kit, Water Side 871389
Seal kit, Actuator Side 871388
Seal kit, Pilot Solenoid Valve 871390

Driver's hot water pneumatic valve

Make ..... Burkert
Type ..... Normally open
Voltage ..... 24 V DC
Prevost number 871252
Seal kit, Water Side 871311
Seal kit, Actuator Side 871312
Seal kit, Pilot Solenoid Valve 871313

Water recirculating pump

Make ..... M.P. pumps
Voltage ..... 24 V DC
Prevost number 871342

Water filter (small A/C system)

Make ..... BRAUKMANN
Prevost number 870807

Driver's expansion valve

Prevost number, option R-134a 950221
Prevost number, option R-22 950282

Expansion valve (Central system)

Make ..... Alco
Model ..... TCLE 5-1/2
Prevost number 950320

Preheating system

Make ..... SPHEROS
Model ..... THERMO 300
Capacity ..... 104 000 Btu/h (30 kW)
Heating medium ..... Coolant
Rated voltage ..... 24 V DC
Operating voltage ..... 20-28 V DC
Electric power consumption (without coolant recirc. Pump) ..... 110 watts
Fuel consumption ..... 1,2 US gallons/hr (4,5 liters/hr)
Prevost number 871202

CONTENTS

1. DESCRIPTION OF AUDIO AND VIDEO SYSTEM INSTALLED ON X3-45 COACHES 4

1.1 DASHBOARD AM/FM RADIO 6
1.2 VSS-05 SOUND SELECTOR 6
1.3 VD-404 MOBILE DVD PLAYER 7
1.4 MULTICHANNEL POWER AMPLIFIER VA400.8 7
1.5 SPEAKERS 8
1.6 BOOM-TYPE MICROPHONE 8
1.6.1 Removal 8
1.6.2 Installation 8
1.7 HANDHELD PRIORITY MICROPHONE 8
1.8 WIRELESS MICROPHONE 8
1.9 TV TUNER 9
1.10 KARAOKE 9
1.10.1 Karaoke Panasonic Sound System – MOBILE DVD PLAYER DV1500 9
1.11 DRIVER'S SPEAKERS 9
1.12 MONITOR 9
1.13 SCENIC VIEWING SYSTEM 9
1.14 ROOF ANTENNA INSTALLATION 10

2. BACK-UP CAMERA AND MONITOR 10

3. HUBODOMETER 12

3.1 DESCRIPTION 12
3.2 OPERATION 13
3.3 REMOVAL 13
3.4 INSTALLATION 13

4. ELECTRONIC DESTINATION SIGN INSTALLED ON X3-45 COACHES (OPTIONAL) 13

5. WINDSHIELD SUNSHADES 13

5.1 END OF STROKE ADJUSTMENT 13

6. LAVATORY INSTALLED ON X3-45 COACHES 14

6.1 DESCRIPTION 14
6.2 MAINTENANCE 15
6.3 VENTILATION FAN 15
6.3.1 Description 15
6.3.2 Maintenance 15
6.3.3 Removal and Installation 15
6.4 DOOR LOCK 16
6.5 LAVATORY LIGHT 16
6.6 LAVATORY NIGHT-LIGHT 16
6.7 EMERGENCY BUZZER 16
6.8 FRESH WATER TANK 16
6.8.1 Fresh Water Tank Draining 16
6.8.2 Fresh Water Tank Filling 18
6.9 LIQUID SOAP DISPENSER 18
6.10 FLUSH PUSH-BUTTON 18
6.10.1 Pneumatic Timer Removal and Installation 19
6.10.2 Timer Adjustment 19
6.11 FLUSH PUMP 19

6.11.1 Flush Pump Removal 19
6.12 SUMP TANK 19
6.12.1 Sump Tank Draining 19
6.12.2 Sump Tank Filling 19

7. HORN INSTALLATION 20

7.1 ELECTRIC OR AIR HORN MAINTENANCE 20

8. HEADLIGHTS CLEANING SYSTEM 20

8.1 GENERAL DESCRIPTION 20
8.2 WASHER FLUID REFILLING 20
8.3 WASHER NOZZLES ADJUSTMENT 20

9. WINDSHIELD WIPERS AND WASHERS 21

9.1 GENERAL DESCRIPTION 21
9.2 WIPER ARM 23
9.2.1 Wiper Arms Positioning 23
9.3 WINDSHIELD WIPER MOTOR 24
9.3.1 Windshield Wiper Motor Replacement 24
9.4 TROUBLESHOOTING 25

10. TIRE PRESSURE MONITORING SYSTEM (TPMS) 26

10.1 TIRE VALVE INSTALLATION 26
10.2 BERU SENSORS INSTALLATION 27

11. AUTOMATIC FIRE SUPPRESSION SYSTEM (AFSS) (OPTIONAL) 29

11.1 STARTING THE VEHICLE AFTER A FIRE ALARM 29
11.2 PERIODIC MAINTENANCE 29

12. SPECIFICATIONS 31

ILLUSTRATIONS

FIGURE 1 : AUDIO-VIDEO PANEL 4
FIGURE 2: AUDIO & VIDEO CONNECTIONS 5
FIGURE 3: AUDIO-VIDEO CONNECTIONS 6
FIGURE 4: RACKS ON AUDIO-VIDEO PANEL 6
FIGURE 5: DASHBOARD AM/FM RADIO 6
FIGURE 6: VSS-05 SOUND SELECTOR 6
FIGURE 7: VD-404 MOBILE DVD PLAYER 7
FIGURE 8: MULTICHANNEL POWER AMPLIFIER 7
FIGURE 9: CROSSOVER ADJUSTMENT 7
FIGURE 10: 10CM COAXIAL SPEAKER 8
FIGURE 11: BOOM-TYPE MICROPHONE 8
FIGURE 12: HANDHELD PRIORITY MICROPHONE 8
FIGURE 13: WIRELESS MICROPHONE 9
FIGURE 14: TUNER CONTROLS DESCRIPTION 9
FIGURE 15: PANASONIC DV1500 9
FIGURE 16: MONITOR MOUNTING 9
FIGURE 17: SCENIC VIEW CAMERA 10
FIGURE 18: HUBODOMETER 13
FIGURE 19; DESTINATION SIGN – ELECTRONIC 13
FIGURE 20: DRIVER'S SUNSHADE 14
FIGURE 21: L.H. SUNSHADE CONTROL BUTTON 14
FIGURE 22: FACTORY ADJUSTMENT OF UPPER AND LOWER END POSITION 14
FIGURE 23: LAVATORY 15
FIGURE 24: VENTILATION FAN INSTALLATION 16
FIGURE 25: DOOR LOCK 16
FIGURE 26: FUNCTIONING OF LAVATORY 17
FIGURE 27: SUMP TANK & F/W TANK SERVICE VALVES 18
FIGURE 28: LIQUID SOAP DISPENSER 18
FIGURE 29: ELECTRIC & AIR HORN INSTALLATION 20
FIGURE 30: HEADLIGHTS CLEANING SYSTEM 21
FIGURE 31: TUBING AND FITTINGS 21
FIGURE 32: WASHER NOZZLES ADJUSTMENT 21
FIGURE 33: MULTIFUNCTION LEVER 22
FIGURE 34: WINSHIELD WASHER RESERVOIR 22
FIGURE 35: WINDSHIELD WIPER INSTALLATION 22
FIGURE 36: WINDSHIELD WIPER (MOTOR SIDE) 23
FIGURE 37: WINDSHIELD WIPER (DRIVER SIDE) 23
FIGURE 38: DRIVING MECHANISM (DRIVER SIDE) 23
FIGURE 39: DRIVING MECHANISM (MOTOR SIDE) 24
FIGURE 40: WIPER ARMS POSITIONING 25

1. DESCRIPTION OF AUDIO AND VIDEO SYSTEM INSTALLED ON X3-45 COACHES

The rack mounted components are gathered on the audio-video panel which is located in the first driver's side overhead compartment (Fig. 1). In addition to the power amplifier, options for AM/FM radio, satellite radio, karaoke, wireless microphone, DVD, scenic view and back-up camera system and GPS Navigation System module may be featured.

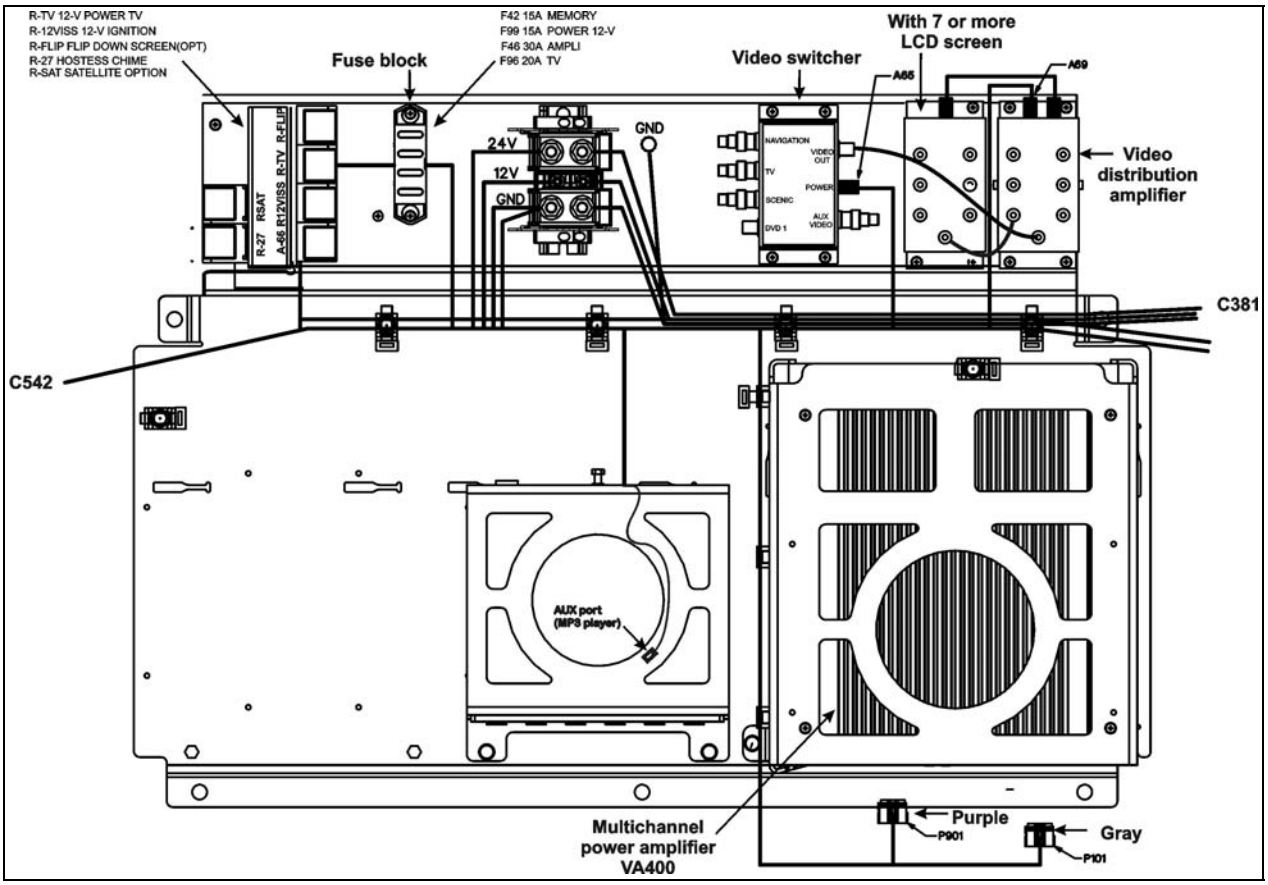

FIGURE 1 : AUDIO-VIDEO PANEL

Each service module mounted to the underside of the parcel racks contains a 40-watt speaker. The speakers in the passenger section are wired in stereo and are powered by the amplifier. A microphone outlet mounted in the driver's area is provided as standard equipment.

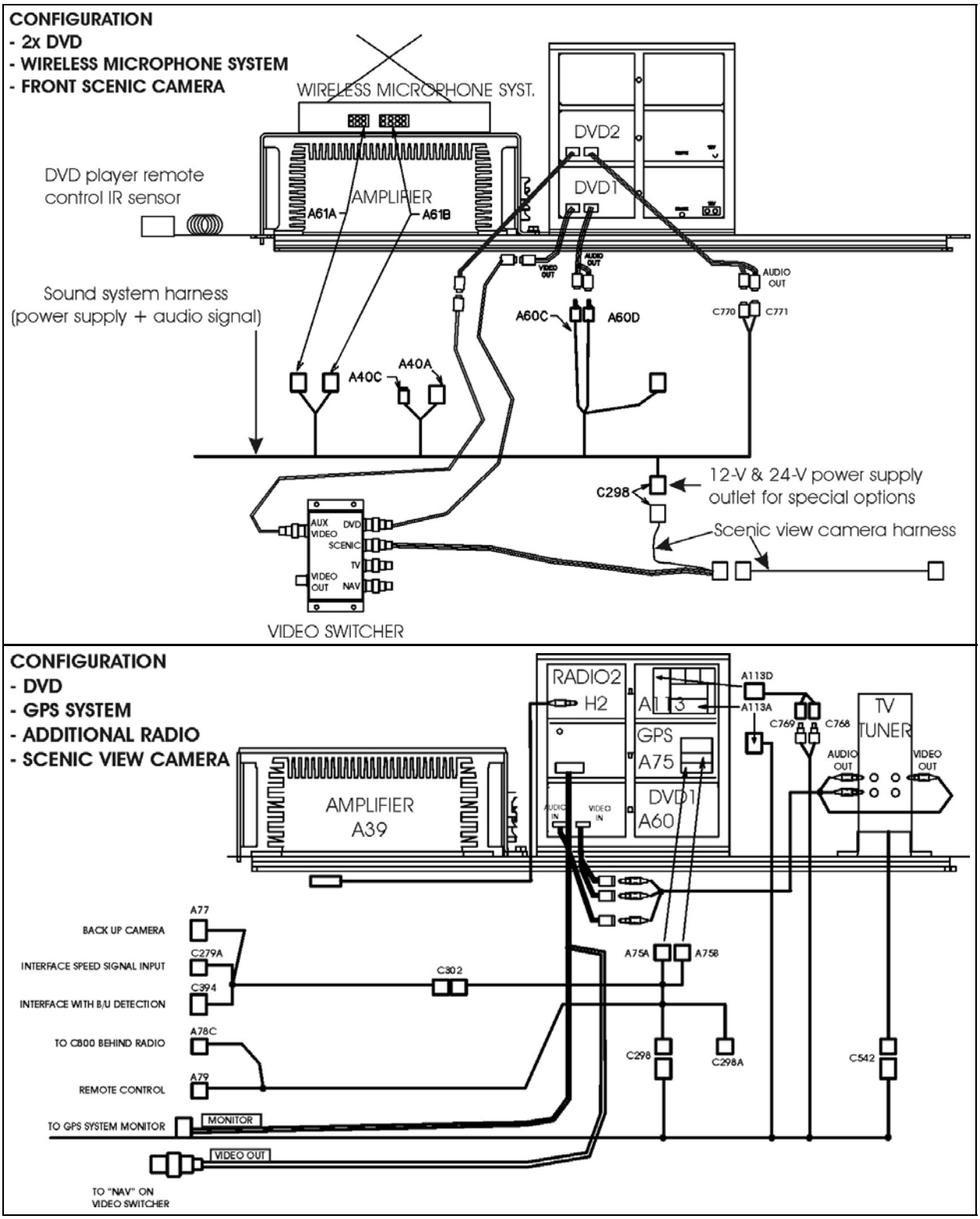

FIGURE 2: AUDIO & VIDEO CONNECTIONS

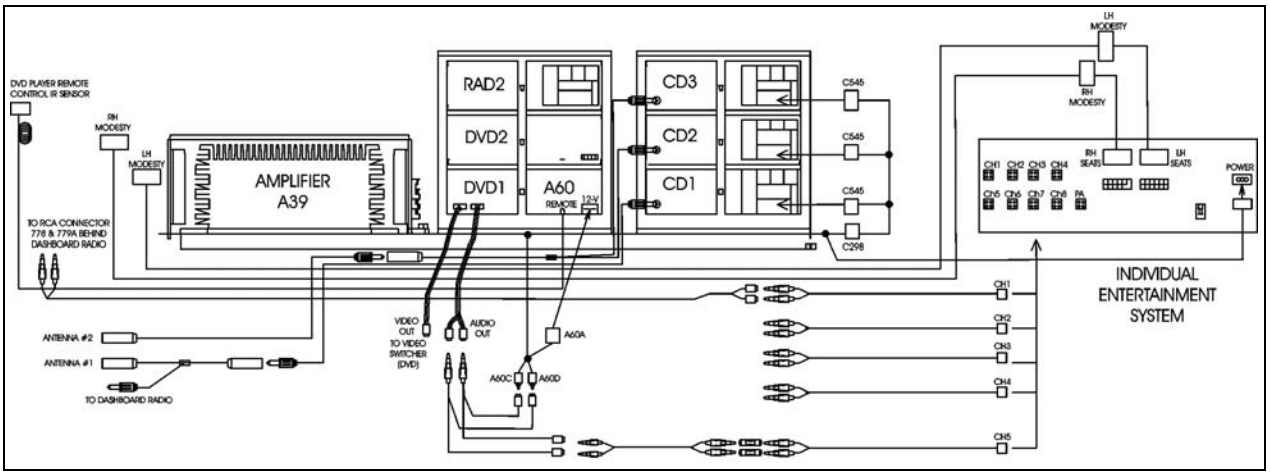

FIGURE 3: AUDIO-VIDEO CONNECTIONS

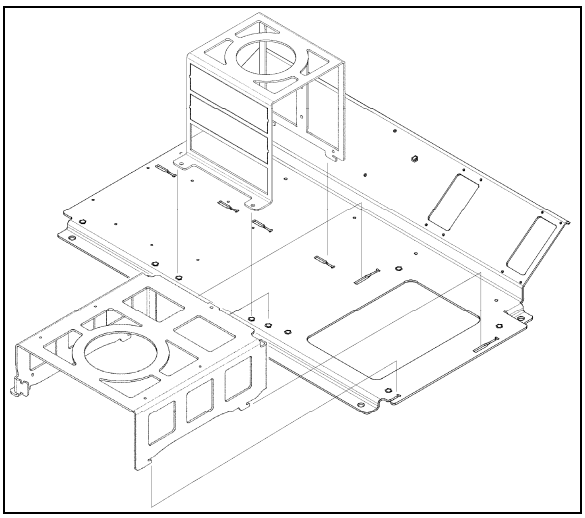

FIGURE 4: RACKS ON AUDIO-VIDEO PANEL 23059

1.1 DASHBOARD AM/FM RADIO

FIGURE 5: DASHBOARD AM/FM RADIO

NOTE
Before attempting to solve an electrical problem on the sound system, refer to the wiring diagrams.

The radio operating instructions manual is included at the end of this section.

- Removal/Installation

To remove the radio from its location, proceed as follows:

- Place the ignition switch in the ''OFF'' position.
- Remove the dashboard cover.
- Disconnect the electrical cable connectors from radio and unfasten back plate securing nuts/screws.
- To separate the radio from its support, insert the removal tool #20584494 in the holes found each side of the radio front panel.
- Push the unit through the front dashboard panel.
- Install a new unit by reversing the procedure.

NOTE
Remember that because power has been interrupted during removal, the radio must be unlocked by entering the four-digit security code after reinstallation.

1.2 VSS-05 SOUND SELECTOR

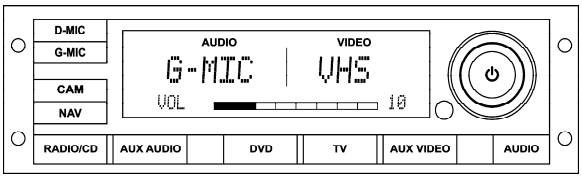

FIGURE 6: VSS-05 SOUND SELECTOR

- Removal/Installation

To remove the Sound Selector from its location, proceed as follows:

* Place the ignition switch in the ‘‘OFF’’ position.
* Remove the dashboard cover.
* Disconnect the electrical connectors from unit and unfasten back plate securing nut/screw.
* To separate the Sound Selector from its support, insert the removal tool #20584494 in the holes found each side of the unit front panel.
* Push the unit through the front dashboard panel.
* Install a new unit by reversing the procedure.

The operating instructions are included in your Operator’s Manual.

1.3 VD-404 MOBILE DVD PLAYER

FIGURE 7: VD-404 MOBILE DVD PLAYER

The MOBILE DVD PLAYER is located in the first parcel compartment on the driver’s side. Instructions for proper use of this unit are included at the end of this section.

Features:

- POWER

  Operating voltage: 12-volt DC

- COMPATIBILITY

  This DVD player can play the following disc formats:
  DVD, CD, VCD, DVCD, MP3, CD-R, CD-RW

- SYSTEM FUNCTIONS

  Video output system: system MULTI, NTSC or PAL switchable.

  1 L/R audio output
  1 L/R audio input
  1 AUX video output
  1 rear camera video input
  3 video outputs with one dedicated self switching rear view monitor

- ADDITIONAL VIDEO FEATURES

Multi-angle, multi-view, multi-audio function, multi-level forward and backward motion, play position memory, resume stop and repeat function.

1.4 MULTICHANNEL POWER AMPLIFIER VA400.8

This 400-watt, 6-channels brings an added dimension to your stereo equipment and increases the total output of the system.

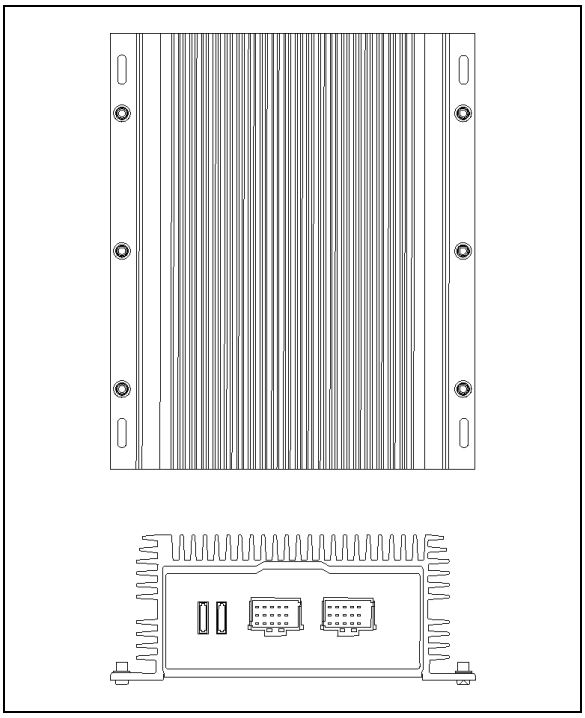

FIGURE 8: MULTICHANNEL POWER AMPLIFIER

For optimum sound quality, adjust the subwoofer crossover filter as shown on figure 10. This adjustment is necessary to balance the subwoofers volume in respect to the other speakers and also to cut high frequencies for a better sound quality.

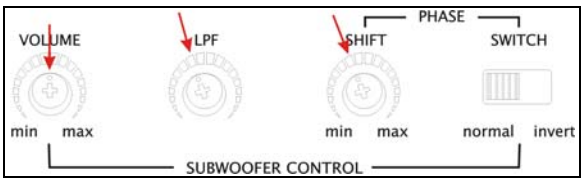

FIGURE 9: CROSSOVER ADJUSTMENT

1.5 SPEAKERS

Each passenger's overhead console mounted to the underside of the parcel racks contains a 20-watt Dual cone or coaxial 10cm speaker. The speakers in the passenger's section, wired in stereo and arranged in a delta configuration are powered by the amplifier.

FIGURE 10: 10CM COAXIAL SPEAKER

The vehicle may be equipped with two additional Hi-Fi speakers in the driver's area, mounted one on each side. This arrangement provides the driver with clear stereo sound. Controls for the driver's audio are performed through the dashboard AM/FM radio.

Two specially designed subwoofers may be fixed as an option under a passenger seat with anti-vibration supports.

1.6 BOOM-TYPE MICROPHONE

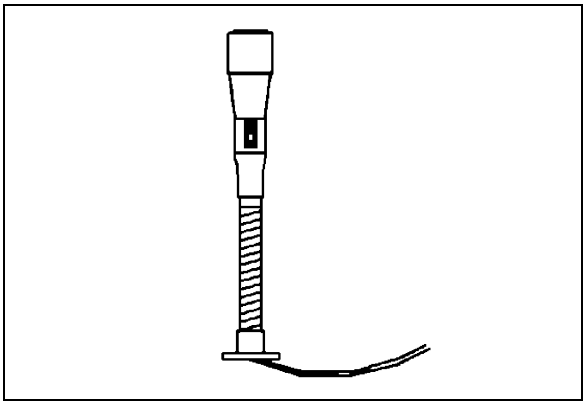

FIGURE 11: BOOM-TYPE MICROPHONE 23083

1.6.1 Removal

1. Place the ignition switch in the ''OFF'' position.
2. Remove the mounting screws at mounting flange.
3. Disconnect wiring.

1.6.2 Installation

1. Reconnect wiring.
2. Align mounting flange with holes and install screws.
3. Remove spacer block mounting screws.
4. Insert spacer block and install mounting screws.
5. Place the ignition switch in the ''ON'' position.

1.7 HANDHELD PRIORITY MICROPHONE

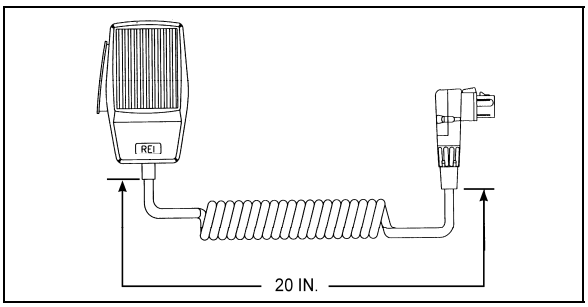

FIGURE 12: HANDHELD PRIORITY MICROPHONE 23216

1.8 WIRELESS MICROPHONE

The system 2000 16 channel wireless microphone, Receiver and Charging Cradle are custom designed units that allow for wireless PA communication from anywhere on the coach. The unit consists of a receiver mounted in the parcel area directly behind the driver, and a rechargeable hand-held microphone and charging unit. Instructions for proper use of the microphone are included in the *''REI Operating Manual''* which is provided in the technical publications box delivered with the vehicle.

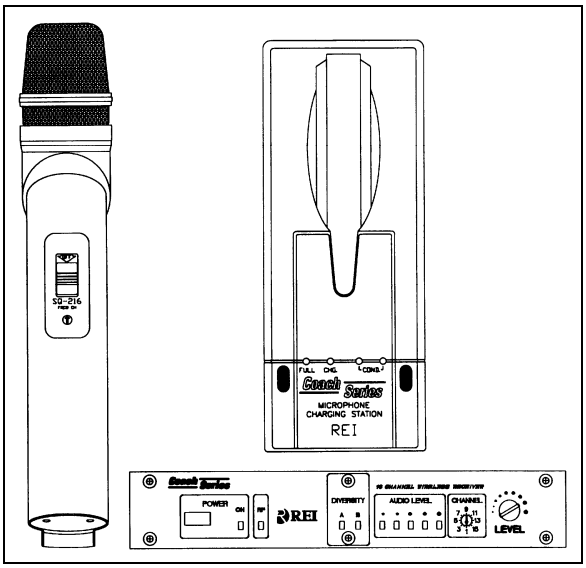

FIGURE 13: WIRELESS MICROPHONE

1.9 TV TUNER

For TV tuner control descriptions, refer to fig. 14.

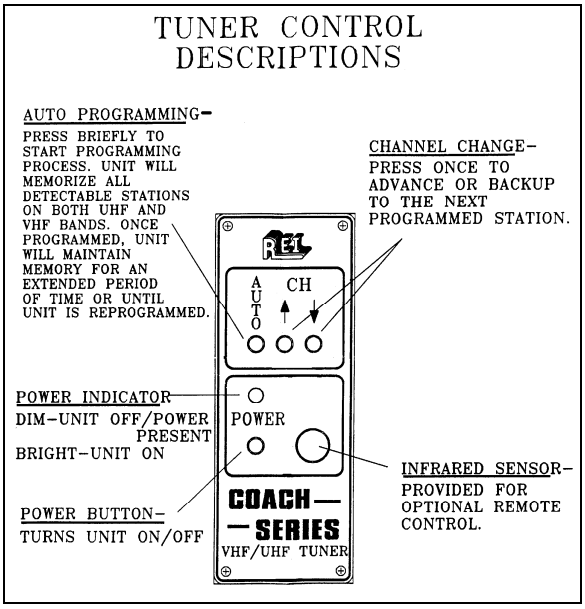

FIGURE 14: TUNER CONTROLS DESCRIPTION

1.10 KARAOKE

The modified Panasonic DVD Player powers up automatically when the video system is activated. The unit can be controlled with the plug-in remote control, or the control head, which has access to the PLAY and STOP commands.

If so equipped, instructions for proper use of the Karaoke system are included in the *"Operating Manual"* that is provided in the technical publications box delivered with the vehicle.

1.10.1 Karaoke Panasonic Sound System – MOBILE DVD PLAYER DV1500

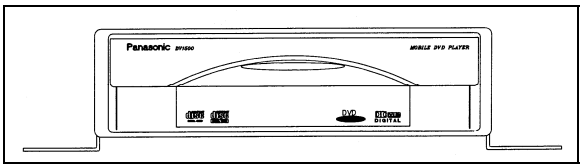

FIGURE 15: PANASONIC DV1500

1.11 DRIVER'S SPEAKERS

The driver's speakers are mounted one on each side. This arrangement provides the driver with clear stereo sound. Controls for the driver's audio allow selection between the radio and the auxiliary audio (independent of the passenger's speakers) or muting the speakers.

1.12 MONITOR

1. Place the ignition switch in the ''OFF'' position.
2. Unfasten the retaining screw located on the monitor R.H. side.
3. Slide the monitor to the right to release it from the mounting bracket.

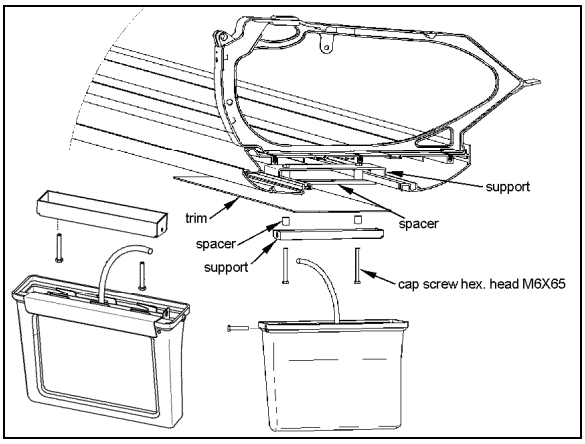

FIGURE 16: MONITOR MOUNTING 23221

1.13 SCENIC VIEWING SYSTEM

The scenic viewing system enables the passengers to view the road ahead of the vehicle. This system is composed of a camera, a dashboard mounted ON/OFF switch and the video switcher located on the audio-video panel (Figs. 1 & 17).

FIGURE 17: SCENIC VIEW CAMERA

1.14 ROOF ANTENNA INSTALLATION

1. Find the desire location and drill a hole according to specification.
2. To remove dirt and grease, wash edge of hole with alcohol.
3. If so equipped, remove foam padding ring from antenna to free the metal surface (foam can produce air bulbs in new rubber seal).
4. With SIKA 205, wash the opening edge and the antenna base surface, wait at least two (2) minutes for chemical evaporation.
5. Apply new seal SIKA 221 on both, vehicle hole edge and antenna base.
6. Fix the antenna in place.
7. Remove excess seal and complete a finishing joint all around the antenna base.

2. BACK-UP CAMERA AND MONITOR

An optional back-up camera is available which provides the driver with visual assistance when backing-up. The camera is automatically activated when the transmission is put in reverse gear and the ignition switch is "ON".

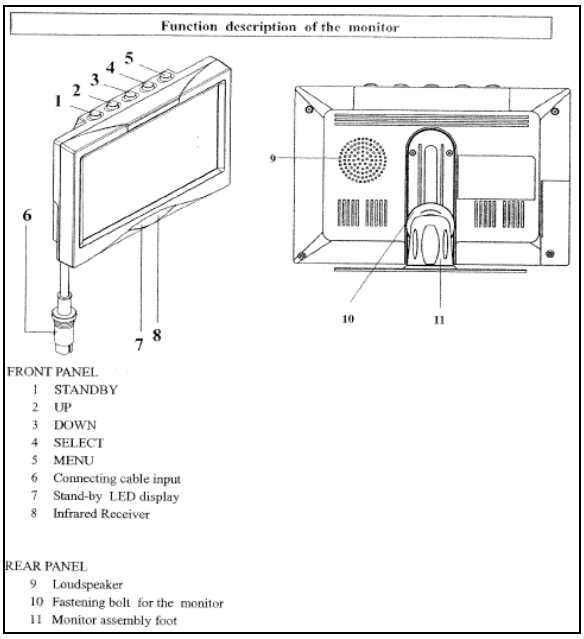

BUTTON DESCRIPTION

1) STANDBY: On/Off switch

2) UP: This key has 3 functions

- Increase of the volume during normal operation;
- Modification of the setting within a function e.g. contrast (after calling up the menu);
- By pressing this key when putting in the reverse gear, the distance markings move upwards;

3) DOWN: This key has 3 functions

- Decrease of the volume during normal operation;
- Modification of the setting within a function e.g. contrast (after calling up the menu);
- By pressing this key when putting in the reverse gear, the distance markings move downwards;

4) SELECT: This key has 3 functions

- Selection of the video sources (CA1→ CA2 → AV → CA1). Press less than 1.5 seconds;
- Selection of the functions e.g. picture setting (after calling up the menu);
- Deleting and calling OSD letters of title & time (press longer than 1.5 seconds) during normal operation;

5) MENU: This key has 2 functions

- Activation of the dimmer function (press less than 1.5 seconds) during normal operation;
- Calling up the menu (press longer than 1.5 seconds, four menus can be called up). Press the key once again to call up the individual menus;
  a) PICTURE= Functions for the image setting;
  b) USER= Selection of the system function;
  c) TIME= Setting time and date;
  d) INSTALL= Setting the camera function (e.g. mirror function);

6) BUSH FOR THE MONITOR CABLE OF THE CONNECTION BOX

7) STANDBY DISPLAY

8) INFRARED RECEIVER

MONITOR MENU DISPLAY

The monitor (RV59 HD) is equipped with an On-Screen Display (OSD) function which displays date, camera, channel, mirror mode and distance markings. These functions can be selected on MENU. To calling up the menu, press longer than 1.5 seconds. Four menus can be called up. Press the key once again to call up the individual menus.
For calling up the menu PICTURE press the key **MENU** longer than 1.5 seconds. The menu PICTURE appears.

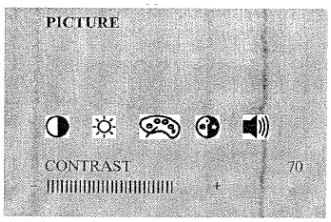

Graphic means the followings.

- → CONTRAST
- → BRIGHTNESS
- → COLOR
- → TINT
- → VOLUME

Select the function (e.g. contrast) by pressing the key **SELECT** repeatedly. The setting within the function can be modified with the keys **UP** and **DOWN**.

For calling up the menu USER press the key **MENU** once again. The menu USER appears. Select the function (e.g. SELECTION) by pressing the key **SELECT** repeatedly as necessary. The setting within the function can be modified with the keys **UP** and **DOWN**.

USER	POSSIBLE SETTINGS:
LANGUE ENG	LANGUAGE: ENGLISH/GERMAN (ENG/DEUT)
SCREEN WIDE	SCREEN FORMAT: NOR 4:3, picture format 4:3 WIDE, picture format 16:9 FULL, picture format 16:9 middle enlarge
TITLE ON	TITLE: CAMERA TITLE DISPLAY ON/OFF
TIME ON	TIME: TIME DISPLAY ON/OFF

For calling up the menu TIME press the key **MENU** once again. The menu TIME appears. Select the function (e.g. DATE) by pressing the key **SELECT** repeatedly as necessary. The setting within the function can be modified with the keys **UP** and **DOWN**.

TIME	
TIME 08:25	- Hour-Month adjustable by UP BUTTON
DATE MAY01	- Minute/Date adjustable by DOWN BUTTON
YEAR 2005	- Year adjustable by UP/DOWN BUTTON

For calling up the menu INSTALL press the key **MENU** once again. The menu TIME appears. Select the function (e.g. SELECTION) by pressing the key **SELECT** repeatedly as necessary. The setting within the function can be modified with the keys **UP** and **DOWN**.

INSTALL	POSSIBLE SETTINGS:	
REAR CAM1	REAR:	Selection of priority camera (CAM1 or CAM2) which is triggered by rear gear.
CAM1 MIR	CAM1:	Selection of real picture or mirrored picture for camera 1
CAM2 NOR	CAM2:	Selection of real picture or mirrored picture for camera 2
	NOTE1	The distance mark will appear on the picture of camera which set as MIR (mirrored).
	NOTE2	Engaging the reverse gear, only distance mark will appear on the mirrored camera picture without any OSD. At the moment, no keys are available except UP/DOWN key for moving distance bar.

BACK-UP CAMERA MODULE (Power box)

The connection line consists of 6 branch lines as below:

RED	Voltage supply 12-volt to 24-volt (max. 32-volt)
BLACK/BROWN	Earth cable
WHITE	Control wire for switching on the dimmer function (night operation)
YELLOW	Control wire for switching on the side camera. The connection is to be made at the INDICATOR
ORANGE	Control wire for switching on the reversing camera. The connection is to be made at the reversing light

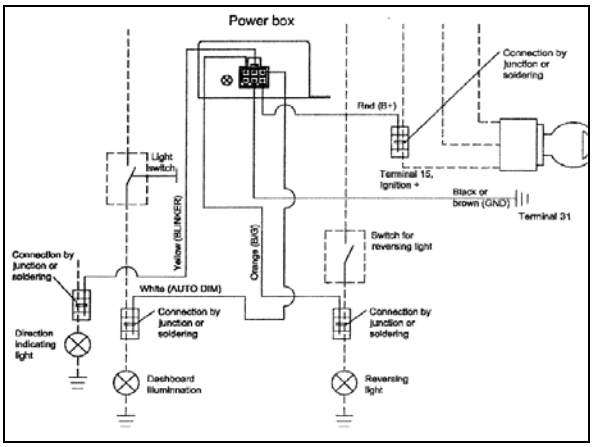

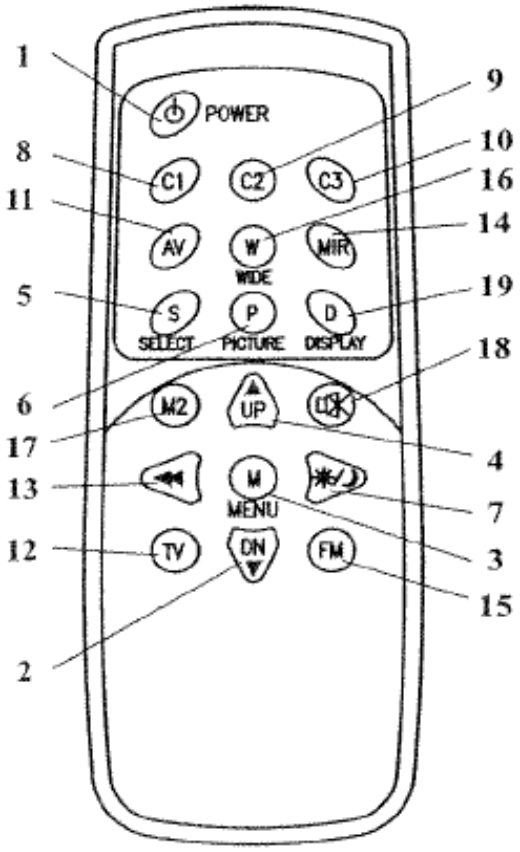

No	Key	Description
1	STANDBY	On/Off switch
2	DOWN▼	This key has 3 functions. – Decrease of the volume during normal operation. – Modification of the setting within a function e. g. brightness (after calling up the menu). – By pressing this key when putting in the reverse gear the distance markings move downwards.
3	MENU	Calling up the menu on the screen. Three menus can be called up : a: PICTURE = Functions for the image setting b: USER = Selection of the system function c: TIME = Setting time and date d: INSTALL = Setting the camera function (e.g. mirror function)
–4	UP ▲	This key has 3 functions. – Increase the volume during normal operation – Modification of the settings within a function e. g. contrast (after calling up the menu) – By pressing this key when putting in the reverse gear the distance markings move upwards.
5	SELECT	This key has 2 functions Selection of the video sources (CA1→CA2→AV) Selection of the functions e.g. picture setting (after calling up the menu)
6	PICTURER	Calls up the functions CONTRAST, BRIGHTNESS etc. directly for the picture setting. Carry out the setting with the key UP or DOWN.
7	DIMMER	Regulates the brightness to night operation temporarily
8	C1	Selection of the camera 1
9	C2	Selection of the camera 2
10	C3	Selection of the camera 3 (camera input 3 is not available))
11	AV	Selection of the video input (RCA)
12	TV	Not available
13	SEARCH	Not available
14	MIRROR	Reversing left and right of picture temporarily
15	FM	Not available
16	WIDE	Setting of the screen format NOR/NOR: 4:3, picture format 4:3 WIDE/WEIT, picture format 16:9 FULL/BREIT, picture format 16:9 middle enlarged
17	MONITOR2	Not available
18	MUTE	Switches off the tone temporarily
19	DISPLAY	This key has 2 functions – Deleting or calling OSD letters of Tile & Time temporarily – Leaving the menu

3. HUBODOMETER

3.1 DESCRIPTION

An optional wheel hubodometer (Fig. 18) may have been installed on the R.H. side of the drive axle. It indicates the total distance in miles or kilometers covered by the coach since it has left the factory, including road testing.

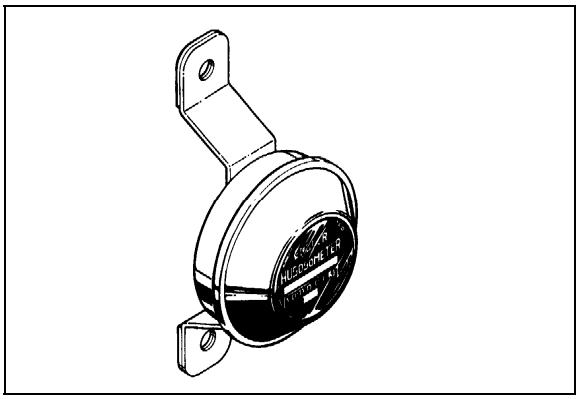

FIGURE 18: HUBODOMETER 23024

3.2 OPERATION

The hubodometer is calibrated for a specific wheel size (diameter). Wheel rotation causes a mechanism inside the hubodometer to record distance after a predetermined number of rotations. The unit should be serviced at a competent speedometer repair facility.

NOTE
Do not use paint, solvent or thinner on hubodometer face or on plastic hubcaps. Do not weld on hubodometer.

3.3 REMOVAL

To remove the unit, remove the two lock nuts and washers securing it to the wheel hub, and pull the unit off the studs.

3.4 INSTALLATION

Place the hubodometer unit over the wheel hub studs. Replace the lock washers and nuts. Torque stud nuts to 110-165 Lbf-ft·(150-225 Nm).

4. ELECTRONIC DESTINATION SIGN INSTALLED ON X3-45 COACHES (OPTIONAL)

The optional destination sign is located at upper front of the vehicle. To change the destination, depress the selecting switches until the desired destination appears in the LCD display.

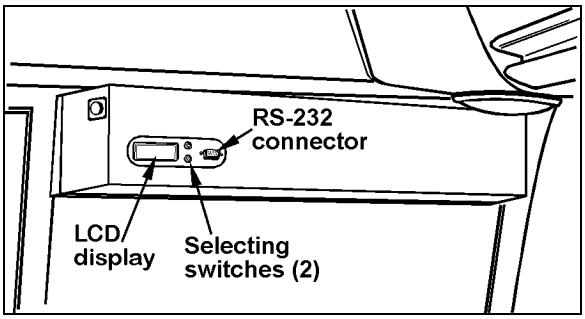

FIGURE 19; DESTINATION SIGN – ELECTRONIC 23123

NOTE
The destination sign must be programmed with a computer connected to the RS-232 connector prior to first use. Follow the instructions on the computer disk to install and run the software.

NOTE
The destination sign is equipped with lights (bulb light or fluorescent) which illuminates automatically when the headlight or fog light switch is activated.

5. WINDSHIELD SUNSHADES

Two electrically-operated sunshades are installed in the driver's area at the top of the windshields. Two control buttons located on the steering wheel operate each sunshade individually. Refer to Operator's Manual: "Controls and Instruments" chapter for more information.

Caution: *The electric sunshades should only be operated electrically. Pulling down manually may damage the mechanism.*

5.1 END OF STROKE ADJUSTMENT

The sunshades end positions are pre-adjusted at factory. If an adjustment is required, proceed as follows:

1. Place the ignition key to the ON position.
2. Insert a small nail or similar thin object into sunshade adjustment button access hole and press the appropriate steering wheel sunshade DOWN button **simultaneously** and hold them until a beeping tone sounds. Release both buttons.

FIGURE 20: DRIVER'S SUNSHADE

FIGURE 21: L.H. SUNSHADE CONTROL BUTTON

3. Move the sunshade to the desired lower end of stroke position using the steering wheel button (never move sunshade by hand) and then release button.
4. Proceed to fine adjustment of lower end position by pressing the DOWN button repeatedly.
5. Press the sunshade UP (opposite direction) button to save #1 end position. The confirmation tone will sound.
6. Move the sunshade to the desired upper end of stroke position using the steering wheel button (never move sunshade by hand) and then release button.
7. Proceed to fine adjustment of upper end position by pressing the UP button repeatedly.
8. Press the sunshade DOWN (opposite direction) button to save #2 end position. The confirmation tone will sound. The adjustment mode is then deactivated.

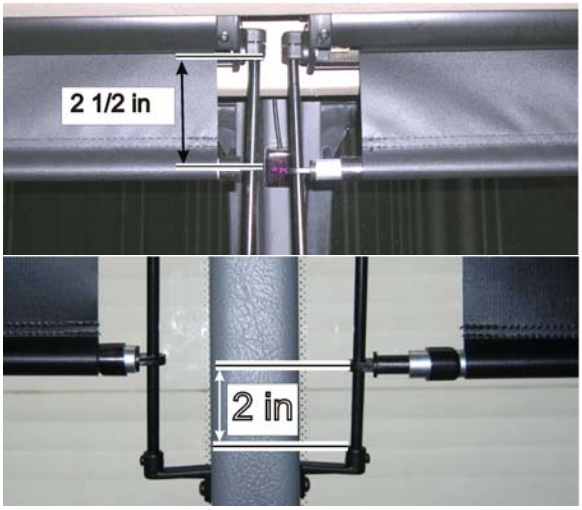

FIGURE 22: FACTORY ADJUSTMENT OF UPPER AND LOWER END POSITION

6. LAVATORY INSTALLED ON X3-45 COACHES

6.1 DESCRIPTION

The lavatory is located in the rear R.H. corner of the coach. It is equipped with a chemical flush toilet, bathroom tissue dispenser, washbasin, towel dispenser, waste container, mirror, ashtray, and a cleaning cabinet. A liquid soap dispenser and moist towel dispenser are optional.

Locking the lavatory door from the inside will illuminate a fluorescent light in the lavatory and two outside signs to indicate occupation. One sign is located on the outer wall of the lavatory and another sign is located over the windshield. An indicator light on the dashboard will illuminate to inform the driver when the lavatory is occupied. A night-light is permanently lit in the lavatory when the ignition switch is in the ON position.

If emergency assistance is required, the lavatory occupant can actuate a buzzer that will sound in driver's area. The buzzer's push-button (c/w instruction label) is located on the inner curbside wall of lavatory.

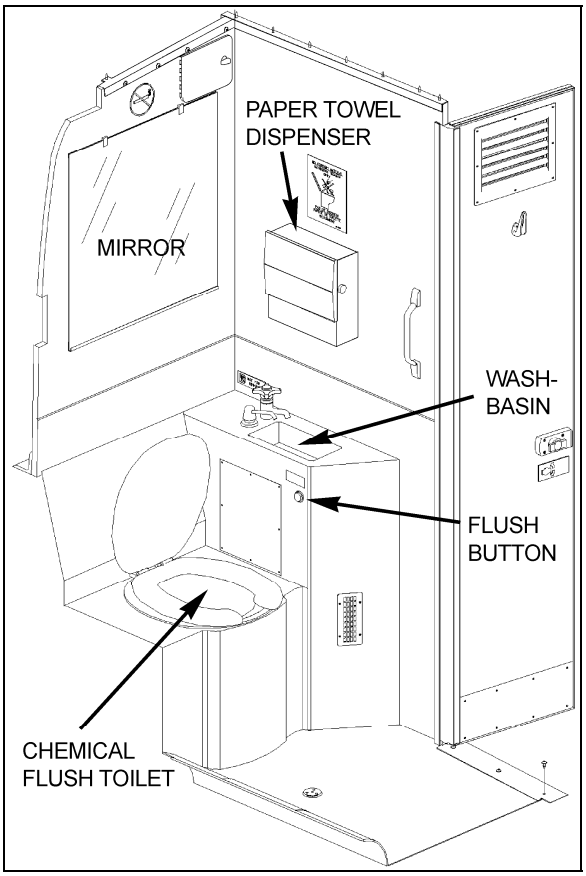

FIGURE 23: LAVATORY 23235

The lavatory has its own ventilation system that operates only when ignition switch is in the "ON" position.

The fresh water tank, located behind compartment mirror (Fig. 23), is equipped with a thermal drain valve that will drain the tank when water temperature approaches the freezing point preventing damage to the tank (Fig. 23). The fresh water supplies water to the washbasin by gravity. Two tubes are connected on top of the tank. One serves as overflow as well as a vent tube and runs along the curbside wall to the engine compartment R.H. side (Fig. 23) while the other tube is connected to the fresh water fill connection which is also located in engine compartment R.H. side (Fig. 23). A third tube connected in the bottom of the fresh water tank allows fresh water to flow to the washbasin faucet. Water from washbasin drain tube flows to the sump tank.

Also, a drain hole located on lavatory floor drain water splashed on the floor to the engine compartment R.H. side.

6.2 MAINTENANCE

The servicing procedure for the lavatory is described in the *"Operator's Manual"* included in the technical publications box delivered with the vehicle.

6.3 VENTILATION FAN

6.3.1 Description

The lavatory ventilation fan, mounted in engine compartment behind the oil reserve tank (Fig. 21), serves two purposes. It exhausts objectionable odors and provides a constant air circulation in the lavatory compartment by heating or cooling the lavatory with the vehicle ambient air. Air flows in the lavatory compartment through a vent grill located on the lavatory door and exhausts through a grill located next to the toilet.

NOTE
This fan runs constantly when the ignition switch located on the dashboard is in the "ON" position.

6.3.2 Maintenance

The frequency of preventive maintenance should be determined according to vehicle mileage and operating conditions. However, it is recommended to check this item every 50,000 miles (80 000 km) or once a year, whichever comes first.

Remove fan and motor assembly. Check for fan housing wheel and motor free operation. When defective motor occurs, new motor must be installed.

6.3.3 Removal and Installation

1. With the engine compartment rear doors opened, remove hose clamp securing duct to ventilation fan inlet, and disconnect duct.
2. Disconnect the ventilation motor wiring connector.
3. Remove the support bracket screw. Remove the three bolts fixing the ventilation fan housing support. Remove the ventilation fan assembly from its location.
4. The unit can now be disassembled and motor replaced.
5. Reverse previous steps to reinstall ventilation fan assembly on vehicle.

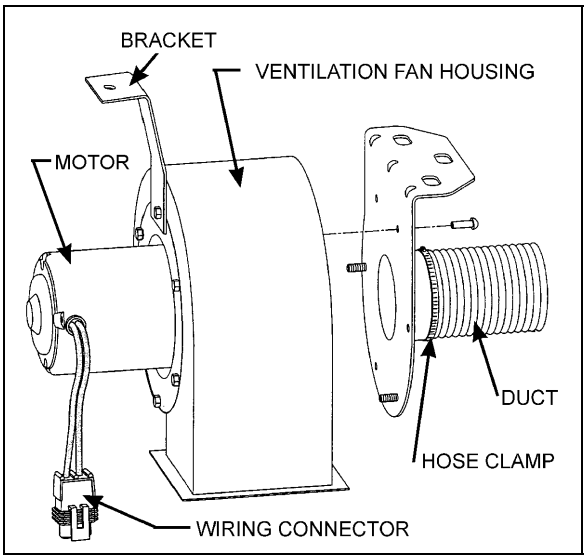

FIGURE 24: VENTILATION FAN INSTALLATION 23222

6.4 DOOR LOCK

Lavatory door lock has inside and outside handles, as well as an inside latch to lock door from inside the compartment. If the lock fails to release, the door can be opened from the outside using a special key which is supplied to the driver. Lock assembly can be removed from the door, then readily disassembled and parts replaced, if necessary (Fig. 22). A thin coat of lubricant on all moving parts will ensure trouble-free operation.

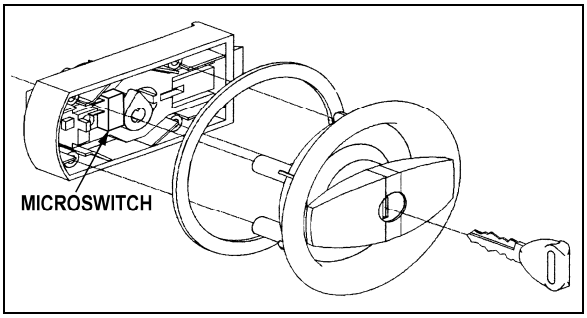

FIGURE 25: DOOR LOCK 23320

6.5 LAVATORY LIGHT

The lavatory light is installed on ceiling. A microswitch, which is mounted inside the latch housing, is activated by the door lock mechanism upon locking to energize the circuit. This switch is readily serviced by removing the four Phillips-head screws securing the housing to the door interior frame.

Proceed as Section 06, Electrical System, *Dome, Rear Roof and Lavatory Lights*" for lights replacement.

6.6 LAVATORY NIGHT-LIGHT

The lavatory night-light is illuminated as soon as the ignition switch is set to the *"ON"* position. See Section 06, Electrical System, "*Parcel Rack / Lavatory Night Light - "Bulb Removal and Replacement*" for lights replacement.

6.7 EMERGENCY BUZZER

The lavatory emergency buzzer is mounted on the inner curb side wall of lavatory and sounds when the emergency call push-button switch in the lavatory compartment is activated. For specific wiring information, refer to wiring diagrams. To remove the emergency call push-button switch, proceed as follows:

1. Remove both phillips-head screws retaining pushbutton switch plate to wall.
2. Remove steel plate located on L.H. side of pushbutton switch.
3. Remove switch through this opening, taking care to disconnect electric wires.

6.8 FRESH WATER TANK

One panel allows access to the fresh water tank. It is located behind the toilet mirror. Remove the tank as follows:

1. Remove the mirror.
2. Remove the fresh water tank tubing, bolts, and different connectors.
3. Remove the tank from the wall.
4. Reverse previous steps to reinstall fresh water tank assembly on vehicle.

6.8.1 Fresh Water Tank Draining

The fresh water tank can be drained by simply opening the fresh water drain cock). Don't forget to close cock when draining is done.

NOTE
The fresh water reservoir is equipped with a thermal valve which is set to open at about 35°F, thereby automatically draining the reservoir in near-freezing temperatures.

Routine draining and filling of lavatory tanks should be performed by maintenance personnel only. If engine or heating failure occurs in extreme weather conditions, emergency draining of water tanks should be performed under the most suitable conditions and should at all times be supervised by driver.

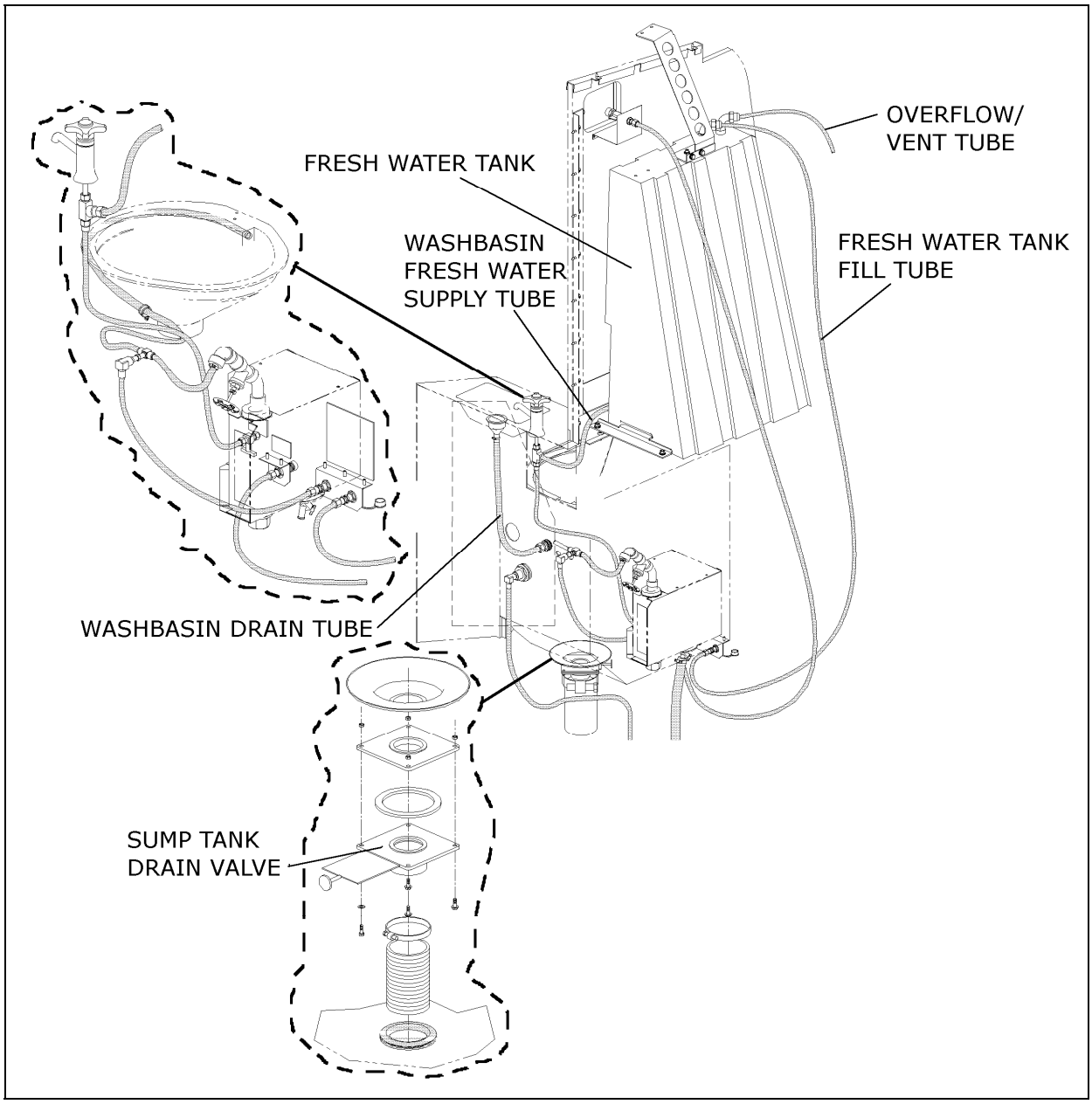

FIGURE 26: FUNCTIONING OF LAVATORY 23051

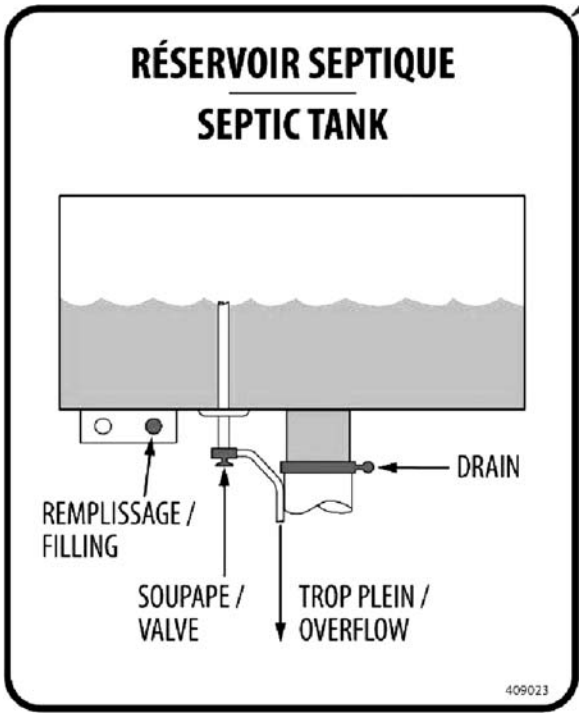

FIGURE 27: SUMP TANK & F/W TANK SERVICE VALVES

6.8.2 Fresh Water Tank Filling

Connect the fresh water supply hose to the fresh water reservoir fill connection (Fig. 24) located in the curb-side section of engine compartment. Fill the reservoir until the overflow tube leaks, signaling that the reservoir is full.

DANGER

Never put antifreeze in fresh water tank; antifreeze is toxic.

WARNING

If tank has not been drained for an extended period of time, draining and filling operations must be repeated three (3) times in order to clean tank and eliminate contaminated water.

6.9 LIQUID SOAP DISPENSER

A liquid soap dispenser may have been installed as optional equipment. To refill dispenser, proceed as follows:

1. Turn cover slightly clockwise until it stops.
2. Lift out piston and spout, cover and supply tube.

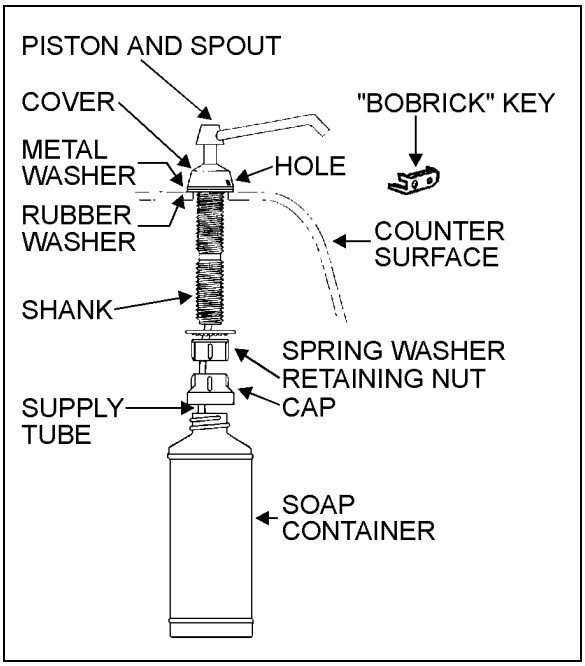

FIGURE 28: LIQUID SOAP DISPENSER 23039

3. Fill dispenser with soap. This model can dispense vegetable oil soaps, synthetic detergents, and lotion soaps.

CAUTION

Never use abrasive cleaners.

4. Replace supply tube, piston, and spout mechanism reversing the steps above.
5. Secure the cover by turning clockwise until lock snaps into position.

NOTE

The dispenser requires priming when extremely viscous lotion soaps are used. Remove piston and spout, cover and supply tube assembly. Pump water into assembly, then replace into dispenser.

6.10 FLUSH PUSH-BUTTON

The green flush push-button is located near the toilet. Press on push-button to actuate a pneumatic timer located on the other side of wall. This timer allows an electric current flow during a preset time to a pump into the sump tank.

6.10.1 Pneumatic Timer Removal and Installation

1. Unscrew and remove the flush push-button locking ring.
2. Remove steel plate located on L.H. side of pushbutton switch.
3. Remove pneumatic timer through this opening, taking care to disconnect electric wires.

NOTE
Care must be taken to avoid losing the spacers installed on the mounting sleeve.

4. Reverse the above procedure to reinstall timer. The recommended torque for the lock nut is 15 Lbf-ft· (21 Nm).

6.10.2 Timer Adjustment

Timer can be adjusted from 0.2 second to 3 minutes by turning the time adjustment screw clockwise to increase time, and counterclockwise to decrease time. To gain access to the time adjustment screw, repeat steps 1, 2 and 3 in the previous paragraph "*6.10.1 Pneumatic Timer Removal and Installation*".

6.11 FLUSH PUMP

The submersible-type flush pump is mounted inside an enclosure in the sump tank (Fig. 26). The enclosure is provided with a screened side which, serves as a strainer to prevent solid matters from entering the pump.

The pump requires no periodic maintenance other than cleaning of the strainer side using a water jet introduced through the circular cap opening, once the sump tank is completely drained. The pump can run dry periodically without damage. However, for maximum seal life, the run dry periods should be kept to a minimum.

CAUTION
If vehicle is stored for an extended period of time, make sure to clean the strainer as solid matter will tend to pack, and will necessitate replacement of strainer.

6.11.1 Flush Pump Removal

1. Remove the toilet to gain access to the pump enclosure.
2. Remove the flush pump enclosure cover
3. Unsnap the flush pump.

6.12 SUMP TANK

6.12.1 Sump Tank Draining

When recirculating water in the toilet is soiled, drain sump tank then perform the filling procedure of the tank.

6.12.2 Sump Tank Filling

Open the sump tank overflow cock and connect a water supply hose to the toilet sump tank fill connection. The tank is full when water starts flowing through the clear overflow tube. Close sump tank overflow cock when the tank is full.

CAUTION
In cold weather, add 2 gallons (9 liters) of antifreeze (e.g.: ethylene glycol) in the toilet before filling sump tank.

CAUTION
Lavatory tank should be serviced only at suitably equipped stations.

NOTE
It is unlawful to dump sump tank contents in any location other than those designated as such.

When a full draining is required, clean sump tank by repeating the draining and filling operations while leaving the drain cock opened. Close cocks and pour a pack of commercial toilet deodorant (Prevost part #900329) in toilet before adding the antifreeze and starting final filling of sump tank.

WARNING
The toilet deodorant contains products that can be very irritating to skin. Use rubber gloves when handling and then clean toilet seat.

WARNING
Antifreeze must comply with the effective environmental act.

CAUTION

When cold weather is expected and there is no antifreeze in the tank, sump tank must be drained.

NOTE

If there is no antifreeze solution in the tank, there is less risk of freezing if engine is operating due to the heat it produces.

NOTE

New coaches are delivered with the sump and fresh water tanks empty. Fill with water before putting the coach in service.

7. HORN INSTALLATION

The electric and air horns are located in a plastic box under the front stepwell and are accessible from the front body understructure. Refer to Operator's or Owner's Manual for operation.

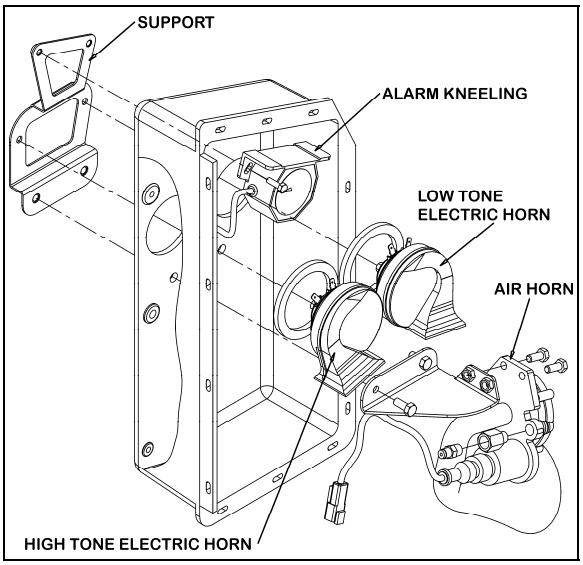

FIGURE 29: ELECTRIC & AIR HORN INSTALLATION 23420

7.1 ELECTRIC OR AIR HORN MAINTENANCE

When needed, the electric or air horn can be serviced or replaced using the following procedure:

1. Raise vehicle by the jacking points;
2. Unplug the cable connector;
3. Disconnect the air tube if applicable;
4. Loosen the retaining bolts;
5. Service or replace the defective horn;
6. Reinstall by reversing procedure.

8. HEADLIGHTS CLEANING SYSTEM

8.1 GENERAL DESCRIPTION

NOTE

When inspecting the headlights cleaning system, check the washer fluid hoses, fittings and connectors to be sure they are properly connected and seal with no restriction to the flow of washer fluid. Check that the washer nozzles are properly aimed.

The headlights cleaning system is independent from the windshield washer system and has its own washer fluid reservoir located in the front electrical and service compartment. However, this system shares the same telltale light than the windshield washer low level sensor (refer to Operator's manual for operation). Each pressing of this switch produces 2 successive 0.7 seconds jets.

CAUTION

Do not operate the headlights washer while the washer fluid reservoir is empty. This may damage the washer fluid pump.

8.2 WASHER FLUID REFILLING

Open the filler neck cap and had regular windshield washer fluid as required. The tank has a capacity of 10 liters (2.6 US gallons). You may use water or windshield washer fluid as well but, during cold weather days, use windshield washer fluid suitable for freezing temperature only.

8.3 WASHER NOZZLES ADJUSTMENT

To avoid waste of washer fluid, assure the fluid jets are properly aimed. Adjust nozzles so they aim as described in figure 29. Align the jet adjustment tool #800377 with the reference line shown on the front view detail. As seen on the side view, position the end of the adjustment tool to a distance of ½" (high beam) and 1" (low beam) from the top of the headlight for proper aiming.

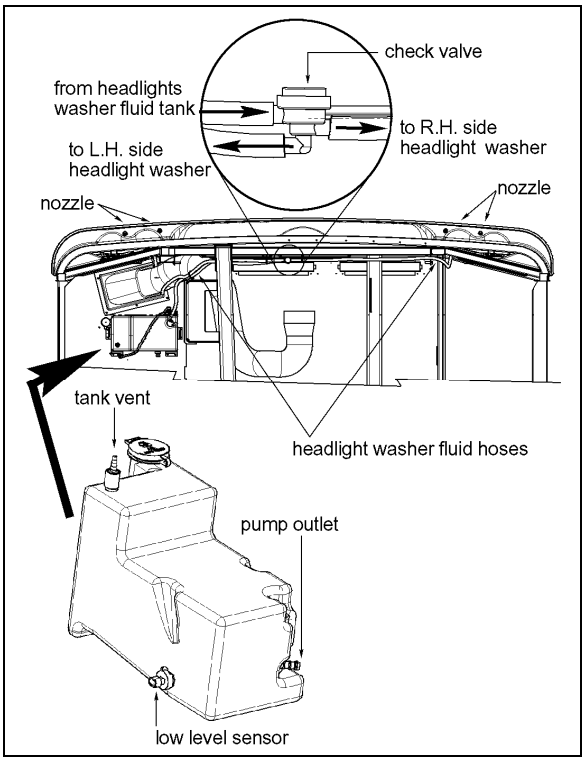

FIGURE 30: HEADLIGHTS CLEANING SYSTEM 23380

CAUTION

Because they are made of plastic, firmly tighten nozzle and bulkhead fittings by hand only.

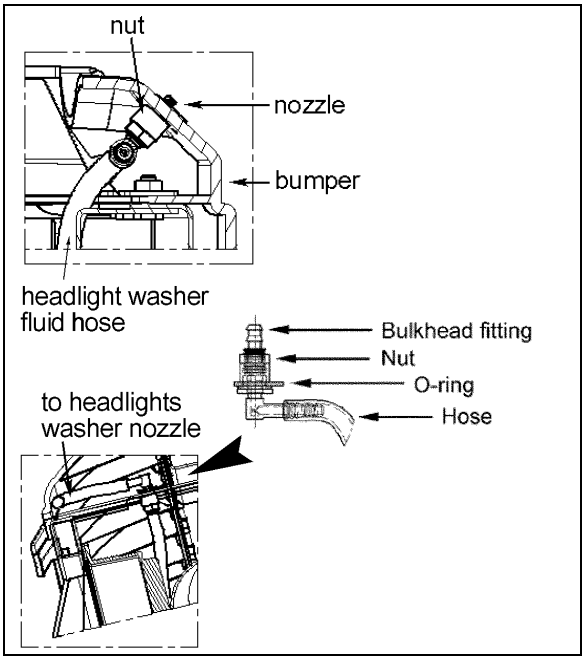

FIGURE 31: TUBING AND FITTINGS 23381

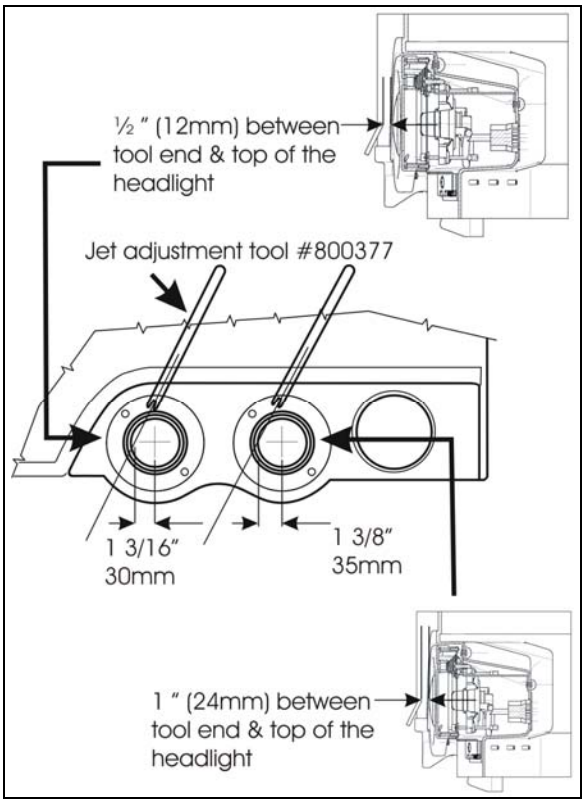

FIGURE 32: WASHER NOZZLES ADJUSTMENT 23382

9. WINDSHIELD WIPERS AND WASHERS

9.1 GENERAL DESCRIPTION

NOTE

When installing a wiper motor, arm or blade, follow recommended procedures to prevent misalignment, binding or malfunction. Check the windshield washer liquid hoses, fittings and connectors to be sure they are properly connected and seal with no restriction to the flow of washer liquid. Check that wiper arms have the proper sweep position and the washer nozzles are aimed so that spray is within the proper wiper pattern.

The windshield wipers are controlled by one electric wiper motor that is accessible for maintenance after removing the appropriate access panel beside the footwell (refer to figure 32).

Turn the multifunction lever forward to activate windshield wipers (item 2, fig. 30). The first position operates the wipers at low speed and the second position operates the wipers at high speed. Turning the lever backwards will operate the wipers in the intermittent mode.

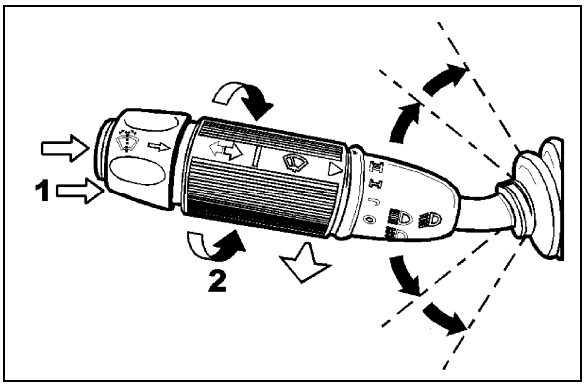

FIGURE 33: MULTIFUNCTION LEVER 23133

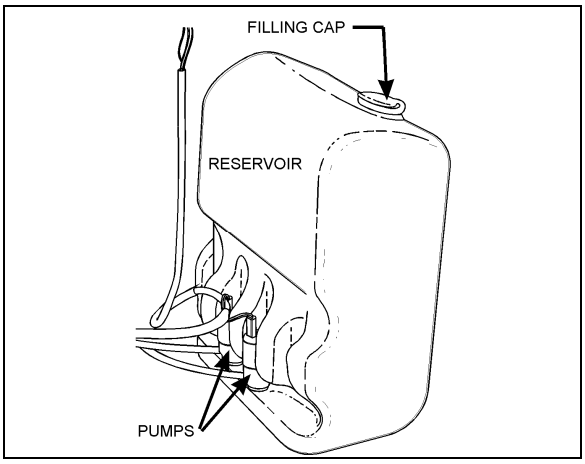

FIGURE 34: WINSHIELD WASHER RESERVOIR 23220

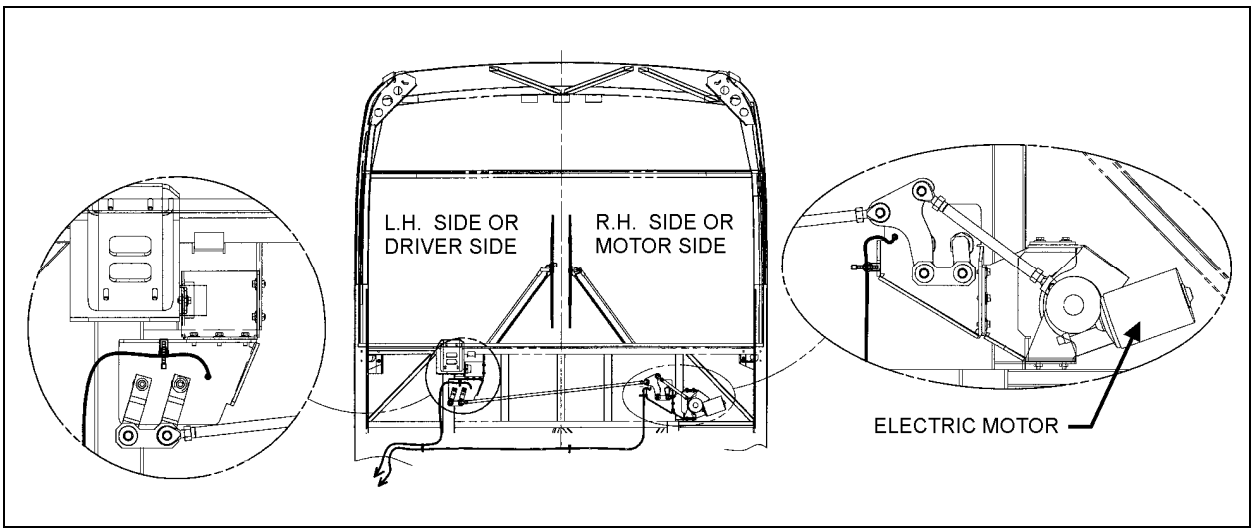

FIGURE 35: WINDSHIELD WIPER INSTALLATION 23287

The windshield washer pumps are electrically operated and are controlled by a washer control ring on the multifunction lever (item 1, fig. 30).

The windshield washer reservoir is located in the front service compartment (Fig. 31). This unit pumps the washer liquid to the spray nozzles where it is dispersed across the windshield.

9.2 WIPER ARM

Check operation of the wipers for proper blade sweep and angle.

9.2.1 Wiper Arms Positioning

1. Reinstall the wiper arms and position as shown in figure 37. Before positioning the wipers at their final position, tighten the nuts to 9 Ft-lbs (12 Nm) at first.
2. To find the final position of the wiper arms, lift then release the wiper arm so if falls back on the windshield.

CAUTION

Do not attempt to manually move the wiper arms to make wiper blade sweep adjustments as damage to the wiper linkage or motor may occur. If it is necessary to adjust the sweep of blades, remove the arms and make adjustment by positioning the arms using serration on the wiper arm pivot shafts.

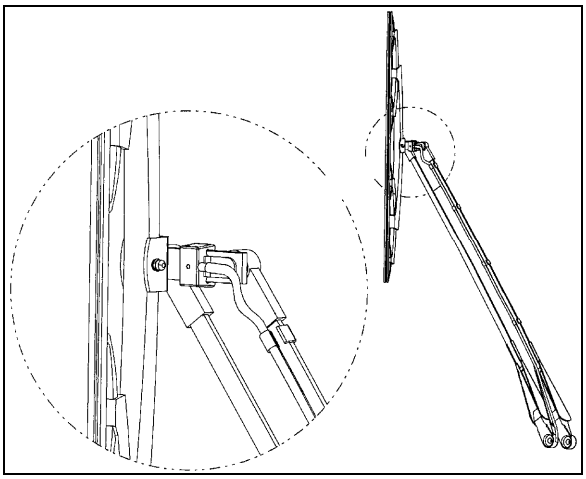

FIGURE 36: WINDSHIELD WIPER (MOTOR SIDE)

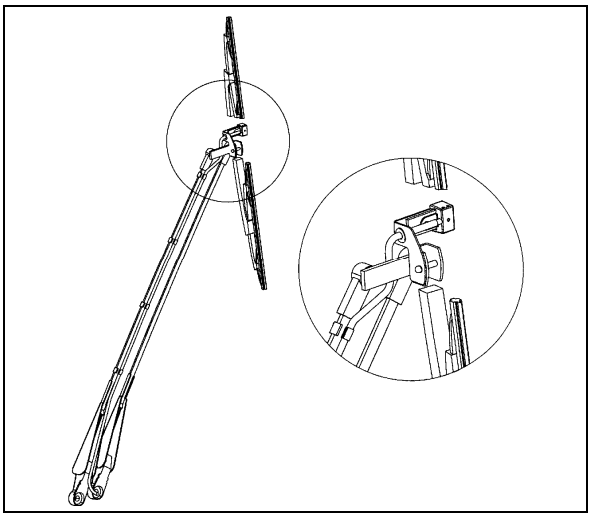

FIGURE 37: WINDSHIELD WIPER (DRIVER SIDE) 23328

3. When the final position is found, tighten the wiper arm nuts to 22 Ft-lbs (30 Nm). Wait 30 minutes and tighten again to 22 Ft-lbs.

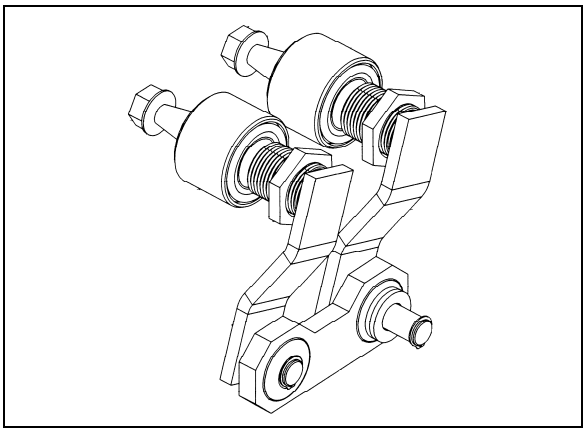

FIGURE 38: DRIVING MECHANISM (DRIVER SIDE) 23284

4. Lower the protective cover.
5. Connect the windshield washer tubing at the base of the wiper arm.
6. Check the adjustment on a wet windshield.

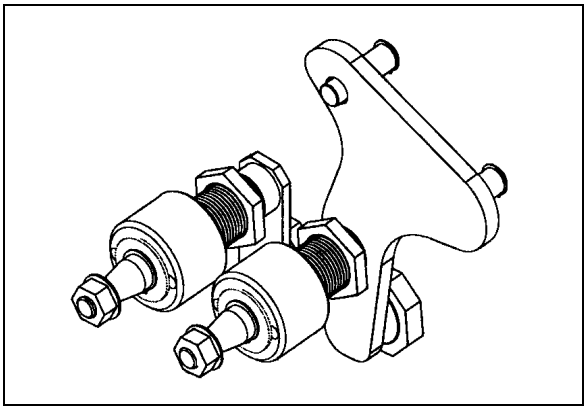

FIGURE 39: DRIVING MECHANISM (MOTOR SIDE) 23285

9.3 WINDSHIELD WIPER MOTOR

9.3.1 Windshield Wiper Motor Replacement

The windshield wiper motor is located at lower front of the vehicle, behind the defroster panel. Refer to figure 32 for motor location.

WARNING

Park vehicle safely, apply parking brake, stop engine and set battery master switch to the ''OFF'' position prior to working on the vehicle.

1. Remove the Phillips-head screws retaining the defroster panels, and remove panels.
2. Disconnect wiring connector from the windshield wiper motor.
3. Loosen clamping screw retaining the lever at the end of the motor driving shaft.
4. Remove the three bolts holding the motor to the steel plate.
5. Remove the windshield wiper motor (Prevost #800328), reverse removal procedure to reinstall.

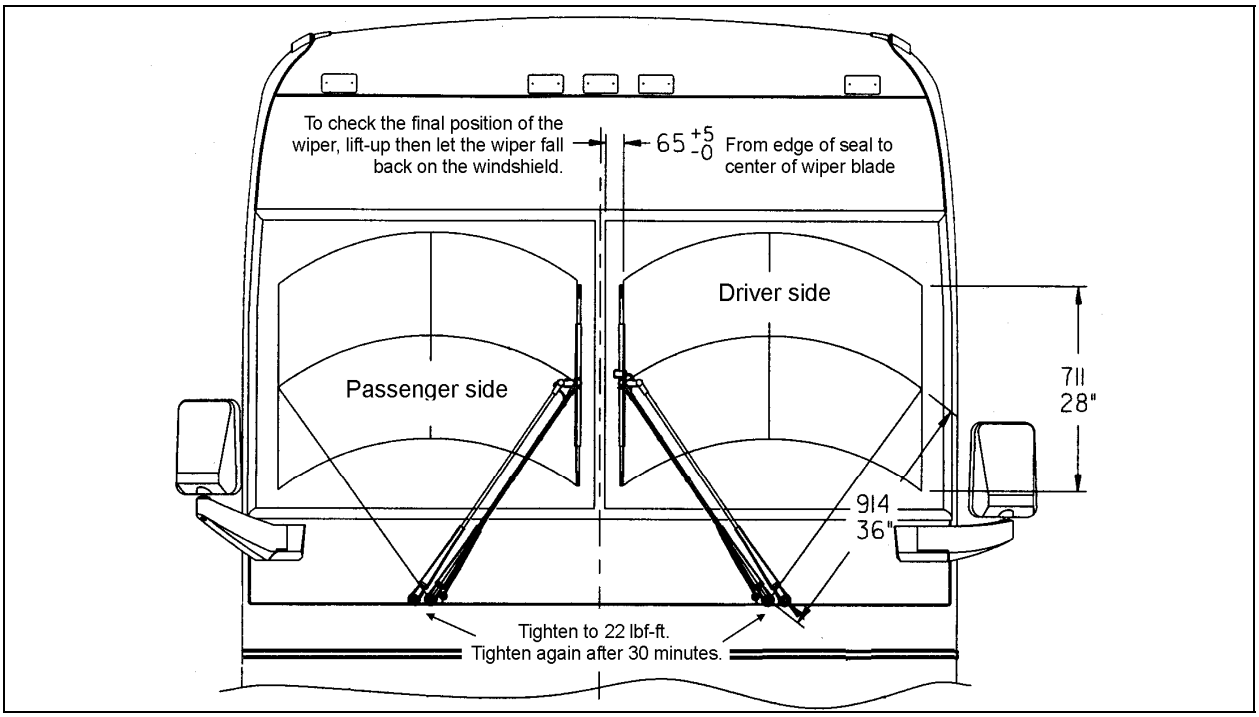

FIGURE 40: WIPER ARMS POSITIONING 23253

9.4 TROUBLESHOOTING

SYMPTOM	PROBABLE CAUSE	REMEDY
FAIL TO SPRAY WASHER FLUID	A. Reservoir empty. B. If below 32°F (0°C), improper washer fluid frozen. C. Contamination in tubing or nozzles. D. Tubing damage. E. Tubing bent (kinked) or off one or more connections.	A. Add proper fluid. B. Store coach or parts in heated area, then purge system with low-temperature solution. C. Remove with compressed air, if severely clogged, replace items. D. Replace section. E. Realign tubing and/or refit. Trim end to ensure proper fit or replace.
INADEQUATE SPRAYING	A. Tubing failure.	A. Replace tubing.
SLOW OPERATION	A. Improper solution. B. Jet stream improperly directed. C. Check if valve is stuck in the open position.	A. Replace with proper type solution. B. Reposition nozzles. C. Remove, clean or replace.

10. TIRE PRESSURE MONITORING SYSTEM (TPMS)

The optional active tire pressure and temperature monitoring system is a sensing device designed to identify and display tire operating data and activate an alert or warning when pressure or temperature irregularities are detected.

For more information on the operation and troubleshooting of the system, refer to Prevost X3-45 Coaches Operator's Manual, chapters "Controls and Instruments", "Safety Features and Equipment" and also "Appendix G".

10.1 TIRE VALVE INSTALLATION

Use as required a small rod to hold the valve in place when tightening.			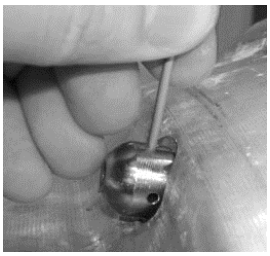
Steel Wheels	***All wheels*** **a) Install Beru valve** **Torque valve to 44.5lb-in +/- 9.5** **b) no extension piece**	 #Prevost 681083	
Aluminum Wheels (new Hub-Mounted wheels)	***Front axle and tag axle wheels with 365 tires–*** **a) Remove Alcoa valve** **b) Install Beru valve** **Torque valve to 102lb-in +/- 22** **c) No extension piece**	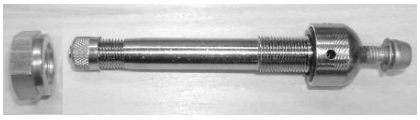 #Prevost 651080	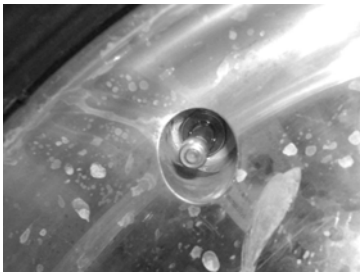
	Front axle and tag axle wheels with 315 tires– **a) Remove Alcoa valve** **b) Install Beru valve** **Torque valve to 102lb-po +/- 22** **c) Small extension piece (approx 50mm)**	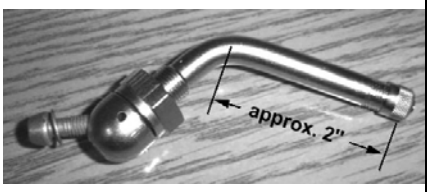 #Prevost 651081	

Aluminum wheels (new Hub-Mounted wheels)	***Drive axle inner and outer wheels with 315 tires–*** **a) Remove Alco valve** **b) Install Beru valve** **Torque valve to 102lb-in +/- 22** **c) no extension piece**	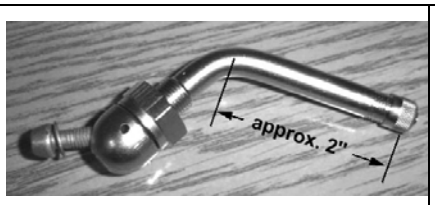 #Prevost 651081	
	"Super Single" Tires **a) Remove Alcoa valve** **b) Install Beru valve** **Torque valve to 102lb-in +/- 22** **c) no extension piece**	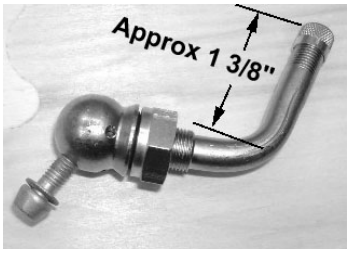 #Prevost 651079	

Aluminum wheels (former Stud-Mounted wheels)	***All wheels*** **a) Remove Alcoa valve** **b) Install Beru valve** **Torque valve to 102lb-in +/- 22** **c) no extension piece**	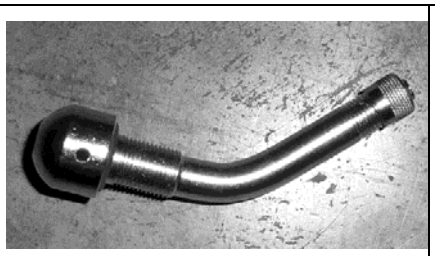 #Prevost 651082	

⚠ CAUTION

When replacing Alcoa valve stems, it is recommended to lubricate the threads and O-ring with Permatex Dielectric Tune-Up grease.

When valve stem extensions are used, it is recommended that valve stem stabilizers be used.

10.2 BERU SENSORS INSTALLATION

IMPORTANT NOTE
Beru sensors have a limited lifespan (5 years on average)

Check proper valve positioning before installing sensor onto valve (risk of damaging the sensor or air leaks).

Beru pressure sensor **564078**

Remove bar code with supplied removable tie-rap.

Make sure not to mix bar codes up between wheels (bar code is linked to sensor)

Position sensor onto wheel

Install oval wave spring washer

Torx screw T-20. Torque to 35lb-in (4Nm) (supplier specification for the screw).

IMPORTANT

Use the screw only once. This screw uses a thread lock**. Never use Loctite (incompatibility between Loctite and thread lock) Replacement screw #651084.**

Install bar code and tie it up using wheel holes. Use supplied removable tie-rap.

Decal

Glue decal facing the valve.

#651091 ENGLISH #651090 BILINGUAL

DRIVE AXLE OUTER WHEEL

11. AUTOMATIC FIRE SUPPRESSION SYSTEM (AFSS) (OPTIONAL)

This optional system is used to shut down the engine and to extinguish a fire in the engine compartment or in the vicinity of the preheating system if so equipped.

The system operation is fully automatic and does not require assistance from the operator, however if required, the system can be manually activated by the operator at any time.

Refer to Prevost Operator's Manual for system operation and operational sequence (fire).

If more information is needed on the system, please refer to Kidde Dual Spectrum "Operation & Maintenance Manual annexed at the end of this section.

11.1 STARTING THE VEHICLE AFTER A FIRE ALARM

The vehicle may be started after a fire alarm without resetting the system. Refer to ignition switch sequence below. This will not reset the system, rather it will instruct the vehicle's multiplex system to ignore vehicle interface outputs from the Protection Panel. This feature is intended to be used only in emergency situations that require the vehicle to be restarted and moved a short distance prior to system reset. It should not be performed if the cause of the fire has not been clearly identified and corrected.

To start the vehicle, perform this ignition switch (key) sequence.

- From the **ON** position,
- Turn to **OFF**, return to **ON** *and* **START** vehicle within 2 seconds.

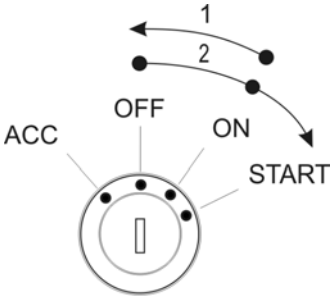

Within 2 seconds.

11.2 PERIODIC MAINTENANCE

PRE-TRIP

o Verify that the Protection Panel "SYSTEM OK" lamp is on solid green.

EVERY 3000 MILES OR MONTHLY (whichever comes first)

General

o Verify that neither the protected equipment nor the hazard has changed.

o Verify that no obvious physical damage or condition exists that might prevent system operation.

Protection Panel

o Verify that all warning lamps and the audible alarm are operational by pressing the "TEST/RESET" button.

Manual Activation Switch

o Verify that the tamper seal is intact and access to the switch is unobstructed.

Fire Detectors

o Optical

- Verify that the status lamp on the detector face is on solid green.
- Verify that nothing is blocking the detector's field of view.

- Verify that the windows on the face of the detector are free of excess contamination (dirt, oil, grease, etc.) – if necessary, clean using a water soaked non-abrasive towel.

o Linear Thermal

- Verify that there is no obvious physical damage and that the unit is free of excess contamination (dirt, oil, grease, etc) – if necessary, clean using a water soaked non-abrasive towel.
- Verify that mounting is secure and taught.

Electrical Harness

o Verify that electrical connectors and electrical wiring have no visible damage and all connectors are securely seated.

Extinguisher & Distribution System

o Verify that that the extinguisher pressure gauge pointer is in the green arc at room temperature.

o Verify that distribution piping and nozzles are intact and unobstructed and that nozzle blow-off caps are in place.

EVERY 18000 MILES OR SEMI-ANNUALLY (whichever comes first)

o Perform a comprehensive fire system test using a Kidde Dual Spectrum System Test Set (Optical Test Kit P/N 420871-2).

o Service the extinguisher in accordance with KDS Document 160296, “KDS Pre-Engineered Fire Suppression System: Installation, Operation and Maintenance Manual”.

EVERY SIX YEARS

o Have the fire extinguisher rebuilt by a qualified fire protection equipment company familiar with Kidde Dual Spectrum equipment and in accordance with KDS Document 160296, “KDS Pre-Engineered Fire Suppression System: Installation, Operation and Maintenance Manual”. Rebuilt shall include actuator, o-ring seals and dry chemical replacement.

EVERY TWELVE YEARS

o Have the Extinguisher cylinder hydrostatically tested by a qualified fire protection equipment company familiar with Kidde Dual Spectrum equipment and in accordance with KDS Document 160296, “KDS Pre-Engineered Fire Suppression System: Installation, Operation and Maintenance Manual”.

12. SPECIFICATIONS

AMPLIFIER
Model.....VA400-8
Output..... 400 watts, 6 channel RMS at 4 ohm @ 0.5 T.H.D.
Prevost number.....901191

SOUND SELECTOR
Model.....VSS-05
Power source .....12 volts
Prevost number.....21116371

DASHBOARD RADIO (standard)
Power source .....12 volts
Prevost number.....901315

DASHBOARD RADIO (SIRIUS)
Power source .....12 volts
Prevost number.....901317

DASHBOARD RADIO (XM)
Power source .....12 volts
Prevost number.....901316

MOBILE DVD PLAYER
Power source .....12 volts
Prevost number.....901198

SPEAKER (standard)
Model.....Dual Cone
Impedance ..... 4 ohms
Prevost number.....901194

SPEAKER (optional)
Model.....Coaxial
Impedance ..... 4 ohms
Prevost number.....901195

SUBWOOFERS (optional)
Model.....J Drive VB170
Impedance ..... 4 ohms
Prevost number.....901193

VIDEO SWITCHER
Model..... V-3000
Prevost number.....901030

BOOM-TYPE MICROPHONE
Prevost number.....900763

HANDHELD PRIORITY MICROPHONE
Prevost number.....900808

RUBBER COATED MICROPHONE
Prevost number.....900745

16 CHANNEL WIRELESS MICROPHONE
Make.....R.E.I.
Prevost number.....900954

16 CHANNEL WIRELESS MICROPHONE CHARGING STATION
Make.....R.E.I.
Prevost number.....900953

16 CHANNEL WIRELESS MICROPHONE RECEIVER
Make.....R.E.I.
Prevost number.....900952

KARAOKE
Make.....Panasonic
Model.....MOBILE DVD PLAYER DV1500
Prevost number.....901033

TV RECEIVER
Power source.....24V
Prevost number.....901054

VIDEO DISTRIBUTION AMPLIFIER
Power source.....24V
Prevost number.....901117

TV MONITOR
Type.....10.4” LCD
Power source.....24V
Prevost number.....901130

HUBODOMETER (US model: miles)
Make.....Stemco
Prevost number.....650002

HUBODOMETER (Canada model: km)
Make.....Stemco
Prevost number.....650117

ELECTRONIC DESTINATION SIGN
Make.....Pocatec
Prevost number.....940050

LAVATORY VENTILATION FAN MOTOR
Make.....Aurora
Type.....RG500EF
Voltage.....24 volts DC
Rotation.....R.H.
Prevost number.....870844

LAVATORY FLUORESCENT TUBES
Make.....General Electric
Model.....F15T8CW
Length.....18" (45 cm)
Wattage.....15
Quantity.....2
Prevost number.....830102

EMERGENCY BUZZER SWITCH (PUSH BUTTON)
Make..... Cole Hersee Co.
Voltage .....24 V
Prevost number.....562117

FRESH WATER TANK
Make.....Prevost
Capacity .....18 US gal (68 liters)
Prevost number.....401591

FLUSH PUSH BUTTON PNEUMATIC TIMER
Make.....Furnas
Type .....Resettable
Time ..... 0,2 to 180 seconds
Prevost number.....900348

FLUSH PUMP
Make..... RULE 2000
Model number ..... 12 - 24 V
Power source ..... 24 volts DC
Capacity .....1450 GPH
Prevost number.....900960

AIR HORN
Make.....VOLVO
Prevost number.....20383071

ELECTRIC HORN (HIGH)
Make..... FIAMM TECHNOLOGIES INC.
Prevost number.....563023

ELECTRIC HORN (LOW)
Make..... FIAMM TECHNOLOGIES INC.
Prevost number.....563015

WINDSHIELD WIPER MOTOR
Make..... BOSCH
Prevost number.....800328

WIPER (BLADE)
Make..... BOSCH
Prevost number.....800329

WIPER ARM
Make..... BOSCH
Prevost number.....800331

CONTENTS

1 LUBRICATION 2

2 LUBRICATION AND SERVICE SCHEDULE 2

2.1 FLEXIBLE HOSE MAINTENANCE 2
2.1.1 HOSE INSPECTION 2
2.1.2 LEAKS 2
2.1.3 SERVICE LIFE 2
2.2 FLUIDS AND LUBRICANTS SPECIFICATIONS 8
2.3 LUBRICATION AND SERVICING SCHEDULES 8

ILLUSTRATIONS

FIGURE 1: LUBRICATION AND SERVICING POINTS (I-BEAM FRONT AXLE SHOWN) TYPICAL 4
FIGURE 2: LUBRICATION AND SERVICING POINTS – HVAC UNIT 6
FIGURE 3: LUBRICATION AND SERVICING POINTS - INDEPENDENT FRONT SUSPENSION VEHICLES (TYPICAL) . 7

1 LUBRICATION

The efficiency and life expectancy of mechanical equipment is largely dependent on proper lubrication and servicing. All mechanical components rely on a lubricating film between moving parts to reduce friction, prevent wear and oxidation. Proper lubrication also helps cool the parts and keep dirt particles away from mating surfaces. Efficient lubrication depends upon using the right type of lubricant, at specified intervals and by filling to correct capacities. Past experience shows that many service problems can be traced to an improper lubricant or to incorrect lubrication procedures.

A comprehensive maintenance and lubrication program is important to ensure the long service life this vehicle was designed for and to avoid costly repairs and associated downtime caused by premature part failure.

A lubrication schedule is included in this section to give the location of key service points on the vehicle as well as the lubricant specifications for each component to be serviced. Specific instructions on how to check and service different components are covered in their respective sections in this maintenance manual.

The recommended lubrication intervals are based on normal operating conditions and mileage accumulation.

Shorten the intervals if your vehicle operates in more severe conditions. Severe conditions include heavy towing, high vehicle weight or operation in mountainous areas. Some parts and equipment referred to in this section may not be installed on your vehicle. Check your vehicle's "Coach Final Record" for equipment list.

Dispose of used lubricants and filters in an environmentally safe manner, according to federal and/or local recommendations.

2 LUBRICATION AND SERVICE SCHEDULE

Following this service schedule is the most economical and easiest way to ensure your vehicle performs at its best, safest and longest. Also, unscheduled maintenance will be minimized since inspection should expose potential problems before they become major ones.

2.1 FLEXIBLE HOSE MAINTENANCE

The performance of engine and equipment are greatly related to the ability of flexible hoses to supply lubricating oil, air, coolant, and fuel oil. Maintenance of hoses is an important step to ensure efficient, economical, and safe operation of the engine and related equipment.

2.1.1 Hose Inspection

Check hoses daily as part of the pre-starting inspection. Examine hose for leaks, and check all fittings, clamps, and ties carefully. Ensure that hoses are not resting on or touching shafts, couplings, heated surfaces including exhaust manifolds, any sharp edges, or other obviously damaging areas. Since all machinery vibrates and moves to a certain extent, clamps and ties can fatigue with time. To ensure proper support, inspect fasteners frequently and tighten or replace them as necessary.

WARNING

Personal injury and property damage may result from fire caused by leaking flammable fluids.

2.1.2 Leaks

Hoses have a limited service life. Thoroughly inspect hoses annually. Look for surface damage or indications of twisted, worn, crimped, cracked or leaking lines. Replace damaged hoses immediately.

Hoses should be replaced during major overhaul or after a maximum of seven years service. Be certain that replacement hoses match the original equipment manufacturer's specifications.

2.1.3 Service life

The limited service life of a hose is determined by the temperature and pressure of the gas or fluid within it, the time in service, its installation, the ambient temperatures, amount of flexing, and the vibration it is subjected to. With this in mind, it is recommended that all hoses be thoroughly inspected at least every 500 operating hours or after 15,000 miles (24 000 km). Look for surface damage or indications of damaged, twisted, worn, crimped, brittle, cracked, or leaking lines. Hoses having a worn outer surface or hoses with a damaged metal

reinforcement should be considered unfit for further service.

It is also recommended that all hoses in this vehicle be replaced during major overhaul and/or after a maximum of five service years. Quality of replacement hose assemblies should always be equal to or superior to those supplied by the Original Equipment Manufacturer.

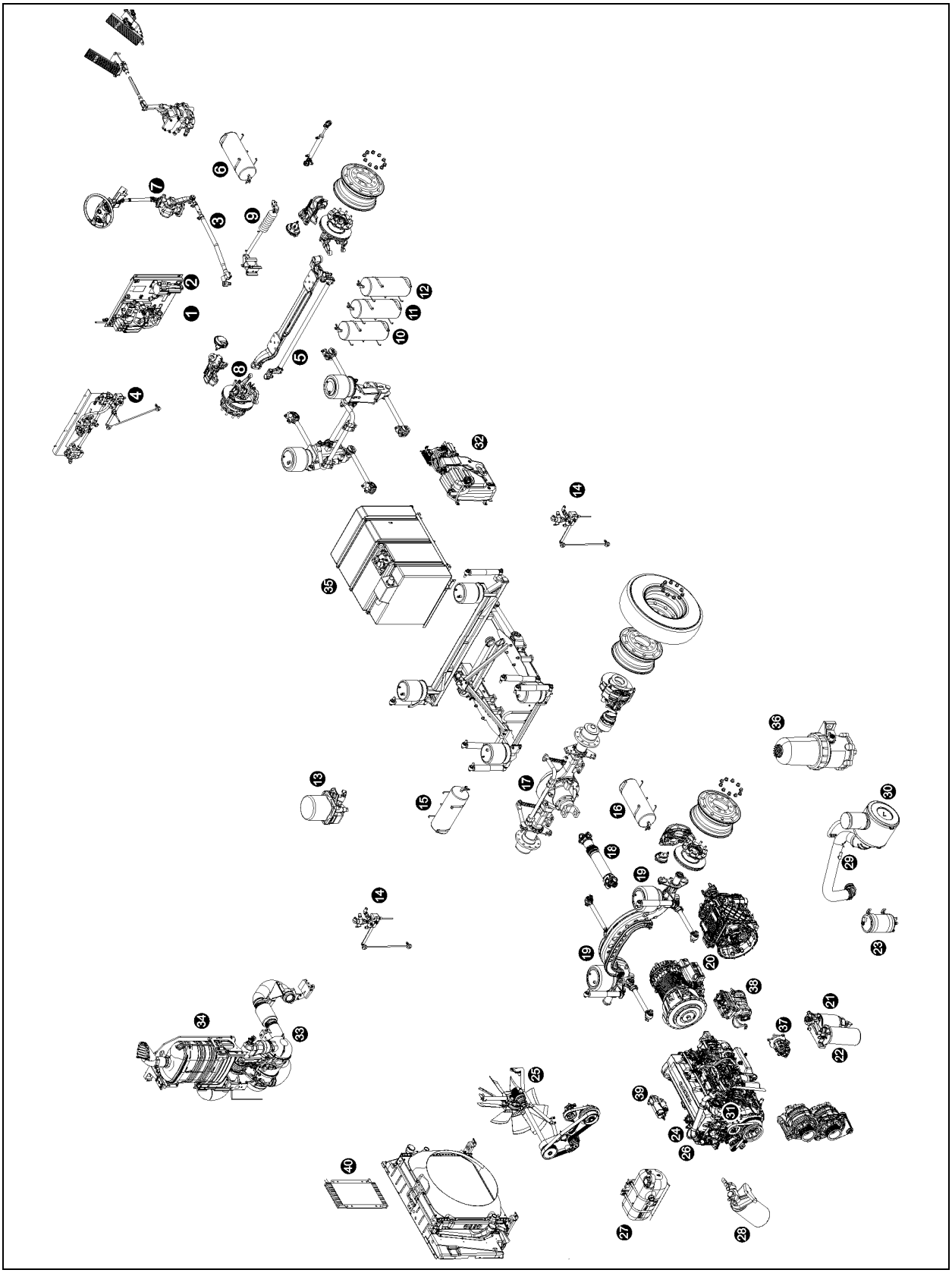

FIGURE 1: LUBRICATION AND SERVICING POINTS (I-BEAM FRONT AXLE SHOWN) TYPICAL

1 Accessories air tank drain cock
2 Accessories air filter
3 Steering drag link
4 Height control valve (front)
5 Steering tie rod
6 Accessories air tank
7 Steering column U-joints
8 Steering knuckle pins
9 Steering damper cylinder
10 Emergency / parking brake overrule tank
11 Secondary air tank
12 Kneeling air tank
13 Air dryer
14 Height control valve (rear)
15 Wet air tank
16 Primary air tank
17 Differential
18 Propeller shaft
19 Tag axle lever pivot
20 Transmission
21 Primary fuel filter
22 Secondary fuel filter
23 Power steering fluid tank
24 Engine oil filter
25 Cooling fan gearbox
26 Allison transmission oil dipstick
27 Engine coolant surge tank
28 Coolant filter & conditioner
29 Engine air filter restriction indicator
30 Engine air filter
31 Engine oil dipstick and filler tube
32 DEF tank
33 Diesel particulate filter
34 SCR catalytic converter
35 Diesel fuel tank
36 Davco Fuel Pro 382 fuel filter
37 Power steering pump
38 Air compressor
39 Starter
40 Fuel cooler

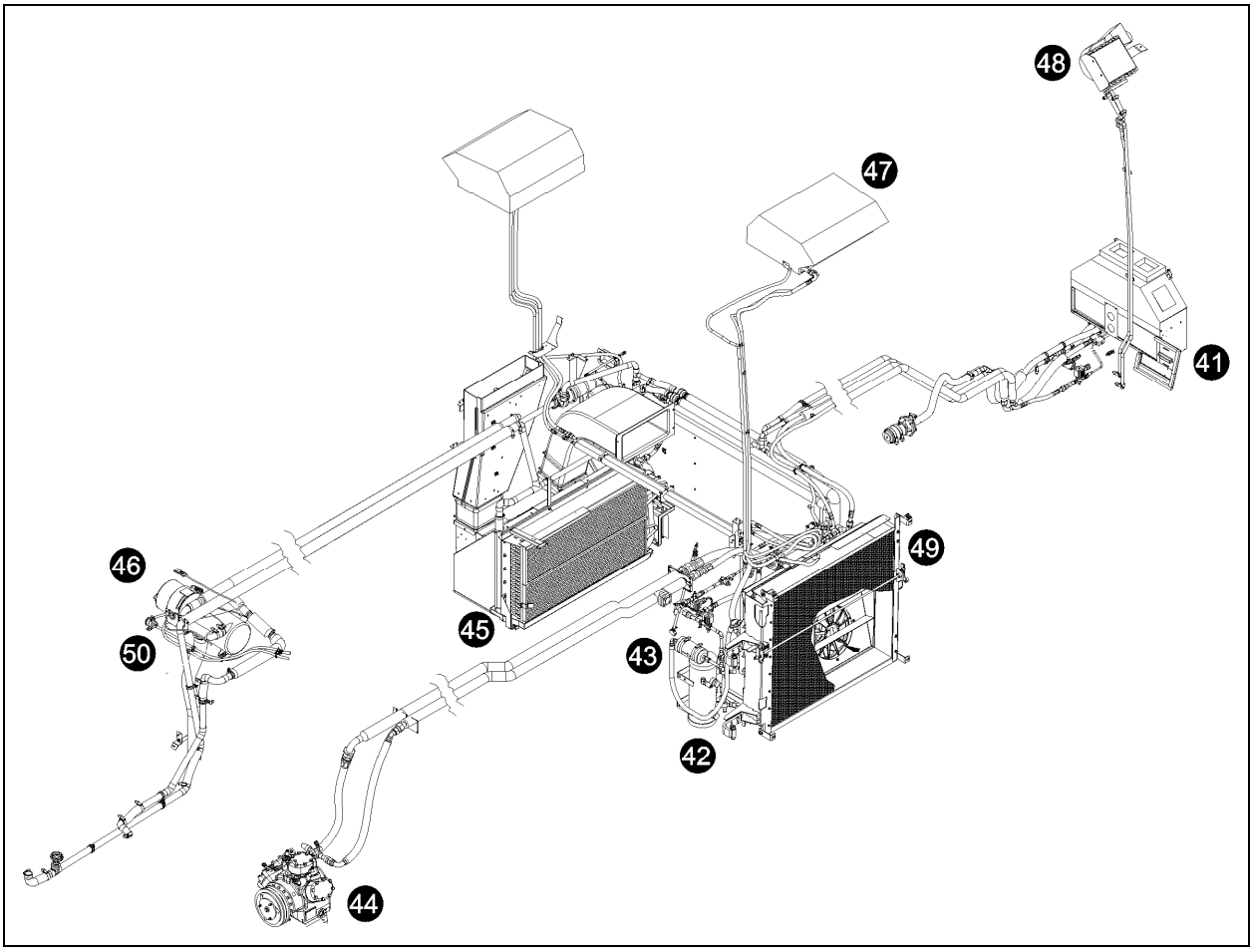

FIGURE 2: LUBRICATION AND SERVICING POINTS – HVAC UNIT

41	HVAC air filter – driver's unit	46	Coolant preheater
42	A/C receiver tank	47	A/C system – passenger's overhead console
43	Refrigerant moisture indicator	48	Upper windshield defrost unit
44	A/C compressor	49	Condenser coil
45	HVAC air filter – passenger's unit	50	Preheater fuel filter

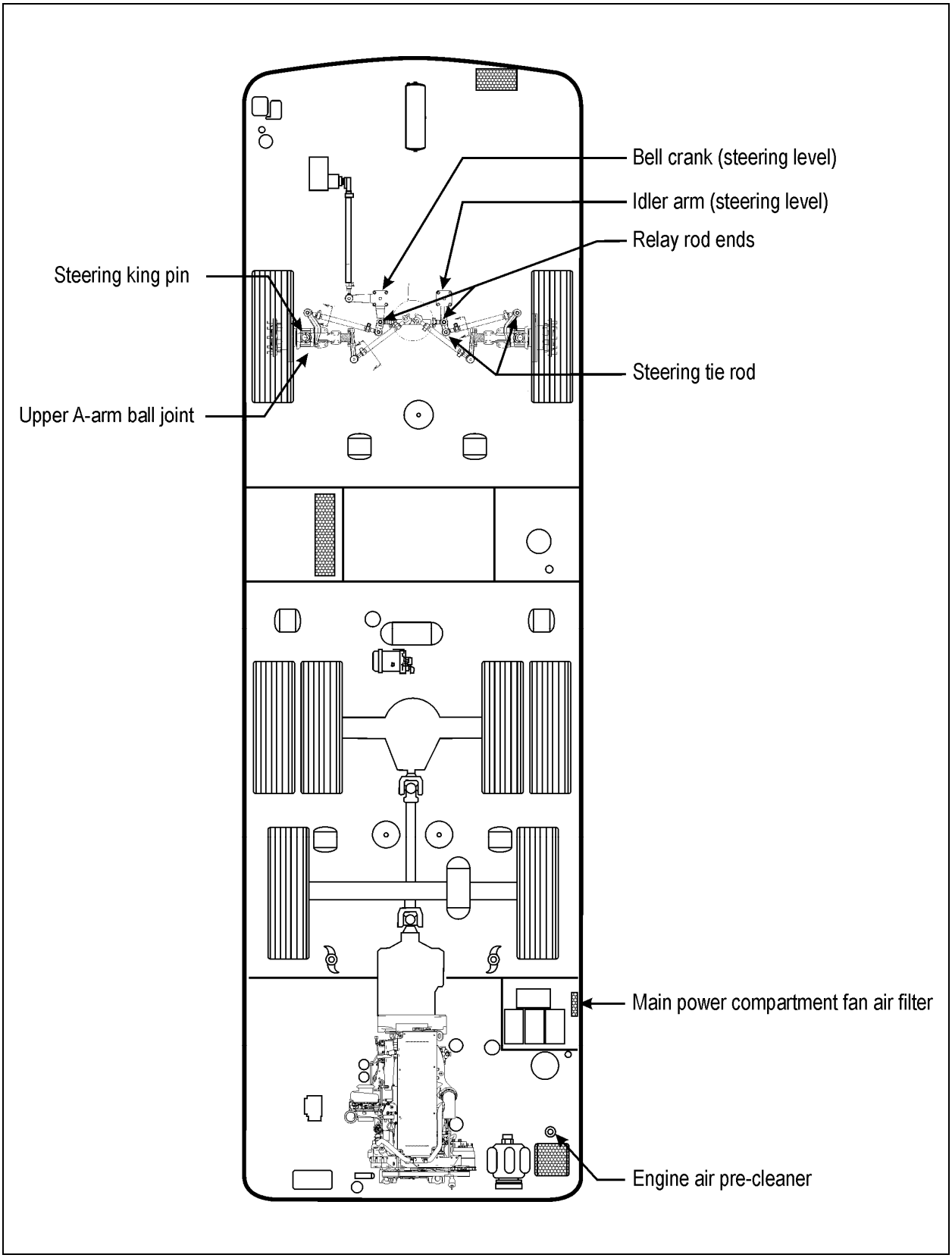

FIGURE 3: LUBRICATION AND SERVICING POINTS - INDEPENDENT FRONT SUSPENSION VEHICLES (TYPICAL)

2.2 FLUIDS AND LUBRICANTS SPECIFICATIONS

FLUIDS & LUBRICANTS		
REF	**DESCRIPTION**	**SPECIFICATIONS**
A	Engine Oil	VOLVO D13 SAE Viscosity Grade: 10W-30 API Classification CJ-4 meeting Volvo specification **VDS-4**
B	Power Steering Oil	Automatic Transmission Oil, Dexron-III
C	Engine Coolant	VOLVO D13 Texaco or Chevron Extended Life Coolant (ELC) 50% antifreeze/water solution is normally used
D	A/C Compressor Oil	Central HVAC system: Polyolester oil, HFC 134a compatible; Castrol SW-68 (POE) or equivalent Small HVAC system: PAG oil
E	Differential Oil	Multigrade gear oil meeting MIL-L-2105-D: 85W140. If temperature drops below 10°F (-12°C), 80W90 should be used. Below -15°F (-26°C), 75W90 should be used. (In extreme conditions or for better performance, full synthetic gear oil can be used)
F	Differential Oil (Full Synthetic)	Multigrade gear oil meeting MIL-L-2105-D: 85W140. If temperature drops below 10°F (-12°C), 80W90 should be used. Below -15°F (-26°C), 75W90 should be used.
G	Cooling Fan Gearbox Oil	Synthetic gear lubricant 75W-90
H	Allison Automatic Transmission Oil	Castrol TranSynd™ Synthetic Transmission Fluid for Allison or TES 295 approved equivalent
I	Allison Automatic Transmission Oil	Dexron-VI® or approved equivalent 1 Schedule 1 TES-389 fluids;
J	Volvo I-Shift Transmission	Castrol Syntrans Grade SAE 75W-85 synthetic oil
K	Multi Purpose Grease	Good quality lithium-base grease: NLGI No.2 Grade is suitable for most temperatures NLGI No.1 Grade is suitable for extremely low temperatures
L	Multi Purpose Grease	Molykote longterm 2/78 grease

2.3 LUBRICATION AND SERVICING SCHEDULES

For lubrication and servicing schedule, refer to the two following tables.

IMPORTANT NOTE
Refer to the manufacturers documentation included in this maintenance manual for specific manufacturer's maintenance requirements.

LUBRICATION AND SERVICING SCHEDULE

H3 Series coaches

X3 Series coaches

H3 VIP commercial use

X3 VIP commercial use

				PROCEED TO MAINTENANCE OPERATION EVERY[1]													
		Item	Month	6 250 mi / 10 000 km	12 500 mi / 20 000 km	31 250 mi / 50 000 km	50 000 mi / 80 000 km	100 000 mi / 160 000 km	106 000 mi / 170 000 km	125 000 mi / 200 000 km	150 000 mi / 240 000 km	185 000 mi / 300 000 km	250 000 mi / 400 000 km	300 000 mi / 500 000 km	500 000 mi / 800 000 km	600 000 mi / 960 000 km	Lubricant / Fluid [2]
	GENERAL																
1	Flexible hoses – thoroughly inspect all hoses		12				●										
	01 ENGINE																
1	Engine oil & filter – heavy[3] operation condition, change at 25 000 mi / 40 000 km	24															A
2	Engine oil & filter – normal operation condition, change at 35 000 mi / 55 000 km	24															A
3	Air cleaner – replace filter element when indicated by restriction indicator or after a maximum of 2 years	30	24														
4	Drive belts – inspect for cracks or frayed material, replace if required		12			●											
5	Valves & injectors – initial adjust	24	12							●							
6	Valves & injectors – check & adjust	24	24										●				
	03 FUEL																
1	Primary & secondary fuel filters – change at every engine oil change	21 22															
2	Preheater fuel filter – change	50					●										
	04 EXHAUST AND AFTERTREATMENT SYSTEM																
1	Diffuser assembly, rain cap & drain tube – check proper functioning, clean	34	12														
2	DEF pump filter element – first change at 100 000 Mi or 36 months then according to odometer reading	32	36								●						
3	DEF tank – drain & clean with water, clean filler neck strainer	32	12									●					
4	DPF filter – either clean or replace filter cartridge	33											●				
	05 COOLING																
1	Coolant surge tank – test coolant solution	27	12		●												
2	Radiator fan gearbox – check oil level	25	6		●												
3	Coolant filter – change (chemical release w/ fully formulated coolant)	28	6				●										
4	Coolant filter – change (long-life w/ extended life coolant)	28	12								●						
5	Radiator – inspect exterior core & clean with low pressure water jet if necessary								●								
6	Radiator fan gearbox – change oil	25	12						●								G
7	Cooling system – drain, flush & refill (fully formulated coolant)	27	24											●			
8	Cooling system – drain, flush & refill (extended life coolant)	27	48													●	C
	06 ELECTRICAL																
1	Battery terminals – clean & coat terminals		12														
2	HD10 Bosch alternators drive belt – inspect for cracks or frayed material					●											
3	HD10 Bosch alternators brushes – check & replace brushes if needed							●									
4	Alternators – remove belts, check for noisy bearings, bearing play		●														

[1] Proceed to maintenance operation at distance indicated on odometer or specified number of month, whichever comes first.

[2] See paragraph 2.2 of this section for lubricant specifications.

[3] Normal=fuel consumption more than 6 MPG (less than 39 L/100km); Heavy= fuel consumption between 4.7 MPG and 6 MPG (between 39 L/100km and 50 L/100km).

	LUBRICATION AND SERVICING SCHEDULE H3 Series coaches X3 Series coaches H3 VIP commercial use X3 VIP commercial use	Item	Month	PROCEED TO MAINTENANCE OPERATION EVERY[1] 6 250 mi / 10 000 km	12 500 mi / 20 000 km	31 250 mi / 50 000 km	50 000 mi / 80 000 km	100 000 mi / 160 000 km	106 000 mi / 170 000 km	125 000 mi / 200 000 km	150 000 mi / 240 000 km	185 000 mi / 300 000 km	250 000 mi / 400 000 km	300 000 mi / 500 000 km	500 000 mi / 800 000 km	600 000 mi / 960 000 km	Lubricant / Fluid [2]
	07 TRANSMISSION [4]																
1	**Allison transmission filled with TES389 approved fluid and Prognostics mode disabled** – change transmission fluid, Main & Lube filter (Refer to TABLE 1 in Section 07: Transmission for Main & Lube filter change intervals)	20															I
2	**Allison transmission filled with TranSynd or TES295 synthetic fluid only, no mixture[5,6] and Prognostics mode disabled** – change transmission fluid, Main & Lube filter (Refer to TABLE 2 in Section 07: Transmission for Main & Lube filter change intervals)	20															H
3	**Allison transmission filled with TranSynd or TES295 synthetic fluid only, no mixture[5,6] and Prognostics mode enabled** – change fluid & filters when indicated by TRANSMISSION SERVICE indicator or 60 month whichever occurs first. In addition, change filters with every fluid change	20	60														H
4	**Allison transmission filled with TES389 approved fluid with Prognostics mode enabled [5,6]** – **c**hange fluid & filters when indicated by TRANSMISSION SERVICE indicator or 24 month whichever occurs first. In addition, change filters with every fluid change.	20	24														H
5	Transmission oil cooler, replace unit if vehicle is equipped with transmission retarder		24														
6	**Volvo I-Shift Transmission** not filled with Castrol Syntrans SAE 75W85, change fluid & filter when	20	36										●				
7	**Volvo I-Shift Transmission** filled with Castrol Syntrans SAE 75W85 **(extended oil drain)**, change fluid & filter if	20	60												●		J
	09 PROPELLER SHAFT																
1	Perform Spicer's Driveshaft Assembly Inspection Procedures	18				●											
2	Grease one fitting on each universal joint	18	6					●									K
	11 REAR AXLES																
1	Drive axle – check differential oil level, add if necessary every 25 000 mi	17	6														E
2	Tag axle lever pivot – grease one fitting on each pivot	19	6	●													K
3	Drive axle – change differential oil, clean breather	17	12					●									E
4	Drive axle – change differential oil, clean breather (with full synthetic oil)	17	48										●				F
	12 BRAKE & AIR																
1	Check caliper running clearance, check condition of the caliper cover, slack adjuster cap & guide pin assembly covers		12														
2	ABS & Electronic Stability Control systems – check proper functioning		12														
3	Air tanks – drain water from all tanks		12		●												
4	Brake pads[7] – check pad wear indicator				●												

[4] In the absence of a fluid analysis program, the fluid change interval listed in Table 1, Table 2 & Table 3 should be used. Change filters according to Table 1, Table 2 & Table 3 even if a fluid analysis shows that the fluid doesn't need to be changed.

[5] When the transmission contains a mixture of fluids (defined as the quantity of non-TranSynd or non-TES 295 fluid remaining in the transmission after a fluid change combined with the quantity of TranSynd or TES295 required to fill the transmission to the proper level), perform the fluid and filter change according to the TES389 intervals.

[6] Extended TranSynd or TES 295 fluid and filter change intervals are only allowed with Allison High-Capacity filters.

[7] At each pad replacement, check slack adjuster operation, perform caliper slide check and inspect visually all sealing elements & caps.

LUBRICATION AND SERVICING SCHEDULE H3 Series coaches X3 Series coaches H3 VIP commercial use X3 VIP commercial use			PROCEED TO MAINTENANCE OPERATION EVERY[1]													
	Item	Month	6 250 mi / 10 000 km	12 500 mi / 20 000 km	31 250 mi / 50 000 km	50 000 mi / 80 000 km	100 000 mi / 160 000 km	106 000 mi / 170 000 km	125 000 mi / 200 000 km	150 000 mi / 240 000 km	185 000 mi / 300 000 km	250 000 mi / 400 000 km	300 000 mi / 500 000 km	500 000 mi / 800 000 km	600 000 mi / 960 000 km	Lubricant / Fluid [2]
5 Accessories air filter – change filter element	2	24					●									
6 Air dryer – change cartridge	13	24					●									
13 WHEELS, HUBS & TIRES																
1 Unitized hub bearing, front and tag axle – inspect, check end play. Refer to See Dana Spicer Maintenance Manual Model NDS Axle Range	8	12			●											
14 STEERING																
1 Drag link end ball joints – inspect for corrosion	3	12														
2 Tie rod end ball joints – inspect for corrosion	5	12														
3 Steering knuckle (king) pins – grease two fittings per knuckle	8	6	●													K
4 Steering knuckle (king) pins – check play	8	6			●											
5 **X3 Series only**: Drag link ends – clean and grease two fittings at each end		6	●													
6 **X3 Series only**: Idler arm – grease fitting		6	●													
7 **X3 Series only**: Bell crank – grease fitting		6	●													
8 **X3 Series only**: Relay rod ends – grease one fitting at each end		6	●													
9 Steering tie rod ends – clean & grease one fitting at each end	5	6	●													K
10 Steering damper cylinder – grease one fitting at rod end	9	6	●													K
11 Power steering reservoir filter cartridge and fluid – replace	23	12				●										B
22 HEATING & AIR CONDITIONING																
1 A/C compressor – check oil level, add if necessary	44	6	●													D
2 A/C receiver tank – check refrigerant level, add if necessary	42	6	●													
3 A/C compressor – empty shaft seal oil collection tube	44	6	●													
4 Refrigerant moisture indicator – check filter dryer unit, replace according to moisture indicator	43	6	●													
5 Evaporator compartment return air filters (2x) – clean or replace	45	6		●												
6 **X3 Series only**. Evaporator compartment door fresh air intake filter – clean or replace		6		●												
7 Parcel rack fans air filter – clean or replace	47	6		●												
8 Driver's HVAC unit return air filter – clean or replace	41	6		●												
9 Evaporator compartment & driver's HVAC units – clean heater core with low pressure water hose										●						
10 Evaporator compartment & driver's HVAC units – clean evaporator core with low pressure water hose										●						
11 Evaporator compartment & driver's HVAC units – clean condenser core with low pressure water hose										●						

	CHANGE LOG - LUBRICATION AND SERVICING SCHEDULE	DATE
1	ADDED: 04 EXHAUST & AFTERTREATMENT SYSTEM - Diffuser assembly, rain cap & drain tube – check proper functioning, clean	Sept.04, 2014
2	ADDED: 06 ELECTRICAL – Alternators – remove belts, check for noisy bearings, bearing play	Dec.03,2024
3		

INTENTIONALLY LEFT BLANK

LUBRICATION AND SERVICING SCHEDULE H3-45 VIP & X3-45 VIP MOTORHOMES (Private Use)	ITEM	EVERY (months)	LUBRICANT / FLUID [8]
GENERAL			
All flexible hoses **–** inspect		12	
H3 VIP Series only: Main power compartment fan air filter – inspect		12	
01 ENGINE			
Engine oil and filters – replace	24	12	A
Air cleaner – replace filter element	30	24	
Engine mounted alternators, house alternator(s) – replace drive belts and intermediary drive belts		24	
Coolant pump – replace belt		24	
Valves and injectors – initial adjustment: after 2 500 hours or 36 months whichever occurs first	24	36	
Valves and injectors – check and adjust: every 5 000 hours or 72 months whichever occurs first	24	72	
03 FUEL			
Primary fuel filter & secondary fuel filter – change at every engine oil change	21, 22		
04 EXHAUST AND AFTERTREATMENT SYSTEM			
DPF filter – either clean or replace filter cartridge after 4 500 hours	33		
DEF tank – drain and clean with water, clean filler neck strainer	32	12	
Diffuser assembly, rain cap & drain tube – check proper functioning, clean	34	24	
DEF pump – replace filter element	32	36	
05 COOLING			
Radiator fan gearbox – check oil level, add if required	25	12	G
Coolant surge tank – test coolant solution	27	12	
Coolant filter – change (long life filter with extended life coolant)	28	12	
Radiator fan drive belt – inspect for cracks or frayed material, replace if required	25	24	
Radiator fan gearbox – change oil	25	48	G
Cooling system – drain, flush & refill (with extended life coolant)	27	48	C
06 ELECTRICAL			
Battery terminals – clean and coat terminals		12	
Bosch HD10 alternator brushes – check and replace if required		48	
Alternators – remove belts, check for noisy bearings, bearing play		3	
07 TRANSMISSION [9]			
Filled with TES389 approved fluid, with **Prognostics mode disabled** – see TABLE 1 in *Section 07: Transmission* for fluid and filter change	20		I
Filled with TranSynd or TES295 approved fluid only, no mixture[10], with **Prognostics mode disabled** – See TABLE 2 in *Section 07: Transmission* for fluid and filter change	20		H
Filled with TranSynd or TES295 approved fluid only, no mixture with **Prognostics mode enabled** [11] - Change fluid & filters when indicated by TRANSMISSION SERVICE indicator or 60 month whichever occurs first. In addition, change filters with every fluid change.	20	60	H

[8] See paragraph 2.2 of this section for lubricant specifications.

[9] In the absence of a fluid analysis program, the fluid change interval listed in Table 1, Table 1 & Table 3 should be used. Change filters according to Table 1, Table 2 & Table 3 even if a fluid analysis shows that the fluid doesn't need to be changed.

[10] When the transmission contains a mixture of fluids (defined as the quantity of non-TranSynd/ non-TES 295 fluid remaining in the transmission after a fluid change combined with the quantity of TranSynd or TES295 required to fill the transmission to the proper level), perform the fluid and filter change according to the TES389 intervals.

LUBRICATION AND SERVICING SCHEDULE H3-45 VIP & X3-45 VIP MOTORHOMES (Private Use)	ITEM	EVERY (months)	LUBRICANT / FLUID [8]
Filled with TES389 approved fluid only, no mixture with **Prognostics mode enabled** – Change fluid & filters when indicated by TRANSMISSION SERVICE indicator or 24 month whichever occurs first. In addition, change filters with every fluid change.	20	24	H
09 PROPELLER SHAFT			
Universal joint **–** grease on fitting on each universal joint	18	12	K
11 REAR AXLE			
Drive axle – check differential oil level, add if necessary	17	12	E
Drive axle – change differential oil, clean breathers	17	12	E
Tag axle lever pivot, grease one fitting on each pivot	19	12	K
Drive axle – change differential oil, clean breathers (with full synthetic oil)	17	48	F
12 BRAKE & AIR			
Air tanks – drain water from all tanks		12	
Brake pads[12] – check pad wear indicator		12	
Check caliper running clearance, check condition of caliper cover, slack adjuster cap and guide pin assembly covers		12	
Abs & electronic stability control systems – check proper functioning		12	
Air dryer – change cartridge	13	24	
Accessories air filter – change filter element	2	48	
13 WHEELS, HUBS & TIRES			
Unitized hub bearing, front and tag axle – inspect, check end play. Refer to See Dana Spicer Maintenance Manual Model NDS Axle Range	8	12	
14 STEERING			
Steering knuckle (king) pins – check play	8	12	
Steering knuckle (king) pins – grease two fittings per knuckle	8	12	K
Tie rod ends – clean and grease one fitting at each end		12	K
Drag link ends – clean and grease two fittings at each end		12	K
Tie rod end & drag link end ball joints – inspect for corrosion		12	
Power steering reservoir filter cartridge and fluid – replace	23	12	B
Idler arm – grease fitting		12	K
Bell crank – grease fitting		12	K
Relay rod ends – grease one fitting at each end		12	K
16 SUSPENSION			
Independent front suspension upper a-arm ball joint – grease fittings		12	L
22 HEATING & AIR CONDITIONING			
A/C compressor – check oil and replenish if required	44	12	D
A/C compressor – empty shaft seal oil collection tube (Bitzer A/C compressor)	42	12	
A/C receiver tank – check refrigerant level, add if required	42	12	
Refrigerant moisture indicator – check filter dryer unit, replace according to moisture indicator	43	12	
HVAC air filters – clean all filter elements	41, 45	12	
A/C compressor drive belt – check		24	

[11] Extended TranSynd or TES295 fluid and filter change intervals are only allowed with Allison High-Capacity filters.

[12] At each pad replacement, check slack adjuster operation, perform caliper slide check and inspect visually all sealing elements & caps.

	CHANGE LOG - LUBRICATION AND SERVICING SCHEDULE	DATE
1	ADDED: 04 EXHAUST & AFTERTREATMENT SYSTEM - Diffuser assembly, rain cap & drain tube – check proper functioning, clean	Sept.04, 2014
2	ADDED: 06 ELECTRICAL – Alternators – remove belts, check for noisy bearings, bearing play	Dec.03,2024
3		

LUBRICATION AND SERVICING SCHEDULE	Item	Months	Odometer reading [1] (miles / km) For higher odometer readings, repeat at the frequency interval established																															LUBRICANT /FLUID [2]
			6 250 / 10 000	12 500 / 20 000	18 750 / 30 000	25 000 / 40 000	31 250 / 50 000	37 500 / 60 000	43 750 / 70 000	50 000 / 80 000	56 250 / 90 000	62 500 / 100 000	68 750 / 110 000	75 000 / 120 000	81 250 / 130 000	87 500 / 140 000	93 750 / 150 000	100 000 / 160 000	106 250 / 170 000	112 500 / 180 000	118 750 / 190 000	125 000 / 200 000	131 250 / 210 000	137 500 / 220 000	143 750 / 230 000	150 000 / 240 000	185 000 / 300 000	200 000 / 320 000	225 000 / 360 000	250 000 / 400 000	275 000 / 440 000	300 000 / 500 000	500 000 / 800 000	600 000 / 960 000	
			proceed to maintenance operation at																							each								
GENERAL																																		
Flexible hoses, thoroughly inspect all hoses	-	12								●								●							●									
01 ENGINE																																		
Air cleaner, change as per mileage or according to restriction indicator	30	24																							●									
Engine oil and filter, change (normal[3] operation condition) **Volvo recommends 35,000miles/55,000km**	24						●					●				●					●													A
Engine oil and filter, change (heavy[3] operation condition)	24					●				●				●				●				●				●									A
Valves and injectors, initial adjust	-	12																				●												
Valves and injectors, check and adjust	-	24																												●				
Drive belts, check	-	36																														●		
03 FUEL																																		
Primary & secondary fuel filters, change at every engine oil change **Volvo recommends 35,000miles/55,000km**	21 22						●					●				●					●													
Preheater fuel filter , replace	50									●								●							●									
04 EXHAUST AND AFTERTREATMENT SYSTEM																																		
DPF filter, change	-																												●					
DEF tank, drain and clean with water, clean filler neck strainer	32	12																								●								
DEF pump, replace filter element	32	36																							●									
05 COOLING																																		
Cooling fan gearbox, check oil level and add if required	25	6		●		●		●		●		●		●		●		●		●		●		●	●									G
Cooling fan gearbox, change oil	25	12								●								●							●									G
Coolant surge tank, test coolant solution	27	12		●		●		●		●		●		●		●		●		●		●		●	●									
Coolant filter, change (with Extended Life Coolant)	28	12																							●									
Cooling system, drain, flush & refill (with Extended Life Coolant) (may require “extender”)	27	48																															●	C
06 ELECTRICAL																																		
Battery terminals, clean and coat terminals	-	12																																
Bosch HD10 alternator brushes, check and replace if required (commuter application)	-	-								●								●							●									

[1] Proceed to maintenance operation at distance indicated on odometer or specified number of month, whichever comes first.
[2] See paragraph 2.2 of this section for lubricant specifications.
[3] Normal=fuel consumption more than 6 MPG (less than 39 L/100km) ; Heavy= fuel consumption between 4.7 MPG and 6 MPG (between 39 L/100km and 50 L/100km)

TABLE A

LUBRICATION AND SERVICING SCHEDULE	Item	Months	Odometer reading [1] (miles / km) For higher odometer readings, repeat at the frequency interval established																																		LUBRICANT /FLUID [2]
			6 250 / 10 000	12 500 / 20 000	18 750 / 30 000	25 000 / 40 000	31 250 / 50 000	37 500 / 60 000	43 750 / 70 000	50 000 / 80 000	56 250 / 90 000	62 500 / 100 000	68 750 / 110 000	75 000 / 120 000	81 250 / 130 000	87 500 / 140 000	93 750 / 150 000	100 000 / 160 000	106 250 / 170 000	112 500 / 180 000	118 750 / 190 000	125 000 / 200 000	131 250 / 210 000	137 500 / 220 000	143 750 / 230 000	150 000 / 240 000	185 000 / 300 000	200 000 / 320 000	225 000 / 360 000	250 000 / 400 000	275 000 / 440 000	300 000 / 500 000	500 000 / 800 000	600 000 / 960 000	
			proceed to maintenance operation at																							each								
Bosch HD10 alternator brushes, check and replace if required (for applications other than commuter)	-	-																●																
Alternators – remove belts, check for noisy bearings, bearing play		3		●																														
07 TRANSMISSION [4]																																		
Allison transmission filled with non-TranSynd or non-TES 295 fluid – Refer to TABLE 1 in Section 07: Transmission for fluid and filter change	20																																	I
Allison transmission filled with TranSynd or TES295 synthetic fluid only, no mixture[5], with **Prognostics mode disabled** – Refer to TABLE 2 in Section 07: Transmission for fluid and filter change	20																																	H
Allison transmission filled with TranSynd or TES295 synthetic fluid only, no mixture with **Prognostics mode enabled** [5, 6] - Change fluid & filters when indicated by TRANSMISSION SERVICE indicator or 60 month (five years) whichever occurs first. In addition, change filters with every fluid change.	20	60																																H
Transmission oil cooler, replace unit if vehicle is equipped with transmission retarder	-	24																																
Volvo I-Shift Transmission **(extended oil drain)**, change fluid & filter if filled with Castrol Syntrans SAE 75W85	20	60																														●		J
Volvo I-Shift Transmission, change fluid & filter when not using Castrol Syntrans SAE 75W85	20	36																											●					J
09 PROPELLER SHAFT																																		
Universal joint and slip joint, grease fittings	18	6	●	●	●	●	●	●	●	●	●	●	●	●	●	●	●	●	●	●	●	●	●	●	●	●								K
10 FRONT AXLE																																		
Steering knuckle (king) pins, inspect 30,000 miles	8	6					●					●					●				●					●									

[4] Allison Transmission recommends that customers use fluid analysis as the primary method for determining fluid change intervals. In the absence of a fluid analysis program, the fluid change interval listed in the charts above and below should be used. Change filters according to the charts above and below even is a fluid analysis shows that the fluid doesn't need to be changed.

[5] When the transmission contains a mixture of fluids (defined as the quantity of non-TranSynd/ non-TES 295 fluid remaining in the transmission after a fluid change combined with the quantity of TranSynd™ required to fill the transmission to the proper level), perform the fluid and filter change according to the non-TranSynd™/non-TES 295 intervals.

[6] Extended TranSynd™/TES 295 fluid and filter change intervals are only allowed with Allison High-Capacity filters. If using Gold Series filter, refer to TABLE 3 in Section 7 of this manual for proper fluid and filter change intervals.

TABLE A

LUBRICATION AND SERVICING SCHEDULE	Item	Months	Odometer reading [1] (miles / km) For higher odometer readings, repeat at the frequency interval established																																		LUBRICANT /FLUID [2]
			6 250 / 10 000	12 500 / 20 000	18 750 / 30 000	25 000 / 40 000	31 250 / 50 000	37 500 / 60 000	43 750 / 70 000	50 000 / 80 000	56 250 / 90 000	62 500 / 100 000	68 750 / 110 000	75 000 / 120 000	81 250 / 130 000	87 500 / 140 000	93 750 / 150 000	100 000 / 160 000	106 250 / 170 000	112 500 / 180 000	118 750 / 190 000	125 000 / 200 000	131 250 / 210 000	137 500 / 220 000	143 750 / 230 000	150 000 / 240 000	185 000 / 300 000	200 000 / 320 000	225 000 / 360 000	250 000 / 400 000	275 000 / 440 000	300 000 / 500 000	500 000 / 800 000	600 000 / 960 000	
			proceed to maintenance operation at																							each								
Steering knuckle (king) pins, grease two fittings per knuckle	8	6	●	●	●	●	●	●	●	●	●	●	●	●	●	●	●	●	●	●	●	●	●	●	●											K
11 REAR AXLE																																					
Differential, check oil level, add if required	17	6				●				●				●				●				●				●											E
Differential, change oil, clean breathers	17	12																●																			E
Differential, change oil, clean breathers (with full synthetic oil)	17	48																											●								F
Tag axle lever pivot, grease one fitting on each pivot	19	6	●	●	●	●	●	●	●	●	●	●	●	●	●	●	●	●	●	●	●	●	●	●	●	●											K
12 BRAKE & AIR																																					
Air tanks, drain water from all tanks	-	12		●		●		●		●		●		●		●		●		●		●		●		●											
Accessories air filter, change filter element	2	24																●																			
Air dryer, change cartridge	13	24																●																			
Brake pads, check pad wear indicator and perform caliper slide check	-	12		●		●		●		●		●		●		●		●		●		●		●		●											
13 WHEELS, HUBS & TIRES																																					
Hub bearing inspect 30, 000 miles. See Dana Spicer Service Manual NDS Axle Range	8	12					●					●					●				●					●											
14 STEERING																																					
Steering tie rod ends, clean and grease one fitting at each end	5	6	●	●	●	●	●	●	●	●	●	●	●	●	●	●	●	●	●	●	●	●	●	●	●	●											K
Drag link ends, clean and grease one fitting at each end	3	6	●	●	●	●	●	●	●	●	●	●	●	●	●	●	●	●	●	●	●	●	●	●	●	●											K
Tie rod end & drag link end ball joints, inspect for corrosion		12																																			
Steering damper cylinder, grease one fitting at rod end	9	6	●	●	●	●	●	●	●	●	●	●	●	●	●	●	●	●	●	●	●	●	●	●	●	●											K
Power steering reservoir, replace oil and filter cartridges	23	12								●								●								●											B
VIP only- Idler arm, grease fitting	-	6	●	●	●	●	●	●	●	●	●	●	●	●	●	●	●	●	●	●	●	●	●	●	●	●											K
VIP only- Bell crank, grease fitting	-	6	●	●	●	●	●	●	●	●	●	●	●	●	●	●	●	●	●	●	●	●	●	●	●	●											K
VIP only- Relay rod ends, grease one fitting at each end	-	6	●	●	●	●	●	●	●	●	●	●	●	●	●	●	●	●	●	●	●	●	●	●	●	●											K
16 SUSPENSION																																					
Upper A-Arm ball joint, grease fitting	6	6	●	●	●	●	●	●	●	●	●	●	●	●	●	●	●	●	●	●	●	●	●	●	●	●											L
22 HEATING & AIR CONDITIONING																																					
A/C compressor, check oil level, add if required	44	6	●	●	●	●	●	●	●	●	●	●	●	●	●	●	●	●	●	●	●	●	●	●	●	●											D

TABLE A

LUBRICATION AND SERVICING SCHEDULE	Item	Months	Odometer reading [1] (miles / km) For higher odometer readings, repeat at the frequency interval established																															LUBRICANT /FLUID [2]
			6 250 / 10 000	12 500 / 20 000	18 750 / 30 000	25 000 / 40 000	31 250 / 50 000	37 500 / 60 000	43 750 / 70 000	50 000 / 80 000	56 250 / 90 000	62 500 / 100 000	68 750 / 110 000	75 000 / 120 000	81 250 / 130 000	87 500 / 140 000	93 750 / 150 000	100 000 / 160 000	106 250 / 170 000	112 500 / 180 000	118 750 / 190 000	125 000 / 200 000	131 250 / 210 000	137 500 / 220 000	143 750 / 230 000	150 000 / 240 000	185 000 / 300 000	200 000 / 320 000	225 000 / 360 000	250 000 / 400 000	275 000 / 440 000	300 000 / 500 000	500 000 / 800 000	600 000 / 960 000	
			proceed to maintenance operation at																							each								
A/C receiver tank, check refrigerant level, add if required	42	6	●	●	●	●	●	●	●	●	●	●	●	●	●	●	●	●	●	●	●	●	●	●	●									
Refrigerant moisture indicator, replace filter dryer unit according to moisture indicator (as needed)	43	6	●	●	●	●	●	●	●	●	●	●	●	●	●	●	●	●	●	●	●	●	●	●	●									
HVAC air filters, clean or replace all elements	41 45	6		●		●		●		●		●		●		●		●		●		●		●		●									
Parcel rack fan air filters, clean or replace	47	6		●		●		●		●		●		●		●		●		●		●		●		●									
Condenser discharge tube, qty:2, check to see if clogged [7]	-	3																																
Front discharge tube, qty:2, check to see if clogged	-	3																																
Evaporator discharge tube, qty:6, check to see if clogged	-	3																																
Evaporator motor, condenser motor, recirculating pump drive motor, inspect brush, replace if required	-	12								●								●							●									

[7] Discharge tubes are rubber tubes located under vehicle

TABLE A

CONTENTS

1 SLIDE-OUT 5
1.1 INNER STOPPER 5
1.1.1 Maintenance 5
1.1.2 Adjustment 5
1.2 "IN LIMIT" STOPPER 6
1.2.1 Maintenance 6
1.2.2 Adjustment 6
1.3 EXTERIOR EXTRUSION 6
2 SECURITY PIN 7
2.1 MAINTENANCE 7
2.2 AIR CYLINDER REPLACEMENT 7
3 ROOF REINFORCING ROD 7
4 RACK 8
4.1 MAINTENANCE 8
4.2 FRONT SLIDE-OUT RACK REPLACEMENT 8
4.3 REAR SLIDE-OUT RACK REPLACEMENT 8
5 PINION 8
5.1 PINION AND KEYLESS BUSHING POSITIONING 9
5.2 FRONT SLIDE-OUT SHAFT PINION REPLACEMENT 9
5.3 REAR SLIDE-OUT SHAFT PINION REPLACEMENT 9
5.4 KEYLESS BUSHING 10
5.4.1 Installation 10
6 ELECTRIC MOTOR 13
6.1 MAINTENANCE 13
6.2 REPLACEMENT 13
7 SPEED REDUCTION GEARBOX 13
7.1 MAINTENANCE 13
7.2 GEARBOX REPLACEMENT 13
8 JAW COUPLING 14
8.1 MAINTENANCE 14
8.2 REPLACEMENT & ADJUSTMENT 14
9 FLANGE BEARING 14
10 LOCKING COLLAR 15
10.1 INSTALLATION 15
11 LINEAR BEARING 15
11.1 MAINTENANCE 15
11.2 REPLACEMENT & ADJUSTMENT 15
11.3 LEVEL & TILT ADJUSTMENT 15
11.3.1 Procedure 15
12 RAIL 17

12.1 MAINTENANCE 17
12.2 REPLACEMENT 17

13 ACETAL PLASTIC BLOCKS 17

13.1 REMOVAL / INSTALLATION 18

14 SLIDE-OUT PNEUMATIC SYSTEM 18

14.1 DESCRIPTION 18
14.2 MAINTENANCE 19
14.3 SEAL 20
14.3.1 Maintenance 21
14.3.2 Seal assembly removal 21
14.3.3 Seal assembly installation 21
14.3.4 Slide-out 2" inside retraction 22

15 SLIDE-OUT ELECTRICAL SYSTEM 22

15.1 ELECTRICAL INTERCONNECTION WITH PREVOST VEHICLE 23
15.2 SLIDE-OUT BREAKERS / FUSES 23
15.2.1 Multiplex fuses 24
15.3 PROBING VOLTAGE ON THE MULTIPLEX CIRCUITS 24
15.4 MODULE REPLACEMENT 24
15.4.1 I/O-B replacement 24
15.4.2 CECM module replacement 24
15.5 SLIDE-OUT LIMIT SENSORS 25
15.5.1 Maintenance and adjustment 25

16 SLIDE-OUT EXTERIOR FINISHING PANELS & WINDOWS 26

16.1 FACE PANEL REMOVAL 26
16.2 FACE PANEL INSTALLATION 26
16.3 SIDE PANELS REMOVAL 26
16.4 SIDE PANELS INSTALLATION 27
16.5 TOP AND BOTTOM PANEL REMOVAL 28
16.6 TOP AND BOTTOM PANEL INSTALLATION 28
16.7 WINDOWS REMOVAL 29
16.8 FIXED WINDOWS INSTALLATION 29
16.9 AWNING WINDOW INSTALLATION 31
16.10 SLIDING WINDOW INSTALLATION 33
16.11 FINISHING JOINT 35
16.11.1 Slide-out face 35
16.11.2 Slide-out side 35
16.11.3 Slide-out bottom 36
16.11.4 Top of Slide-out 36

17 WELDING PRECAUTION 36

18 SLIDE-OUT MANUAL OVERRIDE PROCEDURES 36

18.1 PRELIMINARY CONDITIONS FOR MANUAL OVERRIDE PROCEDURE 37
18.1.1 Manual retracting procedure – Front and rear slide-out 37
18.1.2 Manual extending procedure – Front and rear slide-out 38

19 SLIDE-OUT MAXIMUM LOAD **39**

20 CONVERSION CHECKLIST **40**

20.1 ERROR CONDITION OR MISSING OPERATION CONDITION 41
20.2 TROUBLESHOOTING – OPERATING CONDITIONS & CONTROL 41
20.3 TROUBLESHOOTING - MECHANICAL COMPONENTS 43
20.4 SLIDE-OUT FAULT MESSAGE ON MESSAGE CENTER DISPLAY (MCD) 46

ILLUSTRATIONS

FIGURE 1 : FRONT SLIDE-OUT 5
FIGURE 2 : REAR SLIDE-OUT 5
FIGURE 3 : SIDE INNER STOPPER ADJUSTMENT 5
FIGURE 4 : UPPER INNER STOPPERS ADJUSTMENT 5
FIGURE 5 : LOWER "IN LIMIT" STOPPER 6
FIGURE 6 : UPPER "IN LIMIT" STOPPER 6
FIGURE 7 : EXTERIOR EXTRUSION 6
FIGURE 8 : SECURITY PIN AIR CYLINDER REMOVAL 7
FIGURE 9 : FRONT SLIDE-OUT ROOF REINFORCING ROD 7
FIGURE 10 : RACK 8
FIGURE 11 : PINION AND KEYLESS BUSHING POSITIONING 9
FIGURE 12 : PINION AND KEYLESS BUSHING AS SEEN FROM EVAPORATOR COMPARTMENT 9
FIGURE 13 : MECHANICAL COMPONENTS (TYPICAL) 9
FIGURE 14 : KEYLESS BUSHING TIGHTENING 10
FIGURE 15 : TORQUE WRENCH FORMULA 10
FIGURE 16 : KEYLESS BUSHING INSTALLATION INSTRUCTIONS 12
FIGURE 17 : ELECTRIC MOTOR AND SPEED REDUCTION GEARBOX 13
FIGURE 18 : DRIVE MOTOR/GEARBOX ASSEMBLY MOUNTING BOLTS 14
FIGURE 19 : CLAMPING HUB POSITION ON GEARBOX SHAFT 14
FIGURE 20 : JAW COUPLING 14
FIGURE 21 : SLIDE-OUT LEVEL ADJUSTEMENT 15
FIGURE 22 : SLIDE-OUT LEVELING 16
FIGURE 23 : TILT ADJUSTMENT 16
FIGURE 24 : RAIL POSITIONING 17
FIGURE 25 : ACETAL PLASTIC BLOCKS 17
FIGURE 26 : REMOVE THE UPPER ACETAL PLASTIC BLOCKS WITH A PICKING TOOL 18
FIGURE 27 : LOWER ACETAL PLASTIC BLOCK INSERTION 18
FIGURE 28 : FRONT SERVICE COMPARTMENT 19
FIGURE 29 : PNEUMATIC COMPONENT PANEL 20
FIGURE 30 : SEAL ASSEMBLY 20
FIGURE 31 : REAR SLIDE-OUT INFLATABLE SEAL AIR INLET 21
FIGURE 32 : SLIDE-OUT 2" INSIDE – UPPER PART 22
FIGURE 33 : DASHBOARD SLIDE-OUT TELLTALE LIGHT 23
FIGURE 34 : MAIN BREAKER IN ENGINE R.H. SIDE ACCESS COMPARTMENT 23
FIGURE 35 : SLIDE-OUT CONTROL PANEL 23
FIGURE 36 : VEC CIRCUIT BREAKERS & FUSES 24
FIGURE 37 : FRONT SLIDE-OUT SENSORS 25
FIGURE 38 : REAR SLIDE-OUT SENSORS 25
FIGURE 39 : MAGNETS ON SLIDE-OUT UNDERBODY 25
FIGURE 40 : SLIDE-OUT PANELS AND WINDOWS 26
FIGURE 41 : SIDE PANEL INSTALLATION – DOUBLE FACE ADHESIVE TAPE APPLICATION ON THE SLIDE-OUT STRUCTURE 27
FIGURE 42 : SIDE PANEL INSTALLATION – SIKA 206 G+P APPLICATION 27
FIGURE 43 : SIDE PANEL INSTALLATION – SIKA TACK+BOOSTER APPLICATION 27
FIGURE 44 : SIDE PANEL INSTALLATION 28
FIGURE 45 : TOP AND BOTTOM PANEL INSTALLATION - DOUBLE FACE ADHESIVE TAPE APPLICATION 28

FIGURE 46 : TOP AND BOTTOM PANEL INSTALLATION - SIKA 206 G+P APPLICATION 29
FIGURE 47 : TOP AND BOTTOM PANEL INSTALLATION - SIKA TACK+BOOSTER APPLICATION 29
FIGURE 48 : TOP PANEL INSTALLATION 29
FIGURE 49 : BOTTOM PANEL INSTALLATION 29
FIGURE 50 : FACE FIXED WINDOWS - RUBBER SEAL INSTALLATION 30
FIGURE 51 : FACE FIXED WINDOWS - RUBBER SEAL INSTALLATION 30
FIGURE 52 : FACE FIXED WINDOWS – 3/16 X 1/2 DOUBLE FACE ADHESIVE TAPE INSTALLATION 30
FIGURE 53 : SIDE FIXED WINDOW – ¼ X ½ DOUBLE FACE ADHESIVE TAPE INSTALLATION 30
FIGURE 54 : FACE FIXED WINDOW AND HALF-WINDOW – SIKA AKTIVATOR 30
FIGURE 55 : SIDE FIXED WINDOW – SIKA AKTIVATOR 30
FIGURE 56 : FACE FIXED WINDOW INSTALLATION – SIKA TACK+BOOSTER 30
FIGURE 57 : FACE FIXED HALF-WINDOW INSTALLATION – SIKA TACK+BOOSTER 30
FIGURE 58 : SIDE FIXED WINDOW – SIKA TACK + BOOSTER 31
FIGURE 59 : FACE FIXED WINDOW INSTALLATION 31
FIGURE 60 : SIDE FIXED WINDOW 31
FIGURE 61 : AWNING WINDOW - RUBBER BUMPER INSTALLATION 31
FIGURE 62 : SIDE BUMPERS 32
FIGURE 63 : MASKING TAPE APPLICATION 32
FIGURE 64 : SIKA 255 APPLICATION 32
FIGURE 65 : AWNING WINDOW – SIKA AKTIVATOR 32
FIGURE 66 : AWNING WINDOW – SIKA 255 APPLICATION 32
FIGURE 67 : CORRECT TIGHTENING SEQUENCE 32
FIGURE 68 : SMOOTH DOWN THE JOINT 33
FIGURE 69 : AWNING WINDOW – SEAL THE UPPER CORNERS 33
FIGURE 70 : AWNING WINDOW – SEAL THE CHINK 33
FIGURE 71 : SLIDING WINDOW - SIKA AKTIVATOR 34
FIGURE 72 : SLIDING WINDOW - SIKA AKTIVATOR 34
FIGURE 73 : AWNING WINDOW – SIKA 252 APPLICATION 34
FIGURE 74 : CORRECT TIGHTENING SEQUENCE 34
FIGURE 75 : SLIDING WINDOW – SEAL THE UPPER CORNERS 34
FIGURE 76 : SEAL 34
FIGURE 77 35
FIGURE 78 35
FIGURE 79 35
FIGURE 80 35
FIGURE 81 35
FIGURE 82 36
FIGURE 83 36
FIGURE 84 36
FIGURE 85 36
FIGURE 86 36
FIGURE 87 : COMPARTMENTS LOCATION 37
FIGURE 88 : VEC CIRCUIT BREAKERS ON SLIDE-OUT CONTROL PANEL 37
FIGURE 89 : MAIN SLIDE-OUT BREAKER IN ENGINE R.H. SIDE ACCESS COMPARTMENT 37
FIGURE 90 : SLIDE-OUT CONTROL PANEL 37
FIGURE 91 : INFLATABLE SEAL RELIEVING SHUT-OFF VALVE 38
FIGURE 92 : SLIDE-OUT MOTOR ROTATION 38
FIGURE 93 : INFLATABLE SEAL PRESSURE GAGE 38
FIGURE 94 : SLIDE-OUT MOTOR ROTATION 39
FIGURE 95 : FRONT SLIDE-OUT DEFLECTION 39

1 SLIDE-OUT

1.1 INNER STOPPER

The front slide-out is equipped with six inner stoppers laid out in the following way: two stoppers on the top horizontal member of the slide-out, and two stoppers on each vertical upright, while the rear slide-out is equipped with only three stoppers (Fig. 1 & 2). The upper inner stoppers are used to provide a support to position perpendicularly the slide-out with the vehicle structure.

The side inner stoppers are used to block the extension of the slide-out. They act as ultimate physical limits but take note that when the “out limit” sensors are properly adjusted, the slide-out extension stops before the side inner stoppers reach the side structure keys (FIGURES 1 & 2).

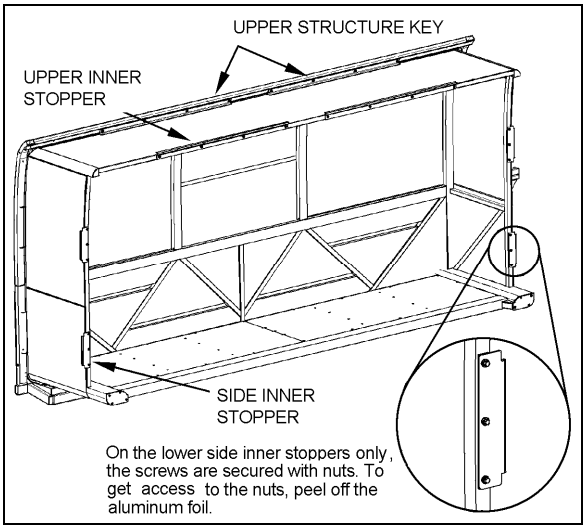

FIGURE 1 : FRONT SLIDE-OUT

1.1.1 Maintenance

Check that the inner stopper screws are tight and that no damage or deformation has taken place for both the side and the upper stoppers.

1.1.2 Adjustment

1. Adjust the side inner stoppers at 1/8" from the vehicle side structure keys, and tighten the screws. Make sure there is a minimum gap of 2mm (0.079”) between the side inner stopper and the side window pane (FIGURE 3). Use shim as required.
2. Adjust the upper structure key and the upper inner stoppers according to FIGURE 4 with <u>the seal deflated</u>. When inflating, the seal presses the roof structure upward and at that moment, the upper inner stopper comes into contact with the upper structure key

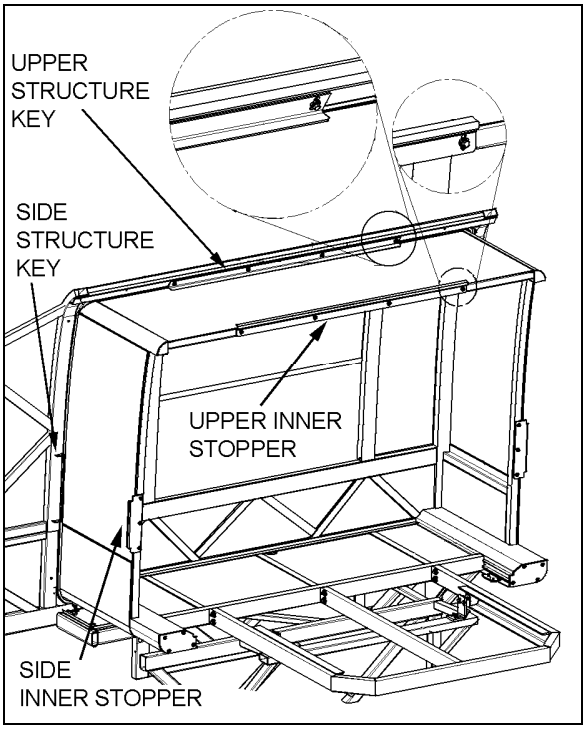

FIGURE 2 : REAR SLIDE-OUT

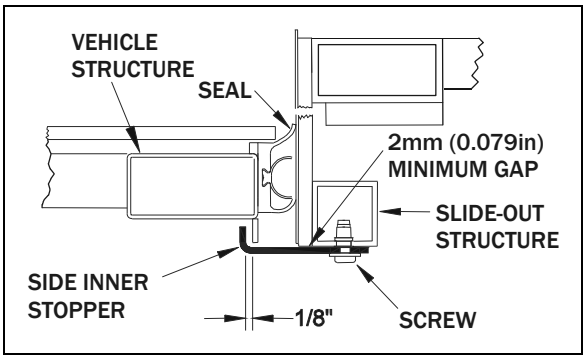

FIGURE 3 : SIDE INNER STOPPER ADJUSTMENT

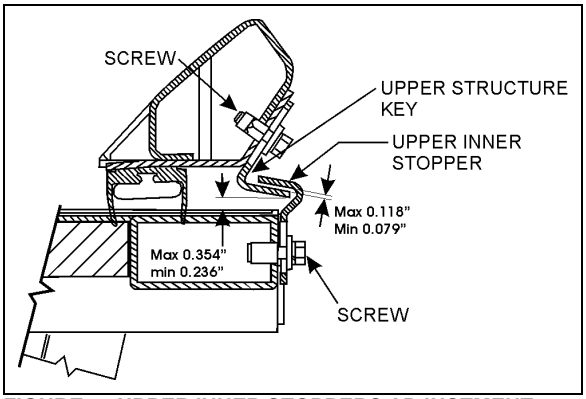

FIGURE 4 : UPPER INNER STOPPERS ADJUSTMENT

1.2 "IN LIMIT" STOPPER

Each slide-out has four "in limit" stoppers. Two "in limit" stoppers are mounted on the exterior extrusion at the top of the slide-out (FIGURE 6) and two other "in limit" stoppers are mounted under the slide-out, next to the rail (FIGURE 5). These stoppers are use to position the outer face of the slide-out flush with the vehicle body when retracted.

1.2.1 Maintenance

Check that the "in limit" stoppers are clean and that there is no foreign matter accumulated between the stopper and their bearing surface. Check that the screws and set screws (where applicable) locking the stoppers in proper position are tight.

1.2.2 Adjustment

NOTE
To properly adjust the "in limit" stoppers, the slide-out system must be turned off to prevent the "in limit" sensors from stopping the slide-out movement before having the "in limit" stoppers contacting their bearing surface.

1. Extend the slide-out partially.
2. Set the ignition switch to the OFF position.
3. To adjust the lower "in limit" stoppers, loosen the set screw and then rotate the stopper CW or CCW to move it back or forward depending on the required adjustment. To adjust the upper plastic "in limit" stoppers, add or remove shims as required between the stopper and the extrusion.
4. Using the manual override procedure (section 18), move the slide-out up to its full "in" position.
5. Using a straight edge, check if the outer face of the slide-out is flush with the vehicle body with the stoppers contacting their bearing surface. Readjust the stoppers if necessary.
6. Readjust the "in limit" sensor.

NOTE
To make sure that the lower "in limit" stoppers are contacting their bearing surface (the acetal plastic blocks) when the slide-out is closed, put white paint on the "in limit" stopper before and check if the acetal plastic blocks are marked with paint.

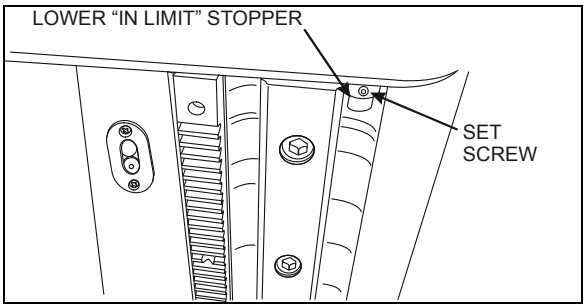

FIGURE 5 : LOWER "IN LIMIT" STOPPER

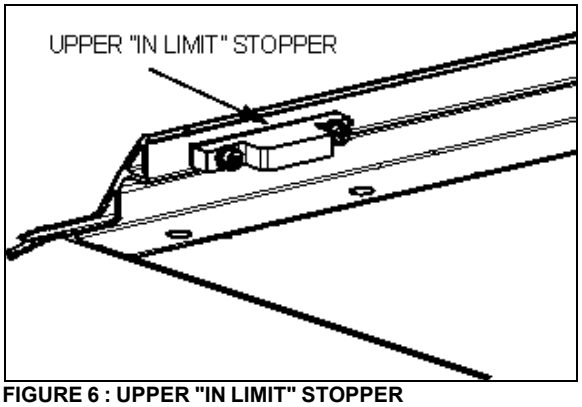

FIGURE 6 : UPPER "IN LIMIT" STOPPER

1.3 EXTERIOR EXTRUSION

The exterior extrusion function is to provide a leaning surface for the inflatable seal. When inflating, the seal leans against the extrusion and presses the roof structure upward until it rests on the inner side of the extrusion.

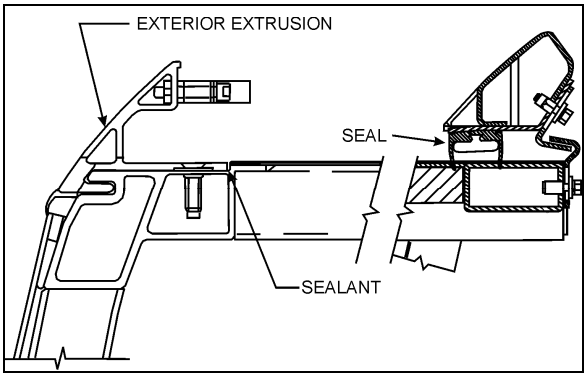

FIGURE 7 : EXTERIOR EXTRUSION

Maintenance

Inspect the exterior extrusion for any deformation or deterioration. Check that the screws are tight. Inspect the sealant condition on screw head and between the extrusion and the vehicle structure, and also at both ends of the extrusion. If needed, clean old sealant and replace with Sika 221 sealant or equivalent product.

2 SECURITY PIN

During normal ride, the slide-out cannot extend by itself because the 740:1 ratio speed reduction worm gear type gearbox system is not reversible, the output shafts are self-locking. The security pin purpose is to lock the slide-out in retracted position if an accident occurs. It is built to stand a great lateral acceleration of the slide-out.

The system consists of a stainless steel pin connected to a single action/spring return pneumatic cylinder (FIGURE 8). The pin engages in the slide-out receptacle with releasing of the parking brake. A knocking sound may be heard at this moment. An O-ring is located at the base of the pin housing to reduce knocking when the pin retracts. The lower hole on the pin housing permits water to drain. The upper hole permits to insert a small screwdriver to prevent the pin from rotating when the air cylinder has to be removed.

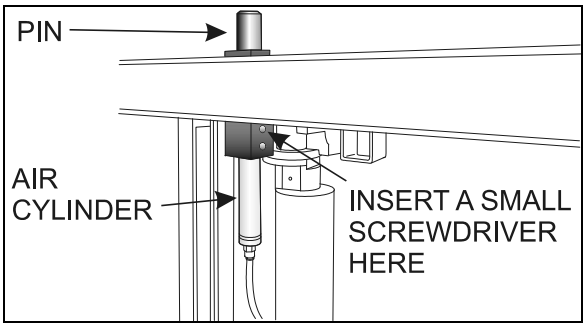

FIGURE 8 : SECURITY PIN AIR CYLINDER REMOVAL

2.1 MAINTENANCE

Inspect air cylinder and fitting for air leaks. Periodically, check that the pin retracts and engages in the receptacle as it should when the parking brake is applied or released. To do slide-out, the slide-out must be in its full “IN” position with the engine running. If the pin produces excessive knocking when it engages with releasing of the parking brake, reduce air cylinder speed by adjusting the air flow regulator on the pneumatic control panel (FIGURE 29, item 11).

2.2 AIR CYLINDER REPLACEMENT

1. Assure the parking brake is applied.
2. Disconnect the cylinder air tubing from the 2nd baggage compartment (front slide-out) or under the bed structure (rear slide-out).
3. Using a wrench at its lower end, unscrew the air cylinder from the pin housing.
4. Insert a small screwdriver through the pin and housing to prevent rotation of the pin an then, unscrew the cylinder rod from the pin.
5. Transfer the fitting on the new cylinder. Place Teflon on threads.
6. Cylinder installation is like removal but in reverse order.

3 ROOF REINFORCING ROD

CAUTION

The front slide-out roof reinforcing rod may have to be adjusted after a load variation inside the vehicle or on the top of the vehicle.

CAUTION

Always lock the turnbuckle using the jam nut to prevent loosening.

The roof reinforcing rod is located on the upper horizontal member of the front slide-out opening and is welded on the roof arches (FIGURE 9).

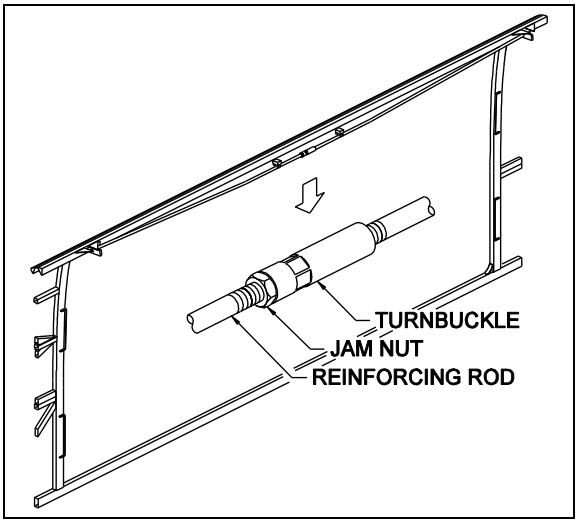

FIGURE 9 : FRONT SLIDE-OUT ROOF REINFORCING ROD

This rod allows an adjustment between the slide-out horizontal member and the roof. When screwing the turnbuckle, the roof is moved upward, and vice versa. Use this rod to adjust the horizontal member parallel to the slide-out. A member not parallel with the slide-out may

cause the inflatable seal to leave the wiper seal or may reduce the inflatable seal and wiper seal efficiency.

4 RACK

Slide-out movement is made by a system of racks and pinions. There are two racks on each slide-out.

4.1 MAINTENANCE

Once a year, check the racks for broken or worn tooth, especially the front slide-out racks. Also, check the rack fastening hole teeth that are weaker and might break (FIGURE 10). Replace the racks if excessive wear is present. Clean racks from sand or other debris. Check that the racks are properly secured. Check the backlash between the gear and the rack. Excessive backlash indicates rack wear.

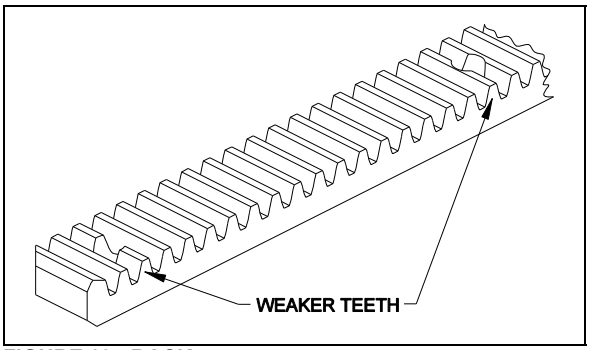

FIGURE 10 : RACK

4.2 FRONT SLIDE-OUT RACK REPLACEMENT

1. Remove the slide-out from the vehicle (removal must be performed according to the Slide-Out Removal Procedure. Ask to your Prevost service representative).
2. From under the slide-out, unscrew all the rack screws and remove the rack.
3. Install a new rack. Tighten the screws to a maximum torque of 2 ft-lbs. Use Loctite™ 242 or equivalent product on threads.
4. Reinstall the front slide-out inside the vehicle.

CAUTION

The counterboring required for recessed screw heads reduce plastic thickness. Do not torque higher than specified.

4.3 REAR SLIDE-OUT RACK REPLACEMENT

1. Using the slide-out handheld control or the manual override procedure (section 18, if using the manual override procedure, do not forget to deflate the inflatable seal completely), extend the slide-out about one foot.
2. From outside, unscrew and remove only the first two screws of the rack to be changed.
3. Using the manual override procedure (section 18) only, retract the slide-out to its fully closed position.
4. Loosen the pinion keyless bushing of the rack to be changed.
5. From under the slide-out, unscrew all the rack screws and remove the rack.
6. Install a new rack between the slide out structural rack seat and the pinion. Tighten the screws to a maximum torque of 2 ft-lbs. Use Loctite™ 242 or equivalent product.

CAUTION

The counterboring required for recessed screw heads reduce plastic thickness. Do not torque higher than specified.

7. Tighten the pinion keyless bushing as described in section 5.4.
8. Using the slide-out manual override procedure only, extend the slide-out about one foot.
9. Tighten the two remaining crews to a maximum torque of 2 ft-lbs. Use Loctite™ 242 or equivalent product.
10. Using the slide-out handheld control switch or the manual override procedure, retract the slide-out to its fully closed position.
11. Re-inflate the air seal at 10 psi.

5 PINION

CAUTION

Make sure all keyless bushings are tightened to 125 lb-ft before moving the slide-out. Refer to section 5.4 for torque wrench settings. A lower torque value may cause the bushing to slip on the shaft, and a higher torque value may break the bushing.

5.1 PINION AND KEYLESS BUSHING POSITIONING

For proper functioning, respect the positioning shown on the following figure.

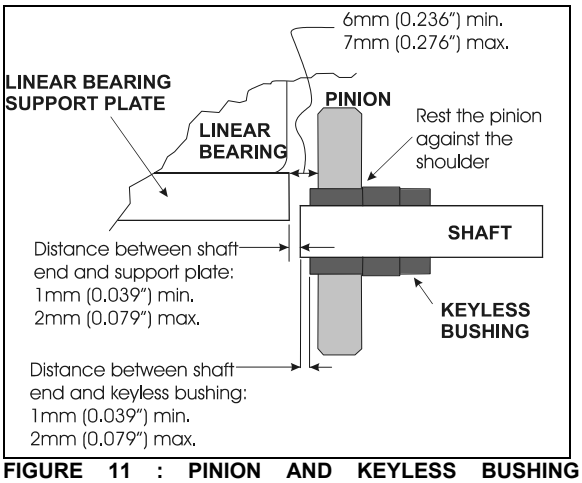

FIGURE 11 : PINION AND KEYLESS BUSHING POSITIONING

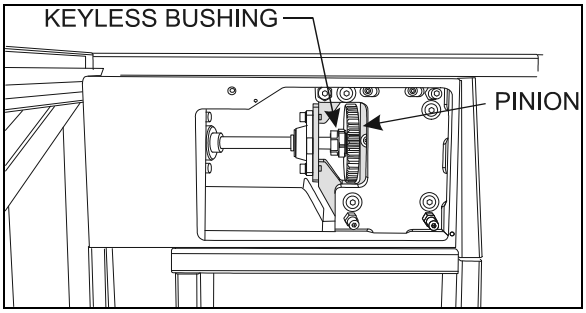

FIGURE 12 : PINION AND KEYLESS BUSHING AS SEEN FROM EVAPORATOR COMPARTMENT

5.2 FRONT SLIDE-OUT SHAFT PINION REPLACEMENT

CAUTION

Before reinstalling the pinion, clean the following surfaces with alcohol to prevent slippage.

- Pinion bore;
- Keyless bushing I.D. and O.D.;
- Shaft.

Before proceeding with the front slide-out shaft pinion replacement, check the following conditions:

- The locking collars located on the side of the pinion being replaced are disengaged;
- The drive motor/gearbox assembly is removed (see section 7.2);

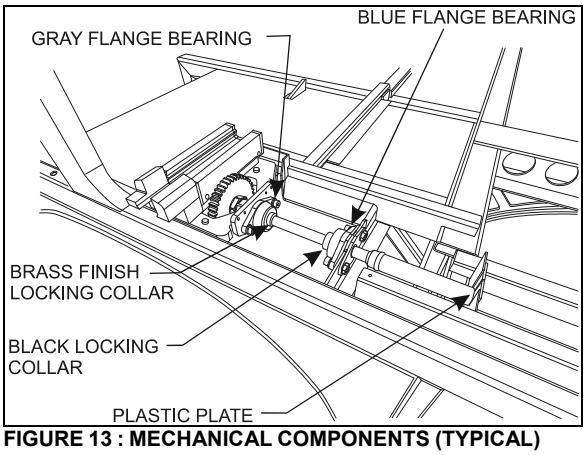

FIGURE 13 : MECHANICAL COMPONENTS (TYPICAL)

1. Loosen the keyless bushing (see section 5.4) of the pinion to be replaced. Slide the pinion and its bushing out of the shaft. Check the keyless bushing condition and replace if needed.

NOTE

If necessary, loosen the blue and gray flange bearing to move the pinion away from the rack.

2. Assemble new pinion on the keyless bushing and then slide on the shaft. Do not tighten the bushing at this moment.
3. Properly position the shaft end in relation to the linear bearing support plate (See FIGURE 11) and then tighten the locking collars to maintain the shaft in that position.
4. Position pinion and keyless bushing as shown on FIGURE 11 and tighten the keyless bushing as described in section 5.4.
5. Reinstall the drive motor/gearbox assembly.

CAUTION

Make sure the keyless bushing is tightened to 125 lb-ft before moving the slide-out. Refer to section 5.4.1 for torque wrench settings.

5.3 REAR SLIDE-OUT SHAFT PINION REPLACEMENT

The procedure is similar to the front slide-out shaft pinion replacement. Gain access to the mechanism from under the bed structure. Refer to section 5.2.

5.4 KEYLESS BUSHING

The keyless bushings need a specific tightening torque value to ensure proper pinion transmitting torque. They also need specific tools to be tightened.

To tighten or loosen the keyless bushing, use those specific tools:

- crowfoot wrench 1 ½";
- torque wrench;
- combination wrench 1 ¾";
- pipe wrench;
- drive extension 5";
- socket 1 ½".

5.4.1 Installation

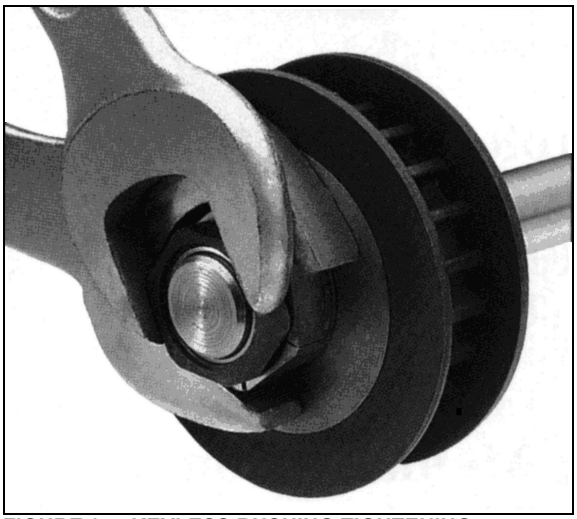

FIGURE 14 : KEYLESS BUSHING TIGHTENING

To tighten the keyless bushing, use a special open-end wrench to retain the yellow part and another wrench to tighten the black part. Figure 20 shows how to tighten the keyless bushing. When tightening, make sure the pinion does not move or rotate.

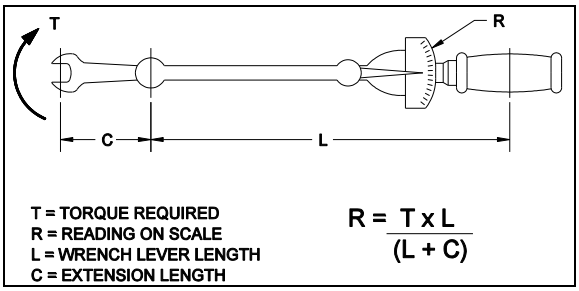

FIGURE 15 : TORQUE WRENCH FORMULA

CAUTION

Make sure all keyless bushings are tightened to 125 lb-ft before moving the slide-out. A lower torque value may cause the bushing to slip on the shaft, and a higher torque value may break the bushing. The torque may need to be recalculated depending of the wrench size. Refer to FIGURE 15 for wrench size compensation.

Take note that when the keyless bushing nut is tightened, the pinion moves about 1/16" to 3/32" toward the slide-out center.

NOTE

On the front slide-out, the driver side keyless bushing is not accessible for tightening or removal unless you remove the front left wheel. If the slide-out has been removed, this keyless bushing should be tightened before reinstalling the slide-out.

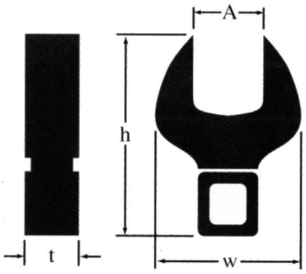

Style C
Installation Nut

WRENCHES FOR INSTALLATION

Fenner Drives offers a complete line of high-quality crowfoot wrenches for installation and to provide counter-torque. These wrenches are much narrower than earlier designs and are specifically for use with Trantorque GT units. It is recommended that both wrenches be used when installing a Trantorque GT unit.

1/2" SQUARE DRIVE

Shaft Size	Part Number	Wrench Style	Dimensions (inches)			
			A	h	w	t
13/16 to 1	6202990024	C	1-1/2	3.44	2.75	0.75

INSTALLATION INSTRUCTIONS

A Trantorque GT Keyless Bushing offers flexible and easy installation while providing exceptional holding power. To ensure a Trantorque GT unit performs as specified, it must be installed properly.

Warning: Use no lubricants in this installation.

1. Shaft and component bore must be within ±0.003"(±0.08mm) [±0.0015"(±0.04mm)Mini Series] of stated bore diameter and must have a surface finish of 32-125 Ra (roughness average). If the surface finish is outside these specified values, consult Fenner Drives.

2. Both shaft and component bore must be completely free of paint, grease, oil, and dirt. If necessary, clean the surfaces with a non-petroleum based solvent, such as isopropyl alcohol.

Warning: Do not lubricate the Trantorque GT bushing or shaft. The use of any lubricant on the contact surfaces could result in bushing failure and will void all warranties.

3. Insert the Trantorque GT unit into the component to be mounted, making sure the mating hub is flush against the shoulder at the hex flats.

4. Position the assembly at the desired location on the shaft and hand-tighten the nut (clockwise) until the assembly becomes snug on the shaft.

Warning: Do not hammer or use any type of impact to force the Trantorque GT assembly along the shaft.

Warning: The shaft must fully engage the shaft gripping area (Figure 1) of the Trantorque GT unit. Figure 2 illustrates minimum shaft engagement.

5. Using a torque wrench, tighten the nut to the proper installation torque. See table for torque value. (Note: Fenner Drives has available crowfoot wrenches for square drives in sizes from 1/2" to 3-1/2".) The hex flats on the outer ring are provided for counter-torque, eliminating the need to hold the component or shaft while applying installation torque.

Note: At full installation torque, the assembly will have moved approximately ±0.075"(±1.9mm)[±0.045"(±1.1mm)Mini Series] axially along the shaft away from the nut. If axial position is critical it may be necessary to loosen the nut and reposition the assembly.

Warning: Over-tightening the nut could damage the Trantorque GT unit and/or the mounted component.

Do not use an impact wrench in the installation.

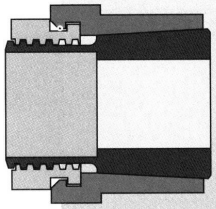

Figure 1

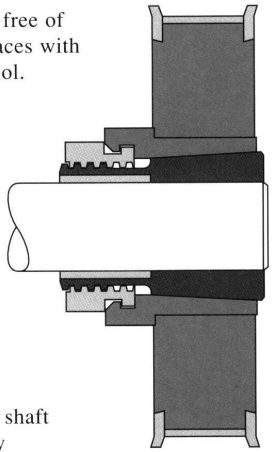

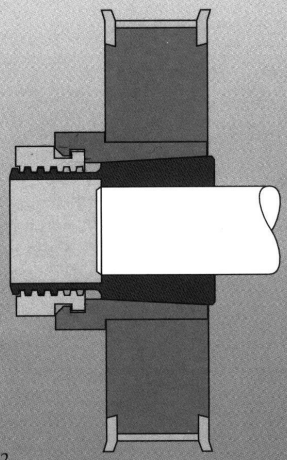

Figure 2

Installation Torque on Nut

	Inch Pound System		Metric System	
	Shaft Size	In. Lbs.	Shaft size	N-m
MINI SERIES	3/16–1/4	125	5–6mm	14.1
	5/16–3/8	150	7–9mm	17.0
	7/16–1/2	175	10–12mm	19.8
	9/16–5/8	200	14–16mm	22.6
	3/4	700	17mm	80.0
STANDARD SERIES	5/8–3/4	1200	15–19mm	136
	13/16–1	1500	20–25mm	170
	1-1/16–1-1/4	2000	28–32mm	225
	1-5/16–1-1/2	2300	34–38mm	260
	1-9/16–1-3/4	2800	40–42mm	316
	1-13/16–2	4900	45–50mm	554
LARGE SERIES	2-1/16–2-1/4	5300	55mm	600
	2-5/16–2-1/2	5600	60mm	635
	2-9/16–2-3/4	6000	65–70mm	680
	2-13/16–3	6600	75mm	750

FIGURE 16 : KEYLESS BUSHING INSTALLATION INSTRUCTIONS

6 ELECTRIC MOTOR

The power is supplied by a 24V 1/3 HP electric motor coupled with a speed reduction gearbox. Opposite to the gearbox, the motor is equipped with a 3/8 hexagonal socket shaft extension permitting to move the slide-out without using the handheld control. This is very useful when moving the slide-out very slowly is required like during the inner stoppers adjustment, the tilt adjustment or the 2" inside retraction. See section 18 for the manual override procedures.

CAUTION

When moving the slide-out with a cordless power drill as described in the manual override procedure, be careful as the slide-out approaches its opened or closed position, in order not to overload the mechanism.

6.1 MAINTENANCE

Inspect the electrical connections and their watertightness. Check that the mounting bolts are tight (Fig. 18).

6.2 REPLACEMENT

1. The slide-out must be retracted.

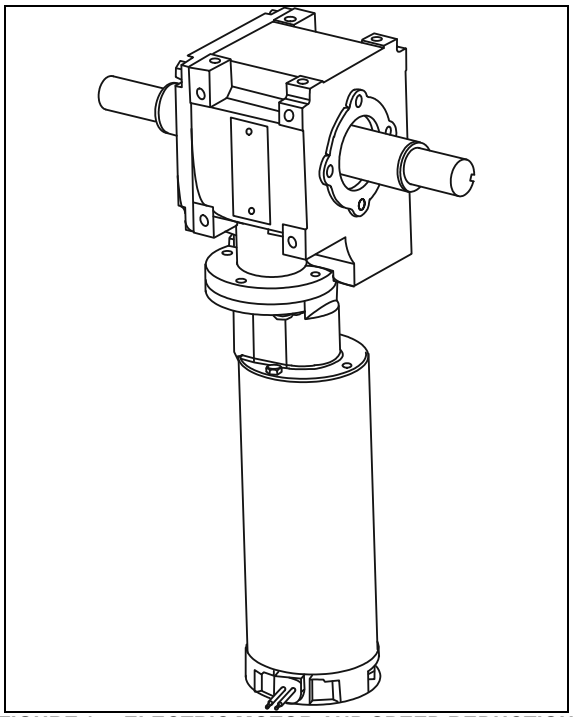

FIGURE 17 : ELECTRIC MOTOR AND SPEED REDUCTION GEARBOX

2. Unplug the electric cable connector.
3. Remove the motor from the gearbox.
4. Fasten the new motor to the gearbox using screws.
5. Re-connect the electric cable connector.

7 SPEED REDUCTION GEARBOX

The speed reduction gearbox used is a helical worm gear type. This gearbox has a 2-stage 740:1 ratio and the output shafts are self-locking. Keys on output shafts are glued into keyseats.

7.1 MAINTENANCE

Inspect the gearbox to check if there is any leakage or backlash in the box. Replace the gearbox if excessive wear is present. Check that all bolts are tight.

The gearbox is lubricated for life and the oil should not have to be changed.

7.2 GEARBOX REPLACEMENT

1. The slide-out must be retracted.
2. Disengage the shafts jaw couplings (refer to section 8: JAW COUPLING).
3. Remove the 4 cap screws securing the drive motor/gearbox assembly and dismount the assembly (See figure 18).
4. Remove the gearbox from the motor and install the new one.
5. Reinstall the drive motor/gearbox assembly on the vehicle mounting bracket. Tighten mounting bolts to a torque of 18 lbf-ft in a criss-cross patern.

CAUTION

To prevent damaging threads, use your fingers to drive the bolts into the aluminum gearbox housing mounting holes.

6. Reinstall the jaw couplings.

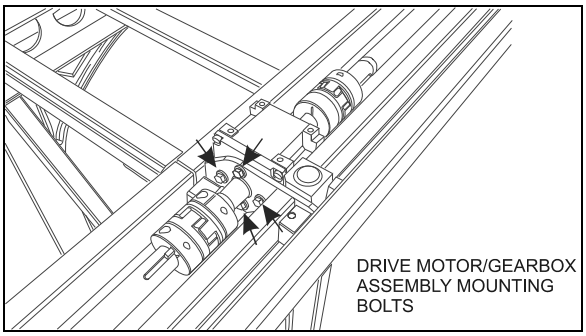

FIGURE 18 : DRIVE MOTOR/GEARBOX ASSEMBLY MOUNTING BOLTS

8 JAW COUPLING

8.1 MAINTENANCE

Inspect the jaw couplings to check if there is backlash between the key and the keyway. Also, check the spider condition. Check that the clamping screws are tight.

8.2 REPLACEMENT & ADJUSTMENT

1. The slide-out must be retracted.
2. Disengage the jaw coupling: loosen the clamping screw on each clamping hub. If required, rotate the motor shaft extension as described in the manual override procedure (section 18) to get to the clamping screws.
3. Separate both clamping hubs.

NOTE
It may be necessary to loosen the blue flange bearings to move the shaft out of the way.

4. Clean and degrease the hub bore and the shaft.
5. Push the new clamping hubs onto the shaft (pinion side).
6. Install a clamping hub on one of the gearbox shaft (opposite side of gearbox mounting bolts) flush with the shaft extremity (FIGURE 19). Tighten the clamping screw to a torque of 18 lbf-ft.
7. Install the second clamping hub on the gearbox shaft. Position the clamping hubs so that they are flush with the shafts extremity (FIGURE 19).

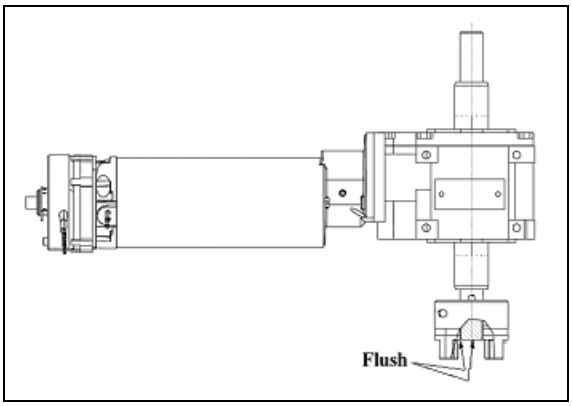

FIGURE 19 : CLAMPING HUB POSITION ON GEARBOX SHAFT

8. Reconnect the clamping hubs with the spider. Leave a gap of 20mm (0.787inch) between each clamping hubs as shown on FIGURE 20. Use the motor hexagonal socket output shaft to align the keyways.
9. Tighten clamping screws to a torque of 18 lbf-ft.

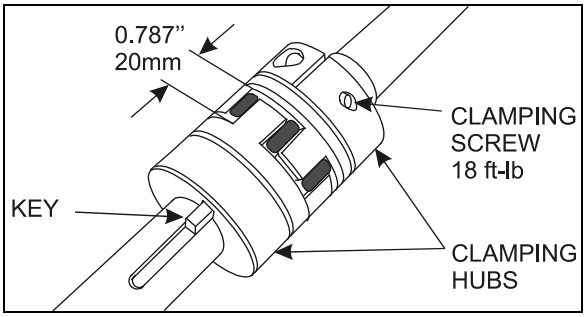

FIGURE 20 : JAW COUPLING

9 FLANGE BEARING

There are two different types of flange bearing on the slide-out mechanism (FIGURE 13). Their purpose is to maintain the shaft in position while permitting rotation. The gray flange bearings are fixed to the linear bearing support plate and are not adjustable. The blue flange bearings are fixed to a support with oblong holes permitting to raise or lower the flange bearing as the linear bearing support plate level is being adjusted.

The flange bearings are pre-lubricated and no subsequent lubrication is required due to the very low extending and retracting speed of the slide-out system.

10 LOCKING COLLAR

The locking collar locks the shaft and the flange bearing together using friction. Once locked, it permits no axial translation of the shaft and prevents rotation of the shaft into the flange bearing bore.

10.1 INSTALLATION

Slide the locking collar along the shaft up to the flange bearing (FIGURE 13). Turn the locking collar clockwise while maintaining it pressed against the flange bearing. Knock the collar with a punch to lock it in place, there is a cavity on the collar made for that purpose. Tighten the set screw.

To remove, loosen the set screw and release the locking collar using channellock pliers or a small pipe wrench.

11 LINEAR BEARING

11.1 MAINTENANCE

Make every effort not to allow dust and foreign objects to enter inside the linear bearing.

The linear bearings are pre-lubricated and no subsequent lubrication is required due to the very low demanding use of the slide-out system.

11.2 REPLACEMENT & ADJUSTMENT

1. Remove the slide-out from the vehicle (removal must be performed according to the Slide-Out Removal Procedure. Ask your Prevost service representative).
2. Disconnect the jaw coupling on the side of the linear bearing being replaced (refer to section 8).
3. Dismount the blue flange bearing.
4. From the mechanism access panel, remove the retaining screws A, B, C & D (see FIGURE 22).
5. Now, you have access to the linear bearing mounting bolts if you turn its support up side down. Dismount the linear bearing and install the new one.
6. Tighten the mounting bolts in a criss-cross pattern to a torque of 60 ft-lb.
7. Reinstall the support plate, retaining screws, blue flange bearing and reengage the jaw coupling. Refer to the specific procedures.

11.3 LEVEL & TILT ADJUSTMENT

Leveling of the slide-out is done by changing the linear bearing support plate height using the leveling screws 1, 2, 3, 4 (FIGURE 22). When proper level is attained, the retaining screws A, B, C & D maintain the support plate seated on the leveling screws. Also, the retaining screws prevent the slide-out from tipping inside the vehicle when it is retracted.

The slide-out is slightly tilted. When retracting, the upper "in limit" stoppers touch first the vehicle structure, followed by the lower "in limit" stoppers. Tilt adjustment is done by changing the linear bearing support plate inclination using the leveling screws 1 & 2 as pivot and 3 to adjust the angle (FIGURE 22).

11.3.1 Procedure

NOTE

*For the **front slide-out**, the front linear bearing leveling screws are accessible from the access panel located over the front wheel while the rear linear bearing leveling screws are accessible from the access panel in the evaporator compartment. For the **rear slide-out**, access the linear bearing from under the bed structure or the radiator compartment.*

WARNING

The slide-out must be retracted when the level and tilt adjustment is performed.

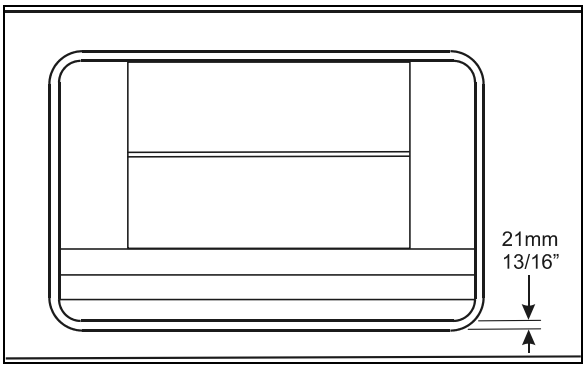

FIGURE 21 : SLIDE-OUT LEVEL ADJUSTEMENT

Before proceeding with the level and tilt adjustment, check the following conditions:

- The slide-out is retracted;
- The 2 lower “in limit” stoppers are perfectly adjusted, that means that the lower edge of the slide-out outer panel is flush with the vehicle body when retracted;
- The 2 upper “in limit” stoppers are removed from the slide-out (see Section 1.2).

1. Loosen the blue flange bearings mounting screws (FIGURE 13).
2. For front slide-out only, loosen the two plastic plates mounting screws along the shafts (FIGURE 13).
3. With the lower edge of the slide-out outer panel flush with the vehicle body, adjust the slide-out level. The distance between the top of the horizontal member under the slide-out and the slide-out under panel must be 21mm (13/16” approximately).

WARNING

Never unscrew completely retaining screw A, B, C, D or the slide-out may tip inside.

To raise the linear bearing support plate, turn levelling screw 1 & 2 clockwise. Slightly and gradually, loosen the retaining screws A & B as the support plate elevates, but keep the retaining screws tighten.

To lower the linear bearing support plate, turn screw 1 & 2 counterclockwise. As the support plate goes down, maintain the retaining screw A & B tighten.

4. Loosen retaining screws C & D. Unscrew leveling screw 4. Now, the support plate should be resting on levelling screw 1, 2 & 3.
5. Using levelling screw 3, adjust the tilt in order to have the top of the slide-out recessed between 5mm and 10mm (7/32" and 3/8") (see FIGURE 23).
6. When proper tilt is attained, tighten leveling screw 4 so that it comes into contact with the support plate.
7. Loosen slightly levelling screw 3 and then tighten it so it is perfectly in contact with the support plate. Make sure screws 1, 2, 3 & 4 are in contact with the support plate.
8. Loosen retaining screw A & B.
9. Using a crisscross pattern, tighten progressively (3 rounds) the retaining screw A, B, C & D to a torque of 50 ft-lb.
10. Assure that the levelling screw 1, 2, 3 & 4 are firmly leaning on the support plate and then firmly tighten the jam nuts.
11. Verify that the tilt is still properly adjusted (between 7/32" and 3/8").

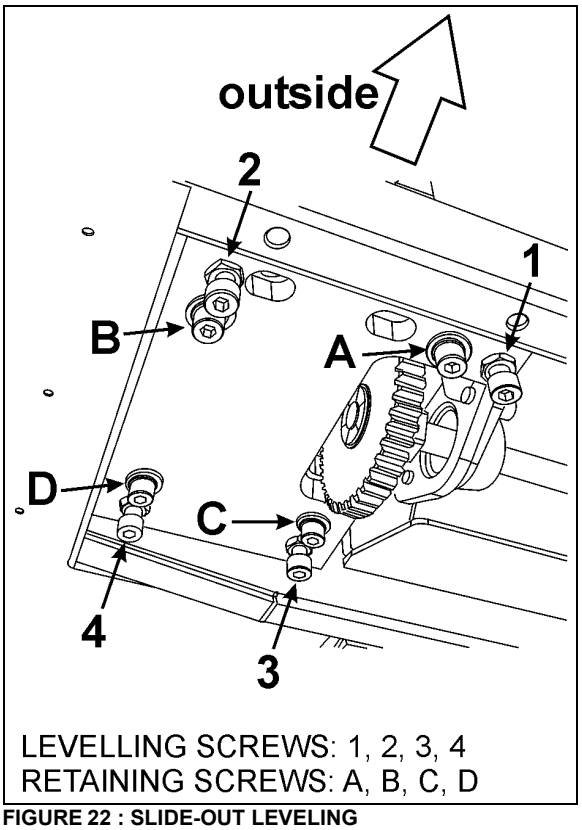

FIGURE 22 : SLIDE-OUT LEVELING

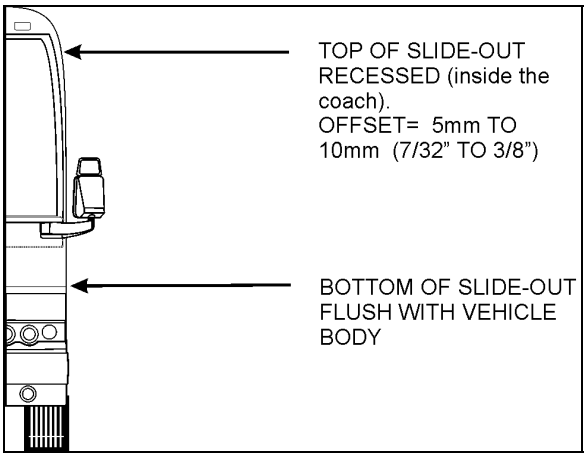

FIGURE 23 : TILT ADJUSTMENT

12 RAIL

Rail and linear bearing system provide precise frictionless linear movement together with high load carrying capacity and high stiffness. These standardized equipments are fully interchangeable.

To prevent corrosion, an electrolytic black film treatment is performed to the rail. Do not strike the rail with metal tools, this could damage the treatment.

After the rail is mounted to the slide-out base, a cap is used to cover the bolt hole to prevent foreign matters from clogging up the hole or from entering into the ball slide. The cap for the bolt hole is made of synthetic resin which is superb in its resistance to oil and wear.

12.1 MAINTENANCE

Check that all the caps for the bolt hole are present. Missing caps must be replaced. To insert a cap into the rail bolt hole, use a flat tool. Pound the cap gradually until its height becomes flush with the rail top face.

Clean accumulated dirt from the rails with a soft cloth.

12.2 REPLACEMENT

1. Remove the slide-out from the vehicle (removal must be performed according to the Slide-Out Removal Procedure. Ask to your Prevost service representative).
2. Remove the bolt hole cap covers. To do so, pierce a hole in the center and hook them out. They will not be reusable.
3. Remove the rail mounting bolts.
4. Wipe off the rust preventive oil applied to the new rail. Remove burrs and small bumps on the slide-out mounting face with an oilstone.
5. Carefully place the rail on the bed on its mounting face.

NOTE
The rail is bolted to a flat bar on which weldnuts are mounted. The flat bar is inserted in the slide-out lower body extrusion and can be removed through the end cap (FIGURE 24).

6. Adjust the flat bar position to align the weldnuts with the rail mounting holes.
7. Temporarily tighten the bolts.
8. Adjust the rail position with as per FIGURE 24. For each rail, make sure the gap is the same both side of the rail.
9. For final tightening of the bolts, tighten on either end of the rail and then start to the other end. Tighten to a torque of 95 ft-lbf. Use blue Loctite ™ on threads.
10. Cap the bolt holes.

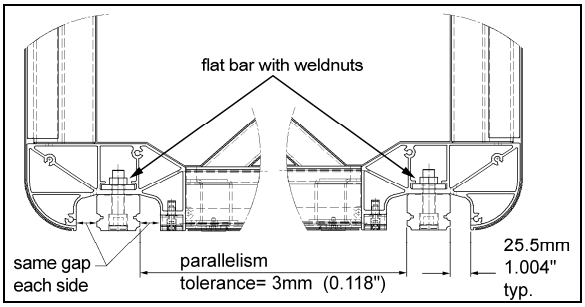

FIGURE 24 : RAIL POSITIONING

13 ACETAL PLASTIC BLOCKS

Three different acetal plastic blocks are installed next to each linear bearing to prevent dirt and foreign matter from entering inside the vehicle. They also serve as bearing surface for:

1. The inflatable seal each side of the rail.
2. The “in limit” stoppers.

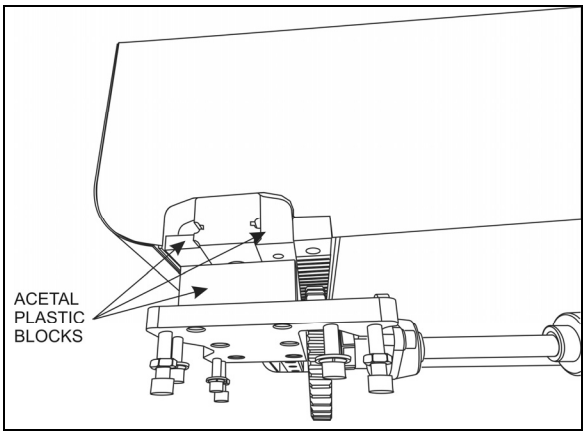

FIGURE 25 : ACETAL PLASTIC BLOCKS

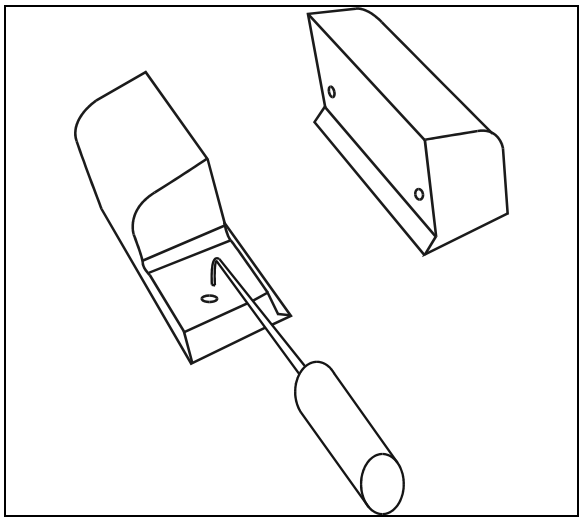

FIGURE 26 : REMOVE THE UPPER ACETAL PLASTIC BLOCKS WITH A PICKING TOOL

13.1 REMOVAL / INSTALLATION

1. Gain access to the linear bearing support plate.
2. From under the support plate, remove the acetal plastic block mounting screws (see the oblong holes on FIGURE 22).
3. Remove the 2 upper acetal plastic blocks. They have holes so they can be removed with a picking tool (FIGURE 26) from outside the vehicle. If the acetal plastic blocks are too hard to reach, slightly extend the slide-out, the movement of the slide-out should bring them out.
4. To remove the lower acetal plastic block, gain access to the compartment under it. Slide the acetal plastic block toward the center of the slide-out. Proceed the same way to reinstall it.
5. Reinstalling the upper acetal plastic blocks. Fold the wiper seal toward the outside with a flat tool to ease installation (FIGURE 27). Tighten the mounting screws to a torque of 7 ft-lb. Leave no gap between the blocks and the rail.

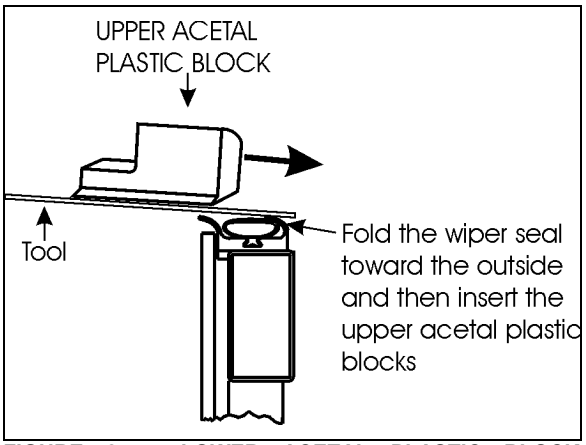

FIGURE 27 : LOWER ACETAL PLASTIC BLOCK INSERTION

14 SLIDE-OUT PNEUMATIC SYSTEM

The slide-out is controlled by a pneumatic and electrical system. Mainly, the pneumatic system consists of electrically operated valves that control slide-out components and safety operations.

14.1 DESCRIPTION

AIR PRESSURE INLET VALVE

The slide-out air pressure comes from the air pressure inlet valve on the pneumatic panel in the front service compartment (FIGURE 28).

INFLATABLE SEAL VALVE

The inflation and the deflation of a seal are done using a 5-port 2-position manifold valve with two solenoids. One solenoid is used for inflating of the seal and the other for deflating of the seal. When one of the solenoids is activated (seal deflating valve for example), the valve will keep its state even if the solenoid is deactivated. The inflating valve solenoid is activated to re-inflate the seal when the slide-out reaches its inner or outer limit. The inflatable seal pressure is set to 10 psi and in full “IN” or full “OUT” position, this pressure is continuously applied to the seal as long as the accessory air tank (which supply the slide-out) is not empty.

VACUUM GENERATOR

A vacuum generator using Venturi principle is controlled by a 5-port 2-position manifold valve and is used to evacuate the air faster from the seal and to ensure that the seal surface does not stay in contact with the slide-out.

The vacuum generator valve is activated simultaneously with seal deflating valve solenoid for 10 seconds. A pressure transducer will detect a seal, vacuum valve or generator failure if -5 psig is not reached after the 10 seconds delay. In that situation, an error code will be stored in the MCD (message center display). In normal operating condition, -5 psig is a necessary condition to consider the seal as deflated.

NOTE

When air pressure is relieved using the shut-off valve, the normal extending and retracting operation cycle is disabled, because the pressure transducer reads 0 psig and that is higher than -5 psig (vacuum). For that reason the slide-out cannot be moved with the handheld control.

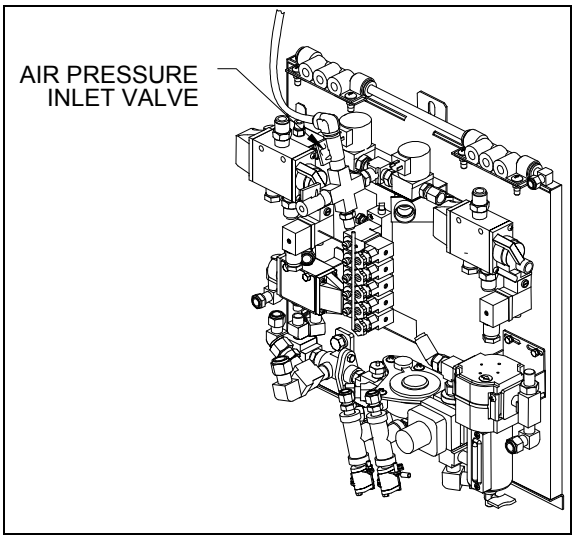

FIGURE 28 : FRONT SERVICE COMPARTMENT

14.2 MAINTENANCE

COMPRESSED AIR LINE

Inspect all compressed air line tubing for cut, swelling, kink or other damage or deterioration. Inspect the pneumatic fittings and components for any leak. The slide-out air supply is connected to the accessory air tank and the maintenance is specified in the “brake and air system” section from the Prevost maintenance manual.

INFLATABLE SEAL CIRCUIT

The efficiency of the seal could be affected by impurities, such as white powder in the pneumatic control valve. It is recommended to inspect the inflatable seal control components once a year to prevent malfunction. In this case, remove the seal valves and clean the interior valve components using a compressed air nozzle. Do the same thing with the vacuum generators.

The inflatable seal pressure must be set from 7 to 10 psi maximum. It is recommended to check the inflatable seal pressure once a month to ensure sealing efficiency and prevent any infiltration from outside.

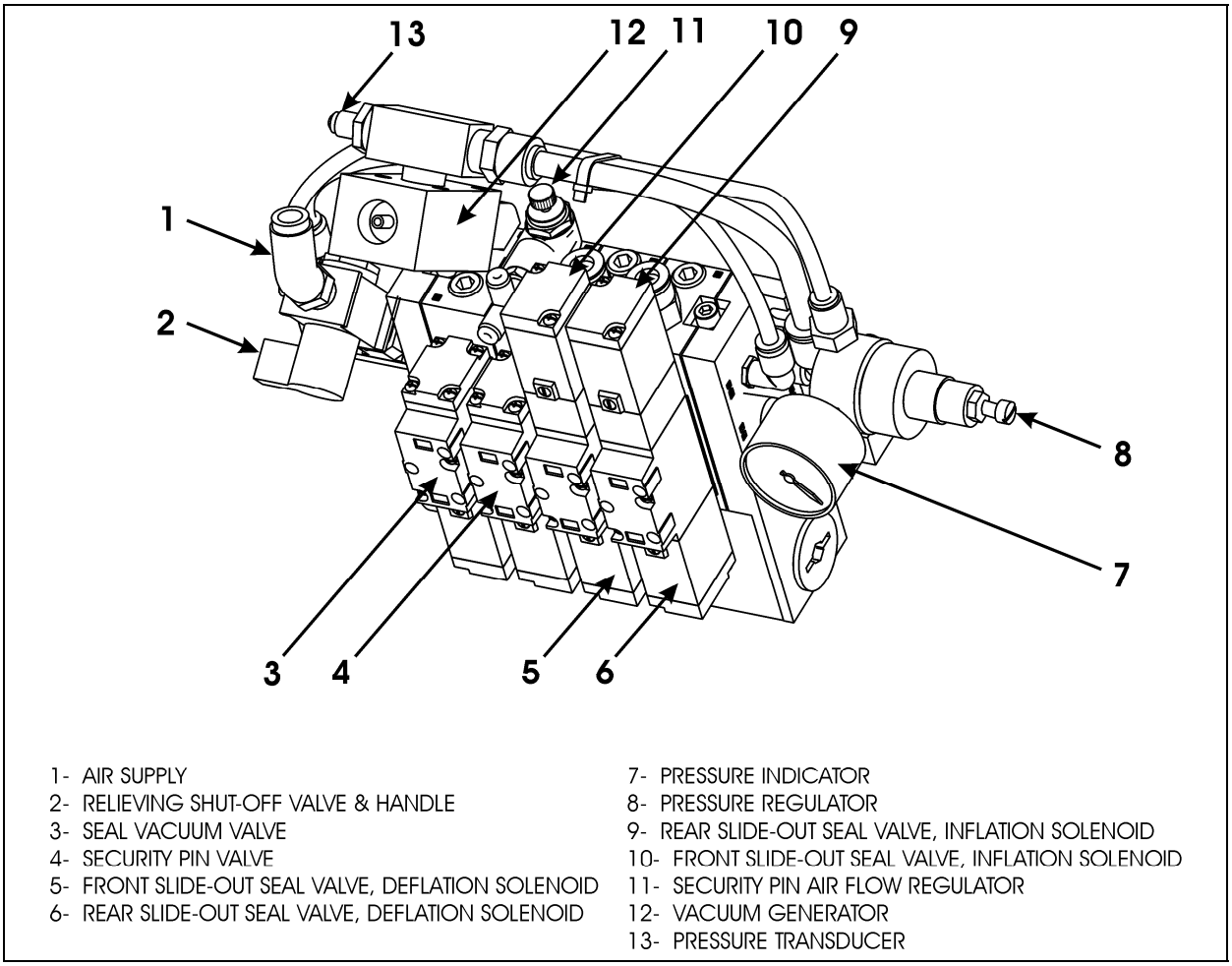

FIGURE 29 : PNEUMATIC COMPONENT PANEL

14.3 SEAL

NOTE
Refer to the Prevost parts manual for descriptions of the sealant and adhesives used.

The slide-out sealing device is used to prevent any type of infiltration that may occur between the structure body and the slide-out itself. It is composed of an inflatable seal which is used as a primary sealing device for both retracted and extended slide-out position and a wiper seal as a secondary sealing device which is used to wipe water out and to ensure sealing during slide-out movement.

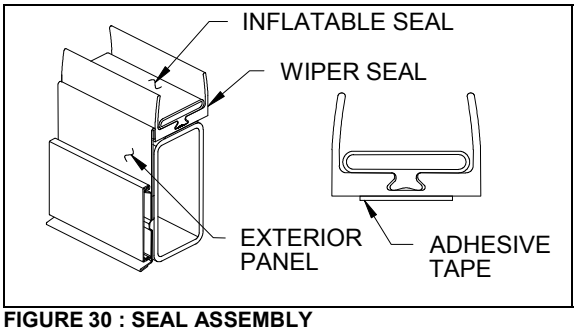

FIGURE 30 : SEAL ASSEMBLY

The seal deflation is done each time the slide-out moves. The deflating valve solenoid is activated before and during the slide-out movement. When the slide-out reaches its retracted or extended position, the deflating solenoid is deactivated before activation of the inflating solenoid to re-inflate the seal.

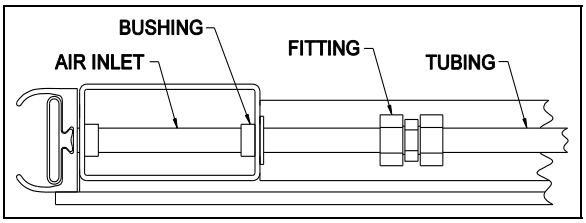

FIGURE 31 : REAR SLIDE-OUT INFLATABLE SEAL AIR INLET

CAUTION

Make sure the inflatable seal is deflated when manually moving the slide-out during service maintenance. Deflate both inflatable seals completely by turning the relief shut-off valve handle clockwise (see FIGURE 29).

CAUTION

Check before using any cleaning or adhesive product on seal, panel or glass to prevent alteration or damage.

14.3.1 Maintenance

The inflatable seal pressure must be set to 10 psi maximum with the pressure regulator. It is recommended to check the inflatable seal pressure once a month to ensure sealing efficiency and prevent any infiltration from outside. Check both seals for air leaks or cracks. Check the sealant between the inflatable seal and the exterior panels and glasses. Add sealant if necessary.

14.3.2 Seal assembly removal

DANGER

Always wear the appropriate safety equipment. Maintain adequate ventilation at all time.

1. Retract the slide-out 2" inside the vehicle (section 14.3.4).
2. Unplug the tubing from the inflatable seal air inlet (FIGURE 31). Keep the bushing.
3. Unstick and remove the wiper seal from the structure.
4. Scrape remaining tape from the structure. Remove old sealant that was between the wiper seal and the exterior panels and glasses.

14.3.3 Seal assembly installation

NOTE

This procedure is to install the inflatable seal assembly on the structure.

CAUTION

Always apply product in the same direction to prevent dirt from being brought back.

CAUTION

Check before using any cleaning or adhesive product on seal, panel or glass to prevent alteration or damage.

NOTE

Refer to the slide-out parts manual for descriptions of primer, cleaner, sealant and adhesives used.

NOTE

Refer to the product specification for drying time.

1. Retract the slide-out 2" inside the vehicle (section 14.3.4).
2. Clean the part of the structure that will receive the inflatable seal and also the back of the exterior panel and glasses with a chix cloth and thinner. Use another cloth to dry the surfaces. Wait at least 2 minutes for drying.
3. Rub the structure and also the back of the exterior panel and glasses with a Scotch Brite (or equivalent product).
4. Clean another times the structure and the back of the exterior panel and glasses with a chix cloth and thinner. Use another cloth to dry the surfaces. Wait at least 2 minutes for drying.
5. Clean the structure and the back of the exterior panel and glasses with appropriate cleaner. Wait until the product is dry before proceeding.
6. Seal the gap between the structure and the exterior panels and the gap between the glasses and the fiberglass panels with appropriate sealant. Make sure not to put

sealant on the structure surface where the inflatable seal will be placed. Wait until the product is dry before proceeding.

7. Install the inflatable seal on the structure, placing it as close as possible from the exterior side of the structure. Position the air inlet first. Then remove locally the inflatable seal adhesive tape protection, and press the upper corners on the structure and hold them in place for 90 to 120 seconds. Install the lower corners next, then the straight section. Press the straight inflatable seal sections on the structure for at least 15 seconds. Use a small roller to ensure a good adhesive contact on the structure.
8. Seal the gap between the inflatable seal and the exterior panels and the gap between the glasses and the fiberglass panels with appropriate sealant. Wait until the product is dry before proceeding. Remove excess sealant with appropriate cleaner.
9. Replace the bushing and plug the pneumatic tubing on the inflatable seal air inlet (FIGURE 31).

14.3.4 Slide-out 2" inside retraction

1. For both sides of the slide-out, remove the 2 upper acetal plastic blocks shown on FIGURE 26 (refer to section 13).
2. Manually deflate the seal completely by turning the relieving shut-off valve clockwise (FIGURE 29). Make sure the pressure indicator reading is "0 psi".
3. Turn the ignition to the off position. Using the manual override procedure (section 18), extend the slide-out a few inches so the exterior extrusion screws located on the top of the slide-out are accessible from outside (FIGURE 7).
4. Using a knife cut the sealant between the extrusion and the roof (FIGURE 7). Unscrew and remove the central exterior extrusion screws and the two end extrusion screws.

CAUTION

Do not use the slide-out handheld control to move the slide-out 2" inside the vehicle, because the limits are not recognized over the closed position. The slide-out will not stop and damage may occur.

5. Using the manual override procedure, move the slide-out 2" inside the vehicle, so the seal is accessible from outside (FIGURE 32).

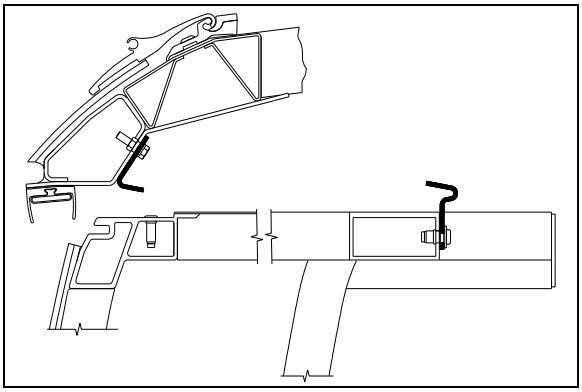

FIGURE 32 : SLIDE-OUT 2" INSIDE – UPPER PART

6. Once completed, use the manual override procedure to extend the slide-out to reinstall the exterior extrusion. Apply appropriate sealant on the exterior extrusion screws and between the extrusion, the roof and the edges to prevent water infiltration (FIGURE 32).
7. Reinstall the acetal plastics blocks.
8. Using the manual override procedure, retract the slide-out to its closed position.
9. Finally, the seal can be re-inflated by turning the shut-off valve handle counterclockwise. Check the pressure gage on the inflatable seal regulator to see if the pressure is increasing to 10 psi.

15 SLIDE-OUT ELECTRICAL SYSTEM

DANGER

Never modify the slide-out electrical wiring without the Prevost Car approval. Any modifications may cause an unexpected slide-out action and could result in personal injuries.

The multiplexed slide-out electrical system is mainly composed of the Master ID module, the CECM module, the VEC module and two I/O-B modules.

Each slide-out has its own I/O-B module and two power relays. The I/O-B modules analyze the input signal conditions and activate outputs like the pneumatic valves, the retracting or extending

programmed sequence, etc. The power relays are used to supply power coming from the I/O-B module to the electric motor and to change polarity to reverse motor rotation.

The I/O-B modules input signals are:

- Handheld control switch IN;
- Handheld control switch OUT;

Also, the following input signals are required for a safe operation of the slide-out:

- Pressure transducer;
- Parking brake;
- “in limit” sensor;
- “out limit” sensor;

The I/O-B modules output signals are:

- Handheld control green indicator light;
- Power relay current reversing;
- Seal valve inflating solenoid;
- Seal valve deflating solenoid;
- Vacuum generator valve solenoid;
- Security pin valve solenoid;
- Electric motor, first power output 15 amps;
- Electric motor, second power output 15 amps;

The CECM module output signals are:

- Dashboard telltale light;
- Transmission inhibit;

DANGER

Before working on the slide-out electrical system, turn the ignition key to the “OFF” position.

15.1 ELECTRICAL INTERCONNECTION WITH PREVOST VEHICLE

The slide-out power supply comes from the 24-volts circuit breaker (FIGURE 34) in the engine R.H. side access compartment. The other interconnections are located on the pneumatic panel and the electrical panel in the front service compartment. All the interconnections are shown on the electrical diagrams of your vehicle.

A blinking signal is added on the dashboard telltale panel (FIGURE 33) to indicate that an error condition or a missing operation condition is present on a slide-out. The slide-out telltale light also illuminates to indicate that at least one of the slide-outs is extended.

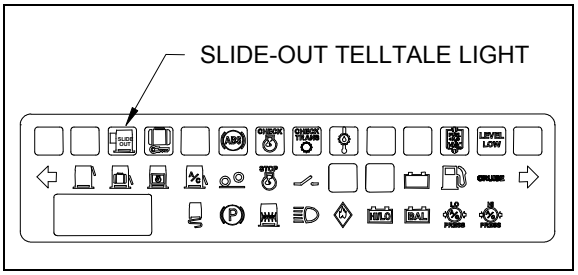

FIGURE 33 : DASHBOARD SLIDE-OUT TELLTALE LIGHT

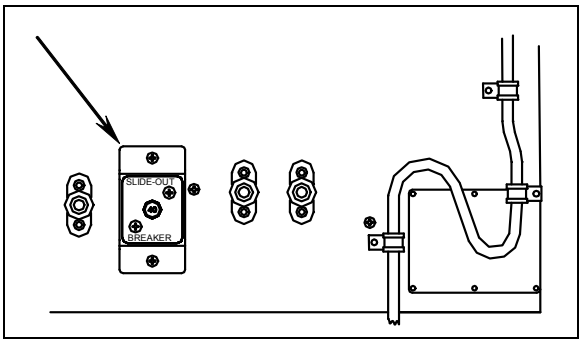

FIGURE 34 : MAIN BREAKER IN ENGINE R.H. SIDE ACCESS COMPARTMENT

15.2 SLIDE-OUT BREAKERS / FUSES

The main breaker (for both slide-outs) is located in the engine R.H. side access compartment. All other slide-out breakers and hardware fuses are located inside the VEC, on the slide-out electrical component panel located in the third baggage compartment on the driver side (FIGURE 35 and FIGURE 36).

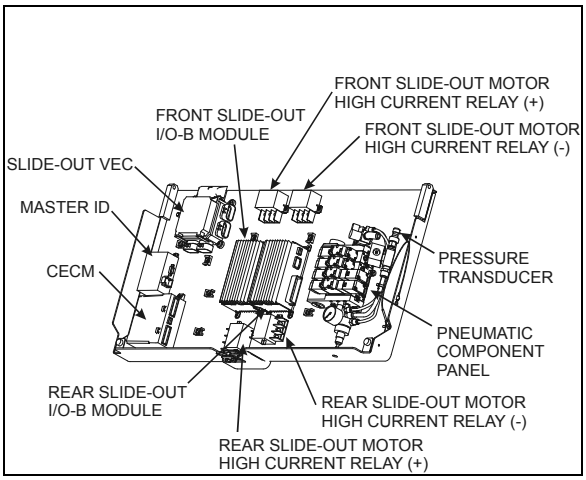

FIGURE 35 : SLIDE-OUT CONTROL PANEL

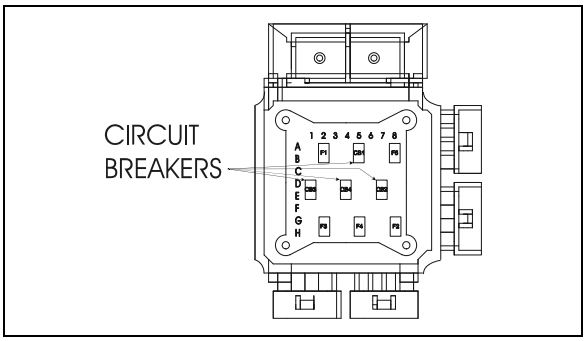

FIGURE 36 : VEC CIRCUIT BREAKERS & FUSES

15.2.1 Multiplex fuses

The multiplex module outputs are protected in current by an internal “soft-fuse”. Each output is programmed to specific maximum amperage. When an output is shorted, the current gets above the limit and the soft-fuse intervenes to turn the output OFF. The output stays OFF until the "soft-fuse" is reset.

Turn the ignition key to the OFF position and turn to the ON position again. This resets all "soft-fuses".

CAUTION

Never put grease, Cortec VCI-238 or other product on the multiplex modules connector terminals.

15.3 PROBING VOLTAGE ON THE MULTIPLEX CIRCUITS

Multiplex modules are supplied by 24 volts.

Inactive Multiplex output = Residual voltage of 18% to 33% of supply voltage.
Inactive Multiplex input = Residual voltage of 50% of supply voltage.

NOTE

For a 24V module: an active voltage would be 24V or 0V but not in between. If you measure the intermediate tensions (ex. 12V, 4V, or 8V) this must be interpreted as if the input or the output is inactive.

15.4 MODULE REPLACEMENT

I/O-B and CECM multiplex modules can be replaced and reprogrammed without having to connect a computer to the vehicle.

15.4.1 I/O-B replacement

- Turn the ignition key to OFF.
- Replace the module (disconnect the green connector first, then the grey one and finish with the black connector. To disconnect the black connector, slide downwards the red latch).
- Turn the ignition key to the ON position. This engages the automatic reprogramming,
- The slide-out telltale light will turn on and stay on until the reprogramming is complete. Once completed, the slide-out telltale light will turn off or stay on (not blinking) if at least, one slide-out is extended.
- Check the SYSTEM DIAGNOSTIC menu of the message center display (MCD). Select FAULT DIAGNOSTIC and ELECTRICAL SYSTEM. Verify the fault message to be certain the module is reprogrammed. If the module is not reprogrammed, the message « Axx Not Responding » appears where Axx is the module number (A56 or A57).

15.4.2 CECM module replacement

- Turn the ignition key to OFF.
- Replace the module.
- Turn the ignition key to the ON position. This engages the program transfer from the Master ID to the CECM module (the back-up program is inside the Master ID. The Master ID will identify the CECM as being new and will send the correct program to it). The slide-out telltale light will turn on and stay on for a while, and then will turn off. Wait until the slide-out telltale starts blinking each second. At this point, the Master ID module has finished loading the program in the CECM.
- Turn the ignition key to the OFF position and then turn it back to the ON position. This engages I/O's modules automatic reprogramming.
- The slide-out telltale light will turn on. Once completed, the slide-out telltale light will turn off or stay on (not blinking) if at least, one slide-out is extended.

- Check the SYSTEM DIAGNOSTIC menu of the message center display (MCD). Select FAULT DIAGNOSTIC and ELECTRICAL SYSTEM. You should read “no errors”. If an active error appears for a module, this one was not reprogrammed. In this case, repeat the procedure.

15.5 SLIDE-OUT LIMIT SENSORS

Two Hall-Effect sensors are used on each slide-out to define end limit positions. The "in limit" and "out limit" sensor detect two pairs of permanent magnets fixed on the slide-out underbody.

15.5.1 Maintenance and adjustment

The rear slide-out sensors are accessible from inside of the vehicle, under the bed structure while the front slide-out sensors can be reached from the 3rd baggage compartment access panel. To remove the sensors, unsnap them from the mounting bracket.

To adjust the "in limit" sensors:
Prior to adjusting the “in limit” sensors, assure that the “in limit” stoppers are perfectly adjusted (see section 1.2.2).

1. Retract the slide-out to its full “IN” position with the “in limit” stoppers in contact with their bearing surface.
2. Loosen the “in limit” sensor mounting bracket screws and move back the sensor completely (toward the inside of the vehicle).
3. Bring slowly the sensor toward the outside of the vehicle until the light emitting diode (LED) turns on. When it does, move it 0.079” (2mm) further in the same direction and tighten the mounting bracket screws.
4. Check if the “in limit” sensor is properly adjusted. At the moment when the slide-out stops during normal retraction, the “in limit” stoppers must contact their bearing surface (lower acetal plastic block). Put white paint on the “in limit” stopper before and check if the acetal plastic blocks are marked with paint.

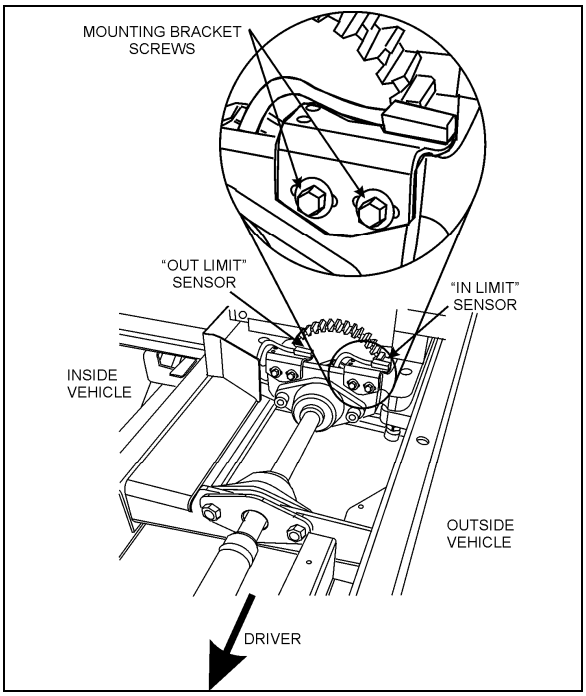

FIGURE 37 : FRONT SLIDE-OUT SENSORS

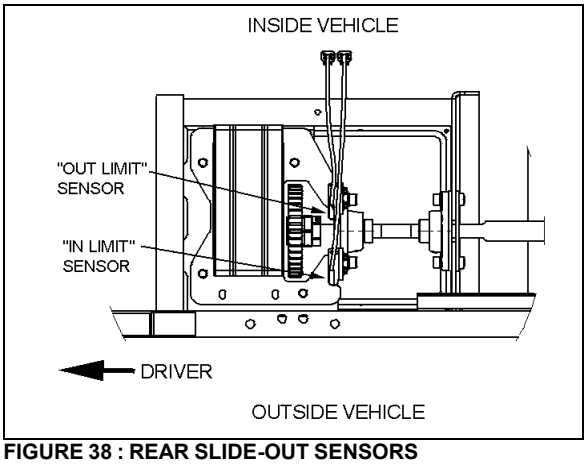

FIGURE 38 : REAR SLIDE-OUT SENSORS

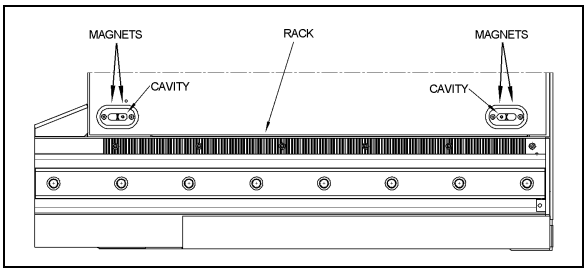

FIGURE 39 : MAGNETS ON SLIDE-OUT UNDERBODY

To adjust the "out limit" sensors:

Prior to adjusting the “out limit” sensors, assure that the inner stoppers are perfectly adjusted (see section 1.1).

1. The slide-out is slightly tilted except when it is in its full “IN” or “OUT” position. Extend the slide-out near its full “OUT” position. When the slide-out straitens up and that it is perpendicular with the vehicle body, stop the slide-out.
2. Loosen the “out limit” sensor mounting bracket screws and move back the sensor completely (toward the inside of the vehicle).
3. Bring slowly the sensor toward the outside of the vehicle until the light emitting diode (LED) turns on. When it does, tighten the mounting bracket screws.

NOTE
When the “out limit” sensors are properly adjusted, the slide-out extension stops before the side inner stoppers reach the vehicle structure.

16 SLIDE-OUT EXTERIOR FINISHING PANELS & WINDOWS

NOTE
The removal and installation procedures are all based on standard service methods described in section 18: BODY. Refer to this manual for procedures, tools, cleaner, adhesives and other product needed.

16.1 FACE PANEL REMOVAL

Use the same procedure as described in section 18: BODY for MTH side panel removal, and:

- Keep the slide-out retracted;
- Make sure not to damage the finishing molding supports to be able to re-use them;
- Remove the old adhesive on the finishing molding supports and clean them before re-using;
- Check where adhesive, sealant and double face adhesive tape are on the structure and the panel back side, in order to be able to stick the new panel in the same way;
- Check the tape width and use same width tape when installing new panels.

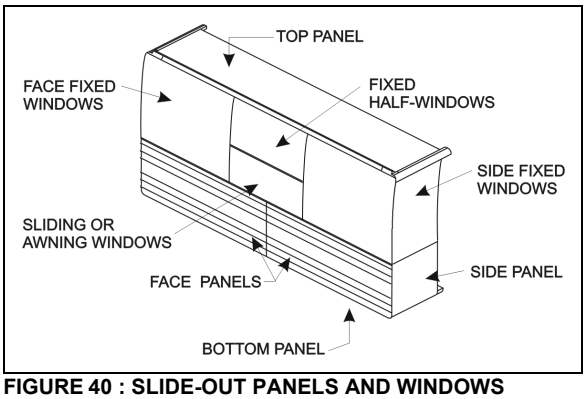

FIGURE 40 : SLIDE-OUT PANELS AND WINDOWS

16.2 FACE PANEL INSTALLATION

For surface cleaning, and preparation, panel installation and products needed, use the same procedure as the MTH side panel installation described in section 18: BODY.

- Keep the slide-out retracted for panel alignment;
- Make sure to apply sealant between the face panels and the side panels, and also between face panels and bottom and top panels. Apply sealant both inside and outside the slide-out panels.

16.3 SIDE PANELS REMOVAL

NOTE
The side panels are made of aluminum, or of stainless steel in option.

⚠ CAUTION
Be careful not to damage the adjacent surfaces.

1. Remove the slide-out (according to the Slide-Out Removal Procedure. Ask to your Prevost service representative).
2. Remove the side fixed windows from the slide-out first, as described in section 16.7.
3. Insert a flat screwdriver between the panel and the slide-out structure, in the top left and right corners of the panel, and unstick the panel from the structure.
4. Use C-clamp to peel the panel from the slide-out structure.
5. Check where adhesive, sealant and double face adhesive tape are on the structure and

the panel back side, in order to be able to stick the new panel in the same way.

6. Check the tape width and use same width tape when installing new panels.

CAUTION

Make sure the heat gun nozzle tip is at least 4" from surface.

7. Use a heat gun and putty knife to remove the dried off adhesive and tape residue from the structure.

DANGER

Because of the adhesive toxicity, never use a buffer or other sanding method to remove it.

16.4 SIDE PANELS INSTALLATION

NOTE

The side panels are made of aluminum, or of stainless steel in option. Use rivet of same material as the panels.

For surface cleaning and preparation, panel installation and products needed, refer to the MTH side panel installation procedure described in section 18: BODY.

1. Protect adjacent surfaces with appropriate material;
2. Refer to FIGURE 41 for 1/16x1/4 double face adhesive tape location on structure;
3. Apply Sika 206 G+P on the side panel as shown in FIGURE 42;
4. Apply Sika Tack+Booster (triangular bead: 9mm width X 6mm high) as shown in FIGURE 43 and glue panel in place as shown in FIGURE 44
5. Exert pressure and let dry for at least 90 minutes;
6. Smooth down the joint and remove glue in excess;
7. After drying, apply Sika 252 as a finishing joint;
8. Smooth down the joint.
9. Refer to section 16.11 for the finishing joint application procedure.

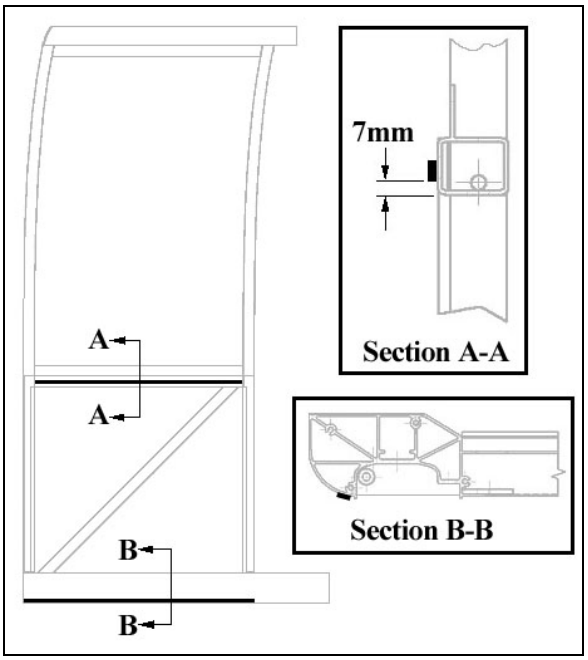

FIGURE 41 : SIDE PANEL INSTALLATION – DOUBLE FACE ADHESIVE TAPE APPLICATION ON THE SLIDE-OUT STRUCTURE

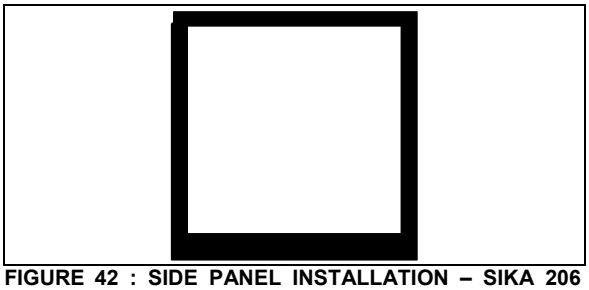

FIGURE 42 : SIDE PANEL INSTALLATION – SIKA 206 G+P APPLICATION

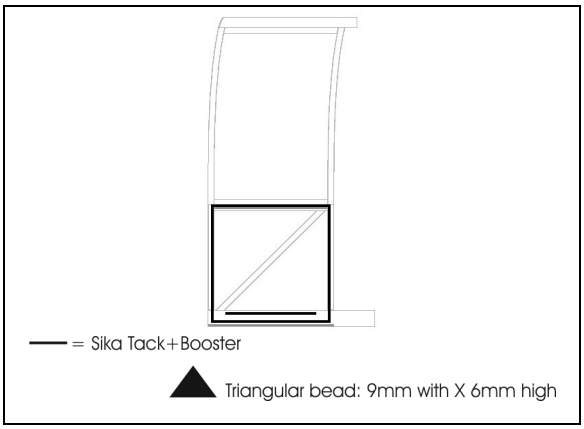

FIGURE 43 : SIDE PANEL INSTALLATION – SIKA TACK+BOOSTER APPLICATION

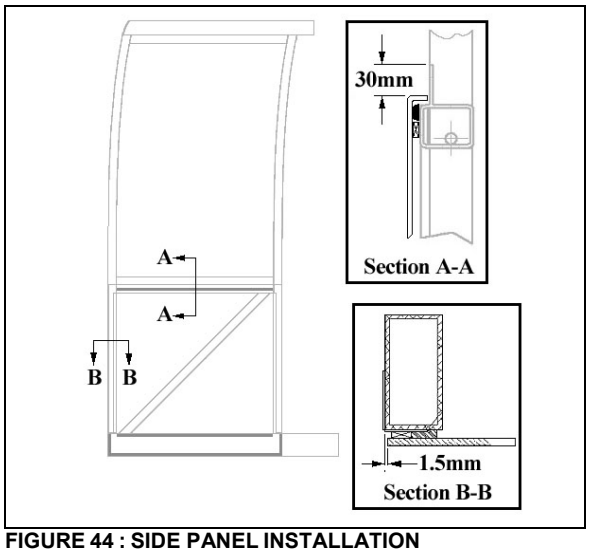

FIGURE 44 : SIDE PANEL INSTALLATION

16.5 TOP AND BOTTOM PANEL REMOVAL

NOTE
The top and bottom panels are made of aluminum sheets.

1. Remove the slide-out (according to the Slide-Out Removal Procedure. Ask to your Prevost service representative).
2. Insert a flat screwdriver between the panel and the slide-out structure, and unstick the panel from the structure.
3. Use C-clamp to peel the panel from the slide-out structure.
4. Check where adhesive, sealant and double face adhesive tape are on the structure and the panel back side, in order to be able to stick the new panel in the same way.
5. Check the tape width and use same width tape when installing new panels.
6. Use a heat gun and putty knife to remove the dried off adhesive and tape residue from the structure.

DANGER

Because of the adhesive toxicity, never use a buffer or other sanding method to remove it.

16.6 TOP AND BOTTOM PANEL INSTALLATION

NOTE
The top and bottom panels are made of aluminum sheets and need aluminum rivet.

For surface cleaning, preparation, panel installation and products needed, refer to the MTH side panel installation procedure described in section 18: BODY.

1. Protect adjacent surfaces with appropriate material.
2. Refer to FIGURE 45 for 1/16x1/4 double face adhesive tape location on structure;
3. Apply Sika 206 G+P on panel as shown in figure 46
4. Apply Sika Tack+Booster (triangular bead: 9mm width X 6mm high) has shown in figure 47 and glue panel in place as shown in FIGURE 48 & FIGURE 49.
5. Exert pressure and let dry for at least 90 minutes;
6. Smooth down the joint and remove glue in excess;
7. After drying, apply Sika 252 as a finishing joint;
8. Smooth down the joint.
9. Refer to section 16.11 for the finishing joint application procedure.

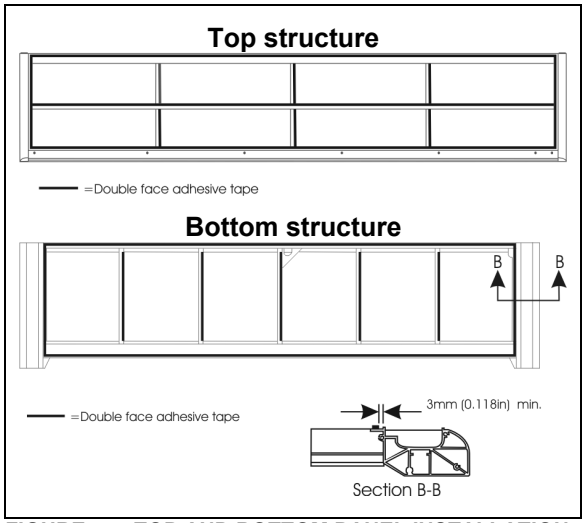

FIGURE 45 : TOP AND BOTTOM PANEL INSTALLATION - DOUBLE FACE ADHESIVE TAPE APPLICATION

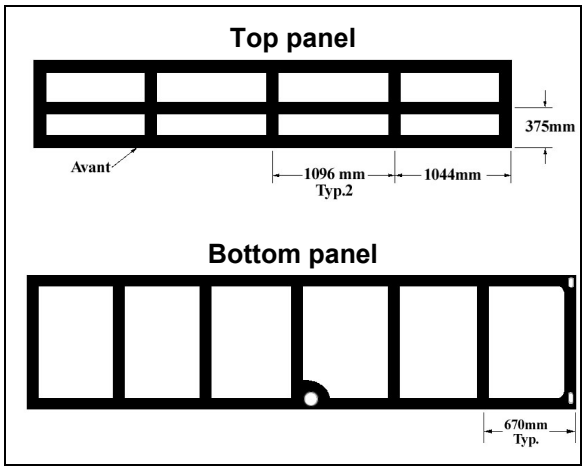

FIGURE 46 : TOP AND BOTTOM PANEL INSTALLATION - SIKA 206 G+P APPLICATION

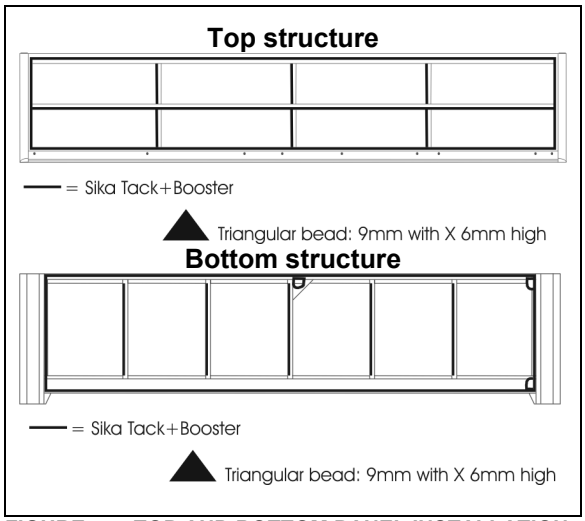

FIGURE 47 : TOP AND BOTTOM PANEL INSTALLATION - SIKA TACK+BOOSTER APPLICATION

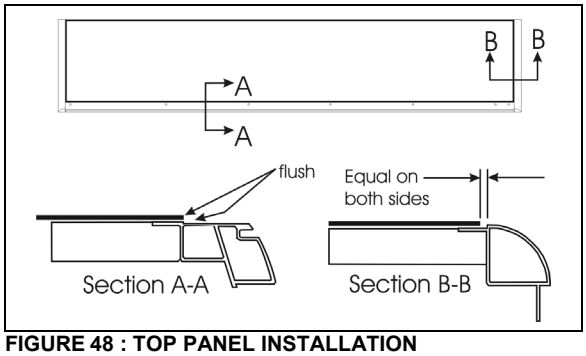

FIGURE 48 : TOP PANEL INSTALLATION

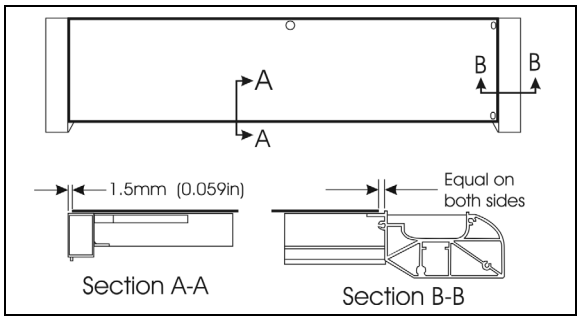

FIGURE 49 : BOTTOM PANEL INSTALLATION

NOTE

The removal and installation procedures are based on standard service methods described in section 18: BODY. Refer to these procedures for tools and adhesives specifications.

DANGER

Always wear safety equipment when working with glass and chemical adhesives.

16.7 WINDOWS REMOVAL

1. Remove the slide-out.
2. If needed, remove the exterior extrusion as described in section 1.3.

CAUTION

Be careful not to damage the adjacent surfaces.

3. With a knife or a wire, cut the sealant and the adhesive between the windows and the structure. Make sure not to damage the rubber seal between the windows.
4. With a helper, remove the window from the slide-out.

16.8 FIXED WINDOWS INSTALLATION

Refer to procedures described in section 18: BODY of the maintenance manual for details.

1. Clean and prepare the windows and the slide-out structure surfaces with appropriate cleaner, abrasives and primers.
2. If necessary, install the rubber seals as per FIGURE 50 & FIGURE 51. Press the seal against the structure with a roller.

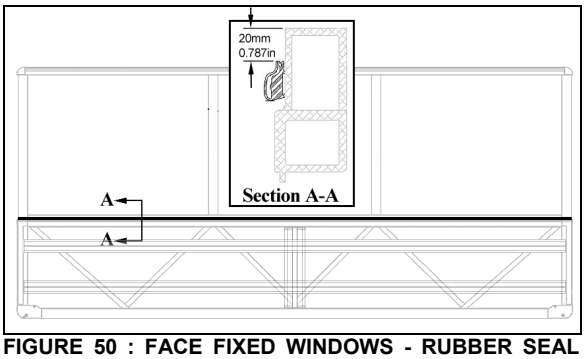

FIGURE 50 : FACE FIXED WINDOWS - RUBBER SEAL INSTALLATION

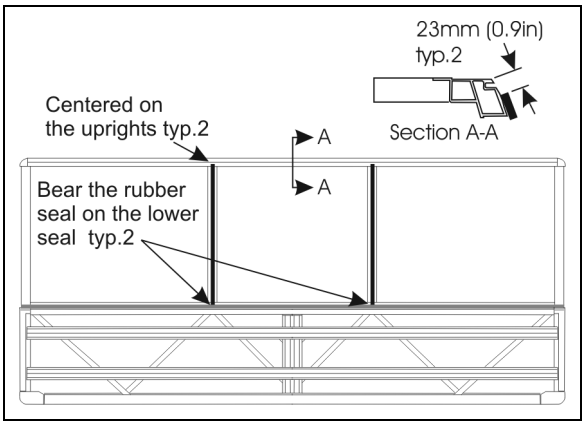

FIGURE 51 : FACE FIXED WINDOWS - RUBBER SEAL INSTALLATION

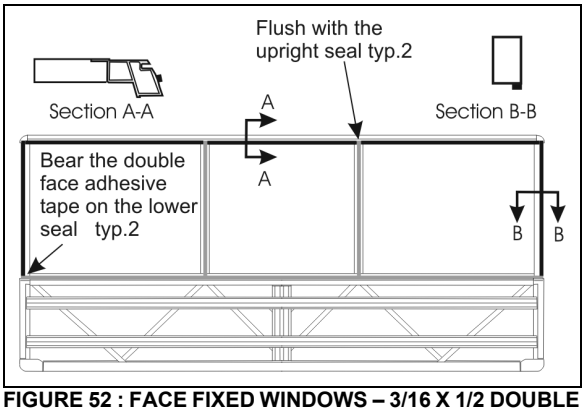

FIGURE 52 : FACE FIXED WINDOWS – 3/16 X 1/2 DOUBLE FACE ADHESIVE TAPE INSTALLATION

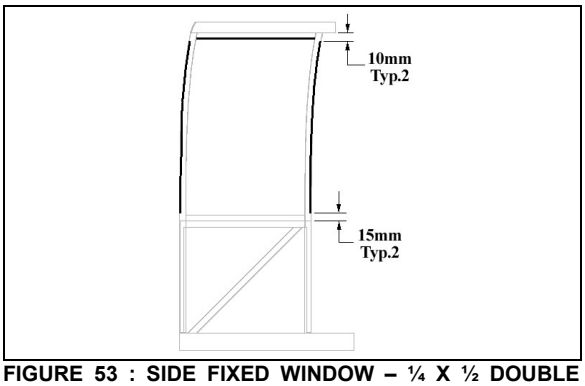

FIGURE 53 : SIDE FIXED WINDOW – ¼ X ½ DOUBLE FACE ADHESIVE TAPE INSTALLATION

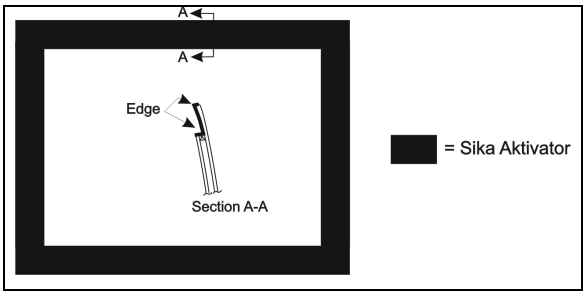

FIGURE 54 : FACE FIXED WINDOW AND HALF-WINDOW – SIKA AKTIVATOR

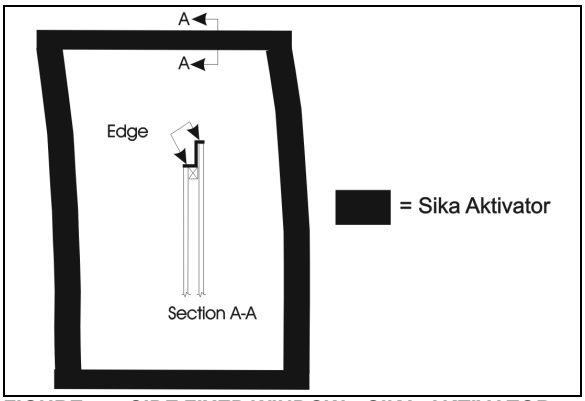

FIGURE 55 : SIDE FIXED WINDOW – SIKA AKTIVATOR

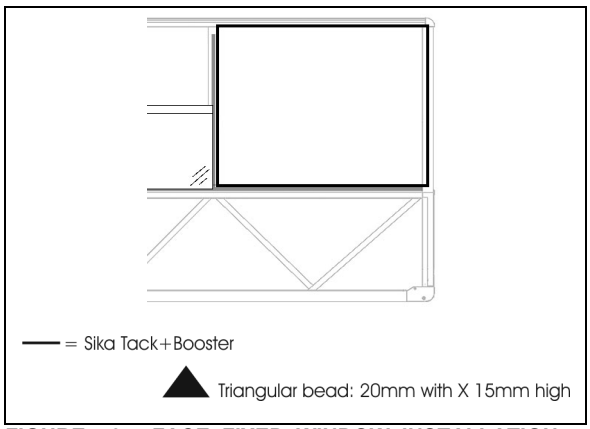

FIGURE 56 : FACE FIXED WINDOW INSTALLATION – SIKA TACK+BOOSTER

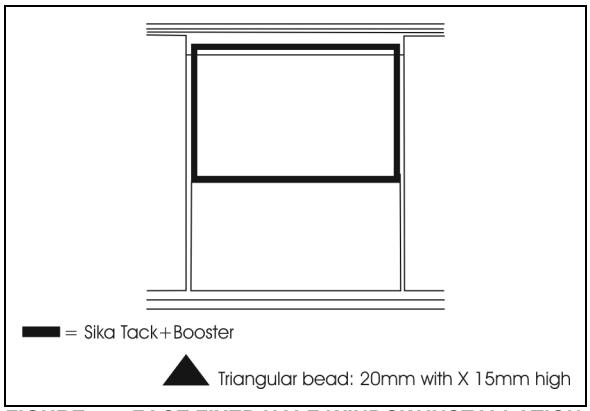

FIGURE 57 : FACE FIXED HALF-WINDOW INSTALLATION – SIKA TACK+BOOSTER

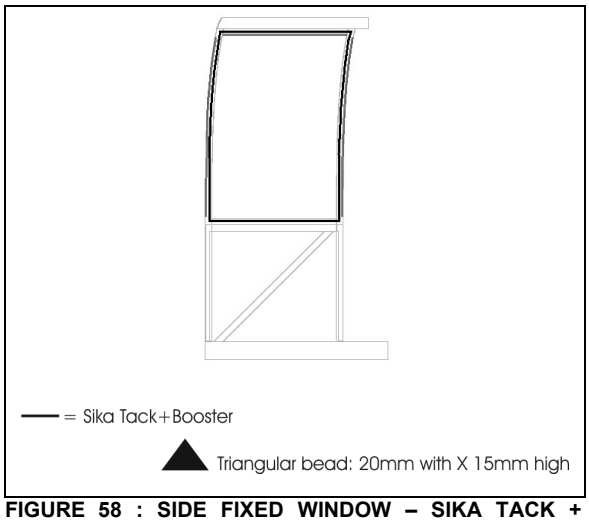

FIGURE 58 : SIDE FIXED WINDOW – SIKA TACK + BOOSTER

3. Apply appropriate double face self adhesive tape on the slide-out structure (see FIGURE 52 for face fixed windows or FIGURE 53 for side fixed window).
4. Clean window with appropriate window cleaner.
5. Apply Sika Aktivator on the window pane as per FIGURE 54 or FIGURE 55.
6. Apply Sika Tack+Booster as per FIGURE 56, FIGURE 57 or FIGURE 58 (triangular bead: 20mm width X 15mm high).
7. Install the windows on the slide-out structure (see FIGURE 59 or FIGURE 60).
8. Press the jigs on the windows and wait for the adhesive to dry (90 minutes minimum).
9. After drying, apply Sika 221 as a finishing joint. Clean excess with Sika 208.
10. Refer to section 16.11 for the finishing joint application procedure.

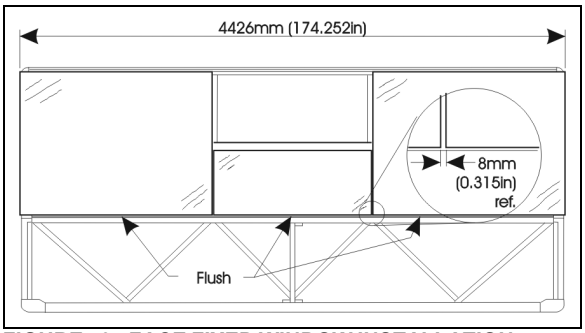

FIGURE 59 : FACE FIXED WINDOW INSTALLATION

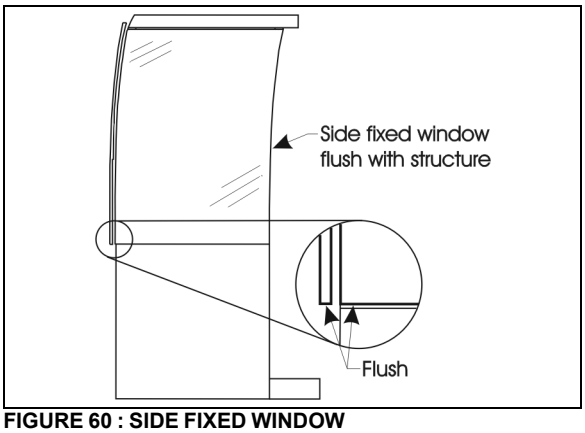

FIGURE 60 : SIDE FIXED WINDOW

16.9 AWNING WINDOW INSTALLATION

1. Clean and prepare the windows and the slide-out structure surfaces with appropriate cleaner, abrasives and primers.
2. Glue on the structure horizontal member, 4 rubber bumpers (#5061020), placing them 2 by 2 to have a total thickness of 1/16" (FIGURE 61).

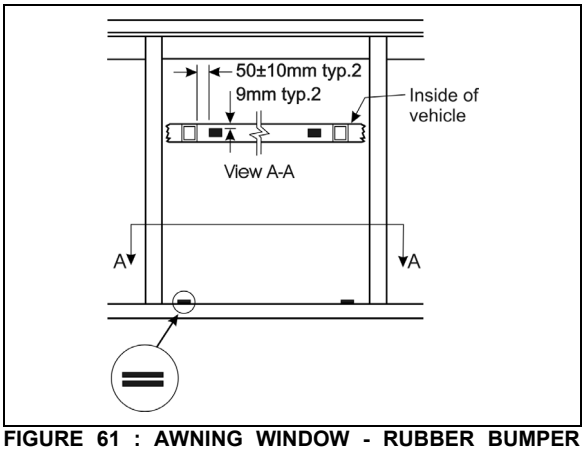

FIGURE 61 : AWNING WINDOW - RUBBER BUMPER INSTALLATION

3. Glue 4 rubber bumpers (#790610) on the awning window frame as per FIGURE 62.

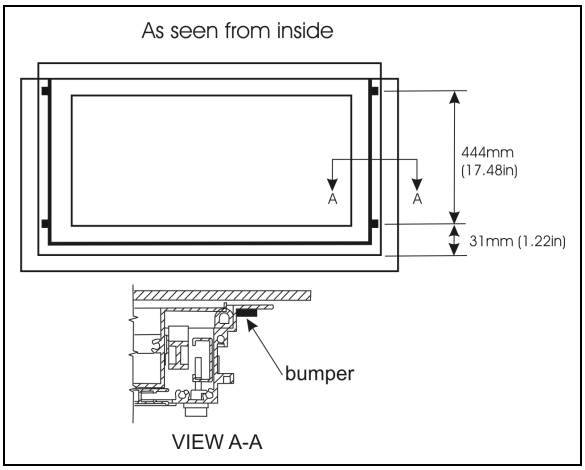

FIGURE 62 : SIDE BUMPERS

4. Place masking tape on the inside of the frame as per FIGURE 63

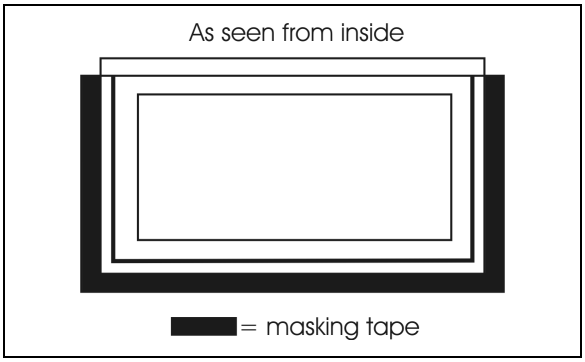

FIGURE 63 : MASKING TAPE APPLICATION

5. Apply Sika 255 in the upper and lower frame corner as per FIGURE 64.

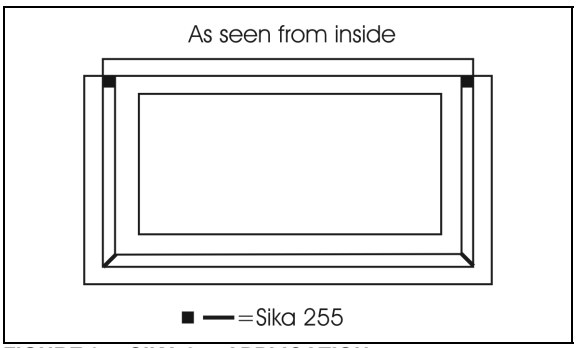

FIGURE 64 : SIKA 255 APPLICATION

6. Apply Sika Aktivator as per FIGURE 65.
7. Apply Sika 255 as per FIGURE 66 (triangular bead: 10mm width X 10mm high).

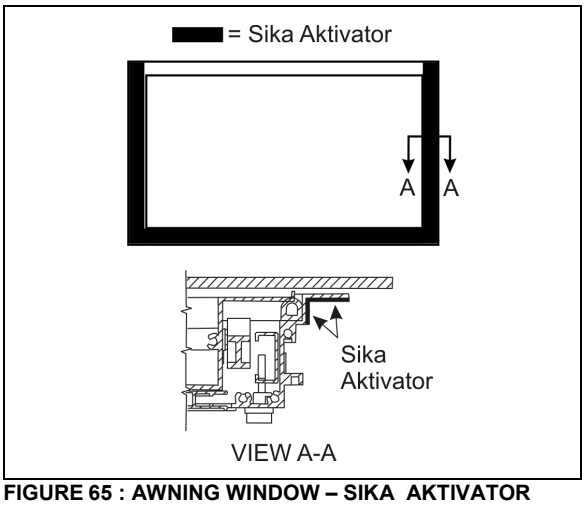

FIGURE 65 : AWNING WINDOW – SIKA AKTIVATOR

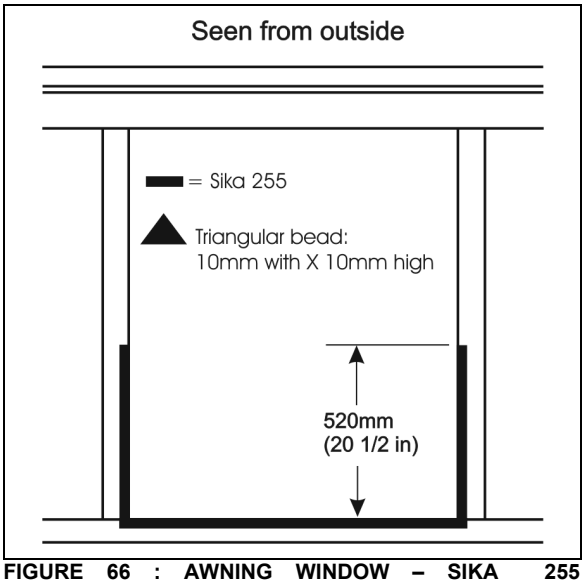

FIGURE 66 : AWNING WINDOW – SIKA 255 APPLICATION

8. Install the awning window centered in the opening. Press the window slightly. The awning window must be kept closed.
9. While a helper is pressing on the window from outside, install the awning window clamping frame and tighten screws according to the sequence shown in FIGURE 67.

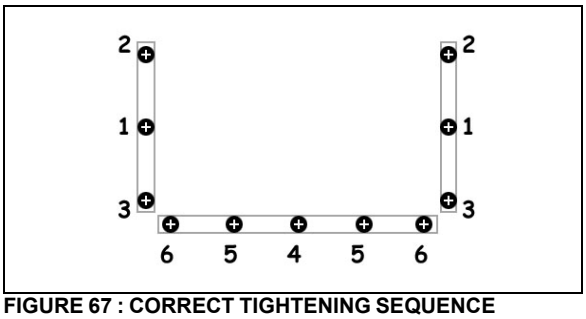

FIGURE 67 : CORRECT TIGHTENING SEQUENCE

10. Open the awning window manually and smooth down the joint (FIGURE 68) and remove glue in excess with Sika 208.

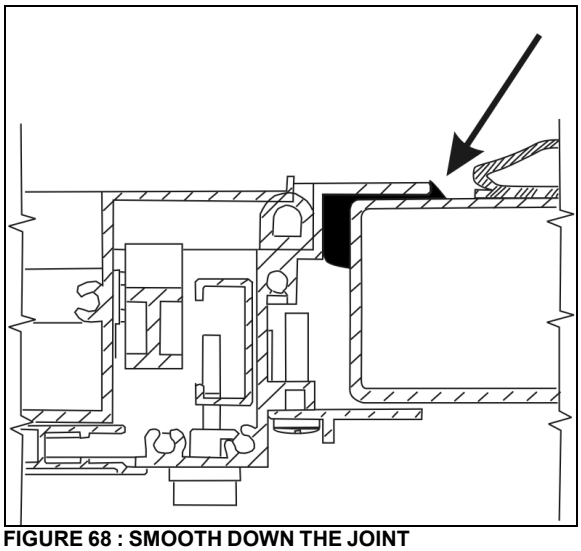

FIGURE 68 : SMOOTH DOWN THE JOINT

11. Using Sika 252 or 255, seal the upper corner of the awning window, both sides (FIGURE 69).
12. Using Sika 252 or 255, seal the chink between the structure vertical member and the awning window, both sides (FIGURE 70).

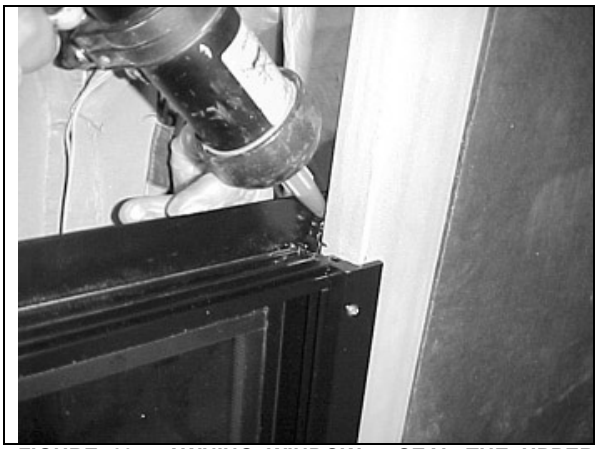

FIGURE 69 : AWNING WINDOW – SEAL THE UPPER CORNERS

FIGURE 70 : AWNING WINDOW – SEAL THE CHINK

16.10 SLIDING WINDOW INSTALLATION

1. Clean and prepare the windows and the slide-out structure surfaces with appropriate cleaner, abrasives and primers. Clean surfaces with anti-silicone.
2. Apply Sika Aktivator on sliding window as per FIGURE 71.
3. Apply Sika Aktivator on the structure as per FIGURE 72.
4. Apply Sika 252 as per FIGURE 73 (triangular bead: 20mm width X 10mm high).
5. Install the sliding window centered in the opening. Press the window slightly. The window must be kept closed.
6. While a helper is pressing on the window from outside, install the awning window clamping frame and tighten screws according to the sequence shown in FIGURE 74.
7. Remove glue in excess with Sika 208.
8. Using Sika 252 or 255, seal the inside upper corner of the sliding window, both sides (FIGURE 75).
9. Using Sika 252 or 255, seal the chink between the structure vertical rubber seal and the sliding window, both sides (FIGURE 76).

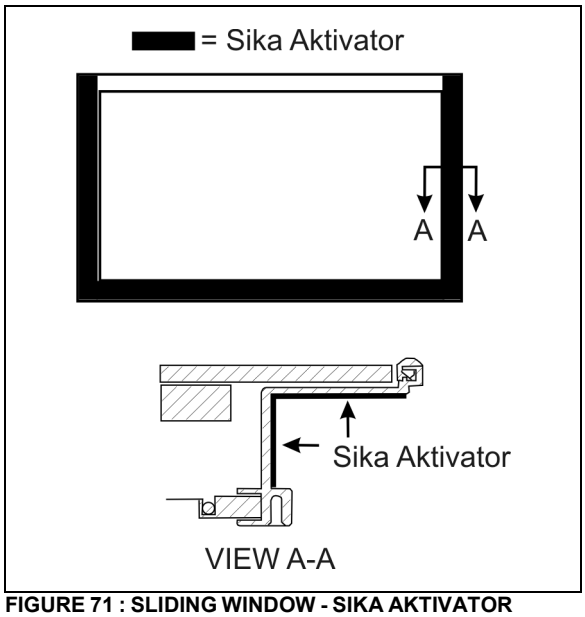

FIGURE 71 : SLIDING WINDOW - SIKA AKTIVATOR

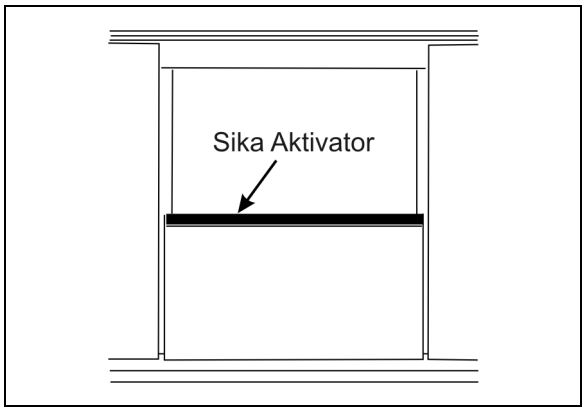

FIGURE 72 : SLIDING WINDOW - SIKA AKTIVATOR

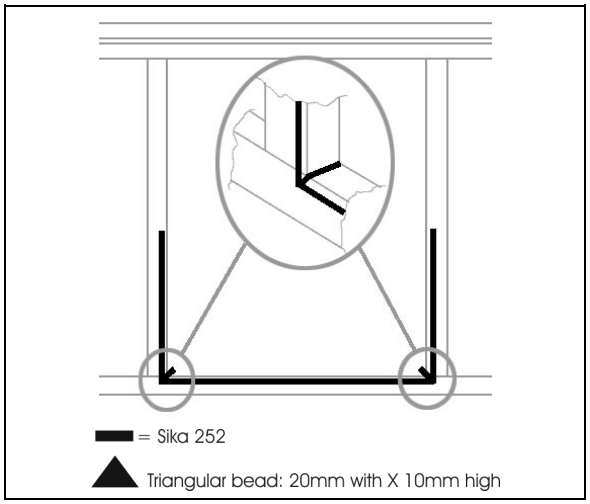

FIGURE 73 : AWNING WINDOW – SIKA 252 APPLICATION

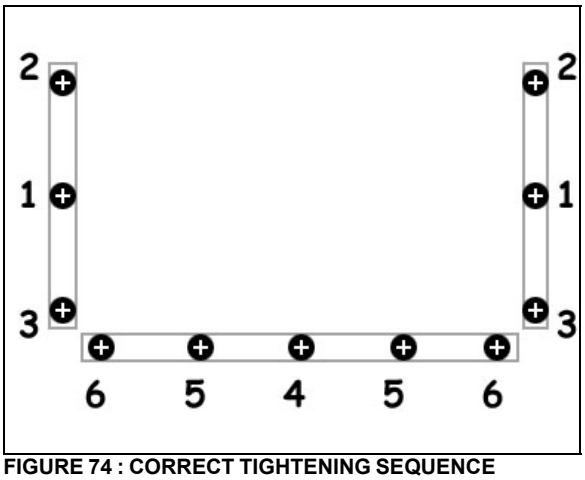

FIGURE 74 : CORRECT TIGHTENING SEQUENCE

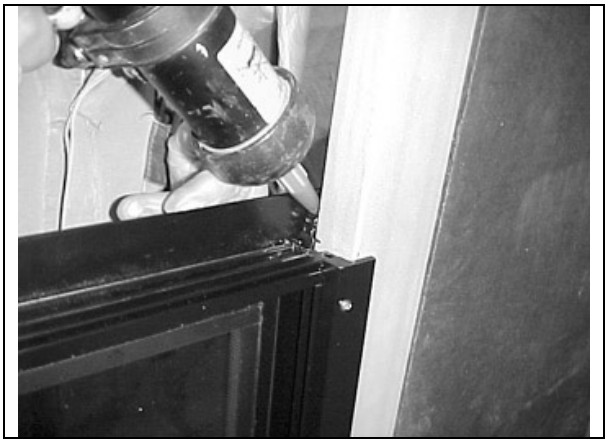

FIGURE 75 : SLIDING WINDOW – SEAL THE UPPER CORNERS

FIGURE 76 : SEAL

16.11 FINISHING JOINT

The following procedure applies to section 16.11.1 up to 16.11.4.

For surface cleaning and preparation, tools, cleaner, adhesives and other product needed, refer to the MTH side panel installation procedure described in section 18: BODY.

1. Place masking tape to protect surfaces from smudge.
2. Apply Sika 221.
3. Using soapy water, smooth down the joint with your finger (wear vinyl gloves).

16.11.1 Slide-out face

Apply Sika 221 between the face panel and the structural member

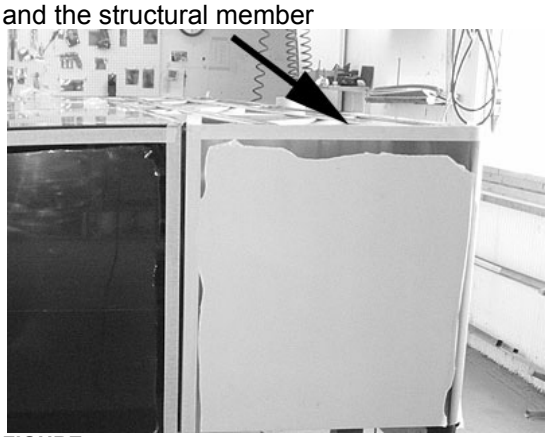

FIGURE 77

Apply Sika 221 between the top of face window and the structural member

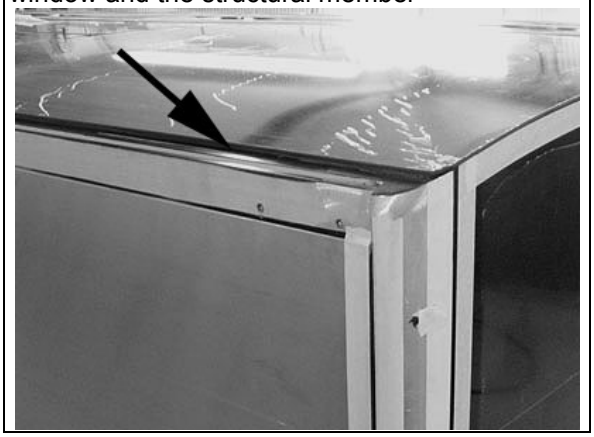

FIGURE 78

16.11.2 Slide-out side

Apply Sika 221 between the top of side window and the structural member

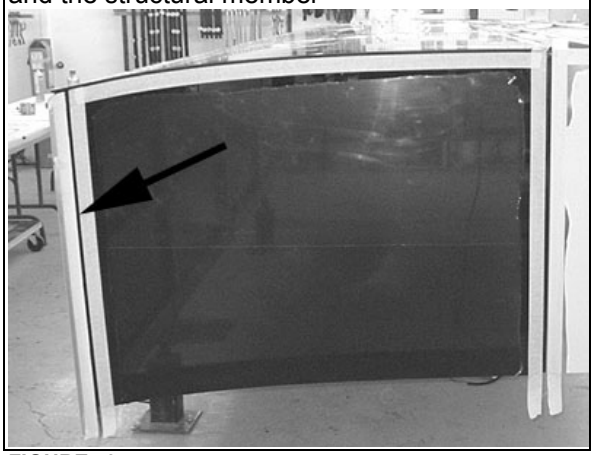

FIGURE 79

Apply Sika 221 between the bottom of side window and top of side panel

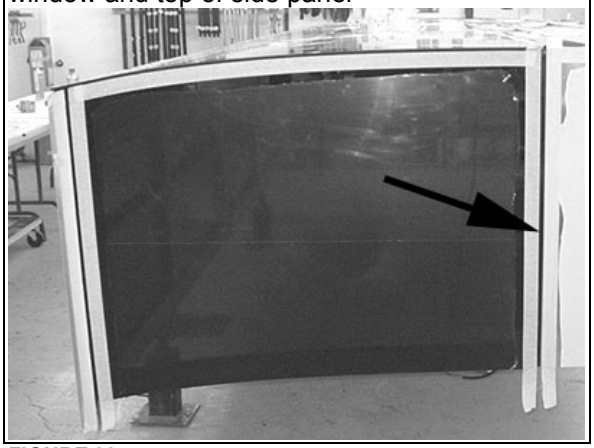

FIGURE 80

Apply Sika 221 between side window and top of face fixed window

FIGURE 81

16.11.3 Slide-out bottom

Apply Sika 221 between bottom edge of side panel and structural member

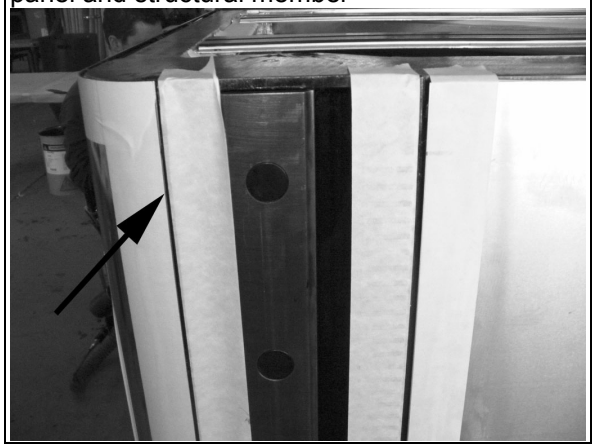

FIGURE 82

Apply Sika 221 between edge of bottom panel and structural member

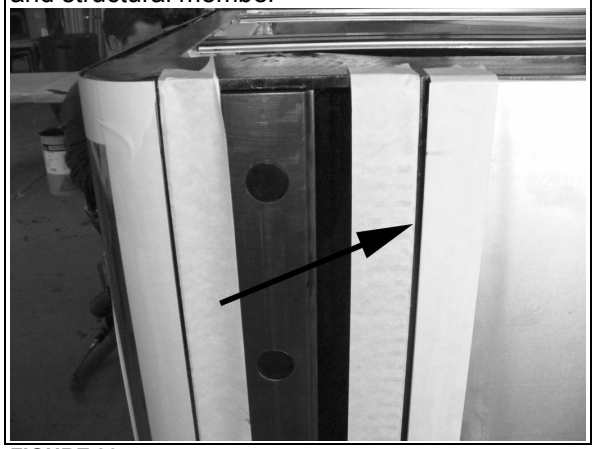

FIGURE 83

Apply Sika 221 between the bottom panel and the magnets

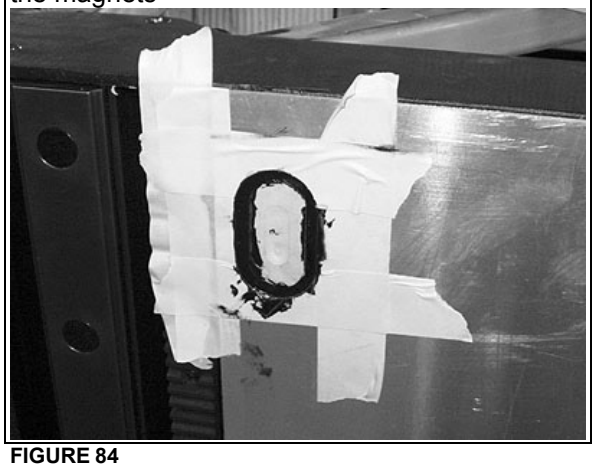

FIGURE 84

Apply Sika 221 around the security pin cavity

FIGURE 85

16.11.4 Top of Slide-out

Apply Sika 221 between edge of top panel and structural member

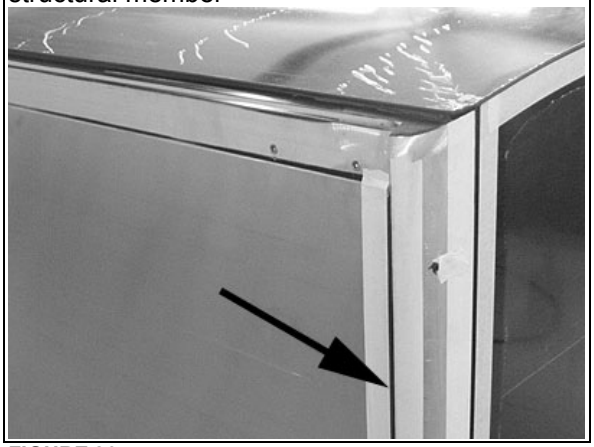

FIGURE 86

17 WELDING PRECAUTION

CAUTION

Prior to arc welding on the vehicle, refer to the Welding Precautions Procedure Prior To Welding" in section 00 GENERAL of this manual to avoid serious damage to the vehicle components.

18 SLIDE-OUT MANUAL OVERRIDE PROCEDURES

In case of power retracting system failure, it is possible to use the manual override procedure to retract or extend the slide-out.

The manual override procedures consist in rotating the slide-out motor shaft extension using a cordless power drill with a 3/8" hexagonal bit. However, it is very important to follow all the instructions very carefully to assure that the inflatable seal or the retraction mechanisms are not damaged.

18.1 PRELIMINARY CONDITIONS FOR MANUAL OVERRIDE PROCEDURE

Before using the slide-out manual override procedures, make sure that the problem cannot be solved by one of the following simple checks:

- Make sure that none of the breakers are tripped (the breakers are located inside the VEC on the slide-out control panel (FIGURE 88) and the main slide-out breaker is located in the engine R.H. side access compartment (FIGURE 89).
- Make sure the barking brake is applied and that transmission is in the "NEUTRAL" position.
- Make sure the voltage is high enough by running the engine at fast idle or having the battery charger connected.

CAUTION

Before extending or retracting the slide-out, always open a window to avoid movement restriction and to prevent the motor from stopping in overcurrent because of a vacuum or pressure build up inside the vehicle.

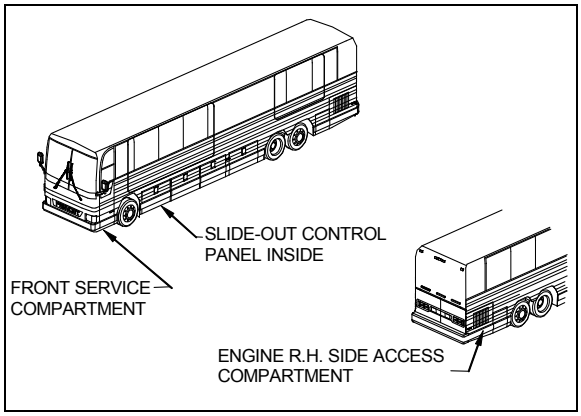

FIGURE 87 : COMPARTMENTS LOCATION

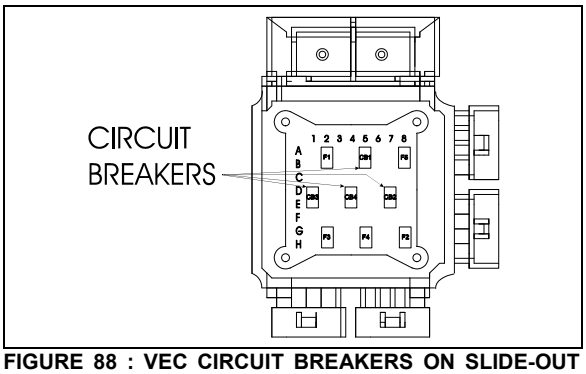

FIGURE 88 : VEC CIRCUIT BREAKERS ON SLIDE-OUT CONTROL PANEL

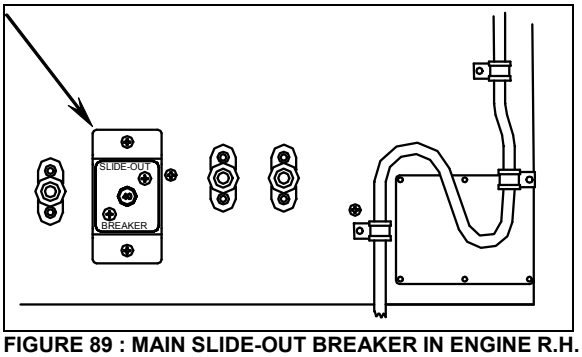

FIGURE 89 : MAIN SLIDE-OUT BREAKER IN ENGINE R.H. SIDE ACCESS COMPARTMENT

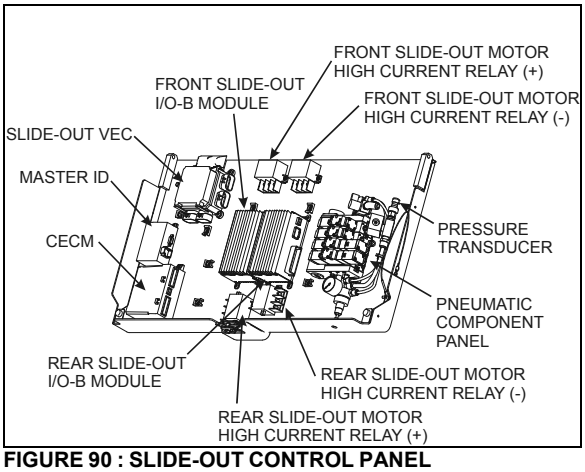

FIGURE 90 : SLIDE-OUT CONTROL PANEL

18.1.1 Manual retracting procedure – Front and rear slide-out

1. Turn the ignition switch to the "OFF" position, and remove the ignition key for more safety.
2. Deflate the inflatable seal by using the relieving shut-off valve located on the pneumatic component panel (FIGURE 91).
3. Turn the handle clockwise to deflate the seal. Make sure the pressure indicator reading is "0 psi".

CAUTION

The pressure in the inflatable seal must be completely relieved to prevent any damage to the seal.

NOTE

When air pressure is relieved using the shut-off valve, the normal extending and retracting operation cycle is disabled, for that reason the slide-out cannot be moved using the handheld control.

4. To move the slide-out, use a cordless power drill with a 3/8" hexagonal bit on the shaft extension of the slide-out motor.

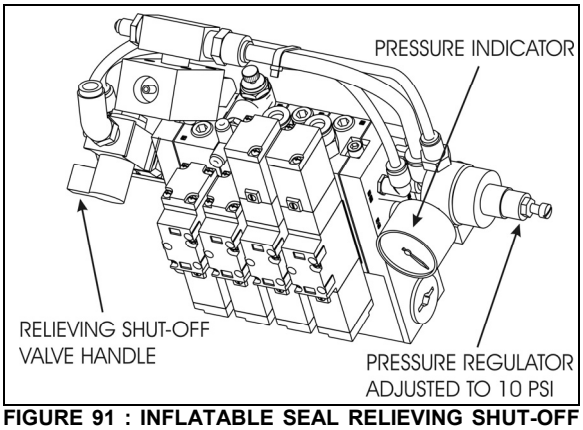

FIGURE 91 : INFLATABLE SEAL RELIEVING SHUT-OFF VALVE

5. Rotate the slide-out motor shaft extension with the power drill until the slide-out comes to its closed position (FIGURE 92).

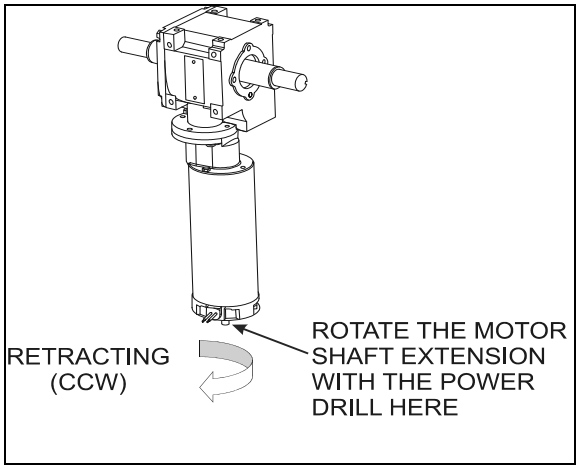

FIGURE 92 : SLIDE-OUT MOTOR ROTATION

6. Once the slide-out room is lined up to its closed position, remove the tool from the motor.

NOTE

*The **front slide-out motor** is located inside the 2nd baggage compartment while the **rear slide-out motor** is accessible from inside the vehicle, under the bed structure.*

CAUTION

Slow down on the closing speed as the slide-out approaches its closed position. As soon as the “in limit” stoppers come in contact with their bearing surface, stop immediately the power drill rotating movement. Not doing so could overload the drive mechanism and cause damage to the reduction gearbox.

4. Finally, the inflatable seal can be re-inflated by turning the shut-off valve handle counterclockwise. Check the pressure gage on the inflatable seal regulator to see if the pressure is increasing to 10 psi (FIGURE 93).

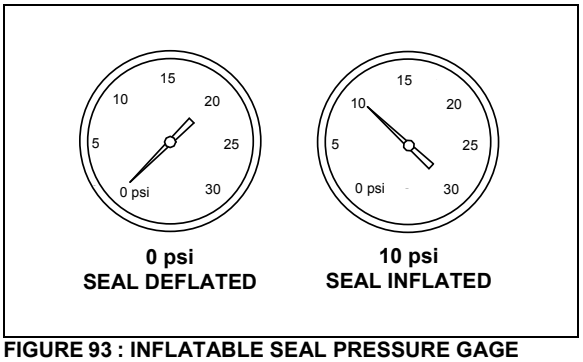

FIGURE 93 : INFLATABLE SEAL PRESSURE GAGE

NOTE

The slide-out control system inhibits transmission range selection to prevent the vehicle from moving if the slide-out is not in its full "IN" position.

18.1.2 Manual extending procedure – Front and rear slide-out

1. Apply parking brake to disengage the security pin from the receptacle.
2. Turn the ignition switch to the "OFF" position, and remove the ignition key for more safety.

3. Deflate the inflatable seal by using the relieving shut-off valve located on the pneumatic component panel (FIGURE 91). Turn the handle clockwise to deflate the seal. Make sure the pressure indicator reading is "0 psi".

CAUTION

The pressure in the inflatable seal must be completely relieved to prevent any damage to the seal.

NOTE

When air pressure is relieved using the shut-off valve, the normal extending and retracting operation cycle is disabled, for that reason the slide-out cannot be moved with the handheld control.

4. To move the slide-out, use a cordless power drill with a 3/8" hexagonal bit on the shaft extension of the slide-out motor.
5. Rotate the slide-out motor shaft extension with the power drill until the slide-out comes to its opened position (FIGURE 94).
6. Once the slide-out is lined up to its opened position, remove the tool from the motor.

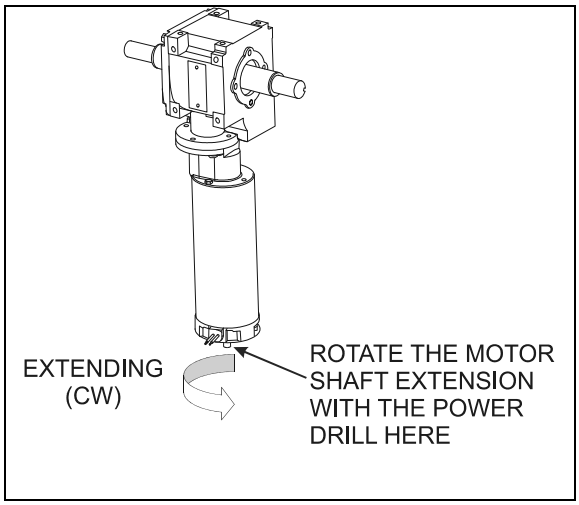

FIGURE 94 : SLIDE-OUT MOTOR ROTATION

NOTE

*The **front slide-out motor** is located inside the 2nd baggage compartment while the **rear slide-out motor** is accessible from inside the vehicle, under the bed structure.*

CAUTION

Slow down on the closing speed as the slide-out approaches its extended position. As soon as the “out limit” stoppers come in contact with their bearing surface, stop immediately the power drill rotating movement. Not doing so could overload the drive mechanism and cause damage to the reduction gearbox.

7. Finally, the inflatable seal can be re-inflated by turning the shut-off valve handle counterclockwise. Check the pressure gage on the inflatable seal regulator to see if the pressure is increasing to 10 psi (FIGURE 93).

NOTE

The slide-out control system inhibits transmission range selection to prevent the vehicle from moving if the slide-out is not in its full "IN" position.

19 SLIDE-OUT MAXIMUM LOAD

Front slide-out:
Maximum load with vehicle at stand still (retracted or extended) ……1500 lb
Maximum load with vehicle moving or slide-out moving ……...1200 lb[1]

Rear slide-out:
Maximum load with vehicle at stand still (retracted or extended) …..1500 lb
Maximum load with vehicle moving or slide-out moving …….1000 lb [1]

NOTE

Maximum load includes people weight and equipment added by the converters in the slide-out

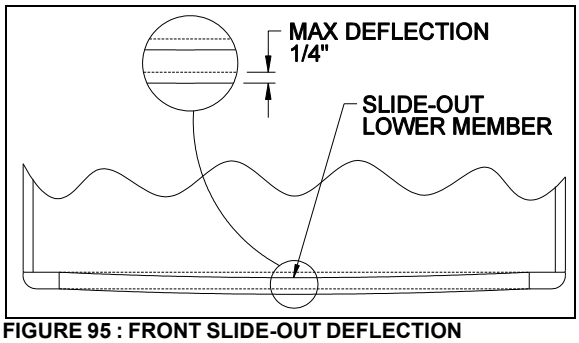

FIGURE 95 : FRONT SLIDE-OUT DEFLECTION

[1] When the load is distributed in the slide-out to prevent a deflection of the inside lower member over ¼” that could damage the seal.

CAUTION

Never remove the structural reinforcement angle brackets inside the baggage compartments. Doing so could lead to termination of the warranty coverage concerning the structural integrity.

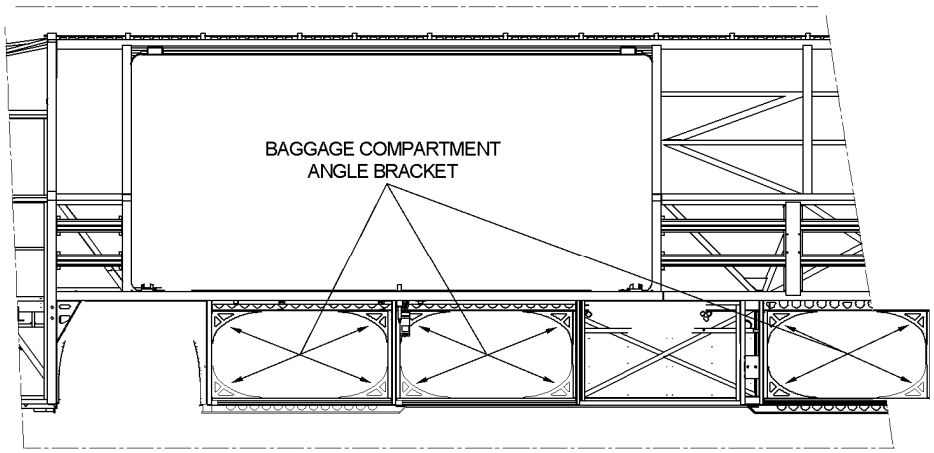

20 CONVERSION CHECKLIST

The converter should check these points before closing the walls covering the roof reinforcing rod and the pinions:

1. Check that the front slide-out exterior panels are parallel with the vehicle panels when retracted. If not, readjust the tilt.
2. Check that the slide-out is straight when completely extended, and that it leans against all inner stoppers.
3. Make sure the vehicle upper member is parallel with the front slide-out structure. If not, readjust the roof reinforcing rod. This may be affected by the loading on the roof.
4. Make sure the front slide-out lower member deflection is within 1/4". If not, redistribute the slide-out load.
5. Check the whole slide-out mechanism good functioning. The slide-out should retract and extend smoothly without vibration.

Final check:

- Make sure the slide-out air pressure inlet valve is completely opened.
- Check the inflatable seal air pressure on the pressure regulator. The pressure should be 10 psi.

TROUBLESHOOTING

20.1 ERROR CONDITION OR MISSING OPERATION CONDITION

When an error condition or a missing operation condition is present on a slide-out, the green indicator light on its respective handheld control starts blinking upon releasing of the IN/OUT rocker switch.
Turning the ignition OFF and ON again, will stop the blinking and reset the fault. If the error condition or a missing operation condition is still present, the blinking will start again the next time that the slide-out is operated. So, to get a fault diagnostic, use the MCD right after operating the slide-out without cycling the ignition switch.

NOTE
It is of the utmost importance to have a MCD (message center display) in working condition because it is the most important tool to achieve troubleshooting on a multiplex vehicle.

Fault diagnostic

To get more specific information about the error condition or the missing operation condition, request a diagnostic from the slide-out CECM using the dashboard message center display (MCD). Check if there are active errors in the slide-out electrical system. With the SYSTEM DIAGNOSTIC menu, highlight FAULT DIAGNOSTIC and then highlight ELECTRICAL SYSTEM to request a diagnostic of the electrical system from the CECM. Press the enter key. If applicable, the MCD shows the device ID, the fault messages or fault codes recorded. When more than one fault is recorded, an arrow pointing down appears on the right of the display. Use the down arrow to see all the fault messages.
Once the problem corrected, the MCD still shows the fault as being active. You have to leave the FAULT DIAGNOSTIC menu, wait approximately 20 to 30 seconds and then return to FAULT DIAGNOSTIC to request a new diagnostic of the ELECTRICAL SYSTEM from the CECM. The MCD should display the fault as being inactive.

20.2 TROUBLESHOOTING – OPERATING CONDITIONS & CONTROL

PROBLEM	CAUSE	CORRECTIVE ACTION
The slide-out functions normally but the handheld control green indicator light blinks	Something is defective and may eventually create an issue if not repaired. The problem may be: A. Faulty limit sensor causing the slide-out to stop in overcurrent; B. CAN network problem causing the transmission inhibit safety to be non-operational; C. Vacuum pressure transducer disconnected or damaged (vacuum is applied for a fixed time of 7 seconds); D. Seal inflating valve solenoid open circuit (the seal is not re-inflated and water can penetrate in the vehicle); E. Security pin valve solenoid open circuit (the security pin is not extended while vehicle is riding).	Request a diagnostic from the electrical system using the MCD SYSTEM DIAGNOSTIC menu and refer to the Fault Message list in section 20.4.

PROBLEM	CAUSE	CORRECTIVE ACTION
The slide-out does not extend	A. The parking brake is not seen by the controller as being applied; B. Not enough air pressure in the accessory air tank to permit proper operation of the vacuum generator; C. Faulty vacuum generator, connection to the vacuum generator open, seal deflating valve solenoid open circuit; D. I/O-B module output defective, regulated 5-volt supply to sensors shorted to ground, “out limit” sensor shorted to ground, connection to the motor negative relay solenoid open circuit;	A. Make sure the parking brake is applied. Confirm parking brake application with the parking brake light on the telltale panel. B. Run the engine at fast idle a few minutes to increase air pressure in the accessory air tank and try again. C. Turn the relieving shut-off valve handle clockwise to deflate the inflatable seal, disconnect the pressure transducer. Do not forget to reconnect the pressure transducer and to close the relieving shut-off valve. Failure to do so could damage the seal and lead to water infiltration; D. Operate the slide-out with the manual override procedures.
The slide-out does not retract	A. Not enough air pressure in the accessory air tank to permit proper operation of the vacuum generator; B. Faulty vacuum generator, connection to the vacuum generator open, seal deflating valve solenoid open circuit; C. I/O-B module output defective, “in limit” sensor shorted to ground, connection to the motor positive relay solenoid open circuit;	A. Run the engine at fast idle a few minutes to increase air pressure in the accessory air tank and try again. B. Turn the relieving shut-off valve handle clockwise to deflate the inflatable seal, disconnect the pressure transducer. CAUTION, do not forget to reconnect the pressure transducer and to close the relieving shut-off valve. Failure to do so could damage the seal and lead to water infiltration; C. Operate the slide-out with the manual override procedures.
When extending, the slide-out stops after having extended by 1 inch	A. The security pin valve solenoid circuit is shorted to (+) 24-volt and the pin remains engaged;	A. Disconnect air supply from the safety pin cylinder;
Transmission DRIVE range or REVERSE cannot be selected (the slide-out telltale light is illuminating).	A. Slide-out not in full "in" position; B. Faulty “in limit” sensor. The slide-out is retracted but the controller doesn’t not see it as retracted.	A. Retract slide-out. B. Confirm that all slide-out are retracted. On the slide-out control panel, disconnect the 5 pins green connector on the I/O-B module to disable the transmission inhibit. CAUTION, this is a temporary measure, the vehicle must be serviced as soon as possible.

20.3 TROUBLESHOOTING - MECHANICAL COMPONENTS

PROBLEM	CAUSE	CORRECTIVE ACTION
Slide-out does not retract or extend when depressing the control switch.	A. Electrical motor failure; B. Speed reduction gearbox failure; C. Security pin still engaged in receptacle;	A. Replace motor. B. Inspect gearbox components, particularly: bronze wheel or first reduction stage output shaft. Replace damaged components. C. Disengage pin and check if air cylinder is damaged.
Slide-out is not straight once retracted or during retracting or extending operation.	A. Broken rack tooth; B. Faulty rack attachment; C. Faulty shaft key at speed reduction gearbox or jaw coupling; D. Pinion keyless bushing slipping; E. Shaft breaking; F. Flange bearing attachment loosen;	A. Replace rack. B. Tighten mounting bolts, apply proper torque and use Loctite threadlocker (replace rack if necessary). C. Replace key or component having a damaged keyway. D. Realign slide-out and apply proper torque to keyless bushing. E. Replace shaft. F. Reposition shaft and tighten flange bearing mounting bolts.
Slide-out moves out slightly when vehicle is traveling.	A. Lower "in limit" stoppers are not leaning against the structure at the moment when the "in limit" sensor detects the magnet;	A. Adjust the sensor position in order to have contact of the stoppers against the structure at the time when the system stops the slide-out retraction.
Slide-out moves when vehicle is moving.	A. Inflatable seal not inflated	A. Check seal condition and seal air supply system.
Slide-out retracts or extends difficultly.	A. Foreign matters accumulated in the linear bearing;	A. Inspect the linear bearing end seals to see if they are in good condition. If not, replace the end seals and clean the inside of linear bearing.
Slide-out oscillates vertically when retracting or extending	A. Linear bearing balls hardened due to a too heavy load; B. Linear bearing mounting bolts loosen;	A. If balls clearance is excessive, replace linear bearing. B. Tighten mounting bolts.
Slide-out vibrating or noisy when extending or retracting	A. Acetal plastic block rubbing against the slide-out structure; B. Worn-out anti-friction coating on wiper seal around slide-out; C. Lower acetal plastic block rubbing against rail;	A. Realign acetal plastic block. B. Replace wiper seal. C. Remove lower acetal plastic block and machine down 1mm (0.039").

PROBLEM	CAUSE	CORRECTIVE ACTION
Top of slide-out moves sideways when vehicle is moving	A. Roof reinforcing rod misadjusted;	A. Readjust as per procedure.
Slide-out does not retract up to its full "in" position	A. Interference between the exterior extrusion and the vehicle upper horizontal member above the slide-out;	A. Check for straightness of horizontal member and adjust the roof reinforcing rod. B. Check for outer wiper seal lip straightness on the slide-out roof.
Bottom of slide-out not flush with vehicle body	A. Broken or misadjusted lower "in limit" stopper; B. Lower "in limit" stoppers are not leaning against the structure at the moment when the "in limit" sensor detects the magnet; C. Acetal plastic block serving as leaning surface for lower "in limit" stopper broken or moved;	A. Replace or adjust lower "in limit" stopper. B. Adjust the sensor position in order to have contact of the stoppers against the structure when slide-out is stopped. C. Replace or adjust acetal plastic block proper position.
Top of slide-out not flush with vehicle body	A. Broken or misadjusted leveling or retaining screw; B. Faulty upper “in limit" stopper;	A. Check and replace screw. B. Replace upper “in limit" stopper.
Lower edge of slide-out not parallel with vehicle body opening	A. Faulty leveling and retaining screw (8 screws each side).	A. Inspect screw, replace and adjust slide-out level.
Watertightness problem	A. Inflatable seal and/or wiper seal damaged or unstuck; B. Insufficient air pressure in the seal; C. No air pressure in the slide-out pneumatic system; D. Sealant missing; E. Wiper seal draining hole clogged; F. Faulty water recovery pan; G. Faulty internal gutter;	A. Check both seals condition. B. Check the pressure regulator, the relieving shut-off valve and the seal valve condition. C. Check the slide-out air pressure inlet valve condition and the accessory air tank pressure. D. Check the exterior extrusion screws, the windows and the exterior panels sealant condition. E. Unclog draining hole. F. Check the recovery pan. G. Check internal gutter.
Knocking sound at end of travel when extending slide-out	A. Inner stoppers misadjusted;	A. Readjust the inner stoppers.

PROBLEM	CAUSE	CORRECTIVE ACTION
Knocking sound when parking brake is released	A. Security pin retracts too rapidly;	A. Adjust security pin air flow regulator.
Inflatable seal damaged or removed, or wiper seal unstuck from the structure.	A. Slide-out has been retracted or extended with the manual procedure with the inflatable seal not deflated; B. Pressure transducer malfunction; C. Faulty roof reinforcing rod adjustment; D. Seal valve malfunction; E. Excessive load in the slide-out; F. Slide-out not centered in the structure opening;	A. Always deflate the seal when manually retracting or extending the slide-out. B. Check the pressure transducer condition, replace if necessary. C. Readjust the roof reinforcing rod. D. Check the seal valve condition. E. Reduce load or distribute load evenly in order to respect the deflection criterion and slide-out load capacity. F. Readjust the slide-out height and center horizontally in opening.
Friction at end of travel when in full OUT position or at beginning of retraction	A. Interference between upper structure key and upper inner stopper;	A. Readjust the upper inner stopper.

20.4 SLIDE-OUT FAULT MESSAGE ON MESSAGE CENTER DISPLAY (MCD)

SID #	FAULT MESSAGE	TEXT	PROBABLE CAUSE	CORRECTIVE ACTION
1	Voltage Module A56	Value Too Low	Module A56 sees a Voltage less than 18 V on its power supply connector. Breaker, fuse or wiring harness open.	Check/ reset circuit breaker CBSo and CBSo1. Check/ replace fuse FSo5 Fix wiring harness
2	No Response Mod A56	Data Error	CECM module does not receive CAN communication from module A56. CAN connector A56 J3 Disconnected or CAN wiring harness open, or module A56 is defective.	Check connection A56 J3 Fix CAN wiring harness Replace module A56
3	Voltage Module A57	Value Too Low	Module A57 sees a voltage less than 18 V on its power supply connector. Breaker, fuse or wiring harness open.	Check/ reset circuit breaker CBSo and CBSo2. Check/ replace fuse FSo2 Fix wiring harness
4	No Response Mod A57	Data Error	CECM module does not receive CAN communication from module A57. CAN connector A57 J3 disconnected or CAN wiring harness open or module A57 is defective.	Check connection A57 J3 Fix CAN wiring harness Replace module
5	SldO Vacuum Sensor	Open Circuit	Pressure transducer disconnected. Faulty pressure transducer. Connection or wiring harness open.	Check/ replace vacuum transducer Check/ reconnect the connector SESo1 Fix wiring harness
		Shorted High	Pressure transducer is faulty Wiring harness shorted to 12v or 24v	Check/ replace vacuum transducer Fix wiring harness
6	SldO Seal Deaf Vac	Mechanical Fault	Does not reach vacuum level (-5 PSIG). Slide-out seal damaged or air leak in the seal deflating pneumatic circuit.	Check the seals and the pneumatic circuit.
7	SldO Motor/Limit se	Mechanical Or Electrical Fault	Slide-Out motor is activated for more than 5 seconds and the limit sensor from the departing end is still seen as active. Either the motor is defective and the slide-out is not moving or the limit sensor from the departing end is broken active.	If the slide-Out is not moving, then check the motor and its wiring. If the slide-out is moving, then check the limit sensor from the departing end. (If problem occurs when extending, check the in-limit sensor. If the problem occurred when retracting, then check the out-limit sensor).
8	SldO Park Br Signal	Mechanical Or Electrical Fault	Parking brake is not applied. Wire between parking brake switch and CECM is open.	Make sure the parking brake is applied and the parking brake telltale illuminates. Check / replace parking brake switch. Fix wiring harness.

SID #	FAULT MESSAGE	TEXT	PROBABLE CAUSE	CORRECTIVE ACTION
		Shorted High	Wire between parking brake switch and CECM is shorted to 12v or 24v.	Fix wiring harness.
9	SldO Mot SpeedA Ctr	Shorted High	Wiring harness shorted to 12v or 24v	Fix wiring harness
		Current Above normal	Security pin or object stop the movement of a slide-out	Check / fix security pin functionality. Check / remove any object around the slide-out.
10	SldO Mot SpeedB Ctr	Shorted High	Wiring harness shorted to 12v or 24v	Fix wiring harness
		Current Above normal	Security pin or object stop the movement of a slide-out	Check / fix security pin functionality. Check / remove any object around the slide-out.
11	SldO Remote Led	Shorted High	LED or wiring harness shorted to 12v or 24v	Fix LED or wiring harness
		Shorted Low	Led or wiring harness shorted to ground	Fix LED or wiring harness
		Open Circuit	LED is broken. Bad connection on handheld control. Wiring harness is cut.	Check / fix remote LED or connection Check /fix wiring harness
		Current Above normal	Led or wiring harness shorted to 12v or 24v	Fix Led or wiring harness
12	SldO Seal Inf Sol	Shorted High	Solenoid or wiring harness shorted to 12v or 24v	Fix solenoid or wiring harness
		Shorted Low	Solenoid or wiring harness shorted to ground	Fix solenoid or wiring harness
		Open Circuit	Solenoid is broken or open. Bad connection on solenoid or bloc valve. Wiring harness is cut.	Check / fix solenoid or connection Check /fix wiring harness
		Current Above normal	Solenoid or wiring harness shorted to 12v or 24v	Fix solenoid or wiring harness
13	SldO Seal Def Sol	Shorted High	Solenoid or wiring harness shorted to 12v or 24v	Fix solenoid or wiring harness
		Shorted Low	Solenoid or wiring harness shorted to ground	Fix solenoid or wiring harness
		Open Circuit	Solenoid is broken or open. Bad connection on solenoid or bloc valve. Wiring harness is cut.	Check / fix solenoid or connection. Check /fix wiring harness
		Current Above normal	Solenoid or wiring harness shorted to 12v or 24v	Fix solenoid or wiring harness
14	SldO Vacc Gen Sol	Shorted High	Solenoid or wiring harness shorted to 12v or 24v	Fix solenoid or wiring harness
		Shorted Low	Solenoid or wiring harness Shorted to ground	Fix solenoid or wiring harness
		Open Circuit	Solenoid is broken or open. Bad connection on solenoid or bloc valve. Wiring harness is cut.	Check / fix solenoid or connection Check / fix wiring harness
		Current Above normal	Solenoid or wiring harness shorted to 12v or 24v	Fix Solenoid or wiring harness
15	SldO Mot Neg Rly	Shorted High	Relay coil or wiring harness shorted to 12v or 24v	Fix relay coil or wiring harness

SID #	FAULT MESSAGE	TEXT	PROBABLE CAUSE	CORRECTIVE ACTION
		Shorted Low	Relay coil or wiring harness shorted to ground	Fix relay coil or wiring harness
		Open Circuit	Relay coil is broken or open. Bad connection on relay. Wiring harness is cut.	Check / fix relay coil or connection Check / fix wiring harness
		Current Above normal	Relay coil or wiring harness shorted to 12v or 24v	Fix relay coil or wiring harness
16	SldO Mot Pos Rly	Shorted High	Relay coil or wiring harness shorted to 12v or 24v	Fix relay coil or wiring harness
		Shorted Low	Relay coil or wiring harness shorted to ground	Fix relay coil or wiring harness
		Open Circuit	Relay coil is broken or open. Bad connection on relay. Wiring harness is cut.	Check / fix relay coil or connection Check / fix wiring harness
		Current Above normal	Relay coil or wiring harness shorted to 12v or 24v	Fix relay coil or wiring harness
17	SldO Open Sw	Shorted High	Switch or wiring harness shorted to 12v or 24v	Fix switch or wiring harness
18	SldO Close Sw	Shorted High	Switch or wiring harness shorted to 12v or 24v	Fix switch or wiring harness
19	SldO Limit In Se	Shorted High	Sensor or wiring harness shorted to 12v or 24v	Fix sensor or wiring harness
20	SldO Limit Out Se	Shorted High	Sensor or wiring harness shorted to 12v or 24v	Fix sensor or wiring harness
21	SldO Secu Pin Sol	Shorted High	Solenoid or wiring harness shorted to 12v or 24v	Fix solenoid or wiring harness
		Shorted Low	Solenoid or wiring Harness shorted to ground	Fix solenoid or wiring harness
		Open Circuit	Solenoid is broken or open. Bad connection on solenoid or bloc valve. Wiring harness is cut.	Check / fix solenoid or connection. Check / fix wiring harness
		Current Above normal	Solenoid or wiring harness shorted to 12v or 24v	Fix solenoid or wiring harness
22	SldO Limit In Out	Mechanical Or Electrical Fault	In Limit and Out Limit are seen at the same time. In Limit or Out Limit problem.	Check / replace in limit or out limit sensors Fix wiring harness.
23	Limit Sensor 5 V supply	Shorted Low	5v IO-B output is less than 2v. Wiring harness is open or shorted to ground.	Check 5v output on IO-B / replace IO-B module. Fix wiring harness.

CONTENTS

1. FUEL SYSTEM WITH VOLVO D13 ENGINE 3

1.1 DESCRIPTION 3
1.2 FUEL VALVES 4
1.3 FUEL FILTERS 5
1.3.1 Primary Fuel Filter Replacement 5
1.3.2 Secondary Fuel Filter Replacement 6
1.4 PRIMING THE FUEL SYSTEM 6
1.5 FUEL PUMP REMOVAL AND INSTALLATION 7

2. DAVCO FUEL PRO 382 7

3. FUEL LINES AND FLEXIBLE HOSES 9

4. PREHEATER FUEL FILTER 9

5. FUEL TANK 9

5.1 TANK REMOVAL 9
5.2 TANK INSTALLATION 10
5.3 FUEL TANK VERIFICATION 11
5.4 POLYETHYLENE FUEL TANK REPAIR 11

6. FUEL SPECIFICATIONS 11

6.1 FUEL TYPE 11
6.2 BLENDING 12
6.3 BIODIESEL FUELS 12

7. AIR CLEANER (DRY TYPE) 12

7.1 PRE-CLEANER SERVICING 12
7.2 AIR CLEANER SERVICING 12
7.3 GENERAL RECOMMENDATIONS 13
7.4 AIR CLEANER RESTRICTION INDICATOR 13

8. FUEL PEDAL 13

8.1 FUEL PEDAL ADJUSTMENT 13
8.2 POTENTIOMETER REPLACEMENT 13

9. SPECIFICATIONS 14

ILLUTRATIONS

FIGURE 1: FUEL SYSTEM SCHEMATIC (VOLVO D13 ENGINE) 3
FIGURE 2: MANUAL SHUT-OFF VALVE (VOLVO D13 ENGINE) 4
FIGURE 3: MANUAL SHUT-OFF VALVE LOCATION WITH DAVCO FUEL PRO 382 (VOLVO D13 ENGINE) 4
FIGURE 4: FUEL LINE COMPRESSION FITTING 4
FIGURE 5: FUEL FILTERS WITH VOLVO D13 ENGINE 5
FIGURE 6: HAND PRIMING PUMP 6
FIGURE 7: FUEL PUMP REMOVAL 7
FIGURE 8: FUEL PUMP DRIVE AXLE 7
FIGURE 9: DAVCO FUEL PRO 382 FUEL FILTER 8
FIGURE 10: DAVCO FUEL PRO 382 EXPLODED VIEW 8
FIGURE 11: 208 US GAL. FUEL TANK 10
FIGURE 12: FUEL TANK REPAIR 11
FIGURE 13: RESTRICTION INDICATOR 13
FIGURE 14: ELECTRONIC FOOT PEDAL ASSEMBLY 14

1. FUEL SYSTEM WITH VOLVO D13 ENGINE

1.1 DESCRIPTION

NOTE
For additional information concerning Volvo D13 engine components or engine-related components, consult Volvo Trucks Canada or Volvo Trucks North America Web Site under: Parts & Service. On Volvo web site, you will find detailed service procedures for parts replacement, repair and maintenance.

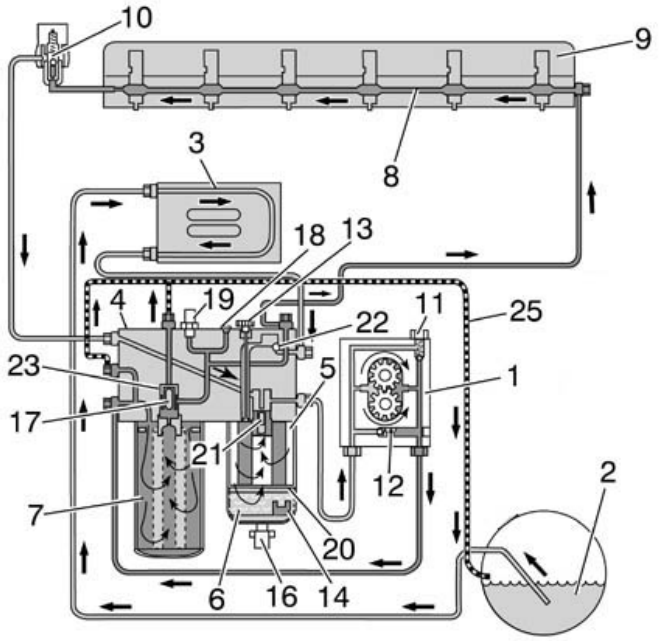

FIGURE 1: FUEL SYSTEM SCHEMATIC (VOLVO D13 ENGINE) 03086

Fuel is drawn up the fuel lines by the supply pump (1) through the pickup tube in the tank (2) and through the Engine Electronic Control Unit (EECU) cooling coil (3) and into the fuel filter housing (4). The fuel housing is equipped with a primary fuel filter (fuel/water separator) consisting of a filter cartridge and a water separation bowl.

The supply pump (1) forces the fuel into the fuel filter housing through the secondary filter (main) to a cylinder head longitudinal gallery (8). This channel supplies each unit injector (9) with pressurized fuel by a circular groove around each unit injector in the cylinder head. The overflow valve (10) controls the fuel supply pressure to the unit injectors.

The return fuel from the overflow valve (10) is returned back to the fuel filler housing and is mixed with the fuel from the fuel tank in a channel within the fuel filter housing (4).

Supply Pump Valves

Two valves are located in the supply pump (1). The safety valve (11) allows fuel to flow back to the suction side when the pressure becomes too high, e.g., if the fuel filter is blocked or is too restricted. The non-return valve (12) opens when the hand-priming pump is used.

Automatic Bleeding

If air gets into the system, it is bled when the engine starts. During bleeding, air is pressed out through the fuel filter housing over to the fuel tank through the return line (25). Bleeding for the filter replacement is controlled by valves (17) and (23).

Other

The fuel filter housing eliminates the need to drain the fuel when replacing the filter. The valve pegs (17) and (21) close when the fuel filter is removed. It is not necessary to bleed the fuel system after replacing the filter, since this is performed automatically when the engine is started and runs for more than 2 minutes.

The plugged outlet (18) is fitted on the fuel filter housing. This outlet is used when measuring supply pressure after the fuel filter with an external pressure gauge. The pressure sensor (19) on the fuel filter housing monitors the supply pressure after the fuel filter. A fault code is displayed on the instrument cluster if the fuel supply pressure is less than the specified value.

Hand Priming Pump

The hand priming pump (13) is located on the fuel filter housing and is used to pump fuel (when engine is not running) after the fuel system has been drained for repair, etc. The non-return valve (22) for the hand priming pump is also located in the fuel filter housing.

1.2 FUEL VALVES

The manual shut-off valve on engine fuel-supply line is located on the R.H. side of engine compartment. A manual shut-off valve is located at the inlet side of the primary fuel filter or at the inlet side of Davco Fuel Pro 382 fuel filter.

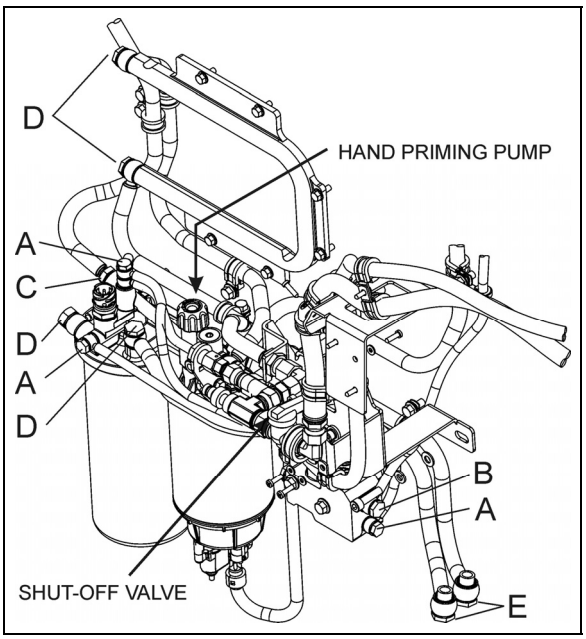

FIGURE 2: MANUAL SHUT-OFF VALVE (VOLVO D13 ENGINE) 03088

Shut-off valve is designed to prevent loss of fuel prime. No manual valve is required on preheater fuel-supply line, since the positive-displacement fuel pump (located close to the fuel tank) prevents fuel flow when not activated.

FUEL LINE FITTINGS – VOLVO D13 ENGINE	
A	13 ± 2 ft-lb (18 ± 3 Nm)
B	20.5 ± 3 ft-lb (28 ± 4 Nm)
C	22 ± 3 ft-lb (30 ± 4 Nm)
D	26 ± 4 ft-lb (35 ± 5 Nm)
E	29.5 ± 4 ft-lb (40 ± 5 Nm)
F	35 ± 4 ft-lb (48 ± 5 Nm)

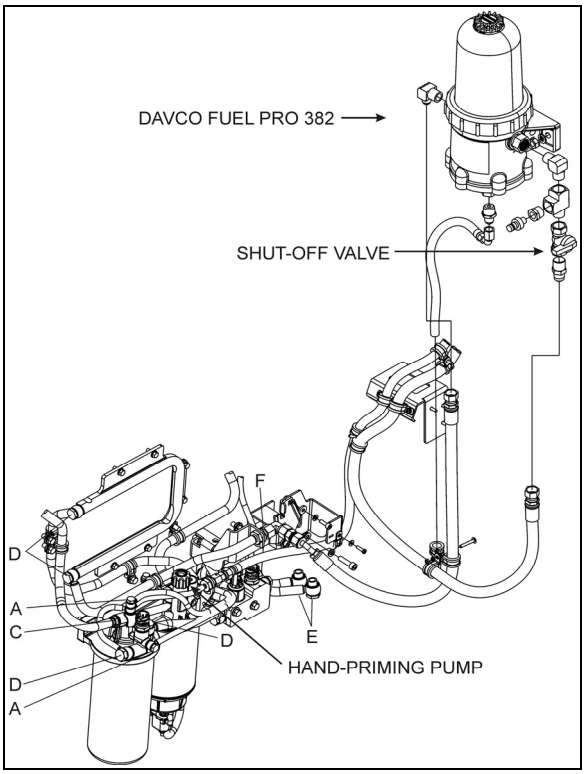

FIGURE 3: MANUAL SHUT-OFF VALVE LOCATION WITH DAVCO FUEL PRO 382 (VOLVO D13 ENGINE) 03087

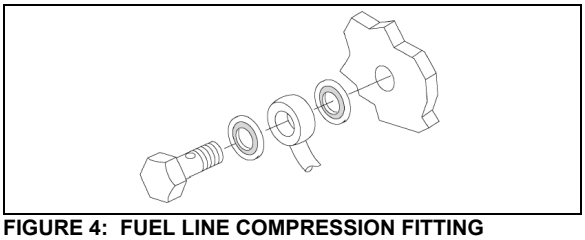

FIGURE 4: FUEL LINE COMPRESSION FITTING

CAUTION

Always replace the fuel line compression sealing washers when troubleshooting for fuel aeration or performing any service procedure that requires the removal of engine fuel lines.

1.3 FUEL FILTERS

A primary fuel filter is installed on the engine. This filter consists of a filter cartridge, a water separation bowl with a drain valve. It is used to prevent water from entering the fuel system.

MAINTENANCE

The primary and secondary fuel filters are of a spin-on type and must be replaced at **every engine oil change**.

The primary fuel filter should be drained periodically or when the telltale light on the dashboard illuminates if equipped with this system. To drain water, loosen the drain valve below the separator. Place an appropriate container under the filter. Close the drain valve when finished.

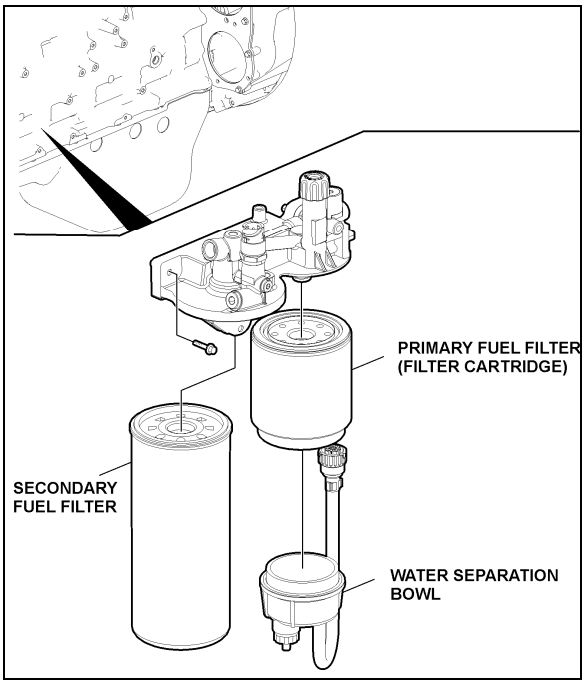

FIGURE 5: FUEL FILTERS WITH VOLVO D13 ENGINE
03085

1.3.1 Primary Fuel Filter Replacement

1. Stop engine, close the fuel supply line shut-off valve.
2. Place an appropriate container under the fuel filter housing, then drain the water from the water separation bowl.
3. Disconnect the fuel/water separator indicator electrical connector.

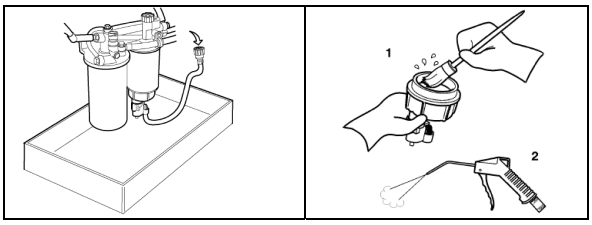

4. Unscrew and remove the primary fuel filter from the fuel filter housing. Drain filter.
5. Unscrew and remove the separation bowl from the filter cartridge.
6. Remove and discard the old gasket from the water separation bowl. Clean the bowl thoroughly and then blow dry with filtered compressed air.

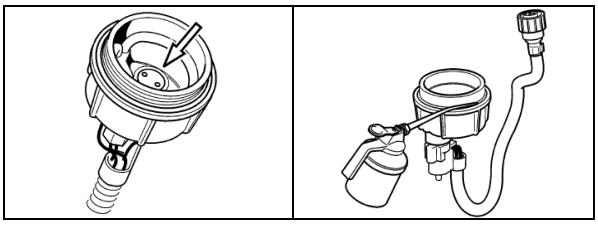

7. Check that the drainage hole in the water separator bowl is not blocked.
8. Apply a thin coating of clean engine oil to the surface of the water separation bowl.

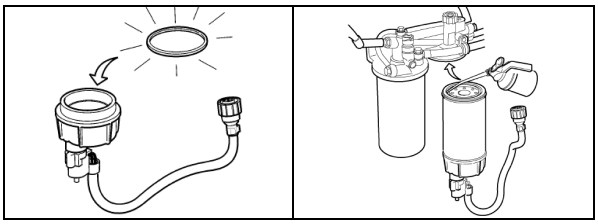

9. Install a new gasket to the water separation bowl and then reinstall the separation bowl to the new primary fuel filter cartridge.
10. Apply a thin coating of clean engine oil to the surface of the primary fuel filter, install the primary fuel filter to the fuel filter housing, then tighten the primary fuel filter 1/2-3/4 turn.

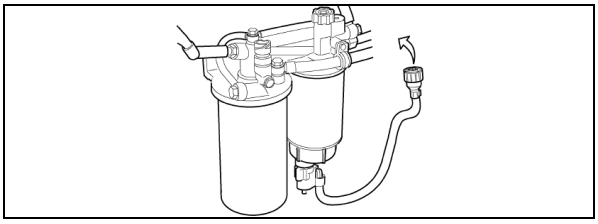

11. Connect the electrical connector for the water/fuel separation bowl indicator.

12. Open the fuel supply line shut-off valve.
13. Purge air from the filter by operating the priming pump to draw fuel and fill the filter. When using the hand priming pump, approximately 100 strokes will be required.
14. Start the engine and carry out a fuel-tightness check. Let the engine run for about 5 minutes to remove air pockets from the fuel system.

1.3.2 Secondary Fuel Filter Replacement

1. Stop engine, close the fuel supply line shut-off valve. Place an appropriate container under the fuel filter housing.
2. Clean around sealing area on fuel filter and housing.
3. Unscrew and remove the secondary fuel filter from the fuel filter housing.
4. Apply a thin coating of clean engine oil to the gasket of the secondary fuel filter. Screw the fuel filter into position. Tighten the filter ¾ to 1 turn after the gasket makes contact with the fuel filter housing.

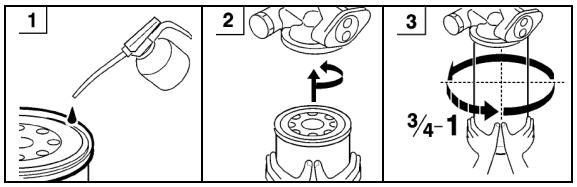

CAUTION

Fuel in the old filter **must absolutely not** be poured into the new filter. This kind of contaminated fuel can damage the unit injectors.

5. Prime the fuel system by pumping the hand priming pump on the fuel filter housing until resistance is felt indicating that the system is full of fuel.
6. Start the engine and carry out a fuel-tightness check. Let the engine run for about 5 minutes to remove air pockets from the fuel system.

1.4 PRIMING THE FUEL SYSTEM

The fuel system will need to be bled if:

- The vehicle has run out of fuel.
- The engine has not been running for an extended period of time.
- Service work has been done on the fuel system, (tank, fuel lines, filters, valves, etc.) for example cleaning or replacing fuel filter cartridges.
- The engine is new or rebuilt.

CAUTION

When priming the system, movement of the primer pump should be as up and down as possible. Avoid putting any side load on the pump or causing a binding condition. Failure to follow these instructions could prematurely damage the primer pump.

NOTE

When the fuel system is empty, 200 or more pump strokes may be needed to properly prime system. There are no bleed nipples to be opened to prime the fuel system.

1. Stop engine;
2. Unlock the hand pump by turning the handle counterclockwise.
3. Prime the system by moving the primer pump in an up and down pumping motion. Avoid putting any side load on the pump or causing a binding condition.

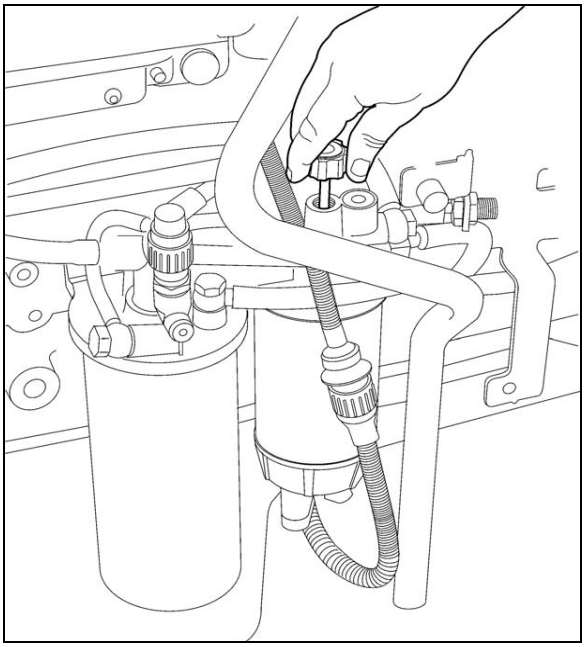

FIGURE 6: HAND PRIMING PUMP

4. Lock the hand primer pump by retracting it into the housing and turning it clockwise.
5. Start the engine and run it at an increased idle speed for approximately 5 minutes to remove any remaining air in the system. Check the fuel system for leaks.

1.5 FUEL PUMP REMOVAL AND INSTALLATION

The pump is located underneath the air compressor and is accessible through the engine compartment R.H. access door.

To remove the pump, proceed as follows:

- Clean around the fuel pump and fuel lines. Position a container to catch any fuel that might drain from the pump or lines.
- Remove the fuel pump.

NOTE
Only unfasten the bolts marked with arrows.

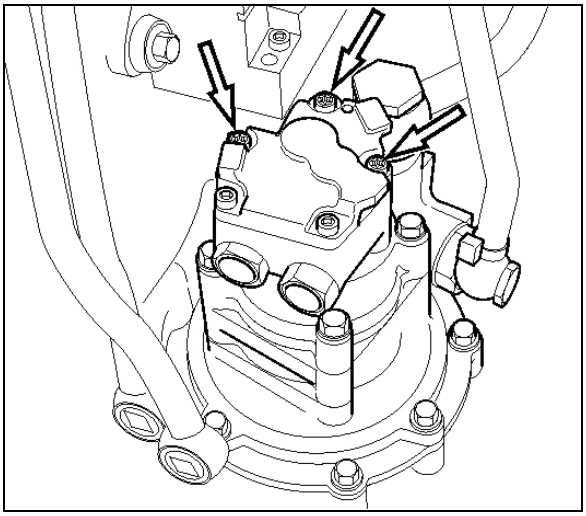

FIGURE 7: FUEL PUMP REMOVAL

CAUTION
Ensure to clean around the head of the bolts. Debris will prevent the tool from fitting properly and cause damage to the fasteners..

- Check that the adapter and fuel pump drive axle are not damaged.

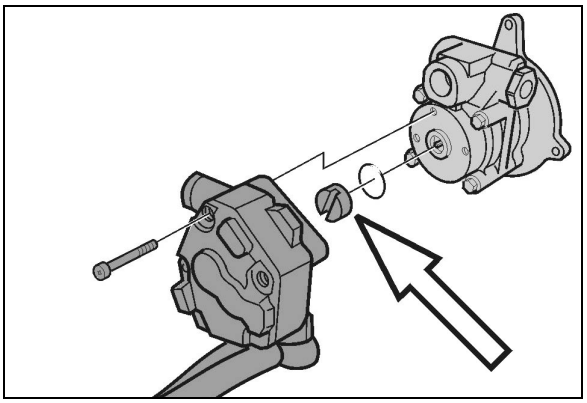

FIGURE 8: FUEL PUMP DRIVE AXLE

- Install the fuel pump. Torque-tighten bolts to specification.

NOTE
Use a new sealing ring. Check that the fuel pump drive axle sits correctly in the power steering pump.

- Using the hand primer on the fuel filter housing, prime the fuel system.
- Start the engine and let run for 5 minutes. Make sure that there are no leaks.

2. DAVCO FUEL PRO 382

The optional Fuel Pro 382 diesel fuel filter system consists of a permanently mounted fuel processor, a replaceable filter element, a filter element cover and collar and a fluid filter base assembly. This system is installed between the fuel tank and the fuel pump and is designed to be the only fuel filter in the fuel system. The filter serves as a water separator as well as a fuel filter (refer to figure 9).

The filter fibers used in the Davco Fuel Pro 382 element may cause the fuel level to read artificially high when the filter is first installed. Over the first few days, the filter fibers eventually become fully saturated and the fuel level will drop to normal levels. Do not be concerned about an abnormally high fuel level when a new Davco element is installed.

When new, the fuel level as seen through the clear cover in the 382 filter is very low. It rises as dirt collects on the filter from the bottom up. Restriction remains consistently low because fuel always flows through clean, new media.

MAINTENANCE

Replace Fuel Pro 382 filter element when the fuel level in the see-thru filter cover reaches the top of the filter element or after one year of service, whichever comes first.

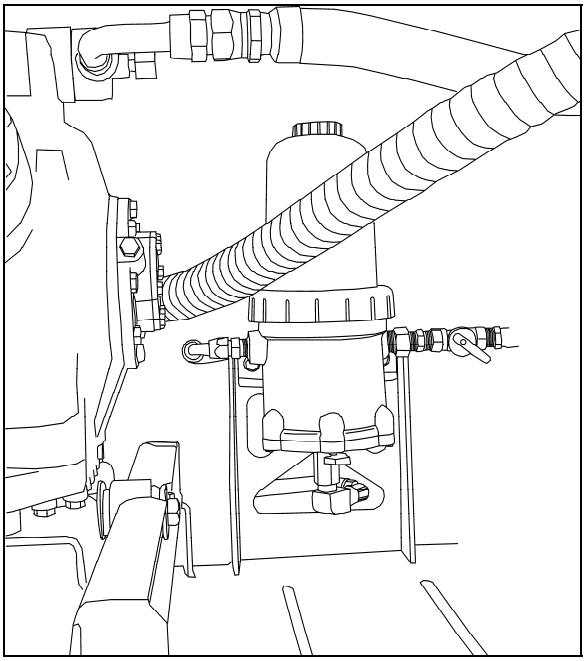

FIGURE 9: DAVCO FUEL PRO 382 FUEL FILTER 03062

Filter replacement:

1. Stop engine;
2. Place a suitable container under the fuel processor;
3. Close the shut-off valve at the inlet side of the fuel filter;
4. Open the drain valve at the base of the fuel processor and drain the fuel until it is below the level of the filter;
5. Untighten upper collar, remove cover, filter hold down spring, filter element and cover seal;
6. Dispose of used filter element;
7. Ensure the filter grommet is included at the base of the new filter element and then install the element onto the center stud;
8. Ensure the filter spring is installed at the top of the cover. If missing, the spring must be replaced to insure proper filter operation.
9. Wipe the cover lid and seal clean. After ensuring the seal is properly positioned at the base of the cover, install the cover and collar onto the fuel processor. Tighten the collar by hand until secure;
10. Fill the cover full of clean fuel through spin off cap located on top of cover. Install vent cap seal and then reinstall the cap and tighten by hand only;

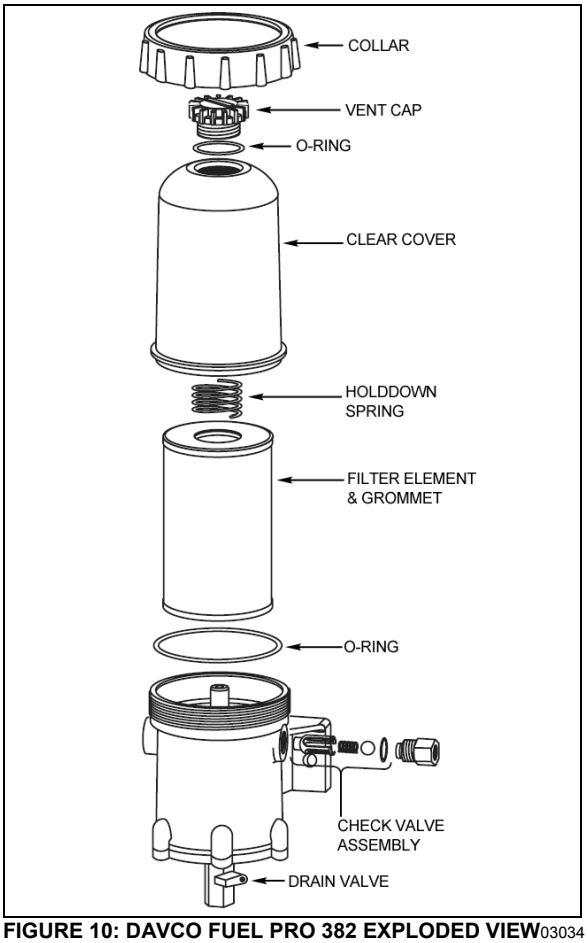

FIGURE 10: DAVCO FUEL PRO 382 EXPLODED VIEW 03034

11. Open the shut-off valve;
12. Start engine, raise rpm for 2-3 minutes, hand tighten collar again;
13. After the air is purged and with the engine still running, slowly loosen the vent cap on the filter cover. The fuel level in the cover will start falling. When the fuel level falls to the top of the collar, tighten the vent cap quickly by hand;
14. Shut down the engine and hand-tighten the collar again.

NOTE

Fuel Pro 382 also accepts standard secondary spin-on fuel filters.

ENVIRONMENTAL NOTICE

Diesel fuel is an environmentally hazardous product. Dispose in an environmentally friendly manner.

3. FUEL LINES AND FLEXIBLE HOSES

Make a visual check for fuel leaks at all engine-mounted fuel lines and connections and at the fuel tank suction and return lines. Since fuel tanks are susceptible to road hazards, leaks in this area may best be detected by checking for accumulation of fuel under the tank. Engine performance and auxiliary equipment is greatly dependent on the ability of flexible hoses to transfer lubricating oil, air, coolant and fuel oil. Diligent maintenance of hoses is an important step in ensuring efficient, economical and safe operation of engine and related equipment.

MAINTENANCE

Check hoses daily as part of the pre-start-up inspection. Examine hoses for leaks and check all fittings, clamps and ties carefully. Make sure that the hoses are not resting on or touching shafts, couplings, and heated surfaces, including exhaust manifolds, any sharp edges or other obviously hazardous areas.

Since all machinery vibrates and moves to a certain extent, clamps and ties can fatigue with age. To ensure continued proper support, inspect fasteners frequently and tighten or replace them as necessary. Refer to the schematic diagram of the fuel system (Fig. 1).

CAUTION

Oil level above the dipstick full mark or a decrease in lube oil consumption may indicate internal fuel leaks. Check oil level frequently.

4. PREHEATER FUEL FILTER

The preheater fuel filter is located beside the preheater in the engine coolant heater compartment, and is accessible by opening the evaporator compartment door.

MAINTENANCE

Replace preheater fuel filter every 50,000 miles (80 000 km) or once a year, whichever comes first.

5. FUEL TANK

X3-45 coaches & VIP and also XLII Entertainer Bus Shells are equipped with a high-density cross-link polyethylene fuel tank with a capacity of 208 US gallons (787 liters).

The fuel filling access door is located on the R.H. side of vehicle providing easy fuel filling.

A pressure relief valve on the fuel tank connection-panel relieves high-pressure buildup and an overflow tube allows offset air in the tank to escape during filling. For 95% of the tank volume, 5% of tank inside space is kept filled with air with no exit opening, allowing for a fuel expansion safety margin. A drain plug, accessible from under the vehicle, is fitted at the bottom of the tank.

5.1 TANK REMOVAL

DANGER

Park vehicle safely, apply parking brake, stop engine and set battery master switch(es) to the OFF position prior to working on the vehicle.

Before working under an air-suspended vehicle, it is strongly recommended to support the body at the recommended jacking points.

NOTE

Before removal, the fuel tank should be completely drained by unscrewing the drain plug. Ensure that the container used has a capacity equal to the amount of fuel remaining in the tank.

1. Open the condenser door and remove the fuel tank access panel. The rear baggage compartment fuel tank access panel may also be removed to facilitate access to components.
2. Unscrew clamps retaining R.H. side filler tube to fuel tank and filler neck. Disconnect tube and remove it.

3. If applicable, unscrew preheater supply line, preheater return line, auxiliary return line and/or auxiliary return line from fuel tank connection-panel.
4. Unscrew engine supply and return lines from fuel tank connection-panel, identify them for reinstallation.
5. Disconnect electrical wiring from tank on connection plate.

DANGER

Before removing the bolts securing the tank support to the frame, make sure the tank is supported adequately. Failure to do so could result in injury as well as damage to the tank.

6. From under the vehicle, on R.H. side, unscrew the 4 bolts (2 in front, 2 in back) retaining the tank support to the frame.
7. From under the vehicle, on the L.H. side, unscrew the 2 bolts (1 in front, 1 in back) retaining the tank support to the frame.
8. Carefully remove tank from under the vehicle.

5.2 TANK INSTALLATION

To install tank, simply reverse the *"Tank Removal"* procedure.

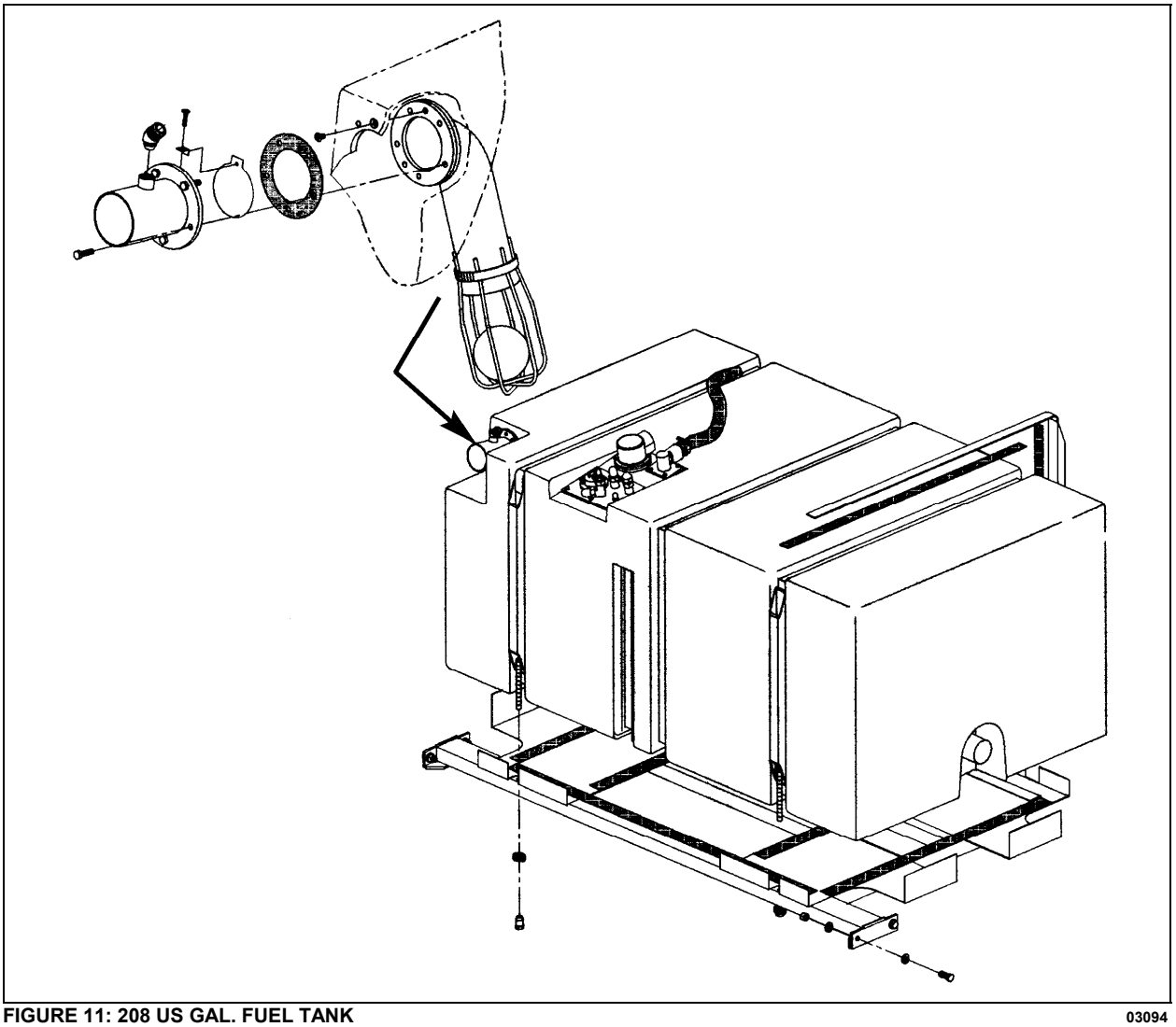

FIGURE 11: 208 US GAL. FUEL TANK 03094

5.3 FUEL TANK VERIFICATION

Inspect fuel tank from under vehicle for leaks or fuel traces. If a leak is detected, repair immediately as per "Polyethylene Fuel Tank Repair" in this section.

DANGER

Park vehicle safely, apply parking brake, stop engine and set battery master switch(es) to the OFF position prior to working on the vehicle.

Before working under an air-suspended vehicle, it is strongly recommended to support the body at the recommended jacking points.

5.4 POLYETHYLENE FUEL TANK REPAIR

NOTE

Fuel level must be lower than perforation to carry out this procedure.

DANGER

Park vehicle safely, apply parking brake, stop engine and set battery master switch(es) to the OFF position prior to working on the vehicle.

1. Locate perforation on fuel tank.
2. If necessary, remove fuel tank as per instructions in this section.
3. Drill perforation with a 23/64" bit. Make sure drill hole is perfectly round.
4. Insert a screw (Prevost #500196) and a washer (Prevost #5001244) into anchor nut (Prevost #500331).
5. Place assembly in drill hole. Tighten screw by 10 complete turns. Refer to Fig. 12.
6. Apply sealant on head plug (Prevost #507300) and seal hole with the head plug.

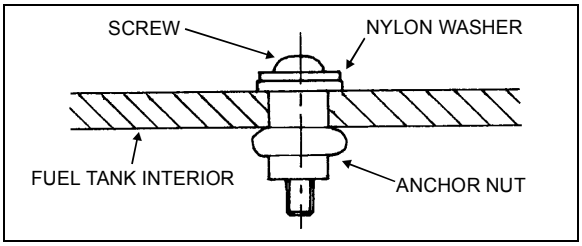

FIGURE 12: FUEL TANK REPAIR 03014

6. FUEL SPECIFICATIONS

The quality of fuel oil used for high-speed diesel engine operation is a very important factor in obtaining satisfactory engine performance, long engine life and acceptable exhaust emission levels.

The U.S. Environmental Protection Agency (EPA) has issued new standards to improve air quality by significantly reducing emissions through a combination of cleaner-burning diesel engines and vehicles.

To meet EPA standards, the petroleum industry produces **Ultra Low Sulfur Diesel** (ULSD) fuel, also referred to as S15, containing a maximum 15ppm (parts-per-million) sulfur.

On-highway diesel engines meeting 2010 emission regulations are designed to operate **ONLY** with ULSD fuel. ULSD fuel will enable the use of cleaner technology diesel engines and vehicles with advanced emissions control devices, resulting in significantly improved air quality.

6.1 FUEL TYPE

EPA-10 engines like the Volvo D13 are designed to run on **Ultra Low Sulfur Diesel** (ULSD) fuel, which can contain no more than 15 ppm sulfur.

Fuel used must meet engine manufacturer's specification. Refer to Volvo engine specifications.

CAUTION

ULSD fuel is necessary to avoid fouling the engine's Exhaust Aftertreatment System. Improper fuel use will reduce the efficiency of the engine's Aftertreatment System and may permanently damage the system.

CAUTION

Owners of 2010 and later model year on-highway diesel engine must refuel only with ULSD fuel.

NOTE

Burning Low Sulfur Diesel fuel (instead of ULSD fuel) in 2010 and later model year diesel engines is illegal and punishable with civil penalties.

NOTE

Engine and vehicle manufacturers expect ULSD fuel to be fully compatible with the existing fleet, including 2006 and earlier model year vehicles. In some instances, the introduction of ULSD fuel to older vehicles may affect fuel system components or loosen deposits in fuel tanks. As part of a good maintenance program, owners and operators of existing cars, trucks and buses are encouraged to monitor their diesel-powered vehicles closely for potential fuel system leaks or premature fuel filter plugging during the change-over to ULSD fuel.

NOTE

Like Low Sulfur Diesel fuel, ULSD fuel requires good lubricity and corrosion inhibitors to prevent unacceptable engine wear. As necessary, additives to increase lubricity and to inhibit corrosion will be added to ULSD fuel ***prior*** *to its retail sale.*

6.2 BLENDING

Only ultra low sulfur kerosene – No.1 diesel with no more than 15ppm sulfur may be blended with ULSD fuel to improve cold weather performance. With so many kerosene formulations on the market, care must be taken to select kerosene with a maximum of 15ppm sulfur.

Blend rates remain the same as with Low Sulfur Diesel fuel.

6.3 BIODIESEL FUELS

ULSD-B5 biodiesel may be used. B5 tells you the percentage of biodiesel mixed in with ULSD. B5 is 5% biodiesel and 95% ULSD.

Fuel used must meet engine manufacturer's specification for biodiesel fuel. Refer to Volvo engine specifications.

Biodiesel fuels are alkyl esters of long chain fatty acids derived from renewable resources. Volvo highly recommends biodiesel fuels made from soybean or rapeseed oil through the proper transesterification reaction process. Other feedstock source of biodiesel fuels such as animal fat and used cooking oils are not recommended by Volvo. Failures attributed to the use of biodiesel fuel will not be covered by Volvo or Prevost product warranty. Also, any engine performance problem related to the use of biodiesel fuel would not be recognized nor considered as Volvo or Prevost's responsibility.

7. AIR CLEANER (DRY TYPE)

The vehicle is equipped with a dry-type replaceable element air cleaner, located in the engine compartment. Access the air cleaner through the engine R.H. side door. Engine air enters the air cleaner through (1) one intake duct located just above engine R.H. side door. It then flows through a pre-cleaner and finally through the air cleaner. The pre-cleaner removes dust and moisture by means of a discharge tube at the bottom of the element. It is in series with a replaceable impregnated paper filter element (air cleaner).

7.1 PRE-CLEANER SERVICING

MAINTENANCE

The pre-cleaner is designed to be self-cleaning; however, it should be inspected and any accumulated foreign material removed during the periodic replacement of the impregnated paper filter element.

7.2 AIR CLEANER SERVICING

Stop the engine, open the R.H. side engine compartment door, and loosen the wing nut retaining the air cleaner element to the air cleaner. Remove the element by pulling on the handle in the center of the air cleaner element.

Install cleaner element as follows:

1. Inspect the gasket-sealing surface inside the air cleaner. It must be smooth, flat and clean;
2. Install the air cleaner element;
3. Make sure that the element seals securely;
4. Inspect element cover gasket and replace if necessary.

Whenever it becomes necessary to remove the air cleaner assembly (dry type) for maintenance or other repair in this area, great care should be taken when installing air cleaner assembly.

The pre-filter should be installed snugly in the air duct and clamped tightly to the air cleaner inlet to prevent any dust infiltration into the air cleaner.

7.3 GENERAL RECOMMENDATIONS

The following maintenance procedures will ensure efficient air cleaner operation:

1. Keep the air cleaner housing tight on the air intake pipe;
2. Make sure the correct filters are used for replacement;
3. Keep the air cleaner properly assembled so the joints are air-tight;
4. Immediately repair any damage to the air cleaner or related parts;
5. Inspect, clean or replace the air cleaner or elements as operating conditions warrant. Whenever an element has been removed from the air cleaner housing the inside surface of the housing must be cleaned with a soft clean cloth;
6. Periodically inspect the entire system. Dust-laden air can pass through an almost invisible crack or opening which may eventually cause damage to an engine;
7. Never operate the engine without an element in the air cleaner assembly;

CAUTION

Do not ignore the Warning given by the air restriction indicator. This could result in serious engine damage.

8. Store new elements in a closed area free from dust and possible damage.

7.4 AIR CLEANER RESTRICTION INDICATOR

A resettable restriction indicator may be installed on the engine air-intake duct, clearly visible from the rear engine compartment. The indicator monitors the vacuum level between the air filter and the engine. A red marker is displayed when the air filter is clogged and must be replaced. Reset by pressing on the indicator's extremity.

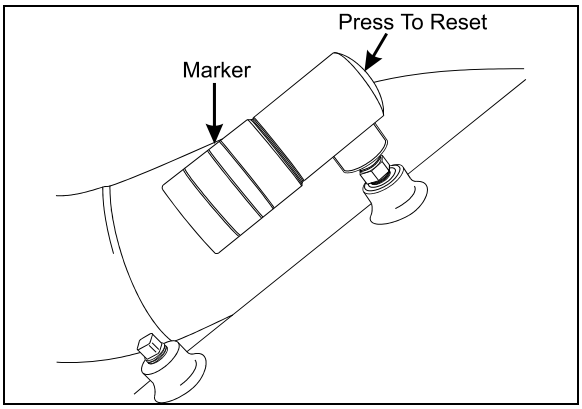

FIGURE 13: RESTRICTION INDICATOR 01052

8. FUEL PEDAL

The EFPA (Electronic Foot Pedal Assembly) connects the accelerator pedal to a potentiometer (a device that sends an electrical signal to the ECM, which varies in voltage, depending on how far down the pedal is depressed). The EFPA is installed in the space normally occupied by a mechanical foot pedal. It has maximum and minimum stops that are built into the unit during manufacturing.

8.1 FUEL PEDAL ADJUSTMENT

The EFPA contains a throttle position sensor that varies the electrical signal sent to the ECM. The sensor must be adjusted whenever an EFPA is serviced. In addition, the sensor should be adjusted any time codes 21 and 22 are flashed.

With the ignition "ON" and the proper diagnostic tool (DDR) (for information regarding the DDR, see *"01 ENGINE"* in this manual), check the throttle counts at idle and full throttle positions.

Proper pedal output should be 20/30 counts at idle and 200/235 at full throttle. If adjustment is necessary, remove the potentiometer retaining screws and rotate the potentiometer clockwise to increase counts or counterclockwise to decrease. When correct output is confirmed, tighten retaining screws.

8.2 POTENTIOMETER REPLACEMENT

1. Disconnect cable harness connector.
2. Loosen the two screws and remove potentiometer. Retain for re-assembly.
3. Discard potentiometer (Fig. 14).

CAUTION

Note the routing and clamping locations of the cable before disassembly. Proper cable routing and fastening is critical to the operation of this system. Marking the foot pedal assembly to record cable routing is recommended.

2. Position new potentiometer. Press potentiometer onto the potentiometer shaft, matching cutouts in shaft to drive tangs of potentiometer. Apply hand pressure until potentiometer has bottomed out in housing. Reinstall screws (Fig. 14) and tighten just enough to secure potentiometer lightly. Tighten screws to 10 - 20 Lbf-in (1.13 - 2.26 Nm).
3. Reconnect electronic foot pedal assembly's cable harness to the ECM connector. If potentiometer calibration is necessary (see *"FUEL PEDAL ADJUSTMENT"* in this section).

CAUTION

Make sure the cable harness is routed correctly, and securely installed so that it does not become pinched, stretched, or otherwise damaged during vehicle operation.

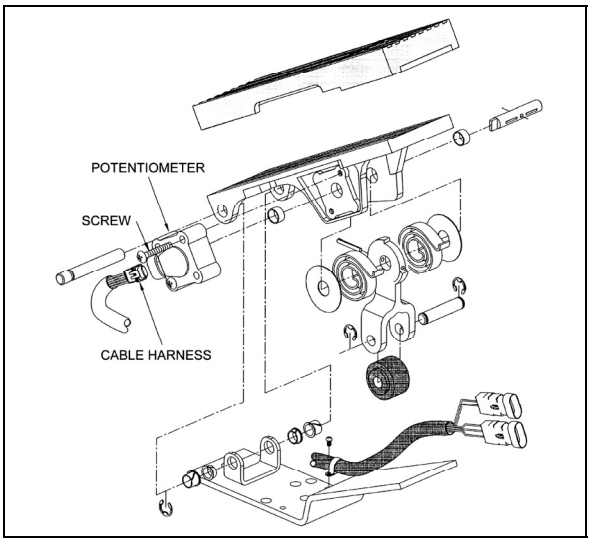

FIGURE 14: ELECTRONIC FOOT PEDAL ASSEMBLY 03035

9. SPECIFICATIONS

Davco Fuel Pro 382 Fuel Filter / Water Separator Element

Prevost number 510795

Primary Fuel Filter (Fuel/Water Separator) With Volvo D13 Engine

Part number 21380475

Filter torque ..... ½-¾ turn after gasket contact

Secondary Fuel Filter With Volvo D13 Engine

Part number 20972293

Filter torque ..... ¾- 1 turn after gasket contact

Fuel tank Capacity

Standard (All vehicles) .....208 US gallons (787 liters)

Air Cleaner

Make ..... Nelson

Prevost Number 530206

Service Part No 7182 8N

Prevost number (element cartridge) 530197

Air Cleaner Restriction Indicator

Make ..... Donaldson

Model RBX00-2220

Indicates .....at 20" (508 mm) of water

Prevost number 530161

Preheater Fuel Filter

Make ..... Spheros

Prevost number 871037