

PREVOST

Prevost Vehicles – All Series

# MAINTENANCE MANUAL

PA-1655

# MAINTENANCE MANUAL

H3-45, H3-45 VIP
X3-45, X3-45 VIP

PA1655 rev 02

# PA1655

First release June 2023 featuring:

- H3 Series: new front and rear aerodynamic design, new dashboard & driver environment

  H3-45 VIP from P-1348, H3-45 coach from R-1453
- OBD23 engine

  H3-45 VIP from P-1486, H3-45 coach from R-1487, X3 Series from P-6879

Revision 2 February 2024 – Volvo D13 engine EPA24 EOBD-U24

- From R-1910 (H3 Series)
- From R-4068 (X3 Series)

| REV | FROM V.I.N. | DESCRIPTION | ISSUED |
|---|---|---|---|
| **00** | | Initial release - | June 2023 |
| **01** | P-1348 | New rear-view mirror removal procedure – H3 Series | October 2023 |
| **02** | R-4068 (X3) R-1910 (H3) | New MY2024 D13 engine EPA2024 EOBD-U24 | February 2024 |
| **02** | S-001674 (X3) S-001332 (H3) | New MY2025 D13 engine EOBD-U25 | Janvier 2025 |
| **02** | S-001655 (x3) S-001310 (H3) | New opening mechanism for emergency exit windows (rollover) | Janvier 2025 |
| | | | |
| | | | |
| | | | |

## CRITICAL EMISSION-RELATED MAINTENANCE

**Source of parts and repair:**

A repair shop or person of the owner's choosing must maintain, replace, or repair emission control devices and systems per manufacturer's recommendations.

**Replacement of tires that are GHG certified:**

The original equipment tires installed on this vehicle at the factory were certified to the U.S. EPA Greenhouse Gas (GHG) and **National Highway Traffic Safety Administration (NHTSA)** Fuel Efficiency regulations. Replacement of these tires should be with a tire of equal or lower rolling resistance levels (TRRL or Crr). Please consult your tire supplier(s) for appropriate replacement tires.

**Maintaining a GHG certified tire:**

In order to maintain the certified rolling resistance of the tires which optimize fuel economy, the maintenance procedures provide by the tire manufacturer must be followed.

## CONTENTS


| | |
|---|---|
| SECTION 00 | GENERAL INFORMATION |
| | MULTIPLEX MODULES DISCONNECTION PROCEDURE PRIOR TO WELDING |
| SECTION 01 | ENGINE |
| | MI16-16 STARTER REMOVAL AND INSTALLATION |
| SECTION 03 | FUEL SYSTEM |
| SECTION 04 | EXHAUST AND AFTERTREATMENT |
| SECTION 05 | COOLING SYSTEM |
| SECTION 06 | ELECTRICAL |
| | ELECTRICAL CONNECTORS PROTECTION |
| | MI15-24 POWER CABLES INSPECTION GUIDELINES |
| | MI16-17 TWIN BOSCH HD10 ALTERNATOR REMOVAL AND INSTALLATION |
| SECTION 07 | TRANSMISSION |
| SECTION 09 | PROPELLER SHAFT |
| SECTION 10 | FRONT I-BEAM AXLE |
| SECTION 11 | REAR AXLES |
| SECTION 12 | BRAKE AND AIR SYSTEM |
| SECTION 13 | WHEELS, HUBS AND TIRES |
| SECTION 14 | STEERING |
| | MI19-05 DRAG LINK ADJUSTMENT |
| SECTION 16 | SUSPENSION |
| | MI16-14 SUSPENSION HEIGHT ADJUSTMENT USING HEIGHT CONTROL VALVES |
| SECTION 18A | H3 SERIES BODY |
| SECTION 18B | X3 SERIES BODY |
| | MI15-18 STRUCTURE INSPECTION FOR CORROSION |
| | MI15-41 CRACKING OF POLYCARBONATE TAILLIGHTS |
| | MI18-18 HOISTING TOWING |
| | MI23-03 DASHBOARD COVERS REMOVAL PROCEDURE |
| SECTION 22 | HEATING AND AIR CONDITIONING |
| | MI18-37 LANG KK73.1 ELECTROMAGNETIC CLUTCH REMOVAL & INSTALLATION |
| SECTION 23 | ACCESSORIES |
| | MI23-12 WIPER DRIVE MOTOR_ LINKAGE AND PIVOT REPLACEMENT |
| SECTION 24a | LUBRICATION & SERVICING |
| SECTION 24b | LUBRICATION & SERVICING (COMMUTERS) |
| SECTION 26a | H3 SERIES SLIDE-OUT |
| SECTION 26b | X3 SERIES SLIDE-OUT |
| | MI18-31 SLIDE OUT REMOVAL |
| | MI19-27 INFLATABLE SEAL INSTALLATION |

# CONTENTS

**SECTION CHANGE LOG** ..... **2**

**1. FOREWORD** ..... **3**

**2. SCHEMATICS** ..... **3**

**3. SAFETY NOTICE** ..... **3**

3.1 DATA PLATES AND CERTIFICATIONS ..... 4
*3.1.1 Engine* ..... *4*
*3.1.2 Transmission* ..... *4*
*3.1.3 Drive Axle* ..... *4*
*3.1.4 Front Axles* ..... *4*
*3.1.5 Coach Final Record* ..... *5*
*3.1.6 Safety Certification* ..... *5*
*3.1.7 DOT Certification Label* ..... *5*
*3.1.8 Fuel Tank Label* ..... *5*
*3.1.9 EPA Engine Label* ..... *5*
*3.1.10 Vehicle Identification Number (VIN)* ..... *5*

**4. FASTENER** ..... **9**

4.1 FASTENER STRENGTH IDENTIFICATION ..... 9
4.2 STANDARD TORQUE SPECIFICATIONS ..... 10
*4.2.1 SAE* ..... *10*
*4.2.2 Metric* ..... *12*
4.3 SELF-LOCKING FASTENERS ..... 14
4.4 RECOMMENDATIONS FOR REUSE ..... 14
4.5 SIX LOBED SOCKET HEAD ..... 15
4.6 HOSE CLAMP TORQUE ..... 18

**5. WELDING PROCESS** ..... **19**

5.1 STEEL – STEEL WELDING ..... 19
5.2 STEEL WITH STAINLESS STEEL OR STAINLESS STEEL WITH STAINLESS STEEL WELDING ..... 19
5.3 STEEL - STAINLESS STEEL WELDING ..... 20

## SECTION CHANGE LOG

| | DESCRIPTION | DATE |
|---|---|---|
| 1 | standard torque specifications – SAE A2-70 (NSS-SS) DESCRIPTION COARSE THREAD – torque unit corrected, was lb-ft changed for lb-in | 09-26-2024 |
| 2 | | |
| 3 | | |
| 4 | | |
| 5 | | |
| 6 | | |

## 1. FOREWORD

This manual includes procedures for diagnosis, service, maintenance and repair for components of all series of Prevost coaches and motorhomes listed on the front cover. This manual should be kept in a handy place for ready reference by the technician. If properly used, it will meet the needs of the technician and owner.

Information provided in Section 1 through 26 pertains to standard equipment items, systems and components as well as the most commonly used optional equipment and special equipment offered on the vehicle models covered by this manual. At the beginning of each section: a Table of Contents gives the page number on which each subject begins.

Vehicle operating information is provided in a separate Operator's Manual for coaches or Owner's Manual. Audio/Video system operator instructions are also included in a separate manual.

More specific information on engine, transmission and other systems or components operating, maintenance, and overhaul information is contained in the applicable service manual published by the OEM. Parts information may be contained in the applicable OEM parts catalog or service manual published by the OEM. All information, illustrations and specifications contained in this manual are based on the latest product information available at the time of publication approval. The right is reserved to make product changes at any time without notice.

*NOTE*

*Illustrations in this manual are used for reference only and may differ slightly from the actual vehicle, however, key components addressed in the manual are represented as accurately as possible.*

Prevost occasionally sends Maintenance Information, Warranty Bulletins, Safety Recalls or other literature to update users with the latest service procedures. They are issued, when required, to supplement or supersede information in this manual. Update sheet should be filled out and bulletins should be filed at the end of their respective section for future reference.

## 2. SCHEMATICS

Vehicle pneumatic and electrical schematics can be found in your technical publications box. Refer to those schematics for detailed circuit information and diagnosis.

## 3. SAFETY NOTICE

This maintenance manual has been prepared in order to assist skilled mechanics in the efficient repair and maintenance of PREVOST vehicles.

This manual covers only the procedures as of manufacturing date.

Safety features may be impaired if other than genuine PREVOST parts are installed.

Torque wrench tightening specifications must be strictly observed. Locking devices must be installed or replaced by new ones, where specified. If the efficiency of a locking device is impaired, it must be replaced.

This manual emphasizes particular information outlined by the wording and symbols:

**DANGER**

Directs the operator's attention to unsafe practices which could result in serious personal injury or death.

**WARNING**

Directs the operator's attention to unsafe practices which could result in serious personal injury or severe damage to the vehicle.

**CAUTION**

Directs the operator's attention to unsafe practices where personal injury is not likely but damage to vehicle components could occur.

*NOTE*

*Indicates supplementary information essential to the proper operation of the vehicle. Although, the mere reading of such information does not eliminate the hazard, understanding of the information will promote its correct use.*

## 3.1 DATA PLATES AND CERTIFICATIONS

Delay and confusion can be avoided by placing the complete vehicle identification number of the vehicle and the serial numbers of the engine on parts orders and correspondence. Also, the transmission, axles, power steering pump chassis and other major components are identified by serial numbers.

### 3.1.1 Engine

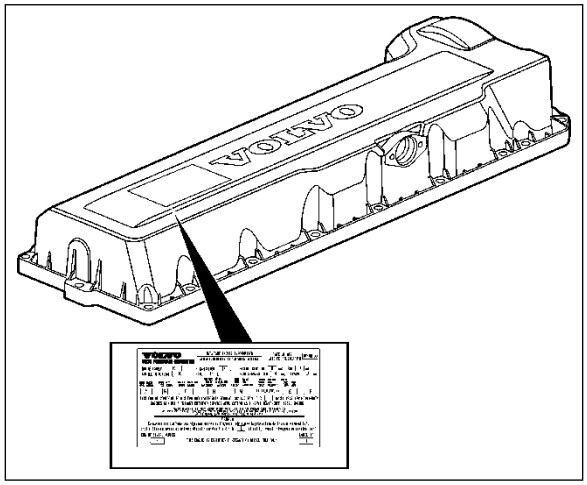


**FIGURE 1: VOLVO D13 ENGINE DATA PLATE** 00052

Volvo D13 engine serial and model numbers are stamped on the cylinder head. Also, the engine data plate certifies that the engine conforms to federal and any state exhaust emission regulations. It gives the operating conditions under which certification was made (Figure 1).

### 3.1.2 Transmission

The transmission identification plate is located on the oil level dipstick side of the transmission Allison (World) (Figure 2) or on transmission I-Shift (Figure 3). The identification plate shows the transmission serial number, part number (assembly number), and model number. Use all three numbers when ordering parts.

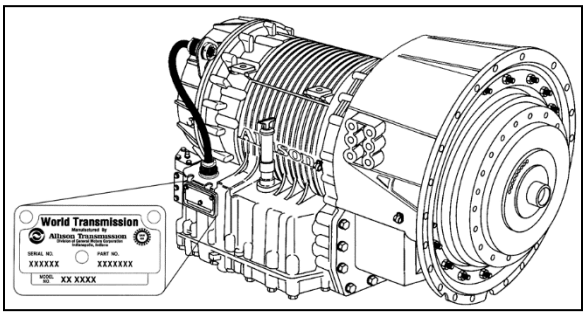


**FIGURE 2: ALLISON TRANSMISSION** 07076

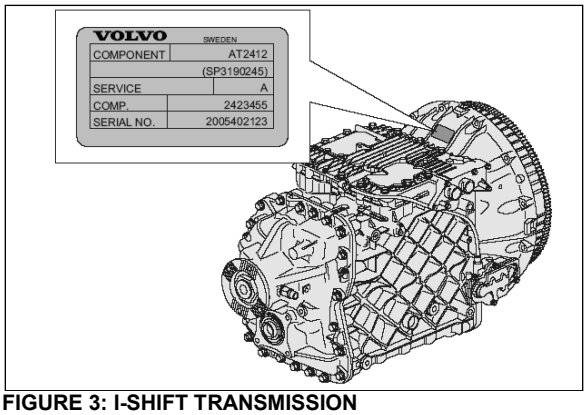


**FIGURE 3: I-SHIFT TRANSMISSION**

### 3.1.3 Drive Axle

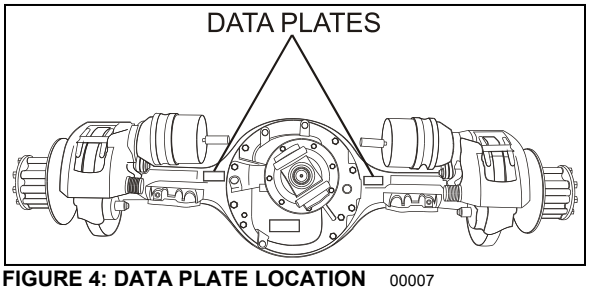


**FIGURE 4: DATA PLATE LOCATION** 00007

### 3.1.4 Front Axles

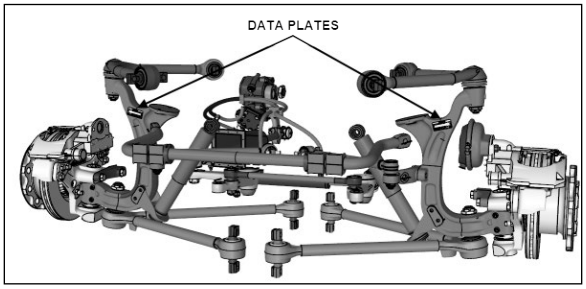


**FIGURE 5: IFS TYPICAL DATA PLATE LOCATION** 16136

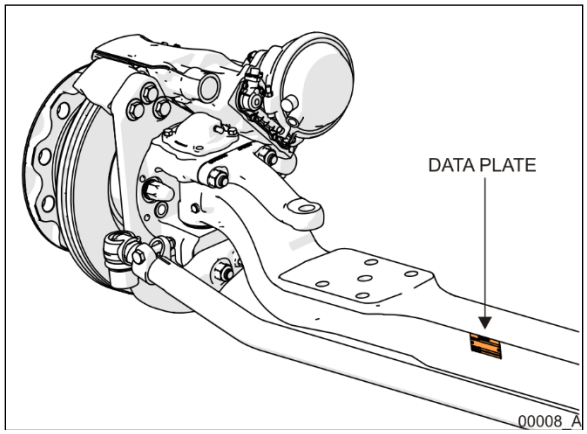


**FIGURE 6: I-BEAM AXLE DATA PLATE**

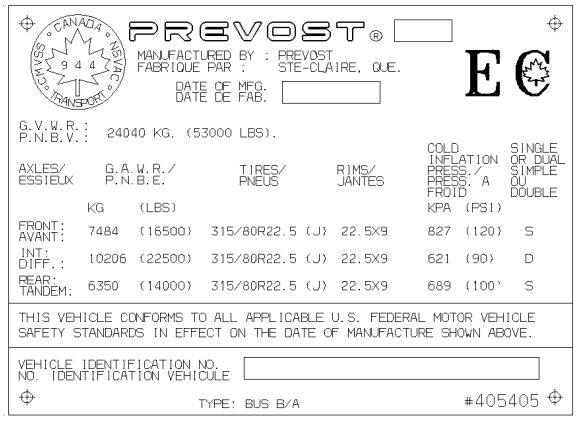


**FIGURE 7: DOT CERTIFICATION PLATE** 00016

### 3.1.5 Coach Final Record

The Coach Final Record is a record of all data pertaining to the assembly of the vehicle. This record is given to the new customer on the vehicle delivery. Retain this record in the company records office for reference and safe-keeping.

### 3.1.6 Safety Certification

Vehicle components meet specifications and standards as follows:

- Material and parts conform to ASTM and/or SAE standards in effect at the time of manufacture.

- All factory-installed interior materials meet FMVSS 302 for fire resistance.

- Certified according to Provincial, State and Federal Safety standards (Canadian and US) BMCSS, FMVSS, and CMVSS.

Other applicable certification labels are affixed to the component.

### 3.1.7 DOT Certification Label

This certifies that vehicles manufactured by Prevost Car Inc., comply with all Federal Motor Vehicle Safety Standards at the time of manufacture. Information such as date of manufacture, model year, gross vehicle weight rating, tire types and inflation pressure is also etched on this plate. The DOT Certification plate is affixed behind the driver's seat.

### 3.1.8 Fuel Tank Label

The fuel tank label is molded on the side of the fuel tank. To read this label, unscrew the fuel tank access panel nuts located at the left in the condenser compartment.

### 3.1.9 EPA Engine Label

The exhaust emission certification label affixed in the engine compartment certifies that the engine conforms to federal and any state exhaust emission regulations (Figure 8). It gives the operating conditions under which certification was made.

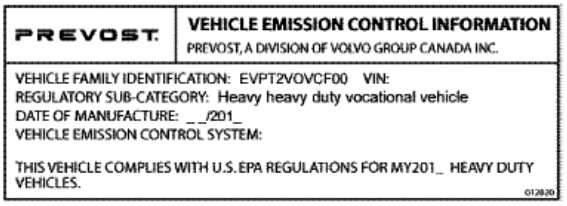


**FIGURE 8: EMISSION CONTROL LABEL** 23229

### 3.1.10 Vehicle Identification Number (VIN)

The seventeen digit vehicle identification number (VIN) is located on a plate (Figure 9) located on the windshield frame pillar (driver's side). The VIN is visible from the outside of the vehicle. Make sure the correct vehicle identification number is given when ordering replacement parts. Using the VIN when ordering parts will facilitate processing.

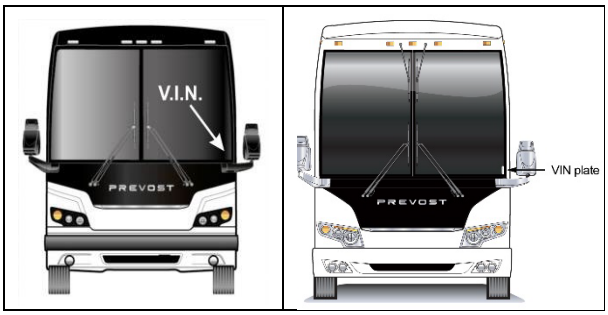


**FIGURE 9: VEHICLE I.D.** 00048/00045-2

| *NOTE* |
| --- |
| *Record the VIN in the vehicle documentation and keep with company records. The VIN will normally be used for vehicle registration and for obtaining vehicle insurance coverage.* |

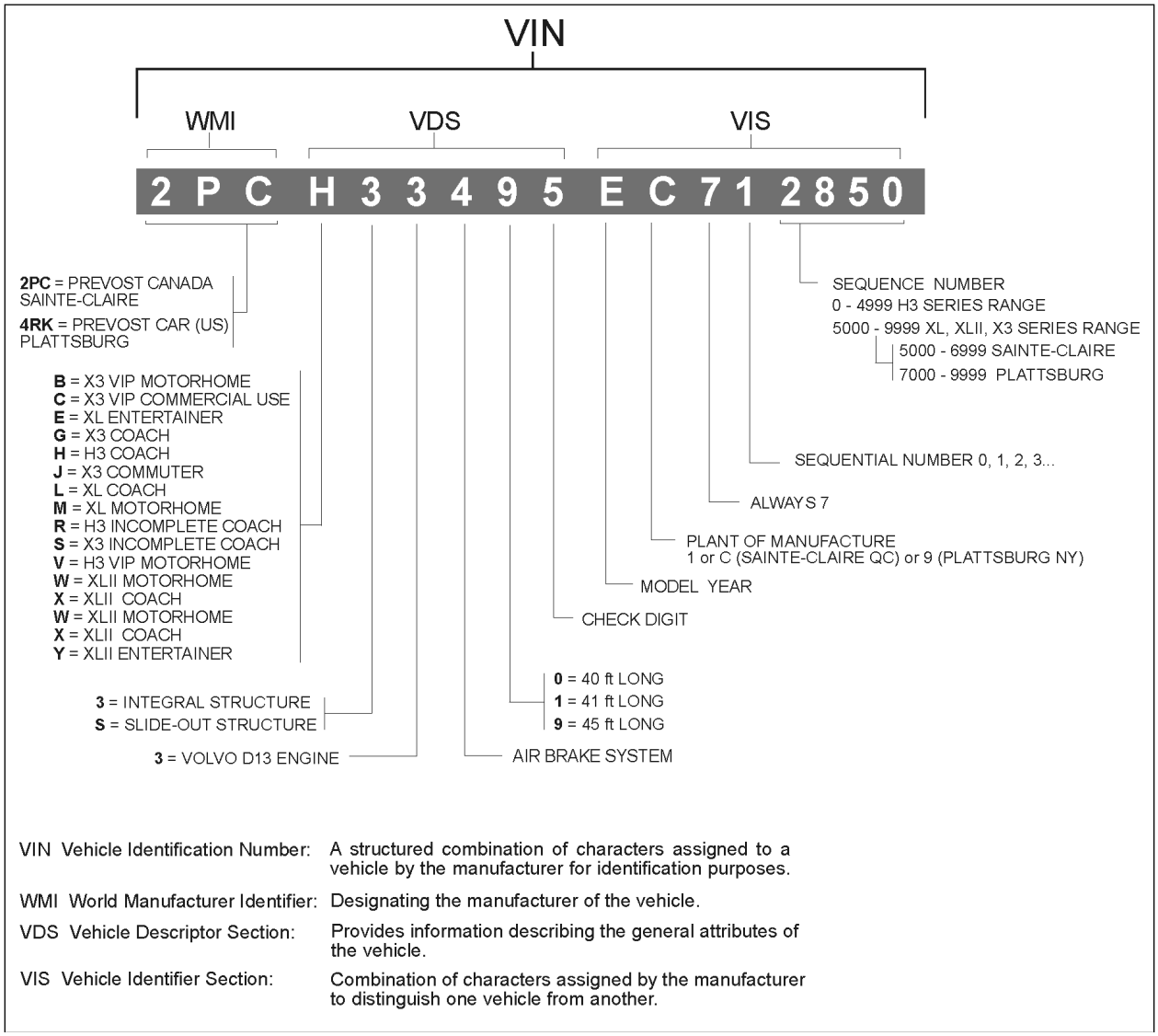


| | |
|---|---|
| VIN Vehicle Identification Number: | A structured combination of characters assigned to a vehicle by the manufacturer for identification purposes. |
| WMI World Manufacturer Identifier: | Designating the manufacturer of the vehicle. |
| VDS Vehicle Descriptor Section: | Provides information describing the general attributes of the vehicle. |
| VIS Vehicle Identifier Section: | Combination of characters assigned by the manufacturer to distinguish one vehicle from another. |

**FIGURE 10: VEHICLE IDENTIFICATION NUMBER – UP TO 2024** 00057_5

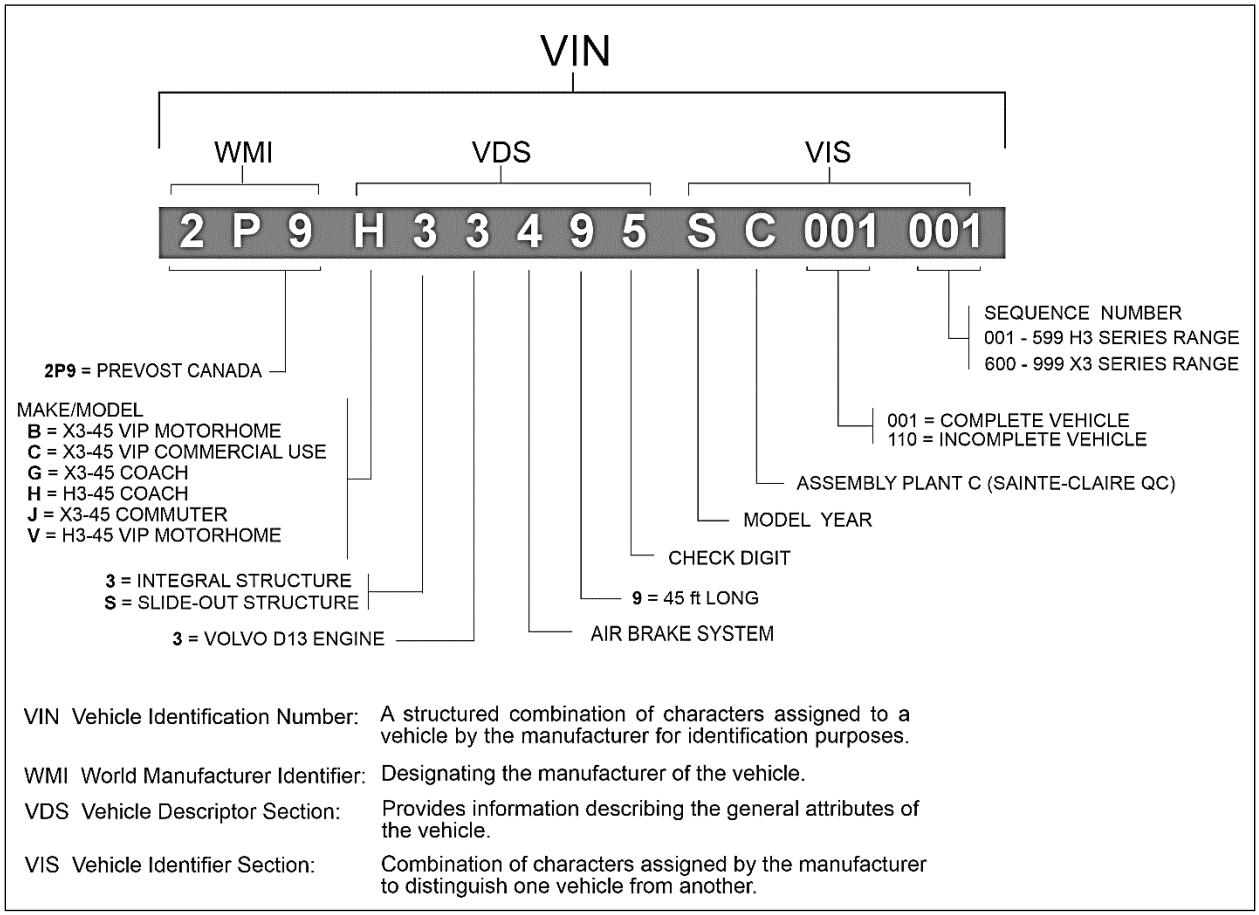


**FIGURE 11: INTRODUCED IN 2024**

| Model year | Code | Model year | Code | Model year | Code | Model year | Code |
|---|---|---|---|---|---|---|---|
| 2001 | 1 | 2009 | 9 | 2017 | H | 2025 | S |
| 2002 | 2 | 2010 | A | 2018 | J | 2026 | T |
| 2003 | 3 | 2011 | B | 2019 | K | 2027 | V |
| 2004 | 4 | 2012 | C | 2020 | L | 2028 | W |
| 2005 | 5 | 2013 | D | 2021 | M | 2029 | X |
| 2006 | 6 | 2014 | E | 2022 | N | 2030 | Y |
| 2007 | 7 | 2015 | F | 2023 | P | 2031 | 1 |
| 2008 | 8 | 2016 | G | 2024 | R | 2032 | 2 |

## 4. FASTENER

### 4.1 FASTENER STRENGTH IDENTIFICATION

Most commonly used metric fastener strength property classes are 9.8 and 10.9 with the class identification embossed on the head of each bolt. Customary (inch) strength classes range from grade 2 to 8 with radial line identification embossed on each bolt head actual grade (i.e., a grade 7 bolt will have 5 embossed radial lines on the bolt head). Some metric nuts will be marked with single digit strength identification numbers on the nut face. Figure 12 shows the different strength markings.

When replacing metric fasteners, be careful to use fasteners of the same or greater strength than the original fasteners (the same number marking or higher). It is also important to select replacement fasteners of the correct size. Correct replacement fasteners are available through the parts division. Some metric fasteners available in after-market parts sources were designed to metric standards of countries other than the United States and may be of a lower strength, may not have the numbered head marking system, and may be of a different thread pitch.

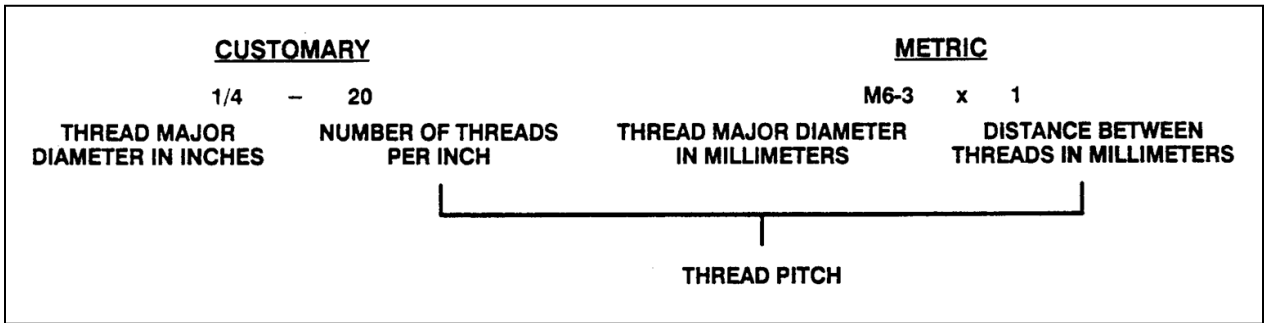


**FIGURE 12: THREAD NOTATION** 00002

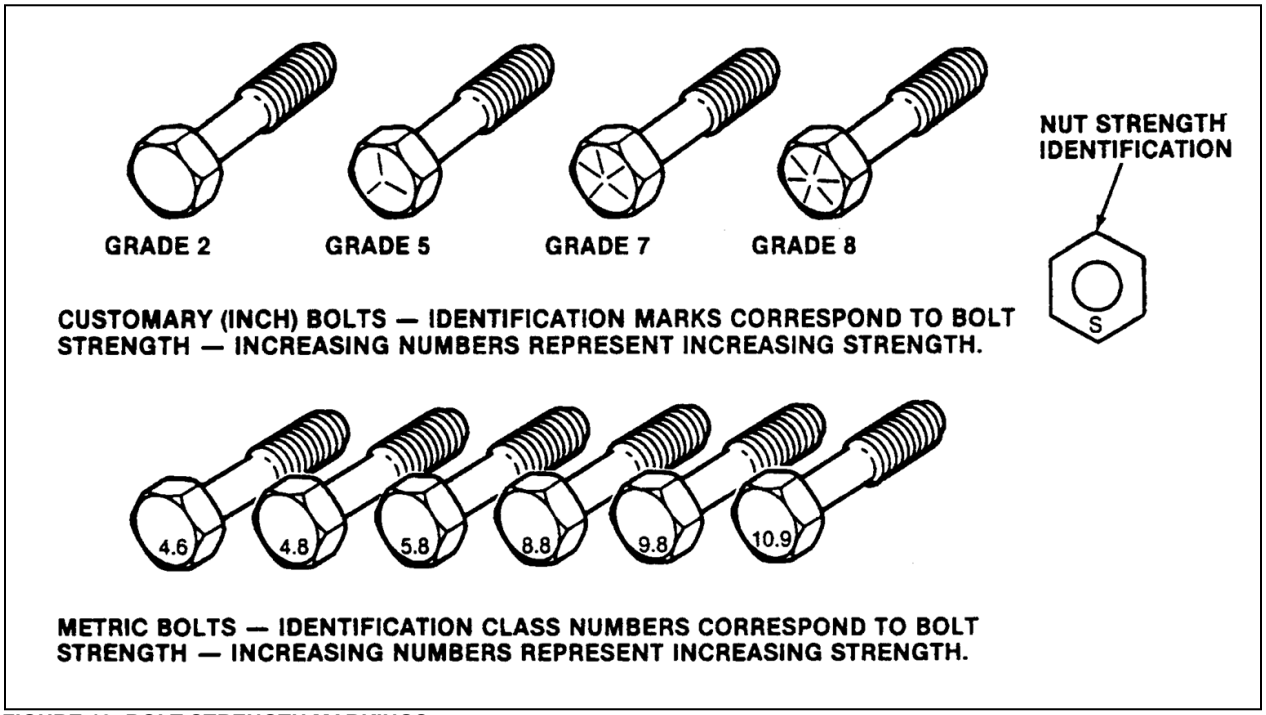


**FIGURE 13: BOLT STRENGTH MARKINGS** 00003

The metric fasteners used on the coach are designed to new standards and may not yet be manufactured by some non-domestic fastener suppliers. In general, except for special applications, the common sizes and pitches are:

M 8 X 1.25;
M 10 X 1.5;
M 12 X 1.75;
M 14 X 2;

## 4.2 STANDARD TORQUE SPECIFICATIONS

The following table lists the standard tightening torques for bolts and nuts, relating tightening torque to thread diameter. Use the following table as a general guide for tightening torques. Use this table only for the bolts and nuts which do not require a specific torque value. All of the values are for use with dry solvent-cleaned threads.

### 4.2.1 SAE

| TYPE | DESCRIPTION | THREAD | GRADE | RECOMMENDED TORQUE<br>Tolerance: ±10% |
|---|---|---|---|---|
| SAE | 1/4-20 | unc | 5 | 96 lb-in (11 Nm) |
| SAE | 1/4-20 | unc | 8 | 135 lb-in (15 Nm) |
| SAE | 1/4-28 | unf | 5 | 106 lb-in (12 Nm) |
| SAE | 1/4-28 | unf | 8 | 149 lb-in (17 Nm) |
| SAE | 5/16-18 | unc | 5 | 188 lb-in (21 Nm) |
| SAE | 5/16-18 | unc | 8 | 266 lb-in (30 Nm) |
| SAE | 5/16-24 | unf | 2 | 131 lb-in (15 Nm) |
| SAE | 5/16-24 | unf | 5 | 202 lb-in (23 Nm) |
| SAE | 5/16-24 | unf | 8 | 286 lb-in (32 Nm) |
| SAE | 3/8-16 | unc | 5 | 27 lb-ft (37 Nm) |
| SAE | 3/8-16 | unc | 8 | 38 lb-ft (52 Nm) |
| SAE | 3/8-24 | unf | 5 | 30 lb-ft (41 Nm) |
| SAE | 3/8-24 | unf | 8 | 42 lb-ft (57 Nm) |
| SAE | 7/16-14 | unc | 5 | 43 lb-ft (58 Nm) |
| SAE | 7/16-14 | unc | 8 | 60 lb-ft (81 Nm) |
| SAE | 7/16-20 | unf | 5 | 46 lb-ft (62 Nm) |
| SAE | 7/16-20 | unf | 8 | 65 lb-ft (88 Nm) |
| SAE | 1/2-13 | unc | 5 | 65 lb-ft (88 Nm) |
| SAE | 1/2-13 | unc | 8 | 92 lb-ft (125 Nm) |
| SAE | 1/2-20 | unf | 5 | 71 lb-ft (96 Nm) |
| SAE | 1/2-20 | unf | 8 | 100 lb-ft (136 Nm) |

| TYPE | DESCRIPTION | THREAD | GRADE | RECOMMENDED TORQUE<br>Tolerance: ±10% |
|---|---|---|---|---|
| SAE | 9/16-12 | unc | 5 | 94 lb-ft (127 Nm) |
| SAE | 9/16-12 | unc | 8 | 132 lb-ft (179 Nm) |
| SAE | 9/16-18 | unf | 5 | 101 lb-ft (137 Nm) |
| SAE | 9/16-18 | unf | 8 | 143 lb-ft (194 Nm) |
| SAE | 5/8-11 | unc | 5 | 130 lb-ft (176 Nm) |
| SAE | 5/8-11 | unc | 8 | 184 lb-ft (249 Nm) |
| SAE | 5/8-18 | unf | 5 | 142 lb-ft (193 Nm) |
| SAE | 5/8-18 | unf | 8 | 200 lb-ft (271 Nm) |
| SAE | 3/4-10 | unc | 5 | 228 lb-ft (309 Nm) |
| SAE | 3/4-10 | unc | 8 | 321 lb-ft (435 Nm) |
| SAE | 3/4-16 | unf | 5 | 245 lb-ft (332 Nm) |
| SAE | 3/4-16 | unf | 8 | 346 lb-ft (469 Nm) |
| SAE | 7/8-9 | unc | 5 | 368 lb-ft (499 Nm) |
| SAE | 7/8-9 | unc | 8 | 519 lb-ft (704 Nm) |
| SAE | 7/8-14 | unf | 5 | 392 lb-ft (531 Nm) |
| SAE | 7/8-14 | unf | 8 | 554 lb-ft (751 Nm) |

| SAE | A2-70 (NSS-SS) |
|---|---|
| DESCRIPTION COARSE THREAD | RECOMMENDED TIGHTENING (LB-IN) Tolerance: ±10% |
| | DRY |
| 8-32 | 21 |
| 10-32 | 34 |
| 1/4-20 | 77 |
| 5/16-18 | 152 |
| DESCRIPTION COARSE THREAD | RECOMMENDED TIGHTENING (LB-FT) Tolerance: ±10% |
| | DRY |
| 3/8-16 | 22 |
| 7/16-14 | 34 |
| 1/2-13 | 53 |

4.2.2 Metric

| TYPE | DESCRIPTION | THREAD | GRADE | RECOMMENDED TORQUE, ±10%<br>lb-ft (dry) otherwise specified<br>Tolerance: ±10% |
|---|---|---|---|---|
| METRIC | M6 X 1 | | nut 8 / screw 8.8 | 7 lb-ft (10 Nm) |
| METRIC | M6 X 1 | | nut 10 / screw 10.9 | 10 lb-ft (13 Nm) |
| METRIC | M6 X 1 | | nut 12 / screw 12.9 | 12 lb-ft (16 Nm) |
| METRIC | M8 X 1.25 | | nut 8 / screw 8.8 | 17 lb-ft (23 Nm) |
| METRIC | M8 X 1.25 | | nut 10 / screw 10.9 | 24 lb-ft (32 Nm) |
| METRIC | M8 X 1.25 | | nut 12 / screw 12.9 | 28 lb-ft (38 Nm) |
| METRIC | M10 X 1.5 | | nut 8 / screw 8.8 | 35 lb-ft (47 Nm) |
| METRIC | M10 X 1.5 | | nut 10 / screw 10.9 | 48 lb-ft (65 Nm) |
| METRIC | M10 X 1.5 | | nut 12 / screw 12.9 | 56 lb-ft (76 Nm) |
| METRIC | M12 X 1.75 | | nut 8 / screw 8.8 | 59 lb-ft (80 Nm) |
| METRIC | M12 X 1.75 | | nut 10 / screw 10.9 | 82 lb-ft (111 Nm) |
| METRIC | M12 X 1.75 | | nut 12 / screw 12.9 | 96 lb-ft (130 Nm) |
| METRIC | M14 X 2 | | nut 8 / screw 8.8 | 94 lb-ft (128 Nm) |
| METRIC | M14 X 2 | | nut 10 / screw 10.9 | 130 lb-ft (176 Nm) |
| METRIC | M14 X 2 | | nut 12 / screw 12.9 | 152 lb-ft (206 Nm) |
| METRIC | M16 X 2 | | nut 8 / screw 8.8 | 143 lb-ft (194 Nm) |
| METRIC | M16 X 2 | | nut 10 / screw 10.9 | 198 lb-ft (268 Nm) |
| METRIC | M16 X 2 | | nut 12 / screw 12.9 | 231 lb-ft (314 Nm) |
| METRIC | M16 X 1.5 | | nut 10 / screw 10.9 | 206 lb-ft (279 Nm) |
| METRIC | M16 X 1.5 | | nut 12 / screw 12.9 | 241 lb-ft (326 Nm) |
| METRIC | M20 X 2.5 | | nut 8 / screw 8.8 | 280 lb-ft (379 Nm) |
| METRIC | M20 X 2.5 | | nut 10 / screw 10.9 | 387 lb-ft (524 Nm) |
| METRIC | M20 X 2.5 | | nut 12 / screw 12.9 | 452 lb-ft (613 Nm) |
| METRIC | M20 X 1.5 | | nut 10 / screw 10.9 | 415 lb-ft (563 Nm) |
| METRIC | M20 X 1.5 | | nut 12 / screw 12.9 | 485 lb-ft (658 Nm) |
| METRIC | M22 X 2.5 | | nut 8 / screw 8.8 | 373 lb-ft (506 Nm) |
| METRIC | M22 X 2.5 | | nut 10 / screw 10.9 | 516 lb-ft (700 Nm) |
| METRIC | M22 X 2.5 | | nut 12 / screw 12.9 | 604 lb-ft (818 Nm) |
| METRIC | M24 X 3 | | nut 8 / screw 8.8 | 481 lb-ft (652 Nm) |
| METRIC | M24 X 3 | | nut 10 / screw 10.9 | 665 lb-ft (902 Nm) |

| TYPE | DESCRIPTION | THREAD | GRADE | RECOMMENDED TORQUE, ±10%<br>lb-ft (dry) otherwise specified<br>Tolerance: ±10% |
|---|---|---|---|---|
| METRIC | M24 X 3 | | nut 12 / screw 12.9 | 777 lb-ft (1054 Nm) |

| METRIC: STAINLESS NUT A2-70 AND STAINLESS SCREW A2-70 (NSS-SS) | | |
|---|---|---|
| DESCRIPTION | RECOMMENDED TIGHTENING Tolerance: ±10%<br>(N-M) DRY | RECOMMENDED TIGHTENING Tolerance: ±10%<br>(LB-IN) DRY |
| M4 X 0.7 | 2.3 | 20 |
| M5 X 0.8 | 4.4 | 39 |
| M6 X 1 | 7.7 | 68 |
| DESCRIPTION | RECOMMENDED TIGHTENING Tolerance: ±10%<br>(N-M) DRY | RECOMMENDED TIGHTENING Tolerance: ±10%<br>(LB-FT) DRY |
| M8 X 1.25 | 18.6 | 13.7 |
| M10 X 1.5 | 37.3 | 27.5 |
| M12 X 1.75 | 63.8 | 47.0 |

## 4.3 SELF-LOCKING FASTENERS

A self-locking fastener is designed with an interference fit between the nut and bolt threads. This is most often accomplished by distortion of the top thread of an all-metal nut or bolt or by using a nylon patch on the threads. A nylon insert or the use of adhesives may also be used as a method of interference between nut and bolt threads (Figure 13).

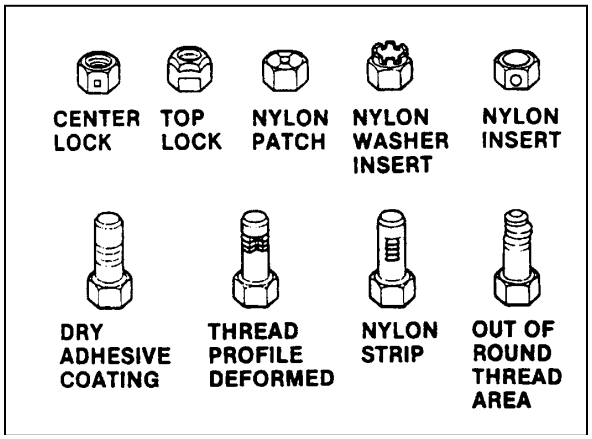


**FIGURE 14: SELF-LOCKING FASTENERS** 00004

## 4.4 RECOMMENDATIONS FOR REUSE

Clean, rust-free self-locking fasteners may be reused as follows:

a) Clean dirt and other foreign matter from the fastener;

b) Inspect the fastener to ensure there is no crack, elongation, or other sign of fatigue or over tightening. If there is any doubt, replace with a new self-locking fastener of equal or greater strength;

c) Assemble parts and hand start fastener;

d) Observe that, before the fastener seats, it develops torque per the chart in the following table. If there is any doubt, replace with a new self-locking fastener of equal or greater strength;

e) Tighten the fastener to the torque specified in the applicable section of this manual;

Fasteners which are rusty or damaged should be replaced with new ones of equal or greater strength

.

**SELF-LOCKING TORQUE CHART BEFORE FASTERNER SEATS**

| **METRIC** | | 6 & 6.3 | 8 | 10 | 12 | 14 | 16 | 20 |
|---|---|---|---|---|---|---|---|---|
| NUTS AND ALL-METAL BOLTS | Nm | 0.4 | 0.8 | 1.4 | 2.2 | 3.0 | 4.2 | 7.0 |
| | lb-in | 4.0 | 7.0 | 12 | 18 | 25 | 35 | 57 |
| ADHESIVE OR NYLON COATED BOLTS | Nm | 0.4 | 0.6 | 1.2 | 1.6 | 2.4 | 3.4 | 5.6 |
| | lb-in | 4.0 | 5.0 | 10 | 14 | 20 | 28 | 46 |

| **US STANDARD** | | ¼ | 5/16 | 3/8 | 7/16 | ½ | 9/16 | 5/8 | ¾ |
|---|---|---|---|---|---|---|---|---|---|
| NUTS AND ALL-METAL BOLTS | Nm | 0.4 | 0.6 | 1.4 | 1.8 | 2.4 | 3.2 | 4.2 | 6.2 |
| | lb-in | 4.0 | 5.0 | 12 | 15 | 20 | 27 | 35 | 51 |
| ADHESIVE OR NYLON COATED BOLTS | Nm | 0.4 | 0.6 | 1.0 | 1.4 | 1.8 | 2.6 | 3.4 | 5.2 |
| | lb-in | 4.0 | 5.0 | 9.0 | 12 | 15 | 22 | 28 | 43 |

## 4.5 SIX LOBED SOCKET HEAD

Six lobed socket head (Torx) fasteners are used in some applications on vehicles covered in this manual. The tools designed for these fasteners are available commercially. However, in some cases, if the correct tool is not available, a hex socket head wrench may be used.

| Multiply | by | to get equivalent number of: |
|---|---|---|
| **LENGTH** | | |
| Inch | 25.4 | millimeters (mm) |
| Foot | 0.305 | meters (m) |
| Yard | 0.914 | meters |
| Mile | 1.609 | kilometers (km) |
| **AREA** | | |
| Inch² | 645.2 | millimeters² ($mm^2$) |
| | 6.45 | centimeters² ($cm^2$) |
| Foot² | 0.093 | meters² ($m^2$) |
| Yard² | 0.836 | meters² |
| **VOLUME** | | |
| Inch³ | 16 387.0 | $mm^3$ |
| | 16.387 | $cm^3$ |
| | 0.016 | liters (l) |
| Quart | 0.946 | liters |
| Gallon | 3.785 | liters |
| Yard³ | 0.765 | meters³ ($m^3$) |
| **MASS** | | |
| Pound | 0.453 | kilograms (kg) |
| Ton | 907.18 | kilograms (kg) |
| Ton | 0.907 | ton (t) |
| **FORCE** | | |
| Kilogram | 9.807 | newtons (N) |
| Ounce | 0.278 | newtons |
| Pound | 4.448 | newtons |
| **TEMPERATURE** | | |
| Degree Fahrenheit | (†°F – 32) ÷ 1.8 | Degree Celsius (C) |

| Multiply | by | to get equivalent number of: |
|---|---|---|
| **ACCELERATION** | | |
| Foot/sec² | 0.305 | meter/sec² ($m/s^2$) |
| Inch/sec² | 0.026 | meter/sec² |
| **TORQUE** | | |
| Pound-inch | 0.113 | newton-meters (N·m) |
| Pound-foot | 1.35 | newton-meters |
| **POWER** | | |
| Horsepower | 0.746 | kilowatts (kW) |
| **PRESSURE OR STRESS** | | |
| Inches of water | 0.249 | kilopascals (kPa) |
| Pounds/sq. in. | 6.895 | kilopascals |
| **ENERGY OR WORK** | | |
| BTU | 1 055.0 | joules (J) |
| Foot-pound | 1.356 | joules |
| kilowatt-hour | 3 600 000.0 or 3.6 x 10 ⁶ | joules (J = one W's) |
| **LIGHT** | | |
| Foot candle | 1.076 | lumens/meter² ($lm/m^2$) |
| **VELOCITY** | | |
| Miles/hour | 1.609 | kilometers/hr (km/h) |

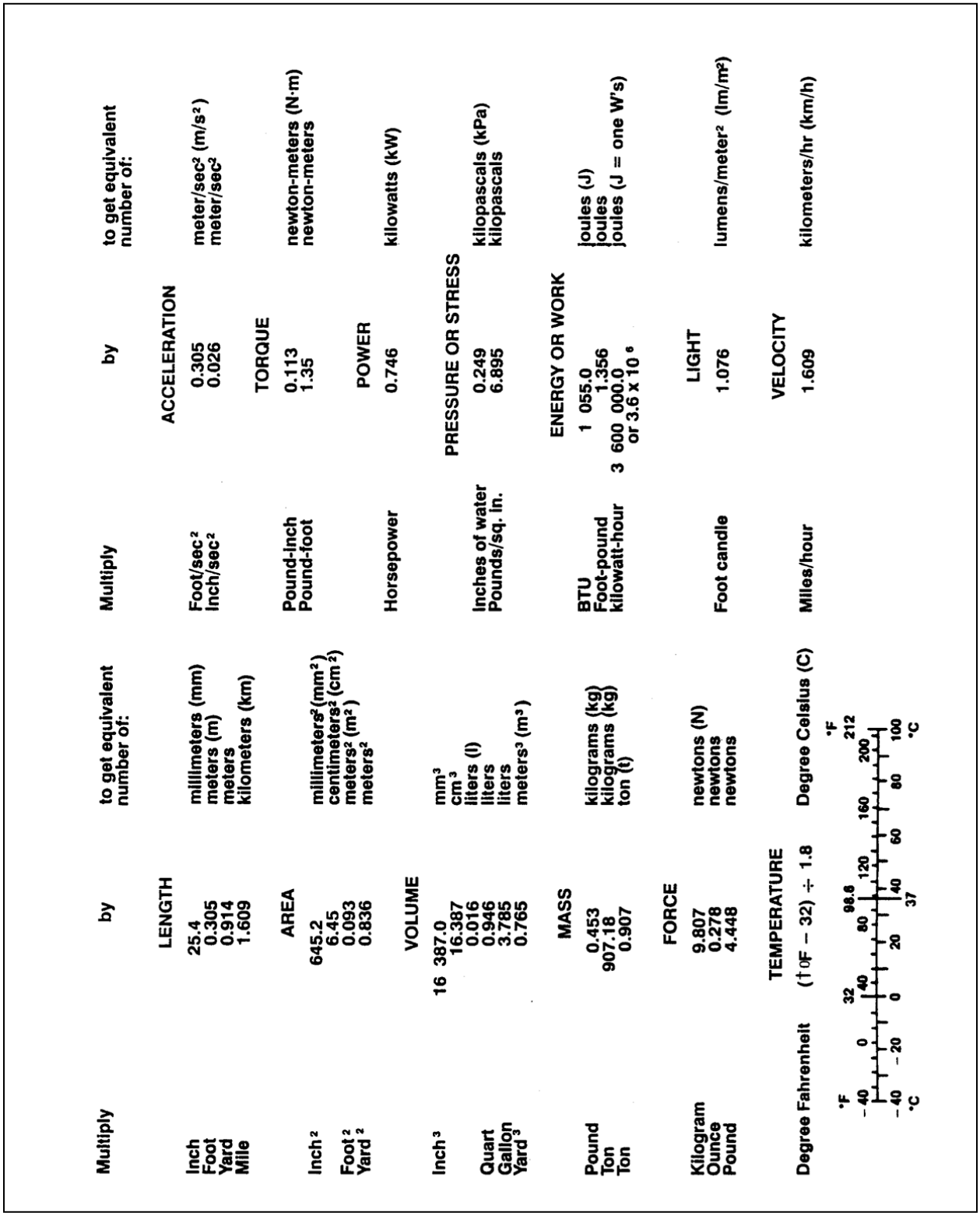


**FIGURE 15: METRIC - US STANDARD CONVERSION TABLE**

00005

# DECIMAL AND METRIC EQUIVALENTS

| FRACTIONS | DECIMAL IN. | METRIC MM | FRACTIONS | DECIMAL IN. | METRIC MM |
|---|---|---|---|---|---|
| 1/64 | .015625 | .39688 | 33/64 | .515625 | 13.09687 |
| 1/32 | .03125 | .79375 | 17/32 | .53125 | 13.49375 |
| 3/64 | .046875 | 1.19062 | 35/64 | .546875 | 13.89062 |
| 1/16 | .0625 | 1.58750 | 9/16 | .5625 | 14.28750 |
| 5/64 | .078125 | 1.98437 | 37/64 | .578125 | 14.68437 |
| 3/32 | .09375 | 2.38125 | 19/32 | .59375 | 15.08125 |
| 7/64 | .109375 | 2.77812 | 39/64 | .609375 | 15.47812 |
| 1/8 | .125 | 3.1750 | 5/8 | .625 | 15.87500 |
| 9/64 | .140625 | 3.57187 | 41/64 | .640625 | 16.27187 |
| 5/32 | .15625 | 3.96875 | 21/32 | .65625 | 16.66875 |
| 11/64 | .171875 | 4.36562 | 43/64 | .671875 | 17.06562 |
| 3/16 | .1875 | 4.76250 | 11/16 | .6875 | 17.46250 |
| 13/64 | .203125 | 5.15937 | 45/64 | .703125 | 17.85937 |
| 7/32 | .21875 | 5.55625 | 23/32 | .71875 | 18.25625 |
| 15/64 | .234375 | 5.95312 | 47/64 | .734375 | 18.65312 |
| 1/4 | .250 | 6.35000 | 3/4 | .750 | 19.05000 |
| 17/64 | .265625 | 6.74687 | 49/64 | .765625 | 19.44687 |
| 9/32 | .28125 | 7.14375 | 25/32 | .78125 | 19.84375 |
| 19/64 | .296875 | 7.54062 | 51/64 | .796875 | 20.24062 |
| 5/16 | .3125 | 7.93750 | 13/16 | .8125 | 20.63750 |
| 21/64 | .328125 | 8.33437 | 53/64 | .828125 | 21.03437 |
| 11/32 | .34375 | 8.73125 | 27/32 | .84375 | 21.43125 |
| 23/64 | .359375 | 9.12812 | 55/64 | .859375 | 21.82812 |
| 3/8 | .375 | 9.52500 | 7/8 | .875 | 22.22500 |
| 25/64 | .390625 | 9.92187 | 57/64 | .890625 | 22.62187 |
| 13/32 | .40625 | 10.31875 | 29/32 | .90625 | 23.01875 |
| 27/64 | 421875 | 10.71562 | 59/64 | .921875 | 23.41562 |
| 7/16 | .4375 | 11.11250 | 15/16 | .9375 | 23.81250 |
| 29/64 | .453125 | 11.50937 | 61/64 | .953125 | 24.20937 |
| 15/32 | .46875 | 11.90625 | 31/32 | .96875 | 24.60625 |
| 31/64 | .484375 | 12.30312 | 63/64 | .984375 | 25.00312 |
| 1/2 | .500 | 12.70000 | 1 | 1.00 | 25.40000 |

**FIGURE 16: CONVERSION CHART** 00006

## 4.6 HOSE CLAMP TORQUE

| ENGLISH: | HOSE CLAMP | |
|---|---|---|
| DESCRIPTION CONSTANT TORQUE | RECOMMENDED TIGHTENING (LB-IN) | |
| | | DRY |
| 3/8 Hex | | 90-110 |

| ENGLISH: | HOSE CLAMP (WAVE SEAL AND BREEZE) | |
|---|---|---|
| DESCRIPTION CONSTANT TORQUE | RECOMMENDED TIGHTENING (LB-IN) | |
| | | DRY |
| 5/16 Hex | | 55-65 |



| METRIC: | HOSE CLAMP (CAILLAU) | |
|---|---|---|
| | RECOMMENDED TIGHTENING (LB-IN) | |
| | | DRY |
| 7 mm Hex | | 30±2.2 |

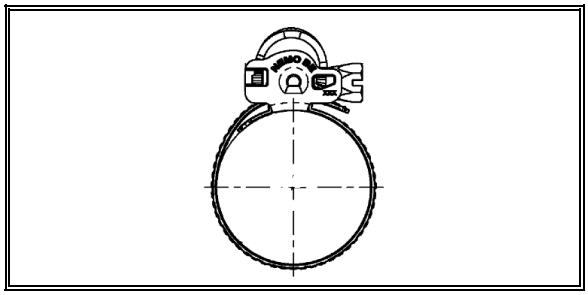

**CAUTION**

Cover electronic control components and wiring to protect from hot sparks, etc.

**CAUTION**

Position welding machine ground clamp as close as possible to the work. Ensure that the welding machine ground return clamp is well secured and makes a good electrical contact with a large metallic area of the chassis located as close as possible to the welding point.

**CAUTION**

Do not use TIG welding process on the vehicle. This high frequency current process can seriously damage the electronic components.

Refer to *Multiplex Modules Disconnection Procedure Prior to Welding* annexed at the end of this section.

## 5. WELDING PROCESS

### 5.1 STEEL – STEEL WELDING

**CAUTION**

Before welding, perform multiplex modules disconnection procedure.

*NOTE*

*Welding surfaces must be free of scale, slag, rust, paint, grease, humidity or other foreign material that would render welding impossible.*

**DANGER**

Only a qualified and experienced person must do welding.

- FCAW (Flux Cored Arc Welding) process ;
- Electrode wire conforms to A5.20 AWS (American Welding Society) specifications ;
- E4801T-9-CH, type electrode wire with 0,045“ diameter (1,14 mm) ;

| Material Thickness | Voltage | Current | Wire Feed Rate | Shielding Gas |
|---|---|---|---|---|
| 1/8” to ½” | 26 ± 2 volts | 260 Amps | 450 ipm approx. | 75% argon – 25% CO2 or 100% CO2 |

If necessary and with great care to prevent perforating the material, it is possible to use a conventional electric arc welding machine according to the following specifications:

- SMAW (Shielded Metal-Arc Welding) process ;
- Welding rod conforms to A5.1 of AWS (American Welding Society) specifications; E 7018 type welding rod with 1/8” diameter (3,2 mm).
- Current: 100 amperes to 150 amperes; optimum at 120 amps.

It is important to grind weld bead starts and stops and also to grind arc strikes from surfaces.

### 5.2 STEEL WITH STAINLESS STEEL OR STAINLESS STEEL WITH STAINLESS STEEL WELDING

**CAUTION**

Before welding, perform multiplex modules disconnection procedure.

*NOTE*

*Welding surfaces must be free of scale, slag, rust, paint, grease, humidity or other foreign material that would render welding impossible.*

**DANGER**

Only a qualified and experienced person must do welding.

- GMAW (Gas Metal-Arc Welding) process;
- Welding wire conforms to AWS (American Welding Standards) A5.9 specifications;
- 308LSi type welding wire with 0.035" diameter (0,9 mm);

## 5.3 STEEL - STAINLESS STEEL WELDING

| Steel Thickness | SS Thickness | Voltage | Current | Wire Feed Rate | Shielding Gas |
|---|---|---|---|---|---|
| Less than 1/8” | Any type | 20±1.5 volts | 130±15 Amps | 290 ipm approx. | 90% He, 7.5% Ar, 2.5% CO2 |
| 1/8” and more | Any type | 22±1.5 volts | 160±15 Amps | 330 ipm approx. | 90% He, 7.5% Ar, 2.5% CO2 |

**STAINLESS STEEL - STAINLESS STEEL WELDING**

| SS Thickness | Voltage | Current | Wire Feed Rate | Shielding Gas |
|---|---|---|---|---|
| Any type | 20 ± 1.5 volts | 130 ± 15 Amps | 290 ipm approx. | 90% He – 7.5% Ar, 2.5% CO2 |

If necessary and with great care to prevent perforating the material, it is possible to use a conventional electric arc welding machine according to the following specifications:

- SMAW (Shield Metal-Arc Welding) process;
- Welding rod conforms to AWS (American Welding Standards) A5.4 specifications; 308L-17 type welding rod with 3/32" diameter (2,4 mm);
- Current: - 50 amperes to 90 amperes, optimum at 60 amperes.

It is important to grind weld bead starts and stops and also to grind arc strikes from surfaces.

PREVOST

# MULTIPLEX MODULES DISCONNECTION PROCEDURE PRIOR TO WELDING

JANUARY 2018

**Table of contents**


1. COMMUTERS ..... 2
2. H3 SERIES - WITH NEW ELECTRICAL ARCHITECTURE ..... 5
3. X3 SERIES - WITH NEW ELECTRICAL ARCHITECTURE ..... 7


| | |
|---|---|
| **Material:** | N/A |
| **Equipment(s):** | Phillips-head screwdriver<br>Ratchet handle<br>3/8" socket<br>Electric tape<br>Long nose pliers |
| **Reference schematics:** | N/A |
| **Safety rules:** | - Wear safety goggles<br>- Set the battery master switch to the OFF position first |
| **Recommendations:** | **This procedure should be performed by qualified personnel only.** |

# 1. COMMUTERS

| Disconnection prior to welding | |
|---|---|
| **1** Switch ignition OFF<br>Switch Master cut-out OFF<br> | 2 Open the 2 circuit breakers (each end)<br>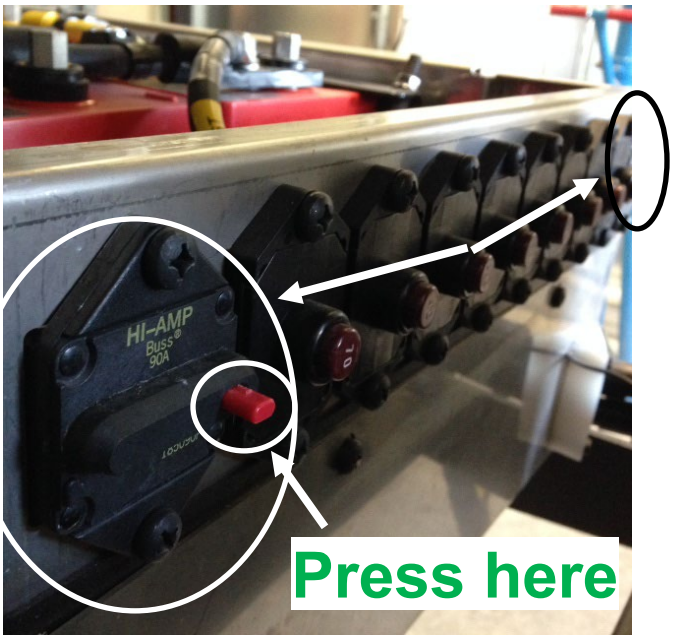 |
| 3 Disconnect both electronic grounds<br>Use insulating tape to make sure that cables don't touch each other or the vehicle body<br> | 4 Disconnect C397 and C355<br> |

**Disconnection prior to welding**

5 Disconnect all the connectors from the I/O-A and I/O-B modules in rear junction box

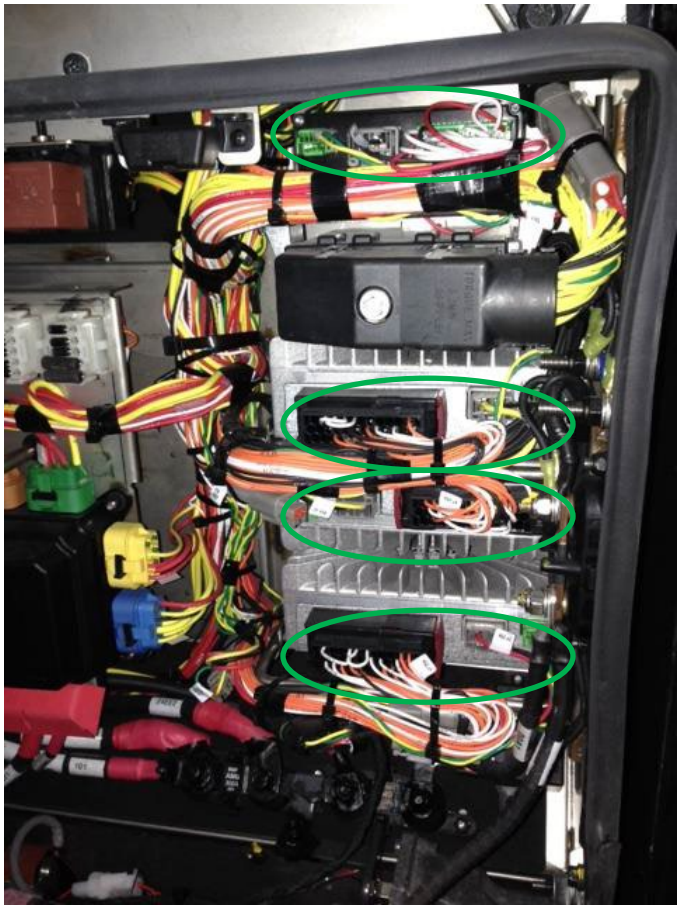

6 Disconnect the control connector from the battery equalizer

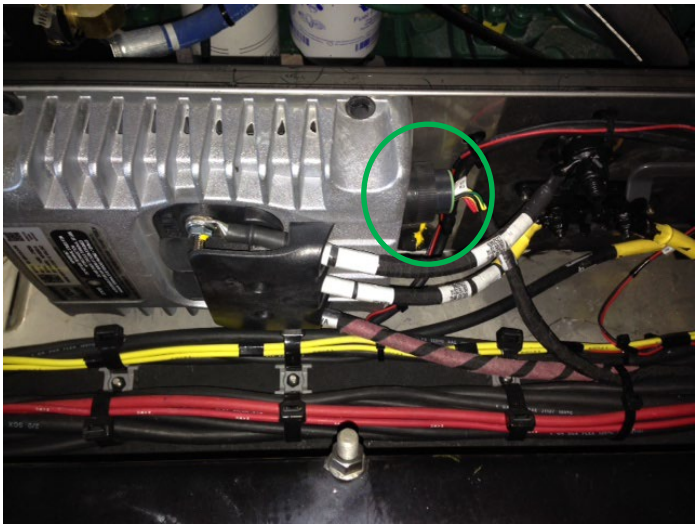

7 In the front junction box

Disconnect all the connectors from :

- I/O-A modules
- I/O-B modules
- Vancso Gateway
- ABS module
- VECU
- MCM

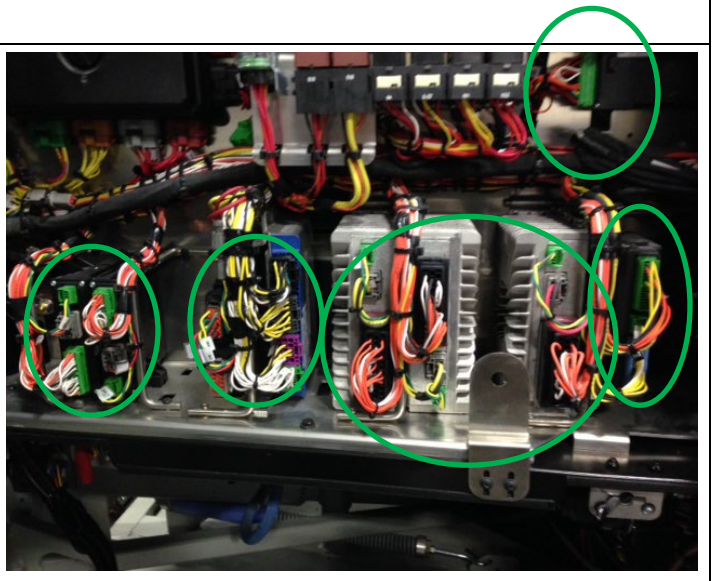

**Disconnection prior to welding**

8 Behind the right console panel

Disconnect all the connectors from the I/O-B modules

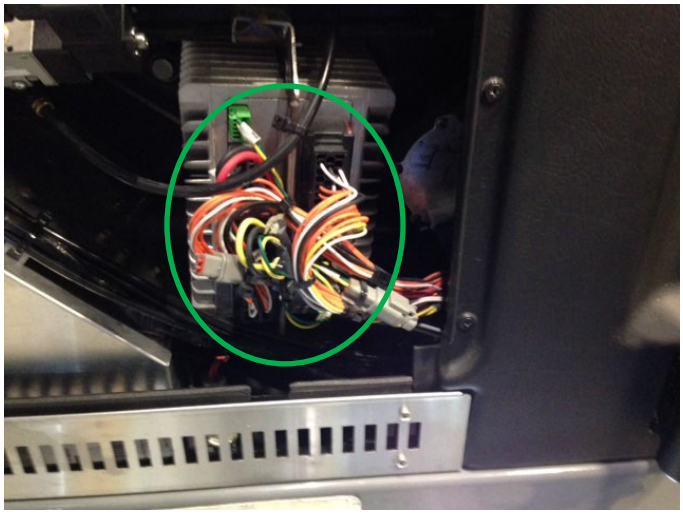

9 In the condensor compartment

Disconnect the ACM connector (A137A)

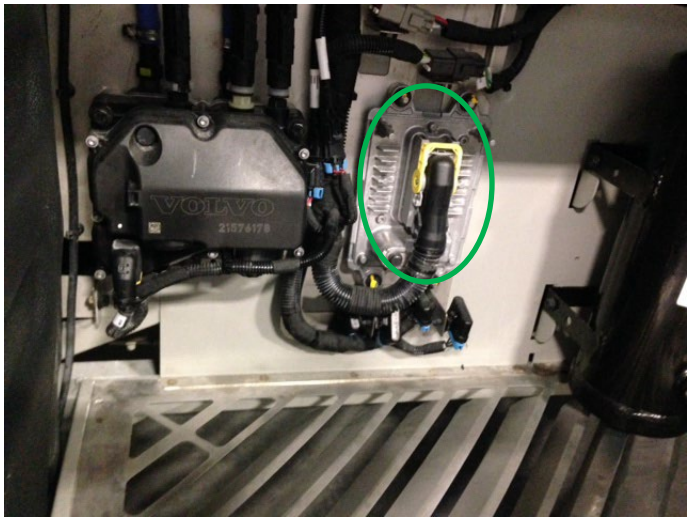


10 In the evaporator compartment

Disconnect all the connectors from I/O-B module

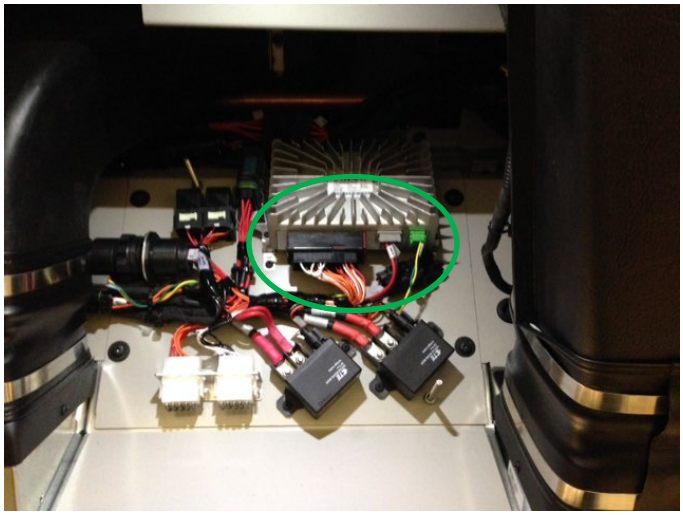

11 The vehicle is now ready for welding

Make sure that the welding ground is as close as possible of the welding point and the contact is perfect.

12 When the welding is done

Reconnect all the modules

Make sure that all the connectors are perfectly connected with the locking tabs well engaged.

## 2. H3 SERIES - with New Electrical Architecture

**CAUTION**

Cover electronic control components and wiring to protect from hot sparks, etc.

**CAUTION**

Do not use TIG welding process on the vehicle. This high frequency current process can seriously damage the electronic components.

### Disconnection prior to welding

PRECAUTIONS TO BE OBSERVED BEFORE ARC WELDING TO MINIMIZE THE RISK OF MAJOR AND COSTLY DAMAGES CAUSED TO THE VEHICLE ELECTRONIC COMPONENTS



1. Turn the ignition switch to the OFF position.

2. Set the main electrical shut-off switch to the OFF position.




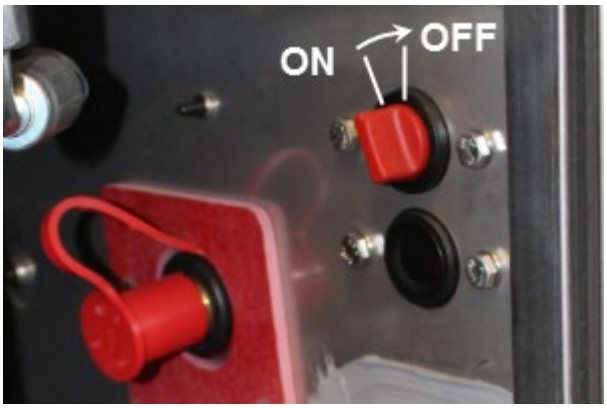

3. Trip circuit breakers CB2 & CB6.







4. Disconnect the chassis ground cable “00” (GND) from the appropriate battery post (figure on your right).

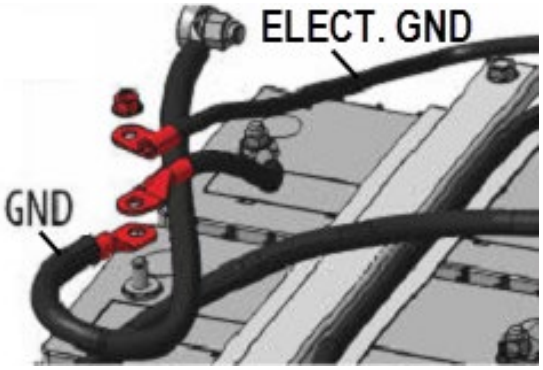


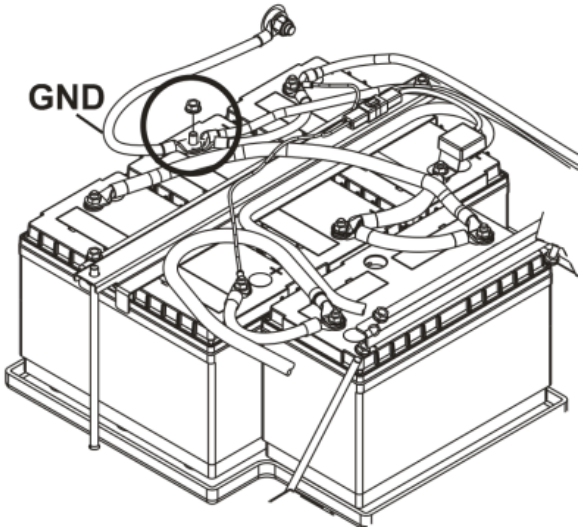


**CAUTION**

*Position welding machine ground clamp as close as possible to the work. Ensure that the welding machine ground return clamp is well secured and makes a good electrical contact with a large metallic area of the chassis located as close as possible to the welding point.*

5. Once the welding works completed, perform the previous steps in reverse order. Torque the ground cable nut according to specifications found in Section 06 Electrical.

## 3. X3 SERIES - with New Electrical Architecture

**CAUTION**

Cover electronic control components and wiring to protect from hot sparks, etc.

**CAUTION**

Do not use TIG welding process on the vehicle. This high frequency current process can seriously damage the electronic components.

### Disconnection prior to welding

PRECAUTIONS TO BE OBSERVED BEFORE ARC WELDING TO MINIMIZE THE RISK OF MAJOR AND COSTLY DAMAGES CAUSED TO THE VEHICLE ELECTRONIC COMPONENTS



1. Turn the ignition switch to the OFF position.

2. Set the main electrical shut-off switch to the OFF position.




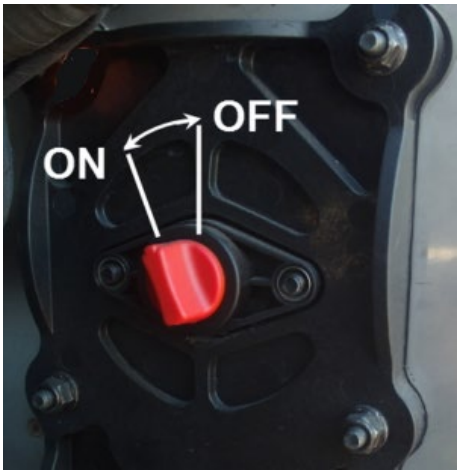

3. Trip circuit breakers CB2 & CB6.







4. Disconnect the chassis ground cable “00” (GND) from the appropriate battery post (figure on your right).

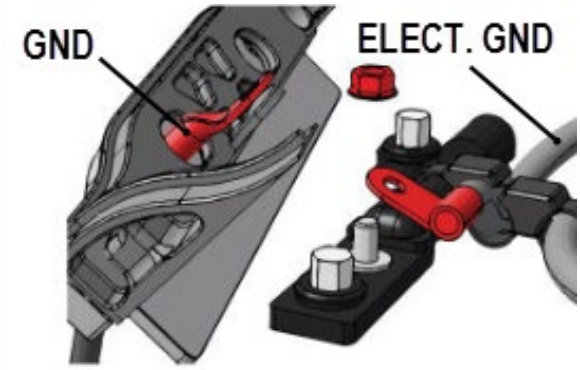


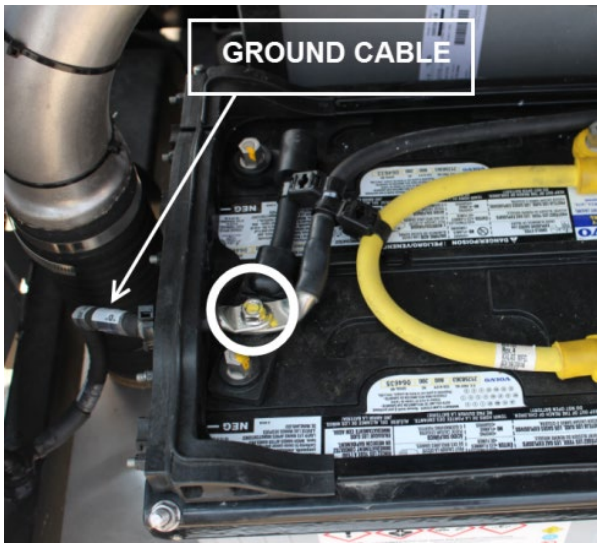


**CAUTION**

*Position welding machine ground clamp as close as possible to the work. Ensure that the welding machine ground return clamp is well secured and makes a good electrical contact with a large metallic area of the chassis located as close as possible to the welding point.*

5. Once the welding works completed, perform the previous steps in reverse order. Torque the ground cable nut according to specifications found in Section 06 Electrical.

## CONTENT

**SECTION CHANGE LOG** ..... **2**

**1. TORQUE TABLES** ..... **3**

1.1 POWER PLANT CRADLE INSTALLATION ..... 3
1.2 BELT TENSIONERS AND IDLERS ..... 4

**2. VOLVO D13N ENGINE** ..... **6**

2.1 ENGINE HARNESS ..... 7
2.2 ENGINE OVERVIEW ..... 11
2.3 ENGINE & EXHAUST AFTERTREATMENT SYSTEM DIAGRAM ..... 13
2.4 ENGINE OIL ..... 15
*2.4.1 Oil Quality* ..... *15*
*2.4.2 OBD24 Emission Compliant Volvo Engines Oil Viscosity* ..... *15*
*2.4.3 Oil Additives* ..... *16*
*2.4.4 Synthetic Lubrication* ..... *16*
*2.4.5 Oil Consumption* ..... *16*
*2.4.6 Oil Change* ..... *16*
*2.4.7 Oil Change Intervals* ..... *17*
*2.4.8 Oil Filters* ..... *17*
*2.4.9 Oil Filter Change* ..... *18*
*2.4.10 Checking the Oil Level* ..... *19*
2.5 POWER PLANT ASSEMBLY REMOVAL ..... 20
2.6 POWER PLANT ASSEMBLY INSTALLATION ..... 23
2.7 ENGINE MOUNTS ..... 24

**3. ELECTRONIC FOOT PEDAL ASSEMBLY (EFPA) & THROTTLE POSITION SENSOR** ..... **24**

**4. AUTOMATIC BELT TENSIONERS AND IDLER PULLEYS INSPECTION** ..... **24**

4.1 BEARING INSPECTION ..... 26
4.2 AUTOMATIC BELT TENSIONER BUSHING WEAR ..... 26
4.3 BELTS AND IDLERS VISUAL INSPECTION ..... 27

**5. ENGINE PROTECTION STRATEGY** ..... **27**

**6. SPECIFICATIONS** ..... **28**

## SECTION CHANGE LOG

| | DESCRIPTION | DATE |
|---|---|---|
| 1 | New MY2024 D13 engine EPA2024 EOBD-U24 | Feb 2024 |
| | | |
| | | |
| | | |
| | | |
| | | |

## 1. TORQUE TABLES

### 1.1 POWER PLANT CRADLE INSTALLATION

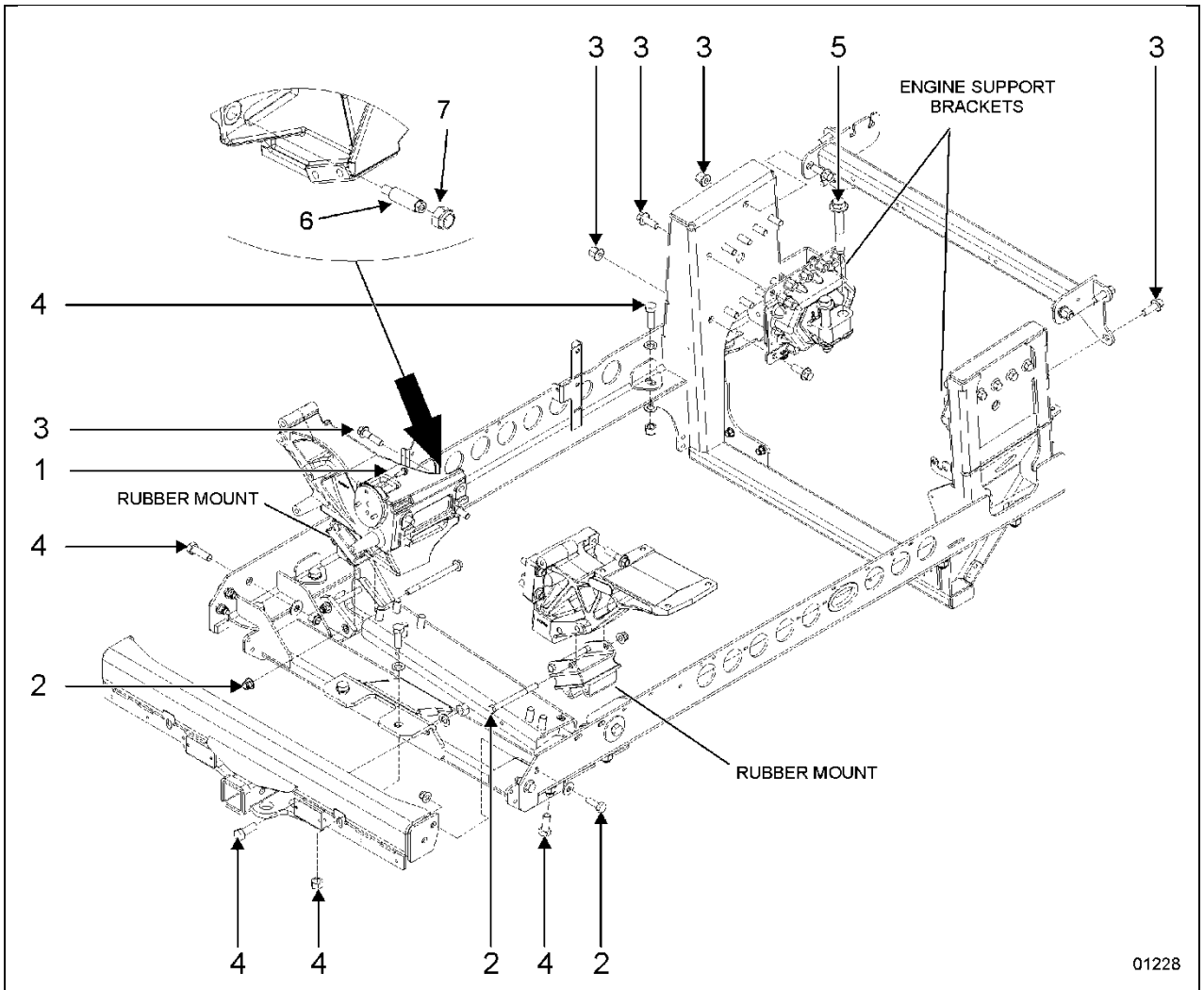


| VOLVO ENGINE CRADLE INSTALLATION | | |
|---|---|---|
| No | DESCRIPTION | TORQUE |
| 1 | Screw, cap hexagonal head M8 – 1.25 g8.8 | 14 lb-ft (19 Nm) |
| 2 | Screw, cap hexagonal head M12 – 1.75 g8.8 | 60 lb-ft (81 Nm) |
| 3 | Screw, cap hexagonal head M14 – 2.0 g8.8 | 94 lb-ft (128 Nm) |
| 4 | Screw, cap hexagonal head M16 – 2.0 g10.9 | 190 lb-ft (258 Nm) |
| 5 | Screw, cap hexagonal head M20 – 2.5 g10.9 | 450 lb-ft (610 Nm) |
| 6 | Ground stud M14 – 2.0 | 85-103 lb-ft (115-140 Nm) |
| 7 | Nut on ground stud M22 – 2.5 | 165-201 lb-ft (224-273 Nm) |

## 1.2 BELT TENSIONERS AND IDLERS

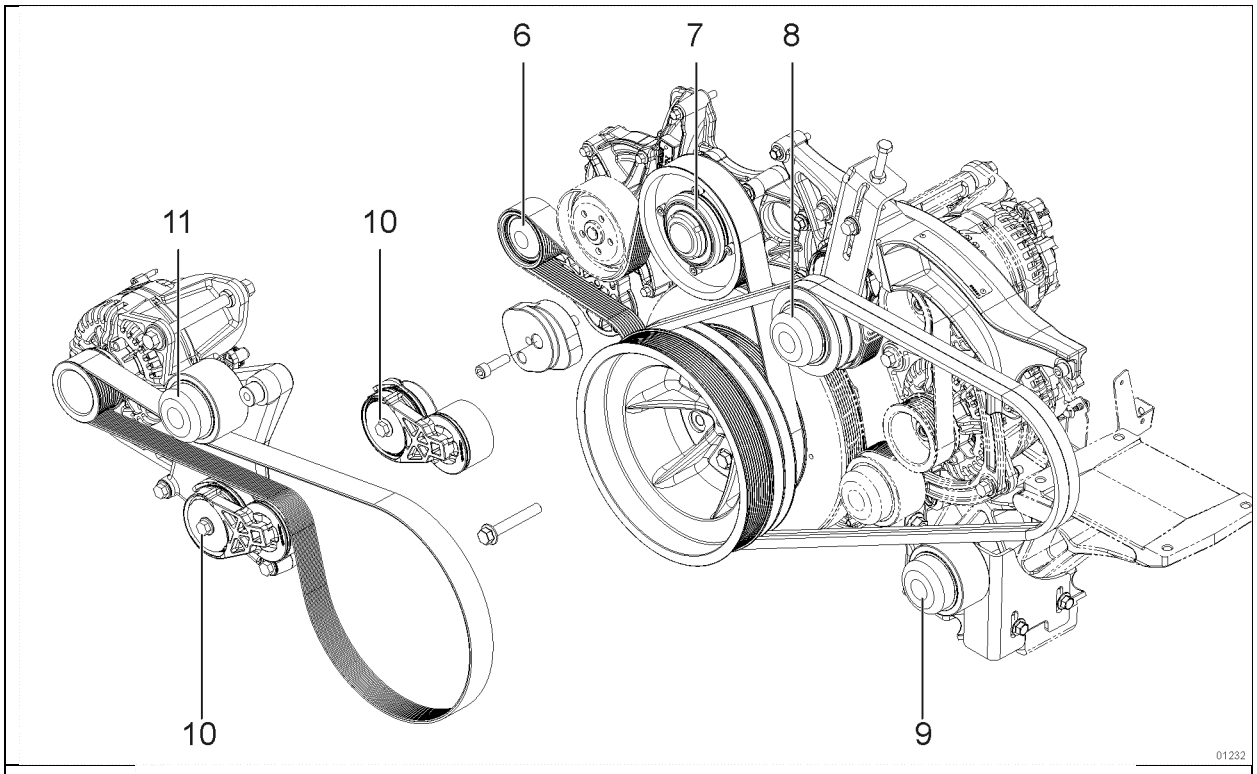


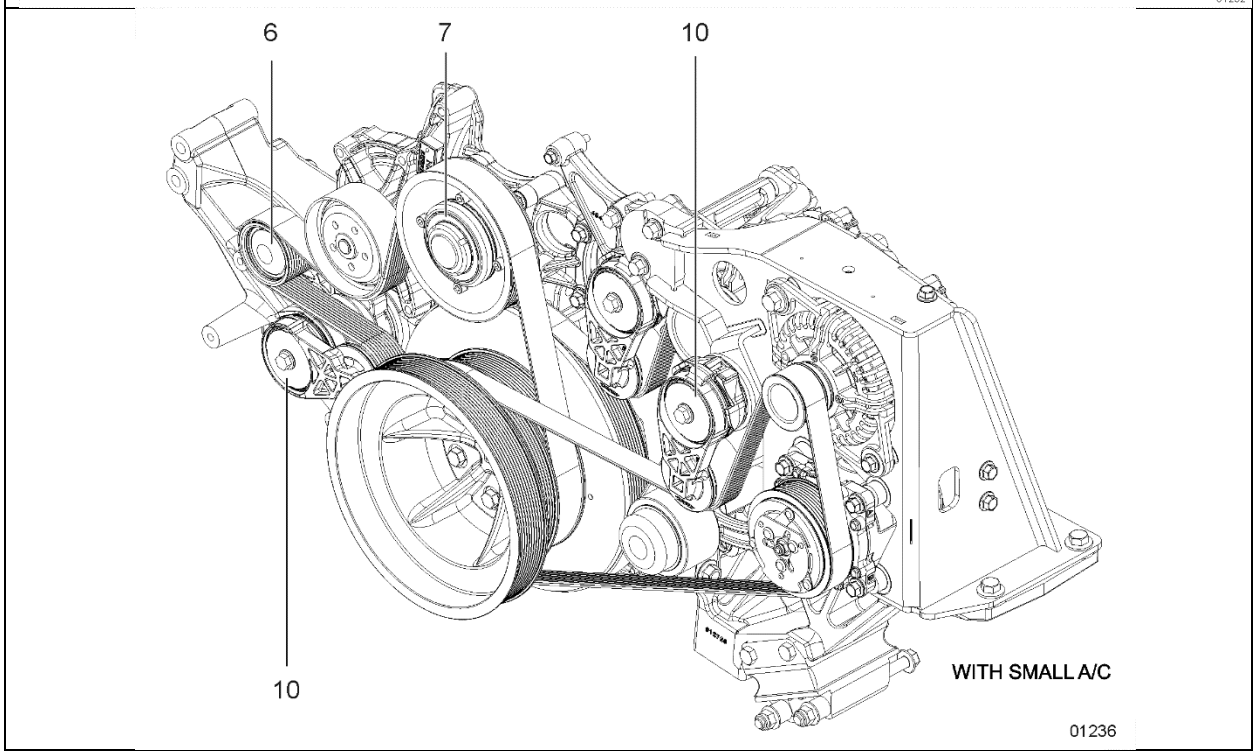

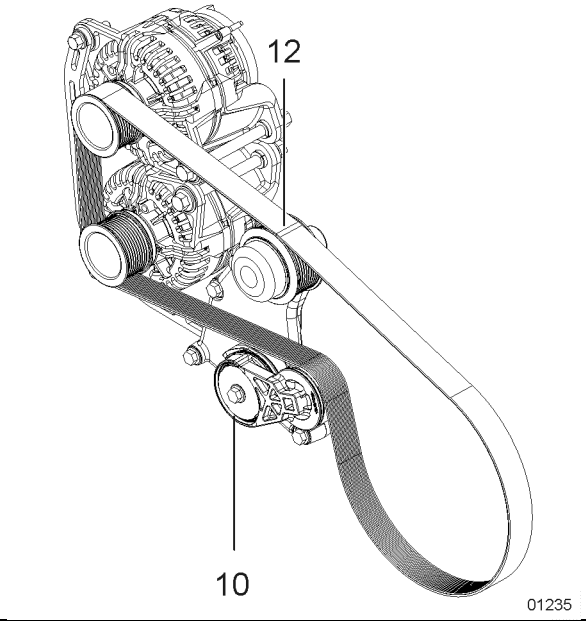


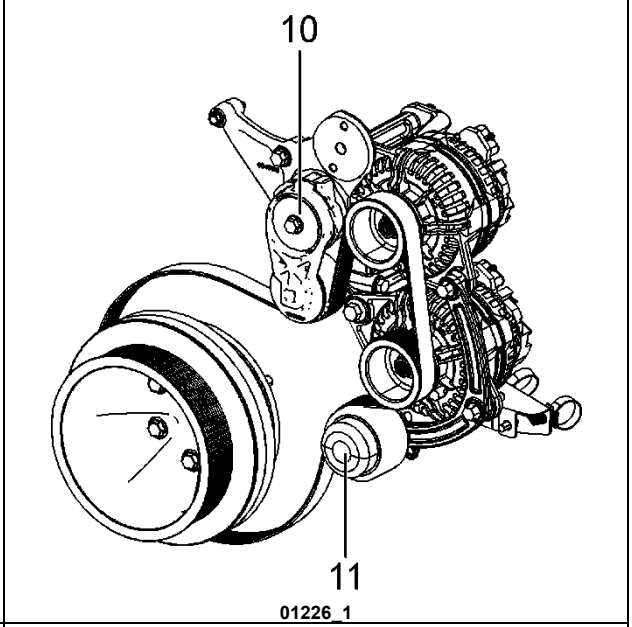


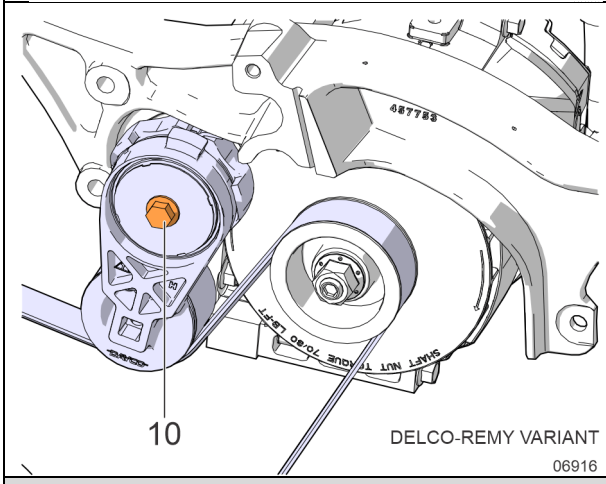


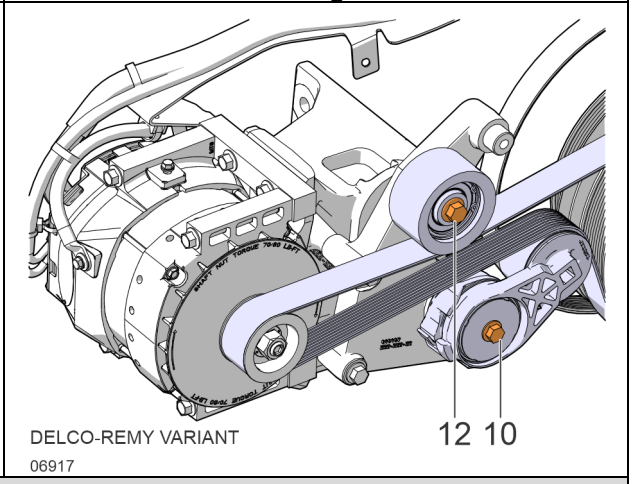


**VOLVO ENGINE – DRIVE BELT IDLERS & TENSIONERS**

| No | DESCRIPTION | TORQUE |
|---|---|---|
| 6 | Idler, water pump drive | 43 lb-ft (58 Nm) |
| 7 | Idler, water pump drive | pulley 16 lb-ft (22 Nm)<br>shaft 32 lb-ft (43 Nm) |
| 8 | Idler, A/C compressor drive | 31.5-38.5 lb-ft (43-52 Nm) |
| 9 | Idler, A/C compressor drive | 82 lb-ft (111 Nm) |
| 10 | Tensioner, alternator drive | 48 lb-ft (65 Nm) |
| 11 | Idler, alternator drive | 82 lb-ft (111 Nm) |
| 12 | Idler left alternator drive | 59 lb-ft (80 Nm) |

## 2. VOLVO D13N ENGINE

| *NOTE* |
| --- |
| *The "Premium Tech Tool" (PTT) is the preferred tool for performing diagnostic work. Contact your local dealer for more information.* |

The Engine Management System (EMS) controls many engine functions such as: fuel timing and delivery, engine protection functions, engine brake operation, EGR valve function and the turbocharger nozzle function. The Engine Electronic Control Unit (EECU) along with other supporting control units and sensors are responsible for monitoring and controlling these functions. These control units communicate through the J1939 high speed serial data line to share data.

In addition to their control functions, the modules have on-board diagnostic capabilities. The on-board diagnostics are designed to detect faults or abnormal conditions that are not within their operating parameters. When the system detects a fault or abnormal condition, the fault will be logged in one or both of the modules' memory. The vehicle operator will be advised that a fault has occurred by the illumination of a malfunction indicator lamp and a message in the driver information display, if equipped. The module may initiate the engine shutdown procedure if the system determines that the abnormal condition could damage the engine. In some situations, the system will enter the "limp home" mode. Limp home mode allows continued vehicle operation but, the system may substitute a sensor or signal value that may result in reduced engine performance.

Fault codes logged in the system memory, can later be read to aid in diagnosing the fault. These faults can be read via a diagnostic computer or through the instrument cluster display, if equipped. The "Premium Tech Tool" (PTT) is the preferred tool for performing diagnostic work. Using a diagnostic computer (or PTT) connected to the Serial Communication Port, expands the technician's diagnostic capabilities with additional data and tests.

For diagnostic software, contact your local dealer.

| *NOTE* |
| --- |
| *For maintenance or repair information of engine components or engine-related components, please refer to Volvo Trucks USA Web Site under: Parts & Services, Online Manuals.*<br>*http://www.volvotrucks.us/parts-and-services/service/online-manuals/* |

## 2.1 ENGINE HARNESS

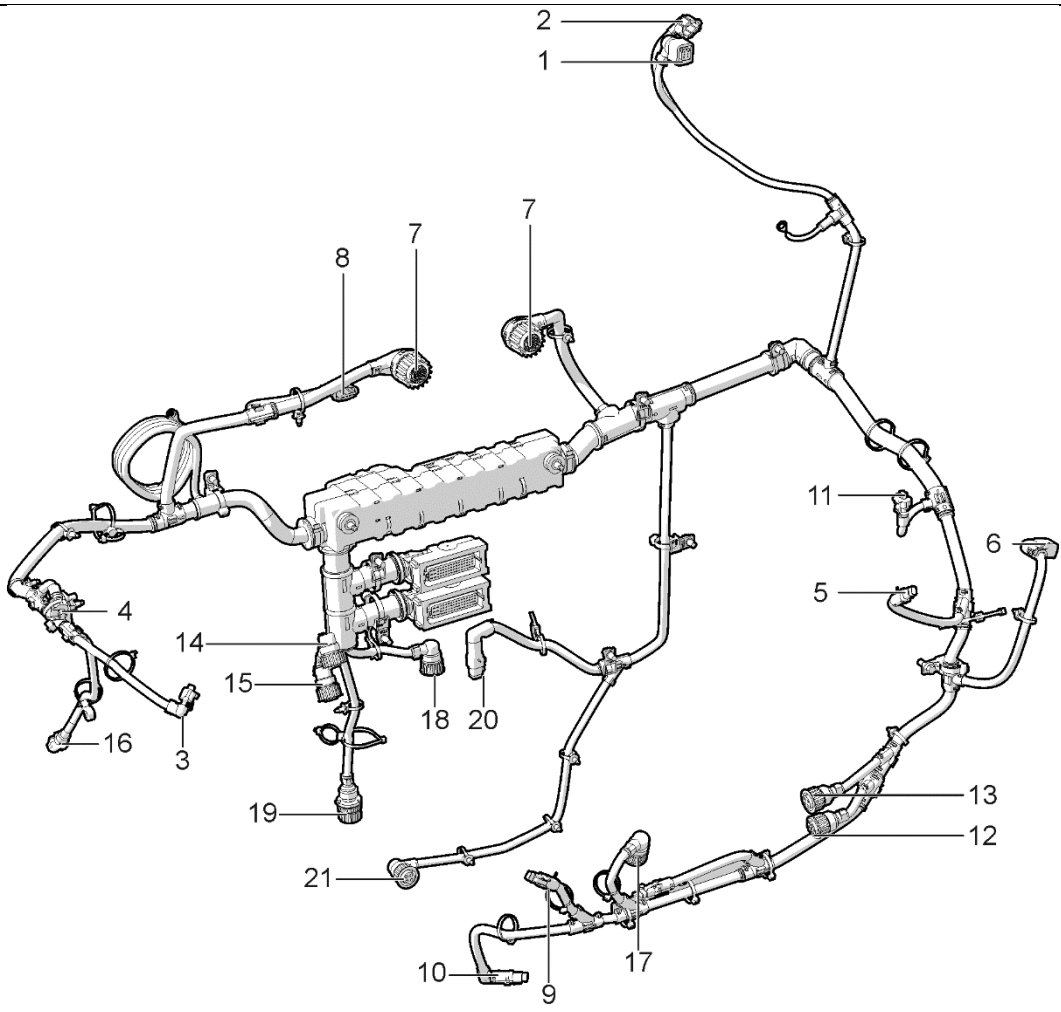


FIGURE 1: D13 ENGINE HARNESS

| | |
|---|---|
| 1. Throttle, Engine Air Mass Regulation | 12. Variable geometry Turbo Actuator |
| 2. Charge Air Cooler Temperature Sensor | 13. Turbocharger Speed Sensor |
| 3. EGR Solenoid Valve | 14. Oil Pressure Sensor |
| 4. Engine Speed Sensor Camshaft | 15. Crankcase Pressure Sensor |
| 5. EGR Temperature sensor | 16. Engine Speed Sensor Crankshaft |
| 6. EGR Delta-P (differential pressure) | 17. Oil Piston Cooling Jet Pressure |
| 7. Injector Harness | 18. Aftertreatment Fuel Injector Pressure Valve |
| 8. Boost Pressure & Temp sensor | 19. Water Level Sensor (water separator) |
| 9. Solenoid Valve Oil Thermostat | 20. Safety Valve, AHI Fuel System |
| 10. Solenoid Valve Oil Piston Cooling Jet | 21. Oil Level & Temperature Sensor |
| 11. Engine Coolant Temperature Sensor | |

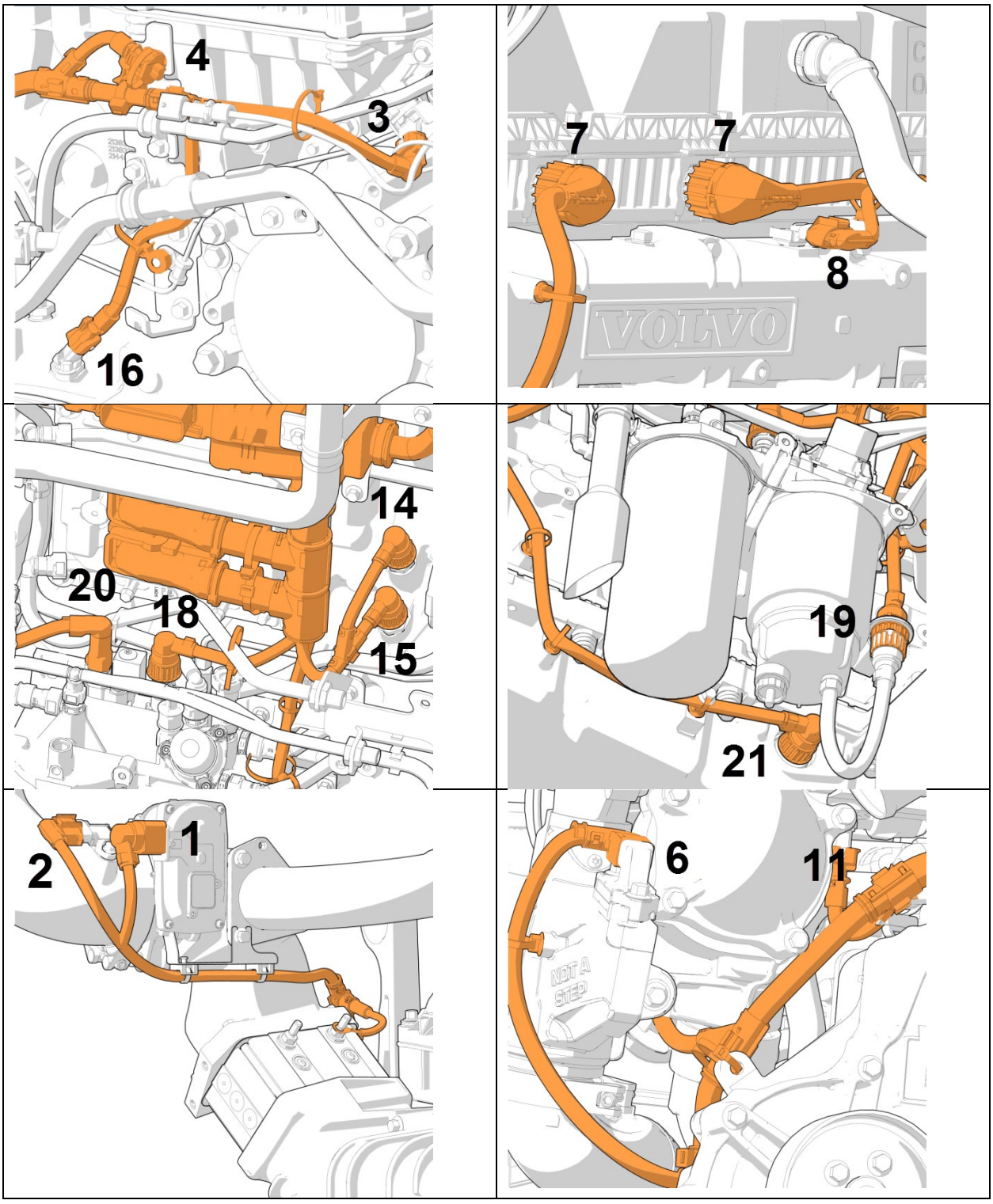
4
3
16
7
7
8
VOLVO
14
20
18
15
19
21
2
1
6
11
NOT A STEP




FIGURE 2: ENGINE HARNESS CONNECTION POINTS

*IMPORTANT NOTE*

***Disconnection of Auxiliary Emission Control Device - 25% engine derate***

*Auxiliary Emission Control Device (EACD) defines as any element of design which senses temperature, vehicle speed, engine RPM, transmission gear, manifold vacuum, or any other parameter for the purpose of activating, modulating, delaying, or deactivating the operation of any part of the emission control system.*

*Disconnection of the following EACD produces immediate activation of the Malfunction Indicator Lamp MIL and 25% engine derate after three (3) hours of a continuous open circuit.*

- Intake throttle position sensor;
- Ambient air temperature sensor;
- Vehicle speed;
- Engine oil pressure sensor;
- Exhaust back pressure sensor;
- Camshaft speed sensor;
- EGR delta pressure;
- Fuel rail pressure
- Engine timing sensor;
- Engine coolant temperature;
- EGR temperature sensor.

## 2.2 ENGINE OVERVIEW

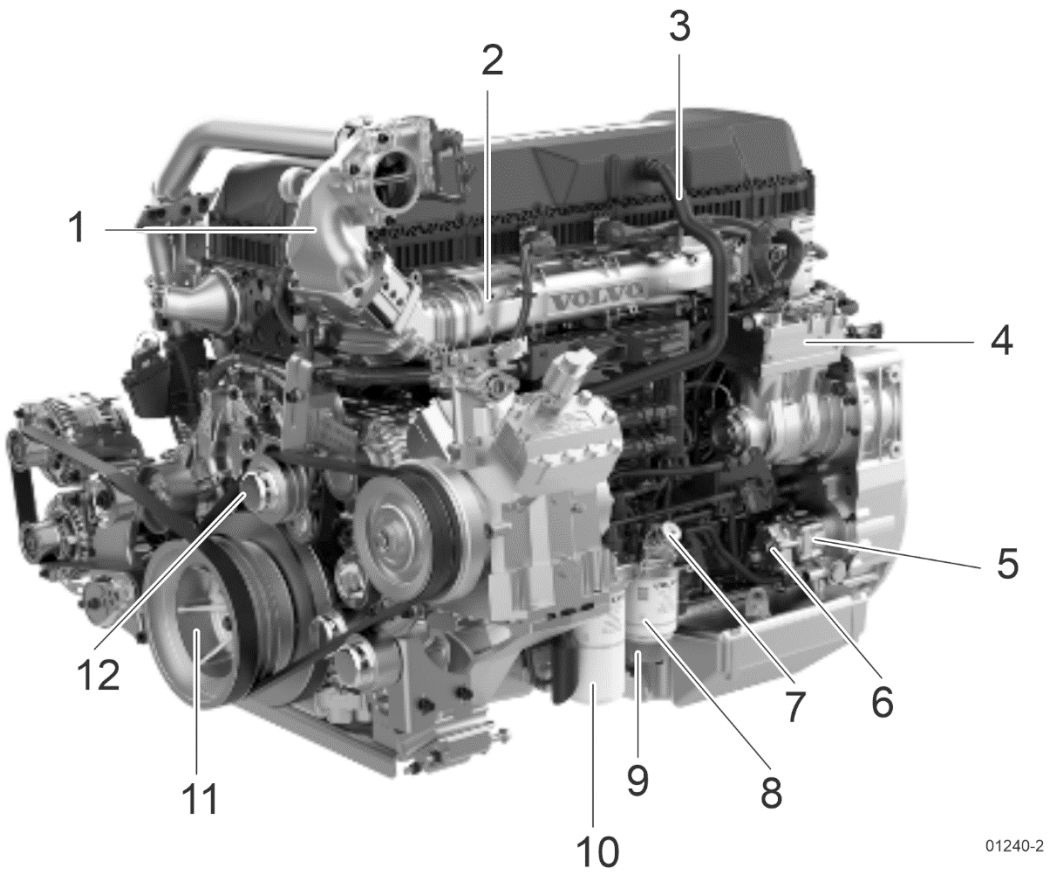


FIGURE 3: D13N ENGINE OVERVIEW, CURB SIDE

| | |
|---|---|
| 1. Mixing Chamber | 7. Hand-priming Pump |
| 2. Intake Manifold | 8. Fuel filter (Primary) |
| 3. CCV Breather Pipe | 9. Fuel/Water separator |
| 4. Air Compressor | 10. Fuel Filter (Secondary) |
| 5. Power steering pump | 11. Crank pulley |
| 6. Fuel pump | 12. A/C compressor belt tensioner |

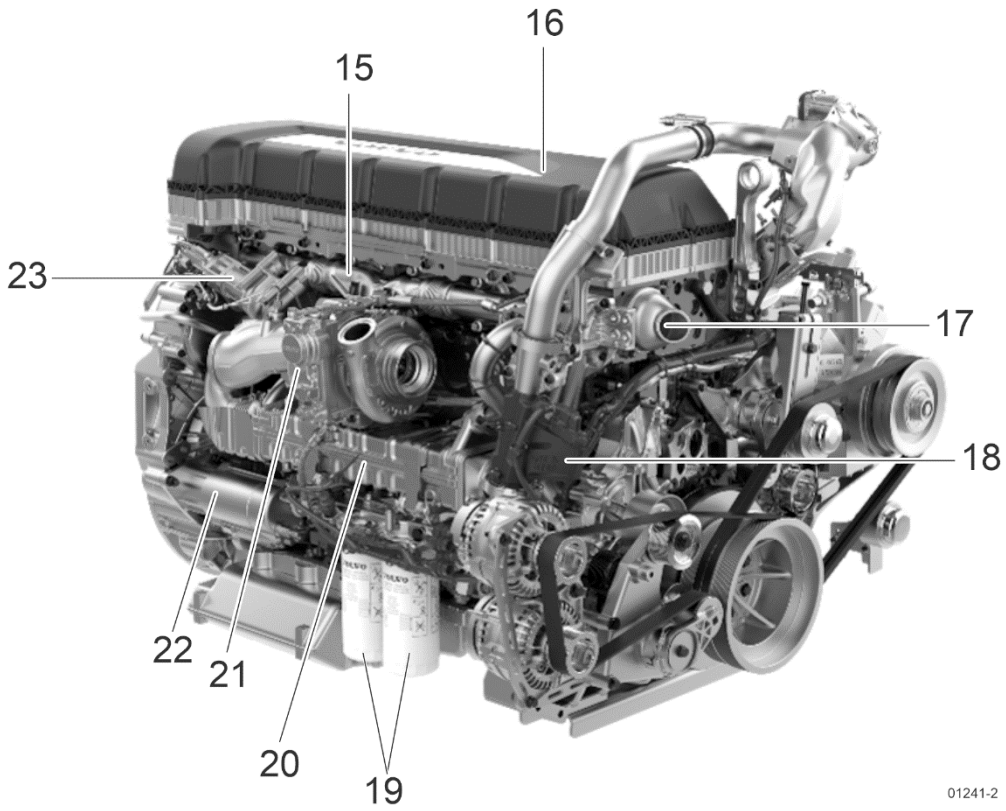


FIGURE 4: D13N ENGINE OVERVIEW, ROAD SIDE A.K.A HOT SIDE

| | |
|---|---|
| 15. Exhaust Manifold | 20. EGR Cooler |
| 16. Valve Cover | 21. Turbocharger Actuator |
| 17. Thermostat Cover | 22. Starter |
| 18. Venturi | 23. EGR Valve |
| 19. Oil Filters | |

## 2.3 ENGINE & EXHAUST AFTERTREATMENT SYSTEM DIAGRAM

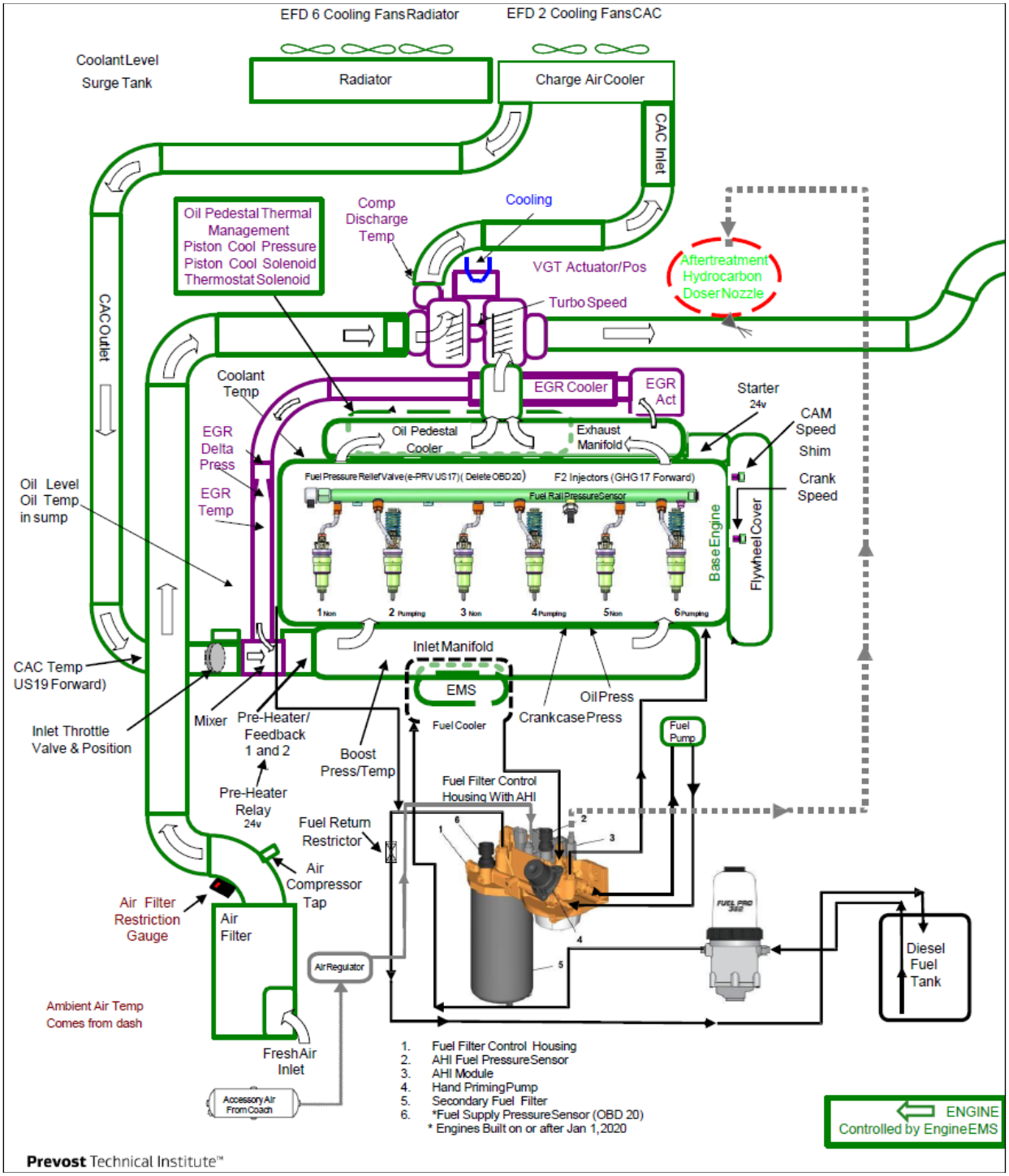


FIGURE 5: 2017 AND LATER ENGINE & EXHAUST AFTERTREATMENT SYSTEM DIAGRAM (1 OF 2) 01222

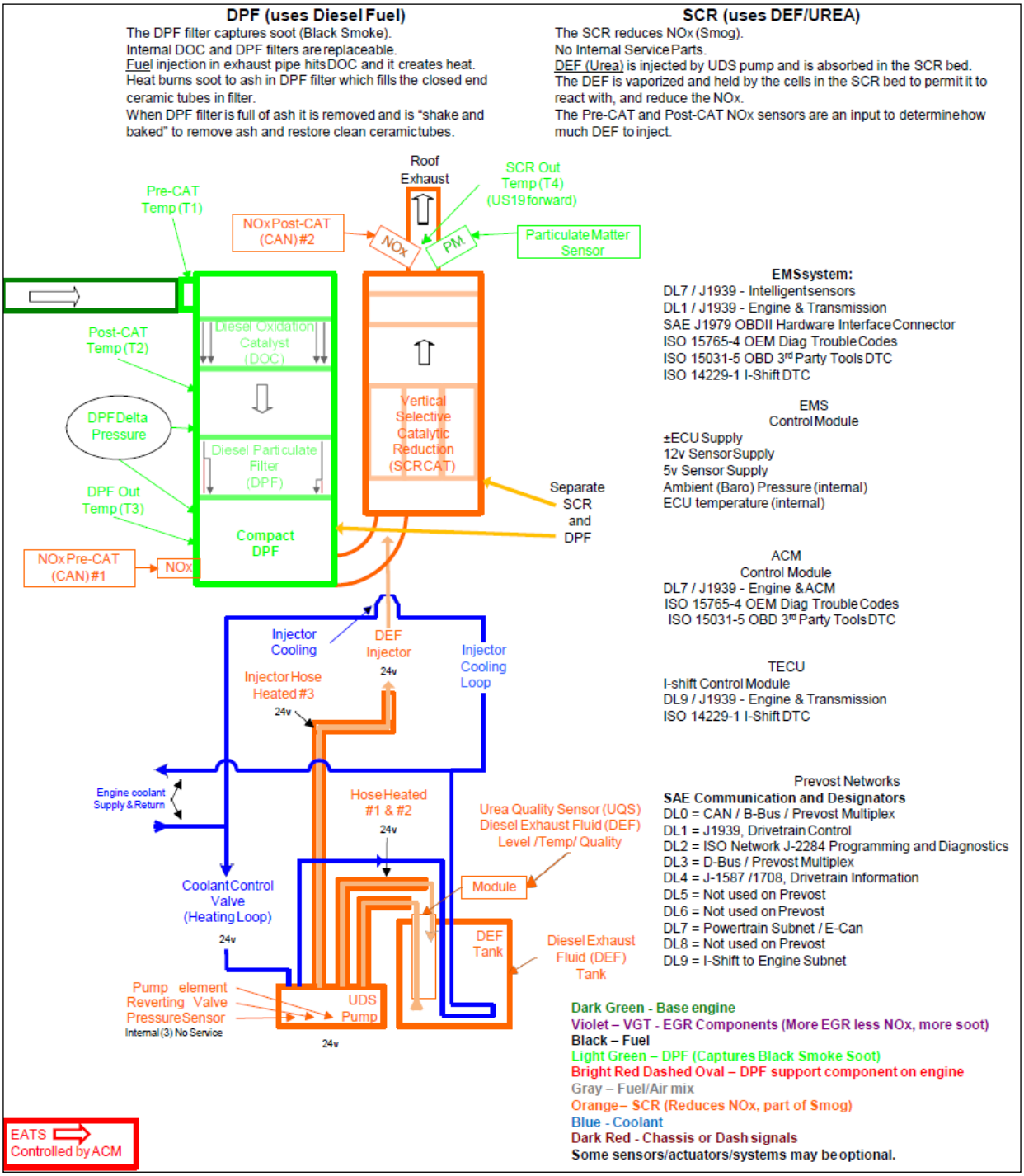


FIGURE 6: 2017 AND LATER ENGINE & EXHAUST AFTERTREATMENT SYSTEM DIAGRAM (2 OF 2) 01222

| *NOTE* |
| --- |
| *For maintenance or repair information of engine components or engine-related components, please refer to Volvo Trucks USA Web Site under: Parts & Services, Online Manuals.*<br>*http://www.volvotrucks.us/parts-and-services/service/online-manuals/* |

## 2.4 ENGINE OIL

Keep the engine oil at the proper level and change it at the recommended intervals. Always replace the oil filters at the same time as when the oil is changed.

### 2.4.1 Oil Quality

Approved VDS-5 and VDS-4.5 diesel engine oils are mandatory for use in all OBD24 emission compliant Volvo engines. VDS-5 oils exceed the new API service category FA-4. VDS-4.5 oils exceed the API service category CK-4. Take note that **VDS-5 oil is not backward compatible, thus cannot be used on older engines.**

**Recommended oil for EOBD-U24 (OBD24) engine:**

- Oil meeting Volvo specification VDS-5 and API FA-4

**Minimum requirement for EOBD-U24 (OBD24) engine:**

- Oil meeting Volvo specification VDS-4.5 and API CK-4

**CAUTION**

DO NOT add extra oil additives. Additives such as break-in oils, top oils, graphitizers, and friction-reducing liquids are not necessary and can harm the engine.

### 2.4.2 OBD24 Emission Compliant Volvo Engines Oil Viscosity

For best fuel economy, SAE Viscosity Grade 5W-30 oil is recommended, however, other viscosity grade may be chosen.

The viscosity grade defines the thickness of the oil. The oil must be thin enough at low temperatures for easy cold starts and thick enough to protect at high temperatures. Oil is not fully defined until both the API quality classification and the viscosity grade are specified.

Choose the viscosity grade for the typical ambient temperature for the application. Multigrade oils have a broad range that suit operation in changing temperature.

In summary, all past and present engines can use 10W-30 engine oil.

5W-30 oil can only be used on the 2-oil filter D13N starting from OBD20. 5W-30 cannot ever go into a 3-oil filter engine.

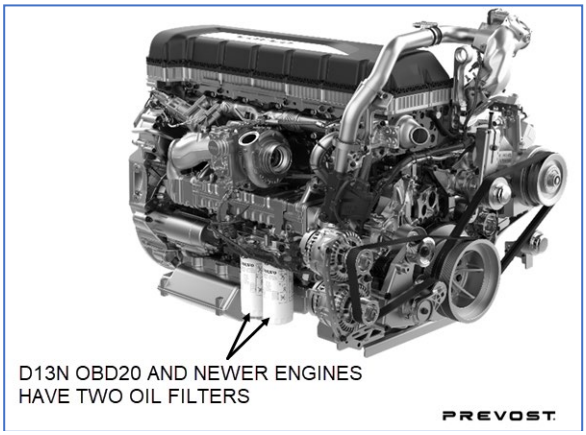


FIGURE 7: D13N FROM OBD20 OIL FILTER CONFIGURATION

Volvo North America recommends the viscosities shown in the viscosity/temperature table for Volvo engines.

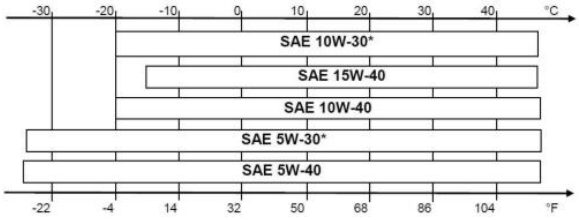

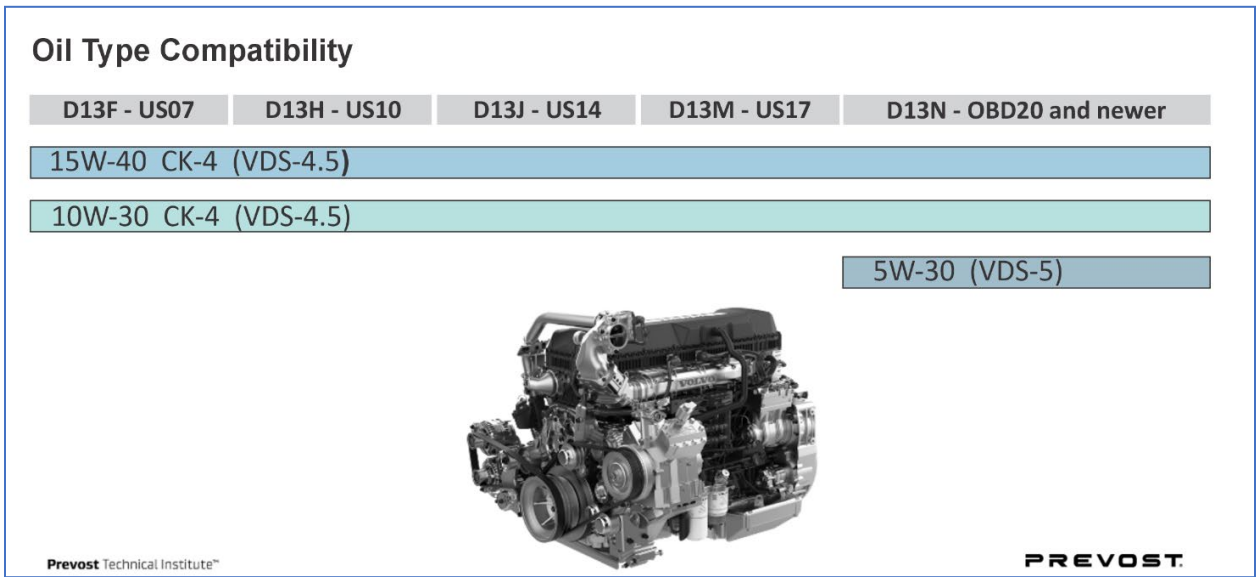


FIGURE 8: RECOMMENDED OIL TYPE

2.4.3 Oil Additives

**CAUTION**

Extra oil additives must never be added to any engine oil used. Additives such as break-in oils, top oils, graphitizers, and friction reducing liquids are not necessary and may even harm the engine.

Using oils to the quality standards recommended in this manual makes the use of extra oil additives unnecessary, as these oils already contain a balanced treatment of additives.

2.4.4 Synthetic Lubrication

Synthetic oils are offered by some oil suppliers as an alternative to the traditional, petroleum based oils for engines. These oils may be used in Volvo engines, provided they meet the quality levels of the traditional, petroleum based oils for engines and provided they meet the quality level VDS-4.5 or VDS-5.

**The use of synthetic oils does not permit the extension of the recommended oil change intervals.**

2.4.5 Oil Consumption

Once the engine is stopped, check the oil level daily. If the engine has just been stopped and it is warm, wait approximately five minutes to allow the oil to drain back to the oil pan before checking. Add oil as necessary.

**CAUTION**

DO NOT overfill engine with oil.

All diesel engines are designed to consume some oil, so it is normal to add oil periodically. An engine used in heavy-duty operation will consume more oil than one in normal operation.

2.4.6 Oil Change

**WARNING**

A hot engine or engine oil can be dangerous. Serious burns can result from contact with a hot engine or oil. Take precautions when draining the oil. Wear gloves or let the engine cool down before draining.

**WARNING**

When draining the oil, use the proper tools and keep away as far as possible. Raise the elbow so the forearm is parallel to the ground to prevent oil running down the arm, causing burns.

**CAUTION**

Always dispose of all lubricants (motor oil, coolant, gear box oils, etc) and filters according to Federal or local regulations. Used oil disposed of in nature or waterways contaminates our drinking water and kills wildlife.

**WARNING**

Prolonged contact with used engine oil may be harmful. Use rubber gloves when handling used oil. Wash skin thoroughly if it comes in contact with used oil.

It is important to drain as much oil as possible. Try to change oil immediately after driving, when the oil is warm. Always replace the oil filters when changing the oil.

| component | capacity | |
|---|---|---|
| | liters | quarts |
| Oil pan low/high mark | 24 – 32 | 25 – 34 |
| Refill volume including filter change | 38 | 40 |

*NOTE*

*Since about 1 liter of oil remains in the engine after draining, approximately 38 liters will be needed for a complete oil change.*

2.4.7 Oil Change Intervals

The length of time an engine can operate before an oil change depends on the oil quality used, the type of fuel used, engine oil consumption, vehicle application, level of dust in the air and fuel consumption. The change intervals given in the Lubrication and Servicing Schedule are maximal intervals. If the vehicle is operating in heavy-duty operation, dusty or off-road conditions, etc., reduce the intervals for more frequent oil changes.

**MAINTENANCE**

**Engine oil and filters change**

Change engine oil and filters at the intervals specified by the Lubrication And Servicing Schedule in Section 24: LUBRICATION & SERVICING.

*NOTE*

*Use the information in the table below to determine the operating condition and usage applicable to your vehicle.*

| engine operating condition | normal | heavy | severe |
|---|---|---|---|
| Total Fuel Consumption (mpg) | More than 6 | Between 5 and 6 | Less than 5 |
| Total Fuel Consumption (L/100 KM) | Less than 39 | Between 39 and 50 | More than 60 |

**NOTE:** If idle time is greater than 25%, use the next lower drain interval (refer to Section 24 Lubrication and Servicing).

*NOTE*

*Oil filters should always be changed when changing the oil.*

2.4.8 Oil Filters

There are two full-flow filters on the D13N OBD24 engine.

**CAUTION**

Volvo branded oil filters are designed to provide the proper level of filtration and protection for Volvo engines. Filters that do not meet the same stringent requirements may void engine warranty.

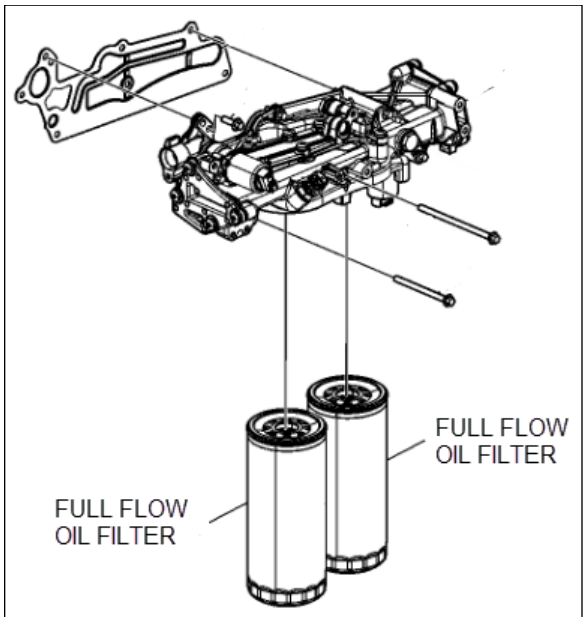


FIGURE 9: D13N OBD24 OIL FILTERS

2.4.9 Oil Filter Change

**WARNING**

Hot oil can cause severe burns. DO NOT allow hot oil to contact the skin. When changing oil, wear protective gloves.

**CAUTION**

Volvo-branded oil filters are designed to provide the proper level of filtration and protection for Volvo engines. Filters that do not meet the same stringent requirements may cause unsatisfactory results.

- Clean around the oil filter housing and remove the filters using the oil filter wrench or the oil filter socket.

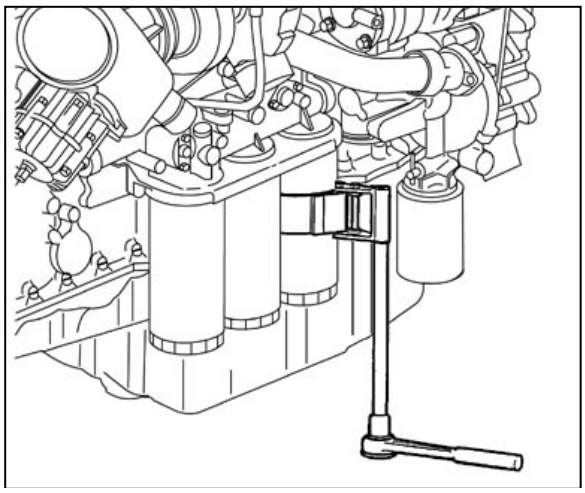

FIGURE 10: OIL FILTER WRENCH

- Prefill the new oil filters with approved engine oil. Refer to Figure 11, also, lubricate the filter gaskets with engine oil (1). Hand tightens the oil filters until they contact the sealing surface of the oil filter housing (2). Manually tighten the oil filters an additional ¾ to 1 full turn (3).

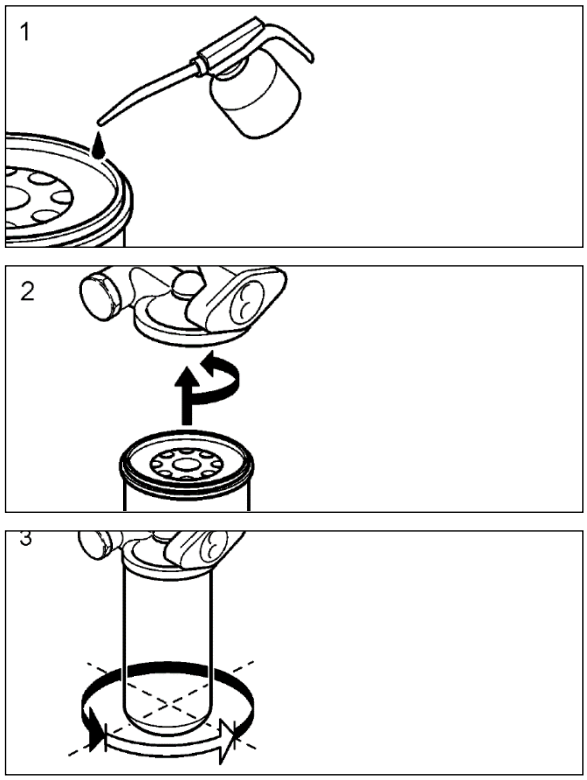


FIGURE 11: OIL FILTER REPLACEMENT

- Start the engine and check for leaks around the oil filter housing and filters.

- Check the oil level. Add approved engine oil to the recommended level, if necessary. Do not overfill.

### 2.4.10 Checking the Oil Level

Ensure that the vehicle is parked on level ground before checking the oil level. Wait five minutes after shutting off the engine and then proceed with checking the oil.

> **CAUTION**
>
> **DO NOT** let the oil level fall below the marking on the dipstick. **DO NOT** overfills so the level is above the upper marking on the dipstick. This could lead to excessive oil temperature and/or poor crankcase breather performance. Add oil through the oil filler pipe as required in order to maintain level within the safe range.

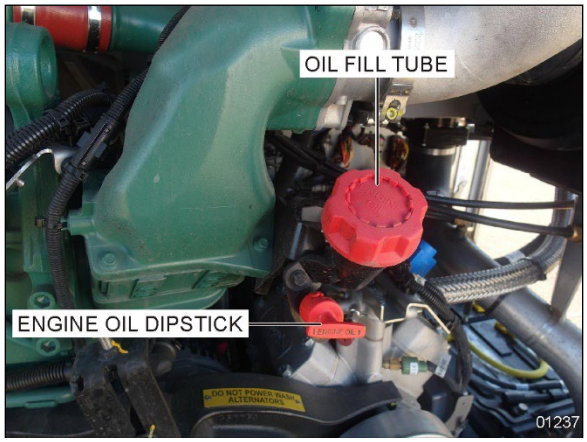


FIGURE 12: TYPICAL ENGINE OIL FILLING TUBE

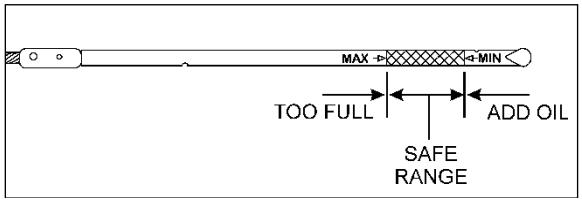


FIGURE 13: ENGINE OIL LEVEL DIPSTICK

## 2.5 POWER PLANT ASSEMBLY REMOVAL

To access the engine or engine-related components, the vehicle power plant assembly must be removed as a whole unit by means of a slide-out cradle. The power plant assembly includes the engine, transmission (including retarder if so equipped), air compressor, alternator and transmission oil cooler.

Remove the power plant assembly as follows:

**CAUTION**

Tag hoses and cables for identification before disconnecting in order to facilitate reinstallation. Plug all openings to prevent dirt from entering the system.

*NOTE*

*No parts within the EECU are serviceable. If found defective, replace the EECU as a unit.*

- **First**

1. Close the heater line shut-off valves.
2. Disconnect batteries from the starting system by removing battery cables. With the electrical circuit disrupted, accidental contact with the starter button will not produce an engine start.

**WARNING**

Due to the heavy load of the rear bumper assembly, it must be adequately supported before attempting to remove it.

3. Remove the rear bumper assembly complete with hitch if applicable from the vehicle. Refer to Section 18, BODY, under "REAR BUMPER REMOVAL".
4. Using the quick-connect drain hose, drain the engine cooling system. Refer to Section 05, COOLING under "DRAINING COOLING SYSTEM".
5. If applicable, disconnect the block heater connector located near the EGR mixing chamber.

- **With Vehicle Raised**

1. Using a vehicle lift or jack, raise vehicle to access transmission fasteners and wire harness.
2. From under the vehicle, disconnect the propeller shaft as detailed in Section 09, under heading "Propeller Shaft Removal".
3. Partially remove L.H. side transmission protective panel to access connectors.
4. Disconnect transmission harness from transmission housing.
5. On vehicles equipped with an automatic transmission provided with a hydraulic output retarder, disconnect steel-braided airline from pressure regulator output. The pressure regulator is mounted in the upper section of engine compartment backwall and is accessible through the engine compartment R.H. side door.
6. Untighten bolts A and C. Remove bolts B and D and pivot oil cooler towards transmission. Reinstall bolts B and D.

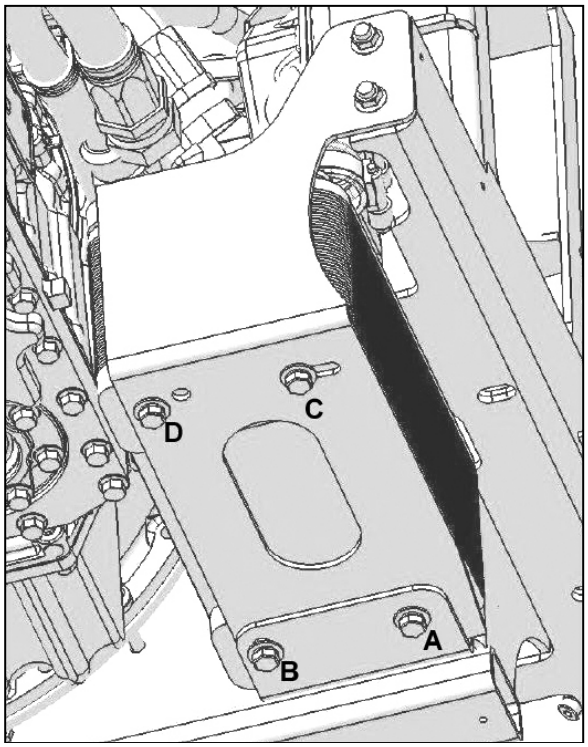


FIGURE 14: COOLER POSITION DURING ENGINE CRADLE INSERTION OR REMOVAL

7. Remove the retaining bolts, washers and nuts securing the power plant cradle to the vehicle rear subframe.
8. Disconnect the engine coolant hose near the starter.
9. Disconnect air compressor suction and discharge hoses.

- **With Vehicle Lowered**

Lower the vehicle enough to access all components.

➢ Engine Compartment R.H. side

1. If applicable, remove auxiliary sump tank to ease access.
2. Purge the A/C system and disconnect the A/C compressor hoses. Refer to Section 22, HEATING AND AIR CONDITIONING under "CENTRAL AIR CONDITIONING".
3. Disconnect cables from chassis grounds.
4. Inside engine compartment, disconnect starter, alternators and heater cables. Also disconnect AFSS cable if applicable.

Disconnect from engine, connector C397 and vehicle interface harness connector located above EECU connectors. Also disconnect DPF cable.

5. Disconnect power steering pump hoses.
6. Close engine fuel supply shut-off valve on primary fuel filter or Fuel Pro. Disconnect the fuel line located above fuel filters and connected to inlet port. On vehicles equipped with the optional water-separator-fuel-filter, disconnect the connector and remove cable ties from cradle.
7. Disconnect fuel return line from bulkhead fixed on engine cylinder head end.
8. Locate the A/C compressor belt tensioner pressure releasing valve (if so equipped). Turn pressure releasing valve handle counterclockwise in order to release pressure in belt-tensioner air bellows and loosen belts (Figure 15). Remove the belts.

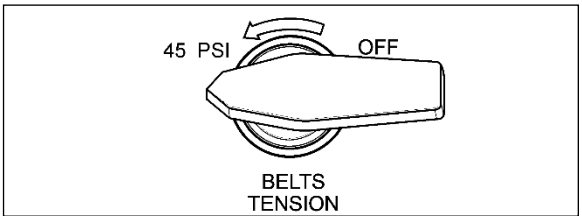


FIGURE 15: BELT TENSIONER VALVE ON REAR CONTROL PANEL (OPTION)

9. At the back of the air cleaner, disconnect the engine-air intake duct mounted between air cleaner housing and turbocharger inlet.

**CAUTION**

To avoid damage to turbocharger, cover the turbocharger inlet opening to prevent foreign material from entering.

10. Disconnect and remove the exhaust pipe mounted between the flexible coupling and the pipe going to the Diesel Oxidation Catalyst (DOC) and Diesel Particulate Filter (DPF) assembly. If necessary, refer to Section 4: EXHAUST SYSTEM under “EXHAUST AFTERTREATMENT SYSTEM OVERVIEW".
11. Disconnect and remove the air intake duct mounted between the charge air cooler outlet and the engine intake.

➢ Engine Compartment L.H. side

1. At the turbocharger inlet, disconnect and remove the engine-air intake duct mounted between air cleaner housing and turbocharger inlet.
2. Disconnect and remove section of coolant pipe assembly mounted between the radiator outlet and the water pump inlet.
3. Disconnect and remove a section of coolant pipe assembly mounted between the thermostat housing and the radiator inlet.
4. Disconnect and remove surge tank hose connected to pump inlet pipe and hose connected to engine.
5. Disconnect and remove the air intake duct mounted between the turbocharger outlet and the air cooler inlet.

6. Unfasten and put aside engine compartment lighting fixture and turbocharger fire suppression nozzle if applicable.

7. Disconnect Exhaust Aftertreatment System control cable.

- **Last**

1. Inspect the power plant assembly to ensure that nothing will interfere when sliding out the cradle. Check for connections or hoses not mentioned in this list as some vehicles are equipped with special or aftermarket components.

2. Make sure the ten retaining bolts, washers and nuts securing the power plant cradle to the vehicle rear subframe are removed.

| *NOTE* |
| --- |
| *Check if any spacer(s) have been installed between power plant cradle and vehicle rear subframe, and if so, note position of each washer for reinstallation purposes.* |

3. Using a suitable equipment with a minimum capacity of 4,000 lbs (1 800 kg), slightly raise the power plant cradle.

4. Pull engine out slowly from the engine compartment. Make sure all lines, wiring and accessories are disconnected and are not tangled.

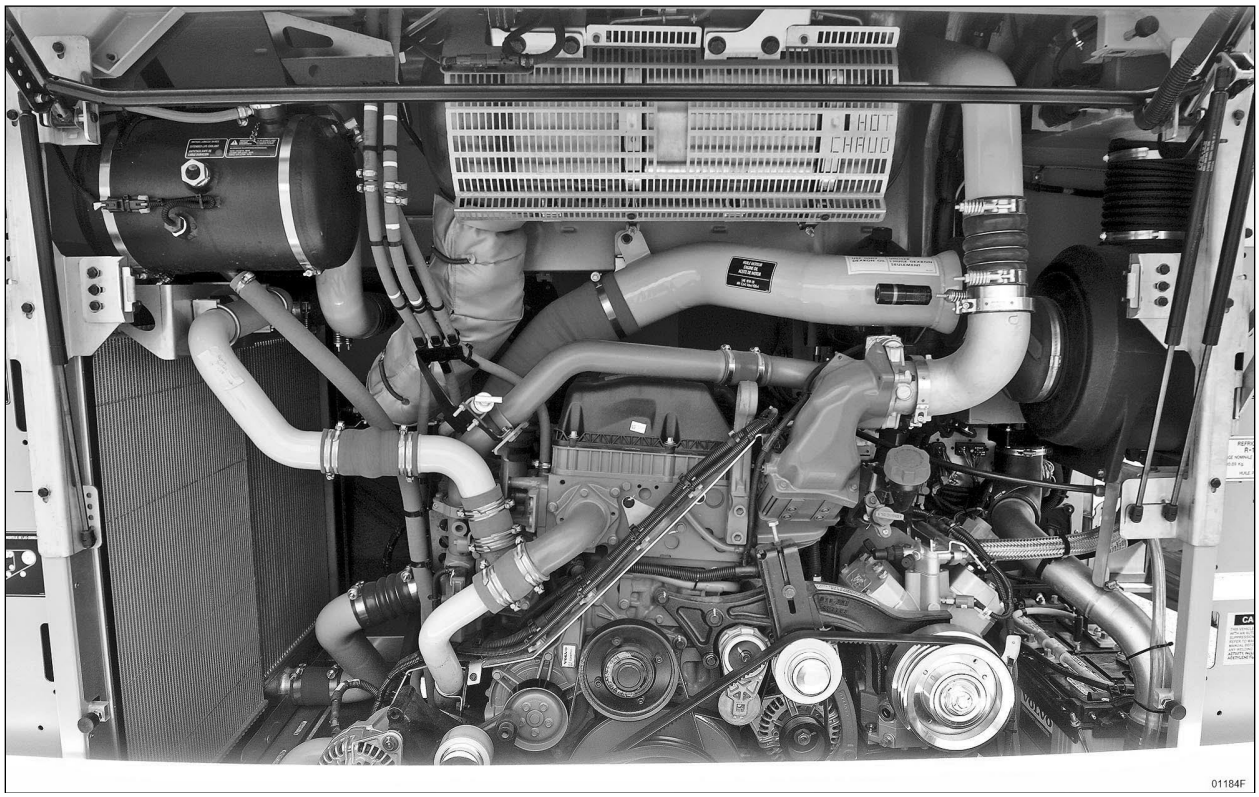


FIGURE 16: TYPICAL X SERIES ENGINE COMPARTMENT

## 2.6 POWER PLANT ASSEMBLY INSTALLATION

To install a power plant assembly, follow the same procedure as in "Power Plant Assembly Removal" except in reverse order, then proceed with the following:

1. Torque the power plant cradle mounting bolts.

   **TORQUE: 190 lb-ft (258 Nm)**

2. Remove bolts B and D. Untighten bolts A and C then pivot oil cooler as per Figure 17. Install bolts B and D and tighten all bolts.

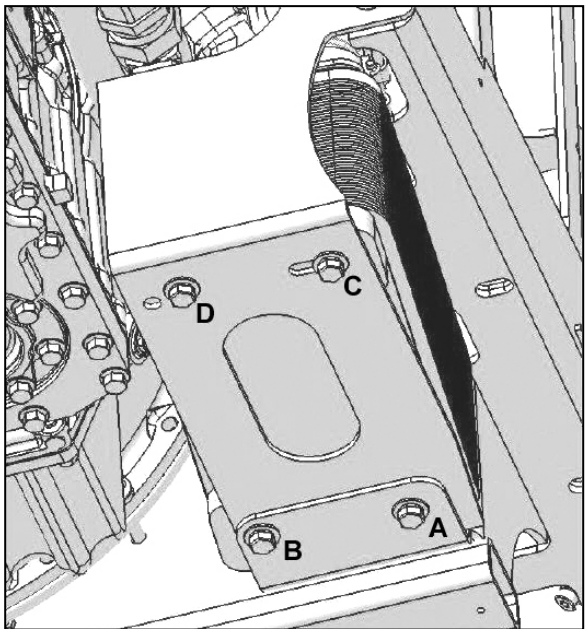


FIGURE 17: NORMAL OIL COOLER POSITION

3. Refill cooling system with saved fluid (refer to Section 05 COOLANT SYSTEM).
4. Once engine fuel system has been drained, it will aid restarting if fuel filters are filled with fuel oil (refer to Section 03 FUEL SYSTEM).
5. Start engine for a visual check. Check fuel, oil, cooling, pneumatic and hydraulic system connections for leakage. Test operation of engine controls and accessories.

## 2.7 ENGINE MOUNTS

The power plant assembly is mounted to the cradle by means of rubber mounts and supports.

Two engine support brackets are used at the front of the engine while two rubber mounts are mounted at the back of the engine.

It is recommended that new rubber mounts be installed at each major overhaul.

### 3. ELECTRONIC FOOT PEDAL ASSEMBLY (EFPA) & THROTTLE POSITION SENSOR

The Electronic Foot Pedal Assembly (EFPA) connects the accelerator pedal to a Throttle Position Sensor (TPS). The (TPS) is a device, which sends an electrical signal to the Motor Control Module (MCM). The TPS varies in voltage depending on how far the pedal is depressed. The system is installed in the space normally occupied by a mechanical foot pedal. The (EFPA) has maximum and minimum stops that are built into the unit during manufacturing (Figure 18). The (TPS) converts the operator's foot pedal input into a signal for the MCM.

When installed by the equipment manufacturer, the TPS should not require adjustment. If the TPS is suspected of being misadjusted, confirm that the sensor is installed in accordance with the manufacturer's specifications. It is recommended that the idle count be at 50 or higher with a full throttle count of up to 200.

The TPS is self-calibrating and therefore has no optimum closed throttle or wide open throttle count value. If the counts are within the 50 to 200 range, the sensor is properly set.

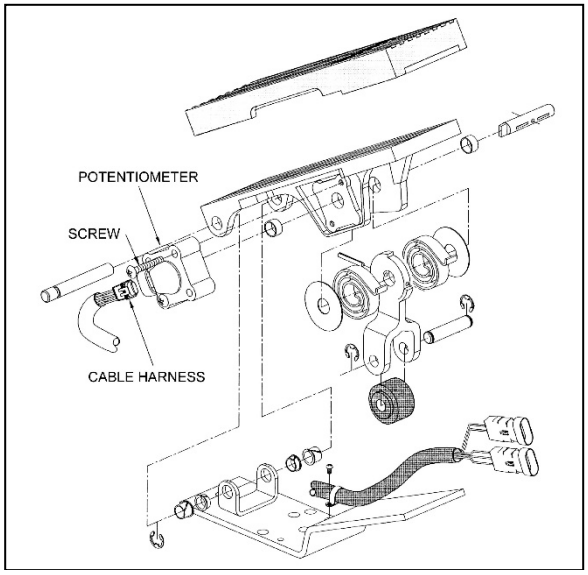


FIGURE 18: ELECTRONIC FOOT PEDAL ASSEMBLY 3035

Monitor the (TPS) at the controls as you move it through its full stroke. Be sure there is no misalignment or obstruction preventing the smooth movement of the TPS through the full stroke. Using a diagnostic data reader, check that the idle and full throttle position counts do not fall within the error zones. The error zones occur when the idle position is less than 14 counts, or when the full throttle position is more than 233 counts. Should these conditions occur, the CPC will signal diagnostic codes of 21-12 for idle error and 21-23 for wide-open throttle error.

### 4. AUTOMATIC BELT TENSIONERS AND IDLER PULLEYS INSPECTION

With the engine running, if noise is coming from the tensioners or drive system, an inspection with the engine off is necessary.

**MAINTENANCE**

Remove belts and inspect automatic belt tensioners, idler pulley bearings at the intervals specified by the Lubrication And Servicing Schedule in Section 24: LUBRICATION & SERVICING.

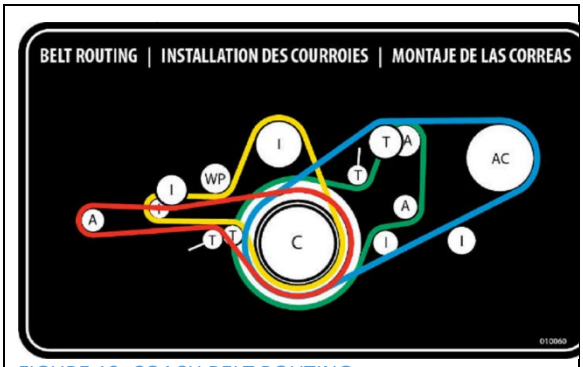


FIGURE 19: COACH BELT ROUTING

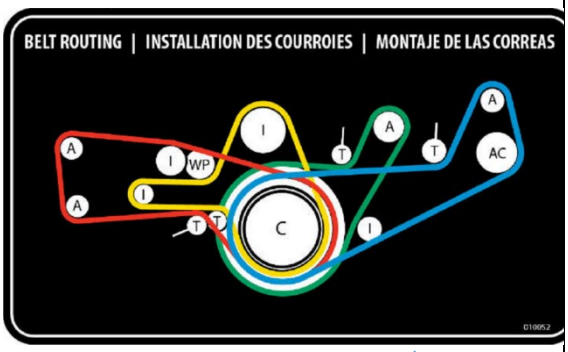


FIGURE 20: VIP BELT ROUTING – SMALL A/C SYSTEM,

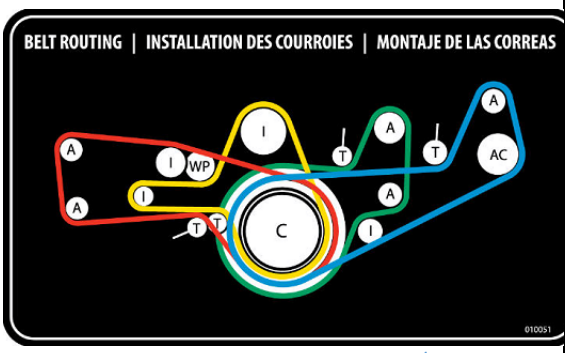


FIGURE 21: VIP BELT ROUTING – SMALL A/C SYSTEM, 5 ALTERNATORS

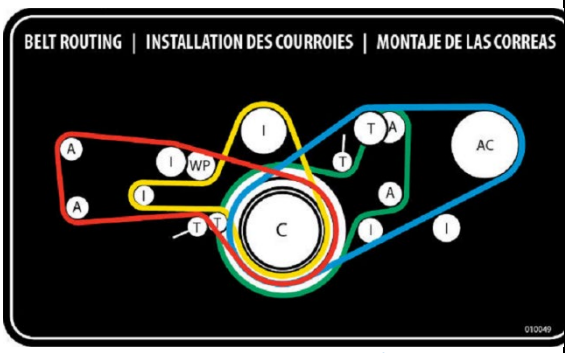


FIGURE 22: VIP BELT ROUTING – BIG A/C SYSTEM

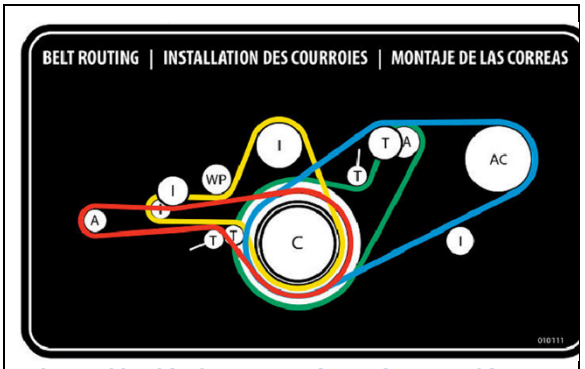


FIGURE 23: COACH BELT ROUTING – DELCO-REMY VARIANT

A=alternator
C=crank pulley
I=dler
WP=water pump
T=tensioner
AC=air conditioning compressor

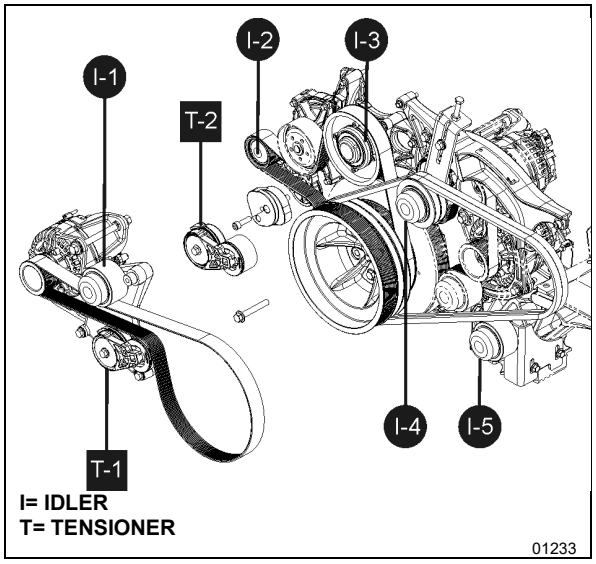


FIGURE 24: IDLER PULLEYS, AUTOMATIC BELT TENSIONERS ON ENGINE ACCESSORIES

## 4.1 BEARING INSPECTION

1. First, set parking brake, turn the ignition OFF and set the rear start selector switch to the OFF position.
2. Remove all belts on left hand alternator, water pump drive, A/C compressor drive and alternator drive.

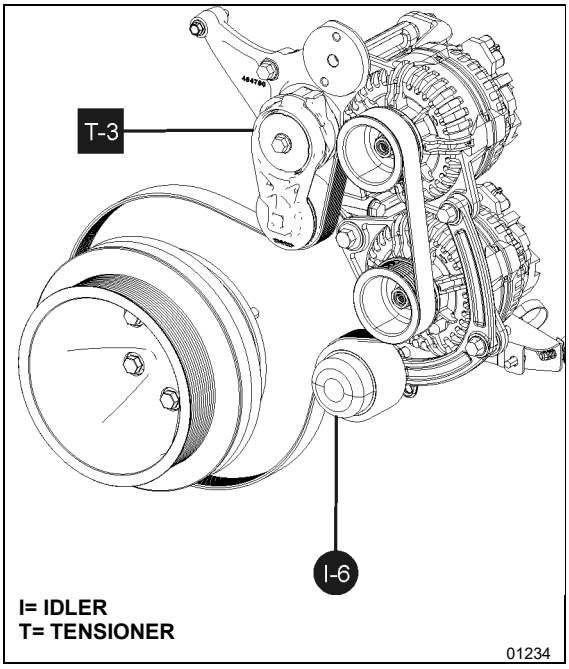


FIGURE 25: IDLER AND AUTOMATIC BELT TENSIONER ON ALTERNATOR DRIVE

3. Spin all idler pulleys, I-1 thru I-6, plus the idlers that are part of the automatic belt tensioners T-1 thru T-3.
4. Listen if some idlers are noisy and check for play in the bearings by hand.
5. Replace noisy idlers or if a play is found. Replace the automatic belt tensioner as a complete unit.
6. Record the results of the inspection.

## 4.2 AUTOMATIC BELT TENSIONER BUSHING WEAR

Automatic belt tensioner bushing wear may results in belt misalignment.

1. Check the automatic belt tensioner T-1 thru T-3.
2. Pry the automatic belt tensioner arm and check for a play between the arm and the spring case (**FIGURE 26**).

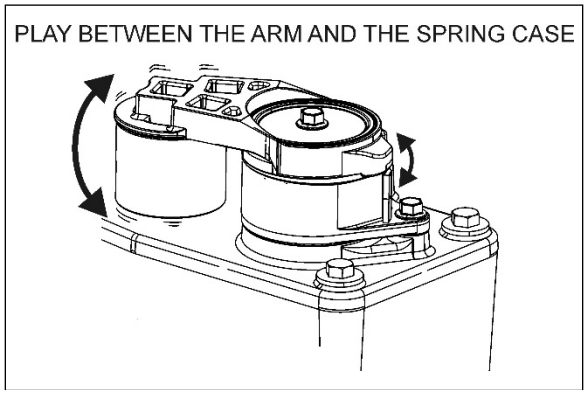


FIGURE 26: CHECKING BUSHING WEAR

3. If bushing wear is suspected, remove the tensioner. Inspect the tensioner for any signs of wear. Check for bearing noise as well as metal to metal contact between the arm and spring case which is a sign of bushing wear. Check for cracks in the tensioner body.
4. Replace the automatic belt tensioner if found defective.
5. Record the results of the inspection.

4.3 BELTS AND IDLERS VISUAL INSPECTION

1. Inspect drive belts for cracks, frayed material, missing chunks in the belt, abrasion and peeling. Replace belts if damaged.
2. Visually inspect all idlers for signs of deterioration, loose fasteners, etc.
3. Record the results of the inspection.

**MAINTENANCE**

Visually inspect belts and idlers for signs of deterioration, cracks, frayed material at the intervals specified by the Lubrication And Servicing Schedule in Section 24: LUBRICATION & SERVICING.

## 5. ENGINE PROTECTION STRATEGY

The engine protection system will automatically derate or derate and stop the engine when certain engine conditions reach a critical stage.

In the event of a serious fault, the red STOP telltale light comes on and an audible alarm will sound if the engine is running.




Prior to an actual automatic shutdown, the engine will automatically derate, go to idle, and then stop in 30 seconds.

| **ENGINE PROTECTION LOGIC (with yellow CHECK or red STOP telltale light)** | |
|---|---|
| High engine coolant temperature | Shutdown |
| High engine oil temperature | Shutdown |
| Low engine oil pressure | Shutdown |
| High crankcase pressure (rate of change) | Shutdown |
| Low coolant level | Derate only |
| High intake manifold air temperature | Derate only |
| High transmission oil temperature | Derate only |
| High temperature of cooled exhaust gas (EGR) - after EGR cooler | Derate only |
| EGR valve and position error | Derate only |
| Variable Geometry Turbo (VGT) valve and position error | Derate only |
| High VGT actuator temperature | Derate only |
| High pre-Diesel Oxidation Catalyst (DOC) temperature | Derate only |
| High Compressor Discharge Temperature (CDT – measured) | Derate only |
| High soot load | Derate only |
| High Diesel Particulate Filter (DPF) pressure differential (DP) | Derate only |

| **OUTSIDE ENGINE PROTECTION LOGIC (no yellow CHECK or red STOP telltale light)** | |
|---|---|
| High altitude (ensures that high compressor discharge temp. is never reached) | Derate only |
| Turbo over-speed | Derate only |
| Low coolant temperature | Derate only |
| Crank sensor failure | Derate only |
| High crankcase pressure - Absolute Pressure | Shutdown |

## 6. SPECIFICATIONS

Volvo D13N EOBD-U24 (OBD24) Engine

| | |
|---|---|
| Make | Volvo |
| Emission | EM-USA24 |
| Vehicle OBD | EOBD-U24 (OBD24) |
| Generation | N |
| Type | Diesel four cycle/in-line direct injection engine |
| Description | Turbo/Air to air charge cooled |
| No. of cylinders | 12.8 L in-line 6. |
| Operating range | 1400-1800 RPM |
| X3-45 and H345 Coaches Peak Power Rating | 435 HP (324 kW) |
| X3-45 and H345 Coaches Peak Torque Rating | 1650 Ft-lb (2237 Nm) |
| X3-45 Bus Shells, X3-45 VIP and H345 VIP Peak Power Rating | 500 HP (373 kW) |
| X3-45 Bus Shells, X3-45 VIP and H345 VIP Peak Torque Rating | 1750 Ft-lb (2374 Nm) |
| Low Idle | 600 rpm |
| Fast Idle | 1000 rpm |
| Maximum full load revolutions | 1900 rpm |

Engine oil level quantity

| | |
|---|---|
| Oil Pan Capacity, Low Limit | 25 quarts/24 liters |
| Oil Pan Capacity, High Limit | 34 quarts/32 liters |
| Refill volume including filter change | 40 quarts/38 liters |

Lubricating oil filter elements

| | |
|---|---|
| Type | By-pass |
| Type | Full Flow |

Torque specification

| | |
|---|---|
| Engine oil filter | Tighten ¾ of a turn to 1 full turn after gasket contact |

# MAINTENANCE INFORMATION

**MI16-16**

| | | |
|---|---|---|
| DATE : | FEBRUARY 2016 | SECTION : 01 - Engine |
| SUBJECT : | **VOLVO D13 ENGINE – STARTER REMOVAL AND INSTALLATION** | |

## DESCRIPTION

This procedure applies to current Melco 105P70 starter part number #21212425.

## REQUIRED TOOLS

| | |
|---|---|
| **RATCHET EXTENSION BAR**  | **RATCHET AND SOCKET SET – METRIC**  |
| **CORDLESS DRILL**  | **BRASS WIRE CUP BRUSH**  |
| **TORQUE WRENCH**  | **CUTTING PLIERS**  |
| **VOLTMETER / MULTIMETER**  | **METRIC OPEN END WRENCH SET**  |

**PROCEDURE – STARTER REMOVAL AND INSTALLATION**

## DANGER

Park vehicle safely, apply parking brake, stop engine. Prior to working on the vehicle, **set the ignition switch to the OFF position,** the battery master switch to the OFF position and trip the main circuit breakers equipped with a trip button.

## RISK OF ELECTRICAL SHOCK

1. The starter is connected to the batteries through master relay R1. If the ignition switch is in the OFF position and the battery master switch (master cut-out) is set to the OFF position, there should not be electrical power to the starter **B** (batt) terminal. However, a faulty master relay R1 could eventually leave the battery power circuit closed, thus electrical power would be present at the starter **B** terminal.
2. Using a voltmeter or multimeter, probe the starter **B** terminal and the **ground** terminal. Make sure that the voltage reading is 0 volt prior disconnecting the starter cables (FIGURE 2).

## STARTER REMOVAL

3. While proceeding from under the vehicle, gain access to the starter (item 29 on FIGURE 1) on the turbocharger side (street side).

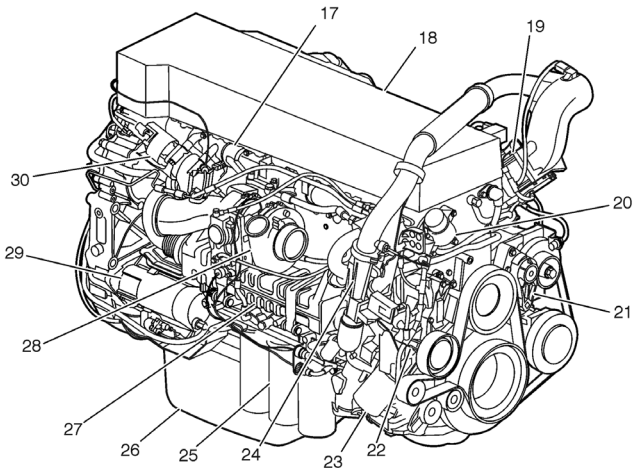


**FIGURE 1: D13H ENGINE OVERVIEW, TURBO SIDE**

4. On the starter, disconnect circuits **0C**, **101** and **101B** (see FIGURE 2). Properly clean cable lugs as applicable using a brass wire cup brush, a Scotch-Brite pad or an emery cloth. Remove old Color Guard Rubber Coating as much as possible.

   ***IMPORTANT: keep hardware for later use***

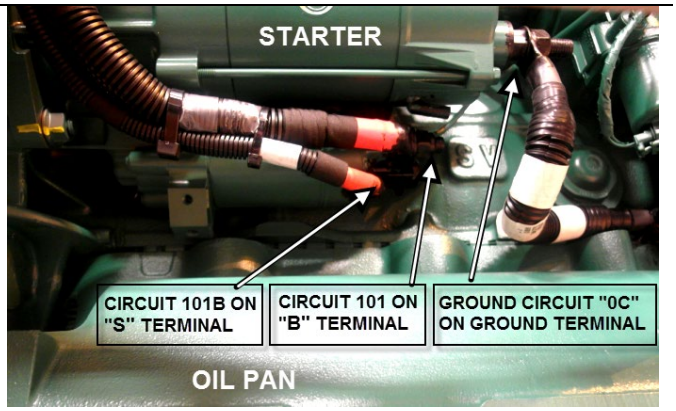


**FIGURE 2**

5. Using a 18mm socket, unscrew three bolts fastening the starter to the flywheel housing (FIGURE 3).
6. Detach the starter from the flywheel housing.

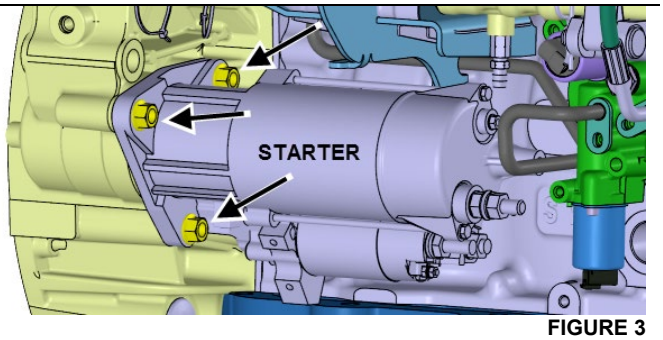


**FIGURE 3**

## STARTER INSTALLATION

1. If the starter is replaced with a brand new starter, prepare the new starter as follows (refer to FIGURE 5).
   a) Remove the second nut on the ground terminal (FIGURE 5). Keep for later use.
   b) Remove the jumper cable connected to the ground terminal (FIGURE 5).
   c) Make sure that the three nuts identified on FIGURE 5 are tightened to a torque of **22 lbf-ft**.
   d) Reinstall the jumper cable to the ground terminal.
   e) Install a nylon tie mount p/n 504013 on the starter. Refer to FIGURE 6 for proper location. Secure the nylon tie mount with one screw *p/n 502817* (FIGURE 7).

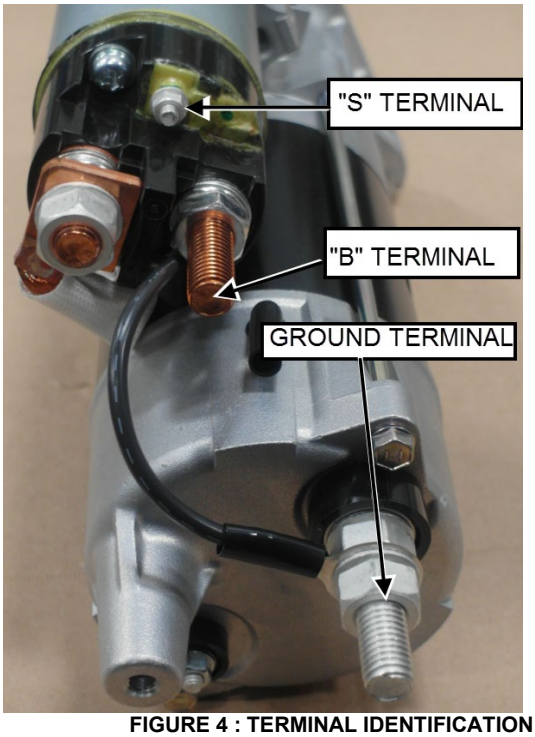


**FIGURE 4 : TERMINAL IDENTIFICATION**

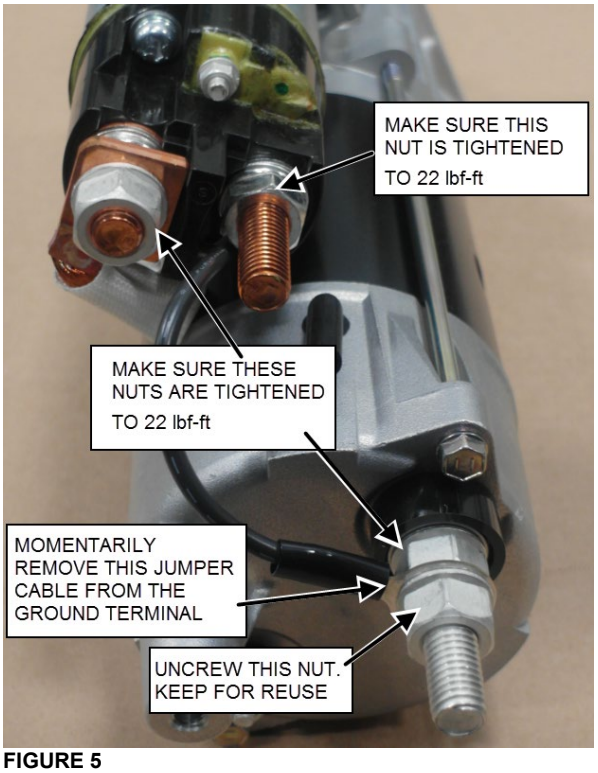


**FIGURE 5**

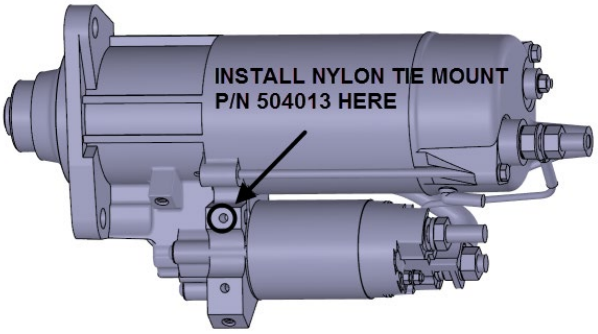


**FIGURE 6**

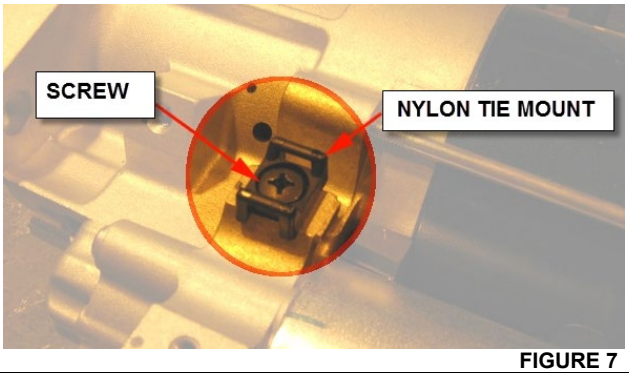


**FIGURE 7**

2. Install the replacement starter with the solenoid located on the underside of the starter motor as shown on **FIGURE 8**.
3. Hand tighten the three mounting nut.

   *Flange nut M12 p/n 990942 qty: 3*
4. Once the starter is properly seated on the flywheel housing, torque the three mounting nuts to al torque of **44 lbf-ft**.

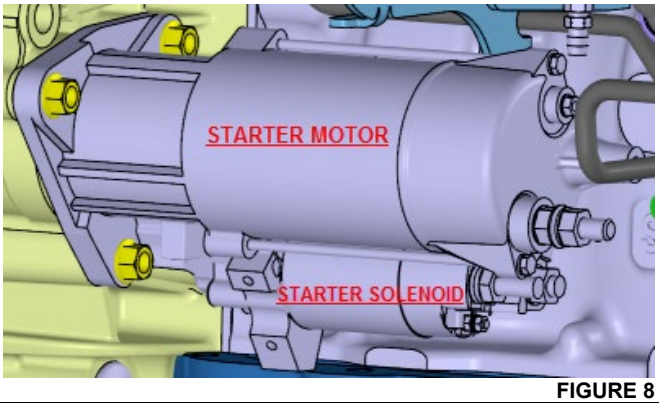


**FIGURE 8**

## INSTALLATION OF CIRCUIT 0C

5. Connect the ground cable (circuit 0C) to the ground terminal first. Make sure the ground cable extends vertically downward from the terminal as shown on **FIGURE 9**.
6. Secure the ground cable lug with the nut previously removed at step 1-a. Tighten to a torque of **22 lbf-ft**.

   *M12 hex nut p/n 983717*

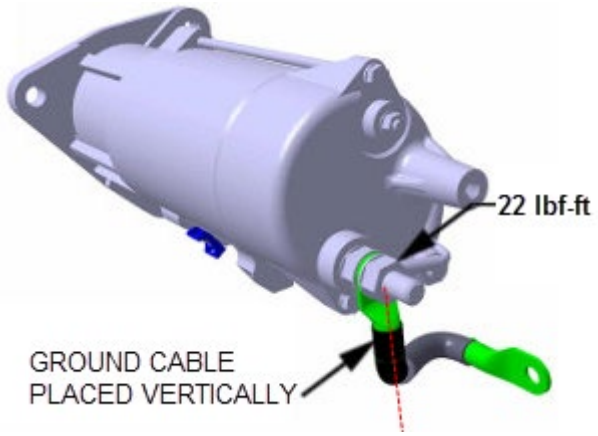


**FIGURE 9**

## INSTALLATION OF CIRCUIT 101

7. Connect circuit **101** to **B** terminal (FIGURE 4 & FIGURE 5). Position circuit **101** cable to be in line with the nylon tie mount on the starter.
8. Place the washer against circuit **101** cable lug and secure cable lug and washer with the nut. Tighten the nut to a torque of **22 lbf-ft**.

   *washer p/n 500958 qty:1*

   *nut p/n 5001761 qty:1*

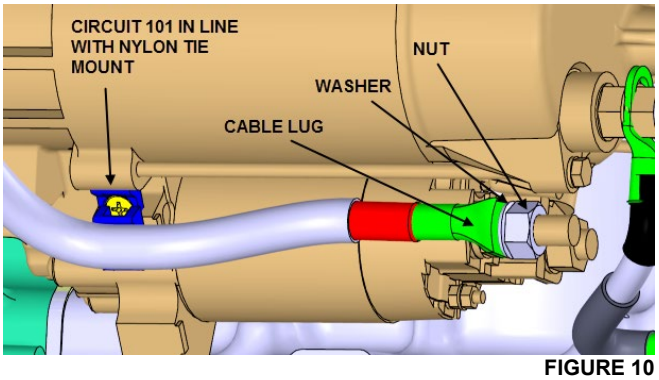


**FIGURE 10**

## INSTALLATION OF CIRCUIT 101B

9. If not already done, remove the nut and washer provided with the brand new starter on **S** terminal (FIGURE 4).
10. Connect circuit **101B** to **S** terminal. Position circuit **101B** cable to be in line with the nylon tie mount on the starter.
11. Place the provided washer against circuit **101** cable lug and then secure cable lug and washer with the nut provided. Tighten the nut to **35 lbf-in**.

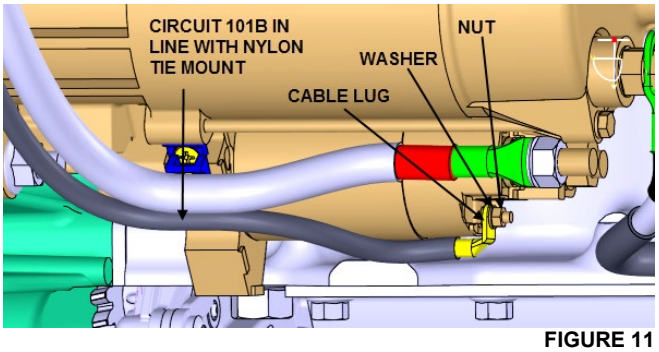


**FIGURE 11**

12. Secure circuit **101** and **101B** to the tie mount using one nylon tie *p/n 504016*.
13. Tie circuit **101** and **101B** together using one nylon tie *p/n 504637* as shown on FIGURE 12.

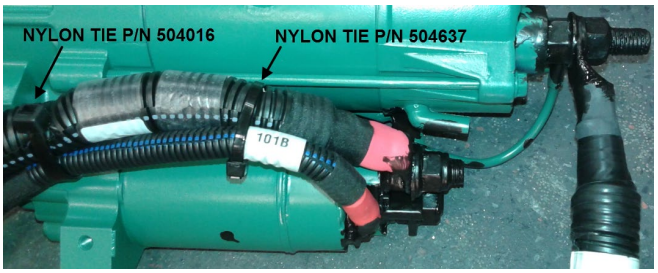


**FIGURE 12**

14. Apply anti-corrosion compound or **Color Guard Rubber Coating** (Prevost p/n 684013) on starter terminals, cable lugs and nuts (see FIGURE 13 to FIGURE 15).

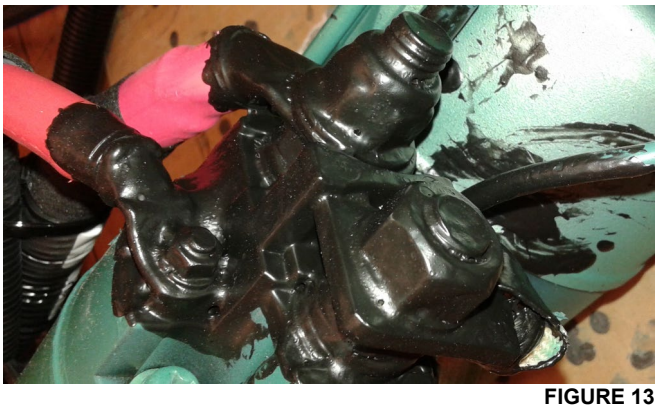

**FIGURE 13**



FIGURE 14



FIGURE 15

# FUNCTIONAL TEST

1. Reset main circuit breakers if applicable. Set the battery master switch (master cut-out) to the ON position and start the engine.

## PARTS / WASTE DISPOSAL

| |
|---|
| Discard according to applicable environmental regulations (Municipal/State[Prov.]/ Federal) |

*Access all our Service Bulletins on https://secureus5.volvo.com/technicalpublications/en/pub.asp*
*Or scan the QR-Code with your smart phone.*

*E-mail us at **technicalpublications_prev@volvo.com** and type "ADD" in the subject to receive our warranty bulletins by e-mail.*

## CONTENTS

**SECTION CHANGE LOG** ..... **3**

**1. TORQUE TABLES** ..... **4**

1.1 FUEL SYSTEM ..... 4
1.2 MISCELLANEOUS TORQUES ..... 4

**2. FUEL SYSTEM** ..... **5**

2.1 FUEL VALVES ..... 5
2.2 FUEL FILTERS AND WATER SEPARATOR ..... 6
*2.2.1 Primary fuel filter replacement* ..... *6*
*2.2.2 Main fuel filter Replacement* ..... *9*
2.3 PRIMING THE FUEL SYSTEM ..... 10
2.4 DAVCO FUEL PRO 386 ..... 10
2.5 FUEL PUMP REMOVAL AND INSTALLATION ..... 13

**3. FUEL LINES AND FLEXIBLE HOSES** ..... **13**

**4. PREHEATER FUEL FILTER** ..... **14**

**5. FUEL TANK** ..... **14**

5.1 POLYETHYLENE FUEL TANK ..... 14
5.2 TANK REMOVAL (POLYETHYLENE) ..... 14
5.3 TANK INSTALLATION (POLYETHYLENE) ..... 15
5.4 FUEL TANK VERIFICATION (POLYETHYLENE) ..... 16
5.5 POLYETHYLENE FUEL TANK REPAIR ..... 16
5.6 STEEL FUEL TANK (OPTIONAL) ..... 16
5.7 STEEL FUEL TANK DRAIN PLUG ..... 17
5.8 STEEL TANK REMOVAL ..... 17
5.9 STEEL TANK INSTALLATION ..... 18
5.10 FUEL TANK YEARLY INSPECTION ..... 18

**6. FUEL SPECIFICATIONS** ..... **20**

6.1 FUEL TYPE ..... 20
6.2 BLENDING ..... 20
6.3 BIODIESEL FUELS ..... 21
*6.3.1 Biodiesel Fuels and Preheater* ..... *21*
*6.3.2 Biodiesel Fuels and the Engine* ..... *21*

**7. AIR CLEANER (DRY TYPE)** ..... **21**

7.1 PRE-CLEANER SERVICING ..... 21
7.2 AIR CLEANER SERVICING ..... 21
*7.2.1 Checking restriction indicator* ..... *21*
*7.2.2 Replacing the Filter* ..... *22*
7.3 GENERAL RECOMMENDATIONS ..... 23
7.4 AIR CLEANER RESTRICTION INDICATOR ..... 24

**8. FUEL PEDAL** ..... **24**

8.1 FUEL PEDAL ADJUSTMENT ..... 25
8.2 POTENTIOMETER REPLACEMENT ..... 25

**9. SPECIFICATIONS ..... 27**

## SECTION CHANGE LOG

| | DESCRIPTION | DATE |
|---|---|---|
| 1 | H3-45 VIP fuel tank capacity corrected | Oct. 2023 |
| 2 | New fuel filters arrangement | Feb. 2024 |
| 3 | Updated instruction: primary & main fuel filter replacement | Feb. 2024 |
| 4 | | |
| 5 | | |
| 6 | | |

# 1. TORQUE TABLES

## 1.1 FUEL SYSTEM

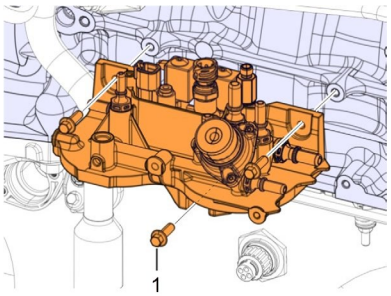


03100

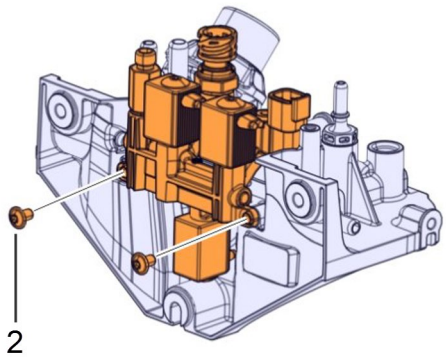


03101

| FUEL FILTER HOUSING – VOLVO D13 ENGINE | | |
|---|---|---|
| No | DESCRIPTION | TORQUE |
| 1 | Fuel filter housing assembly screws | 15-21 lb-ft (20-28 Nm) |
| 2 | Dosing module mounting screws | 7.5 lb-ft (10 Nm) |

## 1.2 MISCELLANEOUS TORQUES

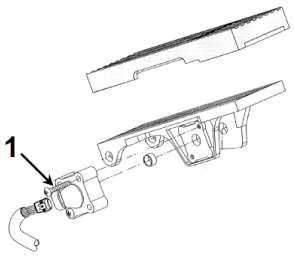


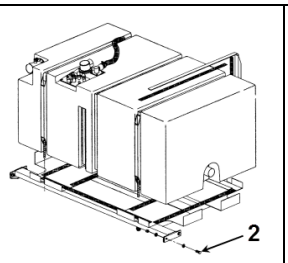


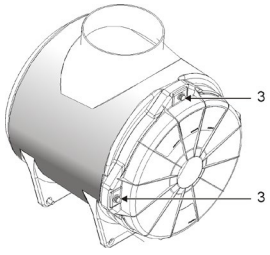


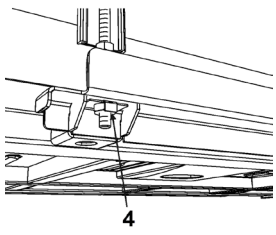


| MISCELLANEOUS TORQUES | | |
|---|---|---|
| No | DESCRIPTION | TORQUE |
| 1 | Brake pedal potentiometer holding screws | 10-20 lb-in (1.13-2.26 Nm) |
| 2 | Fuel tank support to frame | 55 lb-ft (75 Nm) |
| 3 | Air filter cover plastic screws (4) | 10-15 lb-ft (14-20 Nm) |
| 4 | Steel fuel tank retaining straps | 20 lb-ft (27 Nm) |

## 2. FUEL SYSTEM

> *NOTE*
>
> *For additional information concerning Volvo D13 engine components or engine-related components, consult Volvo Trucks Canada or Volvo Trucks North America Web Site under: Parts & Service. On Volvo web site, you will find detailed service procedures for parts replacement, repair and maintenance.*

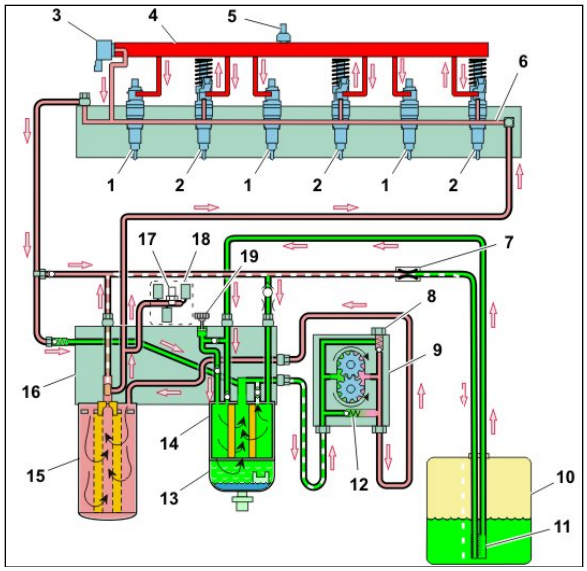


FIGURE 1: FUEL SYSTEM SCHEMATIC (VOLVO D13 ENGINE)

1 Non-pumping injector
2 Pumping injector
3 Fuel pressure relief valve
4 Common rail
5 Rail pressure sensor
6 Fuel channel (gallery)
7 Restrictor
8 Overpressure relief valve
9 Fuel pump
10 Fuel tank
12 Check valve
13 Bowl (fuel/water separator)
14 Primary filter/fuel water separator
15 Filter
16 Fuel filter housing
17 Fuel pressure sensor (low pressure system)
18 Aftertreatment hydrocarbon injector module
19 Hand pump (fuel primer pump)

### 2.1 FUEL VALVES

The manual shut-off valve is located on the inlet side of the Davco Fuel Pro fuel filter.

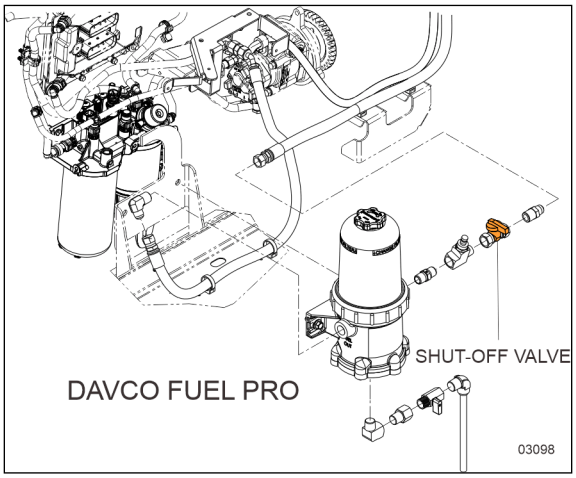


FIGURE 2: MANUAL SHUT-OFF VALVE LOCATION WITH DAVCO FUEL PRO 386

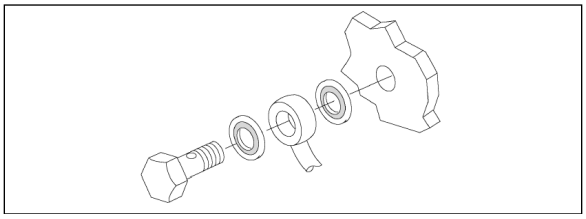

FIGURE 3: FUEL LINE COMPRESSION FITTING

> **CAUTION**
>
> ALWAYS replace the fuel line compression sealing washers when troubleshooting for fuel aeration or performing any service procedure that requires the removal of engine fuel lines.

## 2.2 FUEL FILTERS AND WATER SEPARATOR

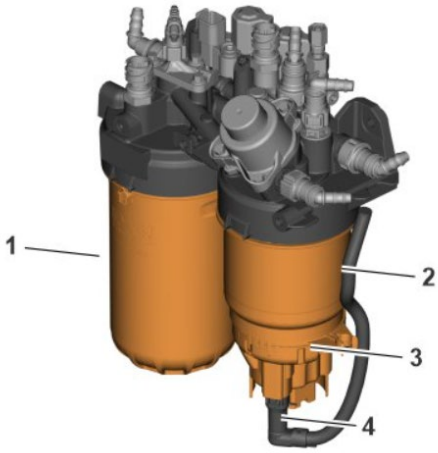


| | |
|---|---|
| 1 | Main fuel filter |
| 2 | Primary filter/fuel water separator |
| 3 | Water collection bowl |
| 4 | Connector (water in fuel level sensor) |

The main fuel filter (1) and primary filter/fuel water separator (2) with water collection bowl (3) are mounted to the fuel filter housing on the left side of the engine.

The water separator is installed at the bottom of the primary filter. The water separator has:

- Water in the fuel level sensor
- Fuel heater (optional).
- A drain valve located at the bottom of the water separator.

The cable harness for the water in the fuel level sensor is connected to the water collection bowl by the connector (4).

Both filters consist of a reusable filter bowl and a disposable filter element.

**MAINTENANCE**

The primary and main disposable fuel filter elements must be replaced at the intervals specified by the Lubrication And Servicing Schedule in Section 24: LUBRICATION & SERVICING.

The primary fuel filter/fuel water separator should be drained periodically or when the “water in fuel” pop-up message appears on the DID if equipped with this system. To drain water, loosen the drain valve below the separator. Place an appropriate container under the filter. Close the drain valve when finished.

### 2.2.1 Primary fuel filter replacement

1. Stop engine. If equipped with Davco Fuel Pro, this one serves as primary filter.
2. Clean around sealing area on filter bowl and housing.
3. Place an appropriate container under the filter bowl to catch any fuel that might spill. Drain the water from the water separation bowl.
4. Disconnect the water separator indicator connector.

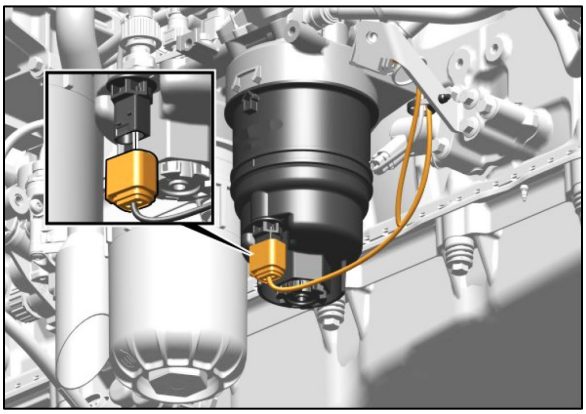

FIGURE 4

5. Unscrew and remove the primary fuel filter/fuel water separator bowl from the fuel filter housing. Use a suitable tool.

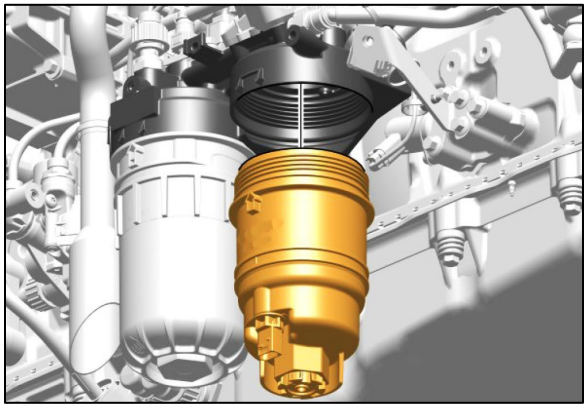

FIGURE 5

6. Remove and discard the old filter element. Use pliers.

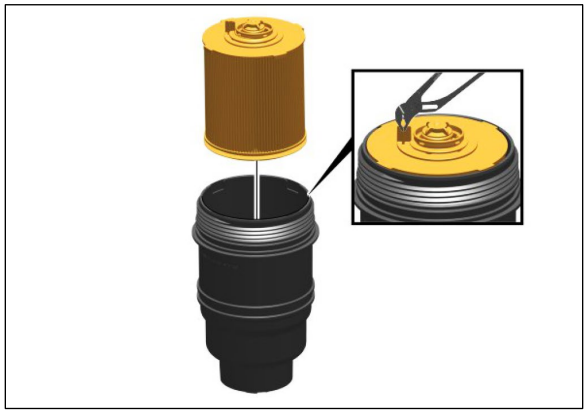

FIGURE 6

7. Remove the O-ring.

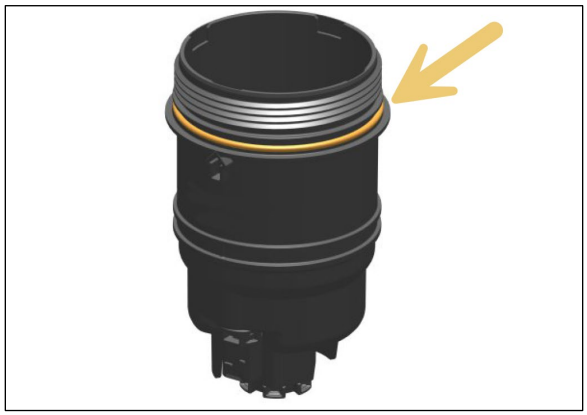

FIGURE 7

8. Clean the filter bowl and the O-ring grove. Use suitable protective equipment.

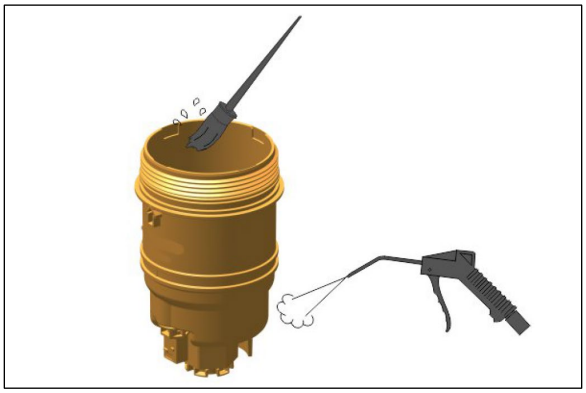

FIGURE 8

9. Check the sensor. Deposits on the level sensor do not affect the function of the water separator.

   NOTE: Do not replace the water separator simply due to deposits.



FIGURE 9

10. Apply clean engine oil to the O-ring. Install the O-ring. Use a new part.

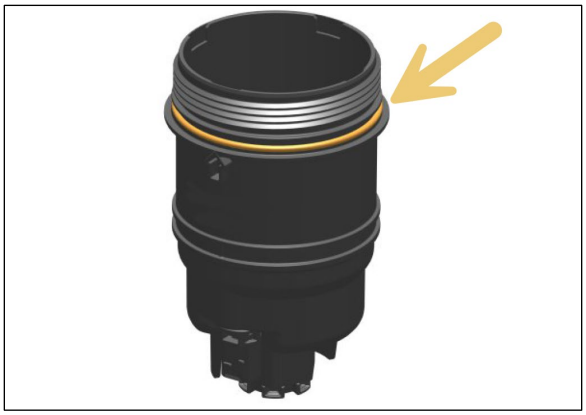

FIGURE 10

11. Install the filter element to the bowl.

Note: The ribs on the filter top cover should fit into the grooves.

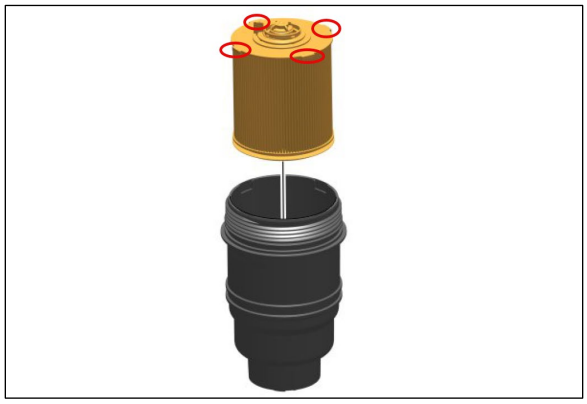

FIGURE 11

> **CAUTION**
>
> **Risk of material damage.**
>
> Contaminated fuel can damage the fuel system and the injectors.
>
> Never pour fuel from the old filter to the new one.

12. Install the filter assembly.

    Note: Check for potential damage and cracks. Note: Check the position for the lower cable support.

13. Tighten the filter assembly to torque.

    **Tightening torque: 35 Nm 26 lb-ft**

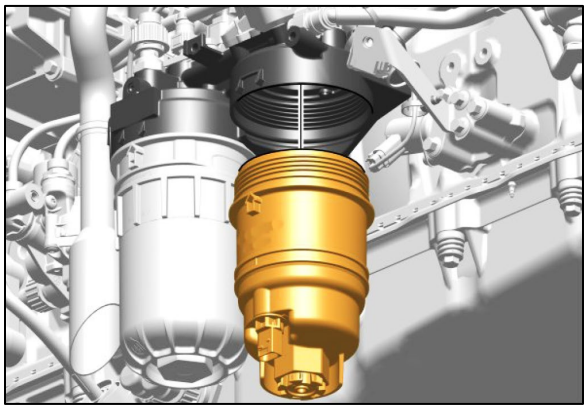

FIGURE 12

14. Position the harness. Connect the connector.

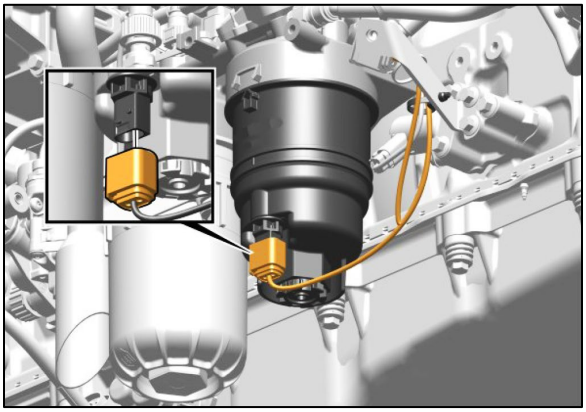

FIGURE 13

15. Prime the system by operating hand primer pump until resistance is felt indicating that the system is full of fuel.

16. Start the engine and carry out a fuel-tightness check. Let the engine run for about 5 minutes to remove air pockets from the fuel system.

### 2.2.2 Main fuel filter Replacement

1. Stop engine. If equipped with Davco Fuel Pro, close the fuel supply line shut-off valve.
2. Place an appropriate container under the fuel filter housing to catch any fuel that might spill.
3. Clean around sealing area on fuel filter bowl and housing.
4. Unscrew and remove the main fuel filter bowl from the fuel filter housing.

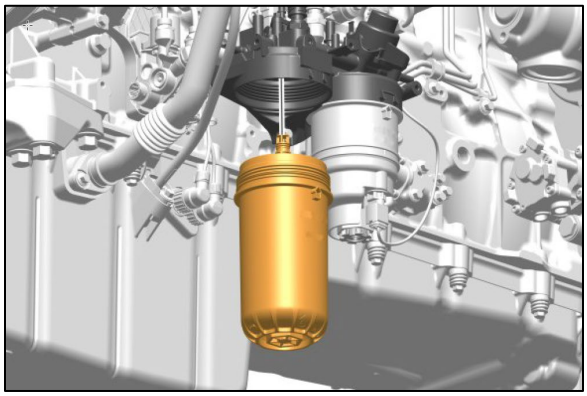

FIGURE 14: MAIN FUEL FILTER

5. Remove the filter element from the bowl.

   NOTE: Rotate in clockwise direction.

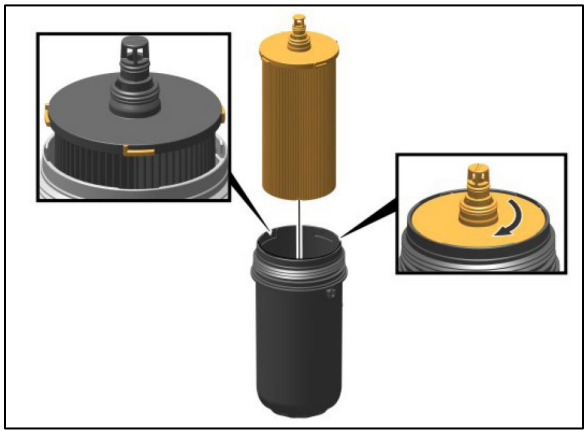

FIGURE 15

6. Remove the O-ring. Clean the grove.



FIGURE 16

7. Apply clean engine oil to the O-ring. Install the O-ring. Use a new part.
8. Clean the contact surface.
9. Install the filter element to the bowl.

   Note: Use a new part.

   Service hint: Rotate in counterclockwise direction.

   Note: The ribs on the filter top cover should fit into the grooves.

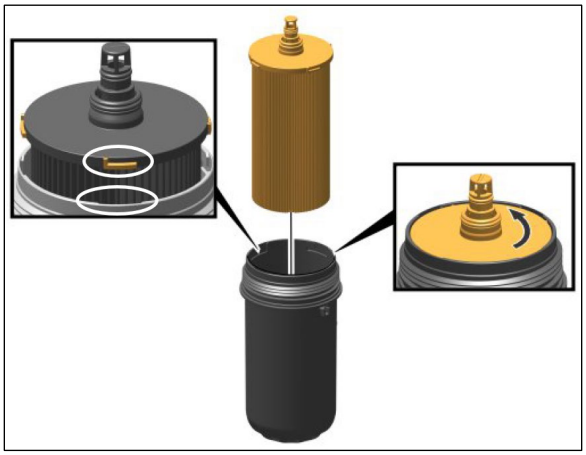

FIGURE 17

**CAUTION**

**Risk of material damage.**

Contaminated fuel can damage the fuel system and the injectors.

Never pour fuel from the old filter to the new one.

10. Install the filter assembly.

11. Tighten the filter assembly to torque.

**Tightening torque: 35 Nm 26 lb-ft**

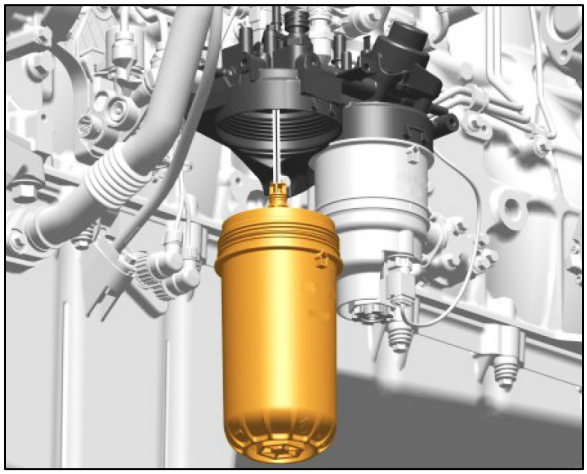

FIGURE 18

12. If equipped with Davco Fuel Pro, open the fuel supply line shut-off valve.
13. Prime the fuel system by pumping the hand priming pump on the fuel filter housing until resistance is felt indicating that the system is full of fuel.
14. Start the engine and carry out a fuel-tightness check. Let the engine run for about 5 minutes to remove air pockets from the fuel system. Note: The engine speed must not be increased, otherwise air can be pressed into the cylinder head, causing the engine to stop.
15. Check that no fault codes have been set.

## 2.3 PRIMING THE FUEL SYSTEM

The fuel system will need to be bled if:

- The vehicle has run out of fuel.
- The engine has not been running for an extended period of time.
- Service work has been done on the fuel system, (tank, fuel lines, filters, valves, etc.) for example cleaning or replacing fuel filters.
- The engine is new or rebuilt.

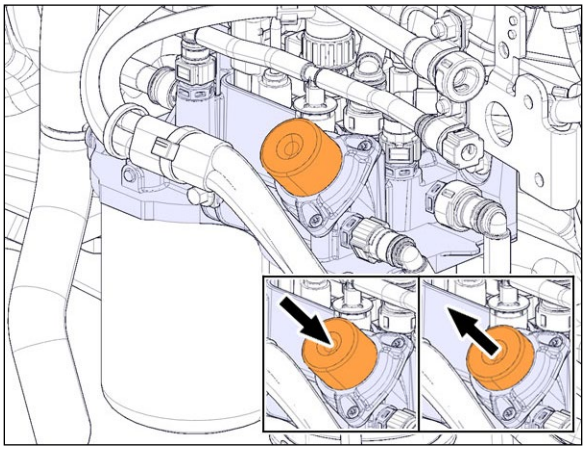

FIGURE 19: HAND PRIMING PUMP

| *NOTE* |
| --- |
| When the fuel system is empty, 200 or more pump strokes may be needed to properly prime system. There are no bleed nipples to be opened to prime the fuel system. |

If a Fuel Pro 386 fuel processor is installed on the vehicle, refer to paragraph 2.4 Davco Fuel Pro 386 otherwise, perform the steps below:

1. Prime filter by operating hand primer pump until resistance is felt indicating that the system is full of fuel.
2. Start the engine and run it at an increased idle speed for approximately 5 minutes to remove any remaining air in the system. Check the fuel system for leaks.

## 2.4 DAVCO FUEL PRO 386

The Fuel Pro 386 (Figure 8) fuel processor is installed between the fuel tank and the main fuel filter and is used as the primary fuel filter/fuel water separator. This system also serves as a water separator and is equipped with heating for winter conditions. *Davco Technical Manual F1387* is available on Prevost Technical Publications site.

Fuel Pro 386: 10 microns filter element

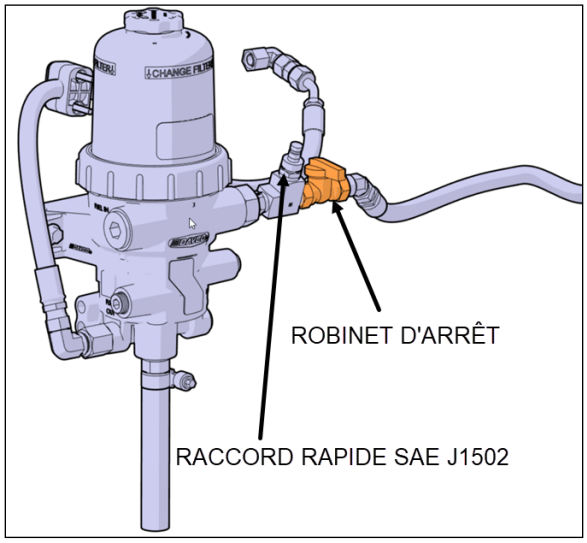


FIGURE 20: DAVCO FUEL PRO 386 WITH MANUAL SHUT-OFF VALVE

The filter fibers used in the Davco Fuel Pro 386 element may cause the fuel level to read artificially high when the filter is first installed. Over the first few days, the filter fibers eventually become fully saturated and the fuel level will drop to normal levels. Do not be concerned about an abnormally high fuel level when a new Davco element is installed.

Fuel level rises as dirt collects on the filter from the bottom up. Restriction remains consistently low because fuel always flows through clean, new media.

## MAINTENANCE

Replace Fuel Pro 386 filter element when the fuel level in the see-thru filter cover reaches the “CHANGE FILTER” lettering on the clear cover.

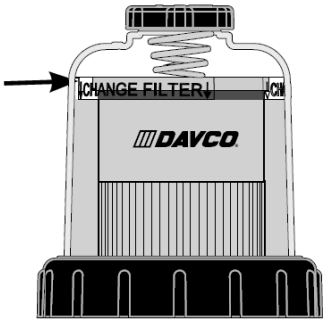


**Water drains**

1. Turn off the engine and remove the vent cap.
2. Place a suitable container under the Fuel Pro and open the drain valve.
3. Collected water will flow into the container. When fuel begins to flow out the drain, close the drain valve. Drain the least amount of fuel as possible.
4. Install the vent cap and tighten it by hand until it clicks.
5. Start the engine and raise the RPM for one minute to purge the air from the system.

### 2.4.1 Priming fuel system

To prime the fuel system, turn the engine off and then proceed as follows:

Close the shut-off valve on the “fuel in” side of the Fuel Pro unit and then pump fuel into the engine through the quick coupling J1502. When completed, open the shut-off valve and keep on pumping fuel about ten seconds to fill the fuel line located between the Fuel Pro unit and the fuel tank.

### 2.4.2 Filter replacement

1. Turn off the engine. Place a suitable container under the fuel processor.
2. Close the shut-off valve on the “fuel in” side of the fuel filter (**FIGURE 8**).
3. Remove the vent cap & vent cap O-ring (A).
4. Open the drain valve (I) a minimum of 3 turns and drain the fuel completely from the unit.
5. Close the drain valve.
6. Untighten the collar (E), remove clear cover with filter spring (D), filter element and cover O-ring (B).

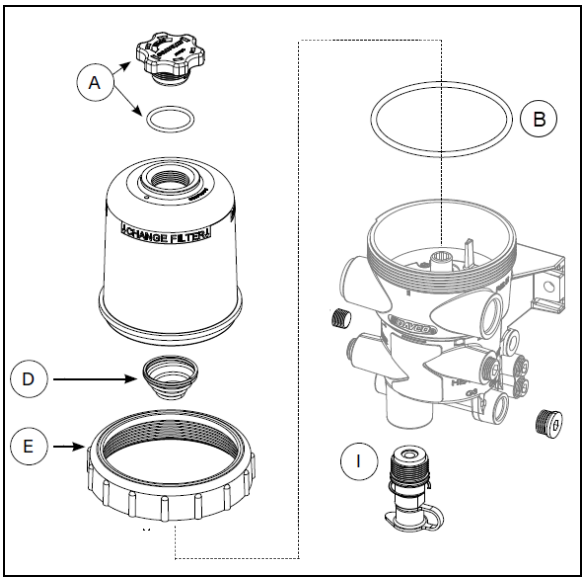


FIGURE 21: DAVCO FUEL PRO 386 FUEL PROCESSOR

7. Dispose of used filter element, cover O-ring and vent cap O-ring.
8. Using a clean shop rag, clean the cover, the collar, the vent cap, and threads on the Fuel Pro body.
9. Install the new filter element. Position the filter element so the key is lined up with the keyway on the separator plate of the housing (Figure 10). Use the arrow on the top of the endplate to align the filter. Ensure the filter element is fully seated by firmly pushing on the endplate. The filter should not rotate freely.

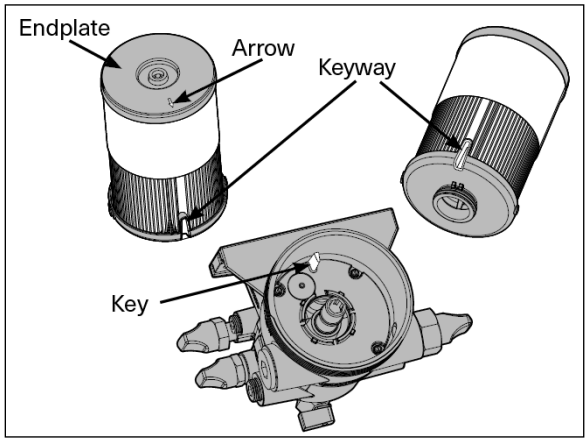


FIGURE 22: KEYWAY ON FUEL PRO 386 FILTER ONLY

10. Ensure the filter spring is installed at the top of the clear cover. If missing, the spring must be replaced to insure proper filter operation.
11. After ensuring a new O-ring is properly positioned at the base of the clear cover, install the clear cover with the collar onto the fuel processor. Apply downward pressure to the top of the clear cover and then tighten the collar by hand until secured.

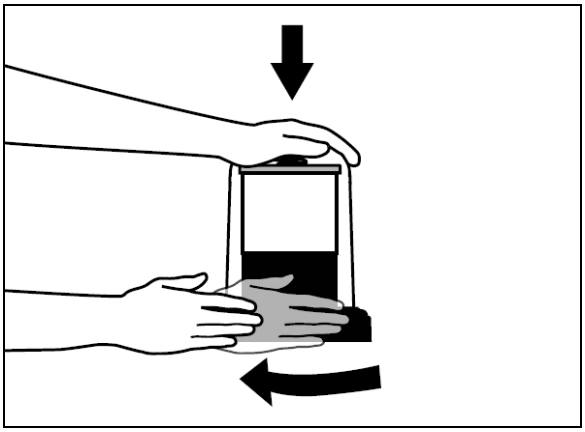

FIGURE 23

12. Use a Davco collar wrench (if necessary) to tighten the collar three additional ribs.

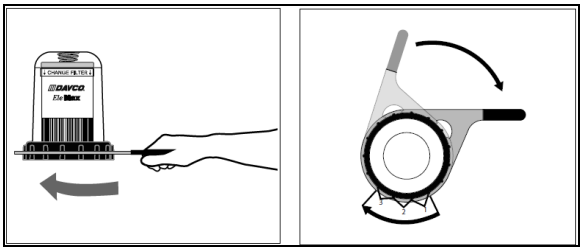

FIGURE 24

13. Fill the clear cover with clean diesel fuel until it reaches the top of the filter through spin off vent cap located on top of clear cover.
14. Install the vent cap with new O-ring and tighten it by hand until it clicks.
15. Open the shut-off valve.
16. Start the engine. When the lubrication system reaches its normal operating pressure increase the engine RPM to high idle for 1-2 minutes.
17. After the air is purged and while the engine is at idle, loosen the vent cap and let the fuel level drop to just above the collar, then tighten the vent cap by hand until it clicks.
18. Shut down the engine and hand-tighten the collar again.

| *NOTE* |
| --- |
| *Diesel fuel is an environmentally hazardous product. Dispose according to applicable environmental regulations.* |

## 2.5 FUEL PUMP REMOVAL AND INSTALLATION

The pump is located underneath the air compressor and is accessible through the engine compartment R.H. access door.

To remove the pump, proceed as follows:

- Clean around the fuel pump and fuel lines. Position a container to catch any fuel that might drain from the pump or lines.
- Remove the fuel pump.

| *NOTE* |
| --- |
| *Only unfasten the bolts marked with arrows.* |

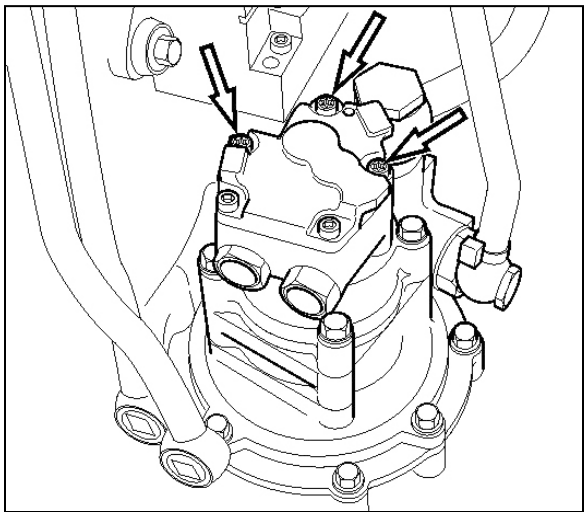

FIGURE 25: FUEL PUMP REMOVAL

| **CAUTION** |
| --- |
| Ensure to clean around the head of the bolts. Debris will prevent the tool from fitting properly and cause damage to the fasteners. |

- Check that the adapter and fuel pump drive axle are not damaged.
- Install the fuel pump. Torque-tighten bolts to specification.

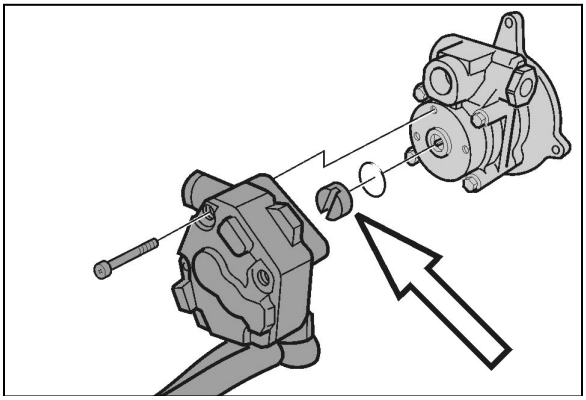

FIGURE 26: FUEL PUMP DRIVE AXLE

| *NOTE* |
| --- |
| *Use a new sealing ring. Check that the fuel pump drive axle sits correctly in the power steering pump.* |

- Using the hand primer on the fuel filter housing, prime the fuel system.
- Start the engine and let run for 5 minutes. Make sure that there are no leaks.

## 3. FUEL LINES AND FLEXIBLE HOSES

Make a visual check for fuel leaks at all engine-mounted fuel lines and connections and at the fuel tank suction and return lines. Since fuel tanks are susceptible to road hazards, leaks in this area may best be detected by checking for accumulation of fuel under the tank. Engine performance and auxiliary equipment is greatly dependent on the ability of flexible hoses to transfer lubricating oil, air, coolant and fuel oil. Diligent maintenance of hoses is an important step in ensuring efficient, economical and safe operation of engine and related equipment.

| **MAINTENANCE** |
| --- |
| Check hoses daily as part of the pre-start-up inspection. Examine hoses for leaks and check all fittings, clamps and ties carefully. Make sure that the hoses are not resting on or touching shafts, couplings, and heated surfaces, including exhaust manifolds, any sharp edges or other obviously hazardous areas. |

All machinery vibrates and moves to a certain extent, clamps and ties can fatigue with age. To ensure continued proper support, inspect

fasteners frequently and tighten or replace them as necessary. Refer to the schematic diagram of the fuel system.

**CAUTION**

Oil level above the dipstick full mark or a decrease in lube oil consumption may indicate internal fuel leaks. Check oil level frequently.

### 4. PREHEATER FUEL FILTER

On H3 series vehicles, the preheater fuel filter is located beside the preheater in the dedicated compartment above the rear wheelhousing, on the L.H. side of vehicle.

On X3 series vehicles, the preheater fuel filter is located beside the preheater in the engine coolant heater compartment, and is accessible by opening the evaporator compartment door.

**MAINTENANCE**

Replace preheater fuel filter at the intervals specified by the Lubrication And Servicing Schedule in Section 24: LUBRICATION & SERVICING.

### 5. FUEL TANK

5.1 POLYETHYLENE FUEL TANK

All H3 series vehicles are equipped with a high-density cross-link polyethylene fuel tank with a legal capacity (corresponding to 95% of gross capacity) of 222 US gallons / 840 liters on H3-45 coaches and 200 US gallons / 757 liters on H3-45 VIP. The tank is located just forward of the last baggage compartment, between the A/C condenser and evaporator. Fuel filling access doors on both sides of vehicle provide direct access to filler necks; offering the added advantage of refueling from either side of vehicle.

X3 series are equipped with a high-density cross-link polyethylene fuel tank with a legal capacity (corresponding to 95% of gross capacity) of 203 US gallons (768 liters). The fuel filling access door is located on the R.H. side of vehicle providing easy fuel filling.

A pressure relief valve on the fuel tank connection-panel relieves high-pressure buildup and an overflow tube allows offset air in the tank to escape during filling. For 95% of the tank volume, 5% of tank inside space is kept filled with air with no exit opening, allowing for a fuel expansion safety margin. A drain plug, accessible from under the vehicle, is fitted at the bottom of the tank.

5.2 TANK REMOVAL (POLYETHYLENE)

**WARNING**

Park vehicle safely, apply parking brake, stop engine and set battery master switch(es) to the OFF position before working on the vehicle.

Before working under an air-suspended vehicle, it is strongly recommended to support the body at the recommended jacking points.

*NOTE*

*Before removal, the fuel tank should be completely drained by unscrewing the drain plug. Ensure that the container used has a capacity equal to the amount of fuel remaining in the tank.*

1. Open the condenser door and remove the fuel tank access panel. The rear baggage compartment fuel tank access panel may also be removed to facilitate access to components.
2. On H3 series vehicles only, unscrew clamps retaining L.H. side filler tube to the fuel tank, then disconnect tube and remove it.
3. Unscrew clamps retaining R.H. side filler tube to fuel tank and filler neck. Disconnect tube and remove it.
4. If applicable, unscrew preheater supply line, preheater return line, auxiliary return line and/or auxiliary return line from fuel tank connection-panel.
5. Unscrew engine supply and return lines from fuel tank connection-panel, identify them for reinstallation.

6. Disconnect electrical wiring from tank on connection plate.

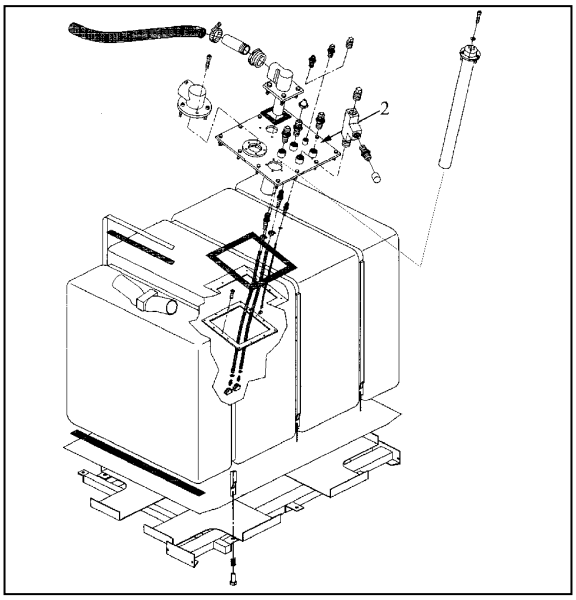

FIGURE 27: 222 US GALLONS FUEL TANK 03048

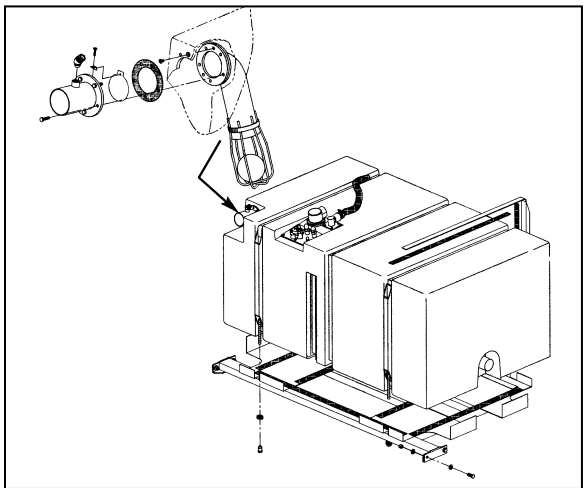

FIGURE 28: 203 US GALLONS FUEL TANK 03094

**WARNING**

Before removing the bolts securing the tank support to the frame, make sure the tank is supported adequately. Failure to do so could result in injury as well as damage to the tank.

7. From under the vehicle, on R.H. side, unscrew the 4 bolts (2 in front, 2 in back) retaining the tank support to the frame.
8. From under the vehicle, on the L.H. side, unscrew the 2 bolts (1 in front, 1 in back) retaining the tank support to the frame.
9. Carefully remove tank from under the vehicle.

## 5.3 TANK INSTALLATION (POLYETHYLENE)

Tank installation is the reverse of removal.

***NOTE***

*Fastening of rubber flap must always be on top, in line with clamp screw.*

***NOTE***

*Insert check valve assembly in right-side filler hose, use hose clamp to fix it. Repeat with left side filler hose on H3 series vehicles.*

***NOTE***

*When reinstalling lines, use Loctite 567 type thread sealant on line fittings.*

**WARNING**

For proper assembly, check connections and fasteners for tightness.

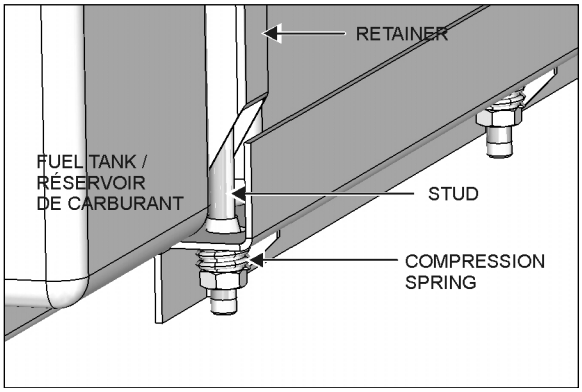


FIGURE 29: FUEL TANK RETENTION 03019_2

For each fuel tank retainer (Figure 17):

1. Clean nuts and stud threads.
2. Apply a Loctite 242 type thread adhesive on stud threads.
3. Fix the retainers to the tank platform. Tighten the nuts to compress the spring completely and then loosen 3 turns.
4. Lift tank assembly and fasten tank support to vehicle.

**TORQUE: 55 lb-ft (75 Nm)**

## 5.4 FUEL TANK VERIFICATION (POLYETHYLENE)

Inspect fuel tank from under vehicle for leaks or fuel traces. If a leak is detected, repair immediately as per "Polyethylene Fuel Tank Repair" in this section.

**WARNING**

Park vehicle safely, apply parking brake, stop engine and set battery master switch(es) to the OFF position before working on the vehicle.

Before working under an air-suspended vehicle, it is strongly recommended to support the body at the recommended jacking points.

## 5.5 POLYETHYLENE FUEL TANK REPAIR

*NOTE*

*Fuel level must be lower than perforation to carry out this procedure.*

**WARNING**

Park vehicle safely, apply parking brake, stop engine and set battery master switches to the OFF position before working on the vehicle.

1. Locate perforation on fuel tank.
2. If necessary, remove fuel tank as per instructions in this section.
3. Drill perforation with a 23/64" bit. Make sure drill hole is perfectly round.
4. Insert a screw (Prevost #500196) and a washer (Prevost #5001244) into anchor nut (Prevost #500331).
5. Place assembly in drilled hole. Tighten screw by 10 complete turns. Refer to Figure 18.
6. Apply sealant on head plug (Prevost #507300) and seal hole with the head plug.

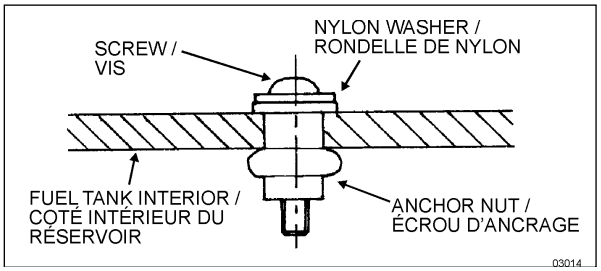


FIGURE 30: FUEL TANK REPAIR 03014

## 5.6 STEEL FUEL TANK (OPTIONAL)

Some X3-45 Commuter coaches may be equipped with an optional steel fuel tank with a legal capacity (corresponding to 95% of gross capacity) of 180 US gallons (681 liters) and 6.3 US gallons of unusable fuel.

The fuel filling access door is located on the R.H. side of vehicle providing easy fuel filling.
A Level Control Valve (LCV) on the fuel tank connection panel relieves pressure buildup and allows offset air in the tank to escape during filling. A whistle mounted at the LCV outlet can be heard as air escapes. During fueling, the LCV will close when the fuel reaches the level in the tank corresponding to 95% of the tank volume, permitting a small build-up of pressure in the tank. When the back pressure reaches between 1.1and 1.5 psig it forces the filling nozzle to close automatically.

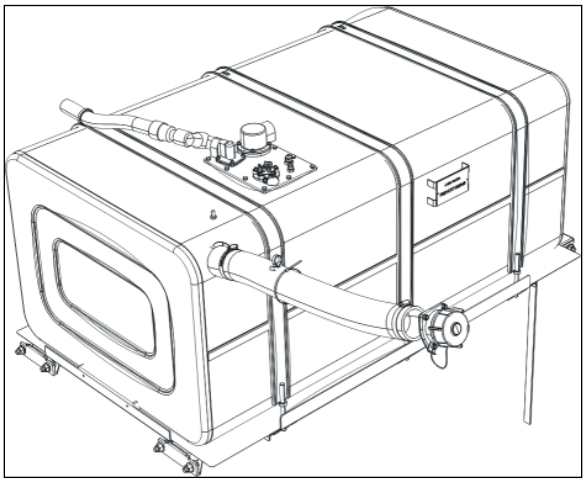

FIGURE 31: STEEL FUEL TANK ASSEMBLY

5% of tank inside space is kept filled with air with no exit opening, allowing for a fuel expansion safety margin. A drain plug, accessible from

under the vehicle, is fitted at the bottom of the tank.

## 5.7 STEEL FUEL TANK DRAIN PLUG

*NOTE*

*For faster emptying, it is recommended to siphon fuel through the opening left on the connection panel once the pressure relief valve is removed.*

Apply **Loctite 567 Thread Sealant** on drain plug. With any sealant, the first one or two threads should be left uncovered to avoid system contamination.

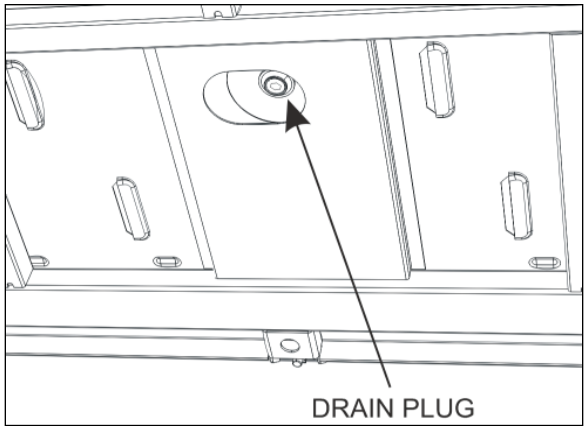


FIGURE 32: FUEL TANK DRAIN PLUG

The proper method of assembling this tapered threaded drain plug is to screw it to the finger tight position and then wrench tighten further 2-3 turns. If leakage persists, check for damaged threads.

## 5.8 STEEL TANK REMOVAL

**DANGER**

Park vehicle safely, apply parking brake, stop engine and set battery master switch(es) to the OFF position prior to working on the vehicle.

Before working under an air-suspended vehicle, it is strongly recommended to support the chassis at the recommended jacking points.

*NOTE*

*Before removal, the fuel tank should be completely emptied by unscrewing the drain plug. For faster emptying, it is recommended to siphon fuel through the opening left on the connection panel once the pressure relief valve is removed.*

*Ensure that the container used has a capacity equal to the amount of fuel remaining in the tank.*

1. Open the condenser door.
2. Unscrew clamps retaining R.H. side filler tube to fuel tank and filler neck. Disconnect tube and remove it.
3. Unscrew engine fuel supply and return lines from fuel tank connection panel.
4. Disconnect the fuel level sender electrical wires (3wires). Prior disconnecting, identify the wires and proper terminal on the fuel level sender as reference for reinstallation (Figure 21).
5. Using mobile column lifts, raise the vehicle to gain access to the fuel tank support from underneath.
6. Before removing the bolts securing the tank support to the chassis, lower the vehicle and make sure the tank support is adequately supported with jack stands or wood blocks. Failure to do so could result in injury as well as damage to the tank.

**DANGER**

Before removing the bolts securing the tank cradle to the frame, make sure the tank cradle is adequately supported with jack stands. Failure to do so could result in injury as well as damage to the tank.

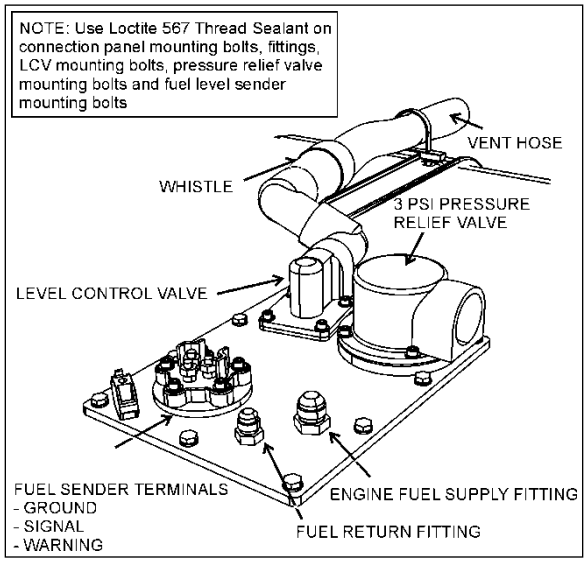

FIGURE 33: FUEL TANK CONNECTION PANEL

7. Once properly supported, unscrew the bolts (6) holding the fuel tank support to the vehicle chassis.
8. Lift the coach until it is high enough to clear the fuel tank. The fuel tank will rest on the floor.

## 5.9 STEEL TANK INSTALLATION

To install tank, simply reverse the "Tank Removal" procedure. Apply Valvoline anti-corrosion compound on retainer strap studs, nuts and fuel tank cradle mounting bolts.

Fasten tank to cradle (tank straps).

**TORQUE:** 20 lb-ft (27 Nm)

Fasten tank support to vehicle.

**TORQUE: 55 lb-ft (75 Nm)**

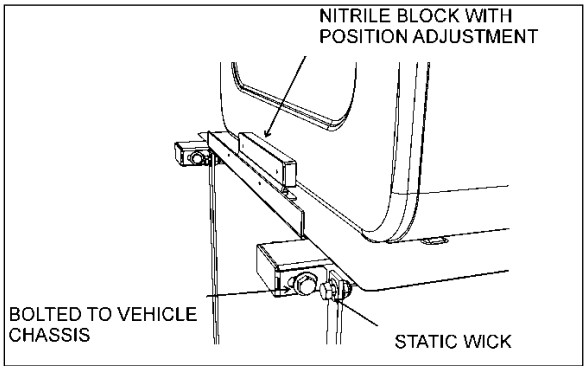

FIGURE 34: FUEL TANK SUPPORT MOUNTING BOLTS

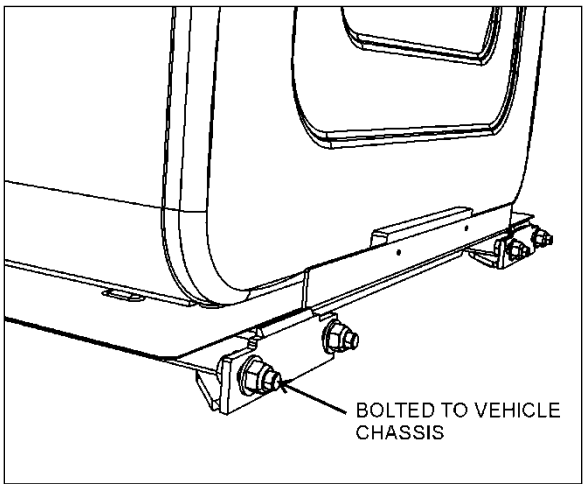

FIGURE 35: FUEL TANK SUPPORT MOUNTING BOLTS

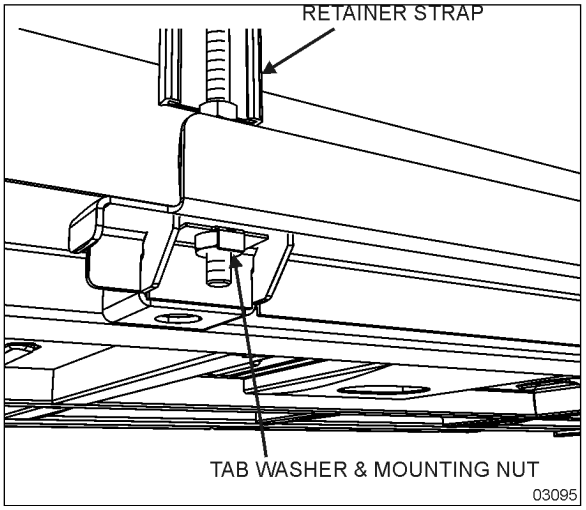

FIGURE 36: FUEL TANK STRAP MOUNTING

## 5.10 FUEL TANK YEARLY INSPECTION

Perform an external visual inspection of the fuel tank from under the vehicle to detect fuel traces or leaks.

Perform a visual inspection of the fuel tank connection panel. Make sure there are no loose connections. Investigate and correct the cause of any fuel leaks.

Inspect all fuel tank mountings and cradle attachment points. Inspect fasteners and replace them as necessary as described in the procedure that follows.

1. Raise the vehicle with safe lifting equipment and procedures.
2. Place jack stands under the fuel tank cradle.

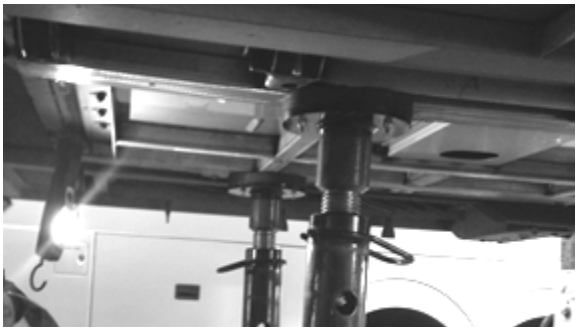

FIGURE 37: JACK STANDS UNDER THE FUEL TANK CRADLE

3. Carefully inspect fuel cradle mounting bolts, 6 locations (Figure 26).

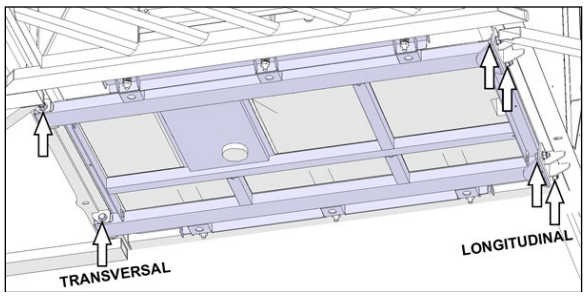


FIGURE 38: LOCATION OF MOUNTING POINTS

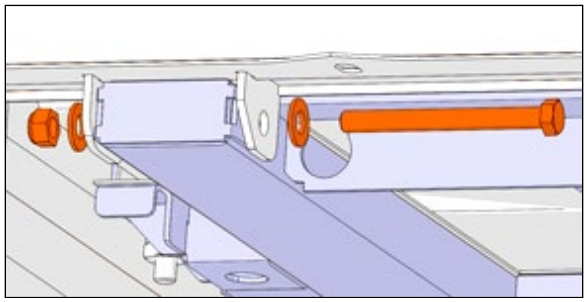

FIGURE 39: TRANSVERSE SCREWS, 2 LOCATIONS

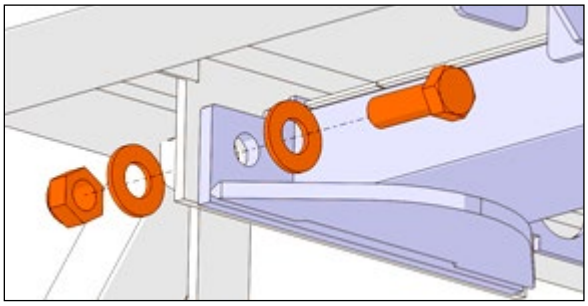

FIGURE 40: LONGITUDINAL SCREWS, 4 LOCATIONS

4. Replace any bolt showing **signs of wear** by new hardware. **DO NOT REUSE NUTS**. **Perform replacement one screw location at a time with appropriate support.** Apply torque seal mark.

**Torque: 82 lbf-ft.**

Hardware part number and description

*# 5001941 screw, cap hex M12x1.75x120 g10.9*

*# 500806 screw, cap hex M12x1.75x35 g10.9*

*# 500811 nut, hex sto M12-1.75 G10*

*# 500958 flat washer ss .531x1.062x.095*

*# 030082 U-shim 3.175mm thick (0.125 in)*

*# 030083 U-shim 0.953mm thick (0.038 in)*

5. On the transversal screw joints (Figure 29) any visible gap between cradle support tubing and vehicle frame mounting lugs is not acceptable.

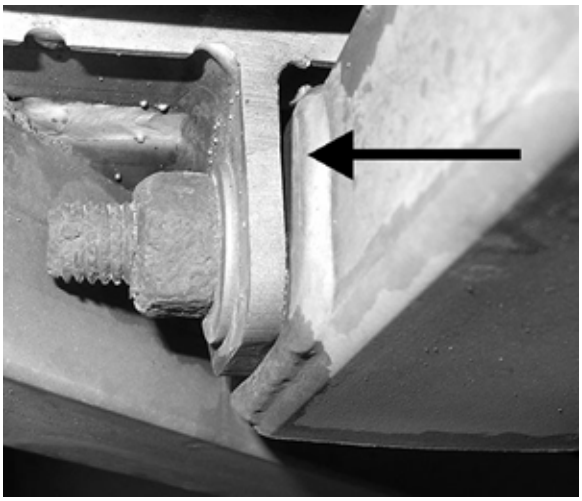

FIGURE 41: VISIBLE GAP ON TRANSVERSAL SCREW JOINT

6. If shims are not present, the visible gap should be shimmed using U-shims #030082 and/or #030083 as required.

7. Shim arrangement may vary and may be stacked on both sides (Figure 30).

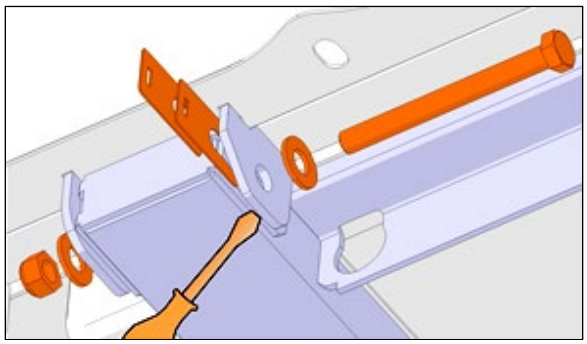

FIGURE 42: SHIM INSTALLATION, TRANSVERSE SCREW. ARRANGEMENT MAY VARY

## 6. FUEL SPECIFICATIONS

The quality of fuel used for high-speed diesel engine operation is a very important factor in obtaining satisfactory engine performance, long engine life and acceptable exhaust emission levels.

The U.S. Environmental Protection Agency (EPA) has issued new standards to improve air quality by significantly reducing emissions through a combination of cleaner-burning diesel engines and vehicles.

To meet EPA standards, the petroleum industry produces **Ultra Low Sulfur Diesel** (ULSD) fuel, also referred to as S15, containing a maximum of 15ppm (parts-per-million) sulfur.

On-highway diesel engines meeting 2010 emission regulations are designed to operate **ONLY** with ULSD fuel. ULSD fuel will enable the use of cleaner technology diesel engines and vehicles with advanced emissions control devices, resulting in significantly improved air quality.

### 6.1 FUEL TYPE

EPA-10 and later engines like the Volvo D13 are designed to run on **Ultra Low Sulfur Diesel** (ULSD) fuel, which can contain no more than 15 ppm sulfur.

Fuel used must meet engine manufacturer's specification. Refer to Volvo engine specifications.

**⚠ CAUTION**

ULSD fuel is necessary to avoid fouling the engine's Exhaust Aftertreatment System. Improper fuel use will reduce the efficiency of the engine's Aftertreatment System and may permanently damage the system.

**⚠ CAUTION**

Owners of 2010 and later model year on-highway diesel engine must refuel only with ULSD fuel.

*NOTE*

*Burning Low Sulfur Diesel fuel (instead of ULSD fuel) in 2010 and later model year diesel engines is illegal and punishable with civil penalties.*

*NOTE*

*Engine and vehicle manufacturers expect ULSD fuel to be fully compatible with the existing fleet, including 2006 and earlier model year vehicles. In some instances, the introduction of ULSD fuel to older vehicles may affect fuel system components or loosen deposits in fuel tanks. As part of a good maintenance program, owners and operators of existing cars, trucks and buses are encouraged to monitor their diesel-powered vehicles closely for potential fuel system leaks or premature fuel filter plugging during the change-over to ULSD fuel.*

*NOTE*

*Like Low Sulfur Diesel fuel, ULSD fuel requires good lubricity and corrosion inhibitors to prevent unacceptable engine wear. As necessary, additives to increase lubricity and to inhibit corrosion will be added to ULSD fuel **prior** to its retail sale.*

### 6.2 BLENDING

Only ultra low sulfur kerosene – No.1 diesel with no more than 15ppm sulfur may be blended with ULSD fuel to improve cold weather performance. With so many kerosene formulations on the

market, care must be taken to select kerosene with a maximum of 15ppm sulfur.

Blend rates remain the same as with Low Sulfur Diesel fuel.

### 6.3 BIODIESEL FUELS

Biodiesel up to a maximum of 5% blend (B5) may be used and will not affect the manufacturers' mechanical warranty as to engine and emissions system related components, provided the biofuel used in the blend conforms to ASTM D6751, B1 to B5 blends conform to ASTM D975. Also, any engine performance problem related to the use of biodiesel fuel would not be recognized nor considered as Volvo or Prevost's responsibility.

However, Volvo engines are certified to comply with U.S. EPA and California emissions standards based upon the use of *test fuels* with specifications established by these regulatory agencies.

Alternative fuels, including biodiesel, that are not substantially similar to the required *test fuels* may adversely affect engine emissions compliance. As a result, Volvo does not warrant the engine will conform to applicable Federal or California emissions limits when operated on biodiesel or other alternative fuels that are not substantially similar to specified test fuels used for certification.

Additional maintenance care must be carried-out for the following systems:

#### 6.3.1 Biodiesel Fuels and Preheater

For operation of the preheater with biodiesel, a retrofit is mandatory. Refer to the guidelines outlined in the last version of the Valeo Workshop Manual for Thermo 230, 300, 350, available on the Technical Publications USB flash drive and on Prevost technical publications website.

#### 6.3.2 Biodiesel Fuels and the Engine

Use an oil sampling method to establish the appropriate oil drain interval for your application.

Fuel filter change intervals should be analyzed and adjusted accordingly.

## 7. AIR CLEANER (DRY TYPE)

The vehicle is equipped with a dry-type replaceable element air cleaner, located in the engine compartment. Access the air cleaner through the engine R.H. side door. Engine air enters the air cleaner through an intake duct on the R.H. side of the rear cap, next to the last window. It then flows through a pre-cleaner and finally through the air cleaner. The pre-cleaner removes dust and moisture by means of a discharge tube at the bottom of the element. It is in series with a replaceable impregnated paper filter element (air cleaner).

### 7.1 PRE-CLEANER SERVICING



**MAINTENANCE**

The pre-cleaner is designed to be self-cleaning; however, it should be inspected and any accumulated foreign material removed during the periodic replacement of the impregnated paper filter element.

### 7.2 AIR CLEANER SERVICING

Replacing the air filter cartridge is important to preserve a good air quality at a sufficient level. Neglecting this servicing could lead to an efficiency loss and eventual engine problems. Follow these steps to replace the filter cartridge:

#### 7.2.1 Checking restriction indicator

Locate the restriction gage in the engine compartment, at the back of the vehicle. Consisting of a black tube, it is fixed on the main intake hose.

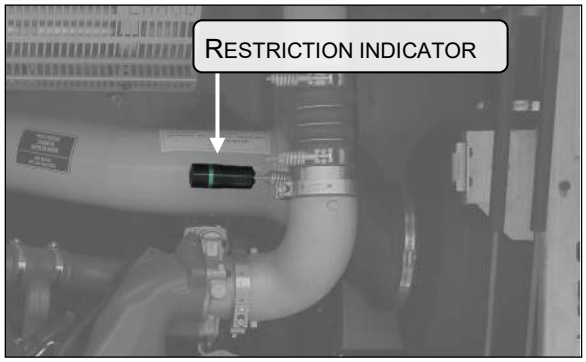


FIGURE 43 RESTRICTION INDICATOR LOCATION

*Indication of a need to replace the filter will be apparent once its line turns red*. Proper operation will be indicated by a green line. Consult the servicing schedule for time intervals between each regular filter change.

### 7.2.2 Replacing the Filter

- Remove the four filter cover plastic bolts. The filter itself can be removed by pulling it with gentle movements from left to right and up/down. A residual suction may occur, creating additional resistance.
- Empty the drain rubber valve located under the filter housing; if damaged this part can be ordered and changed.

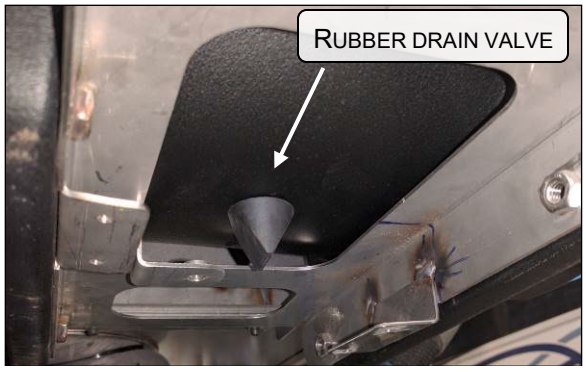


FIGURE 44 RUBBER DRAIN VALVE UNDER FILTER

- Using a clean damp cloth, wipe the sealing flange and the inside of the outlet tube.

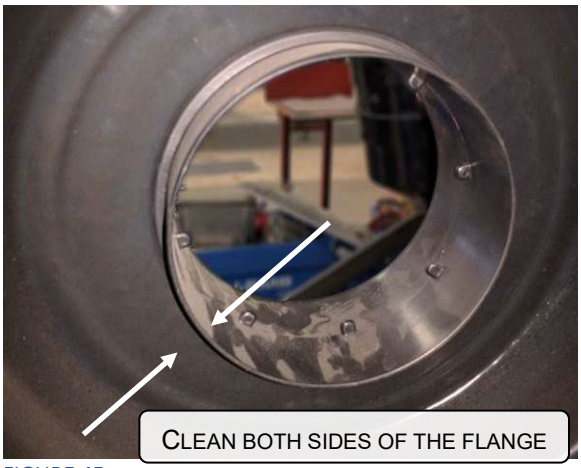


FIGURE 45

- Look for traces of dirt and particles on the outer surface of the old filter, indicating possible leakage. If so, the leakage cause should be investigated and solved.
- Unbox the new filter, inspect the inner sealing surface for potential non-conformities; Do not wipe the surface as it is factory sprayed with a dry lubricant for an easier mounting.

Insert new filter by gently pushing it inside the filter housing.

**CAUTION**

Avoid pushing it by its center; use both hands and push on its outer rim until it is well seated. (It should be exceeding the housing by around 2-1/2 inches as shown)

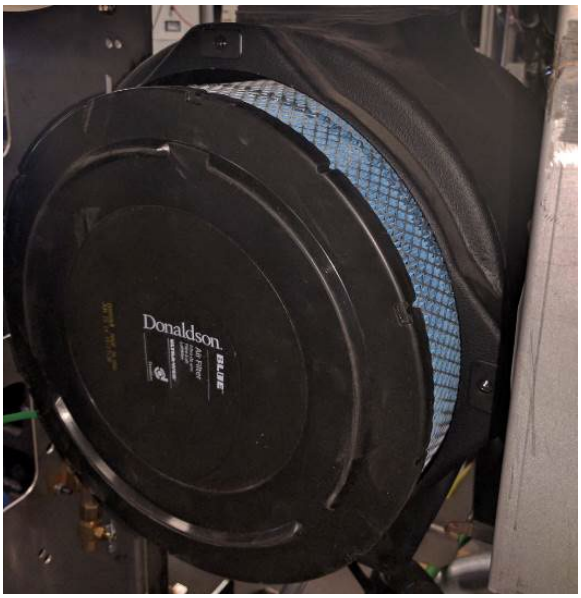


FIGURE 46

- Replace the filter cover and tighten the 4 plastic bolts using recommended torque settings (as displayed on filter cover).

**TORQUE: 10-15 lb-ft (14-20 Nm)**

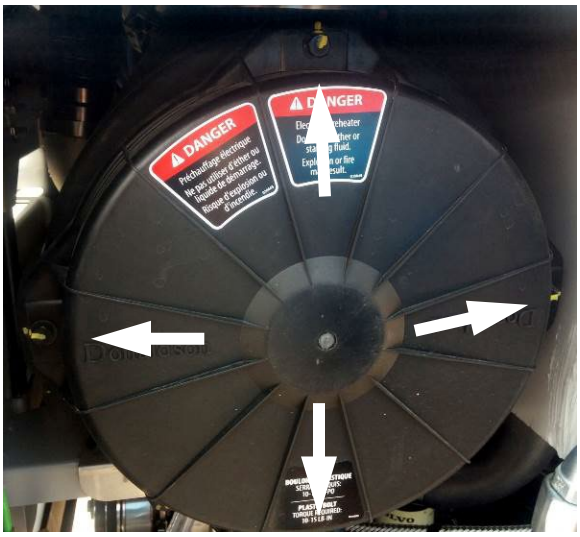


FIGURE 47

WARNING: The cover is not supposed to apply pressure on the filter. If so, the filter needs to be pushed further in the housing.

- Reset the restriction gage by pushing on the right-hand side button.

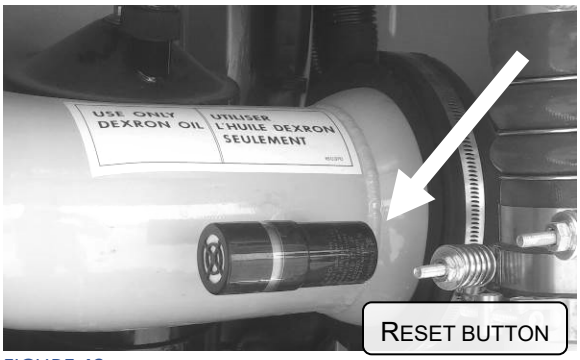


FIGURE 48

## 7.3 GENERAL RECOMMENDATIONS

The following maintenance procedures will ensure efficient air cleaner operation:

1. Keep the air cleaner housing tight on the air intake pipe;
2. Make sure the correct filters are used for replacement;
3. Keep the air cleaner properly assembled so the joints are air-tight;
4. Immediately repair any damage to the air cleaner or related parts;
5. Inspect, clean or replace the air cleaner or elements as operating conditions warrant. Whenever an element has been removed from the air cleaner housing the inside surface of the housing must be cleaned with a soft clean cloth;
6. Periodically inspect the entire system. Dust-laden air can pass through an almost invisible crack or opening which may eventually cause damage to an engine;
7. Never operate the engine without an element in the air cleaner assembly;

> **CAUTION**
>
> Do not ignore the Warning given by the air restriction indicator. This could result in serious engine damage.

8. Store new elements in a closed area free from dust and possible damage.

## 7.4 AIR CLEANER RESTRICTION INDICATOR

A resettable restriction indicator may be installed on the engine air-intake duct, clearly visible from the rear engine compartment. The indicator monitors the vacuum level between the air cleaner and the engine. A red marker is displayed when the air cleaner is clogged and must be replaced. Reset by pressing on the indicator's extremity.

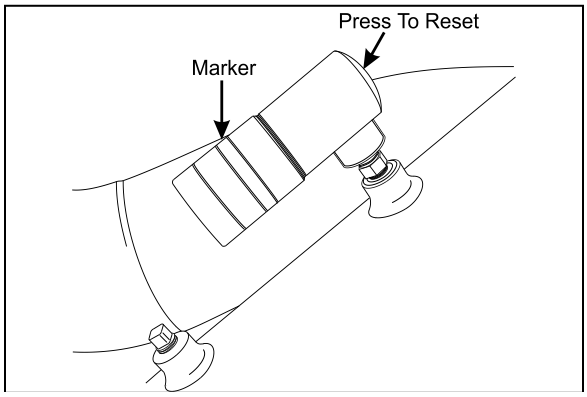


FIGURE 49: RESTRICTION INDICATOR 01052

*NOTE*

*Some vehicles may be equipped with a slightly different "clear body" restrictor indicator. This type of indicator is usually combined with a warning light located on the rear control panel. Reset by pressing on the indicator's extremity.*

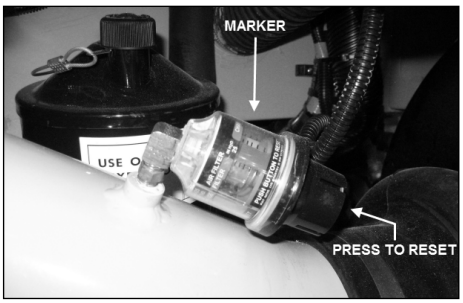


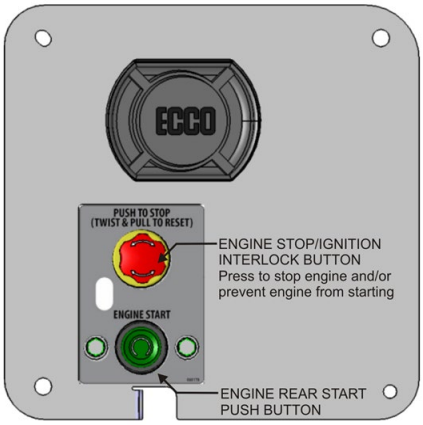


## MAINTENANCE

**Air cleaner**

Change the filter element when indicated by the restriction indicator or at the intervals specified by the Lubrication And Servicing Schedule in Section 24: LUBRICATION & SERVICING.

## 8. FUEL PEDAL

The EFPA (Electronic Foot Pedal Assembly) connects the accelerator pedal to a potentiometer (a device that sends an electrical signal to the ECM, which varies in voltage, depending on how far down the pedal is depressed). The EFPA is installed in the space normally occupied by a mechanical foot pedal. It has maximum and

minimum stops that are built into the unit during manufacturing.

## 8.1 FUEL PEDAL ADJUSTMENT

The EFPA contains a throttle position sensor that varies the electrical signal sent to the ECM. The sensor must be adjusted whenever an EFPA is serviced. In addition, the sensor should be adjusted any time codes 21 and 22 are flashed.

With the ignition "ON" and the proper diagnostic tool (DDR) (for information regarding the DDR, see *"01 ENGINE"* in this manual), check the throttle counts at idle and full throttle positions. Proper pedal output should be 20/30 counts at idle and 200/235 at full throttle. If adjustment is necessary, remove the potentiometer retaining screws and rotate the potentiometer clockwise to increase counts or counterclockwise to decrease. When correct output is confirmed, tighten retaining screws.

## 8.2 POTENTIOMETER REPLACEMENT

1. Disconnect cable harness connector.
2. Loosen the two screws and remove potentiometer. Retain for re-assembly.
3. Discard potentiometer (Figure 38).

**⚠ CAUTION**

Note the routing and clamping locations of the cable before disassembly. Proper cable routing and fastening is critical to the operation of this system.

4. Position new potentiometer. Press potentiometer onto the potentiometer shaft, matching cutouts in shaft to drive tangs of potentiometer. Apply hand pressure until potentiometer has bottomed out in housing. Reinstall screws (Figure 38) and tighten just enough to secure potentiometer lightly.

**TORQUE: 10-20 lb-in (1.13-2.26 Nm)**

5. Reconnect electronic foot pedal assembly's cable harness to the ECM connector. If potentiometer calibration is necessary (see *"FUEL PEDAL ADJUSTMENT"* in this section).

**⚠ CAUTION**

Make sure the cable harness is routed correctly, and securely installed so that it does not become pinched, stretched, or otherwise damaged during vehicle operation.

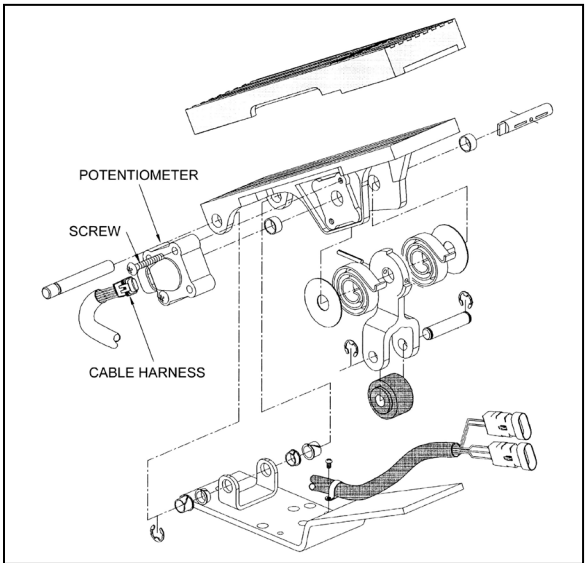


FIGURE 50: ELECTRONIC FOOT PEDAL ASSEMBLY 03035

## 9. SPECIFICATIONS

**Davco Fuel Pro 386 Fuel Filter / Water Separator Element**

Max Fuel Flow ..... 180 US gal/h (681 l/h)
Water removal @ 10 microns ..... 96.9%
Dirt holding capacity @ 10 microns ..... 89 g

**Primary fuel filter/fuel water separator**

Filter type ..... Disposable filter element with reusable filter retainer

**Main fuel filter**

Filter type ..... Disposable filter element with reusable filter retainer

**Fuel tank Capacity**

H3-45 coach vehicles ..... 222 US gallons (840 liters)
H3-45 VIP vehicles ..... 200 US gallons (757 liters)
X3 series vehicles ..... 203 US gallons (768 liters)
X3 series vehicles (steel tank) ..... 180 US gallons (681 liters)

**Air Cleaner**

Filter type ..... Dry-type replaceable element
Filter change interval ..... Red marker on restriction indicator

**Preheater Fuel Filter**

Heater type ..... Thermo 300 High pressure atomizer
Heater power ..... 104000 btu/h
Pump flow ..... 1.05 US gal/h (4 l/h)

# CONTENTS

**SECTION CHANGE LOG** ..... **2**

**1. TORQUE TABLES** ..... **3**

1.1. X3 SERIES ..... 3
1.2. H3 SERIES ..... 5
1.3. MISCELLANEOUS TORQUES ..... 9

**2. EXHAUST AFTERTREATMENT SYSTEM (EATS) OVERVIEW** ..... **10**

1.4. MAINTENANCE ..... 11
1.5. FLEXIBLE COUPLING INSTALLATION ..... 11

**3. DIESEL PARTICULATE FILTER (DPF)** ..... **12**

1.6. DIESEL PARTICULATE FILTER ASSEMBLY REMOVAL ..... 14

**4. CATALYTIC CONVERTER** ..... **16**

1.7. REMOVAL ..... 16
1.8. ASSEMBLING CATALYTIC CONVERTER ..... 17

**5. DIFFUSER ASSEMBLY** ..... **19**

1.9. DIFFUSER ADJUSTMENT ..... 19
1.10. MAINTENANCE ..... 19
1.11. DIFFUSER EXTENSION – (H3-45 VIP / X3-45 VIP) ..... 20

**6. DIESEL EXHAUST FLUID (DEF) TANK AND INJECTION SYSTEM** ..... **20**

1.12. DIESEL EXHAUST FLUID ..... 21
1.13. DEF TANK CLEANING ..... 23
1.14. PUMP ASSEMBLY FILTER ELEMENT REPLACEMENT ..... 23
1.15. FILLER NECK STRAINER ..... 24

**7. AFTERTREATMENT HYDROCARBON DOSER** ..... **24**

1.16. REPLACEMENT ..... 24

## SECTION CHANGE LOG

| | DESCRIPTION | DATE |
|---|---|---|
| 1 | | |
| 2 | | |
| 3 | | |
| 4 | | |
| 5 | | |
| 6 | | |

## 1. TORQUE TABLES

The following tables show specific torque values for the DPF assembly. *In the absence of a torque specification for a given item, standard torque applies.* See table in Section 00: General Information.

### 1.1. X3 SERIES

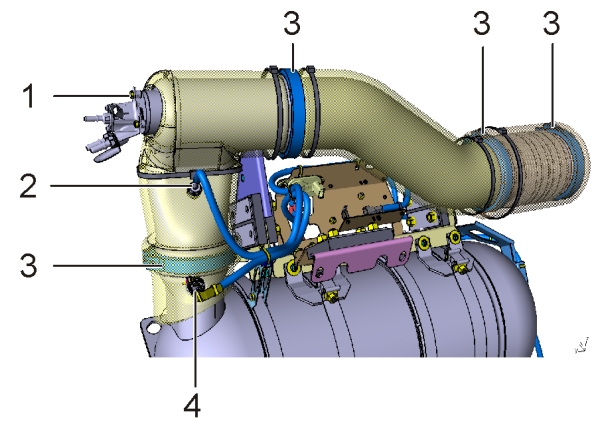


04050_1

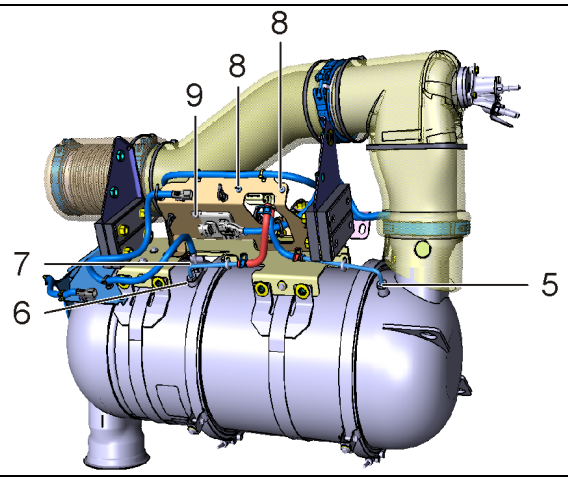


04036

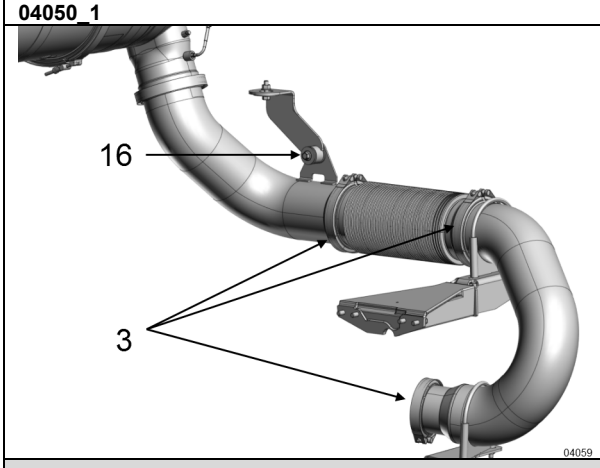


**X3 SERIES TORQUE SPECIFICATIONS**

| No | DESCRIPTION | TORQUE |
|---|---|---|
| 1 | DEF injection nozzle mounting bolt | 6.3-8.5 lb-ft (9-12 Nm) |
| 2 | DPF outlet temperature sensor (T3) | 30-37 lb-ft (41-50 Nm) * |
| 3 | V-band clamp 4-inch & 5-inch | 6.5-9.5 lb-ft (9-13 Nm) |
| 4 | NOx sensor 1 | 30-44 lb-ft (41-60 Nm) |
| 5 | DPF filter outlet pressure sensor | 3.7-4.6 lb-ft (5.02-6.24 Nm) * |
| 6 | DPF filter inlet pressure sensor | 3.7-4.6 lb-ft (5.02-6.24 Nm) * |
| 7 | Diesel Oxidation Catalyst (DOC) temperature sensor (T2) | 30-37 lb-ft (41-50 Nm) * |
| 8 | Cap screw | 3.8-5.1 lb-ft (5.15-6.91 Nm) |
| 9 | Module mounting bolt | 5.9-8.8 lb-ft (8-11.93 Nm) |
| 16 | Vibration damper screw downstream from turbo | 15.5-18.5 lb-ft (21-25 Nm) |

* Use Permatex 454G anti-seize lubricant or Loctite 76764 silver grade anti-seize

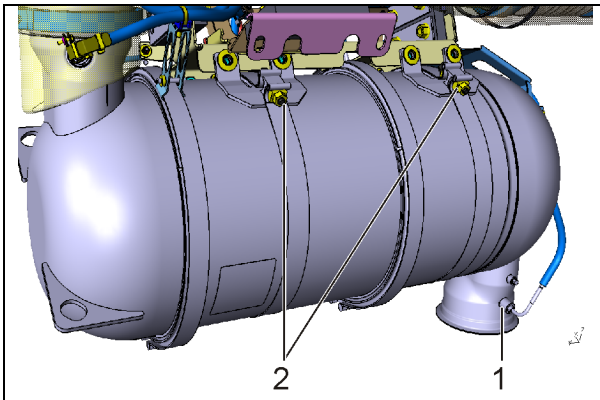


04037

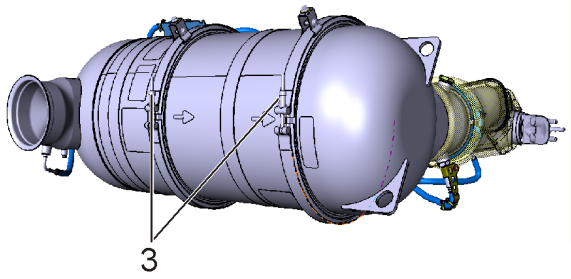


04038

| X3 SERIES TORQUE SPECIFICATIONS | | |
|---|---|---|
| No | DESCRIPTION | TORQUE |
| 1 | DPF inlet temperature sensor (T1) | 30-37 lb-ft (41-50 Nm)* |
| 2 | DPF tank strap | 17-23 lb-ft (23-31 Nm) |
| 3 | DPF tank V-band clamp | 17-23 lb-ft (23-31 Nm) |

* Use Permatex 454G anti-seize lubricant or Loctite 76764 silver grade anti-seize

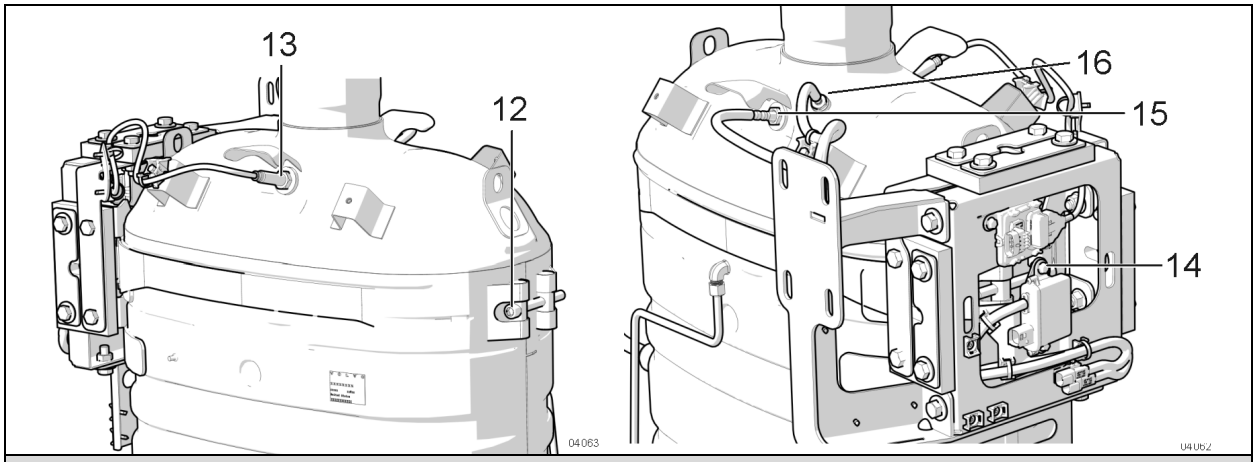


| X3 SERIES TORQUE SPECIFICATIONS | | |
|---|---|---|
| No | DESCRIPTION | TORQUE |
| 12 | SCR tank strap bolts | 30-37 lb-ft (41-50 Nm) |
| 13 | NOx sensor 2 (outlet) | 30-44 lb-ft (41-60 Nm) |
| 14 | Module mounting bolts | 5.9-8.8 lb-ft (8-11.93 Nm) |
| 15 | SCR tank particulate matter sensor | 33-40.5 lb-ft (45-55 Nm) |
| 16 | SCR tank temperature sensor (T4) | 30-37 lb-ft (41-50 Nm)* |

* Use Permatex 454G anti-seize lubricant or Loctite 76764 silver grade anti-seize

1.2. H3 SERIES

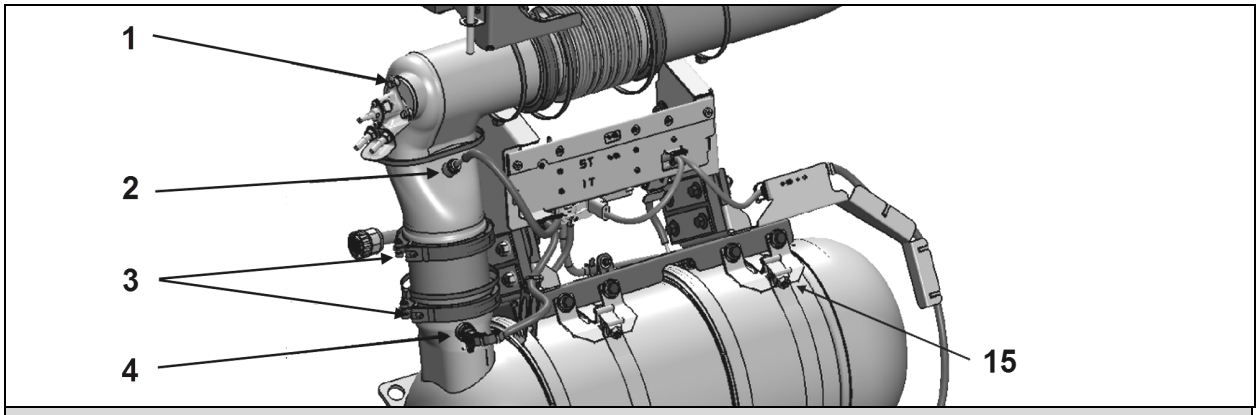


| H3 SERIES TORQUE SPECIFICATIONS | | |
|---|---|---|
| No | DESCRIPTION | TORQUE |
| 1 | DEF injection nozzle mounting bolt | 6.3-8.5 lb-ft (9-12 Nm) |
| 2 | DPF outlet temperature sensor (T3) | 30-37 lb-ft (41-50 Nm) * |
| 3 | V-band clamp 4-inch & 5-inch | 6.5-9.5 lb-ft (9-13 Nm) |
| 4 | NOx sensor 1 | 30-44 lb-ft (41-60 Nm) |
| 15 | DPF tank strap | 17-23 lb-ft (23-31 Nm) |

* Use Permatex 454G anti-seize lubricant or Loctite 76764 silver grade anti-seize

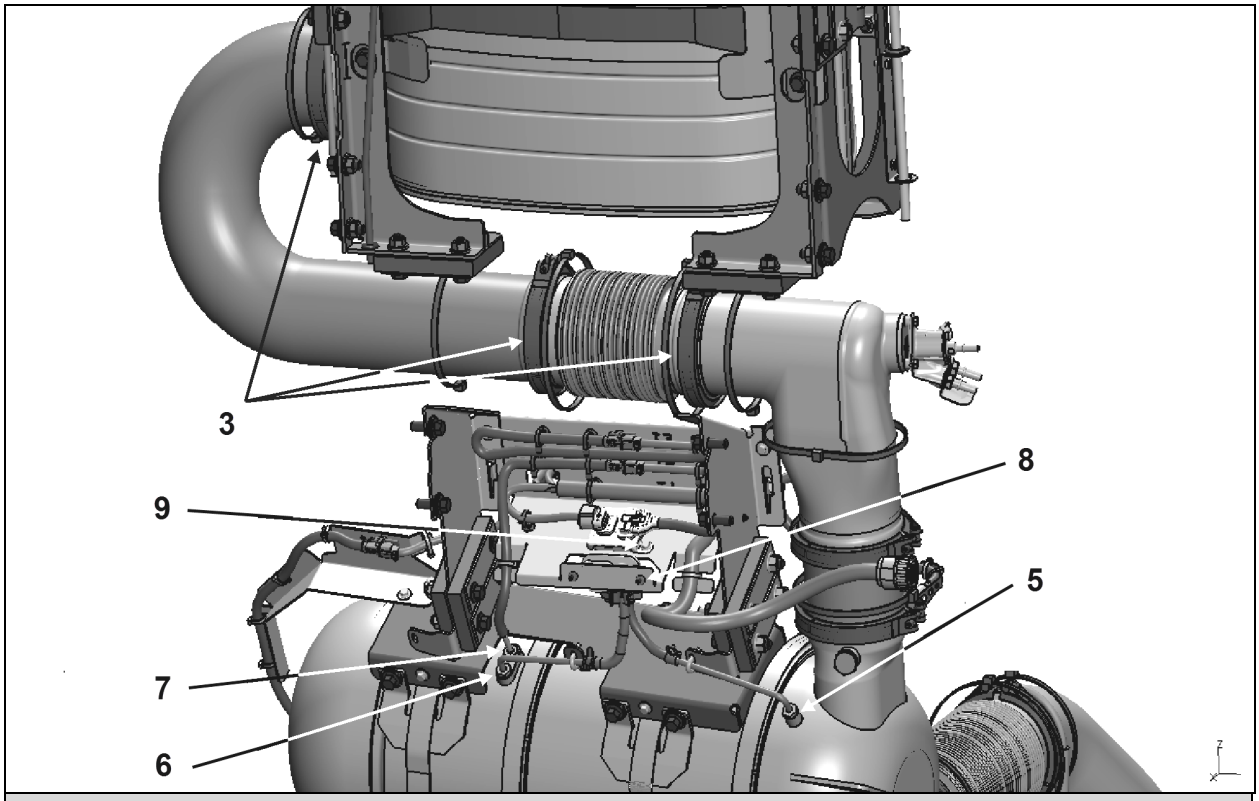


| H3 SERIES TORQUE SPECIFICATIONS | | |
|---|---|---|
| No | DESCRIPTION | TORQUE |
| 3 | V-band clamp 4-inch & 5-inch | 6.5-9.5 lb-ft (9-13 Nm) |
| 5 | DPF filter outlet pressure sensor | 3.7-4.6 lb-ft (5.02-6.24 Nm) * |
| 6 | DPF filter inlet pressure sensor | 3.7-4.6 lb-ft (5.02-6.24 Nm) * |
| 7 | Diesel Oxydation Catalyst (DOC) temperature sensor (T2) | 30-37 lb-ft (41-50 Nm) * |
| 8 | Cap screw | 3.8-5.1 lb-ft (5.15-6.91 Nm) |
| 9 | Module mounting bolt | 5.9-8.8 lb-ft (8-11.93 Nm) |

* Use Permatex 454G anti-seize lubricant or Loctite 76764 silver grade anti-seize

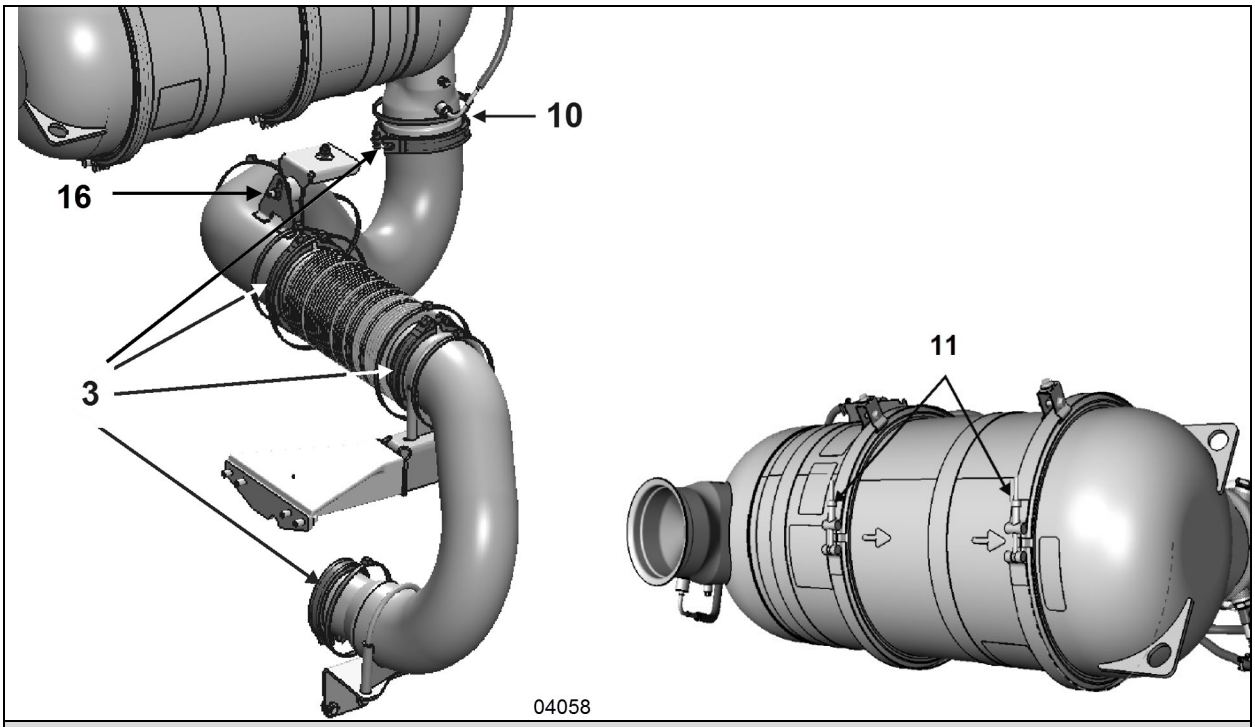


| H3 SERIES TORQUE SPECIFICATIONS | | |
|---|---|---|
| No | DESCRIPTION | TORQUE |
| 3 | V-band clamp 4-inch & 5-inch | 6.5-9.5 lb-ft (9-13 Nm) |
| 10 | DPF inlet temperature sensor (T1) | 30-37 lb-ft (41-50 Nm) * |
| 11 | DPF tank V-band clamp | 17-23 lb-ft (23-31 Nm) |
| 16 | Vibration damper screw downstream from turbo | 15.5-18.5 lb-ft (21-25 Nm) |

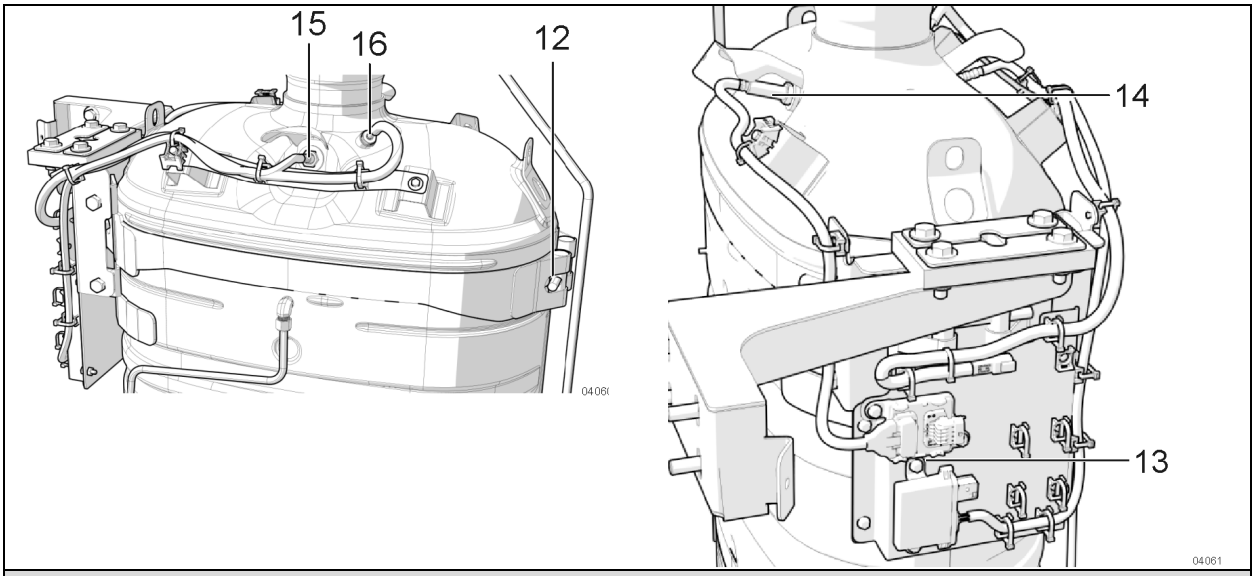


**H3 SERIES TORQUE SPECIFICATIONS**

| No | DESCRIPTION | TORQUE |
|---|---|---|
| 12 | SCR tank strap | 30-37 lb-ft (41-50 Nm) |
| 13 | Module mounting bolt | 6.3-8.5 lb-ft (9-12 Nm) |
| 14 | SCR tank NOx sensor 2 (outlet) | 30-44 lb-ft (41-60 Nm) |
| 15 | SCR tank particulate matter sensor | 33-40.5 lb-ft (45-55 Nm) |
| 16 | SCR tank temperature sensor (T4) | 30-37 lb-ft (41-50 Nm)* |

* Use Permatex 454G anti-seize lubricant or Loctite 76764 silver grade anti-seize

## 1.3. MISCELLANEOUS TORQUES

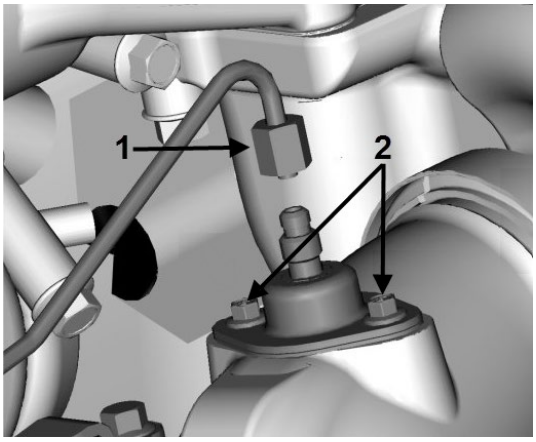


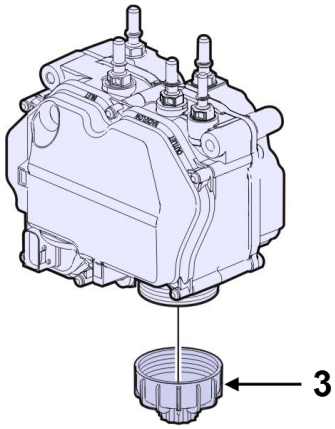


| MISCELLANEOUS TORQUES | | |
|---|---|---|
| No | DESCRIPTION | TORQUE |
| 1 | Aftertreatment hydrocarbon doser fuel line fitting | 177-213 lb-in (20-24 Nm) |
| 2 | Aftertreatment hydrocarbon doser mounting bolts | 120-130 lb-in (14-15 Nm) |
| 3 | DEF pump filter cover | 22 lb-ft (30 Nm) |

## 2. EXHAUST AFTERTREATMENT SYSTEM (EATS) OVERVIEW

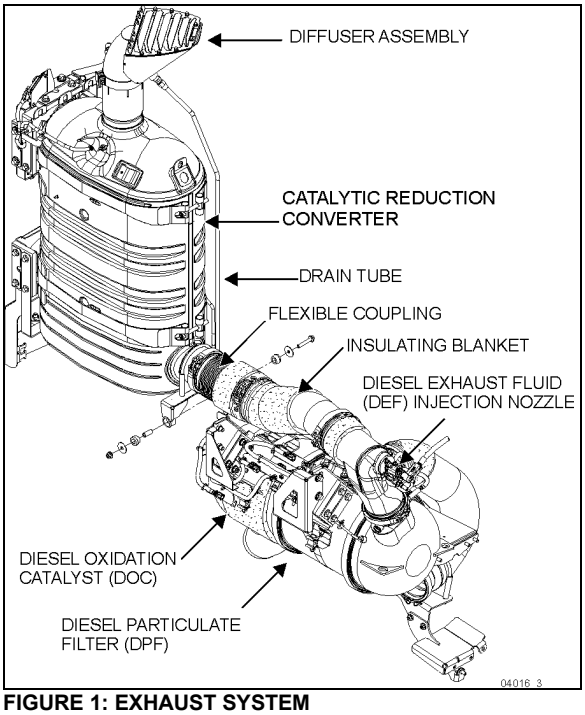


**FIGURE 1: EXHAUST SYSTEM**

The technology behind clean emissions is through the immediate aftertreatment of engine exhaust. The process for reducing NOx via aftertreatment is called Selective Catalytic Reduction (SCR). It requires a catalytic converter into which is injected Diesel Exhaust Fluid (DEF). The primary component of DEF is water; the active component is urea. Urea is a nitrogen compound that turns to ammonia when heated. When a urea-and-water solution is injected into the exhaust stream and passed over a catalyst, the urea reacts with the NOx to form nitrogen and water vapor – two clean and harmless components of the air we breathe. The aftertreatment system primary function is to capture and oxidize (regenerate) the particulate matter (soot) in the engine exhaust gases and to reduce NOx. To achieve this goal, the exhaust aftertreatment system (EATS) is split into two main sections: the exhaust gases first enter the **Diesel Oxidation Catalyst (DOC)** and **Diesel Particulate Filter (DPF)** assembly to capture and regenerate the soot on a regular or passive basis, then the exhaust gases flow through the **catalytic converter** to reduce NOx to minimum level. Through constant monitoring of the exhaust gas temperature and the system back pressure, the Engine management System (EMS) is able to manage regeneration.

The EATS is rubber mounted to the vehicle structure. This feature reduces the transmission of vibrations to the EATS thus resulting in extended life of the system, brackets and also noise reduction.

*IMPORTANT NOTE*

*Exhaust Aftertreatment System (EATS) components must not be removed, altered or modified in any way. In order to protect the emission control system from tampering, inducement measures will occur if the following states are detected:*

- Disconnection of DEF tank level sensor
- Blocked DEF line or dosing valve
- Disconnection of NOx sensor
- Disconnected exhaust temperature sensor
- Disconnected DEF temperature sensor
- Disconnected DEF quality sensor
- Disconnection of DEF dosing valve
- Disconnection of DEF pump
- Disconnection of SCR wiring harness

Auxiliary Emission Control Device (EACD) defines as any element of design which senses temperature, vehicle speed, engine RPM, transmission gear, manifold vacuum, or any other parameter for the purpose of activating, modulating, delaying, or deactivating the operation of any part of the emission control system.

Disconnection of the following EACD produces immediate activation of the Malfunction Indicator Lamp MIL and 25% engine derate after three (3) hours of a continuous open circuit.

- Intake throttle position sensor;
- Ambient air temperature sensor;
- Vehicle speed;
- Engine oil pressure sensor;
- Exhaust back pressure sensor;
- Camshaft speed sensor;
- EGR delta pressure;
- Fuel rail pressure
- Engine timing sensor;

- Engine coolant temperature;
- EGR temperature sensor.

### 1.4. MAINTENANCE

Inspect the exhaust system periodically for restrictions and leaks. Figure 1 presents the major components of the exhaust system. Exhaust leaks are commonly the result of loose clamp bolts, corroded or punctured pipes. In addition to excessive noise, a leaking exhaust system could allow toxic gases to enter the vehicle. Damage to surrounding components from hot gases could result as well. Replace damaged or corroded exhaust components immediately.

Inspect the exhaust system as follows:

- At vehicle inspection intervals ;
- Whenever a change is noticed in the sound of the exhaust system ;
- When components close to the exhaust system get unnaturally dirty ;
- Whenever the exhaust system is damaged.

Replace damaged or corroded exhaust system components without delay.

When operating the engine in a service garage or in a closed area, the exhaust must be vented to the outside. Place the shop vent hose over the exhaust outlet pipe.



**DANGER**

Avoid breathing exhaust gases since they contain carbon monoxide which is odorless and colorless but harmful. Carbon monoxide is a dangerous gas that can cause unconsciousness and can be lethal. If, at any time you suspect that exhaust fumes are entering the vehicle, locate and correct the cause(s) as soon as possible.

**WARNING**

Diesel engine exhaust and some of its constituents are known to the State of California to cause cancer, birth defects and other reproductive harm.

*NOTE*

***INSULATING BLANKETS***

*The key to successful regeneration is high exhaust temperature for an extended period of time. For this reason, insulating blankets must remain permanently on the exhaust system.*

*If insulating blankets are removed from the system, the exhaust gases temperature may not be high enough to permit efficient particulate oxidation during passive regeneration, resulting in increased fuel consumption due to overuse of active or stationary regeneration.*

*Use of insulating blankets on the SCR converter is **no longer** necessary on vehicles equipped with engine compliant to OBD19.*

### 1.5. FLEXIBLE COUPLING INSTALLATION

The flexible coupling contains a rigid interior pipe (Figure 2). To allow appropriate flexibility once installed, be sure interior pipe is concentric to flexible part and that the flexible coupling is straight when installed. This piece of equipment handles vibration and thermal expansion.

**CAUTION**

Adequately support the exhaust system line. The load of the exhaust line **must not** be transferred to the turbocharger.

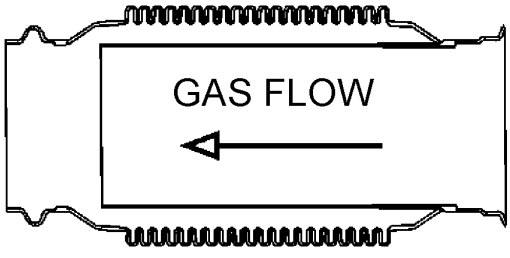


**FIGURE 2: FLEXIBLE COUPLING**

### 3. DIESEL PARTICULATE FILTER (DPF)

Besides trapping soot, the **DPF** (**Diesel Particulate Filter**) also traps the ash that has been generated when additives in engine oil are burned. However, unlike soot, ash cannot be oxidized. The ash that accumulates in the filter will eventually cause an increase in exhaust back pressure. EMS will constantly monitor the ash accumulation and forecast the approximate time until DPF ash cleaning is required. This allows you the opportunity to plan for the DPF ash cleaning interval. If ash cleaning is not performed proactively, and the back pressure increases beyond the system limit, EMS will flag the amber warning light on the telltale panel, notifying the operator that an ash cleaning is required. Clean remanufactured DPF cartridge will be available through Prevost on an exchange basis. For most vehicle applications and duty cycle, this will occur after approximately 200,000 to 400,000 miles (320,000 to 640,000 km) of operation.



**WARNING**

**HOT SURFACES**

Keep yourself clear of hot Aftertreatment System surfaces, particularly during and after active or stationary regeneration. Hot surfaces can cause serious burns.

Make sure Aftertreatment System components are cold before handling.



**MAINTENANCE**

**DPF (Diesel Particulate Filter)**

Either clean or replace filter cartridge at the intervals specified by the Lubrication And Servicing Schedule in Section 24: LUBRICATION & SERVICING.

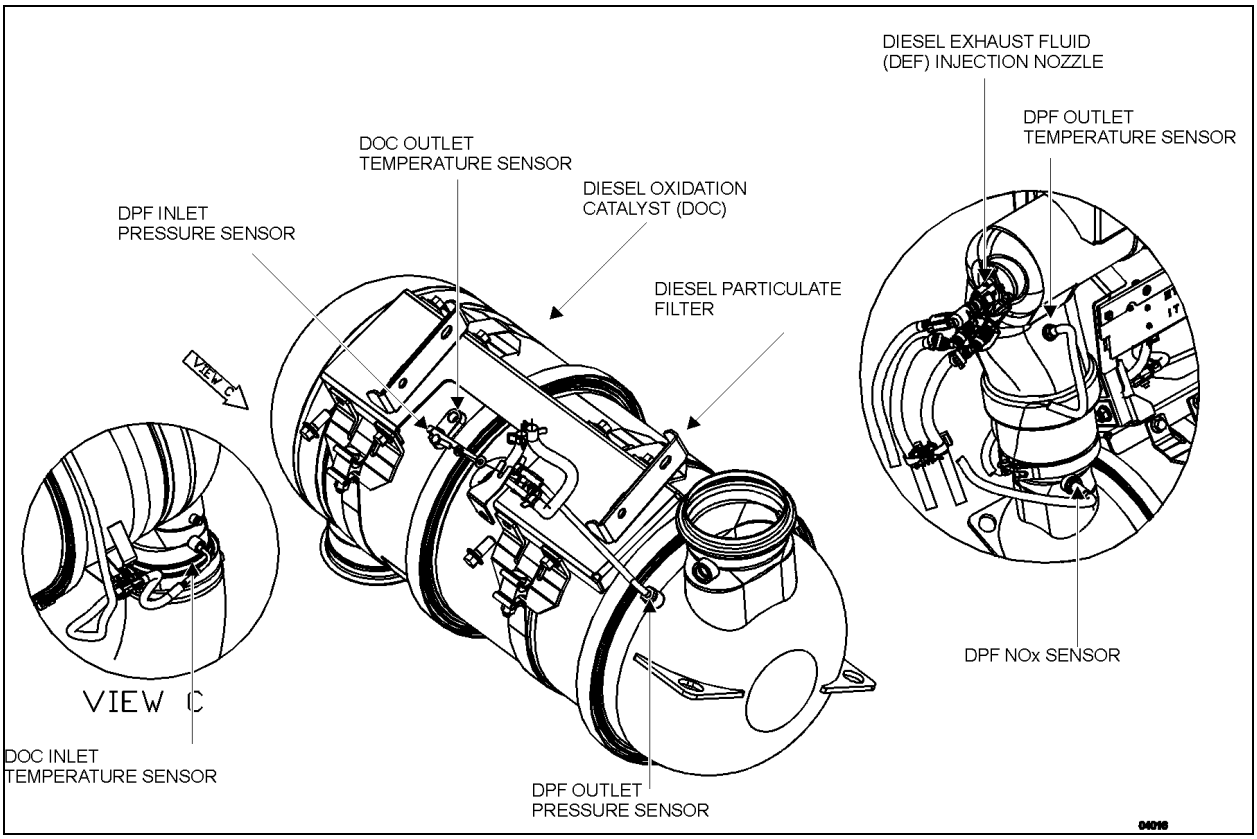


**FIGURE 3: DIESEL OXIDATION CATALYST (DOC) & DIESEL PARTICULATE FILTER (DPF) ASSEMBLY**

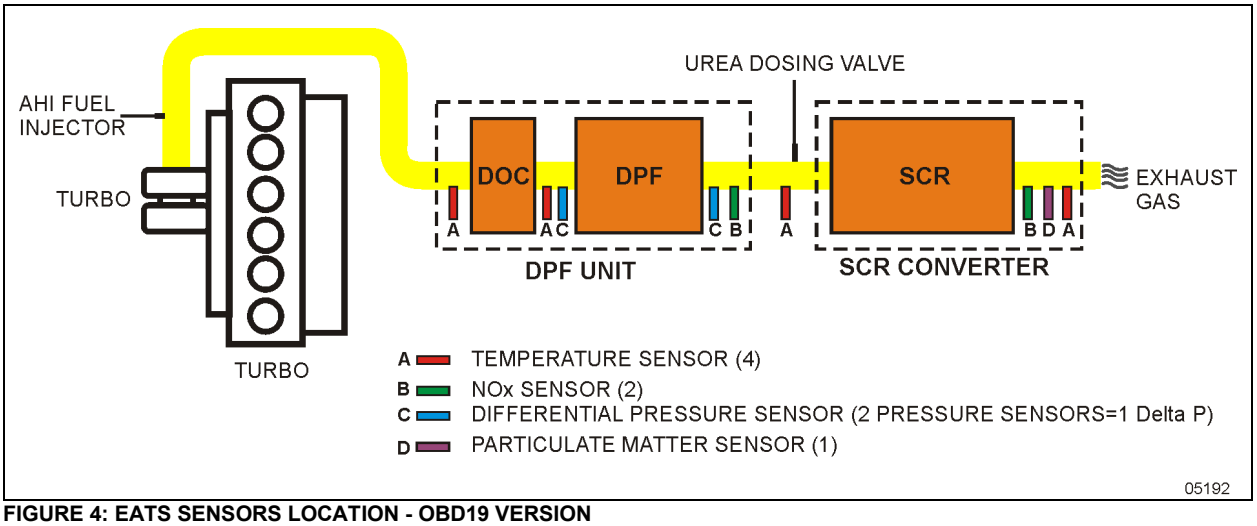


**FIGURE 4: EATS SENSORS LOCATION - OBD19 VERSION**

## WARNING

**HOT EXHAUST**

During stationary regeneration, exhaust gases temperature may get very hot at the diffuser outlet. Do not direct diffuser at combustible materials. Before initiating stationary regeneration, make sure that the diffuser outlet is clear of objects and that no one is working near the diffuser outlet. Stationary regenerations must be undertaken outdoors only.

**Never** initiate regeneration when exhaust gas collection system is in place.

## WARNING

**TOXICITY**

Do not initiate a stationary regeneration in a closed area like a garage. **Stationary regeneration must be undertaken outdoors only.**

### 1.6. DIESEL PARTICULATE FILTER ASSEMBLY REMOVAL

To remove the DPF, proceed as follows:

## CAUTION

External and internal temperatures remain hot long after engine has been shutdown. Allow the EATS to cool before handling. Wear protective clothing and glove while servicing.

1. First, Access the engine compartment
2. Put insulating blanket aside;
3. Disconnect pressure, NOx and temperature sensors;
4. Support Diesel Oxidation Catalyst (DOC) and Diesel Particulate Filter (DPF) assembly;

## CAUTION

**HEAVY DEVICE**

A suitable lifting or holding device is required. Properly support and attach lifting equipment to prevent the DOC and DPF assembly from falling when servicing.

5. Unfasten clamps holding DOC and DPF assembly;
6. Carefully lower DOC and DPF assembly;
7. To make sure components are reinstalled in the same position, mark position of DOC, DPF and V-band clamps in relation with one another before taking apart;

## CAUTION

**FRAGILE - HANDLE WITH CARE**

Use extreme care when handling DPF cartridge as it could be damaged or destroyed by dropping or sudden impact.

Clean remanufactured DPF filtration cartridge will be available on an exchange basis. For this reason, it is very important to maintain the cartridge in perfect condition. Damaged cartridge may not be refunded.

8. Also replace V-band clamps and gaskets when replacing DPF filtration cartridge;

*NOTE*

*When replacing the DPF cartridge, refer to the specifications on the DPF attached tag for proper replacement DPF selection.*

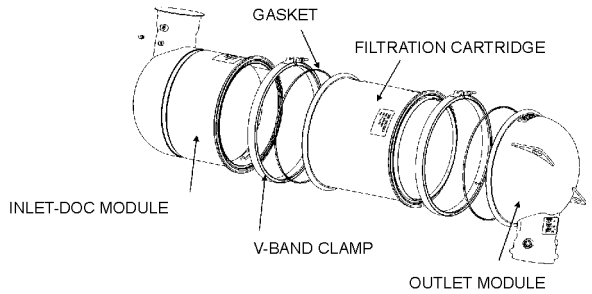

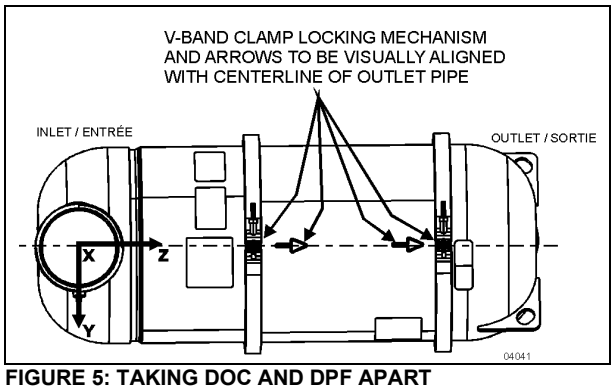


**FIGURE 5: TAKING DOC AND DPF APART**

9. Always put DOC and DPF filtration cartridge back together again in a vertical position to facilitate gaskets positioning;

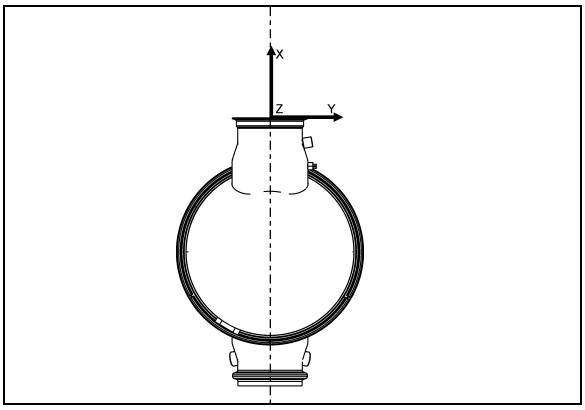


10. Tighten V-band clamps.

**TORQUE: 20 lb-ft (27 Nm)**

> **CAUTION**
>
> Always torque clamps by hand.

11. With a rubber mallet, hit clamps forcefully around circumference to make sure gasket is fully seated;
12. Support Diesel Oxidation Catalyst (DOC) and Diesel Particulate Filter (DPF) assembly during reinstallation;
13. Reconnect pressure, NOx and temperature sensors;
14. Fasten straps holding DOC and DPF assembly;
15. Put insulating blanket back.

## 4. CATALYTIC CONVERTER

In the first instance, the catalytic converter of the Selective Catalytic Reduction (SCR) does not need any maintenance. Unless an accident or damage occurs in the vicinity of the engine compartment; the catalytic converter will not have to be replaced.

However if the catalytic converter must be replaced, use one of the two following procedures:

### 1.7. REMOVAL

**Procedure # 1**

Radiator must be removed in order to lower the catalytic converter for replacement.

- Set the starter selector switch to the *OFF* position.
- Shut off the heater line shut-off valves.
- Using the quick-connect drain hose, drain the engine cooling system. Refer to Section 05, COOLING under "DRAINING COOLING SYSTEM".

> **CAUTION**
>
> Tag hoses and cables for identification before disconnecting in order to facilitate re-installation. Plug all openings to prevent dirt from entering the system.

- Disconnect and remove section of coolant pipe assembly mounted between the radiator outlet and the water pump inlet.

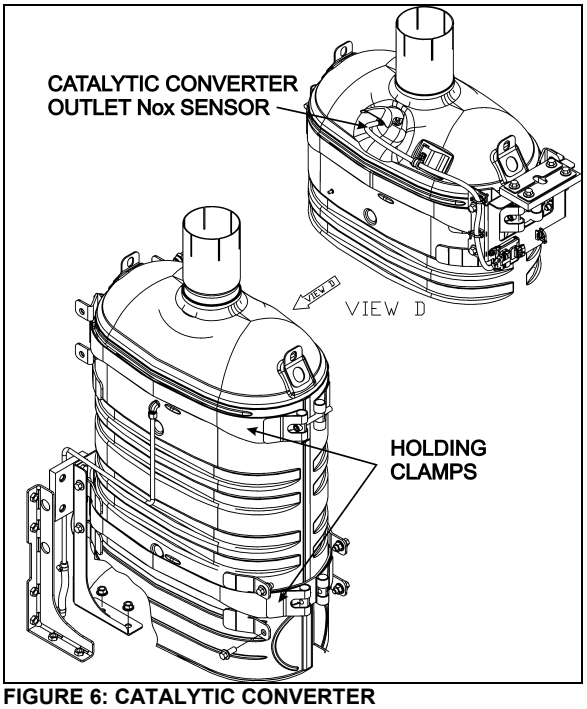


**FIGURE 6: CATALYTIC CONVERTER**

- Disconnect and remove a section of coolant pipe assembly mounted between the thermostat housing and the radiator inlet.

With the electric fan-clutch setup:

- Disconnect the electric fan-clutch connector located near the cooling fan right angle gearbox.
- Disconnect and remove the air intake duct mounted between the turbocharger outlet and the air cooler inlet.
- Open radiator door. Unfasten bolts and screws fixing radiator sealing frame.
- Remove radiator and air cooler assembly.

> **WARNING**
>
> Due to the heavy load of the radiator assembly, it must be adequately supported before attempting to remove it.

- Safely support catalytic converter from the top.
- Disconnect catalytic converter outlet NOx sensor.
- Remove clamps holding catalytic converter then lower.
- Remove or disconnect any piece of equipment or component that might be in

the way or that might prevent removing the catalytic converter.

**Procedure # 2**

- Set the starter selector switch to the *OFF* position.

With the electric fan-clutch setup:

- Shut off the heater line shut-off valves.
- Remove DOC and DPF assembly (Refer to paragraph 2.1 in this Section).
- Remove pipe connecting DOC & DPF assembly to catalytic converter.
- Using the quick-connect drain hose, drain the engine cooling system. Refer to Section 05, COOLING under "DRAINING COOLING SYSTEM".

> **CAUTION**
>
> Tag hoses and cables for identification before disconnecting in order to facilitate re-installation. Plug all openings to prevent dirt from entering the system.

- Disconnect and remove section of coolant pipe assembly mounted between the radiator outlet and the water pump inlet.
- Disconnect and remove a section of coolant pipe assembly mounted between the thermostat housing and the radiator inlet.
- Disconnect and remove the air intake duct mounted between the turbocharger outlet and the air cooler inlet.
- Remove coolant surge tank.
- Release tension from drive belt (Refer to paragraph 12.1 and 15.1 in Section 05: Cooling System).
- Cut cable ties and disconnect electrical connector from fan clutch. Remove fan drive shaft fasteners at the gear box.
- Remove radiator fan drive mechanism support.
- Safely support catalytic converter from the top.
- Disconnect catalytic converter outlet NOx sensor.
- Remove clamps holding catalytic converter then lower.

With all setups:

- Remove or disconnect any piece of equipment or component that might be in the way or that might prevent removing the catalytic converter.

### 1.8. ASSEMBLING CATALYTIC CONVERTER

**Before removing**

- Mark, with a vertical line the angular position of the lower (both sides) and upper clamps with regard to the clamps support located on the catalytic converter.

Lower

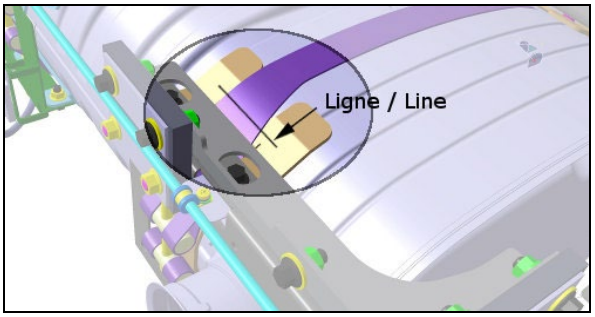


Upper

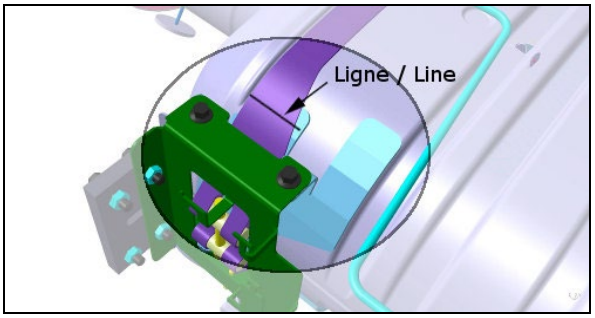


- Mark, with a vertical line the central position of the lower and upper clamps with regard to the emboss located at the bottom and at the top of the catalytic converter.

Lower

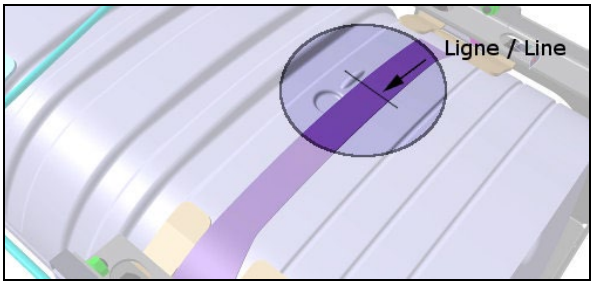


Upper

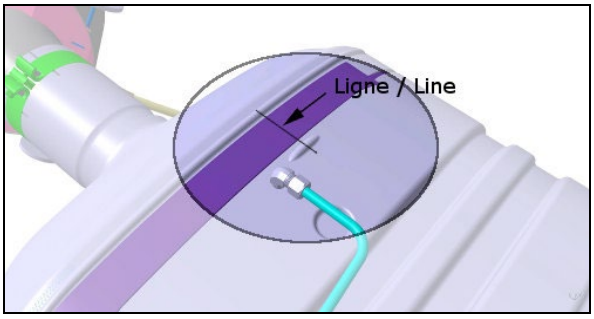


**Assembling**

- Position the upper clamps above the upper emboss and the lower clamps below the lower emboss of the catalytic converter.

Lower

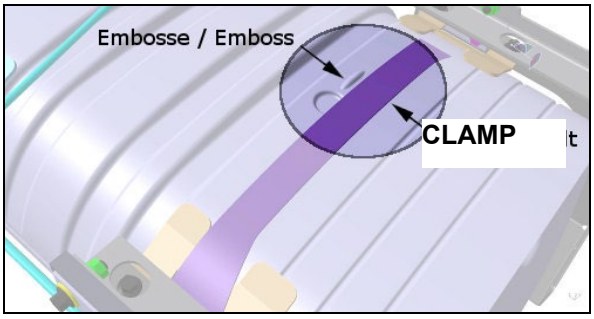


Upper

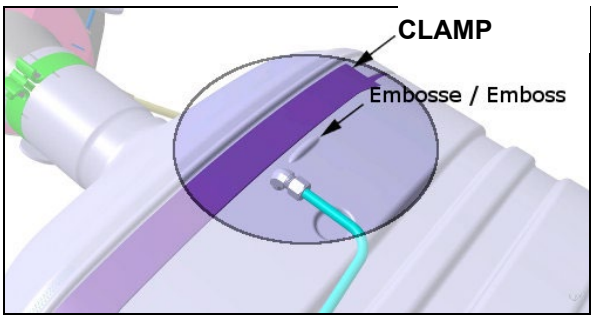


- Using the lines made earlier, line up the lower and upper clamps with regard to the emboss of the converter and afterward, line up the lines made earlier on the clamps with regard to the clamp supports on the catalytic converter.

Lower

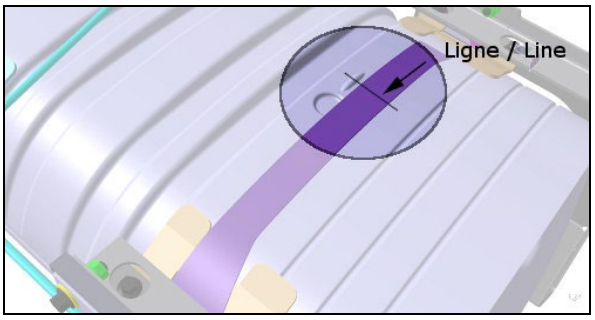


Upper

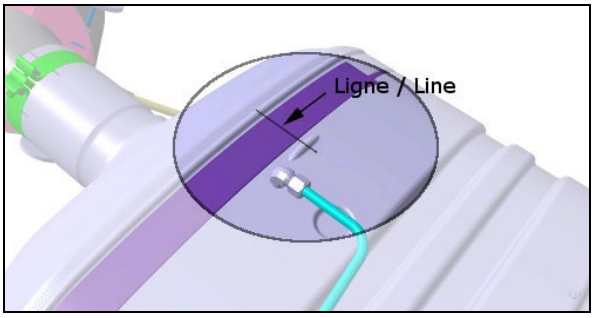


Lower

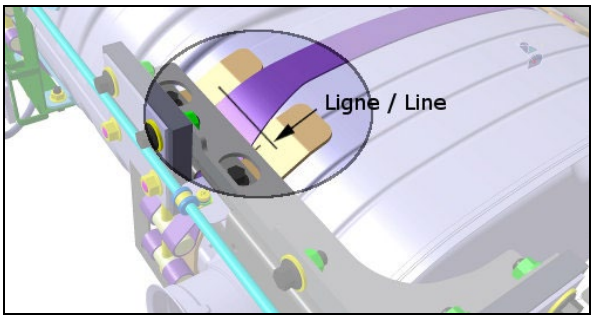


Upper

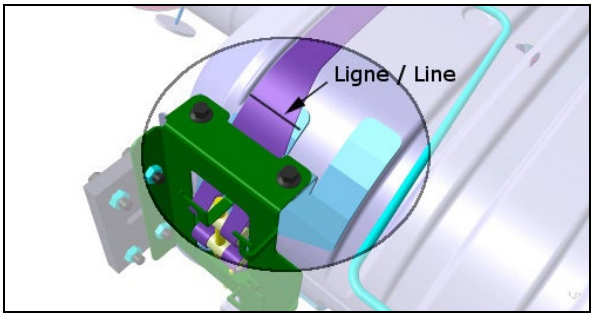


- Before tightening the parts, make sure that the catalytic converter lower support is well

centered with the exhaust inlet of the catalytic converter.

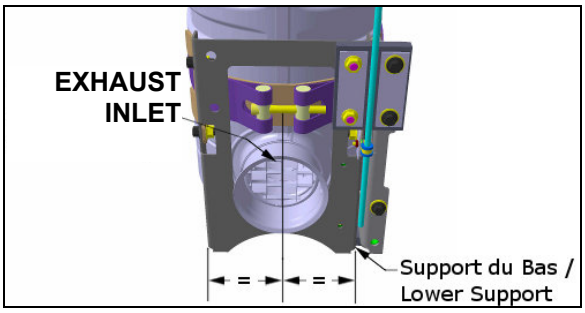


- While tightening the bolts, keep in mind to respect the alignment of the parts and keep the lower support as centered as possible with the catalytic converter exhaust inlet.

## 5. DIFFUSER ASSEMBLY

During stationary regeneration, exhaust gases temperature may get very hot at the outlet. The diffuser decreases the exhaust gas temperature by about half at 6 inches above the diffuser. The diffuser is an important component of the exhaust system and must remain on the vehicle at all times. Operating the vehicle without the diffuser may seriously damage the vehicle.

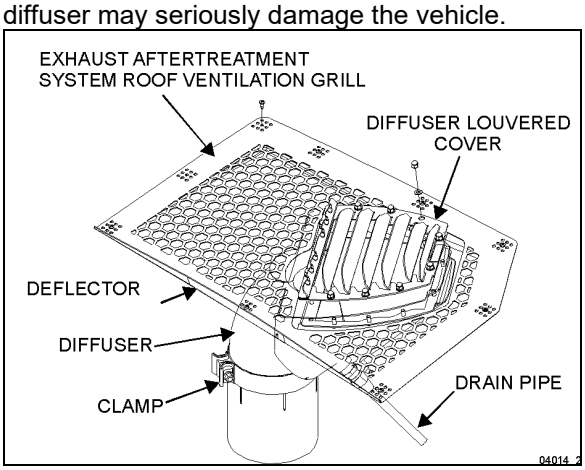


**FIGURE 7: DIFFUSER ASSEMBLY**

### 1.9. DIFFUSER ADJUSTMENT

Should an adjustment of the diffuser position be necessary, first remove the exhaust aftertreatment roof ventilation grill.

**CAUTION**

To prevent paint damage and fiberglass overheating caused by hot exhaust gases, the diffuser louvered cover must be flush with the roof surface or may not exceed the roof surface more than 3/32 inch (2 mm).

**CAUTION**

Tighten clamps properly in order to prevent any movement of the diffuser assembly. An impact wrench is necessary.

1. Loosen the clamp securing the diffuser assembly to the catalytic converter.

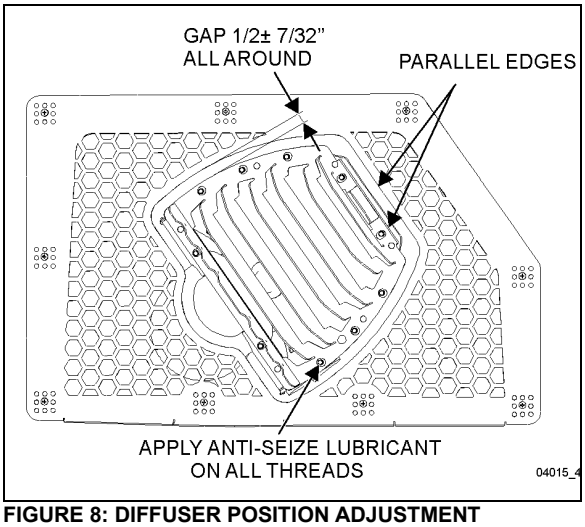


**FIGURE 8: DIFFUSER POSITION ADJUSTMENT**

2. For proper angular position, make sure that the two edges shown on Figure 8 are parallel with each other.
3. Using a straightedge, adjust the diffuser assembly level. The top surface of the warning plate fixed on the diffuser louvered cover must be flush with the roof surface or may exceed about 3/32in (2mm).
4. Tighten the clamp securing the diffuser assembly to the catalytic converter.
5. Reinstall the EATS roof ventilation grill and deflector.

### 1.10. MAINTENANCE

At vehicle inspection intervals, inspect the diffuser assembly as follows:

- Inspect diffuser grille for stress cracking;

- Check for presence of foreign matter and debris inside the diffuser housing, remove and clean if applicable;
- Check for proper functioning of the rain cap inside the diffuser housing, make sure that it moves freely;
- Make sure that the water drain tube is not clogged. Pour a cup of water into the diffuser housing and assure that all the water is drained at once at the other end of the drain tube. If tube is clogged, remove tube and blow compressed air inside, in reverse flow;
- Check that the warning plate "THIS DIFFUSER SURFACE MUST BE FLUSH WITH THE ROOF SURFACE" is still in place.

## MAINTENANCE

**Diffuser assembly**

Inspect the diffuser assembly at the intervals specified by the Lubrication And Servicing Schedule in Section 24: LUBRICATION & SERVICING.

### 1.11. DIFFUSER EXTENSION – (H3-45 VIP / X3-45 VIP)

A diffuser extension is available for converters. To install:

1. Remove the existing diffuser louvered cover;
2. Mount the extension on the diffuser housing. Secure with the 10 existing nuts;
3. Slide the heat shield over the extension;
4. Place the diffuser louvered cover over the assembly and secure with a second set of 10 identical nuts.

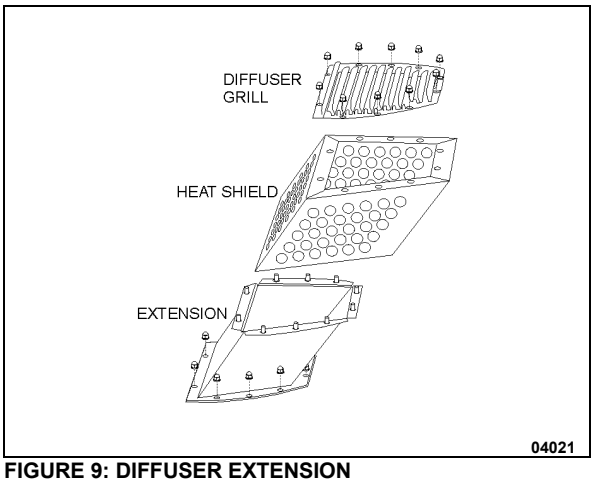


**FIGURE 9: DIFFUSER EXTENSION**

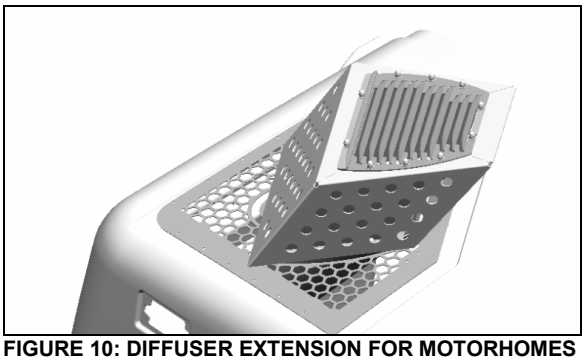

**FIGURE 10: DIFFUSER EXTENSION FOR MOTORHOMES**

### 6. DIESEL EXHAUST FLUID (DEF) TANK AND INJECTION SYSTEM

The DEF tank and injection system control unit continuously vary the amount of DEF injected in response to the engine's current load conditions.

Diesel Exhaust Fluid (DEF) is stored in a 16 gallons (60 liters) plastic tank located curb side, in the condenser compartment.

A pump located beside the DEF tank is used to pressurize the system and deliver the fluid.

A heating coil inside the tank uses engine coolant to keep the DEF in a liquid state or to melt DEF at engine start up during cold season.

DEF is injected into the exhaust gases through an injection nozzle located between the DPF and the catalytic converter (refer to Figure 1).

In the catalytic converter, nitrogen oxides are transformed into harmless nitrogen gas and water.

The system notifies the driver when it is time to top up with DEF.

## 1.12. DIESEL EXHAUST FLUID

When handling DEF solution, it is important that electrical connectors to be connected or well encapsulated, otherwise there is a risk that the DEF will cause oxidation that cannot be removed. Water or compressed air will not help, since DEF quickly oxidizes certain metals. If a disconnected connector comes into contact with the DEF solution, it must be replaced immediately to prevent the DEF solution from creeping further into the copper wiring, which takes place at a speed of about 2.4 in (60 mm) per hour.

**CAUTION**

Diesel Exhaust Fluid (DEF) is a nontoxic aqueous solution of urea (32.5%) and ultra-pure water (67.5%). Urea is a compound of nitrogen that turns to ammonia when heated. The fluid is non-flammable, and is not dangerous when handled as recommended. However, it is highly corrosive to certain metals, especially copper and brass.

When detaching hoses and components, do not spill DEF on disconnected or unsealed connectors. If DEF is spilled on a disconnected or unsealed connector, the connector must be removed immediately and replaced.

Things to know about spilt diesel exhaust fluid (DEF):

- If urea solution comes into contact with the skin, rinse with plenty of water and remove contaminated clothing.
- If urea solution comes into contact with the eyes rinse for several minutes and call for medical help if necessary.
- If inhaled breathe fresh air and call for medical help if necessary.
- Do not allow the DEF solution to come into contact with other chemicals.
- The DEF solution is not flammable. If the DEF solution is exposed to high temperatures, it breaks down into ammonia and carbon dioxide.
- The DEF solution is highly corrosive to certain metals, including copper and aluminum.
- If the DEF solution is spilled onto the vehicle, wipe off the excess and rinse with water. Spilled DEF solution can form concentrated white crystals on the vehicle. Rinse off these crystals with water.

**WARNING**

DEF spilt onto hot components will quickly vaporize. Turn your face away!

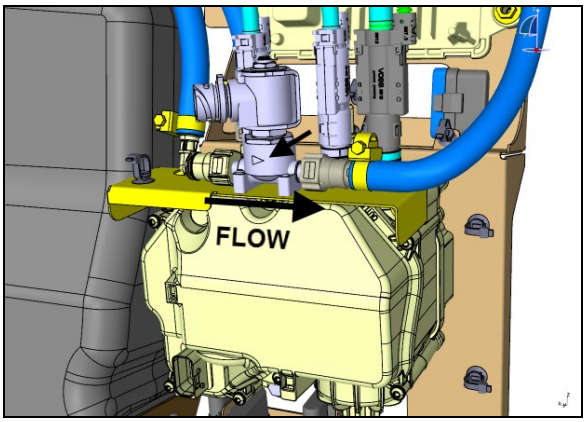


04052

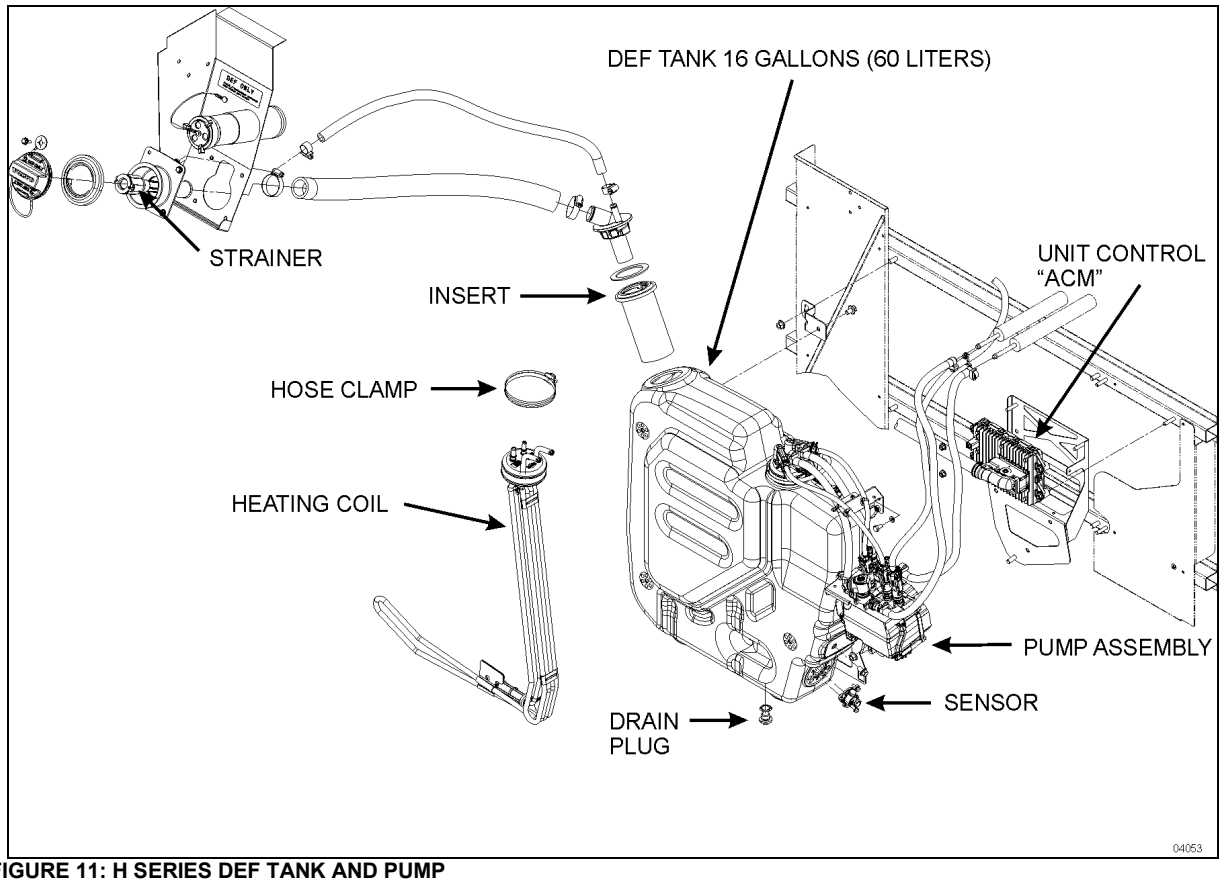


**FIGURE 11: H SERIES DEF TANK AND PUMP**

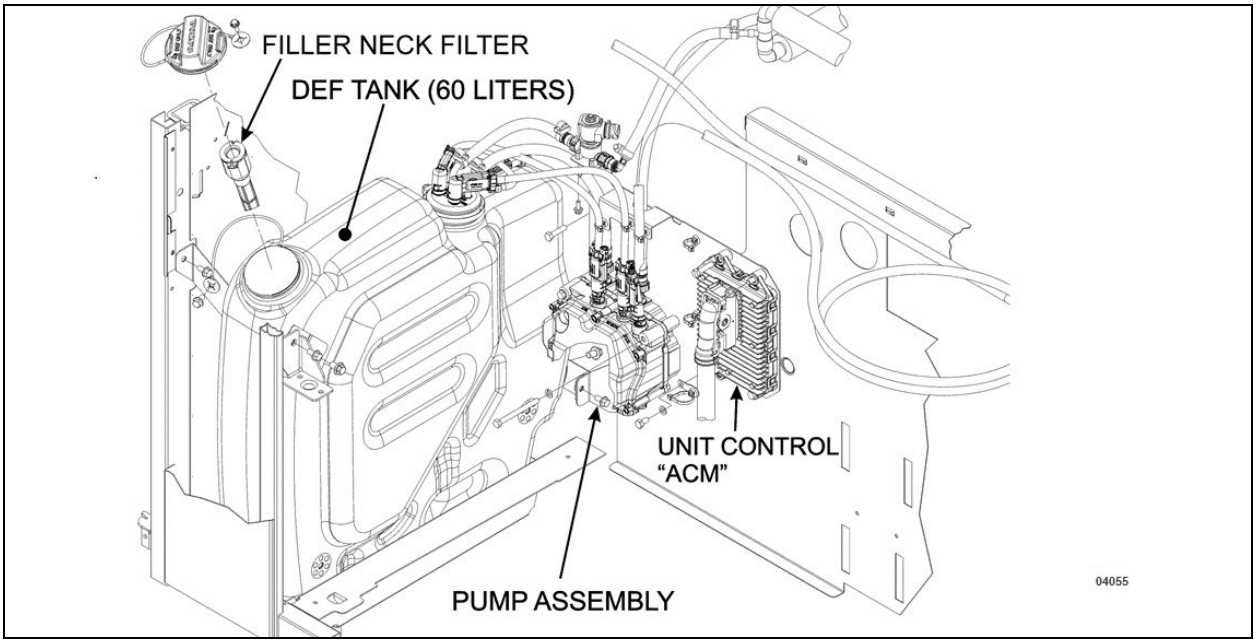


**FIGURE 12 X SERIES DEF TANK AND PUMP**

## 1.13. DEF TANK CLEANING

Removing the DEF tank for cleaning is not necessary.

1. Put a suitable container under the DEF tank.
2. Remove the DEF tank drain plug through the DEF tank support pan access hole.
3. Let all of the DEF drain from the tank. Discard the used DEF according to local regulations.
4. Remove the DEF tank filler neck insert. To do so, release the retaining tab and remove filler neck insert. Replace old seal if damaged.

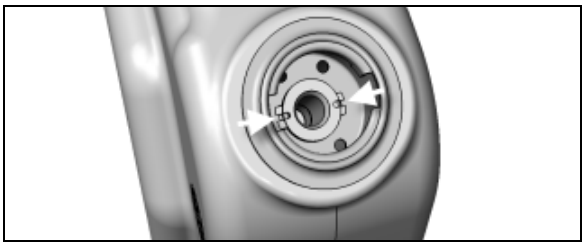

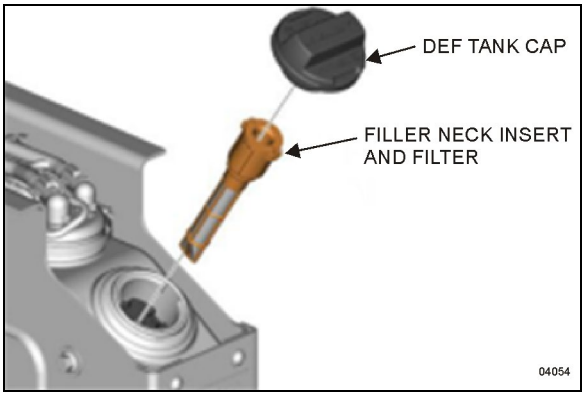


5. Flush the tank with hot water. Let all of the water drain from the tank.
6. Clean the filler neck insert screen with hot water.
7. Reinstall the filler neck insert until the retaining tabs snap into filler neck. Reinstall DEF tank drain plug.

**MAINTENANCE**

Drain and clean DEF tank and filler neck insert filter with hot water at the intervals specified by the Lubrication And Servicing Schedule in Section 24: LUBRICATION & SERVICING.

## 1.14. PUMP ASSEMBLY FILTER ELEMENT REPLACEMENT

1. Clean the area around filter cover.
2. Before you loosen the filter cover, place a suitable container under the cover to catch fluid that may drain from the pump;
3. Remove filter cover.

**CAUTION**

Contamination or damage of the sealing surface on the housing is not acceptable.

4. Use needle nose pliers to carefully remove the equalizer and filter element. Do not damage the sealing surface on the housing.

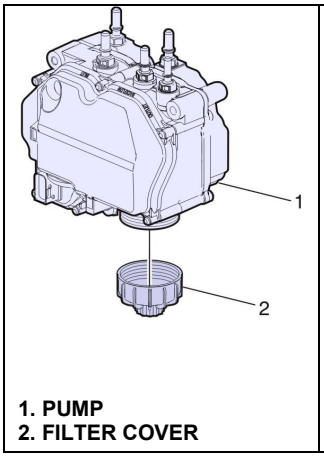


**1. PUMP**
**2. FILTER COVER**

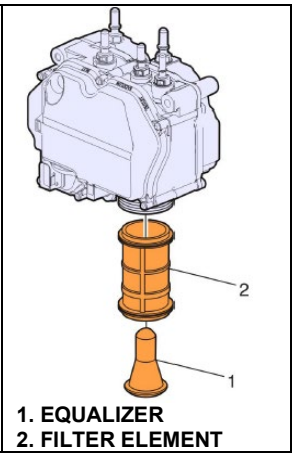


**1. EQUALIZER**
**2. FILTER ELEMENT**

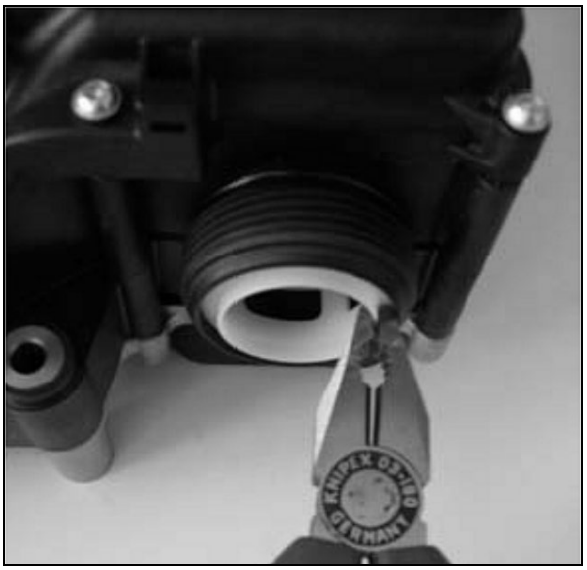

**FIGURE 13 : PUMP ASSEMBLY FILTER ELEMENT**

5. Install new filter element and equalizer. Checks filter element cover and housing for damage. If either the filter or housing is damaged, the damaged part must be changed.
6. Install filter cover.

**TORQUE: 22 lb-ft (30 Nm)**

**CAUTION**

Check if there are cracks around the area of the filter cover. No cracks in the material are allowed.

**MAINTENANCE**

Replace DEF pump filter element and equalizer at the intervals specified by the Lubrication And Servicing Schedule in Section 24: LUBRICATION & SERVICING.

1.15. FILLER NECK STRAINER

If the DEF tank filler neck strainer (Figure 13) becomes obstructed with foreign matter and debris, remove and clean strainer as follows;

1. Remove filler neck cap.
2. Release the retaining tabs and remove filler neck strainer from the filler neck. Discard the old seal.
3. Clean and reinstall strainer into DEF tank filler neck with new seal.
4. Insert until the retaining tabs snap into the filler neck.

## 7. AFTERTREATMENT HYDROCARBON DOSER

Proper functioning of the aftertreatment hydrocarbon doser a.k.a. aftertreatment hydrocarbon injector (AHI) is required in order to obtain efficient regeneration process of the DPF. Clogged aftertreatment hydrocarbon doser will result in clogged DPF.

In addition to the activation of the CHECK telltale, emission of diagnostic troubleshooting codes (DTC) by the engine ECM (MID128) will indicate malfunction of the aftertreatment system and/or aftertreatment hydrocarbon doser. DTC may be accessed through the Driver Information Display. Select DIAGNOSTICS menu then FAULT DIAGNOSTICS and ENGINE ECU submenus.

Check status of the aftertreatment system through the Driver Information Display. Select AFTERTREATMENT menu then ATS STATUS. Then check the DPF soot level with SOOT LEVEL GAUGE.

1.16. REPLACEMENT

1. Remove fastener and p-clamp securing the line to the mounting bracket on the diffuser pipe.

**WARNING**

Fuel leaked or spilled onto hot surfaces or electrical components can cause a fire and result in component damage and serious personal injury.

2. Disconnect the line from the aftertreatment hydrocarbon injector fitting. Collect any residual fuel that might be in the line in a suitable container.

**CAUTION**

Do not kink the line. Kinking the line may result in leakage.

Remove the aftertreatment hydrocarbon injector mounting fasteners. Remove the aftertreatment hydrocarbon injector from the diffuser pipe (which attaches to the turbocharger outlet).

Clean the sealing surface on the diffuser pipe before mounting the aftertreatment hydrocarbon injector.

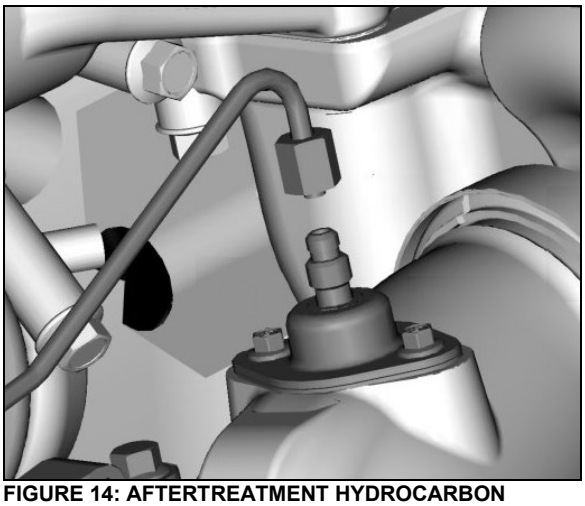

**FIGURE 14: AFTERTREATMENT HYDROCARBON DOSER**

Install the new aftertreatment hydrocarbon injector and new gasket onto the diffuser pipe (which attaches to the turbocharger outlet) and tighten the fasteners.

**TORQUE: 120-130 lb-in (14-15 Nm)**

| *NOTE* |
| --- |
| *The fasteners already include pre-applied high-temperature anti-seize compound.* |

3. Connect the line to the aftertreatment hydrocarbon injector. Tighten the line fitting.

**TORQUE: 177-213 lb-in (20-24 Nm)**

4. Install the P-clamp and fasteners to secure the line to the mounting bracket on the diffuser pipe.
5. Start the engine, build air to operating pressure. Start the service regeneration process. When fuel dosing starts, check for leaks starting on the hot side of the engine. Clear any diagnostic trouble codes, if needed.

| *NOTE* |
| --- |
| *If fault tracing was performed using Guided Diagnostics, return to Guided Diagnostics for repair verification.* |

## CONTENTS

**SECTION CHANGE LOG** ..... **2**

**1. TORQUE TABLES** ..... **3**

1.1 HOSE CLAMPS ..... 3
1.2 PULLEYS, IDLERS & TENSIONERS ..... 4
1.3 COOLING ASSEMBLY ..... 5
1.4 MISCELLANEOUS ..... 6

**2. DESCRIPTION** ..... **7**

**3. MAINTENANCE** ..... **9**

3.1 GENERAL RECOMMENDATIONS ..... 9
3.2 COOLANT FILTER HOUSING SHUT-OFF VALVE – SPINDLE SERVICING ..... 10

**4. HOSES** ..... **11**

4.1 HOSE CLAMPS ON COOLANT LINES ..... 11
4.2 CONSTANT-TORQUE HOSE CLAMPS ON CHARGE AIR COOLER (CAC) ..... 12
*4.2.1 Maintenance* ..... *13*

**5. THERMOSTAT OPERATION** ..... **13**

5.1 THERMOSTAT REPLACEMENT ..... 13
5.2 CHECKING NEW THERMOSTAT ..... 13

**6. COOLANT** ..... **14**

6.1 COOLANT LEVEL VERIFICATION ..... 14
6.2 COOLANT LEVEL SENSOR ..... 14
6.3 THAWING COOLING SYSTEM ..... 14
6.4 COOLANT RECOMMENDATIONS FOR VOLVO D13 ENGINE ..... 14
6.5 COOLANT SAMPLING ..... 17

**7. DRAINING COOLING SYSTEM** ..... **18**

**8. FILLING COOLING SYSTEM** ..... **19**

**9. FLUSHING** ..... **20**

9.1 COOLING SYSTEM DESCALERS ..... 20
9.2 REVERSE FLUSHING ..... 21

**10. SPIN-ON COOLANT FILTER** ..... **21**

**11. COOLING ASSEMBLY** ..... **22**

11.1 MAINTENANCE ..... 23
11.2 COOLING FAN REPLACEMENT ..... 25
11.3 COOLING FAN SHROUD REMOVAL & INSTALLATION ..... 25
11.4 H3 SERIES VEHICLES - COOLING PACK (RADIATOR & CAC) REMOVAL & INSTALLATION ..... 27
11.5 X3 SERIES VEHICLES - COOLING PACK (RADIATOR & CAC) REMOVAL & INSTALLATION ..... 33
11.6 CHARGE AIR COOLER (CAC) IN VEHICLE REMOVAL ..... 39

**12. SPECIFICATIONS** ..... **43**

## SECTION CHANGE LOG

| | DESCRIPTION | DATE |
|---|---|---|
| 1 | New Volvo coolant specification VCS2B introduced | Feb 2024 |
| 2 | | |
| 3 | | |
| 4 | | |
| 5 | | |
| 6 | | |

# 1. TORQUE TABLES

## 1.1 HOSE CLAMPS

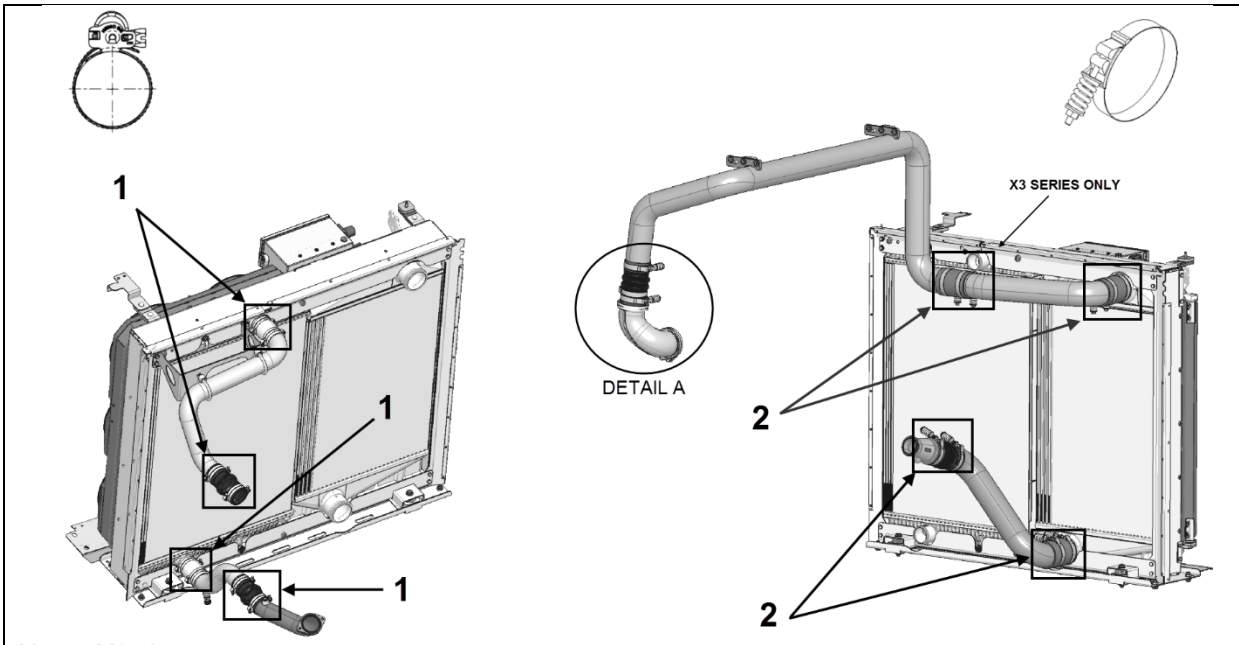


Note : X3 shown

05179_1

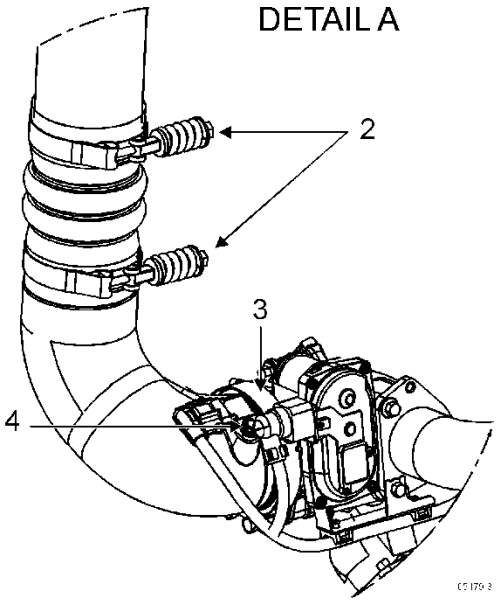


X3 shown. Torque values applicable to X3 & H3

| HOSE CLAMPS | | |
|---|---|---|
| No | DESCRIPTION | TORQUE |
| 1 | Hose clamps - coolant lines (2.5 in O.D) | 30 lb-in (3.39 Nm) |
| 2 | Constant-torque hose clamps - charge air cooler (CAC) | 4.5-5.5 lb-ft (6.1-7.46 Nm) |
| 3 | Intake elbow - V-clamps (both) | 4.5-6 lb-ft (6.1-8.13 Nm) |

| | | |
|---|---|---|
| 4 | Screw, CAC air temperature sensor | 5.3-6.5 lb-ft (7-9 Nm) |

## 1.2 PULLEYS, IDLERS & TENSIONERS

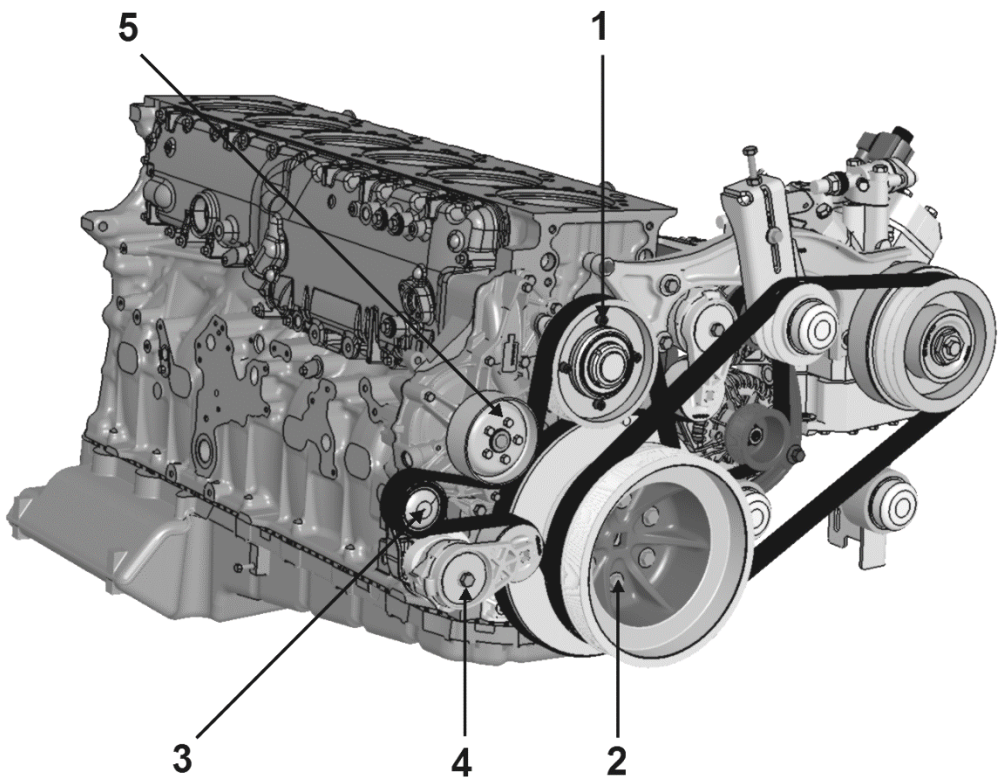


01225_3

| PULLEYS, IDLERS & TENSIONERS | | |
|---|---|---|
| No | DESCRIPTION | TORQUE |
| 1 | Water pump idler pulley bolts | 16 lb-ft (22 Nm) |
| 2 | Crank pulley bolts | 22 lb-ft (30 Nm) |
| 3 | Idler bolt – water pump | 43 lb-ft (58 Nm) |
| 4 | Automatic belt tensioner bolt – water pump | 48 lb-ft (65 Nm) |
| 5 | Water pump pulley | 18 lb-ft (24 Nm) |

## 1.3 COOLING ASSEMBLY

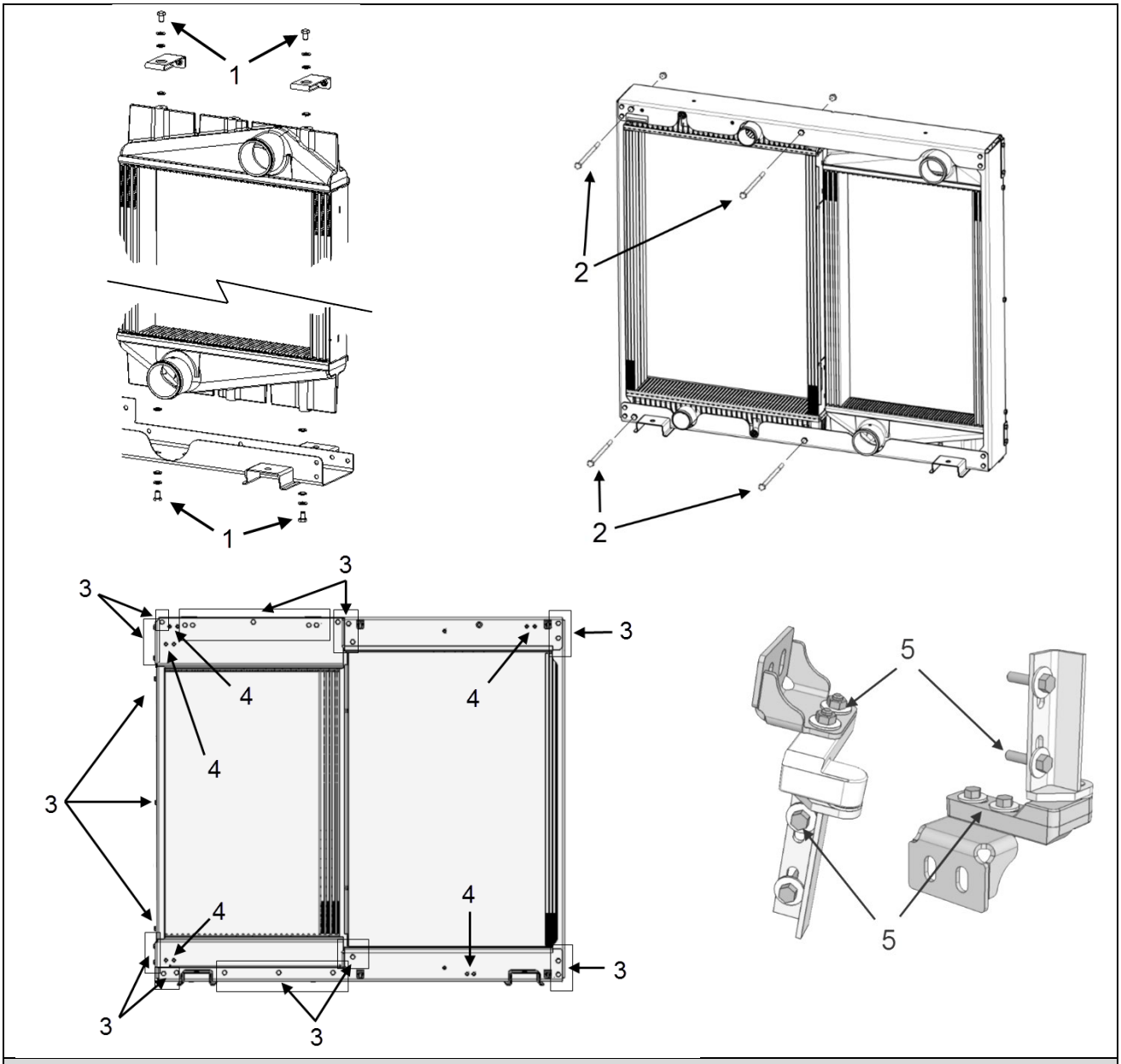


| COOLING ASSEMBLY | | |
|---|---|---|
| No | DESCRIPTION | TORQUE |
| 1 | CAC upper & lower mounting bolts (with plastic bushings) | 9 lb-ft (12 Nm) |
| 2 | Radiator to cooling pack frame mounting bolts (pass through) | 9 lb-ft (12 Nm) |
| 3 | Cooling pack frame bolts (all 8mm bolts – both sides) | 9 lb-ft (12 Nm) |
| 4 | Brackets, fan shroud hinge, shroud support & upper support | 9 lb-ft (12 Nm) |
| 5 | Fan shroud hinge bolts (upper & lower) | 68 lb-in (8 Nm) |

## 1.4 MISCELLANEOUS

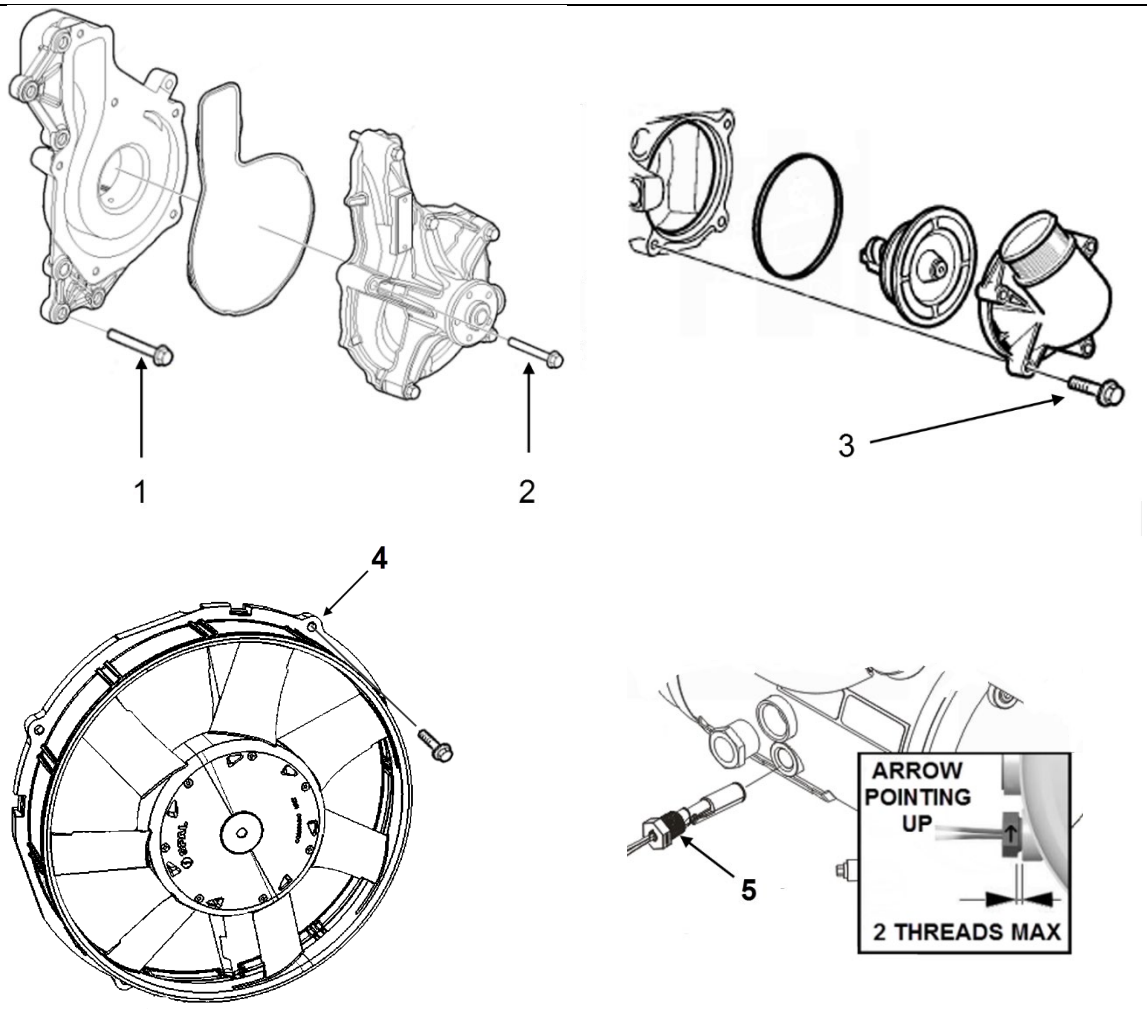


| MISCELLANEOUS | | |
|---|---|---|
| No | DESCRIPTION | TORQUE |
| 1 | Water pump - Back cover to engine | 29-41 lb-ft (39-56 Nm) |
| 2 | Water pump - body to back cover | 15-21 lb-ft (20-28 Nm) |
| 3 | Thermostat housing bolts | 15-21 lb-ft (20-28 Nm) |
| 4 | Electric cooling fan mounting bolts | 30 lb-in (3 Nm) |
| 5 | Coolant level sensor (arrow on side must point up) | 2 Threads out MAX* |

* Add Teflon – PTFE sealant to threads

## 2. DESCRIPTION

A radiator and variable speed electric cooling fans are used to effectively dissipate the heat generated by the engine. A charge air cooler (CAC) mounted next to the radiator is also used to cool the compressed air flow coming from the turbocharger before it reaches the engine intake. All components, along with the fans' circuit breaker box, are grouped together and mounted on the L.H. side of the engine compartment to form an easy to access and service “cooling assembly”.

**WARNING**

**WHEN THE ENGINE IS RUNNING**

Cooling fans may activate at any moment.

Keep hands away from cooling fans or keep the radiator door closed.

**WARNING**

**Cooling fans may be running when the engine is shut down in the following conditions:**

- If a High Exhaust Temperature condition exists (e.g. following regeneration).
- During "Motor Test" sequence.

An engine mounted centrifugal water pump is used to circulate the engine coolant in the cooling circuit. The pump works in conjunction with a full blocking-type thermostat positioned in the water outlet passage, controlling the coolant flow and providing fast engine warm-up and regulated coolant temperature.

The engine coolant is drawn from the lower portion of the radiator by the water pump and is forced through the transmission cooler before going through the oil cooler and into the cylinder block.

From the cylinder block, the coolant passes up through the cylinder head and, when the engine is at normal operating temperature, it goes through the thermostat housing and into the upper portion of the radiator. The coolant then passes through a series of tubes where its heat is dissipated by airstreams created by the revolving fans and the motion of the vehicle.

Upon starting a cold engine or when the coolant is below normal operating temperature, the closed thermostat directs coolant flow from the thermostat housing through the by-pass tube to the water pump. Coolant is recirculated through the engine to aid engine warm up.

When the thermostat opening temperature is reached, coolant flow is divided between the radiator inlet and the by-pass tube. When the thermostat is completely open, all of the coolant flow is to the radiator inlet.

The H3 Series cooling system is filled with a funnel through a pressure & filler cap on the surge tank, the cap is also used to maintain pressure within the system. When system exceeds normal pressure rating (14 psi - 96.53 kPa), the cap releases air and if necessary, coolant through the overflow tube (Figure 3). On the X3 Series, the cap is also present on the surge tank to act as a pressure cap, but the fill cap is on the top of a plastic recovery tank located next to the surge tank (Figure 2). The thermostat is located in the housing bolted to the engine on the L.H. side.

**WARNING**

On X3-Series vehicles *do not open the surge tank pressure cap unless a large amount of liquid must be added*. Always use the recovery tank fill cap to add coolant to the vehicle during normal operation (level check).

**WARNING**

On X3 Series vehicles, the system pressure must be relieved using the pressure relief valve.

**Never open the surge tank pressure cap without making sure first that the system is completely depressurized. Coolant under pressure (hot or not) may cause serious injuries and eye damages.**

*NOTE*

*Close the valve after releasing the pressure.*

The engine cooling system also provides hot coolant for the vehicle heating system. Refer to section 22, *""HEATING AND AIR CONDITIONING"* in this manual for information relating to heating system water circulation.

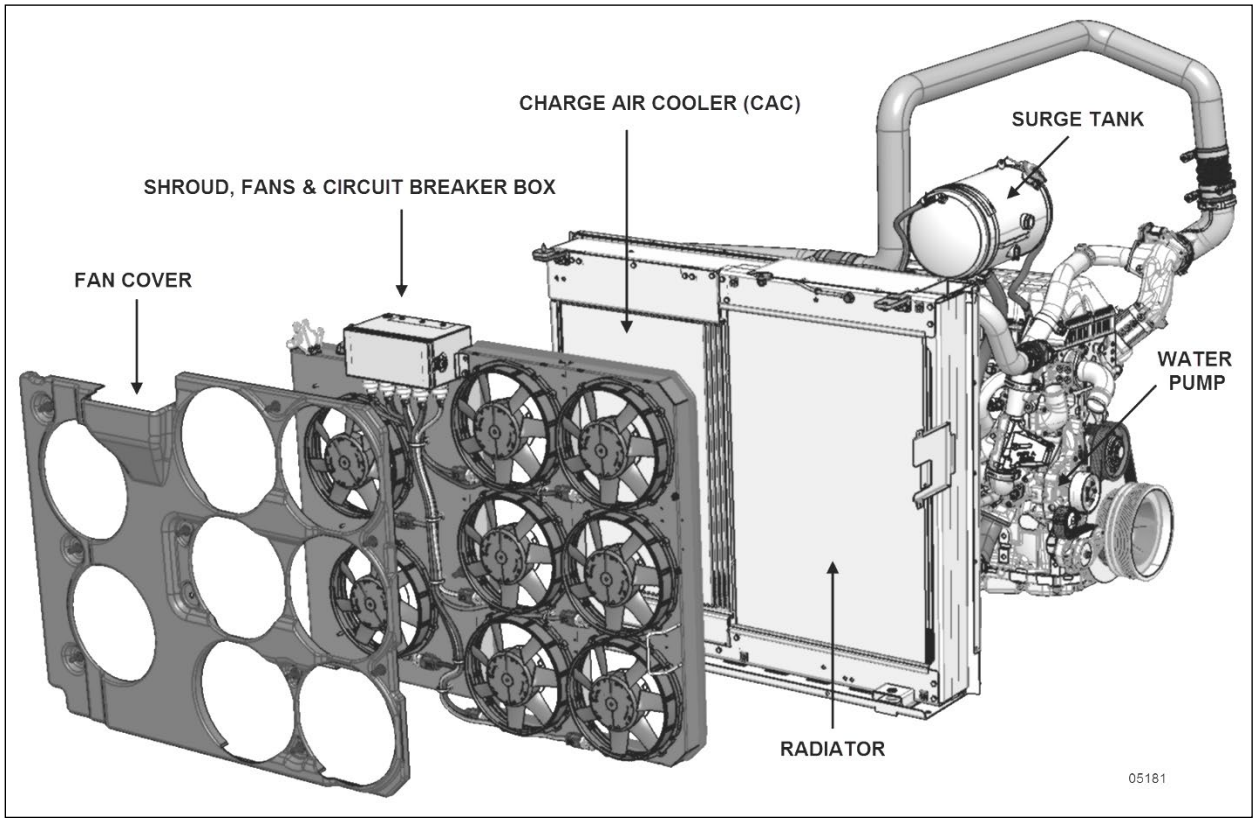


**FIGURE 1: COOLING ASSEMBLY & RELATED COMPONENTS (X3 SERIES SHOWN)**

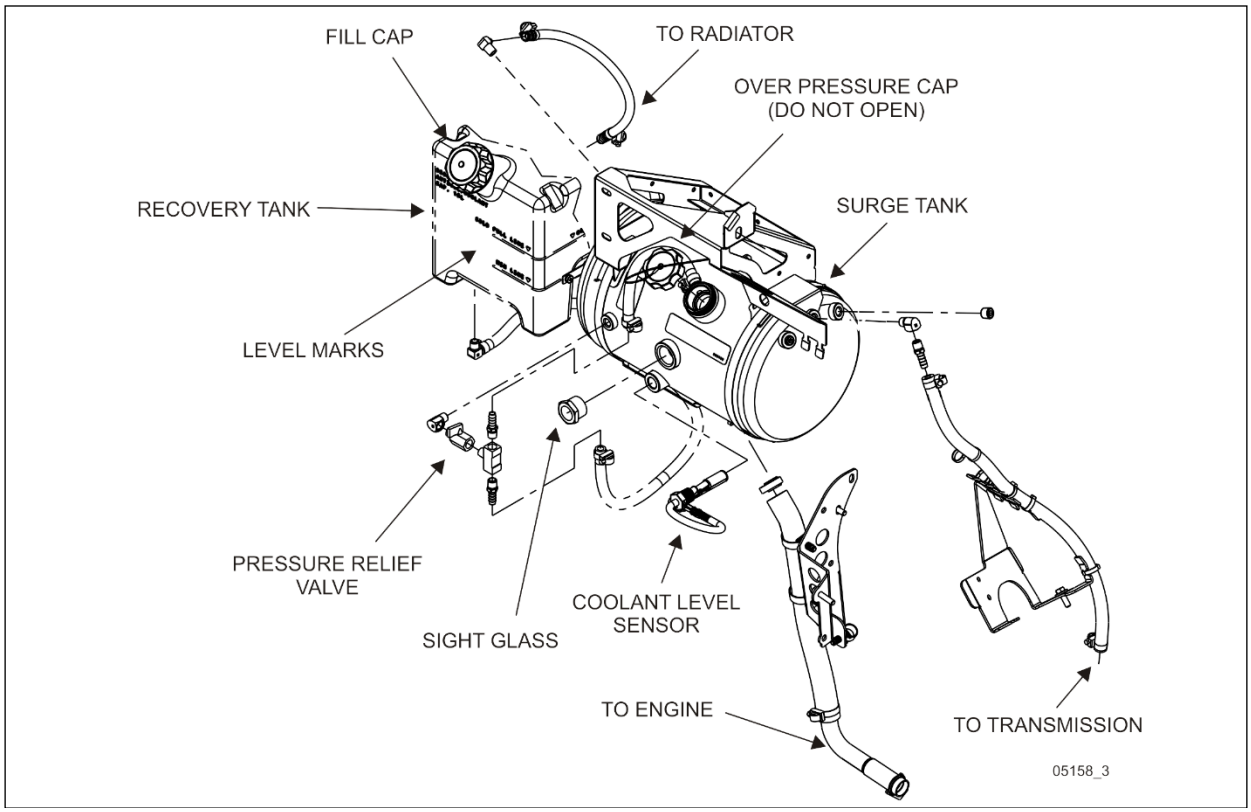


**FIGURE 2: COOLANT SURGE TANK AND RECOVERY TANK ON X3 SERIES VEHICLES**

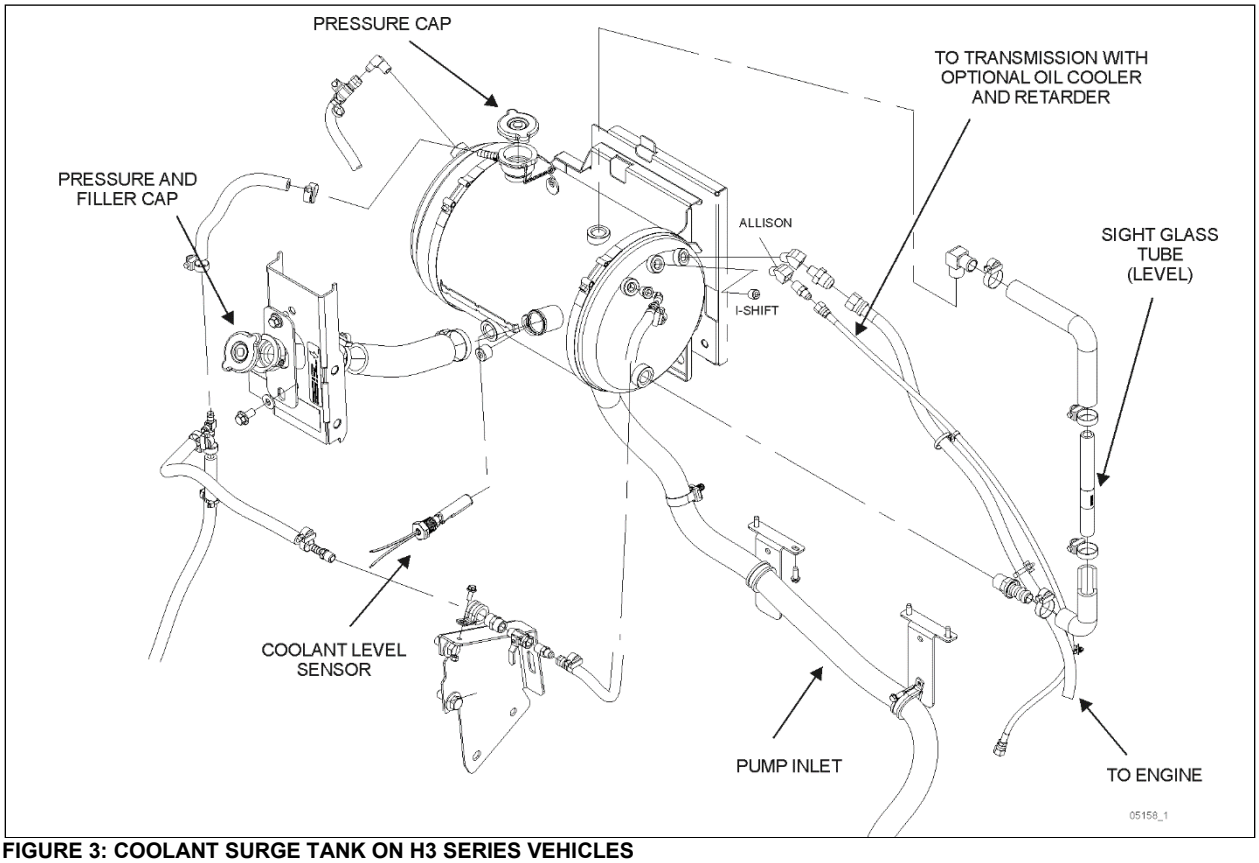


**FIGURE 3: COOLANT SURGE TANK ON H3 SERIES VEHICLES**

## 3. MAINTENANCE

### 3.1 GENERAL RECOMMENDATIONS

A systematic routine inspection of cooling system components is essential to ensure maximum engine and heating system efficiency.

- Check coolant level in the surge/recovery tank daily, and correct if required. Test antifreeze strength.
- Check water pump belt and replace if frayed or badly worn.
- Check radiator cores for leaks and make sure the cores are not clogged with dirt or insects. To avoid damaging the fins, clean cores with a low-pressure air hose. Steam clean if required.
- Inspect the water pump operation. A leaky pump sucks in air, increasing corrosion.
- Repair all leaks promptly. Unrepaired leaks can lead to trouble. Inspect and tighten radiator mounts periodically. Test and replace thermostat regularly.

*NOTE*

*In order to ensure the integrity of the system, it is recommended that a periodic cooling system pressure check be made. Pressurize the cooling system to 103-138 kPa (15-20 psi) using Radiator and Cooling System Tester, J24460-1. Do not exceed 138 kPa (20 psi).*

*Any measurable drop in pressure may indicate a leak. Whenever the oil pan is removed, the cooling system should be pressure checked as a means of identifying any incipient coolant leaks. Make sure the cause of the internal leak has been corrected before flushing the contaminated system.*

**⚠ CAUTION**

Hoses and hose connections should be clean and free of oil and grease before hose clamp installation. **Do not use** soap, lubricant or sealing compound on hose connections.

| *NOTE* |
| --- |
| *For additional information concerning Volvo D13 engine components or engine-related components, consult Volvo Trucks Canada or Volvo Trucks North America Web site under: Parts & Service. On Volvo web site, you will find detailed service procedures for parts replacement, repair and maintenance.* |

## 3.2 COOLANT FILTER HOUSING SHUT-OFF VALVE – SPINDLE SERVICING

Seizing of the spindle in the coolant filter housing (Figure 4) could prevent proper operation of the valve. With proper cleaning, the application of a silicone-based lubricant to the groove in the spindle, and cycling the valve at regular intervals will prevent the buildup of corrosion in the coolant filter housing. Follow this spindle servicing and repair procedure.

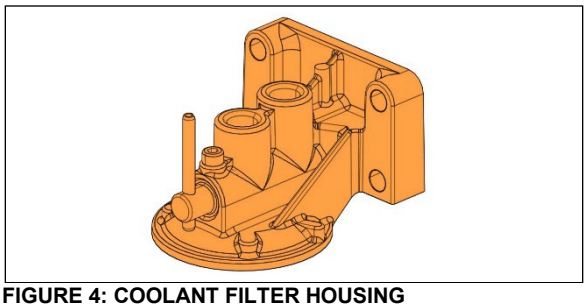

**FIGURE 4: COOLANT FILTER HOUSING**

1. Park the vehicle on a level surface. Apply the parking brake and place the transmission in neutral.
2. Turn the ignition switch to the OFF position.
3. On the engine compartment rear start panel (Figure 5), push the **engine stop/ignition interlock** button to prevent the engine from being started.

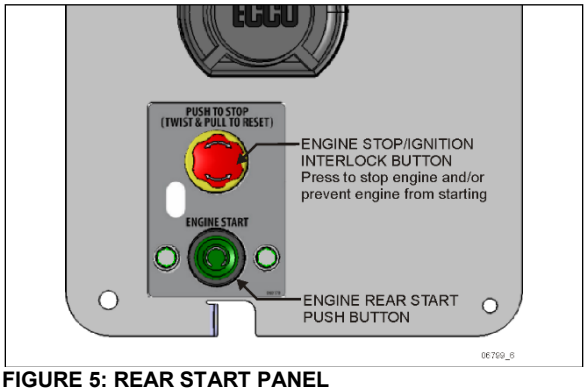


**FIGURE 5: REAR START PANEL**

4. Drain the coolant from the engine. Refer to DRAINING COOLING SYSTEM in this section.

Shut-off valve corrosion repair procedure

5. Place a spill container under the engine coolant filter housing.
6. Loosen the M5 hex socket screw (1) in the coolant filter housing (3) until it clears the groove in the spindle (2) (Figure 6).

*Note: This is the groove the M5 hex socket screw sets in when the coolant filter hosing is fully assembled.*

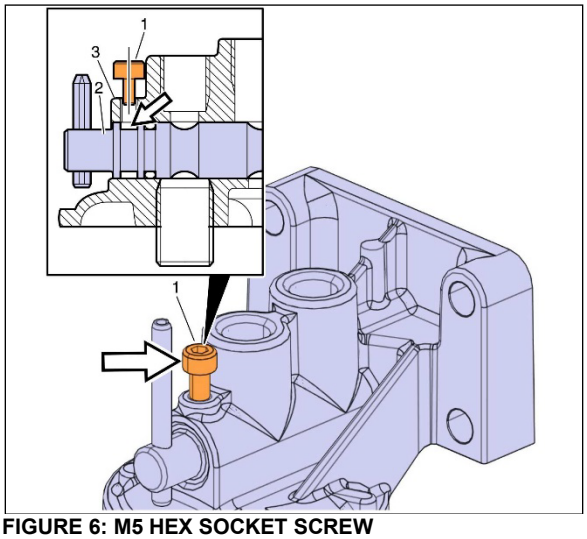


**FIGURE 6: M5 HEX SOCKET SCREW**

7. Extract the spindle (2) from the coolant filter housing (3).

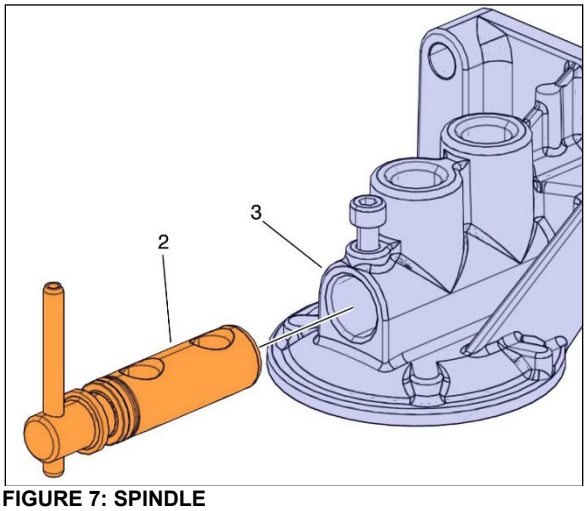


**FIGURE 7: SPINDLE**

8. Gently scrape by hand and remove any loose debris or corrosion from the spindle and coolant filter housing using an abrasive cleaning pad (Figure 8).

***Note:*** *Do not allow any corrosion or solid contaminants to fall into the filter housing.*

***Note:*** *When cleaning is required* ***DO NOT*** *use power tools or grinders to clean the areas covered with corrosion. This could damage the parts beyond repair.*

***Note:*** *Inspect the O-ring (4) in the spindle (2) for damaged due to corrosion or during removal. Replace the O-ring using part number 968725 if needed. Replace the spindle using part number 3979940 if needed.*

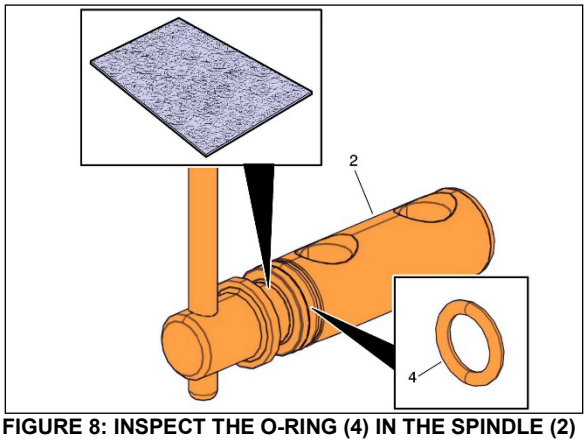


**FIGURE 8: INSPECT THE O-RING (4) IN THE SPINDLE (2)**

9. If the area containing corrosion cannot be reliably cleaned or there is damage to the sealing surface for the O-ring, the coolant filter housing must be replaced.

10. Apply grade NLGI No.2 silicone-based grease to the grooved area of the spindle. Ensure the grooved area of the spindle is filled as completely as possible.

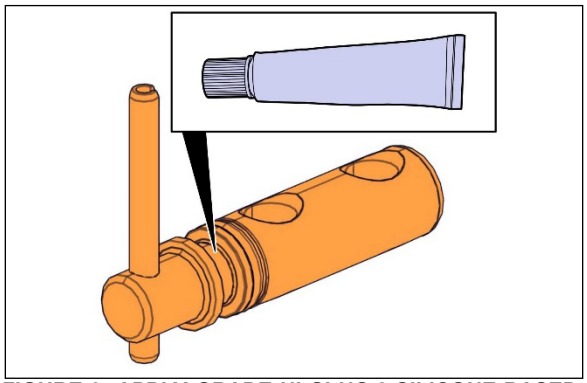

**FIGURE 9: APPLY GRADE NLGI NO.2 SILICONE-BASED GREASE TO THE GROOVED AREA**

11. Reinsert the spindle (2) into the coolant filter housing (3) and tighten the M5 hex socket screw (1).

12. To prevent reoccurrences, at a minimum, the grease should be repacked in this area when the coolant is changed, and the valve should be rotated periodically.

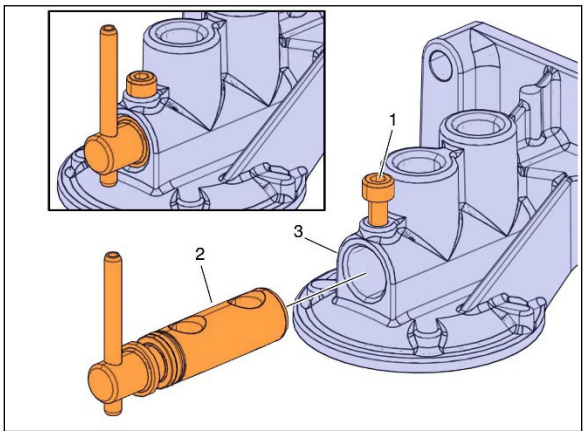


**FIGURE 10: INSERTING THE SPINDLE**

13. Fill the cooling system with the recommended coolant.

14. Set the engine stop/ignition interlock back to the normal position.

15. Start the engine, check for leaks and proper operation.

16. After shutdown, replenish coolant as necessary.

## 4. HOSES

Rotten, swollen, and worn out hoses or loose connections are frequent causes of cooling system problems.

Serious overheating is often caused by an old hose collapsing or from rotten rubber shedding from hoses and clogging the coolant passages.

Connections should be inspected periodically and hose clamps tightened. Replace any hose found to be cracked or swollen.

### 4.1 HOSE CLAMPS ON COOLANT LINES

All hose clamps used for the heating and cooling systems have a spring function (spring in the housing) to compensate for the normal expansion/contraction of hose and metal

connection that occurs during vehicle operation and shutdown. These clamps are worm-driven and made of stainless steel.

All connections equal or greater than 2 inches OD have doubled clamps (two clamps, side by side) with screw housing separated from at least 90°. A torque wrench should be used for proper installation.

**TORQUE: 30 lb-in (3.39 Nm)**

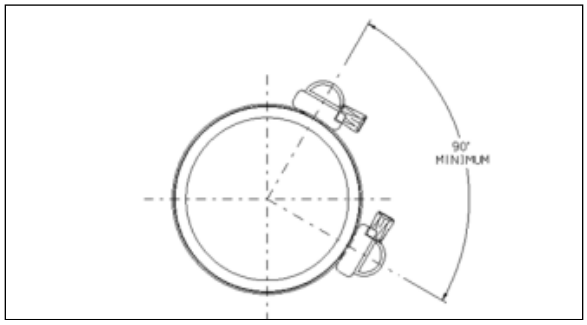


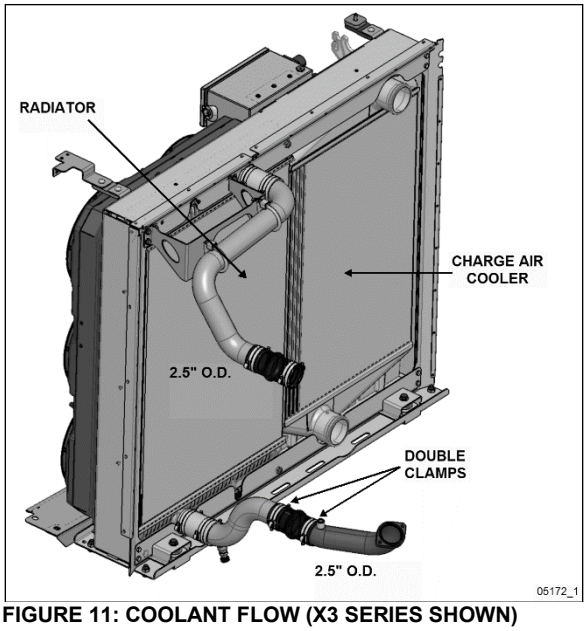


**FIGURE 11: COOLANT FLOW (X3 SERIES SHOWN)**

> **CAUTION**
>
> The hose clamps will break if over-torqued. Do not over-tighten, especially during cold weather when hose has contracted.

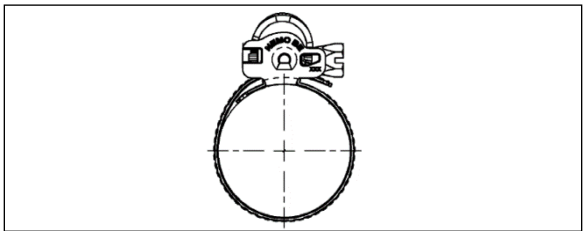

**FIGURE 12: CLAMP TYPE USED ON HEATING & COOLING SYSTEMS**

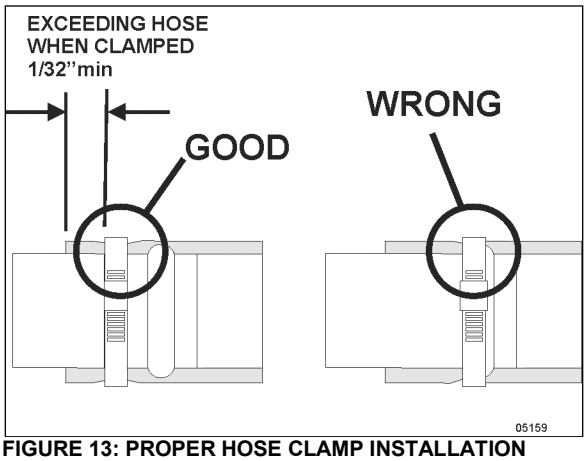


**FIGURE 13: PROPER HOSE CLAMP INSTALLATION**

4.2 CONSTANT-TORQUE HOSE CLAMPS ON CHARGE AIR COOLER (CAC)

If for any reason hose clamps need to be replaced; install and tighten hose clamps to specified torque (dry) (Figure 14).

**TORQUE: 4.5-5.5 lb-ft (6.1-7.46 Nm)**

IMPORTANT: The two constant torque clamps used *at the CAC to intake manifold elbow* must be torqued differently on the X3 Series (see torque table for proper identification).

**TORQUE: 12-15 lb-ft (16-20 Nm)**

Elbow V-clamps must also be torqued to specification.

**TORQUE: 4.5-6 lb-ft (6.1-8.13 Nm)**

> **CAUTION**
>
> The hose clamps will break if over-tighten. Do not over-tighten, especially during cold weather when hose has contracted.

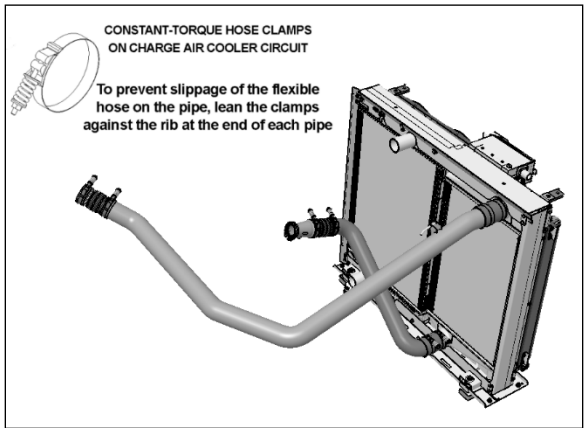


**FIGURE 14: CHARGE AIR COOLER HOSE CLAMPS (H3 SERIES SHOWN)**

4.2.1 Maintenance

Since the constant-torque clamp automatically adjusts to keep a consistent sealing pressure, there is no need to torque hose clamps on a regular basis. During vehicle operation and shutdown, the screw tip will adjust according to the temperature and pressure changes.

**Checking for proper torque should be done at room temperature.**

## 5. THERMOSTAT OPERATION

### 5.1 THERMOSTAT REPLACEMENT

17. Drain the cooling system.
18. Remove the bolts, the thermostat housing and the thermostat. Carefully clean the thermostat seat and all cylinder head-to-thermostat housing mating surfaces.

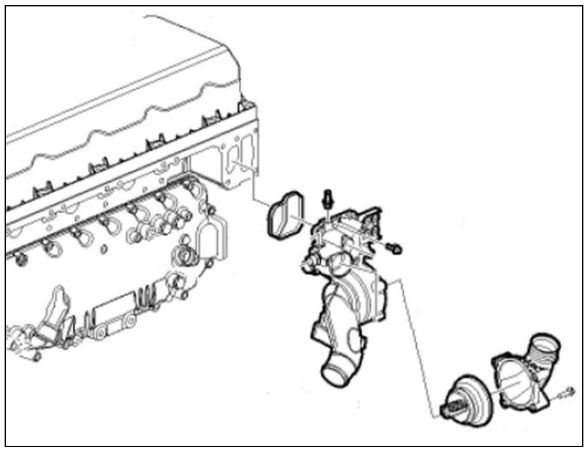

**FIGURE 15: VOLVO D13 THERMOSTAT HOUSING**

19. Install the new thermostat. Make sure that the rubber seal remains properly seated.
20. Position the thermostat housing to the cylinder head, install the bolts and tighten.

**TORQUE: 15-21 lb-ft (20-28 Nm)**

21. Install the rubber radiator hose to the thermostat housing. Position the clamp and tighten to secure.
22. Fill the system with the recommended coolant.
23. Start the engine, check for leaks and proper operation. After shutdown, replenish fluids as necessary.

### 5.2 CHECKING NEW THERMOSTAT

A function check must be carried out before installing a new thermostat.

| *NOTE* |
| --- |
| *Check to be sure that the new thermostat closes fully. This can be done by holding it up to the light to check that there is no visible gap at the opening point. If the thermostat does not close properly, replace it.* |

1. Warm up water in a receptacle to 75°C (167°F) and immerse the thermostat in the water. Use a piece of wire attached to the thermostat.

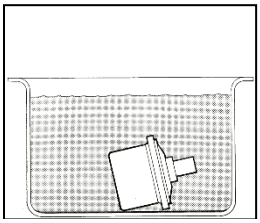

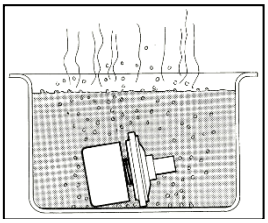

2. After at least 30 seconds, check that the thermostat is still closed.
3. Now warm the water to 100°C (212°F). After at least 30 seconds at the boiling point, check that the thermostat has opened at least 7mm (9/32in). If the thermostat has not opened, it must be replaced. A good thermostat starts to close at 95°C (203°F) and is fully closed at approximately 85°C (185°F).

## 6. COOLANT

### 6.1 COOLANT LEVEL VERIFICATION

*Cold engine* coolant level is correct when coolant is visible halfway up through the surge tank lateral sight tube on the H3 series or when the coolant level is visible between the two level marks in the X3 Series recovery tank (Figure 2 & Figure 3). If coolant level is low, fill cooling system.

### 6.2 COOLANT LEVEL SENSOR

This warning device consists of a fluid level probe mounted on the surge tank. The probe sends a signal to the engine control module to indicate coolant level. If the coolant level drops below the probe, the *"Check Engine"* light flashes and a diagnostic code is registered (see section 01*" ENGINE"*).

**CAUTION**

Do not run engine with the “Check Engine” light flashing.

The level probe is mounted on the front of the surge tank.

### 6.3 THAWING COOLING SYSTEM

If the cooling system becomes frozen solid, place the coach in a warm area until the ice is completely thawed.

**CAUTION**

Under no circumstances should the engine be operated when the cooling system is frozen, as it will result in engine overheating due to insufficient coolant.

Once it is thawed, check engine, radiator and related components for damage caused by expansion of frozen coolant fluid.

### 6.4 COOLANT RECOMMENDATIONS FOR VOLVO D13 ENGINE

Use extended life coolant (ELC) meeting Volvo specification VCS2B with *50/50 antifreeze and deionized water mixture ratio or 50/50 prediluted.* This ratio should be used year-round to provide freeze and boil-over protection as well as providing a stable environment for seals and hoses.

**CAUTION**

While mixing is not recommended, extended life coolant (ELC) meeting Volvo specification VCS2B is compatible with other coolants approved by Volvo.

Dilution/mixing with non-equivalent coolants would reduce or eliminate the extended life properties. Therefore, do not mix with non-ELC coolant.

**CAUTION**

On Volvo D13 engine, preferably use *Extended Life Coolant* (ELC) for prolonged drain interval.

**Do not** add supplemental coolant additives (SCA) to extended life coolant.

**Do not** use a coolant filter containing Supplemental Coolant Additives (SCA).

**CAUTION**

Extended Life Coolant (ELC) will test as out of additives (SCA), but SCA should not be added. Shortened engine life may be the result of adding SCA.

A decal located on the surge tank provides information on recommended coolant.



The coolant provides a medium for heat transfer and controls the internal temperature of the engine during operation. In an engine having proper coolant flow, some of the combustion heat is conveyed through the cylinder walls and the cylinder head into the coolant. Without adequate coolant, normal heat transfer cannot take place within the engine, and engine temperature rapidly rises.

To function properly, the cooling system must be pressurized to prevent localized boiling of coolant. The system must be kept clean and leak-free. The filler and pressure caps must be checked periodically for proper operation.

Always maintain cooling system at the proper coolant level, check daily. When topping up coolant, use the same coolant mixture type as the mixture already in the cooling system. Do not mix two different types of coolant.

Do not use antifreeze formulated for automobile gasoline engines, these have a very high silicate content that will clog the radiator and leave unwanted deposits in the engine.

The ELC coolant slow depleting additive chemistry does not require regular testing, but the coolant can be tested with a *FleetFix® Maintenance Test Strip* (to measure nitrite and carboxylate levels*) and the FleetFix® Dilution Test Kit* (to determine contamination and protection levels of the ELC coolant).
The freeze protection level should be checked at least twice a year using a coolant refractometer.

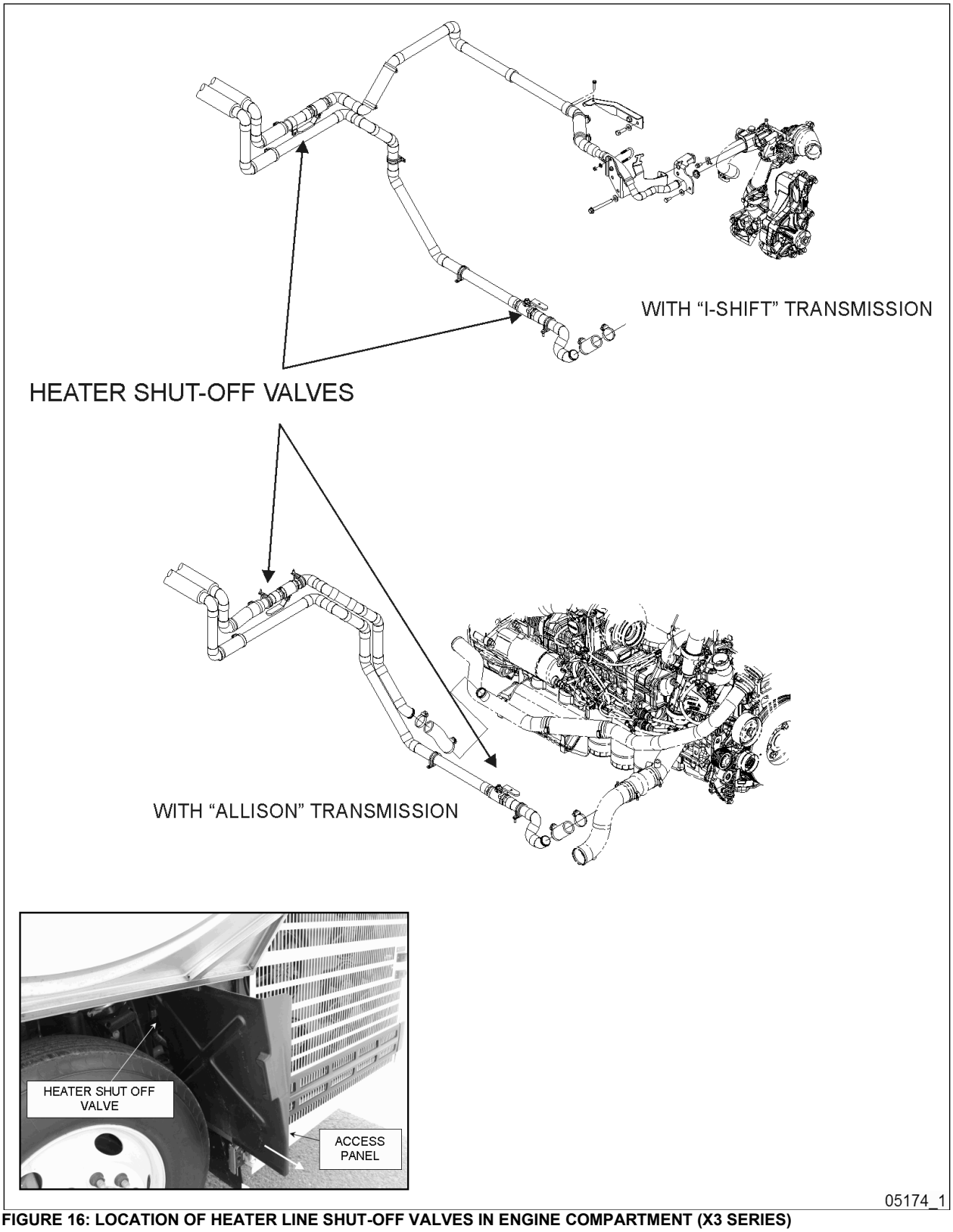


**FIGURE 16: LOCATION OF HEATER LINE SHUT-OFF VALVES IN ENGINE COMPARTMENT (X3 SERIES)**

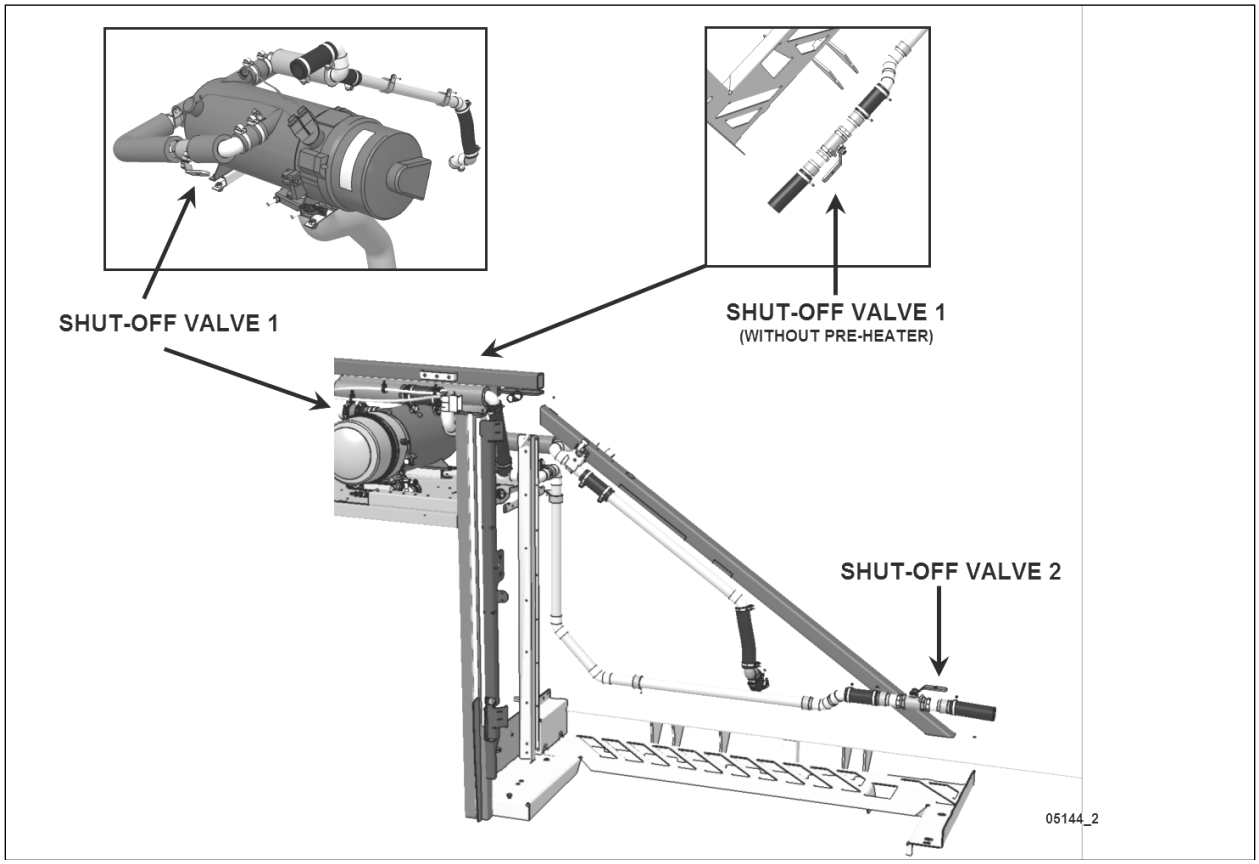


**FIGURE 17: LOCATION OF HEATER LINE SHUT-OFF VALVES IN ENGINE COMPARTMENT (H3 SERIES)**

## 6.5 COOLANT SAMPLING

| *NOTE* |
|---|
| *The following procedure is provided for reference only.*<br>*Instructions coming with the laboratory test kit take precedence over this procedure.* |

| **WARNING** |
|---|
| Before proceeding with the following steps, make sure the coolant has cooled down. The sudden release of pressure from a heated cooling system can result in loss of coolant and possible personal injury (scalding) from the hot liquid.<br><br>Sampling should be performed on a *cold engine*. |

Providing a sample of coolant for lab analysis may be required at some point in the life of the vehicle.

Typical material required:

- Hand Vacuum Pump w/ bottle provision

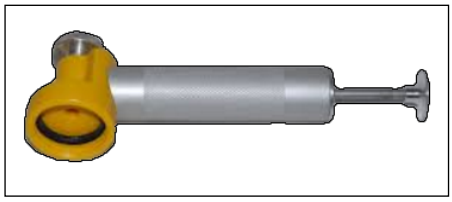

- Sample bottle
- Plastic tube (1/4 “refrigerator” tube)
- Nitrile gloves
- Safety glasses
- Shop Towels

*NOTE*

*Watch out for accidental contamination!*

*Hand vacuum pump should be used for* coolant sampling only *to prevent cross-contamination.*

*Also, ensure cleanliness throughout this procedure to make sure the coolant sample is not contaminated accidentally.*

Sampling should be performed on the surge tank, on a cold engine.

If the vehicle has been standing still for a significant period, drive it around 30 min up to normal operating temperature. Then let it cool down.

1. Pull the pressure cap off the surge tank. Refer to Figure 2 for location of cap.
2. Thread the sample bottle to the pump. Hand tightens.
3. Slide the plastic tubing in the fitting on the pump until it exceeds about 1/2 inch into pump cavity.
4. Insert tube in the surge tank about half way to the bottom. (Do not draw sample in the bottom of the surge tank.)
5. Pump until sample bottle is about 2/3 full. Do not overfill.
6. Loosen pump fitting to remove tube from pump. Allow any coolant in the tube to flow in the bottle.
7. Remove sample bottle and install cap.
8. Throw plastic tube away. (Not to be re-used)
9. Complete any forms required by the laboratory.

## 7. DRAINING COOLING SYSTEM

Use the following procedures to drain the cooling system partially or completely.

To drain engine and related components:

1. Stop engine and allow engine to cool. Close both heater line shutoff valves.

On X3 Series vehicles, the valves are located in the engine compartment. One is located under the turbocharger inlet pipe in the lower L.H side of the engine compartment; another valve is located behind the L.H. tag axle wheel and is accessible by lifting the hinged rear wheel fender and removing the access panel behind it (Figure 16).

On the H3 Series vehicles, one valve is located in the engine compartment near the water pump (Figure 17). Another valve *i*s located behind rear fender, above the L.H. rear wheel housing near the optional coolant heater.

*NOTE*

*Refer to section 22 under "Preheating System" for information about preheater access and heater line shutoff valve.*



**MAINTENANCE**

**Cooling system**

Drain, flush, thoroughly clean and refill the system at the intervals specified by the Lubrication And Servicing Schedule in Section 24: LUBRICATION & SERVICING.

When using ELC, **do not** use a filter that contains Supplemental Coolant Additives (SCA).



**WARNING**

Before proceeding with the following steps, make sure the coolant has cooled down. The sudden release of pressure from a heated cooling system can result in loss of coolant and possible personal injury (scalding) from the hot liquid.

2. Close the shut-off valve on the coolant filter mounting head and remove filter (perform only if filter as to be replaced).
3. Open the shut-off valve on the coolant filter mounting head and drain the coolant into a suitable container. Close the shut-off valve.

4. Unscrew the surge tank pressure cap of the H3 Series vehicles counterclockwise, ¼ turn to let air enter the system and permit the coolant to drain completely from system. *On X3 Series, release the pressure using the pressure release valve before removing the pressure cap.*

**CAUTION**

***On X3 Series vehicles, never open the surge tank pressure cap without making sure first that the system is completely depressurized.*** **Coolant under pressure (hot or not) may cause serious injuries and eyes damages.**

5. Connect coolant extractor (Figure 18). Use coolant extractor to drain the coolant from the engine. An alternate method is to drain the coolant into a suitable container using the drain hose.

**DANGER**

Coolant is toxic; risk of poisoning. Do not drink coolant. Use proper hand protection when handling. Keep coolant out of reach of children and animals. Failure to follow these precautions can cause serious illness or death.

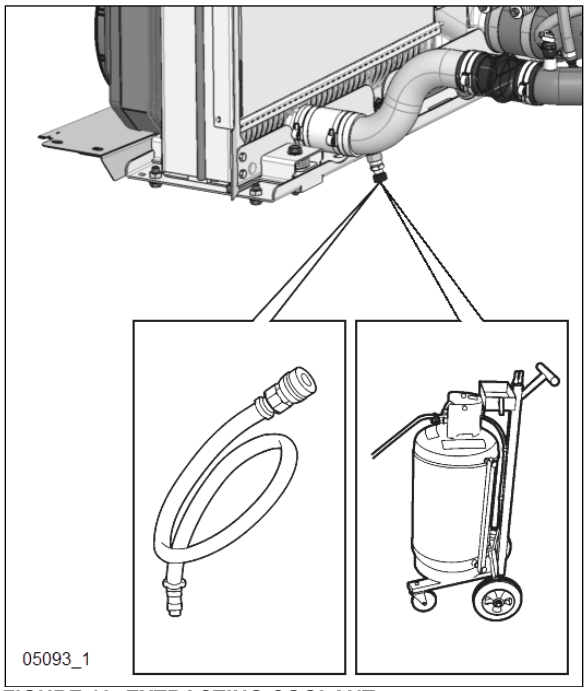


**FIGURE 18: EXTRACTING COOLANT**

6. Open the radiator drain cock.
7. Remove the transmission oil cooler. Drain, flush and inspect. Refer to Section 7, "TRANSMISSION" for oil cooler maintenance or preventive replacement.

**CAUTION**

If freezing weather is anticipated and the engine is not protected with antifreeze, drain the cooling system completely when the vehicle is not in use. Trapped water in the cylinder block, radiator or other components may freeze and expand resulting in damages. Leave the drain plugs open until the cooling system can be filled with coolant fluid. Do not run engine with cooling system empty.

To drain the entire system, do the previous steps while maintaining the shutoff valves in the open position; follow procedure under *"Draining Heating System"* in Section 22.

## 8. FILLING COOLING SYSTEM

If only the engine and related components were drained, maintain the two heater line shutoff valves in their closed position, then proceed as follows:

1. Close radiator drain cock.
2. Open the shut-off valve on the coolant filter mounting head.
3. Refill cooling system from the surge tank filler cap inlet with the recommended ethylene glycol-based antifreeze and water solution of the required concentration using the coolant extractor.

*NOTE*

*Make sure the purge lines are properly connected and not obstructed. The purge lines (thermostat housing dome, radiator top tank, transmission oil cooler or delivery line) are required to ensure complete engine fill and proper purging of air in the system.*

*NOTE*

*The coolant level should remain within two inches of the tank filler neck.*

4. Install the pressure cap, then start the engine and run it at fast idle until reaching normal operating temperature. Check for leaks.

| *NOTE* |
| --- |
| *If for any reason, the coolant level drops below the surge tank level probe, the Check Engine warning light will illuminate.* |

5. Stop engine and allow cooling.
6. Open the two heater line shutoff valves, check the coolant level and add as required.

| **CAUTION** |
| --- |
| Never pour cold coolant into a hot engine. The sudden change in temperature may crack the cylinder head or block. |

If the entire system has been drained, redo the previous steps while maintaining the two heater line shutoff valves in the "Open" position. With engine running, activate the driver's and central heating systems to permit coolant circulation. Complete the procedure by bleeding the heater cores as explained in Section 22, under *"Bleeding Heating System".*

## 9. FLUSHING

If the cooling system is contaminated, flush the cooling system as follows:

1. Drain the coolant from the engine.
2. Refill with clean water.

| **CAUTION** |
| --- |
| If the engine is hot, fill slowly to prevent rapid cooling and distortion of the engine castings. |

3. To thoroughly circulate the water, start and run the engine for 15 minutes after the thermostats have opened.
4. Fully drain system.
5. Refill with clean water and operate for 15 minutes after the thermostats have opened.
6. Stop engine and allow cooling.
7. Fully drain system.

Vehicles without coolant filters:

Fill with a 50/50-antifreeze/water solution and add required inhibitors.

Vehicles with coolant filters:

Fill with a 50/50-antifreeze/water solution. Replace coolant filter as per the Lubrication and Servicing Schedule in section 24 if required.

Dispose of spent fluids in an environmentally responsible manner according to regulations in effect in your area.

| **MAINTENANCE** |
| --- |
| **COOLING SYSTEM CAPACITY Including heating system (approximation)**:<br>H3 Series 26 US gal (99 liters)<br>X3 Series 22.5 US gal (85 liters) |

### 9.1 COOLING SYSTEM DESCALERS

If the engine overheats and the water pump, coolant level and thermostat operation have been found to be satisfactory, it may be necessary to flush and de-scale the cooling system.

1. Drain the coolant from the engine.
2. Fill system with clean water.
3. Add the required amount of a reputable commercially available de-scaling product (aluminum & copper compatible). It is important that product directions be thoroughly read and followed regarding duration of the treatment, temperature and product mix ratio).

**⚠ CAUTION**

Only use de-scaling products sold by a reputable manufacturer, product must be aluminum and copper compatible and must be safe for rubber hoses and gaskets.

*Some de-scaling products will require the use of a neutralizing agent before coolant system refill*

Carefully follow manufacturer's directions to avoid cooling system damage when using descaling products.

Never use "home-brewed" descaling solution containing caustic or acid products not intended for cooling system descaling or having unknown active product concentration.

4. Drain descaling solution from the cooling system.
5. Refill with clean water and carefully rinse the cooling system to completely evacuate all remaining descaling solution.
6. On heavily contaminated system, reverse flush the cooling system to prevent remaining dirt and scale deposits from clogging the radiator tubes or being forced through the water pump (refer to paragraph 9.2 *Reverse Flushing* below).
7. Flush the system.
8. Refill system with appropriate coolant.

### 9.2 REVERSE FLUSHING

After the engine and radiator have been thoroughly de-scaled, they should be reverse-flushed. The water pump should be removed and the radiator and engine reverse-flushed separately to prevent dirt and scale deposits from clogging the radiator tubes or being forced through the pump. Reverse flushing is accomplished by hot water, under pressure, being forced through the cooling system in a direction opposite to the normal flow of coolant, loosening and forcing deposits out.

The radiator is reverse flushed as follows:

1. Remove the radiator inlet and outlet hoses and replace existing radiator cap with a new one.
2. Attach a hose to the top of the radiator to lead water away from the engine.
3. Attach a hose at the bottom of the radiator and insert a flushing gun in the hose.
4. Connect the water hose of the gun to the water outlet and the air hose to the compressed air outlet.
5. Turn on the water and when the radiator is full, turn on the air in short blasts, allowing the radiator to fill between blasts.

*NOTE*

*Apply air gradually. Do not exert more than 138 kPa (20 psi) air pressure. Too great a pressure may rupture a radiator tube.*

6. Continue flushing until only clean water is expelled from the radiator.

The cylinder block and cylinder head water passages are reverse flushed as follows:

1. Remove the thermostats and the water pump.
2. Attach a hose to the water inlet of oil cooler housing to drain water away from engine.
3. Attach a hose to the water outlet at the top of the cylinder head (thermostat housing) and insert the flushing gun in the hose.
4. Turn on the water until the jackets are filled, and then turn on the air in short blasts. Allow jackets to fill with water between air blasts.
5. Continue flushing until the water from the engine runs clean.

If scale deposits in the radiator cannot be removed by chemical cleaners and reverse flushing as outlined above, it may be necessary to remove the upper tank and rod out the individual radiator tubes with flat steel rods. Circulate the water through the radiator core from the bottom to the top during this operation.

## 10. SPIN-ON COOLANT FILTER

The optional engine cooling system filter is used to filter out impurities such as scale or sand from the coolant. The filter is mounted on the frame below the turbocharger inlet tube (Figure 19).

**To replace a filter:**

1. Close the filter shutoff cock on the filter mounting head and unscrew the old filter from mounting.

**WARNING**

Failure to relieve cooling system pressure may result in personal injury.

2. Remove and discard the filter. Recover the coolant remaining in the filter with a suitable container.
3. Clean the filter adapter with a clean, lint-free cloth.
4. Coat surface of gasket with clean antifreeze, tighten 2/3 to 1 turn after gasket makes contact with head.
5. Open the filter shutoff cock.
6. Start engine and check for leaks.

**CAUTION**

Do not exceed recommended service intervals.

**MAINTENANCE**

**Coolant filter**

Replace the coolant filter cartridge at the intervals specified by the Lubrication And Servicing Schedule in Section 24: LUBRICATION & SERVICING.

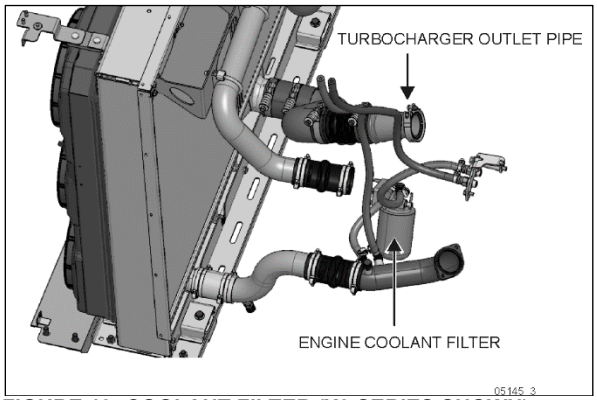


**FIGURE 19: COOLANT FILTER (X3 SERIES SHOWN)**

## 11. COOLING ASSEMBLY

The cooling assembly uses a total of 8 identical 12 inches (305mm) brushless (24V) electric cooling fans to dissipate the heat generated by the engine. The two first fans are used by the charge air cooler (CAC) to cool the hot compressed air coming from the turbocharger; the remaining 6 fans are used by the radiator.

Each fan is fixed to a shroud by 4 hex screws and is individually connected to the circuit breaker box through a main wiring harness (*refer to section 06 ELECTRICAL for more information regarding breaker box components and harness*).

The shroud assists in directing the air flow generated by the fans through the radiator/CAC assembly with maximum efficiency and is sealed to the radiator/CAC assembly (cooling pack) with rubber seals. The shroud is hinged and can be "pivoted" out of the way to inspect or clean the radiator/CAC fins and tanks.

A cover is installed over the shroud to protect the fan harness and connectors from the elements.

**CAUTION**

The fan shroud is an essential component used to achieve maximum air flow capacity through the cooling assembly. To prevent overheating, inspect rubber seal regularly to ensure proper sealing.

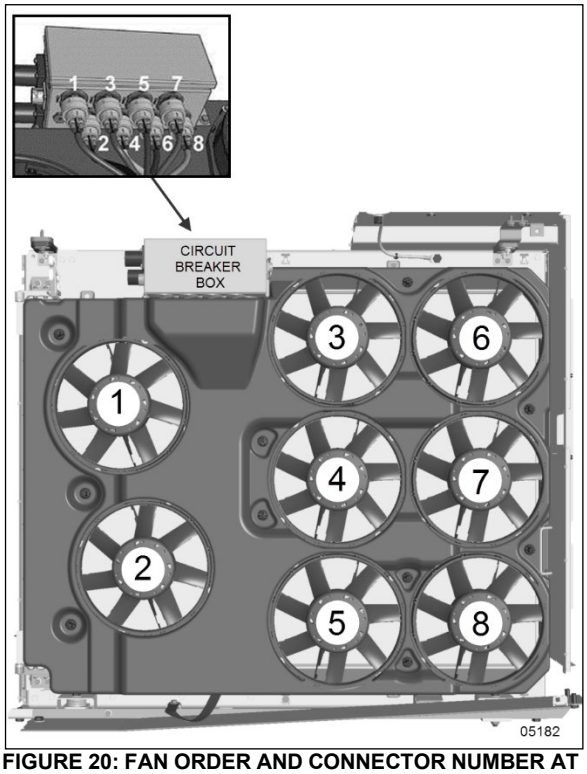


**FIGURE 20: FAN ORDER AND CONNECTOR NUMBER AT CIRCUIT BREAKER BOX**

## 11.1 MAINTENANCE

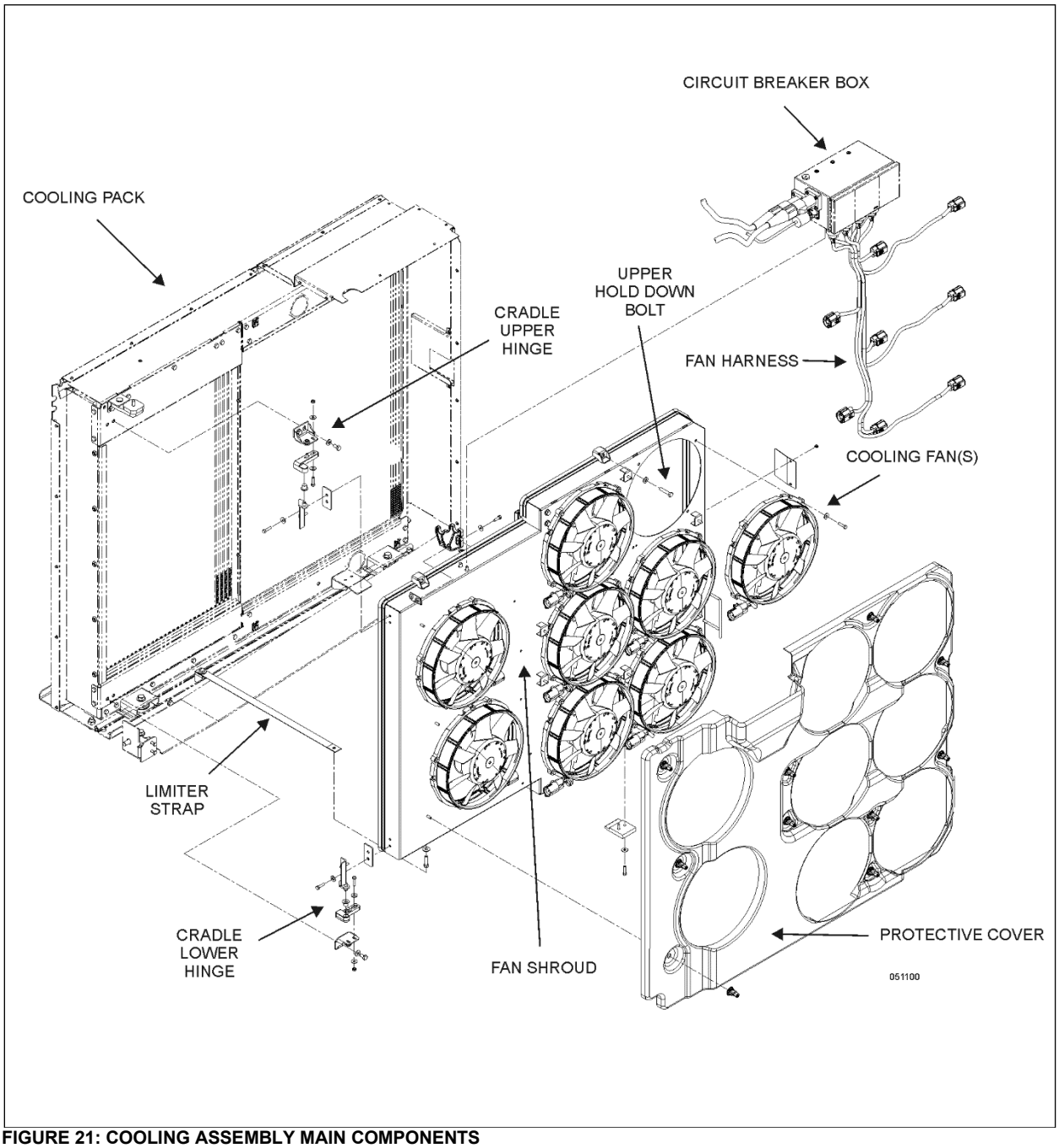


**FIGURE 21: COOLING ASSEMBLY MAIN COMPONENTS**

## WARNING

**Cooling fans may start when the engine is shut down in the following conditions:**

- If a High Exhaust Temperature condition exists (e.g. following regeneration).
- During “Motor Test” sequence.

## MAINTENANCE

Inspect fan blades regularly, check for dirt or grime accumulations on the blade that could cause vibrations, clean as necessary using water and regular strength degreaser.

Check for cracks and signs of abrasion on the blades that could indicate contact with debris or obstruction during operation.

Check the bottom of the shroud cover and remove debris that could have accumulated. In sub-zero winter area, also check for snow and ice accumulation that could block the fan blades rotation.

Open the fan shroud as necessary (remove top and bottom hex screws shown below) to facilitate cleaning and debris removal.

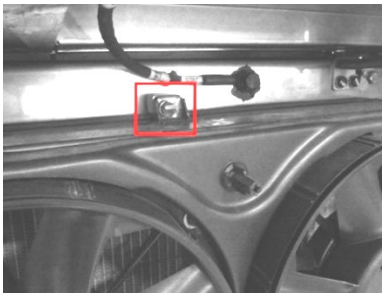

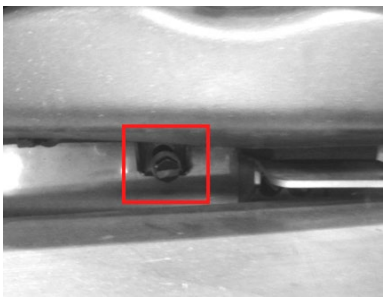

*NOTE*

*Electric cooling fan motors are sealed and certified IP6K9K and IP68.They can therefore be safely power/pressure washed.*

*NOTE*

*To prevent a situation where debris would stick to the radiator door (due to fans suction force) and prevent full cooling performance, all fans are forced to stop for a period of 25 sec. every 30 minutes.*

*NOTE*

*To keep area between fans and shroud cover clean and, in winter, prevent snow and ice accumulation, a cleaning sequence, where the fans will run at full reverse speed for 30 sec. will take place the first time the vehicle reaches 30 km/h (19 mph) after start-up.*

*A winter cleaning mode will also take place if exterior temperature drops below 0°C (32°F) and will activate the fans at full reverse speed for 30 sec every 30 min.*

## CAUTION

Fans are factory balanced by the use of small metal weight clipped to the fan blades, to avoid damaging vibrations during fan operation, do not remove, shift or interchange balancing weights.



## 11.2 COOLING FAN REPLACEMENT

Proceed as follow to remove one (or more) individual fan from the shroud.

1. Remove the cooling fan shroud cover by unscrewing the 10 plastic fasteners holding it to the fan shroud.

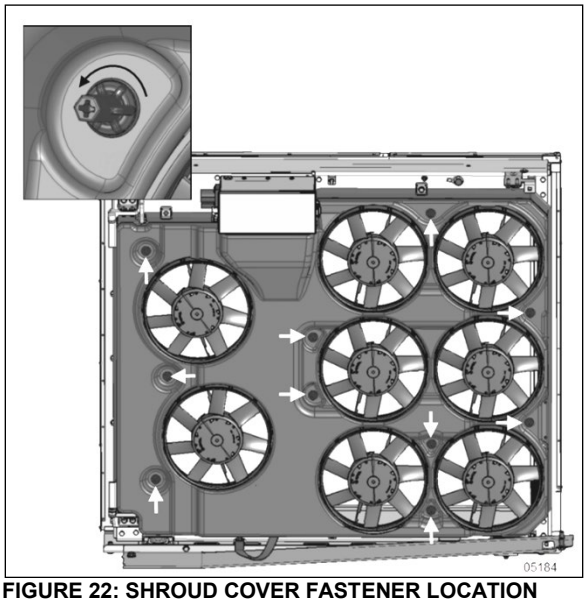


**FIGURE 22: SHROUD COVER FASTENER LOCATION**

2. Unplug the fan from the main fan harness (blue connector).
3. Remove the 4 hex screws holding the fan body to the shroud.
4. Remove the fan.
5. Reverse removal procedure to reinstall the fan and apply specified torque to the fan frame mounting screws.

**TORQUE: 30 lb-in (3 Nm)**

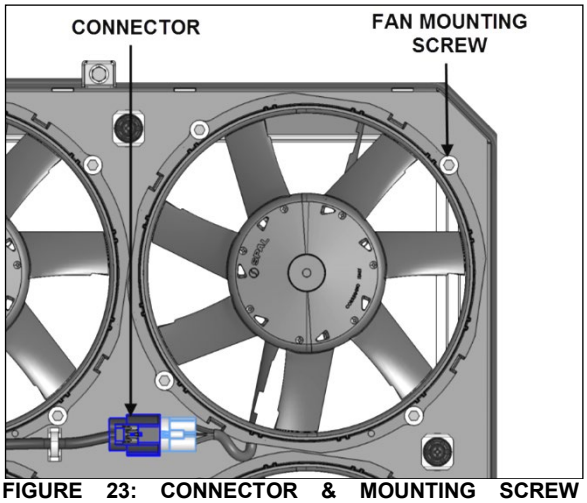


**FIGURE 23: CONNECTOR & MOUNTING SCREW LOCATION**

## 11.3 COOLING FAN SHROUD REMOVAL & INSTALLATION

1. Open rear engine door and set engine stop button to the OFF position (push).
2. Open the radiator door and disconnect the door support arm to allow full door opening (optional).

> *NOTE*
>
> *X3 Series vehicles; If fan shroud is removed in preparation for the removal of the complete cooling assembly (see 11.4 in this section); the radiator door must be removed from the vehicle.*
>
> - *Open and support door.*
> - *Disconnect side marker lights.*
> - *Remove light harness from door.*
> - *Unscrew lower hinge from vehicle.*
> - *Lift and remove door.*
>
> *See section 18b BODY X-Series for more information.*

3. Disconnect the cooling fans circuit breaker box.
   - Turn the two main harness (black and red) connectors half a turn counterclockwise and pull.
   - Turn the smaller wiring connector 1/3 turn counterclockwise.

- Remove the wires from the wire separator and move them out of the way.

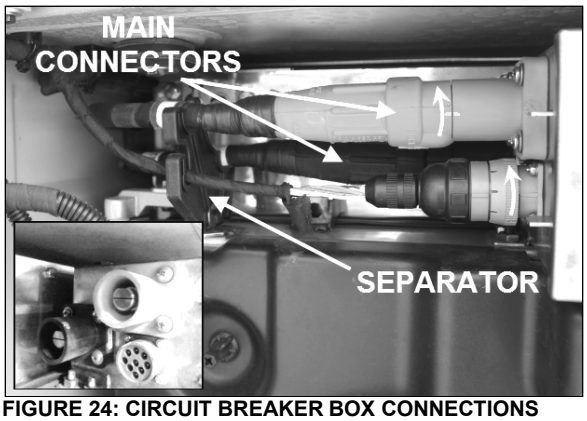


**FIGURE 24: CIRCUIT BREAKER BOX CONNECTIONS**

4. Remove the shroud upper and lower hold down screws and open the shroud assembly (yellow handle).

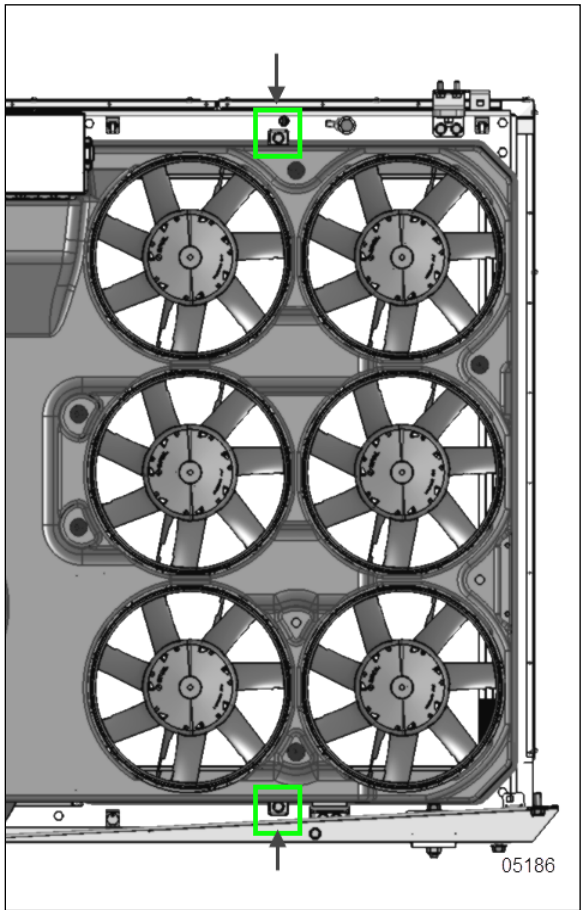


**FIGURE 25: SHROUD HOLD DOWN SCREWS**

5. Unfasten the limiter strap at the bottom of the shroud assembly.

6. Support the bottom of the shroud assembly with a lift table or other suitable equipment.

7. Unscrew the shroud upper hinge at the vehicle structure and remove the hinge.

> ***NOTE***
>
> *It is good practice to scribe the hinge position on the vehicle structure to use as a reference point upon reinstallation. This will minimize the need for hinge adjustment.*

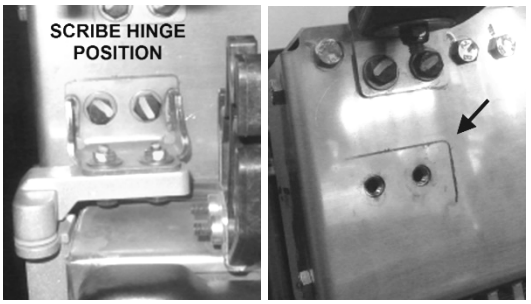


8. Slightly lift the door with the lift table to disengage the lower hinge pin and allow shroud removal from the vehicle.

> ***NOTE***
>
> *Do not lose the plastic bushings installed at the pivot point of both lower and upper hinges.*

9. Reverse removal procedure to reinstall the fan shroud assembly making sure that;

   - The bushings are installed at the hinges pivot point.
   - There is no gap at both hinges between the bushing and the hinge pivot.
   - Main connectors are fully engaged (paint mark are aligned).

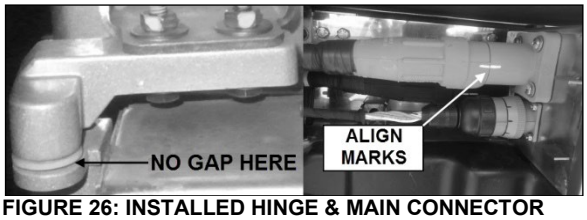


**FIGURE 26: INSTALLED HINGE & MAIN CONNECTOR**

## 11.4 H3 SERIES VEHICLES - COOLING PACK (RADIATOR & CAC) REMOVAL & INSTALLATION

***NOTE***

*For CAC only replacement, removal of the entire cooling pack is not necessary. Refer to paragraph 11.6 in this section for "in vehicle" CAC replacement instructions.*

**WARNING**

**GALVANIC CORROSION PREVENTION**

*Galvanic corrosion (also called bimetallic corrosion or contact corrosion) is an electrochemical process in which one metal corrodes preferentially to another when both metals are in electrical contact.*

To avoid galvanic corrosion problems, the aluminum CAC and radiator have been electrically isolated from the cooling pack stainless frame.

When replacing the entire cooling pack with a new unit, make sure before installation that :

- There is no conductivity between the frame and both CAC and radiator core using a suitable ohmmeter or continuity (buzzer) tester.

*Note: If using ohmmeter, a minimum of 100 000 (100K) ohms must be observed to be considered acceptable for installation.*

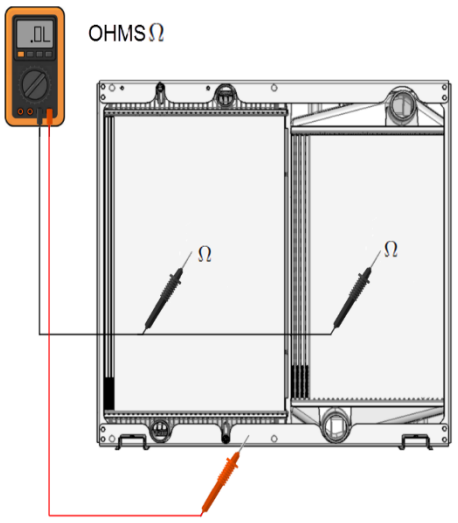


When replacing the CAC or radiator unit only, ensure that:

- The rubber seal is present all around the radiator perimeter and that it is in good condition (replace as necessary).
- Both rubber strips (upper & lower) are present and in good shape at the edge of the upper and lower support section (fan side only).

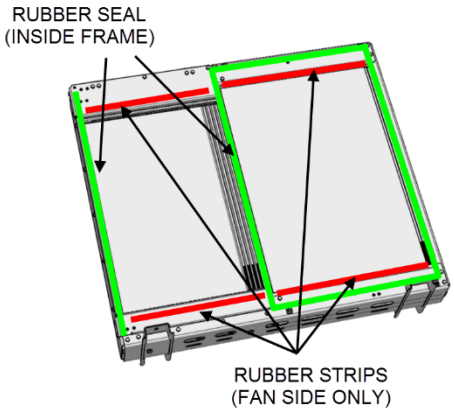


- Both uppers and lowers CAC insulating bushings & washers are present and in good condition at the CAC mounting points (replace as necessary).

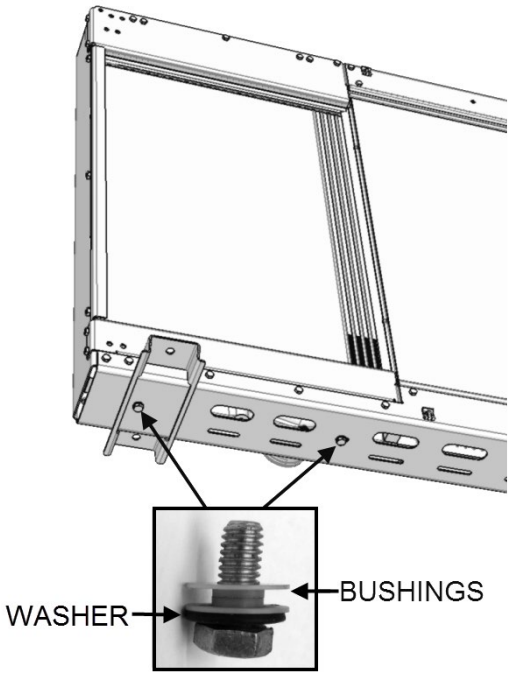


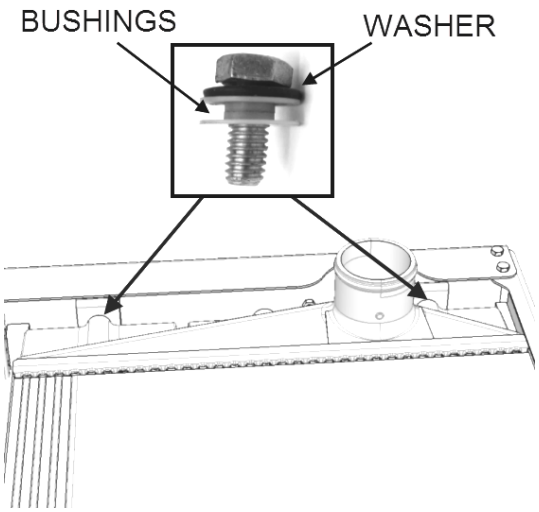


After all the frame sections have been reassembled, check for conductivity between CAC/radiator core and frame *(min 100 000 ohms must be observed).*

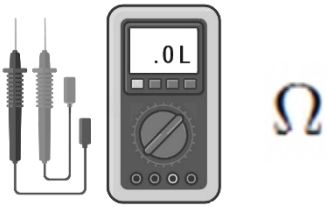


1. Open rear engine compartment door.
2. Open rear engine door and set engine stop button to the OFF position (push).
3. Remove L.H. side hinged rear fender.

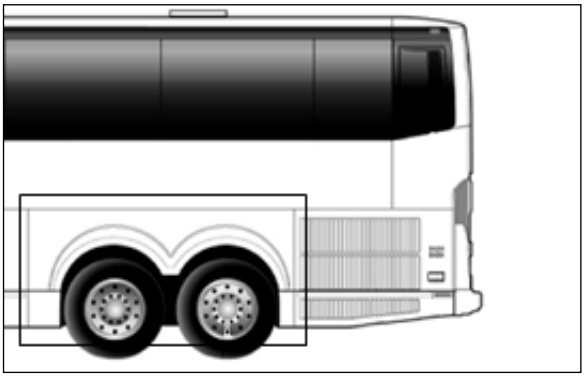

**FIGURE 27: REMOVE REAR FENDER**

4. If the vehicle is equipped with a coolant preheater, loosen the preheater exhaust clamp and remove the exhaust pipe.
5. Unscrew and remove access panel located behind L.H tag axle wheel (remove tag wheel).
6. Access the heater shut-off valve located behind the access panel and set it to the closed position.
7. Set the second heater shut-off valve, located over the tag axle wheel (next to the preheater if so equipped), at the closed position.

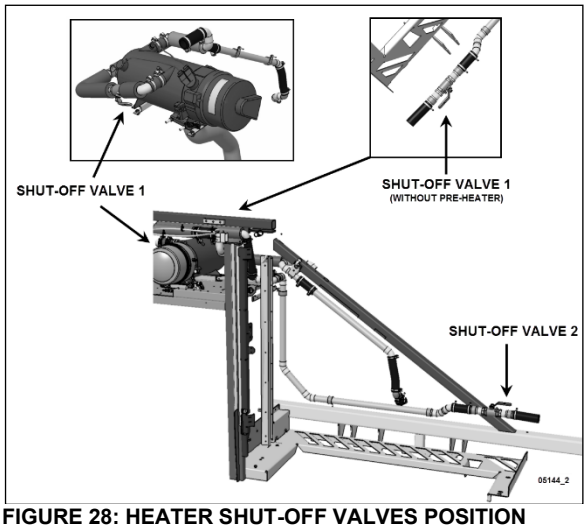


**FIGURE 28: HEATER SHUT-OFF VALVES POSITION**

*8.* Connect coolant extractor to the radiator drain cock and drain the coolant system as per *Draining cooling system in paragraph 7 of this section.*

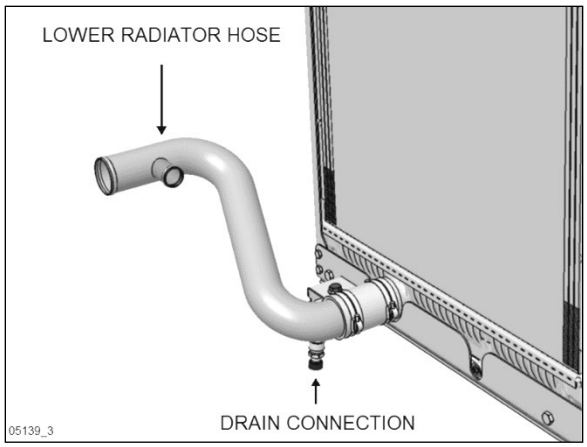


**FIGURE 29: COOLANT DRAIN EXTRACTOR CONNECTION**

**DANGER**

Risk of poisoning. Do not drink coolant. Use proper hand protection when handling. Keep coolant out of reach of children and animals.

9. Disconnect the upper radiator pipe at the radiator bracket junction (loosen U-Bolt and hose clamps).

10. Also disconnect the upper CAC pipe.

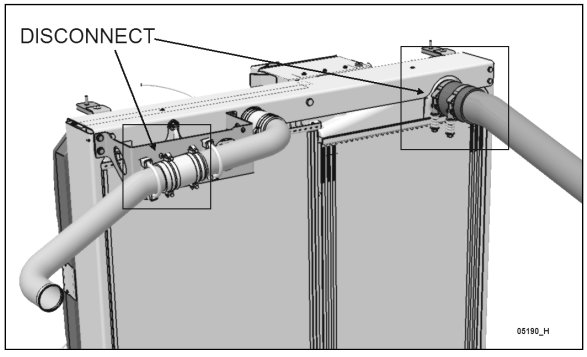


**FIGURE 30: RADIATOR & CAC UPPER CONNECTION**

11. Disconnect the radiator lower pipe at the radiator outlet.

12. Disconnect the lower CAC pipe (turbo outlet).

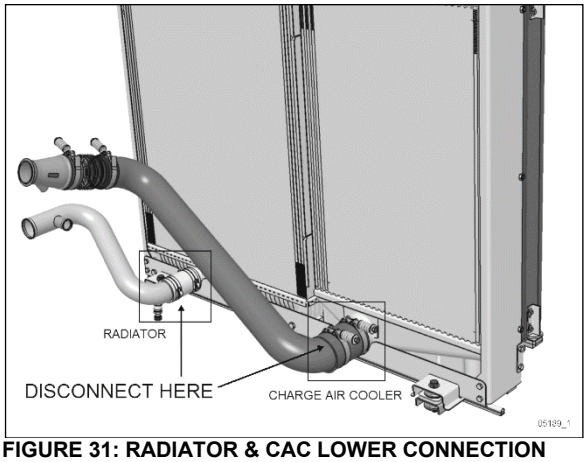


**FIGURE 31: RADIATOR & CAC LOWER CONNECTION**

13. Proceed to the cooling fan shroud removal following *paragraph 11.3* of this section.

14. Disconnect the ground connection at the upper right corner of the cooling assembly.




**FIGURE 32: COOLING ASSEMBLY GROUND**

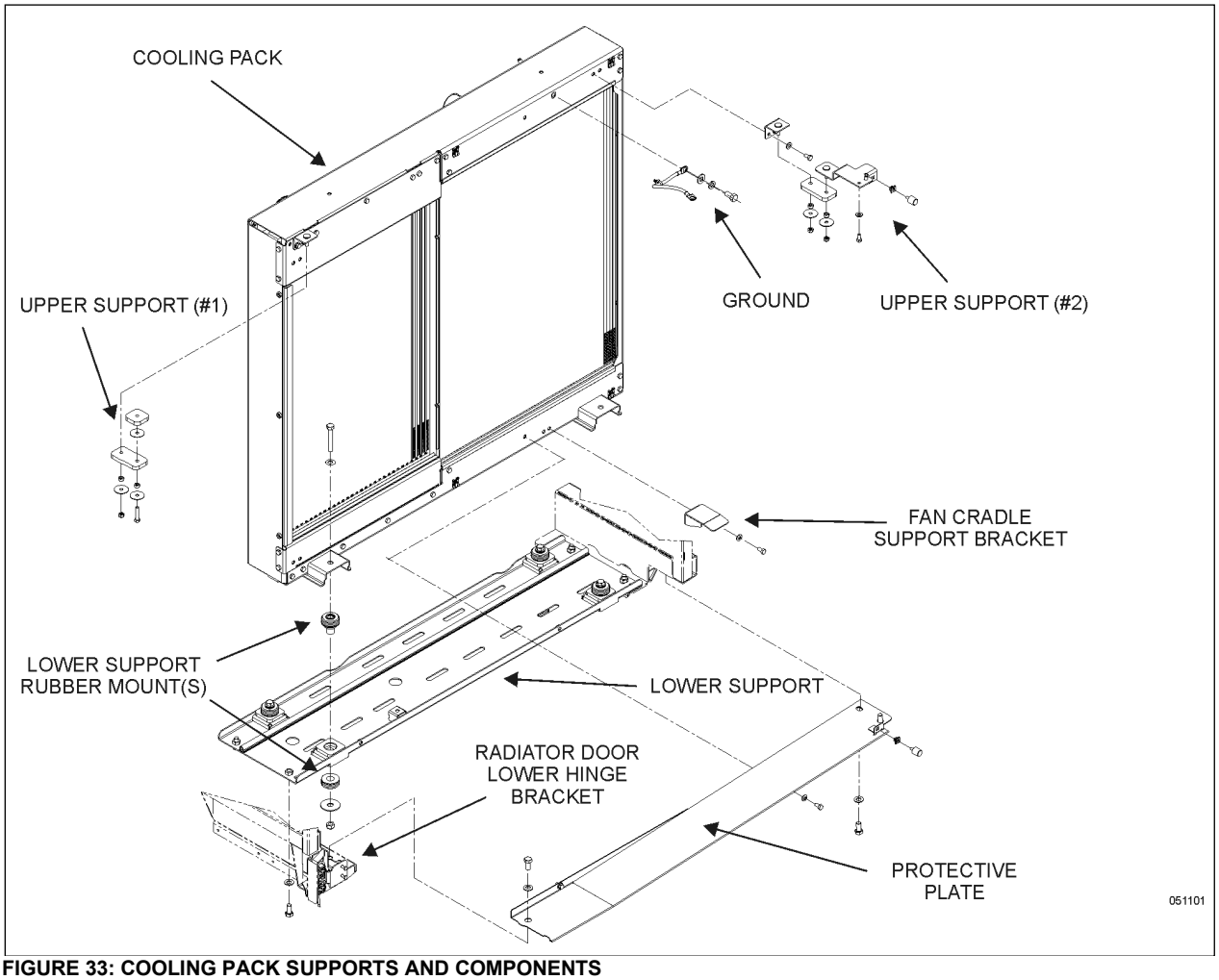


**FIGURE 33: COOLING PACK SUPPORTS AND COMPONENTS**

15. Remove the protective (splash) plate fixed to the cooling pack lower support.

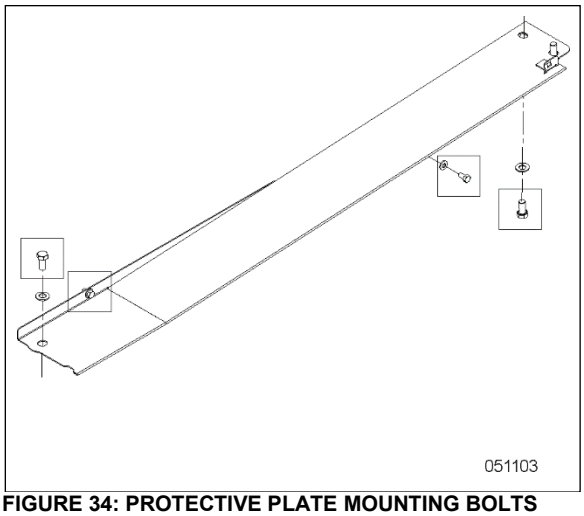


**FIGURE 34: PROTECTIVE PLATE MOUNTING BOLTS**

16. Support the cooling assembly with a lift table positioned under the lower support.

17. Unscrew the lower support from the vehicle (two hex bolts at each end of the support).

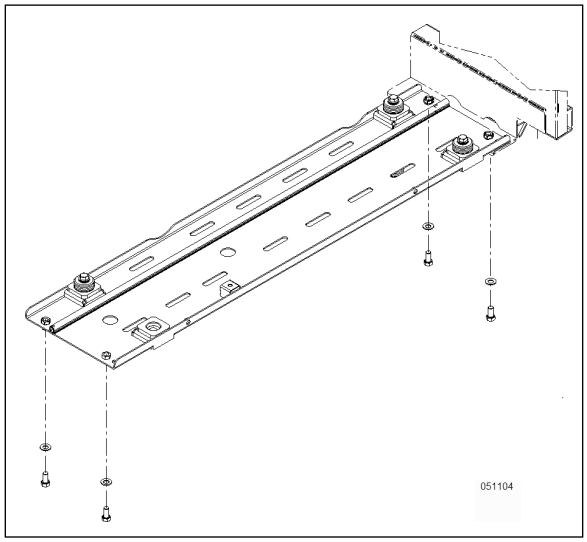


**FIGURE 35: LOWER SUPPORT MOUNTING BOLTS**

18. Unscrew the two upper supports from the vehicle structure so they will be removed with the cooling assembly.

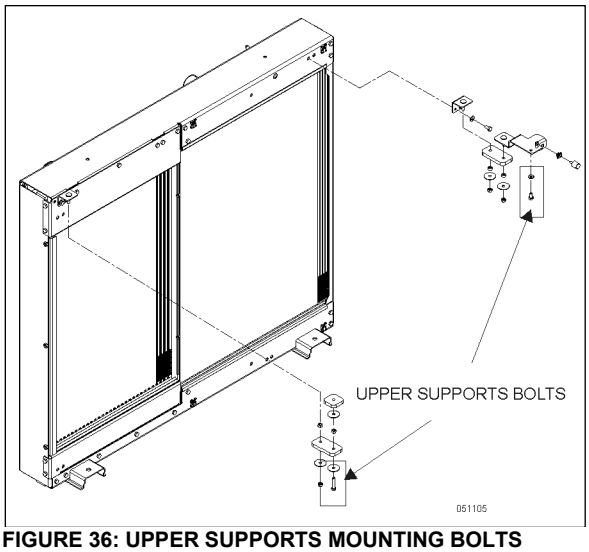


**FIGURE 36: UPPER SUPPORTS MOUNTING BOLTS**

19. Slightly lift the assembly and slide it out of the vehicles.
    - Check interference at the back of the assembly with the pipe section still attached to the assembly and the vehicle structure.

20. To proceed to the ***radiator replacement***, remove radiator upper pipe section, bracket and hardware, unbolt the four support bolts passing through the radiator and holding it to the frame (upper & lower) also unbolt the cooling pack frame upper and lateral sections and slide the old radiator out.

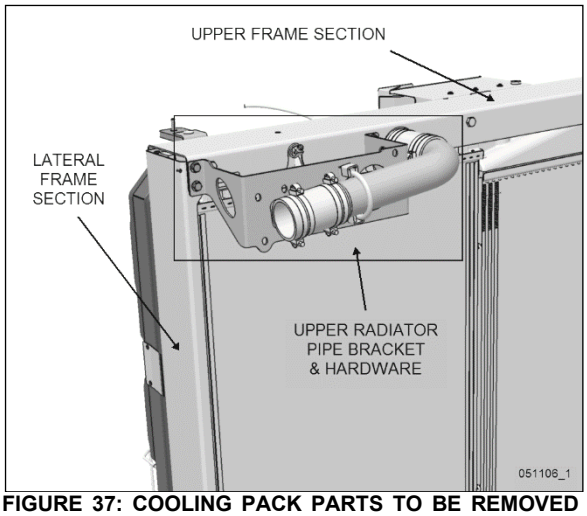


**FIGURE 37: COOLING PACK PARTS TO BE REMOVED FOR RADIATOR REPLACEMENT**

21. Insert a new radiator in the lower support making sure that insulating foam is installed all around the radiator body.

22. Reinstall the four support bolts and the upper and lateral frame sections only (*go to step 59 below*) Torque all support bolts and frame bolts to specified torque below.

    **TORQUE: 9 lb-ft (12 Nm)**

23. To proceed to the ***complete cooling pack replacement***, ignore steps 55 to 57 above and remove and transfer to the new assembly:
    - Both upper supports & brackets
    - Lower support & rubber mounts
    - Shroud support bracket
    - Lower hinge & hinge bracket

    Torque all brackets to specified torque.

    **TORQUE: 9 lb-ft (12 Nm)**

| *NOTE* |
| --- |
| *Reinstallation of the cooling components as a complete assembly is recommended.*<br>*- Install fan shroud on the cooling pack frame then install complete assembly to vehicle structure.* |

24. Lay the cooling pack horizontally at working height (use large workbench or sawhorses) exterior face pointing up.

25. Install fan shroud in position over the cooling pack (make sure the lower hinge is correctly assembled with plastic bushing in place).

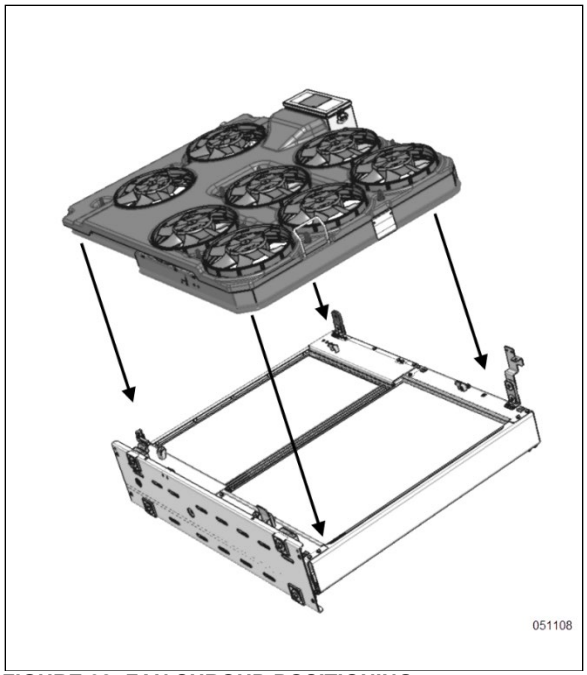


**FIGURE 38: FAN SHROUD POSITIONING**

26. Partially screw down the both upper and lower shroud hold down screws to position the shroud

27. Loosely install the hinges.

28. Adjust the shroud in its final position.

- There should be no gaps between the hinge pivot point and the plastic bushing (upper & lower hinges).

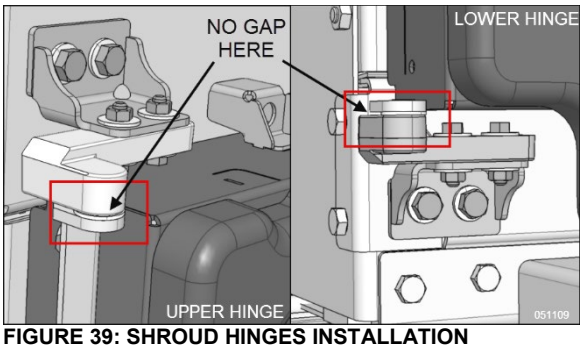


**FIGURE 39: SHROUD HINGES INSTALLATION**

- The bottom of the shroud should fit flat (parallel) against the shroud lower support.

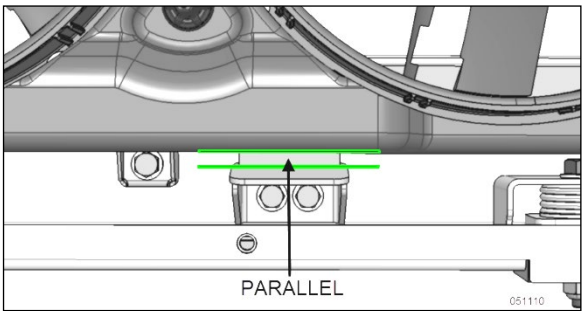


**FIGURE 40: FAN SHROUD PARALLEL TO SUPPORT**

29. Tighten hinges and hold down bolts.

**TORQUE: 68 lb-in (8 Nm)**

30. Put back the cooling assembly in its vertical position on a small lift table.

31. Reinstall the upper radiator pipe section (including bracket and hardware).

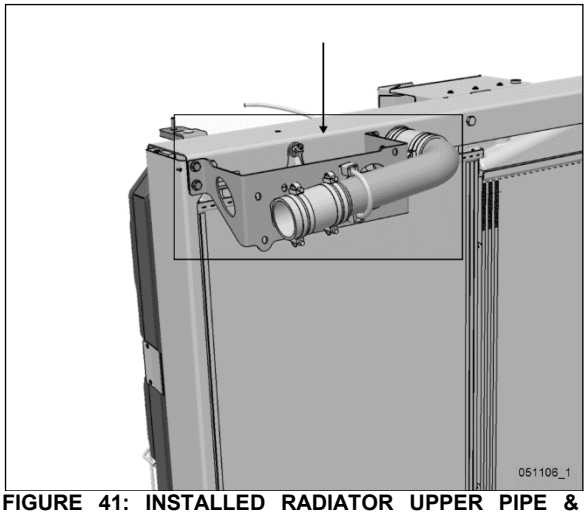


**FIGURE 41: INSTALLED RADIATOR UPPER PIPE & BRACKET**

32. Slide back the cooling assembly into position and reverse removal procedure to reinstall in vehicle.

33. Make sure that there is no conductivity between the CAC/radiator units and the cooling pack frame (*see note at the beginning of paragraph 11.4)*.

34. Fill the vehicle cooling system.

35. Set engine stop button to the ON position (depressed), start the engine and check for coolant leaks.

11.5 X3 SERIES VEHICLES - COOLING PACK (RADIATOR & CAC) REMOVAL & INSTALLATION

***NOTE***

*For CAC only replacement, removal of the entire cooling pack is not necessary. Refer to paragraph 11.6 in this section for "in vehicle" CAC replacement instructions.*

**WARNING**

**GALVANIC CORROSION PREVENTION**

*Galvanic corrosion (also called bimetallic corrosion or contact corrosion) is an electrochemical process in which one metal corrodes preferentially to another when both metals are in electrical contact.*

To avoid galvanic corrosion problems, the aluminum CAC and radiator have been electrically isolated from the cooling pack stainless frame.

When replacing the entire cooling pack with a new unit, make sure before installation that :

- There is no conductivity between the frame and both CAC and radiator core using a suitable ohmmeter or continuity (buzzer) tester.

*Note: If using ohmmeter, a minimum of 100 000 (100K) ohms must be observed to be considered acceptable for installation.*

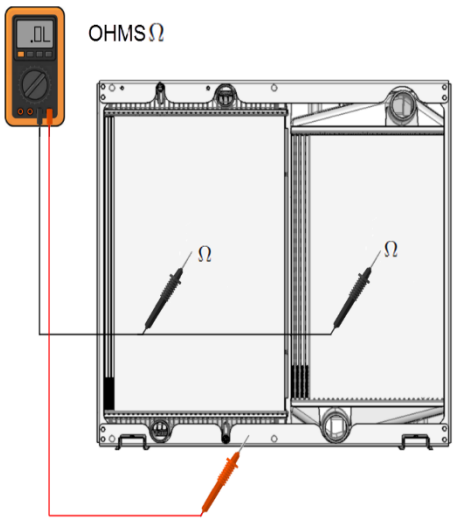


When replacing the CAC or radiator unit only, ensure that:

- The rubber seal is present all around the radiator perimeter and that it is in good condition (replace as necessary).
- Both rubber strips (upper & lower) are present and in good shape at the edge of the upper and lower support section (fan side only).

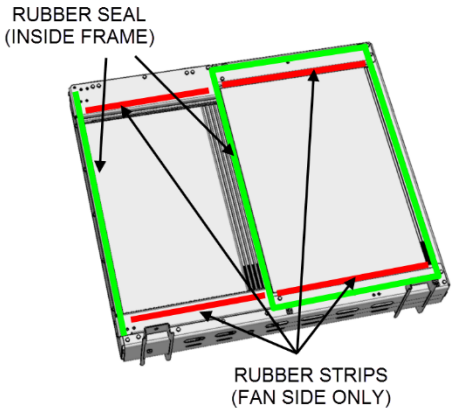


- Both uppers and lowers CAC insulating bushings & washers are present and in good condition at the CAC mounting points (replace as necessary).

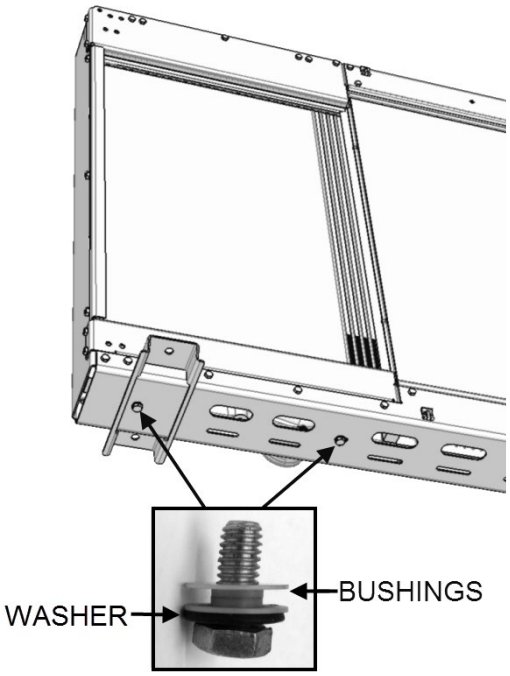


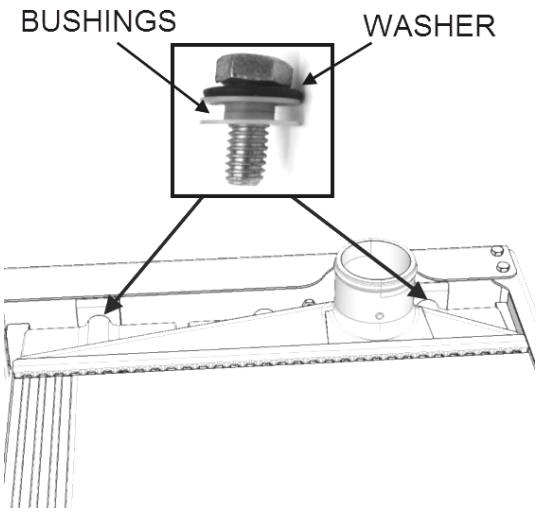


After all the frame sections have been reassembled, check for conductivity between CAC/radiator core and frame *(min 100 000 ohms must be observed).*

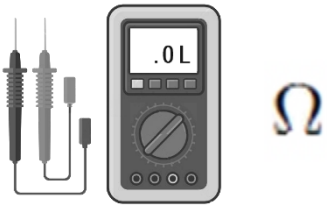


36. Open rear engine compartment door.

37. Open rear engine door and set engine stop button to the OFF position (push).

38. Raise L.H. side hinged rear fender.

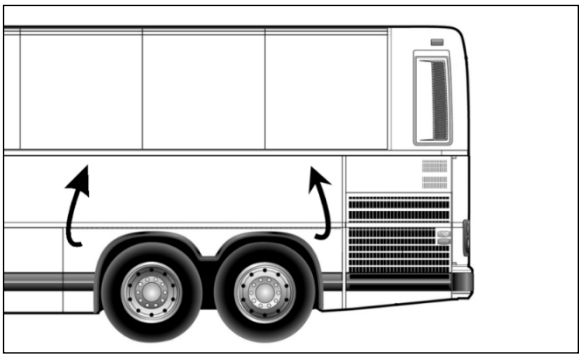

**FIGURE 42: RAISING REAR FENDER**

39. Remove access panel located behind L.H tag axle wheel.

40. Access the heater shut-off valve located behind the access panel and set it to the closed position.

41. Set the second heater shut-off valve, located in the engine compartment below the turbocharger outlet to CAC pipe, at the closed position.

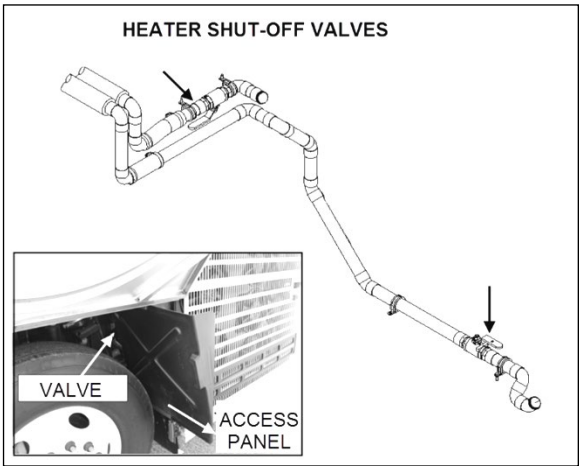


**FIGURE 43: HEATER SHUT-OFF VALVES POSITION**

*42.* Connect coolant extractor to the radiator drain cock and drain the coolant system as per *Draining cooling system in paragraph 7 of this section.*

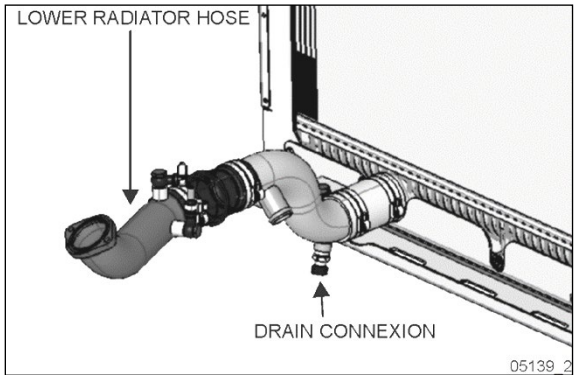


**FIGURE 44: COOLANT DRAIN EXTRACTOR CONNECTION**

**DANGER**

Risk of poisoning. Do not drink coolant. Use proper hand protection when handling. Keep coolant out of reach of children and animals.

43. Disconnect the upper radiator pipe *at the pipe junction* between the radiator and the engine.

44. Also disconnect the upper CAC pipe at the *mid pipe junction*.

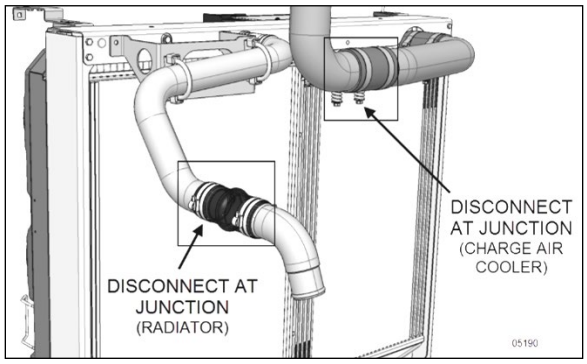


**FIGURE 45: RADIATOR & CAC UPPER CONNECTION**

45. Disconnect the radiator lower pipe directly at the radiator outlet.

46. Disconnect the lower CAC pipe (turbo outlet).

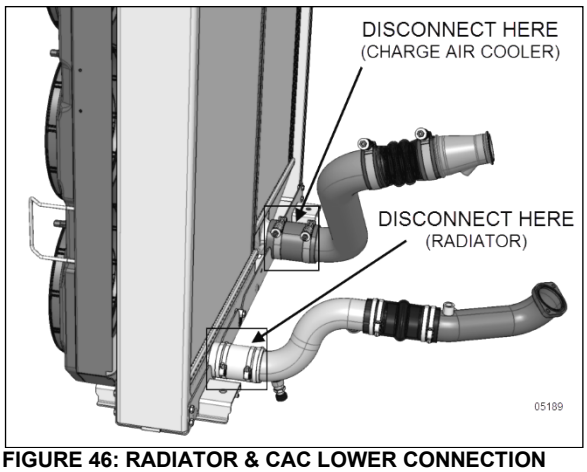


**FIGURE 46: RADIATOR & CAC LOWER CONNECTION**

47. Proceed to the cooling fan shroud removal following *paragraph 11.3* of this section (radiator door must be removed).

48. Disconnect the ground connection at the upper right corner of the cooling assembly.

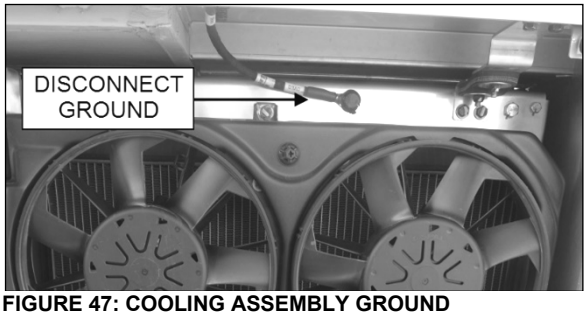


**FIGURE 47: COOLING ASSEMBLY GROUND**

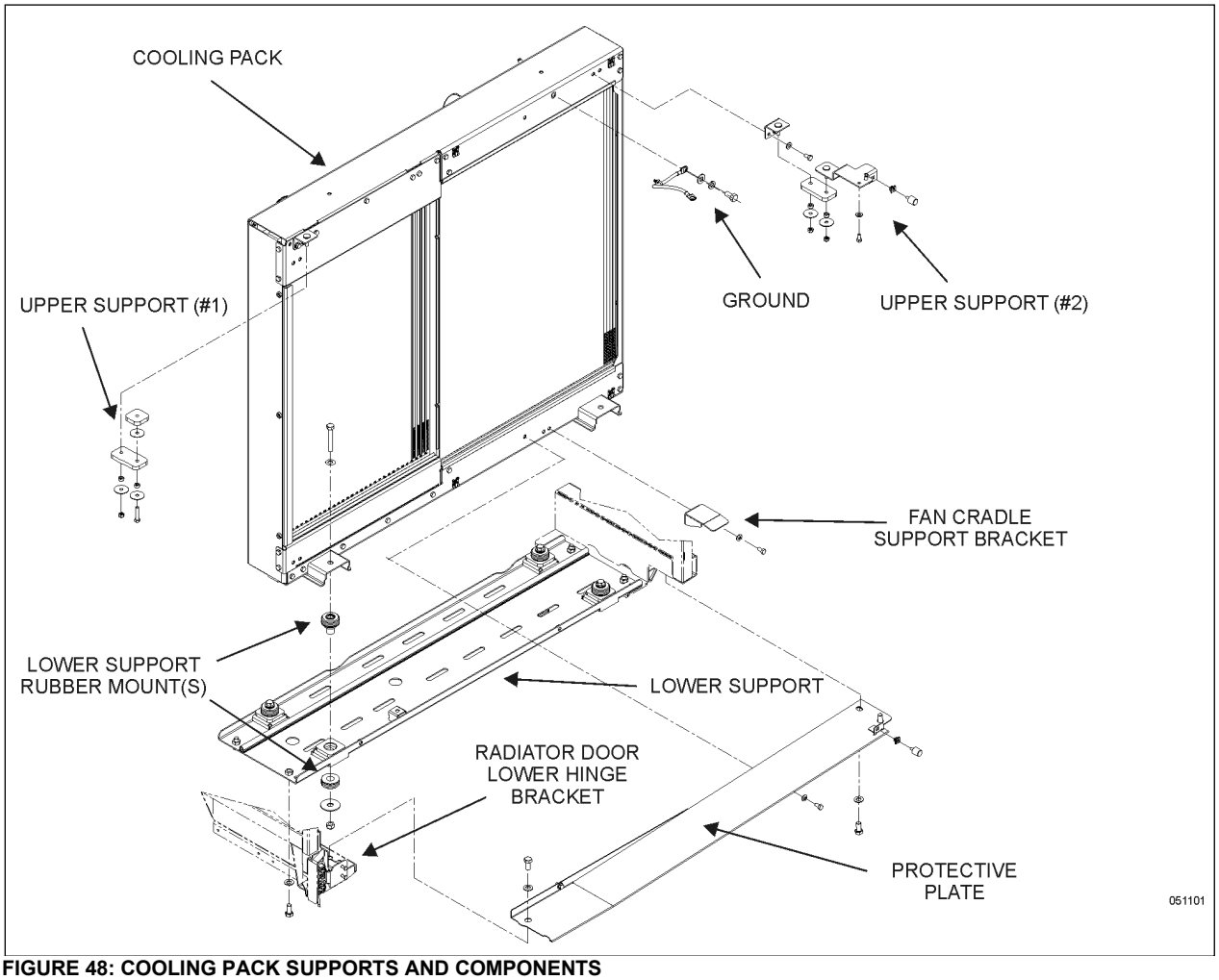


**FIGURE 48: COOLING PACK SUPPORTS AND COMPONENTS**

49. Remove the radiator door lower hinge bracket.

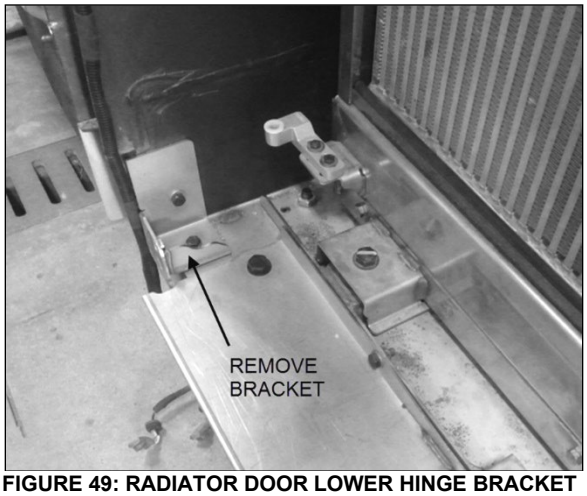


**FIGURE 49: RADIATOR DOOR LOWER HINGE BRACKET**

50. Remove the protective (splash) plate fixed to the cooling pack lower support.

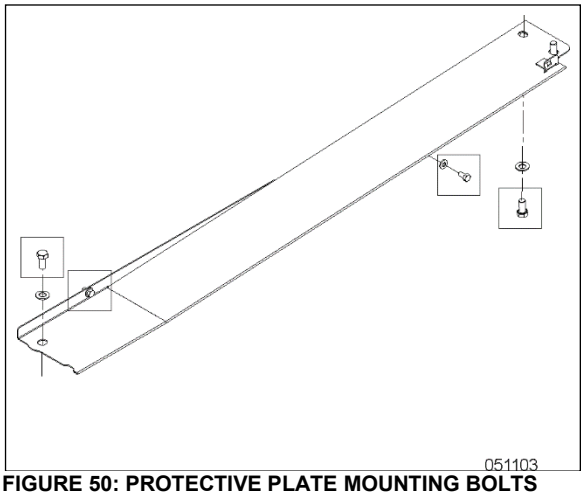


**FIGURE 50: PROTECTIVE PLATE MOUNTING BOLTS**

51. Support the cooling assembly with a lift table positioned under the lower support.

52. Unscrew the lower support from the vehicle (two hex bolts at each end of the support).

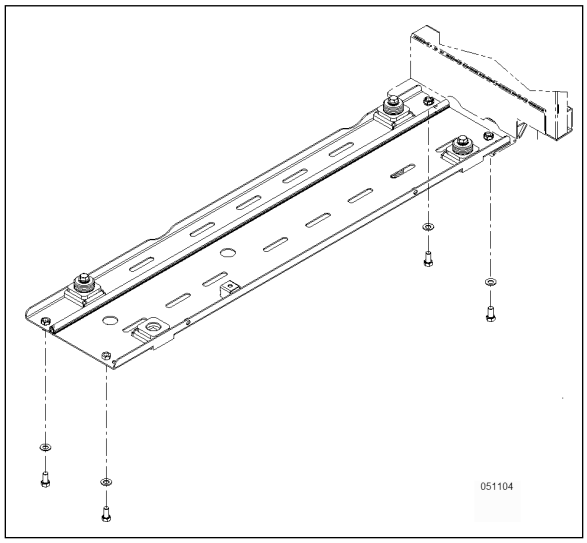


**FIGURE 51: LOWER SUPPORT MOUNTING BOLTS**

53. Unscrew the two upper supports from the vehicle structure so they will be removed with the cooling assembly.

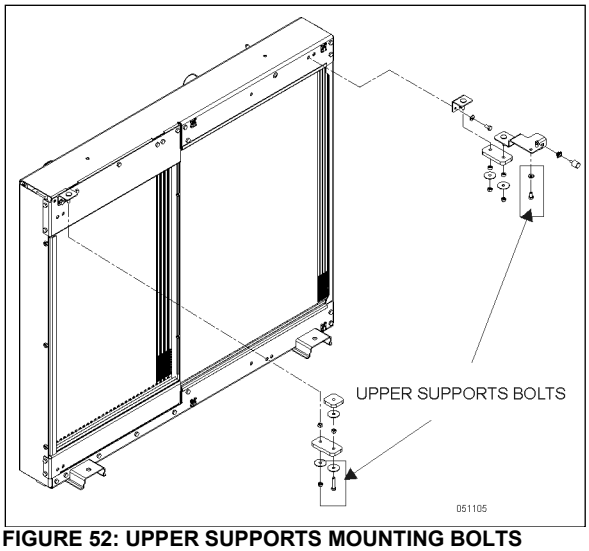


**FIGURE 52: UPPER SUPPORTS MOUNTING BOLTS**

54. Slightly lift the assembly and slide it out of the vehicles.

    - Check interference at the back of the assembly with the pipe sections still attached to the assembly and the vehicle structure (slack hose clamps and turn down tubes as necessary).

55. To proceed to the *radiator replacement*, remove radiator upper pipe section, bracket and hardware, unbolt the four support bolts passing through the radiator and holding it to the frame (upper & lower) also unbolt the cooling pack frame upper and lateral sections and slide the old radiator out.

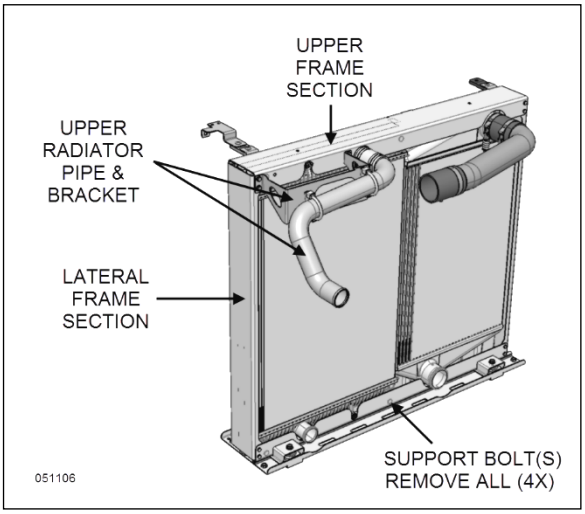


**FIGURE 53: COOLING PACK PARTS TO BE REMOVED FOR RADIATOR REPLACEMENT**

56. Insert a new radiator in the lower support making sure that insulating foam is installed all around the radiator body.

57. Reinstall the four support bolts and the upper and lateral frame sections only (*go to step 59 below*) Torque all support bolts and frame bolts to specified torque below.

**TORQUE: 9 lb-ft (12 Nm)**

58. To proceed to the *complete cooling pack replacement*, ignore steps 55 to 57 above and remove and transfer to the new assembly:

    - Both upper supports & brackets
    - Lower support & rubber mounts
    - Shroud support bracket
    - Lower hinge & hinge bracket

    Torque all brackets to specified torque.

**TORQUE: 9 lb-ft (12 Nm)**

*NOTE*

*Reinstallation of the cooling components as a complete assembly is recommended.*

*- Install fan shroud on the cooling pack frame then install complete assembly to vehicle structure.*

59. Lay the cooling pack horizontally at working height (use large workbench or sawhorses) exterior face pointing up.

60. Install fan shroud in position over the cooling pack (make sure the lower hinge is correctly assembled with plastic bushing in place).

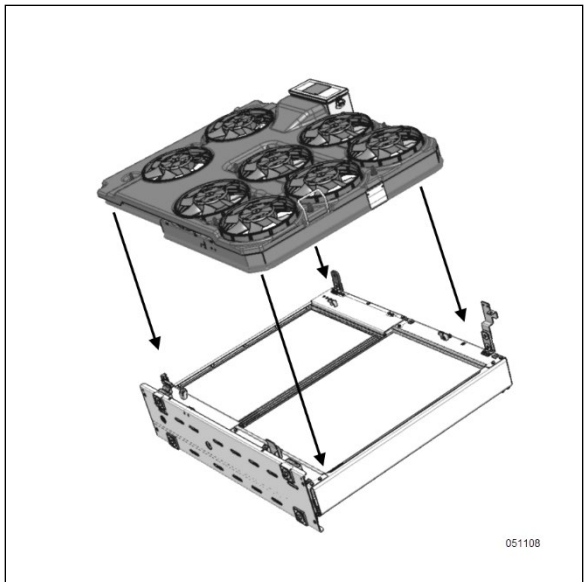


**FIGURE 54: FAN SHROUD POSITIONING**

61. Partially screw down the both upper and lower shroud hold down screws to position the shroud

62. Loosely install the hinges.

63. Adjust the shroud in its final position.

- There should be no gaps between the hinge pivot point and the plastic bushing (upper & lower hinges).

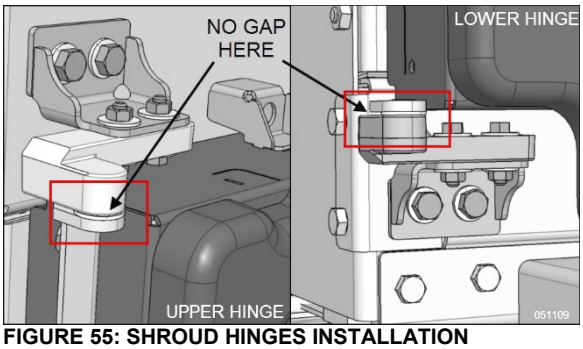


**FIGURE 55: SHROUD HINGES INSTALLATION**

- The bottom of the shroud should fit flat (parallel) against the shroud lower support.

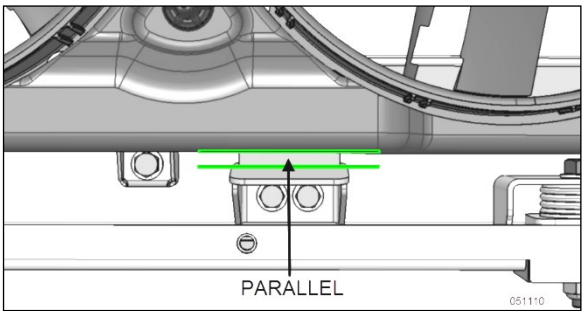


**FIGURE 56: FAN SHROUD PARALLEL TO SUPPORT**

64. Tighten hinges and hold down bolts.

**TORQUE: 68 lb-in (8 Nm)**

65. Put back the cooling assembly in its vertical position on a small lift table.

66. Reinstall the upper CAC and radiator pipe sections (including bracket and hardware).

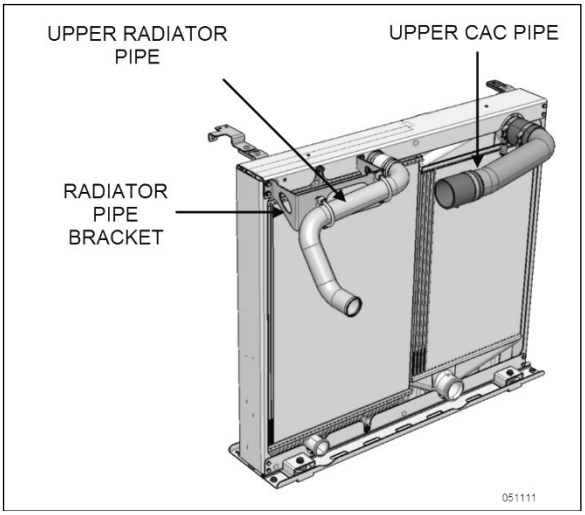


**FIGURE 57: INSTALLED RADIATOR & CAC UPPER PIPES**

67. Slide back the cooling assembly into position and reverse removal procedure to reinstall in vehicle.

68. Make sure that there is no conductivity between the CAC/radiator units and the cooling pack frame (*see note at the beginning of paragraph 11.4)*.

69. Fill the vehicle cooling system.

70. Set engine stop button to the ON position (depressed), start the engine and check for coolant leaks.

## 11.6 CHARGE AIR COOLER (CAC) IN VEHICLE REMOVAL

In the event that the charge air cooler (CAC) would require replacement or in cases where access to the engine hot side and/or turbocharger would be required. It is possible to remove the CAC from the vehicle without removing the complete cooling pack thereby eliminating the need to drain and refill the vehicle cooling system.

| *NOTE* |
| --- |
| *Spec for CAC acceptable leakage:*<br>*The CAC is considered acceptable if it can hold 30 psi (206 kPa) gauge pressure with less than 1 psi (6.9 kPa) loss in 60 seconds.*<br>*This spec does not apply if there is any evidence that the leak was caused by a foreign object impact.* |

1. Open rear engine compartment door.

2. Set engine stop button to the OFF position (push).

3. Proceed to the cooling fan shroud removal following *paragraph 11.3* of this section.

4. Disconnect the lower CAC pipe (directly at the CAC connection or at the turbo connection).

5. Disconnect the upper CAC pipe: On the X3 Series, it is possible to disconnect the pipe middle section junction and loosen the hose clamps at the CAC connection to pivot down the pipe (to clear radiator). The H3 Series upper CAC pipe is a one piece unit and must be disconnected directly at the CAC connection.

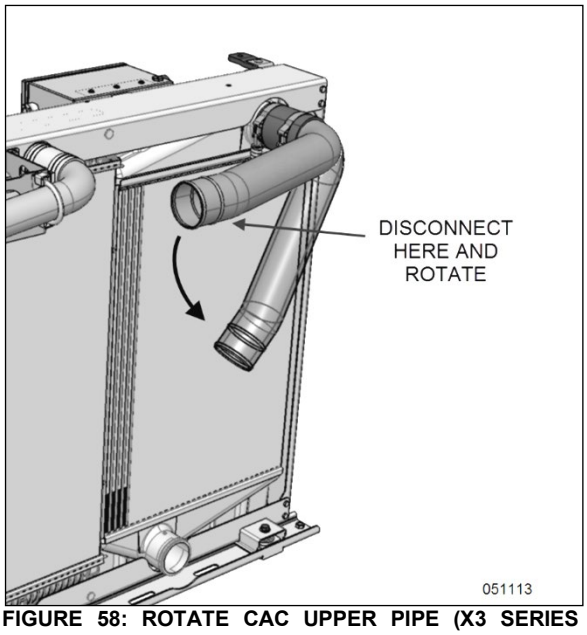


**FIGURE 58: ROTATE CAC UPPER PIPE (X3 SERIES ONLY)**

6. Unscrew the upper cooling pack support from the vehicle structure (CAC side support only).

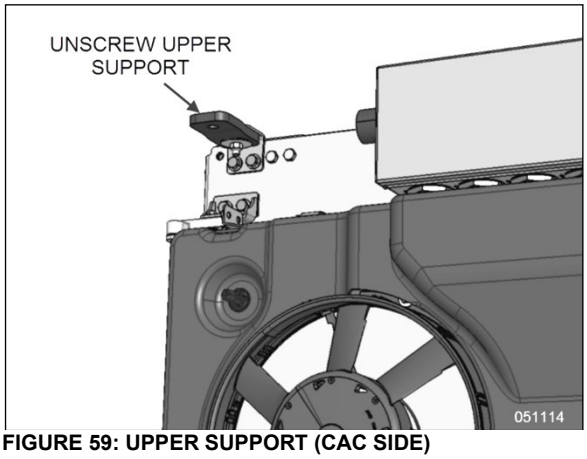


**FIGURE 59: UPPER SUPPORT (CAC SIDE)**

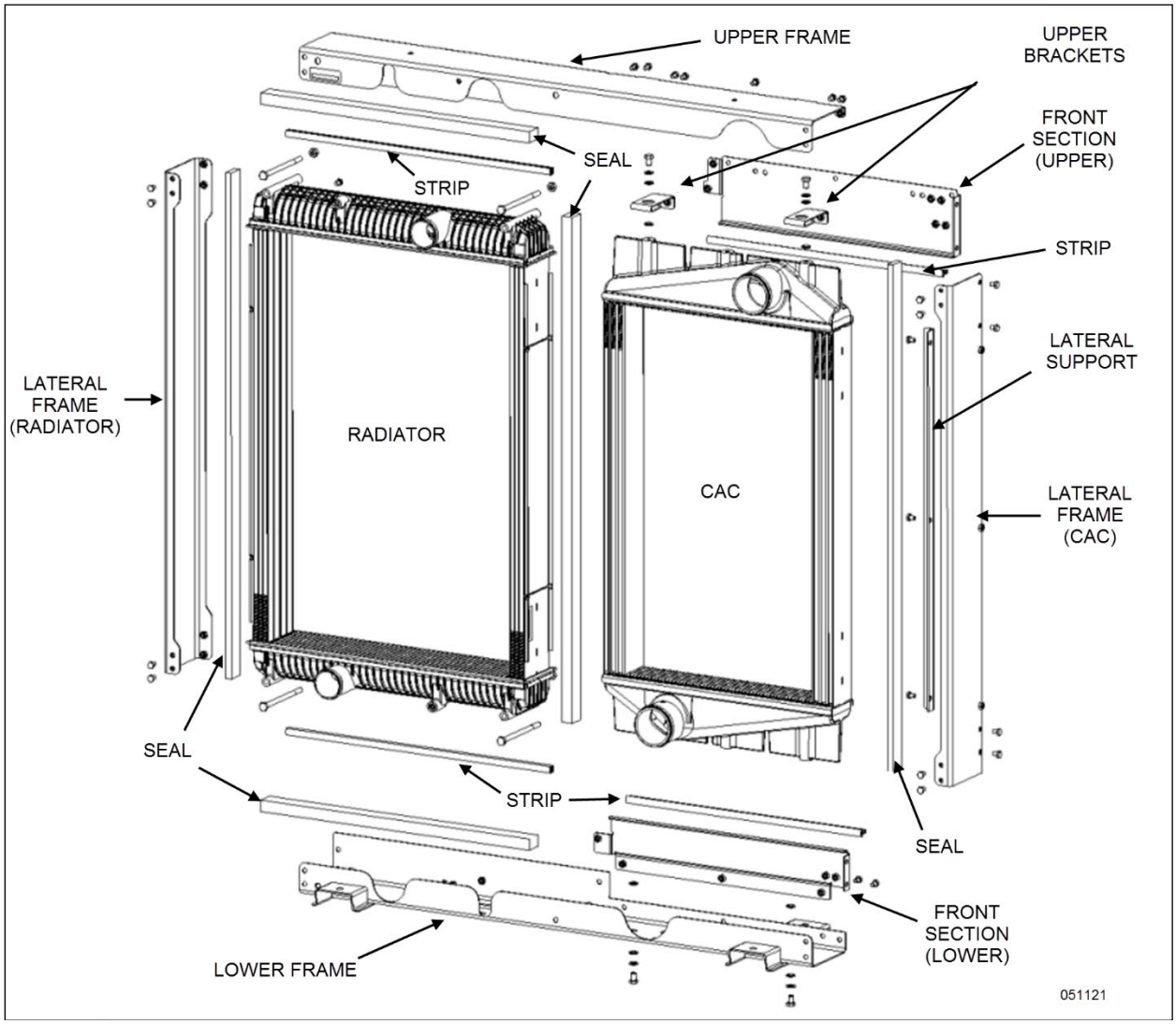


**FIGURE 60: COOLING PACK EXPLODED VIEW**

7. Remove CAC upper front frame structure by unscrewing the 11 hex bolts holding it.

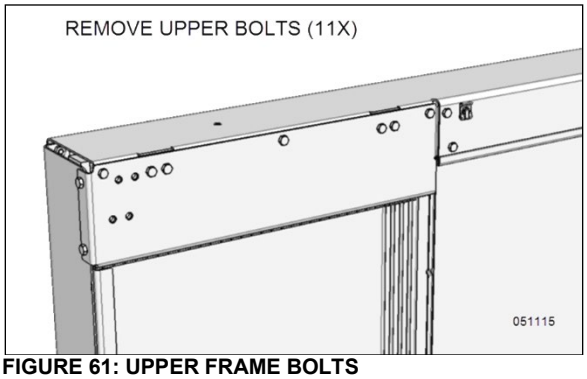


**FIGURE 61: UPPER FRAME BOLTS**

8. Remove the CAC lower front frame structure by unscrewing the 8 hex bolts holding it.

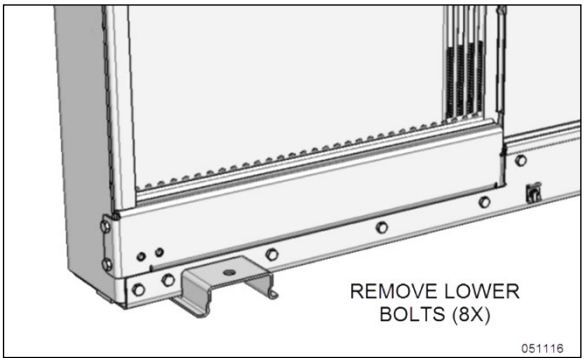


**FIGURE 62: LOWER FRAME BOLTS**

9. Also remove the CAC lateral support (3 hex bolts).

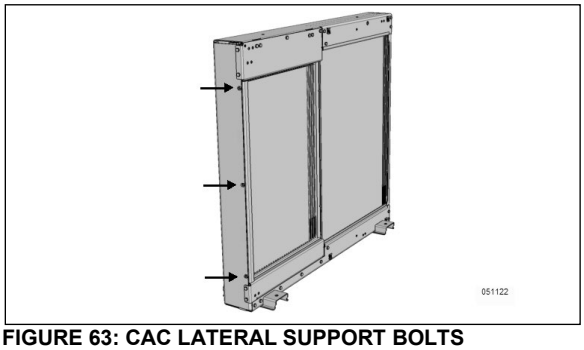


**FIGURE 63: CAC LATERAL SUPPORT BOLTS**

10. From under the vehicle, unscrew the CAC from the lower support (two hex bolts with plastic insulating bushings).

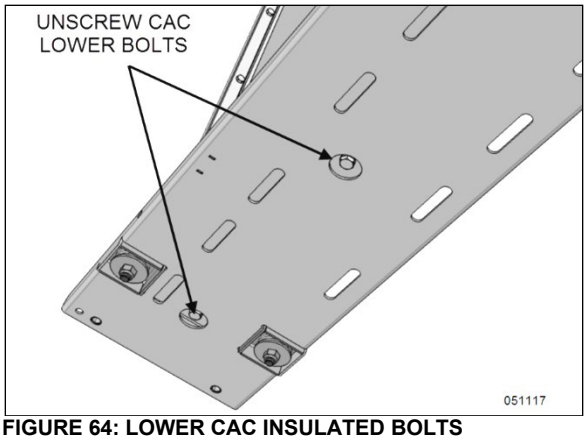


**FIGURE 64: LOWER CAC INSULATED BOLTS**

11. Remove CAC (and two upper brackets) from the vehicle.

12. If a new CAC is to be installed, transfer the upper CAC pipe (X3 Series only) and upper brackets to the new unit. Torque upper brackets with plastic bushings & washers to specified torque. Also reinstall the lower CAC pipe if it was previously removed with the CAC unit.

**TORQUE: 9 lb-ft (12 Nm)**

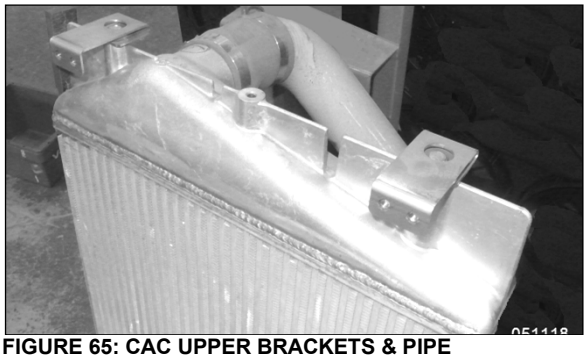

**FIGURE 65: CAC UPPER BRACKETS & PIPE**

## WARNING

To prevent galvanic corrosion, the CAC upper brackets need to be electrically insulated from the CAC body.

When reinstalling brackets, make sure the plastic insulating bushings (two per bracket) & washers (one per bracket) are present and in good condition (replace as necessary).



After installation, check for proper insulation (lack of conductivity) between brackets and CAC body with a suitable ohmmeter or continuity tester (buzzer).

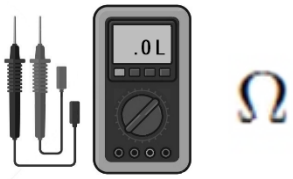


13. In preparation for reinstallation of the CAC, install the inner insulating bushings in their location (lower support).

*NOTE*

*To ease installation and ensure that the bushings will not move during reinstallation, use masking tape to hold the inner bushings to the lower support.*

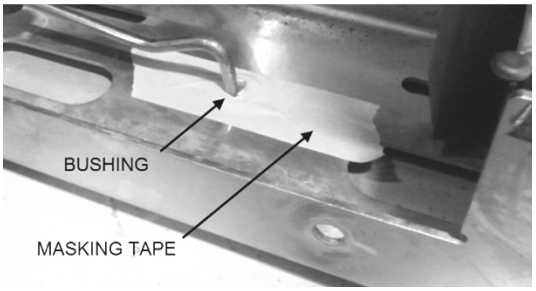


14. Install CAC on the vehicle and secure to the lower support using both lower hex bolts, washers and remaining plastic insulating bushings.

**TORQUE: 9 lb-ft (12 Nm)**

## ⚠ WARNING

To prevent galvanic corrosion, the CAC is electrically insulated from the support by the use of plastic insulating bushings.

When reinstalling brackets, make sure the plastic insulating bushings (two per bracket) & washers (one per bracket) are present and in good condition (replace as necessary).



After installation, check for proper insulation (lack of conductivity) between support and CAC body with a suitable ohmmeter or continuity tester (buzzer).

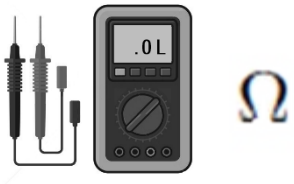


15. Reinstall both (upper and lower) front frame sections.

**TORQUE: 9 lb-ft (12 Nm)**

16. Secure upper support to the vehicle structure.

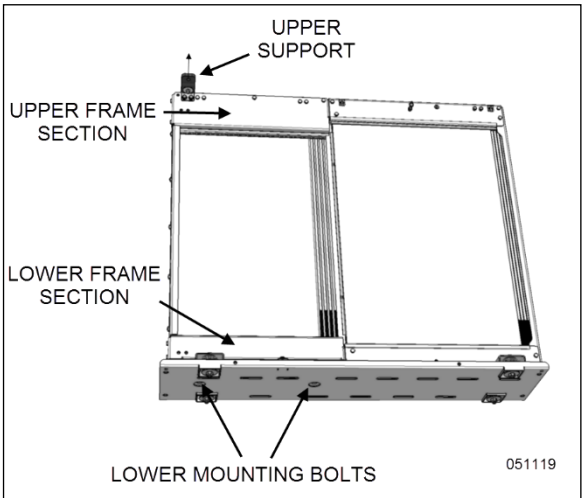


**FIGURE 66: CAC IN VEHICLE**

17. Double check for lack of continuity between CAC body and vehicle structure (*see note at the beginning of paragraph 11.4 for reference).*

18. Reconnect upper CAC pipe and tighten hose clamps at both ends.

19. Reconnect lower CAC pipe.

20. Proceed to the fan shroud reinstallation (*refer to paragraph 11.3 earlier in this section*).

21. Set engine stop button to the ON position (depressed) and start the vehicle.

22. Check for CAC leakage at the pipe connections.

## 12. SPECIFICATIONS

**Cooling System Capacity (Approximation)**

H3 Series (incl. heating system) ..... 26 US gal (99 liters)
X3 Series (incl. heating system) ..... 22.5 US gal (85 liters)

**Cooling System Fans**

Number used ..... 8
Diameter ..... 12 in (30.5 cm)
Power ..... 850W
Voltage (nominal) ..... 24 Volts
Voltage (operating range) ..... 16-32 Volts
Maximum speed ..... 4760 rpm
Sealing ..... SAE J1455 IP67 / IP69K
Operating temperature range ..... -40 to 138°F (-40 to 59°C)

**Thermostat - Volvo D13 Engine**

Number used ..... 1
Start to close ..... 203°F (95°C)
Fully closed ..... 185°F (85°C)

**Recommended Coolant - Volvo D13 Engine**

Extended Life Coolant ELC meeting Volvo specification VCS2B

**Coolant Filter Cartridge – Volvo D13 Engine**

Number used ..... 1
Type ..... Spin-on
Prevost number ..... 20458771

**CONTENTS**

**SECTION CHANGE LOG ..... 5**

**1. TORQUE TABLES ..... 6**

1.1 ALTERNATORS AND SURROUNDING COMPONENTS ..... 6
1.2 ELECTRICAL CONNECTIONS – BATTERIES, MISCELLANEOUS ..... 9

**2. GENERAL DESCRIPTION ..... 14**

2.1 WIRING DIAGRAMS ..... 14
*2.1.1 Using Wiring Diagrams ..... 14*
2.2 TESTING CIRCUITS ..... 15
2.3 WIRE SIZES AND COLORS ..... 15
2.4 WIRE IDENTIFICATION ..... 15
2.5 SPARE WIRES ..... 17
2.6 CIRCUIT BREAKERS ..... 17
*2.6.1 Main Circuit Breakers On Coaches ..... 17*
*2.6.2 Main Circuit Breakers On VIP Motorhomes ..... 17*
*2.6.3 VECR/VECF Circuit Breakers ..... 18*
*2.6.4 Electric Cooling Fan Circuit Breakers ..... 18*
2.7 MULTIPLEX FUSES ..... 18
2.8 RELAYS ..... 18
2.9 DASHBOARD SWITCH - REMOVAL ..... 19
2.10 COOLING FAN CONNECTIONS ..... 20
2.11 ELECTRONIC GROUND ..... 20
2.12 PRECAUTIONS ..... 21
2.13 CORROSION INHIBITOR ..... 21

**3. ELECTRONIC MODULES ..... 21**

3.1 MCM ..... 21
*3.1.1 Replacing the MCM ..... 21*
*3.1.2 Uploading a multiplex program update into the MCM ..... 22*
3.2 I/O-EA AND I/O-EB MODULES ..... 22
*3.2.1 Replacing I/O-EA or I/O-EB Modules ..... 22*
3.3 ELECTRONIC MODULES CONNECTOR PIN-OUT ..... 23

**4. AVAILABLE TEST MODES ..... 27**

4.1 MULTIPLEX INPUT TEST ..... 27
4.2 ELECTRIC MOTOR TEST SEQUENCE ..... 28
*4.2.1 Test Sequence – Coaches only ..... 30*
*4.2.2 Test Sequence – VIP With Central HVAC System ..... 31*
*4.2.3 Test Sequence – VIP With Small HVAC System ..... 32*
4.3 ALTERNATOR TEST ..... 33
4.4 FORCED ACTIVATION OF THE COOLING FANS ..... 33
*4.4.1 Cooling Fans Cleaning Mode Validation ..... 33*

**5. LOWER PRIORITY I/O-EA & I/O-EB MODULES FOR BREAKDOWN SERVICE ..... 34**

5.1 ESSENTIAL FUNCTIONS TO OPERATE THE VEHICLE ..... 34
*5.1.1 Available Functions ..... 34*

**6. NETWORKS ..... 35**

6.1 DL0 (BBUS MUX) NETWORK ..... 35
6.2 DL0 (BBUS MUX) CONNECTION ON THE TELLTALE PANEL AND THE HVAC CONTROL UNIT ..... 35

6.3 SPARE DL0 (BBUS MUX) ..... 35

**7. TROUBLESHOOTING ..... 35**

7.1 PROBING VOLTAGE ON THE MULTIPLEX CIRCUITS ..... 35
7.2 DL0 (BBUS MUX) NETWORK LAYOUT AND TROUBLESHOOTING ..... 36
7.3 ELECTRICAL SYSTEM DIAGNOSTIC THROUGH THE DID ..... 42

**8. ELECTRICAL COMPARTMENTS ..... 44**

8.1 X3 SERIES MAIN POWER COMPARTMENT (RJB) ..... 46
8.2 X3 SERIES FRONT ELECTRICAL AND SERVICE COMPARTMENT (FJB) ..... 48
8.3 H3 SERIES MAIN POWER COMPARTMENT (RJB) ..... 50
*8.3.1 H3 Series Vehicle Electrical Center Rear (VECR) ..... 51*
8.4 H3 SERIES FRONT ELECTRICAL AND SERVICE COMPARTMENT (FJB) ..... 51
*8.4.1 H3 Series Vehicle Electrical Center Front (VECF) ..... 53*
8.5 EVAPORATOR COMPARTMENT CONTROL PANEL ..... 54
8.6 ENGINE REAR START PANEL ..... 54
8.7 CONTROL PANEL AT TO THE RIGHT OF THE DASHBOARD ..... 56
8.8 OVERHEAD COMPARTMENT MODULE ..... 57

**9. BATTERIES ..... 57**

9.1 BATTERY INSTALLATION X3 SERIES ..... 57
9.2 BATTERY INSTALLATION H3 SERIES ..... 59
9.3 AGM BATTERIES ..... 60
9.4 BATTERY DISCHARGE PROTECTION ..... 60
9.5 MAIN ELECTRICAL SHUT-OFF SWITCH ..... 60
9.6 BATTERY REMOVAL AND INSTALLATION – X3 SERIES ..... 61
9.7 AGM BATTERY RATING ..... 64
9.8 BATTERY TESTING ..... 64
*9.8.1 Visual Inspection ..... 64*
*9.8.2 Removing Surface Charge ..... 64*
*9.8.3 Load Test ..... 64*
9.9 BATTERY CHARGING ..... 65
*9.9.1 Emergency Jump Starting With Auxiliary (Booster) Battery. ..... 67*
9.10 AGM BATTERY CHARGING PRECAUTIONS ..... 69
9.11 BATTERY EQUALIZATION AND AGM BATTERIES ..... 69
9.12 CLEANING AND INSPECTION ..... 69
9.13 COMMON CAUSES OF BATTERY FAILURE ..... 69
9.14 TROUBLESHOOTING ..... 70
9.15 "BATTERY VOLTAGE WARNING" PICTOGRAM ..... 70
*9.15.1 Voltage Gauge Definitions ..... 70*
*9.15.2 BATTERY warning Pictogram MAY appear as a reminder ..... 70*

**10. BATTERY EQUALIZER ..... 71**

**11. SUPERCAPACITOR STARTING MODULE (OPTION) ..... 71**

11.1 STARTING THE VEHICLE WITH DEPLETED BATTERIES. ..... 71
11.2 STARTING MODULE STATUS LED ..... 71
11.3 TROUBLESHOOTING ..... 72
11.4 MAINTENANCE ..... 72
11.5 HANDLING AND STORAGE ..... 72

**12. PRIME ENERGY MANAGEMENT SYSTEM ..... 73**

12.1 COMPONENTS ..... 73

12.2 DID DISPLAY ..... 74

**13. ALTERNATORS ..... 74**

13.1 IDENTIFYING A DEFECTIVE ALTERNATOR ..... 74
*13.1.1 Alternator identification ..... 74*
*13.1.2 Identifying a defective alternator using the instrument cluster DID ..... 74*
*13.1.3 Identifying a Defective Alternator – Back-probing Multiplex Modules Method ..... 75*
13.2 ALTERNATOR DRIVE BELT ..... 75
*13.2.1 Removal and installation ..... 75*
*13.2.2 Adjustment ..... 75*

**14. STARTER ..... 76**

**15. ENGINE BLOCK HEATER ..... 76**

15.1 MAINTENANCE ..... 76

**16. EXTERIOR LIGHTING ..... 76**

16.1 X3 SERIES HEADLAMPS ..... 80
*16.1.1 Maintenance ..... 80*
*16.1.2 Headlamps Cable Routing ..... 81*
*16.1.3 Halogen Bulb Replacement ..... 81*
*16.1.4 Headlamp Module Replacement ..... 82*
*16.1.5 Directional Turn Signal Replacement ..... 84*
*16.1.6 Xenon Bulbs Replacement ..... 84*
16.2 H3 SERIES HEADLAMP MODULE ..... 86
*16.2.1 Maintenance ..... 86*
*16.2.2 Headlamp Module Replacement ..... 86*
*16.2.3 Headlamps Vertical Aiming ..... 87*
16.3 HEADLAMP ADJUSTMENT ..... 87
16.4 X3 SERIES STOP, TAIL, DIRECTIONAL, BACK-UP, AND HAZARD WARNING LIGHTS ..... 89
*16.4.1 Lamp Removal and Replacement ..... 89*
*16.4.2 Center Stoplights and Cyclops Light Removal and Replacement ..... 89*
16.5 H3 SERIES STOP, TAIL, DIRECTIONAL, BACK-UP, AND HAZARD WARNING LIGHTS ..... 90
*16.5.1 Lamp Removal And Replacement ..... 90*
*16.5.2 High-Mounted Stop Light Removal And Replacement ..... 90*
16.6 LICENSE PLATE LIGHT ..... 90
16.7 CLEARANCE, IDENTIFICATION AND MARKER LIGHTS ..... 91
*16.7.1 Clearance and Identification Lights Removal and Replacement ..... 91*
*16.7.2 Marker Lights Removal and Replacement ..... 91*
16.8 DOCKING AND CORNERING LIGHTS ..... 91
*16.8.1 Lamp Removal And Replacement ..... 92*
16.9 FOG LIGHTS ..... 92
*16.9.1 H3 models Fog light removal and Replacement ..... 92*
*16.9.2 X3 Models Fog Light Removal And Replacement ..... 93*
16.10 BAGGAGE COMPARTMENT, MAIN POWER COMPARTMENT LIGHTS ..... 94
16.11 ENGINE COMPARTMENT LIGHTING ..... 94

**17. INTERIOR LIGHTING EQUIPMENT ..... 94**

17.1 CONTROL PANEL LIGHTING ..... 94
*17.1.1 Switch Lighting ..... 94*
*17.1.2 Instrument Cluster Lights ..... 95*
17.2 X3 SERIES - STEPWELL LIGHTS ..... 95
*17.2.1 Bulb Removal and Replacement ..... 95*

17.3 H3 SERIES - STEPWELL LIGHTS ..... 95
*17.3.1 Coach Entrance ..... 95*
*17.3.2 VIP Entrance ..... 95*
*Bulb Removal And Replacement ..... 95*
17.4 DRIVER'S AREA CEILING LIGHTS ..... 96
*17.4.1 Bulb Removal and Replacement ..... 96*
17.5 PASSENGER SECTION LIGHTING ..... 96
*17.5.1 LED Indirect Lighting / Overhead compartment Interior Lighting ..... 97*
*17.5.2 LED Direct Lighting ..... 97*
*17.5.3 Removal and Replacement of Reading Lamp Bulb ..... 97*
17.6 LAVATORY NIGHT-LIGHT ..... 97
*17.6.1 Bulb Removal And Replacement ..... 97*

**18. LIGHT BULB DATA ..... 98**

**19. SPECIFICATIONS ..... 99**

## SECTION CHANGE LOG

| | DESCRIPTION | DATE |
|---|---|---|
| 1 | | |
| 2 | | |
| 3 | | |
| 4 | | |
| 5 | | |
| 6 | | |
| 7 | | |
| 8 | | |
| 9 | | |

# 1. TORQUE TABLES

## 1.1 ALTERNATORS AND SURROUNDING COMPONENTS

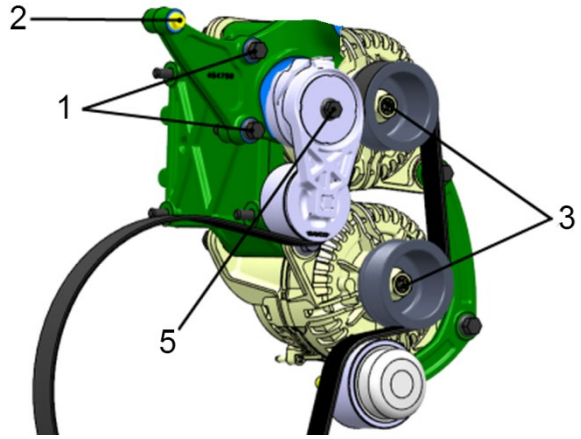


COLD SIDE ALTERNATORS

06783

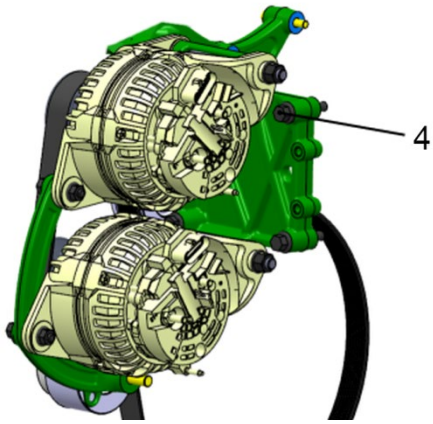


COLD SIDE ALTERNATORS

06784

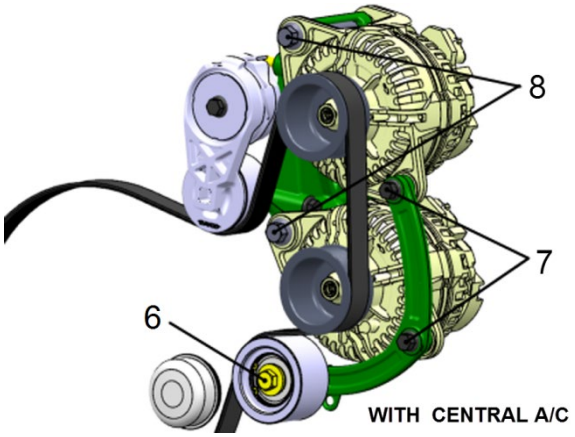


WITH CENTRAL A/C

COLD SIDE ALTERNATORS

06785

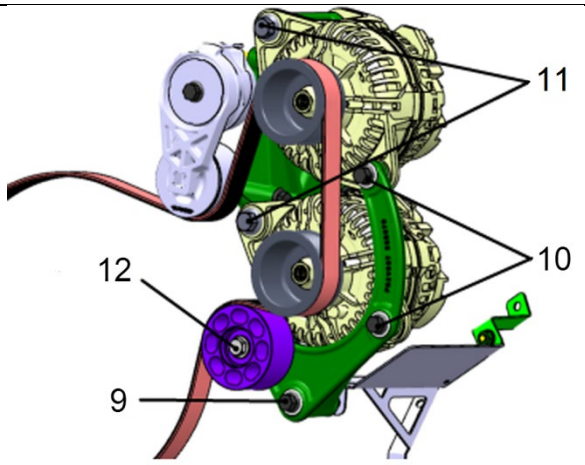


WITH SMALL A/C SYSTEM

COLD SIDE ALTERNATORS

06786

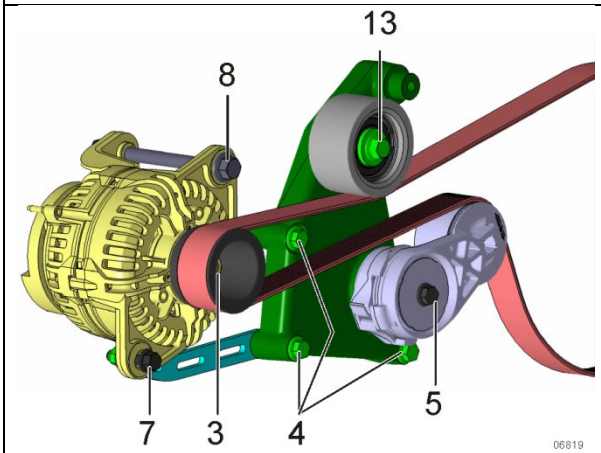


HOT SIDE ALTERNATOR, LOW LH (coaches)

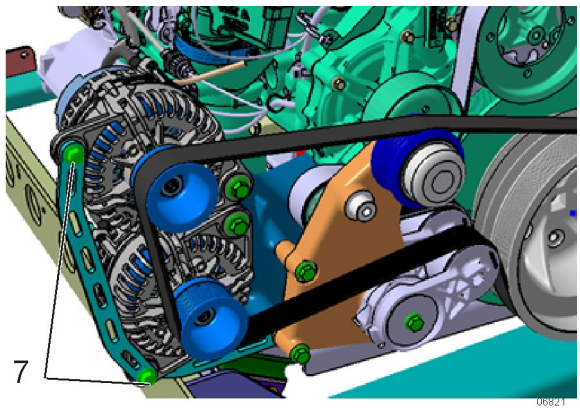


HOT SIDE ALTERNATORS (motorhomes)

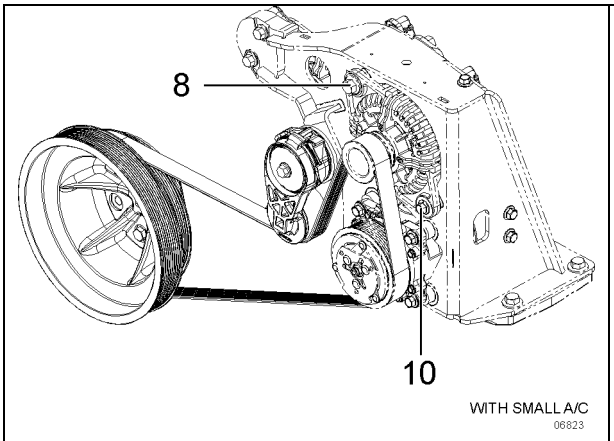


| BOSCH HD10 ALTERNATORS | | |
|---|---|---|
| No | DESCRIPTION | TORQUE |
| 1 | A/C tensioner / idler bracket mounting bolts (2) | 43 lb-ft (58 Nm) |
| 2 | A/C tensioner / idler bracket mounting bolt (1) | 22 lb-ft (30 Nm) |
| 3 | Alternator pulley (2) LH threads | 70-80 lb-ft (95-108 Nm) |
| 4 | Alternator mounting bracket mounting bolts | 48 lb-ft (65 Nm) |
| 5 | Alternator belt tensioner mounting bolt | 48 lb-ft (65 Nm) |
| 6 | Alternator belt idler mounting bolt (central A/C config.) | 82 lb-ft (111 Nm) |
| 7 | Alternator mounting bolts, short | 48 lb-ft (65 Nm) |
| 8 | Alternator mounting bolts, long | 82 lb-ft (111 Nm) |
| 9 | Alternator bottom bracket mounting bolt (small A/C system) | 48 lb-ft (65 Nm) |
| 10 | Alternator mounting bolts (small A/C system) | 48 lb-ft (65 Nm) |
| 11 | Alternator mounting bolts (small A/C system) | 82 lb-ft (111 Nm) |
| 12 | Alternator belt idler mounting bolt (small A/C system) | 48 lb-ft (65 Nm) |
| 13 | Alternator belt idler mounting bolt (hot side) | 59 lb-ft (80 Nm) |

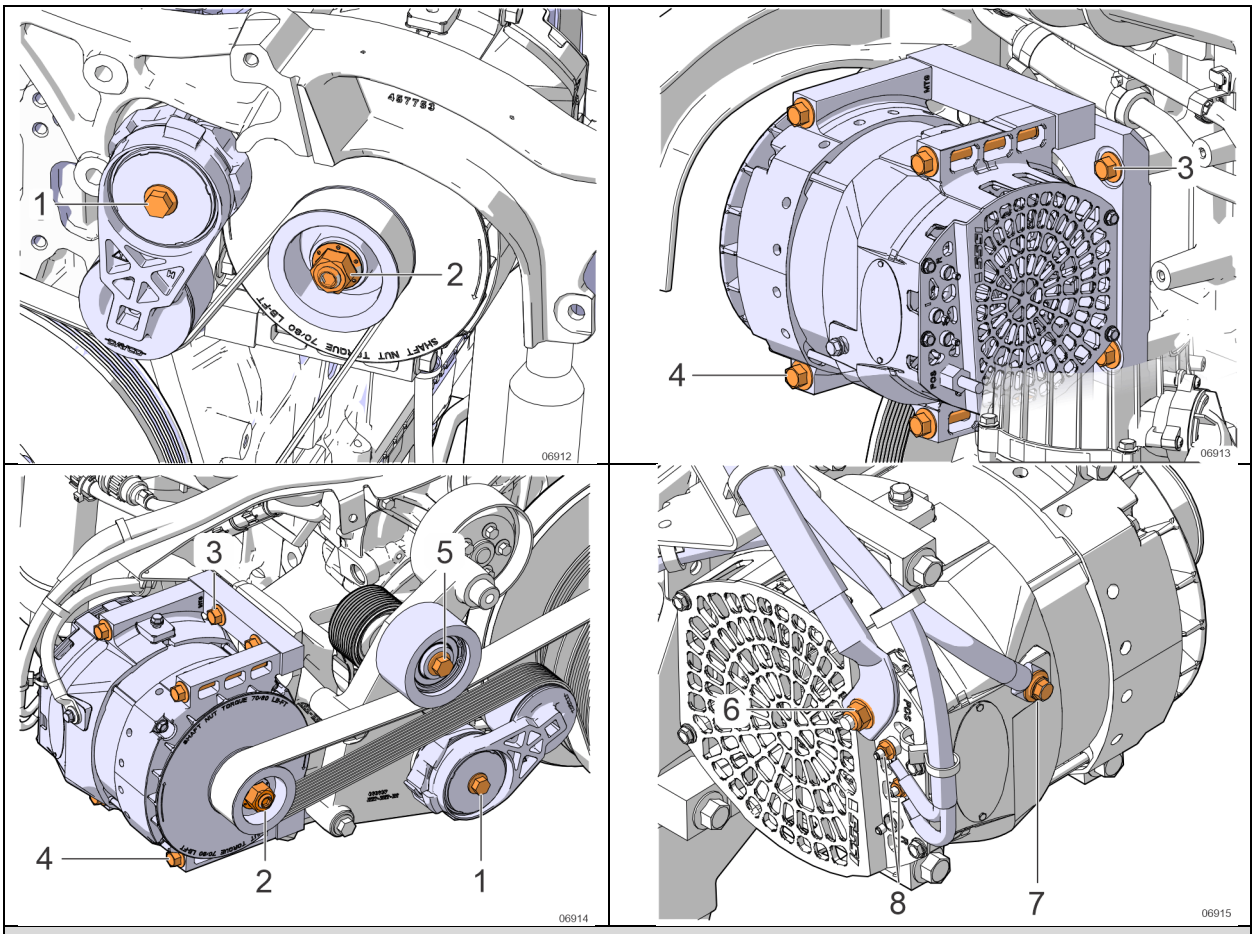


| DELCO REMY ALTERNATORS | | |
|---|---|---|
| No | DESCRIPTION | TORQUE |
| 1 | A/C tensioner / idler bracket mounting screws (2) | 43 lb-ft (58 Nm) |
| 2 | Alternator pulley nut (2) | 70-80 lb-ft (95-108 Nm) |
| 3 | Alternator bracket mounting screws (8) | 35 lb-ft (47 Nm) |
| 4 | Alternator mounting screws (8) | 48 lb-ft (65 Nm) |
| 5 | Idler, hot side | 59 lb-ft (80 Nm) |
| 6 | Alternator power connection nut (POS) | 80-125 lb-in (9-14 Nm) |
| 7 | Alternator ground screw | 50-60 lb-in (6-7 Nm) |
| 8 | Alternator connection (I; S) | 25-45 lb-in (3-5 Nm) |

## 1.2 ELECTRICAL CONNECTIONS – BATTERIES, MISCELLANEOUS

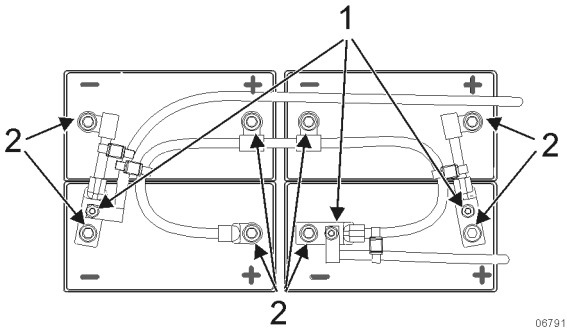


**X3 SERIES**

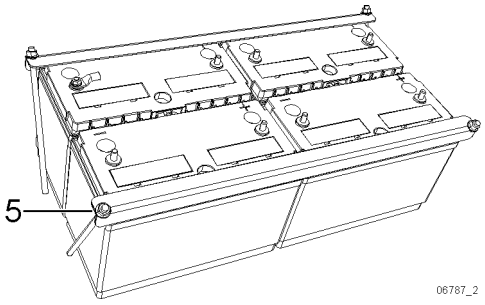


**X3 SERIES**

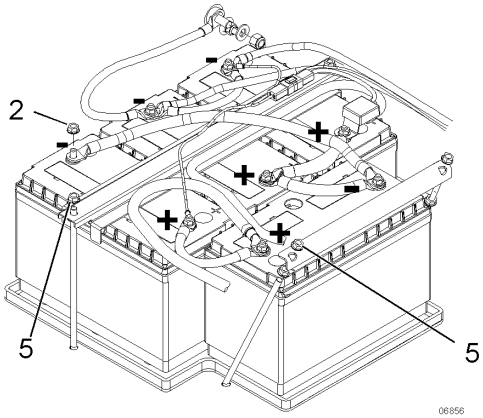


**H3 SERIES**

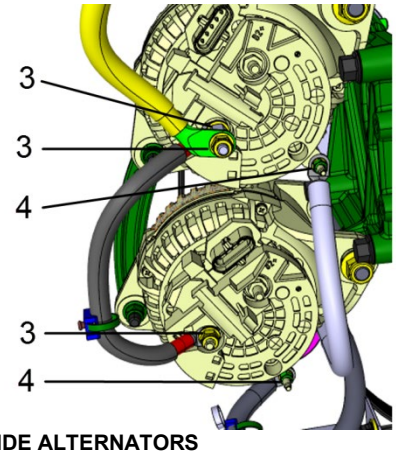


**COLD SIDE ALTERNATORS**

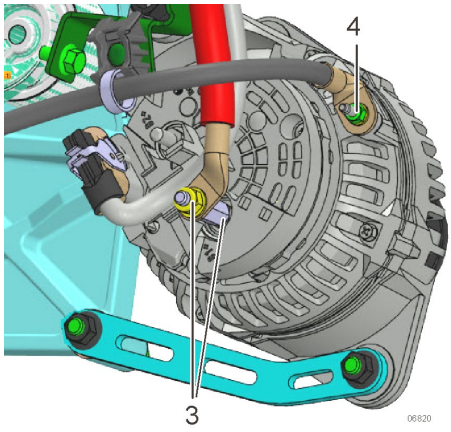


**HOT SIDE ALTERNATOR, LOW LH (single)**

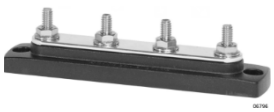

6



7



8



9


10


11


12


13

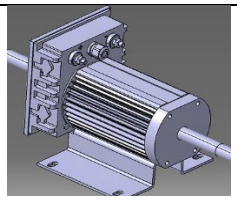
14

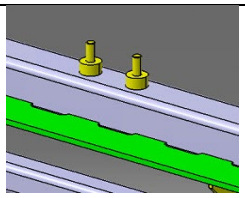
15


16

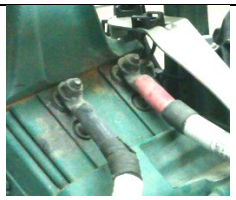
17

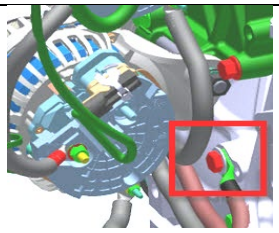
18

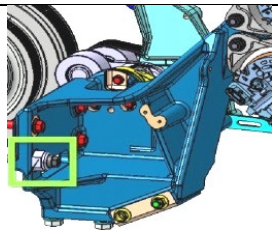
19

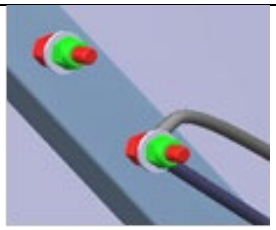
20

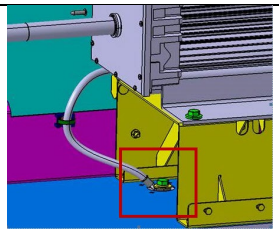
21


22


23


24

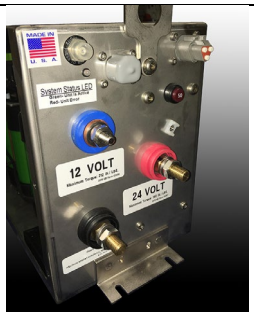

25

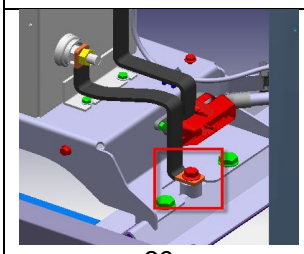
26

| ELECTRICAL CONNECTIONS - BATTERIES, MISC. | | |
|---|---|---|
| No | DESCRIPTION | TORQUE |
| 1 | AGM battery Ground, 12VD & 24VD terminal nut | 170 lb-in (19 Nm) |
| 2 | AGM battery connections, cap nut | 170 lb-in (19 Nm) |
| 3 | Alternator power connection – nut & adaptor | 11 lb-ft (15 Nm) |
| 4 | Alternator ground connection – nut | 6 lb-ft (8 Nm) |
| 5 | Battery tie-down | 45-55 lb-in (5-6 Nm) |
| 6 | Electronic ground bus bar ¼-20 stud (front & rear electric cmpt) | 60 lb-in (7 Nm) |
| 7 | Junction block – 1 stud 3/8-16 | 120 lb-in (14 Nm) |

| | | |
|---|---|---|
| 8 | Junction block – 4, 6, 8, 10 studs #10-32 brass | 20 lb-in (2 Nm) |
| 9 | Boost terminal – 3/8-16 studs | 119-131 lb-in (13-15 Nm) |
| 10 | ATC type fuse box – #8-32 screw terminal | 15 lb-in (2 Nm) |
| 11 | Battery equalizer – 5/16-18 stud | 96 lb-in (11 Nm) |
| 12 | VECR/F – M8-1.5 studs | 216 lb-in (24 Nm) |
| 13 | 24-V Inverter – M8-1.25 studs | 104-115 lb-in (12-13 Nm) |
| 14 | Evaporator fan motor – 5/16-18 stud | 50 lb-in (6 Nm) |
| 15 | Chassis ground studs – 1/2-13 stud stainless steel | 170 lb-in (19 Nm) |
| 16 | Chassis battery ground studs – 1/2-13 stud stainless steel | 170 lb-in (19 Nm) |
| 17 | Engine air preheater – M8-1.25 stud | 84-108 lb-in (9-12 Nm) |
| 18 | Engine ground studs – M10-1. 5 stud | 240 lb-in (27 Nm) |
| 19 | Alternator ground cable stud (hot side) – M10-1. 5 stud | 240 lb-in (27 Nm) |
| 20 | On chassis welded ground stud – M6-1 stud | 106 lb-in (12 Nm) |
| | On chassis welded ground stud – M10-1.5 stud | 170 lb-in (19 Nm) |
| 21 | Evaporator fan motor ground cable stud – M8-1.25 stud | 170 lb-in (19 Nm) |
| 22 | Main electrical shut-off switch (Kissling type) – M12-1.75 stud | 166-183 lb-in (19-21 Nm) |
| 23 | Circuit breaker (manual reset) 1/4-28 stud nut | 60 lb-in (7 Nm) |
| 24 | Circuit breaker (switchable, manual reset) 1/4-24 stud nut | 50 lb-in (6 Nm) |
| 25 | Ultracapacitor starting module 1/2-13 power studs (option) | 180 lb-in (20 Nm) |
| | Ultracapacitor starting module 3/8-16 12V power stud (option) | 180 lb-in (20 Nm) |
| 26 | Bus bar, chassis ground stud, M10-1.5, ultracap starting module | 240 lb-in (27 Nm) |

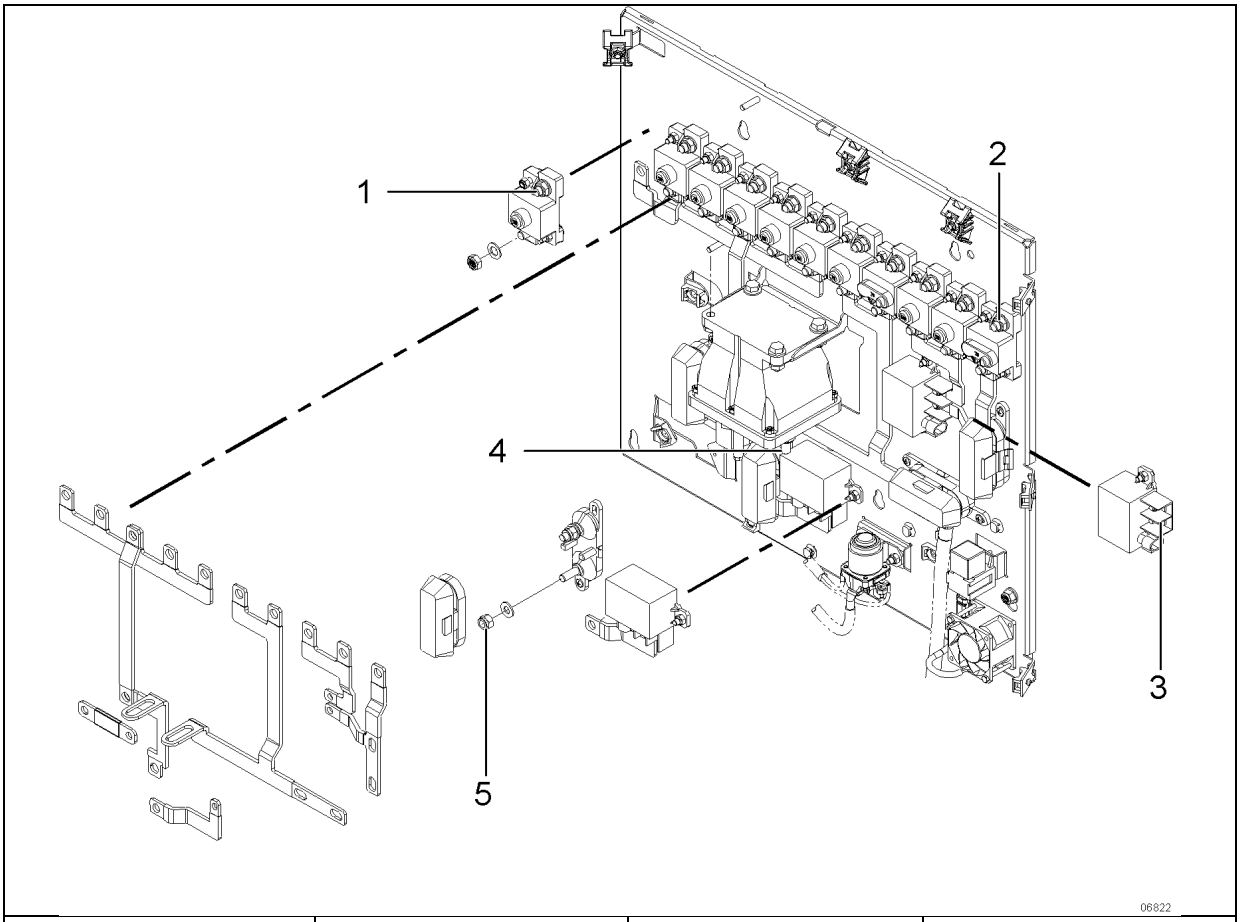



1

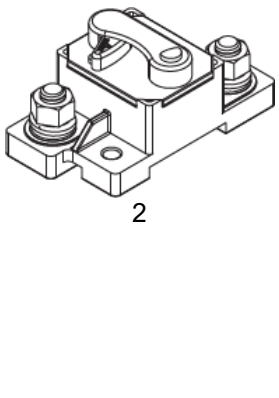
2


3


5

**ELECTRICAL CONNECTIONS – MAIN POWER COMPARTMENT**

| No | DESCRIPTION | TORQUE |
|---|---|---|
| 1 | Main circuit breaker 3/8-16 stud nut | 135 lb-in (15 Nm) |
| 2 | Main circuit breaker (switchable, manual reset) 3/8-16 stud nut | 135 lb-in (15 Nm) |
| 3 | Power relay stud nut M6-1 | 60 lb-in (7 Nm) |
| 4 | Master relay R1 - Port 30 – M10-1.5 buss bar connection stud nut | 160-195 lb-in (18-22 Nm) |
| 5 | Fuse holder M8-1.25 stud nut | 96 lb-in (11 Nm) |

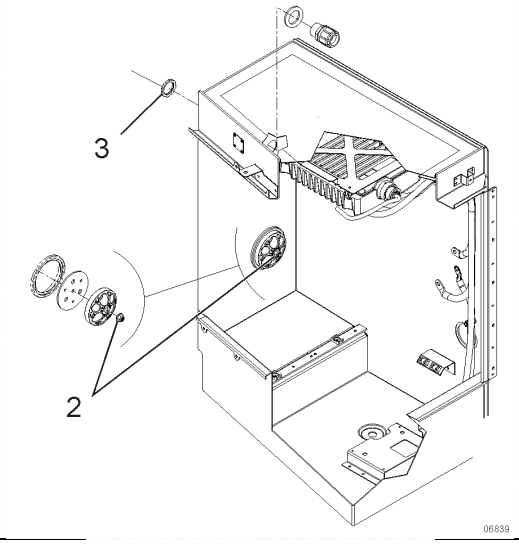


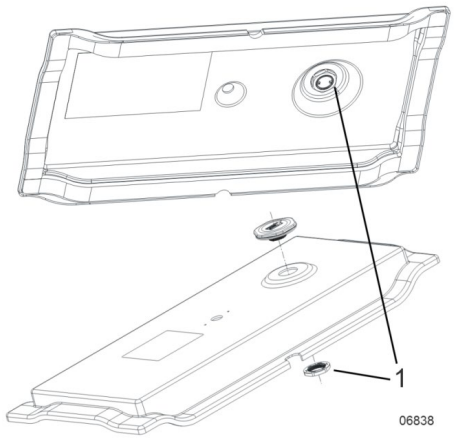


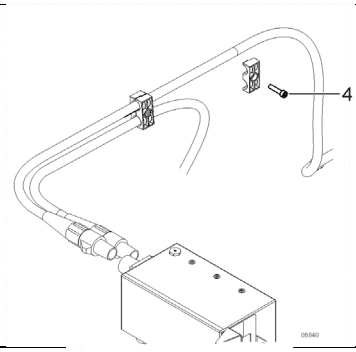


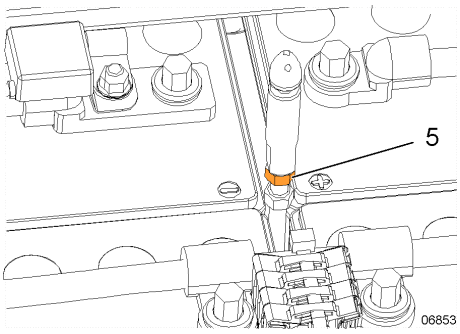


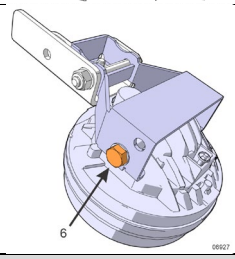


| MISCELLANEOUS COMPONENTS | | |
|---|---|---|
| No | DESCRIPTION | TORQUE |
| 1 | Battery cover vent mounting nut | 40-48 lb-in (4.5-5.4 Nm) |
| 2 | Cable pass-through assembly nut | 90-110 lb-in (10-12 Nm) |
| 3 | Strain relief mounting lock nut | 90-110 lb-in (10-12 Nm) |
| 4 | Screw - power cable support- electrical cooling fans | 50-60 lb-in (5.6-6.8 Nm) |
| 5 | Battery cover stud nut (X3 Series only) | 86-106 lb-in (10-12 Nm) |
| 6 | Fog light pod installation | 50-60 lb-in (6-7 Nm) |

## 2. GENERAL DESCRIPTION

This vehicle uses a dual voltage system to obtain two different voltages (12-volts and 24-volts) for various electrical controls and accessories. The main power source incorporates four batteries connected in series-parallel. All batteries are kept uniformly charged by means of a 100-amp battery equalizer (standard), giving a maximum possible output supply of 100 amps on the 12-volt system. Both the 12V and 24V systems are controlled through individual main battery relays. Base configuration uses three 24V self-regulated alternators, belt driven from the engine, and can be reached through the engine compartment doors.

This vehicle is equipped with PRIME energy management system which features AGM batteries and a Vanner Vann-Bus 80 Series battery equalizer.

### 2.1 WIRING DIAGRAMS

A paper copy of the master wiring diagram of the electric circuits, covering standard and optional accessories and systems is located in the Technical Publications box. Usually, a separate wiring diagram page is provided for each major function or system. In some cases, more than one circuit may appear on one wiring diagram page; when this occurs, each circuit covered in this page is listed in the wiring diagram index. Moreover, a circuit may appear on several pages; in such case, the number(s) at the extremity of the diagram title will indicate the sheet reference number. Refer to the *"Wiring Diagram Index*" to ensure that the correct diagram is being used to trace the circuit in question. In addition to the major functions page reference, the wiring diagram index contains the following information pages.

- The Multiplexed Device Index,
- The Arrangement-Harness drawing showing the harnesses arrangement and harness number on the vehicle,
- Glossary,
- Circuit number listing,
- Circuit breaker code,
- Connector code,
- Diode number code,
- Resistor number code,
- Fuse code.

#### 2.1.1 Using Wiring Diagrams

Three methods are used to ″work″ with electric wiring diagrams.

**Situation:** You have identified the defective part (breaker, diode, relay, etc.), and you wish to locate its corresponding circuit.

**Problem:** Circuit breaker CB5 is released (open circuit) and you don't know which circuit is affected.

a) Refer to wiring diagram index and look for *"Circuit breaker list"*.

b) At item CB5, you will find the location, the Prevost number, the breaker function, the breaker ampere rating and the page on which to find the corresponding diagram.

c) Refer to page 3.1.

d) When you have located CB5, follow the wiring up to the end and find the diagram page number and function on which the circuit continues.

**Situation:** You have a problem with a specific system, and you want to find the corresponding diagram.

**Problem:** The last three (3) speakers on the R.H. side of vehicle are inoperative, and you must trace the electric circuit.

a) Refer to wiring diagram index and look for *“Sound system”.*

b) You will find on page 35.2 the components as well as the electric wiring, thus providing you with a complete understanding of this circuit.

**Situation:** Using the Driver’s Info Display (DID), you check on arrival if there are active errors in the vehicle electrical system. With the DIAGNOSTICS menu, highlight VIEW ACTIVE FAULTS, highlight ELECTRICAL to request a diagnostic of the electrical system and then press the enter key. If applicable, the DID shows the fault messages or fault codes recorded. When more than one fault is recorded, an arrow pointing down appears on the right of the display. Use the down arrow to see all the fault messages.

**Problem:** DID displays the fault "Elec. Horn SW63; shorted to ground" as being active.

a) Refer to wiring diagram index, and look for *"Multiplexed Device Index"*, pages B1-B8.

b) In first column DEVICE ID, look for device SW63.

c) At device SW63, find the fault message, the minimum condition to activate, other inputs

involved in logic, the multiplex module related to switch 63, the connector and pin number on the module and the page on which to find the corresponding diagram.

d) Once the problem corrected, the DID still shows the fault as being active. You have to leave the VIEW ACTIVE FAULTS menu, wait approximately 20 to 30 seconds and then return to VIEW ACTIVE FAULTS to request a new diagnostic of the electrical system from the MCM. The DID should display the fault as being inactive.

## 2.2 TESTING CIRCUITS

A careful study of the wiring diagrams should be made to determine the source and flow of current through each circuit. When a circuit is thoroughly understood, a point-to-point check can be made with the aid of the applicable wiring diagrams. Any circuit can be tested for continuity or short circuits with a multimeter or a suitable voltmeter.

All electrical connections must always be kept clean and adequately tight. Loose or corroded connections can result in discharged batteries, difficult starting, dim lights and improper functioning of other electric circuits. Inspect all wiring connections at regular intervals. Make sure knurled nuts on all amphenol-type plugs are securely tightened. Knurled nuts on the plastic amphenol-type connectors will click into a detent when properly tightened. Line connectors, who have the side locking tabs, must have the locks latched in place to ensure a proper electrical connection.

## 2.3 WIRE SIZES AND COLORS

Each wire in the electrical system has a specific size as designated on the wiring diagram. When replacing a wire, the correct size must be used. Never replace a wire with one of a smaller size. The vehicle electrical system is provided with different voltages. The insulation on each wire is distinctly colored in order to determine visually the wiring voltage and to assist in making connectors. The wires are color coded as follows:

| | |
|---|---|
| Yellow | Data link High |
| Green | Data link Low |
| Orange | Connected to multiplex outputs |
| White | Connected to multiplex inputs |
| Red | 24-volt system |
| Yellow | 12-volt system |
| Black | grounded wire |
| Orange | speakers (+) (**Coaches Only)** |
| Brown | speakers (-) (**Coaches Only)** |
| Grey | spare wire |

Black convolute tube with orange tape containing:

| | |
|---|---|
| Black | 120V ac system (live) |
| White | 120V ac system (neutral) |
| Green | 120V ac system (ground) |

***NOTE***

*Wires are identified at each 2-4 inch (5-10 cm) intervals by a printed number.*

## 2.4 WIRE IDENTIFICATION

Each wire on a diagram is patterned to assist in tracing and testing circuits. The wire identification identifies the voltage reading or network, the circuit identification and the basic wire gauge.

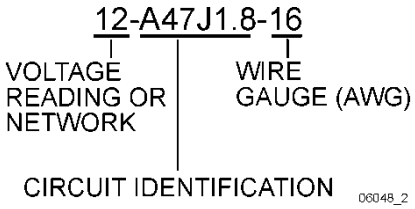


**VOLTAGE READING OR NETWORK**

| | | |
|---|---|---|
| 0 | 120 | J1939 |
| 5 | ANA | J2284 |
| 0/12 | BBUS | LIN |
| 0/24 | DATA | PWM |
| 12 | DBUS | GND |
| 24 | J1587 | …other |

**CIRCUIT IDENTIFICATION**

**Ground circuits**

Electronic: I/O module number followed by an R, followed by the connector number and pin number (cavity) (ex: A47RJ1.8, A54 RJ2.14).

Electronic ground studs: Number 00 followed with the stud location[1] and sequential number (ex: 00R1, 00F4).

Chassis ground studs: Number 0 followed with the stud location and sequential number (ex: 0EV1, 0FH2).

**Power & voltage carrying circuits**

Power distribution: Uphill component identification as circuit number (ex.: F96, CB22).

Multiplex outputs: Output module number and connector and pin number (cavity) (ex: A55J1.4, A49J2.9)

Relays, diodes, resistors and any other component output: Component number and pin number as circuit name

(ex: SW55A, R30.87, D12.B).

**NETWORKS**

| | |
|---|---|
| J1939 | - DL0 (Bbus Mux)<br>- DL1 (drivetrain control network)<br>- DL3 (Dbus Mux)<br>- DL7 (engine subnet)<br>- DL9 (engine transmission/I-Shift subnet) |
| J2284 | - DL2 |
| J1587 | - DL4 (powertrain subnet 900/901) |

**WIRE GAUGE (AWG)**

| | | |
|---|---|---|
| 0000 | 3 | 14 |
| 000 | 4 | 16 |
| 00 | 6 | 18 |
| 0 | 8 | 20 |
| 1 | 10 | 22 |
| 2 | 12 | 24 |

[1] For stud location, refer to page 2.1 of wiring diagram

## 2.5 SPARE WIRES

When the vehicle leaves the factory, and even in the case of a fully-equipped vehicle, an important number of unconnected spare wires are routed between the junction boxes. Consequently, for any connection of an additional accessory, refer to page *"Spare wires"* in master wiring diagram to determine the number, the gauge and location of these wires.

**⚠ CAUTION**

Wire size is calibrated according to the breaker or fuse that protects it. When using a spare wire to replace a damaged wire, assure that the spare wire size is equal or larger than the wire being replaced. Using a wire too small for the breaker or fuse amperage might cause overheating of the wire.

*NOTE*

*Spare wires are identified by a wire identification number and by the letters "SP", to designate "spare".*

## 2.6 CIRCUIT BREAKERS

The electric circuits are protected by manual reset type circuit breakers. The main circuit breakers (Figure 2), as well as those protecting the A/C system, are located in the main power compartment.

This type of circuit breaker de-energizes the circuit without disconnecting any wire.

Some circuit breakers such as CB2 & CB6 are different in the fact that you may open the circuit manually, to do so simply press the blue button on breaker to open the circuit, repair defective circuit, and afterwards swing red reset lever of breaker to close the circuit.




**FIGURE 1: BREAKER WITH MANUAL TRIP BUTTON AND RESET LEVER SUCH AS CB2 & CB6**

### 2.6.1 Main Circuit Breakers On Coaches

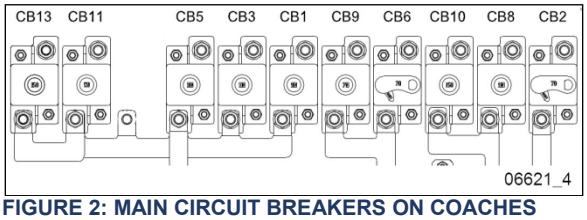


**FIGURE 2: MAIN CIRCUIT BREAKERS ON COACHES**

| MAIN CIRCUIT BREAKERS ON COACHES | | |
|---|---|---|
| CB1 | **24 WUP** front distribution rear junction box | 90 A |
| CB2 | **12VD** & 12 ECU front distribution – ignition & engine start rear junction box rear junction box | 70 A |
| CB3 | **24 WUP** HVAC evaporator rear junction box | 90 A |
| CB5 | **24 WUP** rear distribution-rear junction box | 90 A |
| CB6 | **24VD** rear distribution & WCL rear junction box | 70 A |
| CB8 | **12 WUP** rear distribution-rear junction box | 90 A |
| CB9 | Diesel exhaust fluid system | 40 A |
| CB10 | **12 WUP** front distribution – VECF power rear junction box | 150 A |
| CB11 | **24 WUP** Sound system-rear junction box | 50 A |
| CB13 | **24 WUP** Inverter charger 120 VAC outlets rear junction box | 90 A |
| VD= volts direct. The electrical components connected to these circuit breakers are direct-connected to the battery. | | |

### 2.6.2 Main Circuit Breakers On VIP Motorhomes

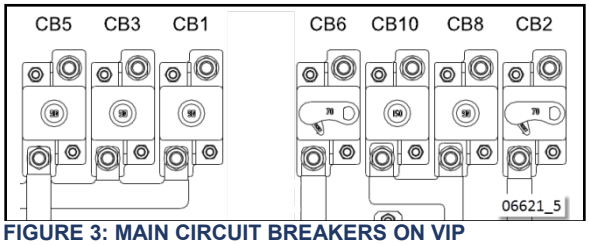


**FIGURE 3: MAIN CIRCUIT BREAKERS ON VIP MOTORHOMES**

| MAIN CIRCUIT BREAKERS –VIP MOTORHOMES | | |
|---|---|---|
| CB1 | **24 WUP** front distribution | 90 A |
| CB2 | **12VD** front distribution – ignition & engine start | 70 A |
| CB3 | **24 WUP** Main distribution power full A/C | 90 A |
| CB5 | **24 WUP** rear distribution | 90 A |
| CB6 | **24VD** rear distribution | 70 A |
| CB8 | **12 WUP** rear distribution | 90 A |
| CB10 | **12 WUP** front distribution | 150 A |

### 2.6.3 VECR/VECF Circuit Breakers

Smaller circuit breakers are located in the VECF and VECR in front and rear electrical compartment respectively. Refer to the vehicle wiring diagram.

### 2.6.4 Electric Cooling Fan Circuit Breakers

MAXI 50 Amp manual reset CB

Each radiator or Charge Air Cooler electric fan may be protected by a MAXI 50 amp single pole thermal type breaker with manual reset. If tripped, the circuit breaker remains open until it is reset by pressing the reset button.



This type of circuit breaker inserts in MAXI fuse blades mounting style. Simply pull the circuit breaker off the blade type mount to replace.

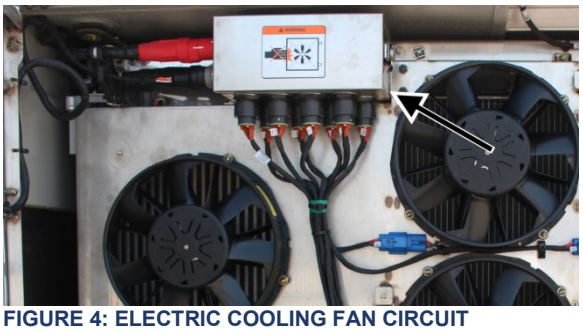

**FIGURE 4: ELECTRIC COOLING FAN CIRCUIT BREAKER BOX**

| ELECTRIC FAN DRIVE 50 Amps CIRCUIT BREAKERS | | |
|---|---|---|
| ID | Description | connector |
| CB201 | Charge Air Cooler fan #1 - Mo65 | 1 |
| CB202 | Charge Air Cooler fan #2 - Mo67 | 2 |
| CB203 | Radiator fan #3 - Mo68 | 3 |
| CB204 | Radiator fan #4 - Mo69 | 4 |
| CB205 | Radiator fan #5 - Mo70 | 5 |
| CB206 | Radiator fan #6 - Mo71 | 6 |
| CB207 | Radiator fan #7 - Mo72 | 7 |
| CB208 | Radiator fan #8 - Mo73 | 8 |

## 2.7 MULTIPLEX FUSES

The multiplex outputs are protected in current by an internal “soft-fuse”. Each output has programmed specific maximum amperage. When an output is shorted, the current gets above the limit and the soft-fuse intervenes to turn the output OFF. The output stays OFF until the "soft-fuse" is reset.

Turn the ignition key to the OFF position and turn to the ON position again. This resets all "soft-fuses".

There is also hardware fuses used to protect the incoming power to the multiplex modules. These fuses are located inside the VECF (Vehicle Electrical Center Front) and VECR (Vehicle Electrical Center Rear).

## 2.8 RELAYS

Relays are used to automatically energize or de-energize a circuit from a remote location. The relay draws a very low current to energize its coil. Once the coil is energized, it develops a magnetic field that pulls a switch arm closed or open, to either energize or de-energize a given component. As the control current required for the coil is very low, the relay allows a remote station to control a high energy circuit without running great lengths of costly high capacity cable, and also eliminates the need for high amperage switches and heavy connectors.

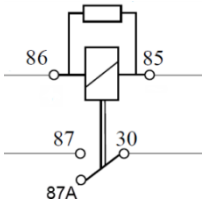


86 coil
85 coil
30 common feed
87 normally open contact NO
87A normally closed contact NC

**FIGURE 5: SINGLE POLE DOUBLE THROW RELAY**

***NOTE***

*Each relay is identified with “12V” or “24V” printed on its casing in order to identify the coil operating voltage.*

**CAUTION**

The Multiplex vehicle uses a VF4 relay specially designed for Volvo that has different internal characteristics than the current VF4

relay. It is important to use only the new part marked Volvo as a replacement in Multiplex vehicles. Regular relays have an inadequate lifespan for Multiplex vehicles.

## 2.9 DASHBOARD SWITCH - REMOVAL

To remove a dashboard switch, proceed as follows. You will need the switch removal tool p/n 392667.

1. Insert the switch removal tool as shown in the opening above the switch.

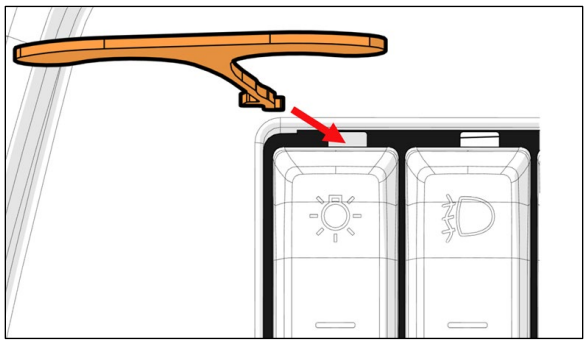

FIGURE 6

2. Rotate the tool so the handle is vertical.

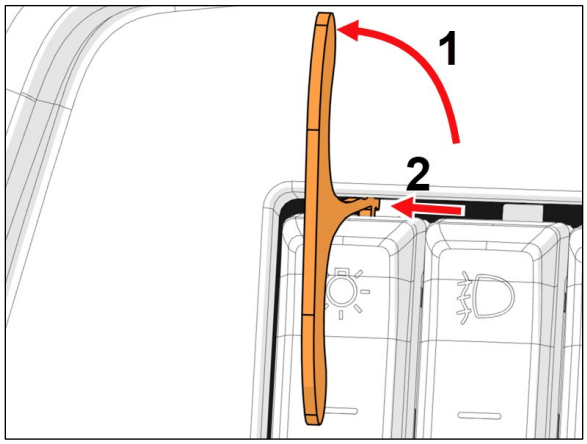


FIGURE 7

3. Pull the tool gently to lower the switch upper tab.




FIGURE 8

4. Pull the upper part of the switch just enough to disengage the upper tab.

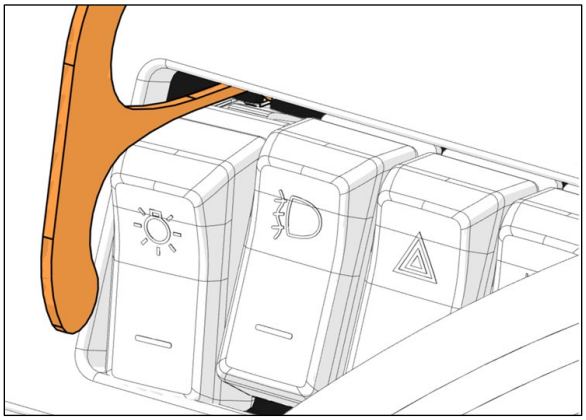

FIGURE 9

5. Repeat the process for the lower switch tab. The tool must be inverted compared to position in step 2.

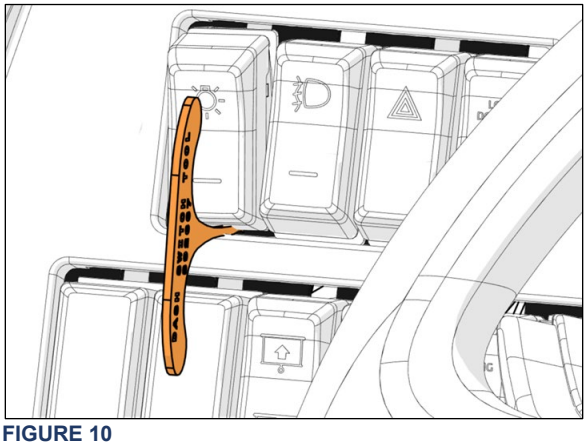

FIGURE 10

## 2.10 COOLING FAN CONNECTIONS

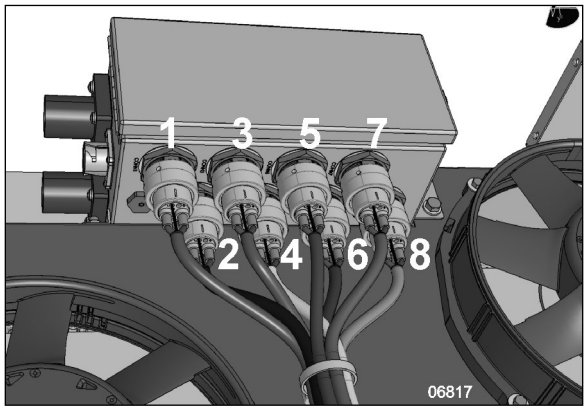


**FIGURE 11: COOLING FANS CIRCUIT BREAKER BOX - CONNECTOR NUMBER**

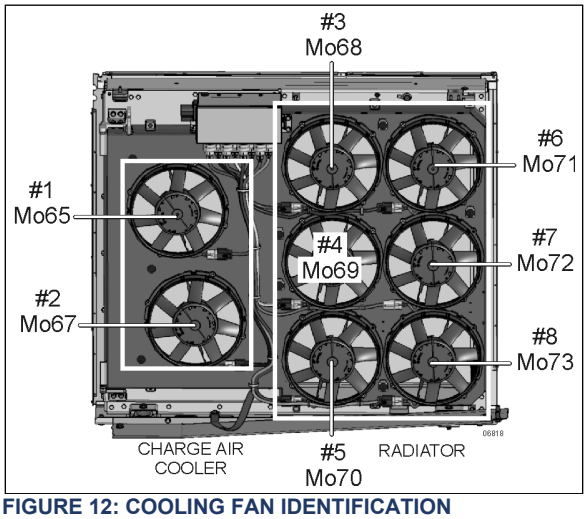


**FIGURE 12: COOLING FAN IDENTIFICATION**

**WARNING**

**WHEN THE ENGINE IS RUNNING…**

Cooling fans may start running at any moment.

Keep hands away from cooling fans or keep the radiator door closed.

**WARNING**

**Cooling fans may be running when the engine is shut down in the following conditions:**

- If a High Exhaust Temperature condition exists (e.g. following regeneration). The CAC fans will keep running for a maximum of 15 minutes.
- During the **Electric Motors Test Sequence**, the cooling fans will start running briefly.

The CAC fans and the radiator fans are controlled by two multiplex modules, i.e.

**AE49 & AE52 X3 Series**

**AE50 & AE53 H3 Series**

Each module controls one (1) CAC fan and three (3) radiator fans. For this reason, if one module fails, sufficient cooling will still be available for the CAC and the radiator through the second module.

Module AE49: Fans 1, 4, 6, 8
Module AE52: Fans 2 3, 5, 7

Module AE50: Fans 1, 4, 6, 8
Module AE53: Fans 2 3, 5, 7

If one fan doesn't function, diagnose the probable causes of failure for this particular fan. If one CAC fan and three radiator fans are not functioning, then you should suspect that one of the multiplex modules is defective.

## 2.11 ELECTRONIC GROUND

All the electronic modules installed on this vehicle are grounded to the electronic ground stud located in the main power compartment, using separate and protected circuits.

All the loads fed by a particular electronic module are grounded to that same module. However, a load can be grounded to another module in the situation when the load can be powered by two different modules for redundancy need.

2.12 PRECAUTIONS



Prior to working on a system inside vehicle, make sure to cut electrical power and air supply. A component could be supplied with electricity even if the ignition switch is set to the OFF position and/or a component could be pressurized even if air tanks are emptied. Always refer to the appropriate wiring and pneumatic diagrams prior to working on electrical and/or pneumatic systems.

*NOTE*

*When the ignition switch is set to the OFF position, the electrical components are not energized except for the MCM, engine ECU, transmission ECU, instrument cluster module, the battery equalizer, the preheater system, AFSS, the wheelchair lift system and some Multiplex modules which remain energized during 15 minutes after the ignition has been set to the OFF position. Prior to working on one of these electrical components, set the main electrical shut-off switch located above the batteries, on the exterior wall of the main power compartment to the OFF position.*

*If the vehicle will not be operated for a long period (more than 2 weeks), it is recommended, in order to prevent the batteries from discharging, to trip main circuit breakers CB2 & CB6 located on the rear junction panel to stop the small current drawn by the radio preset station memory, the MCM memory and the instrument cluster clock. Note that the radio station presets will be erased, same thing for the diagnostic codes history and the instrument cluster clock will have to be reset.*

2.13 CORROSION INHIBITOR

A corrosion inhibitor has been sprayed on certain electrical components in order to protect them from corrosion. Refer to procedure SAV00002E at the end of this section for recommended products and where they are used.

**CAUTION**

Never put grease or other product on the multiplex modules connector terminals.



Use sprayed sealer in a well-ventilated area. Do not smoke. Avoid prolonged contact with skin and breathing of spray mist.

## 3. ELECTRONIC MODULES

3.1 MCM

The MCM (Master Control Module) plays the role of interface between the engine ECM, the transmission ECU, the telltale panel module and other I/O-EA, I/O-EB modules. When a multiplex module is being replaced, the MCM will inform the new module of its role and function accordingly to the vehicle options. The MCM keeps the back-up program of the vehicle specific multiplex program. So, a specific MCM cannot be removed from a vehicle and be installed on another vehicle.

3.1.1 Replacing the MCM

If the MCM must be replaced, a new MCM, pre-programmed at the factory specifically for the vehicle must be ordered. The actual vehicle identification number (V.I.N) will be needed at the time of ordering.

1. The vehicle should be connected to a battery charger.
2. Turn the hazards ON. Doing this will prevent the vehicle to fall in “sleep” mode after the normal 15 minutes delay.
3. Set the ignition key to the ON position and leave it in that position at all time while performing this procedure.
4. On rear electrical junction panel, trip circuit breaker CB6.
5. Replace the MCM.
6. Reset circuit breaker CB6.
7. The DID indicates "MUX AUTOPROGRAMMING I/O MODULE PLEASE WAIT" until the reprogramming of the I/O modules is complete unless a higher

priority message must be displayed. If this is the case, press ESCape button repeatedly to acknowledge the higher priority messages.

8. The previous message displayed on the DID may disappear event if the programming is not completed. For this reason, wait another 5 minutes before proceeding to the next step.
9. Trip and reset circuit breaker CB6.
10. Check the DIAGNOSTICS menu of the Driver Information Display (DID). Select VIEW ACTIVE FAULTS and ELECTRICAL. Verify the fault message to be certain the module is reprogrammed. If the module is not reprogrammed, the message “Axx Not Responding” appears where Axx is the module number (Ex: A41, A42…etc).

3.1.2 Uploading a multiplex program update into the MCM

An updated vehicle multiplex program saved on a laptop computer can be uploaded into the MCM. A laptop computer running Windows XP or Windows 7 must be connected to the RS232 serial port DB9 connector (identified C226) found on the front service compartment electrical panel. Please contact your Prevost Service Representative in order to get the vehicle specific multiplex program and upload procedure. Save the specific multiplex program on your laptop computer.

**WARNING**

**WHEN UPLOADING A NEW MUX SOFTWARE INTO THE MCM …**

Cooling fans WILL start running for a short while.

Keep hands away from cooling fans or keep the radiator door closed.

3.2 I/O-EA AND I/O-EB MODULES

I/O-EA modules receive inputs and control outputs. I/O-EA's are used for all outputs of 1 amp or less.

I/O-EB modules receive inputs and control outputs. I/O-EB's are used for outputs up to 30 amps.

3.2.1 Replacing I/O-EA or I/O-EB Modules

I/O-EA, I/O-EB modules can be replaced and reprogrammed without having to connect a computer to the vehicle.

Set the ignition switch to the ON position and leave it in that position at all time while performing this procedure.

6. On rear electrical junction panel, trip circuit breaker CB6.
7. Replace the defective module.
8. Reset circuit breaker CB6. Doing so will initiate the I/O auto programming.
9. The DID indicates "MUX AUTOPROGRAMMING I/O MODULE PLEASE WAIT" until the reprogramming is complete unless a higher priority message must be displayed. If this is the case, press ESCape button repeatedly to acknowledge the higher priority messages.
10. The previous message displayed on the DID may disappear event if the programming is not completed. For this reason, wait another 5 minutes before proceeding to the next step.
11. Trip and reset circuit breaker CB6.
12. Check the **Diagnostics** menu of the Driver Information Display (DID). Select VIEW ACTIVE FAULTS and. Verify the fault message to be certain the module is reprogrammed. If the module is not reprogrammed, the message “Axx Not Responding” appears where Axx is the module number (Ex: A41, A42…etc).

## 3.3 ELECTRONIC MODULES CONNECTOR PIN-OUT

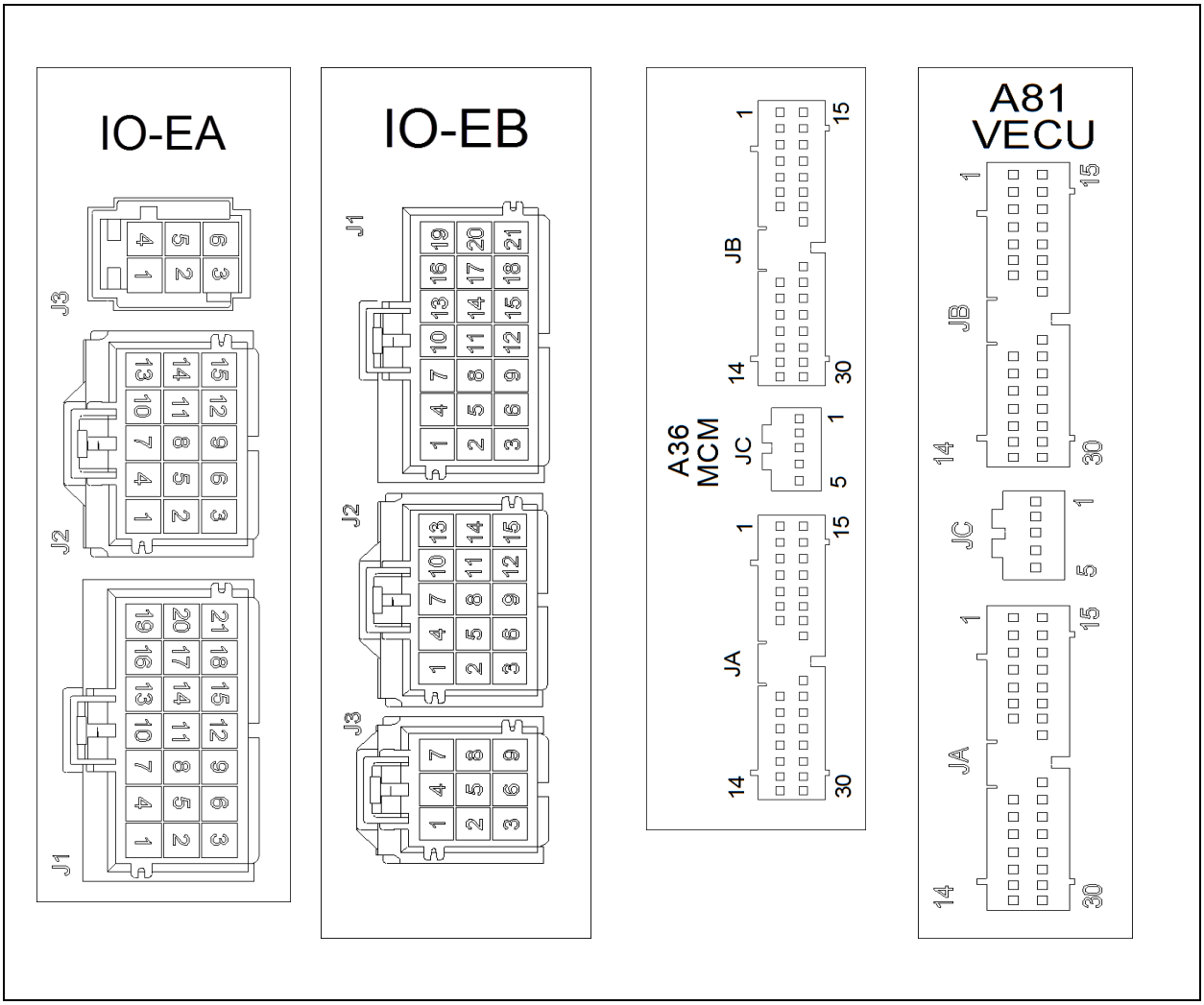


**FIGURE 13: ELECTRONIC MODULES CONNECTOR PIN-OUT - BACK PROBING VIEW**

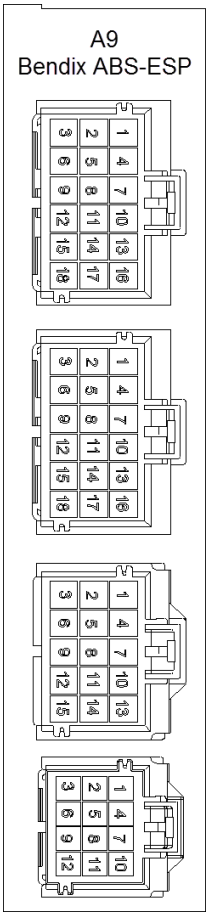


**VECR / VECF**

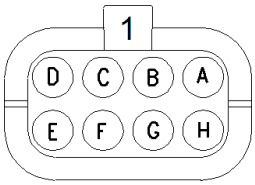


ORANGE, BLACK, RED,
GREY, BROWN, GREEN,
YELLOW

**FIGURE 14: ELECTRONIC MODULES CONNECTORS PIN-OUT - BACK PROBING VIEW**

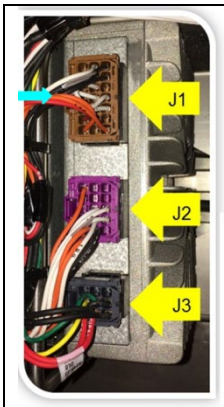


- IO-EB modules utilize 3 connectors.
- J1 – Inputs, Outputs, Address Loops
- J2 – Inputs & Outputs
- J3 – Power, Ground, & Network Communication (CAN)

FIGURE 15: I/O-EB MODULE

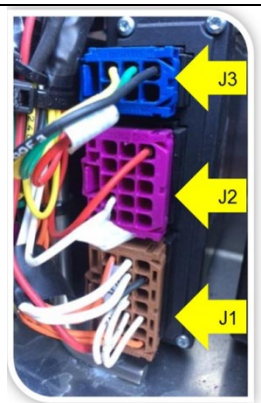


- IO-EA Modules have 3 connectors
- J1 – Inputs, Outputs, Address Loops
- J2 – Inputs & Outputs
- J3 – Power, Ground, & Network Communication (CAN)

FIGURE 16: I/O-EA MODULE

## I/O-EA & I/O-EB MUX modules

### Connector: AMP MCP 2.8

**Contact loading of housings**

Loading the contacts is only possible if the secondary lock is in the unlock position.

Proper orientation of the contact is important. If the orientation is incorrect, the contact stops too early in the region of the secondary lock and the whole crimp stands out from the housing. With correct orientation the secondary lock stops with a metallic “click” sound.

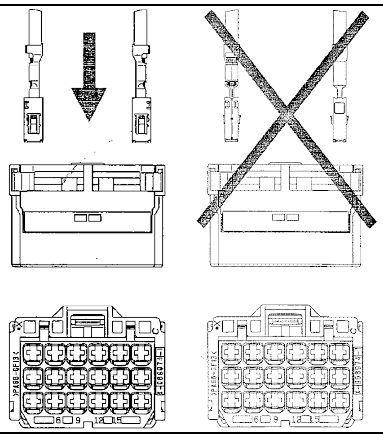

**Locking the secondary lock**

Delivery state of the secondary lock is the open position. In this position the AMP MCP2.8 contacts can be loaded. After that the secondary lock is moved into the final locking position by hand.

At a sufficient large surface a perpendicular force is initiated by (preferably) the thumb of one hand. Proper final position is reached a click noise can be heard. Make sure that both sides are locked.

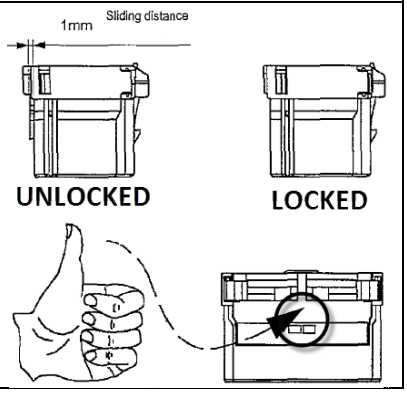

**Unlocking the secondary lock**

To unlock the secondary lock on these housings, a simple solid commercial ball pen is sufficient. The ball pen has to be inserted perpendicularly according the image, between the locking latch of the housing and the secondary lock block. Then it will be pushed with care until the opening is felt (a “click” sound can be heard).

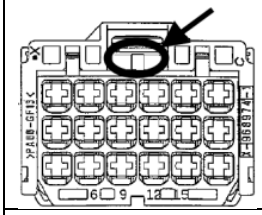

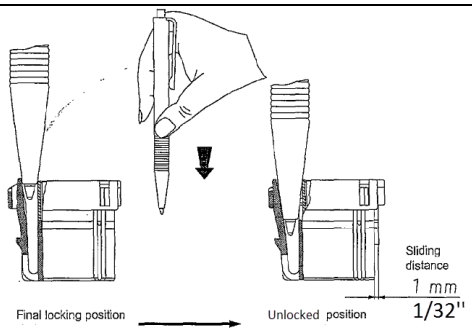


**Extracting the contacts from housings**

To extract contacts, the secondary lock has to be in the unlock position. The tool has to be inserted from connection side into the cavity of housing up to the stop; the contact will be unlocked thereby. Keep the tool in that position and then take the contact out by pulling on the cable. Note: Do not pull the cable before unlocking the contact; on the other hand by pressing the cable gently against the cable outlet direction the unlocking procedure will be facilitated.



EXTRACTOR/TOOL: Prevost 568103

| Multiplex modules | Connector type | Contact removal |
|---|---|---|
| 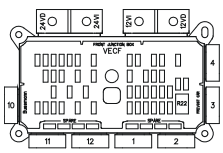 **VECR / VECF** 06627 | 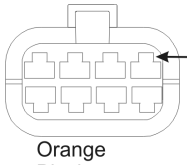 INSERT EXTRACTOR HERE<br>Orange<br>Black<br>Red<br>Grey<br>Brown<br>Green<br>Yellow<br>06632 **BUSSMAN** | EXTRACTOR/TOOL: Prevost #682256 (Packard 12094429)<br><br>Remove the terminal by disengaging the flexible lock tab on the terminal. Gently remove the terminal from the connector by pulling on the wire. |

## 4. AVAILABLE TEST MODES

The available test modes are the followings:

1. Alternators test;
2. Electric motors test;
3. MUX Input Test;
4. HVAC pump test;
5. Force Radiator Fan Speed 50%;
6. Force Radiator Fan Speed 100%.

### 4.1 MULTIPLEX INPUT TEST

The multiplex input test provides useful information to diagnose multiplexed input of switches and sensors, complimentary to the electrical system diagnosis.

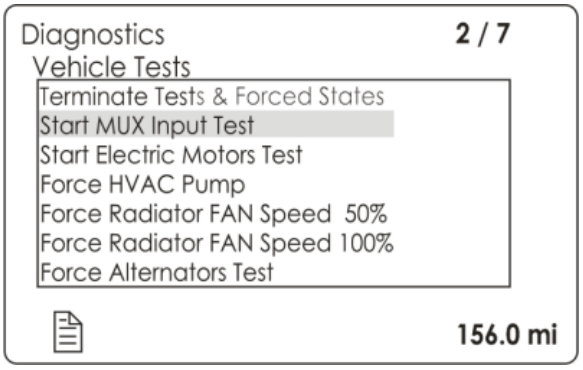


To initiate the test, use the Driver Information Display (DID) DIAGNOSTICS menu. Select VEHICLE TESTS submenu and then START MUX INPUT TEST. Press ENTER button to start the test. The DID status line will show TEST to confirm the test mode is active. To exit test, press ESCAPE button, select TERMINATE TESTS & FORCED STATES submenu and then press ENTER button twice. TEST will disappear from the DID status line.

Instrument panel audible alarm emits a *beep* each time an OFF/ON transition is detected on a multiplex input. This allows quick verifying if the switches and sensors are detected or seen by the multiplex modules. When the vehicle is parked, the back-up alarm also emits a *beep* that allows verification of the sensors at the rear of the vehicle.

Certain inputs are doubled (for example, turn signal switch on multi-function lever, door operating buttons) and also other inputs activate at the same time (ex. kneeling switch and Kneeling proximity sensor switch). For these inputs, 2 *beeps* are emitted. If only one *beep* is heard, one of the inputs is defective.

| SWITCHES AND SENSORS SUPPORTED BY THE SWITCH/SENSOR TEST MODE |
|---|
| HVAC control unit driver's section ON/OFF |
| HVAC control unit driver recirculate switch |
| HVAC overhead compartment fan switch |
| HVAC control unit passenger's section ON/OFF |
| Engine rear start selector switch "rear start" |
| Engine rear start selector switch "normal" |
| Engine ignition front switch |
| Engine ignition rear switch |
| Entrance door inside opening /closing switch |
| Entrance door outside opening /closing switch |
| Electric horn button |
| Kneeling down switch |
| Kneeling up switch |
| Baggage compartment locking system switch |
| Baggage compartment door ajar open sensor |
| Steering wheel control buttons |
| Lavatory emergency switch |
| Interior lighting switch, 2 positions |
| Driver's area lighting switch |
| Reading lights switch |
| Multi-function lever LH turn signal |
| Multi-function lever RH turn signal |
| Fog lights switch |
| Hazard warning flashers switch |
| Multi-function lever courtesy blinkers switch |
| Headlamps switch, 2 positions |
| Multi-function lever headlamps beam toggle switch |
| Baggage compartment door lock/unlock switch |
| Tag axle lever |
| Wheelchair lift activation switch |
| Windshield lower wiper |

| |
|---|
| Multi-function lever windshield wipers intermit. |
| Lower windshield wipers backup switch |
| Lower windshield washer switch |
| Upper windshield washer switch |
| Upper windshield wipers switch, 2 positions |

The following inputs, either certain options or sensors which are difficult to activate, are not supported by the switch/sensor test:

- Service chime enable switch,
- Fast idle switch,
- Outside Rear View Mirror & Video Camera Mirror System Heat,
- Traction control system switch,
- Outside rear-view mirror heat,
- Mirror control switches,
- Low-buoy switch,
- Starter sensor,
- ABS warning input,
- WCL switch,
- Driver's power window switch,
- Alternator sensors 1 & 2,
- Retarder active signal,

In test mode, with the parking brake applied and the passenger set point set to a value higher than 64°F (18°C), the circulator pump is not set to OFF as it would normally do when the outside temperature gets above 50°F (10°C). This feature allows verification of the pump when inside a garage. This is also useful when working on the heating system to remove air pockets trapped in the system.

When performing an A/C cooling test and having the water pump shut off is required, initiate the multiplex input test mode. While in this mode, just set the passenger set point temperature to the minimum 64°F (18°C) to shut off the pump.

### 4.2 Electric Motor Test Sequence

This test mode allows testing of the electric motors, the A/C compressor clutch and unloader and the HVAC system solenoid valves without the need to have the engine running. Note that while in test mode, the engine cannot be started.

Prerequisite conditions for the motor test mode:

A. The battery charger must be connected to a 110-120 volt power supply. If not, the test will be interrupted when the voltage drops below 24.4 volts,

B. Engine not running,

C. Parking brake applied,

**DANGER**

Before starting the test sequence, make sure that no one is doing maintenance in the evaporator compartment, the condenser compartment or close to the CAC & radiator electric cooling fans.

*NOTE*

*The back-up alarm will sound (beep) ten (10) times prior the test starts to warn the persons who do work on the vehicle. Moreover, the alarm will beep to tell the person conducting the electric motors test sequence to move to the next test location on the vehicle.*

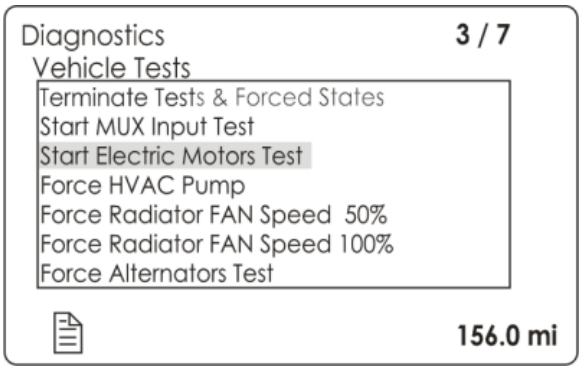


To enter this mode:

- Using the dashboard DID, select DIAGNOSTICS menu and press ENTER button ;
- Select VEHICLE TEST, press ENTER button then select START ELECTRIC MOTORS TEST and press ENTER button to initiate the test mode for electrical motors;
- Ten (10) *beeps* can be heard indicating the motor test mode has started.

Using the test mode:

- During the entire test, the telltale panel audible alarm gives a signal each second to remind that the motor test mode is underway.

4.2.1 Test Sequence – Coaches only

| Test Sequence – Coaches only | | |
|---|---|---|
| Go to the condenser compartment |  | • The condenser fans start. Speed will gradually increase to maximum speed.<br>• The passenger's unit refrigerant solenoid valve activates. The refrigerant solenoid valve of the overhead compartment A/C system activates. |

*Then 5 beeps can be heard from the back-up alarm to indicate to go to the engine compartment.*

| | | |
|---|---|---|
| In the engine compartment, the sequence is as follows |  | • The main power compartment fan activates for 3 seconds.<br>• Toilet fan motor starts.<br>• A/C compressor clutch activates 3 times.<br>• The compressor unloader activates 3 times.<br>• The electric cooling fans start running for 20 seconds. |

*Then 5 beeps can be heard from the back-up alarm to indicate to go to the evaporator compartment.*

| | | |
|---|---|---|
| In the evaporator compartment |  | • Evaporator fan motor runs at speed 1 for 3 seconds then runs at speed 2 for 2 seconds.<br>• Hot water pump starts running for 5 seconds and hot water pneumatic valve cycles 3 times. |

*5 beeps from the back-up alarm indicate to get to the driver's area inside the vehicle.*

| | | |
|---|---|---|
| Inside the vehicle |  | • The driver's HVAC unit refrigerant solenoid valve cycles 3 times and the hot water pneumatic valve cycles 3 times also.<br>• Left and right overhead compartment fans start running one after the other for 5 seconds. |

**To exit the electric motors test sequence, press ESCAPE button, select TERMINATE TESTS & FORCED STATES submenu and then press ENTER button twice.**

4.2.2 Test Sequence – VIP With Central HVAC System

| Test Sequence – VIP With Central HVAC System | | |
|---|---|---|
| |  | • Driver's & passenger's unit fresh air damper open. *[20 seconds delay]* |
| Go to the condenser compartment |  | • The condenser fans start. Speed will gradually increase to maximum speed. *[3 seconds delay]*<br>• The passenger's unit refrigerant solenoid valve activates 3 times. *[10 seconds delay]* |

*Then 5 beeps can be heard from the back-up alarm to indicate to go to the engine compartment and main power compartment.*

| | | |
|---|---|---|
| In the engine compartment, the sequence is as follows |  | • The main power compartment fan activates for 3 seconds.<br>• A/C compressor clutch activates 3 times.<br>• A/C compressor unloader activates 3 times.<br>• The electric cooling fans start running for 20 seconds. |

*5 beeps from the back-up alarm indicate to go to the evaporator compartment.*

| | | |
|---|---|---|
| In the evaporator compartment |  | • Evaporator fan motor runs at speed 1 for 3 seconds then runs at speed 2 for 2 seconds.<br>• Hot water pump starts running for 5 seconds and hot water pneumatic valve cycles 3 times. |

*5 beeps from the back-up alarm indicate to go to the spare wheel compartment behind the reclining bumper.*

| | | |
|---|---|---|
| Inside the spare wheel compartment |  | • Driver's unit refrigerant solenoid valve activates 3 times.<br>• Driver's unit hot water pneumatic valve cycles 3 times.<br>• Closing of the fresh air dampers. |
| **To exit the electric motors test sequence, press ESCAPE button, select TERMINATE TESTS & FORCED STATES submenu and then press ENTER button twice.** | | |

4.2.3 Test Sequence – VIP With Small HVAC System

| Test Sequence – VIP With Smal System | | |
|---|---|---|
| | → | • Driver's unit fresh air damper opening. [20 seconds delay] |
| Go to the condenser compartment | → | • The condenser fan start. Speed will gradually increase to maximum speed. *[3 seconds delay]* |

*Then 5 beeps can be heard from the back-up alarm to indicate to go to the engine compartment and main power compartment.*

| | | |
|---|---|---|
| In the engine compartment, the sequence is as follows | → | • The main power compartment fan activates for 3 seconds.<br>• A/C compressor clutch activated 3 times. [5 seconds delay]<br>• The electric cooling fans start running for 20 seconds. |

*5 beeps from the back-up alarm indicate to go to the spare wheel compartment behind the reclining bumper.*

| | | |
|---|---|---|
| Inside the spare wheel compartment | → | • Auxiliary unit refrigerant solenoid valve activates 3 times. [*10 seconds delay]*<br>• Hot water pump starts running for 5 seconds.<br>• Driver's unit refrigerant solenoid valve activates 3 times.<br>• Driver's unit hot water pneumatic valve cycles 3 times.<br>• Closing of the fresh air dampers. |
| **To exit the electric motors test sequence, press ESCAPE button, select TERMINATE TESTS & FORCED STATES submenu and then press ENTER button twice.** | | |

## 4.3 ALTERNATOR TEST

Anytime an alternator is suspected of being defective, this test will help you when performing your own alternator power output test, without the need to disconnect the alternator power cable. A clamp-on current meter is required.

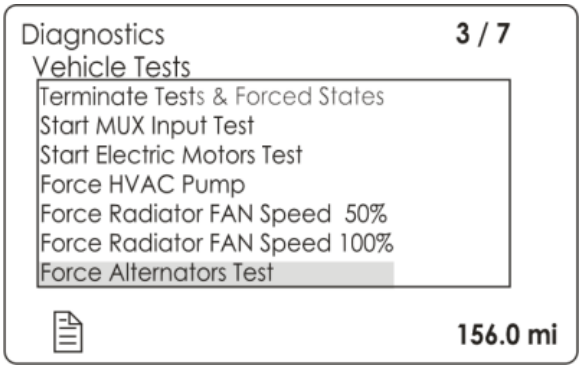


To initiate the test, use the Driver Information Display (DID) DIAGNOSTICS menu. Select VEHICLE TESTS submenu and then FORCE ALTERNATORS TEST. Press ENTER button to start the test. This feature will activate one alternator at a time during 5 seconds, cycling between alternator 1, 2 & 3.

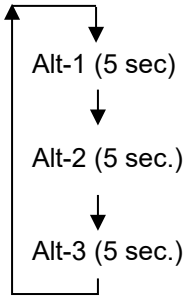


To exit test, press ESCAPE button, select TERMINATE TESTS & FORCED STATES submenu and then press ENTER button twice.

## 4.4 FORCED ACTIVATION OF THE COOLING FANS

To allow the technicians to visually check if all the cooling fans are in working conditions or to prevent the engine from overheating in case of malfunction of the cooling fans activation system, it is possible to force activation of the CAC & radiator fans.

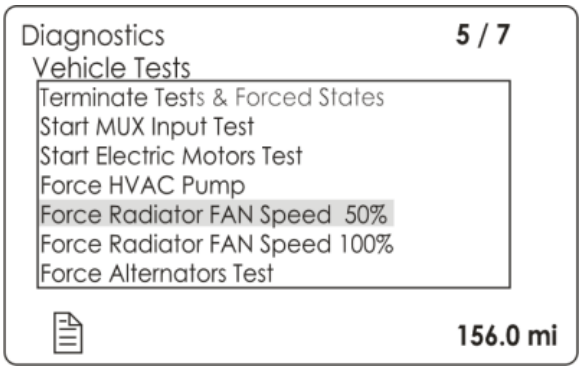


Prerequisite condition: The engine is running (fast idle if at stand still).

1. On the Driver Information Display, select DIAGNOSTICS menu. Select VEHICLE TESTS submenu and then FORCE RADIATOR FAN SPEED 50% or FORCE RADIATOR FAN SPEED100% as required.
2. The DID status line will show TEST to confirm the forced activation of the radiator fan clutch. To cancel, turn the ignition switch to the OFF position or press ESCAPE button, select TERMINATE TESTS & FORCED STATES submenu and then press ENTER button twice. TEST will disappear from the DID status line.

**WARNING**

**Keep hands away from the cooling fans as they may start running at any moment.**

### 4.4.1 Cooling Fans Cleaning Mode Validation

In order to make sure the cleaning mode is working, the following steps should be taken:

1. From the instrument panel DID, look for any fault codes related to cooling fans in the ELECTRICAL section.

Select: Diagnostics > View Active Faults > Electrical

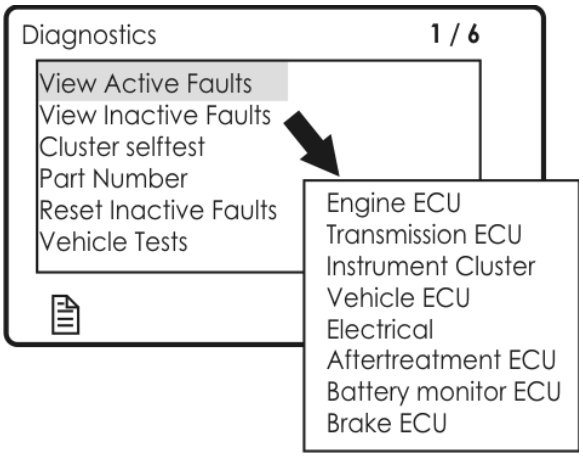


2. From the dash cluster DID, look at the cooling fans status under the fans status gauge. While in cleaning mode, the status will show CLEANING.

Fan run in reverse mode once per drive cycle when the vehicle reaches for the first time a speed between 31 mph and 43 mph. Note that no cooling request should be present in order for the cleaning mode to start. The sequence will last 10 seconds at full speed.

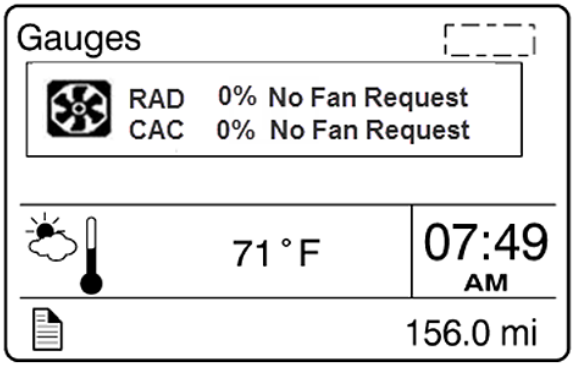


**FIGURE 17: DURING THE NORMAL OPERATION OF THE VEHICLE, DISPLAYS THE SPEED AND THE STATE OF BOTH CHARGE AIR COOLER AND RADIATOR COOLING FANS, EXPRESSED IN PERCENTAGE FROM 0 TO 100%**

## 5. LOWER PRIORITY I/O-EA & I/O-EB MODULES FOR BREAKDOWN SERVICE

Modules AE42 (I/O-EA) and AE43 (I/O-EA) affect lower priority functions. These modules can therefore be used as spare parts for breakdown service while on the road.

Functions lost if AE42 is removed and used as spare part:

- Kneeling, low buoy & auxiliary axle

Functions lost if AE43 is removed and used as spare part:

- Cruise control & ACB,
- Baggage compartment door luck,
- Door ajar,
- Tire Pressure Monitoring System,
- Front identification &clearance lights.

### 5.1 ESSENTIAL FUNCTIONS TO OPERATE THE VEHICLE

Even with a defective MCM (Chassis Control Module) or a DL0 (BBUS MUX) network problem, essential base functions are maintained to rear start the vehicle from the engine compartment and drive in a secure manner.

However, many secondary functions are lost. In this case, the following directives must be followed.

- Never connect a battery charger when the ignition is at the ON position on a vehicle with a DL0 (BBUS MUX) defective or certain functions will start up by themselves,
- Disconnect the charger before starting the vehicle, if not the default functions will not activate,
- If the default mode does not activate, try to turn the ignition OFF while ensuring that no charger is connected and then restart the vehicle.

#### 5.1.1 Available Functions

- Startup: Turn on the ignition in the driver's area and rear start the vehicle from the engine compartment,
- Opening the door: Functions normally,
- Closing the door: Manually pull on the door and it will lock automatically,
- Windshield wipers: Wipers functions at 1st speed only,
- Headlamps: Low beams only,
- Directional signals: Rear and front only,
- Stoplights: 2 upper stoplights + high-mounted stoplight are functional,
- HVAC: Functional with set point fixed at 70°F (22°C), evaporator and condenser fixed at speed 1, defroster fixed at speed 4.

## 6. NETWORKS

Networks identification

| NETWORKS | |
|---|---|
| J1939 | - DL0 (Bbus Mux)<br>- DL1 (drivetrain control network)<br>- DL3 (Dbus Mux)<br>- DL7 (engine subnet)<br>- DL9 (engine transmission/I-Shift subnet) |
| J2284 | - DL2 |
| J1587 | - DL4 (powertrain subnet 900/901) |

### 6.1 DL0 (BBUS MUX) NETWORK

The DL0 (BBUS MUX) network wiring is separated in sections and uses the following connectors that are not shared with other circuits: C1, C3, C5, C13, C100. These connectors allow sections of the network to be isolated to help locate short-circuit on the DL0 (BBUS MUX).

In case of a short-circuit on the DL0 (BBUS MUX) network, this affects all the modules and they all act as “No response” in the error messages of the VIEW ACTIVE FAULTS/ELECTRICAL menu. To locate a short-circuit, proceed by disconnecting one module zone at a time while verifying if this makes inactive the errors in the modules still connected. Connector C1 (front electrical & service compartment) disconnects all the modules at the rear of the vehicle from the network. Connector C5 (front electrical & service compartment) disconnects all the modules from the entrance door & wiper control panel. Connector C3 (rear electrical panel) disconnects all the modules at the rear of the vehicle from the network.

Example: Disconnect C5 and C1 and then verify the status of the errors. If the front modules (A41 to A46) now give inactive errors, which means short-circuit is elsewhere than in the front electrical & service compartment.

### 6.2 DL0 (BBUS MUX) CONNECTION ON THE TELLTALE PANEL AND THE HVAC CONTROL UNIT

The telltale panel module and HVAC module are linked to the MCM by a DL0 (BBUS MUX) connection. In case of a connection default, the telltale panel LCD display shows "CAN", and on the HVAC control unit, the temperature display indicates "---". To confirm a connection default, check that the fan speed on the driver's section HVAC control unit cannot be adjusted.

Moreover, specific error messages from these 2 modules can be read in the ELECTRICAL menu.

*NOTE*

*While downloading a new vehicle program in the MCM from a computer, the DL0 (BBUS MUX) network is temporarily interrupted and therefore a DL0 (BBUS MUX) reference appears in the telltale panel LCD display.*

### 6.3 SPARE DL0 (BBUS MUX)

A spare DL0 (BBUS MUX) network is installed between the front and the rear of the vehicle. It has connectors installed at each end to facilitate swapping from the regular DL0 (BBUS MUX) network to the spare DL0 (BBUS MUX) network. Refer to the vehicle wiring diagram and section 4.6 for more information.

## 7. TROUBLESHOOTING

### 7.1 PROBING VOLTAGE ON THE MULTIPLEX CIRCUITS

Some Multiplex modules are supplied by 12 volts while others are supplied by 24 volts. The 12-volt or 24-volt information is found on the modules symbol in the wiring diagram. Before taking voltage readings to track the source of a problem, first verify if the module is supplied by 12V or 24V, if not, residual voltage on the module inputs/outputs can draw an erroneous conclusion.

Inactive Multiplex output = Residual voltage of 18% to 33% of supply voltage.

Inactive Multiplex input = Residual voltage of 50% of supply voltage.

*NOTE*

- *Verify on the wiring diagram whether the voltage is 12V or 24V,*
- *For a 12V module: an active voltage would be 12V or 0V but not in between. If you measure the intermediate tensions (ex. 6V, 2V, or 4V) this must be interpreted as if the input or the output is inactive.*
- *For a 24V module: an active voltage would be 24V or 0V but not in between. If you measure the intermediate tensions (ex. 12V, 4V, or 8V) this must be interpreted as if the input or the output is inactive.*

7.2 DL0 (BBUS MUX) NETWORK LAYOUT AND TROUBLESHOOTING

| X3 SERIES | | |
|---|---|---|
| MUX MODULE IDENTIFICATION | MODULE TYPE | LOCATION |
| A36 | MCM | FJB |
| AE41 | I/O-EA | FJB |
| AE42 | I/O-EA | FJB |
| AE43 | I/O-EB | FJB |
| AE44 | I/O-EB | FJB |
| AE45 | I/O-EB | FJB |
| AE46 | I/O-EB | FJB |
| AE47 | I/O-EB | DASHBOARD CONTROL PANEL |
| AE48 | I/O-EB | DASHBOARD CONTROL PANEL |
| AE49 | I/O-EB | MAIN POWER COMPARTMENT |
| AE50 | I/O-EB | MAIN POWER COMPARTMENT |
| AE51 | I/O-EB | MAIN POWER COMPARTMENT |
| AE52 | I/O-EB | MAIN POWER COMPARTMENT |
| AE53 | I/O-EB | LAST OVERHEAD COMPARTMENT, L.H. SIDE |
| AE54 | I/O-EB | EVAPORATOR COMPARTMENT CONTROL PANEL |
| AE55 | I/O-EA | DASHBOARD |
| AE56 | I/O-EA | DASHBOARD |
| AE57 | I/O-EA | WCL CMPT, ABOVE WHEELCHAIR LIFT |

| H3 SERIES | | |
|---|---|---|
| MUX MODULE IDENTIFICATION | MODULE TYPE | LOCATION |
| A36 | MCM | FJB |
| AE41 | I/O-EA | FJB |
| AE42 | I/O-EA | FJB |
| AE43 | I/O-EB | FJB |
| AE44 | I/O-EB | FJB |
| AE45 | I/O-EB | FJB |
| AE46 | I/O-EB | FJB |
| AE47 | I/O-EB | DASHBOARD CONTROL PANEL |
| AE48 | I/O-EB | DASHBOARD CONTROL PANEL |
| AE49 | I/O-EB | DASHBOARD CONTROL PANEL |
| AE50 | I/O-EB | MAIN POWER COMPARTMENT |
| AE51 | I/O-EB | MAIN POWER COMPARTMENT |
| AE52 | I/O-EB | MAIN POWER COMPARTMENT |
| AE53 | I/O-EB | MAIN POWER COMPARTMENT |
| AE54 | I/O-EB | EVAPORATOR COMPARTMENT CONTROL PANEL |
| AE55 | I/O-EA | DASHBOARD CONTROL PANEL |
| AE56 | I/O-EA | DASHBOARD CONTROL PANEL |
| AE57 | I/O-EA | WCL CMPT, ABOVE WHEELCHAIR LIFT |
| AE58 | I/O-EB | LAST OVERHEAD COMPARTMENT, L.H. SIDE |

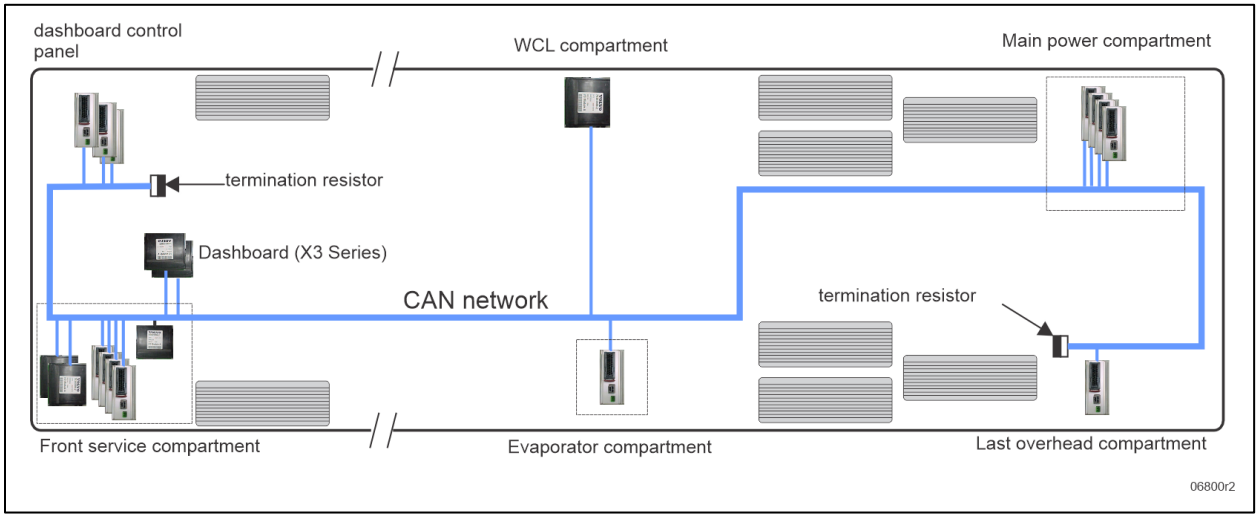


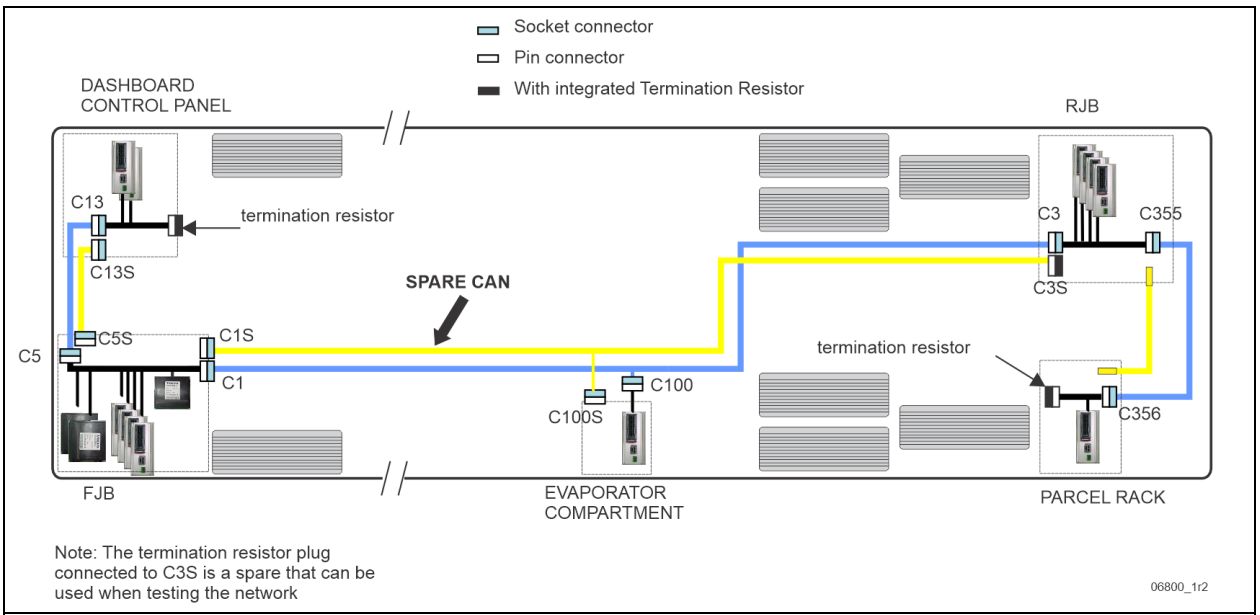


If all modules (AE41 to AE58) are showed as Not Responding and Active Fault, the problem could be:

- A short circuit somewhere on the DL0H, DL0L (BBUS MUX) network.
- The network is completely open circuit. That means none of the two termination resistors are connected.

Several simple tests can be done to locate the problem.

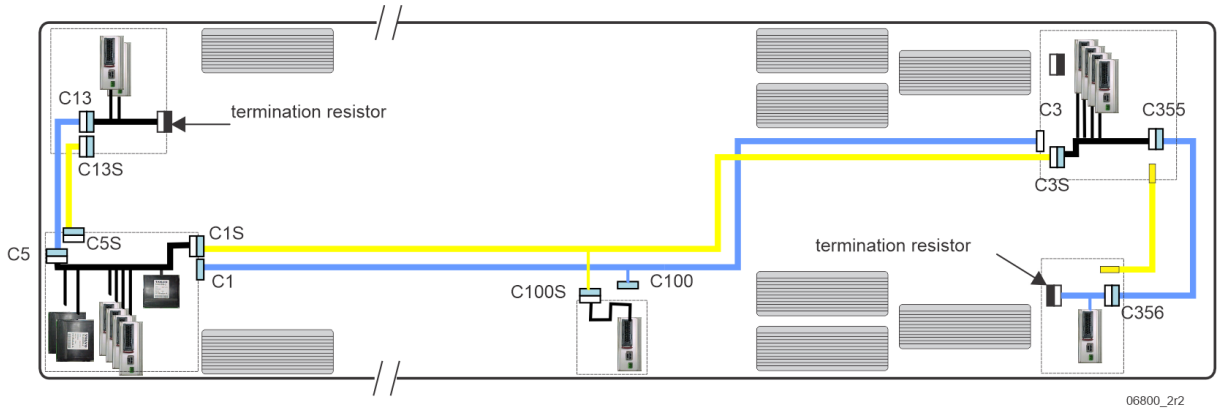


**Use the spare "FRONT ELECTRICAL COMPARTMENT to MAIN POWER COMPARTMENT" CAN**

FRONT ELECTRICAL COMPARTMENT: disconnect C1 and connect C1 pin housing to C1S socket housing.

RJB: disconnect C3 and connect C3 socket housing to C3S pin housing.

5th baggage compartment: disconnect C100 and connect C100 pin housing to C100S socket housing.

*NOTE*

All modules including Wake-up modules and MCM have to be powered OFF prior to probe the DL0 (BBUS MUX) lines with an ohmmeter.

Probing the resistance between the DL0H and DL0L wire is a useful method to localize short circuits or open circuit on the DL0 (BBUS MUX) network. However, when doing so, make sure none of the modules connected to the DL0 (BBUS MUX) line are powered, including wake-up powered modules and battery direct supply module (MCM). Otherwise the measured value is invalid and will always show OL (Open Load). This is because the modules are applying a voltage on the DL0 (BBUS MUX) lines and this is fooling the ohmmeter.

Proceed as follow when probing the DL0 (BBUS MUX) line with an ohmmeter in order to get a valid reading:

- Turn ignition key to the OFF position.
- Set the main electrical shut-off switch to the OFF position to turn all Wake-up modules power to OFF.

Trip circuit breakers CB2 and CB6 to remove direct battery power from the MCM.

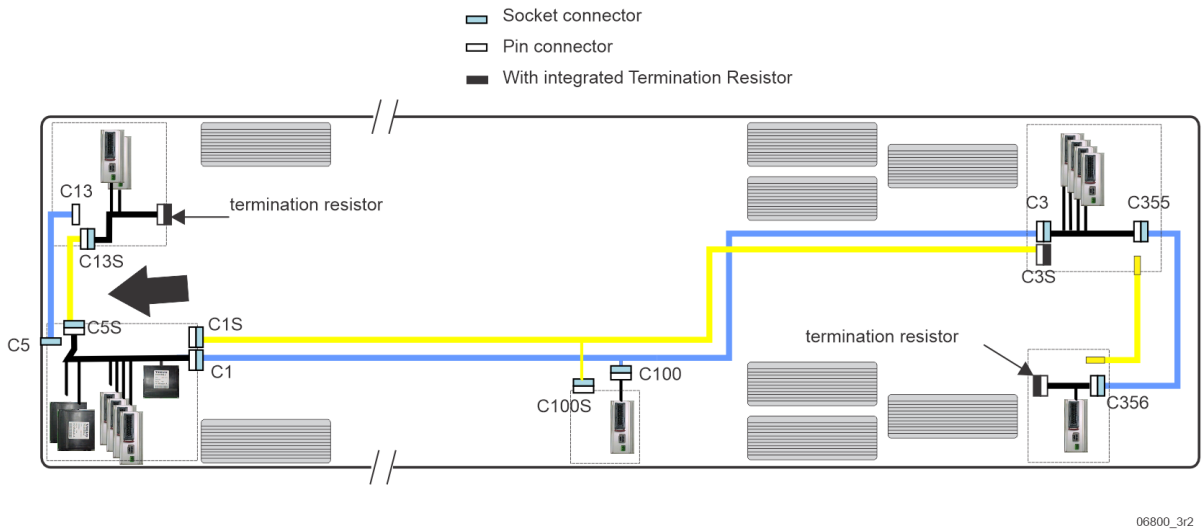


### Use the spare “FRONT ELECTRICAL COMPARTMENT TO DASHBOARD CONTROL PANEL” CAN

Dashboard control panel: disconnect C13 and connect C13S pin housing to C13 socket.

FRONT ELECTRICAL COMPARTMENT: Disconnect C5 and connect C5S socket housing to C5 pin housing.

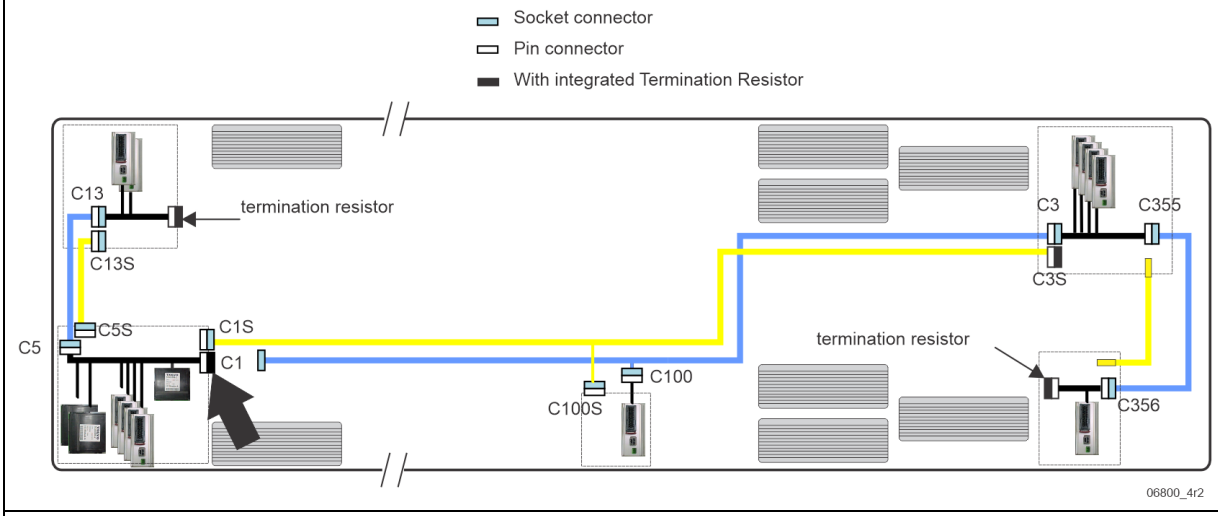


### Isolate the front from the rear

Take one of the termination resistors in the MAIN POWER COMPARTMENT.

Disconnect C1 and connect the termination resistor to C1 pin housing.

If all the front modules respond normally, the short circuit is in the rear portion.

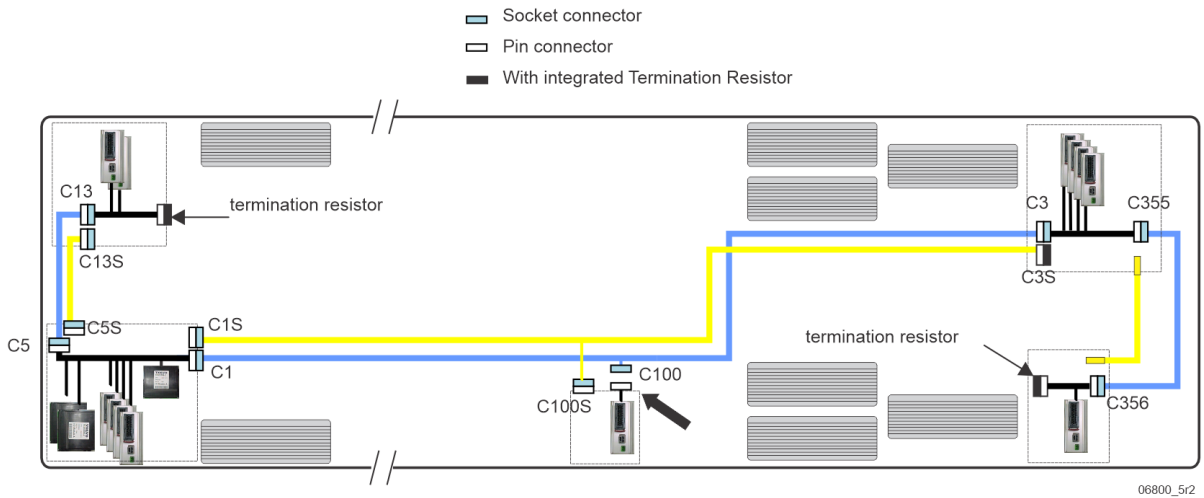


## Isolate the evaporator module from the network

Disconnect C100.

No need to connect a termination resistor there since C100 is a stub connection.

If the short circuit problem is in the evaporator panel, all modules except AE54 will respond normally.

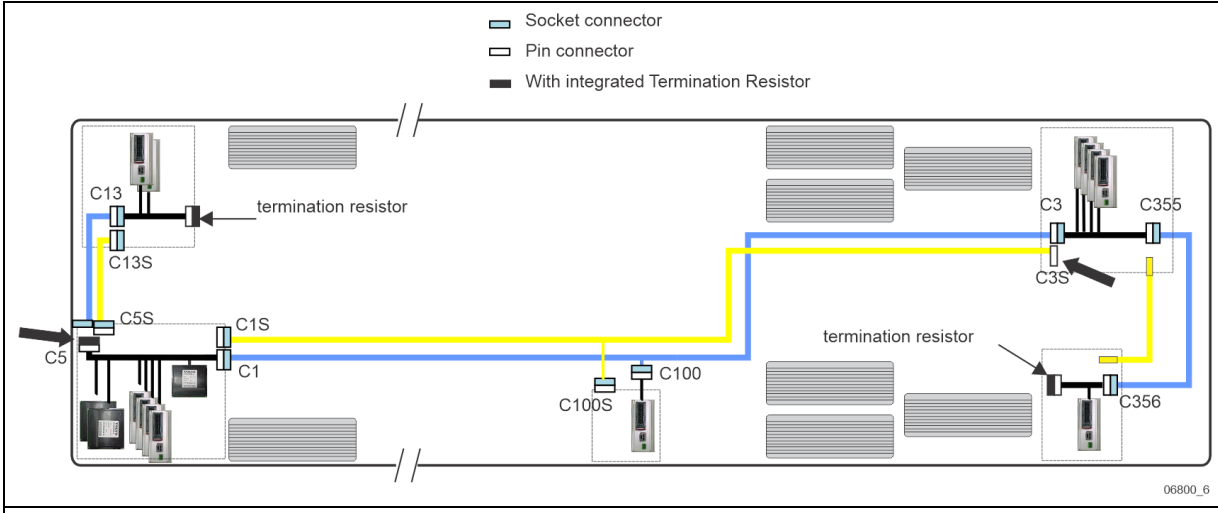


## Isolate the pneumatic accessories panel modules from the network

In the FRONT ELECTRICAL COMPARTMENT, disconnect C5.

Take the spare termination resistor on C3S in the MAIN POWER COMPARTMENT and connect it to C5 pin housing.

If the short circuit problem come from the DASHBOARD CONTROL PANEL, all modules except the ones located on the DASHBOARD CONTROL PANEL will respond normally.

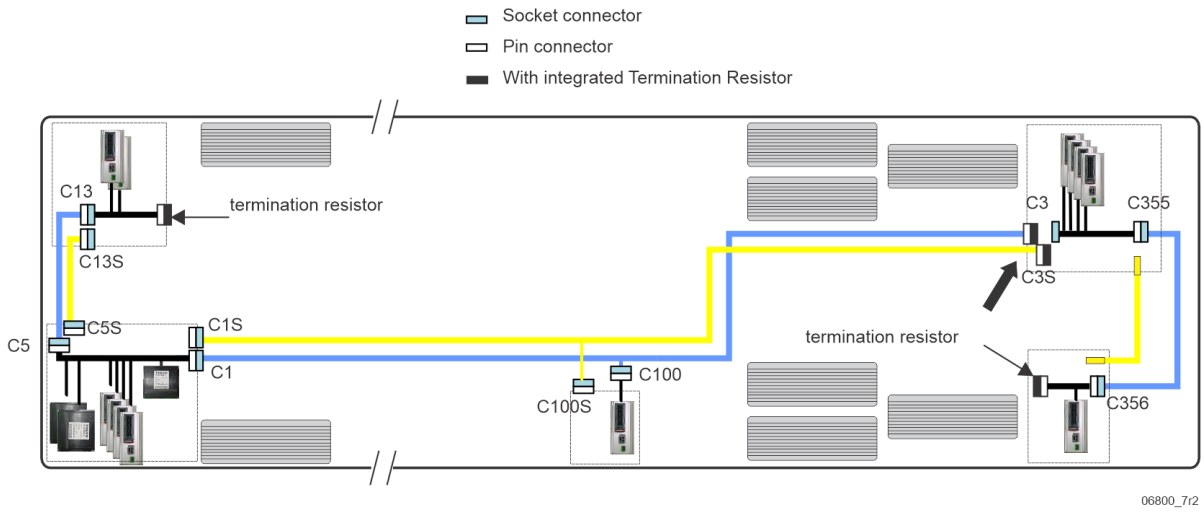


**Isolate the MAIN POWER COMPARTMENT from the network**

Disconnect C3 Plug and connect the termination resistor into C3 pin housing.

If the short circuit problem is in the MAIN POWER COMPARTMENT or downstream, all front modules + the evaporator module will respond normally.

The same process can be for the overhead compartment module.

DL0 (BBUS MUX) wires are not like other common electrical wires.

- Maintaining a proper wire twisting is important. The two yellow and green wires must be twisted and in close contact all along the network to maintain the transmission line impedance.
- A slack handmade twisting is not acceptable.
- There should be no more than 50 mm (2 inches) without twist at the connection points.

We recommend replacing the DL0 (BBUS MUX) harnesses instead of trying to repair them.

## 7.3 ELECTRICAL SYSTEM DIAGNOSTIC THROUGH THE DID

Using the Driver's Info Display (DID), check if there are active errors in the vehicle electrical system. With the DIAGNOSTICS menu, highlight VIEW ACTIVE FAULTS and then highlight ELECTRICAL to request a diagnostic of the electrical system from the MCM. Press the enter key. If applicable, the DID shows the multiplex device ID, the fault messages or fault codes recorded. When more than one fault is recorded, an arrow pointing down appears on the right of the display. Use the down arrow to see all the fault messages.

Once the problem corrected, the DID still shows the fault as being active. You have to leave the VIEW ACTIVE FAULTS menu, wait approximately 20 to 30 seconds and then return to VIEW ACTIVE FAULTS to request a new diagnostic of the electrical system from the MCM. The DID should display the fault as being inactive. The MCM can store up to 20 faults, i.e. the first 10 and the last 10. Middle faults will be erased. If the breakers are tripped, the fault history will be erased from the MCM memory.

**NOTE**

*When performing an electrical system diagnostic with the DID, the message « No Response ModA41» indicates either module A41 is not responding due to a DL0 (BBUS MUX) link problem or module A41 is not powered. Similar messages exist for all modules (A42, A43, A44, etc.).*

**NOTE**

*Because it is easier to do, check first if the module is powered by probing on J3 connector. If it is, then you can conclude that there is a DL0 (BBUS MUX) link problem. Refer to DL0 (BBUS MUX) NETWORK LAYOUT AND TROUBLESHOOTING in this section.*

## 8. ELECTRICAL COMPARTMENTS

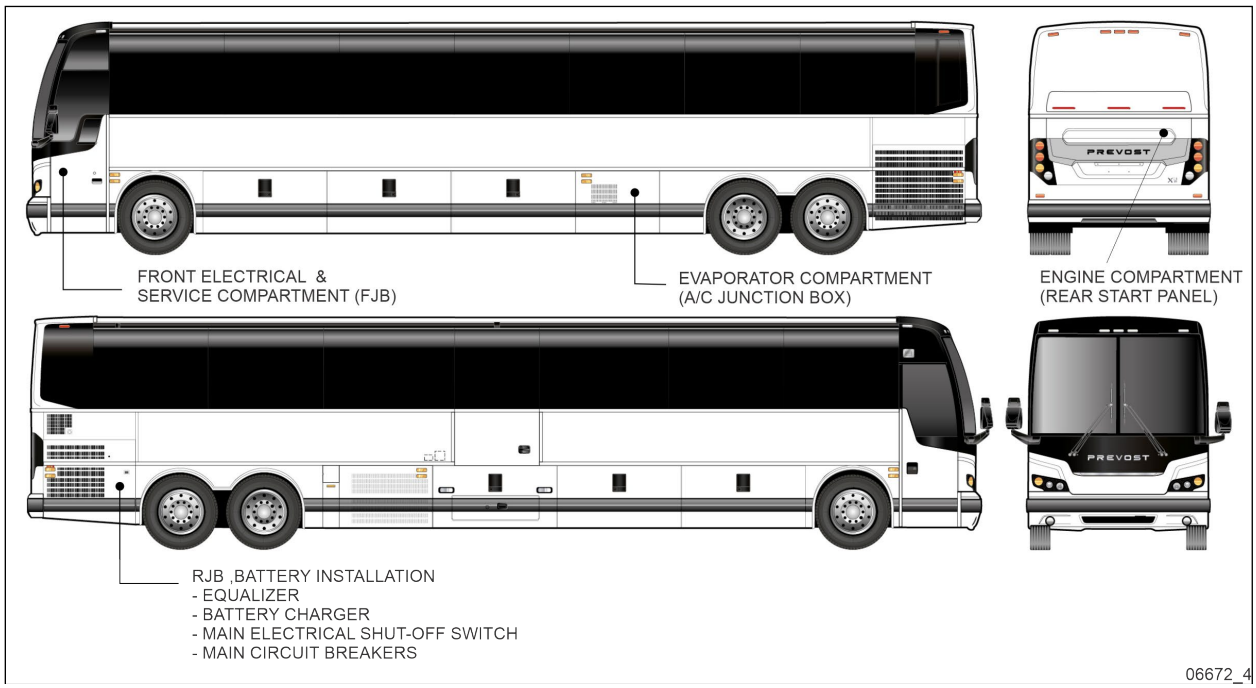


**FIGURE 18: ELECTRICAL COMPARTMENTS (X3-45 COACH)**

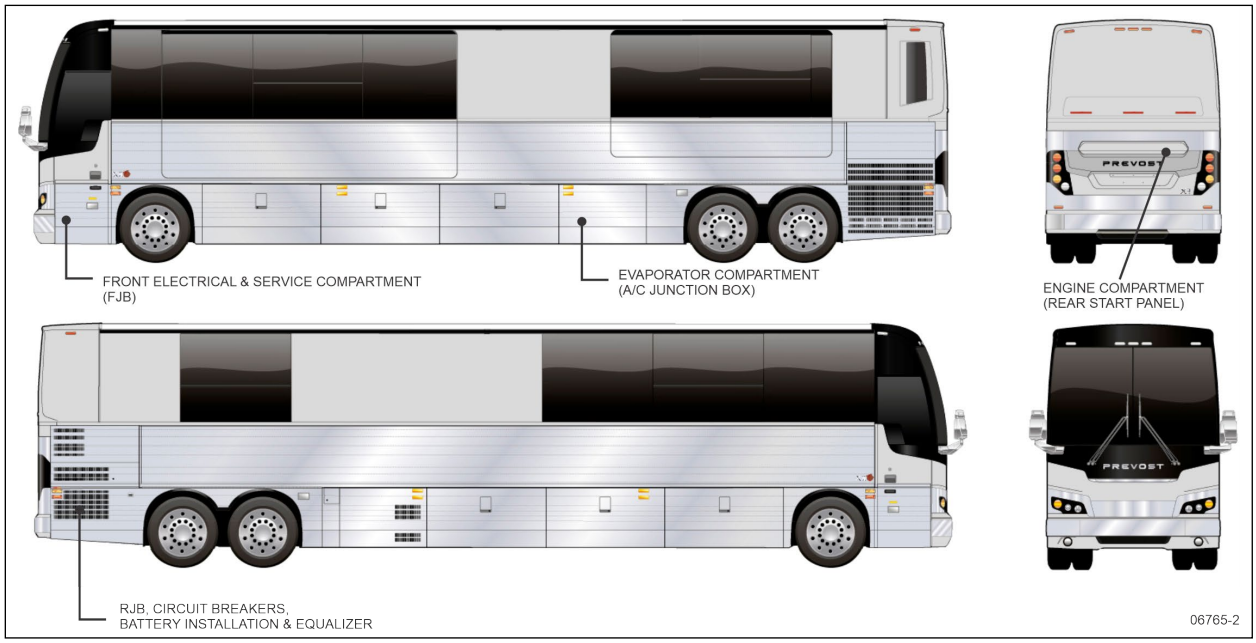


**FIGURE 19: ELECTRICAL COMPARTMENTS (X3-45 VIP)**

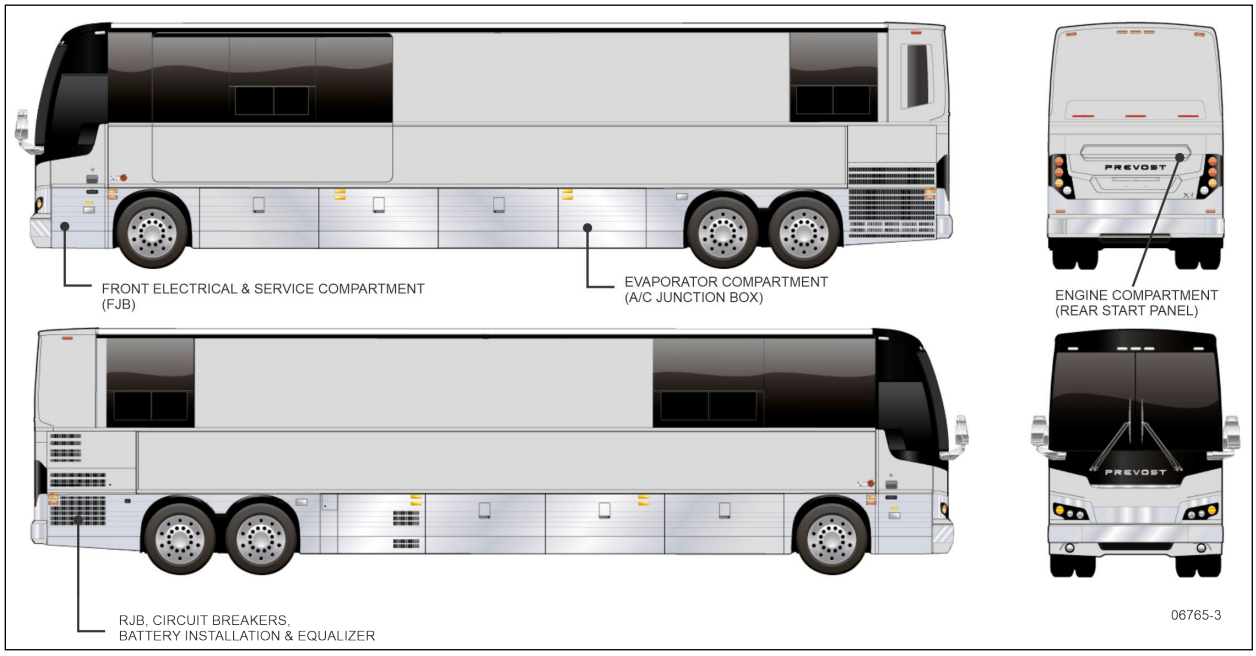


**FIGURE 20: ELECTRICAL COMPARTMENTS (X3-45 VIP COMMERCIAL BUS SHELL)**

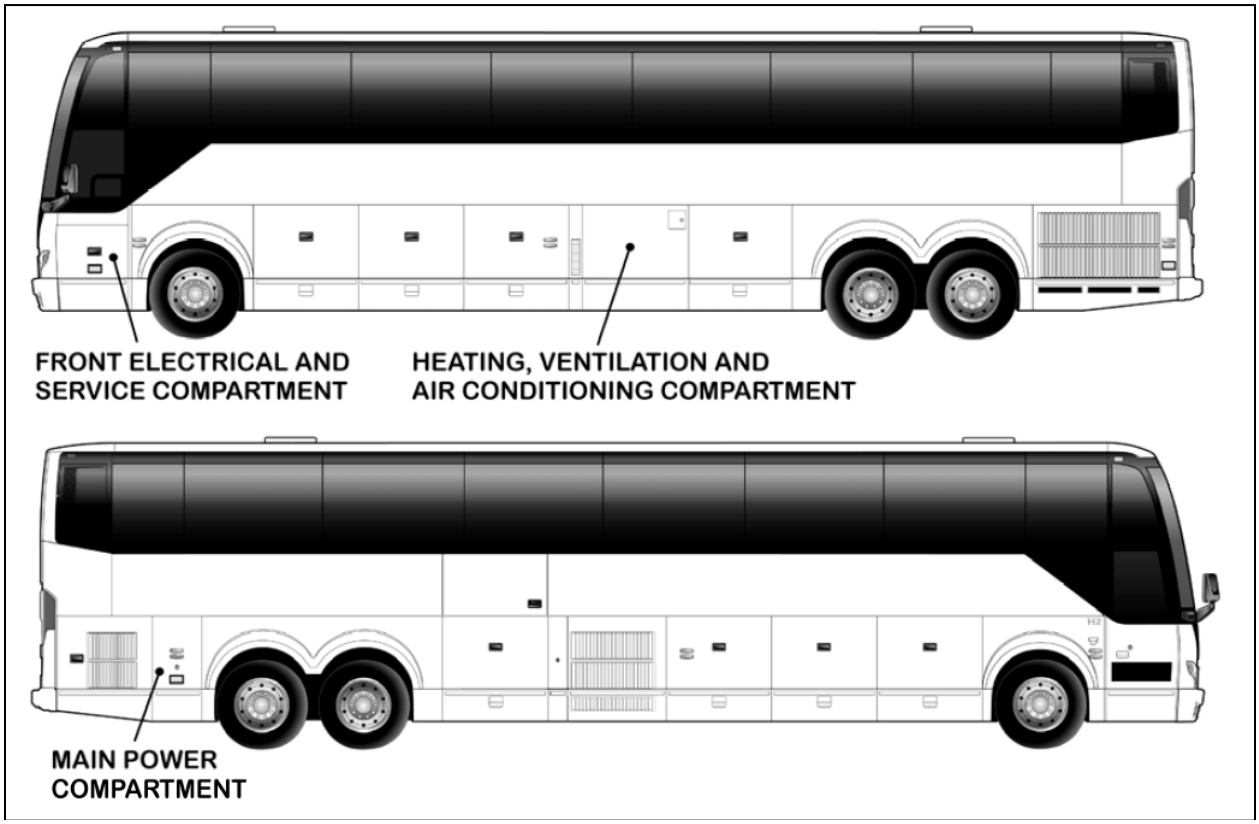


**FIGURE 21: ELECTRICAL COMPARTMENTS (H3-45 COACH)**

## 8.1 X3 SERIES MAIN POWER COMPARTMENT (RJB)

The main power compartment (a.k.a. rear junction box or RJB) and battery installation (Figure 22) are accessible from the engine compartment curb-side door.

The batteries are housed and secured on the engine R.H side deck. The battery posts and connections are protected by a watertight cover. The cover is fitted with a built-in vent. The cover can be unlocked and then removed with the use of the same type of hardware that allows opening and closing of the rear fender. Refer to paragraph *9.6* for the battery removal procedure.

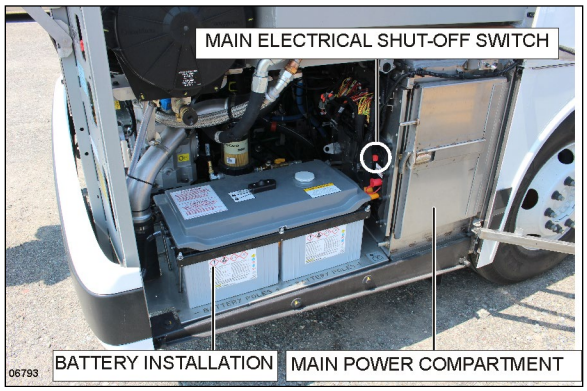


**FIGURE 22: ENGINE R.H. SIDE COMPARTMENT**

The main power compartment panel provides access to the following:

- Rear 12VD, 24VD junction blocks;
- Main circuit breakers;
- AE49, AE50, AE51, AE52 I/O-EB Multiplex modules;
- Vehicle Electrical Center Rear (VECR);
- Master relay R1;
- 12V ignition relay R3;
- Starter relay;
- Relays and fuses;
- Battery equalizer;
- 12VD & 24 VD current sensors;

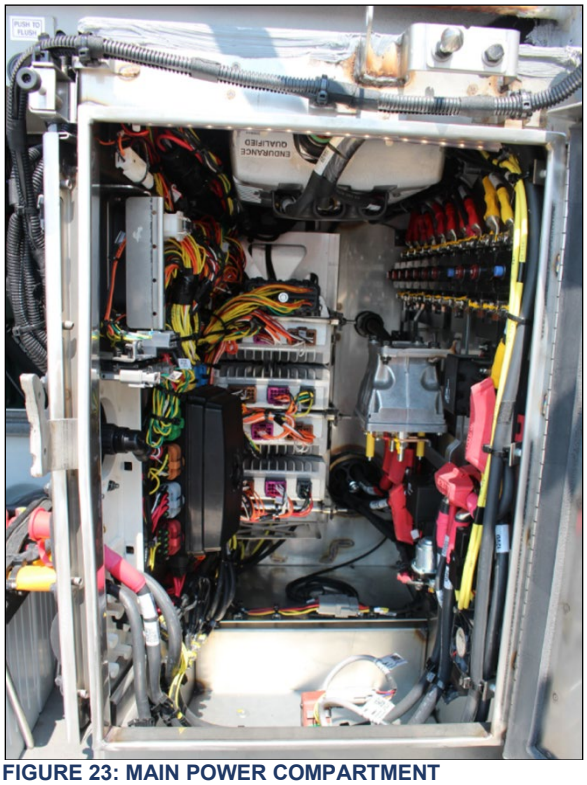

**FIGURE 23: MAIN POWER COMPARTMENT**

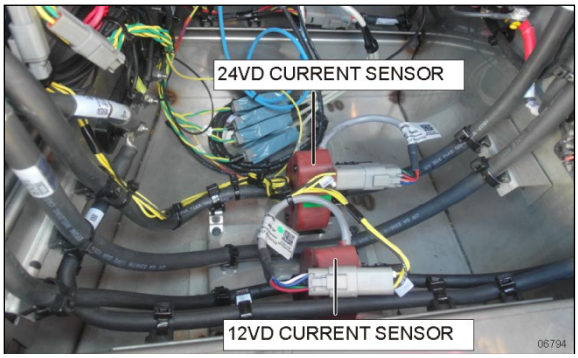


**FIGURE 24: 12VD / 24VD CURRENT SENSORS IN MPC**

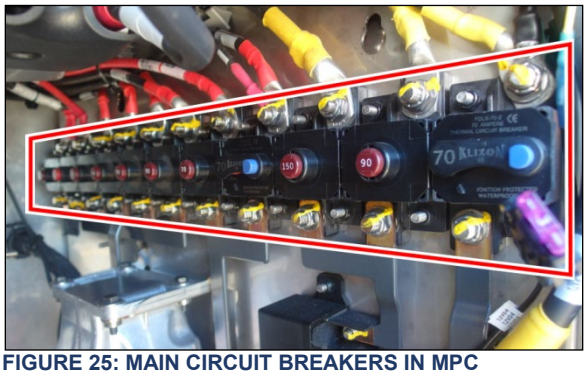

**FIGURE 25: MAIN CIRCUIT BREAKERS IN MPC**

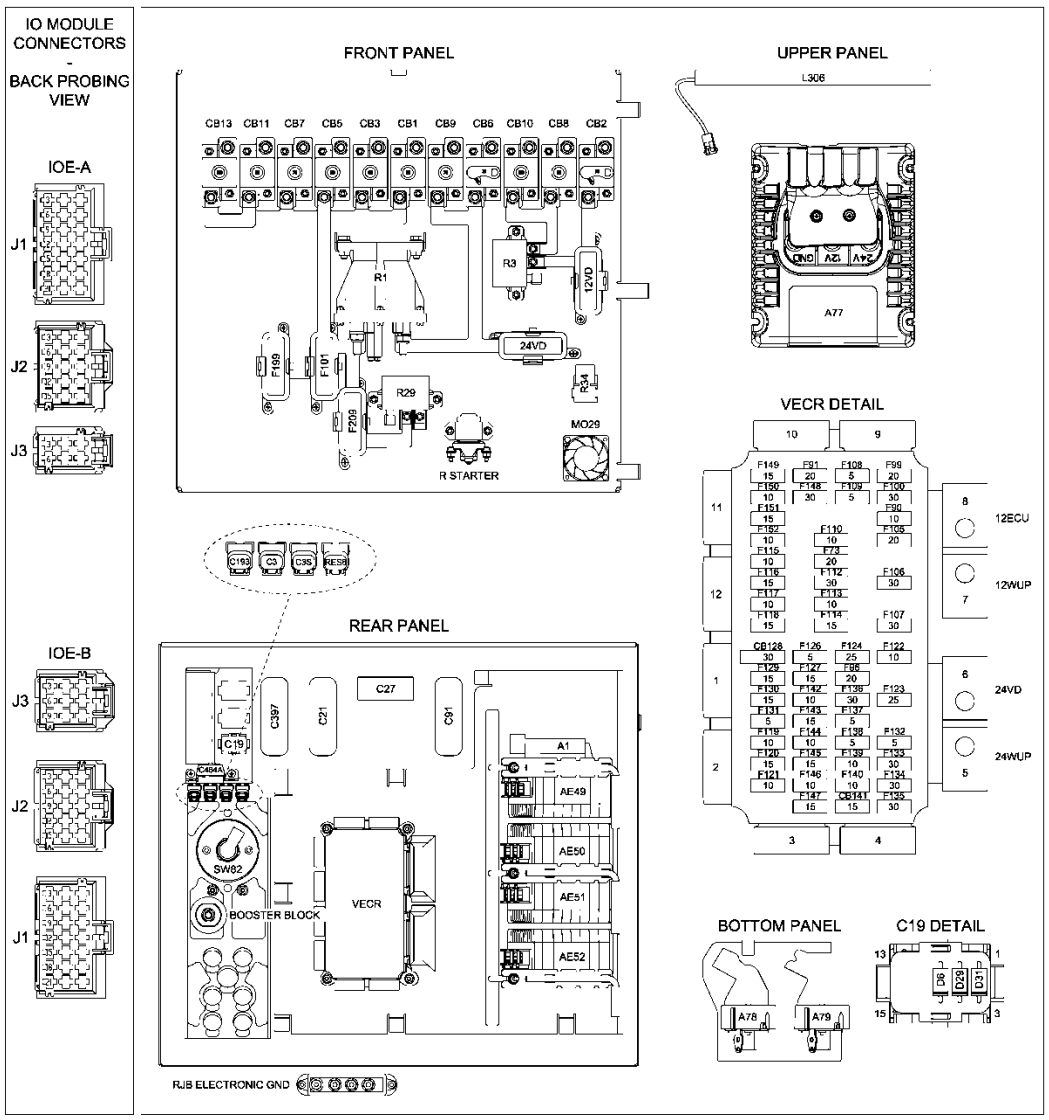


| BREAKER | RATING | DESCRIPTION | FUSE | RATING | DESCRIPTION | FUSE | RATING | DESCRIPTION | FUSE | RATING | DESCRIPTION |
|---|---|---|---|---|---|---|---|---|---|---|---|
| CB1 | 90 | 24WUP DIST. FJB | F73 | 20 | ENGINE ECU VOLVO | F113 | 10 | SPARE FUSE | F129 | 15 | SPARE FUSE |
| CB2 | 70 | 12ECU DIST. FJB & RJB | F90 | 10 | UREA SYSTEM | F114 | 15 | SPARE FUSE | F130 | 15 | SPARE FUSE |
| CB3 | 90 | HVAC (EVAPORATOR) | F91 | 20 | ENGINE ECU VOLVO | F115 | 10 | SPARE FUSE | F131 | 5 | CUSTOMER POWER |
| CB5 | 90 | 24WUP DIST. RJB | F96 | 20 | UREA SYSTEM | F116 | 15 | SPARE FUSE | F132 | 5 | MULTIPLEX POWER |
| CB6 | 70 | 24VD DIST. RJB & WCL | F99 | 20 | ENGINE ECU VOLVO | F117 | 10 | SPARE FUSE | F133 | 30 | MULTIPLEX POWER |
| CB7 | 70 | HVAC (CONDENSOR) | F100 | 30 | ENGINE ECU VOLVO | F118 | 15 | SPARE FUSE | F134 | 30 | MULTIPLEX POWER |
| CB8 | 90 | 12WUP DIST. RJB | F101 | 300 | MASTER RELAY POWER | F119 | 10 | SPARE FUSE | F135 | 30 | MULTIPLEX POWER |
| CB9 | 70 | BATTERY CHARGER | F105 | 20 | SPARE FUSE | F120 | 15 | SPARE FUSE | F136 | 30 | MULTIPLEX POWER |
| CB10 | 150 | 12WUP DIST. FJB | F106 | 30 | MULTIPLEX POWER | F121 | 15 | CUSTOMER POWER | F137 | 5 | BATTERY EQUALIZER |
| CB11 | 50 | SOUND SYSTEM | F107 | 30 | MULTIPLEX POWER | F122 | 10 | SPARE FUSE | F138 | 5 | READING LAMPS & CHIME |
| CB13 | 150 | INVERTER(S) | F108 | 5 | RJB OBD CONN. | F123 | 25 | WATER PREHEATER | F139 | 10 | ALTERNATORS |
| CB128 | 30 | 24VD DIST. FJB | F109 | 5 | ENG. CMPT DOOR SENSORS | F124 | 25 | WATER PREHEATER | F140 | 10 | SPARE FUSE |
| CB141 | 15 | SPARE FUSE | F110 | 10 | TRANSMISSION ECU | F126 | 5 | AIR PREHEATER & REFRIG. FILL | F142 | 10 | SPARE FUSE |
| | | | F112 | 30 | TRAILER INTERFACE | F127 | 15 | WATER PUMP | | | |

| FUSE | RATING | DESCRIPTION | RELAY | DESCRIPTION | MODULES | DESCRIPTION | CONNECTOR | DESCRIPTION |
|---|---|---|---|---|---|---|---|---|
| F143 | 15 | SPARE FUSE | R1 | MASTER RELAY | A1 | TRANSMISSION ECU | C3 | DL0 (BBUS) |
| F144 | 10 | SPARE FUSE | R3 | 12V IGN. & ACC. RELAY | AE49 | MULTIPLEX IOEB MODULE | C19 | DIODES CONN. |
| F145 | 15 | SPARE FUSE | R29 | AIR PREHEATER | AE50 | MULTIPLEX IOEB MODULE | C21 | TRANS. FR/RR - RJB |
| F146 | 10 | SPARE FUSE | R34 | 12V RR ENGINE ECU | AE51 | MULTIPLEX IOEB MODULE | C27 | TRANS. FR/RR - RJB |
| F147 | 15 | CUSTOMER POWER | R STARTER | ENGINE STARTER RELAY | AE52 | MULTIPLEX IOEB MODULE | C91 | ENGINE ACC. - RJB |
| F148 | 30 | SOUND SYSTEM | | | A77 | BATTERY EQUALIZER | C193 | DL1 (J1939) |
| F149 | 15 | SPARE FUSE | DIODE | DESCRIPTION | A78 | 24VD CURRENT SENSOR | C397 | ENGINE CRADLE - RJB |
| F150 | 10 | SPARE FUSE | D6 | MASTER RELAY | A79 | 12VD CURRENT SENSOR | C464A | OBD CONN. |
| F151 | 15 | SPARE FUSE | D29 | A/C COMP. UNLOADER | VECR | RJB POWER DIST. | CCUST | CUSTOMER POWER |
| F152 | 10 | SPARE FUSE | D31 | A/C COMP. CLUTCH | | | | |
| F199 | 300 | RADIATOR FANS | | | | | | |
| F209 | 150 | PREHEATER VOLVO | RESISTOR | DESCRIPTION | MOTOR | DESCRIPTION | MISC. | DESCRIPTION |
| | | | RES6 | DL3 (DBUS) TERMINATION | MO29 | RJB FAN | L306 | CMPT LIGHT |
| | | | | | | | SW82 | CUTOUT SWITCH |

REAR JUNCTION BOX - 960304

**FIGURE 26: X3 SERIES MAIN POWER COMPARTMENT COMPONENTS IDENTIFICATION**

## 8.2 X3 SERIES FRONT ELECTRICAL AND SERVICE COMPARTMENT (FJB)

The front electrical and service compartment is located on L.H. side of vehicle, under the driver's window. It contains the following components (Figure 27):

- Front terminal block;
- Master Control Module (MCM);
- Vehicle Electrical Center Front (VECF) and Multiplex Modules;
- Relays and fuses;
- ABS Electronic Control Unit (ECU);
- VECU with Volvo D13 engine;

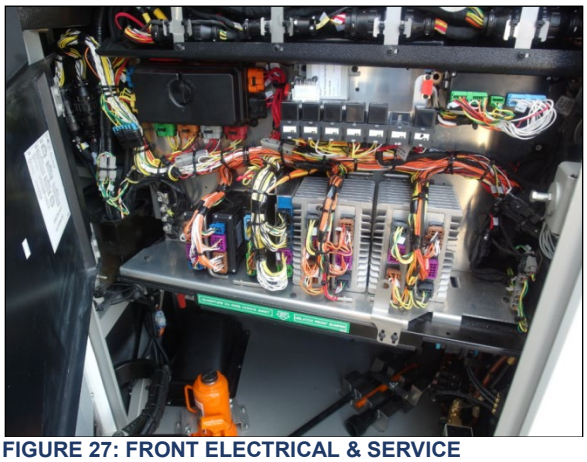

**FIGURE 27: FRONT ELECTRICAL & SERVICE COMPARTMENT**

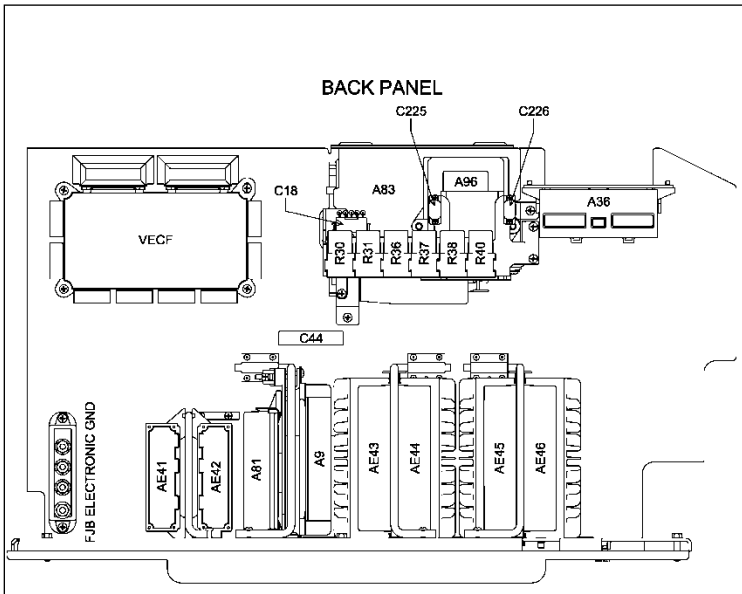


C18 DETAIL

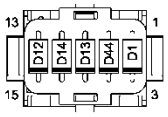


VECF DETAIL

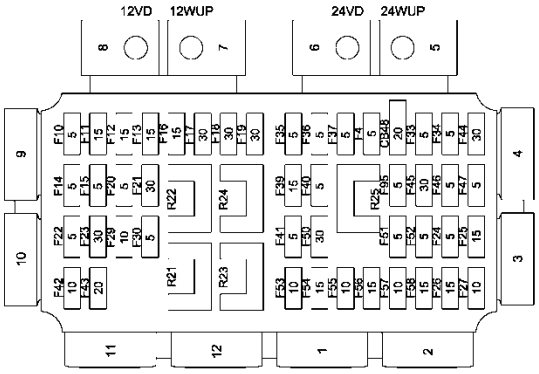


| BREAKER | RATING | DESCRIPTION |
|---|---|---|
| CB48 | 20 | WIPERS |

| FUSE | RATING | DESCRIPTION |
|---|---|---|
| F4 | 5 | TGW & GSECU POWER |
| F10 | 5 | OBD CONN. & CLUSTER |
| F11 | 15 | FIRE EXT. ALARM |
| F12 | 15 | SPARE FUSE |
| F13 | 15 | CUSTOMER POWER |
| F14 | 5 | SPARE FUSE |
| F15 | 5 | SPARE FUSE |
| F16 | 15 | CUSTOMER POWER |
| F17 | 30 | MULTIPLEX POWER |
| F18 | 30 | MULTIPLEX POWER |
| F19 | 30 | MULTIPLEX POWER |
| F20 | 5 | MULTIPLEX POWER |
| F21 | 30 | MULTIPLEX POWER |
| F22 | 5 | WIRELESS SYST. |
| F23 | 30 | ESP ECU |
| F24 | 5 | CUSTOMER POWER |
| F25 | 15 | 12V POWER OUTLETS |
| F26 | 15 | SPARE FUSE |
| F27 | 10 | SPARE FUSE |
| F29 | 10 | ECU IGNITION |
| F30 | 5 | ECU IGNITION |
| F33 | 5 | MULTIPLEX POWER |
| F34 | 5 | MULTIPLEX POWER |
| F35 | 5 | MULTIPLEX POWER |
| F36 | 5 | FRONT START SWITCH |
| F37 | 5 | HAZARD & EXT. DOOR SW. |
| F39 | 15 | CUSTOMER POWER |
| F40 | 5 | AFSS |
| F41 | 5 | SPARE FUSE |
| F42 | 10 | ISHIFT SHIFTER |
| F43 | 20 | ISHIFT TECU |
| F44 | 30 | MULTIPLEX POWER |
| F45 | 30 | MULTIPLEX POWER |
| F46 | 5 | MULTIPLEX POWER |
| F47 | 5 | MULTIPLEX POWER |
| F50 | 30 | DEFROSTER FANS |
| F51 | 5 | DESTINATION SIGN |
| F52 | 5 | SPARE FUSE |
| F53 | 10 | CLOCK & FLIP-DN SCREEN |
| F54 | 15 | SPARE FUSE |
| F55 | 10 | SPARE FUSE |
| F56 | 15 | SPARE FUSE |
| F57 | 10 | SPARE FUSE |
| F58 | 15 | SPARE FUSE |
| F95 | 5 | TGW & ISHIFT GSECU |

| MODULES | DESCRIPTION |
|---|---|
| A9 | ESP MODULE |
| A36 | MULTIPLEX MCM MODULE |
| AE41 | MULTIPLEX IOEA MODULE |
| AE42 | MULTIPLEX IOEA MODULE |
| AE43 | MULTIPLEX IOEB MODULE |
| AE44 | MULTIPLEX IOEB MODULE |
| AE45 | MULTIPLEX IOEB MODULE |
| AE46 | MULTIPLEX IOEB MODULE |
| A81 | VECU - VOLVO D13F |
| A83 | TGW - VOLVO LINK |
| A96 | TPMS ECU |
| VECF | FJB POWER DIST. |

| CONNECTOR | DESCRIPTION |
|---|---|
| C18 | DIODES CONN. |
| C44 | DEFROSTER REFRIG. FILL UP |
| C225 | TPMS DOWNLOAD CONN. |
| C226 | COMPUTER - MCM CONN. |

| RELAY | DESCRIPTION |
|---|---|
| R21 | EMERGENCY CUTOUT |
| R22 | ECU IGNITION |
| R23 | ENGINE SHUTDOWN |
| R24 | ISHIFT ECU |
| R25 | 24V IGNITION |
| R30 | 12V ENGINE RUN |
| R31 | 12V IGNITION |
| R36 | FIRE EXTINGUISHER |
| R37 | ELECTRIC HORN |
| R38 | 12V OUTPUTS / LIGHTER |
| R40 | GSECU POWER |

| DIODE | DESCRIPTION |
|---|---|
| D1 | EMERGENCY CUTOUT RELAY |
| D12 | ELECTRIC HORN |
| D13 | FRONT CLEARANCE LIGHTS |
| D14 | FRONT CLEARANCE LIGHTS |
| D44 | EMERGENCY CUTOUT RELAY |

FRONT JUNCTION BOX - 060303

**FIGURE 28: X3 SERIES FRONT ELECTRICAL & SERVICE COMPARTMENT COMPONENTS IDENTIFICATION**

## 8.3 H3 SERIES MAIN POWER COMPARTMENT (RJB)

The main power compartment is located on rear R.H. side of vehicle behind the rear wheelhousing (Figure 29 & Figure 30).

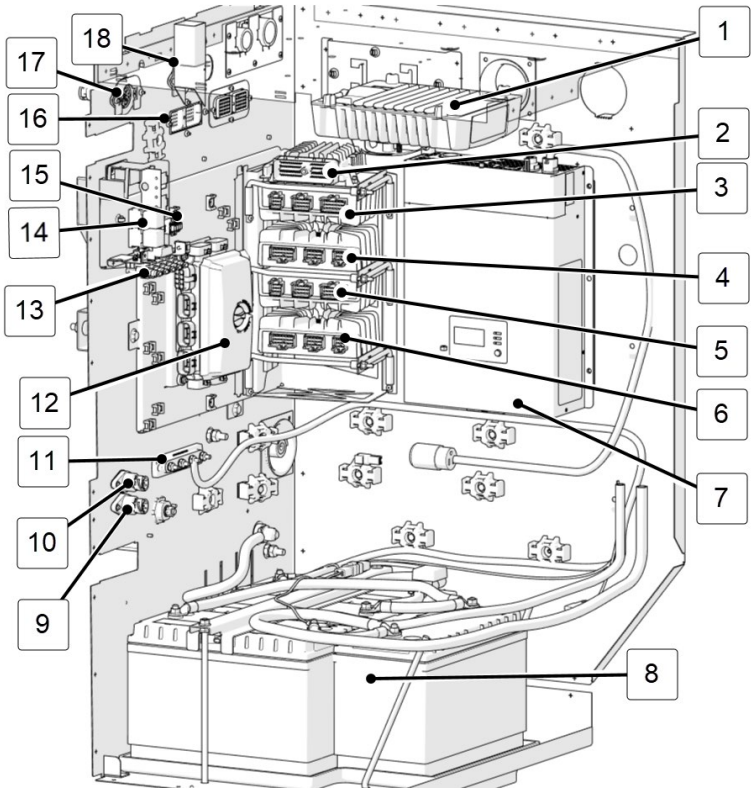


**FIGURE 29: H3 SERIES MAIN POWER COMPARTMENT**

1. Battery equalizer (Vanner)
2. A1 transmission ECU (Allison)
3. AE50 multiplex module
4. AE51 multiplex module
5. AE52 multiplex module
6. AE53 multiplex module
7. Inverter charger (Xantrex Freedom XC 1800)
8. Battery bank
9. SW 30
10. SW 82
11. RJB electronic ground studs
12. VECR
13. C464A OBD tool receptable
    Res6 DL3
    C3S DL0
    C3 DL0
14. C464A OBD tool receptable
    Res6 DL3
    C3S DL0
    C3 DL0
    C193 DL1
15. R45 120V relay charger
    R16 preheater max temp
16. C19 diode block
    D31 clutch
    D29 unloader
    Spare
    Spare
    Res21 RJB compt light
17. C397 (left), C91 (right)
18. C355
19. C54A

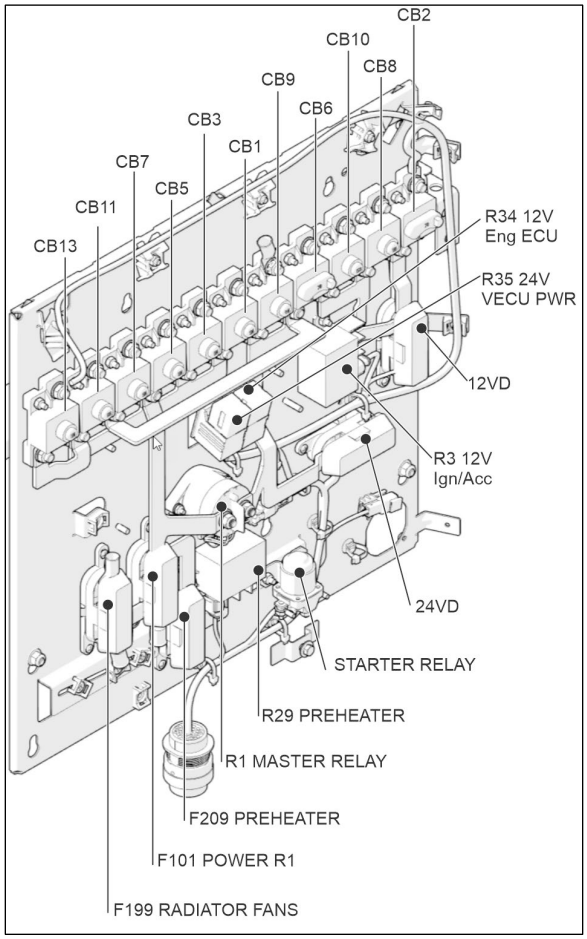


**FIGURE 30: H3 SERIES MAIN POWER COMPARTMENT**

### 8.3.1 H3 Series Vehicle Electrical Center Rear (VECR)

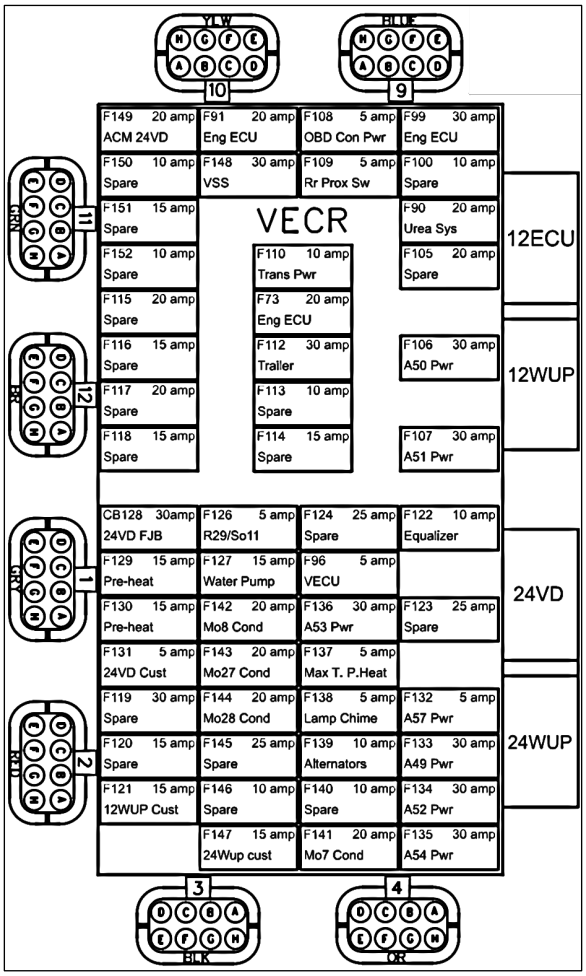


**FIGURE 31: VECR – FUSE IDENTIFICATION**

## 8.4 H3 SERIES FRONT ELECTRICAL AND SERVICE COMPARTMENT (FJB)

The front electrical and service compartment is located on L.H. side of vehicle, under the driver's window. It contains the following components among others (Figure 32):

- Electronic ground bus bar;
- Master Control Module (MCM);
- Fuses;
- Front power distribution module known as Vehicle Electrical Center Front (VECF);
- Multiplex Modules I/O-AE, I/O-BE;
- Electronic modules;
- Relays, diodes;

- ABS Electronic Control Unit (ECU);
- Emergency door opening unlock valve (coaches only);
- Windshield washer reservoir;
- Reclining bumper handle;
- Accessories system fill valve;
- Keyless entry system module (VIP only);

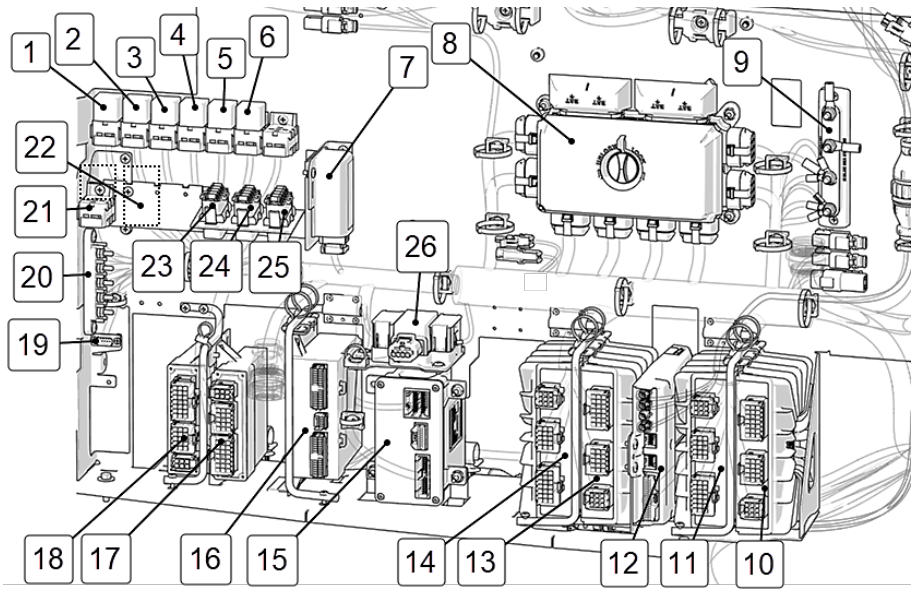


**FIGURE 32: H3 SERIES FRONT ELECTRICAL & SERVICE COMPARTMENT**

1. R23A vecu ign
2. R30 12V engine run
3. R31 12V ign
4. R36 fire extinguisher
5. R37electric horn
6. R38 12V pwr outlet (lateral control panel)
7. Light pipe module (headlights)
8. VECF
9. Electronic ground studs
10. AE46 multiplex module
11. AE45 multiplex module
12. A83 Telematic GW
13. AE44 multiplex module
14. AE43 multiplex module
15. A81 VECU
16. A36 MCM
17. AE42 multiplex module
18. AE41 multiplex module
19. C226 COM port MCM
20. Power distribution
    - 24 VD
    - 12 VI
    - 12 V engine run
    - 12 VD
    - ground
21. A27 12 V steer control
22. R4 cut preheater
23. C18 diode block
    - D1 accessories
    - D44 ignition
    - D13 front clearance lights
    - D14 fire extinguisher
    - D12 electric horn
24. C22 diode block
    - 4x spare diode
    - Res22 light
25. C36 diode block
    - D80 cutoff preheater
    - Spare
    - D41 ignition
    - D43 ignition
    - Spare
26. R21 intel sleep mode

### 8.4.1 H3 Series Vehicle Electrical Center Front (VECF)

The VECF is a power distribution module. It incorporates fuses, relays and one circuit breaker.

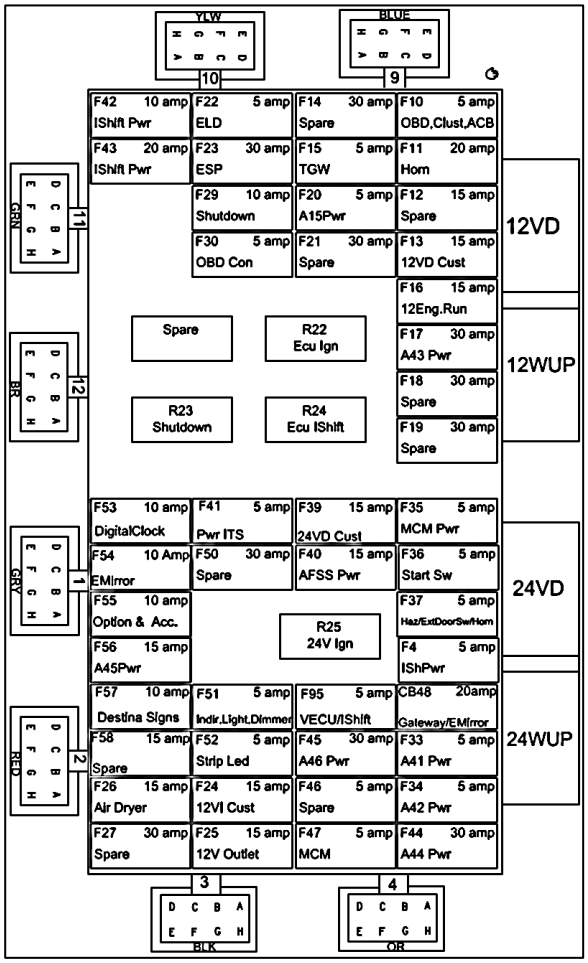


**FIGURE 33: VECF – FUSE IDENTIFICATION**

## 8.5 EVAPORATOR COMPARTMENT CONTROL PANEL

The evaporator compartment control panel is located on the evaporator fan housing.

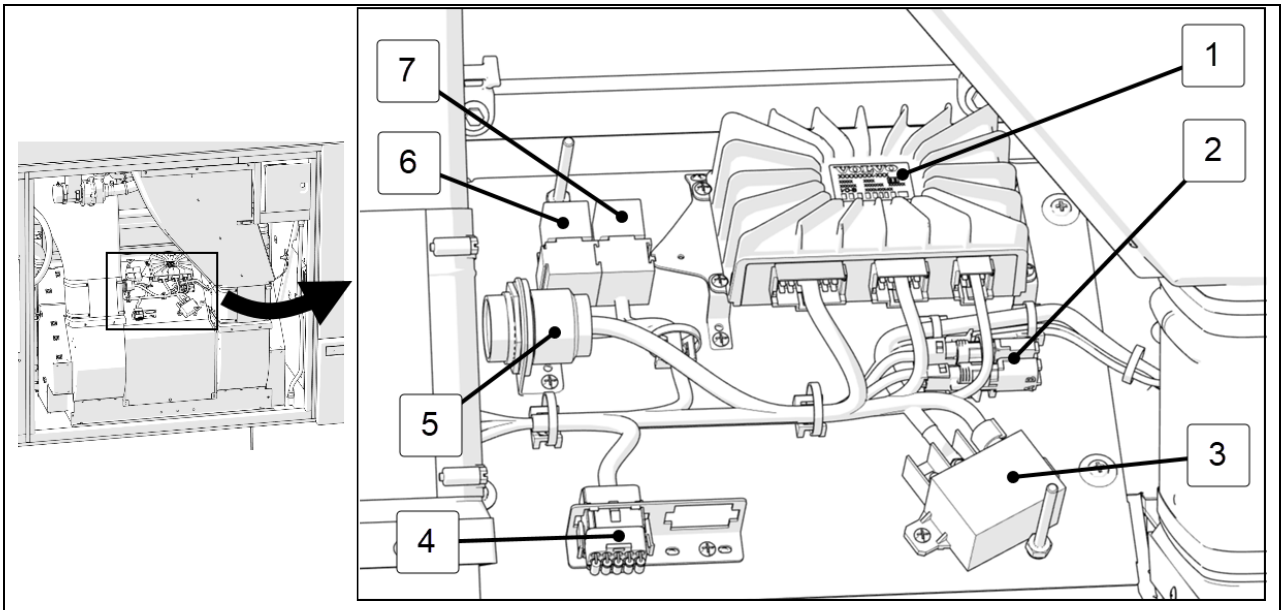


**FIGURE 34: EVAPORATOR COMPARTMENT CONTROL PANEL**

1. AE54 multiplex module
2. C24 refrigerant refill
3. R12 evaporator
4. C9 diode block
   - D9 water pump
   - D10 water pump
   - D11 passenger liquid
   - D8 A/C overhead cmpt
   - Res14 condenser fans
5. C15A
6. R20 water pump
7. R26 preheater

## 8.6 ENGINE REAR START PANEL

This control panel is located close to the back-up alarm in the engine compartment. This control panel includes the **engine rear start push button** and the **engine stop/ignition interlock** button. On some vehicles, a **tachometer** is also integrated in the start panel.

The **engine rear start push button** is used to start engine from engine compartment.

When servicing the engine, push the **engine stop/ignition interlock** button to prevent the engine from being started from the dashboard ignition switch or the rear start push button. Once servicing is done, twist and pull the button to allow normal engine start. Pressing the **engine stop/ignition interlock** button while the engine is running will stop the engine.

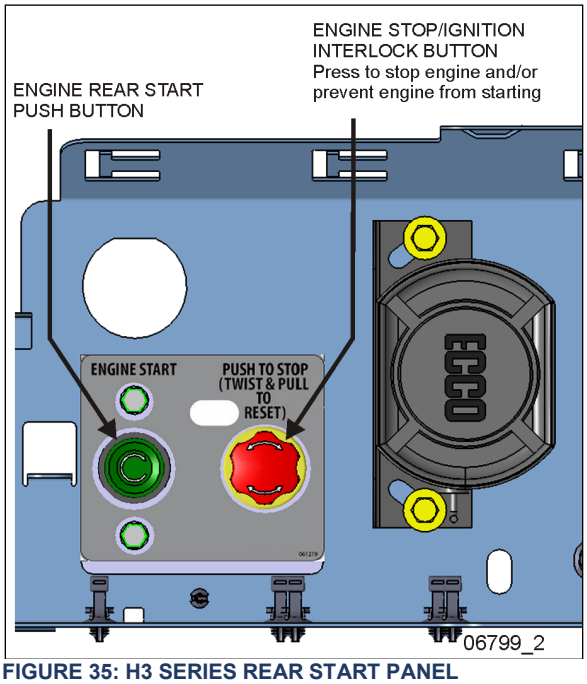


FIGURE 35: H3 SERIES REAR START PANEL

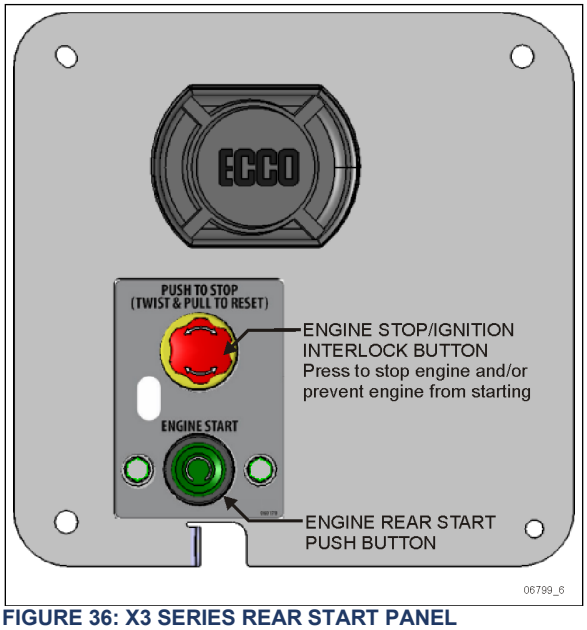


FIGURE 36: X3 SERIES REAR START PANEL

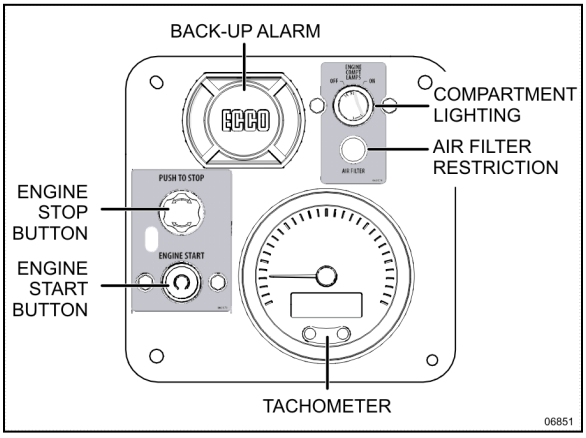


FIGURE 37: REAR START PANEL WITH TACHOMETER

## 8.7 CONTROL PANEL AT TO THE RIGHT OF THE DASHBOARD

To access the entrance door & wiper control panel of the right console, remove the panel under the larger utility compartment at the base of the windshield.

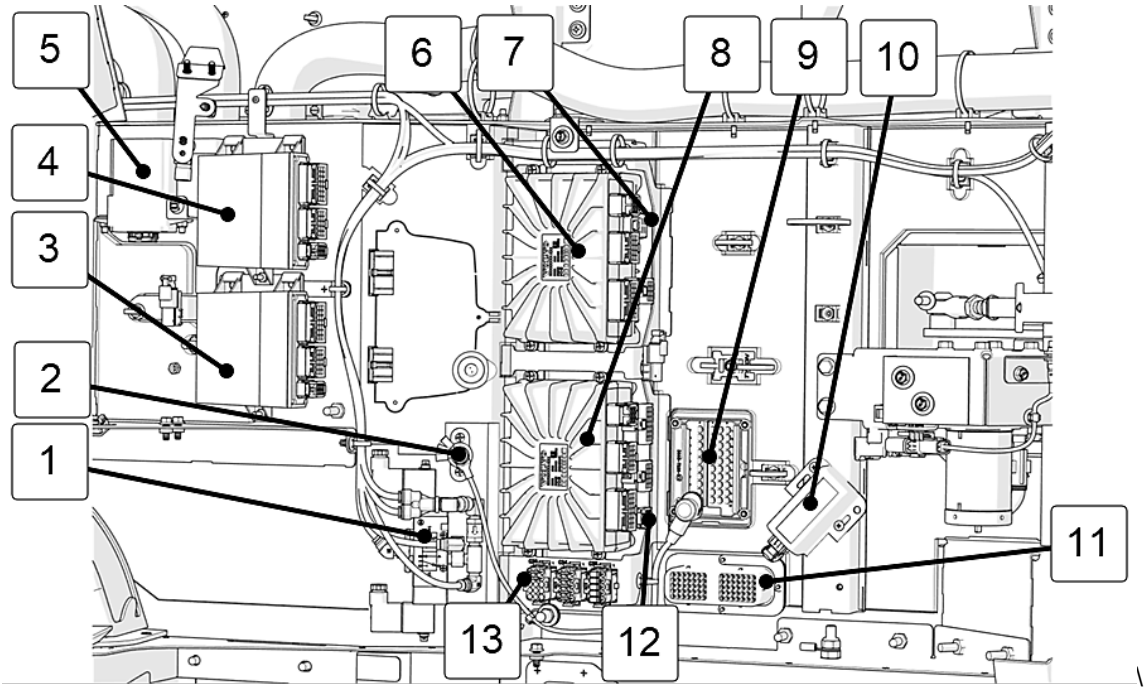


**FIGURE 38: DASHBOARD CONTROL PANEL - H3 SERIES SHOWN**

1. Entrance door solenoid valve
2. Electronic ground stud
3. AE56 multiplex module
4. AE55 multiplex module
5. A99 ELD gateway
6. AE49 multiplex module
7. A21 wiper control
8. AE48 multiplex module
9. VEC RHC
10. Light pipe module (headlights)
11. C42
12. AE47 multiplex module

13.

C28 diode block
- Res12 (Res18 VIP) LH mirror
- Res13 RH mirror
- Spare
- Spare
- Spare

C34 diode block
- Res2 air recirc damper (spare VIP)
- Res9 defroster
- Res10 dashbd damper (Res2 air recirc damper VIP)
- Res11 pwm switch (Res10 dashboard damper VIP)
- Spare (Res12 pwm switch VIP)

C35 diode block
- Spare (D66 water pump VIP)
- Spare (D4 front door)
- D7 open door sw (Spare VIP)
- D2 refrigerant solenoid So7
- Spare

### 8.8 OVERHEAD COMPARTMENT MODULE

A single I/O B module, AE53 (X3 Series) AE58 (H3 Series) is found at the rear end of the left overhead compartment.

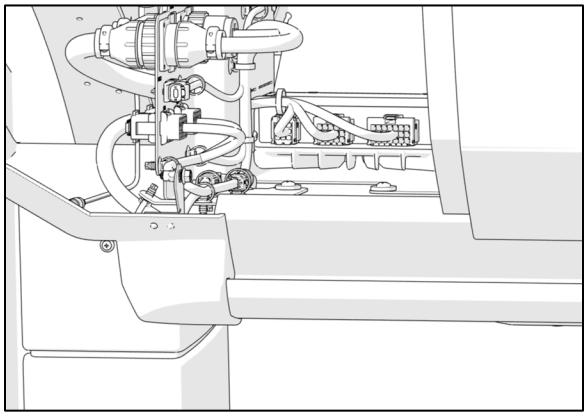

**FIGURE 39: OVERHEAD COMPARTMENT I/O-EB MODULE AE58**

## 9. BATTERIES

The battery has four (4) major functions:

1. Providing a source of current for starting the engine.
2. Stabilizing the voltage in the electrical system.
3. Supplying current for a limited time, when electrical demands of the equipment exceed the power output of the alternator.
4. Providing a limited source of power for connected accessories, when the engine is not running.

**WARNING**

Battery posts, terminals and other related accessories contain lead and lead compounds, chemical known to the State of California to cause cancer and other reproductive harm.

Batteries also contain other chemicals known to the State of California to cause cancer.

**Wash hands after handling.**

### 9.1 BATTERY INSTALLATION X3 SERIES

The battery bank is composed of four AGM batteries. To prevent improper installation of the batteries, the positive (+) and negative (-) signs are laser cut on the battery deck steel sheet. When installing new batteries, place the battery negative and positive poles according to the signs on the battery deck (Figure 40).

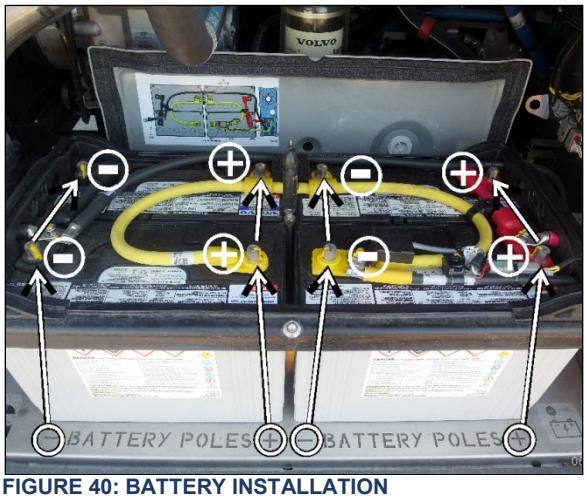


**FIGURE 40: BATTERY INSTALLATION**

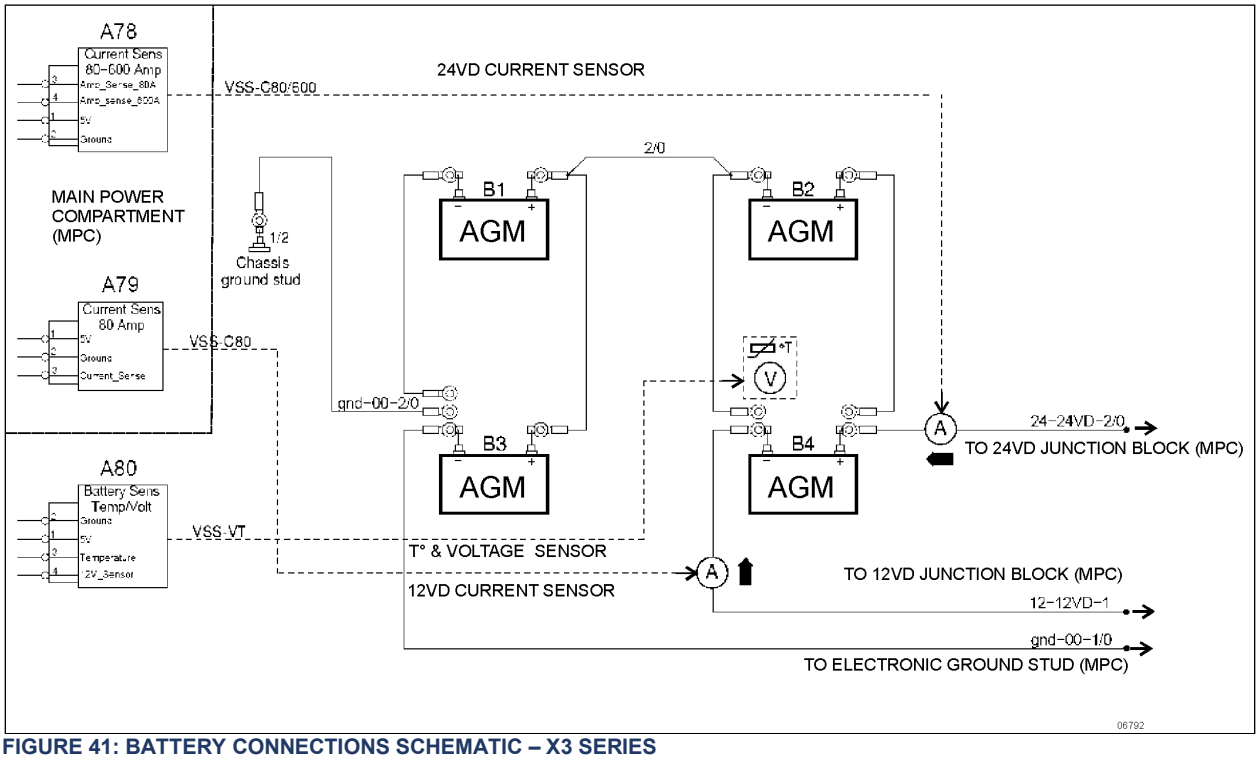


FIGURE 41: BATTERY CONNECTIONS SCHEMATIC – X3 SERIES

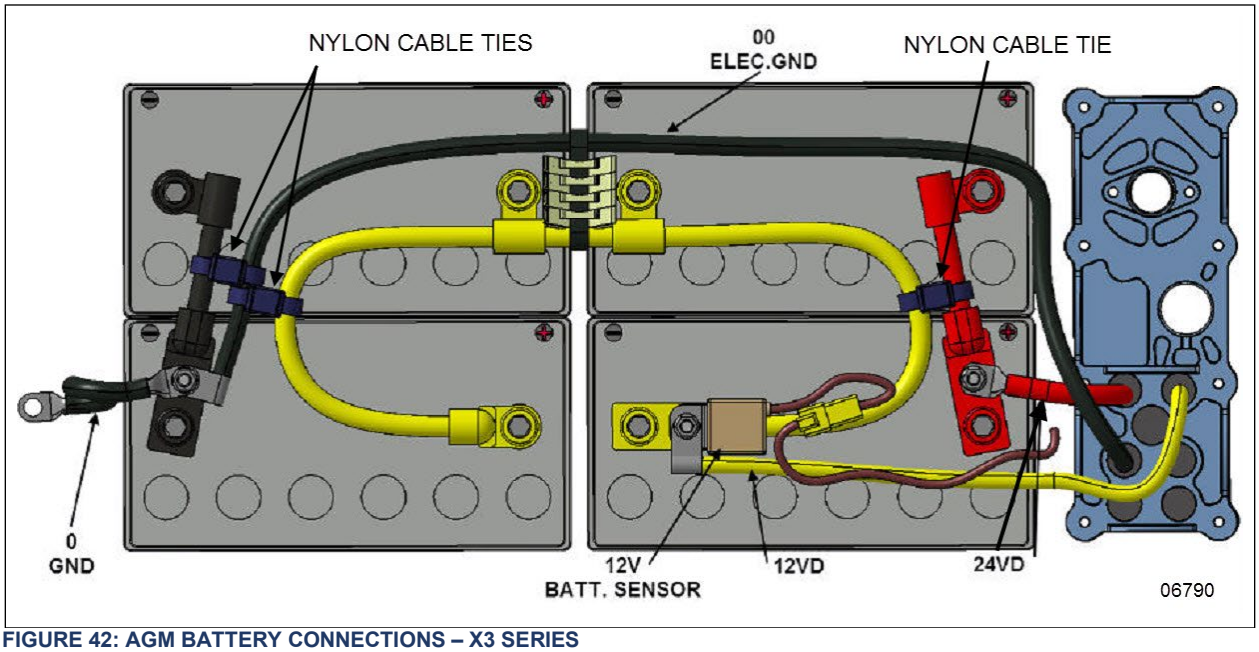


FIGURE 42: AGM BATTERY CONNECTIONS – X3 SERIES

## 9.2 BATTERY INSTALLATION H3 SERIES

The battery bank is composed of four AGM batteries. To prevent improper installation of the batteries, place the battery negative and positive poles according to the image below (Figure 43).

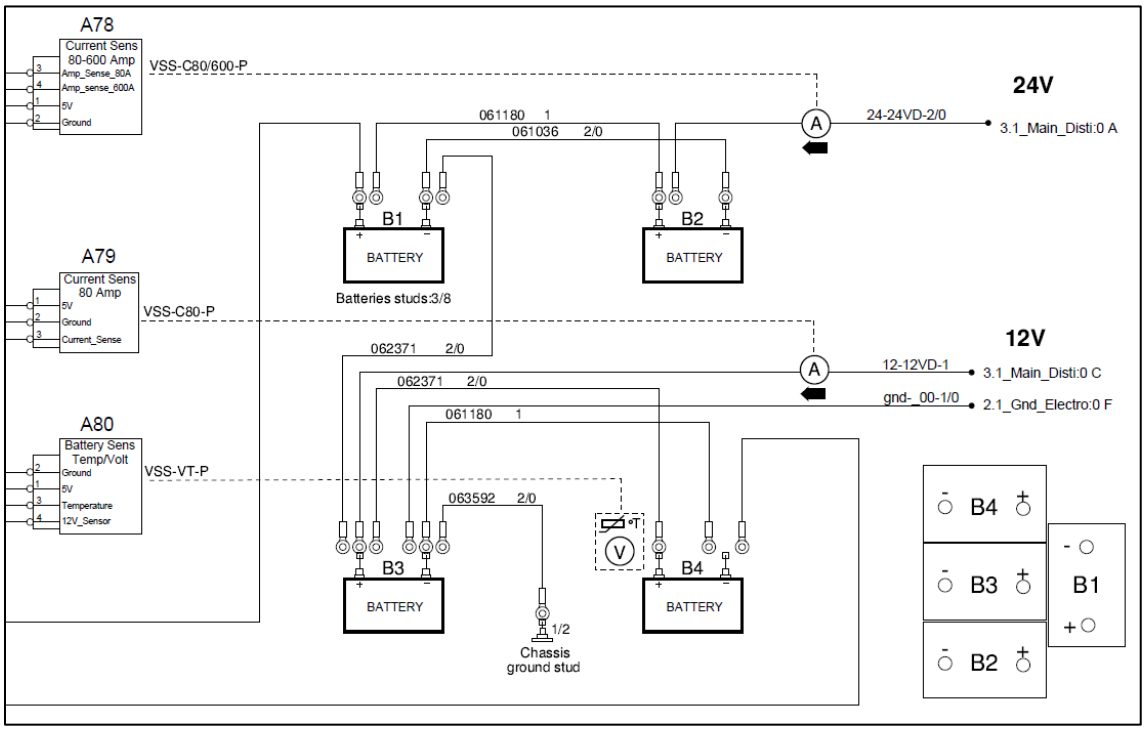


**FIGURE 43: BATTERY CONNECTIONS SCHEMATIC – H3 SERIES**

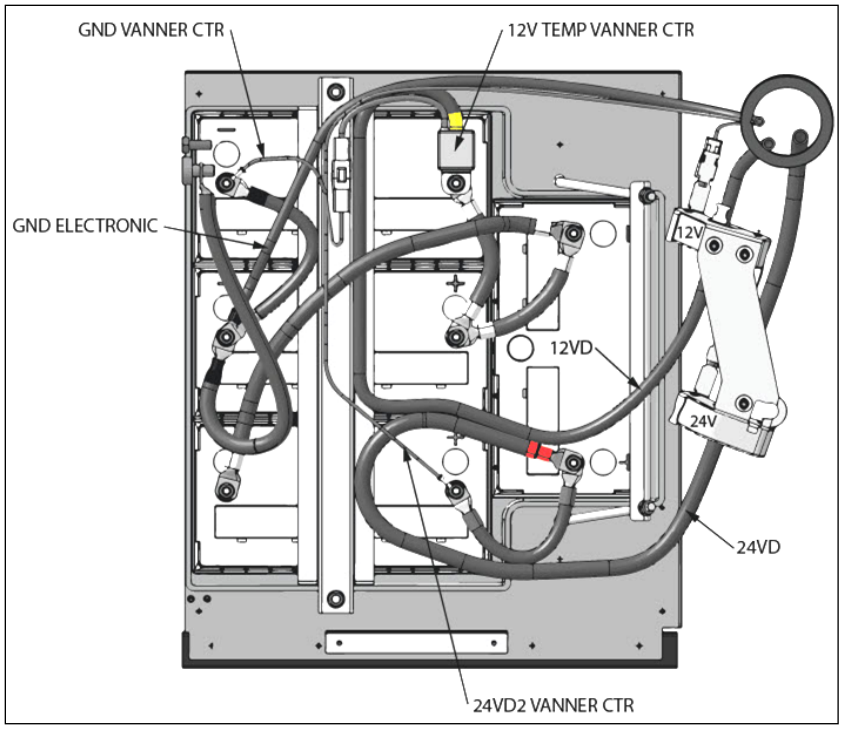


**FIGURE 44: AGM BATTERY CONNECTIONS – H3 SERIES**

## 9.3 AGM BATTERIES

This vehicle is equipped with PRIME energy management system, it is provided with four (4) Absorbed Glass Mat (AGM) 12-volt batteries connected in series-parallel.

These batteries require no maintenance for their lifetime. They can withstand deeper discharge cycles and several times the charging cycles of a standard battery.

These are sealed, valve regulated recombinant batteries which means that the oxygen created will recombine with the hydrogen in the battery, creating water and preventing water loss. Water never needs to be added to this type of battery.

The top-mounted negative and positive terminals are tightly sealed to prevent leaks.

The electrolyte in this type of battery is absorbed in micro-porous glass separators. This design prevents spills and results in greater resistance to vibration.

Always replace these batteries with identical make and model batteries as the system is balanced and optimized for this type of battery.

**CAUTION**

Replace only with AGM type batteries of the same specification and capacity.

PRIME system is programmed for the charging capacity of the batteries installed.

Installing a higher capacity battery will affect the battery life as the system will not fully charge the batteries, which is detrimental to battery performance.

Refer to “Specifications” at the end of this section for further details.

AGM batteries should be replaced in pairs or four at a time.

**CAUTION**

AGM (Absorbed Glass Mat) batteries require a voltage-limited charger, ideally fitted with a battery temperature sensor for temperature correction of charging parameters.

Charge voltage: 13.8-14.6 Volt @77°F (25°C)

Float voltage: 13.4-13.6 Volt @77°F (25°C)

Charging AGM battery on a typical constant current or taper current charger – even one time – may greatly shorten its life.

## 9.4 BATTERY DISCHARGE PROTECTION

To prevent discharge of the batteries when the engine in not running, some functions are automatically switched off if the batteries voltage drops below 24.4 volts for more than 30 seconds. The "Battery Voltage Warning" pictogram will show on the DID. Set the ignition key to the OFF position and then turn the ignition key to the ON position to reactivate the functions for a period of 30 seconds before they switch off again.

If a prolonged use of the functions with the engine not running is necessary, connect the battery to a charger.

## 9.5 MAIN ELECTRICAL SHUT-OFF SWITCH

Main 12-volt and 24-volt battery (master) relays are provided for this vehicle. The relays are located in the main power compartment. The 24-volt battery relay R1 & 12-volt battery relay R3 engage when ignition key is in the ON or ACC position and the main electrical shut-off switch is set to the ON position.

When the main electrical shut-off switch is set to the OFF position, the main battery relays R1 & R3 disengage thus all electrical supply from the batteries to main circuit breakers CB1, CB3, CB5, CB8, CB10, CB11, CB13, is cut off, with the exception of the following items, among others.

- Main circuit breakers CB2, CB6, CB9 which are directly connected to the batteries;
- Battery equalizer check module;
- MCM;
- ECM;
- TCM (Allison transmission);
- Aftertreatment Control Module (ACM);
- Preheater electronic timer;
- Preheater and water recirculating pump;
- Entrance door;
- Radio memory;
- Fire suppression system (momentarily);
- Horn, Hazard:
- Wheelchair lift system;
- Cluster memory.

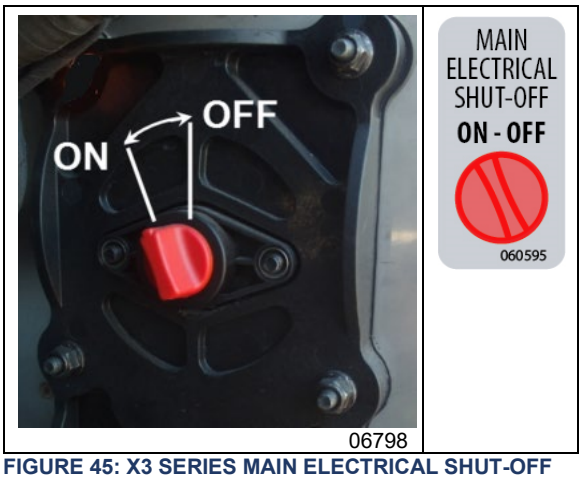


FIGURE 45: X3 SERIES MAIN ELECTRICAL SHUT-OFF SWITCH

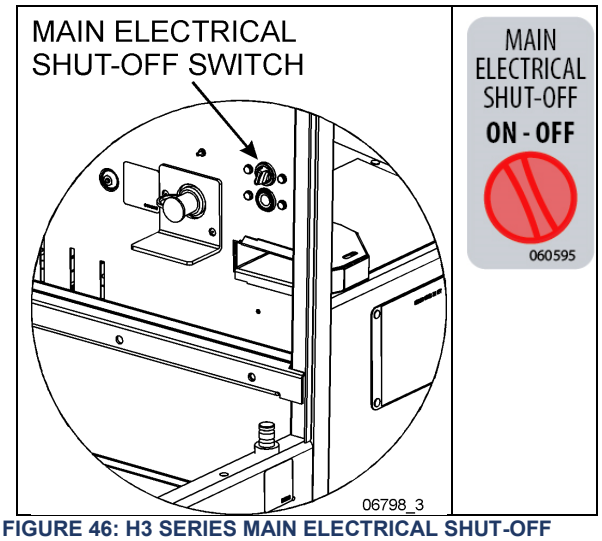


FIGURE 46: H3 SERIES MAIN ELECTRICAL SHUT-OFF SWITCH

## 9.6 BATTERY REMOVAL AND INSTALLATION – X3 SERIES

The batteries are located in the R.H. side of the engine compartment.

To prevent possible electric shocks or sparking, the main electrical shut-off switch in the R.H. side of the engine compartment (Figure 45) should be in the "Off" position before disconnecting cables from the batteries. In addition, trip main circuit breakers CB2 & CB6.

### Battery Removal

1. Remove the battery bank cover and place behind the battery bank (FIGURE 47).



FIGURE 47: BATTERY BANK COVER REMOVED

2. Disconnect the ground cable first (FIGURE 48).

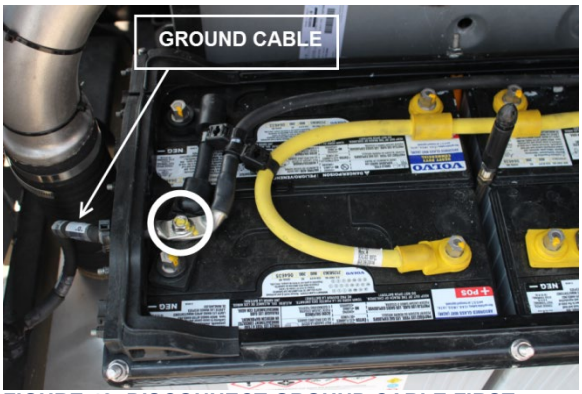


FIGURE 48: DISCONNECT GROUND CABLE FIRST

3. Using a 9/16 hex socket box, disconnect the eight (8) battery cable terminals (FIGURE 49).

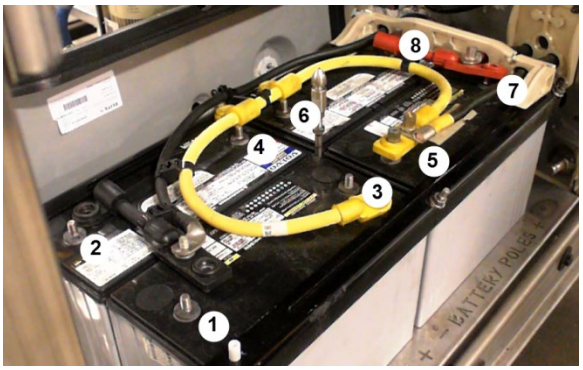


FIGURE 49: DISCONNECT 8 CABLE TERMINALS

4. Put the whole battery cable arrangement aside (FIGURE 50).



FIGURE 50

5. Unscrew three nuts (indicated with arrows) and then remove the front angle (FIGURE 51).

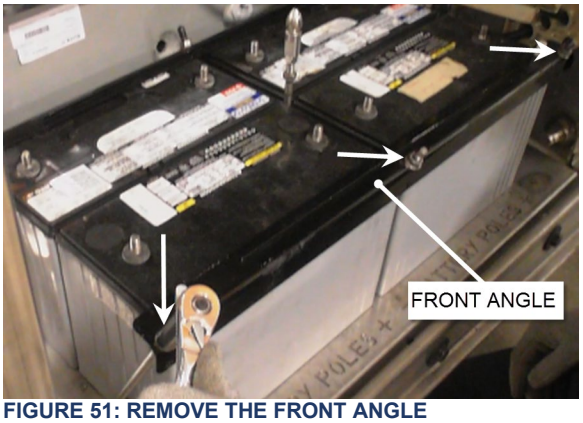


FIGURE 51: REMOVE THE FRONT ANGLE

6. Remove the rear angle similarly.



FIGURE 52: REMOVE THE REAR ANGLE

7. Slide the batteries on a mobile scissor lift table placed slightly lower than the battery deck level.




FIGURE 53

### Battery Installation

Reinstalling the batteries is quite similar as the removal procedure but in reverse order.

However, special care should be taken to the following points:

1. To respect battery polarity in the arrangement, positive (+) and negative (-) signs are laser cut on the battery deck steel sheet. When installing the batteries, place the battery negative and positive poles according to the signs on the battery deck (Figure 54).

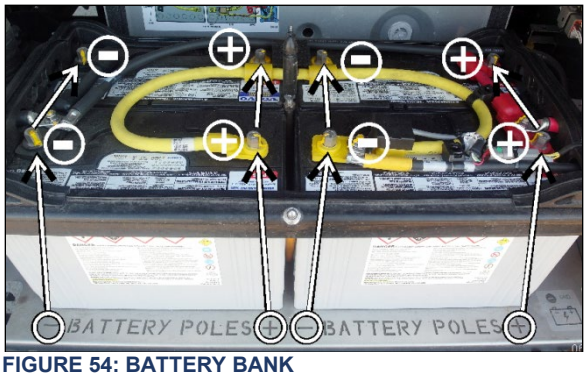


FIGURE 54: BATTERY BANK

2. Rest the aft batteries against the fold on the battery deck. Rest the fore batteries against the aft batteries.

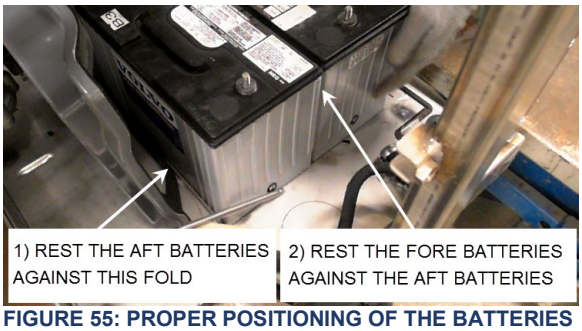


**FIGURE 55: PROPER POSITIONING OF THE BATTERIES**

3. The upper end of the rods is shaped to match with the angle (FIGURE 56).

4. Tighten the rod nut to the following torque:

**TORQUE:** 45-55 lb-in (5-6 Nm)

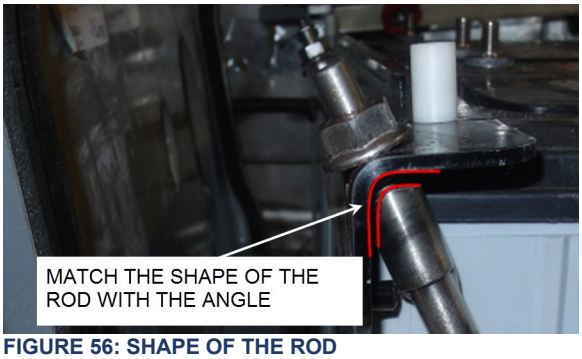


**FIGURE 56: SHAPE OF THE ROD**

5. Align the dowels on the angles with the holes on the cable guides (FIGURE 57).

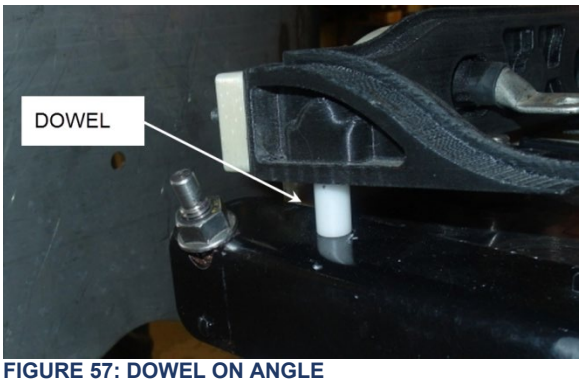


**FIGURE 57: DOWEL ON ANGLE**

*NOTE*

*When partially disconnecting battery cable arrangement, wrap the battery terminals and cable ends with electric tape to prevent accidental grounding. The ground cables should always be disconnected first and connected last.*

*NOTE*

*When reinstalling batteries, battery connections must be tightened. A torque wrench is required to ensure an accurate tightening torque.*

5. Connect the battery cables. Tighten the cable terminal (item 1, FIGURE 58) nuts to the following torque:

**TORQUE:** 170 lb-in (19 Nm)

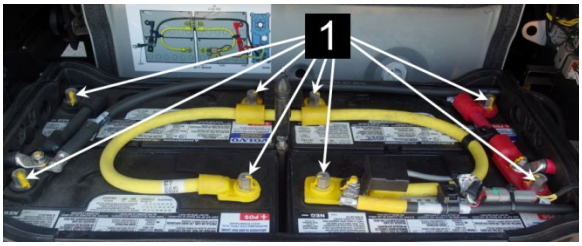


**FIGURE 58: INSTALL THE BATTERY CABLE LUGS**

6. Connect the ground cable last (FIGURE 59). Tighten the ground cable nut to the following torque:

**TORQUE:** 170 lb-in (19 Nm)

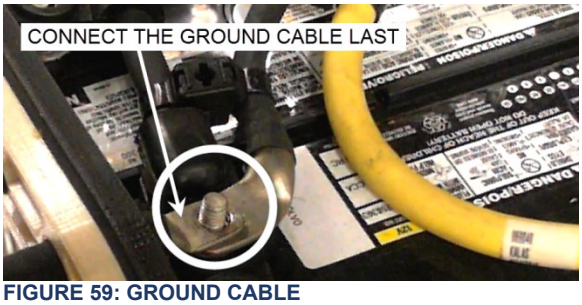


**FIGURE 59: GROUND CABLE**

7. To keep the battery connections clean, make sure that battery bank cover leans perfectly on the cable guides and the angles.

To prevent possible electric shock or sparking, the main electrical shut-off switch must be set to the "Off" position before tightening an electrical connection.

*NOTE*

*A protective coating should be applied on certain power connections that have been disconnected. Refer to Procedure SAV00002E included at the end of this section to know the recommended products and where they are used.*

## 9.7 AGM BATTERY RATING

Each of the 12-volt batteries used on the vehicle has the following rating:

- Reserve capacity: 200 minutes
- Cold Cranking Amps (CCA): 800 @ 0°F (-18°C)
- Weight: 69 lb (26,7 kg)

The reserve capacity is defined as the number of minutes a new, fully charged battery at 80°F (26,6°C) can be discharged at 25 amperes and maintain a minimum of 1.75 volts per cell (10.5 volts total for one 12-volt battery). This rating can be used as a basis for determining how long a vehicle might run after an alternator failure.

The cold cranking rating is defined as the minimum discharge current a battery will deliver in amperes for 30 seconds at 0°F (-18°C) while maintaining a minimum of 1.2 volts per cell (7.2 volts total for one 12-volt battery). This rating can be used as a basis for comparing starting performance.

## 9.8 BATTERY TESTING

Several factors influence battery performance. The methods and inspection procedures proposed here will ensure your batteries are in good shape.

### 9.8.1 Visual Inspection

1. Check the outside of the battery for a broken or cracked cover or case that could permit loss of electrolyte. If obvious physical damage is noted, replace the battery. If the battery is bulged, replace the battery. Also check for wet areas around the terminals.
2. Check for loose terminal posts, cable connections, damaged cables, and for evidence of corrosion. Correct conditions as required before proceeding with tests.
3. Check for damaged or loose battery tie-downs.

### 9.8.2 Removing Surface Charge

Disconnect cables from the battery and attach alligator clamps to the contact lead pad on the battery as shown in Figure 61. Connect a load equal to half the CCA across the terminal for 5 seconds to remove surface charge from the battery.

### 9.8.3 Load Test

This test is one means of checking the battery to determine its ability to function as required in the vehicle.
To make this test, use test equipment that will withstand a heavy electrical load from the battery, such as a **carbon pile load tester**. A charging system analyzer test equipment may also be used.

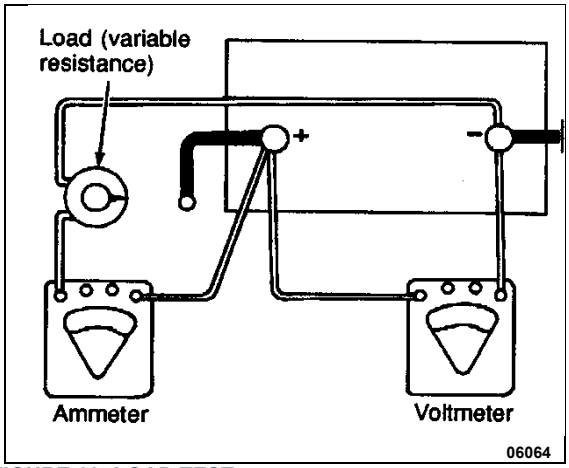


FIGURE 60: LOAD TEST

**CAUTION**

Observe the polarity of the meters and the battery when making connections, and select the correct meter range.

1. You cannot test a discharged battery. If the voltage is below 12.4 volts, be sure to

completely charge the battery before continuing.

2. Connect a voltmeter, ammeter, and a variable load resistance as illustrated in Figure 60.
3. Apply a load equal to one-half the CCA rating @ 0ºF for 15 seconds. Note the voltage at 15 seconds with the load on and immediately shut the load off.
4. A voltage reading at least equal to the value from the chart below indicates a good battery.
5. If the voltage reading is less than the value from the chart for a given battery temperature, replace the battery.

| Voltage and Battery Temperature Chart | |
|---|---|
| Battery Temperature | Minimum Voltage |
| 70ºF (21ºC) and above | 9.6 |
| 60ºF (16ºC) | 9.5 |
| 50ºF (10ºC) | 9.4 |
| 40ºF (4ºC) | 9.3 |
| 30ºF (-1ºC) | 9.1 |
| 20ºF (-7ºC) | 8.9 |
| 10ºF (-12ºC) | 8.7 |
| 0ºF (-18ºC) | 8.5 |

***NOTE***

*The accuracy of this test procedure is dependent upon close adherence to the proper load, time and temperature specifications.*

## 9.9 BATTERY CHARGING

The batteries used on this vehicle can be charged on the vehicle. To charge the batteries, proceed as follows:

1. With the engine turned off and the ignition switch set to OFF.
2. **EQUIPPED WITH ONBOARD CHARGER**. Connect 120 V supply to the onboard charger connector (the onboard charger is an optional equipment and might not be installed on the vehicle).



3. **NOT EQUIPPED WITH ONBOARD CHARGER**. Connect the clamps of an external charger to the booster block terminals. Make sure the external charger is **not** powered.

**WARNING**

Always turn off the external charger before connecting or disconnecting to a battery.

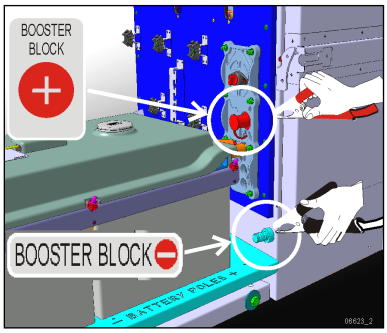


4. Turn ON the external charger.

Proceed in reverse order to stop the charging operation and to disconnect the onboard or external charger.

During charging of the batteries, an explosive gas mixture forms in each cell. Part of this gas escapes through the vent holes and may form an explosive atmosphere around the battery itself if ventilation is poor. This explosive gas may remain in or around the battery for several hours after it has been charged. Sparks or flames can ignite this gas causing an internal explosion, which may shatter the battery.

1. Do not smoke near a battery which is being charged or which has been recently charged.
2. Do not break live circuits at battery terminals because a spark usually occurs at the point where a live circuit is broken. Care must always be taken when connecting or disconnecting booster leads or cable clamps on chargers. Poor connections are a common cause of electric arcs, which cause explosions.
3. The electrical system on this vehicle is negative ground. Installing the batteries with the positive terminals grounded or incorrect use of the booster battery and jumper cables will result in serious damage to the alternator, batteries and battery cables.

The clamps of the tester or charger must be placed between the terminal nuts and the lead pads of the terminal studs after the vehicle cables are detached. The clamps should make firm contact with the lead pads (Figure 61).

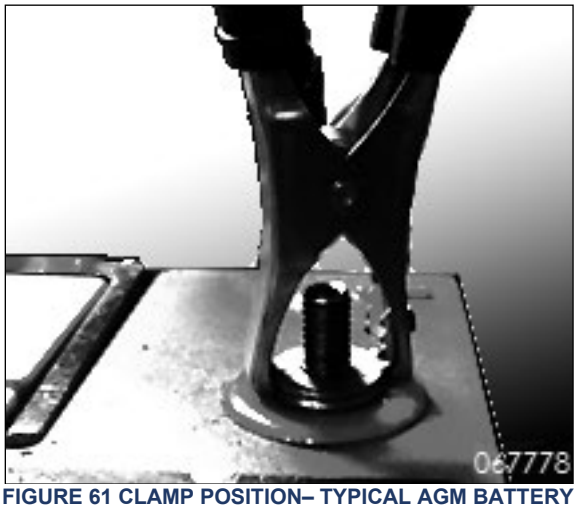


**FIGURE 61 CLAMP POSITION– TYPICAL AGM BATTERY**

*NOTE*

*The charge rate must be doubled when the batteries are charged by the booster block, because of the series-parallel circuit.*

**AGM (Absorbed Glass Mat) batteries require a voltage-limited charger, ideally fitted with a battery temperature sensor for temperature correction of charging parameters**.

***Do not manually charge AGM batteries. Look for the following voltage values on your voltage-limited charger.***

Charge voltage: 13.8-14.6 Volt @77°F (25°C)

Float voltage: 13.4-13.6 Volt @77°F (25°C)

Charging AGM battery on a typical constant current or taper current charger – even once – may greatly shorten its life.

- The maximum charge rate in amperes should be no more than 1/3 of the battery's reserve capacity minute rating.
- State-of-charge is estimated from the **OCV** (open-circuit voltage). Typical values are shown on the charging time table below.

| CHARGING TIME FOR A SINGLE BATTERY | | | | |
|---|---|---|---|---|
| OCV (AGM) | STATE OF CHARGE | CHARGER MAXIMUM RATE | | |
| | | 30 A | 20 A | 10 A |
| 12.8V | 100% | Ready to use | | |
| 12.6V | 75% | 0.9 | 1.3 | 2.5 |
| 12.2V | 50% | 1.9 | 2.7 | 5.1 |
| 12.0V | 25% | 2.9 | 4.3 | 7.8 |
| 11.8V | 0% | 4.0 | 5.7 | 10.7 |

## CAUTION

**AGM Battery Charging Considerations**

Many common battery chargers are not fully compatible with AGM batteries, however; they will not ruin the battery if used a few times over the battery's life.

Adversely, not all chargers are really AGM compatible and can do significant damage to an AGM battery. Large "wheeled chargers" found in many shops, which exceed 15.4 volts must be avoided.

If an AGM battery needs to be charged outside of the vehicle's charging system, charging voltage should be 13.8 –14.8 @ 77°F (25°C). Not to exceed 30 Amps.

The time required for a charge will vary according to the following factors:

**Temperature**

A longer time will be needed to charge any battery at 0°F (-18°C) than at 80°F (27°C). When a fast charger is connected to a cold battery, the current accepted by the battery will be very low at first, and then in time, the battery will accept a higher rate as it warms.

**State of Charge**

For example, a completely discharged battery requires more than twice as much charge than a half-charged battery. Since the electrolyte is nearly pure water and a poor conductor in a completely discharged battery, the current accepted is very low at first. Later, as the charging current causes the electrolyte acid content to increase, the charging current will likewise increase.

**Charger Capacity**

A charger supplying only 5 amperes will require a much longer period of charging than a charger that can supply 30 amperes.

9.9.1 Emergency Jump Starting With Auxiliary (Booster) Battery.

Off-board battery charger with a start boost facility must not be used to jump start the vehicle. This could damage the electrical system.

**Booster Block**

The booster block is located near next to the main power compartment and is accessible through the engine R.H. side door (Figure 62).

Both booster and discharged batteries should be treated carefully when using jumper cables. A vehicle with a discharged battery may be started by using energy from a booster battery or the battery from another vehicle.

Jump starting may be dangerous and should be attempted only if the following conditions are met:

The booster battery or the battery in the other vehicle must be of the same voltage as the battery in the vehicle being started, and must be negative grounded.

Follow the procedure exactly as outlined hereafter. Avoid making sparks.

Wear adequate eye protection when working on or near the batteries. Ensure that metal tools or jumper cables do not contact the positive battery terminal (or a metal surface in contact with it) as a short circuit will result. Do not attempt to jump start a vehicle suspected of having a frozen battery because the battery may rupture or explode. Both the booster and discharged batteries must be treated carefully when using jumper cables. Follow exactly the procedure outlined later in this section, being careful not to cause sparks.

**WARNING**

**DURING EMERGENCY JUMP STARTING …**

Cooling fans WILL start running for a short while.

Keep hands away from cooling fans. Keep the radiator door closed.

Wear eye protection and remove rings, watches with metal bands and other metal jewelry.

Apply parking brake and place the transmission to Neutral (N) position in both vehicles. Turn off lights, heater and other electrical loads.

The following procedure should be used only when the batteries are discharged.

**Do not** attempt jump starting if you suspect the batteries are charged. Inspect the engine starting system prior to using this procedure.

To jump start, proceed as follows:

5. Remove the red protective cap from the (+) booster block terminal located in the R.H. side engine compartment;

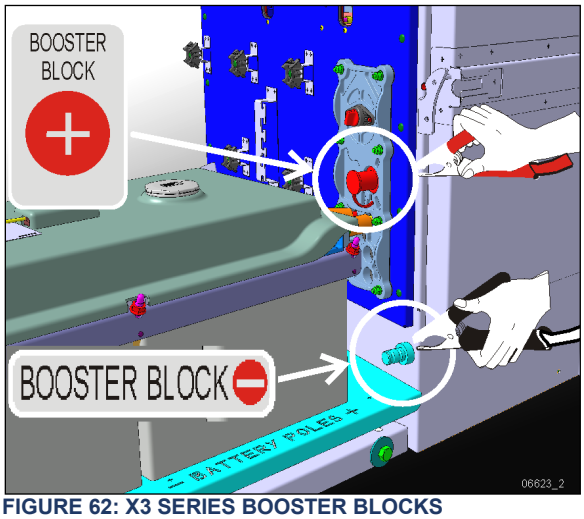


FIGURE 62: X3 SERIES BOOSTER BLOCKS

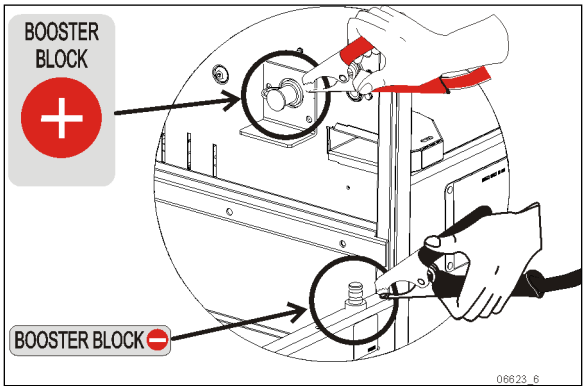


FIGURE 63: H3 SERIES BOOSTER BLOCKS

6. Connect the red jumper cable to the positive (+) post of the booster power source. If the good battery is in another vehicle, that vehicle's engine must be shut OFF before connecting;
7. Connect the other end of the red jumper cable to the positive (+) terminal on the booster block;
8. Connect one end of the black jumper cable to the negative (-) post on the booster power source;
9. Connect the other end of the same black jumper cable to the negative (-) terminal on the booster block. If the good battery is in another vehicle, start that vehicle's engine and increase the engine rpm speed slightly and maintain at that level for approximately 5 minutes to recharge run-down batteries and then **stop** the engine;
10. Start the vehicle with the run-down battery;
11. Disconnect the jumper cables in reverse order given in steps 2 through 5;
12. Install protective cap on the booster block terminal.

*NOTE*

*Jumper cables must be rated at 500 cranking amperes. If jumper cable length is 20 feet (6 m) or less, use 2/0 (AWG) gauge wires. If cable length is between 20 to 30 feet (6 to 9 m), use 3/0 (AWG) gauge wires.*

Any procedure other than the above could result in personal injury, property damage due to battery explosion, or damage to the charging system of the booster vehicle or of the boosted vehicle.

## 9.10 AGM BATTERY CHARGING PRECAUTIONS

AGM (Absorbed Glass Mat) batteries require a voltage-limited, temperature corrected charger.

Make sure your charger is multi-staged and minimally provides the following voltage values:

Charge stage voltage:

13.8-14.6 V @77°F (25°C)

Float stage voltage:

13.4-13.6 V @77°F (25°C)

Charging AGM battery on a typical constant current or taper current charger – even one time – may greatly shorten its life.

## 9.11 BATTERY EQUALIZATION AND AGM BATTERIES

Equalization is a controlled over charge. Conventional batteries may benefit from this procedure, stirring the chemistry of the entire battery it counters stratification (layers of different concentration of electrolyte), and also counters sulfation that may have accumulated on the battery plates.

AGM battery design prevents chemical unbalance of the electrolyte. Manufacturers of this type of battery generally do not recommend performing equalization.

## 9.12 CLEANING AND INSPECTION

The external condition of the battery and the battery cables should be checked periodically. The top of the battery should be kept clean and the battery tie-down clamp bolts should be kept properly tightened. For best results when cleaning the battery, wash first with a diluted solution of ammonia or soda to neutralize any acid present then wash out with clean water. The battery tie-down bolts should be kept tight enough to prevent the batteries from moving, but they should not be tightened to the point that excessive strain is placed on the battery hold-down cover. Tighten as prescribed. Refer to torque tables at the beginning of this section.

### MAINTENANCE

**Battery terminals**

Clean and coat terminals with Nyogel at the intervals specified by the Lubrication And Servicing Schedule in Section 24: LUBRICATION & SERVICING.

*A protective coating should be applied on certain power connections that have been disconnected. Refer to Procedure SAV00002E included at the end of this section to know the recommended products and where they are used.*

To insure good contact, the battery cable ring terminals should be tight on the battery posts. If the posts or cable ring terminals are corroded, the cables should be disconnected and the posts and clamps cleaned separately with a soda solution and a wire brush. Install cable ring terminals on battery posts and tighten. Tighten as prescribed. Refer to torque tables at the beginning of this section.

Replace protective caps to prevent corrosion and sparks.

## 9.13 COMMON CAUSES OF BATTERY FAILURE

When a battery fails, the cause of failure may be related to something other than the battery. For this reason, when a battery failure occurs, do not be satisfied with merely recharging or replacing the battery. Locate and correct the cause of the failure to prevent recurrence. Some common external causes of battery failure are as follows:

1. A defect in charging system such as high resistance or a faulty alternator or regulator. The dashboard ALTERNATOR telltale light illuminates if one of the alternators is defective.



ALTERNATOR telltale

2. A malfunction within the 12-volt system (equalizer).

3. Overloads caused by a defective starter or excessive use of accessories.
4. Dirt and electrolyte on top of the batteries causing a constant drain.
5. Hardened battery plates, due to battery being in a low state of charge over a long period of time.
6. Shorted cells, loss of active material from plates.
7. Driving conditions or requirements under which the vehicle is driven for short periods of time.
8. A constant drain caused by a shorted circuit such as an exposed wire or water infiltration in junction boxes causing ground fault.
9. Extended operation of preheating system with engine not running.
10. Failing to close disconnect switches during the night.

## 9.14 TROUBLESHOOTING

If a battery is known to be good and then has not performed satisfactorily in service for no apparent reason, the following factors may reveal the cause of trouble:

1. Vehicle accessories and disconnect switches inadvertently left on overnight.
2. Defects in the charging system, such as high wiring resistance, faulty alternator, regulator or battery equalizer.
3. A vehicle electrical load exceeding the alternator (or battery equalizer) capacity, with the addition of electrical devices, such as CB radio equipment, a cellular phone or additional lighting systems.
4. Defects in the electrical system, such as shorted or pinched wires.
5. Extended driving at a slow speed while using many accessories.
6. Loose or poor battery cable-to-post connections, previous improper charging of a run-down battery, or loose hold-down clamp bolts.
7. High-resistance connections or defects in the cranking system.

## 9.15 "BATTERY VOLTAGE WARNING" PICTOGRAM

If the "BATTERY VOLTAGE WARNING"  (Low Voltage – Connect Battery Charger) pictogram shows up in the DID (Driver Information Display), check the voltmeter gauge to determine if the battery voltage is too high or too low.

### 9.15.1 Voltage Gauge Definitions

Voltmeter drops below 24.4 volts dc

- Check alternator output.
- Check battery connections.
- Check battery equalizer connections.

Voltmeter exceeds 30 volts dc

- Check alternator output (voltage regulator might be defective).
- Check battery connections.

Checking Battery Balance

| *NOTE* |
| --- |
| *Allow at least 15 minutes to balance batteries after any corrective measure has been taken.* |

1. Batteries out of balance (difference greater than 1.5 volts between the two battery banks).
   - Check battery equalizer connections.
   - Check equalizer cables for proper gauge.
   - Check battery connections.
2. Demand for 12-volt power exceeding rated amperage output of battery equalizers causing batteries to go out of balance.
   - Reduce 12-volt load or install additional battery equalizer(s).

### 9.15.2 BATTERY warning Pictogram MAY appear as a reminder

If you leave *ignition ON, park brake set* and *engine not running*, this warning  may appear after 20 minutes as a reminder to connect the battery charger. The reminder will appear even if the batteries are in the right voltage range. Confirm battery voltage is indeed correct with the DID Gauges screen and if you do need to leave the ignition ON for a prolonged period, connect a battery charger.

## 10. BATTERY EQUALIZER

The Vanner “Vann-Bus 80 Series” 100amp Battery equalizer with Power Management System is installed inside the main power compartment.

Refer to Vanner ***Vann-Bus 80 Series Owner's Manual*** found on your Technical Publications USB flash drive.

## 11. SUPERCAPACITOR STARTING MODULE (OPTION)

The vehicle may be equipped with a supercapacitor starting module located in the 3rd luggage bay. (Figure 64)

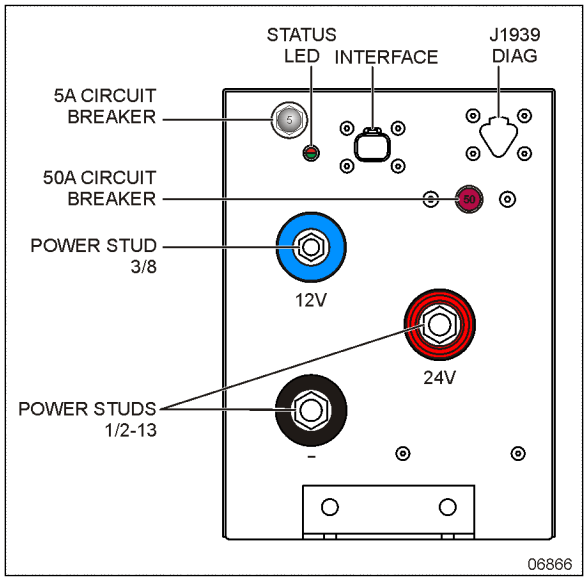


**FIGURE 64: STARTING MODULE**

This module houses supercapacitors that derive power from the vehicle electrical system and discharges it when starting the engine.

On engine start-up, the module provides power in parallel with the standard batteries. If the standard batteries are depleted, the module will provide enough power for engine start-up.

A vehicle equipped with a starting module will have a differing starting switch arrangement on the dashboard. This system uses an on/off ignition switch and an engine starting (cranking) switch.




**FIGURE 65: SWITCH ARRANGEMENT WITH STARTING MODULE**

### 11.1 STARTING THE VEHICLE WITH DEPLETED BATTERIES.

With a supercapacitor starting module, if the batteries are depleted and the charging system works correctly, it is still possible to start the vehicle.

Place ignition switch to the “ON” position (Figure 65)

Press and hold engine start switch (Figure 65) until engine is running and keep holding minimum of 3 seconds after engine run.

Holding the switch provides the circuit with power coming from the starting module.

### 11.2 STARTING MODULE STATUS LED

The bi-color (red/green) LED is an indicator for how the starting module is functioning. The green side of the LED is connected parallel with the contactor. The red side is connected to an output on the module's programmable logic controller (PLC).

**Green:** Anytime the LED Status Indicator is illuminated green, the contactor is closed. In a typical engine-starting event you will see the LED illuminate during engine cranking and then go out for several seconds after the engine has started. The LED will then illuminate again and could remain illuminated for several seconds based on the condition of the module. The LED may “cycle” depending on the vehicle or system voltage during the recharging events.

**Red:** The PLC monitors the capacitor voltage during and after the recharge cycle. If the capacitor voltage drops to below an acceptable level in the first 5 minutes after the recharge, the red LED will flash, indicating a fault.

If at any time while the PLC is powered up, the 5A circuit breaker trips or the capacitor voltage level drops below 4 volts the red LED will flash. (Source: KBI)

## 11.3 TROUBLESHOOTING

Refer to supplier manual *KSM Starting Module Manual RevD.pdf* from KBI on the technical publications web site or on the technical publications USB drive for troubleshooting instructions.

**WARNING**

The starting module is a polarity sensitive device. Polarity should be strictly observed when connecting the KAPower module into any circuit

**WARNING**

The Starting Module is a product of high electric power. Avoid shorting module terminals!

## 11.4 MAINTENANCE

Regularly inspect the wiring and bus bar connections to make sure they are clean and free of corrosion.

1/2-13 power stud nut torque:

**180 lb-in (20 Nm)**

3/8-16 12V power stud torque:

180 lb-in (20 Nm)

M10-1.5 bus bar ground stud:

**240 lb-in (27 Nm)**

## 11.5 HANDLING AND STORAGE

**CAUTION**

Module should be stored at a minimum voltage of 8V for the 24V circuit and 4V for the 12V circuit.

*NOTE*

*The starting module is not a high-voltage device. It simply supplies the same voltage that it was charged up to. Handle it with the same respect you would give to a fully charged battery.*

## 12. PRIME ENERGY MANAGEMENT SYSTEM

The acronym “PRIME” stands for Power Recovery by Intelligent Management of Energy.

This system focuses on eliminating parasitic loads on the engine by intelligent management of the alternators and air compressor duty cycle.

Instead of constantly charging, the alternators will use engine negative torque (braking, deceleration) to generate “Free” electricity.

Depending on the compressed air requirement, PRIME will also trigger the production of compressed air on negative torque.

PRIME also introduces maintenance-free Absorbed Glass Mat (AGM) batteries and a Vanner 80 series battery equalizer that monitors battery State of Charge (SOC).

Battery temperature, voltage and current are also monitored to prevent overcharging and overheating.

Maximum fuel economy is obtained on a ride when the mix of hilly and flat portions allows the batteries to be charged when the vehicle is in free wheel. It basically means that batteries are charged with free energy and that no fuel consumption is dedicated to charge the batteries.

### 12.1 COMPONENTS

New components includes AGM batteries, a Vanner Battery equalizer, a temperature sensor located on the battery post and two voltage and current sensors monitoring 12V and 24 V circuits. Refer to Figure 66 below.

The compressor duty cycle control is achieved by an electric air dryer. This is covered in section 12 of this manual.

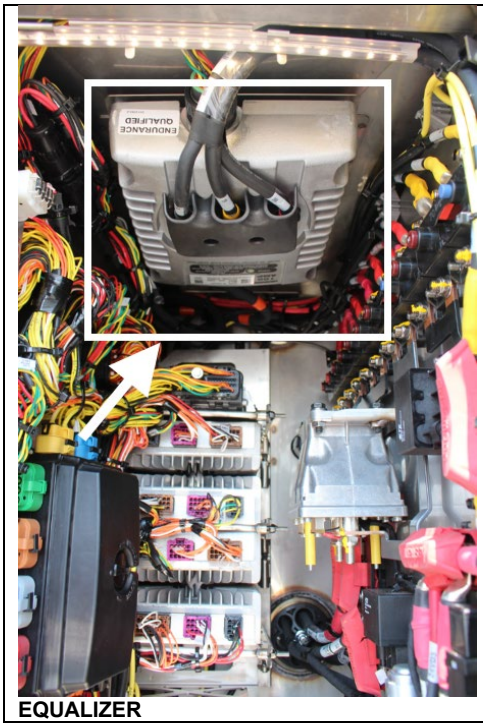

EQUALIZER

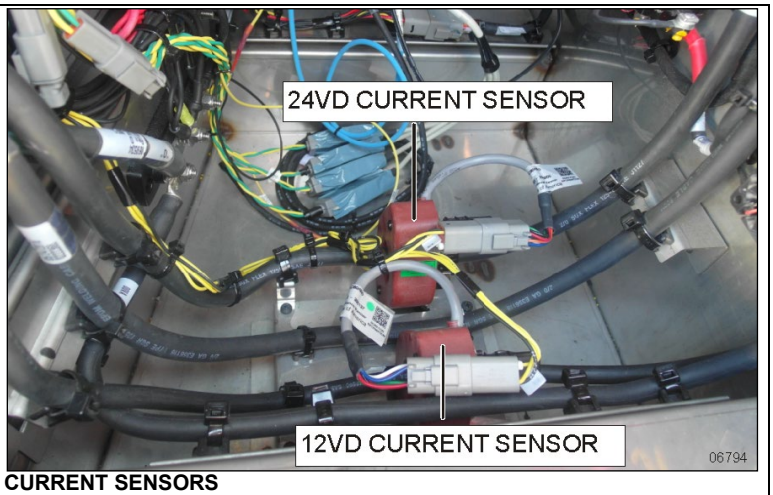


CURRENT SENSORS

FIGURE 66: PRIME ELECTRICAL COMPONENTS

12.2 DID DISPLAY

In the DID you will find the percentage of trip made with regenerated electricity displayed along with the instantaneous fuel consumption.

This value is reset each time the engine is restarted.

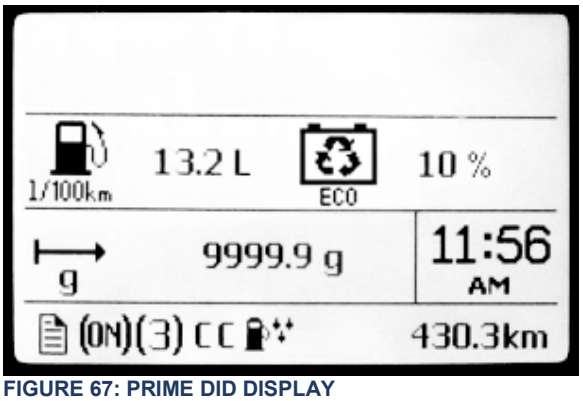


FIGURE 67: PRIME DID DISPLAY

In addition to the standard voltage gage, the DID also includes a state of charge gage for the batteries:

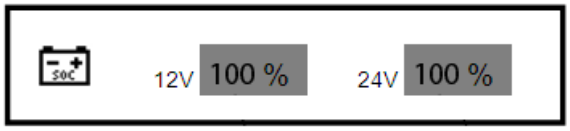


FIGURE 68: BATTERY STATE OF CHARGE

This gage displays the level of charge for the 12V and 24V battery banks in percentage.

## 13. ALTERNATORS

Standard configuration includes three 24-volt 150A, self-regulated, belt driven, air-cooled HD 10 BOSCH alternators are used in the 24-volt electrical system.

| *NOTE* |
| --- |
| *For the complete removal/installation instructions, refer to Maintenance Information* ***MI16-17 Bosch HD10 alternator removal and installation*** *included at the end of this section.* |

As an option, two 24-volt 250A Delco Remy 55SI alternators may be installed. One on each side of the engine.

In this configuration, the multiplex system will identify the alternator on the right (cold side) as *Upper Right* and the left (hot side) as *Lower Left.*

13.1 IDENTIFYING A DEFECTIVE ALTERNATOR

When an alternator is not charging, the *charging system warning light* will illuminate.



charging system warning light

13.1.1 Alternator identification

Cold side alternators are the one found on the A/C compressor side. The hot side alternators are the one located on the engine turbo side.

Cold Side (R.H.):

ALTERNATOR Up RH= upper right
ALTERNATOR Low RH=lower right

ALTERNATOR Ext RH= above small A/C comp.

(MTH only)

Hot Side (L.H.):

ALTERNATOR Up LH= upper left (MTH only)
ALTERNATOR Low LH=lower left

13.1.2 Identifying a defective alternator using the instrument cluster DID

1. On the DID (Driver Information Display), select DIAGNOSTICS menu.
2. Select VIEW ACTIVE FAULTS and then ELECTRICAL.
3. The active electrical system faults will appear. Scroll through the active faults. You will find one of the following messages:

| MID (188) ELECTRICAL SYSTEM |
| --- |
| PSID 34 ALTERNATOR Low RH |
| FMI (5) OPEN CIRCUIT |

| MID (188) ELECTRICAL SYSTEM |
| --- |
| PSID 35 ALTERNATOR Up RH |
| FMI (5) OPEN CIRCUIT |

13.1.3 Identifying a Defective Alternator – Back-probing Multiplex Modules Method

Prerequisite conditions:

a) Engine running;

b) Parking brake applied.

Back-probe the following modules:

**AE49 & AE52 X3 Series**

**AE50 & AE53 H3 Series**

Alternator Up RH =pin J1:20, module AE49/AE50
Alternator Low RH=pin J2:8, module AE52/AE53
Alternator Low LH= pin J2:9, module AE52/AE53

Back-probe pin 20 (AE49/AE50 J1:20):

- If multimeter reads 1-2 volts, the **upper R.H.** alternator is defective;
- If multimeter reads 12 volts, you have an open circuit;
- If multimeter reads 26 volts or greater, the **upper R.H.** alternator operates normally.

Back-probe pin 8 (AE52/AE53 J2:8) and a good ground (use ground stud in the compartment):

- If multimeter reads 1-2 volts, the **lower R.H.** alternator is defective;
- If multimeter reads 12 volts, you have an open circuit;
- If multimeter reads 26 volts or greater, the **lower R.H.** alternator operates normally.

Back-probe pin 9 (AE52/AE53 J2:9) and a good ground (use ground stud in the compartment):

- If multimeter reads 1-2 volts, the **lower L.H.** alternator is defective;
- If multimeter reads 12 volts, you have an open circuit;
- If multimeter reads 26 volts or greater, the **lower L.H.** alternator operates normally.

13.2 ALTERNATOR DRIVE BELT

**MAINTENANCE**

**Drive belt**

Inspect for crack or frayed material at the intervals specified by the Lubrication And Servicing Schedule in Section 24: LUBRICATION & SERVICING.

13.2.1 Removal and installation

1. Insert a ½″ socket drive into the automatic belt tensioner opening.
2. Twist the tensioning arm to slacken belt.
3. Remove belt.

Installation of the alternator drive belt is the reverse of removal.



**FIGURE 69: ½″ SOCKET DRIVE WRENCH**

*NOTE*

*Belts specifications may vary. For proper belt selection, always consult your vehicle Coach Final Record.*

13.2.2 Adjustment

Correct belt tension is required to maximize belt life. The tensioning arm maintains proper belt tension, no adjustment is required.

## 14. STARTER

Refer to Mitsubishi Electric Corporation (MELCO) Service bulletin ME003-P found on your Technical Publications USB flash drive for information and maintenance instruction on MELCO 105P70 starter.

*NOTE*

*For the complete removal/installation instructions, refer to Maintenance Information* ***MI16-16 Starter removal and installation*** *included at the end of section 01ENGINE.*

**CAUTION**

Do not engage starter for more than 15 seconds at a time. If engine does not start within 15 seconds, release ignition key and let starter cool for one minute before attempting to restart.

## 15. ENGINE BLOCK HEATER

The vehicle may be equipped with an engine immersion-type electric block heater to assist cold weather starting. The heater male electric plug is easily accessible through the engine compartment R.H. side door (FIGURE 70). To use it, connect the female plug of an electrical extension cord to the heater plug. The extension cord must be plugged into a 120 V AC power source only. The engine block heater should be used whenever the vehicle is parked for an extended period of time in cold weather and a suitable power source is available.

### 15.1 MAINTENANCE

This heater is non-serviceable except for the cord, and if faulty, must be replaced as a unit.

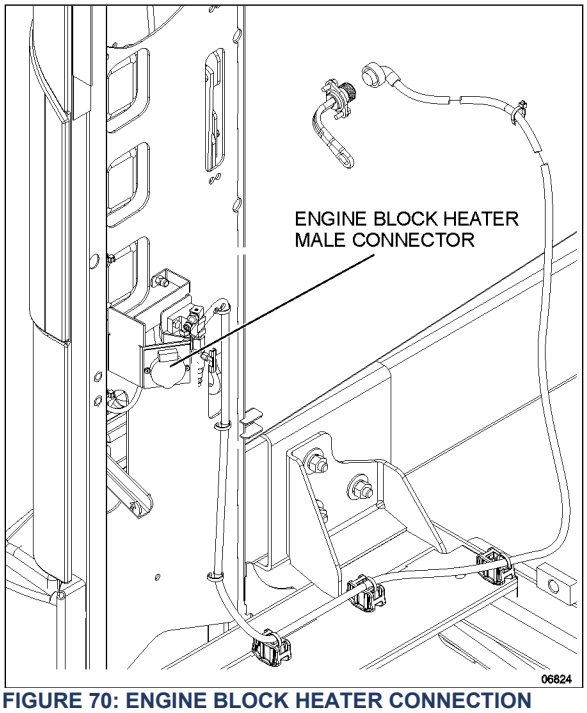


**FIGURE 70: ENGINE BLOCK HEATER CONNECTION**

## 16. EXTERIOR LIGHTING

The circuit for exterior lights, as well as their control switches, relays and circuit breakers are shown on the applicable wiring diagrams.

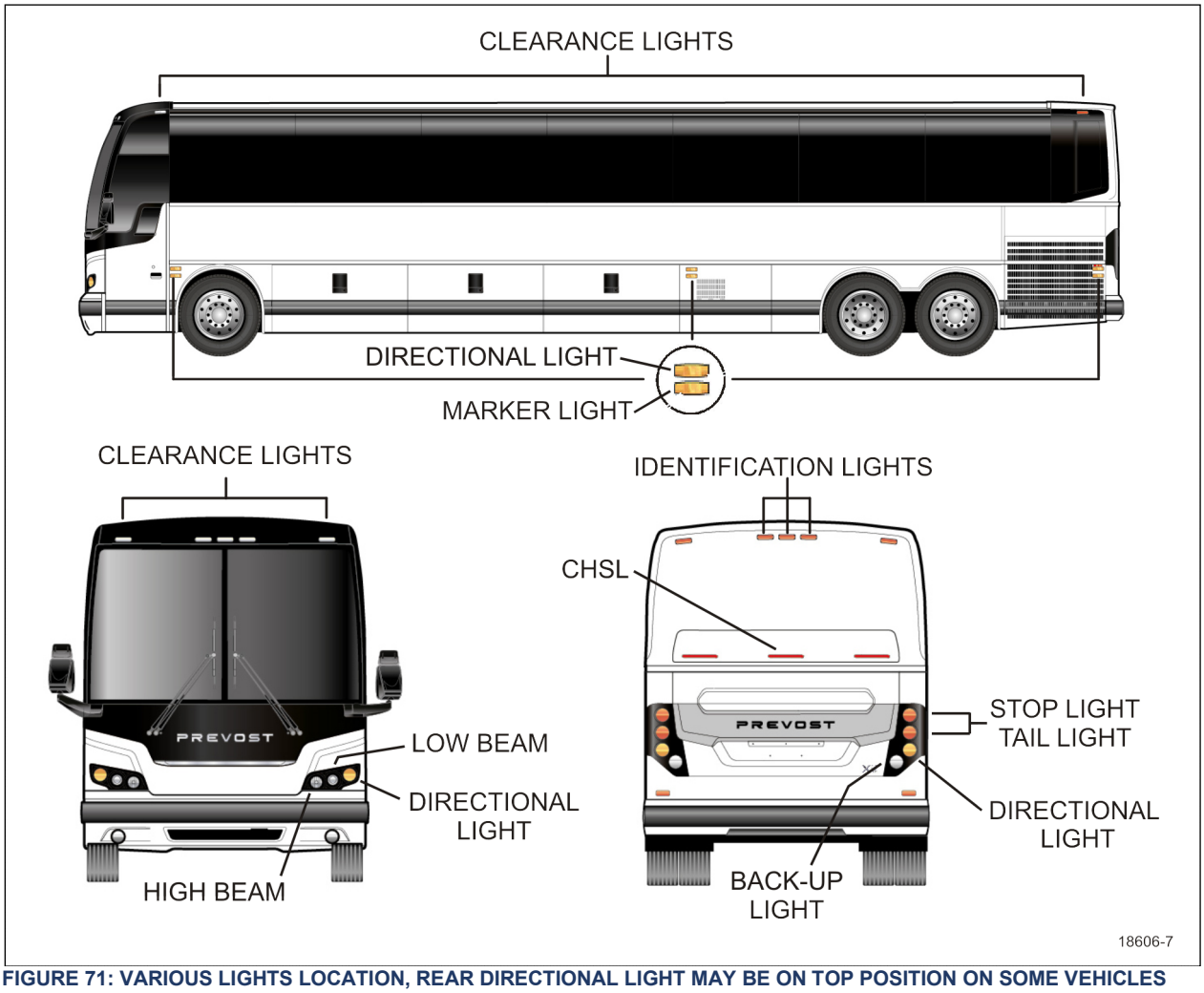


**FIGURE 71: VARIOUS LIGHTS LOCATION, REAR DIRECTIONAL LIGHT MAY BE ON TOP POSITION ON SOME VEHICLES**

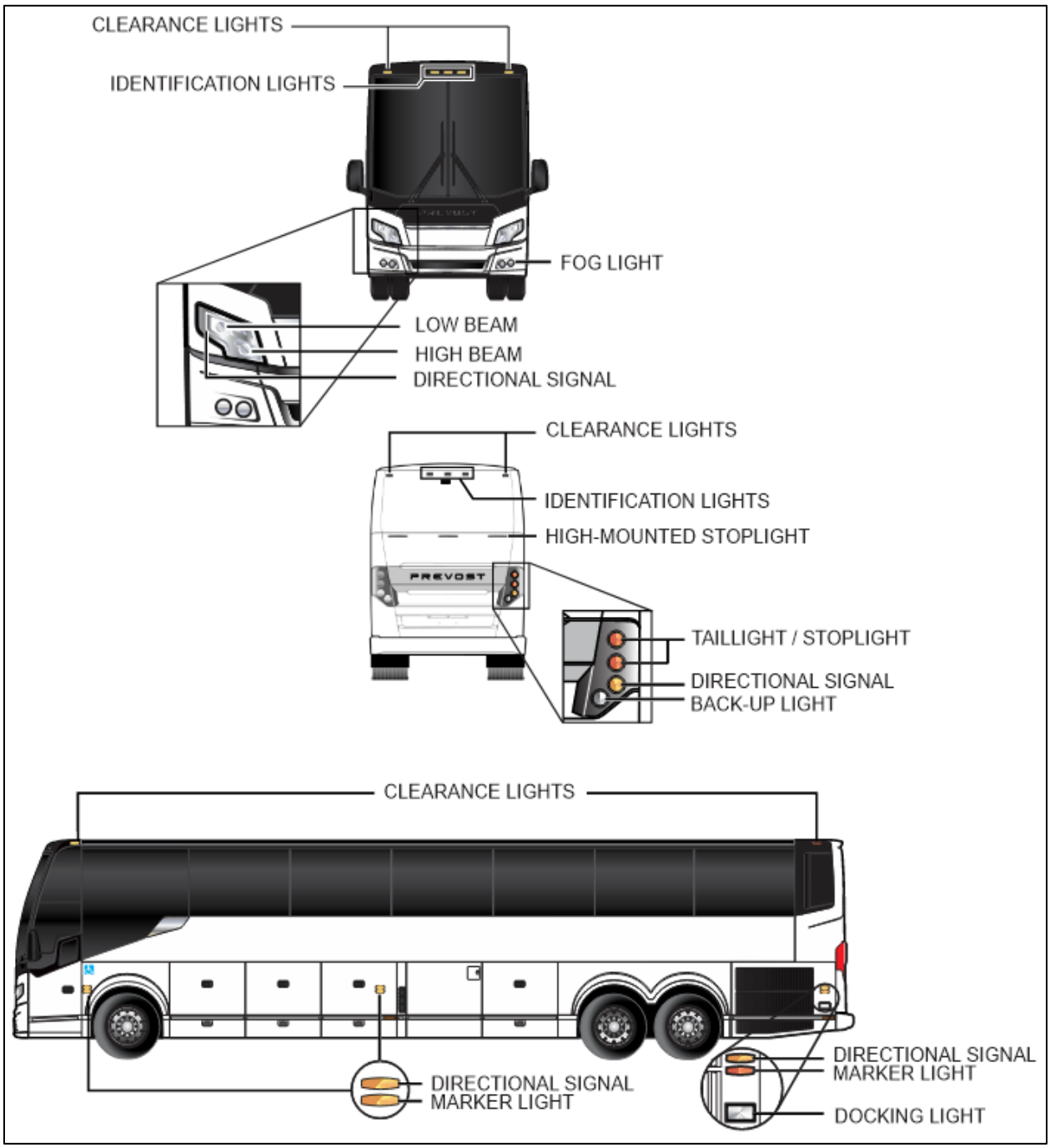


**FIGURE 72: VARIOUS LIGHT LOCATIONS**

## 16.1 X3 SERIES HEADLAMPS

Each headlamps assembly consists of two 90 mm (3½ inch) headlamp module (Figure 73) and one 100 mm (4 inch) 12-volt LED parking/directional signal lamp. Middle lamps are used for low beams. Inner lamps are used for high beams.

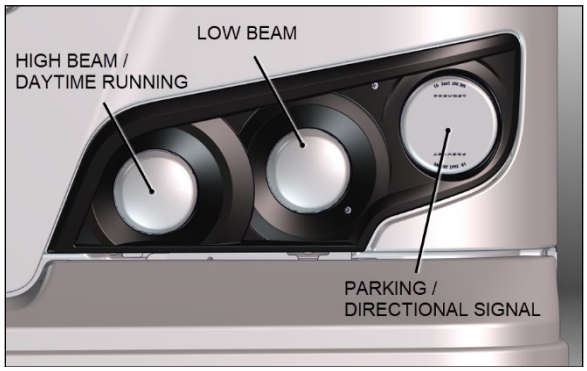


**FIGURE 73: HEADLAMPS ASSEMBLY**

The high beams serve as daytime running lights. The high beams light intensity is lower in the daytime running mode.

| MODEL | LOW BEAM H9 halogen 65W/12V | LOW BEAM HID SAE D2S Xenon 35W | HIGH BEAM H9 halogen 65W/12V |
|---|---|---|---|
| X3-45 coach | standard | option | standard |
| X3 VIP motorhome | standard | option | standard |
| X3 VIP Commercial Use | standard | option | standard |

**CAUTION**

DO NOT use replacement bulbs with a power rating higher than specified. Damage to the headlamp module will occur due to overheating. Refer to the table above.

**CAUTION**

DO NOT use aftermarket bulbs. Use only Hella or Osram bulbs. Refer to the Parts Manual for the appropriate replacement bulbs.

*NOTE*

*If the vehicle is equipped with optional xenon headlamps, refer to paragraph 5.*

### 16.1.1 Maintenance

Clean headlamps assembly with soap and water. When a headlamp burns out, a new bulb must be installed. Headlamp modules must be properly aimed to provide maximum allowable road illumination. When using mechanical aiming devices, follow the manufacturer's instructions.

Horizontal aiming of headlamp module is provided by an adjustment screw that rotates the headlamp module in the housing for the proper alignment (Figure 74).




**FIGURE 74: HEADLAMPS ASSEMBLY**

*NOTE*

*Make sure headlamps assembly module is properly positioned into its housing before securing using fixing screws.*

General recommendations

1- Inspect lamp assembly and wiring harness on a regular basis and replace defective parts with OEM parts only.

2- Pay particular attention to socket terminal wider or burnished. Do not attempt to repair wiring harness, replace the entire cable assembly when required.

3- Train the repair personal to make sure the glass of the bulb always stays free of grease. Never touch the glass part of the bulb.

4- Double check the work to make sure the socket bulb is properly turned and locked in the lamp assembly.

5- Make sure repair personal do not push meter probe or other type of tool in the socket terminal.

6- Secure wiring harness and socket terminal with nylon ties to avoid risk of pin fretting wear.

### 16.1.2 Headlamps Cable Routing

*Make sure connector and wiring harnesses are properly secured to avoid pin fretting wear.*

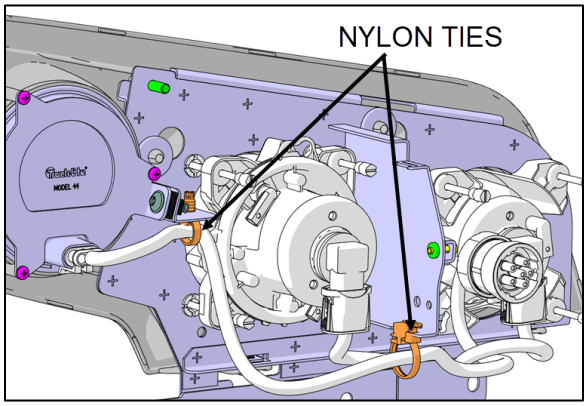


**FIGURE 75: TYPICAL CABLE ROUTING WITH TWO HALOGEN HEADLAMPS**

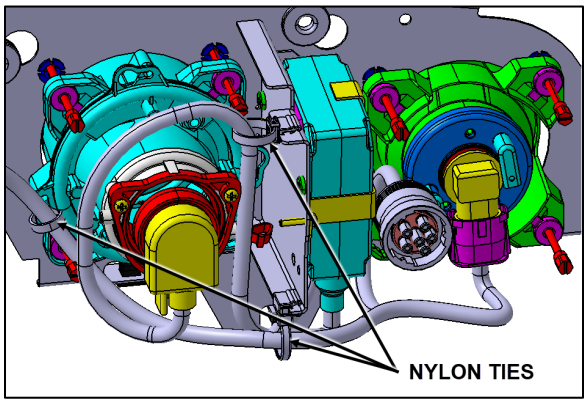


**FIGURE 76: TYPICAL CABLE ROUTING WITH ONE XENON HEADLAMP (LEFT) AND ONE HALOGEN HEADLAMP (RIGHT). ROUTE THE XENON CABLE AROUND THE XENON HEADLAMP MODULE TO PREVENT ANY RISK OF FRICTIONAL WEAR**

### 16.1.3 Halogen Bulb Replacement

1. Lower the reclining bumper.
2. Unfasten the two screws (Figure 77) fixing the headlamps assembly then tilt the headlamps assembly down.

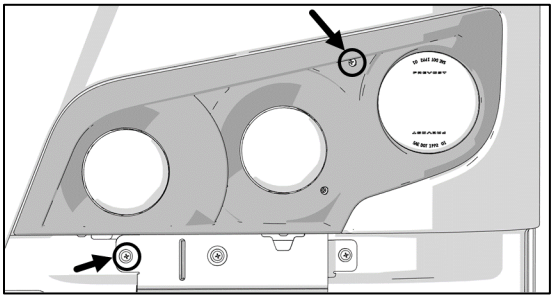

**FIGURE 77: HEADLAMPS ASSEMBLY FIXING SCREWS**

3. Unplug the bulb connector (Figure 78).

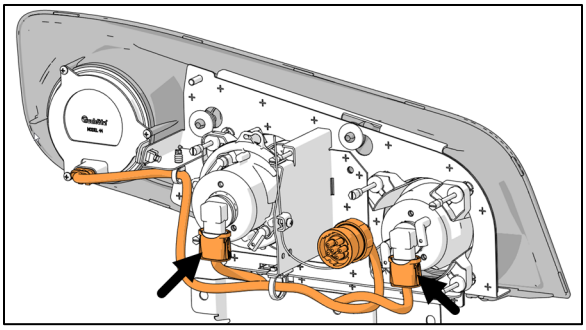

**FIGURE 78**

4. Press lightly, rotate the bulb socket counterclockwise, and remove from the headlamp module.

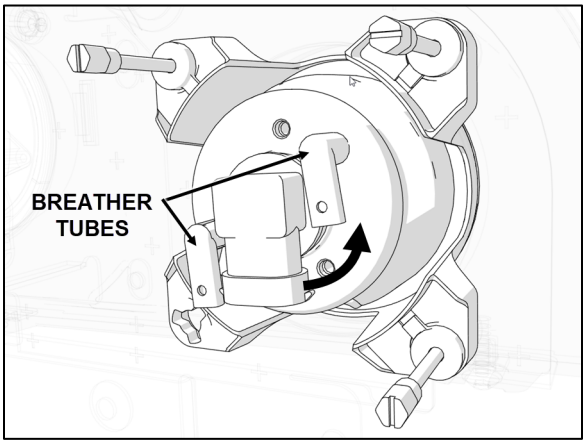


**FIGURE 79: HALOGEN BULB REMOVAL**

5. Install the new bulb by reversing the previous steps. Orient as indicated with the connector downwards.

**CAUTION**

During this step, DO NOT touch the bulb with the fingers not to alter the bulb life. Hold the bulb by its socket. Avoid any contact with grease.

- *Make sure to insert the bulb socket perfectly straight.*
- *Make sure the bulb socket is fully turned and locked.*
- *Do not use dielectric grease.*

6. Plug the harness to the bulb socket. **Make sure it is properly connected.**
7. Make sure the breather tubes are present and properly secured.
   - *Make sure no stress is created on the connector.*
   - Make sure the connector and harness are secured to avoid pin fretting wear.

*NOTE*

*Do not disrupt headlamp module adjustment screws.*

16.1.4 Headlamp Module Replacement

1. Unfasten the two screws (Figure 77) fixing the headlamps assembly and then tilt the headlamps assembly down.
2. Unplug the bulb connector.

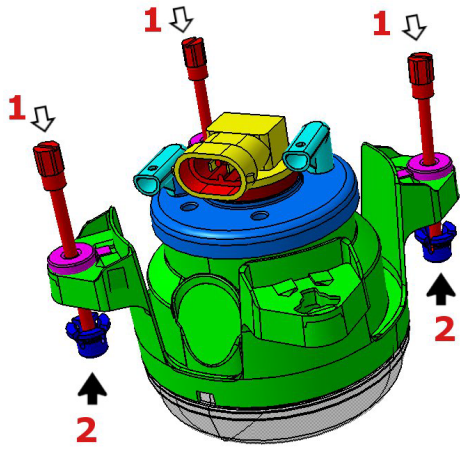


1- Threaded rods
2- Plastic mounts

**FIGURE 80: HEADLAMP MODULE**

3. Using pliers, unfasten all plastic mounts from the headlight metal support (Figure 81).

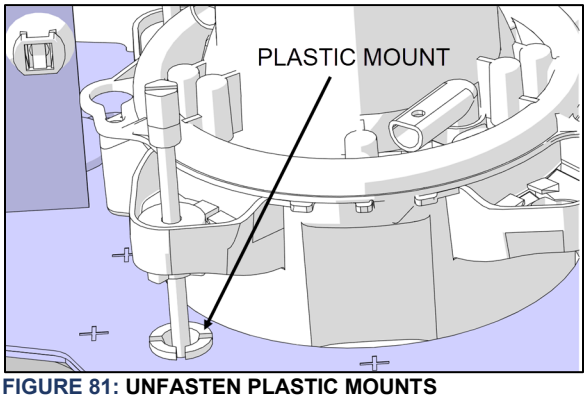


**FIGURE 81: UNFASTEN PLASTIC MOUNTS**

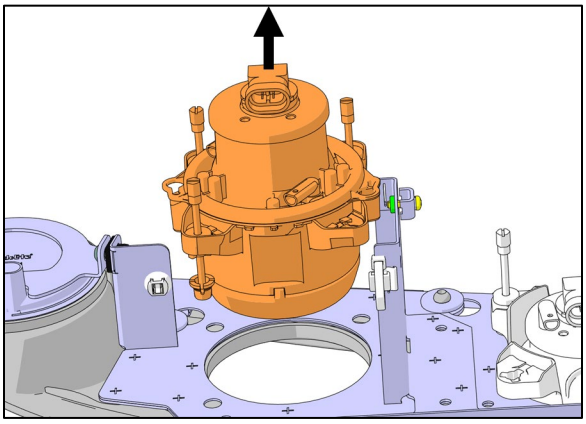

**FIGURE 82**

4. Discard defective headlamp module complete with plastic mounts and threaded rods.
5. Install three new threaded rods (item 1, Figure 80) on the new headlamp module.
6. Use pliers to lock threaded rods by rotating the tab counterclockwise until it “clicks” in place (Figure 83).



**FIGURE 83: LOCK THREADED ROD**

7. Snap new plastic mounts on threaded rods (3x) (item 2 in Figure 80 & Figure 84). You will hear or feel a click.

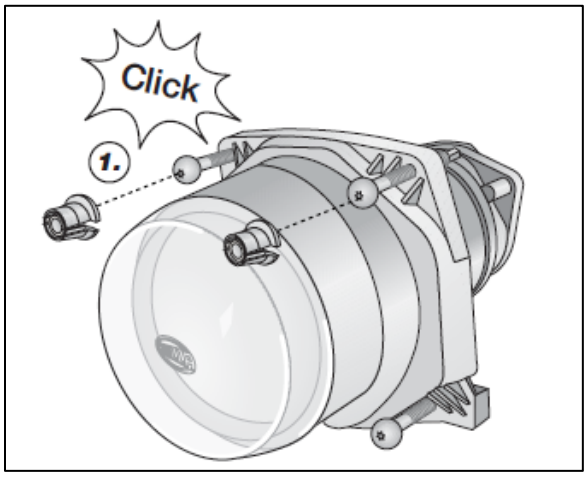


FIGURE 84

8. Mount (snap) headlamp module complete with threaded rods and plastic mounts onto the headlamp module metal support. **Make sure the plastic mounts are properly seated.**

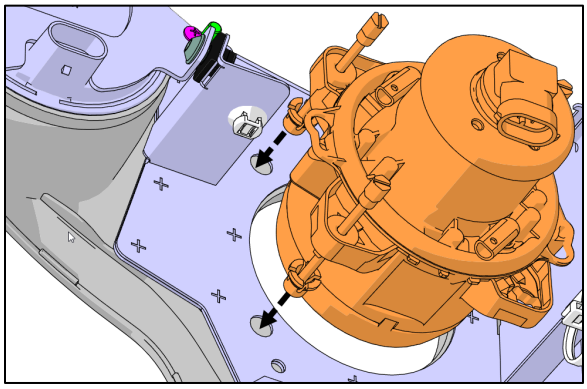

FIGURE 85

9. Adjust the headlamp module height in relation to the metal support at each threaded rod. Screw threaded rods until height of the headlamp module reaches the values shown in Figure 86 & Figure 87.

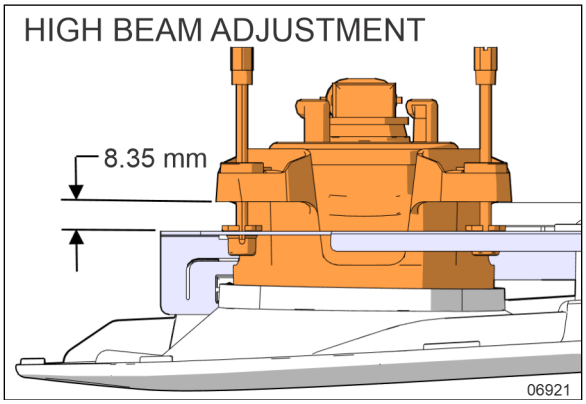


FIGURE 86: HIGH BEAM ADJUSTMENT

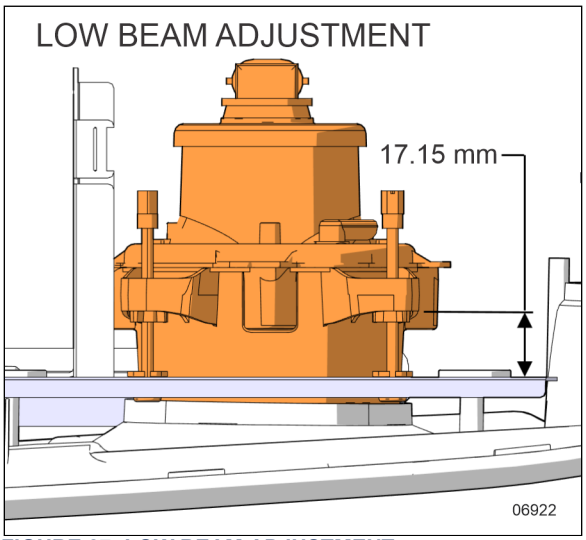


FIGURE 87: LOW BEAM ADJUSTMENT

10. Plug the harness to the bulb socket. **Make sure it is properly connected.**
    - Make sure the breather tubes are present and properly secured.
    - *Make sure no stress is created on the connector.*
    - Make sure the connector and harness are secured to avoid pin fretting wear.

| *NOTE* |
| --- |
| *Make sure headlamps assembly is properly positioned into its housing before securing using fixing screws.* |

11. Test the lights.
12. Perform the alignment procedure.

*NOTE*

*The headlamp module aim must be checked and adjusted even if it was properly adjusted before the headlamp module was replaced.*

*Only low beam can be adjusted with an adjusting screw (see* Figure 74*).*

16.1.5 Directional Turn Signal Replacement

The front turn signal is part of the front headlamps assembly. The turn signal is a sealed unit and should be replaced as an assembly.

1. Remove the two screws (Figure 77) fixing the headlamps assembly and then tilt the headlamps assembly down.
2. Disconnect the electrical harness connector from the light module.
3. Unscrew the 4 mounting fasteners.

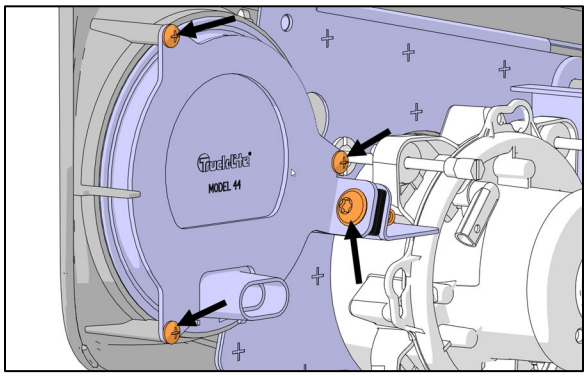

FIGURE 88

4. Replace the directional signal module.

Important: Orient as indicated with the connector downwards. The "Prevost" brand on the face should be placed horizontally as much as possible.

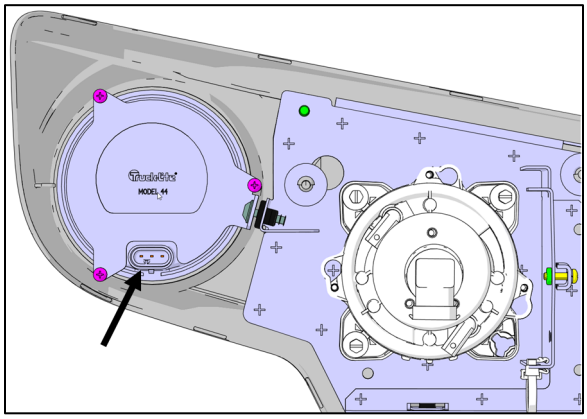

FIGURE 89

5. Install wiring connector on the back of the new turn signal module. **Make sure it is properly connected.**

16.1.6 Xenon Bulbs Replacement

The outer lamps (low beam) of each headlamp assembly may be equipped with the optional Xenon lamps.

1. Lower the reclining bumper.
2. Unplug connector from the headlamp bulb by turning counterclockwise.

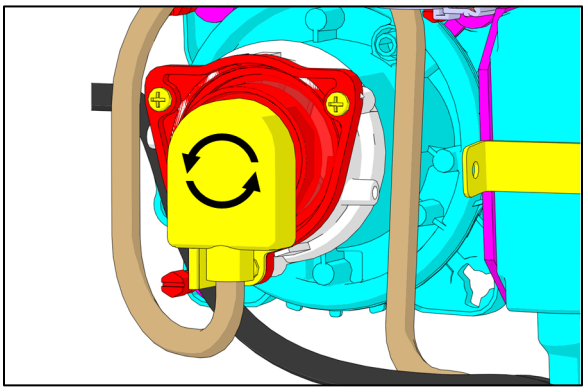

FIGURE 90

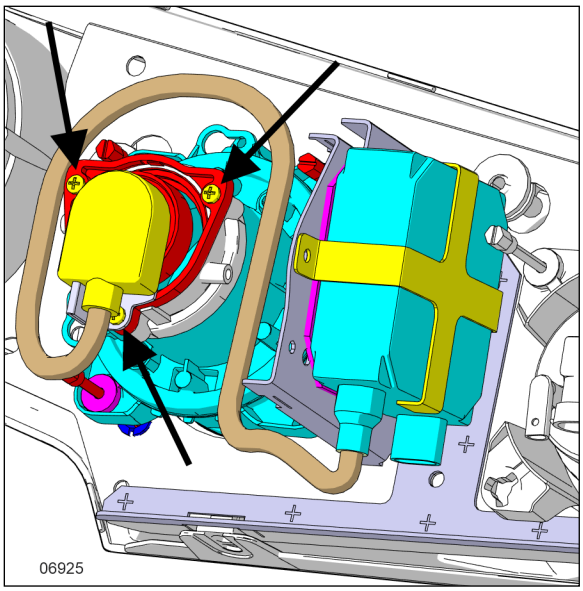


FIGURE 91: XENON HEADLAMP

3. Unscrew the three Phillips head screws (Figure 91) pull the retainer and bulb out.
4. Install the new bulb by reversing the previous steps and make sure the connector stopper is in place (Figure 92). **Make sure the connector is properly connected.**
   - *Make sure to insert the bulb socket perfectly straight.*

- *Make sure the bulb socket is fully turned and locked.*
- *Do not use dielectric grease.*
- *Make sure no stress is created on the connector.*
- Make sure the connector and harness are secured to avoid pin fretting wear.

**CAUTION**

To avoid breaking the bulb, make sure the connector is in proper position against the stop.

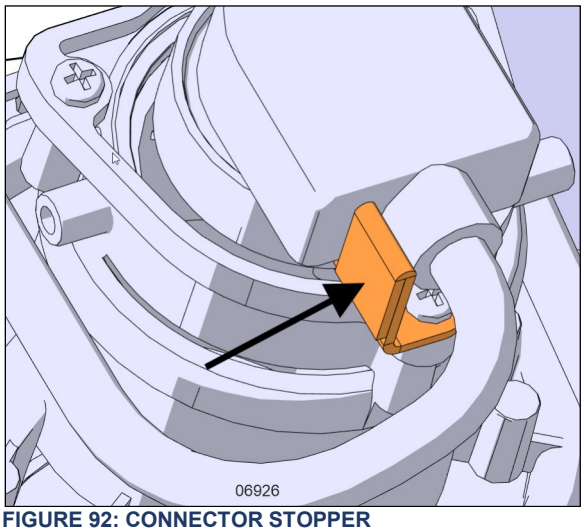


**FIGURE 92: CONNECTOR STOPPER**

**CAUTION**

During this step, DO NOT touch the bulb with the fingers not to alter the bulb life. Hold the bulb by its socket. Avoid any contact with grease.

*NOTE*

*Do not disrupt headlamp adjustment screws.*

**CAUTION**

Never connect a voltmeter or V.O.M. to measure bulb voltage as the instrument will be destroyed.

**Troubleshooting and Safety**

When switching on the Xenon headlamp using the rocker switch, a lamp short-circuit test is performed.

Current is detected in the lamp circuit before the ignition time and ignition prevented. Connection of the "hot" lamp to the body mass also prevents ignition. In both cases, the system is cut off within < 0.2 s and can only be restarted via the rocker switch.

In general, the maximum ignition time is < 0.2 s, which period is followed by cutoff. This would happen if a lamp was defected.

Lamp missing: system is cut off after < 0.2 s.

If lamp components or cables are damaged by force (accident) so that contact with hazardous parts is possible, the current in these lines is earthed by the vehicle body and - as with a defective household appliance - switched off when 30 mA are reached within < 0.2 s. the cutoff time is shortened by a more powerful defect current.

To protect the ballast, a counter in the electronic safety system ensures that a defective lamp can only be switched off 7 times consecutively after a successful ignition, after which the device is cut off. This prevents flutter and flashing. This counter is put out of action when the lamp cutoff time repetition interval is longer than 1.3 s so that temporary non-defect disturbances that result in immediate invisible re-ignition do not cause lamp cutoff.

A warning notice on the lamp plug makes you aware of the fact that the lamp is operated in this system on a higher voltage (you should therefore switch off the lamp before working on this part).

After taking out the lamp, the contact pins are in a practically idle state (< 34 Volt) after < 0.5 seconds so that there is no immediate danger of electric shock even if the warning is disregarded.

With this safety concept there is no danger to check the ballast with a new bulb. There is a very high probability that the ballast is OK if the ballast can ignite the bulb.

One simple test to check the ballast would be to measure the nominal current of 1.58 A after one minute for the 24V ballast.

## 16.2 H3 SERIES HEADLAMP MODULE

### 16.2.1 Maintenance

Clean headlamps with soap and water.

### 16.2.2 Headlamp Module Replacement

The following illustrations show how to remove and replace the headlamp module.

1. First, make sure the ignition switch and light switch are off.
2. Pull on the reclining bumper opening handle located inside the front electrical and service compartment.
3. Unplug the connector (Figure 94).

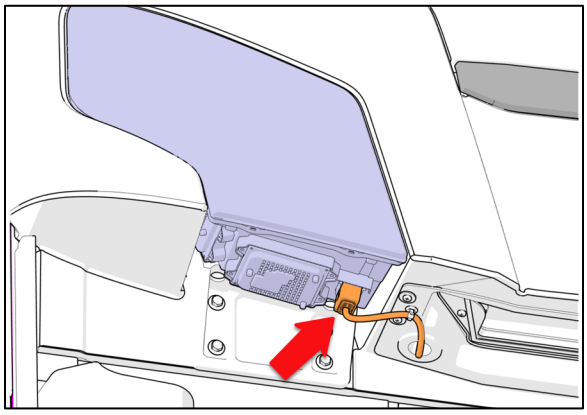

FIGURE 93

4. Unscrew and remove four (4) bolts and washers.

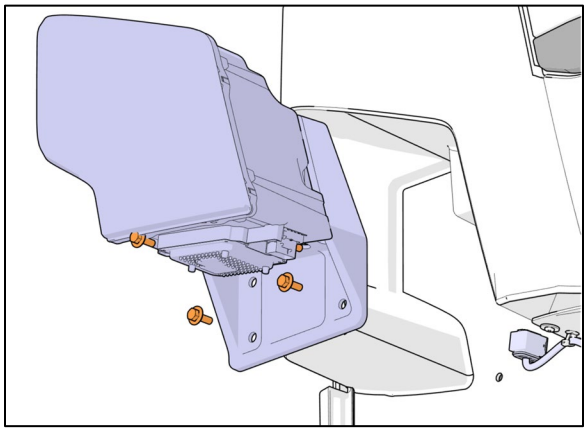

FIGURE 94

5. Unscrew six (6) nuts (Figure 95) and separate the headlamp module from the support.

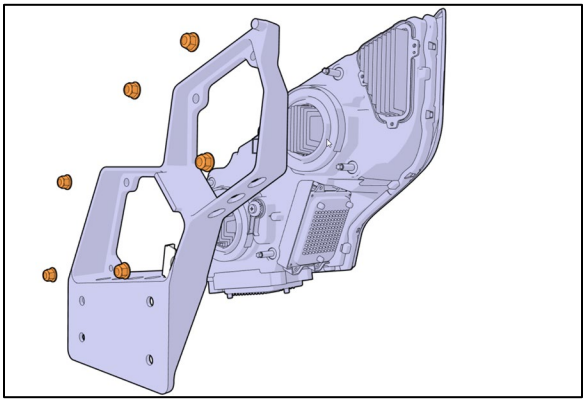

FIGURE 95

6. Mount the new headlamp module to the support. Tighten the six (6) nuts by hand only.
7. Perform final nut tightening in accordance with the tightening sequence (Figure 97).

**TORQUE: 14 lb-ft (6x)**

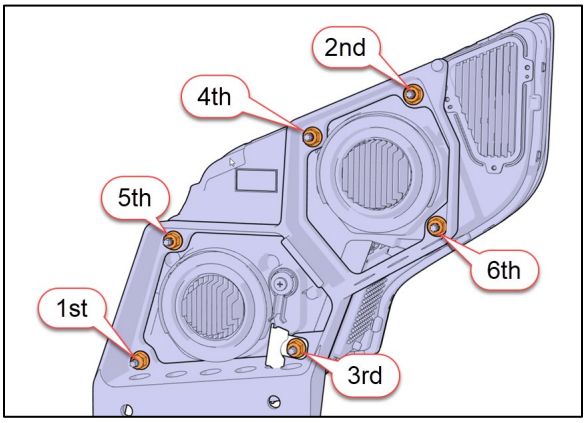


FIGURE 96

8. Reinstall the headlamp module and support assembly. Tighten the four (4) bolts by hand.

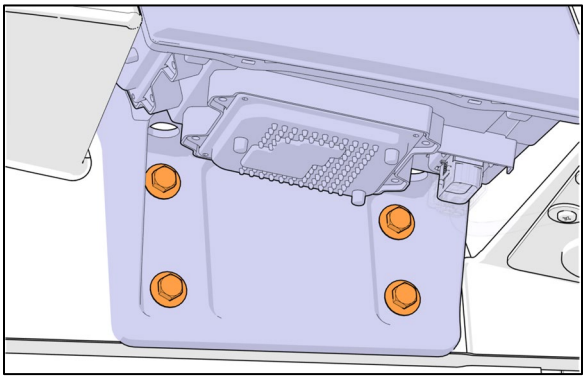

FIGURE 97

9. With the bolts slightly tighten, center the headlight module in the opening to distribute the play evenly on each side (Figure 99).

| REF | VALUE | TOLERANCE |
|---|---|---|

| | | |
|---|---|---|
| A play | centered | ± 1.5 mm |
| B straightness | 0 mm | ± 3 mm |

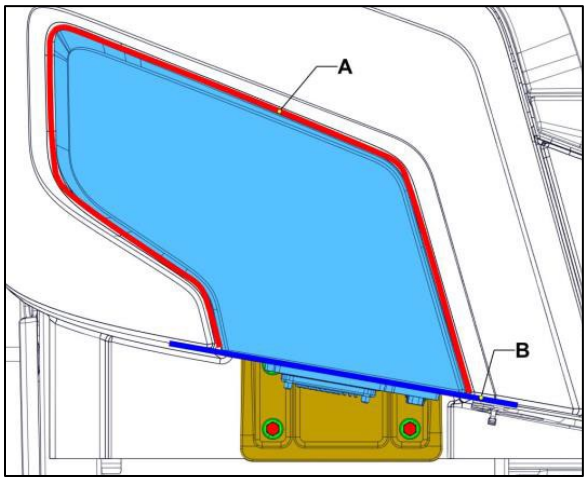


FIGURE 98

10. Apply final torque to the four (4) bolts in accordance with the tightening sequence (Figure 100).

**TORQUE: 14 lb-ft (4x)**

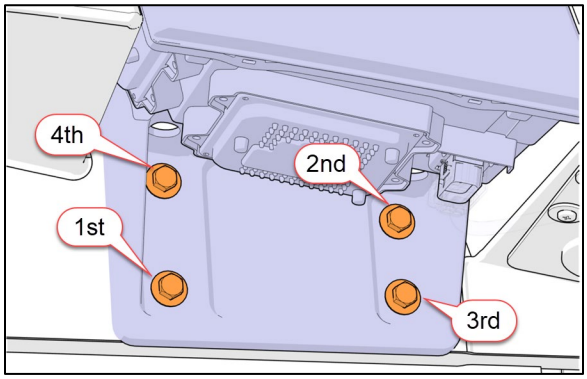


FIGURE 99

11. Plug the connector.

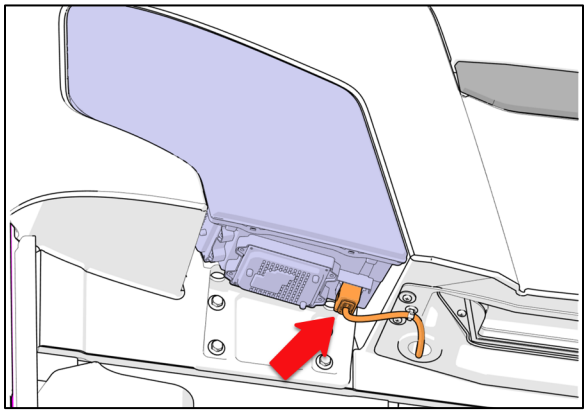

FIGURE 100

**NOTE**

*Do not disrupt headlamp adjustment screws.*

16.2.3 Headlamps Vertical Aiming

Aiming is not necessary after replacing the headlamp module as it is preadjusted.

If it ever becomes necessary, the vertical orientation of the two headlights is carried out by a rotating adjuster which, using a Phillips screwdriver, rotates all the headlamps in the headlamp module (Figure 102).

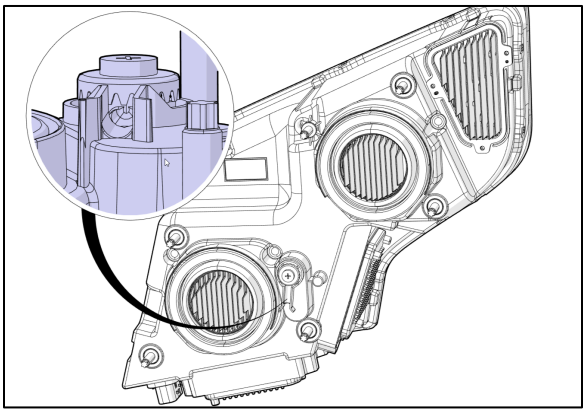

FIGURE 101: VERTICAL AIMING

16.3 HEADLAMP ADJUSTMENT

1. Headlamp aiming and inspection can be accomplished by visual means. This is done on a screen located at a distance of 25 feet (7,6 m) of the headlamps. It should be of adequate size with a matte-white surface well shaded from extraneous light and properly adjusted to the floor area on which the vehicle stands. Provisions should be made for moving the screen or its vertical centerline so that it can be aligned with the vehicle axis. In addition to the vertical centerline, the screen should be provided with four laterally adjustable vertical tapes and two vertically adjustable horizontal tapes.
2. The four movable vertical tapes should be located on the screen at the left and right limits called for in the specification with reference to centerlines ahead of each headlamps assembly.

The headlamp centerlines shall be spaced either side of the fixed centerline on the screen by ½ the lateral distance between the light source centers of the pertinent headlamps. The horizontal tapes

should be located on the screen at the upper and lower limits called for in the specification with reference to the height of beam centers and the plane on which the vehicle rests, not the floor on which the screen rests.

**TABLE 1 – VERTICAL BEAM AIM GUIDELINES**

| Headlamp (centerline) Mounting Height | Nominal Vertical Aim | Aim Inspection Limits for Vertical Aim |
|---|---|---|
| 56 to 90 cm (22 to 36 inch) | 0 Vertical | 10 cm (4 inch) up to 10 cm ( 4 inch) down |
| 90 to 120 cm (36 to 48 inch) | 5 cm (2 inch) down | 5 cm (2 inch) up to 15 cm (6 inch) down |
| 120 to 140 cm (48 to 54 inch) | 10 cm (4 inch) down | 4 cm (1.5 inch) up to 16.5 cm (6.5 inch) down |

3. The nominal vertical aim position on lower beam headlamps shall be adjusted based on the headlamp mounting height, from the ground to the light source center of the headlamp, according to table1.
4. High beam headlamps are aimed so that the center of the high-intensity zone is located at the horizontal and straight ahead vertically (Figure 104).
5. Low beam headlamps are aimed so that the top edge (the cutoff) of the high-intensity zone is at the vertical location as per Table 1 and the left edge of the high-intensity zone is at the vertical centerline of the headlamp (Figure 105).

**NOTE**

**HIGH INTENSITY ZONE**

The brightest observable portion of a beam pattern viewed on an aiming screen or wall. This hot spot is typically located at or near the center of the beam and may not be readily observable in all beam patterns.

6. The inspection limits for high-beam headlamps shall be with the center of the high-intensity zone from 10 cm (4 in) up to 10 cm (4 in) down; and, from 10 cm (4 in) left to 10 cm (4 in) right on a screen at 7.6 m (25 ft) (Figure 106).

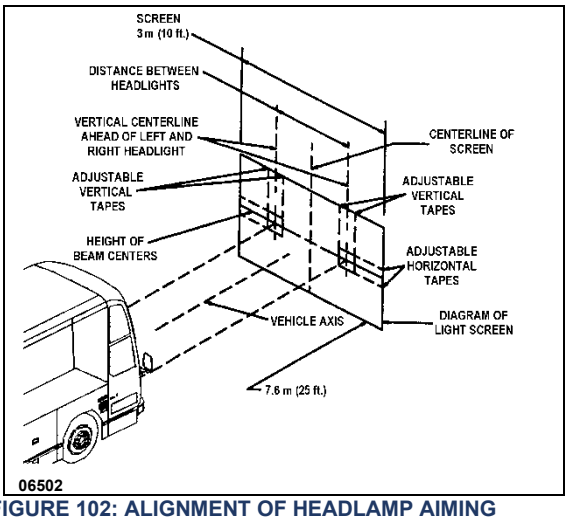


**FIGURE 102: ALIGNMENT OF HEADLAMP AIMING SCREEN**

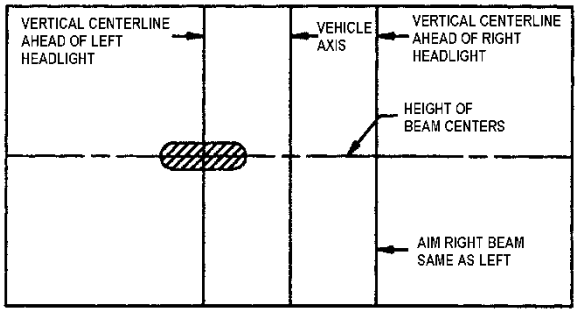


**FIGURE 103: UPPER BEAM HIGH-INTENSITY ZONE PROPER LOCATION ON SCREEN** 06503

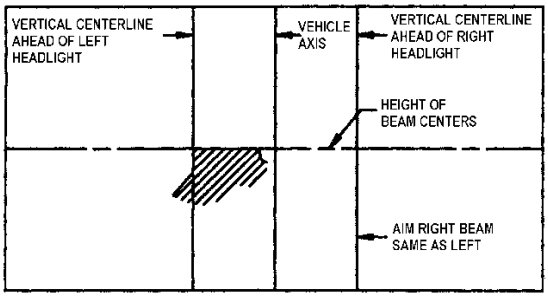


**FIGURE 104: LOWER BEAM HIGH-INTENSITY ZONE PROPER LOCATION ON SCREEN**

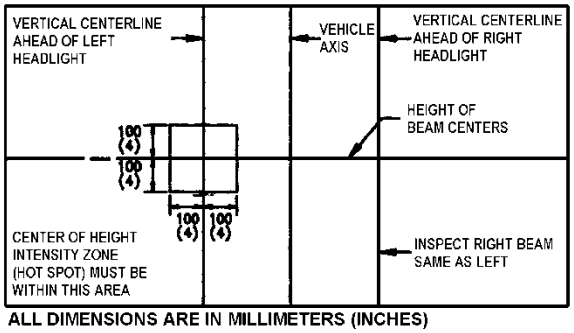


**FIGURE 105: AIM INSPECTION LIMITS FOR UPPER-BEAM HEADLAMPS**

7. The inspection limits in the vertical direction for low-beam headlamps or the low beam of a dual-beam headlamp, shall be as described in Table 1. In the horizontal direction, the left edge of the high-intensity zone shall be located from 10 cm (4 in) left to 10 cm (4 in) right of the vertical centerline of the beam. The viewing screen shall be located 7.6 m (25 ft) in front of the vehicle (Figure 107).

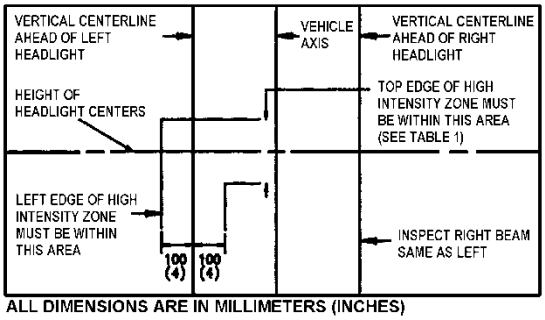


**FIGURE 106: AIM INSPECTION LIMITS FOR LOWER-BEAM HEADLAMPS**

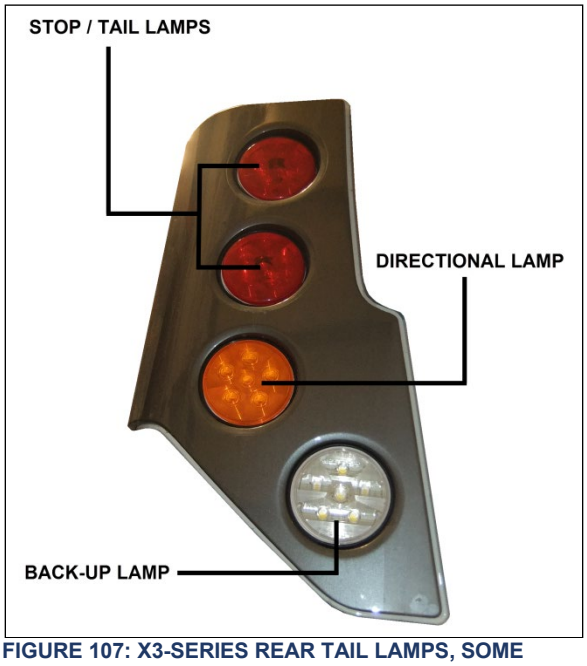


**FIGURE 107: X3-SERIES REAR TAIL LAMPS, SOME VEHICLES MAY HAVE THE DIRECTIONAL LAMP MAY BE MOUNTED ON TOP POSITION**

## 16.4 X3 SERIES STOP, TAIL, DIRECTIONAL, BACK-UP, AND HAZARD WARNING LIGHTS

A combination stoplight, taillight, directional signal light and back-up light assembly is mounted at the rear, on each side of the vehicle. Furthermore, when braking, two center stoplights (LED) and a center high-mounted stop light (CHSL) (LED) will illuminate simultaneously with the stoplights on the sides for increased safety. The L.H. and R.H. side center stop lights are also used as directional signal and marker lights.

The stop, tail, directional signal and back-up lights consist of individual lamps, each equipped with 6 LED lights, mounted together as a module.

LED lights are not replaceable, and each lamp is serviced individually as a complete unit.

The hazard warning flashing system uses the front, side and rear directional lights simultaneously. This system is energized by a switch on the L.H. dashboard.

### 16.4.1 Lamp Removal and Replacement

1. Open engine compartment rear door.
2. Remove the lamp pod from the engine compartment door by unscrewing the Torx hold down screws (4) at the back of the door and the two (2) side retaining nuts.
3. Remove the lamp support retaining screws (2), and then from the outside, disconnect and remove the faulty lamp and its support.
4. From the outside, install the new lamp with its support then fasten the retaining screws.
5. Reinstall the lamp pod on the door and reconnect the lamp.

### 16.4.2 Center Stoplights and Cyclops Light Removal and Replacement

These (LED) lights are sealed unit and should be replaced as an assembly in accordance with the following procedure:

1. Unscrew both “Phillips” light screws then remove the light assembly.
2. Install new light assembly and secure using screws.

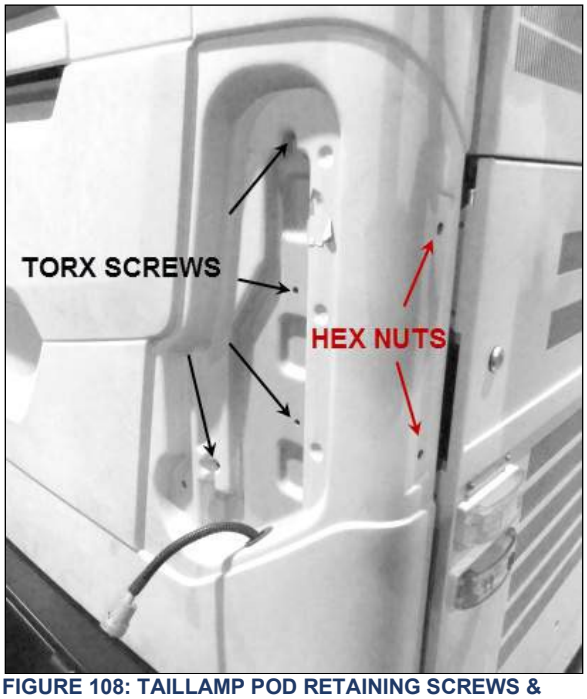


FIGURE 108: TAILLAMP POD RETAINING SCREWS & NUTS

## 16.5 H3 SERIES STOP, TAIL, DIRECTIONAL, BACK-UP, AND HAZARD WARNING LIGHTS

A combination stoplight, taillight, directional signal light and back-up light assembly is mounted at the rear, on each side of the vehicle. Furthermore, when braking, a high-mounted stoplight will illuminate simultaneously with the stoplights on the sides for increased safety.

The stop and tail lights are combined in the same 6-LED lamp. The directional signal and license plate lights consist of individual LED lights mounted on the engine rear door, and each light is serviced individually as a complete unit. The back-up light sealed unit uses a regular tungsten bulb.

The hazard warning flashing system uses the front, side and rear directional lights simultaneously. This system is energized by a switch on the L.H. dashboard.



FIGURE 109: H3-SERIES REAR TAIL LAMPS

### 16.5.1 Lamp Removal And Replacement

1. Open engine compartment rear door.
2. Unscrew the lamp support retaining screws (2), and then from the outside, remove the lamp and its support.
3. From the outside, install the new lamp with its support then fasten the retaining screws.

### 16.5.2 High-Mounted Stop Light Removal And Replacement

This vehicle is equipped with a high-mounted stop light (LED). This light is a sealed unit and should be replaced as an assembly in accordance with the following procedure:

1. Unscrew both *"Phillips"* light screws, and then remove the light assembly.
2. Position the new light assembly and install the *"Phillips"* screws.

## 16.6 LICENSE PLATE LIGHT

Two LED units are mounted above the rear license plate(s) of vehicle. In case of burn out, the LED unit must be changed according to the following procedure.

1. Pry out the rubber seal with a small screwdriver. Pull on the LED unit and disconnect it.
2. Reconnect new LED unit, place rubber seal, and press on it until it is seated in position.

## 16.7 CLEARANCE, IDENTIFICATION AND MARKER LIGHTS

The vehicle is equipped with marker, identification and clearance lights (LED). The clearance lights are mounted at each corner of the coach near the top and the identification lights are in the upper center of rear and front sections.

### 16.7.1 Clearance and Identification Lights Removal and Replacement

The rear clearance and identification lights are red and the front ones are amber.

These lights are LED sealed units and should be replaced as an assembly in accordance with the following procedure:

1. Unscrew both *"Phillips"* screws, and then remove the LED unit. Unplug the connectors.

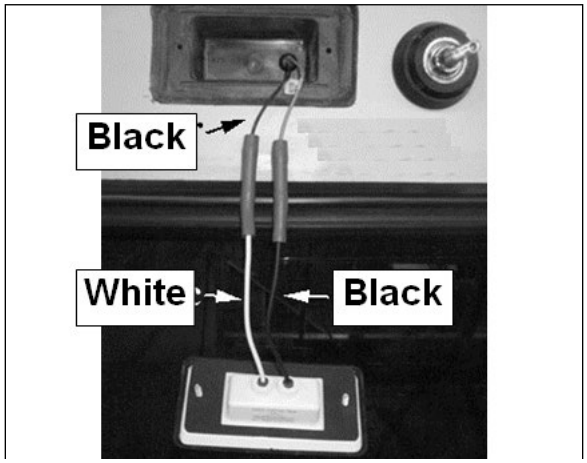


**FIGURE 110: LED SEALED UNIT WIRE CONNECTION**

2. Plug the new unit connectors. Engage the mating parts; push until the connector is fully seated. Turn slightly until you feel a click.
3. Position the new unit and maintain a pressure on the unit to compress the rubber seal. Tighten the "Phillips" screws.



**FIGURE 111: CLEARANCE/IDENTIFICATION LIGHTS**

### 16.7.2 Marker Lights Removal and Replacement

The amber and red marker lights are mounted along the sides of vehicle.

The side marker light is a sealed unit (LED) and should be replaced as an assembly in accordance with the following procedure:

1. Unscrew both *"Phillips"* screws, and then remove the marker light unit. Unplug the connector.
2. Plug the connector to the new marker light unit. Position the new light assembly and tighten the "Phillips" screws (19 lbs-in).

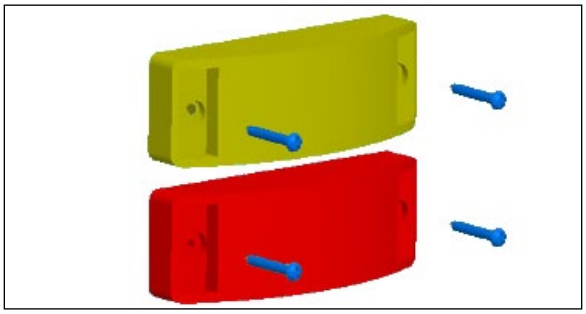

**FIGURE 112: SIDE MARKER AND SIDE DIRECTIONAL LIGHTS**

## 16.8 DOCKING AND CORNERING LIGHTS

This vehicle is provided with two halogen sealed-beam units that serve as cornering lights. They are mounted on the vehicle as follows: one is mounted on the front L.H. side service compartment door, while the other is located between the front wheel and the entrance door on the R.H. side. The main function of these lights is to increase lateral visibility when turning a corner. These lights are energized simultaneously with the directional lights. On the V.I.P. model, a

dashboard-mounted rocker switch may be actuated to cancel this system in special situations.

Two additional halogen sealed-beam units are installed on rear electrical compartment door (R.H.) and radiator door. These lights are used as docking lights and both will illuminate automatically when reverse range is selected to facilitate back-up or docking procedure.

On the V.I.P. model, these lights do not operate automatically when the reverse range is selected, but by means of a dashboard-mounted rocker switch. When actuated, the docking as well as the cornering lights illuminate. Furthermore, a *"Low docking"* switch, also located on dashboard, allows the use of the docking and cornering lights at a lower intensity when the docking switch is actuated.

### 16.8.1 Lamp Removal And Replacement

Both docking and cornering sealed-beam units can be changed in accordance with the following procedure:

1. Remove the two "Phillips" screws attaching the retaining ring.
2. Disconnect the light unit connection.
3. Remove the lamp.
4. Position new lamp.
5. Connect and position the light unit.
6. Finally, install the retaining ring and screw.

## 16.9 FOG LIGHTS

Optional fog lights can be mounted on the vehicle to give the driver better visibility in foggy weather, or to improve the range of vision just ahead of the coach.

### 16.9.1 H3 models Fog light removal and Replacement

1. Lower the bumper by pulling the release handle located in the front electrical and service compartment.
2. Disconnect the wiring and cut the cable ties.
3. Remove the screws that supports the fog light subassembly on the bumper support (Figure 114).

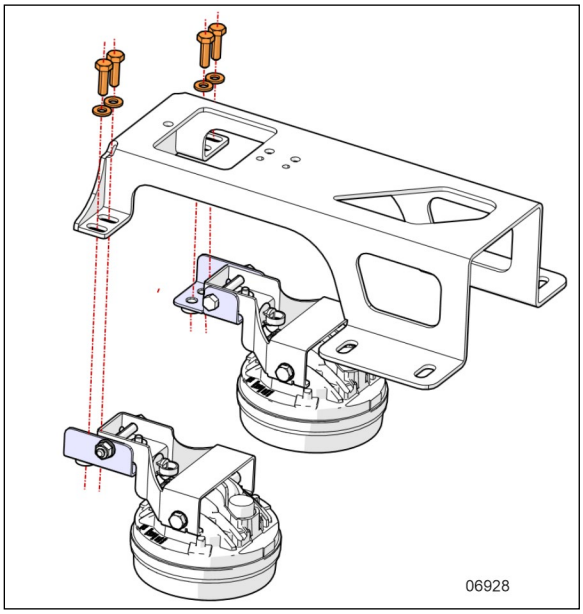


FIGURE 113: FOG LIGHT SUBASSEMBLY DISMOUNT

4. Remove the screws (2) that supports the fog light pod, keep screws and lockwashers.

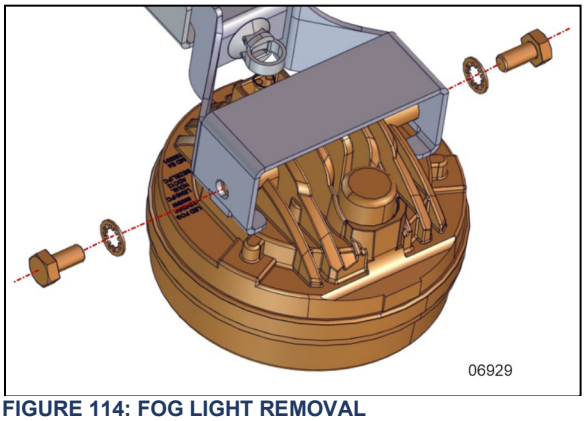


FIGURE 114: FOG LIGHT REMOVAL

5. Discard the defective fog light pod.
6. Install a new cable tie on the fog light support.

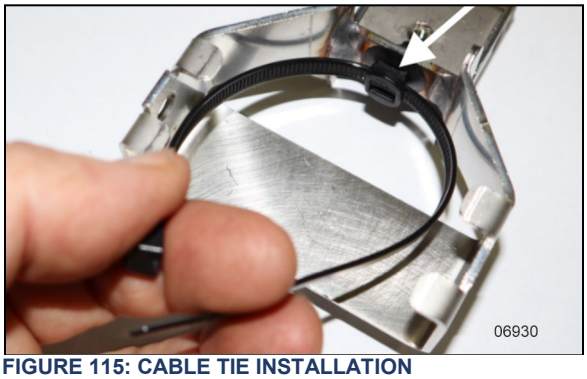


FIGURE 115: CABLE TIE INSTALLATION

7. Install the new fog light pod on the pod support with the existing screws and lockwashers.

Tighten screws to a torque value of 50-60 lb-in (6-7 Nm).




FIGURE 116: FOG LIGHT INSTALLATION

8. Secure the wiring with a cable tie as shown in Figure 117.
9. Reinstall the fog light subassembly on the bumper support.
10. Plug the connector and secure all wiring.
11. Test the fog light.

### 16.9.2 X3 Models Fog Light Removal And Replacement

1. Lower the bumper by pulling the release handle located in the front electrical and service compartment.
2. From the bumper inner side, dismount the screws fixing the fog light subassembly from the bumper.

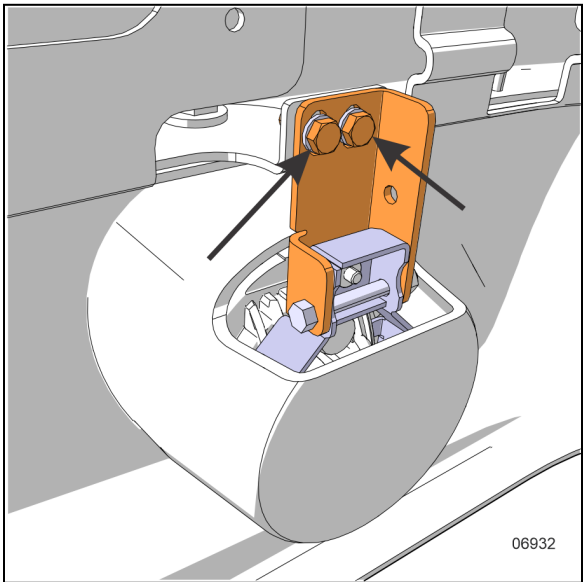


FIGURE 117: FOG LIGHT MOUNTING BOLT

3. Dismount the screws (2) fixing the pod from the fog light support, keep the screws and the lockwashers.

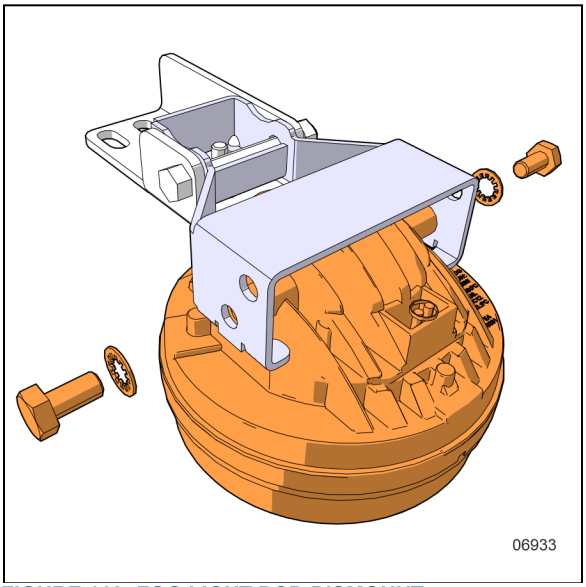


FIGURE 118: FOG LIGHT POD DISMOUNT

4. Install the new fog light pod on the pod support with the existing screws and lockwashers (Figure 119).
5. Tighten screws to a torque value of 50-60 lb-in (6-7 Nm).
6. Reinstall the fog light subassembly on the bumper support.
7. Plug the connector and secure all wiring.
8. Test the fog light.

### 16.10 BAGGAGE COMPARTMENT, MAIN POWER COMPARTMENT LIGHTS

This type of compartment light is a sealed unit (LED) and can be replaced as a complete unit.

It is found in the following locations:

- Baggage compartments
- Main power compartment

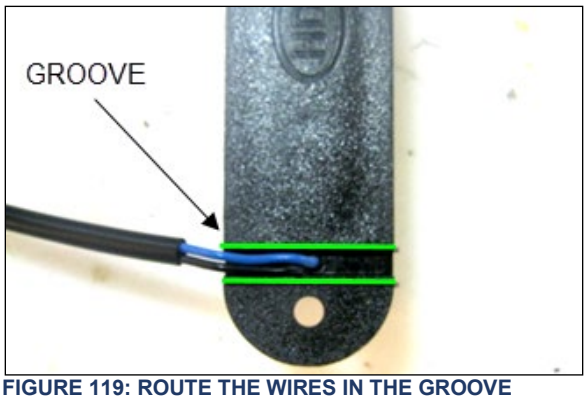


**FIGURE 119: ROUTE THE WIRES IN THE GROOVE UNDER THE SEALED UNIT BODY**

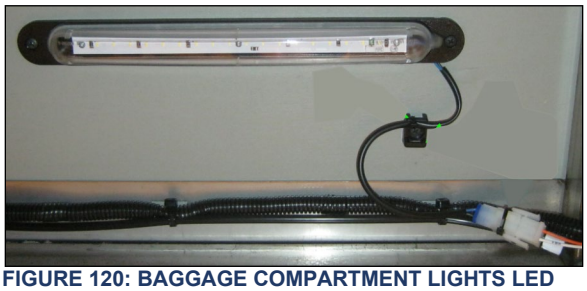

**FIGURE 120: BAGGAGE COMPARTMENT LIGHTS LED SEALED UNIT**

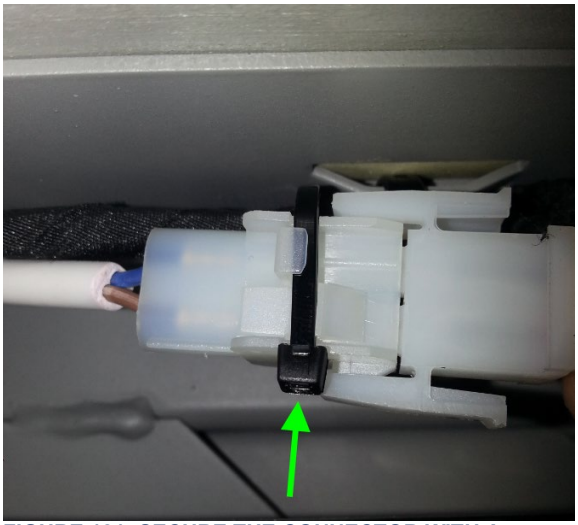

**FIGURE 121: SECURE THE CONNECTOR WITH A NYLON TIE**

### 16.11 ENGINE COMPARTMENT LIGHTING

Three 24-volts LED modules illuminate the engine compartment when the following conditions are met:

1. The engine compartment rear door or curbside door is open.
2. Ignition switch in ON or ACC position.

The light module is sealed thus not serviceable.

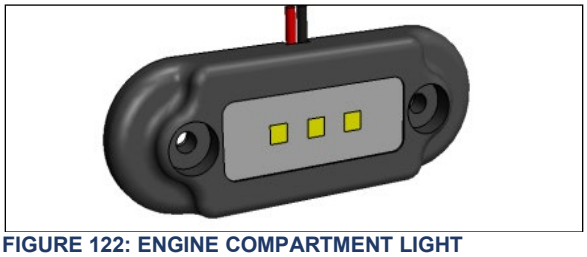

**FIGURE 122: ENGINE COMPARTMENT LIGHT**

## 17. INTERIOR LIGHTING EQUIPMENT

### 17.1 CONTROL PANEL LIGHTING

The instrument gauges and switches mounted on all control panels are energized whenever the exterior light switch is pushed to the first position. A control dimmer located on the dashboard is used to vary the brightness of the panel gauges, switches and indicator lights.

#### 17.1.1 Switch Lighting

1. Slightly pull the switch with a defective LED away from the control panel.
2. Disconnect the electric cable from the switch.
3. To install a new switch, reverse the procedure (Figure 124)

| *NOTE* |
| --- |
| *Switches are lighted by the use of LED. When lighting on a switch fails, replace defective switch as a unit.* |

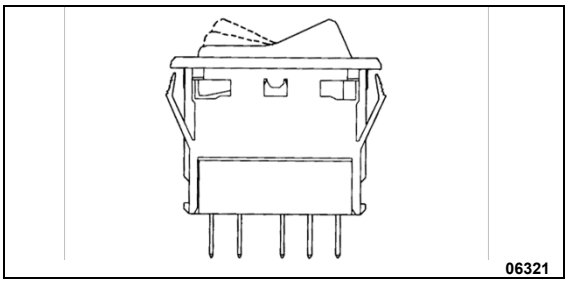


**FIGURE 123: SWITCH**

### 17.1.2 Instrument Cluster Lights

The instrument cluster is non-serviceable and must be replaced as a unit.

## 17.2 X3 SERIES - STEPWELL LIGHTS

Two stepwell lights are illuminated when the door opening system is activated.

### 17.2.1 Bulb Removal and Replacement

Proceed as follows to replace a defective bulb:

1. Unscrew the two Phillips-head screws retaining the lens to the wall, and remove it.
2. With the light lens removed, pull bulb from the lamp while applying lateral pressure.
3. Install the new bulb into the lamp.
4. Position the light lens and install it.

## 17.3 H3 SERIES - STEPWELL LIGHTS

### 17.3.1 Coach Entrance

The stepwell lights are illuminated when the door opening system is activated (**FIGURE 125**).

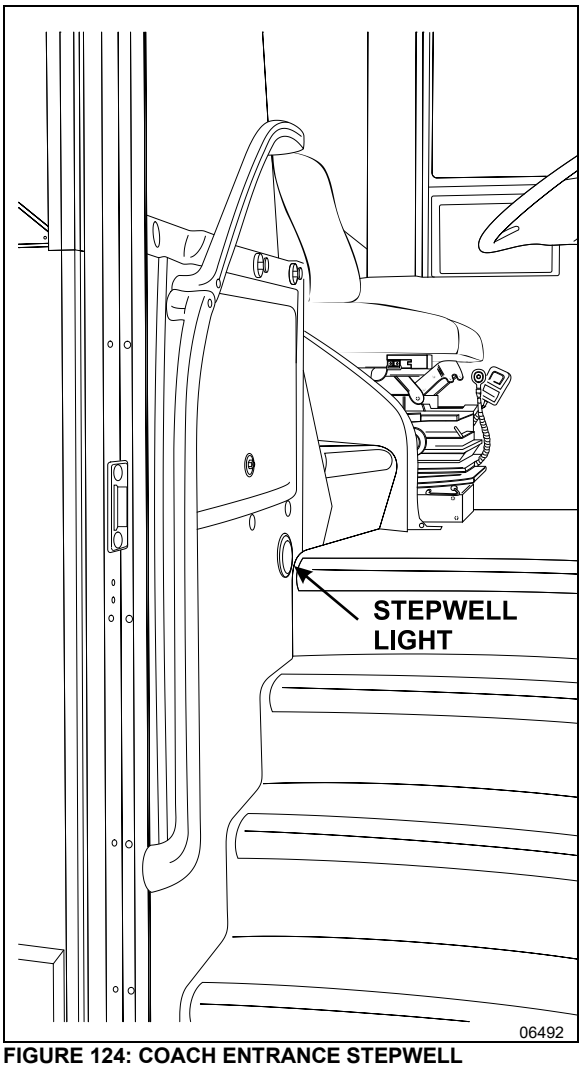


**FIGURE 124: COACH ENTRANCE STEPWELL**

Light Removal and Replacement

1. Unsnap the lamp outer ring and remove it.
2. Unfasten the three fixing screws, remove and disconnect LED light assembly.
3. Connect and install the new LED assembly in position.
4. Fasten the three fixing screws and replace the lamp outer ring by snapping it back in place.

### 17.3.2 VIP Entrance

The stepwell light is illuminated when the door opening system is activated (**FIGURE 126**).

Bulb Removal And Replacement

Proceed as follows to replace defective bulb:

1. Unscrew the two Phillips-head screws retaining the lens to the wall, and remove it.
2. With the light lens removed, pull bulb from the lamp while applying lateral pressure.
3. Install the new bulb into the lamp.
4. Position the light lens and install it.

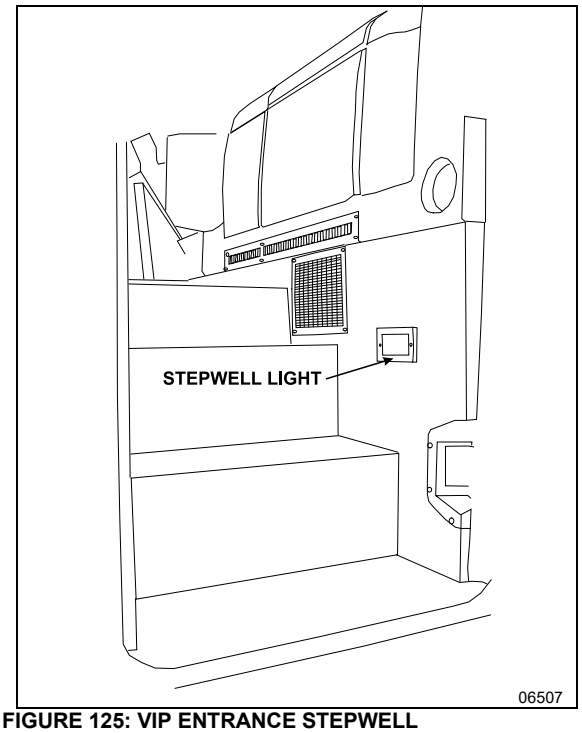


**FIGURE 125: VIP ENTRANCE STEPWELL**

## 17.4 DRIVER'S AREA CEILING LIGHTS

One halogen ceiling light is installed over the stepwell and another one is installed over the driver's area. These lights are frequently used for night-time operation when passengers board or leave coach.



**FIGURE 126: DRIVER'S AREA CEILING LIGHT**

### 17.4.1 Bulb Removal and Replacement

1. Pull the lamp assembly by the outer ring using your fingers.
2. Pull the defective bulb out of the socket.
3. Install the new bulb by pushing it in position.
4. Replace the lamp by snapping it back in place.

> **CAUTION**
>
> Do not touch halogen bulbs with bare hands as natural oils on skin will shorten bulb life span.

## 17.5 PASSENGER SECTION LIGHTING

The passenger section of coach is lit by two types LED strips installed on the overhead compartments. The aisle or *indirect lights* are located on front of overhead compartments, and provide soft, indirect cabin lighting and overhead compartment interior lighting.

More powerful lighting is provided by LED strips located under the overhead compartments, close to the windows. 24 volt power is available for this lighting. In order to save batteries during extended periods, the battery charger can be connected prior use.

Moreover, adjustable reading lamps are installed under the overhead compartments for passenger accommodation.

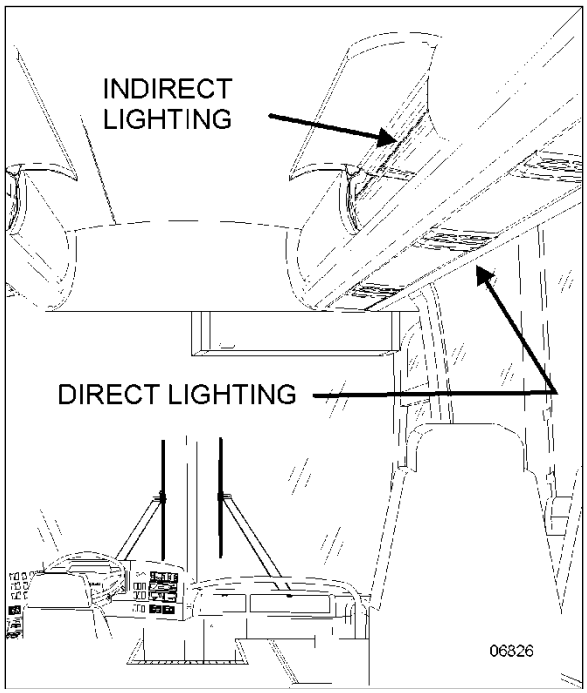


FIGURE 127: OVERHEAD COMPARTMENT LIGHTING

17.5.1 LED Indirect Lighting / Overhead compartment Interior Lighting

1. Open the overhead compartment access door.
2. Using a Phillips head screwdriver, unscrew and remove the existing LED strip (FIGURE 129).
3. Install a new LED strip as a complete unit.

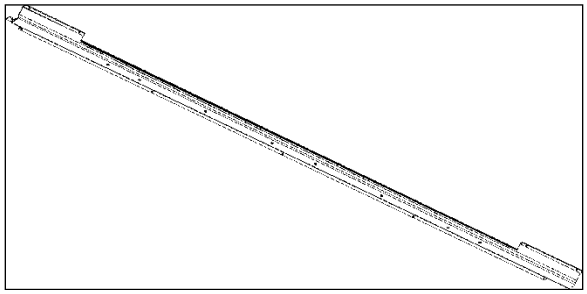

FIGURE 128: LED INDIRECT LIGHTING IN OVERHEAD COMPARTMENT

17.5.2 LED Direct Lighting

1. Start by pulling out the corner of the lens then delicately peeling it out of its seat.
2. Unscrew and remove the LED strip assembly (4 Phillips screws).
3. Install a new LED strip assembly.
4. Replace the screen lens by first inserting one side in the seat, then push the other side in and snap it in place by running it in from one corner to the next.

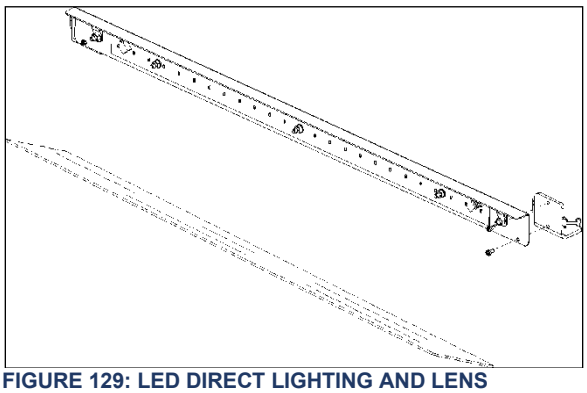

FIGURE 129: LED DIRECT LIGHTING AND LENS

17.5.3 Removal and Replacement of Reading Lamp Bulb

1. Engage the tool (#830164) over the lamp and turn one quarter turn counterclockwise. Then, remove the tool slowly.
2. Pull the bulb socket off the reading lamp unit.
3. Push and turn bulb counterclockwise, then pull it out of the socket.
4. Install new bulb in the socket, then push and turn clockwise to lock bulb in position.
5. Push the bulb socket in the reading lamp unit.
6. Position the reading lamp with the tool (#830164), turn one quarter turn clockwise.

17.6 LAVATORY NIGHT-LIGHT

The lavatory halogen lights are installed on ceiling. A microswitch, mounted in the door exterior frame, is activated by the door lock mechanism upon locking to energize the circuit. This switch is readily serviced by removing the two Phillips-head screws securing the mounting plate to the door exterior frame.

17.6.1 Bulb Removal And Replacement

Proceed as follows to replace defective bulb:

1. Unscrew the two Phillips-head screws retaining the lens to the lavatory wall, and remove it.
2. With the light lens removed, pull bulb from the lamp while applying lateral pressure.

3. Install the new bulb into the lamp.
4. Position the light lens and install it.

## 18. LIGHT BULB DATA

Please, refer to your vehicle Parts Manual for selection of replacement light bulbs.

## 19. SPECIFICATIONS

### AGM Battery

Make..... Volvo
Type ..... Absorbed Glass Mat
Terminal type ..... Top Stud
Group size.....8A31
Volts ..... 12
Load test amperage ..... 400
Reserve capacity (minutes)..... 200

Cold cranking (in amps)
-At 0°F (-18°C).....800 (each battery)

Maximum dimensions (inches/mm)
-Length (including flange)..... 12.93/328
-Width ..... 6.7/169
-Height (including top posts) ..... 9.3/237
-Approximate weight (lbs/kg)..... 61.7/28

### Alternators

Make..... BOSCH
Series .....HD 10
Amperes ..... 150
Volts ..... 28.4
Output Power ..... 3 Kw
Ground ..... negative

Make..... Delco Remy
Series .....55SI
Amperes .....250
Volts .....28.4
Ground ..... negative

### Inverter charger (H3 Series)

Make.....Xantrex
Model.....Freedom XC 1800

### Battery equalizer

Make..... Vanner
Model..... Vann-bus 80-Series
Amperes ..... 100 amps

### Starter

Make..... Mitsubishi Electric Corporation (MELCO)
Type .....105P70
Voltage ..... 24

No-load test
-Volts ..... 23.5
-Max. current draw ..... 125 amperes
-Min. rpm .....3000 rpm

### Starter solenoid

Make..... Mitsubishi Electric Corporation (MELCO)

Pull In Voltage ..... 16 volts max.

# ELECTRICAL CONNECTORS PROTECTION

| PROCEDURE NO SAV00002E | NOVEMBER 2009<br>REVISION 02 |
|---|---|

| Kent Sealer | |
|---|---|
| Sprayed sealer. It is used for structure ground connections. It prevents corrosion and ensures maximum contact. Refer to table for proper use.<br>Apply this product once installation is finished.<br>***Warning**: It is very important to be in a well ventilated area when applying this product.* | <br>680324 |
| **Nyogel Grease** | |
| Grease-type product.<br>It is used to facilitate connectors or terminals insertion.<br>Refer to table for proper use of Nyogel grease.<br>It is preferable to apply Nyogel into the female part of connector.<br>Apply this product as the last assembling operation. | 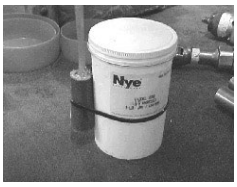<br>3 Oz. tube: 681095<br>Container 500g: 683409 |
| **"Color Guard" black rubber coating** | |
| This product may be applied with a brush.<br>It is used for structure ground connections or other connections that will most likely not be disconnected later on.<br>Apply this product once installation is finished.<br>***Warning** : Wear goggles and rubber gloves.* | <br>684013 |

# Vehicle Zoning

## X3-MTH

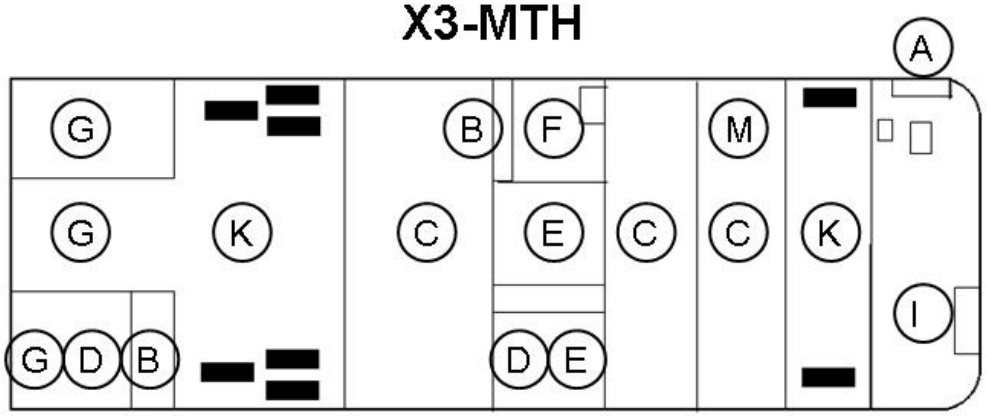


**REAR** **FRONT**

## H3- VIP

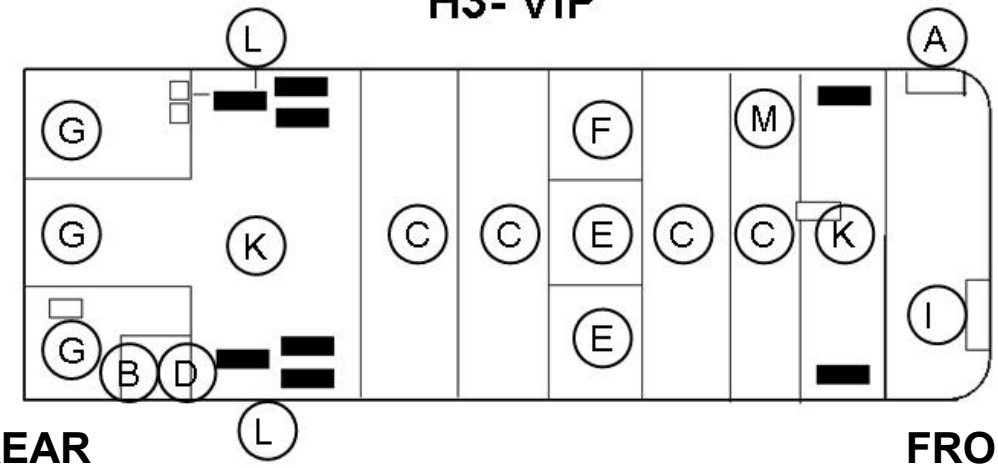


**REAR** **FRONT**

# Electrical Connectors Protection Procedure Table

| Zone | Component | Model | | | | Product | Note |
|---|---|---|---|---|---|---|---|
| | | MTH | X3 | H3 | VIP | | |
| A- Front Elect. Compt | Diode Block | X | X | X | X | Nyogel | Accepted to ease connection |
| A- Front Elect. Compt | Customer Terminal Block | X | X | X | X | Nothing | |
| A Front Elect. Compt | Terminal Block Electronic Ground | X | X | X | X | Kent | |
| A- Front Elect. Compt | Structure Ground | X | X | X | X | Kent | |
| A- Front Elect. Compt | Electronic Module | X | X | X | X | Nothing | |
| A- Front Elect. Compt | VEC Power | X | X | X | X | Nothing | |
| A- Front Elect. Compt | 70A Relay | X | X | X | X | Nyogel | Accepted to ease connection |
| A- Front Elect. Compt | Control Relay | X | X | X | X | Nyogel | Accepted to ease connection |
| A- Front Elect. Compt | All connectors except those specified in this zone | X | X | X | X | Nothing | |
| A- Front Service Compt | All connectors except those specified in this zone | X | X | X | X | Nothing | |
| B- Rear Elect. Compt/panel | Customer Terminal Block | X | X | X | X | Nothing | |
| B- Rear Elect. Compt/panel | Power Terminal Block | | X | | | Nothing | |
| B- Rear Elect. Compt/panel | Circuit Breaker | | X | X | X | Nothing | |
| B- Rear Elect. Compt/panel | Circuit Breaker | X | | | | Kent | Surface only |
| B- Rear Elect. Compt/panel | Volvo Air Heater Fuse | | | X | | Nothing | |
| B- Rear Elect. Compt/panel | Structure Ground | | X | X | X | Kent | |
| B- Rear Elect. Compt/panel | Electronic Module | X | X | X | X | Nothing | |
| B- Rear Elect. Compt/panel | VEC Power | | X | X | X | Nothing | |
| B- Rear Elect. Compt/panel | VEC Power | X | | | | Kent | Surface only |
| B- Rear Elect. Compt/panel | 70A Relay | X | X | X | X | Nyogel | Accepted to ease connection |
| B- Rear Elect. Compt/panel | Master Switch Relay | | X | X | X | Nothing | |
| B- Rear Elect. Compt/panel | Master Switch Relay | X | | | | Kent | Surface only |
| B- Rear Elect. Compt/panel | Control Relay | X | X | X | X | Nyogel | Accepted to ease connection |
| B- Rear Elect. Compt/panel | 200A Power Relay | X | X | X | X | Nothing | |
| B- Rear Elect. Compt/panel | Power Relay Stud | | X | | | Nothing | |
| B- Rear Elect. Compt/panel | All connectors except those specified in this zone | X | X | X | X | Nothing | |
| B- Rear Elect. Compt/panel | Vanner | | | X | X | Kent | |

| Zone | Component | Model | | | | Product | Note |
|---|---|---|---|---|---|---|---|
| | | MTH | X3 | H3 | VIP | | |
| C- Baggage Compt | Structure Ground | X | X | X | X | Color Guard or Kent | |
| C- Baggage Compt | Door Switch | X | X | X | X | Nyogel | Accepted to ease connection |
| C- Baggage Compt | Door lock Actuator Module (switch and solenoid) | X | X | X | X | Nyogel | Accepted to ease connection |
| C- Baggage Compt | Electronic Module | X | X | X | X | Nothing | |
| C- Baggage Compt | Slide-out Motor | X | | | X | Nyogel | Accepted to ease connection |
| C- Baggage Compt | WCL Junction Panel | | X | X | | Nothing | |
| C- Baggage Compt | 120V Inverter Connector | X | X | X | X | Nothing | |
| C- Baggage Compt | Stud inverter | | X | X | | Color Guard or Kent | |
| C- Baggage Compt | WCL Remote Control | | X | X | | Nyogel | Accepted to ease connection |
| C- Baggage Compt | All connectors except those specified in this zone | X | X | X | X | Nothing | |
| D- Battery Compt | Battery terminals | X | X | X | X | Nyogel | |
| D- Battery Compt | Structure Ground | X | X | | | Color Guard or Kent | |
| D- Battery Compt | Electronic Module | X | X | X | X | Nothing | |
| D- Battery Compt | All connectors except those specified in this zone | X | X | X | X | Nothing | |
| D- Battery Compt | Battery Equalizer | X | X | | | Kent | |
| E- Condenser Compt | Fuel sender | X | X | X | X | Kent | |
| E- Condenser Compt | Structure Ground | X | X | X | X | Color Guard or Kent | |
| E- Condenser Compt | Door Switch | X | X | X | X | Nyogel | Accepted to ease connection |
| E- Condenser Compt | Condenser Motor | X | X | X | X | Nothing | |
| F- Evaporator Compt | Diode Block | X | | X | X | Nyogel | Accepted to ease connection |
| F- Evaporator Compt | Structure Ground | X | X | X | X | Color Guard or Kent | |
| F- Evaporator Compt | Electronic Module | X | | X | X | Nothing | |
| F- Evaporator Compt | Evaporator Motor | X | X | X | X | Color Guard or Kent | |
| F- Evaporator Compt | 200A Power Relay | X | | X | X | Nothing | |
| F- Evaporator Compt | All connectors except those specified in this zone | X | | X | X | Nothing | |

| Zone | Component | Model | | | | Product | Note |
|---|---|---|---|---|---|---|---|
| | | MTH | X3 | H3 | VIP | | |
| G- Engine Compt | Alternator | X | X | X | X | Color Guard | |
| G- Engine Compt | Booster Block (+) | | X | X | X | Color Guard | |
| G- Engine Compt | Starter Terminal | X | X | X | X | Color Guard | |
| G- Engine Compt | Volvo Air Element Terminal | X | X | X | X | Color Guard | |
| G- Engine Compt | Customer Terminal Block | X | | | | Nothing | |
| G- Engine Compt | Power Terminal Block | | X | | | Color Guard | |
| G- Engine Compt | Breaker | X | | | | Kent | |
| G- Engine Compt | Air Heater Fuse & Relay | X | X | | | Nyogel | Accepted here |
| G- Engine Compt | Engine Ground | X | X | X | X | Color Guard | |
| G- Engine Compt | Structure Ground | X | X | X | X | Color Guard | |
| G- Engine Compt | VEC Power | X | | | | Kent | |
| G- Engine Compt | Master Switch Relay | X | | | | Kent | |
| G- Engine Compt | Starter Relay | X | X | | | Color Guard | |
| G- Engine Compt | All connectors except those specified in this zone | X | X | X | X | Nothing | |
| H- Vehicle Exterior | ABS Sensor | X | X | X | X | Nothing | |
| H- Vehicle Exterior | Docking & Cornering Lamps | X | X | X | X | Nyogel | Accepted to ease connection |
| H- Vehicle Exterior | Marker Light | X | X | X | X | Nothing | |
| H- Vehicle Exterior | Mirror | X | X | X | X | Nothing | |
| H- Vehicle Exterior | Light Module | X | X | X | X | Nothing | |
| H- Vehicle Exterior | Stop light, Backup light, Directional Signal Light | X | X | X | X | Nothing | |
| I- Vehicle Interior | Diode Block | X | X | X | X | Nyogel | Accepted to ease connection |
| I- Vehicle Interior | Junction Block | | X | X | | Nothing | |
| I- Vehicle Interior | A3 & A4 Transmission Retarder Hand lever | X | X | X | X | Nyogel | Accepted to ease connection |
| I- Vehicle Interior | C258 & C259 Multi-function Lever Connector | X | X | X | X | Nyogel | Accepted to ease connection |
| I- Vehicle Interior | Audio - video Connection | | X | X | | Nothing | |
| I- Vehicle Interior | Defrost Compt Ground | X | X | X | X | Kent | |
| I- Vehicle Interior | Video Plate Direct Ground | | X | X | | Nothing | |
| I- Vehicle Interior | Structure Ground | | X | X | | Kent | |
| I- Vehicle Interior | Terminal Block Ground | | X | X | | Nothing | |

| Zone | Component | Model | | | | Product | Note |
|---|---|---|---|---|---|---|---|
| | | MTH | X3 | H3 | VIP | | |
| I- Vehicle Interior | Dashboard Switch | X | X | X | X | Nothing | |
| I- Vehicle Interior | Electronic Module | X | X | X | X | Nothing | |
| I- Vehicle Interior | Slide-out Motor | X | | | X | Nyogel | Accepted to ease connection |
| I- Vehicle Interior | Wiper Motor | X | X | X | X | Nyogel | Accepted to ease connection |
| I- Vehicle Interior | 200A Power Relay | X | X | X | X | Nothing | |
| I- Vehicle Interior | 70A Relay | X | X | X | X | Nyogel | Accepted to ease connection |
| I- Vehicle Interior | Control Relay | X | X | X | X | Nyogel | Accepted to ease connection |
| I- Vehicle Interior | All connectors except those specified in this zone | X | X | X | X | Nothing | |
| I- Vehicle Interior | All components except those specified in this zone | X | X | X | X | Nothing | |
| K- Front & Rear Wheelhousing | All connectors except those specified in this zone | X | X | X | X | Nothing | |
| K- Front & Rear Wheelhousing | All components except those specified in this zone | X | X | X | X | Nothing | |
| L- Compartment above rear wheelhousing | All connectors except those specified in this zone | | | X | X | Nothing | |
| L- Compartment above rear wheelhousing | All components except those specified in this zone | | | X | X | Nothing | |
| M- Slide-out Panel | All connectors except those specified in this zone | X | | | X | Nothing | |
| M- Slide-out Panel | All components except those specified in this zone | X | | | X | Nothing | |
| | | | | | | | |
| | | | | | | | |
| | | | | | | | |
| | | | | | | | |

# MAINTENANCE INFORMATION

**MI15-24B**

| | | |
|---|---|---|
| DATE : | MAY 2015 | SECTION: 06 - Electrical |
| SUBJECT : | **POWER CABLES INSPECTION GUIDELINES** | |

Revision: B Added: Power cables for L.H. side alternator & fan drive breaker box
March 25, 2020

## APPLICATION

| Model | VIN  |
|---|---|
| All Prevost models | |

## DESCRIPTION

It is important to carry out a regular inspection of the vehicle power cables. Power cables in poor condition can be the cause of failures and serious damage in the engine compartment.

*Please note that some images in this document may represent arrangements different from those found on vehicles of former generations. However, inspection criteria and points to check presented in this document remain applicable in essence for all models of Prevost vehicles.*

| POWER CABLES MAINTENANCE SCHEDULE | |
|---|---|
| **DESCRIPTION** | **INTERVAL** |
| Perform power cables inspection | Every 3 months |

## POWER CABLES

– The power cables are those through which flow the highest currents. These cables are those with the largest electrical conductor diameters on the vehicle.

– The power cables are 1/0, 2/0, 3/0 wire gauges respectively Ø0.325in, Ø0.365in, Ø0.409in.

*Note: not to be confused with the 1, 2, 3 wire gauges that are actually smaller.*

– There are power cables at the following locations:

- On the **<u>alternators positive (+) stud terminal</u>** and from there, up to junction block in the electrical compartment (Figure 1 to **Erreur ! Source du renvoi introuvable.**5).

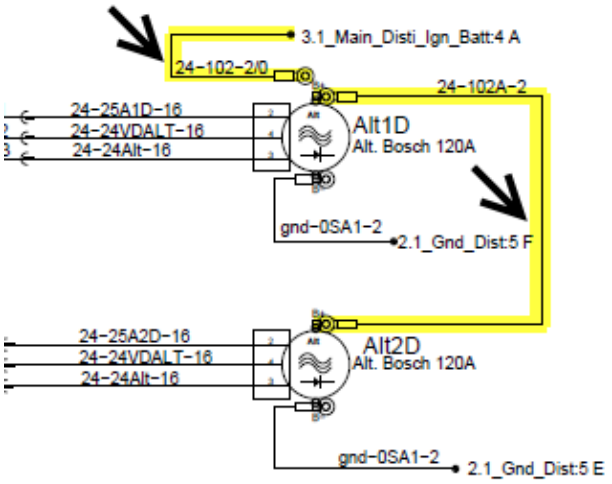


Figure 1 – R.H. SIDE ALTERNATORS (2x BOSCH)
MECHANICAL COOLING FAN DRIVE CONFIGURATION

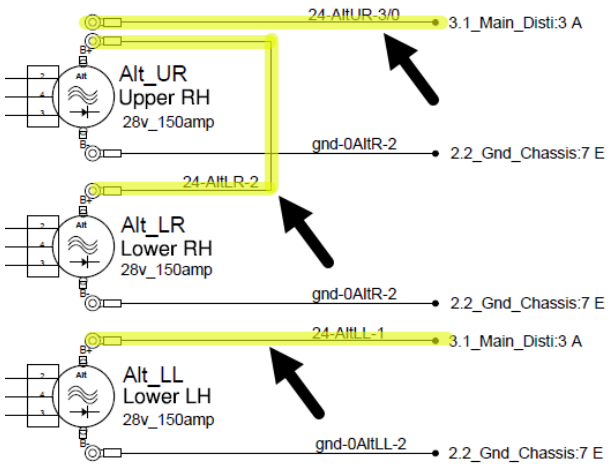


Figure 2 – L.H. + R.H. SIDE ALTERNATORS (3x BOSCH)
ELECTRIC FAN DRIVE CONFIGURATION

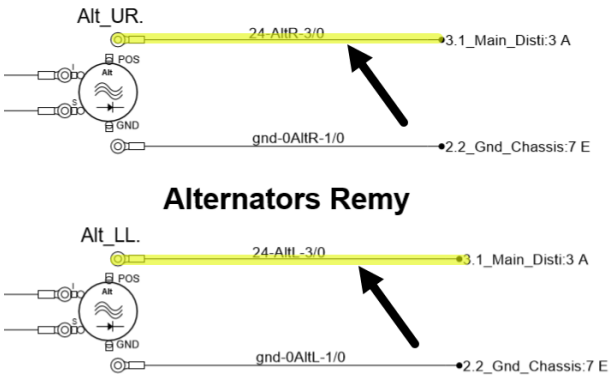


Figure 3 – R.H. + L.H. SIDE ALTERNATORS (2x DelcoRemy)

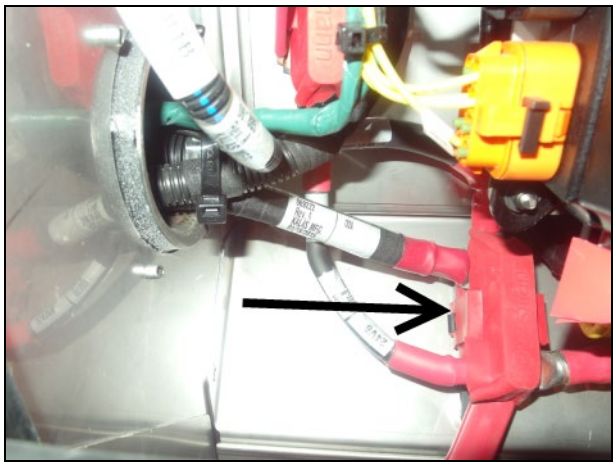

Figure 4: Bussman Junction Block - X3 Series.



Figure 5: Bussman Junction Block - H3 Series.

- On the **<u>starter positive (+) stud terminals</u>** and from there, up to Bussman junction block in the electrical compartment (Figure 6, Figure 7).

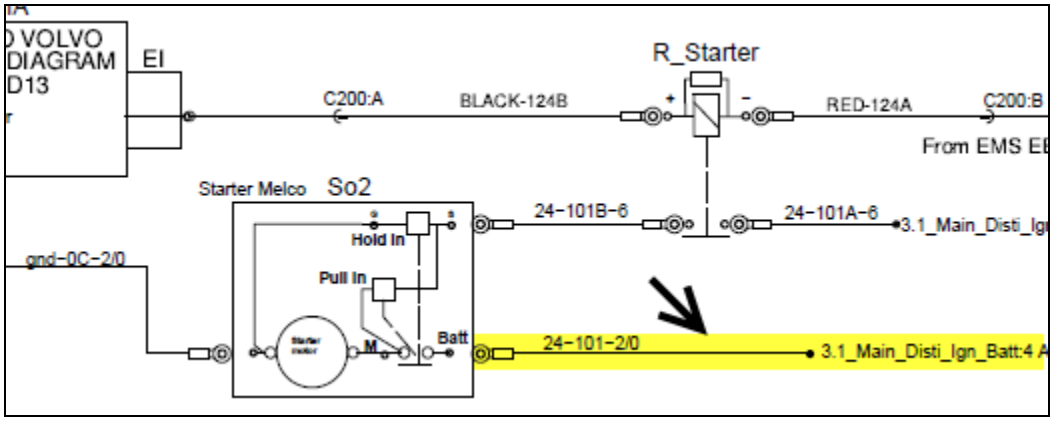


Figure 6

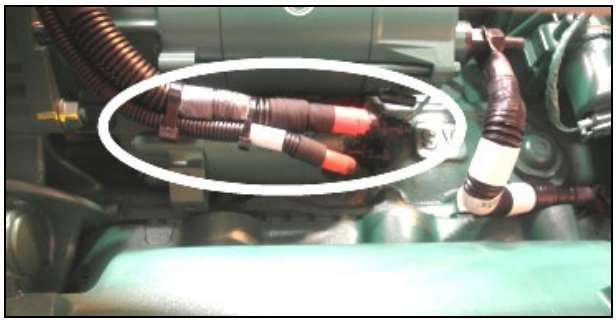

Figure 7: starter cables

- In the electrical compartment, **<u>connected to the junction block</u>** (Figure 8).

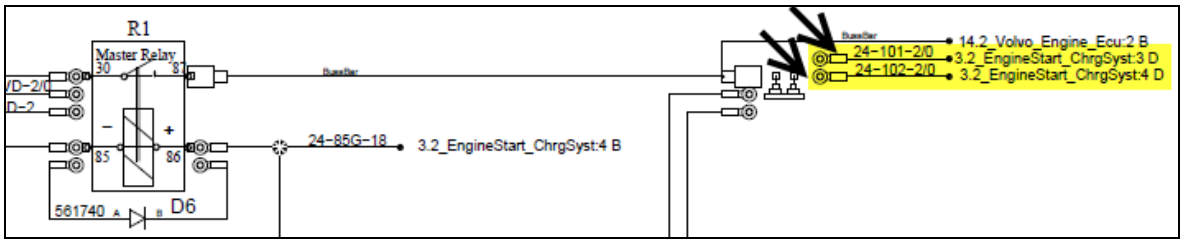


Figure 8

- In the **<u>battery compartment</u>** between **<u>battery and master relay R1</u>** (Figure 9).

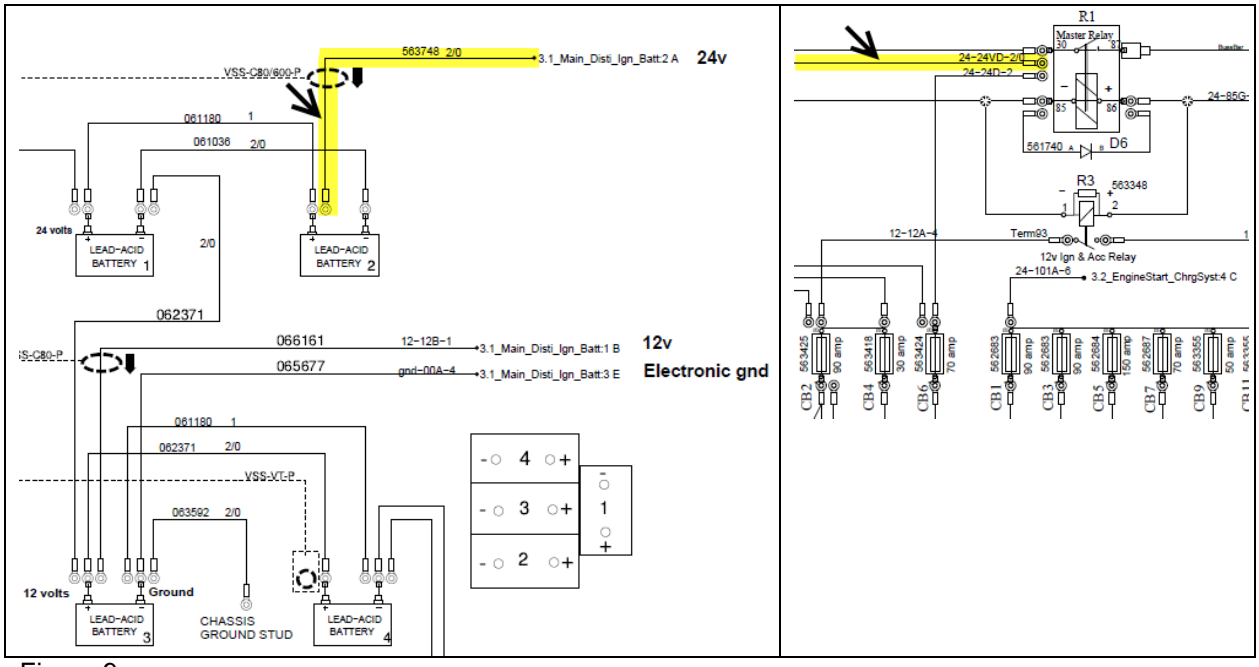


Figure 9

- Between **Bussman junction block** and **main circuit breaker bus bar** (Figure 10 & Figure 11).

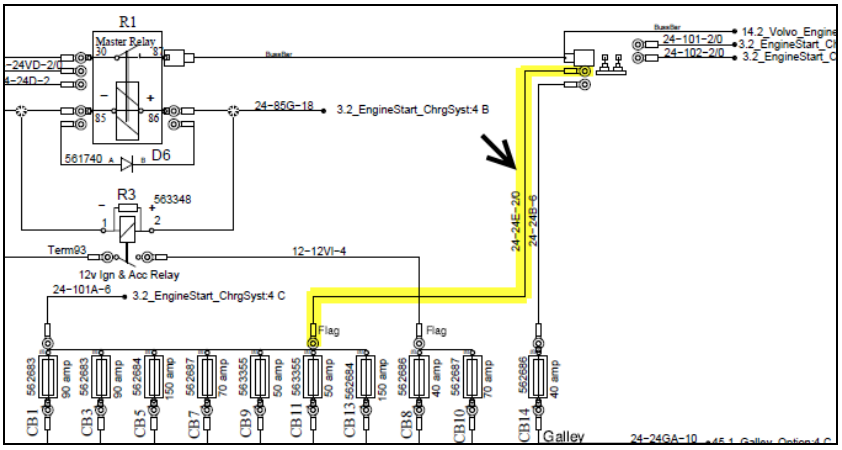

Figure 10

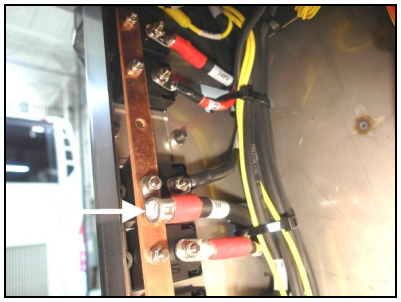
Figure 11: Power cable on main circuit breakers' bus bar.

- From the electric fan drive breaker box up to fuse F199 in main power compartment (Figure 12)

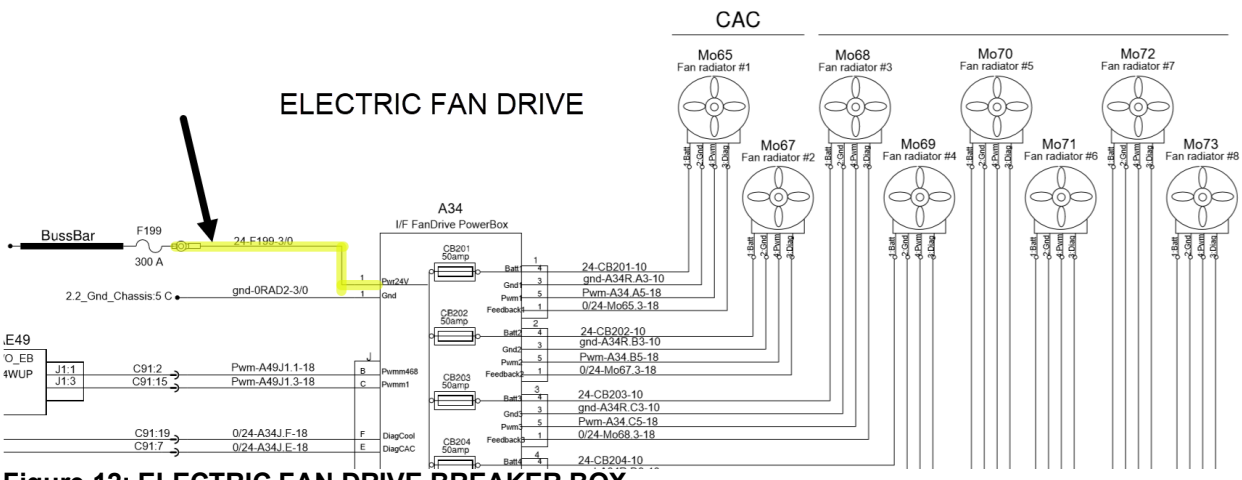

**Figure 12: ELECTRIC FAN DRIVE BREAKER BOX**

## PROCEDURE

**DANGER**

Park vehicle safely, apply parking brake, stop engine. Prior to working on the vehicle, set the ignition switch to the OFF position and trip the main circuit breakers equipped with a trip button. On Commuter type vehicles, set the battery master switch (master cut-out) to the OFF position.

## POWER CABLES GENERAL INSPECTION CRITERIA

1. **Make sure that the power cables are properly secured with appropriate fasteners so that they do not move. Movement of the cables can cause wear of the extruded protective sheath, strains on stud terminals and ring cable lugs.**

2. **Ensure that the power cables do not rub on other cables or other components.**

3. **Make sure ring cable lugs are securely attached to the stud terminals, that the retaining nut is tightened. Also, make sure that cable lug crimping holds firmly on copper conductor.**

## OTHER THINGS TO CHECK

- Check for damages caused by electric arcs with loss of material along the copper conductor.
- Check for damaged cable extruded sheath and having lost its insulating properties.
- Bosch T1 alternator: ensure that the rubber grommets at the rear cap of the alternator are present.
- P-clamp type cable clamps must be suitable for cable diameter. The cable must remain in the P-clamp without moving or rubbing, thus oversized P-clamps are not allowed. Inspect the corrugated protective sheath passing through the P-clamp for signs of wear.
- At certain locations, power cables are protected by a corrugated protective sheath and should remain as such.

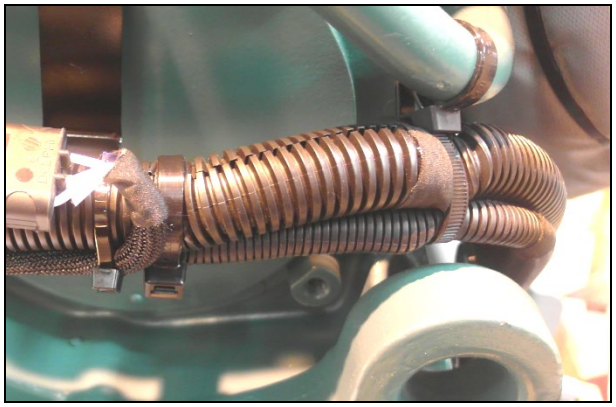

Figure 13: starter cables in a corrugated protective sheath.

- Ensure that the power cables do not rub on bolt heads or sharp metal edges that can cut or wear the cable extruded sheath.

- For power cables passing through a corrugated protective sheath, it is recommended to apply two layers of fabric tape every 3 to 6 inches minimum to prevent the cable from coming out of the corrugated protective sheath (Figure 14). The ends of the corrugated protective sheath should be covered with fabric tape (figure 15).

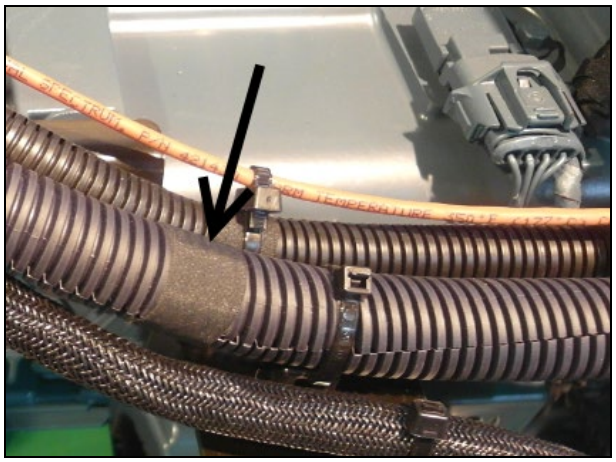

Figure 14: Two layers of fabric tape applied every 3 to 6 inches to prevent the cable from coming out of the corrugated protective sheath.

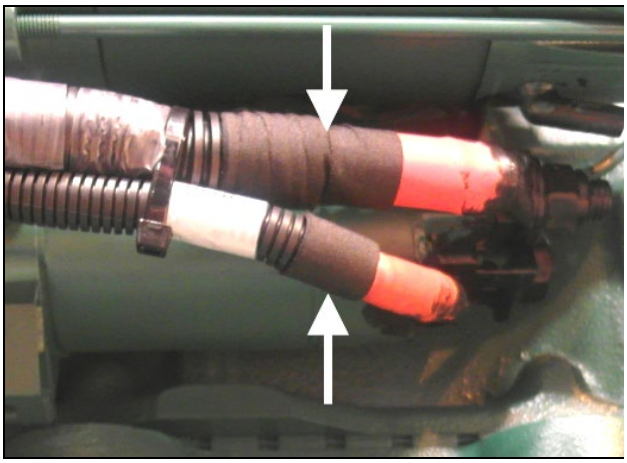

Figure 15: The ends of the corrugated protective sheath should be covered with fabric tape.

- Stud terminal nuts properly tightened. Use a nut with nylon insert to replace a similar nut where applicable. Protect ring cable lugs against tightening force by placing a flat washer between nut and ring cable lug.



When required, use fasteners that secure cables while preventing rubbing

## RING CABLE LUGS

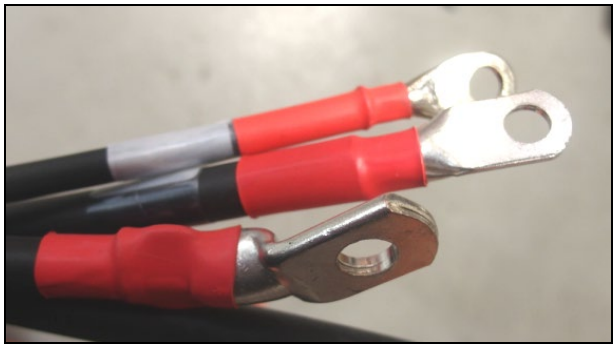

Figure 16: Cable lugs must be closed type, crimped or welded.

- Ring cable lugs should not be distorted.
- Ring cable lugs should not suffer strains that can deform.
- Ring cable lugs must be installed with smooth washers and nuts to prevent damage to the cable lug when tightening.



Figure 17: Power cable shouldn't be bent just next to the cable lug. Angled cable lugs are used to avoid mechanical stress.

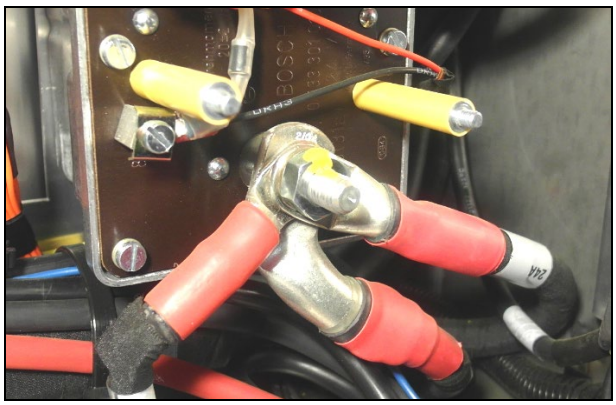

Figure 18: When several terminals are connected on a single stud terminal, the largest cable lug must be placed first, followed by the second larger and so on. Cable lugs should be distributed around the stud terminal in a way that no cable lug is distorted when tightening the nut.

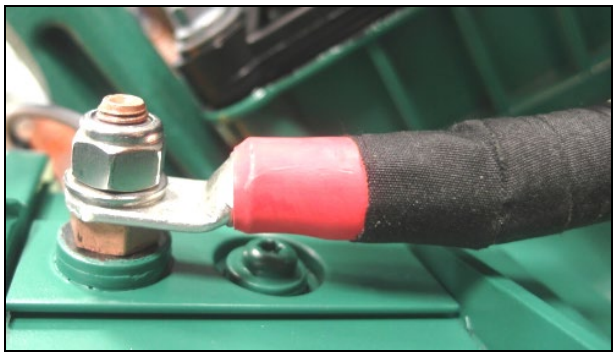

Figure 19: No exposed or broken copper strands.

- A shrink tubing (or fabric tape) should cover the copper strands.
- Ensure that the power cables and ground wire are not stretched tight.
- Ensure that the cable lugs are still properly crimped on the copper conductor, that the conductor strands are not broken so that the power cable retain its capacity and ensure unrestricted current flow.

## BATTERY CABLES

- Battery interconnection cables must be checked too :

– Ensure the cables are properly fastened to battery posts and that the cables are in good condition (consult battery manufacturer documentation for appropriate tightening torque).

– No corroded or cut copper strands. No apparent copper strands. Protective sheath in good condition, no cuts, no rubbing against metal edges.

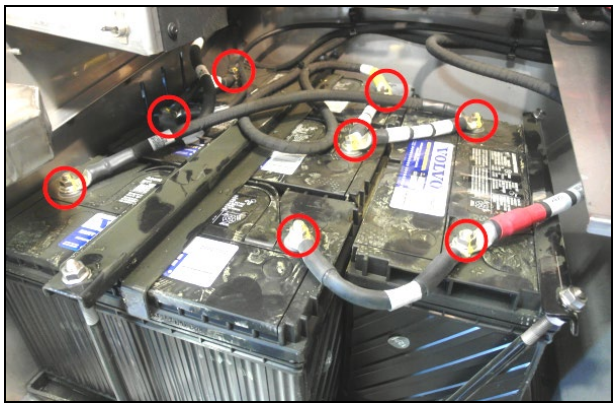

Figure 20: battery bank

## STEEL P-CLAMPS

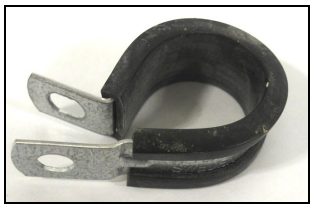

Figure 21: P-clamps are no longer used to secure power cables, but they can nevertheless be found on coaches of older generations. The piece of rubber that protects cable against the P-clamp steel loop must absolutely be in place. Replace any P-clamps where the rubber piece is missing, broken or likely to separate from the steel loop.

| *NOTE* |
| --- |
| *Unlike steel P-clamps, plastic clamps have the advantage of being not conductive. A good practice would be to replace P-clamps* ***securing power cables*** *with appropriate nylon cable ties like the following:*<br>**#507664 CABLE TIE, DOUBLE LOOP**<br>**#509491 CABLE TIE, WIDE** |

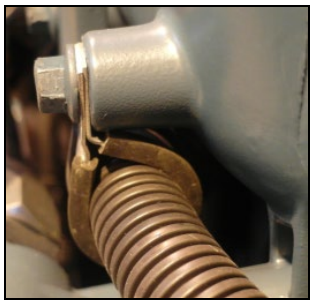

Figure 22: P-clamp with appropriate diameter prevents the power cable or corrugated protective sheath from moving and rubbing inside the clamp.

## ALTERNATORS

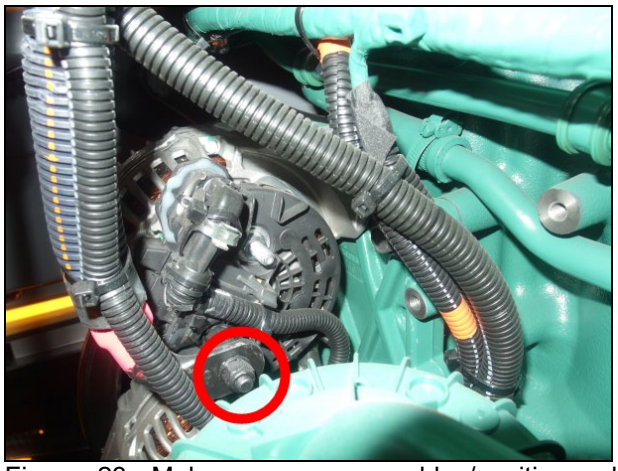

Figure 23: Make sure power cables/positive cables (+) are properly connected to alternator, that stud terminal nuts are properly tightened.

**TERMINAL NUT PRESCRIBED TORQUE**

Delco Remy 55SI
- Ground : 50-60 lb-in
- Positive (+): 80-125 lb-in
- Sense (S) 25-45 lb-in
- Indicator (I) 25-45 lb-in

Bosch HD10
- B1(+) terminal: 10 lbf-ft
- ground: 6 lbf-ft

Bosch T1
- D+: 21-28 lbf-in
- B+, B-: 88-115 lbf-in
- W: 36-48 lbf-in

Delco 50DN
- DC Output: 30-35 lbf-ft
- F1, F2, Relay: 6 lbf-ft

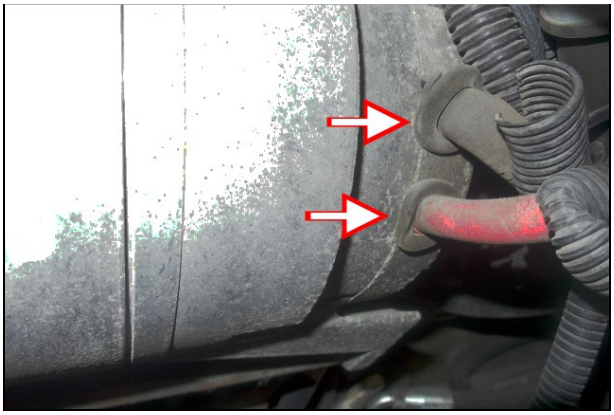

Figure 24: Bosch T1 alternator with the two required rubber grommets. Alternator cables connected to the alternator stud terminals must be protected against metal edges with rubber grommets.

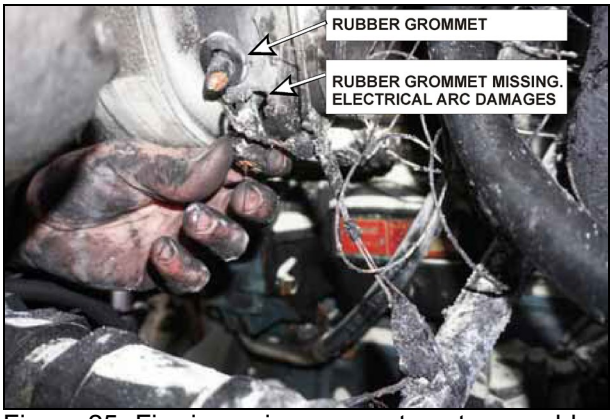


Figure 25: Fire in engine compartment caused by rubbing of power cable against metal edge of Bosch T1 alternator rear cover. Lower rubber grommet was missing when fire occured. Evidence of electrical arc can be seen.

## CORROSION PROTECTION

- Power cable connections on alternators, starter and ground connections exposed to water, dust, etc. should be protected against corrosion with Loctite Color Guard rubber coating (**Figure 26**) (Prevost p/n: 684013).




Figure 26: Loctite Color Guard.

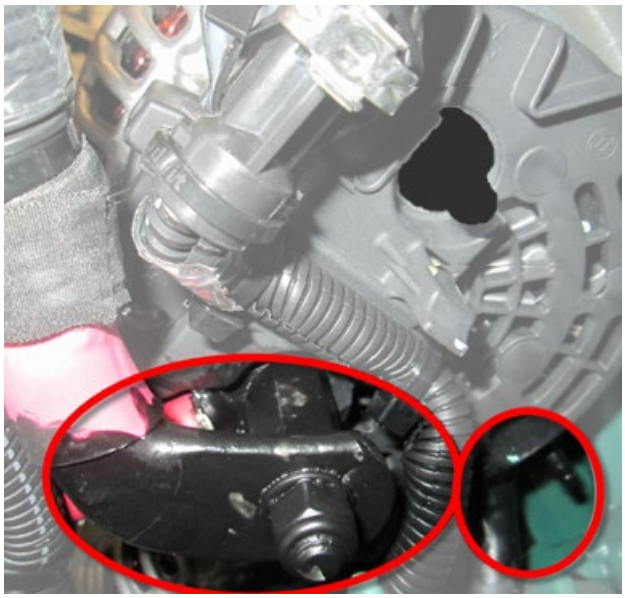

Figure 27: Upper R.H. side Bosch alternator power cable lug protected with Color Guard rubber coating.

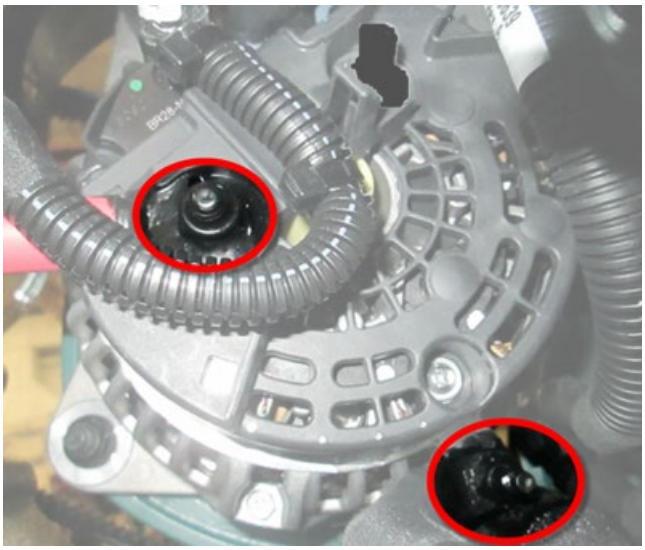

Figure 28: Lower R.H. side Bosch alternator power cable lug protected with Color Guard rubber coating.

*Protect the cable lug similarly on the L.H. side alternator (with electric fan drive)*

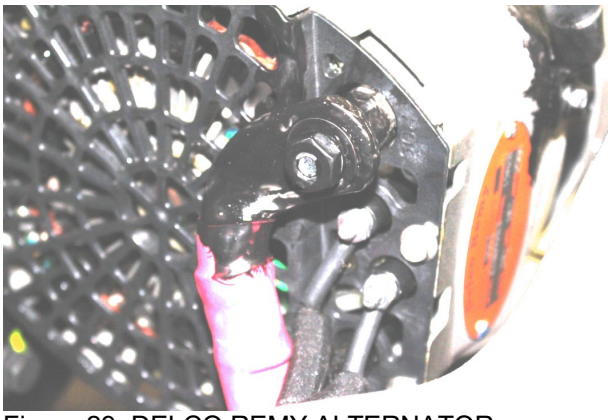

Figure 29: DELCO REMY ALTERNATOR

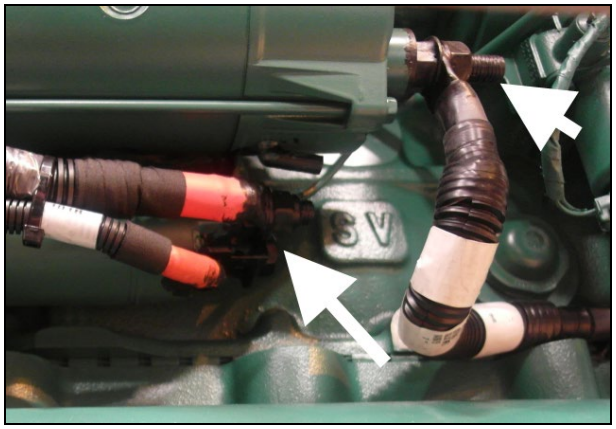

Figure 30: Starter power cable and ground cable lugs protected with Color Guard rubber coating.

## PARTS / WASTE DISPOSAL

Discard according to applicable environmental regulations (Municipal/State[Prov.]/ Federal)

*Access all our Service Bulletins on https://secureus5.volvo.com/technicalpublications/en/pub.asp*
*Or scan the QR-Code with your smart phone.*

*E-mail us at **technicalpublications_prev@volvo.com** and type "ADD" in the subject to receive our warranty bulletins by e-mail.*

PREVOST

# MAINTENANCE INFORMATION

**MI16-17**

| | | |
|---|---|---|
| DATE : | FEBRUARY 2016 | **SECTION:** 06 - Electrical |
| SUBJECT : | **BOSCH HD10 ALTERNATOR REMOVAL AND INSTALLATION** | |

Please, get the latest revision of Maintenance Information MI16-17 on Prevost Technical Publications web site:

https://techpub.prevostcar.com/en/

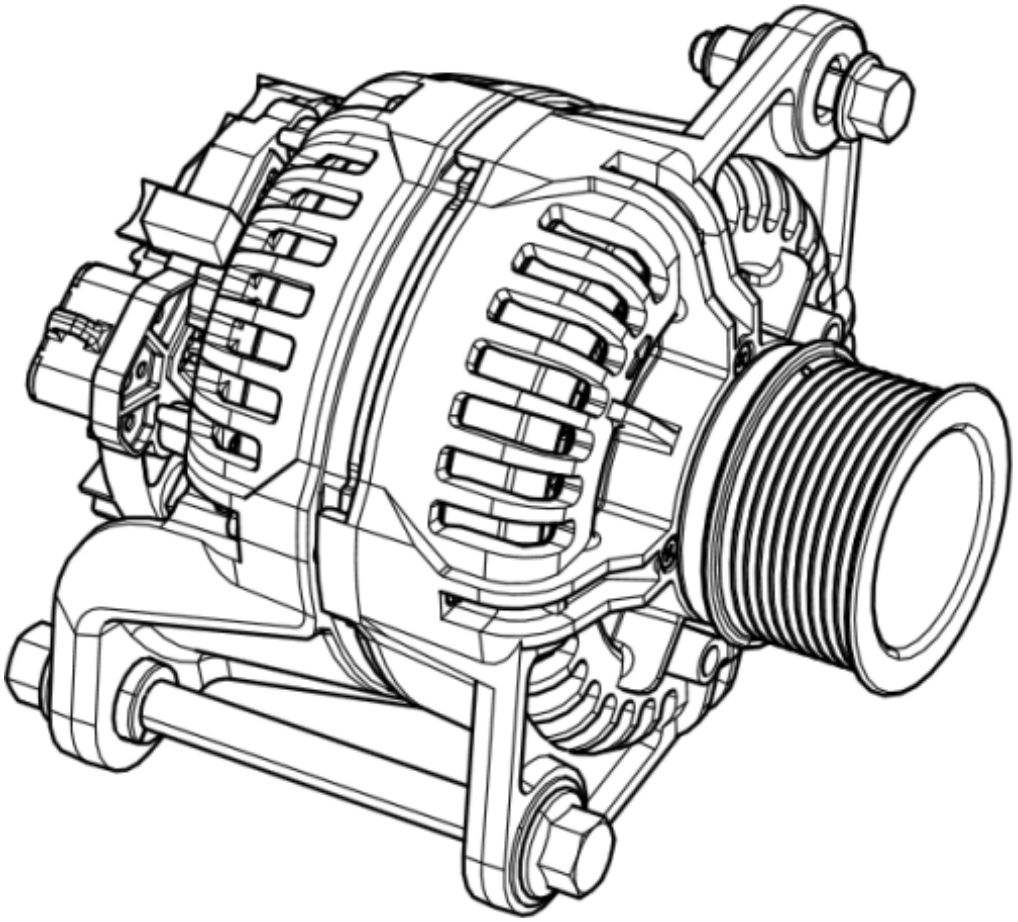

## CONTENTS

**SECTION CHANGE LOG** ..... **3**

**1. TORQUE TABLES** ..... **4**

1.1 ALLISON TRANSMISSION ..... 4
1.2 VOLVO I-SHIFT TRANSMISSION ..... 5

**2. DESCRIPTION** ..... **6**

2.1 ALLISON AUTOMATIC TRANSMISSION ..... 6
*2.1.1 Retarder* ..... *6*
2.2 VOLVO I-SHIFT TRANSMISSION ..... 6

**3. ALLISON TRANSMISSION MAINTENANCE** ..... **7**

3.1 MANUAL FLUID LEVEL CHECK ..... 7
*3.1.1 Cold Check* ..... *7*
*3.1.2 Hot Check* ..... *8*
3.2 FLUID LEVEL CHECK USING THE PUSHBUTTON SHIFT SELECTOR ..... 9
3.3 RECOMMENDED AUTOMATIC TRANSMISSION FLUID ..... 9
*3.3.1 Importance of Proper Fluid Level* ..... *10*
*3.3.2 Keeping Fluid Clean* ..... *10*
*3.3.3 Oil Contamination* ..... *10*
*3.3.4 Metal Particles* ..... *10*
*3.3.5 Coolant Leakage* ..... *11*
3.4 CONTROL SYSTEM PROGNOSTICS ..... 11
*3.4.1 Normal Prognostics Indication at Engine Start* ..... *11*
*3.4.2 Oil Life Monitor* ..... *11*
*3.4.3 Filter Life Monitor* ..... *12*
*3.4.4 Transmission Health Monitor* ..... *13*
3.5 OIL AND FILTER CHANGE INTERVAL ..... 15
*3.5.1 Oil and Filter Change Interval with Prognostics Mode Disabled* ..... *16*
*3.5.2 Oil and Filter Change Interval with Prognostics Mode Enabled* ..... *16*
3.6 FLUID AND FILTER CHANGE PROCEDURE ..... 17
*3.6.1 Drain* ..... *17*
*3.6.2 Refill transmission* ..... *17*
3.7 CLEANING AND INSPECTION OF ALLISON AUTOMATIC TRANSMISSION ..... 18
*3.7.1 Breather* ..... *18*

**4. ALLISON TRANSMISSION OIL COOLER REMOVAL** ..... **18**

4.1 TRANSMISSION WITHOUT RETARDER ..... 18
4.2 TRANSMISSION WITH RETARDER ..... 18

**5. ALLISON TRANSMISSION INSTALLATION** ..... **19**

**6. ALLISON TRANSMISSION TROUBLESHOOTING** ..... **21**

6.1 DIAGNOSTIC TROUBLESHOOTING CODES (DTC) — ALLISON 6TH GENERATION CONTROLS ..... 21
*6.1.1 Using Shift Selector for Accessing Diagnostics Information* ..... *22*
*6.1.2 Display Sequence* ..... *22*
*6.1.3 Diagnostic Code Display and Clearing Procedure* ..... *22*
*6.1.4 Exiting Diagnostic Mode* ..... *22*
*6.1.5 Diagnostic Trouble Code Response* ..... *22*

6.2 DIAGNOSTIC TROUBLESHOOTING CODES (DTC) LIST - ALLISON 6TH GENERATION CONTROLS....24

**7. ALLISON TRANSMISSION REMOVAL....26**

**8. VOLVO I-SHIFT TRANSMISSION MAINTENANCE....27**

8.1 TRANSMISSION OIL TYPE....27
8.2 CHECKING OIL LEVEL....28
8.3 OIL DRAINS INTERVAL....28
8.4 OIL CHANGE....28

**9. VOLVO I-SHIFT TRANSMISSION TECU FAULT CODES....30**

**10. VOLVO I-SHIFT TRANSMISSION GSECU FAULT CODES....69**

**11. SPECIFICATIONS....71**

## SECTION CHANGE LOG

| | DESCRIPTION | DATE |
|---|---|---|
| 1 | | |
| 2 | | |
| 3 | | |
| 4 | | |
| 5 | | |
| 6 | | |

## 1. TORQUE TABLES

### 1.1 ALLISON TRANSMISSION

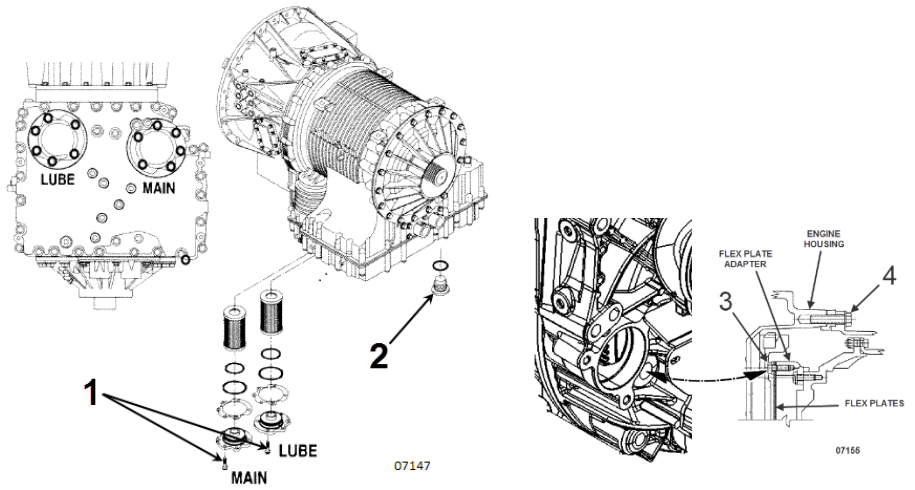


| ALLISON TRANSMISSION | | |
|---|---|---|
| No | DESCRIPTION | TORQUE |
| 1 | Lube and main filter cover bolts | 38-45 lb-ft (52-61 Nm) |
| 2 | Drain Plug | 18-24 lb-ft (24-33 Nm) |
| 3 | Flex plate screws | 24-30 lb-ft (33-41 Nm) |
| 4 | Transmission housing screws to engine housing | 46-50 lb-ft (62-68 Nm) |

## 1.2 VOLVO I-SHIFT TRANSMISSION

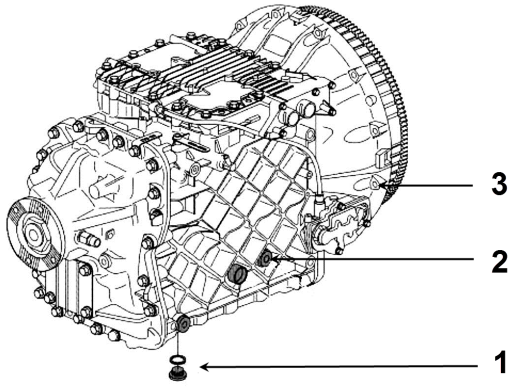


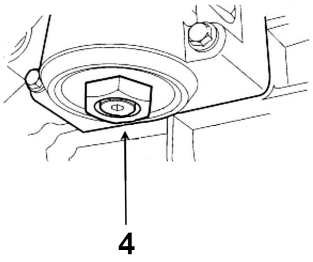


| VOLVO I-SHIFT TRANSMISSION | | |
|---|---|---|
| No | DESCRIPTION | TORQUE |
| 1 | Oil drain plug | 18-24 lb-ft (24-33 Nm) |
| 2 | Oil fill plug | 22-30 lb-ft (30-41 Nm) |
| 3 | Transmission mounting screws | 66 lb-ft (89 Nm) |
| 4 | Filter housing drain plug | 11-13 lb-ft (15-18 Nm) |

## 2. DESCRIPTION

H3 and X3 Series vehicles may be provided with either an Allison automatic transmission or a Volvo I-Shift transmission.

### 2.1 ALLISON AUTOMATIC TRANSMISSION

The Series 4000 Allison Transmission has 6 speeds with two top range (fifth and sixth) overdrives.

Two variants are available: **B500** for commercially operated highway coaches and **4000MH** for private use motorhomes.

An electronic control allows the transmission to shift at exactly the right point on the engine's fuel consumption curve for best economy. Early lockup maintains the highest possible mechanical efficiency through the closely-spaced gear steps, culminating in two overdrive ratios. This combination allows progressive shifting techniques, where engine speeds are reduced for higher efficiency and lower fuel consumption.

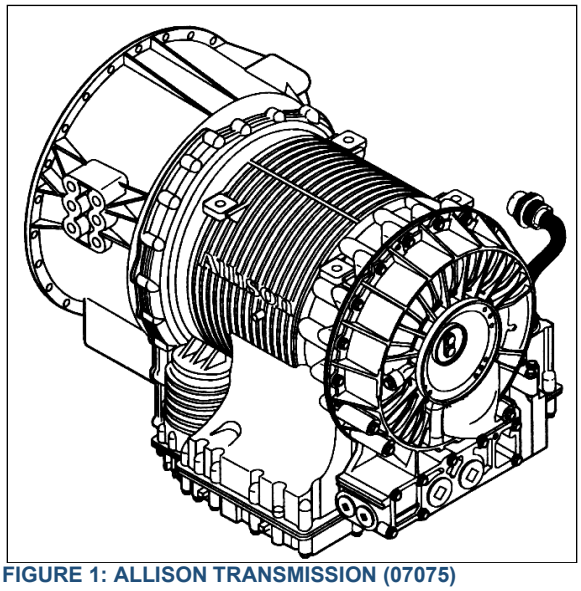

FIGURE 1: ALLISON TRANSMISSION (07075)

Gear selection and torque converter modes are controlled by a microcomputer-based electronic transmission management system. It is fed information regarding throttle position, operator range selection, engine speed, turbine speed, transmission output speed and various system pressures from special electronic sensors. With this information, it computes shift points and clutch pressures to meet immediate needs. Using closed loop adaptive logic, the electronic control looks at a number of parameters during the shift, and makes minute adjustments to match the shift to desired profile stored in its memory. It then looks at these adjustments and resets the parameters, which allow the transmission to quickly compensate for variations in load, terrain or environment and to adjust for clutch wear and engine power changes. A Diagnostic Data Reader can be connected to the electronic control unit to provide a self-check of all systems in the transmission. Five-digit trouble codes greatly reduce the time it takes to pinpoint potential problems. (Refer to paragraph 6 “allison transmission TROUBLESHOOTING” in this section).

#### 2.1.1 Retarder

This optional auxiliary braking device for the automatic transmission is integrated into the basic envelope of the transmission and transmits its braking force directly to the propeller shaft. It requires no additional length and adds only 75 pounds (34 kg) of weight. Operation of the retarder is controlled electronically by the driver's use of the brake and/or by hand control lever.

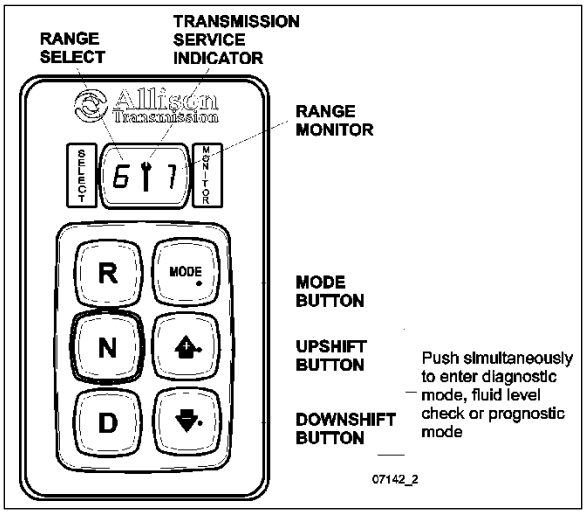


FIGURE 2: ALLISON PUSHBUTTON SHIFT SELECTOR

When activated, fluid enters a cavity and provides resistance to the turning of rotor blades revolving with the output shaft. This effectively slows the vehicle to the point where the service brakes are needed only for final stopping. The retarder is fully modulated and is compatible with ABS.

### 2.2 VOLVO I-SHIFT TRANSMISSION

The Volvo I-Shift transmission is a single countershaft transmission with 12 forward gears and two reverse gears. The I-Shift is an automated mechanical transmission.

If the I-Shift transmission system is to be used, the vehicle must have an electronic engine control unit as well as CAN communication. Since the clutch is automated (clutch pedal no longer fitted), the driver no longer has to activate the clutch.

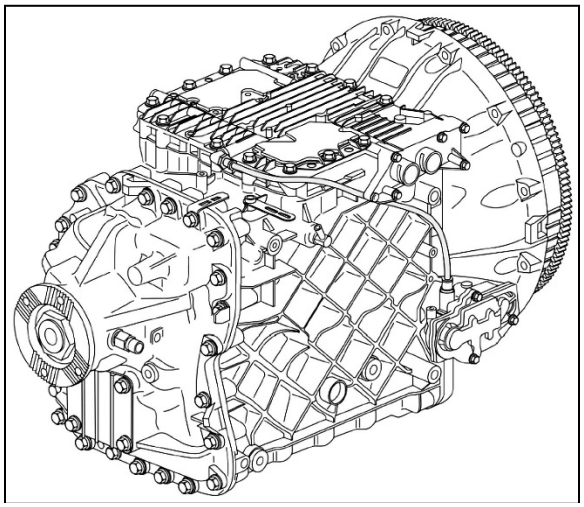

FIGURE 3: VOLVO I-SHIFT TRANSMISSION

The transmitted torque (both engine and braking) will be interrupted during gear shifting, in both driving and coasting conditions. There is no clutch pedal and the gear shifting is controlled by the transmission or the driver through the pushbutton shift selector.

When in fully automatic mode, gears are selected and shifts made by the electronic control unit. The driver can still intervene if he wishes to. All system functions required are shown on the display, e.g. neutral, gear change, clutch overload and diagnosis information.

## 3. ALLISON TRANSMISSION MAINTENANCE

### 3.1 MANUAL FLUID LEVEL CHECK

Take note that an oil level sensor (OLS) is standard in your transmission. With the OLS and Allison 6th generation shift selector, you can get a more accurate electronic fluid level check than with a dipstick.

To gain access to the dipstick, open the engine compartment rear door; dipstick is located on the radiator side of the engine (Figure 4).

Clean all dirt from around the end of the oil filler tube before removing the dipstick. Dirt or foreign matter must not be permitted to enter the oil system since it will cause valves to stick, undue wear of transmission parts, and clogged passages. Check the oil level using the procedures in Cold Check and Hot Check. Record any abnormal level on your *"Maintenance Records".*

**WARNING**

When checking the oil level, be sure that the parking brake and/or emergency brakes are set and properly engaged, and the wheels are chocked. Unexpected and possible sudden vehicle movement may occur if these precautions are not taken.

- Special care must be taken not to touch the engine coolant tubing and/or exhaust pipe, since this could cause severe burns.
- Do not wear loose clothing and, stay away from rotating parts during procedure; personal injury could occur.

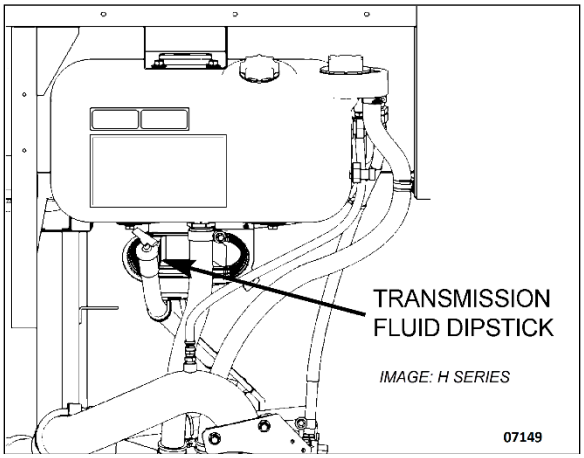


FIGURE 4: OIL LEVEL DIPSTICK (ALLISON)

Always check the oil level reading at least twice when the engine is running. Consistency is important in maintaining the accuracy of the reading. If inconsistent readings persist, check the transmission breather to ensure it is clean and free of debris.

#### 3.1.1 Cold Check

The purpose of the **Cold Check** is to determine if the transmission has enough fluid to be operated safely until a **Hot Check** can be made.

**CAUTION**

The oil level rises as sump temperature increases. DO NOT fill above the Cold Run band if the transmission oil is below normal operating temperature. During operation, an overfull transmission can become overheated, leading to transmission damage.

1. Move the vehicle to a level surface, put transmission in «N» (Neutral), and set the parking brake.
2. With the engine idling (500 - 800 rpm), shift to «D» (Drive) and then shift to «R» (Reverse) to clear the hydraulic system of air.
3. Run the engine at idle in «N» (Neutral) for about one minute.
4. While the engine is running, remove the dipstick from the tube and wipe it clean (Figure 4). Insert the dipstick into the fill tube, pushing down until it stops.
5. Remove the dipstick and observe the fluid level. Repeat the check procedure to verify the reading. If the fluid on the dipstick is within the COLD CHECK band, the level is satisfactory for operating the transmission until the oil is hot enough to perform a **Hot Check**. If the fluid level **is not** within this band, add or drain fluid as necessary to bring the level within the COLD CHECK band.
6. Perform a **Hot Check** at the first opportunity after the normal operating temperature of 160ºF to 200ºF (71ºC to 93ºC) is attained.

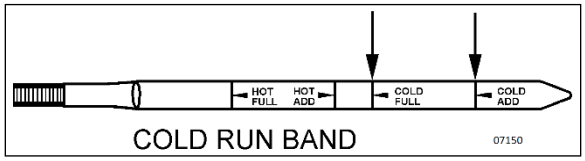


**FIGURE 5: COLD CHECK**

**CAUTION**

**DO NOT** operate the transmission for extended periods of time until a **Hot Check** has verified proper fluid level. Transmission damage can result from extended operation at improper fluid level conditions.

**CAUTION**

Obtain an accurate fluid level by imposing the following conditions:

- Engine is idling (500-800 rpm) in «N» (Neutral).
- Transmission fluid is at normal operating temperature.
- The vehicle is on a level surface.

3.1.2 Hot Check

To perform a **Hot Check**, do the following:

1. The **Hot Check** can be performed when the transmission oil reaches the normal operating temperature (160ºF to 200ºF / 71ºC to 93ºC). The transmission oil temperature can be checked with the Driver Information Display (DID) when selecting the Gauge menu (refer to the ‘’Operator’s Manual’’ for added information).

**CAUTION**

The oil **must be hot** to obtain an accurate check because the fluid level rises as temperature increases.

2. Park the vehicle on a level surface and shift to «N» (Neutral). Apply the parking brake and allow the engine to idle (500 - 800 rpm).
3. Remove the dipstick from the tube and wipe it clean. Insert the dipstick into the fill tube, pushing down until it stops.
4. Remove the dipstick and observe the fluid level. The safe operating level is anywhere within the HOT RUN band on the dipstick. Repeat the check procedure to verify the reading.
5. If the level **is not** within this band, add or drain fluid as necessary to bring the level within the HOT RUN band.
6. Be sure fluid level checks are consistent. Check level more than once and if readings are not consistent, check to be sure the transmission breather is clean and not clogged. If readings are still not consistent, contact your nearest Allison dealer or distributor.

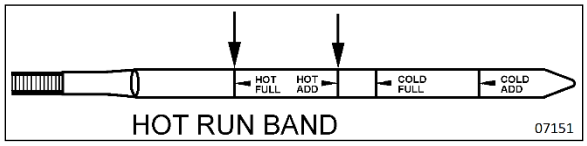


**FIGURE 6: HOT CHECK**

| *NOTE* |
|---|
| *The Cold Check is more appropriate for verifying the oil level after the first fill-up. In case of conflict, the Hot Check has priority over the Cold Check;* ***the fluid level check using the pushbutton shift selector has priority over the Hot Check.*** |

## 3.2 FLUID LEVEL CHECK USING THE PUSHBUTTON SHIFT SELECTOR

The oil level sensor (OLS) is standard in your transmission. With the OLS and Allison 6th generation shift selector, you can get a more accurate electronic fluid level check than with a dipstick.

Oil level codes are obtained as follows:

1. Park vehicle on a level surface, select «N» (neutral) on the pushbutton shift selector and apply parking brake.
2. Wait for at least 2 minutes to allow the oil to settle;
3. Press simultaneously the ▲ (Upshift) and ▼ (Downshift) arrow buttons once.
4. Oil level codes are displayed once the following parameters are met :
   - **The vehicle has been stationary for approximately 2 minutes to allow the oil to settle;**
   - **Engine at idle;**
   - **Oil at normal operating temperature, between 104°F (40°C) and 220°F (104°C);**
   - **Transmission in «N» (Neutral);**
   - **Transmission output shaft stopped;**
   - **Oil level sensor present and working.**
5. Correct fluid level is displayed as shown.

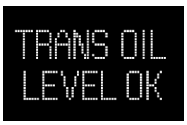


6. Low fluid level is displayed as shown. The number indicates the number of quarts of fluid the transmission requires.




7. High fluid level condition with the number of quarts in excess is displayed as shown.




| **NOTE** |
|---|
| *Confirm a low fluid level condition by making a manual fluid level check.* |

8. To exit the Oil Level Display Mode, press any range button «R», «N» or «D» at any time.

| **NOTE** |
|---|
| *Note that the quantities LO 4 and HI 3 are the largest values displayed and that the actual variation in oil level may exceed these numbers.* |

If the fluid level check cannot be completed, an invalid for Display fault is reported. Refer to table below to review the codes and conditions.

| CODE | CAUSE OF FAULT CODE |
|---|---|
| SETTLING OK | Settling time too short |
| ENG RPM TOO LOW | Engine speed (rpm) too low |
| ENG RPM TOO HIGH | Engine speed (rpm) too high |
| MUST BE IN NEU | N (Neutral) must be selected |
| OIL TEMP TOO LOW | Sump fluid temperature too low |
| OIL TEMP TOO HIGH | Sump fluid temperature too high |
| VEH SPD TOO HI | Output shaft speed |
| SENSOR FAILED | Sensor failure |

## 3.3 RECOMMENDED AUTOMATIC TRANSMISSION FLUID

Only use fluids meeting Allison Transmission specification TES668, TES295 or TES389 in your transmission. Refer to TES668, TES295 or

TES389 Approved Fluids list, found under the Service/Parts heading on the home page of the Allison Transmission web site **www.allisontransmission.com.**

Allison Transmission recommends you take the following into consideration when selecting the appropriate fluid type for your transmission:

- Fluids meeting specification TES668, TES295 are preferred over TES389 fluids for use in all 4000 Product Families transmission applications.
- TES668, TES295 fluids are fully qualified for Severe Duty and Extended Drain intervals.
- A TES668, TES295 fluid allows you to operate at a lower ambient temperature than a TES389 type fluid.
- TES389 fluid is the minimum fluid requirement approved for use in 4000 Product Families transmissions.
- To extend the TES389 fluid drain intervals beyond the recommended mileage or hours change interval, use a fluid analysis program.

When choosing a fluid type to use, consider what the minimum fluid operating temperature of the fluid will be based on the ambient temperatures reached in the geographical location for the vehicle.

**Transmission Fluid Operating Temperature Requirements**

| Fluid type | Minimum operating temperature | |
|---|---|---|
| | Celsius | Fahrenheit |
| TES668, TES295 | -35 | -31 |
| TES389 | -25 | -13 |

**CAUTION**

Disregarding minimum fluid temperature limits can result in transmission malfunction or reduced transmission life.

*NOTE*

*The use of an arctic preheat kit is recommended at temperatures below -25ºF (-32ºC). If a preheat kit is not available, the TCM will restrict full operation until the sump temperature is increased.*

### 3.3.1 Importance of Proper Fluid Level

It is important that the proper fluid level be maintained at all times because the transmission fluid cools, lubricates, and transmits hydraulic power. If the fluid level is too low, the converter and clutches do not receive an adequate supply of fluid. If fluid level is too high, the fluid can aerate, causing the transmission to shift erratically or overheat.

### 3.3.2 Keeping Fluid Clean

Oil must be handled in clean containers, fillers, etc., to prevent foreign material from entering the transmission. Place the dipstick on a clean surface area while filling the transmission.

**CAUTION**

Containers or fillers that have been used to handle antifreeze or engine coolant must NEVER be used for handling transmission fluid. Antifreeze and coolant solutions contain ethylene glycol that, if introduced into the transmission, can cause the clutch plates to fail.

### 3.3.3 Oil Contamination

At each oil change, examine the drained oil for evidence of dirt or water. A nominal amount of condensation will emulsify during operation of the transmission. However, if there is evidence of water; check the cooler (heat exchanger) for other signs of leakage. This, however, may also indicate leakage from the engine oil system.

### 3.3.4 Metal Particles

Metal particles in the oil (except for minute particles normally trapped in the oil filter) indicate damage has occurred in the transmission. When these particles are found in the sump, the transmission must be disassembled and closely inspected to find the source. Metal contamination will require complete disassembly of the transmission and cleaning of all internal and external circuits, coolers, and all other areas where the particles could lodge.

**CAUTION**

If excessive metal contamination has occurred, replacement of the oil cooler and replacement of all bearings within the transmission is recommended.

3.3.5 Coolant Leakage

If engine coolant leaks into the transmission oil system, immediate action must be taken to prevent malfunction and possible serious damage. The transmission must be completely disassembled, inspected, and cleaned. All traces of the coolant contamination must be removed. Friction clutch plates contaminated with ethylene glycol must be replaced.

## 3.4 CONTROL SYSTEM PROGNOSTICS

The transmission control system includes the provision for the user to monitor various transmission operating parameters. Transmission operating parameters monitored by the prognostics feature are:

- Oil Life Monitor
- Filter Life Monitor
- Transmission Health Monitor

*NOTE*

*The prognostics package requires the use of **TranSynd™ or an Allison approved TES668, TES295 or TES389 licensed fluid** in the transmission and **Allison High Capacity filters**. If any other fluids or filters are used, Prognostic mode **must be disabled**. Prognostic information will not be accurate with any other fluids or filters and could result in missed maintenance activities resulting in transmission damage.*

*Refer to TES668, TES295 or TES389 Approved Fluids list, found under the Service/Parts heading on the home page of the Allison Transmission web site.*

***www.allisontransmission.com***

When a specified threshold is detected for any of the serviceable conditions, the TRANSMISSION SERVICE indicator is illuminated to alert the operator. Failure to attend to the service condition and reset the TRANSMISSION SERVICE indicator within a defined operating period will result in illumination of the CHECK light with associated message in the DID, indicating the increased probability that the service condition will develop into a more serious condition.

To access the Prognostic Mode functions simultaneously press the (Upshift) and (Downshift) arrow buttons repeatedly.

3.4.1 Normal Prognostics Indication at Engine Start

- A system bulb check illuminates the TRANSMISSION SERVICE indicator approximately 0.5 seconds.
- If Prognostics features are enabled, the TRANSMISSION SERVICE indicator illuminates again for 3 seconds after the bulb check. If Prognostics features are disabled, the TRANSMISSION SERVICE indicator does not illuminate again after the bulb check.

3.4.2 Oil Life Monitor

The display message denotes the calculated remaining life of the transmission fluid. This value is based on the established life for the required baseline fluid, and then is continuously adjusted for cumulative effects of such operating parameters as operating time, retarder operation, output shaft revolutions and shift frequency.

Display

The display is a two-digit number, denoting percentage of the fluid life which remains. New fluid is displayed as 99%.

The TRANSMISSION SERVICE indicator will be illuminated, denoting a required change of transmission fluid, when the remaining fluid life reaches approximately 1 %. The indicator will be lit steadily upon each initialization of the TCM, and will remain on steady for approximately 2 minutes after the first selection of “D” (drive) range each time, until service is performed and the indicator is reset.

Failure to perform maintenance and reset the TRANSMISSION SERVICE indicator within a defined period will result in the illumination of the CHECK light with associated message in the DID and diagnostic code P0897 Transmission Fluid Deteriorated.

Reset

The TRANSMISSION SERVICE indicator can be reset by a message over the SAE J1939 communication interface, with the Allison DOC™

for PC diagnostic program, or by depressing and holding the MODE button for ten (10) seconds while the Oil Life Monitor function is displayed. It may also be reset by selecting N-D-N-D-N-R-N on the shift selector, pausing briefly (less than 3 seconds) between each selector movement, with the ignition on and the engine not running. The TRANSMISSION SERVICE indicator illuminates briefly following a reset to acknowledge the reset was successful.

Setting Fluid Type for Prognostics

The fluid type can be programmed if the specific calibration allows it. The operator can do the following:

With the engine off and the ignition on, perform the following sequence on the selector, N-R-N-D-N-R-N-D-N-R-N-D-N.

The TRANSMISSION SERVICE indicator flashes if TES389 is the current setting and illuminates solidly if TES668, TES295 is the current setting. To change the transmission fluid type, wait 5 seconds after entering transmission fluid type mode and perform the following sequences to select the proper transmission type:

N-R-N to select TES668, TES295

N-D-N to select TES389

The selector exits 30 seconds after entering transmission fluid type mode or the ignition may be turned off to exit earlier. Only one transmission fluid type selection may be made after entering transmission fluid type mode. All other attempt will be ignored. Transmission fluid type mode needs to be entered again if the wrong type of fluid is selected.

**CAUTION**

*Verify prognostics fluid type setting matches transmission fluid type. Oil Life Monitor notifications will be inaccurate when mismatched. This could result in transmission damage from running a TES389 fluid too long or cause shortened TES668, TES295 fluid changes to occur.*

**CAUTION**

Required calendar-based oil & filter change intervals (based on month) still apply because Oil Life Monitor function cannot measure time while ignition power is OFF.

If the Oil Life Monitor function has not indicated the need for a fluid change before 60 months have passed when using TES668, TES295 fluid type or before 24 months have passed when using TES389 fluid type, it will be necessary to change the fluid and filters per calendar requirements and reset the system.

3.4.3 Filter Life Monitor

This feature provides an alert when the transmission's fluid filters need to be replaced. It helps extend filter change intervals to reduce routine maintenance downtime while providing maximum protection for the transmission.

The filter life indicator pressure switch signals the transmission control module when fluid exiting the main filter drops below a predetermined pressure. Both the main and lube filters **must be** changed when the TRANSMISSION SERVICE indicator shows the main filter should be changed.

Filter Change Notification

The TRANSMISSION SERVICE indicator will flash for 2 minutes after the first selection of "D" (drive) range. Once the Filter Monitor mode has been accessed via the shift selector, the "OIL FILTER OK" or "REPLACE FILTERS" message is displayed in the selector display window. An acceptable filter life status is displayed as "OIL FILTER OK". An unacceptable filter life status is displayed as "REPLACE FILTERS".

Once the programmed threshold for maximum filter pressure drop has been observed and verified, the diagnostic code P088A Transmission Filter Maintenance Alert will be recorded to indicate that the filter has reached the end of its designed life. At the next initialization of the TCM, the TRANSMISSION SERVICE indicator will flash for 2 minutes after the first selection of "D" (drive) range. Thereafter, the indicator will illuminate and flash upon each TCM initialization, continuing to flash for 2 minutes after the first selection of a drive range each time, until service is performed and the indicator is reset.

Failure to perform maintenance and reset the monitor after a calibration-defined number of warnings will result in the illumination of the CHECK light with associated message in the DID

and diagnostic code P088B will be recorded to indicate a highly deteriorated filter.

Read and Reset Filter Life Monitor from Selector

**To enter** the filter life monitor, press simultaneously the ▲ (Upshift) and ▼ (Downshift) arrows three times. An acceptable filter life status is displayed as "OIL FILTER OK". An unacceptable filter life status is displayed as "REPLACE FILTERS".

The feature will **reset** automatically when the main fluid filter has been changed and the pressure drop across the filter no longer exceeds the threshold value. A manual reset can be performed by depressing and holding the MODE button for ten (10) seconds while the Filter Life Monitor function is displayed. It may also be reset by selecting N-R-N-R-N-D-N on the shift selector, pausing briefly (less than 3 seconds) between each selector movement, with the ignition on and the engine not running. The TRANSMISSION SERVICE indicator illuminates briefly following a reset to acknowledge the reset was successful.

3.4.4 Transmission Health Monitor

This prognostic feature determines clutch life status of the transmission's clutches and alerts you when clutch maintenance is required. The clutch life status is determined by monitoring changes and the calculated running clearance of the transmission clutches.

Clutch Maintenance Notification

The transmission health monitor feature determines when clutch maintenance is needed. If any of the clutches (except lockup) reaches a remaining life of approximately 10% or if any of the clutch running clearances exceeds a maximum value, then the TRANSMISSION SERVICE indicator is steadily illuminated from just after ignition on until ignition is turned off. Thereafter, the indicator will be lit upon each initialization of the TCM, and will remain on steady during all vehicle operation until service is performed and the indicator is reset. If the transmission health monitor mode has been accessed via the shift selector, a "TRANS HEALTH OK" or "TRANS HEALTH LO" is displayed. An acceptable clutch life status is displayed as "TRANS HEALTH OK". An unacceptable clutch life status is displayed as "TRANS HEALTH LO".

Read and Reset Transmission Health Monitor from Selector

**To enter** the transmission health monitor, press simultaneously the ▲ (Upshift) and ▼ (Downshift) arrows four times. An acceptable clutch life status is displayed as "TRANS HEALTH OK". An unacceptable filter life status is displayed as "TRANS HEALTH LO".

The feature will **reset** automatically upon elimination of the clutch clearance condition which initiated it. The indicator can also be manually reset using the Allison DOC™ for PC diagnostics program if necessary.

**The following table illustrates how to access Oil Level Check, Prognostics & Diagnostic Troubleshooting Codes functions on the Allison pushbutton shift selector.**

| ▲ (Upshift) & ▼ (Downshift) arrow buttons pressed simultaneously * | Description | Message | |
|---|---|---|---|
| **1st press** | **Allison transmission oil level check** | | |
| **2nd press** | **Oil Life Monitor** | **" O "** | **" M "** |
| | Oil life remaining will range from 99% down to 00% | Some number from 9 to 0 | Some number from 9 to 0 |
| **3rd press** | **Filter Life Monitor** | **" F"** | **" M "** |
| | Present life of filter is acceptable | OIL FILTER OK | |
| | Present life of filter is unacceptable | REPLACE FILTERS | |
| **4th press** | **Transmission Health Monitor** | **" T"** | **" M "** |
| | Shows " TRANS HEALTH OK " until remaining life of one or more of the clutch(es) wear enough so that the programming changes | TRANS HEALTH OK | |
| | One or more of the clutches have worn enough to change the program | TRANS HEALTH LO | |
| **5th press** | **Display of diagnostic codes** | | |

* With the engine off and ignition on.

## 3.5 OIL AND FILTER CHANGE INTERVAL

**TABLE 1**

| Allison Transmission Recommended Fluid And Filter Change Intervals With Prognostics Mode Disabled Using TES389 or Mixture | | | | | |
|---|---|---|---|---|---|
| **Severe vocation[3] Coaches or MTH equipped with retarder** | | | **General vocation[4] Coaches or MTH without retarder** | | |
| | **Filters** | | | **Filters** | |
| **Fluid** | **Main & Lube** | **Internal** | **Fluid** | **Main & Lube** | **Internal** |
| Whichever is the first of the following:<br>12,000 Miles<br>20 000 km<br>6 Months/<br>500hrs<br>*Note: always replace main and lube filters with the fluid change* | Whichever is the first of the following:<br>12,000 Miles<br>20 000 km<br>6 Months/<br>500hrs<br>*Note: always replace main and lube filters with the fluid change* | Overhaul | Whichever is the first of the following:<br>25,000 Miles<br>40 000 km<br>12 Months/<br>1000hrs<br>*Note: always replace main and lube filters with the fluid change* | Whichever is the first of the following:<br>25,000 Miles<br>40 000 km<br>12 Months/<br>1000hrs<br>*Note: always replace main and lube filters with the fluid change* | Overhaul |

**TABLE 2**

| Allison Transmission Recommended Fluid And Filter Change Intervals[1] With Prognostics Mode Disabled Using 100% TranSynd or TES668/TES295 Approved Fluid[2] | | | | | |
|---|---|---|---|---|---|
| **Severe vocation [3] Coaches or MTH equipped with retarder** | | | **General vocation[4] Coaches or MTH without retarder** | | |
| | **Filters** | | | **Filters** | |
| **Fluid** | **Main & Lube** | **Internal** | **Fluid** | **Main & Lube** | **Internal** |
| Whichever is the first of the following:<br>150,000 Miles<br>240 000 km<br>48 Months/<br>6000hrs<br>*Note: always replace main and lube filters with the fluid change* | Whichever is the first of the following:<br>75,000 Miles<br>120 000 km<br>36 Months/<br>3000hrs<br>*Note: always replace main and lube filters with the fluid change* | Overhaul | Whichever is the first of the following:<br>300,000 Miles<br>480 000 km<br>48 Months<br>6000hrs<br>*Note: always replace main and lube filters with the fluid change* | Whichever is the first of the following:<br>75,000 Miles<br>120 000 km<br>36 Months<br>3000hrs<br>*Note: always replace main and lube filters with the fluid change* | Overhaul |

[1] Extended TrandSynd, TES668/TES295 fluid and filter change intervals are only allowed with Allison High-Capacity filters.

[2] Less than 100% concentration of TranSynd or TES668/TES295 approved fluid is considered a mixture and should utilize TES389 change intervals. If the customer replaces non-TranSynd or non-TES295/non-TES668 fluid with TranSynd or TES295/TES668 equivalent, the change interval recommendations of TES389 or mixture must be followed. Upon the next oil change, if the customer reinstall TranSynd or TES295/TES668 equivalent, the fluid & filter change recommendation outlined in 100% TES295/TES668 approved fluids must be followed.

[3] Severe vocation= All retarder, On/Off highway, transit and intercity coach with duty cycle greater than one (1) stop per mile.

[4] General vocation= intercity coach with duty cycle less than or equal to one (1) stop per mile and all other vocations not listed in severe vocation.

**TABLE 3**

| Recommended Fluid And Filter Change Intervals With Prognostics Mode Enabled | | | |
|---|---|---|---|
| | FLUID CHANGE INTERVALS | HIGH CAPACITY MAIN & LUBE FILTERS CHANGE INTERVALS | SUCTION FILTER ASSEMBLY CHANGE INTERVAL |
| TES668, TES295 | Whichever is the first of the following:<br>• If the TRANS SERVICE indicator in the shift selector is illuminated steady for 2 minutes after D (drive) is selected<br>• 60 calendar months<br>*Note: always replace main and lube filters with the fluid change* | Whichever is the first of the following:<br>• If the TRANS SERVICE indicator in the shift selector is illuminated steady for 2 minutes after D (drive) is selected<br>• 60 calendar months<br>• Any time fluid is changed | At time of transmission overhaul |
| TES389 | Whichever is the first of the following:<br>• If the TRANS SERVICE indicator in the shift selector is illuminated steady for 2 minutes after D (drive) is selected<br>• 24 calendar months<br>*Note: always replace main and lube filters with the fluid change* | Whichever is the first of the following:<br>• If the TRANS SERVICE indicator in the shift selector is illuminated steady for 2 minutes after D (drive) is selected<br>• 24 calendar months<br>• Any time fluid is changed | At time of transmission overhaul |
| Prognostics Mode requires the use an Allison approved TES668, TES295 or TES389 transmission fluid and Allison High Capacity filters. | | | |
| A mixture of TES668/TES295 and TES389 fluid must continue to use the TES389 fluid change intervals, until two fluid changes with only TES668/TES295 fluid have occurred, at which time the TES668/TES295 schedule may be used. | | | |

### 3.5.1 Oil and Filter Change Interval with Prognostics Mode Disabled

Allison transmissions are factory fill with **Castrol TranSynd** fluid. Oil change must be performed with the vehicle on a flat and level surface and with parking brake applied. Oil and filter change frequency is determined by the severity of service and operating conditions of the transmission and by the filter equipment installed. See *"TABLE 1 or TABLE 2"* for oil and filter change intervals when PROGNOSTIC MODE is **disabled**. More frequent changes may be required when operations are subject to high levels of contamination or overheating. Filters must be changed at or before recommended intervals.

*IMPORTANT NOTE*

*Your transmission is equipped with **High Capacity filters**. High Capacity filters allow for increased fluid and filter change intervals in transmissions utilizing TES668/TES295 approved fluid or TranSynd. High Capacity filters eliminate the requirement of the initial 5000 miles (8000km) main filter change.*

*IMPORTANT NOTE*

*Allison Transmission recommends that customers use fluid analysis as the primary method for determining fluid change intervals. Many customers have a systematical annual transmission fluid change while, in many cases, fluid analysis could demonstrate that the transmission fluid is still in good condition and a fluid change is not required. In the absence of a fluid analysis program, the fluid change interval listed in TABLE 1 & TABLE 2 should be used.*

### 3.5.2 Oil and Filter Change Interval with Prognostics Mode Enabled

Oil Life Monitor and Filter Life Monitor of the Prognostics mode provide indicators of required maintenance actions. They are designed to maximize fluid and filter utilization. **Prognostics enabled require the use of an Allison approved TES668, TES295 or TES389 transmission fluid** and **Allison High Capacity filters**. If any other fluids or filters are used,

Prognostic mode **must be disabled**. Prognostic information will not be accurate with any other fluids or filters and could result in missed maintenance activities resulting in transmission damage. See *"TABLE 3* for oil and filter change intervals with PROGNOSTIC MODE **enabled**.

| *IMPORTANT NOTE* |
| --- |
| *A mixture of TES668/TES295 and TES389 fluid must continue to use the TES389 fluid change intervals, until two fluid changes with only TES668/TES295 fluid have occurred, at which time the TES668/TES295 schedule may be used.* |

Calendar-based change intervals of TABLE 3 must still be adhered to for both fluid and filter changes even if Prognostics has not indicated the need for either fluid or filter maintenance, unless fluid analysis is used.

## 3.6 FLUID AND FILTER CHANGE PROCEDURE

### 3.6.1 Drain

1. The transmission should be at an operating temperature of 160ºF (71ºC) to 200ºF (93ºC) when the oil is drained. This will ensure quicker and more complete fluid drainage.
2. Remove the drain plug from under the transmission (Figure 7) and allow the oil to drain into a suitable container. Check the condition of the oil as described previously.
3. Remove twelve bolts (item 1), two filter covers (item 2), two gaskets (item 3), two O-rings (item 4), two O-rings (item 5) and the two filters (item 6) from the bottom of the control module (Figure 7).
4. When reinstalling parts, lubricate and install new O-rings (4) and (5) on each cover (2). Lubricate O-ring inside filter (6) and push filter onto cover (2). Install new gaskets (3) on cover (2) and align holes in gaskets with holes in cover.

| **CAUTION** |
| --- |
| Do not use bolts to draw the cover to sump. This can damage the cover, seal, or sump. |

5. Install filter and cover assemblies into the filter compartment. Align each filter/cover assembly with the holes in the channel plate/sump. Push the cover assemblies in by hand to seat the seals.
6. Install twelve bolts and both covers.

   **TORQUE:** 38-45 lb-ft (52-61 Nm)

7. Inspect the drain plug and O-ring. Replace if necessary. Reinstall the drain plug.

   **TORQUE :** 18-24 lb-ft (24-33 Nm)

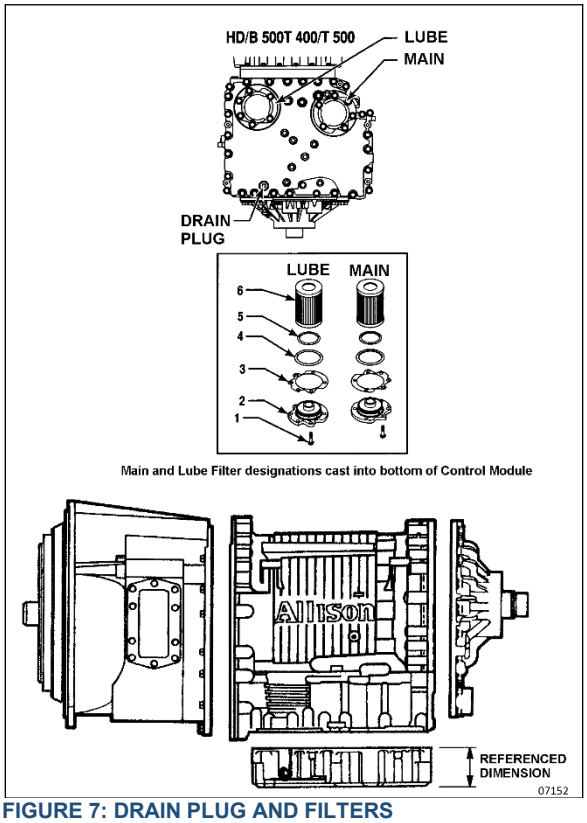


**FIGURE 7: DRAIN PLUG AND FILTERS**

**Fluid loss with filter change only**

When changing main and lube filters at recommended intervals, approximate fluid loss for each filter as follows:

Main filter = 2 quarts (1.9 liters)
Lube filter =8 quarts (7.6 liters)

### 3.6.2 Refill transmission

The amount of refill fluid is less than the amount used for the initial fill. Fluid remains in the external circuits and transmission cavities after draining the transmission.

| *NOTE* |
| --- |
| *Quantities listed below are approximations and do not include external oil cooler lines.* |

Using the oil level dipstick filler tube, refill with 24 US qts (23 liters), 28 US qts (26.5 liters) if equipped with retarder, and check the oil level using the **Fluid Level Check Using Pushbutton Shift Selector** procedure in this section. Add transmission fluid according to pushbutton shit selector fluid level check.

### 3.7 CLEANING AND INSPECTION OF ALLISON AUTOMATIC TRANSMISSION

The exterior of the transmission should be cleaned and inspected at regular intervals. The length of service and severity of operating conditions will determine the frequency of such inspections. Inspect the transmission for:

1. Loosen bolts (transmission and mounting components);
2. Oil leaks (correct immediately);
3. Loose, dirty, or improperly adjusted throttle sensor linkage;
4. Damaged or loose oil lines;
5. Worn or frayed electrical harnesses, improper routing;
6. Worn or out of phase drive line U-joint and slip fittings.

**CAUTION**

DO NOT pressure wash the transmission electrical connectors. Water and detergent will cause the contacts to corrode or become faulty.

#### 3.7.1 Breather

The breather is located on the engine, flywheel side near the valve cover. It serves to prevent pressure build-up within the transmission and must be cleaned to keep the passage opened. The prevalence of dust and dirt will determine the frequency at which the breather requires cleaning. Use care when cleaning the engine. Spraying steam, water or cleaning solution directly at the breather can force the water or solution into the transmission. Always use care when removing the hose connector from transmission to prevent the entry of foreign matter.

## 4. ALLISON TRANSMISSION OIL COOLER REMOVAL

### 4.1 TRANSMISSION WITHOUT RETARDER

Stop engine and allow engine to cool. Close both heater line shutoff valves (refer to Section 05 *''Cooling''*).

To drain the cooling system, proceed as per Section 05 *''Cooling''*, paragraph 5: Draining. If the cooling system is contaminated, flush system as per Section 05 *''Cooling''*, paragraph 7: Flushing.

1. Remove the rear L.H. side tag axle wheel, then remove the rear L.H. side fender panel.
2. Disconnect the two transmission hoses from oil cooler. Cover hose ends and fittings to prevent fluid contamination (Figure 8).

**WARNING**

A significant amount of oil may drain from oil lines when they are disconnected.

3. Unfasten the constant-torque hose clamps and remove the two hoses.
4. Unscrew the four holding nuts and remove the U-bolts, remove the oil cooler from engine compartment.
5. Reinstall transmission oil cooler by using reverse procedure.

### 4.2 TRANSMISSION WITH RETARDER

Stop engine and allow engine to cool. Close both heater line shutoff valves (refer to Section 05 *''Cooling''*).

1. To drain the cooling system, proceed as per Section 05 *''Cooling''*, paragraph 5: Draining. If the cooling system is contaminated, flush system as per Section 05 *''Cooling''*, paragraph 7: Flushing.
2. Remove the rear L.H. side tag axle wheel, then remove the rear L.H. side fender panel.
3. Disconnect the transmission hoses from oil cooler. Cover hose ends and fittings to prevent fluid contamination.

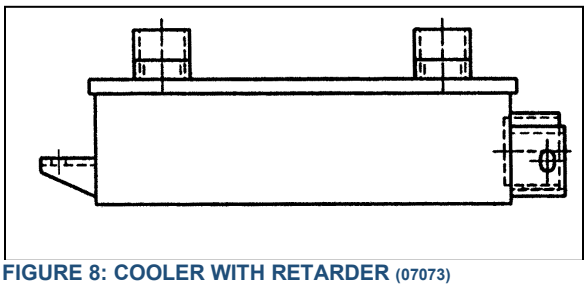

FIGURE 8: COOLER WITH RETARDER (07073)

**WARNING**

A significant amount of oil may drain from oil lines when they are disconnected.

4. Unfasten the constant-torque hose clamps and remove the two hoses.
5. Unscrew the holding bolts and nuts and remove the oil cooler from engine compartment.

## 5. ALLISON TRANSMISSION INSTALLATION

1. Place the transmission on a transmission jack.
2. Install a headless guide bolt into one of the 12 threaded holes in the flex plate adapter.

*NOTE*

*For more clearance between the tag axle and transmission, the tag axle may be unloaded and jacked up, or retracted (if applicable).*

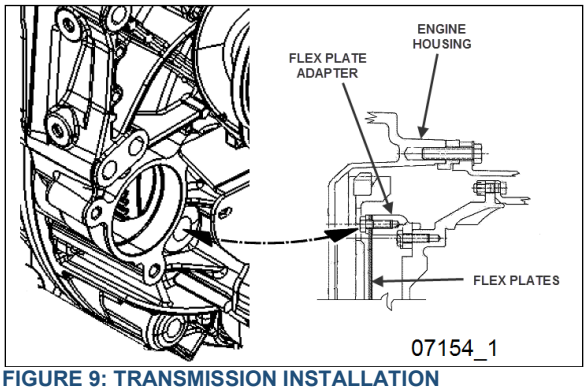


FIGURE 9: TRANSMISSION INSTALLATION

3. With the engine starter removed, use Volvo engine turning tool #88800014 (Figure 10) to align one of the 12 attaching screw holes in the flex plate with the engine starter access opening. If you do not have the Volvo tool, place a wrench on the crankshaft pulley attaching screw to turn it and therefore turn the flex plate.

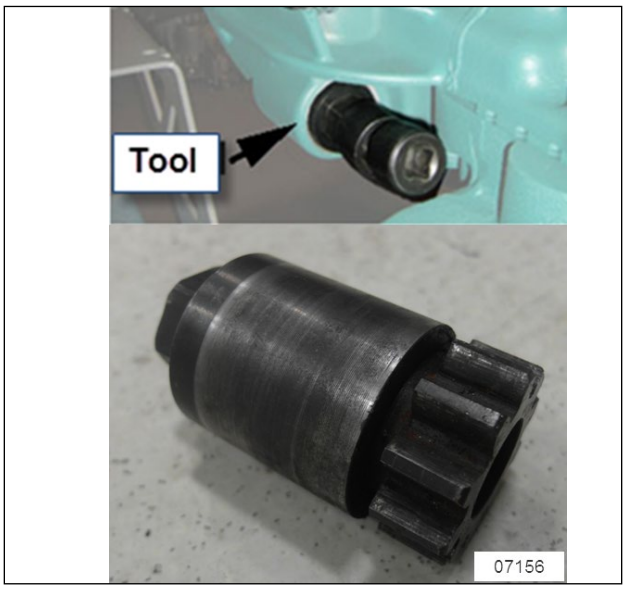


FIGURE 10: VOLVO ENGINE TURNING TOOL #88800014

4. Apply clear silicone (Prevost #680457 or equivalent) on the spacer and install it on the engine housing (Figure 11).




FIGURE 11: SPACER INSTALLATION

5. Lubricate the flywheel center pilot boss with molybdenum disulfide grease (Molycote G, or equivalent).
6. Raise transmission and position the flywheel pilot boss with the crankshaft hole.
7. Turn the flex plate adapter into the transmission to align the headless guide bolt with the flex plate hole facing the engine starter access opening.

**WARNING**

Severe damages and/or personal injury can occur if transmission is not adequately supported.

8. Apply clear silicone (Prevost #680457 or equivalent) around the edge of the

transmission housing (Figure 12: silicone application transmission housing).

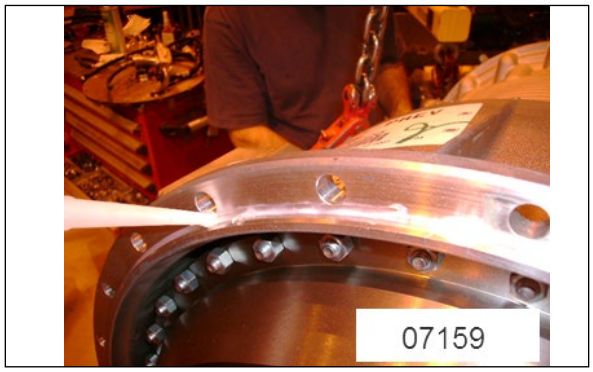


**FIGURE 12: SILICONE APPLICATION TRANSMISSION HOUSING**

9. Seat the transmission against the engine housing (with the spacer in place). NO FORCE IS REQUIRED. If interference is encountered, move the transmission away from engine, then investigate the cause.

> **CAUTION**
>
> The transmission housing must be seated against the engine housing (with the spacer in place) prior to tightening any screws. DO NOT USE SCREWS TO SEAT THE HOUSING.

10. Start all screws attaching the transmission housing to the engine housing.
11. Tighten them gradually in a criss-cross sequence as shown in Figure 13. Apply the following torque value:

    **TORQUE:** 46-50 lb-ft (62-68 Nm)

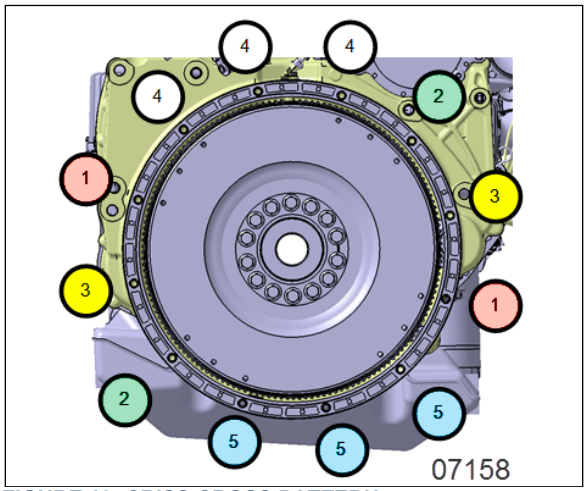


**FIGURE 13: CRISS CROSS PATTERN**

12. Remove the headless guide bolt from the flex plate adapter through the engine starter access opening. Replace it with a self-locking screw, finger-tighten then start the remaining screws. Use Volvo engine turning tool #88800014 (Figure 10) to align holes. If you do not have the Volvo tool, place a wrench on the crankshaft pulley attaching screw to turn it and therefore turn the flex plate.
13. Tighten all screws to the following torque value:

    **TORQUE:** 24-30 lb-ft (33-41 Nm)

> *NOTE*
>
> *Reinstall engine starter and connect cables.*
>
> *Reinstall access plug below starter motor.*

14. Remove jack from under transmission.
15. Connect all sensors.
16. Connect the main wiring harness.
17. Connect the air supply line (steel-braided hose) to the retarder control valve (if applicable).
18. Connect the two transmission oil cooler hoses as they were previously.
19. Reinstall clamps and brackets, and replace locking ties previously removed during removal procedure.
20. Install propeller shaft and its safety guard. Refer to Section 09, *"PROPELLER SHAFT".*
21. Install transmission dipstick and filler tube.
22. Install cross member under transmission.
23. Install engine splash guards.
24. Adjust the retarder pressure to 80 ± 3 psi with the air pressure regulator. For more information refer to Section 12, *"BRAKE AND AIR SYSTEM*", under heading *"AIR PRESSURE REGULATOR".* The air pressure regulator is located at back of engine compartment, on R.H. side (Figure 14) or in the R.H. side rear service compartment.
25. Make sure that the drain plug is in place, and then remove the transmission dipstick and pour approximately 24 US quarts (23 L) of automatic transmission fluid through the filler tube. Check and adjust oil level.

**CAUTION**

Do not overfill the transmission. Overfilling can cause oil aeration (milky appearance) and overheating. If overfilling occurs, drain oil as required to bring it to the proper level.

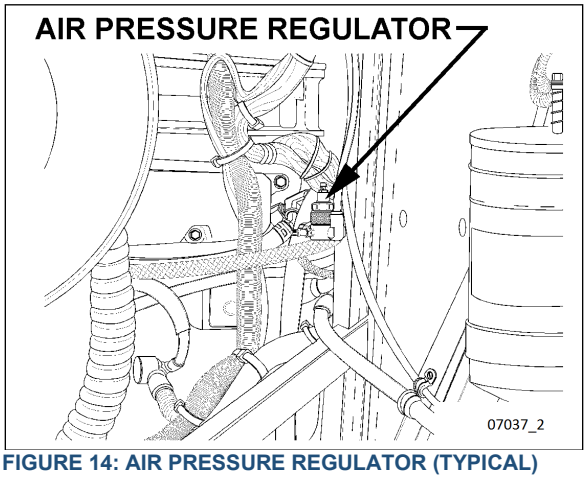


FIGURE 14: AIR PRESSURE REGULATOR (TYPICAL)

## 6. ALLISON TRANSMISSION TROUBLESHOOTING

The Allison transmission has a new Transmission Control Module (TCM) which involves specific diagnostic incident codes. The TCM unit is located in the coach main power compartment.

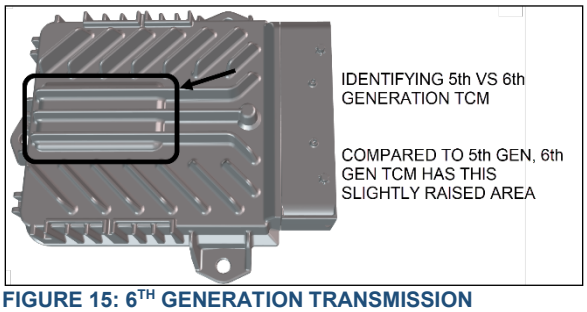


FIGURE 15: 6TH GENERATION TRANSMISSION CONTROL MODULE (07140)

TCM Replacement

The TCM is a non-serviceable electronic device. When it fails, it must be replaced using the following procedure:

- Open the coach main power compartment in order to get access to the TCM;
- Remove the electrical cable connectors;
- Unscrew the TCM unit;
- Replace by reversing the procedure.

**CAUTION**

Place the battery master switch to the ‘‘OFF’’ position.

### 6.1 DIAGNOSTIC TROUBLESHOOTING CODES (DTC) — ALLISON 6TH GENERATION CONTROLS

Diagnostic features are provided with the transmission control system to assist in troubleshooting of malfunctions and/or the monitoring of specific operating parameters. When a control system malfunction is detected, a series of Diagnostic Trouble Codes (DTCs) are used to identify and clarify the nature of the malfunction. These DTCs are each named by a 5 character alphanumeric string that refers to a diagnostic algorithm running pass/fail tests to help identify a malfunction in the transmission or vehicle operation. Most DTCs have some kind of diagnostic response that the operator notices, such as an illuminated CHECK light, selector display change, lock in range, or inhibit shifts condition.

DTCs are logged in the Transmission Control Module (TCM) memory by severity and by their active/inactive status with the most severe and active codes listed first. A maximum of five DTCs (numbered d1- d5) from most recent to oldest may be read from the shift selector. As DTCs are added, the oldest inactive DTC (historic) is dropped from the list. If all DTCs are active, the DTC with the lowest priority is dropped from the list.

An active code is any code that is current in the TCM decision-making process and has failed the DTC test(s) associated with that specific diagnostic algorithm. Historical codes, which are by definition inactive, are codes that are no longer failing their algorithm but are retained in the TCM in order to help the technician analyze possible causes and provide them direction if the vehicle is brought in before they are cleared from the queue.

DTCs can be cleared manually by the operator or they clear automatically from last (d5) to first (d1) in the queue after a number of engine starts, without becoming active again.

### 6.1.1 Using Shift Selector for Accessing Diagnostics Information

DTCs can be displayed on the display portion of the shift selector. A DTC is either active or historic. An active DTC is a DTC that is current in the TCM decision-making process. Historic DTCs are retained in the TCM memory and do not necessarily affect the TCM decision-making process.

### 6.1.2 Display Sequence

Up to five DTCs may be displayed one at a time from the selector once the diagnostic display mode has been initiated by the operator. Each DTC is 5 characters in length. The DTC status active or inactive is shown below the DTC.



Shows active DTC P0730

The operator presses the MODE button to read the next DTC in the queue (if any) or requests to exit diagnostics mode. The diagnostics mode times out and returns the selector to normal operating mode after approximately 10 minutes of operator inactivity.

### 6.1.3 Diagnostic Code Display and Clearing Procedure

Diagnostic codes can be read and cleared by two methods:

- Using an Allison DOC™ diagnostic tool. For specific instructions on how to use an Allison DOC™ diagnostic tool, refer to the User Guide.
- Using the pushbutton shift selector.

To begin the diagnostic process:

1. Bring the vehicle to a stop at a safe location.
2. Apply the parking brake.

To display stored codes:

1. Simultaneously press the ▲ (Upshift) and ▼ (Downshift) arrow buttons five times (Prognostics enabled) to access the Diagnostic Display Mode. With Prognostics disabled, press the ▲ (Upshift) and ▼ (Downshift) arrow buttons twice.
2. Press the MODE button to read the next code in the queue, if any.

To clear all active stored codes:

While in Diagnostic Mode, clear all active codes by pressing and holding the MODE button for approximately three seconds until the MODE message flashes. Release the MODE button. The MODE message should not remain illuminated if the active DTC shown in the display has cleared.

While in Diagnostic Mode, press and hold the MODE button for 10 seconds to clear both active codes and inactive codes. The MODE message flashes a second time indicating all codes are cleared from the queue.

### 6.1.4 Exiting Diagnostic Mode

Exit the diagnostic mode by one of the following methods:

1. Press simultaneously the ▲ (Upshift) and ▼ (Downshift) arrow buttons at the same time on the pushbutton shift selector.
2. Press any range button «D», «N» or «R» on the pushbutton shift selector.
3. After approximately 10 minutes of inactivity at the pushbutton shift selector, the diagnostic mode automatically exits and returns to normal operating mode.
4. Turn off power to the TCM (shut off the engine using the ignition key).

| *NOTE* |
| --- |
| *Be sure to record all codes displayed before they are cleared. This is essential for troubleshooting.* |

| *NOTE* |
| --- |
| *If clearing a code while locked in a «D» (Drive) or «R» (Reverse) position (fail-to-range), the transmission will still be in «D» (Drive) or «R» (Reverse) when the clearing procedure is completed. «N» (Neutral) must be manually selected.* |

### 6.1.5 Diagnostic Trouble Code Response

The electronic control system is programmed to inform the operator of a problem with the transmission system via the CHECK light and

shift selector display while it automatically takes action to protect the operator, vehicle, and transmission. When the Transmission Control Module (TCM) flags a Diagnostic Trouble Code (DTC) as active, the TCM may take a combination of diagnostic responses as listed in the following table.

| CATEGORY OF RESPONSE | ACTIONS TAKEN |
|---|---|
| DNS - Do Not Shift | Release lock up (LU) clutch and inhibit lock up operation.<br>Inhibit shifts from the current attained range.<br>Turn on the CHECK light.<br>Display the current attained range in the MONITOR window of the shift selector.<br>Blank the SELECT window of the shift selector.<br>Ignore any range selection inputs from the shift selector. |
| SOL OFF - SOLenoid OFF | All solenoids are commanded off, resulting in hydraulic default operation of the transmission – PCS1 & PCS2 are on hydraulically when off electrically. |
| RPR - Return to Previous Range | When the speed sensor ratio or PS1 tests do not pass, the TCM commands the same range as commanded before the shift. |
| NNC - Neutral No Clutches | When certain speed sensor ratio or PS1 tests do not pass, the TCM a neutral condition with no clutches applied. |
| DNA - Do Not Adapt | The TCM stops adaptive shift control while the code is active. |

## 6.2 DIAGNOSTIC TROUBLESHOOTING CODES (DTC) LIST - ALLISON 6TH GENERATION CONTROLS

| DTC | Description | CHECK Light | Inhibited Operation Description |
|---|---|---|---|
| C1312 | Retarder Request Sensor Failed Low | No | May inhibit retarder operation if not using J1939 datalink |
| C1313 | Retarder Request Sensor Failed High | No | May inhibit retarder operation if not using J1939 datalink |
| P0122 | Pedal Position Sensor Circuit Low Voltage | No | Use default throttle values. Freezes shift adapts. |
| P0123 | Pedal Position Sensor Circuit High Voltage | No | Use default throttle values. Freezes shift adapts. |
| P0218 | Transmission Fluid Over Temperature | Yes | Use default sump temp |
| P0562 | System Voltage Low | No | Inhibit TCC Operation, DNA |
| P0602 | TCM Not Programmed | Yes | Lock in Neutral |
| P0604 | Control module random access memory (RAM) | Yes | Lock in Neutral |
| P0614 | Torque Control Data Mismatch - ECM/TCM | Yes | Allows operation only in reverse and second range. |
| P0634 | TCM Internal Temperature Too High | Yes | SOL OFF (hydraulic default) |
| P0642 | Sensor Reference Voltage "A" Circuit Low | Yes | Default sensor data used |
| P0643 | Sensor Reference Voltage "A" Circuit High | Yes | Default sensor data used |
| P0657 | Actuator Supply Circuit Voltage 1 Open (HSD 1) | Yes | SOL OFF, DNA, Inhibit TCC operation, Inhibit main modulation |
| P0658 | Actuator Supply Voltage 1 (HSD1) Low | Yes | DNS, SOL OFF (hydraulic default) |
| P0659 | Actuator Supply Voltage 1 (HSD1) High | Yes | DNS, SOL OFF (hydraulic default) |
| P0703 | Brake Switch Circuit Malfunction | No | No Neutral to Drive shifts for refuse packer. TCM inhibits retarder operation if a TPS code is also active. |
| P0708 | Transmission Range Sensor Circuit High Input | Yes | Ignore defective strip selector inputs |
| P070C | Transmission Fluid Level Sensor Circuit – Low Input | No | None |
| P070D | Transmission Fluid Level Sensor Circuit – High Input | No | None |
| P0712 | Transmission Fluid Temperature Sensor Circuit Low Input | Yes | Use default sump temp |
| P0713 | Transmission Fluid Temperature Sensor Circuit High Input | Yes | Use default sump temp |
| P0715 | Turbine Shaft Speed Sensor Circuit | Yes | DNS, Lock in current range |
| P0716 | Turbine Shaft Speed Sensor Circuit Performance | Yes | DNS, Lock in current range |
| P0717 | Turbine Shaft Speed Sensor Circuit No Signal | Yes | DNS, Lock in current range |
| P071A | RELS Input Failed On | Yes | Inhibit RELS operation |
| P071D | General Purpose Input Fault | Yes | None |
| P0720 | Output Shaft Speed Sensor Circuit | Yes | DNS, Lock in current range |
| P0721 | Output Shaft Speed Sensor Circuit Performance | Yes | DNS, Lock in current range |
| P0722 | Output Speed Sensor Circuit No Signal | Yes | DNS, Lock in current range |
| P0725 | Engine Speed Sensor Circuit | No | Default to turbine speed |
| P0726 | Engine Speed Sensor Circuit Performance | No | Default to turbine speed |
| P0727 | Engine Speed Sensor Circuit No Signal | No | Default to turbine speed |
| P0729 | Incorrect 6$^{th}$ Gear Ratio | Yes | DNS, Attempt 5$^{th}$, then 3$^{rd}$ |
| P0731 | Incorrect 1$^{st}$ Gear ratio | Yes | DNS, Attempt 2$^{nd}$, then 5$^{th}$ |
| P0732 | Incorrect 2$^{nd}$ Gear ratio | Yes | DNS, Attempt 3$^{rd}$, then 5$^{th}$ |
| P0733 | Incorrect 3$^{rd}$ Gear ratio | Yes | DNS, Attempt 4$^{th}$, then 6$^{th}$ |
| P0734 | Incorrect 4$^{th}$ Gear ratio | Yes | DNS, Attempt 5$^{th}$, then 3$^{rd}$ |
| P0735 | Incorrect 5$^{th}$ Gear ratio | Yes | DNS, Attempt 6$^{th}$, then 3$^{rd}$, then 2$^{nd}$ |
| P0736 | Incorrect Reverse Gear ratio | Yes | DNS, Lock in Neutral |
| P0741 | Torque Converter Clutch System Stuck Off | Yes | None |
| P0752 | Shift Solenoid 1 Valve Performance-Stuck On | Yes | DNS |
| P0776 | Pressure Control Solenoid (PCS) 2 Stuck Off | Yes | DNS, RPR |
| P0777 | Pressure Control Solenoid 2 Stuck On | Yes | DNS, RPR |

| DTC | Description | CHECK Light | Inhibited Operation Description |
|---|---|---|---|
| P0796 | Pressure Control Solenoid 3 Stuck Off | Yes | DNS, RPR |
| P0797 | Pressure Control Solenoid 3 Stuck On | Yes | DNS, RPR |
| P0842 | Transmission Fluid Pressure Switch 1 Circuit Low | Yes | DNS, Lock in current range |
| P0843 | Transmission Fluid Pressure Switch 1 Circuit High | Yes | DNS, Lock in current range |
| P0847 | Transmission Fluid Pressure Switch 2 Circuit Low | Yes | None |
| P0848 | Transmission Fluid Pressure Switch 2 Circuit High | Yes | None |
| P088A | Transmission Fluid Filter Maintenance Alert | No | None |
| P088B | Transmission Fluid Filter Maintenance Required | No | None |
| P0880 | TCM Power Input Signal | No | None |
| P0881 | TCM Power Input Signal Performance | No | None |
| P0882 | TCM Power Input Signal Low | Yes | DNS, SOL OFF (hydraulic default) |
| P0883 | TCM Power Input Signal High | No | None |
| P0894 | Unexpected Mechanical Gear Disengagement | Yes | DNS, Lock in first |
| P0897 | Transmission Fluid Deteriorated | No | None |
| P0960 | Main Pressure Modulator Solenoid Control Circuit Open | Yes | None |
| P0962 | Main Pressure Modulator Solenoid Control Circuit Low | Yes | DNS, SOL OFF (hydraulic default) |
| P0963 | Main Pressure Modulator Solenoid Control Circuit High | Yes | None |
| P0964 | Pressure Control Solenoid 2 (PCS2) Control Circuit Open | Yes | DNS, SOL OFF (hydraulic default) |
| P0966 | Pressure Control Solenoid 2 (PCS2) Control Circuit Low | Yes | DNS, SOL OFF (hydraulic default) |
| P0967 | Pressure Control Solenoid 2 (PCS2) Control Circuit High | Yes | DNS, SOL OFF (hydraulic default) |
| P0968 | Pressure Control Solenoid 3 (PCS3) Control Circuit Open | Yes | DNS, SOL OFF (hydraulic default) |
| P0970 | Pressure Control Solenoid 3 (PCS3) Control Circuit Low | Yes | DNS, SOL OFF (hydraulic default) |
| P0971 | Pressure Control Solenoid 3 (PCS3) Control Circuit High | Yes | DNS, SOL OFF (hydraulic default) |
| P0973 | Shift Solenoid 1 (SS1) Control Circuit Low | Yes | DNS, SOL OFF (hydraulic default) |
| P0974 | Shift Solenoid 1 (SS1) Control Circuit High | Yes | DNS, SOL OFF (hydraulic default) |
| P0976 | Shift Solenoid 2 (SS2) Control Circuit Low | Yes | 7-speed: Allow 2 through 6, N, R Inhibit TCC operation |
| P0977 | Shift Solenoid 2 (SS2) Control Circuit High | Yes | 7-speed: Allow 2 through 6, N, R |
| P097A | Shift Solenoid 1 (SS1) Control Circuit Open | Yes | Lock in range |
| P097B | Shift Solenoid 2 (SS2) Control Circuit Open | Yes | 7-speed: Allow 2 through 6, N, R |
| P0989 | Retarder Pressure Sensor Circuit Low | No | None |
| P0990 | Retarder Pressure Sensor Circuit High | No | None |
| P1739 | Incorrect Low Gear Ratio | Yes | Command 2nd and allow shifts 2 through 6, N, R |
| P1790 | Gear Shift Module 1 Calibrated Invalid | Yes | Shift selector language or units incorrect |
| P1791 | Gear Shift Module 2 Calibrated Invalid | Yes | Shift selector language or units incorrect |
| P1891 | Throttle Position Sensor PWM Signal Low | No | Use default throttle values |
| P1892 | Throttle Position Sensor PWM Signal High | No | Use default throttle values |
| P2184 | Engine Coolant Temperature Sensor 2 Circuit Low Input | No | Use default engine coolant values |
| P2185 | Engine Coolant Temperature Sensor 2 Circuit High Input | No | Use default engine coolant values |
| P2637 | Torque Management Feedback Signal (A) | Yes | Inhibit SEM |
| P2641 | Torque Management Feedback Signal (B) | Yes | Inhibit LRTP |
| P2669 | Actuator Supply Circuit Voltage 2 Open (HSD2) | Yes | SOL OFF, Inhibit TCC operation, Inhibit Main modulation, ONA |
| P2670 | Actuator Supply Voltage 2 (HSD2) Low | Yes | DNS, SOL OFF (hydraulic default) |
| P2671 | Actuator Supply Voltage 2 (HSD2) High | Yes | DNS, SOL OFF (hydraulic default) |
| P2684 | Actuator Supply Circuit Voltage 3 Open (HSD3) | Yes | SOL OFF, Inhibit TCC operation, Inhibit Main modulation, ONA |
| P2685 | Actuator Supply Voltage 3 (HSD3) Low | Yes | DNS, SOL OFF (hydraulic default) |
| P2686 | Actuator Supply Voltage 3 (HSD3) High | Yes | DNS, SOL OFF (hydraulic default) |
| P2714 | Pressure Control Solenoid 4 (PCS4) Stuck Off | Yes | DNS, RPR |
| P2715 | Pressure Control Solenoid 4 (PCS4) Stuck On | Yes | DNS, SOL OFF (hydraulic default) |
| P2718 | Pressure Control Solenoid 4 (PCS4) Control Circuit Open | Yes | DNS, SOL OFF (hydraulic default) |
| P2720 | Pressure Control Solenoid 4 (PCS4) Control Circuit Low | Yes | DNS, SOL OFF (hydraulic default) |

| DTC | Description | CHECK Light | Inhibited Operation Description |
|---|---|---|---|
| P2721 | Pressure Control Solenoid 4 (PCS4) Control Circuit High | Yes | DNS, SOL OFF (hydraulic default) |
| P2723 | Pressure Control Solenoid 1 (PCS1) Stuck Off | Yes | DNS, RPR |
| P2724 | Pressure Control Solenoid 1 (PCS1) Stuck On | Yes | DNS, RPR |
| P2727 | Pressure Control Solenoid 1 (PCS1) Control Circuit Open | Yes | DNS, SOL OFF (hydraulic default) |
| P2729 | Pressure Control Solenoid 1 (PCS1) Control Circuit Low | Yes | DNS, SOL OFF (hydraulic default) |
| P2730 | Pressure Control Solenoid 1 (PCS1) Control Circuit High | Yes | DNS, SOL OFF (hydraulic default) |
| P2736 | Pressure Control Solenoid 5 (PCS5) Control Circuit Open | Yes | Inhibit retarder operation |
| P2738 | Pressure Control Solenoid 5 (PCS5) Control Circuit Low | Yes | Allow 2 through 6, N, R. Inhibit retarder and TCC operation |
| P2739 | Pressure Control Solenoid 5 (PCS5) Control Circuit High | Yes | Inhibit retarder operation |
| P273F | Retarder Oil Temperature Sensor Over Temperature Condition | No | None |
| P2742 | Retarder Oil Temperature Sensor Circuit – Low | No | Use default retarder temp values |
| P2743 | Retarder Oil Temperature Sensor Circuit – High | No | Use default retarder temp values |
| P2761 | TCC PCS Control Circuit Open | Yes | Inhibit TCC operation |
| P2763 | TCC PCS Control Circuit High | Yes | Inhibit TCC operation |
| P2764 | TCC PCS Control Circuit Low | Yes | 7-speed: Allow 2 through 6, N, R. Inhibit TCC operation |
| P2789 | Transmission Clutch Life Expired (Clutch Adaptive Learning at Limit) | No | None |
| P2793 | Gear Shift Direction Circuit | Yes | Ignores PWM input from shift selector |
| P2808 | Pressure Control Solenoid 6 (PCS6) Stuck Off | Yes | DNS, RPR |
| P2809 | Pressure Control Solenoid 6 (PCS6) Stuck On | Yes | DNS, RPR |
| P2812 | Pressure Control Solenoid 6 (PCS6) Control Circuit Open | Yes | DNS, SOL OFF (hydraulic default) |
| P2814 | Pressure Control Solenoid 6 (PCS6) Control Circuit Low | Yes | DNS, SOL OFF (hydraulic default) |
| P2815 | Pressure Control Solenoid 6 (PCS6) Control Circuit High | Yes | DNS, SOL OFF (hydraulic default) |
| U0073 | CAN Communication Bus 1 Off | No | Use default values |
| U0074 | CAN Communication Bus 2 Off | No | Use default values |
| U0100 | Lost Communications with ECM A | Yes | Use default values |
| U0103 | Lost Communication with Gear Shift Module (Shift Selector) 1 | Yes | Maintain range selected, observe gear shift direction circuit |
| U0291 | Lost Communication with Gear Shift Module (Shift Selector) 2 | Yes | Maintain range selected, observe gear shift direction circuit |
| U0304 | Incompatible Gear Shift Module 1 (Shift Selector) | Yes | Ignore shift selector inputs |
| U0333 | Incompatible Gear Shift Module 2 (Shift Selector) | Yes | Ignore shift selector inputs |
| U0404 | Invalid Data Received From Gear Shift Module (Shift Selector) 1 | Yes | Maintain range selected, observe gear shift direction circuit |
| U0592 | Invalid Data Received From Gear Shift Module (Shift Selector) 2 | Yes | Maintain range selected, observe gear shift direction circuit |

## 7. ALLISON TRANSMISSION REMOVAL

The following procedure deals with the removal of the Allison transmission without removing the power plant cradle from vehicle. The methods used to support the transmission and engine depend upon conditions and available equipment.

1. Select transmission's "NEUTRAL" positions, apply parking brake, and then set battery master switch to the "OFF" position.
2. Jack up vehicle, then place safety supports underneath body.

**CAUTION**

Only the recommended jacking points must be used as outlined in Section 18, "BODY".

*NOTE*

*For more clearance between the tag axle and transmission, the tag axle may be unloaded and jacked up or retracted (if applicable).*

3. Remove engine splash guards and protective panels surrounding transmission.
4. Remove cross member from under transmission.
5. Remove the transmission drain plug and allow oil to drain. Inspect the drain plug washer and replace it if necessary. Reinstall the drain plug (see *"3.5 Oil and Filter Change"* in this section.

**TORQUE:** 18-24 lb-ft (24-33 Nm)

**WARNING**

It is better to drain oil when it is still warm. Avoid contact with oil since it can be very hot and cause personal injury.

6. Remove transmission dipstick and filler tube.
7. Disconnect propeller shaft from transmission and remove its safety guard. Refer to Section 09, *"PROPELLER SHAFT".*
8. Disconnect the two oil cooler hoses from transmission. Cover hose ends and fittings to prevent fluid contamination.

**WARNING**

A significant amount of oil may drain from oil lines when they are disconnected.

9. Disconnect all sensors on L.H. side of the transmission.
10. Disconnect main wiring harness.
11. Disconnect the air supply line (steel-braided hose) from retarder control valve (if applicable).
12. Remove any locking tie, clamp and bracket that may interfere with the removal of transmission.
13. Support transmission using a suitable transmission jack.

*NOTE*

*Remove starter motor located on engine L.H. side. Removing the starter motor will allow access to unfasten the 12 converter-to-flexible plate attaching screws. Remove the plug located below starter motor and install cranking tool (88800014). Cranking the engine to gain access to the attaching screws may be done by turning the cranking tool using a suitable adapter (Figure 16).*

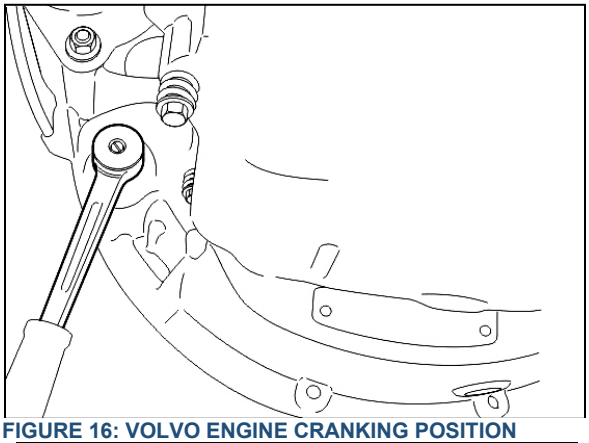

**FIGURE 16: VOLVO ENGINE CRANKING POSITION**

**CAUTION**

Do not rotate alternator shaft clockwise to avoid removing tension on belt.

14. Remove the 12 screws retaining the torque converter housing to the flywheel housing.

**CAUTION**

Make sure transmission-to-engine alignment is maintained when removing screws to avoid damaging torque converter housing.

15. Slowly pull transmission straight out to clear the engine.
16. Remove the transmission.

## 8. VOLVO I-SHIFT TRANSMISSION MAINTENANCE

### 8.1 TRANSMISSION OIL TYPE

Keep the transmission oil at the proper level and change it at the Volvo recommended intervals. Always replace the oil filter when the oil is changed. Always use the Volvo approved synthetic oil whenever adding or changing the transmission oil.

Consult "**2.2 FLUIDS AND LUBRICANTS SPECIFICATION**" in SECTION 24 for appropriate I-Shift transmission oils.

**CAUTION**

Never reuse drained I-Shift oil. The oil must be replaced along with the oil filter. Reusing drained oil can result in damage to transmission components.

## 8.2 CHECKING OIL LEVEL

Check the transmission oil level at each service interval. Park the vehicle on a level surface. Check the oil level through the sight glass on the side of the transmission. Add oil as necessary. Always use the correct Volvo approved synthetic oil.

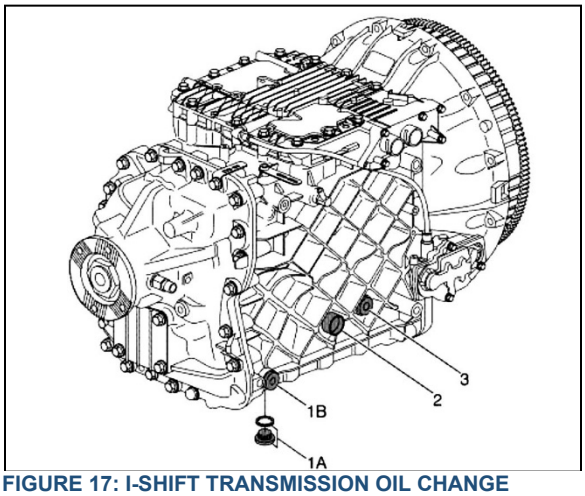


FIGURE 17: I-SHIFT TRANSMISSION OIL CHANGE

- Vehicle should be on horizontal ground when oil is changed;
- Do not check oil level straight after a journey (incorrect measurement). Undertake the check once the transmission oil has cooled down (lower than 104°F or 40 °C);
- Check oil level using transmission sight glass (2) ;

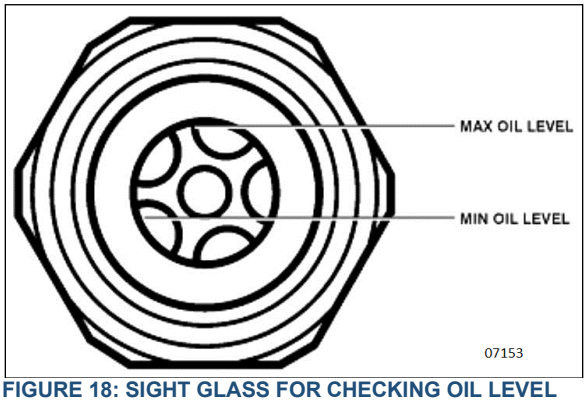


FIGURE 18: SIGHT GLASS FOR CHECKING OIL LEVEL

- Add oil through the oil filling point if necessary (3) ;
- Torque tighten fill plug.

**TORQUE:** 22-30 lb-ft (30-41 Nm)

## 8.3 OIL DRAINS INTERVAL

The length of time a transmission can operate before an oil change is required depends on the quality of the oil used and the vehicle application.

**MAINTENANCE**

Always use Volvo approved synthetic oil whenever changing the transmission oil. Always replace the oil filter when the oil is changed.

Refer to “2.2 FLUIDS AND LUBRICANTS SPECIFICATION” in SECTION 24 for appropriate I-Shift transmission oils.

**Extended Drains**

For normal and heavy operating condition, change the transmission oil and filter at the intervals specified by the Lubrication And Servicing Schedule in Section 24: LUBRICATION & SERVICING. This extended oil change interval requires using approved oil for extended drains.

## 8.4 OIL CHANGE

Approximately 15 liters (16 quarts) is needed for a complete oil change.

**WARNING**

Hot oil can cause burns. DO NOT allow hot oil to contact the skin. When changing oil, wear protective gloves.

Remove the drain plug from under the transmission (1A or 1B, Figure 17) and allow the oil to drain into a suitable container.

Inspect the drain plug and O-ring. Replace if necessary. Reinstall the drain plug.

**TORQUE:** 18-24 lb-ft (24-33 Nm)

**CAUTION**

Always dispose of all lubricants (engine oil, coolant, transmission oil, etc) and filters according to Federal or local regulations.

Change the oil filter (#20779040) at every oil change. Drain the oil filter housing before you remove the filter. Torque tighten oil filter housing drain plug.

**TORQUE:** 11-13 lb-ft (15-18 Nm)

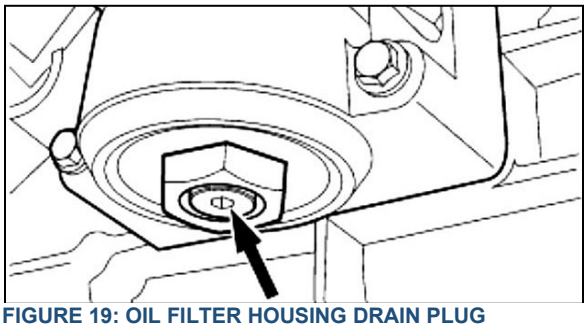

FIGURE 19: OIL FILTER HOUSING DRAIN PLUG

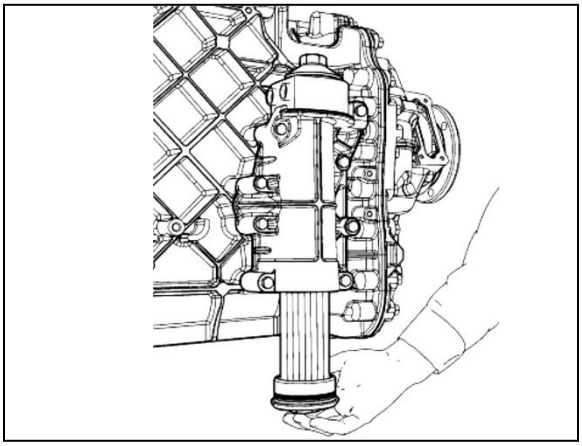

FIGURE 20: OIL FILTER

## 9. VOLVO I-SHIFT TRANSMISSION TECU FAULT CODES

| FUNCTION | PID/SID | FMI J1587 | ERROR | CONDITION | SYMPTOM | COMMENT |
|---|---|---|---|---|---|---|
| Brake switch | **PID65** | FMI14 | Brake interlock active | ***Activate:*** The gearlever is moved from neutral without prior application of the service brake ***Deactivate:*** The gearlever is returned to neutral or the vehicle speed is above 5km/h | White lamp is sent together with a pop-up message The transmission will not engage the selected gear (stays in neutral) | ***Conditions for activation: (and)*** The brake interlock function is activated (VTNA vehicles only) The vehicle speed is below 5km/h The gear lever is moved from neutral or in folded position without prior activation of the service brake or parking brake ***Conditions for deactivation: (either)*** The vehicle speed is above 5km/h The gearlever is returned to neutral or folded position |
| Calibration memory | **SID253** | FMI13 | Out of range | ***Active:*** Flash CS dataset error or program code missing ***Deactivate:*** Flash CS OK | Yellow lamp is sent Cranking is inhibited Engine cannot start | |
| Clutch cylinder slip point position | **PPID51** | FMI13 | Calibration value out of range | ***Activate:*** 1. The CS in NVRAM is not correct, or 2. The slip point has not been calibrated ***Deactivate:*** Slip point has been successfully calibrated | Yellow lamp is sent The vehicle cannot drive | |
| Clutch load on plates | **PID50** | FMI0 | Data valid but above normal operational range | ***Activate:*** The calculated stored energy is above 200kJ. The energy calculation is time-based for VTNA and physical for others. ***Deactivate:*** 7.0s after activation and, energy below 180 kJ or neutral, or driving without clutch slip | Yellow lamp is sent Start gear changed to gear 1 in A/D, for RTC also in M The clutch is overheated The clutch is slowly engaged | Clutch load on plates are set without any filtering |
| Clutch load on plates | | FMI11 | Clutch protection active (unidentifiable error) | ***Activate:*** Only activated for VTNA. Clutch slip more than 8.0s with vehicle movement less than 0.8m (e.g. hill holding event) ***Deactivate:*** 7.0s | Yellow lamp is sent Start gear changed to gear 1 in A/D, for RTC also in M There has been unnecessary clutch slip | |

| FUNCTION | PID/SID | FMI J1587 | ERROR | CONDITION | SYMPTOM | COMMENT |
|---|---|---|---|---|---|---|
| | | | | after activation and, acc pedal released more than 6.0s or neutral, or driving without clutch slip | The clutch is slowly engaged | |
| Clutch load on plates | | FMI14 | Special instructions | ***Activate:*** If there is an attempt to start on a high range gear or above gear 4 in VTNA in manual mode<br>***Deactivate:*** The start gear is changed to an allowed gear | White lamp is sent<br>Not possible to start | This fault code is not saved |
| Clutch plate wear condition | **PID36** | FMI0 | Data valid but above normal operational range | ***Activate:*** The clutch wear is more than or equal to "Service due position"<br>***Deactivate:*** The clutch disc is replaced and calibrated | Yellow lamp is sent<br>If active during a long time the clutch may wear out and become damaged | |
| Clutch position sensor supply (SEPoC5V) | **PPID54** | FMI0 | Data valid but above normal operational range | ***Activate:***<br>Voltage is above normal range<br>***Deactivate:***<br>Voltage is within normal range | Yellow lamp is sent<br>Reduced clutch performance<br>Reduced gearbox comfort at start and marshalling<br>Gear changes are slow | |
| Clutch position sensor supply (SEPoC5V) | | FMI1 | Data valid but below operational range | ***Activate:***<br>Voltage is below normal range<br>***Deactivate:***<br>Voltage is within normal range | Yellow lamp is sent<br>Reduced clutch performance<br>Reduced gearbox comfort at start and marshalling<br>Gear changes are slow | |
| Clutch system | **PSID27** | FMI0 | Unintentional disengagement of the clutch | ***Activate:*** 1. The clutch disengages when not commanded and,<br>2. There is no active fault code on the SEPoC and,<br>3. There is no active fault code for low air pressure and,<br>4. There is no active fault code on any of the clutch cylinder valves and, | Yellow lamp is sent<br>Slow gear changes<br>Low clutch performance | ***Detailed conditions to activate/deactivate***<br>The following conditions must be fulfilled three times (only once if the fault code-filter is switched OFF) in a row in order to set the fault code:<br>- The clutch has been engaged for less than 10s with inactive engagement valves<br>- The clutch cylinder position has been at least 1mm below the engaged limit at some point during this time<br>- The clutch leaves the engaged state<br>- The clutch disengagement |

| FUNCTION | PID/SID | FMI J1587 | ERROR | CONDITION | SYMPTOM | COMMENT |
|---|---|---|---|---|---|---|
| | | | | 5. The PCB temperature is above a specific limit<br>***Deactivate:*** The clutch response is OK | | valves are inactive<br>- There is no active fault code on any of the clutch cylinder position sensor (SEPoC) the clutch valves<br>- There is no active fault code for low air pressure<br>- The PCB temperature is above 10 dgC<br>*The fault is deactivated if any of the following conditions are fulfilled:*<br>- The clutch has been engaged for more than 20s with inactive engagement valves<br>- There is an active fault code for the clutch cylinder position sensor (SEPoC) |
| Clutch system | | FMI1 | Unintentional engagement of the clutch | ***Activate:*** 1. The clutch engages when not commanded and,<br>2. There is no active fault code on the SEPoC and,<br>3. There is no active fault code for low air pressure and,<br>4. There is no active fault code on any of the clutch cylinder valves and,<br>5. The PCB temperature is above a specific limit<br>***Deactivate:*** The clutch response is OK | Yellow lamp is sent<br>Slow gear changes<br>Low clutch performance | ***Algorithm for activation/deactivation***<br>The following sequence must be passed three times (only once if the fault code-filter is switched OFF) in order to activate:<br>- The clutch is near the disengaged position<br>- All clutch valves are deactivated<br>- The initial average clutch position is calculated during 0.1s<br>- Wait for 3s<br>- The final average clutch position is calculated during 0.1s<br>- If the position has moved more than 1mm in the engagement direction, the FMI is set, else if the clutch has moved less than 0.2mm in the engagement direction the FMI is reset.<br>*Additional conditions for activation:*<br>*- There is no active fault code on any of the clutch cylinder position sensor (SEPoC) the clutch valves low air pressure*<br>*- The PCB temperature is above 10dgC* |
| Clutch system | | FMI7 | Mechanical system not responding properly | ***Activate:*** 1. The clutch does not disengage/engage properly when commanded<br>2. There is no active fault code on the SEPoC and,<br>3. There is no active fault code for low air | Yellow lamp is sent<br>Slow gear changes<br>Low clutch performance | ***Detailed conditions to activate/deactivate***<br>One of the following conditions must be fulfilled three times in a row in order to activate the fault:<br>- The clutch position is more than 2mm from the disengaged position, after control of the clutch to the disengaged position during 1.0 s<br>- The clutch position is not in |

| FUNCTION | PID/SID | FMI J1587 | ERROR | CONDITION | SYMPTOM | COMMENT |
|---|---|---|---|---|---|---|
| | | | | pressure and,<br>4. There is no active fault code on any of the clutch cylinder valves and,<br>5. The PCB temperature is above 10 dgC<br>***Deactivate:*** The clutch response is OK | | the interval [set point +3mm; set point -1mm] after control of the clutch to near the slip point position during 1.0s<br>- The clutch position is more than 2.5mm from the engaged position, after control of the clutch to the engaged position during 1.0s<br>*The fault is deactivated after three successful occurrences, of control of the clutch to the requested position in 0.5s*<br>The fault is also deactivated if<br>- There is an active fault on the clutch position sensor<br>- There is an active fault on any of the clutch valves<br>- There is an active fault code for low air pressure - The PCB temperature is below 10 dgC |
| Clutch system | | FMI12 | Unintentional clutch slip | ***Activate:*** The clutch can not transfer a specific torque without slipping<br>***Deactivate:*** The clutch can transfer a specific torque without slipping | Yellow lamp is sent<br>The engine torque is reduced so that the clutch does not continue to slip | ***Detailed conditions Activation:***<br>- Clutch slip is detected when the engine torque is already reduced below the "Clutch slip warning torque level" in an attempt to prevent clutch slip. The clutch slip warning level is 2500Nm for MD16 (TMF) variants and 2000Nm for other variants (SMF)<br>- There is no active fault on any of: the sensor for the countershaft speed (SECS) the sensor for the clutch position (SEPoC) and the engine torque & engine speed is received from the engine ECU<br>***Deactivation:***<br>The clutch can transfer the maximum engine torque without slipping<br>the fault is also deactivated at startup of the system |
| Clutch system | | FMI11 | Clutch drag | ***Activate:*** The clutch transfers too much torque in disengaged position<br>***Deactivate:*** The clutch transfers no torque in disengaged position | Yellow lamp is sent<br>The clutch wear is high | ***Algorithm for activation/deactivation***<br>- Start the check when the counter shaft has been stopped with the brake during slip point calibration when the gearlever is in neutral during normal operation.<br>- Release the brake and check the input shaft speed after 0.5s if input shaft speed > 300rpm, activate this fault code if input shaft speed < 300rpm, deactivate |

| FUNCTION | PID/SID | FMI J1587 | ERROR | CONDITION | SYMPTOM | COMMENT |
|---|---|---|---|---|---|---|
| | | | | | | this fault code<br>- Continue with the slip point calibration |
| Digital input flash NVRAM programming enable (DIEE) | **PSID254** | FMI3 | Voltage above normal or shorted high | ***Activate:*** The voltage level for DIEE-pin is high<br>***Deactivate:*** The voltage for the DIEE-pin is low | Yellow lamp is sent<br>Cranking is inhibited<br>Engine can not start<br>All communication with the control unit is disabled except from programming of MSW | The boot-program does not save any fault codes |
| Digital input flash NVRAM programming enable (DIEE) | | FMI3 | Voltage above normal or shorted high | ***Active:*** The voltage level for DIEE-pin is high<br>***Deactivate:*** The voltage for the DIEE-pin is low | Yellow lamp is sent | If the DIEE-pin is high during normal operation the fault code is saved. |
| Fast clutch valves low side (VAF-) | **PSID5** | FMI3 | Voltage above normal or shorted high | ***Activate:*** The low-side drive is short circuit to Ubatt<br>***Deactivate:*** The low-side drive is OK | Yellow lamp is sent<br>Fast engagement/dis engagement disabled<br>Reduced clutch performance<br>Gear changes are slow | |
| Fast clutch valves low side (VAF-) | | FMI6 | Current above normal or grounded circuit | ***Activate:*** 1. The low-side drive is short circuit to Gnd and<br>2. There is no active fault code for short circuit to Gnd on VAFE or VAFD<br>***Deactivate: T***he low-side drive is OK | Yellow lamp is sent<br>Fast engagement/dis engagement disabled<br>Reduced clutch performance<br>Gear changes are slow | |
| Gearbox brake | **PSID28** | FMI7 | Mechanical system not responding properly | ***Activate:*** The gearbox brake does not brake when the valve is activated | Yellow lamp is sent<br>Slow gear changes at standstill | ***Detailed conditions***<br>The following conditions must be fulfilled for five activations (only one with the fault code-filter switched OFF) of the gearbox brake in order to activate the fault code:<br>- The activation must last for at least 0.2s<br>- There is no active fault code on the sensor for the split cylinder position (SEPoS)<br>- The minimum valve of the derivative of the input shaft speed during activation is greater than -500 rpm/s<br>- There is no active fault on any of the gearbox brake valve (VAGB) |

| FUNCTION | PID/SID | FMI J1587 | ERROR | CONDITION | SYMPTOM | COMMENT |
|---|---|---|---|---|---|---|
| | | | | | | the sensor for the counter shaft speed (SECS) the sensor for the split cylinder position (SEPoS) low air pressure. The following conditions must be fulfilled for one activation of the gearbox brake ***in order to deactivate:*** - The minimum value of the derivative of the countershaft speed during the activation is greater than -1000rpm/s The fault is also deactivated if there is an active fault on the countershaft speed sensor (SESC), on the gearbox brake valve (VAGB), or the split position sensor (SEPoS) |
| Gears 1/R engagement system | **PSID25** | FMI0 | Unintentional disengagement of 1:st gear | ***Conditions to set the fault code:*** -The 1/R cylinder leaves the 1:st position -The 1:st cylinder valves are inactive | Yellow lamp is sent Loss of torque | ***Detailed conditions to activate/deactivate*** The following conditions must be fulfilled three times (only one time if the fault code filter is switched OFF) in a row in order to set the fault code: (engagement of another gear will reset the count) - The 1/R cylinder position indicates that the 1/R gear leaves the 1:st position - The 1:st cylinder valves are inactive - There is no active fault on any of the sensor for the position of the 1/R cylinder (SEPo1R) the valve for shift to 1:st gear the valve for shift to reverse gear - There is no active fault code for low air pressure *Note: T*he fault will always have the state inactive. Check the fault count and last occurrence to get more information. |
| Gears 1/R engagement system | | FMI1 | Unintentional disengagement of reverse gear | ***Conditions to set the fault code:*** -The 1/R gear leaves the reverse position -The 1/R cylinder valves are inactive | Yellow lamp is sent Loss of torque | ***Detailed conditions to activate/deactivate*** The following conditions must be fulfilled three times (only one time if the fault code-filter is switched OFF) in a row in order to set the fault code: (engagement of another gear will reset the count) - The 1/R cylinder position indicates that the 1/R gear leaves the reverse position - The 1/R cylinder valves are inactive - There is no active fault on any of the sensor for the |

| FUNCTION | PID/SID | FMI J1587 | ERROR | CONDITION | SYMPTOM | COMMENT |
|---|---|---|---|---|---|---|
| | | | | | | position of the 1/R cylinder (SEPo1R)<br>the valve for shift to 1:st gear the valve for shift to reverse gear<br>- There is no active fault code for low air pressure<br>*Note: T*he fault will always have the state inactive. Check the fault count and last occurrence to get more information. |
| Gears 1/R engagement system | | FMI2 | Unintentional disengagement of neutral gear (1:st and reverse gear cylinder) | ***Conditions to set the fault code:***<br>-The 1/R gear leaves the neutral position<br>-The 1/R cylinder valves are inactive | Yellow lamp is sent<br>Loss of torque | ***Detailed conditions to activate/deactivate***<br>The following conditions must be fulfilled three times (only one time if the fault code-filter is switched OFF) in a row in order to set the fault code:<br>(engagement of another gear will reset the count)<br>- The 1/R cylinder position indicates that the 1/R gear leaves the neutral position<br>- The 1/R cylinder valves are inactive<br>- There is no active fault on any of the sensor for the position of the 1/R cylinder (SEPo1R) the valve for shift to 1:st gear the valve for shift to reverse gear<br>- There is no active fault code for low air pressure<br>*Note: T*he fault will always have the state inactive. Check the fault count and last occurrence to get more information. |
| Gears 1/R engagement system | | FMI11 | Blocked engagement of 1:st gear | ***Conditions to set the fault code:***<br>-The 1:st gear can not engage<br>-There is no active fault code on the SEPo1R<br>-There is no active fault code for low air pressure<br>-There is no active fault code on any of the 1:st and reverse gear cylinder valves | Yellow lamp is sent<br>Loss of torque<br>The 1:st gears will not be selected by the system for a short while. After five successful gear changes a new attempt to use 1:st gear may be made | ***Detailed conditions to activate/deactivate***<br>The following conditions must be fulfilled three times (only one time if the fault code-filter is switched OFF) in a row in order to set the fault code:(engagement of another gear will reset the count)<br>- The valve for reaching 1:st gear is activated for at least 0.8s<br>- The 1/R cylinder position sensor indicates that 1:st position is not engaged<br>- There is no active fault on any of the 1/R position sensor (SEPo1R) the valve for shift to 1:st gear the valve for shift to reverse gear<br>- There is no active fault code for low air pressure<br>The fault is deactivated if any of the following |

| FUNCTION | PID/SID | FMI J1587 | ERROR | CONDITION | SYMPTOM | COMMENT |
|---|---|---|---|---|---|---|
| | | | | | | conditions are fulfilled:<br>- The 1/R position sensor indicates that 1:st position is engaged<br>- There is an active fault code on any of the 1/R position sensor (SEPo1R) the valve for shift to 1:st gear the valve for shift to reverse gear |
| Gears 1/R engagement system | | FMI12 | Blocked engagement of reverse gear | ***Conditions to set the fault code:***<br>-The reverse gear can not engage | Yellow lamp is sent<br>The R gear can not engage, but the system will try to engage it as long as the gearlever is in the reverse position | ***Detailed conditions to activate/deactivate***<br>The following conditions must be fulfilled three times (only one time if the fault code filter is switched OFF) in a row in order to set the fault code:<br>(engagement of another gear will reset the count)<br>- The valve for reaching the reverse gear is activated for at least 0.8s<br>- The 1/R cylinder position sensor indicates that R position is not engaged<br>- There is no active fault on any of the 1/R position sensor (SEPo1R) the valve for shift to 1:st gear the valve for shift to reverse gear<br>- There is no active fault code for low air pressure.<br>The fault is deactivated if any of the following conditions are fulfilled:<br>- The 1/R position sensor indicates that R position is engaged<br>- There is an active fault code on any of the 1/R position sensor (SEPo1R) the valve for shift to 1:st gear the valve for shift to reverse gear |
| Gears 1/R engagement system | | FMI7 | Blocked engagement of neutral gear (1:st and reverse gear cylinder) | ***Conditions to set the fault code:***<br>-The neutral gear (1:st and reverse gear cylinder) can not engage | Yellow lamp is sent | ***Detailed conditions to activate/deactivate***<br>The following conditions must be fulfilled three times (only one time if the fault code-filter is switched OFF) in a row in order to set the fault code:<br>(engagement of another gear will reset the count)<br>- The valve for reaching the reverse gear is activated for at least 0.8s<br>- The 1/R cylinder position sensor indicates that neutral position is not engaged<br>- There is no active fault code on any of the 1/R position sensor (SEPo1R) the valve for shift to 1:st |

| FUNCTION | PID/SID | FMI J1587 | ERROR | CONDITION | SYMPTOM | COMMENT |
|---|---|---|---|---|---|---|
| | | | | | | gear the valve for shift to reverse gear<br>- There is no active fault code for low air pressure<br>The fault is deactivated if any of the following conditions are fulfilled:<br>- The 1/R position sensor indicates that neutral position is engaged<br>- There is an active fault code on any of the 1/R position sensor (SEPo1R) the valve for shift to 1:st gear the valve for shift to reverse gear |
| Gears 2/3 engagement system | **PSID26** | FMI0 | Unintentional disengagement of 2:nd gear | ***Conditions to set the fault code:***<br>-The 2/3 cylinder position indicates that the 2/3 gear leaves the 2:nd position<br>- The 2:nd cylinder valves are inactive | Yellow lamp is sent<br>Loss of torque | ***Detailed conditions to activate/deactivate***<br>The following conditions must be fulfilled three times (only one time if the fault code-filter is switched OFF) in a row in order to set the fault code:<br>(engagement of another gear will reset the count)<br>- The 2/3 cylinder position indicates that the 2/3 gear leaves the 2:nd position<br>- The 2:nd cylinder valves are inactive<br>- There is no active fault on any of the sensor for the position of the 2/3 cylinder (SEPo23) the valve for shift to 2:nd gear the valve for shift to 3:rd gear<br>- There is no active fault code for low air pressure<br>*Note:* The fault will always have the state inactive. Check the fault count and last occurrence to get more information. |
| Gears 2/3 engagement system | | FMI1 | Unintentional disengagement of 3:rd gear | ***Conditions to set the fault code:***<br>-The 2/3 cylinder leaves the 3:rd position<br>- The 3:rd cylinder valves are inactive | Yellow lamp is sent<br>Loss of torque | ***Detailed conditions to activate/deactivate***<br>The following conditions must be fulfilled three times (only once if the fault code-filter is switched OFF) in a row in order to set the fault code:<br>(engagement of another gear will reset the count)<br>- The 2/3 cylinder position indicates that the 2/3 gear leaves the 3:rd position<br>- The 3:rd cylinder valves are inactive<br>- There is no active fault on any of the sensor for the position of the 2/3 cylinder (SEPo23) the valve for shift to 2:nd gear the valve for shift to 3:rd gear<br>- There is no active fault |

| FUNCTION | PID/SID | FMI J1587 | ERROR | CONDITION | SYMPTOM | COMMENT |
|---|---|---|---|---|---|---|
| | | | | | | code for low air pressure<br>*Note:* The fault will always have the state inactive. Check the fault count and last occurrence to get more information. |
| Gears 2/3 engagement system | | FMI2 | Unintentional disengagement of neutral gear (2:nd and 3:rd gear cylinder) | ***Conditions to set the fault code:***<br>-The 2/3 cylinder leaves the neutral position<br>- The 2/3 cylinder valves are inactive | Yellow lamp is sent | ***Detailed conditions to activate/deactivate***<br>The following conditions must be fulfilled three times (only once if the fault code-filter is switched OFF) in a row in order to set the fault code:<br>(engagement of another gear will reset the count)<br>- The 2/3 cylinder position indicates that the 2/3 gear leaves the neutral position<br>- The 2/3 cylinder valves are inactive<br>- There is no active fault on any of the sensor for the position of the 2/3 cylinder (SEPo23) the valve for shift to 2:nd gear the valve for shift to 3:rd gear<br>- There is no active fault code for low air pressure<br>*Note:* The fault will always have the state inactive. Check the fault count and last occurrence to get more information. |
| Gears 2/3 engagement system | | FMI11 | Blocked engagement of 2:nd gear | ***Conditions to set the fault code:***<br>-The 2:nd gear can not engage | Yellow lamp is sent<br>Loss of torque<br>The 2:nd gear will not be selected by the system for a short while. After five successful gearshifts a new attempt to use 2:nd gear may be made | ***Detailed conditions to activate/deactivate***<br>The following conditions must be fulfilled three times (only once if the fault code-filter is switched OFF) in a row in order to set the fault code:<br>(engagement of another gear will reset the count)<br>- The valve for reaching 2:nd gear is activated for at least 0.8s<br>- The 2/3 cylinder position sensor indicates that 2:nd position is not engaged<br>- There is no active fault on any of the 2/3 position sensor (SEPo23) the valve for shift to 2:nd gear the valve for shift to 3:rd gear<br>- There is no active fault code for low air pressure<br>*The fault is deactivated if any of the following conditions are fulfilled:*<br>- The 2/3 position sensor indicates that 2:nd 2;nd position is engaged<br>- There is an active fault code on any of the 2/3 position sensor (SEPo23) |

| FUNCTION | PID/SID | FMI J1587 | ERROR | CONDITION | SYMPTOM | COMMENT |
|---|---|---|---|---|---|---|
| | | | | | | the valve for shift to 2:nd gear the valve for shift to 3:rd gear |
| Gears 2/3 engagement system | | FMI12 | Blocked engagement of 3:rd gear | ***Conditions to set the fault code:***<br>-The 3:rd gear can not engage | Yellow lamp is sent<br>Loss of torque<br>The 3:rd gear will not be selected by the system for a short while. After five successful gearshifts a new attempt to use 3:rd gear may be made | ***Detailed conditions to activate/deactivate***<br>The following conditions must be fulfilled three times (only once if the fault code-filter is switched OFF) in a row in order to set the fault code:<br>(engagement of another gear will reset the count)<br>- The valve for reaching 3:rd gear is activated for at least 0.8s<br>- The 2/3 cylinder position sensor indicates that 3:rd position is not engaged<br>- There is no active fault on any of the 2/3 position sensor (SEPo23) the valve for shift to 2:nd gear the valve for shift to 3:rd gear<br>- There is no active fault code for low air pressure<br>*The fault is deactivated if any of the following conditions are fulfilled:*<br>- The 2/3 position sensor indicates that 3:rd position is engaged<br>- There is an active fault code on any of the 2/3 position sensor (SEPo23) the valve for shift to 2:nd gear the valve for shift to 3:rd gear |
| Gears 2/3 engagement system | | FMI7 | Blocked engagement of neutral gear (2:nd and 3:rd gear cylinder) | ***Conditions to set the fault code:***<br>-The neutral gear (2:nd 3:rd gear cylinder) can not engage | Yellow lamp is sent | ***Detailed conditions to activate/deactivate***<br>The following conditions must be fulfilled three times (only once if the fault code-filter is switched OFF) in a row in order to set the fault code:<br>(engagement of another gear will reset the count)<br>- The valve for reaching gear (2:nd and 3:rd gear cylinder) is activated for at least 0.8s<br>- The 2/3 cylinder position sensor indicates that neutral position is not engaged<br>- There is no active fault code on any of the 2/3 position sensor (SEPo23) the valve for shift to 2:nd gear the valve for shift to 3:rd gear<br>- There is no active fault code for low air pressure<br>*The fault is deactivated if any of the following conditions are fulfilled:* |

| FUNCTION | PID/SID | FMI J1587 | ERROR | CONDITION | SYMPTOM | COMMENT |
|---|---|---|---|---|---|---|
| | | | | | | - The 2/3 position sensor indicates that neutral position is engaged<br>- There is an active fault code on any of the 2/3 position sensor (SEPo23) the valve for shift to 2:nd gear the valve for shift to 3:rd gear |
| J1708/J1587 | **SID250** | FMI9 | Abnormal update rate | ***Activate:*** The FMI shall be set if any of the messages* have not been received on the bus for 30s<br>***Deactivate:*** The FMI shall be cleared if all messages* are sent on the bus<br>*PID190, PID85 and PPID212 | Yellow lamp is sent<br>Fault codes can not be read<br>On-vehicle tests can not be performed | |
| J1939 | **SID231** | FMI2 | Data erratic, intermittent or incorrect | ***Active:*** This FMI shall be set if the CAN transceiver signals "bus-off"<br>***Deactivate:*** FMI cleared if CAN-transceiver does not signal "bus-off" | Yellow lamp is sent<br>Much reduced gear selection and gear change performance | |
| Missing data on J1939 form BECU | **PSID204** | FMI8 | Abnormal frequency, pulse width or period | ***Activate:*** The FMI shall be set if the wheel speeds from the BECU (MID136) are incorrect<br>***Deactivate:*** The FMI shall be cleared if the wheel speeds from the BECU (MID136) are correct | Yellow lamp<br>Automatic gear selection enters backup mode with gear changes only at certain vehicle speeds | |
| Missing data on J1939 form BECU | | FMI9 | Abnormal update rate | ***Activate:*** The FMI shall be set if message WSI from BECU (MID136) is not received within 1s<br>***Deactivate:*** The FMI shall be cleared if message WSI is received at normal rate | Yellow lamp<br>Automatic gear selection enters backup mode with gear changes only at certain vehicle speeds | |
| Missing data on J1939 form GECU | **PSID207** | FMI9 | Abnormal update rate | ***Activate:*** The FMI shall be set if message VP6 from GECU (MID223) is not received within 1s | Yellow lamp<br>Slow response on manual gear changes and slow response when buttons | |

| FUNCTION | PID/SID | FMI J1587 | ERROR | CONDITION | SYMPTOM | COMMENT |
|---|---|---|---|---|---|---|
| | | | | ***Deactivate:*** The FMI shall be cleared if message VP6 is received at normal rate | are pressed on the gear lever. | |
| Missing data on J1939 from the adaptive cruise control | **PSID211** | FMI9 | Abnormal update rate | ***Activate:*** The FMI shall be set if message ACC1 from ACC (MID219) is not received within 1s, and ACC is installed ***Deactivate:*** The FMI shall be cleared if message ACC1 is received at normal rate | Yellow lamp The retarder ACC function does not work | |
| Missing data on J1939 from the EMS | **PSID200** | FMI9 | Abnormal update rate | ***Activate:*** The FMI shall be set if message EEC1 from EECU is not received within 200ms ***Deactivate:*** The FMI shall be cleared if message EEC1 is received at normal rate | Yellow lamp If there is no POWERTRAIN_ CAN, automatic gear selection enters backup mode with gear changes only at certain vehicle speeds If there is no Powertrain_CAN and the engine does not receive any messages from the TECU, the gear changes will be slow | |
| Missing data on J1939 from the light control module (LCM) | **PSID210** | FMI9 | Abnormal update rate | ***Activate:*** The FMI shall be set if message VP37 from LCM (MID216) is not received within 10s ***Deactivate:*** The FMI shall be cleared if message VP37 is received at normal rate | Yellow lamp The start gear might be wrong Automatic gear selection performance might be reduced a certain time after start Automatic gear selection performance might be reduced a certain time after a trailer has been connected/disco nnected | |
| Missing data on J1939 from the suspension ECU (ECS) | **PSID208** | FMI9 | Abnormal update rate | ***Activate:*** The FMI shall be set if message VW from ECS (MID150) is not received within 10s, and ECS is | Yellow lamp The start gear might be wrong after loading and unloading | |

| FUNCTION | PID/SID | FMI J1587 | ERROR | CONDITION | SYMPTOM | COMMENT |
|---|---|---|---|---|---|---|
| | | | | installed<br>***Deactivate:*** The FMI shall be cleared if message VW is received at normal rate | | |
| Missing data on J1939 from VECU | **PSID201** | FMI8 | Abnormal frequency, pulse width or period | ***Activate:*** The FMI shall be set if the acc pedal pos or service brake-switch from the VECU (MID144) is incorrect<br>***Deactivate:*** The FMI shall be cleared if the acc pedal pos and service brake-switch from the VECU (MID144) are correct | Yellow lamp<br>If pedal pos is undefined, automatic gear selection enters backup mode with gear changes only at certain vehicle speeds<br>If pedal pos is undefined, gearbox comfort at start and marshalling might be reduced<br>If service brake is undefined, automatic gear selection enters backup mode with gear changes only at certain vehicle speeds | |
| Missing data on J1939 from VECU | | FMI9 | Abnormal update rate | ***Activate:*** The FMI shall be set if message VP2 from VECU (MID144) is not received within 100ms<br>***Deactivate:*** The FMI shall be cleared if message VP2 is received at normal rate | Yellow lamp<br>Automatic gear selection enters backup mode with gear changes only at certain vehicle speeds<br>Gearbox comfort at start and marshalling might be reduced | |
| Powertrain CAN | **PSID232** | FMI2 | Data erratic, intermittent or incorrect | ***Activate****:* The FMI shall be set if the CAN transceiver signals "busOFF"<br>***Deactivate****:* The FMI shall be cleared if the CAN-transceiver does not signal "busOFF" | Yellow lamp is sent<br>Reduced automatic gear selection and gear change performance | This fault code is only valid for vehicles where a Pwertrain_CAN link exist between the TECU and the engine. |
| Powertrain CAN | | FMI9 | Abnormal update rate | ***Activate:*** The FMI shall be set if message VP24/MID128 is not received within 100ms<br>***Deactivate:*** The FMI shall be | Yellow lamp is sent<br>Reduced automatic gear selection and gear change performance | |

| FUNCTION | PID/SID | FMI J1587 | ERROR | CONDITION | SYMPTOM | COMMENT |
|---|---|---|---|---|---|---|
| | | | | cleared if message VP24/MID128 is received at normal rate | | |
| Program memory | **SID240** | FMI2 | Data erratic, intermittent or incorrect | ***Activate:*** Flash CS error or program code missing<br>***Deactivate***: Flash CS OK | Yellow lamp is sent<br>Cranking is inhibited<br>Engine can not start | |
| Range engagement system | **PSID24** | **FMI0** | Unintentional disengagement of low range | ***Conditions to set the fault code:***<br>-The range cylinder leaves the low range position<br>-The range cylinder valves are inactive | Yellow lamp is sent<br>Loss of torque | ***Detailed conditions to activate/deactivate***:<br><br>The following conditions must be fulfilled three times (only once if the fault code-filter is switched OFF) in a row, in order to set the fault code:<br>(engagement of another gear will reset the count)<br>- The range cylinder position indicates that range gear leaves the low range position<br>- The range cylinder valves are inactive<br>- There is no active fault on any of the sensor for the position of the range cylinder (SEPoR) the valve for shift to high range the valve for shift to low range<br>- There is no active fault code for low air pressure<br>note: The fault will always have the state inactive. Check fault-count and last occurrence to get more information |
| Range engagement system | | FMI1 | Unintentional disengagement of high range | ***Conditions to set the fault code:***<br>-The range cylinder leaves the high range position<br>-The range cylinder valves are inactive | Yellow lamp is sent<br>Loss of torque | ***Detailed conditions to activate/deactivate***:<br><br>The following conditions must be fulfilled three times (only once if the fault code-filter is switched OFF) in a row, in order to set the fault code:<br>(engagement of another gear will reset the count)<br>- The range cylinder position indicates that the range gear leaves the high range position<br>- The range cylinder valves are inactive<br>- There is no active fault on any of the sensor for the position of the range cylinder (SEPoR) the valve for shift to high range the valve for shift to low range<br>- There is no active fault code for low air pressure |

| FUNCTION | PID/SID | FMI J1587 | ERROR | CONDITION | SYMPTOM | COMMENT |
|---|---|---|---|---|---|---|
| | | | | | | *note*: The fault will always have the state inactive. Check fault-count and last occurrence to get more information |
| Range engagement system | | FMI11 | Blocked engagement of low range | ***Conditions to set the fault code:***<br>-The low range gear can not engage | Yellow lamp is sent<br>Loss of torque | ***Detailed conditions to activate/deactivate***:<br><br>The following conditions must be fulfilled three times (only once if the fault code-filter is switched OFF) in a row, in order to set the fault code:<br>(engagement of another gear will reset the count)<br>- The low range can not engage within 3.8s<br>- The gearbox oil temperature is above 10dgC<br>- There is no active fault code on any of the sensor for the position of the range cylinder (SEPoR) low air pressure the range cylinder valves<br>***The fault is deactivated if any of the following conditions are fulfilled:***<br>- The range cylinder position sensor indicates that low range is engaged<br>- The gearbox oil temperature is below 10dgC<br>- There is an active fault on any of the sensor for the position of the range cylinder (SEPoR) low air pressure the range cylinder valves |
| Range engagement system | | FMI12 | Blocked engagement of high range | ***Conditions to set the fault code:***<br>-The high range gear can not engage | Yellow lamp is sent<br>Loss of torque | ***Detailed conditions to activate/deactivate***:<br><br>The following conditions must be fulfilled three times (only once if the fault code-filter is switched OFF) in a row, in order to set the fault code:<br>(engagement of another gear will reset the count)<br>- The high range gear can not engage within 3.8s<br>- The gearbox oil temperature is above 10dgC<br>- There is no active fault on any of the range position sensor (SEPoR) low air pressure the range cylinder valves<br>- There is no active fault code for low air pressure<br>***The fault is deactivated if any of the following conditions are fulfilled:***<br>- The range cylinder position |

| FUNCTION | PID/SID | FMI J1587 | ERROR | CONDITION | SYMPTOM | COMMENT |
|---|---|---|---|---|---|---|
| | | | | | | sensor indicates that high range is engaged<br>- The gearbox oil temperature is below 10dgC<br>- There is an active fault code on any of the range position sensor (SEPoR) low air pressure the range cylinder valves |
| Sensor for the 1:st and reverse gear cylinder (SEPo1R) | **PPID10** | FMI2 | Data erratic, intermittent or incorrect | ***Activate:*** The position sensor is distributing a temperature-signal from the sensor ASIC, if the value from this sensor deviates too much this fault code is triggered.<br>***Deactivate:*** | Yellow lamp is sent<br>Slow gear changes | ***Detailed conditions to activate / deactivate:***<br>***Activate:*** The position sensor is distributing a temperature-signal from the sensor ASIC, if the value from this sensor deviates too much this fault code is triggered, the diagnostics are based upon cross-reference between all four position-sensors. This means that if the value differs more than +/- 20dgC from the average-temp, if the temperature is out of boundary -60dgC to +160dgC or if the temperature changes at a rate higher than 10dgC during 15s, then this fault code is set.<br>***Deactivate:***<br>Fault code stays until a clear DTC command is received |
| Sensor for the 1:st and reverse gear cylinder (SEPo1R) | | FMI3 | Voltage above normal or shorted high | ***Activate:*** Status from the ASIC is short circuit to Ubatt<br>***Deactivate***: Status is OK | Yellow lamp is sent<br>Slow gear changes | |
| Sensor for the 1:st and reverse gear cylinder (SEPo1R) | | FMI5 | Current below normal or open circuit | ***Activate:*** Status from the ASIC is open circuit<br>***Deactivate:*** Status is OK | Yellow lamp is sent<br>Slow gear changes | |
| Sensor for the 1:st and reverse gear cylinder (SEPo1R) | | FMI6 | Current above normal or grounded circuit | ***Activate:*** Status from the ASIC is short circuit to Gnd<br>***Deactivate:*** Status is OK | Yellow lamp is sent<br>Slow gear changes | |
| Sensor for the 1:st and reverse gear cylinder (SEPo1R) | | FMI13 | Calibration value out of range | ***Activate:*** The Checksum of the NVRAM is not correct, or the sensor has not been calibrated<br>***Deactivate:*** Sensor signal has been successfully calibrated | Yellow lamp is sent<br>Cranking is inhibited<br>Engine can not start | |

| FUNCTION | PID/SID | FMI J1587 | ERROR | CONDITION | SYMPTOM | COMMENT |
|---|---|---|---|---|---|---|
| Sensor for the inclination of the gearbox (SEIG) | **PPID140** | FMI2 | Data erratic, intermittent or incorrect | ***Activate:*** 1. The sensor signal is above or below normal range and 2. The vehicle has been standing still for a specific time ***Deactivate:*** The sensor signal is in the normal range | Yellow lamp is sent The start gear might be wrong Gear selection performance might be reduced Downhill and uphill gear change performance may be reduced | |
| Sensor for the PCB temperature | **PPID55** | FMI0 | Data valid but above normal operational range | ***Activate***: temp above 125dgC ***Deactivate:*** temp below 125dgC | Yellow lamp is sent | |
| Sensor for the position of the 2:nd and 3:rd gear cylinder (SEPo23) | **PPID11** | FMI2 | Data erratic, intermittent or incorrect | ***Activate:*** The position sensor is distributing a temperature-signal from the sensor ASIC, if the value from this sensor deviates too much this fault code is triggered. ***Deactivate:*** | Yellow lamp is sent Slow gear changes | ***Detailed conditions to activate / deactivate:*** ***Activate:*** The position sensor is distributing a temperature-signal from the sensor ASIC, if the value from this sensor deviates too much this fault code is triggered, the diagnostics are based upon cross-reference between all four position-sensors. This means that if the value differs more than +/- 20dgC from the average-temp, if the temperature is out of boundary -60dgC to +160dgC or if the temperature changes at a rate higher than 10dgC during 15s, then this fault code is set. ***Deactivate:*** Fault code stays until a clear DTC command is received |
| Sensor for the position of the 2:nd and 3:rd gear cylinder (SEPo23) | | FMI3 | Voltage above normal or shorted high | ***Activate:*** Status from the ASIC is short circuit to Ubatt ***Deactivate:*** Status is OK | Yellow lamp is sent Slow gear changes | |
| Sensor for the position of the 2:nd and 3:rd gear cylinder (SEPo23) | | FMI5 | Current below normal or open circuit | ***Activate***: Status from the ASIC is open circuit ***Deactivate:*** Status is OK | Yellow lamp is sent Slow gear changes | |
| Sensor for the position of the 2:nd and 3:rd gear cylinder (SEPo23) | | FMI6 | Current above normal or grounded circuit | ***Activate***: Status from the ASIC is short circuit to Gnd ***Deactivate***: Status is OK | Yellow lamp is sent Slow gear changes | |

| FUNCTION | PID/SID | FMI J1587 | ERROR | CONDITION | SYMPTOM | COMMENT |
|---|---|---|---|---|---|---|
| Sensor for the position of the 2:nd and 3:rd gear cylinder (SEPo23) | | FMI13 | Calibration value out of range | ***Activate:*** The Checksum of the NVRAM is not correct, or the sensor has not been calibrated ***Deactivate:*** Sensor signal has been successfully calibrated | Yellow lamp is sent Cranking is inhibited Engine can not start | |
| Sensor for the position of the range (SEPoR) | **PID31** | FMI2 | Data erratic, intermittent or incorrect | ***Activate:*** The position sensor is distributing a temperature-signal from the sensor ASIC, if the value from this sensor deviates too much this fault code is triggered. ***Deactivate:*** | Yellow lamp is sent Slow gear changes | ***Detailed conditions to activate / deactivate:*** ***Activate:*** The position sensor is distributing a temperature-signal from the sensor ASIC, if the value from this sensor deviates too much this fault code is triggered, the diagnostics are based upon cross-reference between all four position-sensors. This means that if the value differs more than +/- 20dgC from the average-temp, if the temperature is out of boundary -60dgC to +160dgC or if the temperature changes at a rate higher than 10dgC during 15s, then this fault code is set. ***Deactivate:*** Fault code stays until a clear DTC command is received |
| Sensor for the position of the range (SEPoR) | | FMI3 | Voltage above normal or shorted high | ***Activate***: Status from the ASIC is short circuit to Ubatt ***Deactivate***: Status is OK | Yellow lamp is sent Slow gear changes | |
| Sensor for the position of the range (SEPoR) | | FMI5 | Current below normal or open circuit | ***Activate***: Status from the ASIC is open circuit ***Deactivate***: Status is OK | Yellow lamp is sent Slow gear changes | |
| Sensor for the position of the range (SEPoR) | | FMI6 | Current above normal or grounded circuit | ***Activate***: Status from the ASIC is short circuit to Gnd ***Deactivate***: Status is OK | Yellow lamp is sent Slow gear changes | |
| Sensor for the position of the range (SEPoR) | | FMI13 | Calibration value out of range | ***Activate***: The Checksum of the NVRAM is not correct, or the sensor has not been calibrated ***Deactivate***: Sensor signal has been successfully calibrated | Yellow lamp is sent Cranking is inhibited Engine can not start | |

| FUNCTION | PID/SID | FMI J1587 | ERROR | CONDITION | SYMPTOM | COMMENT |
|---|---|---|---|---|---|---|
| Sensor for the position of the Split (SEPoS) | **PID32** | FMI2 | Data erratic, intermittent or incorrect | ***Activate:*** The position sensor is distributing a temperature-signal from the sensor ASIC, if the value from this sensor deviates too much this fault code is triggered. ***Deactivate:*** | Yellow lamp is sent Slow gear changes | ***Detailed conditions to activate / deactivate:*** ***Activate:*** The position sensor is distributing a temperature-signal from the sensor ASIC, if the value from this sensor deviates too much this fault code is triggered, the diagnostics are based upon cross-reference between all four position-sensors. This means that if the value differs more than +/- 20dgC from the average-temp, if the temperature is out of boundary -60dgC to +160dgC or if the temperature changes at a rate higher than 10dgC during 15s, then this fault code is set. ***Deactivate:*** Fault code stays until a clear DTC command is received |
| Sensor for the position of the Split (SEPoS) | | FMI3 | Voltage above normal or shorted high | ***Activate:*** Status from the ASIC is short circuit to Ubatt ***Deactivate:*** Status is OK | Yellow lamp is sent Slow gear changes | |
| Sensor for the position of the Split (SEPoS) | | FMI5 | Current below normal or open circuit | ***Activate***: Status from the ASIC is open circuit ***Deactivate***: Status is OK | Yellow lamp is sent Slow gear changes | |
| Sensor for the position of the Split (SEPoS) | | FMI6 | Current above normal or grounded circuit | ***Activate:*** Status from the ASIC is short circuit to Gnd ***Deactivate***: Status is OK | Yellow lamp is sent Slow gear changes | |
| Sensor for the position of the Split (SEPoS) | | FMI13 | Calibration value out of range | ***Activate:*** The Checksum of the NVRAM is not correct, or the sensor has not been calibrated ***Deactivate:*** Sensor signal has been successfully calibrated | Yellow lamp is sent Cranking is inhibited Engine can not start | |
| Sensor for the pressure of the supply air (SEPrSA) | **PID37** | FMI0 | Data vaild but above normal operational range | ***Activate:*** 1. Sensor signal is in normal range 2. Pressure is above 10.0 [bar] ***Deactivate:*** 1. Sensor signal is in normal range 2. Pressure is below 10.0 [bar] | Yellow lamp is sent reduced clutch performance | |
| Sensor for the pressure | | FMI1 | Data valid but below | ***Activate:*** 1. Sensor signal is in normal range | Yellow lamp is sent The symbol for | |

| FUNCTION | PID/SID | FMI J1587 | ERROR | CONDITION | SYMPTOM | COMMENT |
|---|---|---|---|---|---|---|
| of the supply air (SEPrSA) | | | operational range | 2. Pressure is below 5.0 [bar] ***Deactivate:*** 1. Sensor signal is in normal range 2. Pressure is above 5.0 [bar] | compressed air, gearbox is sent Gear changes may be absent Reduced clutch performance | |
| Sensor for the pressure of the supply air (SEPrSA) | | FMI3 | Voltage above normal or shorted high | ***Activate:*** The sensor signal is above normal range ***Deactivate:*** The sensor signal is in normal range | Yellow lamp is sent | |
| Sensor for the pressure of the supply air (SEPrSA) | | FMI5 | Current below normal or open circuit | ***Activate:*** The sensor signal is below normal range ***Deactivate:*** The sensor signal is in normal range | Yellow lamp is sent | |
| Sensor for the speed on the counter shaft (SESC) | **PID161** | FMI1 | Data valid but below operational range | ***Activate:*** 1. The sensor signal is within normal range and, 2. The counter shaft speed differs from both the main shaft speed (SESM) and the vehicle speed received from the vehicle ECU when the counter shaft is rotating ***Deactivate:*** 1. The sensor signal is within normal range 2. The counter shaft speed and the main shaft speed are equal when the counter shaft is rotating | Yellow lamp is sent Reduced gear change performance Gearbox brake up shifts can not be used Slip point can not be updated which will give reduced performance at starts Start gear engagement only possible at standstill and when the vehicle speed is high enough to synchronize the main box with the engine | Detailed condition to activate: The following conditions must be fulfilled for a time of 2.0s in order to activate: A gear (not neutral) is engaged in the gearbox The value of the input shaft speed calculated from the main shaft speed sensor (SESM) is more than 300rpm, or the value of the input shaft speed calculated from the counter shaft speed sensor (SESC) is more than 300rpm -The values of the input shaft speed calculated from the counter shaft speed sensor (SESC) and the main shaft speed sensor (SESM) differ more than 50rpm -The values of the input shaft speed calculated from the counter shaft speed sensor (SESC) and the vehicle speed received from the vehicle ECU differ more than 30rpm -The values of the input shaft speed calculated from the main shaft speed sensor (SESM) and the vehicle speed received from the vehicle ECU differ less than 30rpm -There is no active fault on any of -The sensor for the main shaft speed (SESM) -The sensor for the position of the split cylinder (SEPoS) -The sensor for the position of the shift cylinder1R |

| FUNCTION | PID/SID | FMI J1587 | ERROR | CONDITION | SYMPTOM | COMMENT |
|---|---|---|---|---|---|---|
| | | | | | | (SEPo1R)<br>-The sensor for the position of the shift cylinder 23 (SEPo23)<br>-The sensor for the position of teh range cylinder (SEPoR)<br><br>The fault is deactivated if the following conditions are fulfilled for a time of 2.0s:<br>-A gear (not neutral) is engaged in the gearbox<br>-The value of the input shaft speed calculated from the countershaft speed sensor (SESC) is more than 300rpm, or<br>-the value of the input shaft speed calculated from the main shaft speed sensor (SESM) is more than 300rpm<br>-The values of the input shaft speed calculated from the countershaft speed sensor (SESC) and the main shaft speed sensor (SESM) differ less than 50rpm<br>The fault is also deactivated if the following conditions are fulfilled for a time of 2.0s:<br>-A neutral gear is engaged in the gearbox<br>-The engine speed is above 400rpm<br>-The clutch is engaged<br>-Direct or indirect split is engaged<br>-The values of the input shaft speed is calculated from the counter shaft speed sensor (SESC) and the engine speed received from the engine ECU differ less than 50 rpm<br>The fault is also deactivated if the signal from the countershaft speed sensor (SESC) is not within normal range or if there is an active fault code on any of:<br>-The clutch position sensor (SEPoC)<br>-The sensor for the position of the split cylinder (SEPoS)<br>-The sensor for the position of the shift cylinder1R (SEPo1R)<br>-The sensor for the position of the shift cylinder 23 (SEPo23)<br>-The sensor for the position of teh range cylinder (SEPoR) |

| FUNCTION | PID/SID | FMI J1587 | ERROR | CONDITION | SYMPTOM | COMMENT |
|---|---|---|---|---|---|---|
| Sensor for the speed on the counter shaft (SESC) | | FMI4 | Voltage below normal or shorted low | ***Activate:*** The sensor signal is below normal range. ***Deactivate:*** The sensor signal is within normal range | Yellow lamp is sent<br>Reduced gear change performance<br>Gearbox brake up shifts can not be used<br>Slip point cannot be updated which will give reduced performance at starts<br>Start gear engagement only possible at standstill and when the vehicle speeds is high enough to synchronize the main box with the engine | |
| Sensor for the speed on the counter shaft (SESC) | | FMI5 | Current below normal or open circuit | ***Activate:*** The sensor signal is above normal range ***Deactivate:*** The sensor signal is within normal range | Yellow lamp is sent<br>Reduced gear change performance<br>Gearbox brake up shifts can not be used<br>Slip point cannot be updated which will give reduced performance at starts<br>Start gear engagement only possible at standstill and when the vehicle speed is high enough to synchronize the main box with the engine | |
| Sensor for the speed on the main shaft (SESM) | **PID160** | FMI1 | Data valid but below operational range | ***Activate:*** 1. Sensor signal is within normal range and 2. The main shaft speed differs from both the value of the countershaft speed and the vehicle speed received from the vehicle ECU ***Deactivate:*** *1. Sensor signal is within normal range and, 2. The main* | Yellow lamp is sent<br>Reduced gear change performance<br>Reduced gear change comfort | Detailed condition to activate:<br>The following conditions must be fulfilled for a time of 2.0s in order to activate:<br>A gear (not neutral) is engaged in the gearbox<br>The value of the input shaft speed calculated from the main shaft speed sensor (SESM) is more than 300rpm, or the value of the input shaft speed calculated from the counter shaft speed sensor (SESC) is more than 300rpm<br>The values of the input shaft speed calculated from the |

| FUNCTION | PID/SID | FMI J1587 | ERROR | CONDITION | SYMPTOM | COMMENT |
|---|---|---|---|---|---|---|
| | | | | *shaft speed and the counter shaft speed are equal when the main shaft is rotating* | | main shaft speed sensor (SESM) and the counter shaft speed sensor (SESC) differ more than 50rpm<br>The values of the input shaft speed calculated from the main shaft speed sensor (SESM) and the vehicle speed received from the vehicle ECU differ more than 30rpm<br>The values of the input shaft speed calculated from the counter shaft speed sensor (SESC) and the vehicle speed received from the vehicle ECU differ less than 30rpm<br>There is no active fault on any of<br>The sensor for the countershaft speed (SECS)<br>The sensor for the position of the split cylinder (SEPoS)<br>The sensor for the position of the shift cylinder1R (SEPo1R)<br>The sensor for the position of the shift cylinder 23 (SEPo23)<br>The sensor for the position of teh range cylinder (SEPoR)<br>The following conditions must be fulfilled for a time of 2.0s in order to deactivate:<br>A gear (not neutral) is engaged in the gearbox<br>The value of the input shaft speed calculated from the main shaft speed sensor (SESM) is more than 300rpm, or the value of the input shaft speed calculated from the counter shaft speed sensor (SESC) is more than 300rpm<br>The value of the input shaft speed calculated from the main shaft speed sensor (SESM) and the counter shaft speed sensor (SESC) differ less than 50rpm<br>The fault is also deactivated if The sensor signal (SESM) is not within normal range<br>There is an active fault on any of The sensor for the countershaft speed (SECS)<br>The sensor for the position of the split cylinder (SEPoS)<br>The sensor for the position of the shift cylinder1R (SEPo1R)<br>The sensor for the position of the shift cylinder 23 (SEPo23) |

| FUNCTION | PID/SID | FMI J1587 | ERROR | CONDITION | SYMPTOM | COMMENT |
|---|---|---|---|---|---|---|
| | | | | | | The sensor for the position of teh range cylinder (SEPoR) |
| Sensor for the speed on the mainshaft (SESM) | | FMI2 | Data erratic, intermittent or incorrect | ***Activate:*** The sensor indicates wrong traveling direction<br>***Deactivate:*** The sensor indicates correct traveling direction | Yellow lamp is sent<br>Reduced gear change performance | Detailed conditions to activate<br>The following conditions must be fulfilled for a time of 2.0s in order to activate:<br>The input shaft speed calculated from the countershaft speed sensor (SESC) is above 300 rpm and the clutch is engaged or The input shaft speed calculated from the countershaft speed sensor (SECS) is above 600 rpm, the clutch position is more engaged than the slip point and the engine speed is received from the engine ECU and above 600rpm.<br>A forward gear is engaged in the gearbox and the main shaft speed sensor (SESM) indicates reverse movement or a reverse gear is engaged and the main shaft speed sensor (SESM) indicates forward movement<br>There is no other active fault on the sensor for the main shaft speed (SESM)<br>There is no active fault on any of:<br>-The sensor for the countershaft speed (SECS)<br>-The sensor for the clutch position (SePoC)<br>-The sensor for the position of the split cylinder (SePoS)<br>-The sensor for the position of the shift cylinder (1R SEPo1R)<br>-The sensor for the position of the shift cylinder (23 SEPo23)<br>-The sensor for the range cylinder (SEPoR)<br><br>The fault is deactivated if the following conditions are fulfilled for a time of 2,0s:<br>The input shaft speed calculated from the counter shaft speed sensor (SECS) is above 300 rpm and the clutch is engaged or The input shaft speed calculated from the counter shaft speed sensor (SECS) is above 600 rpm, the clutch position is more engaged than the slip point and the engine speed is received from the engine ECU and |

| FUNCTION | PID/SID | FMI J1587 | ERROR | CONDITION | SYMPTOM | COMMENT |
|---|---|---|---|---|---|---|
| | | | | | | above 600rpm<br>A forward gear is engaged in the gearbox and the main shaft speed sensor (SESM) indicates forward movement or A reverse gear is engaged and the main shaft speed sensor (SESM) indicates reverse movement.<br>The fault is also deactivated if the main shaft speed sensor (SESM) signal is not within normal range, or if there is an active fault on any of the sensors:<br>-The sensor for the countershaft speed (SECS)<br>-The sensor for the clutch position (SePoC)<br>-The sensor for the position of the split cylinder (SePoS)<br>-The sensor for the position of the shift cylinder (1R SEPo1R)<br>-The sensor for the position of the shift cylinder (23 SEPo23)<br>-The sensor for the range cylinder (SEPoR) |
| Sensor for the speed on the main shaft (SESM) | | FMI3 | Voltage above normal or shorted high | ***Activate***: Signal or supply voltage is above normal range<br>***Deactivate***: Signal and supply voltage is in normal range. | Yellow lamp is sent<br>Reduced gear change performance<br>Reduced gear change comfort | |
| Sensor for the speed on the main shaft (SESM) | | FMI4 | Voltage below normal or shorted low | ***Activate:*** Signal and supply voltage is below normal range.<br>***Deactivate:*** Signal and supply voltage is within normal range | Yellow lamp is sent<br>Reduced gear change performance<br>Reduced gear change comfort | |
| Sensor for the speed on the main shaft (SESM) | | FMI5 | Current below normal or open circuit | ***Activate:***<br>***1.***Signal voltage is below normal range and,<br>2. Supply voltage is in the normal range<br>***Deactivate:*** Signal and supply voltage is in the normal range | Yellow lamp is sent<br>Reduced gear change performance<br>Reduced gear change comfort | |
| Sensor for the temperature of the gearbox oil (SETeGO | **PID177** | FMI0 | Data valid but above normal operational range | ***Activate low:***<br>1.The sensor signal is in normal range<br>2. Temperature is above 100dgC during 18000s | ***Low:***<br>Yellow lamp is sent<br>Symbol for high gearbox oil temperature is lit<br>***Medium:*** | Gearbox oil temperature fault codes are only set if the vehicle has oil temperature sensor functionality installed |

| FUNCTION | PID/SID | FMI J1587 | ERROR | CONDITION | SYMPTOM | COMMENT |
|---|---|---|---|---|---|---|
| | | | | ***Deactivate low:*** 1. The sensor signal is in normal range 2. Temperature is below 100dgC<br><br>***Activate medium:*** 1. The sensor signal is in normal range 2. Temperature above 120dgC during 600s ***Deactivate medium:*** 1. The sensor signal is in normal range 2. Temperature is below 120dgC<br><br>***Activate high:*** 1. The sensor signal is in normal range 2. Temperature is above 140dgC during 30s ***Deactivate high:*** 1. The sensor signal is in normal range Temperature is below 140dgC | Yellow lamp is sent Symbol for high gearbox oil temperature is lit ***High:*** Red lamp is sent Symbol for high gearbox oil temperature is lit | |
| Sensor for the temperature of the gearbox oil (SETeGO | | FMI4 | Voltage below normal or shorted low | ***Activate:*** The sensor signal is below normal range ***Deactivate:*** The sensor signal is in normal range | Yellow lamp is sent | |
| Sensor for the temperature of the gearbox oil (SETeGO | | FMI5 | Current below normal or open circuit | ***Activate:*** The sensor signal is above normal range ***Deactivate:*** The sensor signal is in normal range | Yellow lamp is sent | |
| Sensor position of the clutch (SEPoC and SEPoCINV) | **PID33** | FMI2 | Data erratic, intermittent or incorrect | ***Activate:*** The difference between clutch positions indicated by the sensor signal (SEPoC) and the inverted sensor signal ( SEPoC INV) is to large and both signals is within normal range ***Deactivate:*** The difference between clutch positions | Yellow lamp is sent Reduced clutch performance Reduced gearbox comfort at start and marshalling Gear changes are slow | The PID 33 fault code should not be set if there is an active fault code on the clutch position sensor supply (PPID 54) The clutch position sensor has four connectors: one supply, one ground and two connectors for the sensor signal. With correct input the input voltage of the sensor signal, the inverted sensor signal and the sensor supply, they will follow the nominal relation (Usepoc + Usepoc_inv) / Usepoc5V = 100% |

| FUNCTION | PID/SID | FMI J1587 | ERROR | CONDITION | SYMPTOM | COMMENT |
|---|---|---|---|---|---|---|
| | | | | indicated by the sensor signal (SEPoC) and the inverted sensor signal ( SEPoC INV) is normal | | |
| Sensor position of the clutch (SEPoC and SEPoCINV) | | FMI3 | Voltage above normal or shorted high | ***Activate:*** Sensor signal is short circuit to Ubatt or sensor supply, when at least one of the sensor signals is above normal range. ***Deactivate:*** No sensor signal is above normal range | Yellow lamp is sent Reduced clutch performance Reduced gearbox comfort at start and marshalling Gear changes are slow | The PID 33 fault code should not be set if there is an active fault code on the clutch position sensor supply (PPID 54) |
| Sensor position of the clutch (SEPoC and SEPoCINV) | | FMI5 | Current below normal or open circuit | ***Activate:*** 1. Open circuit on any of the sensor signals is detected when: one of the sensor signals is within normal range and the other sensor signal is below normal range 2. Open circuit on ground, detected when both the sensor signals are within the normal range and the sum of the sensor signals is above a specific value ***Deactivate: No*** activation condition is no longer fulfilled | Yellow lamp is sent Reduced clutch performance Reduced gearbox comfort at start and marshalling gear changes are slow | The PID 33 fault code should not be set if there is an active fault code on the clutch position sensor supply (PPID 54) |
| Sensor position of the clutch (SEPoC and SEPoCINV) | | FMI12 | Faulty device or component | ***Activate:*** Both sensor signals are below normal when: 1. Status of the sensor ASIC reports internal fault on the sensor, or 2. Short circuit to Gnd on any of the sensor signals, or 3. Open circuit on supply, or 4. Short circuit between the two sensor signals ***Deactivate:*** Both sensor | Yellow lamp is sent Reduced clutch performance Reduced gearbox comfort at start and marshalling gear changes are slow | The PID 33 fault code should not be set if there is an active fault code on the clutch position sensor supply (PPID 54) |

| FUNCTION | PID/SID | FMI J1587 | ERROR | CONDITION | SYMPTOM | COMMENT |
|---|---|---|---|---|---|---|
| | | | | signals are not below normal level | | |
| Sensor position of the clutch (SEPoC and SEPoCINV) | | FMI13 | Calibration value out of range | ***Activate:*** 1. The CS in NVRAM is not correct<br>2. The cylinder has not been calibrated<br>***Deactivate:*** Sensor signal has been successfully calibrated | Yellow lamp is sent<br>Cranking is inhibited<br>Engine can not start | The PID 33 fault code should not be set if there is an active fault code on the clutch position sensor supply (PPID 54) |
| Slow clutch valves low side (VAS-) | **PSID6** | FMI3 | Voltage above normal or shorted high | ***Activate:*** The low-side drive is short circuit to Ubatt<br>***Deactivate:*** The low-side drive is OK | Yellow lamp is sent<br>Slow engagement/dis engagement disabled<br>Reduced clutch performance, especially at start and marshalling | |
| Slow clutch valves low side (VAS-) | | FMI6 | Current above normal or grounded circuit | ***Activate:*** 1. The low-side drive is short circuit to Gnd and<br>2. There is no active fault code for short circuit to Gnd on VASE or VASD<br>***Deactivate: T***he low-side drive is OK | Yellow lamp is sent Slow engagement /disengagement disabled<br>Reduced clutch performance, especially at start and marshalling | |
| Split engagement system | **PSID23** | FMI0 | Unintentional disengagement of indirect split | ***Conditions to set the fault code:***<br>-The split cylinder position leaves the indirect position<br>-The split cylinder valves are inactive | Yellow lamp is sent<br>Loss of torque | ***Detailed conditions to activate/deactivate***:<br><br>The following conditions must be fulfilled three times (only once if the fault code-filter is switched OFF) in a row, in order to set the fault code:<br>(engagement of another gear will reset the count)<br>- The split cylinder position indicates that split gear leaves the indirect position<br>- The split cylinder valves are inactive<br>- There is no active fault on any of the sensor for the position of the split cylinder (SEPoS) the valve for shift to direct split the valve for shift to indirect split<br>- There is no active fault code for low air pressure n*ote:* The fault will always have the state inactive. Check fault-count and last occurrence to get more information |

| FUNCTION | PID/SID | FMI J1587 | ERROR | CONDITION | SYMPTOM | COMMENT |
|---|---|---|---|---|---|---|
| Split engagement system | | FMI1 | Unintentional disengagement of direct split | ***Conditions to set the fault code:***<br>-The split cylinder position leaves the direct position<br>-The split cylinder valves are inactive | Yellow lamp is sent<br>Loss of torque | ***Detailed conditions to activate/deactivate***:<br><br>The following conditions must be fulfilled three times (only once if the fault code-filter is switched OFF) in a row, in order to set the fault code:<br>(engagement of another gear will reset the count)<br>- The split cylinder position indicates that split gear leaves the direct position<br>- The split cylinder valves are inactive<br>- There is no active fault on any of the sensor for the position of the split cylinder (SEPoS) the valve for shift to direct split the valve for shift to indirect split<br>- There is no active fault code for low air pressure<br>Note: The fault will always have the state inactive. Check fault-count and last occurrence to get more information |
| Split engagement system | | FMI2 | Unintentional disengagement of neutral split | ***Conditions to set the fault code:***<br>-The split cylinder position leaves the neutral position<br>-The split cylinder valves are inactive | Yellow lamp is sent | ***Detailed conditions to activate/deactivate***:<br><br>The following conditions must be fulfilled three times (only once if the fault code-filter is switched OFF) in a row, in order to set the fault code:<br>(engagement of another gear will reset the count)<br>- The split cylinder position indicates that split gear leaves the neutral position<br>- The split cylinder valves are inactive<br>- There is no active fault on any of the sensor for the position of the split cylinder (SEPoS) the valve for shift to direct split the valve for shift to indirect split<br>- There is no active fault code for low air pressure<br>*Note*: The fault will always have the state inactive. Check fault-count and last occurrence to get more information |
| Split engagement system | | FMI11 | Blocked engagement of indirect split | ***Conditions to set the fault code:***<br>-The indirect split gear can not engage | Yellow lamp is sent<br>Loss of torque<br>Only direct split gears will be selected by the | ***Detailed conditions to activate/deactivate***:<br><br>The following conditions must be fulfilled three times (only once if the fault code- |

| FUNCTION | PID/SID | FMI J1587 | ERROR | CONDITION | SYMPTOM | COMMENT |
|---|---|---|---|---|---|---|
| | | | | | system for a short while. After five successful gearshifts a new attempt to use indirect split may be made | filter is switched OFF) in a row, in order to set the fault code:<br>- The split valve for reaching indirect split is activated for at least 0.8s<br>- The split cylinder position sensor indicates that indirect position is not engaged<br>- There is no active fault on any of the sensor for the position of the split cylinder (SEPoS) the valve for shift to direct split the valve for shift to indirect split<br>- There is no active fault code for low air pressure<br>***The fault is deactivated if any of the following conditions are fulfilled:***<br>- The split cylinder position sensor indicates that indirect position is engaged<br>- There is an active fault code on any of the sensor for the position of the split cylinder (SEPoS) the valve for shift to direct split the valve for shift to indirect split |
| Split engagement system | | FMI12 | Blocked engagement of direct split | ***Conditions to set the fault code:***<br>-The direct split gear can not engage | Yellow lamp is sent<br>Loss of torque<br>Only indirect split gears will be selected by the system for a short while. After five successful gearshifts a new attempt to use direct split may be made | ***Detailed conditions to activate/deactivate***:<br><br>The following conditions must be fulfilled three times (only once if the fault code-filter is switched OFF) in a row, in order to set the fault code:<br>- The split valve for reaching direct split is activated for at least 0.8s<br>- The split cylinder position sensor indicates that direct position is not engaged<br>- There is no active fault on any of the sensor for the position of the split cylinder (SEPoS) the valve for shift to direct split the valve for shift to indirect split<br>- There is no active fault code for low air pressure<br>***The fault is deactivated if any of the following conditions are fulfilled:***<br>- The split cylinder position sensor indicates that direct position is engaged<br>- There is an active fault code on any of the sensor for the position of the split cylinder (SEPoS) the valve for shift to direct split the valve for shift to indirect split |

| FUNCTION | PID/SID | FMI J1587 | ERROR | CONDITION | SYMPTOM | COMMENT |
|---|---|---|---|---|---|---|
| Split engagement system | | FMI7 | Blocked engagement of neutral split | ***Conditions to set the fault code:*** -The neutral split gear can not engage | Yellow lamp is sent Eco roll is not available | ***Detailed conditions to activate/deactivate***:<br><br>The following conditions must be fulfilled three times (only once if the fault code-filter is switched OFF) in a row, in order to set the fault code:<br>- The split valve for reaching neutral split is activated for at least 0.8s<br>- The split cylinder position sensor indicates that neutral position is not engaged<br>- There is no active fault on any of the sensor for the position of the split cylinder (SEPoS) the valve for shift to direct split the valve for shift to indirect split<br>- There is no active fault code for low air pressure<br>***The fault is deactivated if any of the following conditions are fulfilled:***<br>- The split cylinder position sensor indicates that neutral position is engaged<br>- There is an active fault code on any of the sensor for the position of the split cylinder (SEPoS) the valve for shift to direct split the valve for shift to indirect split |
| TECU Power supply | **PID158** | FMI0 | Data valid but above normal operational range | ***Activate:*** 24V system: above 36V<br>12V system: above 19V<br>***Deactivate:*** 24V system: below 36V<br>12V system: below 19V | Yellow lamp is sent | |
| TECU Power supply | | FMI1 | Data valid but below normal operational range | ***Activate:*** 24V system: below 17V<br>12V system: below 9V<br>***Deactivate:*** 24V system: above 17V<br>12V system: above 9V | Yellow lamp is sent Reduced gearbox performance | |
| Valve for activating the PTO number 1 (VAP1) | **PSID20** | FMI3 | Voltage above normal or shorted high | ***Activate***: The high side drive is short circuit to Ubatt<br>***Deactivate***: The high side drive is OK | Yellow lamp is sent The valve is activated The PTO can not be deactivated Reduced gear change comfort | PTO fault codes are only set if the PTO exists |
| Valve for activating the | | FMI5 | Current below normal or open circuit | ***Activate***: The high side drive is open circuit | Yellow lamp is sent The valve can | |

| FUNCTION | PID/SID | FMI J1587 | ERROR | CONDITION | SYMPTOM | COMMENT |
|---|---|---|---|---|---|---|
| PTO number 1 (VAP1) | | | | ***Deactivate***: The high side drive is OK | not be activated The PTO does not work | |
| Valve for activating the PTO number 1 (VAP1) | | FMI6 | Current above normal or grounded circuit | ***Activate***: The high side drive is short circuit to Gnd ***Deactivate***: The high side drive is OK | Yellow lamp is sent The valve can not be activated The PTO does not work | |
| Valve for activating the PTO number 2 (VAP2) | **PSID21** | FMI3 | Voltage above normal or shorted high | ***Activate***: The high side drive is short circuit to Ubatt ***Deactivate***: The high side drive is OK | Yellow lamp is sent The valve is activated The PTO can not be deactivated Reduced gear change comfort | |
| Valve for activating the PTO number 2 (VAP2) | | FMI5 | Current below normal or open circuit | ***Activate***: The high side drive is open circuit ***Deactivate***: The high side drive is OK | Yellow lamp is sent The valve can not be activated The PTO does not work | |
| Valve for activating the PTO number 2 (VAP2) | | FMI6 | Current above normal or grounded circuit | ***Activate:*** The high side drive is short circuit to Gnd ***Deactivate:*** The high side drive is OK | Yellow lamp is sent The valve can not be activated The PTO does not work | |
| Valve for fast disengagement of the clutch (VAFD) | **PSID3** | FMI3 | Voltage above normal or shorted high | ***Activate:*** 1. The high-side drive is short circuited to Ubatt and 2. there is no active fault code for short circuit to Ubatt on VAF- ***Deactivate:*** The high-side drive is OK | Yellow lamp is sent Fast engagement/disengagement disabled Reduced clutch performance Gear changes are slow | |
| Valve for fast disengagement of the clutch (VAFD) | | FMI5 | Current below normal or open circuit | ***Activate:*** The high-side drive is open circuit ***Deactivate:*** The high side drive is OK | Yellow lamp is sent Fast disengagement disabled Reduced clutch performance Gear changes are slow | |
| Valve for fast disengagement of the clutch (VAFD) | | FMI6 | Current above normal or grounded circuit | ***Activate:*** The high-side drive is short circuit to Gnd ***Deactivate:*** The high-side drive is OK | Yellow lamp is sent Fast disengagement disabled Reduced clutch performance Gear changes are slow | |
| Valve for fast engagement of the clutch (VAFE) | **PSID1** | FMI3 | Voltage above normal or shorted high | ***Activate:*** 1. The high-side drive is short circuited to Ubatt and, 2. there is no active fault code for | Yellow lamp is sent Fast engagement/disengagement disabled | |

| FUNCTION | PID/SID | FMI J1587 | ERROR | CONDITION | SYMPTOM | COMMENT |
|---|---|---|---|---|---|---|
| | | | | short circuit to Ubatt on VAF-<br>***Deactivate:*** The high-side drive is OK | Reduced clutch performance<br>Gear changes are slow | |
| Valve for fast engagement of the clutch (VAFE) | | FMI5 | Current below normal or open circuit | ***Activate:*** The high-side drive is open circuit<br>***Deactivate:*** The high side drive is OK | Yellow lamp is sent<br>Fast engagement disabled<br>Reduced clutch performance<br>Gear changes are slow | |
| Valve for fast engagement of the clutch (VAFE) | | FMI6 | Current above normal or grounded circuit | ***Activate:*** The high-side drive is short circuit to Gnd<br>***Deactivate:*** The high-side drive is OK | Yellow lamp is sent<br>Fast engagement disabled<br>Reduced clutch performance<br>Gear changes are slow | |
| Valve for shifting to direct split (VADS) | **SID37** | FMI3 | Voltage above normal or shorted high | ***Activate:*** The high side drive is short circuit to Ubatt<br>***Deactivate:*** The high side drive is OK | Yellow lamp is sent<br>The valve is activated<br>Indirect and neutral split gears are missing<br>Automatic gear selection enters faulty gearbox mode with gear changes only at certain vehicle speeds | |
| Valve for shifting to direct split (VADS) | | FMI5 | Current below normal or open circuit | ***Activate:*** The high side drive is open circuit<br>***Deactivate:*** The high side drive is OK | Yellow lamp is sent<br>The valve can not be activated<br>Split gears are missing<br>Automatic gear selection enters faulty gearbox mode with gear changes only at certain vehicle speeds | |
| Valve for shifting to direct split (VADS) | | FMI6 | Current above normal or grounded circuit | ***Activate:*** The high side drive is short circuit to Gnd<br>***Deactivate:*** The high side drive is OK | Yellow lamp is sent<br>The valve can not be activated<br>Split gears are missing<br>Automatic gear selection enters faulty gearbox mode with gear changes only at certain vehicle speeds | |
| Valve for shifting to | **PSID12** | FMI3 | Voltage above normal | ***Activate:*** The high side drive is | Yellow lamp is sent | |

| FUNCTION | PID/SID | FMI J1587 | ERROR | CONDITION | SYMPTOM | COMMENT |
|---|---|---|---|---|---|---|
| gear 1 (VAG1) | | | or shorted high | short circuit to Ubatt<br>***Deactivate:*** The high side drive is OK | The valve is activated<br>Gears are missing<br>Automatic gear selection enters faulty gearbox mode with gear changes only at certain vehicle speeds | |
| Valve for shifting to gear 1 (VAG1) | | FMI5 | Current below normal or open circuit | ***Activate:*** The high side drive is open circuit<br>***Deactivate:*** The high side drive is OK | Yellow lamp is sent<br>The valve can not be activated<br>Gears are missing<br>Automatic gear selection enters faulty gearbox mode with gear changes only at certain vehicle speeds | |
| Valve for shifting to gear 1 (VAG1) | | FMI6 | Current above normal or grounded circuit | ***Activate:*** The high side drive is short circuit to Gnd<br>***Deactivate:*** The high side drive is OK | Yellow lamp is sent<br>The valve can not be activated<br>Gears are missing<br>Automatic gear selection enters faulty gearbox mode with gear changes only at certain vehicle speeds | |
| Valve for shifting to gear 2 (VAG2) | **PSID14** | FMI3 | Voltage above normal or shorted high | ***Activate:*** The high side drive is short circuit to Ubatt<br>***Deactivate:*** The high side drive is OK | Yellow lamp is sent<br>The valve can not be activated<br>Gears are missing<br>Automatic gear selection enters faulty gearbox mode with gear changes only at certain vehicle speeds | |
| Valve for shifting to gear 2 (VAG2) | | FMI5 | Current below normal or open circuit | ***Activate:*** The high side drive is open circuit<br>***Deactivate:*** The high side drive is OK | Yellow lamp is sent<br>The valve can not be activated<br>Gears are missing<br>Automatic gear selection enters faulty gearbox mode with gear changes only at certain vehicle speeds | |
| Valve for shifting to | | FMI6 | Current above normal or | ***Activate:*** The high side drive is short circuit to | Yellow lamp is sent<br>The valve can | |

| FUNCTION | PID/SID | FMI J1587 | ERROR | CONDITION | SYMPTOM | COMMENT |
|---|---|---|---|---|---|---|
| gear 2 (VAG2) | | | grounded circuit | Gnd<br>***Deactivate:*** The high side drive is OK | not be activated<br>Gears are missing<br>Automatic gear selection enters faulty gearbox mode with gear changes only at certain vehicle speeds | |
| Valve for shifting to gear 3 (VAG3) | **PSID15** | FMI3 | Voltage above normal or shorted high | ***Activate:*** The high side drive is short circuit to Ubatt<br>***Deactivate:*** The high side drive is OK | Yellow lamp is sent<br>The valve can not be activated<br>Gears are missing<br>Automatic gear selection enters faulty gearbox mode with gear changes only at certain vehicle speeds | |
| Valve for shifting to gear 3 (VAG3) | | FMI5 | Current below normal or open circuit | ***Activate:*** The high side drive is open circuit<br>***Deactivate:*** The high side drive is OK | Yellow lamp is sent<br>The valve can not be activated<br>Gears are missing<br>Automatic gear selection enters faulty gearbox mode with gear changes only at certain vehicle speeds | |
| Valve for shifting to gear 3 (VAG3) | | FMI6 | Current above normal or grounded circuit | ***Activate:*** The high side drive is short circuit to Gnd<br>***Deactivate:*** The high side drive is OK | Yellow lamp is sent<br>The valve can not be activated<br>Gears are missing<br>Automatic gear selection enters faulty gearbox mode with gear changes only at certain vehicle speeds | |
| Valve for shifting to gear reverse (VAGR) | **PSID13** | FMI3 | Voltage above normal or shorted high | ***Activate:*** The high side drive is short circuit to Ubatt<br>***Deactivate:*** The high side drive is OK | Yellow lamp is sent<br>The valve is activated<br>Gears are missing<br>Automatic gear selection enters faulty gearbox mode with gear changes only at certain vehicle speeds | |
| Valve for shifting to | | FMI5 | Current below normal or open circuit | ***Activate:*** The high side drive is open circuit<br>***Deactivate:*** The | Yellow lamp is sent<br>The valve can not be activated | |

| FUNCTION | PID/SID | FMI J1587 | ERROR | CONDITION | SYMPTOM | COMMENT |
|---|---|---|---|---|---|---|
| gear reverse (VAGR) | | | | high side drive is OK | Gears are missing<br>Automatic gear selection enters faulty gearbox mode with gear changes only at certain vehicle speeds | |
| Valve for shifting to gear reverse (VAGR) | | FMI6 | Current above normal or grounded circuit | ***Activate:*** The high side drive is short circuit to Gnd<br>***Deactivate:*** The high side drive is OK | Yellow lamp is sent<br>The valve can not be activated<br>Gears are missing<br>Automatic gear selection enters faulty gearbox mode with gear changes only at certain vehicle speeds | |
| Valve for shifting to high range (VAHR) | **SID35** | FMI3 | Voltage above normal or shorted high | ***Activate:*** The high side drive is short circuit to Ubatt<br>***Deactivate:*** The high side drive is OK | Yellow lamp is sent<br>The valve is activated<br>Low range gears are missing<br>Automatic gear selection enters faulty gearbox mode with gear changes only at certain vehicle speeds | |
| Valve for shifting to high range (VAHR) | | FMI5 | Current below normal or open circuit | ***Activate:*** The high side drive is Open circuit<br>***Deactivate:*** The high side drive is OK | Yellow lamp is sent<br>The valve can not be activated<br>Range gears are missing<br>Automatic gear selection enters faulty gearbox mode with gear changes only at certain vehicle speeds | |
| Valve for shifting to high range (VAHR) | | FMI6 | Current above normal or grounded circuit | ***Activate:*** The high side drive is short circuit to Gnd<br>***Deactivate:*** The high side drive is OK | Yellow lamp is sent<br>The valve can not be activated<br>Range gears are missing<br>Automatic gear selection enters faulty gearbox mode with gear changes only at certain vehicle speeds | |
| Valve for shifting to indirect split (VAIDS) | **SID38** | FMI3 | Voltage above normal or shorted high | ***Activate:*** The high side drive is short circuit to Ubatt<br>***Deactivate:*** The | Yellow lamp is sent<br>The valve is activated<br>Direct and | |

| FUNCTION | PID/SID | FMI J1587 | ERROR | CONDITION | SYMPTOM | COMMENT |
|---|---|---|---|---|---|---|
| | | | | high side drive is OK | neutral split gears are missing<br>Automatic gear selection enters faulty gearbox mode with gear changes only at certain vehicle speeds | |
| Valve for shifting to indirect split (VAIDS) | | FMI5 | Current below normal or open circuit | ***Activate:*** The high side drive is open circuit<br>***Deactivate:*** The high side drive is OK | Yellow lamp is sent<br>The valve can not be activated<br>Split gears are missing<br>Automatic gear selection enters faulty gearbox mode with gear changes only at certain vehicle speeds | |
| Valve for shifting to indirect split (VAIDS) | | FMI6 | Current above normal or grounded circuit | ***Activate:*** The high side drive is short circuit to Gnd<br>***Deactivate:*** The high side drive is OK | Yellow lamp is sent<br>The valve can not be activated<br>Split gears are missing<br>Automatic gear selection enters faulty gearbox mode with gear changes only at certain vehicle speeds | |
| Valve for shifting to low range (VALR) | **SID36** | FMI3 | Voltage above normal or shorted high | ***Activate:*** The high side drive is short circuit to Ubatt<br>***Deactivate:*** The high side drive is OK | Yellow lamp is sent<br>The valve is activated<br>High range gears are missing<br>Automatic gear selection enters faulty gearbox mode with gear changes only at certain vehicle speeds | |
| Valve for shifting to low range (VALR) | | FMI5 | Current below normal or open circuit | ***Activate:*** The high side drive is open circuit<br>***Deactivate:*** The high side drive is OK | Yellow lamp is sent<br>The valve can not be activated<br>Range gears are missing<br>Automatic gear selection enters faulty gearbox mode with gear changes only at certain vehicle speeds | |
| Valve for shifting to | | FMI6 | Current above normal or | ***Activate:*** The high side drive is short circuit to | Yellow lamp is sent<br>The valve can | |

| FUNCTION | PID/SID | FMI J1587 | ERROR | CONDITION | SYMPTOM | COMMENT |
|---|---|---|---|---|---|---|
| low range (VALR) | | | grounded circuit | Gnd<br>***Deactivate:*** The high side drive is OK | not be activated<br>Range gears are missing<br>Automatic gear selection enters faulty gearbox mode with gear changes only at certain vehicle speeds | |
| Valve for slow disengage-ment of the clutch (VASD) | **PSID4** | FMI3 | Voltage above normal or shorted high | ***Activate:*** 1. The high-side drive is short circuit to Ubatt and<br>2. There is no active fault code for short circuit to Ubatt on VAS-<br>***Deactivate:*** The high-side drive is OK | Yellow lamp is sent Slow engagement/dis-engagement disabled<br>Reduced clutch performance, especially at start and marshalling | |
| Valve for slow disengage-ment of the clutch (VASD) | | FMI5 | Current below normal or open circuit | ***Activate:*** The high-side drive is open circuit<br>***Deactivate:*** The high-side drive is OK | Yellow lamp is sent<br>Slow disengagement disabled<br>Reduced clutch performance | |
| Valve for slow disengage-ment of the clutch (VASD) | | FMI6 | Current above normal or grounded circuit | ***Activate:*** The high-side drive is short circuit to Gnd<br>***Deactivate: T***he high-side drive is OK | Yellow lamp is sent Slow disengagement disabled<br>Reduced clutch performance | |
| Valve for slow engagement of the clutch (VASE) | **PSID2** | FMI3 | Voltage above normal or shorted high | ***Activate:*** 1. The high-side drive is short circuit to Ubatt and<br>2. There is no active fault code for short circuit to Ubatt on VAS-<br>***Deactivate:*** The high-side drive is OK | Yellow lamp is sent Slow engagement/dis-engagement disabled<br>Reduced clutch performance, especially at start and marshalling | |
| Valve for slow engagement of the clutch (VASE) | | FMI5 | Current below normal or open circuit | ***Activate:*** The high-side drive is open circuit<br>***Deactivate:*** The high-side drive is OK | Yellow lamp is sent Slow engagement disabled<br>Reduced clutch performance, especially at start and marshalling | |
| Valve for slow engagement of the clutch (VASE) | | FMI6 | Current above normal or grounded circuit | ***Activate:*** The high-side drive is short circuit to Gnd<br>***Deactivate: T***he high-side drive is OK | Yellow lamp is sent Slow engagement disabled<br>Reduced clutch performance, especially at | |

| FUNCTION | PID/SID | FMI J1587 | ERROR | CONDITION | SYMPTOM | COMMENT |
|---|---|---|---|---|---|---|
| | | | | | start and marshalling | |
| Valve for the gearbox brake (VAGB) | **PSID22** | FMI3 | Voltage above normal or shorted high | ***Activate:*** The high side drive is short circuit to Ubatt<br>***Deactivate:*** The high side drive is OK | Red lamp is sent<br>The valve and the brake are activated<br>The gearbox will be damaged if the vehicle drives<br>The prop shaft has to be removed to move the vehicle | |
| Valve for the gearbox brake (VAGB) | | FMI5 | Current below normal or open circuit | ***Activate:*** The high side drive is open circuit<br>***Deactivate:*** The high side drive is OK | Yellow lamp is sent<br>The valve can not be activated<br>Shifting to the start gear takes long time | |
| Valve for the gearbox brake (VAGB) | | FMI6 | Current above normal or grounded circuit | ***Activate:*** The high side drive is short circuit to Gnd<br>***Deactivate:*** The high side drive is OK | Yellow lamp is sent<br>The valve can not be activated<br>Shifting to the start gear takes long time | |

### 10. VOLVO I-SHIFT TRANSMISSION GSECU FAULT CODES

| PID/PPID SID/PSID | FMI | LAMP | CONTENT | TEXT | COMMENT | CONSEQUENCES |
|---|---|---|---|---|---|---|
| SID231 | 2 | None | SAE J1939 Data Link | - | - | Redundancy on J1587 |
| SID237 | 3 | CHECK | Start enable device | Check Gear Selector System at next stop | Only for EMS1.xx vehicles | Start relay not working |
| SID240 | 2 | CHECK | Program memory | Gear Selector System failure | Boot | Not possible to engage gear |
| SID250 | 9 | None | SAE J1708 /J1587 data link | - | - | - |
| SID253 | 2 | CHECK | Program memory | Gear Selector System failure | - | Not possible to engage gear |
| SID254 | 12 | CHECK | Controller #1 | Gear Selector System failure | - | Not possible to engage gear |
| PSID9 | 12 | CHECK | Gear level position sensors | Check Gear Selector System at next stop | - | Not possible to engage/change gear |

| PID/PPID SID/PSID | FMI | LAMP | CONTENT | TEXT | COMMENT | CONSEQUENCES |
|---|---|---|---|---|---|---|
| PSID36 | 7 | CHECK | Output actuator (REPS) | Check Gear Selector System at next stop | - | Fault displayed after ignition OFF. Risk of battery discharge if main circuit breaker is not opened when vehicle is not used |
| PSID36 | 12 | | Output actuator (REPS) | Check Gear Selector System at next stop | - | Gearbox not supplied |
| PSID42 | 2 | None | Ignition signals | - | - | Power supply always on |
| PSID200 | 9 | None | Data Link, MID128 | Check Gear Selector System at next stop | Only for AMT-C, Boot | Affects RT only (can be sent for VT) |
| PSID201 | 9 | None | Data Link, MID144 | Check Gear Selector System at next stop | Only for AMT-C, Boot | Affects RT only (can be sent for VT) |
| PSID205 | 9 | None | Data Link, MID130 | Check Gear Selector System at next stop | Boot | Affects RT only (can be sent for VT) |
| PSID214 | 9 | None | Data Link, MID249 | - | Only when second gear selector is installed, Boot | Not possible to switch to/from secondary gear lever |

## 11. SPECIFICATIONS

### ALLISON AUTOMATIC TRANSMISSION WITH OR WITHOUT RETARDER

Coaches & Commercial use

**Allison B500**

Gross input power (maximum)....500 HP (335 kW)
Gross input torque (maximum)....1525 Lbf-ft (2068 Nm)
Rated input speed (minimum-maximum)....1600-2300 rpm

X3-45 VIP, H3-45 VIP motorhomes. Private use

**Allison MH4000**

Gross input power (maximum)....525 HP (392 kW)
Gross input torque (maximum)....1650 Lbf-ft (2237 Nm)
Rated input speed (minimum-maximum)....1600-2300 rpm

**Mounting:**

Engine....SAE #1 flywheel housing, flex disk drive

**Torque converter:**

Type....One stage, three element, polyphase
Stall torque ratio....TC 551-1.8
Lockup clutch with torsional damper....Integral/standard

**Gearing:**

Type....Patented, constant mesh, helical, planetary

Ratio:

First....3.51:1
Second....1.91:1
Third....1.43:1
Fourth....1.00:1
Fifth....0.74:1
Sixth....0.64:1
Reverse....4.80:1

**Total coverage[3]:**

6 speed....5.48:1

- **Gear ratios do not include torque converter multiplication.**

**Oil System:**

Oil type....TRANSYND, TES668, TES295, TES389
Capacity (excluding external circuits)....Initial fill 47 US qts (45 liters)
Oil change....24 US qts (23 liters)
Oil change (with retarder)....27.6 US qts (26.5 liters)

[3] Total coverage is determined by dividing the highest gear ratio by the lowest gear ratio. Total coverage expresses the transmission gear ratio versatility. Transmissions with a larger total coverage number have a wider variety of available ratios.

**Oil Filters:**
Make ..... Allison Transmission
Type ..... Disposable cartridge

**VOLVO I-SHIFT TRANSMISSION**

**Oil System:**
Oil change..... 16 US qts (15 liters)

**Oil Filter:**
Make ..... Volvo
Type ..... Disposable cartridge

## CONTENTS

**SECTION CHANGE LOG** ..... **2**

**1. STANDARD TORQUE SPECIFICATION TABLES** ..... **3**

**2. PROPELLER SHAFT** ..... **3**

2.1 DESCRIPTION ..... 3

**3. PROPELLER SHAFT MAINTENANCE DIRECTIVE** ..... **4**

**4. U-JOINT SERVICE – QUICK REFERENCE GUIDE** ..... **5**

4.1 LUBRICATION PROCEDURE ..... 6
4.2 INSPECTION RECOMMENDATIONS ..... 6
4.3 MARK PROPELLER SHAFT (PHASING MARKS) ..... 7
4.4 GREASE ZERKS ..... 7
4.5 OTHER INSPECTIONS ..... 7

**5. REMOVAL** ..... **7**

5.1 PROPELLER SHAFT REMOVAL ..... 7
*5.1.1 Inspect Companion Flange/Flange Yokes* ..... *9*
*5.2.1 Remove universal joint kit* ..... *9*
*5.2.2 Inspect Tube Yoke and Flange Yoke (If Applicable)* ..... *10*
5.3 REMOVAL PROCEDURE FOR SLIP MEMBER BOOT ..... 10

**6. INSTALLATION** ..... **10**

6.1 SLIP MEMBER AND BOOT INSTALLATION ..... 10
6.2 PROPELLER SHAFT INSTALLATION ..... 11
6.3 UNIVERSAL JOINT INSTALLATION ..... 12

**7. EXPLANATION OF COMMON DAMAGES** ..... **13**

**8. SPECIFICATIONS** ..... **14**

## SECTION CHANGE LOG

| | DESCRIPTION | DATE |
|---|---|---|
| 1 | | |
| 2 | | |
| 3 | | |
| 4 | | |
| 5 | | |
| 6 | | |

## 1. STANDARD TORQUE SPECIFICATION TABLES

Refer to Section 00 general information for Standard Torque Specifications.

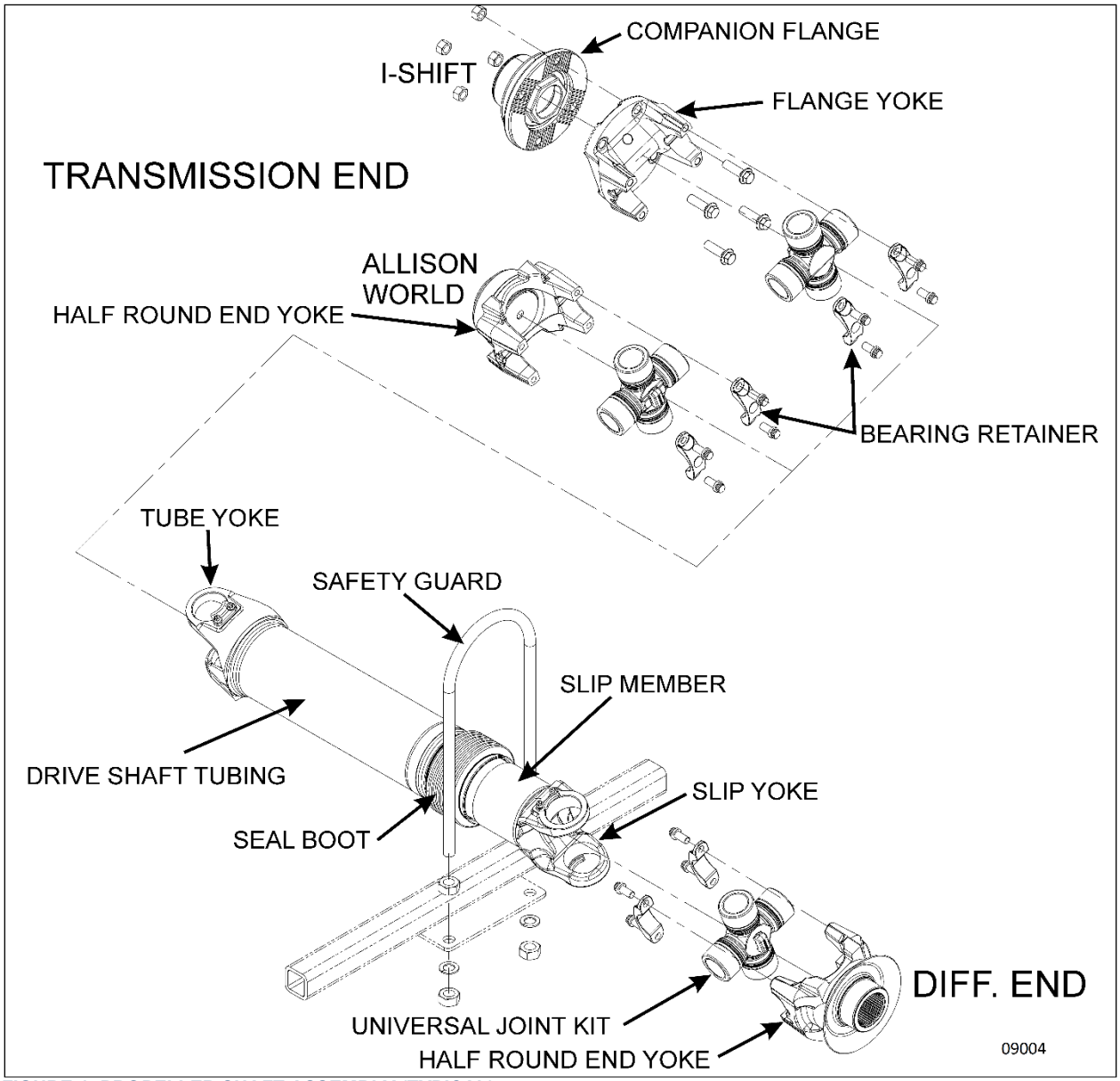


**FIGURE 1: PROPELLER SHAFT ASSEMBLY (TYPICAL)**

## 2. PROPELLER SHAFT

### 2.1 DESCRIPTION

The propeller shaft transmits power from the transmission to the differential. Refer to paragraph *"6. SPECIFICATIONS"* at the end of this section for propeller shaft length. The propeller shaft is Dana Spicer Life Series SPL250 type with tubular shafts. It is provided with two heavy-duty universal joints (FIGURE 1).

The propeller shaft has a half round end yoke at each end. The slip yoke is connected to the differential by a half round end yoke with two needle bearings.

The other extremity (tube yoke assembly) is connected to the transmission by a half round end

yoke with two needle bearings (Allison transmission) or a flange yoke and companion flange with two needle bearings (I-Shift Transmission).

Furthermore, a slip joint on the propeller shaft compensates for variations in distance between the transmission and the differential, or between the output retarder (optional on the automatic transmission) and differential.

The rise and fall of the drive axle bring about these variations as the vehicle passes over uneven surfaces. The slip joint also eases removal of the transmission or the drive axle.

For further information, please consult **Spicer Life Series Driveshafts Service Manual DSSM-0100** included on your Technical Publications USB flash drive.

## WARNING

DO NOT reuse bearing retainer bolts.

DO NOT reuse spring tabs and spring tab bolts.



**FIGURE 2: COLD FORMED BEARING RETAINER AND BOLTS AS USED ON PREVOST VEHICLES**

**New cold formed bearing retainers CAN be reused.** Replace only if damaged.

Bearing retainer bolts **CANNOT** be reuse.

Reuse of stamped straps and bolts can cause driveline failure, which can result in separation of the driveline from the vehicle.

## MAINTENANCE

Perform "Inspection Procedures" as per *Spicer Life Series Driveshafts Service Manual DSSM-0100* at the intervals specified by the Lubrication And Servicing Schedule in Section 24: LUBRICATION & SERVICING.

*NOTE*

*Repair kits are available for overhaul of the propeller shaft assembly. Refer to Parts Manual, Section 9.*

## MAINTENANCE

Lubricate propeller shaft universal joints at the intervals specified by the Lubrication And Servicing Schedule in Section 24: LUBRICATION & SERVICING.

Apply grease gun pressure to the lube fittings (1 grease fitting on each universal joint). Use a good quality lithium-base grease such as: NLGI No.2 E.P. Grease (suitable for most temperatures). Refer to Spicer Driveshaft's Service Manual DSSM-0100 for further details.

*NOTE*

*Do not assume that bearing cavities have been filled with new grease unless it has expelled around all seals.*

### 3. PROPELLER SHAFT MAINTENANCE DIRECTIVE

- Before removing the driveshaft from vehicle, inspect all components (universal joints, slip joints, hardware, etc.) for deterioration (rust or corrosion) or excessive play. If all components pass inspection, grease universal joints until they are properly lubricated (fresh grease showing at all u-joint end caps). If any component does not accept grease, it must be replaced.
- Replace splined slip joint if seal is damaged or if welch plug (cap) is missing (when applicable).
- Unless the slip section (joint) is being replaced, the driveshaft must be removed as

an assembly. The driveshaft must be completely disconnected from the differential and transmission yokes **only***;* the slip section must not be disconnected unless it is being replaced.

- The driveshaft and yokes must be marked (phasing marks) (see paragraph 4.3 mark propeller shaft (PHASING MARKS)) before removal to ensure reinstallation in the same position as removed.
- **All universal joints securing hardware (bearing retainers and bearing retainers bolts, spring tabs and bolts) must be removed and replaced** using new OEM specified replacement parts (FIGURE 1 & Figure 2).
- When removing the universal joint from the yoke, **the end caps must remain attached to the cross at all times** if the universal joint is to be reused (Electrical or masking tape can be used to keep the end caps in place while driveshaft is removed.)
- Unless the universal joint is being replaced, universal joint end caps **must not be removed** for any reason. If the end caps become dislodged while the driveshaft is removed from the vehicle, the universal joint must be replaced. If replacement is needed, the universal joint **must be replaced as a complete assembly**.
- Universal joints **must be treated as a single unit**. This means that parts (such as the cross, needle bearings, or end caps) **must not be interchanged** between new and used joints.
- Universal joints **must be positioned and seated correctly between the yoke tabs (ears)** on the input (tail shaft side) and carrier (differential side) yokes ().
- The driveshaft must be installed facing the correct direction, in particular, with respect to the splined slip joint.
- The driveshaft must be phased correctly.
- All fasteners must be torqued to manufacturer's specifications and torque-marked. DO NOT use air or power tools to install and torque bolts or fasteners.
- Bolt locking tabs, <u>if used</u>, must be bent over the flats of the bolts after final torque is checked.
- The driveshaft guard (hoop) must be in place.
- Driveshaft universal joints must be greased properly.

NOTE: If necessary, rotate driveshaft to allow access to all grease fittings.

- It is the responsibility of the maintainer who begins the driveshaft installation to complete the procedure in its entirety. **The installation procedure must not he carried over (passed on) to the next shift.**

<u>Supervisors must witness and verify</u> the correct installation of the driveshaft as follows:

- The universal joint caps must be seated properly between the yoke tabs (ears) (FIGURE 26).
- All universal joint bearing retainers must have been replaced using new hardware and fasteners.
- All fasteners have been torqued properly and are torque-marked.
- Locking tabs, <u>if used</u>, must be bent over the bolts.
- There must be no mixing of new and old parts on a universal joint.
- The driveshaft must be phased properly.
- Driveshaft guard (hoop) must be in place.
- Driveshaft universal joints must be greased after reinstallation of driveshaft in vehicle (fresh grease showing at all u-joint end caps).

## 4. U-JOINT SERVICE – QUICK REFERENCE GUIDE

This section is intended as a “quick reference” only. Refer to **Spicer Driveshaft’s Service Manual DSSM-0100** for detailed warnings and instructions.

**Precautions**

- Always follow all safety practices when servicing, removing, and/or installing a propeller shaft.
- Always use support strap to prevent this heavy propeller shaft from falling out of the vehicle during removal and installation.
- Always put the transmission in neutral before working on the propeller shaft.

- Never heat components or use a sledgehammer or floor jack to remove the propeller shaft from the vehicle.
- **Do NOT reuse spring tabs and bolts.**
- **Do NOT reuse bearing retainer bolts.**
- Only replace u-joints with genuine Dana Spicer service parts.

## 4.1 LUBRICATION PROCEDURE

> **WARNING**
>
> Read "Spicer Life Series Driveshaft Lubrication Warnings and Cautions" in **Spicer Driveshaft's Service Manual DSSM-0100.**

1. Use recommended lubricant to purge **all** four seals of each universal joint. This flushes abrasive contaminants from each bearing assembly and assures proper filling of **all** four bearings.

> **WARNING**
>
> Maximum grease gun pressure should not exceed 60 psi. Excessive grease gun pressures may cause seal damage.

2. Make sure fresh grease is evident at all u-joint bearing seals.



FIGURE 3: BEARING LUBRICATION ZIRK

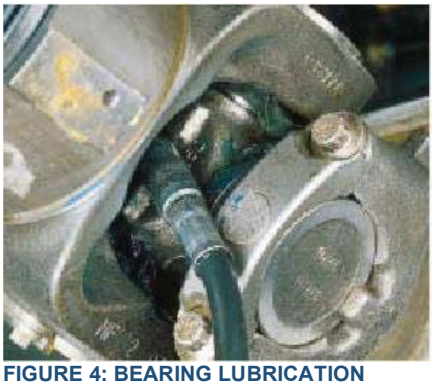

FIGURE 4: BEARING LUBRICATION

3. If any of the seals fail to purge, try to move the propeller shaft from side-to-side while applying grease gun pressure.
   a) If all four bearing positions still do not purge, releasing seal tension may be necessary.
   b) Remove the bearing retainer bolts and bearing retainers and discard. Do NOT reuse.
   c) Once the bearing cups are free, allow the propeller shaft to rest on the support strap.
   d) Apply a c-clamp around the inboard bearings.

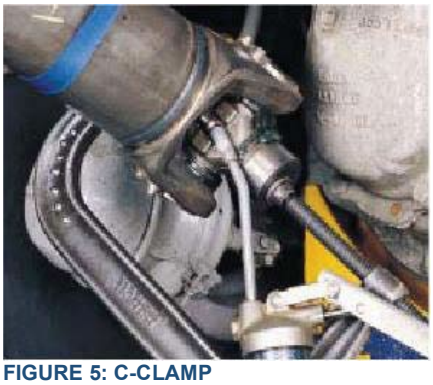

FIGURE 5: C-CLAMP

   e) Apply grease gun pressure. Completely purge both bearings.
   f) If bearings still do not purge, complete the removal of the u-joint and inspect for blockage.
   g) If the u-joint still do not purge at all four positions after following the steps in this procedure, replace the u-joint.

## 4.2 INSPECTION RECOMMENDATIONS

- U-joint inspections should be performed every time a vehicle comes in for scheduled maintenance.

- Visually inspect for damaged bearing retainers, loose bearing retainer bolts, loose companion flange, bolts and nuts, loose or missing spring tabs or spring tab bolts, damaged tangs on end fittings, damaged or missing rotating bearing cups. If any of these situations are evident, replacement of the component is necessary.
- Check all input and output end fittings for looseness. Take hold of the end fitting with both hands. Try to move it vertically and horizontally to feel any looseness.



FIGURE 6: CHECK FOR LOOSENESS

- There should be less than **.006"** movement in the u-joint relative to the end yoke. If looseness is greater than .006", the u-joint should be replaced.
- Check for the presence of all grease zerk fittings. Damaged zerks should be replaced. Loose zerks should be tightened.

### 4.3 MARK PROPELLER SHAFT (PHASING MARKS)

- Mark all mating propeller shaft components with a paint marker to assure proper phasing during reassembly.
- Reassembly of a propeller shaft that is out of phase can cause vibration and failure to propeller shaft components.



FIGURE 7: PHASING MARKS

### 4.4 GREASE ZERKS

- Replace damaged zerks.
- Torque zerks to 15 lbf-ft.
- Zerks should be lined up with outboard bearings.
- Clean zerk nipples before greasing.

### 4.5 OTHER INSPECTIONS

Refer to **Spicer Driveshaft's Service Manual DSSM-0100** for detailed information on:

- The slip member inspection,
- Grease zerk inspection,

Tubing inspection.

## 5. REMOVAL

**WARNING**

Read "Spicer Life Series Driveshaft Removal Warnings and Cautions" in **Spicer Driveshaft's Service Manual DSSM-0100.**

### 5.1 PROPELLER SHAFT REMOVAL

1. Mark propeller shaft (phasing marks). It is imperative to mark all the mating components of a propeller shaft, as illustrated below. Mark the propeller shaft with a marking stick, paint marker or other legible marking device. In addition, be sure to mark all bearing positions, spline positions and shaft locations. This assures proper reassembly of the propeller shaft into the vehicle, in its original position.

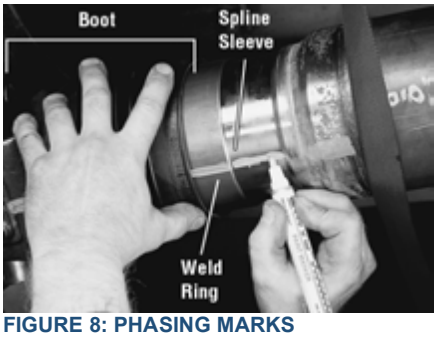


FIGURE 8: PHASING MARKS



FIGURE 9: PHASING MARKS

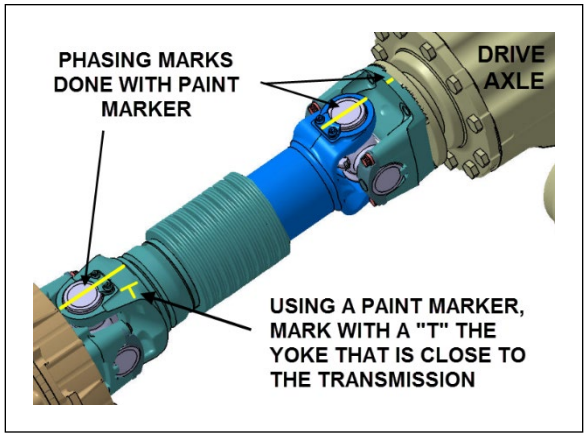


FIGURE 10: PHASING MARKS

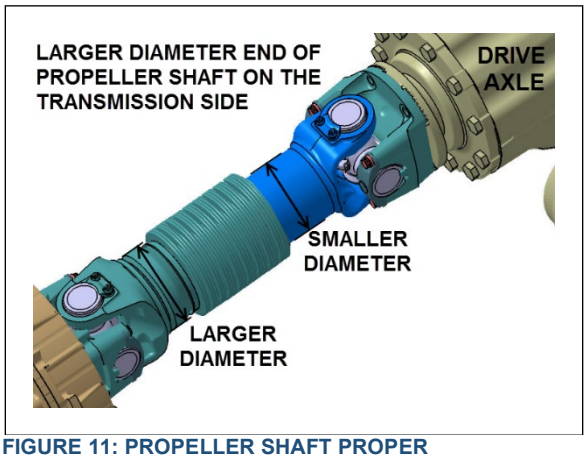


FIGURE 11: PROPELLER SHAFT PROPER ORIENTATION

2. Be sure to ALWAYS use support straps to prevent the propeller shaft from falling out of the vehicle.
3. Remove the bearing retainers and bolts at rear end. Discard bolts, and bearing retainers.



FIGURE 12: COLD FORMED BEARING RETAINERS

4. It may be necessary to unseat bearing cup assemblies by tapping on yoke or bearing cup with a soft-faced hammer. Once the bearing cup assemblies are free, collapse the propeller shaft until both bearing assemblies clear the open end yoke cross holes. Allow the propeller shaft to rest on support strap.

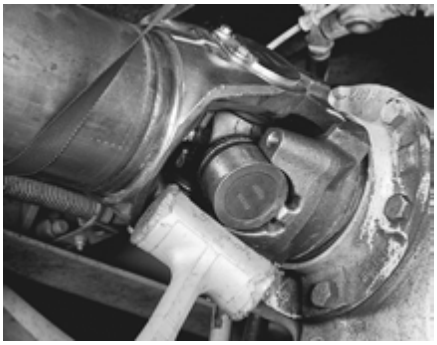

FIGURE 13: UNSEATING BEARING CUP ASSEMBLIES

5. Remove bearing retainers and bolts at the front end.
6. Inspect all end yoke cross hole surfaces and bolt hole threads for damage. If the bolt hole threads are damaged, the yoke must be replaced.
7. Inspect for raised metal or fretting on open yoke cross holes can be removed with a fine-toothed file and/or emery cloth.

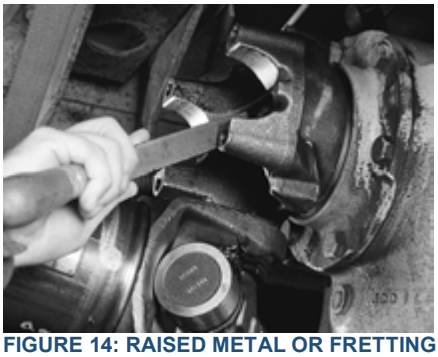

FIGURE 14: RAISED METAL OR FRETTING ON OPEN YOKE CROSS HOLES

8. Inspect the end yoke cross holes for distortion and damage.

5.1.1 Inspect Companion Flange/Flange Yokes

1. Inspect all flange bolt hole threads or through holes for damage. If the bolt hole threads or through holes are damaged, the flange must be replaced.

5.2 Inspect all flange faces for galling or damage. If damaged, the flange must be replaced.removal procedure for universal joint kits

5.2.1 Remove universal joint kit

1. **For Quick Disconnect Style:** Remove spring tab bolts and discard, and remove outboard bearing cap assemblies.



FIGURE 15: SPRING TAB BOLTS REMOVAL

2. Make sure universal joints cross assembly is not tilted in the yoke. Place bearing cup spacer onto the base of the arbor press and under the yoke. If the arbor is larger than the bearing cup diameter, a smaller diameter push rod will be needed to avoid damaging the yoke or bearing.



FIGURE 16: CORRECT POSITIONING



FIGURE 17: INCORRECT POSITIONING

3. Using an arbor press, press down on the upper bearing cup assembly until the shoulder of the journal cross makes contact with the inside of the yoke ear.

**CAUTION**

DO NOT over press the bearing cup and journal cross. This can damage the inside of the yoke ear.

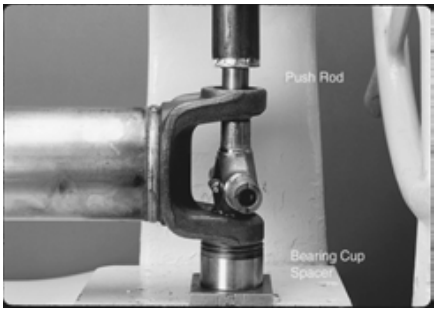


FIGURE 18

4. The bearing cup is not designed to drop out of the yoke. Move the partially pressed-out bearing cup from side to side, to "walk" the bearing cup out of the yoke ear. Remove the bearing cup from the trunnion.

5. Place the yoke in the press, with the remaining bearing cup face down. Using a push rod, press on the end of the journal cross trunnion. Continue to press down on the journal cross trunnion until the shoulder of the journal cross makes contact with the inside of the yoke ear.



FIGURE 19

5.2.2 Inspect Tube Yoke and Flange Yoke (If Applicable)

1. Inspect the tube yoke and flange yoke (if applicable) cross hole surfaces for damage or raised metal. Raised metal or fretting can be removed from yoke cross holes with a fine-toothed file and/or emery cloth.



FIGURE 20: RAISED METAL OR FRETTING CAN BE REMOVED FROM YOKE CROSS HOLES WITH A FINE-TOOTHED FILE

5.3 REMOVAL PROCEDURE FOR SLIP MEMBER BOOT

1. It is imperative to mark all mating components of the propeller shaft. Mark the propeller shaft with a marking stick, paint marker or other legible marking device.
2. Remove and discard both boot clamps. Clamps may be separated using a chisel to disengage locking hooks. DO NOT reuse clamps.



FIGURE 21: BOOT CLAMP

3. Completely collapse the boot toward the yoke shaft to expose weld ring and spline sleeve area. Wipe weld ring and spline sleeve areas clean.
4. Remove the yoke shaft and boot from the spline sleeve. Discard boot.
5. Inspect the yoke shaft spline surface for damage. If the splines are damaged, missing or twisted, or any Glidecote is missing, complete propeller shaft replacement is necessary.
6. Inspect the spline sleeve for damage. If the splines are damaged, missing or twisted, complete propeller shaft replacement is necessary.
7. Inspect the entire slip assembly for contaminants. If the slip assembly shows evidence of rust or the lube is severely contaminated, complete propeller shaft replacement is necessary.

## 6. INSTALLATION

**WARNING**

Read “Spicer Life Series Driveshaft Installation Warnings and Cautions” in **Spicer Driveshaft’s Service Manual DSSM-0100.**

6.1 SLIP MEMBER AND BOOT INSTALLATION

1. Clean ALL grease from yoke shaft and spline sleeve. Make sure grease-cutting solvent does not intrude into the tube through the vent hole in the spline sleeve plug. Be sure the phasing marks made during disassembly are not removed.



FIGURE 22: CLEAN GREASE FROM SPLINE SLEEVE

2. After all traces of grease and cutting solvent have been removed from the yoke shaft and

spline sleeve, apply half of the grease provided to the yoke shaft splines and the other half to the spline sleeve, cover the entire splined surface.



FIGURE 23: APPLY GREASE

3. Measure and place a mark 2.25 inches (55-60mm) from yoke shaft shoulder with a marking stick, paint marker or other legible marking device.

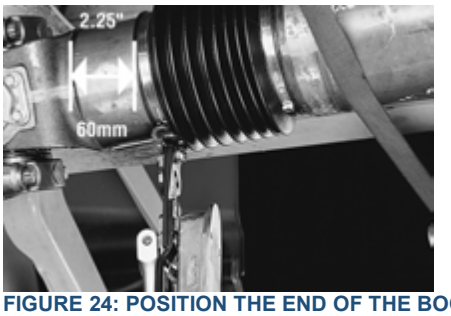


FIGURE 24: POSITION THE END OF THE BOOT AT THE 2.25 INCHES (55-60MM) MARK MADE ON THE YOKE SHAFT SHOULDER

4. Position a clamp on each end of the new boot. Slide the boot onto the grease-free yoke shaft shoulder.
5. Collapse the boot and insert the yoke shaft into the splined sleeve, making sure phasing marks are in line. Position the end of the boot at the 2.25 inches (55-60mm) mark made on the yoke shaft shoulder and tighten boot clamps to the specified torque. Yoke shaft shoulder must be clean, dry and grease free.

***Failure to properly install and tighten boot clamps could allow intrusion of contaminants and can cause driveline failure, which can result in separation of the driveline from the vehicle.***

**6.** Before the propeller shaft is completely installed in the vehicle, slowly collapse and extend the propeller shaft to make sure the boot clamps are stationary. If the clamps are not stationary, recheck for proper clamp torque. If clamps still are not stationary, repeat disassembly and assembly procedure. DO NOT reuse clamps

## 6.2 PROPELLER SHAFT INSTALLATION

1. Before installing the propeller shaft, inspect the yoke surface for burrs and damage. Mating surfaces should be clear of rust, contamination and grease.
2. With safety straps in place, align the phasing marks between the yoke and propeller shaft.



FIGURE 25: ALIGN THE PHASING MARKS BETWEEN THE YOKE AND PROPELLER SHAFT

3. Align the bearing cups with the yoke ears making sure that the cups are evenly spaced between the tabs (ears) of the yoke. A soft faced hammer can be used to fully seat the bearing cups into the yoke.



FIGURE 26: YOKE TAB (EAR)

***Note: Bearing cups must be fully seated between the yoke tabs (ears). Failure to seat the cups properly will result in a premature failure.***

4. Install bearing retainers and lock bolts.
5. It is important that the bearing retainer bolts are torqued in the correct sequence. Following the diagram below. Torque the number one bolt before moving to the number two bolt. Always torque in a counter

clockwise direction starting with the number one position.

***Failure to torque bearing retainer bolts in the proper sequence could result in premature failure.***

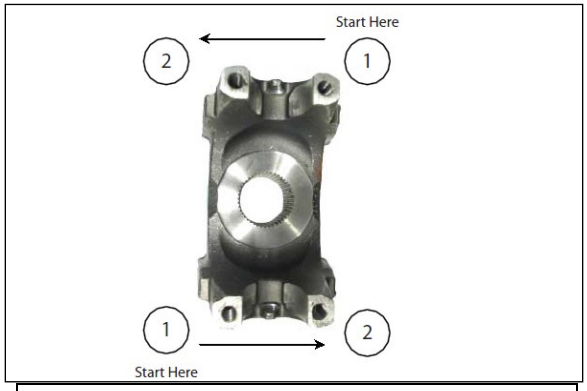


| BEARING RETAINER BOLT TORQUE (HALF ROUND) | | | |
|---|---|---|---|
| Series | Head size | Size | Bolt torque |
| SPL250 | 12 point | 12-1.25mm | 100 lbf-ft[1] |

6. Grease the U-joint and slip member after propeller shaft installation. Refer to *4.1lubrication procedure.*

## 6.3 UNIVERSAL JOINT INSTALLATION

1. Remove needle retaining plugs from all bearing cup assemblies. Using a high quality National Lubricating Grease Institute E. P. Grade 2 lubricating grease, wipe each bearing cup assembly with grease. Fill all cavities between the needle rollers. Also apply a liberal coating of grease on the bottom of each bearing cup assembly and on the lip of the seal.



FIGURE 27: GREASING BEARING CUP

***Caution - Spicer DOES NOT recommend wiping the outside of bearing cup assemblies or yoke cross holes with grease, oil or silicone-based sprays. This could result in bearing cup assembly rotation in yokes.***

2. Position the journal cross into the yoke cross holes with the grease zerk fitting inward toward tubing. The double-headed, grease zerk (nipple) fitting should be perpendicular to the yoke cross holes.

***Note: Failure to properly position the universal joint will result in the inability to grease the universal joint.***



FIGURE 28: POSITION THE JOURNAL CROSS INTO THE YOKE CROSS HOLES WITH THE GREASE ZERK FITTING INWARD TOWARD TUBING

***Note: Always inspect bearing cups for rollers that may have fallen (downed rollers) out of place before installation.***

3. Move one end of the journal cross to cause a trunnion to project through the cross hole beyond the outer machined face of the yoke ear. Take one bearing cup assembly and position an installation height tool on the end of the bearing cup assembly. Place the bearing cup assembly over the protruding trunnion diameter and align it to the yoke cross.




FIGURE 29

[1] Prevost production line torque value

4. Align the yoke in an arbor press with the bearing assembly resting on the base of the press. Cover the yoke ear with a metal plate that has 0.25 inch (6.4mm) minimum thickness. Push the yoke onto the bearing cup assembly until it is flush with the cross hole face. Do not remove the installation height tool.

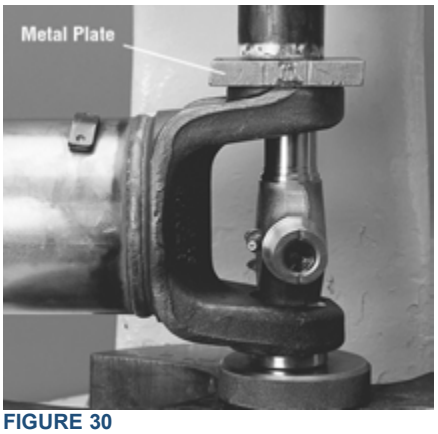


FIGURE 30

5. Flip yoke 180 degrees. Position the remaining installation height tool on the end of another bearing cup assembly. Place bearing cup assembly over trunnion diameter and align it to the yoke cross hole. Push the bearing cup assembly until both installation height tools are flush with the cross hole face.
6. Install new spring tabs and 8mm thread bolts. Make sure that no grease or foreign material is present between the contact areas of the spring tabs, bearing cups and yoke cross hole faces. Tighten bolts to the required torque.



FIGURE 31



SPRING TAB BOLT TORQUE

Bolts are specially heat-treated. DO NOT substitute inferior grade bolts.

| Series | Head size | Size | Bolt torque |
|---|---|---|---|
| SPL250 | 8mm 6 Points | 8mmx1.00 | 25-30lb-ft |

## 7. EXPLANATION OF COMMON DAMAGES

**1. Cracks:** Stress lines due to metal fatigue. Severe and numerous cracks will weaken the metal until it breaks.

**2. Galling:** Scraping off of metal or metal displacement due to friction between surfaces. This is commonly found on trunnion ends.

**3. Spalling (surface fatigue):** Breaking off of chips, scales, or flakes of metal due to fatigue rather than wear. It is usually found on splines and U-joint bearings.

**4. Pitting:** Small pits or craters in metal surfaces due to corrosion. If excessive, pitting can lead to surface wear and eventual failure.

**5. Brinelling:** Surface wear failure due to the wearing of grooves in metal. It is often caused by improper installation procedures. Do not confuse the polishing of a surface (false brinelling), where no structural damage occurs, with actual brinelling.

**6. Structural Overloading:** Failure caused by a load greater than the component can stand. A structural overload may cause propeller shaft tubing to twist under strain or it may cause cracks or breaks in U-joints and spline plugs.

## 8. SPECIFICATIONS

PROPELLER SHAFT

Make .....Dana-Spicer Inc.
Series.....SPL250

## CONTENTS

**SECTION CHANGE LOG** ..... **2**

**1. TORQUE TABLES** ..... **3**

1.1 FRONT I-BEAM AXLE AND RELATED COMPONENTS ..... 3
1.2 FRONT I-BEAM AXLE HUB, ROTOR AND BRAKES ..... 5

**2. DESCRIPTION** ..... **6**

2.1 REFERENCE MANUALS ..... 6

**3. LUBRICATION** ..... **8**

**4. MAINTENANCE** ..... **8**

**5. REMOVAL AND REPLACEMENT** ..... **8**

5.1 REMOVAL ..... 8
5.2 REPLACEMENT ..... 9

**6. SERVICE INSTRUCTIONS FOR STEER AXLE** ..... **10**

6.1 STEERING KNUCKLE KINGPIN INSPECTION ..... 10
*6.1.1 Checking Lateral Slackness ..... 10*
*6.1.2 Checking Vertical Slackness ..... 10*
6.2 STEERING TIE ROD INSPECTION ..... 10

**7. FRONT WHEEL ALIGNMENT** ..... **10**

**8. SPECIFICATIONS** ..... **11**

## SECTION CHANGE LOG

| | DESCRIPTION | DATE |
|---|---|---|
| 1 | | |
| 2 | | |
| 3 | | |
| 4 | | |
| 5 | | |
| 6 | | |

## 1. TORQUE TABLES

The following tables list the tightening torques requiring a specific torque value. When no torque specifications are indicated, use the Standard Torque Specifications table found in Section 00: General Information of the Maintenance Manual.

For other torque specifications, refer to Dana manuals listed in paragraph 2.1 reference manuals in this section.

### 1.1 FRONT I-BEAM AXLE AND RELATED COMPONENTS

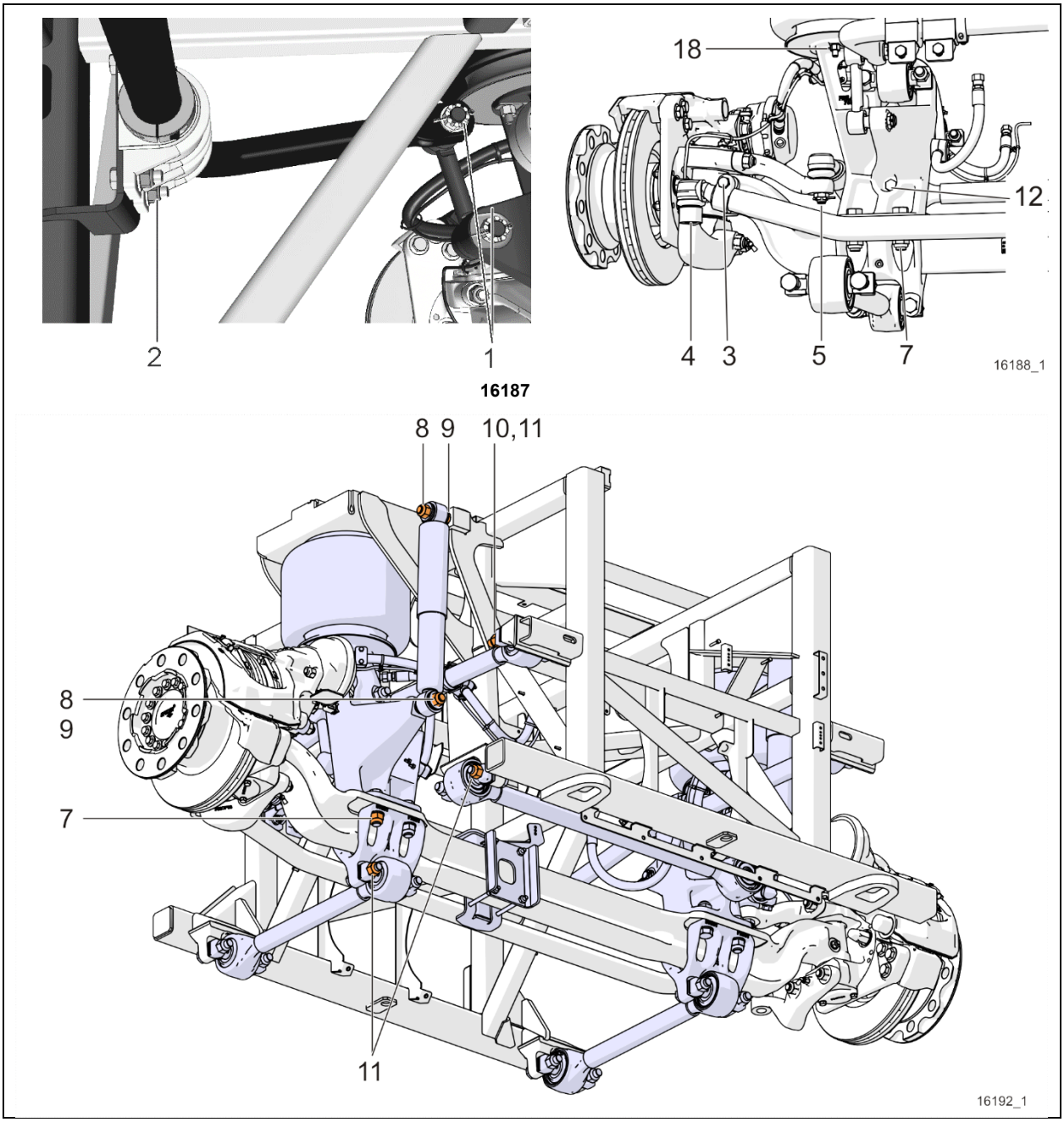

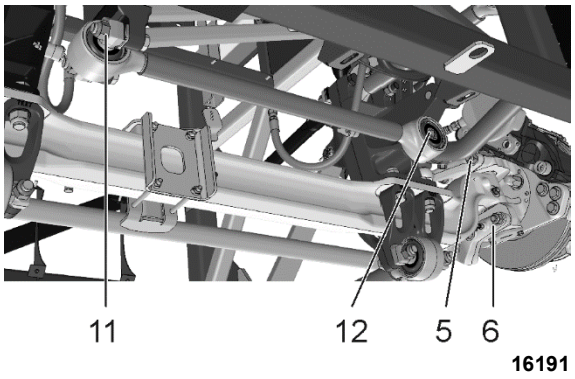


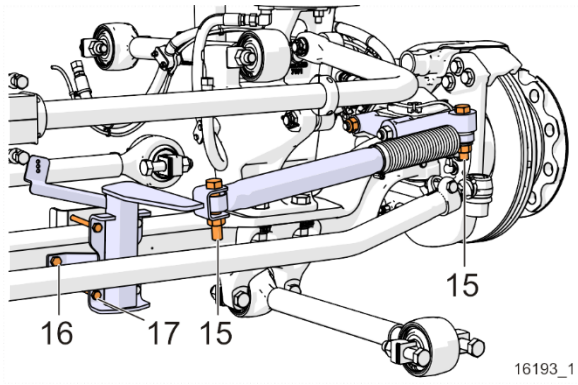


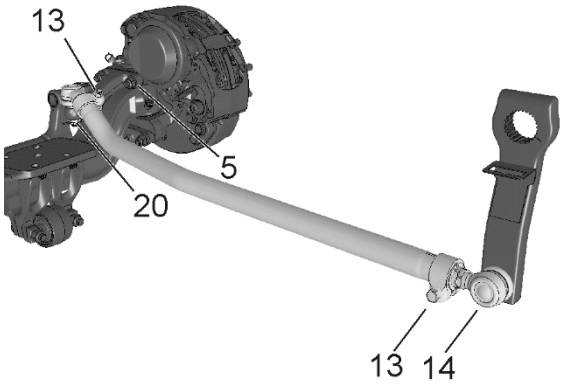


| FRONT I-BEAM AXLE | | | |
|---|---|---|---|
| No | DESCRIPTION | QTY | TORQUE (dry) |
| 1 | Sway bar link, upper and lower nuts | 4 | 165-200 lb-ft (224-271 Nm) |
| 2 | Sway bar bushing collars (front suspension) | 8 | 80-100 lb-ft (108-136 Nm) |
| 3 | Tie rod end clamp bolts | 2 | 118-133 lb-ft (160-180 Nm) |
| 4 | Tie rod end ball pin nuts | 2 | 155-170 lb-ft (210-230 Nm) |
| 5 | Steering arm stud nuts | 2 | 285-315 lb-ft (386-427 Nm) |
| 6 | Tie rod arm stud nuts | 4 | 285-315 lb-ft (386-427 Nm) |
| 7 | I-beam axle mount nuts | 8 | 230-280 lb-ft (312-380 Nm) |
| 8 | Shock absorber upper & lower mounting nuts | 2 | 99-121 lb-ft (134-164 Nm) |
| 9 | Shock absorber pins, upper & lower | 2 | 350-400 lb-ft (475-542 Nm) |
| 10 | Radius rod retaining studs | 4 | 90-110 lb-ft (122-149 Nm) |
| 11 | Radius rod retaining nuts | 18 | 225-255 lb-ft (305-346 Nm) |
| 12 | Transverse radius rod taper pin screw | 1 | 206 lb-ft (279 Nm) |
| 13 | Drag link clamp bolts | 2 | 118-133 lb-ft (160-180 Nm) |
| 14 | Drag link ball joint stud nut, fore | 1 | 165-236 lb-ft (224-320 Nm) |
| 15 | Steering damper nuts | 2 | 100-120 lb-ft (136-163 Nm) |
| 16 | Steering damper bracket bolt | 1 | 39-45 lb-ft (53-61 Nm) |
| 17 | Steering damper bracket nuts | 4 | 30-36 lb-ft (41-49 Nm) |
| 18 | Air spring nut | 4 | 25 lb-ft (34 Nm) |
| 19 | Steering damper arm nuts | 2 | 285-315 lb-ft (386-427 Nm) |
| 20 | Drag link ball joint stud nut, aft | 1 | 140-200 lb-ft (190-271 Nm) |

## 1.2 FRONT I-BEAM AXLE HUB, ROTOR AND BRAKES

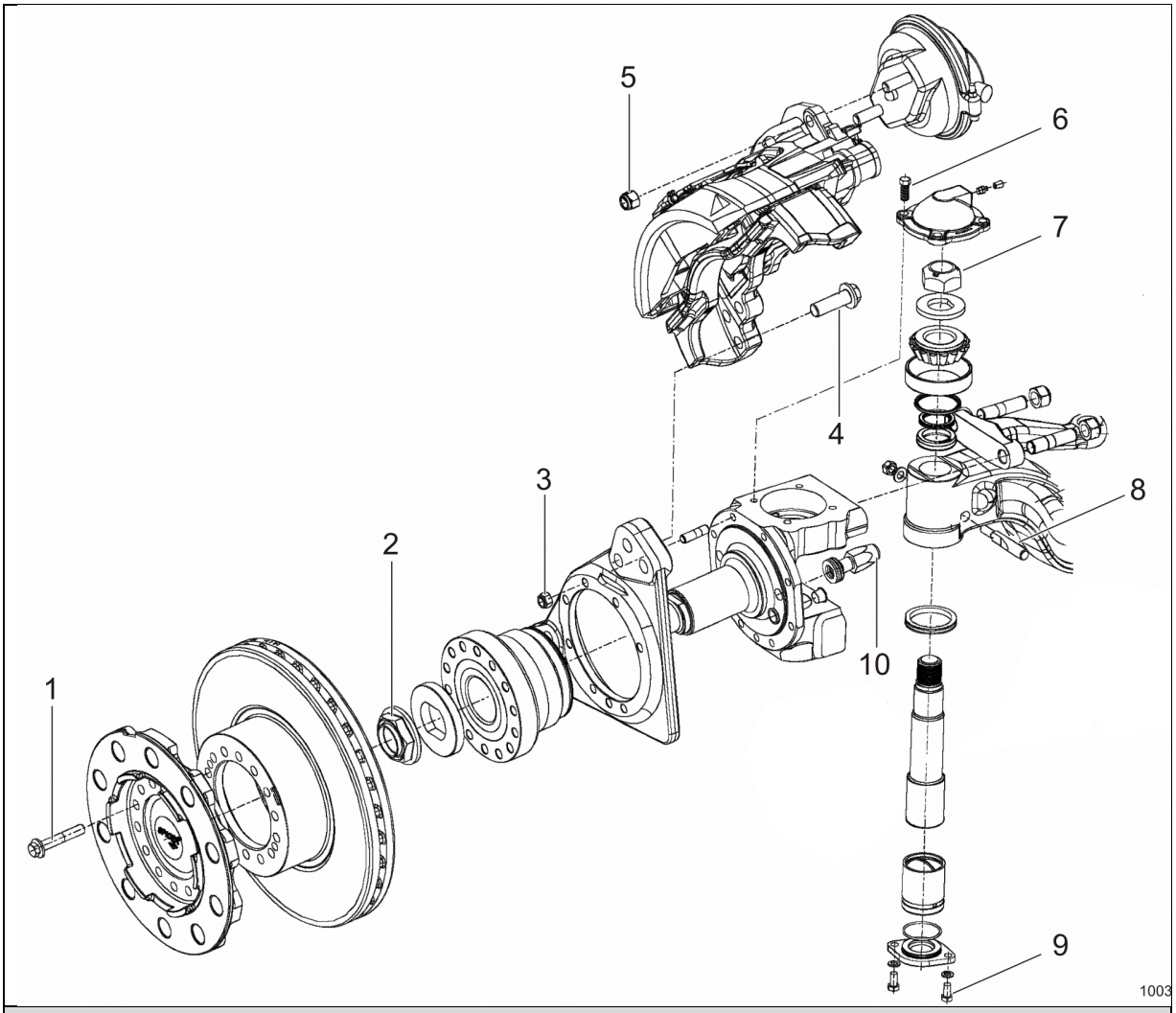


| HUB, ROTOR AND BRAKE | | | |
|---|---|---|---|
| No | DESCRIPTION | QTY | TORQUE (dry) |
| 1 | Hub Flanged Bolt | 28 | 174-192 lb-ft (236-260 Nm) |
| 2 | Stake Hub Nut | 2 | 575-626 lb-ft (780-849 Nm) |
| 3 | Caliper Bracket Nut – Self Lock | 16 | 85-103 lb-ft (115-140 Nm) |
| 4 | Brake Caliper Mounting – Bolt | 12 | 433-479 lb-ft (587-649 Nm) |
| 5 | Brake Chamber Nut – Self Lock | 4 | 133-155 lb-ft (180-210 Nm) |
| 6 | Kingpin cover Screw | 8 | 51-62 lb-ft (69-84 Nm) |
| 7 | Kingpin Nut – Self Lock | 2 | 500-700 lb-ft (678-949 Nm) |
| 8 | Draw key, Nut | 2 | 51-62 lb-ft (69-84 Nm) |
| 9 | Kingpin lower cover Screw | 4 | 26-32 lb-ft (35-43 Nm) |
| 10 | Back & Front Lock - Stop Bolt | 3 | 85-103 lb-ft (115-140 Nm)a |

## 2. DESCRIPTION

The Dana Spicer S84U front axle is of the ‘’Reverse Elliot’’ type. The front axle consists of a girder section beam with knuckles. Each knuckle is carried on a parallel king pin, with a steep angle taper roller bearing at its top and a plain phosphor bronze bush at bottom.

The unitized hub bearings used on the NDS range of axles, are non-serviceable items. Bearings are pre-adjusted, lubricated and have seals fitted as part of the manufacturing process. The bearings are greased for life and there is no need or facility for re-lubrication.

Brakes are manufactured by KNORR-BREMSE.

Steering ball joints with hardened balls and rubbing pads incorporate compression springs which automatically take up any wear.

The tie rod simplifies toe-in adjustment. The maximum turning angle is set through stop screws installed on the inner side of the knuckle.

Steering stabilizer (damper) and steering drag link which are mounted on the front axle are described further in Section 14: STEERING of this manual.

### 2.1 REFERENCE MANUALS

Additional information is found in the following manuals included on your vehicle Technical Publications USB flash drive:

For kingpin rework:
**Dana Parts & Service Instructions S84U Steer Axle KING PIN REWORK_ Manual NO 1985 B iss A**

For hub bearing rework:
**Dana Parts & Service Instructions S84U Steer Axle HUB BEARING REWORK_ Manual NO 1963 B iss A**

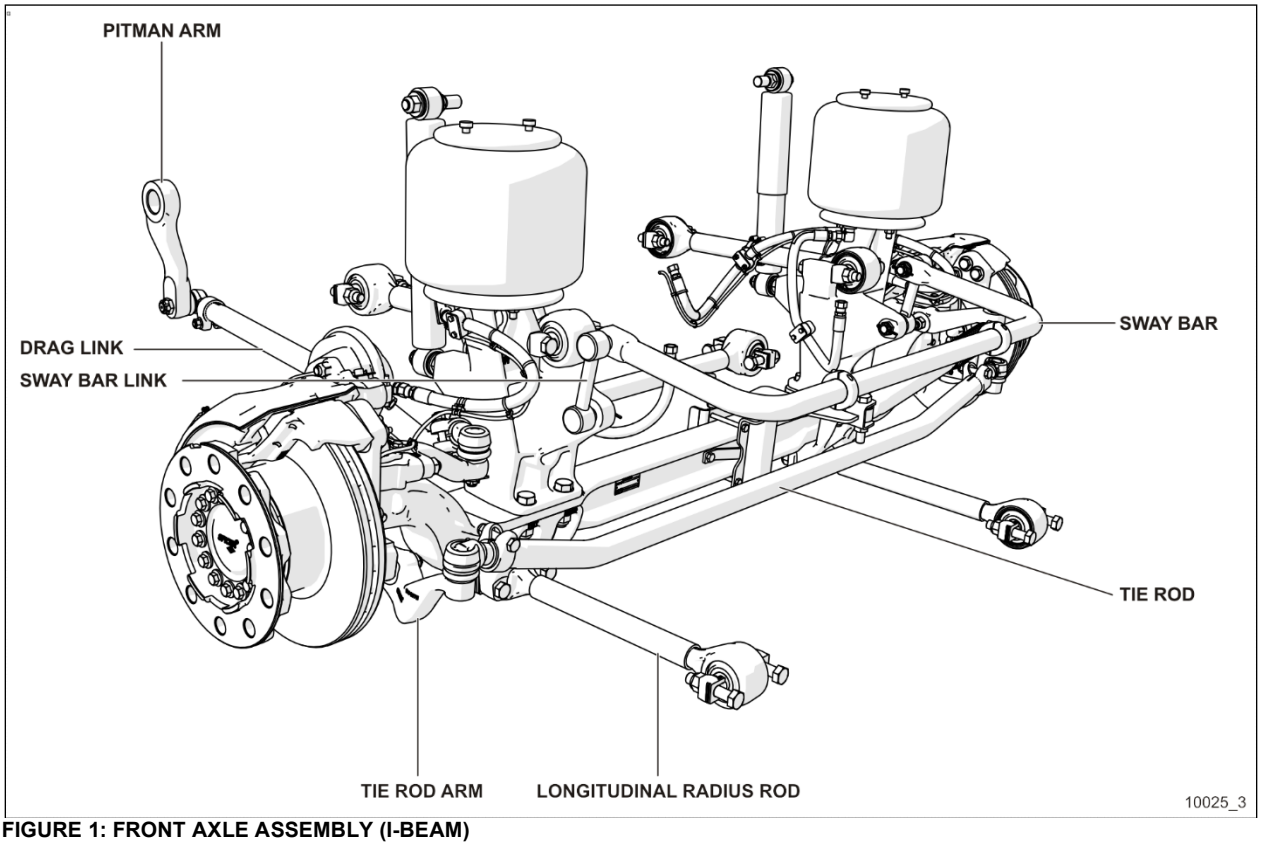


**FIGURE 1: FRONT AXLE ASSEMBLY (I-BEAM)**

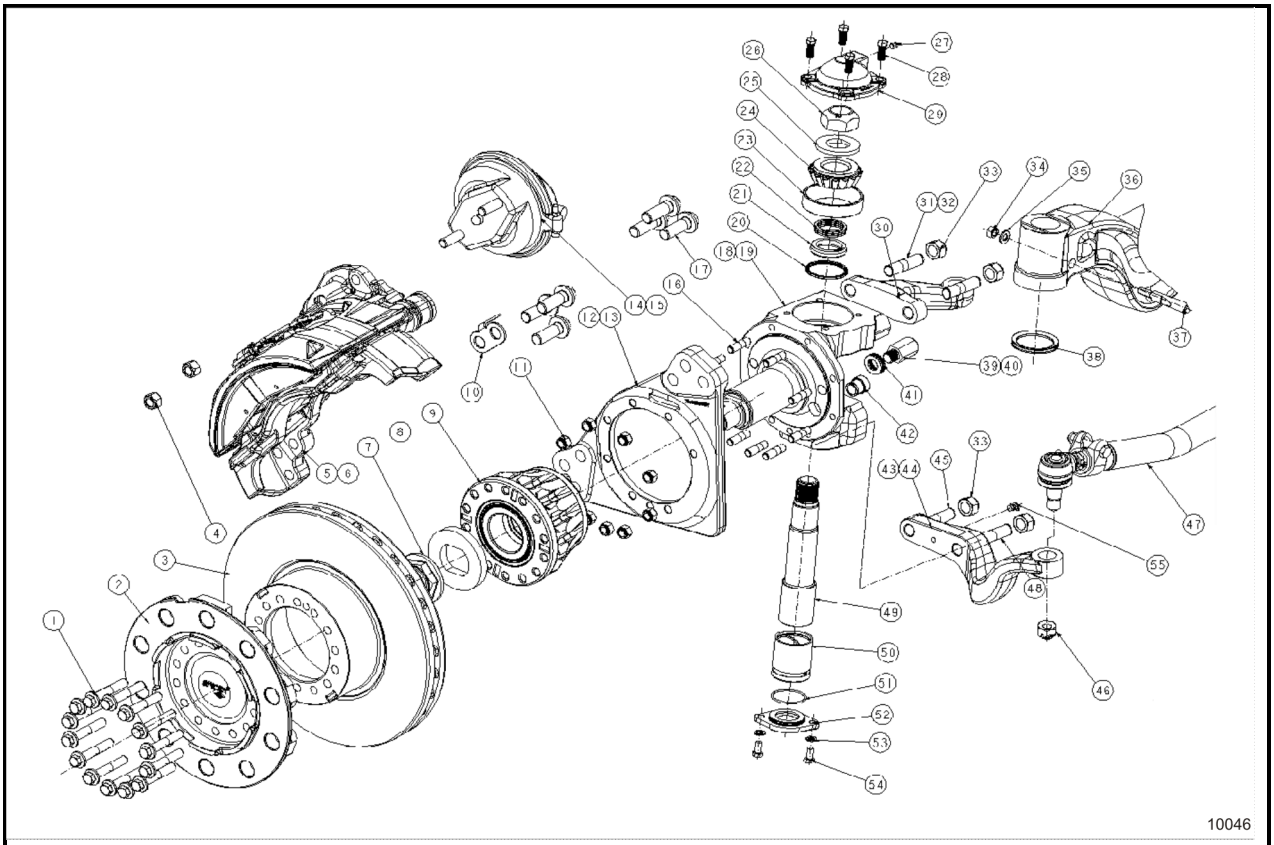


**TYPICAL S84U AXLE**

| ITEM | DESCRIPTION | QTY | ITEM | DESCRIPTION | QTY |
|---|---|---|---|---|---|
| 1 | Flanged Bolt | 28 | 29 | Cap - Knuckle Top | 2 |
| 2 | Hub | 2 | 30 | Top Steering Lever | 1 |
| 3 | Brake Disc | 2 | 31 | Top Steering Lever - Stud L.H. | 2 |
| 4 | Nut – Self Lock | 4 | 32 | Top Steering Lever - Stud R.H. | 2 |
| 5 | Brake L.H. | 1 | 33 | Nut - Self Lock | 8 |
| 6 | Brake R.H. | 1 | 34 | Drawkey - Nut | 2 |
| 7 | Stake Nut | 2 | 35 | Drawkey - Washer | 2 |
| 8 | Collet Washer | 2 | 36 | Beam - Axle | 1 |
| 9 | Hub Bearing | 2 | 37 | Drawkey | 2 |
| 10 | Wear Sensor Clip | 2 | 38 | V Ring Seal | 2 |
| 11 | Nut – Self Lock | 16 | 39 | Back Lock - Stop Bolt | 2 |
| 12 | Brake Mounting Bracket L.H. | 1 | 40 | Front Lock - Stop Bolt | 1 |
| 13 | Brake Mounting Bracket R.H. | 1 | 41 | Stop bolt - washer | 4 |
| 14 | Actuator L.H. | 1 | 42 | ABS Sensor - Bush | 2 |
| 15 | Actuator R.H. | 1 | 43 | Bottom Steering Lever L.H. | 1 |
| 16 | Stud | 16 | 44 | Bottom Steering Lever R.H. | 1 |
| 17 | Brake fixing - Bolt | 12 | 45 | Bottom Steering Lever - Stud | 2 |
| 18 | Knuckle L.H. | 1 | 46 | Nut - Self Lock (Tie Rod) | 2 |
| 19 | Knuckle R.H. | 1 | 47 | Socket & Tie Rod Assy | 1 |
| 20 | Oil Seal | 2 | 48 | Socket Assy R.H. | 2 |
| 21 | Sleeve - Knuckle Bearing | 2 | 49 | Socket Assy L.H. | 2 |
| 22 | Shim | A/R | 50 | Kingpin - Bushing | 2 |
| 23 | Bearing Cup | 2 | 51 | O Ring Seal | 2 |
| 24 | Bearing Cone | 4 | 52 | Kingpin | 2 |
| 25 | Washer (Collet) | 1 | 53 | Washer | 2 |
| 26 | Nut – Self Lock | 2 | 54 | Cap - Knuckle Bottom | 2 |
| 27 | Lub Nipple (Straight) | 2 | | | |
| 28 | Screw | 2 | | | |

## 3. LUBRICATION

### MAINTENANCE

Knuckle pins are provided with grease fittings for pressure lubrication. These grease fittings should be serviced at the intervals specified by the Lubrication And Servicing Schedule in Section 24: LUBRICATION & SERVICING.

Good quality lithium-base roller bearing mineral grease NLGI No.1 and 2 like Shell Retinax LX are recommended.

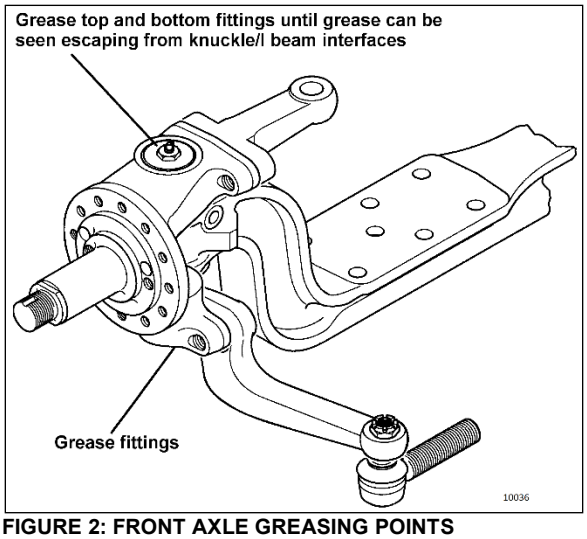


**FIGURE 2: FRONT AXLE GREASING POINTS**

## 4. MAINTENANCE

A periodic inspection of the front axle assembly should be made to check that no damage and distortion have taken place. All the bolts and and stop screws should be checked and tightened, as required, to the torque specifications given at the beginning of this section. Also check the condition of the steering knuckle kingpins and bushings. In case of excessive looseness, the bushings and kingpins should be replaced.

Any looseness in the steering linkage, under normal steering loads, is sufficient cause to immediately check all pivot points for wear, regardless of accumulated mileage. Steering linkage pivot points should be checked each time the front axle assembly is lubricated. Any looseness can be visually detected while rotating the steering wheel in both directions.

Steering knuckles, knuckle pins and bushings can be overhauled or replaced without removing the axle from the vehicle. However, if extensive overhaul work is necessary, the axle assembly should be removed.

### CAUTION

Should removal of a locking device be required when undergoing repairs, disassembly or adjustments, always replace with a new one.

## 5. REMOVAL AND REPLACEMENT

The following procedure deals with the removal of the front axle assembly. The method used to support the axle assembly and suspension components during removal and disassembly depends upon local conditions and available equipment.

5.1 REMOVAL

1. Raise the vehicle by its jacking points on the body (see Section 18, *''Body''* under paragraph ''Vehicle Jacking Points'') until vehicle body is approximately 20 inches (508 mm) from the floor. Place jack stands under frame. Remove the wheels (if required, refer to Section 13, *''Wheels, Hubs and Tires''*).

### CAUTION

Use only the recommended jacking points as outlined in section 18 “Body”.

2. Exhaust compressed air from the air supply system by opening the drain valve of each reservoir.
3. Install jacks under axle jacking points to support the axle weight.
4. Disconnect the steering drag link from the steering arm.
5. Remove the ABS sensors from their location in hubs (if applicable).
6. Disconnect the height control valve link from its support on the axle.
7. Disconnect air lines from front brake chambers, and cover line ends and fittings to prevent the entry of foreign matter.

**CAUTION**

Position the air lines and electric wires so they will not be damaged while removing the front axle assembly.

8. Proceed with steps a, b and c, while referring to Section 16: *''SUSPENSION".*
   a) Disconnect sway bar links from axle brackets.
   b) Remove shock absorbers.
   c) Disconnect five radius rods: one transversal and two longitudinal from subframe, and two upper rods from axle.
9. Remove the bolts and nuts fixing the axle to the left-hand and right-hand side air springs mounting supports.
10. Using the jacks, slowly lower the axle assembly, and carefully pull away from underneath vehicle.

5.2 REPLACEMENT

Reverse front axle "*Removal"* procedure. Ensure cleanliness of air bellows support mounting plates.

*NOTE*

*Refer to Section 16, ''Suspension", Section 14, ''Steering'' and to paragraph 8 ''Specifications'' at the end of this section for applicable checks.*

*Refer to torque tables at the beginning of this section for tightening.*

## 6. SERVICE INSTRUCTIONS FOR STEER AXLE

### MAINTENANCE

An inspection should be made at the intervals specified by the Lubrication And Servicing Schedule in Section 24: LUBRICATION & SERVICING.

### 6.1 STEERING KNUCKLE KINGPIN INSPECTION

Check permissible slackness in the kingpins as follows:

Aspects to be considered are:

- **Lateral slackness**
- **Vertical slackness**

*NOTE*

*Before commencing checks, apply parking brake, raise wheels off ground and support axle on stands.*

#### 6.1.1 Checking Lateral Slackness

Following regular and thorough greasing practices will maximise bushing life. This procedure measures the upper bearing & lower bushing wear due to side and vertical loading. While this is being carried out, the brake must be applied.

1. Place a set-square with its stock on ground and its blade against tire wall.
2. Place a mark on the ground to indicate position of stock end.
3. Insert a lever through bottom cut-out of wheel and lever it upwards thus moving set-square outboard.
4. Mark the changed position of the stock end.
5. Maximum allowable stock displacement (for 22.5" wheels) is **0.315 in (8mm)**.
6. If displacement exceeds stated allowance then need for bushing / bearing attention and possible renewal, is in evidence.

*NOTE*

*To avoid inaccurate measurements, be careful not to let the knuckle turn while moving assembly in and out. Applying brakes will help lock wheel assembly.*

#### 6.1.2 Checking Vertical Slackness

1. This is measured by a dial indicator anchored to axle beam and having its pointer placed vertical against knuckle top.
2. Place a jack against underside of knuckle and, while applying a lifting force, observe any movement on indicator dial.
3. **If vertical movement is evident and it exceeds 0.030" (0.76mm)** then readjustment of knuckle is required by adjusting thickness of bearing adjusting shims. In this case, refer to:

***Dana Parts & Service Instructions S84U Steer Axle KING PIN REWORK_ Manual NO 1985 B iss A.***

### 6.2 STEERING TIE ROD INSPECTION

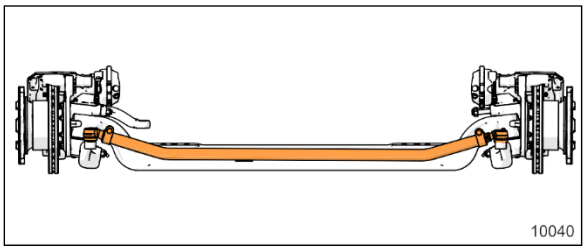


**FIGURE 3**

The steering tie rod on the axle requires several visual and functional inspections. Refer to Section 14– STEERING under heading FRONT I-BEAM AXLE TIE ROD.

Detailed information can also be found in the following supplier publication:
**TRW_Front_Axle_Steering_Bar_Service_Information_XSZ143**

## 7. FRONT WHEEL ALIGNMENT

Refer to Section 14: STEERING.

## 8. SPECIFICATIONS

### Front Axle

Make .....DANA SPICER EUROPE

Model ..... S84U

Front Track ..... 84.4 inches (2 145 mm)

Rated load capacity..... 16,500 lbs (7 500 kg)

## CONTENTS

**1. TORQUE TABLES ..... 3**

1.1 MERITOR DRIVE AXLE ..... 3
1.2 ZF A132 DRIVE AXLE ..... 4
1.3 TAG AXLE ..... 5

**2. MERITOR DRIVE AXLE ..... 6**

2.1 DESCRIPTION ..... 6
2.2 DCDL (DRIVER-CONTROLLED MAIN DIFFERENTIAL LOCK) ..... 6
2.3 MAINTENANCE ..... 7
*2.3.1 Drive Axle Lubrication ..... 7*
*2.3.2 Checking and Adjusting the Oil Level ..... 8*
*2.3.3 Draining and Replacing the Oil ..... 8*
2.4 REMOVAL AND REINSTALLATION ..... 8
2.5 DISASSEMBLY AND REASSEMBLY ..... 9
2.6 GEAR SET IDENTIFICATION ..... 9
2.7 ADJUSTMENTS ..... 9
2.8 TIRE MATCHING ..... 9
2.9 DRIVE AXLE ALIGNMENT ..... 10
*2.9.1 Procedure ..... 10*
*2.9.2 Drive Axle Alignment Specifications ..... 10*
2.10 AXLE SHAFT SEALING METHOD ..... 11

**3. ZF A132 DRIVE AXLE ..... 12**

3.1 MAINTENANCE ..... 12
*3.1.1 Differential Oil Type ..... 12*
*3.1.2 Checking and Adjusting the Differential Oil Level ..... 12*
*3.1.3 Differential Oil Change ..... 12*
*3.1.4 Compact Bearing (Hub Unit) Axial Play Check ..... 13*
*3.1.5 Compact bearing (hub unit) Grease Change ..... 14*
*3.1.6 Speed Sensors (Anti-Lock Brake system, ABS) ..... 14*
3.2 DRIVE AXLE FLANGE SHAFT REMOVAL/INSTALLATION ..... 14
3.3 REMOVAL AND REINSTALLATION ..... 16
3.4 DISASSEMBLY, REASSEMBLY, ADJUSTMENT AND TORQUE CHART ..... 16
3.5 ZF A132 DRIVE AXLE ALIGNMENT ..... 16
*3.5.1 Procedure ..... 17*

**4. TAG AXLE ..... 17**

4.1 UNLOADING TAG AXLE (OPTIONAL) ..... 17
4.2 RETRACTING TAG AXLE ..... 18
4.3 RETRACTING TAG AXLE FOR REPAIR PURPOSES ..... 18
4.4 TAG AXLE WHEEL BEARINGS ..... 18
4.5 REMOVAL AND REINSTALLATION ..... 18
*4.5.1 Removing Tag Axle Only ..... 18*
*4.5.2 Removing Tag Axle Along With Suspension Components ..... 18*
*4.5.3 Removing Transversal radius Rod ..... 19*
4.6 TAG AXLE ALIGNMENT ..... 20

**5. SPECIFICATIONS ..... 21**

## SECTION CHANGE LOG

| | DESCRIPTION | DATE |
|---|---|---|
| 1 | | |
| 2 | | |
| 3 | | |
| 4 | | |
| 5 | | |
| 6 | | |

## 1. TORQUE TABLES

### 1.1 MERITOR DRIVE AXLE

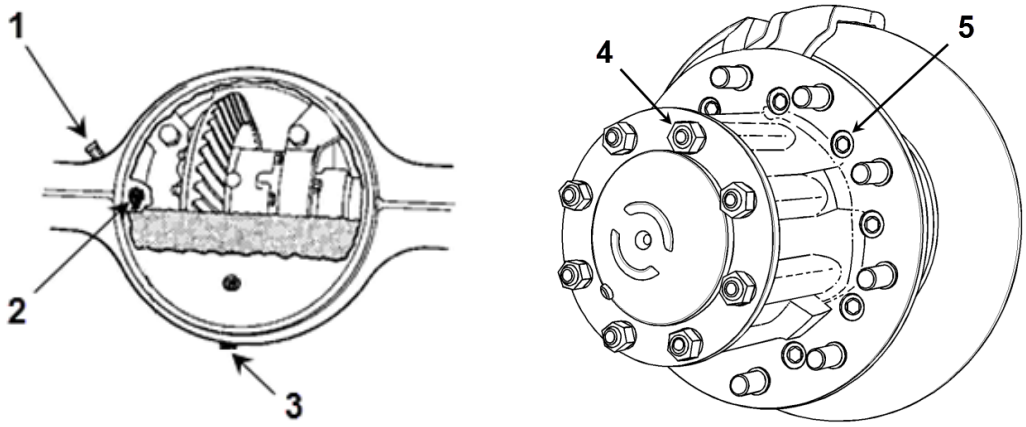


| MERITOR DRIVE AXLE | | |
|---|---|---|
| No | DESCRIPTION | TORQUE |
| 1 | Breather | 12-18 lb-pi (16-24 Nm) |
| 2 | Fill / Level check plug | 35 lb-pi (47 Nm) minimum * |
| 3 | Drain plug | 35 lb-ft (47 Nm) |
| 4 | Drive shaft flange nuts 5/8-18 | 150-230 lb-ft (203-312 Nm) |
| 5 | Hub to disc cap screws 9/16-18 | 110-165 lb-ft (149-224 Nm) |

* Minimum value, tighten until only one full plug thread is visible.

## 1.2 ZF A132 DRIVE AXLE

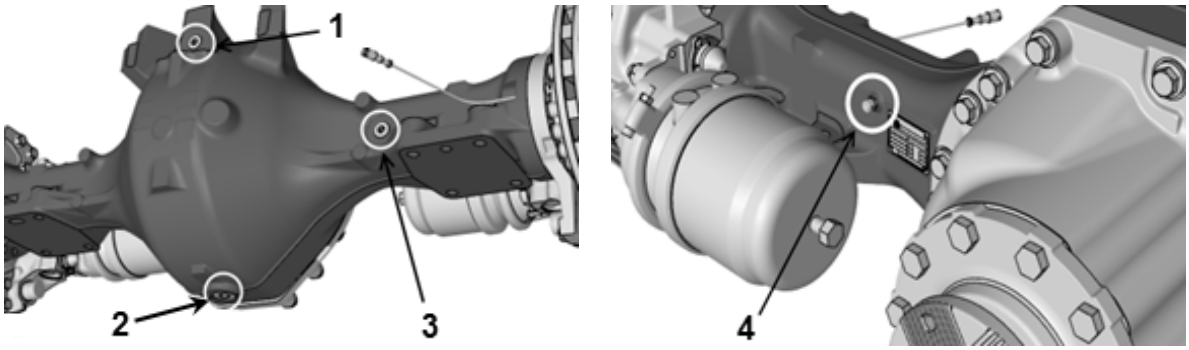


| ZF A132 DRIVE AXLE | | |
|---|---|---|
| No | DESCRIPTION | TORQUE |
| 1 | Filler plug | 52 lb-ft (71 Nm) |
| 2 | Drain plug | 96 lb-ft (130 Nm) |
| 3 | Level check plug | 52 lb-ft (71 Nm) |
| 4 | Breather | 4 lb-ft (5 Nm) |

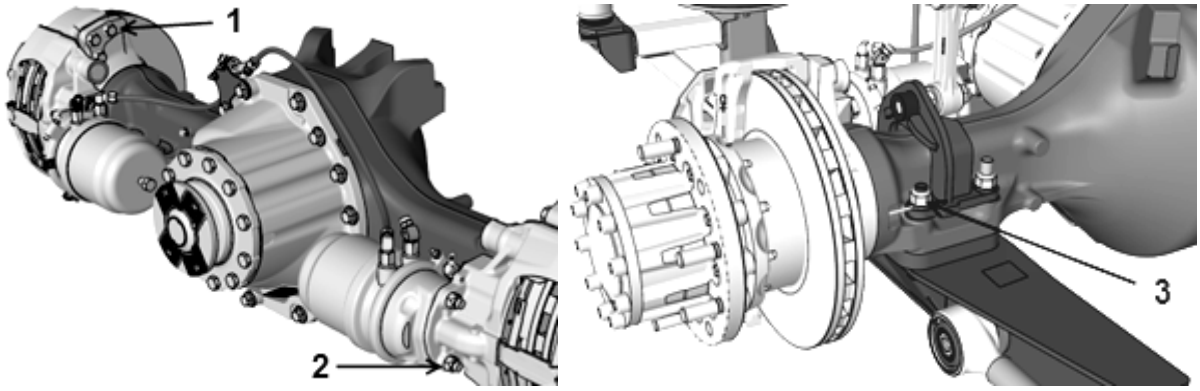


| ZF A132 DRIVE AXLE | | |
|---|---|---|
| No | DESCRIPTION | TORQUE |
| 1 | Caliper mounting bolts | 200 lb-ft (271 Nm) |
| 2 | Brake air chamber mounting bolts | 120-150 lb-ft (163-203 Nm) |
| 3 | Axle to frame mounting bolts | 405-495 lb-ft (549-671 Nm) |

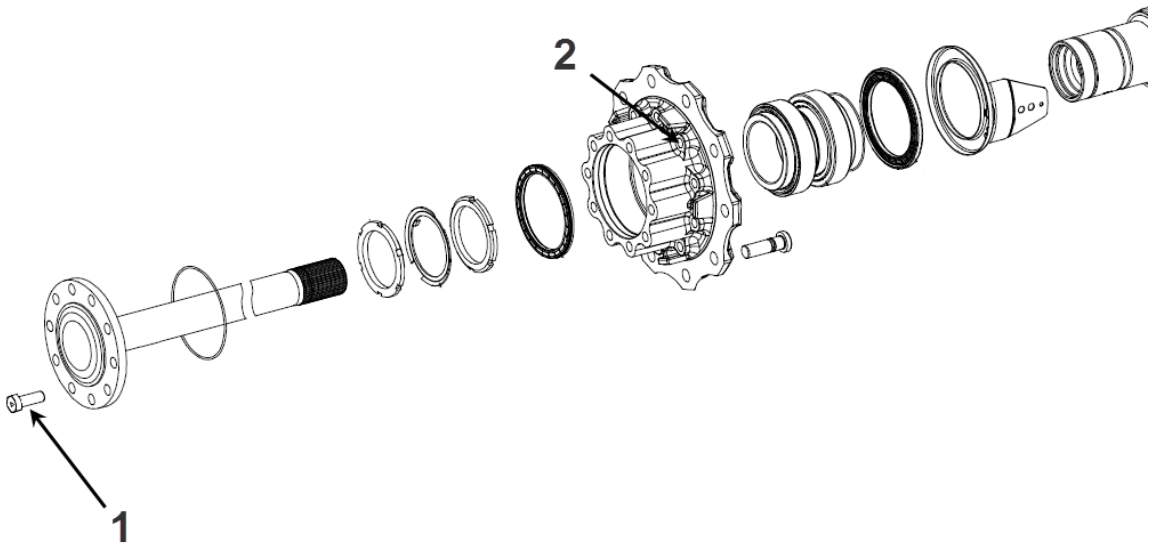


| ZF A132 DRIVE AXLE | | |
|---|---|---|
| No | DESCRIPTION | TORQUE |
| 1 | Drive shaft flange bolts cap screw M18x1.5x50mm G10.9 | 325 lb-ft (441 Nm) |
| 2 | Hub cap screw Torx M16x1.5x60 | 221 lb-ft (300 Nm) |

1.3 TAG AXLE

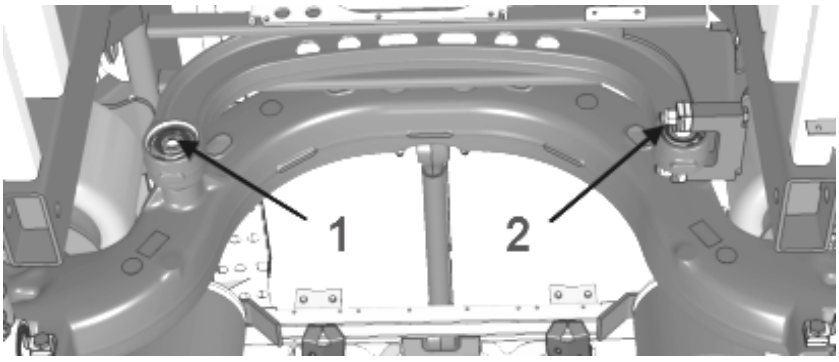


| TAG AXLE | | |
|---|---|---|
| No | DESCRIPTION | TORQUE |
| 1 | Tag axle transversal radius rod (stud) retaining bolt | 198 lb-ft (268 Nm) |
| 2 | Tag axle radius rods nut | 228-252 lb-ft (309-342 Nm) |

## 2. MERITOR DRIVE AXLE

### 2.1 DESCRIPTION

The Meritor drive axle is equipped with a single reduction standard carrier mounted in front of the axle housing. The carrier consists of a hypoid drive pinion, a ring gear set and gears in the differential assembly.

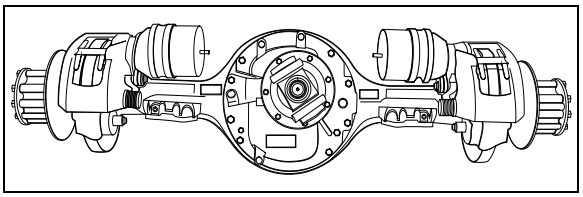

**FIGURE 1: DRIVE AXLE 11019**

A straight roller bearing (spigot) is mounted on the head of the drive pinion. All other bearings in the carrier are tapered roller bearings. When the carrier operates, there is a normal differential action between the wheels all the time.

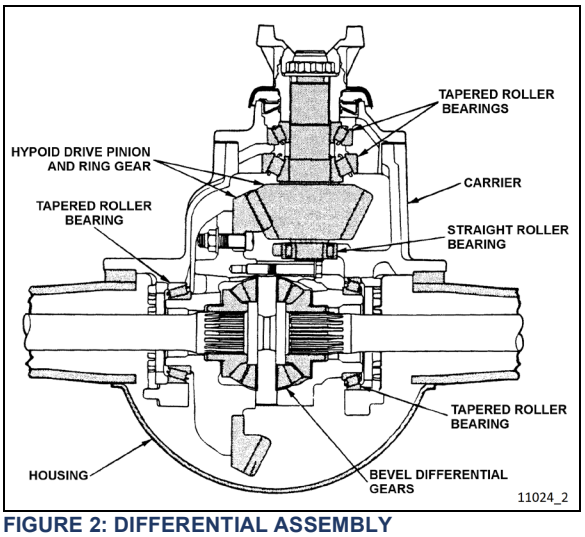


**FIGURE 2: DIFFERENTIAL ASSEMBLY**

Several speed ratios are available for the drive axle. These ratios depend upon the motor and transmission. Also, special applications may suggest slightly different gear ratios.

Additional information is found in the following manuals, included on your vehicle Technical Publications refer to flash drive:

- ***Meritor Maintenance Manual 5A – single reduction differential carriers***




- ***Meritor Maintenance Manual 23A – Bus and Coach Rear Drive Axles***

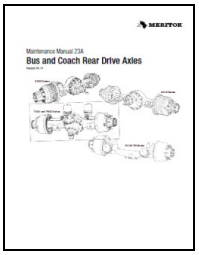


- ***Meritor Technical Bulletin TP-9539 Approved Rear Drive Axle Lubricants***

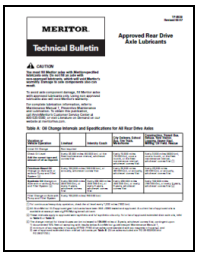


### 2.2 DCDL (DRIVER-CONTROLLED MAIN DIFFERENTIAL LOCK)

Meritor Single-reduction carriers with driver-controlled main differential lock (DCDL) have the same type of gears and bearings as the standard-type carriers. The differential lock is operated by an air actuated shift assembly that is mounted on the carrier.

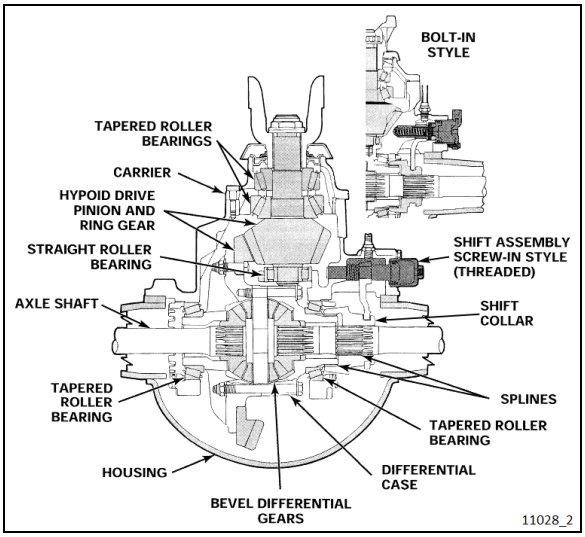


**FIGURE 3: DRIVER-CONTROLLED DIFFERENTIAL LOCK**

## 2.3 MAINTENANCE

Proper vehicle operation starts with preventive maintenance, which includes adequate operation of the differential.

The most common causes of drive axle failures are spinout, shock, fatigue, overheating and lack of lubrication. Monitor these conditions as they could be the first steps leading to improper maintenance, expensive repairs, and excessive downtime.

### MAINTENANCE

Inspect the pinion oil seal, axle shaft flange and carrier housing gaskets for evidence of lubricant leakage. Tighten the bolts and nuts, or replace the gaskets and seals to correct leaks. Maintenance of the axle mountings consists primarily in a regular and systematic inspection of the air suspension units and radius rods, as directed in Section 16, *"Suspension".*

### 2.3.1 Drive Axle Lubrication

Use multigrade gear oil meeting API specification GL-5. Petroleum based gear oil may be used for standard drains interval. Fully synthetic gear oil must be used for extended drains interval. In extreme conditions, or for better performance, fill with synthetic gear oil.

Fill Meritor axle with approved lubricants. Refer to Meritor technical bulletin **TP-9539 Approved Rear Drive Axle Lubricants** for oil selection.

### MAINTENANCE

**Differential oil level**

Check oil level (add if necessary) at the intervals specified by the Lubrication And Servicing Schedule in Section 24: LUBRICATION & SERVICING.

### MAINTENANCE

**Extended Drains**

If using full synthetic gear oil, change differential oil and clean the breathers, magnetic fill and drain plugs, at the intervals specified by the Lubrication And Servicing Schedule in Section 24: LUBRICATION & SERVICING.

**Regular Drains**

If using petroleum based oil, change differential oil and clean the breathers, magnetic fill and drain plugs, at the intervals specified by the Lubrication And Servicing Schedule in Section 24: LUBRICATION & SERVICING.

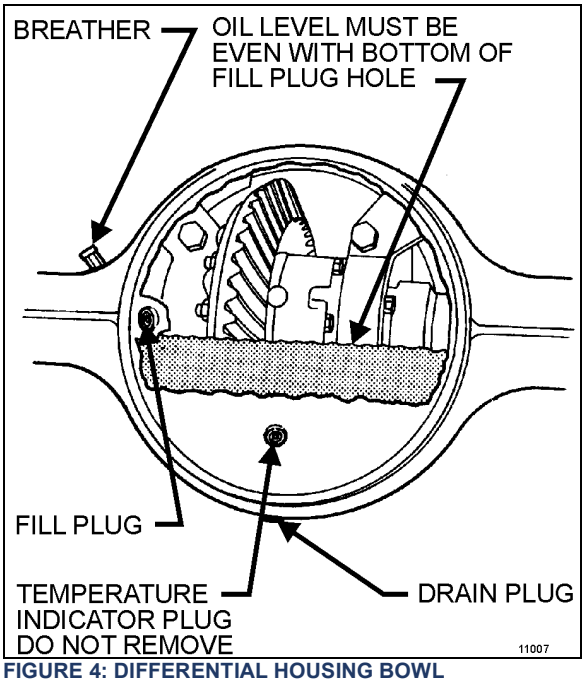


**FIGURE 4: DIFFERENTIAL HOUSING BOWL**

2.3.2 Checking and Adjusting the Oil Level

**DANGER**

Before servicing, park safely over a repair pit; apply parking brake, stop engine and set battery master switch to the "OFF" position.

1. Make sure the vehicle is parked on a level surface.

**WARNING**

Check the oil level when the axle is at room temperature. When hot, the oil temperature may be 190ºF (88ºC) or more and can cause burns. Also, a correct reading is not obtained when the axle is warm or hot.

2. Make sure the axle (oil) is "cold" or at room temperature.
3. Clean the area around the fill plug. Remove the fill plug from the differential axle housing bowl (Figure 4).
4. The oil level must be even with the bottom of the hole of the fill plug.
   a. If oil flows from the hole when the plug is loosened, the oil level is high. Drain the oil to the correct level.
   b. If the oil level is below the bottom of the hole of the fill plug, add the specified oil.
5. Install and tighten the fill plug.

**TORQUE: 35 lb-pi (47 Nm)**

**(Tighten until only one full plug thread is visible)**

2.3.3 Draining and Replacing the Oil

**DANGER**

Before servicing, park safely over a repair pit; apply parking brake, stop engine and set battery master switch to the "OFF" position.

1. Make sure the vehicle is parked on a level surface. Put a large container under the axle's drain plug.

*NOTE*

*Drain the oil when the axle is warm.*

2. Remove the drain plug from the bottom of the axle. Drain and discard the oil in an environment friendly manner.
3. Install and tighten the drain plug.

**TORQUE: 35-50 lb-ft (47-68 Nm)**

4. Clean the area around the fill plug. Remove the fill plug from the differential housing bowl.
5. Add the specified oil until the oil level is even with the bottom of the hole of the fill plug. Allow the oil to flow through the axle and check the oil level again (lube capacity 41 pints [19.4 liters]).

**CAUTION**

The differential overheats when the oil temperature rises above 250ºF (120ºC).

6. Install and tighten the fill plug.

**TORQUE: 35 lb-pi (47 Nm)**

**(Tighten until only one full plug thread is visible)**

Speed Sensors (Anti-Lock Brake system, ABS)

For removing and installing the drive axle speed sensors (for anti-lock brake systems, ABS), refer to Section 12: *''Brake and Air System''*.

2.4 REMOVAL AND REINSTALLATION

The following procedure deals with the removal of the drive axle assembly and its attachments as a unit. The method used to support the axle during removal and disassembly depends upon local conditions and available equipment.

1. Raise vehicle by its jacking points on the body (Figure 5 or see Section 18, *"Body"* under heading *"Vehicle Jacking Points").* Place jack stands under frame. Remove drive axle wheels (if required, refer to Section 13, *"Wheels, Hubs And Tires".*

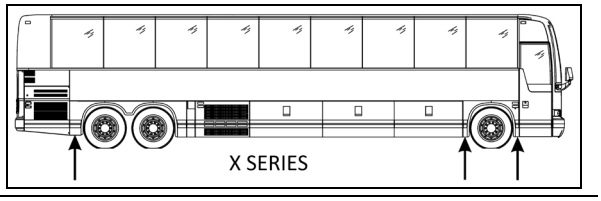

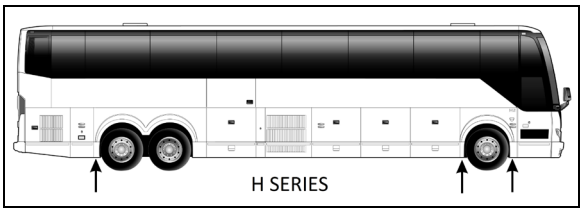


**FIGURE 5: JACKING POINTS ON FRAME** 18524

2. Exhaust compressed air from the air supply system by opening the drain cock on each air reservoir.
3. Disconnect the propeller shaft as directed in Section 9, *"Propeller Shaft",* in this manual.
4. On both sides of the vehicle, unscrew fasteners retaining front wheel housing plastic guards, and remove them from vehicle.
5. Disconnect both height control valve links from air spring mounting plate brackets then move the arm down to exhaust the air suspension.
6. Remove cable ties securing the ABS cables (if vehicle is so equipped) to service brake chamber hoses. Disconnect the ABS cable plugs from the drive axle wheel hubs.

| NOTE |
| --- |
| *When removing drive axle, if unfastening cable ties is necessary for ease of operation, remember to replace them afterwards.* |

7. Disconnect the brake chamber hoses.

| NOTE |
| --- |
| *Position the hoses so they will not be damaged when removing the axle.* |

8. Install jacks under the axle jacking points to support the axle weight (refer to Figure 6).

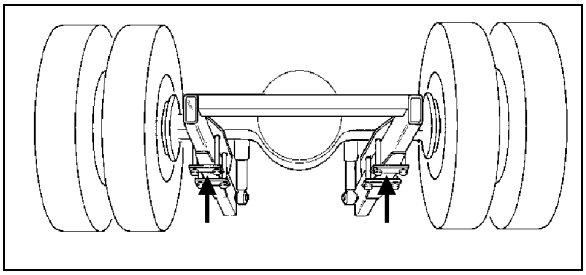

**FIGURE 6: JACKING POINTS ON DRIVE AXLE** H3B762

9. Remove the four shock absorbers as outlined in *Section 16: Suspension* under heading *Shock Absorber Removal.*
10. Remove the sway bar.
11. Remove the lower and upper longitudinal radius rod supports from vehicle sub-frame as outlined in *Section 16: Suspension,* under heading *"Radius Rod Removal".*
12. Remove the transversal radius rod support from the vehicle sub-frame.
13. Remove the two retaining nuts from each of the four air bellows lower mounting supports.
14. Use the jacks to lower axle. Carefully pull away the jacks axle assembly from underneath vehicle.
15. Reverse removal procedure to reinstall drive axle.

| NOTE |
| --- |
| *Refer to Section 16: Suspension for suspension components proper tightening torques.* |

| NOTE |
| --- |
| *Refer to section 13 "Wheels, Hubs And Tires" for correct wheel bearing adjustment procedure.* |

## 2.5 DISASSEMBLY AND REASSEMBLY

Disassembly and re-assembly procedures are covered under applicable headings in Meritor's *"MAINTENANCE MANUAL, NO. 5A",* found on your Technical Publications USB flash drive.

## 2.6 GEAR SET IDENTIFICATION

Gear set identification is covered under applicable heading in Meritor's *"MAINTENANCE MANUAL NO. 5A"*, found on your Technical Publications USB flash drive.

## 2.7 ADJUSTMENTS

Adjustments are covered under applicable headings in Meritor's *"MAINTENANCE MANUAL NO. 5A"*, found on your Technical Publications USB flash drive.

## 2.8 TIRE MATCHING

Drive axle tire matching is covered under the applicable heading in Section 13, *"Wheels, Hubs And Tires"* in this manual.

## 2.9 DRIVE AXLE ALIGNMENT

| *NOTE* |
|---|
| For drive axle alignment specifications, refer to paragraph 2.9.2 ‘’ Drive Axle Alignment Specifications’’ in this section. |

The drive axle alignment consists in aligning the axle according to the frame. The axle must be perpendicular to the frame. The alignment is achieved with the use of shims inserted between the lower longitudinal radius rod supports and the frame.

Drive axle alignment is factory set and is not subject to any change, except if the vehicle has been damaged by an accident or if there are requirements for replacement.

If the axle has been removed for repairs or servicing and if all the parts are reinstalled exactly in the same place, the axle alignment is not necessary. However, if the suspension supports have been replaced or altered, proceed with the following instructions to verify or adjust the drive axle alignment.

| *NOTE* |
|---|
| *When drive axle alignment is modified, tag axle alignment must be re-verified.* |

### 2.9.1 Procedure

1. Park vehicle on a level surface, then chock front vehicle wheels.
2. Using two jacking points (which are at least 30 inches [76 cm] apart) on drive axle, raise the vehicle sufficiently so that wheels can turn freely at about ½ inch from ground. Secure in this position with safety stands, and release parking brake.
3. Install wheel mount sensors on front and drive axles (Figure 7).

| *NOTE* |
|---|
| *See reference numbers on wheel mount sensors (*Figure 7*).* |

| *NOTE* |
|---|
| *Select axle specifications in the appropriate chart.* |

### 2.9.2 Drive Axle Alignment Specifications

With the system installed as for front axle alignment (Figure 7), adjust drive axle according to specifications chart below. Use static wheel alignment systems which work with angle measurements only, such as Josam or Hunter systems. Static alignment specifications are listed in the following tables:

| DRIVE AXLE ALL VEHICLES | | | |
|---|---|---|---|
| Alignment / value | Minimum value | Nominal value | Maximum value |
| Thrust angle (deg.) | ±0.11° | | |
| Total Toe (deg.) | 0.18 Toe-in | 0 | 0.18 Toe-in |

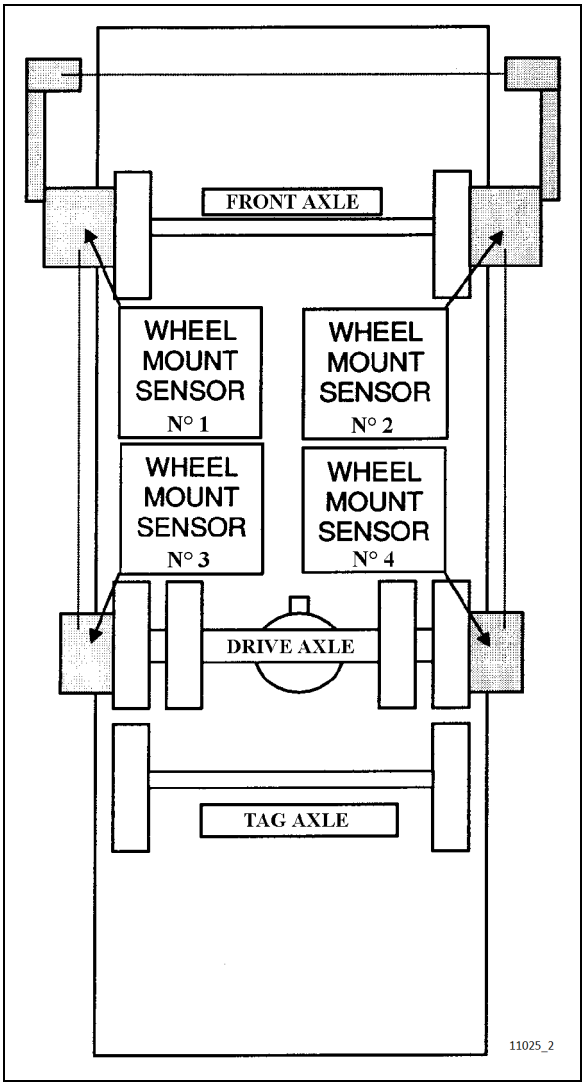


**FIGURE 7: FRONT & DRIVE AXLE ALIGNMENT 11025**

*NOTE*

*Refer to Section 16,* "Suspension", *for proper torque tightening of the longitudinal radius rod support nuts.*

*NOTE*

*When the drive alignment is changed, the tag alignment must also be adjusted.*

## 2.10 AXLE SHAFT SEALING METHOD

The following method is to be used to ensure that axle shaft installation is fluid-tight:

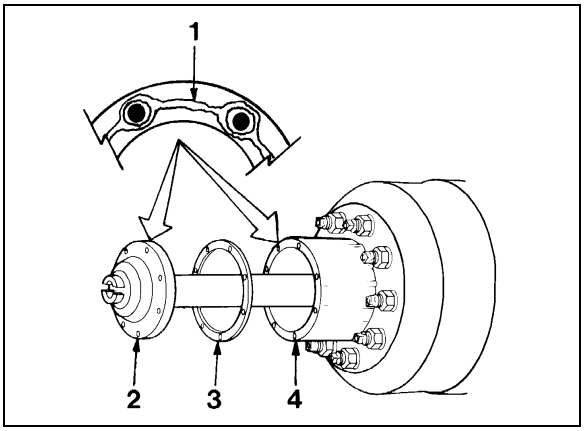


**FIGURE 8: AXLE SHAFT INSTALLATION** 11003

1..... Silicone sealant*
2.....Axle shaft
3.....Gasket
4..... Wheel hub

1. Clean the mounting surfaces of both the axle shaft flange and wheel hub where silicone sealant will be applied. Remove all old silicone sealant, oil, grease, dirt and moisture. Dry both surfaces.
2. Apply a continuous thin bead of silicone sealant* (Prevost P/N 680053) on the mounting surfaces and around the edge of all fastener holes of both the axle shaft flange and wheel hub.

* *GENERAL ELECTRIC Silicone Rubber Adhesive Sealant RTV 103 Black.*

**WARNING**

Carefully read cautions and instructions on the tube of silicone sealant and its packing.

3. Assemble components immediately to permit the silicone sealant to compress evenly between parts.
   a. Place a new gasket and then install the axle shaft into the wheel hub and differential carrier. The gasket and flange of the axle shaft must fit flat against the wheel hub.
   b. Install the tapered dowels at each stud and into the flange of the axle shaft. Use a punch or drift and hammer if needed.
   c. Install the lock washers and nuts on the studs. Tighten nuts to the correct torque value.

*NOTE*

*Torque values are for fasteners that have a light application of oil on the threads (refer to Meritor Maintenance Manual).*

**9/16-18 nut**

**TORQUE: 110-165 lb-ft (149-224 Nm)**

**5/8-18 nut**

**TORQUE: 150-230 lb-ft (203-312 Nm)**

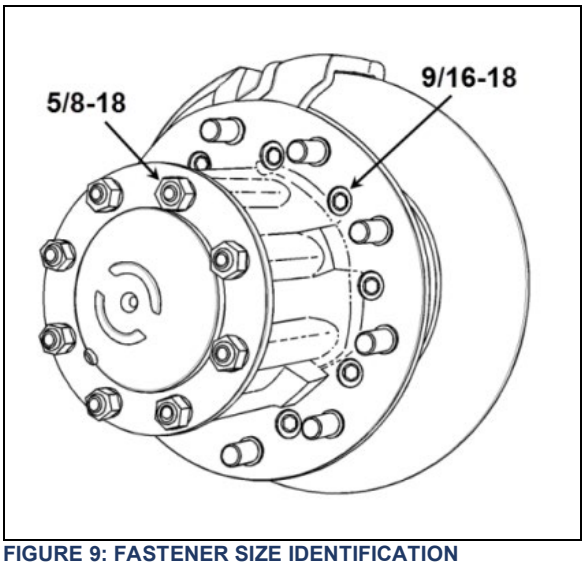


**FIGURE 9: FASTENER SIZE IDENTIFICATION**

## 3. ZF A132 DRIVE AXLE

This vehicle may be equipped with a ZF model A132 Hypoid Single Reduction drive axle, fitted with two Knorr Bremse brake chambers, Knorr Bremse SN7 disc brake and companion flange for Dana Spicer SPL250 propeller shaft. Visual wear indicator or potentiometer wear indicator may be installed. The carrier gear ratio is 3.54.

*NOTE*

Additional information is found in the following manuals, included on your vehicle technical publications USB drive:

- ***OPERATING INSTRUCTIONS ZF AXLE A132 (version with US hub) #5871 207 982 EN.***
- ***ZF AXLE A132 REPAIR MANUAL #5871 207 002E***

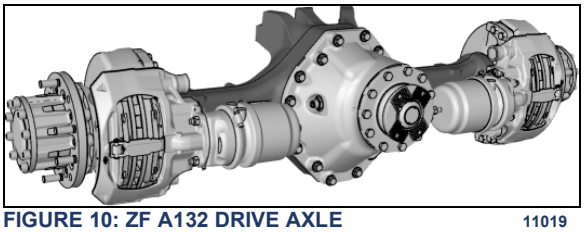

**FIGURE 10: ZF A132 DRIVE AXLE** 11019

### 3.1 MAINTENANCE

Proper vehicle operation starts with preventive maintenance, which includes adequate operation of the differential.

The most common causes of drive axle failures are spinout, shock, fatigue, overheating and lack of lubrication. Monitor these conditions as they could be the first steps leading to improper maintenance, expensive repairs, and excessive downtime.

Inspect at the pinion oil seal, axle shaft flange and carrier housing joint for evidence of lubricant leakage. Tighten the bolts and nuts, or replace the gaskets and seals to correct leaks.

Maintenance of the axle mountings consists primarily in a regular and systematic inspection of the radius rods, as directed in Section 16, *"Suspension".*

#### 3.1.1 Differential Oil Type

Use **Chevron Multigear Oil 80W90 (**ZF lubricant class 12M). Other approved lubricants may be use. Additional lubrication information is covered in ZF's list of lubricants TE-ML 12.

#### 3.1.2 Checking and Adjusting the Differential Oil Level

- Place the vehicle on a level surface.
- Level check plug must be cleaned carefully before opening.
- Check oil level at room temperature only.

**MAINTENANCE**

**Oil level check**

Check differential oil level and add if necessary at every engine oil change.

**WARNING**

Check the oil level when the axle is at room temperature. When hot, the oil temperature may be 190ºF (88ºC) or more and can cause burns. Also, a correct reading is not obtained when the axle is warm or hot.

- Make sure the axle is at room temperature.
- Clean the area around the level check plug. Remove the level check plug from the differential case.
- The oil level must be even with the bottom of the level check bore.

  *If oil flows from the hole when the plug is loosened, the oil level is too high. Let drain the oil to the correct level.*

  *If the oil level is below the bottom of the level check bore, add the specified oil through the level check bore.*
- Reinstall the level check plug using a new seals (O-ring).

**Tighten to 52 lb-ft (71 Nm)**

#### 3.1.3 Differential Oil Change

- Place the vehicle on a level surface.
- Drain, filler and level check plugs must be cleaned carefully before opening.
- Drain oil only at operating temperature, immediately after the vehicle has been operated for an extended period of time.
- Renew seals components (O-rings).

## MAINTENANCE

**Oil change interval – Lubricant class 12M**

Change differential oil and breather, clean the drain plug's magnetic inserts after 110 000 miles (180 000 km) or 3 years, whichever comes first.

**Hot Region Operation**. Change differential oil and breather, clean the drain plug's magnetic inserts after 80 000 miles (120 000 km) or 2 years, whichever comes first.

*Note: Different oil change intervals may be applicable if not using Lubricant Class 12M oil. Refer to ZF list of lubricants TE-ML 12 for appropriate oil change intervals if not using Lubricant Class 12M .*

*Hot region oil change interval is applicable where:*

*The monthly average temperature exceeds 25°C in more than 2 months within a year or if temperatures rise above 40°C on more than 7 days in a year*

*Possible hot region: USA (South and deserts)*

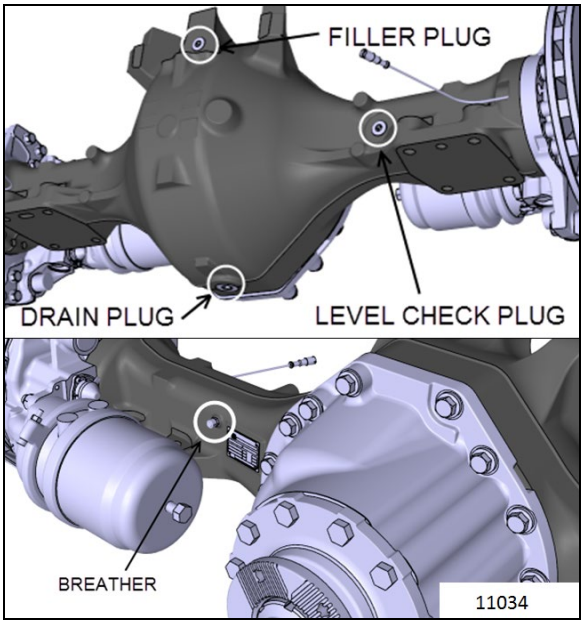


**FIGURE 11: ZF A132 DRIVE AXLE**

- Put a large container under the differential case drain plug. The differential case contains approximately 19 quarts of oil.
- Remove the drain plug from the bottom of the differential case. Drain all the oil and discard in an environment friendly manner.
- Clean the magnetic insert of the drain plug, fit a new seal (O-ring) and reinstall drain plug.

## WARNING

The oil temperature may be extremely high! Risk of burn injuries.

- Remove the filler plug and the level check plug.
- Reinstall the drain plug.

**Tighten to 96 lb-ft (130 Nm)**

- Add the specified oil at the filler plug until the oil level is even with the bottom of the level check bore.

*Filling volume is about 19 quarts (18 liters) at the level check bore*

- Allow the oil to flow through the axle and check the oil level again after some minutes. Refill if necessary until specified level is reached and remains constant.
- Reinstall the filler plug and level check plug using new seals (O-ring).

**Tighten to 52 lb-ft (71 Nm)**

- Replace the breather with every oil change.

**TORQUE: 4 lb-ft (5 Nm)**

### 3.1.4 Compact Bearing (Hub Unit) Axial Play Check

Check the compact bearing (hub unit) axial play every 100 000 miles. Furthermore, the bearing must be checked in case of brake disk change, ABS fault message and rising noise level at increasing speed.

Perform compact bearing (hub unit) axial play check as described in paragraph 6.2 HOW TO CHECK THE AXIAL PLAY of the following manual: OPERATING INSTRUCTIONS ZF AXLE A132 (version with US hub) #5871 207 982 EN.



## MAINTENANCE

**Compact bearing (hub unit) axial play**

Check the bearing axial play once a year or every 100 000 miles (160 000 km) whichever occurs first.

3.1.5 Compact bearing (hub unit) Grease Change

Perform compact bearing (hub unit) grease change as described in paragraph 7.3 GREASE CHANGE IN THE HUB of the following manual: OPERATING INSTRUCTIONS ZF AXLE A132 (version with US hub) #5871 207 982 EN.



## MAINTENANCE

**Compact bearing (hub unit) axial play – ZF Lubricant class 12H**

The compact bearing grease must be change every 6 years or 500 000 miles (800 000 km), whichever comes first.

The list of approved Lubricant Class 12H grease types is found in ZF's list of lubricants TE-ML 12.

3.1.6 Speed Sensors (Anti-Lock Brake system, ABS)

For removing and installing the drive axle speed sensors (for anti-lock brake systems, ABS), refer to Section 12: Brake and Air System.

3.2 DRIVE AXLE FLANGE SHAFT REMOVAL/INSTALLATION

Refer to paragraphs **9-Towing** and **11-Replacement of Axle Insert** in the following manuals, included on your vehicle USB flash drive:

- *OPERATING INSTRUCTIONS ZF AXLE A132 (version with US hub) #5871 207 982 EN.*

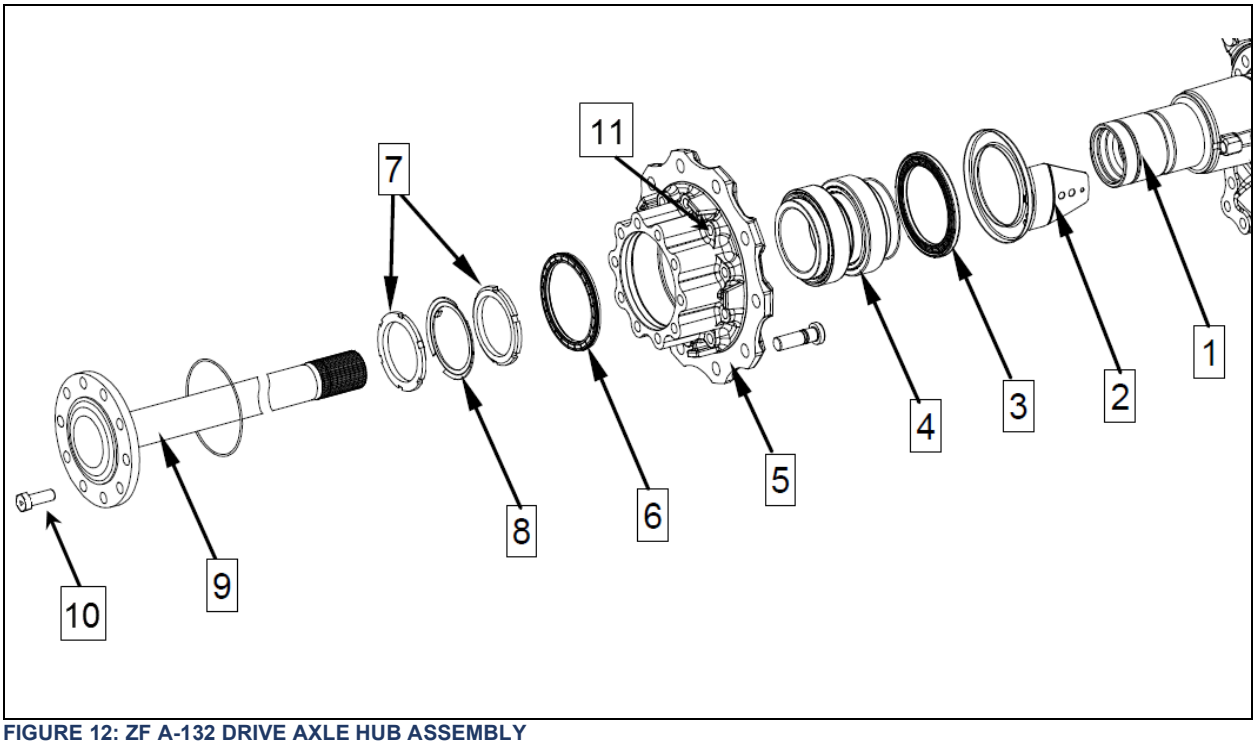


FIGURE 12: ZF A-132 DRIVE AXLE HUB ASSEMBLY

| | | | |
|---|---|---|---|
| 1 | Hub carrier | 7 | Slotted nut |
| 2 | Screen sheet | 8 | Locking plate |
| 3 | Shaft seal (with impulse disc) | 9 | Flange shaft |
| 4 | Compact bearing (hub unit) | 10 | Cap screw M18x1.5x50mm G10.9 (14mm hex socket driver “Allen”) |
| 5 | Hub | 11 | Cap screw Torx M16x1.5x60 (E20 Torx socket) |
| 6 | Shaft seal | | |

## 3.3 REMOVAL AND REINSTALLATION

The following procedure deals with the removal of the drive axle assembly and its attachments as a unit. The method used to support the axle during removal and disassembly depends upon local conditions and available equipment.

2. Raise vehicle from the front wheels and drive axle wheels. Place jack stands under the rear chassis hoisting points. Remove drive axle wheels (if required, refer to Section 13, *"Wheels, Hubs and Tires".*
2. Exhaust compressed air from the air supply system by opening the drain cock on each air reservoir.
3. Disconnect the propeller shaft as directed in Section 9, *"Propeller Shaft",* in this manual.
5. Disconnect the lower end both height control valve link then move the arm up to exhaust air suspension.
6. Disconnect the ABS speed sensors connector located over the differential housing.

| *NOTE* |
| --- |
| *When removing drive axle, if unfastening cable ties is necessary for ease of operation, remember to replace them afterwards.* |

7. Disconnect the air brake supply hoses over the differential carrier.

| *NOTE* |
| --- |
| *Position the hoses so they will not be damaged when removing the axle.* |

8. Install jack stands under the drive axle subframe at the four locations shown on **FIGURE 13**.

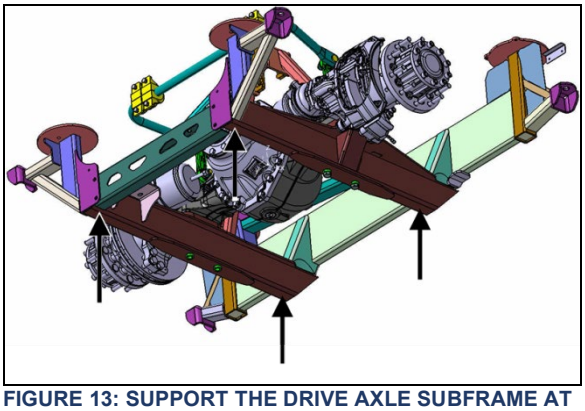

**FIGURE 13: SUPPORT THE DRIVE AXLE SUBFRAME AT THE FOUR LOCATIONS SHOWN**

16. Disconnect the lower ends of the four shock absorbers as outlined in Section 16, *"Suspension"* under heading *"Shock Absorber Removal".*
17. Remove the two sway bar links.
18. Remove the lower and upper longitudinal radius rod supports as outlined in Section 16, *"Suspension",* under heading *"Radius Rod Removal".*
19. Remove the transversal radius rod (panhard bar).
20. Remove the two retaining nuts from each of the four air springs lower mounting supports.
21. Disconnect the drive axle speed sensor.
22. Use the jacks to lower axle. Carefully pull away the drive axle assembly from underneath vehicle.
23. Reverse removal procedure to reinstall drive axle.

| *NOTE* |
| --- |
| *Refer to Section 16, "Suspension" for suspension components' proper tightening torques.* |

| *NOTE* |
| --- |
| *Refer to section 13 "Wheels, Hubs And Tires" for correct wheel bearing adjustment procedure.* |

## 3.4 DISASSEMBLY, REASSEMBLY, ADJUSTMENT AND TORQUE CHART

Disassembly and re-assembly procedures are covered in the following manual:

- *ZF AXLE A132 REPAIR MANUAL #5871 207 002E*

## 3.5 ZF A132 DRIVE AXLE ALIGNMENT

The drive axle alignment consists in aligning the axle according to the frame. The axle must be perpendicular to the frame. The alignment is achieved with the use of shims inserted between the lower longitudinal radius rod supports and the frame.

Drive axle alignment is factory set and is not subject to any change, except if the vehicle has been damaged by an accident or if there are requirements for replacement.

If the axle has been removed for repairs or servicing and if all the parts are reinstalled exactly in the same place, the axle alignment is not necessary. However, if the suspension supports have been replaced or altered, proceed with the following instructions to verify or adjust the drive axle alignment.

| *NOTE* |
|---|
| *When drive axle alignment is modified, tag axle alignment must be re-verified.* |

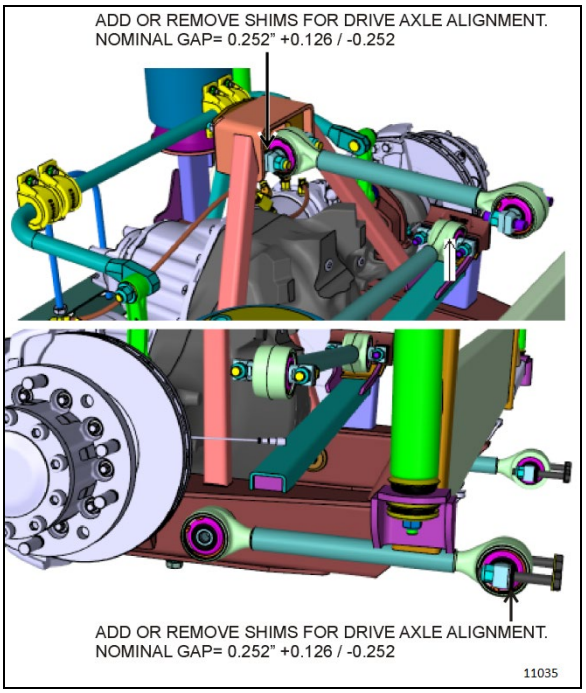


3.5.1 Procedure

1. Park vehicle on a level surface, then chock front vehicle wheels.
2. Using two jacking points (which are at least 30 inches [76 cm] apart) on drive axle, raise the vehicle sufficiently so that wheels can turn freely at about ½ inch from ground. Secure in this position with safety stands, and release parking brake.
3. Install wheel mount sensors on front end and drive axle wheels (Figure 7).

| *NOTE* |
|---|
| *Select axle specifications in the appropriate chart.* |

4. With the system installed as in Figure 7, adjust drive axle according to specifications' chart below.

| DRIVE AXLE ZF A-132 | | | |
|---|---|---|---|
| | Minimum value | Nominal value | Maximum value |
| Thrust angle | ±0.11° | | |
| Total toe | 0.15° toe-in | 0° | 0.15° toe-out |

## 4. TAG AXLE

The tag axle is located behind the drive axle. It carries a single wheel and tire on each side.

One optional system allows unloading of the tag axle air springs without raising the axle, while the other system enables unloading and raising of the tag axle (refer to the *"OPERATOR'S MANUAL"* for location of controls). Both of these systems have been designed for the following purposes:

1. Shortening of wheelbase, thus allowing tighter turning in tight maneuvering areas such as parking lots or when making a sharp turn.
2. Transferring extra weight and additional traction to the drive wheels on slippery surfaces.

| ⚠ **CAUTION** |
|---|
| Do not use tag axle in raised position for an extended period. Raising tag axle increases load on the drive axle, suspension and tires.<br>Do not drive vehicle with tag axle raised when speed is exceeding 9mph (15 km/h).<br>In order to prevent damage to the suspension, always raise the tag axle before lifting the coach. |

The tag axle service brakes operate only when the axle is in normal driving (loaded) position.

### 4.1 UNLOADING TAG AXLE (OPTIONAL)

To reduce the turning radius, the air springs pressure will be automatically reduced by 75% when the coach is moving at speed lower than 5 mph (8 km/h) and with more than 1½ turn from the steering.

4.2 RETRACTING TAG AXLE

The standard tag axle retraction system is controlled by a valve located on the right lateral console and enables unloading and raising the tag axle (refer to the *"OPERATOR'S MANUAL"* for location of controls).

**MAINTENANCE**

**Tag axle lever pivot**

Grease one fitting on each pivot (2 pivots) at the intervals specified by the Lubrication And Servicing Schedule in Section 24: LUBRICATION & SERVICING.

4.3 RETRACTING TAG AXLE FOR REPAIR PURPOSES

- Connect an external air pressure line to the emergency fill valve in the engine compartment.
- Lift the tag axle by pushing the lever forward.

**WARNING**

Install a protective cover to prevent unfortunate lever operation while work is being carried out under the vehicle.

- Raise the vehicle using the lifts.

**WARNING**

Lift manufacturers recommended lowering the vehicle to the ground or installing some safety stands before activating the suspension to prevent the lifts from becoming unstable.

- For added safety, install nylon sling over tag axle shock absorbers to retain tag axle in case of air leak.

4.4 TAG AXLE WHEEL BEARINGS

The unitized hub bearings used on the tag axle are pre-adjusted, lubricated and have seals fitted as part of the manufacturing process. The bearings are greased for life and there is no need or facility for re-lubrication.

**MAINTENANCE**

Front and tag axle hub bearings need to be checked at the intervals specified by the Lubrication And Servicing Schedule in Section 24: LUBRICATION & SERVICING.

4.5 REMOVAL AND REINSTALLATION

4.5.1 Removing Tag Axle Only

The following procedure deals with the removal of the tag axle while keeping the air springs installed. The method used to support the axle and suspension components during removal and disassembly depends upon local conditions and available equipment.

1. Connect an external air pressure line to the emergency fill valve in the engine compartment.
2. Lift the axle by pushing the lever forward.

**WARNING**

Install a protective cover to prevent unfortunate lever operation while work is being carried out under the vehicle.

3. Disconnect tag axle air springs pneumatic hoses and install valves or plugs.
4. Raise the vehicle using the lifts.
5. Dismount tag axle components.
6. Before reinstalling air spring hoses, make sure there is no pressure left inside by opening the valves or unloading tag axle.

4.5.2 Removing Tag Axle Along With Suspension Components

The following procedure deals with the removal of the tag axle assembly along with the suspension components. The method used to support the axle and suspension components during removal and disassembly depends upon local conditions and available equipment.

1. Raise vehicle by its jacking points on the body (Figure 5) or see Section 18, *"Body"* under heading: *"Vehicle Jacking Points"*). Place jack under frame.

2. Remove drive axle wheels (if required, refer to Section 13, *"Wheels, Hubs And Tires"*).
3. Exhaust compressed air from the air supply system by opening the drain cock on each air reservoir and deplete air bags by moving leveling valve arm down.
4. Install jacks under tag axle jacking points to support the axle weight (Figure 14).

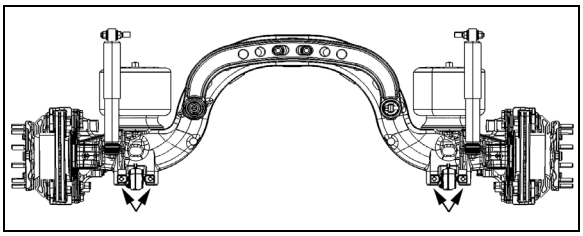

**FIGURE 14: JACKING POINTS ON TAG AXLE** 11023

5. Disconnect tag axle lifting chain collars from lower longitudinal radius rods.
6. Remove the propeller shaft as directed in *Section 9: Propeller Shaft* in this manual.
7. Disconnect the tag axle brake chamber hoses.

**CAUTION**

*Position the hoses so they will not be damaged when removing axle.*

8. Disconnect hose from the air spring upper mounting plate.
9. Remove the two shock absorbers as outlined in Section 16, *"Suspension",* under *"Shock Absorber Removal".*
10. Disconnect the lower longitudinal radius rods as outlined in Section 16, *"Suspension",* under *"Radius Rod Removal".*
11. Disconnect the transversal radius rod.
12. Disconnect the upper longitudinal radius rod.
13. Remove the air bellows retaining nuts from each of the two upper mounting plates.
14. Use the jacks to move the axle forward to clear the axle off the transmission. Lower the axle.
15. Reverse removal procedure to reinstall.

**CAUTION**

On vehicles equipped with an automatic transmission (with or without the output retarder), move tag assembly very carefully. Pay special attention to the U-shaped section, as the transmission end components may be easily damaged through a false maneuver.

*NOTE*

*Refer to Section 16, "Suspension", for proper torque tightening of suspension components.*

*NOTE*

*Refer to section* 13 *"Wheels, Hubs And Tires" for correct wheel bearing adjustment procedure.*

4.5.3 Removing Transversal radius Rod

1. Unfasten bolts and nuts fixing transversal radius rod ball joint to rear underframe.
2. Remove the air bellows retaining nuts from each of the two upper mounting plates.
3. Install extractor tool g32952 onto transversal rod.
4. Partially unscrew ball joint fixing bolt.
5. Tighten extractor threaded rod.
6. Supporting the transversal radius rod at all times, gradually extract transversal radius rod from tag axle.
7. Reinstall by reversing procedure.

**Torque: 198 lb-ft (268 Nm)**

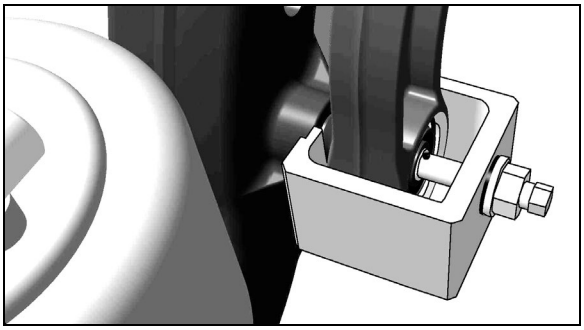

**FIGURE 15: INSTALLING EXTRACTOR TOOL**

**CAUTION**

It is strongly suggested to use the extractor tool in order to remove transversal radius rod.

## 4.6 TAG AXLE ALIGNMENT

The tag axle alignment consists in aligning the tag axle parallel to the drive axle position. Before aligning the tag axle, proceed with the drive axle alignment. Tag axle alignment is achieved with the use of shims inserted between the lower longitudinal radius rod supports and axle. Tag axle alignment is factory set and is not subject to any change, except if vehicle has been damaged by an accident or if there are requirements for parts replacement.

**CAUTION**

If this setting is altered significantly, it will cause excessive tire wear.

*NOTE*

*It may be necessary to adjust the axle TOE as well as its alignment. In this case, insert shims (7 min. - P/N 121203 or 15 min. - P/N 121240) in between mounting plate and spindle, as required.*

If axle has been removed for repair or servicing and if all parts are reinstalled exactly in their previous locations, axle alignment is not necessary. However, if the suspension supports have been replaced or have changed position, proceed with the following instructions to verify or adjust the tag axle alignment.

*NOTE*

*For an accurate alignment, the tag axle must be aligned with the drive axle.*

Adjust tag axle according to specifications' chart below in reference with drive axle. Use static wheel alignment systems which work with angle measurements only, such as Josam or Hunter systems.

| TAG AXLE | | | |
|---|---|---|---|
| Alignment / value | Minimum value | Nominal value | Maximum value |
| Thrust angle (deg.) | -0.02 | 0 | 0.02 |
| Total toe (deg.) | 0.08° toe-in | 0° | 0.02° toe-out |

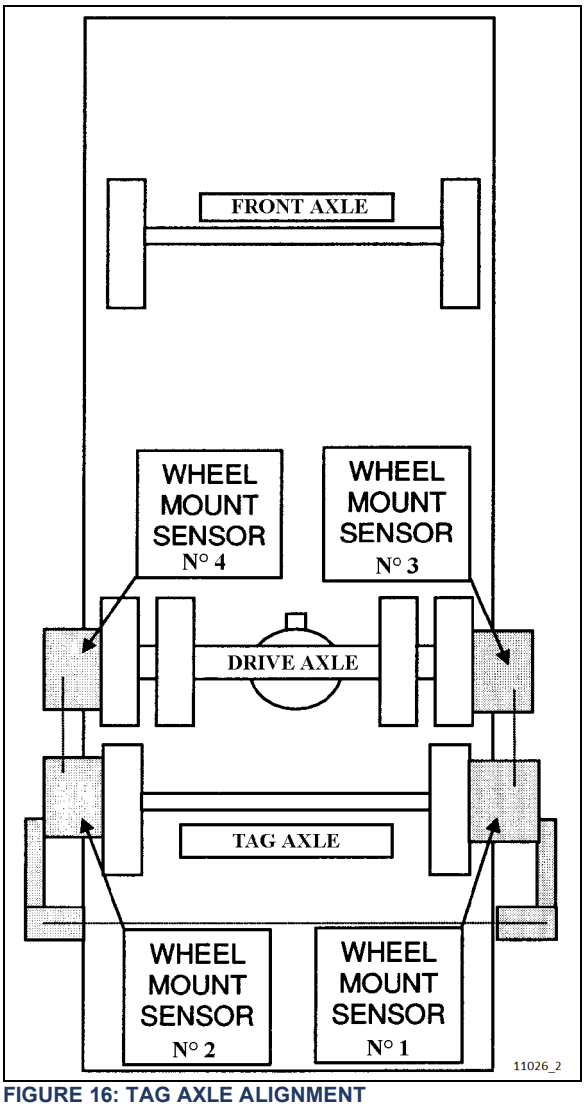


**FIGURE 16: TAG AXLE ALIGNMENT**

## 5. SPECIFICATIONS

### MERITOR Drive Axle

Make ..... Meritor
Drive track ..... 76.7 inches (1 949 mm)
Gear type..... Hypoid
Axle type.....Full floating
Lube capacity..... 41 pints (19,3 liters)

### Drive axle ratio

| Allison Transmission | I-Shift transmission |
|---|---|
| 3.58:1 option | 2.50:1 |
| 3.91:1 standard | |
| 4.10 option (VIP) | |

### ZF A132 Drive Axle

Make and model .....ZF A132
Drive track ..... 76.7 inches (1 949 mm)
Gear type..... Hypoid
Axle type.....Full floating
Oil fill quantity.....19.5 quarts (39 pints)
Ratio..... 3.54

### TAG AXLE

Make .....Prevost
Rear track..... 83.6 inches (2 124 mm)
Axle type..... Forged

## CONTENTS

**SECTION CHANGE LOG** ..... **4**

**1. TORQUE TABLES** ..... **5**

1.1 BRAKE AND AIR SYSTEM ..... 5
1.2 MISCELLANEOUS TORQUES ..... 6

**2. AIR SYSTEM** ..... **8**

**3. BRAKES** ..... **8**

**4. AIR RESERVOIRS** ..... **8**

4.1 OPTIONAL WET TANK AUTOMATIC DRAIN VALVE ..... 8
*4.1.1 Installation* ..... *8*
4.2 MAINTENANCE ..... 9
*4.2.1 Wet Air Tank* ..... *10*
*4.2.2 Primary Air Tank* ..... *10*
*4.2.3 Accessory Air Tank* ..... *10*
*4.2.4 Secondary Air Tank* ..... *10*
*4.2.5 Kneeling Air Tank* ..... *10*
*4.2.6 I-Shift Transmission Air Tank* ..... *10*
*4.2.7 Optional Parking Brakes Overrule Air Tank* ..... *10*
4.3 PING TANK ..... 10

**5. AIR SYSTEM EMERGENCY FILL VALVES** ..... **10**

**6. ACCESSORY AIR FILTER** ..... **11**

6.1 ACCESSORY AIR FILTER DRAIN ..... 11
6.2 ACCESSORY AIR FILTER ELEMENT REPLACEMENT ..... 11

**7. AIR GAUGES (PRIMARY, SECONDARY AND ACCESSORY)** ..... **12**

**8. AIR DRYER** ..... **12**

8.1 REPLACING THE DESICCANT CARTRIDGE ..... 13
8.2 AIR LEAK CHECK / WARNING ..... 13

**9. OPTIONAL HALDEX CONDENSER - SEPARATOR** ..... **14**

9.1 MAINTENANCE ..... 14

**10. AIR LINES** ..... **14**

10.1 FLEXIBLE HOSES ..... 14
10.2 NYLON TUBING ..... 15
10.3 AIR LINE OPERATING TEST ..... 15
10.4 AIR LINE LEAKAGE TEST ..... 15
10.5 MAINTENANCE ..... 15

**11. PRESSURE REGULATING VALVES** ..... **15**

11.1 MAINTENANCE ..... 16
*11.1.1 Pressure Setting Procedure* ..... *16*

**12. AIR COMPRESSOR** ..... **16**

12.1 CARBON DEPOSIT AND OIL CONSUMPTION TEST ..... 17
12.2 COMPRESSOR REMOVAL AND INSTALLATION ..... 17

**13. MISCELLANEOUS VALVES ..... 19**

13.1 EMERGENCY / PARKING BRAKE CONTROL VALVE (PP-1) ..... 22
13.2 OPTIONAL EMERGENCY / PARKING BRAKE OVERRULE CONTROL VALVE (RD-3) ..... 22
13.3 FLIP-FLOP CONTROL VALVE (TW-1) ..... 22
13.4 DUAL BRAKE APPLICATION VALVE (E-8P) ..... 23
*13.4.1 Brake Pedal Adjustment ..... 23*
*13.4.2 Maintenance ..... 23*
13.5 STOPLIGHT SWITCHES ..... 23
13.6 PARKING BRAKE ALARM SWITCH ..... 23
13.7 BRAKE RELAY VALVE (R-14) ..... 24
13.8 ANTILOCK TRACTION RELAY VALVE (ATR-6) ..... 24
13.9 SPRING BRAKE VALVE (SR-7) ..... 24
13.10 PRESSURE PROTECTION VALVE (PR-4) ..... 25
13.11 SHUTTLE-TYPE DOUBLE CHECK VALVE (DC-4) ..... 25
13.12 PRESSURE REDUCING VALVE RV-3 ..... 25
13.13 ANTILOCK MODULATOR (M-32QR) ..... 26
13.14 INVERSION VALVE (TR-2, TR-3) ..... 26
13.15 INLINE QUICK RELEASE VALVE (QR-L) ..... 26

**14. EMERGENCY DOOR OPENING VALVES ..... 26**

*14.1.1 Interior Valve Maintenance ..... 26*

**15. AIR HORN VALVE ..... 27**

**16. AIR SYSTEM TROUBLESHOOTING ..... 27**

**17. BRAKE OPERATION ..... 27**

**18. DISC BRAKES ..... 28**

18.1 INSPECTION POINTS ..... 28
18.2 FUNCTIONAL AND VISUAL CHECK ..... 32
*18.2.1 Wear Check of Pads ..... 32*
*18.2.2 Wear Check of Disc ..... 34*
*18.2.3 Wear Check of Pads/Disc – Drive Axle Equipped With a Rubber Bushing and Exposed Guide Pin ..... 35*
*18.2.4 Wear Check of Pads/Disc – Front and Tag Axle – Equipped With Visual Wear Indicator ..... 35*
*18.2.5 Continuous Wear Sensor option ..... 36*
*18.2.6 Checking Correct Functioning of the Adjuster / Checking That Caliper Operates Smoothly Over Its Full Range of Movement ..... 36*
*18.2.7 Caliper check - Caliper Running Clearance ..... 39*
*18.2.8 Caliper check - Caliper Movement Along Guide Pins ..... 39*
*18.2.9 Clearance Measurement Check of Bearing Variants (6) ..... 40*
*18.2.10 Checking Sealing Elements – Caliper Guide Pin Seals ..... 41*
*18.2.11 Checking Sealing Elements – Tappet and Boot Assemblies ..... 41*
18.3 PAD REPLACEMENT ..... 41

**19. SAFE SERVICE PROCEDURES ..... 42**

**20. AIR BRAKE TROUBLESHOOTING ..... 42**

**21. BRAKE AIR CHAMBER ..... 44**

21.1 MAINTENANCE ..... 44
21.2 EMERGENCY/PARKING BRAKE MANUAL RELEASE ..... 45
21.3 BRAKE CHAMBER REMOVAL ..... 45
21.4 BRAKE CHAMBER INSTALLATION ..... 46
21.5 BRAKE CHAMBER DISASSEMBLY ..... 46

**22. ANTI-LOCK BRAKING SYSTEM (ABS) ..... 46**

22.1 TROUBLESHOOTING AND TESTING ..... 47
22.2 ABS COMPONENTS ..... 47
22.3 BENDIX EC-80 CONTROLLER ..... 47
22.4 SENSORS ..... 47
*22.4.1 Spring clip ..... 48*

**23. BENDIX AUTOMATIC TRACTION CONTROL (ATC) – ELECTRONIC STABILITY CONTROL (ESC) ..... 49**

23.1 COMPONENTS ..... 49
*23.1.1 EC-80 controller's ABS function ..... 49*
*23.1.2 EC-80 controller's ATC function ..... 49*
*23.1.3 EC-80 controller's ESC/RSP function ..... 49*
23.2 BENDIX M-40QR PRESSURE MODULATOR VALVE ..... 49
23.4 BENDIX® SAS-70 STEERING ANGLE SENSOR ..... 51
*23.4.1 Removal of the steering angle sensor ..... 51*

**24. FITTING TIGHTENING TORQUES ..... 52**

**25. SPECIFICATIONS ..... 53**

## SECTION CHANGE LOG

| | DESCRIPTION | DATE |
|---|---|---|
| 1 | | |
| 2 | | |
| 3 | | |
| 4 | | |
| 5 | | |
| 6 | | |

## 1. TORQUE TABLES

### 1.1 BRAKE AND AIR SYSTEM

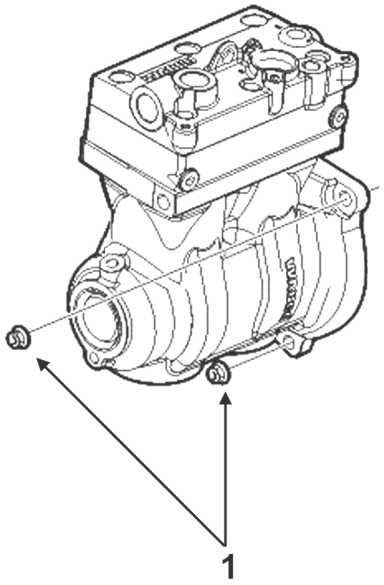


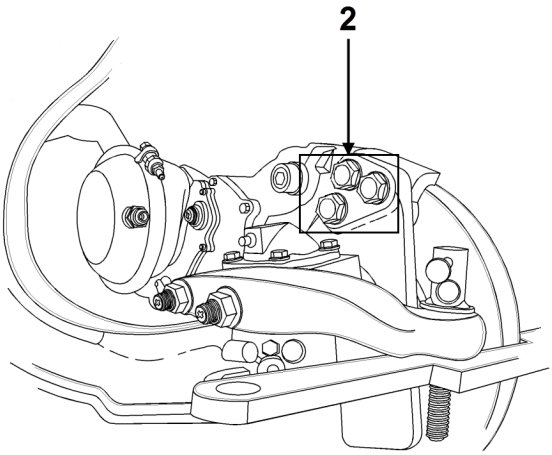


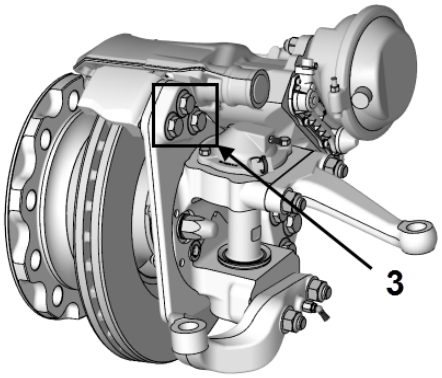


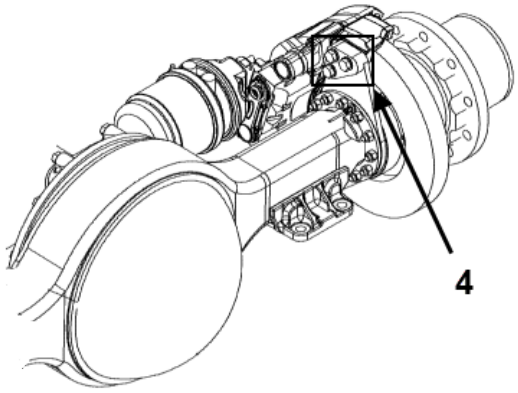


| BRAKE AND AIR SYSTEM | | |
|---|---|---|
| No | DESCRIPTION | TORQUE |
| 1 | Compressor flange mounting nuts | 63 lb-ft (85 Nm) |
| 2 | Front IFS suspension caliper mounting bolts | 405-495 lb-ft (549-671 Nm) |
| 3 | Front I-beam caliper mounting bolts | 433-479 lb-ft (587-649 Nm) |
| 4 | Meritor drive axle & Tag axle caliper mounting bolts | 405-495 lb-ft (549-671 Nm) |

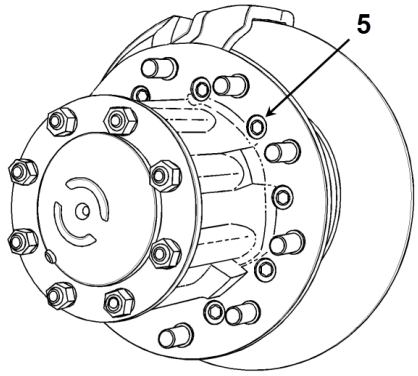


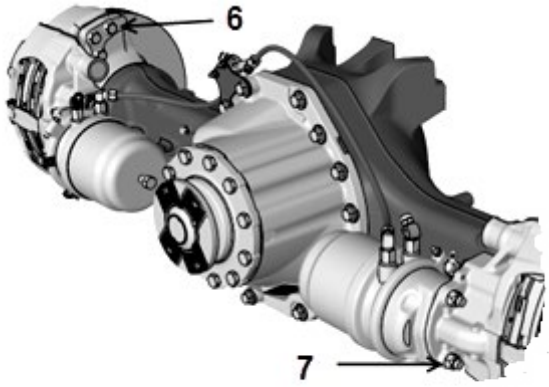


| BRAKE AND AIR SYSTEM | | |
|---|---|---|
| No | DESCRIPTION | TORQUE |
| 5 | Meritor hub to disc cap screws | 110-165 lb-ft (149-224 Nm) |
| 6 | ZF drive axle caliper mounting bolts | 200 lb-ft (271 Nm) |
| 7 | ZF drive axle brake chamber mounting bolts | 120-150 lb-ft (163-203 Nm) |

1.2 MISCELLANEOUS TORQUES

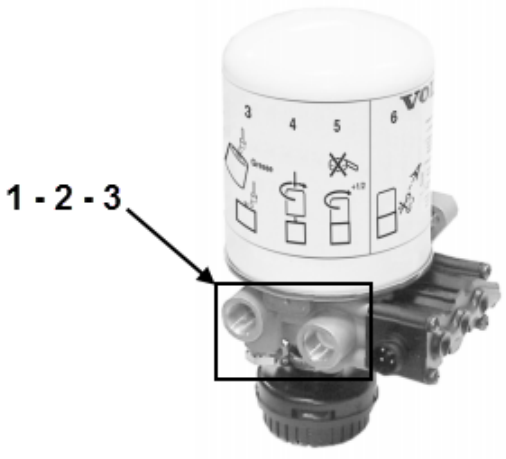


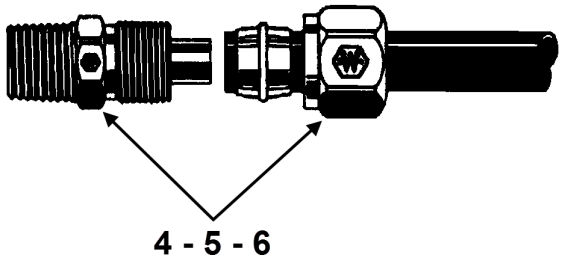


| MISCELLANEOUS TORQUES | | |
|---|---|---|
| No | DESCRIPTION | TORQUE |
| 1 | Air filter/dryer connections - 3/8”-18 NPTF | 12 lb-ft (16 Nm) |
| 2 | Air filter/dryer connections - 1/4”-18 NPTF | 12 lb-ft (16 Nm) |

| | | |
|---|---|---|
| 3 | Air filter/dryer connections - 1/2”-14 NPTF | 37 lb-ft (50 Nm) |
| 4 | 1/4" NTA-Type Plastic Tubing Connection | 3 turns* |
| 5 | 3/8” to 1/2" NTA-Type Plastic Tubing Connection | 4 turns* |
| 6 | 5/8” to 3/4" NTA-Type Plastic Tubing Connection | 3 ½ turns* |

* Hand tight first then tighten using wrench the number of turns specified in table.

## 2. AIR SYSTEM

The basic air system consists of an air compressor, reservoirs, valves, filters and interconnecting lines and hoses. It provides a means for breaking, operating controls and accessories and suspension (refer to Section 16, *"Suspension"*, for complete information on suspension description and maintenance). An air system schematic diagram is annexed in the technical publications box provided with the vehicle for better understanding of the system.

## 3. BRAKES

This vehicle uses both the service brake and emergency/parking brake. The service brake air system is divided into two independent circuits to isolate front brakes from rear brakes, thus providing safe braking in the event that one circuit fails. Front axle brakes operate from the secondary air system, while brakes on both the drive axle and tag axle operate from the primary air system.

| *NOTE* |
| --- |
| *The tag axle service brake operates only when the axle is in normal ride position (loaded and down).* |

Furthermore, the brake application or release, which is speed up by pneumatic relay valves (R-14), will start with the rear axles and will be followed by the front axle, thus providing uniform braking on a slippery road. The vehicle is also equipped with an Anti-Lock Braking System (ABS), which is detailed later in this section.

The drive is provided with spring-loaded emergency/parking brakes, which are applied automatically whenever the control valve supply pressure drops below 60 psi (413 kPa). The optional emergency/parking brake overrule system allows the driver to release spring brakes, and to move the vehicle to a safe parking place, such as in the case of a self-application of these brakes due to a drop in air pressure.

## 4. AIR RESERVOIRS

The air coming from the air dryer is first forwarded to the wet air tank, then to the primary (for the primary brake system), secondary (for the secondary brake system), and accessory (for the pneumatic accessories) air tanks (Figure 2 and Figure 3).

Additional air reservoirs may be installed on the vehicle: the kneeling air tank, emergency/ parking brake overrule air tank and I-Shift transmission air tanks.

### 4.1 OPTIONAL WET TANK AUTOMATIC DRAIN VALVE

The optional wet tank automatic drain valve (Figure 1) is designed to remove liquids from the wet tank each time the brake is applied as the solenoid is connected to the stop light circuit. A built-in heater prevents freeze-ups and keeps the air system clean in all temperature.

#### 4.1.1 Installation

1. Make sure that there is no pressure in the wet tank (emptied tank).
2. Fit the automatic drain valve to the wet tank. Tighten valve finger tight and then tighten an additional 1 ½ turns, do not over tighten.
3. Connect the power cable to the valve connector.
4. Charge the air system and make sure there is no leakage. Also check functioning of the drain valve by applying the service brake.

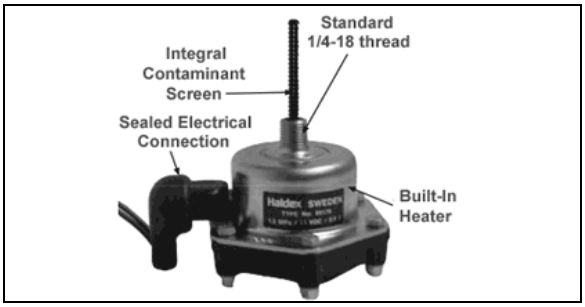


**FIGURE 1: WET TANK AUTOMATIC DRAIN VALVE**

## 4.2 MAINTENANCE

### MAINTENANCE

**Air tanks**

A recommended purge using the bottom drain valve should be done at the intervals specified by the Lubrication And Servicing Schedule in Section 24: LUBRICATION & SERVICING.

It is important to empty the tanks completely to ensure that water and moisture are totally evacuated from the tank.

Ensure that both the accessories and the wet air tanks are purged during pre-starting inspection. In addition, it is good practice to purge these following the information below.

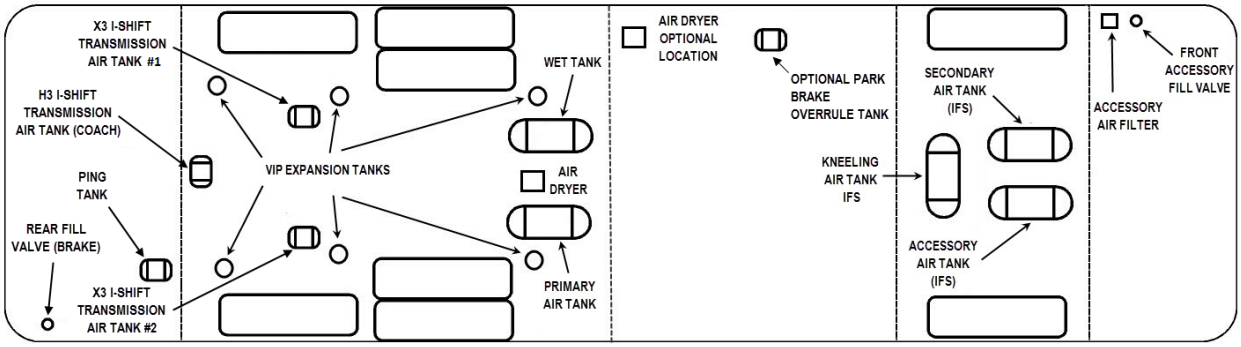


**FIGURE 2: INDEPENDENT SUSPENSION AIR TANKS LOCATIONS (SHOWN WITH VIP EXPANSION TANKS)**

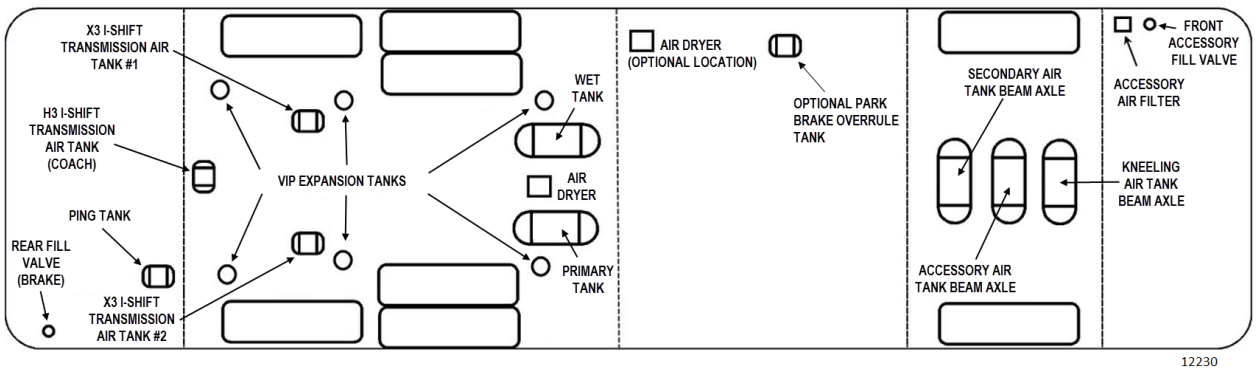


**FIGURE 3: I-BEAM AXLE SUSPENSION AIR TANKS LOCATIONS (TYPICAL WITH VIP EXPANSION TANKS)**

#### 4.2.1 Wet Air Tank

This reservoir located in front and above the L.H. wheel of the drive axle in the rear wheel housing, is provided with a bottom drain valve.

#### 4.2.2 Primary Air Tank

This reservoir is located above the tag axle, and is provided with a bottom drain valve.

#### 4.2.3 Accessory Air Tank

The accessory air tank is installed at the ceiling of spare wheel compartment and is provided with a bottom drain valve.

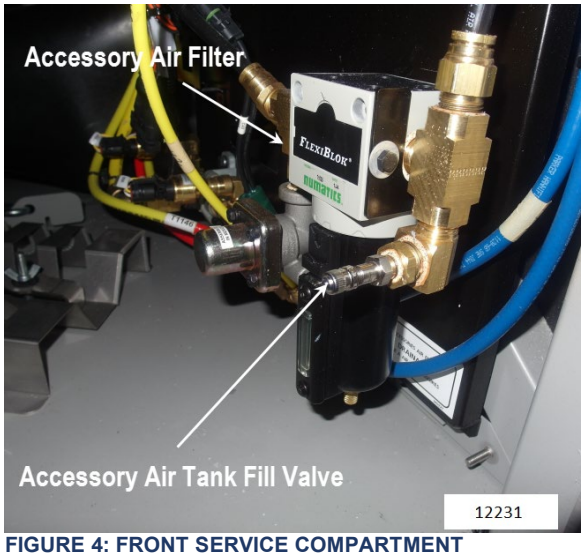


**FIGURE 4: FRONT SERVICE COMPARTMENT**

#### 4.2.4 Secondary Air Tank

Located in the front left wheel housing for the independent suspension equipped vehicles, this tank is set behind the front axle and the accessory air tank for the beam axle equipped vehicles. Tank is provided with a bottom drain valve.

#### 4.2.5 Kneeling Air Tank

The kneeling air tank is installed on vehicles equipped with the Kneeling or Hi/Low-Buoy options. It is located behind the front suspension arms for independent front suspension vehicles and in front of the front axle on vehicles equipped with a beam suspension, tank is provided with a bottom drain valve.

#### 4.2.6 I-Shift Transmission Air Tank

Installed on vehicles equipped with this option, these reservoirs are located in the rear tag axle wheel housing on X Series vehicles, a single tank located between the tag wheels is provides on H Series vehicles. All are provided with a bottom drain valve.

#### 4.2.7 Optional Parking Brakes Overrule Air Tank

On vehicle equipped with this option, the parking brakes overrule air tank is installed at the ceiling of the rear baggage compartment, on the L.H. side.

### 4.3 PING TANK

The ping tank is located next to the power steering pump reservoir in the engine compartment; it is accessible through the engine compartment R.H. side door. This tank is used to dissipate heat and to reduce noise produced by the air compressor cycling on and off.

## 5. AIR SYSTEM EMERGENCY FILL VALVES

All vehicles come equipped with two emergency fill valves that enable system pressurization by an external source such as an air compressor.

The rear valve is located in the engine compartment and is accessible from engine compartment R.H. side door (Figure 12).

**CAUTION**

Maximum allowable air pressure is 140 psi (965 kPa). Air filled through these two points will pass through the standard air filtering system provided by Prevost. Do not fill system by any other point on the system.

The front valve is located in the front electrical and service compartment close to R.H. side of doorframe (Figure 4).

These two air system emergency fill valves are fitted with the same valve stems as standard tires, and can be filled by any standard external air supply line.

The rear air system emergency fill valve will supply air to wet air tank, primary air tank, secondary air tank and accessories air tank for brakes, suspension and accessories systems while the front fill valve will supply air to accessories only.

## 6. ACCESSORY AIR FILTER

This filter is located inside the front electrical and service compartment (Figure 5). Its main function consists in filtering the air supplied to the suspension /leveling system and the accessory air system.

Filter element: 5 microns
¼ PF NPT ports

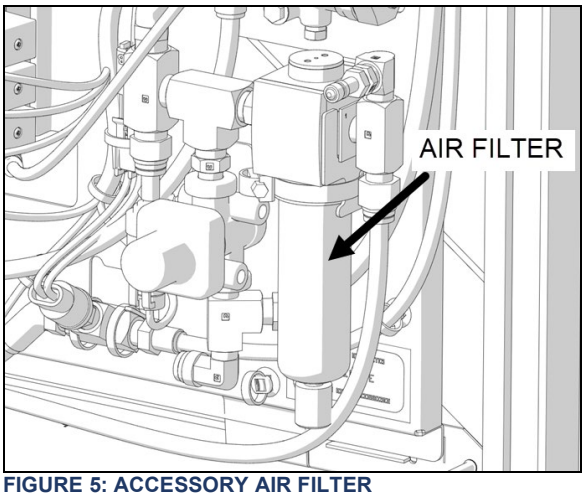


FIGURE 5: ACCESSORY AIR FILTER

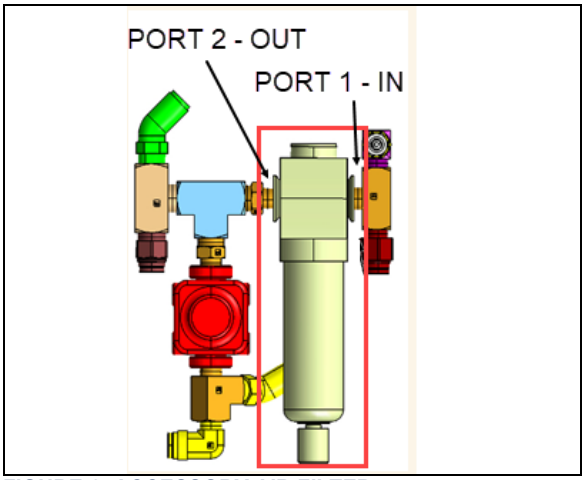


FIGURE 6: ACCESSORY AIR FILTER

### 6.1 ACCESSORY AIR FILTER DRAIN

The bowl is fitted with a manual/semi auto drain. Turn the drain valve to the ON position and then allow draining. Once purged, return to the OFF position.

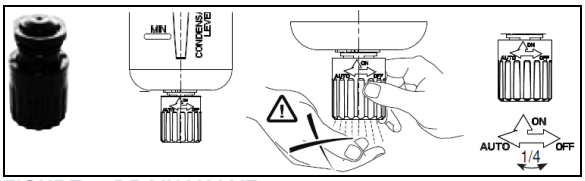


FIGURE 7: DRAIN VALVE

### 6.2 ACCESSORY AIR FILTER ELEMENT REPLACEMENT

Replace the accessory air filter element according to Lubrication and Servicing Schedule. Moreover, the filter element should be changed when differential pressure exceeds 15 psi (105 kPa) between filter inlet and outlet ports.

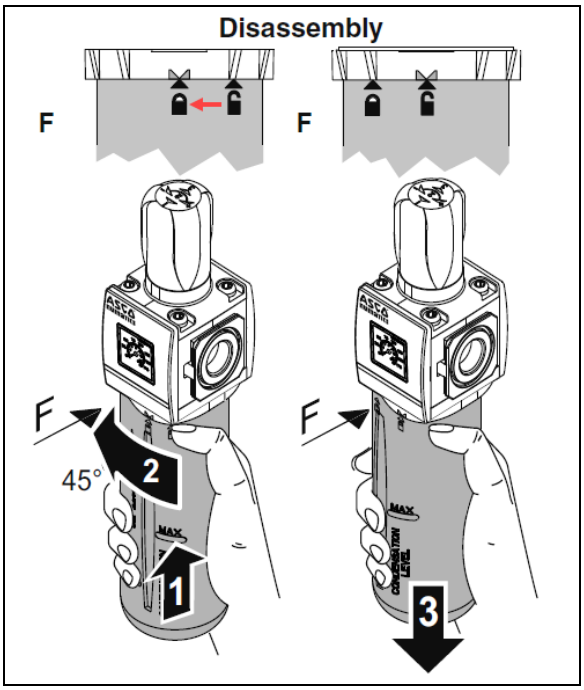


FIGURE 8: ACCESSORY AIR FILTER BOWL REMOVAL

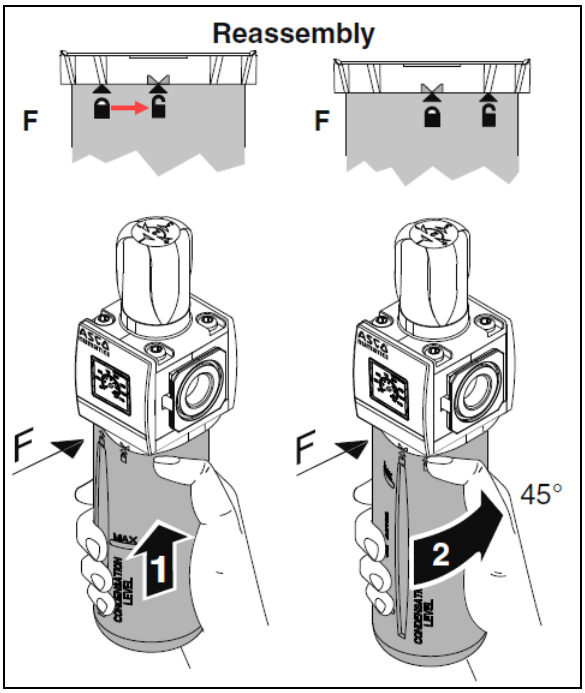


FIGURE 9: ACCESSORY AIR FILTER BOWL INSTALLATION

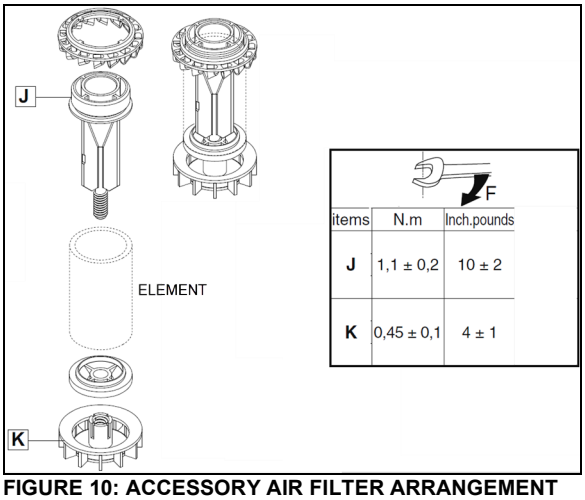


FIGURE 10: ACCESSORY AIR FILTER ARRANGEMENT

## 7. AIR GAUGES (PRIMARY, SECONDARY AND ACCESSORY)

The air pressure gauges, located on the dashboard (see *"Operator's Manual" or "Owner's Manual"*), are fed from pressure transducer installed on the DC-4 double check valve, located on the pneumatic accessories panel in the front service compartment.

The latter is connected to the air lines running from the primary and secondary air tanks, as shown on the pneumatic system diagram provided with the vehicle. The accessory air gauge is connected to the front pneumatic panel in the front compartment of the vehicle. The vehicle should never be set in motion until the buzzer alarm and warning lights turn off, i.e. when air pressure registers at least 85 psi (414 kPa). Moreover, if pressure drops below 85 psi (414 kPa), the *"Low air pressure"* warning lights will turn on, and the *"Low air pressure"* buzzer will sound. Stop the vehicle immediately, determine and correct the cause(s) of pressure loss. Check the gauges regularly with an accurate test gauge. Replace the gauge with a new unit if there is a difference of 4 psi (27 kPa) or more in the reading.

## 8. AIR DRYER

**TORQUE** for connections:

3/8"-18 NPTF= **12 lb-ft** (16 Nm)

1/4"-18 NPTF= **12 lb-ft** (16 Nm)

1/2"-14 NPTF= **37 lb-ft** (50 Nm)

Safety valve dynamic pressure: 290 psi.

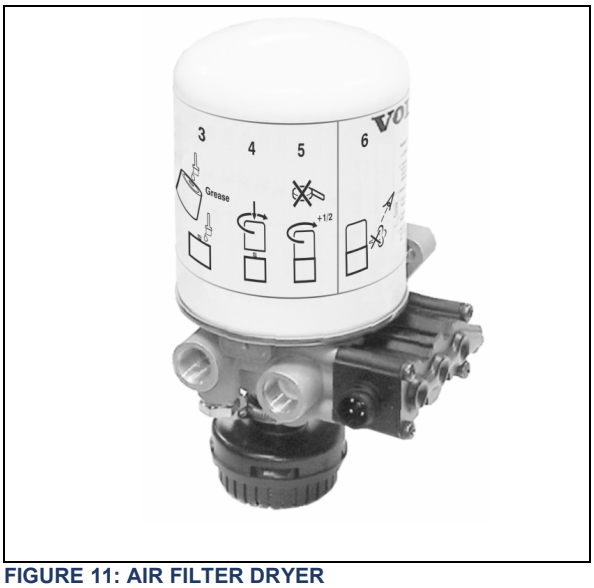


FIGURE 11: AIR FILTER DRYER

The electric air dryer is controlled by the multiplex system. If the air dryer should for some reason become powerless, it will cease to function and the desiccant will become *wet through*, while the compressor will continue to charge. Relief is provided via the safety valve.

By using the information from the vehicle electronic system, the air dryer and compressor control is optimized, so that drying of the air is guaranteed and fuel consumption is reduced. This will be noticed as a different compressor start/stop pattern.

The air dryer has a built-in function to prevent freezing or blockage. The function provides temporary relief (air dryer blow clean) at engine shut down. This function eliminates the problem of freezing on a stationary vehicle.

An additional function at vehicle start-up prevents the compressor from charging air during engine cranking and start-up.

The air filter/dryer is located in front of rear wheel housing above drive axle. Its purpose is to remove moisture that could damage the air system before the air enters the system reservoir. The air filter/dryer also filters the air to remove dirt, compressor oil, and other contaminants that can damage the system. Change cartridge every 100,000 miles (160 000 km) or once every two years, whichever comes first.

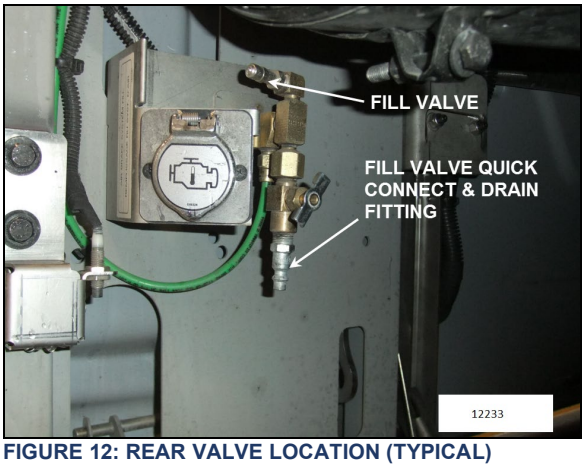


**FIGURE 12: REAR VALVE LOCATION (TYPICAL)**

The air dryer and wet tank may be purged simultaneously for maintenance purposes using the drain cock on the emergency air system fill valve located in the engine compartment and accessible through the engine compartment R.H. side door (Figure 12).

For more information on Meritor Wabco Air dryer, refer to the following manuals included on your Technical Publications USB flash drive:

- ***Meritor Wabco System Saver Series Single Cartridge Air Dryers Maintenance Manual 34***

## 8.1 REPLACING THE DESICCANT CARTRIDGE

To replace the desiccant cartridge:

5. Release air dryer pressure by opening the air dryer drain valve (Figure 12).
6. Loosen and remove the old cartridge. Use strap wrench if necessary.
7. Remove and discard O-ring from dryer base.
8. Inspect and clean seal seat. Repair any minor damage.
9. Lubricate and install new O-ring on stem.
10. Lubricate cartridge seal.
11. Thread replacement cartridge onto the base until the seal touches the base. Then, tighten the cartridge ONE additional turn. DO NOT OVERTIGHTEN.

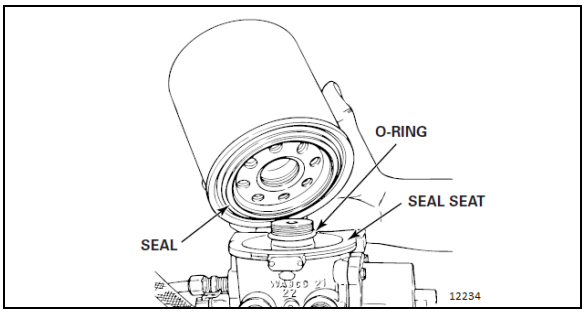


**MAINTENANCE**

**Air dryer cartridge**

Replace the air dryer desiccant cartridge at the intervals specified by the Lubrication And Servicing Schedule in Section 24: LUBRICATION & SERVICING

## 8.2 AIR LEAK CHECK / WARNING

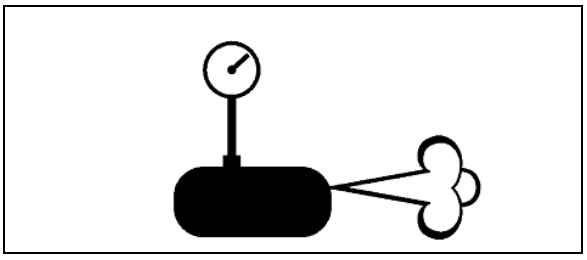

**FIGURE 13: AIR LEAK CHECK / WARNING ICON** 12228

This icon may appear in the DID if the compressor is charging abnormally which is usually an indication of an air leak.

## 9. OPTIONAL HALDEX CONDENSER - SEPARATOR

The optional Consep Air Condenser-Separator is located in the rear wheelhousing, fore of drive axle (Figure 14). When present, the Consep is mounted in the air line between the compressor and the air dryer. It condenses, separates and removes 90% of the oils, liquids and other contaminants. It reduces corrosion and possible failure of air brake system components caused by contamination and significantly increases the air dryer desiccant life.

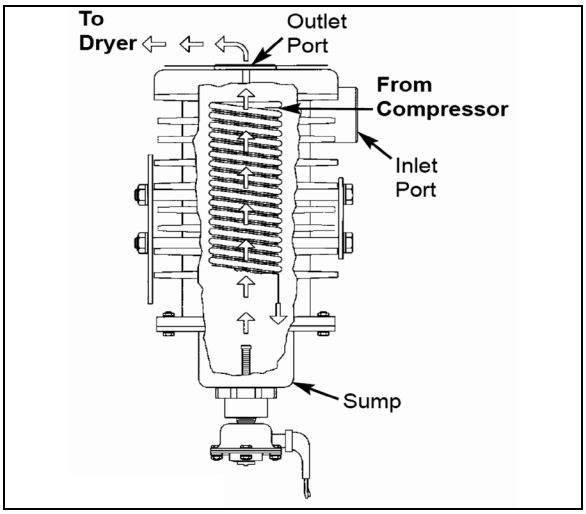


**FIGURE 14: HALDEX CONSEP CONDENSER SEPARATOR**

The automatic heated drain valve installed on the Consep ensures that liquids are removed upon each brake application for optimum performance. The drain valve's integrated filter prevents damage from large debris.

The automatic drain valve activates when the rear stop lights turn ON, with the prerequisite conditions of having a vehicle speed greater than 2 mph and the engine running.

The solenoid remains energized simultaneously with activation of the rear stop lights to heat up air output to prevent it from freezing. However, Multiplex programming will ensure that the solenoid remains energized for at least of 45 seconds but not longer than 5 minutes.

### 9.1 MAINTENANCE

The Consep requires little maintenance during its long service life. The Consep must be inspected periodically for proper operation. The interval between inspections is determined by the type of service. High compressor duty cycles and high temperatures can cause a buildup of carbon in the condenser, drain valve and filter. This contamination must be removed for proper operation.

For more information on the periodic inspection, refer to **Haldex Consep Condenser Separator, Installation, Maintenance & Inspection L31167** included on your technical publications CD.

## 10. AIR LINES

Nylon-reinforced tubing and flexible hoses are used to connect the units in the pneumatic system, including air brake system, suspension system and accessory systems such as the entrance door, air horns, etc. Furthermore, the nylon tubing is color coded to ease identification. Refer to the following table for the complete color identification code. Service instructions for each type of air line are also provided under the applicable headings.

| Color | Circuit |
|---|---|
| Green | Primary system, Supply/Delivery |
| Red | Secondary system |
| Brown | Parking & emergency brake system, trailer Brake |
| Blue | Suspension |
| Black & translucent | Accessories, valve exhaust tube |
| Yellow | Air compressor unload |

### 10.1 FLEXIBLE HOSES

A flexible hose is used normally where it is impractical to use copper or nylon tubing due to constant flexing during operation, such as brake chamber hoses or belt tensioner air cylinder hoses. Hose connections should be tested for leakage at least every 6,250 miles (10 000 km) or twice a year, whichever comes first and tightened or replaced if necessary. Any hose, which is chafed, worn or kinked, should be replaced.

Teflon-braided stainless steel hoses used in the engine compartment must be replaced only with similar hoses.

### 10.2 NYLON TUBING

Nylon tubing is used for air lines in areas where usage of this material is suitable. Nylon tubing is flexible, durable, and weather resistant. When replacing an air line, use nylon tubing only where it has been used previously.

Nylon air lines must never be routed in areas where temperature could exceed 200ºF (93ºC).

> **⚠ CAUTION**
>
> Nylon air lines should be used to replace existing nylon lines only, and must comply with the color identification code to ease pneumatic system troubleshooting.

### 10.3 AIR LINE OPERATING TEST

If any trouble symptom such as slow brake application or slow brake release indicates a restricted or clogged air line, disconnect the suspected tube or hose at both ends and blow through it to clear the passage.

Inspect tubing and hose for partial restriction that may be caused by dents or kinks. If such a condition is found, the tubing or hose should be replaced.

### 10.4 AIR LINE LEAKAGE TEST

With air system fully charged and the brakes applied, coat all tubing and hose connections with a soapy solution to check for air leakage. No leakage is permitted. Leakage can sometimes be corrected by tightening the connection. If this fails to correct the leakage, new fittings, nylon tubing, copper tubing, Teflon-braided stainless steel and flexible hoses must be installed as applicable.

### 10.5 MAINTENANCE

Inspect all lines for cuts, swelling, kinks or other damage or deterioration. Check for lines being pinched by other components. Retaining clips and ties must be in place.

Any support or bracket should be in good condition and mounted firmly in position. Hose spring guards should be in usable condition and not distorted. Particular attention should be given to long lines. Any supporting component (clips, ties, grommets, etc.) must be secured to prevent against unnecessary vibration and eventual loosening of connection. Any detected leak should be repaired. Be sure nylon lines are not near areas of intense heat. Check for any missing grommets or loose material where chafing or cutting may occur. Replace with new material as required. In general, lines should be securely located in position and free from any binding condition, which would hinder air flow.

## 11. PRESSURE REGULATING VALVES

There is one pressure regulator (Figure 15) for small A/C compressor and accessories alternator drive belt tensioner, and an optional one installed on vehicles equipped with the world transmission output retarder.

The belt tensioner pressure regulating valve is located in the engine compartment above the engine air filter and is used to limit the air pressure in belt tensioners to 30 ± 3 psi (207 ± 20 kPa) for vehicles equipped with a single belt and 45± 3 psi (310± 20 kPa) for vehicles with dual belts arrangement.

The optional regulator is located in the engine compartment, on the engine cradle R.H. side (accessible through the engine R.H. side door). It is used for transmission retarder and should be adjusted to 80 +0/-5 psi (552 +0/-35 kPa).

| | Air Pressure (psi) | Air Pressure (kPa) |
|---|---|---|
| Belt Tensioner | 30 ± 3 (Single belt) | 207 ± 20 |
| | 45 ± 3 (Dual belts) | 310 ± 20 |
| Retarder | 80+0/-5 | 552 +0/-35 |

## 11.1 MAINTENANCE

Every 100,000 miles (160 000 km) or once every two years, whichever comes first, disassemble the pressure regulating valve and wash all metal parts in a cleaning solvent (Figure 15). Examine the diaphragm; if cracked, worn or damaged, replace with a new one. If the valve is excessively grooved or pitted, it should be replaced. Replace any other part that appears worn or damaged. After reassembly, adjust to the specified pressure setting and check for air leakage.

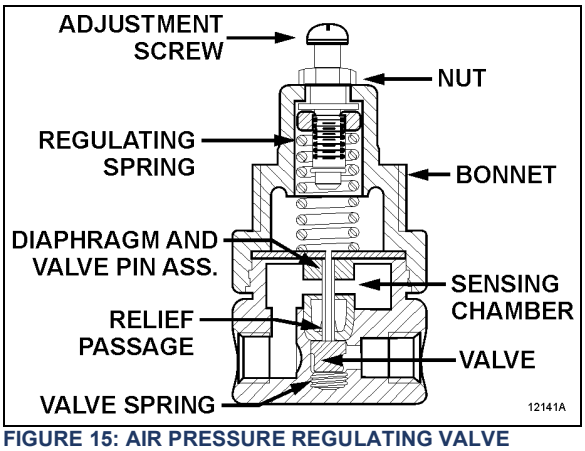


**FIGURE 15: AIR PRESSURE REGULATING VALVE**

### 11.1.1 Pressure Setting Procedure

Remove the dust cap from the pressure check port (Figure 16). Attach a pressure gauge at this port and check the pressure reading. If the pressure reading is incorrect, adjust as follows:

12. Loosen the locking nut; turn the adjustment screw counterclockwise to decrease pressure by approximately 10 psi (70 kPa) below the required pressure.
13. Turn the adjustment screw clockwise to increase the pressure slowly until the required pressure setting is reached. Tighten the locking nut.
14. Remove pressure gauge and replace dust cap on the pressure check port.

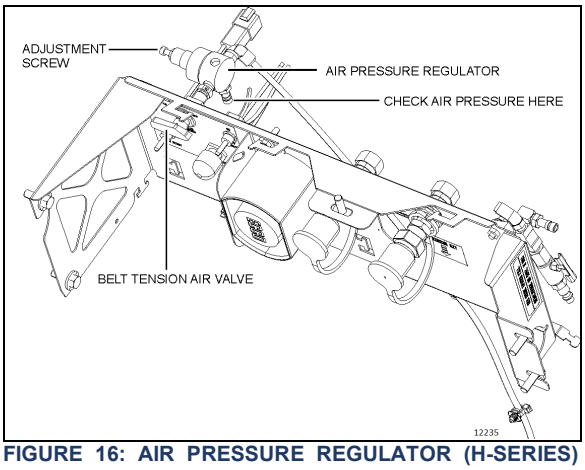


**FIGURE 16: AIR PRESSURE REGULATOR (H-SERIES)**

## 12. AIR COMPRESSOR

The Wabco System Saver 636 Twin Cylinder air compressor is located on the right side of the engine, at the flywheel end (Figure 17). Its function is to provide and maintain air under pressure to operate devices in brake and air systems.

The compressor is driven by the ring gear, and is water cooled. Engine coolant is fed to the compressor through a flexible hose tapped into the block water jacket and connected to the rear of the compressor. Coolant returns from the top of the compressor (governor side) through a flexible hose to the engine pump.

The air is taken from the air intake manifold and entered in the top of the compressor. The compressed air is pushed into the discharge line located on side of the compressor, which sends air to the air dryer. Lubricating oil is supplied to the compressor by a line from the cylinder block oil gallery connected to the air compressor. Lubricating oil returns to the engine crankcase through the air compressor drive assembly.

Maintenance and repair information on the Wabco 636 Twin Cylinder air compressor is supplied in the applicable booklet, found on your Technical Publications USB flash drive.

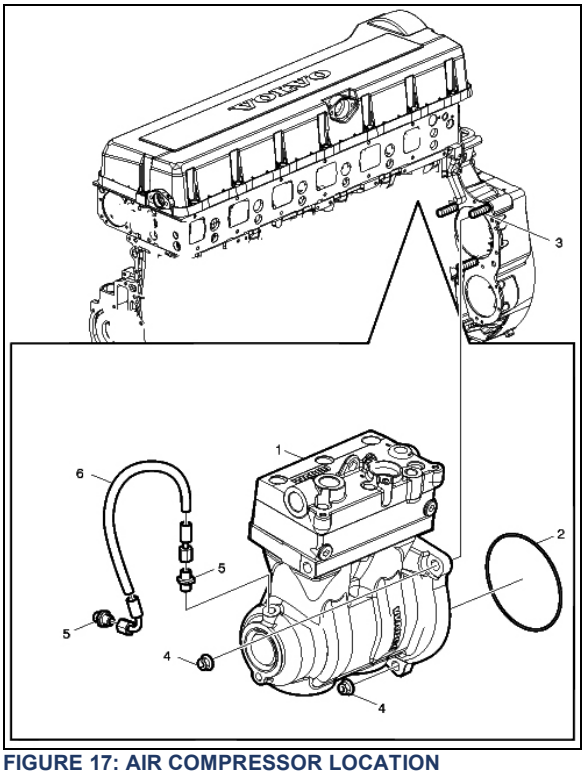


**FIGURE 17: AIR COMPRESSOR LOCATION**

| Item | Description | Notes |
|---|---|---|
| 1 | Air Compressor | Wabco 636 |
| 2 | O-ring | |
| 3 | Stud (3) | M12 |
| 4 | Flange Nut (3) | |
| 5 | Nipple (2) | |
| 6 | Hose Assembly | |

## 12.1 CARBON DEPOSIT AND OIL CONSUMPTION TEST

Some carbon deposits are normal. This is caused by a small amount of oil passing the piston rings. If heavy carbon deposits are suspected, perform the Oil Consumption Test Paper Method as explained in *Wabco Test Instructions for Compressors_91200095_en* available on the Prevost technical Publications site.

If the Oil Consumption Test fails, do the following.

- Make sure there is no restriction on the air inlet to the compressor, that the hose is not kinked, creating a vacuum that would cause the compressor to pull oil past the rings.
- Make sure the air inlet line is not sucking in unfiltered air. That would cause premature wear to the compressor.

After performing the Oil Consumption Test, if excessive oil is found, the compressor will need to be replaced.

| CONDITION | POSSIBLE CORRECTION |
|---|---|
| Carbon deposits in the compressor.<br>*Leakage of air gives the compressor an increased thermal load.*<br>*This often results in an increased amount of carbon and oil products in the pneumatic system.* | Repair air leaks. When necessary, clean, overhaul or change cylinder head/compressor. |
| Carbon deposits in compressed air system. | Check compressor air supply. Check the air dryer and the pipes between the air dryer and compressor for carbon deposits. Also check that the air passes through the air dryer. Clean or change components that have carbon deposits. |

## 12.2 COMPRESSOR REMOVAL AND INSTALLATION

1. Exhaust compressed air from air system by opening the drain valve of each air tank.
2. Drain the engine cooling system. See Section 5: "*Cooling System*".
3. Access the compressor by the engine R.H. side compartment. Identify and disconnect all air, coolant and oil lines from the compressor assembly.
4. Remove the three compressor flange mounting nuts.

5. Slide air compressor rearward to disengage the hub from coupling. Remove the air compressor.
6. Remove and retain the oil supply tube that runs between the compressor and the engine.
7. Reverse removal procedure for installation.

## 13. MISCELLANEOUS VALVES

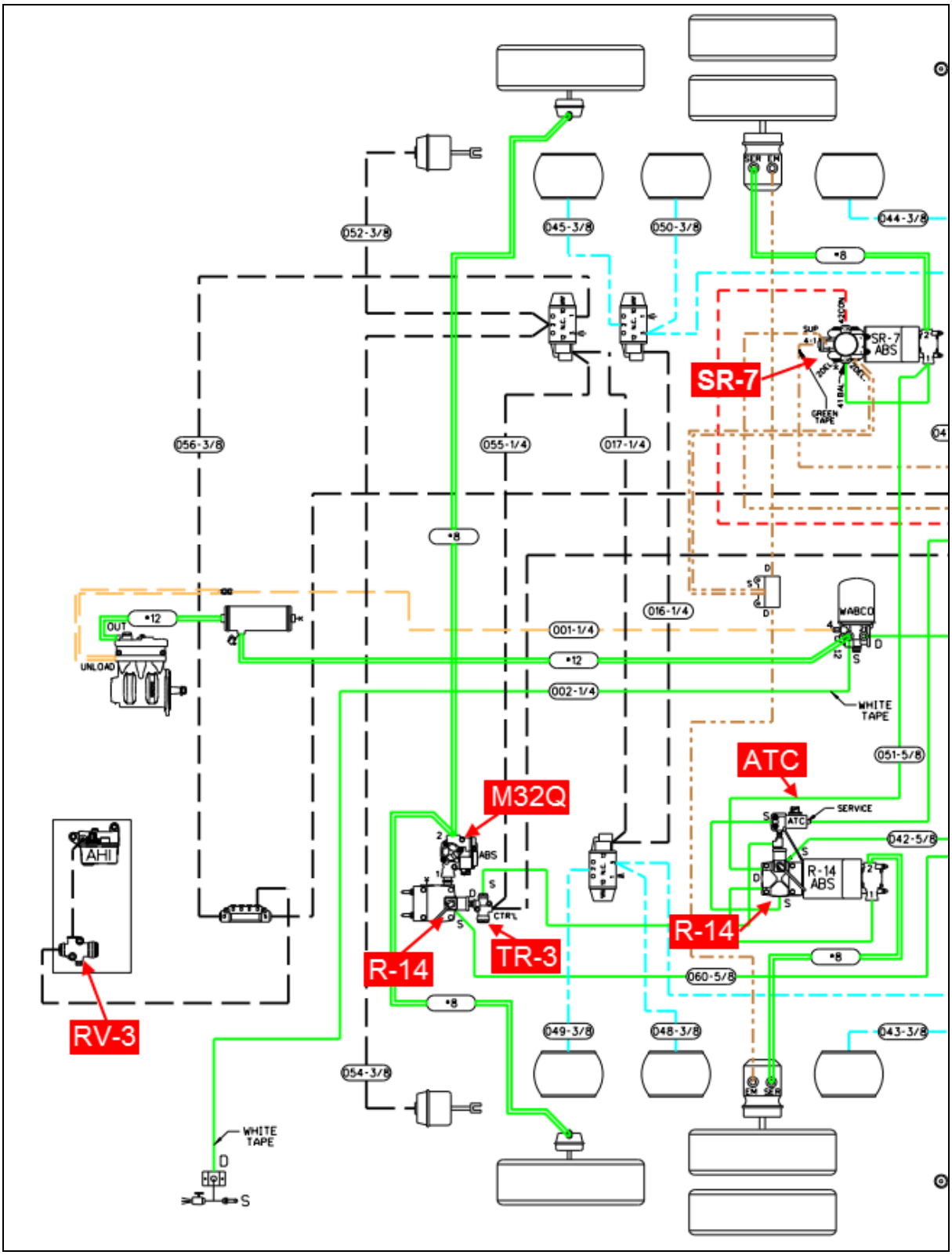


FIGURE 18 : PARTIAL PNEUMATIC DIAGRAM

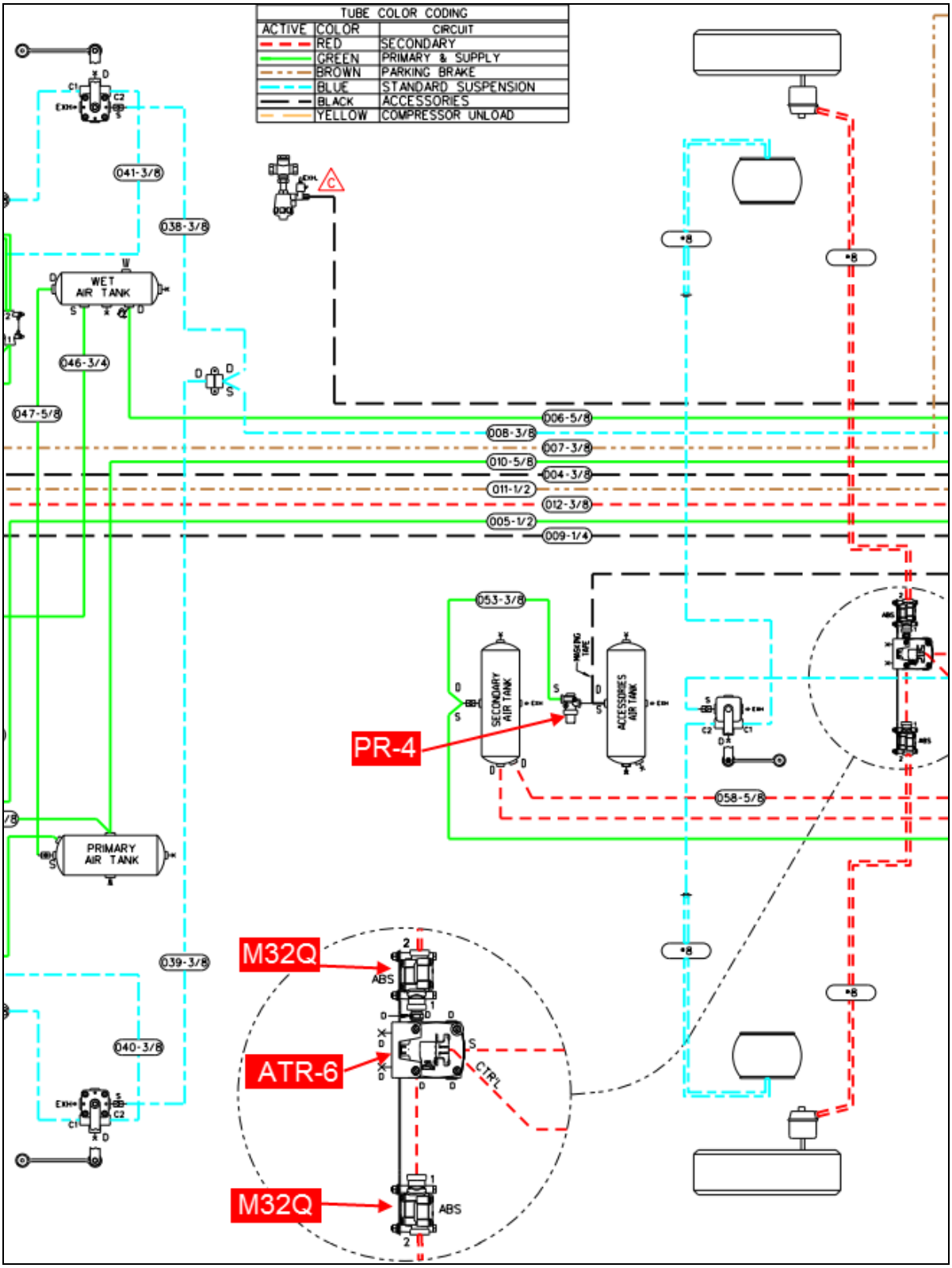
TUBE COLOR CODING
ACTIVE COLOR CIRCUIT
RED SECONDARY
GREEN PRIMARY & SUPPLY
BROWN PARKING BRAKE
BLUE STANDARD SUSPENSION
BLACK ACCESSORIES
YELLOW COMPRESSOR UNLOAD
WET AIR TANK
PRIMARY AIR TANK
SECONDARY AIR TANK
ACCESSORIES AIR TANK
PR-4
M32Q
ATR-6
M32Q
ABS
CTRL
041-3/8
038-3/8
046-3/4
047-5/8
006-5/8
008-3/8
007-3/8
010-5/8
004-3/8
011-1/2
012-3/8
005-1/2
009-1/4
053-3/8
058-5/8
039-3/8
040-3/8

FIGURE 19

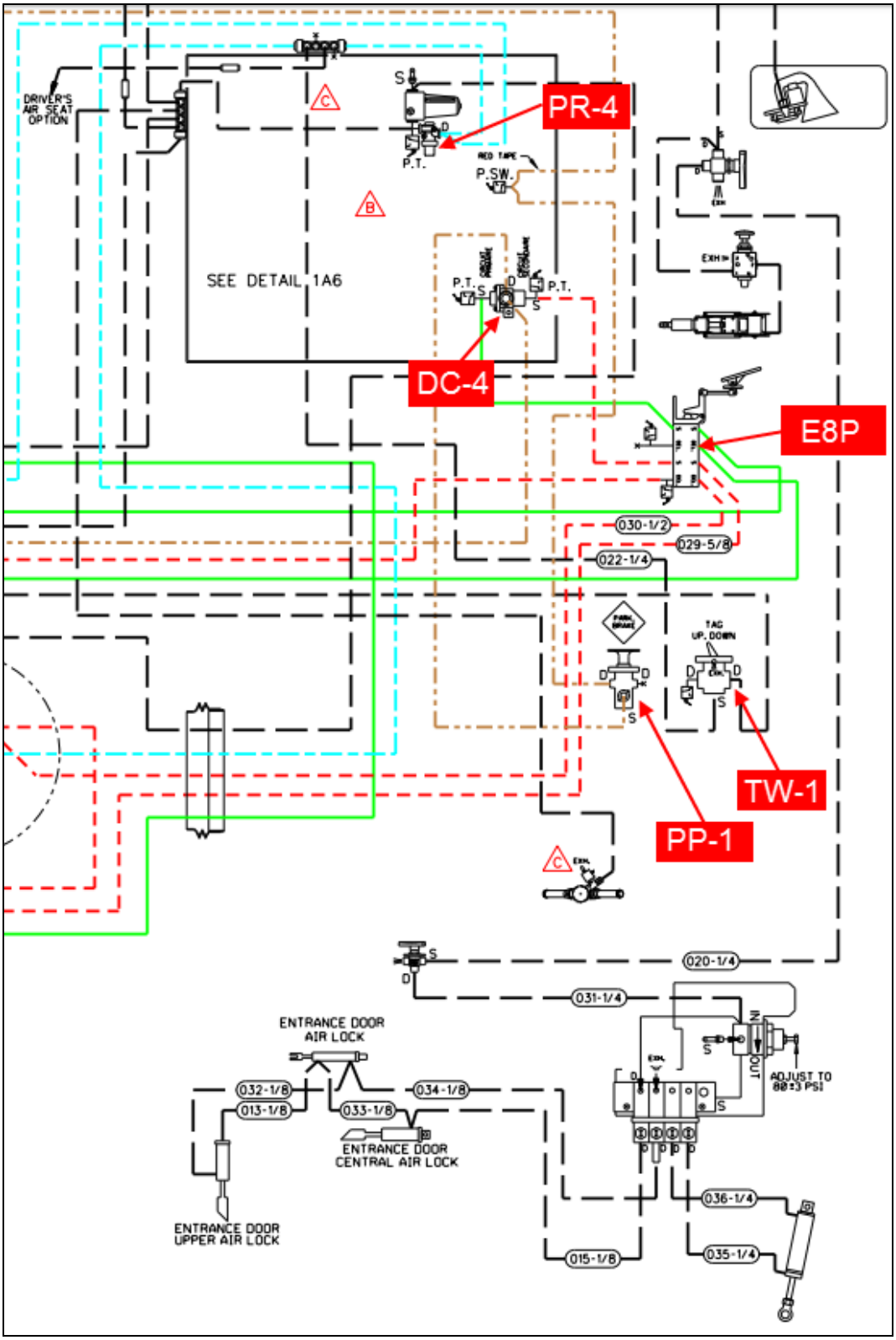
PR-4
DC-4
E8P
TW-1
PP-1
DRIVER'S AIR SEAT OPTION
SEE DETAIL 1A6
P.T.
P.SW.
RED TAPE
EXH.
030-1/2
029-5/8
022-1/4
020-1/4
031-1/4
ENTRANCE DOOR AIR LOCK
032-1/8
013-1/8
034-1/8
033-1/8
ENTRANCE DOOR CENTRAL AIR LOCK
ENTRANCE DOOR UPPER AIR LOCK
036-1/4
035-1/4
015-1/8
ADJUST TO 80±3 PSI
IN
OUT

FIGURE 20

## 13.1 EMERGENCY / PARKING BRAKE CONTROL VALVE (PP-1)

A push-pull control valve mounted on the L.H. lateral console is provided for parking brake application or release. The spring brakes are self-actuated whenever the control valve supply pressure drops below 60 psi (414 kPa). In the UP position, brakes are ON. In the DOWN position, brakes are RELEASED. A protective case around the knob prevents accidentally releasing the brakes.

Maintenance and repair information on this valve is supplied in the applicable booklet, found on your Technical Publications USB flash drive, under reference number **Bendix SD-03-3611**.



PP-1®

## 13.2 OPTIONAL EMERGENCY / PARKING BRAKE OVERRULE CONTROL VALVE (RD-3)

A RD-3 control valve is used when the vehicle is equipped with the optional parking brake overrule system. In the case of self-application of spring brakes due to a pressure drop, the brakes can be released by holding down this control valve.

Maintenance and repair information on this valve is supplied in the applicable booklet, found on your Technical Publications USB flash drive, under reference number **Bendix SD-03-3611**.



BENDIX® RD-3™ VALVE

## 13.3 FLIP-FLOP CONTROL VALVE (TW-1)

A flip-flop control valve mounted on the L.H. lateral console is provided to unload and lift tag axle air springs. Another one controls the low-buoy system (coaches only). It is a manually operated "on-off" valve.

Maintenance and repair information on this valve is supplied in the applicable booklet, found on your Technical Publications USB flash drive, under reference number **Bendix SD-03-3602**.

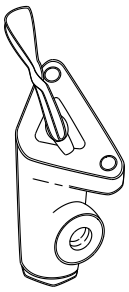

## 13.4 DUAL BRAKE APPLICATION VALVE (E-8P)

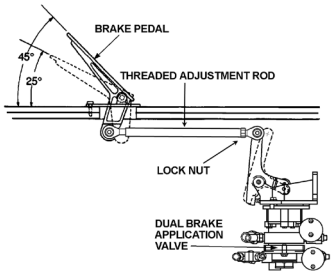


The E-8P dual brake valve is a floor mounted, foot-operated type brake valve with two separate supply and delivery circuits. This valve is located in the front service compartment.

### 13.4.1 Brake Pedal Adjustment

After brake pedal replacement or repair, adjust the pedal to its proper position according to the following procedure:

1. Replace the linkage, loosen threaded rod lock nut and screw or unscrew the threaded adjustment rod in order to obtain a 45º brake pedal inclination.
2. Tighten threaded rod lock nut.

### 13.4.2 Maintenance

Maintenance and repair information on the E-8P dual brake application valve is supplied in the applicable booklet, found on your Technical Publications USB flash drive, under reference number **Bendix SD-03-830**.

## 13.5 STOPLIGHT SWITCHES

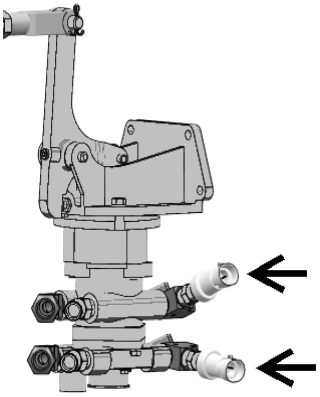

Two Electro-pneumatic stoplight switches are mounted on the dual brake application valve (E-8P). The upper one is used for the primary air circuit while the lower one is used for the secondary air circuit. Both switches are connected in parallel and have the same purpose, i.e. completing the electrical circuit and lighting the stoplights when a brake application is made.

## 13.6 PARKING BRAKE ALARM SWITCH

Refer to the appropriate booklet (Bendix, SL-5 Stop Light Switch; reference no. SD-06-1804), found on your Technical Publications USB flash drive.

The parking brake alarm uses the same switch as the stoplights. It is mounted on the spring brake valve and operates in conjunction with a NC relay to sound a warning alarm by completing the electrical circuit when the ignition key is turned OFF with parking brake released.

## 13.7 BRAKE RELAY VALVE (R-14)

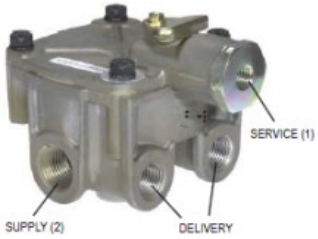

EXTERIOR R-14H

The primary air system includes two brake relay valves being supplied by the dual brake valve, and which function is to speed up the application and release of the service brakes.

One R-14 valve located above the drive axle supplies the drive axle service brake air line, while the other R-14 valve supply the tag axle service brake air line and act as interlock valves. These valves are accessible from under the vehicle at the level of the tag axle.

Maintenance and repair information on these valves is supplied in the applicable booklet, found on your Technical Publications USB flash drive, under reference number **Bendix SD-03-1064**.

## 13.8 ANTILOCK TRACTION RELAY VALVE (ATR-6)



The ATR-6 Antilock Traction Relay valve is a service relay valve fitted with a modified cover containing a control solenoid. It contains both air and electric components to provide the service braking and traction control (differential braking) as well as ESC advanced stability system ABS functions. It is located above the front axle.

Maintenance and repair information on these valves is supplied in the applicable booklet, found on your Technical Publications USB flash drive, under reference number **Bendix SD-13-4861**.

## 13.9 SPRING BRAKE VALVE (SR-7)

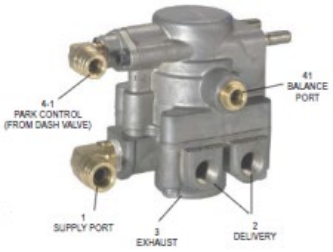


The spring brake valve is located above the drive axle. The SR-7 Modulating Valve is used in conjunction with a dual air brake system and spring brake actuator and performs the following functions:

- Provides a rapid application of the spring brake actuator when parking.
- Modulates the spring brake actuator application using the dual brake valve should a primary failure occur in the service brake system.
- Prevents compounding of service and spring forces.

Maintenance and repair information on the spring brake valve is supplied in the applicable booklet, found on your Technical Publications USB flash drive, under reference number **Bendix SD-03-9043**.

## 13.10 PRESSURE PROTECTION VALVE (PR-4)

Maintenance and repair information on the pressure protection valve is supplied in the applicable booklet, found on your Technical Publications USB flash drive, under reference number **Bendix SD-03-2010**.

The air system includes two pressure protection valves. One valve is installed on the manifold block, and insures at all times a minimum pressure of 70 psi (482 kPa) in the suspension air system in the event that a pressure drop occurs in either the suspension air system or accessory air system. This valve is located in the front service compartment beside the air filter.

The other valve is installed on the accessory air tank, and insures a minimum pressure of 70 psi (482 kPa) in the accessory air system in the event that a pressure drop occurs in either the suspension air system or braking air system (refer to Figure 2 and Figure 3 for accessory air tank location).



PR-2™ PRESSURE PROTECTION VALVE

## 13.11 SHUTTLE-TYPE DOUBLE CHECK VALVE (DC-4)

Maintenance and repair information on the shuttle-type double check valve is supplied in the applicable booklet, found on your Technical Publications USB flash drive, under reference number **Bendix SD-03-2202**.

The double check valve is located on the pneumatic accessories panel in the front service compartment. In the event of a pressure drop in either the primary or secondary system, this unit will protect the emergency /parking brake control valve and the intact portion of the air system from pressure loss.



## 13.12 PRESSURE REDUCING VALVE RV-3

The Bendix RV-3 pressure reducing valve is a normally open pressure control device. The function of the RV-3 valve is to reduce system air pressure and maintain a constant specified pre-set pressure below that of system pressure. A pressure reducing valve is installed upstream of the AHI module (Aftertreatment hydrocarbon injector).

Maintenance and repair information on the pressure reducing valve is supplied in the applicable booklet, found on your Technical Publications USB flash drive, under reference number **Bendix SD-03-3515**.



### 13.13 ANTILOCK MODULATOR (M-32QR)



The M-32QR (quick release) antilock system modulator is high capacity, on/off air valve that incorporate a pair of electrical solenoids for control. The solenoids provide the electro-pneumatic interface between the antilock controller electronics and the air brake system. The modulator is used to control the braking function on individual or dual service actuators during antilock activity.

Maintenance and repair information on the antilock modulator valve is supplied in the applicable booklet, found on your Technical Publications USB flash drive, under reference number **Bendix SD-13-4870**.

### 13.14 INVERSION VALVE (TR-2, TR-3)



The TR-2 & TR-3 valves are normally open, pilot-operated, inverting, on-off, two-way valves. As control pressure is reduced to the point that the piston return spring or springs overcomes the force on the control piston, the valve will deliver full supply pressure at the delivery port.

Maintenance and repair information on the antilock modulator valve is supplied in the applicable booklet, found on your Technical Publications USB flash drive, under reference number **Bendix SD-13-4650**.

### 13.15 INLINE QUICK RELEASE VALVE (QR-L)



The QR-L quick release valve is a quick release valve. Its purpose is to “speed up” the release of air from air lines and devices it is attached to. Although primarily intended to enhance air system performance by rapidly exhausting supply or control air pressure from vehicle air lines, it can be used in a variety of different applications. It is uniquely suitable as an air system performance enhancement due to its 0 psi crack and differential pressure. Supply and delivery pressure is the same throughout the air pressure range.

Maintenance and repair information on the inline quick release valve is supplied in the applicable booklet, found on your Technical Publications USB flash drive, under reference number **Bendix SD-03-906**.

## 14. EMERGENCY DOOR OPENING VALVES

Two emergency door opening three-way valves are installed on passenger coaches. One is in the front service compartment, readily accessible. The other one is on the R.H. side lateral console, close to the entrance door. When used, the valve releases pressure in the door locking cylinder, thus allowing the door to be manually opened.

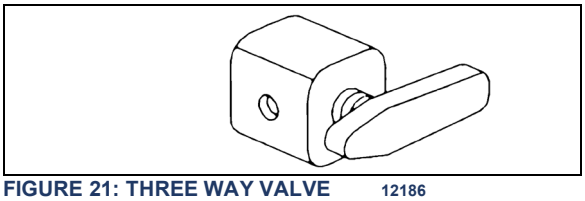

**FIGURE 21: THREE WAY VALVE** 12186

#### 14.1.1 Interior Valve Maintenance

When needed, this valve can be changed according to the following procedure:

1. Unscrew the front R.H. decorative panel in order to access the valve.
2. Unscrew and remove the valve handle.
3. Unscrew and remove the valve retaining ring.
4. Push the valve inside the console.
5. Disconnect the air tubes.
6. Reverse the procedure to install a new valve.

## 15. AIR HORN VALVE

The air horn solenoid valve is located in the front service compartment. The air horn activating button is on the center of the steering wheel. Refer to section 23 “ACCESSORIES” for more information.

## 16. AIR SYSTEM TROUBLESHOOTING

The following list has been designed to help in troubleshooting some of the most common problems in the air system and main causes. For air brakes troubleshooting, refer to “*Air Brakes Troubleshooting”* in this section. For more troubleshooting information, refer to the manufacturer's brochures, found on your Technical Publications USB flash drive.

**Air pressure doesn't rise to or doesn't maintain a normal setting:**

- Defective air gauge (registering incorrectly).
- Excessive leaking in air system.
- Reservoir drain cock open.
- Governor poorly adjusted or defective.
- Defective compressor.
- Worn compressor or excessive wear on piston and/or ring.

**Air pressure rises to normal setting too slowly:**

- Excessive leaking in air system.
- Clogged engine air cleaner.
- Faulty pressure sensor.
- Worn compressor or excessive wear on piston and/or ring.
- Engine speed too low.

**Air pressure rises above a normal setting:**

- Defective air gauge (registering incorrectly).
- Faulty sensor.
- Restriction in line between governor and compressor unloading mechanism.
- Air filter/dryer built-in governor poorly adjusted or defective.

**Air pressure drops quickly when engine is stopped:**

- Leaks in compressor discharge valve.
- Leaks in air lines.
- Leaks in air system valves.

## 17. BRAKE OPERATION

The vehicle braking system uses both service and parking air-operated brakes. The air system is divided into two independent circuits to isolate the front axle brakes and the rear axle brakes (drive and tag), thus providing safe brake operation in the event that one circuit of the system fails. The primary circuit is connected to the drive and tag axle brakes, while the secondary circuit is connected to the front axle brakes. The tag axle service brakes operate only when the axle is in the normal driving (loaded) position. The spring-type emergency brakes are mounted on the drive and tag axles, and will apply automatically if primary system pressure falls below 60 psi (413 kPa).

The optional parking brake override system can cancel the parking brakes, enabling the driver to move the vehicle to a safe parking place. On vehicles equipped with this option, operate the system by pushing down and holding the control knob located on the R.H. side of the driver’s seat (see *"Operator's Manual"* for more details).

Furthermore, brake application or release, which is sped up by a pneumatic relay valve (R-14), will start with the rear axles and be followed by the front axle, thus providing uniform braking on a slippery surface. The vehicle is also equipped with an Anti-lock Brake System (ABS), detailed later in this section.

Brake and air system maintenance consists of periodic inspections. Check all parts for damage

and brake adjustment (refer to subsequent headings in this section for more details). Ensure all fasteners are tight (refer to "Torque Tables" for recommended tightening torques).

## 18. DISC BRAKES

*Knorr-Bremse SN7* disc brakes are used on all axles. The front and drive axle discs are actuated by 24 inch$^2$ effective area air brake chambers (22 inch$^2$ for front I-Beam axle), while on tag axle, the brake chambers have a 14 inch$^2$ effective area for service brake and a 16 inch$^2$ effective area for emergency/parking brakes. The *Knorr-Bremse SN7* brakes are supplied with automatic clearance adjusters as standard equipment for easier adjustment.

For detailed maintenance procedures, refer to ***Knorr-Bremse Pneumatic Disc Brake Y006471 Service Manual*** included on the Technical Publications USB flash drive and also available on Prevost Technical Publications site.




### 18.1 INSPECTION POINTS

The following inspection points will ensure long-life and trouble-free operation of the disc brake.

**MAINTENANCE**

Check brake pad & disc wear visually (this is independent of any electronic wear indicator fitted to the vehicle) at the intervals specified by the Lubrication and Servicing Schedule in Section 24: LUBRICATION & SERVICING.

**MAINTENANCE**

**With every pad replacement or once a year whichever comes first:**

1. Check correct functioning of the adjuster (see 18.2.6).
2. Check that caliper operates smoothly over its full range of movement (see 18.2.6).
3. Check the adjuster cap for correct fitting and condition (item 37).
4. Check the sealing elements for correct fitting and condition (items 9, 58) (see 18.2.10 Caliper Guide Pin Seals & 18.2.11 Tappet & Boot Assemblies).
5. Check the caliper bearing in the area of the rubber bush/guide sleeve (item 6) (see 18.2.8 step 2).
6. Check the caliper running clearance (see 18.2.7).
7. Check fitting and condition of the cover (item 10) and cover (item 68, bearing variants may exist).

**MAINTENANCE**

Moisture and dirt is the enemy. Special care should be awarded to the condition of the various sealing elements, boots and caps to prevent any moisture or dirt intrusion in the caliper. Any missing or damaged sealing element, boot or cap should be replaced immediately.

At each pad replacement, make sure the caliper operates smoothly over its full range of movement. If the caliper shows the following signs, replacement of the rubber bush/guide sleeve (item 6, Figure 22), guide pin (items 4 & 5 Figure 23, screw (items 39 & 40) and cap (items 10 & 68) is required.

- excessive or abnormal play
- movement along guide pins is hard or impossible (due to corrosion or dirt)
- A missing guide pin cap

If an individual wheel has heated abnormally, please refer to Bendix *BW7514_Single wheel end thermal overload checklist*. This checklist

will help you through standard verifications required by the brake manufacturer before filing a warranty claim.

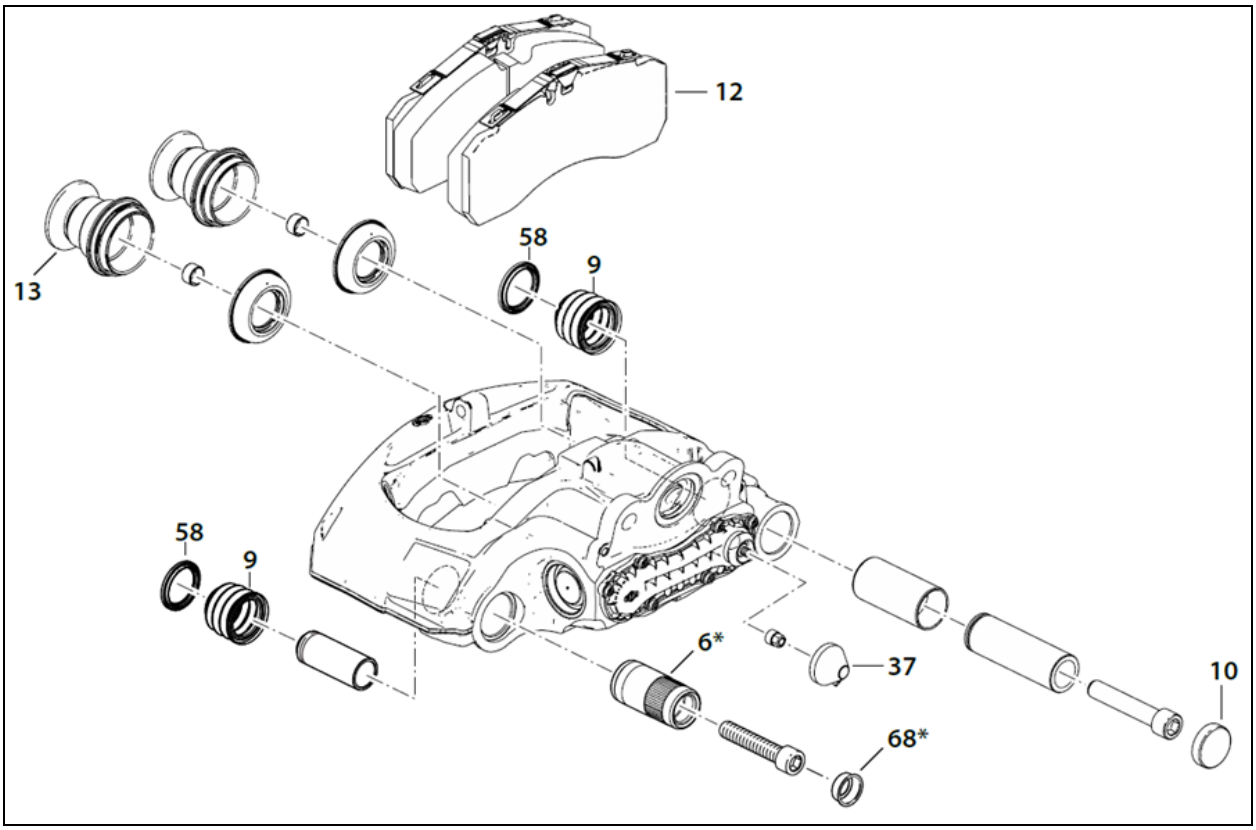


FIGURE 22: INSPECTION POINTS IDENTIFICATION

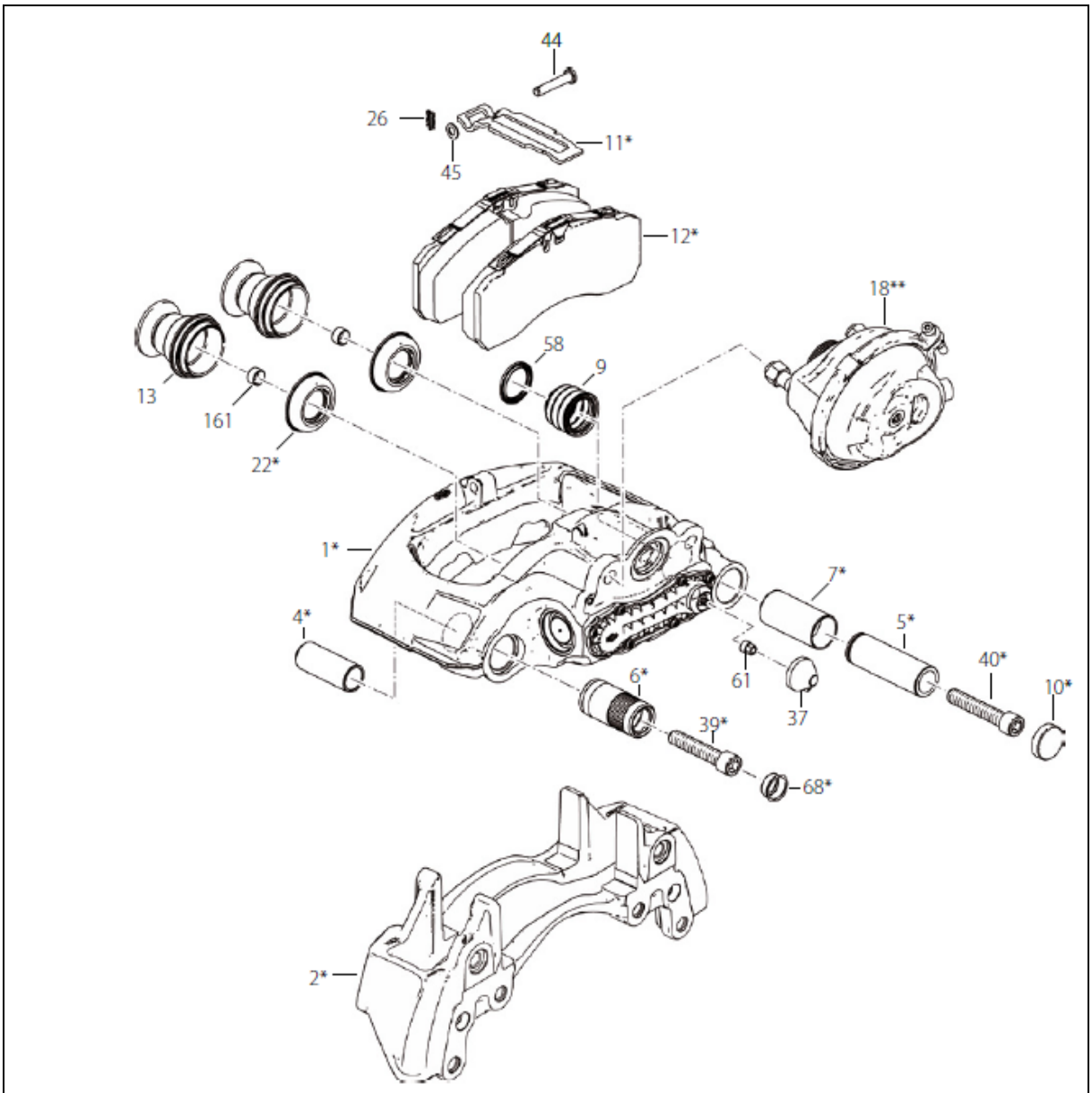


Legend

| | | |
|---|---|---|
| 1 Caliper* | 13 Tappet and Boot Assembly | 61 Shear Adapter |
| 2 Carrier* | 18 Brake Actuator** | 68 Cover* |
| 4 Guide Pin* | 22 Inner Seal* | 161 Tappet Bush |
| 5 Guide Pin* | 26 Spring Clip | |
| 6 Rubber Bush or Guide Sleeve* (floating bearing side) | 37 Adjuster Cap | |
| 7 Brass Bush* (fixed bearing side) | 39 Caliper Bolt* | |
| 9 Inner Boot* | 40 Caliper Bolt* | |
| 10 Cover* | 44 Pad Retainer Pin | * Variants possible (see also contents leaflet in the service kit) |
| 11 Pad Retainer* | 45 Washer | |
| 12 Pad (complete)* | 58 Ring* | ** Brake chamber or spring brake |

**FIGURE 23: DISC BRAKE COMPONENTS**

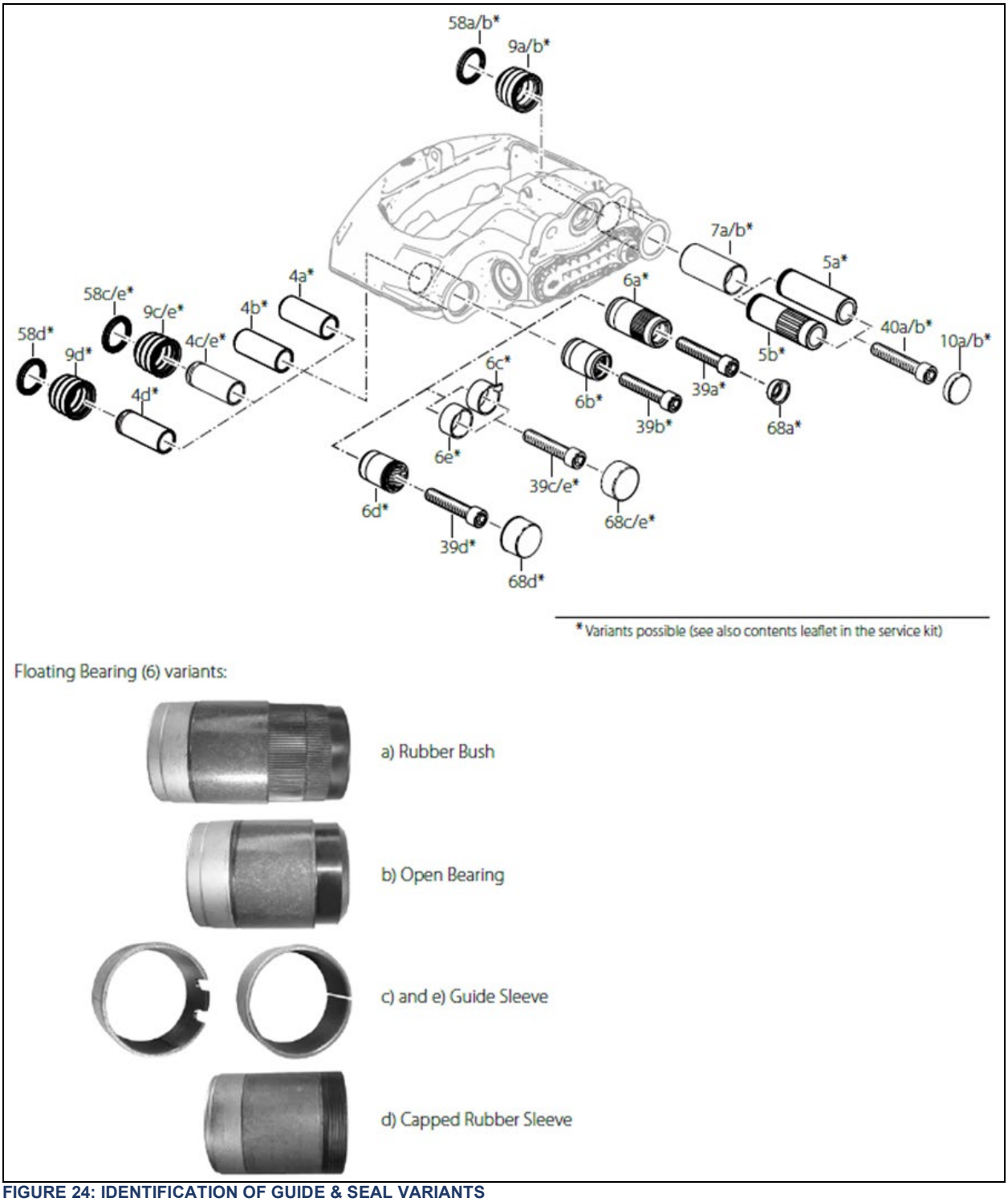


**FIGURE 24: IDENTIFICATION OF GUIDE & SEAL VARIANTS**

## 18.2 FUNCTIONAL AND VISUAL CHECK

### 18.2.1 Wear Check of Pads

The thickness of the pads must be checked regularly dependent on the usage of the vehicle. The pads should be checked corresponding to any legal requirements that may apply. Even if a wear indicator is fitted and connected, this must be at least every 3 months.

Brake pads have to be checked on a regular basis depending on the vehicle operation. The remaining thickness of the pads should never be less than 0.079 in (2 mm). When replacing brake pads, all four pads on an axle have to be changed at the same time. There is no inner or outer pad, since all pads are the same. Once removed, worn pads should be replaced in their original position.

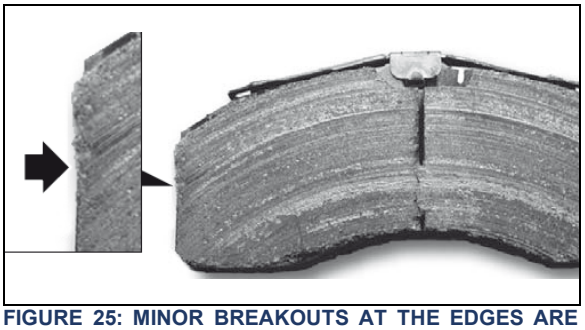

FIGURE 25: MINOR BREAKOUTS AT THE EDGES ARE PERMITTED (SEE ARROW)

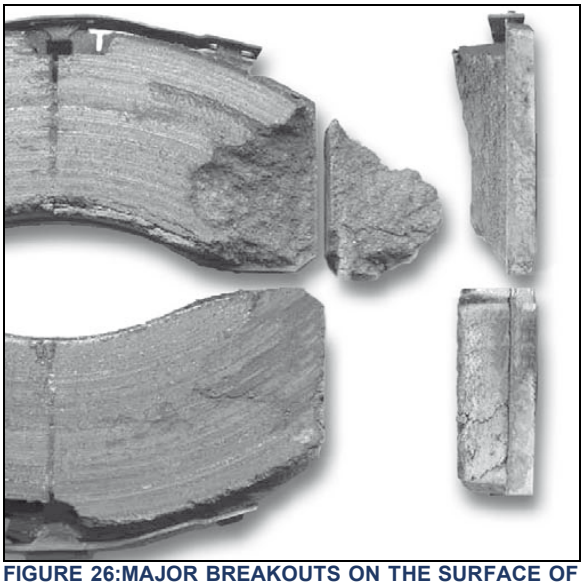

FIGURE 26:MAJOR BREAKOUTS ON THE SURFACE OF THE BRAKE PAD ARE NOT PERMITTED

If the thickness of the friction material at its thinnest point is less than 0.079 inch or 2 mm (measurement C), the pads must be replaced.

A= Overall thickness of new brake pad: 1.181 in (30 mm)
B= Backplate SN7 type: 0.354 in (9 mm)
C= Minimal thickness of friction material: 0.079 in (2 mm)
D= Minimum allowed thickness in worn condition for backplate and friction material: 0.433 in (11 mm)

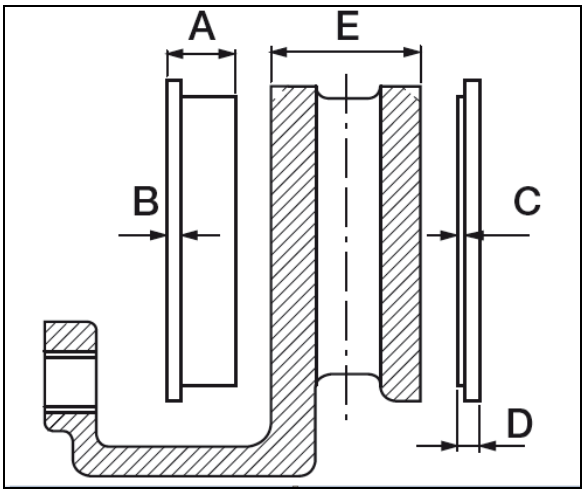


FIGURE 27: BRAKE PADS DIMENSIONS

**Exaggerated wear difference between inner and outer brake pads**

The total thickness of the friction material of the inner and outer pad should be equal. If the difference between the two pads is greater than 3.5 mm, then the following checks are necessary:

- Bearing clearance check (see 18.2.7 & 18.2.8).
- Free movement of the brake pads in the caliper (see 18.2.6).
- Possible collision with other parts on the axle or vehicle body.
- Excessive dirt and grime present.
- Piping of the compressed air line

Example 1)
E=0.748 in (19 mm)
F=0.590 in (15 mm) > NOT OK

Example 2)
E=0.453 in (11.5 mm)
F=0.512 in (13 mm) > OK

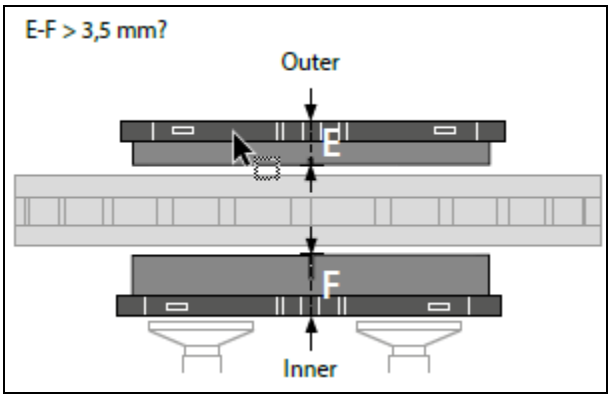


FIGURE 28: EXAGGERATED WEAR DIFFERENCE BETWEEN INNER AND OUTER BRAKE PADS

### Exaggerated tangential oblique wear of brake pads

The total thickness of the friction material at either end of the pad should be equal. If the difference between the two ends is greater than 2 mm, then the following checks are necessary:

- Bearing clearance check (see 18.2.7 to 18.2.9).
- Free movement of the brake pads in the caliper (see 18.2.6).
- Possible collision with other parts on the axle or vehicle body.
- Excessive dirt and grime present.
- Piping of the compressed air line. In addition, the piping must be replaced.

Example 1)
G=21 mm
H=18 mm > NOT OK

Example 2)
G=18 mm
H=19 mm > OK

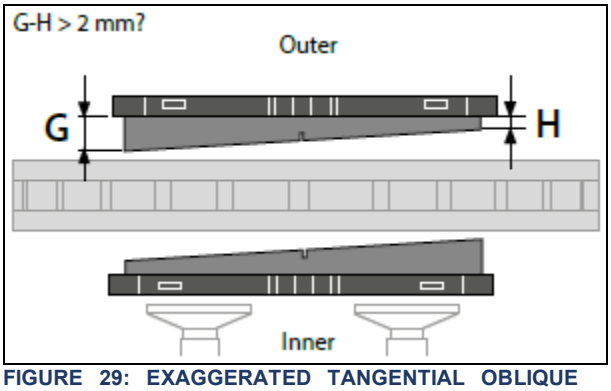


FIGURE 29: EXAGGERATED TANGENTIAL OBLIQUE WEAR OF BRAKE PADS

### Exaggerated taper wear of brake pads

The total thickness of the friction material in the radial direction should be equal. If the difference between the top and bottom ends is greater than 1 mm, then the following checks are necessary:

- Bearing clearance check ((see 18.2.7 to 18.2.9).
- Free movement of the brake pads in the caliper (see 18.2.6).
- Possible collision with other parts on the axle or vehicle body.
- Excessive dirt and grime present.

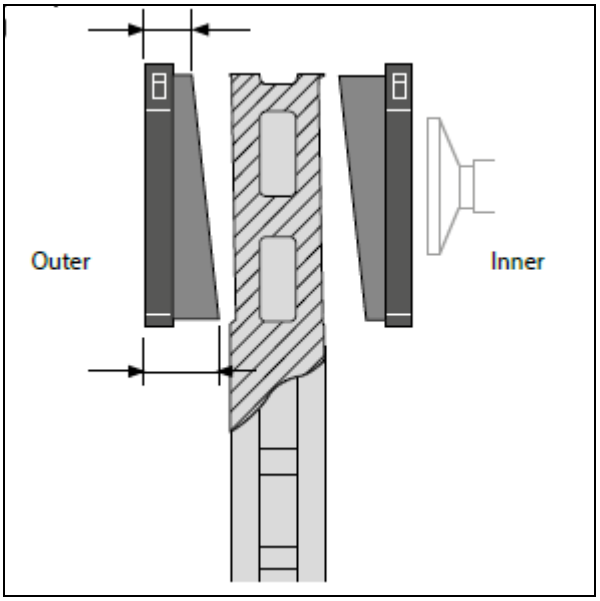


FIGURE 30: BRAKE PAD WITH EXAGGERATED TAPER WEAR

18.2.2 Wear Check of Disc

Measure the thickness of the brake disc at the thinnest point. Be aware of possible burring at the edge of the disc.

M= Total thickness of the brake disc

New condition = 1.77 in (45 mm)
Worn condition = 1.457 in (37 mm) (the disc must be replaced).
If the disc dimension M ≤ 1.535 in (39 mm) or N≤ 0.039 in (1 mm), it is recommended that the disc should be renewed when the brake pads are changed.

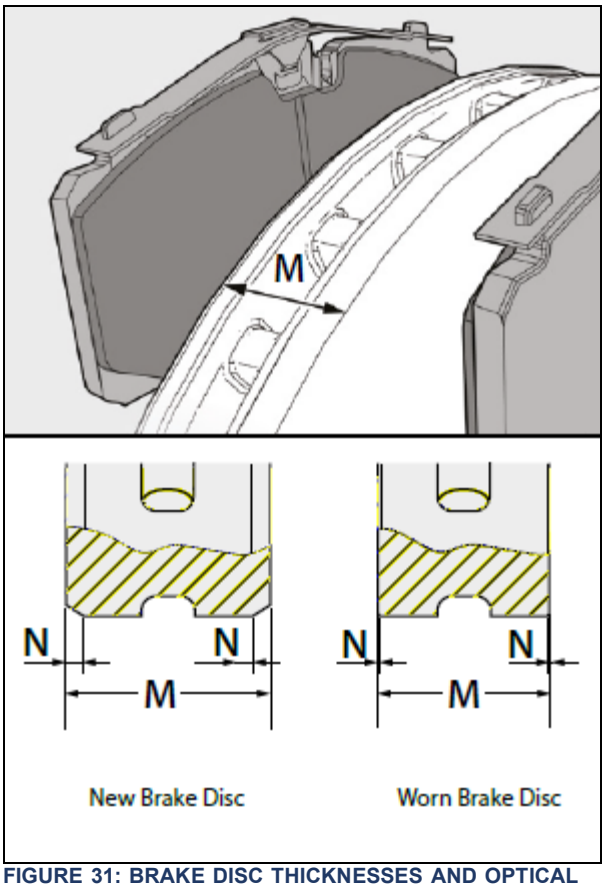


**FIGURE 31: BRAKE DISC THICKNESSES AND OPTICAL WEAR INDICATOR**

Check the discs per axle at each change of pads for grooves and cracks. If necessary, replace the disc.

The figure shows possible surface conditions of the brake disc.

A1 = Small cracks spread over the surface are allowed.

B1 = Cracks less than 0.059 in (1.5 mm) deep or wide, running in a radial direction are allowed.

Cracks to a max. length of 0.75 x 'a' are allowed (a = width of the friction ring).

C1 = Unevenness of the disc surface less than 1.5 mm deep is allowed.

D1 = Cracks going through to the cooling duct or onto the inner or to the outer edge of the friction ring are not allowed and the disc MUST BE REPLACED.

The photograph shows a real-life example of such cracks and wear grooves.

***Note:***
*In case of surface conditions A1, B1 or C1, the disc can continue to be used until the minimum thickness A = 37 mm is reached.*

Knorr-Bremse discs are normally service-free and grinding when changing pads is not necessary. However, grinding could be useful, e.g. to increase the load-bearing surface of the pads after severe grooving on the entire friction surface has occurred. To meet safety requirements, the minimum thickness after machining must be greater than 39 mm.

In addition, the recommendations of the vehicle manufacturer about the machining of the brake disc MUST be followed.

**WARNING**

Grinding of splined disc is not allowed.

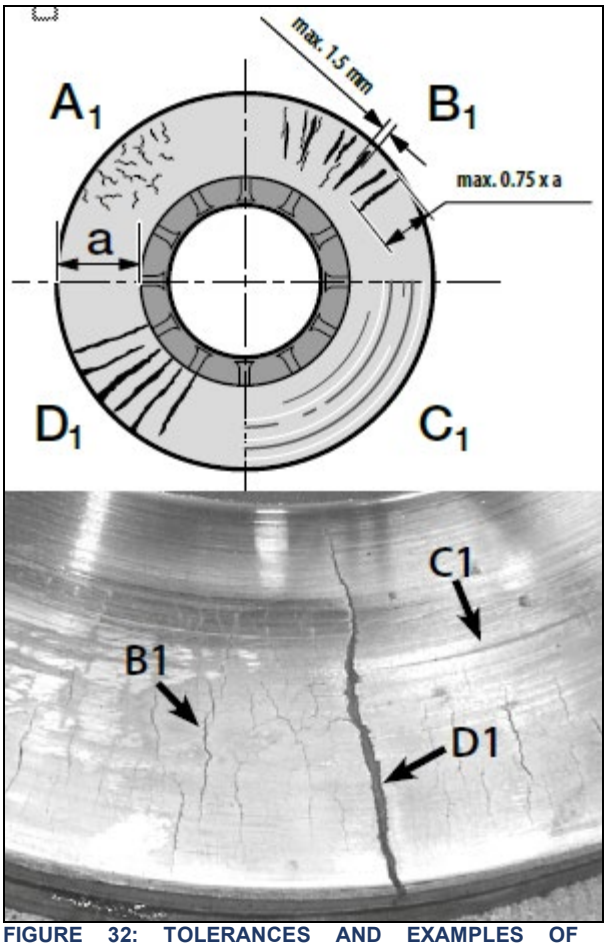


**FIGURE 32: TOLERANCES AND EXAMPLES OF CRACKS AND GROOVES**

18.2.3 Wear Check of Pads/Disc – Drive Axle Equipped With a Rubber Bushing and Exposed Guide Pin

The pads/disc wear can be visually determined without removing the wheel by checking the position of the caliper (1) compared to the fixed guide pin (4).

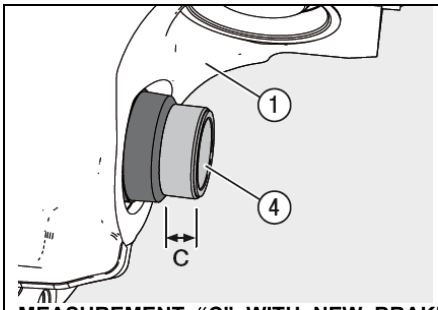


**MEASUREMENT "C" WITH NEW BRAKE PADS AND DISC**

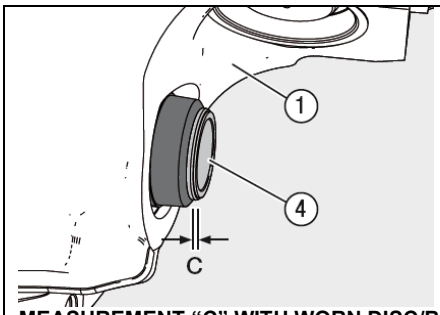


**MEASUREMENT "C" WITH WORN DISC/BRAKE PADS**

**FIGURE 33: BRAKE PAD WEAR CHECK ON THE DRIVE AXLE**

If measurement "C" is less than 0.039" (1 mm), this condition requires a check of the brake pad thickness and the brake disc with the wheel removed. If any minimal tolerance limits have been reached, the pads and/or disc must be changed.

18.2.4 Wear Check of Pads/Disc – Front and Tag Axle – Equipped With Visual Wear Indicator

The condition of the pads can be checked without removing the wheel by checking the position of the caliper compared to the tip of the wear indicator or carrier depending on vehicles.

In one variant of the visual wear indicator (Figure 34), if the side of the caliper (flat surface around guide pin cap) lines up with the tip of the wear indicator (i.e. measurement A would be 0.0 in), the brake pad thickness and the brake disc must be checked with the wheel removed. If any minimal tolerance limits have been reached, the pads and/or disc must be changed.

Alternately, brake pad wear can be checked using carrier to caliper position. When points "P" and "R" align the brake pad thickness and brake disc must be checked with the wheels removed (FIGURE 35). If any minimal tolerance limits have been reached, the pads and/or disc must be changed.

Refer to ***Knorr-Bremse Pneumatic Disc Brake Y006471 Service***.

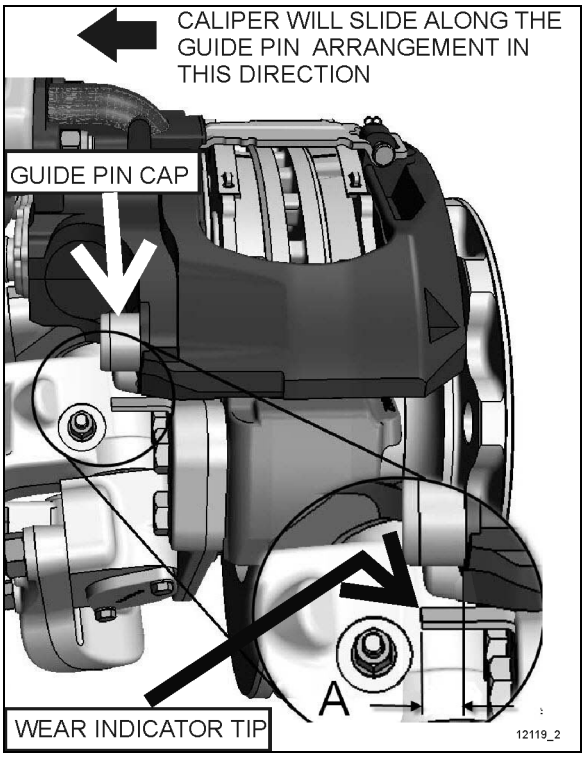


**FIGURE 34: BRAKE PAD WEAR CHECK ON THE FRONT AND TAG AXLE** 12119

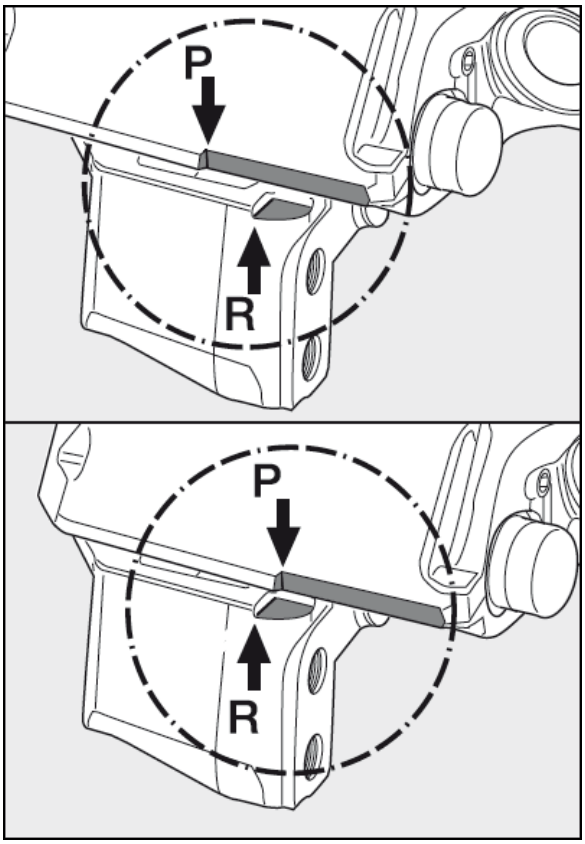


FIGURE 35: PAD WEAR CHECK FRONT AND TAG AXLE

18.2.5 Continuous Wear Sensor option

Some vehicles have a potentiometer installed directly on the brake caliper.

Wear percentage can be consulted via the DID. Access the « Brake Lining Remaining » MENU

**Front axle** wear sensors are connected to multiplex module **A44**.

**Right hand** (curbside) wear sensors for both rear axles are connected to **A50**

**Left hand** (road side) wear sensors for both rear axles are connected to **A51**

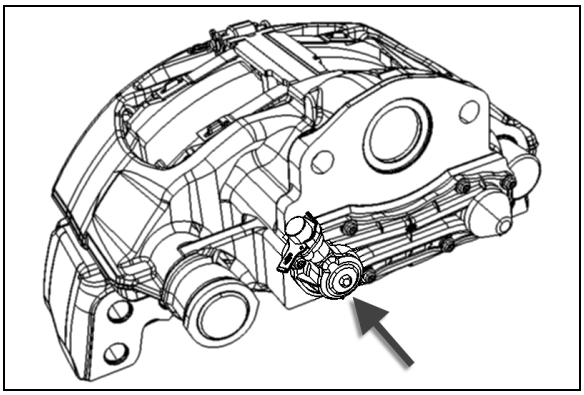

**FIGURE 36: POTENTIOMETER**

18.2.6 Checking Correct Functioning of the Adjuster / Checking That Caliper Operates Smoothly Over Its Full Range of Movement

1. Before starting work, ensure that the wheels are chocked and the vehicle cannot roll away.
2. Ensure that service brake and parking brake are in the released condition.
3. Check the supply pressure of the brake system. Connect an additional external supply to prevent pressure drop.
4. Jack up the axle and remove the wheel.
5. Check the brake disc temperature, it should be between 14°F and 122°F (-10°C and 50°C).

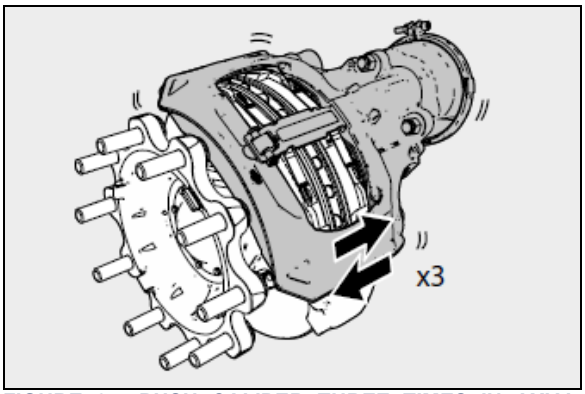


FIGURE 37: PUSH CALIPER THREE TIMES IN AXIAL DIRECTION

6. Push and pull caliper three times in axial direction to assess any existing air gap (see Figure 37. If no movement is possible, clean the disc brake and if necessary, replace the bearings. Once movement is obtained, continue as follows:

7. Pull off the adjuster cap (37) using the tag, taking care not to lose the shear adapter (61) (see Figure 38).

*Removal of the adjuster cap (37) with a screwdriver, or similar, is not allowed since the seal may be damaged.*

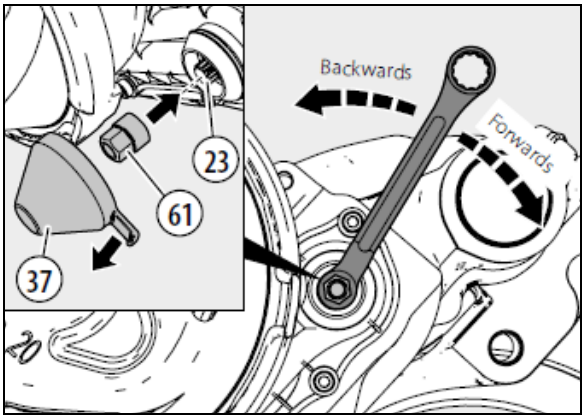


FIGURE 38: REMOVE CAP, INSERT NEW BRAKE PADS, SET THE STARTING GAP

8. Insert new brake pads.

9. Set the starting gap by turning the adjuster (23) with the shear adapter (61) backwards and then forwards (note that when turning backwards a noticeable clicking can be heard and felt), until a value of 0.051 in (1.3 mm) air gap has been achieved (measure between the brake pad and tappets (13).

10. Apply the brakes 20x with medium pressure.

11. Check the gap between each of the tappets (13) and inboard pad backplate (12). This must be measured over the whole tappet surface of both tappets using two feeler gages simultaneously (feeler gages must be at least 8 ½ in / 220 mm long) (see Figure 39).

12. If the gap difference between the two tappets is > 0.009 in / 0.25 mm **then the caliper bearing clearance must be checked** *(see 18.2.7 Caliper check - Caliper Running Clearance & 18.2.8 Caliper check - Caliper Movement Along Guide Pins)*.

13. In addition, each gap must measure between 0.023 - 0.047 in (0.6 - 1.2 mm).

*If the clearance is too great, there is a danger of brake failure. If the clearance is too small, there is a danger of overheating that may lead to consequential damage.*

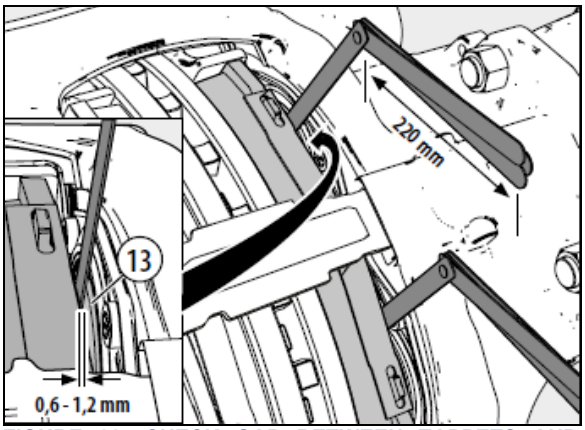


FIGURE 39: CHECK GAP BETWEEN TAPPETS AND INBOARD PAD

**If the air gap is larger than 0.047 in / 1.2 mm, the adjuster must be checked as follows:**

14. Turn the adjuster with adapter (61) **3 clicks** anticlockwise (increasing the air gap) (see Figure 40).

*Make sure the ring spanner or socket can turn freely clockwise during the following procedure.*

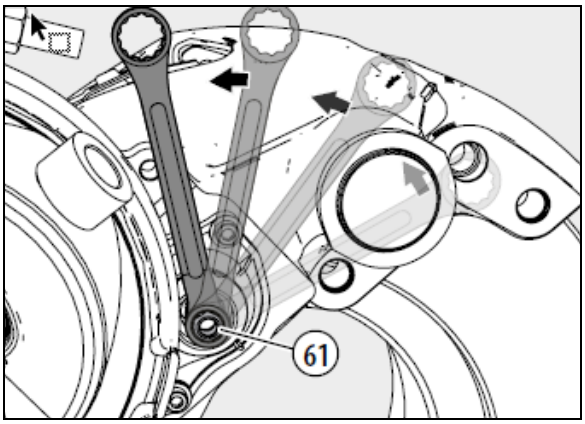


FIGURE 40: TURN ADAPTER 3 CLICKS ANTICLOCKWISE

15. As a visual aid, position a ring spanner or socket onto the adjuster (including Adapter (61)) as shown. Apply the brakes 5 to 10 times, the spanner or socket should turn clockwise (viewed from actuator side) in small increments if the adapter is functioning correctly (see Figure 41 and note below).

*Note: As the number of applications increases, incremental movement of the ring-spanner or socket will decrease.*

*If the spanner or socket does not turn or turns only with the first application or turns forward and backward with every application, the automatic adjuster has failed and the caliper must be replaced.*

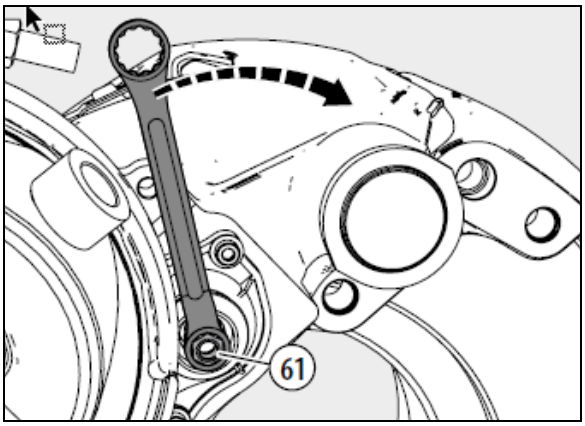


FIGURE 41: APPLY THE BRAKE 5-10 TIMES, SPANNER TURNS CLOCKWISE

16. If necessary, clean the contact area of the cap. Lightly grease the contact surface of the cap with white grease. The tag of the adjuster cap (37) should be positioned as shown by the arrow in the adjacent figure. This ensures access is maintained for subsequent removal (see Figure 42).

*Note: A new adjuster cap (37) should be fitted even if the brake pads are not being replaced.*

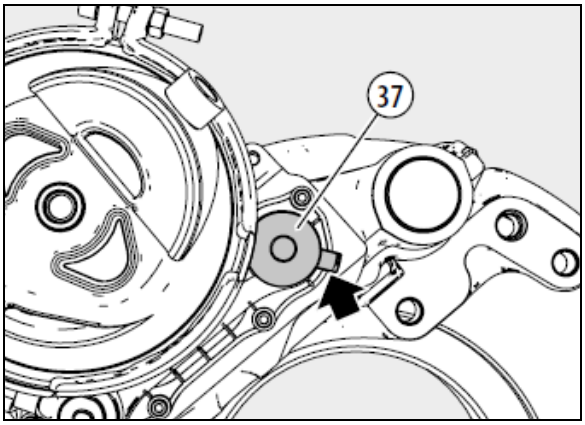


FIGURE 42: TAB POSITIONING OF THE CAP

**If the air gap is smaller than 0.023 in / 0.6 mm, the parameters and functions must be checked as follows:**

17. Check functioning of the brake actuator.

18. Remove brake actuator.

19. Check position of the lever (19) inside the caliper in its released state (see arrow).

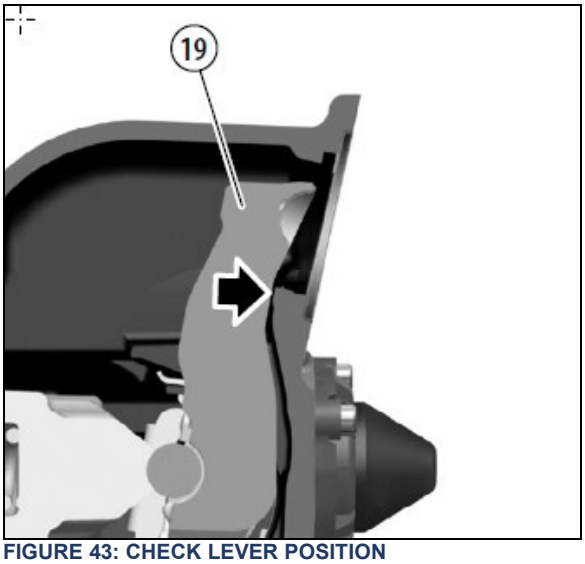


FIGURE 43: CHECK LEVER POSITION

20. Remove brake pads (12). If necessary, remove dirt from brake pads, caliper and carrier.

-Check brake pads for wear from the tappets and if necessary replace brake pads.

- Check for abnormal wear of the contact areas of the carrier. If necessary, replace the carrier.

21. Check the brake disc.
22. Check caliper running clearance (see 18.2.7 & 18.2.8).
23. Fit the brake pads.
24. Fit the brake actuator.
25. Recheck the adjuster (see 18.2.6).

If the air gap is still smaller than 0.6 mm between both tappets, the brake caliper must be replaced.

### 18.2.7 Caliper check - Caliper Running Clearance

The Knorr Bremse air disc brake is designed to move freely, with minimal force.

1. Before starting work, ensure that the wheels are chocked and the vehicle cannot roll away.
2. Ensure that service brake and parking brake are in the released condition.
3. By pushing and pulling the caliper in an axial direction by hand (see arrows in Figure 44), a movement of 0.6 - 1.1 mm must be possible.

If, even using a high level of hand pressure (no tools), the caliper is not moveable, the caliper guide pin seals must be further examined (see 18.2.10 & 18.2.11).

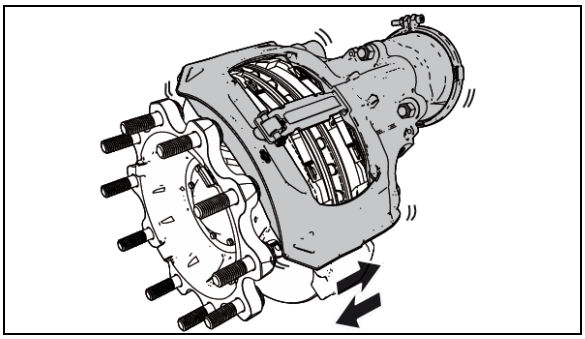

Figure 44: running clearance

### 18.2.8 Caliper check - Caliper Movement Along Guide Pins

1. With the open bearing variant (6b), clean the protruding area of the guide pin (4b) from outside of the caliper and if necessary remove any light corrosion using an emery cloth.
2. Lightly apply grease to the protruding area of the guide pin (4b).
3. Remove brake pads.
4. Fully wind back the tappets (13) using a ring spanner and shear adapter (61) (see Figure 45).

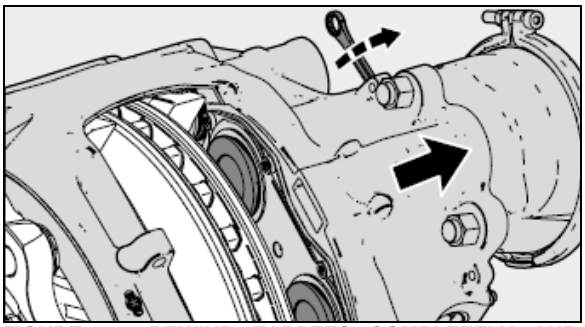

**FIGURE 45: REWIND TAPPETS COMPLETELY AND PUSH CALIPER IN DIRECTION OF MIDDLE OF VIEW**

5. Push caliper inboard towards vehicle's center (see Figure 46).




**FIGURE 46: FREE GUIDE PIN OF DIRT**

6. With both open bearing variants (6a and 6b), clean guide pin (4a or 4b) from the inner area of the caliper, removing any dirt or corrosion.
7. Lightly apply grease to guide pin (4a or 4b).
8. Caliper (1) must slide freely along the whole length of the guide pin arrangement; movement should be greater than 0.984 in / 25 mm. (see Figure 47).

If the caliper does not move at least 0.984 in / 25 mm, the caliper guide pin seals must be examined *(see 18.2.10 & 18.2.11)*.

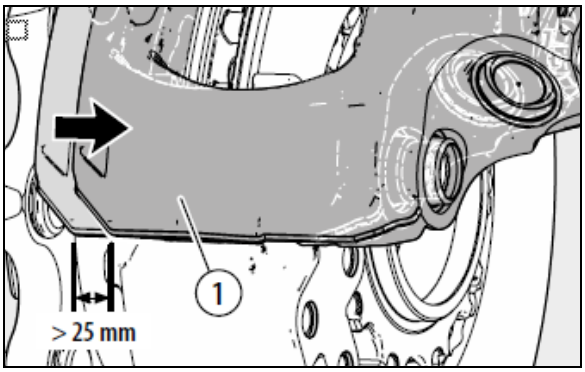


**FIGURE 47: FREE MOVEMENT OF CALIPER > 0.984 IN / 25 MM**

### 18.2.9 Clearance Measurement Check of Bearing Variants (6)

***Note:*** *Before commencing (removing the wheel), make sure there is no contact between caliper and axle, vehicle, chassis sections or carrier. In such cases, it will be necessary to replace the caliper bearings (see Knorr-Bremse Pneumatic Disc Brake Y006471 Service Manual.).*

To measure the clearance, the following steps must be taken:

1. Remove the wheel.
2. Remove pad retainer.

To achieve the correct reading it is necessary to have a pair of new brake pads fitted. If the clearance measuring is not taking place during a brake pad replacement, the current position of the assembled pads must be noted before removing, so that they can be re-assembled in the same position.

Remove old pads and replace with a pair of new pads.

3. Fasten a magnetic dial-gage holder to the carrier (2) on the floating bearing side of the caliper (1). Use the casting tag on the caliper (1) as the measuring point - see arrows A (see Figure 48).
4. Set the dial gage to zero.
5. Place a suitable tool (e.g. screwdriver with at least 200 mm in length) in a central position between carrier (2) and caliper (1) and lever them in opposite directions (using normal hand-force).
6. Read the maximum value of the bearing clearance on the dial gage and compare with the values in the table (see Table).

If the clearance exceeds the given tolerance, the complete bearing will need replacing using the relative service kit.

If the clearance measuring is not taking place during a brake pad replacement, the new pads should be removed and the previously marked brake pads fitted in their original positions, otherwise renew the brake pads as an axle set and adjust the air gap (*refer to* ***Knorr-Bremse Pneumatic Disc Brake Y006471 Service Manual***).

7. Fit the wheels. After replacing the wheel check that it runs interference free.

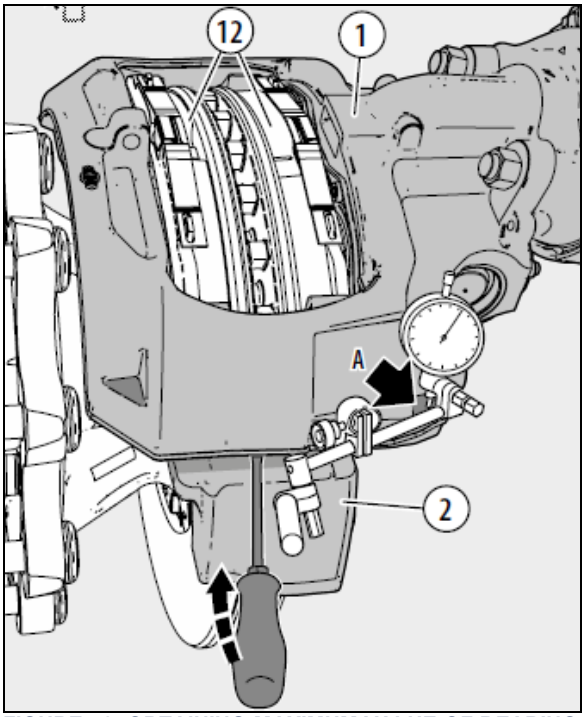


**FIGURE 48: OBTAINING MAXIMUM VALUE OF BEARING CLEARANCE**

| Bearing variants (6) | Max. bearing clearance |
|---|---|
| 6a Rubber Bush | 2 mm |
| 6b Open Bearing | 2 mm |
| 6c Guide Sleeve | 1 mm |
| 6d Capped Rubber Sleeve | 2 mm |
| 6e Guide Sleeve | 1 mm |

Maximum bearing clearance tolerances of bearing variants

### 18.2.10 Checking Sealing Elements – Caliper Guide Pin Seals

The guide pin (5a or 5b) (as fitted to the fixed bearing side) is sealed with cover (10a or 10b) and inner boot (9a or 9b).

The floating bearing side with guide pin (4c, 4d or 4e) is sealed with inner boot (9c, 9d or 9e) and with cover (68c 68d or 68e). All variants (9), (10) and (68) must be free of any signs of damage (see Figure 49).

Check for correct location and fitting.

If necessary, remove pads (12) to inspect the inner boots (9).

If necessary, repair caliper with suitable service kit.

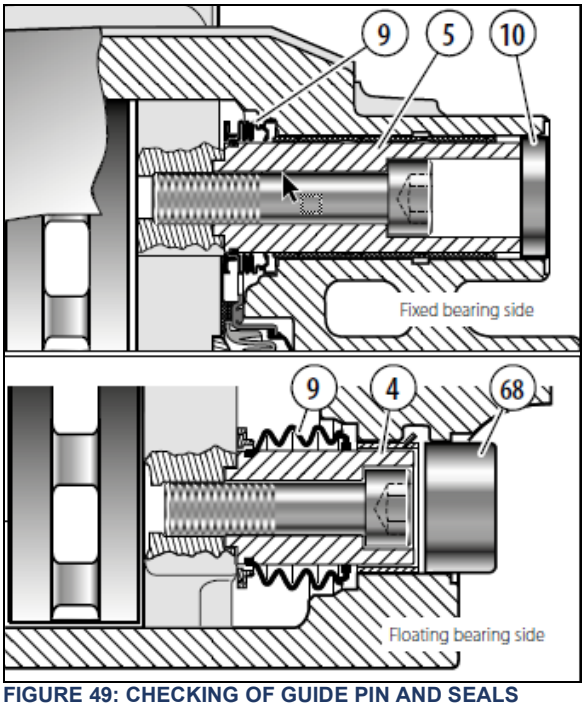


FIGURE 49: CHECKING OF GUIDE PIN AND SEALS

### 18.2.11 Checking Sealing Elements – Tappet and Boot Assemblies

Remove pads (12) (*refer to* ***Knorr-Bremse Pneumatic Disc Brake Y006471 Service Manual***).

Screw out the tappets (13) using the shear adapter (61) clockwise until the boots are clearly visible (see Figure 50).

***The tappets must not be extended more than 1.181 in / 30 mm, otherwise synchronization is lost and the caliper must be replaced.***

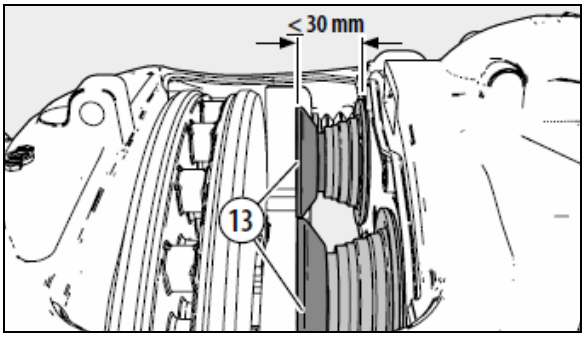


FIGURE 50: SCREW OUT TAPPETS - MAX. 1.181 IN / 30 MM

The rubber boots on the tappets (13) must not have any cuts/tears or show any other signs of damage. Check for correct location and fitting.

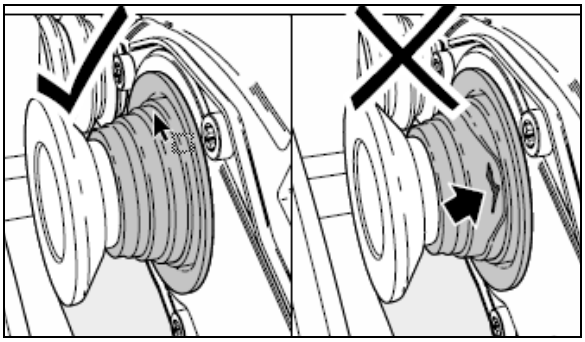

FIGURE 51: CHECK RUBBER BOOTS FOR DAMAGE

*Note: The penetration of dirt and moisture into the brake will lead to corrosion and impair the function of the clamping mechanism and wear adjuster.*

If necessary replace tappet and boot assemblies (*refer to* ***Knorr-Bremse Pneumatic Disc Brake Y006471 Service Manual)***.

## 18.3 PAD REPLACEMENT

Brake pad replacement procedure has slightly changed with the introduction of the new N2G adjuster on the vehicles.

*The full wording of the processes is included in the latest Knorr-Bremse service manual.*

*Refer to* ***Knorr-Bremse Pneumatic Disc Brake Y006471 Service Manual****.*

After fitting new pads,

1. Turn the adjuster (thru shear adapter) clockwise ↻ until the pads come into contact with the disc.

2. Then turn back the adjuster counter-clockwise ↺ **three "clicks"** and check the caliper running clearance.
   - During the turning of the adjuster, you will notice a changed clicking noise. It is not caused by a defect of the mechanism.
   - Also the "feel" during the rotation of the adjuster and the position of the spanner after the 3 clicks has changed.

Depending on the age of the vehicle, it may have installed on it two different design levels of disc brake and so there may be 2 different clicking noises and final positions of the adjuster on the vehicle.

## 19. SAFE SERVICE PROCEDURES

Most recently manufactured brake linings no longer contain asbestos fibers. Instead of asbestos, these linings contain a variety of ingredients, including glass fibers, mineral wool, aramid fibers, ceramic fibers, and carbon fibers. At present, OSHA (Occupational Safety and Health Administration) does not specifically regulate these non-asbestos fibers, except as nuisance dust. Medical experts do not agree about the potential long-term risks from working with and inhaling non-asbestos fibers. Nonetheless some experts think that long-term exposure to some non-asbestos fibers could cause diseases of the lung, including pneumo-coniosis, fibrosis, and cancer. Therefore, lining suppliers recommend that workers use caution to avoid creating and breathing dust when working on brakes that contain non-asbestos fibers.



**WARNING**

Whenever possible, work on brakes in a separate area away from other operations.

Always wear a respirator approved by NIOSH (National Institute of Occupational Safety and Health) or MSHA (Mine Safety and Health Administration) during all brake service procedures. Wear the respirator from removal of the wheels through assembly.



**WARNING**

NEVER use compressed air or dry brushing to clean brake parts or assemblies. OSHA recommends that you use cylinders that enclose the brake. These cylinders have vacuums with high efficiency (HEPA (Health and Environment Protection Agency)) filters and workman's' arm sleeves. If such equipment is not available, carefully clean parts and assemblies in open air.

During disassembly, carefully place all parts on the floor to avoid getting dust into the air. Use an industrial vacuum cleaner with a HEPA filter system to clean dust from the brake drums, backing plates and other brake parts. After using vacuum, remove any remaining dust with a rag soaked in water and wrung until nearly dry.

If you must grind or machine brake linings, take additional precautions, contact with fiber dust is higher during these operations. In addition to wearing an approved respirator, do such work in an area with exhaust ventilation.

When cleaning the work area, NEVER use compressed air or dry sweeping to clean the work area. Use an industrial vacuum with a HEPA filter and rags soaked in water and wrung until nearly dry. Dispose of used rags with care to avoid getting dust into the air. Use an approved respirator when emptying vacuum cleaners and handling used rags.

Wash your hands before eating, drinking or smoking. Do not wear your work clothes at home. Vacuum your work clothes after use and then launder them separately, without shaking, to prevent fiber dust from getting into the air.

Material safety data sheets on this product, as required by OSHA, are available from Rockwell and Knorr-Bremse.

## 20. AIR BRAKE TROUBLESHOOTING

The following tests and check lists have been designed to identify the cause(s) of a sluggish performance and/or leaks in the system. These tests require very little time to perform, and give you a general idea of the system condition. Each test is provided with a corresponding check list

which will guide you to the most common causes of problems.

Before performing any test, check all air lines for kinks or dents, and hoses for signs of wear, drying out or overheating.

**WARNING**

When working on or around brake system and its related components, the following precautions should be observed:

Always block vehicle wheels. Stop engine when working under a vehicle. Keep hands away from chamber push rods and adjusters as they may apply when system pressure drops.

Never connect or disconnect a hose or line containing air pressure. It may whip as air escapes. Never remove a component or pipe plug unless you are sure all system pressure has been depleted.

Never exceed recommended air pressure and always wear safety glasses when working with air pressure. Never look into air jets or direct them at anyone.

Never attempt to disassemble a component until you have read and understood the recommended procedures. Some components contain powerful springs and injury can result if not properly disassembled. Use only proper tools and observe all precautions pertaining to the use of those tools.

Always clean connecting piping and/or fittings, and coat pipe threads with Teflon pipe sealant before installing any air brake system component.

**Pressure Build-Up / Low Pressure Warning / Cutoff Point / Air Filter/Dryer Built-in Governor Cutout**

CONDITION: Vehicle leveled, parking brake applied.

1. Completely drain wet, primary and secondary air reservoirs only.
2. Start engine and run at fast idle. Low pressure warning lights should be *"On"*.
3. Start checking pressure at 50 psi (344 kPa).
4. Low pressure warning lights and buzzer should go off at or above 85 psi (415 kPa).
5. At 85 psi (586 kPa), run engine at full rpm, then check that build up time to 100 psi (690 kPa) is 13 seconds or less.
6. Air filter/dryer built-in governor cut-out. Cuts out at the correct pressure of 140 psi (965 kPa).
7. Air filter/dryer built-in governor cut-in. Cuts in around 122 psi (841 kPa).

For common corrections, refer to the following check list:

**High or Low Warning Cutoff Point**

- Perform a telltale light and gage test. Replace entire cluster if found defective.

**High or Low Air Filter/Dryer Built-in Governor Cutout Point**

- Perform a telltale light and gage test. Replace entire cluster if found defective.

OR

- Repair or replace air filter/dryer as necessary after checking that compressor unloader mechanism operates correctly.

**More than 13 seconds to build-up pressure from 85 to 100 psi (585 - 690 kPa) at full engine RPM**

- Perform a telltale light and gage test. Replace entire cluster if found defective.
- Check compressor strainer or inlet line. If restricted, clean or replace element or faulty line.
- Check compressor head or discharge line for carbonization or restriction. Clean or replace as necessary.
- If discharge valves leak, pull head and correct or replace cylinder head.
- If drive is slipping, replace gear.
- If inlet valves are stuck, open or leaking severely, replace unloader kit, inlet valves and/or seats as necessary.
- If drain cock is found open, close it.
- Listen for air leaks and repair.
- Redo list to check all items repaired or replaced.

**Air Supply Reservoir Leakage**

CONDITION**:** Full pressure, engine stopped, parking brake applied

1. Allow at least 1 minute for pressure to stabilize.
2. Stop engine, then check air pressure gage for 2 minutes. Note any pressure drop.
3. Pressure should not drop by more than 3 psi (20 kPa) per minute.

For common corrections, refer to the following check list:

Excessive air loss:

- With the primary air system at normal operating pressure 122-140 psi (841- 965 kPa), coat all air line connections and pneumatic components with a water and soap solution. Bubbles will indicate an air leak, and none should be permissible. Repair or replace defective parts.
- Listen for leaks and correct as required.
- Redo test to check all items repaired or replaced.

**Brake System Air Leakage**

CONDITION**:** Full pressure, engine stopped, parking brake released.

1. Apply service (foot) brakes, allow at least 1 minute for pressure to stabilize.
2. Hold down foot valve for 1 minute while observing air pressure gage on the dashboard.
3. Pressure drop should not be more than 3 psi (20 kPa) per minute.

For common corrections, refer to the following check list.

**Excessive leakage on brake service side:**

- With the primary air system at normal operating pressure 122-140 psi (841- 965 kPa) and foot brake applied, coat all air line connections and brake pneumatic components with a water and soap solution. Bubbles will indicate an air leak, and none should be permissible. Repair or replace defective parts.
- Listen for leaks and correct as required.
- Redo test to check all items repaired or replaced.

## 21. BRAKE AIR CHAMBER

This vehicle uses “Knorr-Bremse” brake chambers on all axles. The drive axle chambers consist of two separate air chambers, each having its own diaphragm and push rod. They are used as a service brake chamber, an emergency brake in case of air pressure loss and a spring-applied parking brake. Refer to **FIGURE 52**.

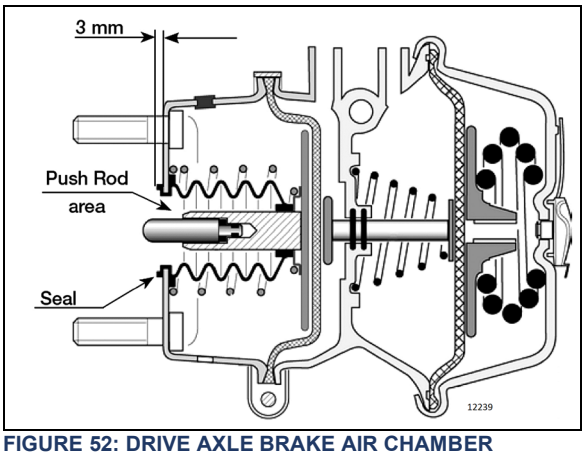


**FIGURE 52: DRIVE AXLE BRAKE AIR CHAMBER**

The front and tag axle brake air chambers are used only for service brake duty (FIGURE 53).

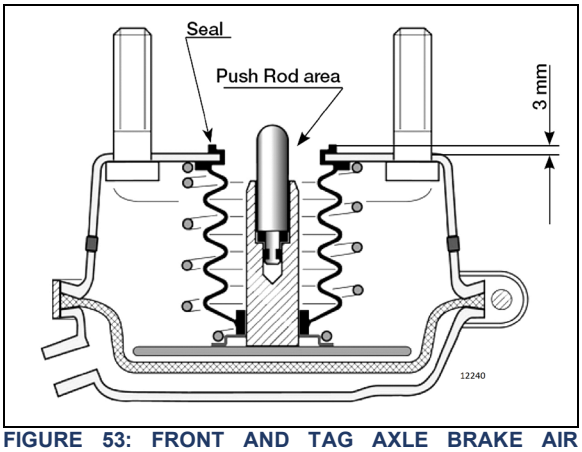


**FIGURE 53: FRONT AND TAG AXLE BRAKE AIR CHAMBER**

### 21.1 MAINTENANCE

Every 6,250 Miles (10 000 km) or twice a year, whichever comes first depending on type of operation:

Check all hoses and lines. They should be secure and in good condition.

Every 100,000 Miles (160 000 km) or once a year, whichever comes first depending on type of operation:

1. Disassemble and clean all parts.
2. Install new diaphragm or any other part if worn or deteriorated.

| *NOTE* |
| --- |
| *When the diaphragm, spring, or both are replaced, they should be replaced in the corresponding chamber on the same axle.* |

3. Perform an airtightness test:

a) Make and hold a full brake application.

b) Coat clamping ring(s) with a soapy solution. If leakage is detected, tighten clamping ring only enough to stop leakage. ***Do not over-tighten*** as this can distort sealing surface or clamping ring. Coat area around push rod hole (loosen boot if necessary). No leakage is permitted. If leakage is detected, the diaphragm must be replaced.

## 21.2 EMERGENCY/PARKING BRAKE MANUAL RELEASE

**DANGER**

Never stand in the axis line of the spring brake chambers, especially when caging the spring.

**Drive Axle**

1. Block the wheels to prevent the vehicle from moving.
2. Remove the release stud tool from its storage place on drive axle brake air chamber.
3. Remove the access plug from the end of the spring chamber, and then insert the release stud through the opening. Turn the release stud 1/4 turn (clockwise) to anchor it into the spring plate. Install the flat washer and nut, and then turn the nut clockwise to cage the spring. Repeat on the opposite side.

**DANGER**

Make sure the release stud is properly anchored in spring plate receptacle prior to caging the spring.

4. To manually reset the emergency/parking brake, turn the nut counterclockwise. Reinstall access plugs on the spring chambers, and release stud tools in their storage places.

**Tag Axle**

1. Block the wheels to prevent the vehicle from moving.
2. Turn the release bolt counterclockwise to cage the power spring (approx. 2.5 inches (6 cm)). Repeat on the opposite side.
3. To manually reset the emergency/parking brake, turn the bolt clockwise.

## 21.3 BRAKE CHAMBER REMOVAL

**WARNING**

To prevent personal injuries, brakes should be inoperative prior to working on any of their components.

To prevent personal injuries, brake chambers should be made inoperative by releasing spring tension prior to disposal.

1. Block the wheels to prevent the vehicle from moving.
2. Safely support vehicle at the recommended body jacking points.
3. To gain access to a given brake air chamber, the corresponding wheel can be removed (refer to Section 13: *"Wheels, Hubs and Tires"*).
4. Exhaust compressed air from system by opening the drain valve of each reservoir.
5. For the drive and tag axles brake chambers, manually release spring brakes (refer to "*Emergency/Parking Brake, Manual Release"* procedure in this section).
6. Disconnect air line(s) from brake chamber.
7. Remove the cotter pin connecting brake chamber and adjuster (drive axle).
8. Unbolt and remove the brake chamber from vehicle.

21.4 BRAKE CHAMBER INSTALLATION

Reverse removal procedure, and then check brake adjustment.

**CAUTION**

Always clean air lines and fittings, and coat pipe threads with Teflon pipe sealant before reconnecting air lines. Make sure the drain hole of the brake chamber is in the lower position for proper moisture evacuation.

21.5 BRAKE CHAMBER DISASSEMBLY

**DANGER**

Spring brake chambers, on drive and tag axles contain an extremely high compressive force spring, which can possibly cause serious injury if special precautions are not taken when working around this area.

To avoid such injury, the following recommendations must be applied:

- Prevost recommends the installation of a new spring brake chamber if it is found to be defective.
- Spring brake chamber maintenance and/or repair must be performed by trained and qualified personnel only.
- Before manually releasing spring brakes, visually check spring brake for cracks and/or corrosion.
- On “MGM” brake chambers (drive axle), make sure the release stud is properly anchored in spring plate receptacle prior to caging the spring.
- Never stand in the axis line of the spring brake chambers, especially when caging the spring.

**WARNING**

To prevent personal injuries, brakes should be inoperative prior to working on any of their components.

1. Block the wheels to prevent the vehicle from moving.
2. Safely support vehicle at the recommended body jacking points.

*NOTE*

*To gain access to a given brake air chamber, the corresponding wheel can be removed (refer to Section 13: "Wheels, Hubs and Tires").*

3. Exhaust compressed air from air system by opening the drain valve of each reservoir.
4. For the drive and tag axles brake chambers, manually release spring brakes (refer to “*Emergency/Parking Brake Manual Release"* procedure in this section).
5. Remove clamp ring, remove and discard the existing diaphragm. Install the new diaphragm squarely on body.
6. Reverse the procedure for assembly. Tap clamp ring to ensure proper seating. Check for proper operation before placing vehicle in service.

## 22. ANTI-LOCK BRAKING SYSTEM (ABS)

This system has been designed to ensure stability and permit steering control of vehicle during hard braking, and to minimize its stopping distance whatever the road conditions are. On slippery roads and generally in emergency situations, over-braking frequently induces wheel lock. The anti-lock braking system provides maximum braking performance while maintaining adequate steering control on slippery roads.

The ABS continuously monitors wheel behavior during braking. Sensors on each wheel of front and drive axles (tag axle is slave to drive axle) transmit data to a four channel electronic processor which senses when any wheel is about to lock. Modulator valves quickly adjust the brake pressure (up to 5 times per second) to prevent wheel locking. Each wheel is therefore controlled according to the grip available between its tire and the road.

With this device, the vehicle is brought to a halt in the shortest possible time, while remaining stable and under the driver's control.

Since the braking system has dual circuits, the ABS is also provided with a secondary system should a fault develop in the ABS. Anti-lock systems are a parallel system which does not hinder brake functioning in case of failure. Braking system functions in normal, non-anti-

lock controlled operation during ABS system failure.

The ABS system consists of two diagonally related circuits, only the half of the system which has sustained damage or other fault is switched off (i.e. wheels return to normal non-ABS braking). The other diagonal half remains under full ABS control.

| *NOTE* |
| --- |
| *ABS is active on service brake, transmission retarder, engine brake, but is inactive on emergency/parking brake.* |

| *NOTE* |
| --- |
| *The ABS system is inoperative at speeds under 4 mph (6 km/h). Illumination of ABS telltale indicator at these speeds is normal.* |

| **CAUTION** |
| --- |
| Disconnect the ECU or pull the ABS fuse before towing vehicle. |

## 22.1 TROUBLESHOOTING AND TESTING

For detailed information, troubleshooting and testing refer to Bendix booklet "*Bendix Service Data EC80 ESP Controller (SD-13-4986)"* found on the Technical Publications USB flash drive and web site.

## 22.2 ABS COMPONENTS

The main components of the ABS system are listed hereafter. Refer to each component for its specific function in the system and for proper maintenance.

## 22.3 BENDIX EC-80 CONTROLLER

This control unit, also known as ABS module, is located in the front electrical and service compartment. According to the data transmitted by the sensors (number of pulses/sec is proportional to the speed of each wheel), the electronic control unit determines which wheel is accelerating or decelerating. It then establishes a reference speed (average speed) from each wheel data, and compares the speed of each wheel with this reference speed to determine which wheel is accelerating or decelerating.

As soon as wheel deceleration or wheel slip threshold values are exceeded, the electronic control unit signals a solenoid control valve to limit the excessive brake pressure produced by the driver in the appropriate brake chamber.

### Maintenance

No specific maintenance is required. The ECU is not serviceable. When found to be defective, replace.

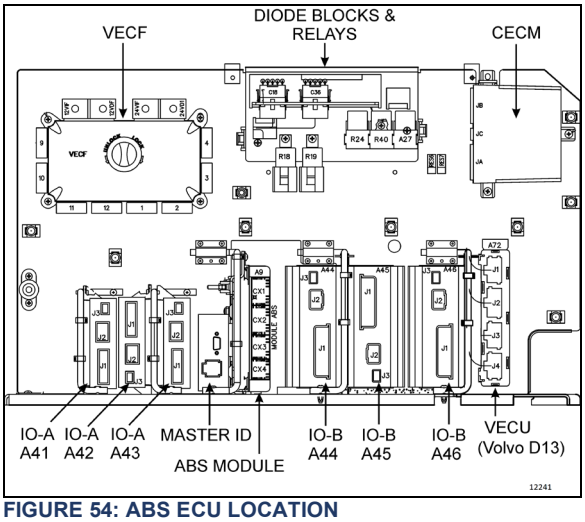


**FIGURE 54: ABS ECU LOCATION**

| **CAUTION** |
| --- |
| In order to protect the ABS electronic control unit from voltage surges, always disconnect before performing any welding procedure on vehicle. |

## 22.4 SENSORS

The sensors are mounted on the front and drive axle wheel hubs (Figure 55). The inductive sensors consist essentially of a permanent magnet with a round pole pin and a coil. The rotation of the toothed wheel alters the magnetic flux picked up by the coil, producing an alternating voltage, the frequency of which is proportional to wheel speed. When wheel speed decreases, magnetic flux decreases proportionately. Consequently, the electronic control unit will command the solenoid control

valve to decrease the pressure at the corresponding brake chamber.

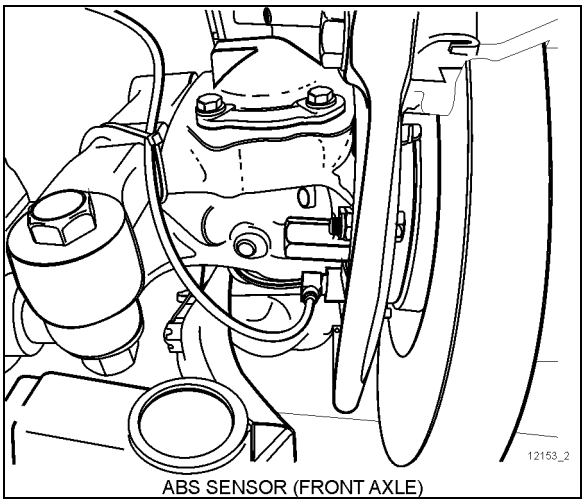


**FIGURE 55: ABS SENSOR LOCATION**

**Maintenance**

No specific maintenance is required for sensors, except if the sensors have to be removed for axle servicing. In such a case, sensors should be lubricated with special grease (Prevost #680460) before reinstallation. Refer to paragraph *"Sensor Installation"* for details.

| *NOTE* |
| --- |
| *The resistance value, when sensors are checked as a unit, must be equal to 1,75 kohms. To check the sensors for proper output voltage after the sensors and toothed wheels have been assembled to the axle, connect a suitable AC voltmeter across the output terminals. With the hubs rotating at 30 rpm, the output voltages should read from 50 to 1999 mV to be acceptable.* |

**Sensor Installation**

The following procedure deals with sensor installation on the axle wheel hubs. Read procedure carefully before reinstalling a sensor, as its installation must comply with operational tolerances and specifications.

1. Apply recommended lubricant (Prevost #680460) to spring clip and sensor.

| **CAUTION** |
| --- |
| Use only this type of grease on the sensors. |

2. Insert spring clip in the holder on hub. Make sure the spring clip tabs are on the inboard side of the vehicle. Push in until the clip stops.
3. Push the sensor completely inside the spring clip until it is in contact with the tooth wheel. Ensure mounting is rigid, as it is an important criterion for adequate sensor operation.

| *NOTE* |
| --- |
| *This installation should be of the "press fit" type.* |

22.4.1 Spring clip

The spring clip retains the sensor in its mounting bracket close to the toothed pulse wheel. The gap between the sensor end and teeth is set automatically by pushing the sensor in the clip hard up against the tooth wheel, and the latter knocks back the sensor to its adjusted position (Figure 56).

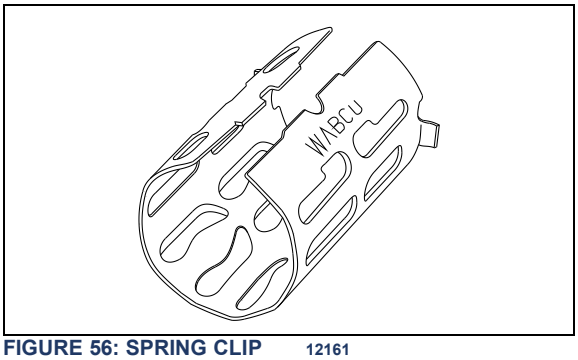


**FIGURE 56: SPRING CLIP** 12161

**Maintenance**

The spring clip requires no specific maintenance.

| **MAINTENANCE** |
| --- |
| **ABS & ELECTRONIC STABILITY CONTROL SYSTEMS**<br><br>Check the proper functioning of ABS and ESC systems at the intervals specified by the Lubrication And Servicing Schedule in Section 24: LUBRICATION & SERVICING. To do so, perform the "Component Test" using Bendix ACom Diagnostics software.<br><br>Bendix ACom Diagnostics software is available for download at www.bendix.com. |

## 23. BENDIX AUTOMATIC TRACTION CONTROL (ATC) – ELECTRONIC STABILITY CONTROL (ESC)

In addition to the ABS function, vehicle is equipped with a Traction Control System (TCS) feature. This feature is provided by the Bendix ESP EC-80 controller. Bendix refers to this feature as **Automatic Traction Control (ATC)**. Bendix ATC can improve vehicle traction during acceleration, and lateral stability while accelerating through curves. ATC utilizes **Engine Torque Limiting (ETL)** where the ECU communicates with the engine's controller and/or **Differential Braking (DB)** where individual wheel brake applications are used to improve vehicle traction.

The ESP EC-80 model controller also provides an ABS-based Electronic Stability Control (ESC) feature. Bendix refers to it as **ESC Electronic Stability Control**.

The Bendix ESC system is an ABS-based stability system that enhances vehicle stability by both reducing engine throttle and by applying vehicle braking based on actual vehicle dynamics

ESC stability system consists of Yaw Control (YC) and Roll Stability Program (RSP) features.

**DANGER**

**Bendix ESC system may reduce the vehicle speed automatically**.

ESC can make the vehicle **decelerate automatically.** ESC can slow the vehicle with or **without the operator applying the brake,** and **even when the throttle is being applied.**

**CAUTION**

Even with ESC-equipped vehicles, the driver remains responsible for ensuring vehicle stability during operation.

### 23.1 COMPONENTS

#### 23.1.1 EC-80 controller's ABS function

- Six (6) Bendix® WS-24™ wheel speed sensors. Each sensor is installed with a Bendix Sensor Clamping Sleeve;
- Five (5) Bendix® Pressure Modulator Valves (M-40QR);
- Dash-mounted vehicle ABS Indicator Lamp;
- Service brake relay valve;
- Dash-mounted trailer ABS Indicator Lamp.

#### 23.1.2 EC-80 controller's ATC function

- Drive axle traction control valve;
- TCS status/indicator icon in the DID;
- Dash-mounted TCS Mud/Snow switch;
- J1939 serial communication to engine control module.

#### 23.1.3 EC-80 controller's ESC/RSP function

- Front Axle Traction Control Valve integral to the service brake relay valve;
- Dash-mounted ESC status/indicator lamp;
- Bendix SAS-70 Steering Angle Sensor (mounted to the steering column);
- Bendix YAS-70 Yaw Rate/Lateral Acceleration Sensor (mounted to a cross member forward of the drive axle);
- Brake Demand Sensors (installed in the primary and secondary delivery circuits);
- An additional Modulator Valve (Bendix® M-40QR™ Pressure Modulator Valve) that controls pressure applied to the trailer brakes during system intervention.

### 23.2 BENDIX M-40QR PRESSURE MODULATOR VALVE

This Bendix M-40QR (quick release) Pressure Modulator Valve (PMV) is operated by the EC-80 controller to modify driver applied air pressure to the service brakes during ABS, ATC, RSP or YC activation. The PMV is an electro pneumatic control valve and is the last valve that air passes through on its way to the brake chamber. The modulator hold and release solenoids are activated to "modulate" or "control" the brake pressure during an antilock braking

event. The hold solenoid is normally open and the release solenoid is normally closed, such that the PMV nominally allows air to flow through. This design allows for air delivery to brake chambers in the event of electrical trouble. This is an *"On/Off"* type valve, i.e., during an antilock activity, the valve exhausts air from the brake chamber when in a ABS event, the electronic unit senses that the corresponding wheel speed is decreasing in relation to the other wheels.

The EC-80 controller also utilizes an additional PMV for control of the trailer service brakes during stability interventions.

**6s/5m Configuration**

Prevost vehicles utilize a 6 sensors/5 pressure modulator valves configuration, with the tag axle having two sensors, but only one Pressure Modulator Valve. In this case, the PMV controls both wheels on the tag axle. The tag axle wheels would receive equal brake pressure, based on the wheel that is currently experiencing the most wheel slip.

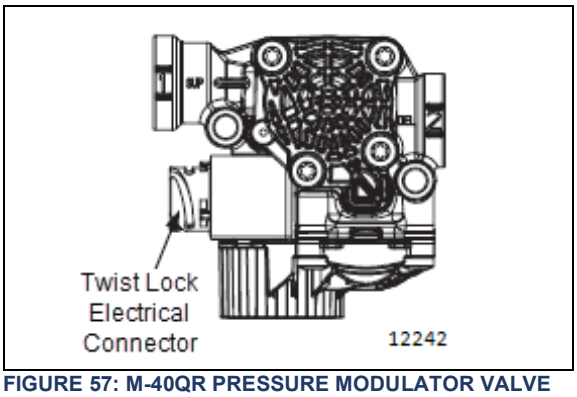


**FIGURE 57: M-40QR PRESSURE MODULATOR VALVE**

**Maintenance**

| *NOTE* |
|---|
| *On older vehicles, when replacing for the first time the older modulator valve M-32QR by the newer M-40QR modulator valve, it is important to replace both left and right valves on the vehicles drive axle or front suspension.*<br><br>*Modulator valve model can be easily identified by their different side cover and exhaust section.* |

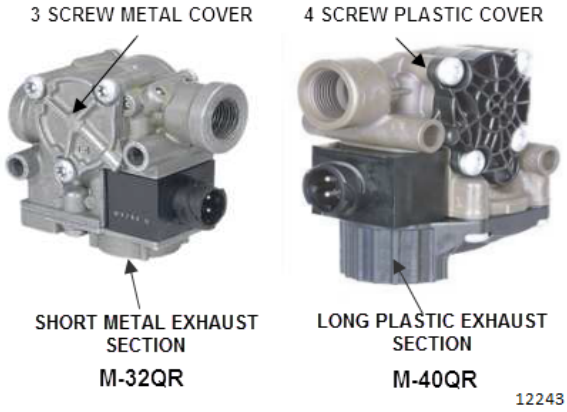


*Mixing valve type on the left and right sides of the vehicle may result in slight pull to one side when braking.*

Maintenance, removal and installation information of this valve is supplied in Bendix booklet, found on your Technical Publications USB flash drive, under reference number SD-13-4958.

## 23.3 ABS WITH ELECTRONIC STABILITY CONTROL (ESC)

**Overview**

Bendix ESC stability system reduces the risk of rollovers, jackknifing and other loss of control. ESC features include Roll Stability Program (RSP) and Yaw Control. During operation, the ECU of the Bendix ABS system constantly compares performance models to the vehicle's actual movement, using the wheel speed sensors of the ABS system, as well as lateral, yaw, and steering angle sensors. If the vehicle shows a tendency to leave an appropriate travel path, or if critical threshold values are approached, the system will intervene to assist the driver.

**Roll Stability Program**

Bendix RSP, an element of the overall ESC system, addresses rollover conditions. In the case of a potential roll event, the ECU will override the throttle and quickly apply pressure at all wheel ends to slow the vehicle. The level of braking application during an RSP event will be proportional to roll risk.

**Yaw Stability**

Yaw stability counteracts the tendency of a vehicle to spin about its vertical axis. During operation, if the friction between the road surface and the tires is not sufficient to oppose lateral (side) forces, one or more of the tires can slide, causing the vehicle to spin. These events are referred to as either an “under-steer” situation (where there is a lack of vehicle response to steering input due to the slide on the front axle) or an “over-steer” (where the vehicle’s rear end slides out due to tire slide on the rear axle) situation. Factors that influence yaw stability are: wheelbase, suspension, steering geometry, weight distribution front to rear, and vehicle track width.

**Yaw Control**

Yaw Control corresponds to a wide range of low to high friction surface scenarios including rollover, jackknife and loss of control. It is the recommended system for all power vehicles and especially critical for vehicles pulling trailers. In the case of vehicle slide (over-steer or under-steer situations), the system will reduce the throttle and then brake one or more of the “four corners” of the vehicle (in addition to potentially applying the trailer brakes), thus applying a counter-force to better align the vehicle with an appropriate path of travel.

For example, in an over-steer situation, the system applies the “outside” front brake; while in an under-steer condition, the “inside” rear brake is applied.

## 23.4 BENDIX® SAS-70 STEERING ANGLE SENSOR

The Steering Angle Sensor (SAS) is used to provide driver steering input to the controller. It reports the steering wheel position to the controller utilizing a dedicated serial communications link that is shared with the YAS-70 sensor. The controller supplies the power and ground inputs to the SAS-70 sensor.

The SAS-70 sensor installed on Prevost vehicles is the 90° connector.

### 23.4.1 Removal of the steering angle sensor

**Service Checks:**

1. Check all wiring and connectors. Some installations also include an intermediate connector from the steering angle sensor to the main vehicle wire harness. Make sure all connections are free from visible damage.
2. Examine the sensor. Make sure the sensor, its mounting screws, and the interface between the hub and the steering column are not damaged.

**Diagnostics:**

The steering angle sensor is only operational in conjunction with an EC-80 ECU. No independent diagnostics can be performed on the sensor.

**Removal:**

1. Remove steering column upper, middle and lower covers.
2. The steering angle sensor is located near the universal joint.
3. Unplug sensor cable assembly from body of sensor. Squeeze the mounting tabs and pull gently on connector until it disengages.
4. Disconnect steering column upper U-joint.
5. Unscrew all three of the mounting screws that hold the body of the sensor to the steering column body.
6. Slide the sensor over the column to remove. Take note if the sensor label is facing upward or downward.

**Installation:**

1. Obtain a new sensor. The sensor is not repairable in the field.
2. Slide the sensor over the column. The center hub of the sensor must be aligned with the corresponding notch in the column. The sensor label should be facing in the same direction as the removed sensor.

   **TORQUE: 9-12 lb-in (1.02-1.36 Nm)**
3. Reconnect the steering column U-joint.

   **TORQUE: 35-39 lb-ft (47-53 Nm)**
4. Reconnect the connector. Ensure that there will be no force applied to the sensor because the connector is pulling on the sensor body.
5. If the wire harness leading to the sensor is being replaced, ensure that it is adequately tie wrapped so that the full motion of the

steering column can be achieved without pulling apart the connectors.

6. Reinstall the steering column covers. The sensor is not protected against dirt or water intrusion, so care must be taken not to introduce these elements during installation.

### Steering Angle Sensor Calibration

The steering angle sensor calibration can only be achieved when the sensor is powered by the Advanced ABS ECU. No stand-alone sensor calibration can be carried out. The calibration procedure is performed using Bendix® ACom™ Diagnostic V4.0 or higher. See "Troubleshooting Diagnostic Trouble Codes: Steering Angle Sensor (SAS-70)" for the calibration procedure using this tool.

The sensor **must** be recalibrated after any of these situations:

- Replacement of the steering angle sensor;
- Any opening of the connector hub from the steering angle sensor to the column;
- Any maintenance or repair work on the steering linkage, steering gear or other related mechanism;
- Adjustment of the wheel alignment or wheel track;
- After an accident that may have led to damage of the steering angle sensor or assembly.

**WARNING**

If the steering angle sensor is not properly recalibrated as needed, the yaw control system may not function properly, which can result in incidents leading to loss of vehicle control.

## 24. FITTING TIGHTENING TORQUES

**NTA-Type Plastic Tubing:** Hand tighten nut. From that point, tighten using a wrench the number of turns indicated in the following chart.

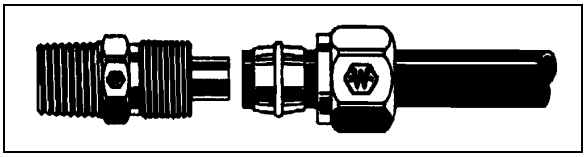

FIGURE 58: HOSE FITTING 12055

| Tubing diameter (inch) | Number of additional turns required following manual tightening |
|---|---|
| 1/4 | 3 |
| 3/8 to 1/2 | 4 |
| 5/8 to 3/4 | 3 ½ |

*NOTE*

*Use Loctite pipe sealant to seal pipe thread (Prevost number 680098).*

## 25. SPECIFICATIONS

**Air Compressor**
Make ..... Meritor Wabco
Model ..... SS636
Capacity (at 1250 rpm) ..... 37.4 cfm (1,059 $m^3$/min.)

**Air Dryer**
Make ..... Meritor Wabco
Model ..... System Saver
Cut in pressure ..... 122 psi
Cut-out pressure ..... 140 psi

**Flip-Flop Control Valve**
Make ..... Bendix
Model ..... TW-1
Type ..... On-Off

**Emergency/Parking Brake Control Valve**
Make ..... Bendix
Model ..... PP-1
Automatic release pressure ..... 60 psi (414 kPa) nominal

**Dual Brake Application Valve**
Make ..... Bendix
Model ..... E-10P

**Spring Brake Valve**
Make ..... Bendix
Model ..... SR-1

**Pressure Protection Valve**
Make ..... Bendix
Model ..... PR-4
Nominal closing pressure ..... 70 psi (482 kPa)
Prevost number ..... 641137

**Shuttle-Type Double Check Valve**
Make ..... Bendix
Model ..... DC-4

**Air Pressure Regulator**
Make ..... Norgren
Adjustable output range ..... 0-80/85 psi (0-552/586 kPa)

**Air Filter Element**
Make ..... Norgren
Type ..... With manual drain

**Front Axle Brake Chambers**
Make ..... Knorr-Bremse
Type ..... 24-inch

**Drive Axle Brake Chambers**
Make ..... Knorr-Bremse
Type .....24-inch as service -24-inch as emergency

**Tag Axle Brake Chambers**
Make ..... Knorr-Bremse
Type .....16-inch

**Brake Lining (All Axles)**
Make ..... Knorr-Bremse

## CONTENTS

**SECTION CHANGE LOG** ..... **3**

**1. TORQUE TABLES** ..... **4**

1.1 WHEEL NUTS ..... 4
1.2 TAG AXLE ..... 4
1.3 FRONT AXLE ..... 5
1.4 MERITOR DRIVE AXLE ..... 5
1.5 ZF A132 DRIVE AXLE ..... 6

**2. WHEELS** ..... **7**

2.1 H3-45 & X3-45 COACHES ..... 7
2.2 H3-45 VIP & X3-45 VIP MOTORHOMES ..... 7

**3. WHEEL MAINTENANCE** ..... **8**

3.1 INSPECTION ..... 8
3.2 SINGLE WHEEL REMOVAL ..... 8
3.3 SINGLE WHEEL INSTALLATION ..... 8

**4. DUAL WHEELS** ..... **9**

4.1 OUTER WHEEL REMOVAL ..... 9
4.2 INNER WHEEL REMOVAL ..... 9
4.3 INNER WHEEL INSTALLATION ..... 9
4.4 OUTER WHEEL INSTALLATION ..... 9
4.5 INSPECTION ..... 9

**5. ALUMINUM WHEEL ANTI-CORROSION PROTECTION (WITHOUT DURA-BRIGHT)** ..... **10**

**6. WHEEL STRAIGHTNESS TEST** ..... **11**

**7. WHEEL STUDS** ..... **12**

7.1 DRIVE AXLES WHEEL STUDS ..... 12
7.2 FRONT AND TAG AXLE WHEEL STUDS ..... 12

**8. HUB MOUNTED WHEELS** ..... **13**

8.1 CARE OF WHEELS ..... 13

**9. TAG AXLE WHEEL HUBS** ..... **14**

9.1 TAG AXLE HUB UNITIZED BEARING INSPECTION ..... 15
9.2 TAG AXLE HUB BEARING REMOVAL ..... 16
9.3 TAG AXLE HUB BEARING INSTALLATION ..... 18

**10. FRONT AXLE WHEEL HUBS** ..... **21**

10.1 FRONT AXLE HUB BEARING INSPECTION ..... 22
10.2 FRONT AXLE HUB BEARING REMOVAL ..... 22
10.3 FRONT AXLE HUB BEARING INSTALLATION ..... 23

**11. MERITOR DRIVE AXLE WHEEL HUBS** ..... **24**

11.1 BEARING CHECK/ADJUSTMENT ..... 24
11.2 DISASSEMBLY AND REPAIR ..... 24

**12. ZF DRIVE AXLE WHEEL HUBS** ..... **25**

12.1 COMPACT BEARING (HUB UNIT) AXIAL PLAY CHECK ..... 25
12.2 COMPACT BEARING (HUB UNIT) GREASE CHANGE ..... 25

**13. SPARE WHEEL ..... 26**

13.1 SUPER SINGLE TIRE REPLACEMENT ..... 26
13.2 PULLING OUT SPARE WHEEL ..... 27
13.3 CHANGING A FLAT TIRE (COACHES ONLY) ..... 28
13.4 CHANGING A FLAT TIRE (VIP & CONVERTED BUS SHELLS) ..... 28
13.5 SPARE WHEEL MAINTENANCE ..... 28

**14. VALVE INSTALLATION ..... 30**

14.1 TPMS SENSORS INSTALLATION ..... 31

**15. TIRE MAINTENANCE ..... 33**

15.1 INFLATION PRESSURE ..... 33
15.2 TIRE MATCHING ..... 35
15.3 WHEEL BALANCING ..... 35
15.4 TIRE ROTATION ..... 35

**16. SPECIFICATIONS ..... 36**

## SECTION CHANGE LOG

| | DESCRIPTION | DATE |
|---|---|---|
| 1 | | |
| 2 | | |
| 3 | | |
| 4 | | |
| 5 | | |
| 6 | | |

## 1. TORQUE TABLES

### 1.1 WHEEL NUTS

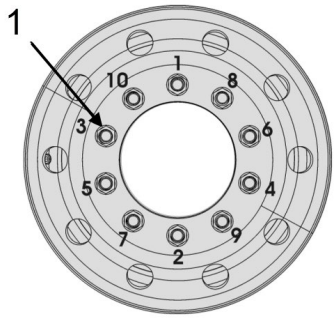


| WHEEL NUTS (ALL TYPES) – STEEL/ALUMINUM WHEELS | | |
|---|---|---|
| No | DESCRIPTION | TORQUE |
| 1 | Wheel nuts (M22x1.5 threads)* | 450-500 lb-ft (610-678 Nm) |

*Torque following sequence shown

### 1.2 TAG AXLE

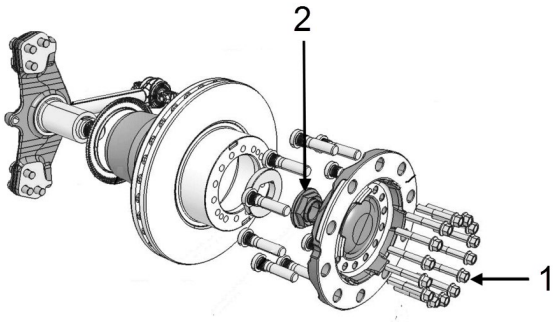


| TAG AXLE | | |
|---|---|---|
| No | DESCRIPTION | TORQUE |
| 1 | Tag axle hub flange cap screws | 161-197 lb-ft (218-267 Nm) |
| 2 | Tag axle hub nut | 563-687 lb-ft (763-931 Nm) |

## 1.3 FRONT AXLE

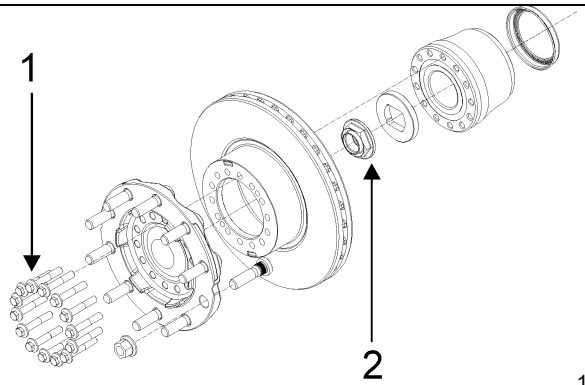


| FRONT AXLE | | |
|---|---|---|
| No | DESCRIPTION | TORQUE |
| 1 | Front axle hub flange cap screws | 174-192 lb-ft (236-260 Nm) |
| 2 | Front axle hub nut | 575-625 lb-ft (780-847 Nm) |

## 1.4 MERITOR DRIVE AXLE

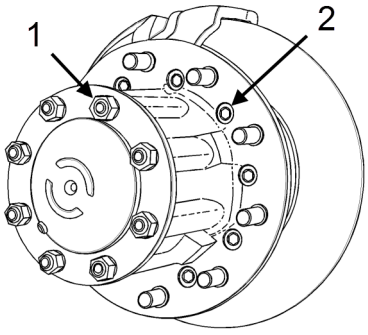


| MERITOR DRIVE AXLE | | |
|---|---|---|
| No | DESCRIPTION | TORQUE |
| 1 | Drive shaft flange nuts 5/8-18 | 150-230 lb-ft (203-312 Nm) |
| 2 | Hub to disc cap screws 9/16-18 | 110-165 lb-ft (149-224 Nm) |

## 1.5 ZF A132 DRIVE AXLE

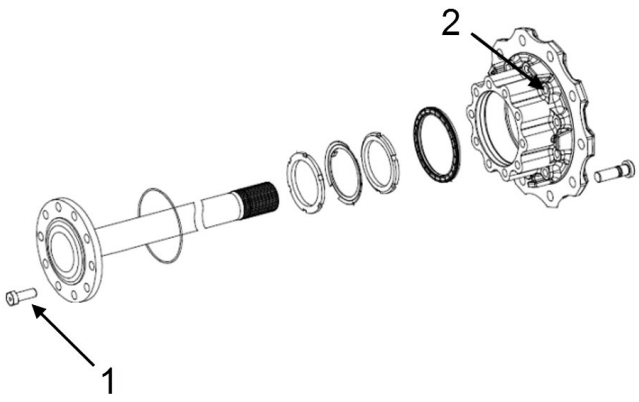


| ZF DRIVE AXLE | | |
|---|---|---|
| No | DESCRIPTION | TORQUE |
| 1 | Drive shaft flange bolts cap screw M18x1.5x50mm G10.9 | 325 lb-ft (441 Nm) |
| 2 | Hub cap screw Torx M16x1.5x60 | 221 lb-ft (300 Nm) |

## 2. WHEELS

The vehicle is equipped with hub-mounted wheels as standard equipment, all studs and nuts have right-hand threads Either steel wheels or optional aluminum-polished wheels may be installed on the vehicle. Both are mounted with radial tubeless tires. Dura-Bright surface treatment on aluminum wheels is optional.

### 2.1 H3-45 & X3-45 COACHES

Except for customer special request, all wheel dimensions are 22.50 X 9.0 inches (571.5 X 228.6 mm) for 315/80 R 22.5 "L" tires.

All wheels can either be steel or aluminum.

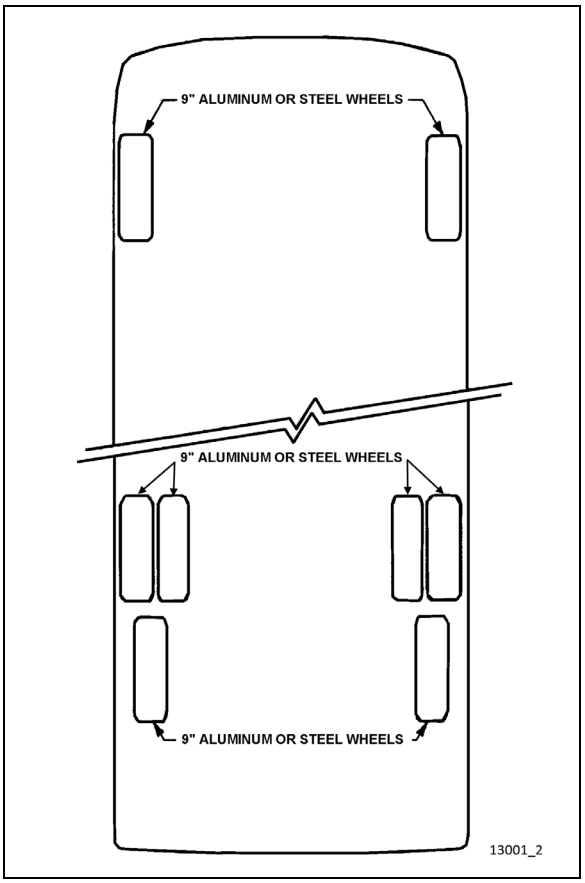


**FIGURE 1: ALUM/STEEL WHEEL ARRANGEMENT**

### 2.2 H3-45 VIP & X3-45 VIP MOTORHOMES

Drive axle wheel dimensions are 22.50 X 9.0 inches (571.5 X 228.6 mm) for 315/80 R 22.5 tires while front and tag axle wheels are 22.50 X 10.5 inches (571.5 X 266.7 mm) for 365/70 R 22.5 tires.

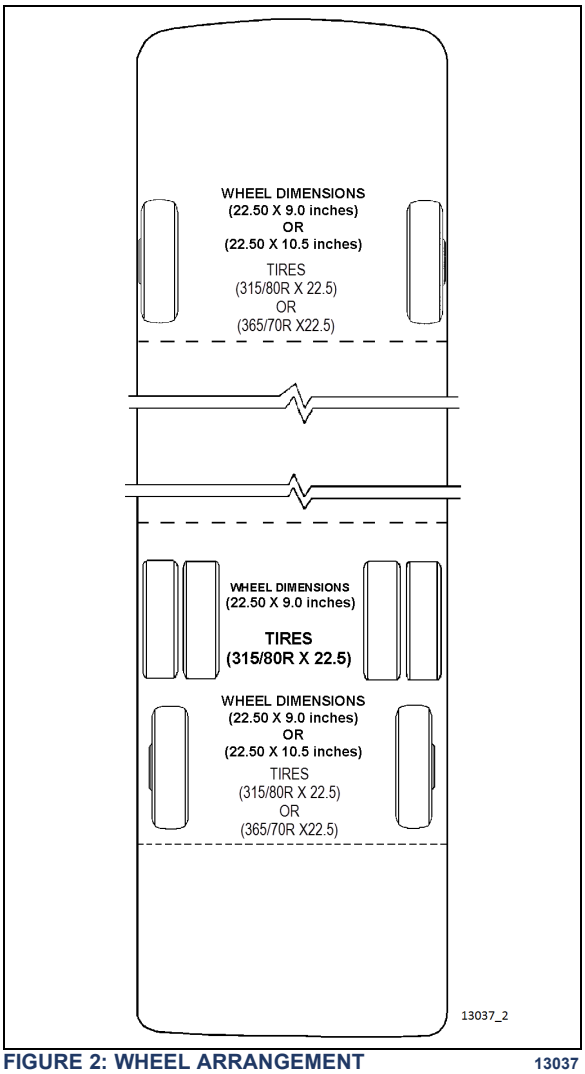


**FIGURE 2: WHEEL ARRANGEMENT** 13037

*NOTE*

Wide base "Super Single" tire are available as an option to replace both drive axle wheels and tires by a single 455/55 X 22.5 tire mounted on a 14 inches wheel.

## 3. WHEEL MAINTENANCE

Wheel maintenance consists of periodic inspections. Check all parts for damage and make sure that wheel nuts are tightened to the proper torque. In the case of a new vehicle, or after a wheel installation, stud nuts should be tightened every 100 miles (160-km) for the first 500 miles (800-km) to allow setting in of clamping surfaces.

**CAUTION**

Wheel studs and nuts must be kept free from grease and oil. No lubricant whatsoever should be used. Cleanliness of the wheel and its rotor mating surfaces is important for proper wheel mounting.

It is recommended to add some rust protection lubricant on the outside diameter of the hub (to facilitate future removal).

It is also important that wheel stud nuts be tightened alternately on opposite sides of the wheel. Refer to Figure 3 for the suggested tightening sequence.

### 3.1 INSPECTION

Tighten stud nuts progressively as shown in Figure 3. The final tightening should be done with a torque wrench.

**TORQUE (aluminum & steel wheels):**
**450-500 lb-ft (610-678 Nm)**

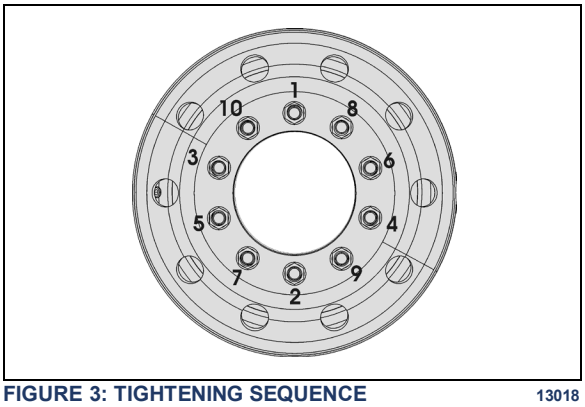


**FIGURE 3: TIGHTENING SEQUENCE** 13018

### 3.2 SINGLE WHEEL REMOVAL

1. Stop engine and apply parking brake.
2. Loosen wheel nuts about one turn (do not remove the nuts). This is not necessary if equipped with hydraulic powered gun.
3. Raise the vehicle by its jacking points on the body. See Section 18, *"Body",* under heading *"Vehicle Jacking Points";*
4. Unscrew wheel hex stud nuts and remove the wheel;

**CAUTION**

Always mark position of the wheel on the axle prior to removal in order to replace wheel at the same location, thus avoiding a new wheel balancing.

### 3.3 SINGLE WHEEL INSTALLATION

1. Mount the wheel over studs, being careful not to damage stud threads;
2. Screw in the hex stud nuts (refer to Figure 3 for sequence) so that wheel will position itself concentrically with hub. This is important, otherwise wheel may be eccentric with hub and will not run straight. In this initial step, slightly tighten the nuts to correctly position the wheel;
3. Tighten stud nuts progressively as shown in Figure 3. The final tightening should be done with a torque wrench.

**TORQUE (aluminum & steel wheels):**
**450-500 lb-ft (610-678 Nm)**

**CAUTION**

Insufficient mounting-torque can result in damage to parts. Excessive mounting torque can cause studs to break and the wheel to crack in stud hole area.

## 4. DUAL WHEELS

4.1 OUTER WHEEL REMOVAL

Same as described in *"Single Wheel Removal"* procedure described previously.

4.2 INNER WHEEL REMOVAL

1. Remove outer wheel;
2. Remove inner wheel.

4.3 INNER WHEEL INSTALLATION

Mount the wheel over studs, being careful not to damage stud threads;

4.4 OUTER WHEEL INSTALLATION

With inner and outer wheels installed, tighten the stud nuts progressively as shown in Figure 3. The final tightening should be done with a torque wrench.

**TORQUE (aluminum & steel wheels):**
**450-500 lb-ft (610-678 Nm)**

**⚠ CAUTION**

Insufficient mounting-torque can result in damage to parts. Excessive mounting torque can cause studs to break and the wheel to crack in stud hole area.

*NOTE*

*On dual wheel assemblies, position the wheels with the tire valves 180° apart in order to have access to both the inner and outer valves.*

4.5 INSPECTION

1. Loosen a hex stud nut three turns (Figure 5);
2. Retighten the hex stud nut.

**TORQUE: 450-500 lb-ft (610-678 Nm)**

Repeat for each of the 10 *"hex stud nuts"* according to the tightening sequence in FIGURE 3.

**⚠ CAUTION**

The actual length of thread engagement present in an assembled wheel cannot always be determined by visual inspection of measurement of a tightened assembly. The relationship of the wheel cap nut seat to the end of the stud may vary. If there is any doubt that enough thread engagement is present, the number of engaged threads may be counted. Tighten all nuts in the regular manner, then loosen one to hand-tightness. The number of turns to disengage a 1-1/8-inch nut should be at least five full turns.

At least seven full turns should be required to disengage a ¾-inch nut or a M22 nut. Ideally, when torqued to the proper load, the stud should be flush with the face of the nut. The face of the nut may be recessed in nuts that are taller for improved wrenching. With most of the nuts in present use, a few unengaged threads at the outer end will cause no problem provided at least 5-7 full turns are required to disengage the nut depending on thread size.

### 5. ALUMINUM WHEEL ANTI-CORROSION PROTECTION (WITHOUT DURA-BRIGHT)

Clean wheels often by means of a high pressure water jet. Cleaning may be accelerated with mild soap. Do not use concentrated alkaline cleaning products.

When tire is removed, clean and inspect wheel thoroughly. Remove dirt and corrosion on rim by means of a wire brush. Do not use a wire brush on the outer surface of the wheel.

The following measures should be taken to maintain original appearance of the aluminum wheels:

1. Remove any tar from wheel surface with a good quality tar remover.
2. Spray Alcoa Cleaner (Prevost #683529) evenly on cool outer surface of wheel. Let work 15-20 minutes (keep wet by spraying more Cleaner if necessary).
3. Rinse thoroughly with clean water and let air dry. Heavy oxidation may require a repeat application of cleaner.
4. Apply Alcoa Polish (Prevost #683528) sparingly to a small area using a clean, soft cloth. Work polish into surface as you would a rubbing compound.
5. Buff, turning cloth frequently, until surface is clean and shiny. Let air dry. Use power buffer to improve ease of use and gloss uniformity.
6. On completely dry, clean and polished surface, generously apply Alcoa sealant (Prevost #683527). Rinse thoroughly with water while surface is still wet in appearance (have water source ready as the dry time is very short, usually less than 2 minutes).
7. For best results, finish by wiping the surface with a clean rag to remove excess water, then allow surface to dry.

**CAUTION**

Dura-Bright is a special surface treatment that does not require polishing. Do not use abrasives, abrasive brushes steel wool scouring pads or strong chemicals on Dura-Bright wheels.

*Do not use* Alcoa Aluminum care system on Dura-Bright wheels, clean regularly with high pressure water jet and mild detergent.

Clean aluminum wheels as required to maintain original look.

**WARNING**

Wheel surfaces may have sharp or cutting edges that may cause injury to the hands. To prevent contact with sharp edges, it is strongly recommended to wear rubber gloves when washing or polishing wheels.

### 6. WHEEL STRAIGHTNESS TEST

1. Slightly raise axle to be checked and place a safety support underneath;
2. Check wheel lateral run-out. Install a dial gauge as shown in figure 4, then rotate the wheel by hand one full turn. As the wheel turns, note any variation on the dial gauge;

**CAUTION**

Damage to the dial gauge could occur if it strikes a wheel balancing weight.

3. If the variation in lateral run-out exceeds 0.0625 inch (1,6 mm), the wheel must be replaced.

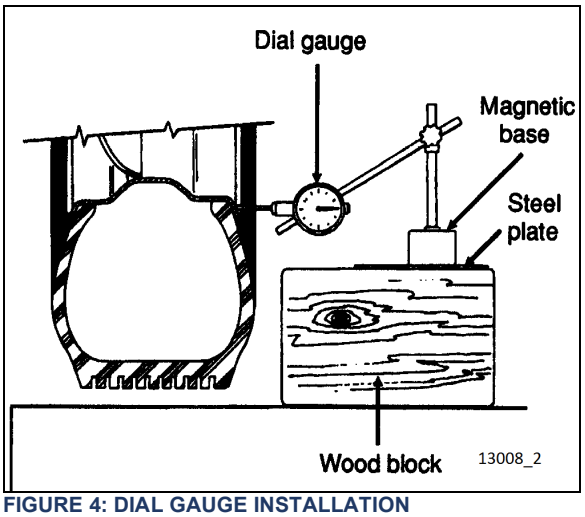


**FIGURE 4: DIAL GAUGE INSTALLATION**

If doubt exists whether wheel or hub is distorted, hub may be checked as follows:

- Replace the existing wheel with a wheel known to be correct;
- Check wheel lateral run-out as outlined in step 2;
- If, within specifications, the hub is correct but the suspected wheel must be replaced.

**WARNING**

**NEVER STRAIGHTEN ALUMINUM WHEELS.** Never heat aluminum wheels to repair damages incurred after hitting a curb or resulting from other causes. The special alloy in wheels has been heat treated, and any uncontrolled heating could alter wheel structure. Furthermore, never weld aluminum-forged wheels for any reason whatsoever.

## 7. WHEEL STUDS

Stripped threads may be the result of excessive torque or may have been damaged during wheel installation when placing the wheel over the studs. A stud having damaged threads must be replaced. Broken studs are a direct result of operating with loose stud nuts or improperly seated wheels. When a broken stud is replaced, the adjacent studs, on each side of the broken one must also be replaced since they could have been subjected to excessive strain and may be fatigued.

When installing wheel studs to hubs, check nuts retaining the wheel stud to wheel hub and replace if they are deformed, damaged or severely corroded. Install nut (and washer where applicable) to new stud.

**TORQUE: 450-500 lb-ft (610-678 Nm)**

**60 nuts**

### 7.1 DRIVE AXLES WHEEL STUDS

Hub-mounted wheels are mounted with M22x1.5 studs and an M22 flange nut.

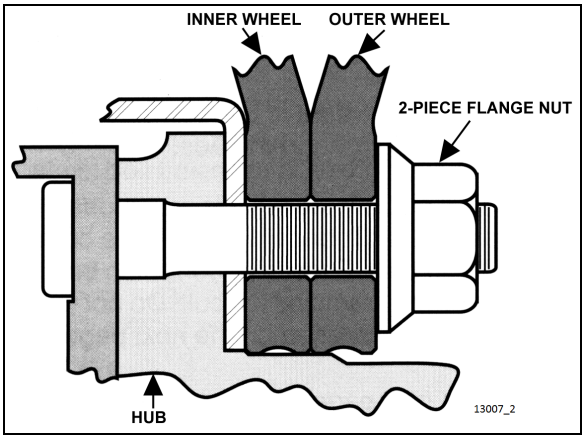


FIGURE 5: DRIVE AXLE WHEELS

### 7.2 FRONT AND TAG AXLE WHEEL STUDS

Wheel is hub mounted on front and tag axle (M22x1.5 thread).

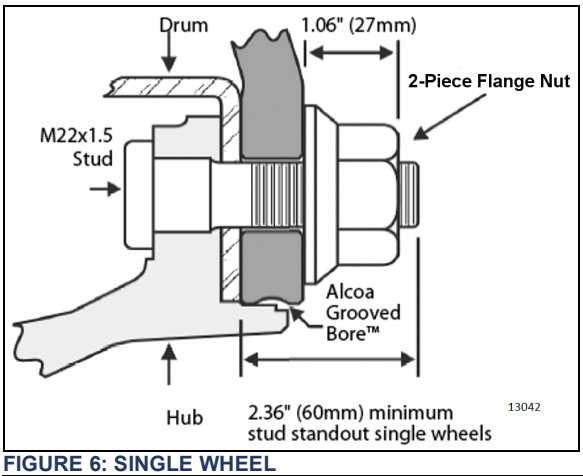


FIGURE 6: SINGLE WHEEL

*NOTE*

*Wheel studs and nuts must be kept free from grease and oil. No lubricant whatsoever should be used.*

## 8. HUB MOUNTED WHEELS

Wheel surfaces in contact with hubs, nuts or other wheels should be kept free of all rust, grease and paint (except for initial “E” coat protection, applied to stop rusting and to facilitate wheel removal). The reason for this is to assure that all faces are clamped together without buildup of any coating. The threads of the wheel studs and the wheel nuts should be clean and undamaged.

| *NOTE* |
| --- |
| *When painting wheels, make sure to mask all surfaces identified above.* |

Using a calibrated torque wrench, tighten wheel nuts. Do not use power tools or long bars for tightening. Tighten wheel nuts alternately as shown in FIGURE 3.

**TORQUE: 450-500 lb-ft (610-678 Nm)**

| *NOTE* |
| --- |
| *Tightening should not be done immediately after prolonged braking or when wheel ends are hot.* |

Check wheel nut torque at every 100 miles (160 km) for 500 miles (800 km) after fitting wheels. Let cool before checking. If any relaxation of the initial torque has occurred, retighten. Relaxation of initial torque may occur because of the “bedding down” of the hub and wheel surfaces.

| *NOTE* |
| --- |
| *Torque relaxation occurs when wheel ends are hot but should revert to original setting when cool. Retightening when hot will produce a higher torque reading than recommended.* |

### 8.1 CARE OF WHEELS

Check for cracks in wheels, especially around the fixing holes, studs, nuts and washers. If in doubt, renew.

Do not simply retighten very loose wheel fixings or wheels that are continually becoming loose. Find out why they are loose and whether any damage has been caused.

Use trained personnel and keep records of all attention to wheels and fixings, including which parts were renewed and when.

## 9. TAG AXLE WHEEL HUBS

The FAG unitized hub bearings used on the tag axle are non-serviceable items. Bearings are pre-adjusted, lubricated and have seals fitted as part of the manufacturing process. The bearings are greased for life and there is no need or facility for re-lubrication.

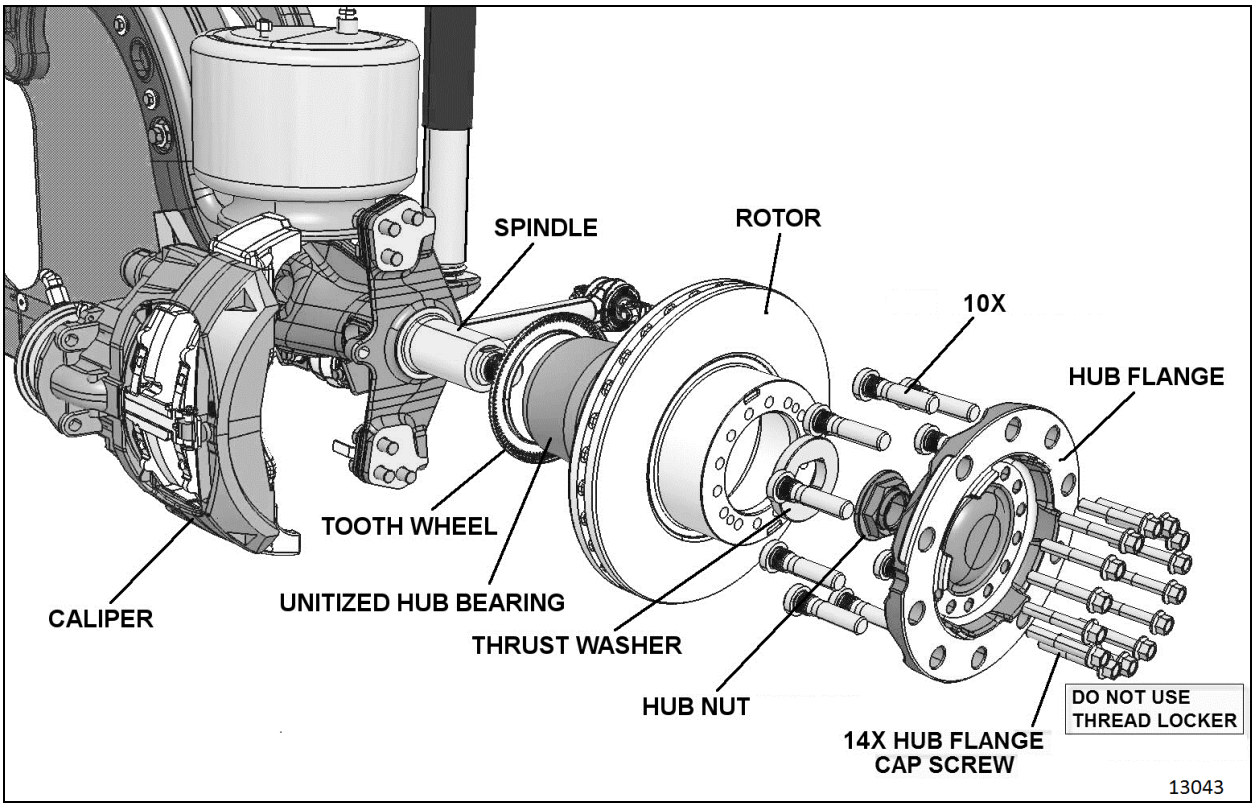


FIGURE 7: TAG AXLE HUB AND ROTOR ASSEMBLY

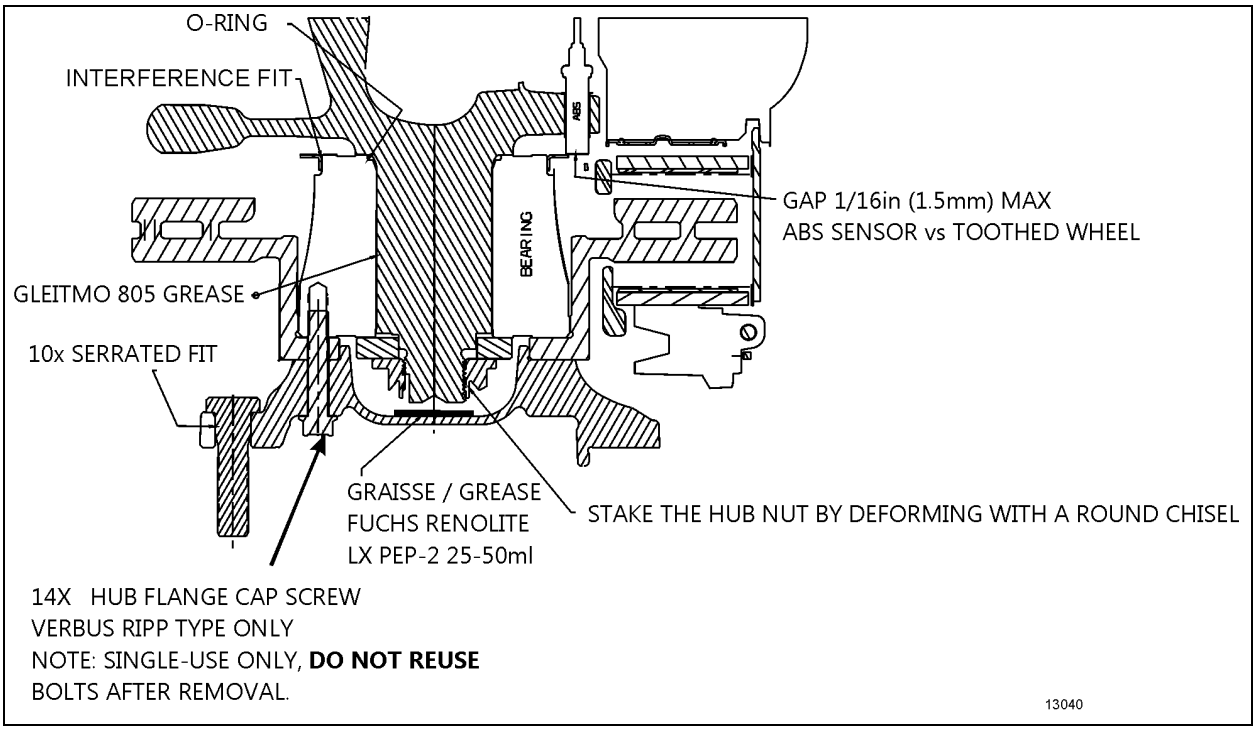


**FIGURE 8: TAG AXLE UNITIZED BEARING & WHEEL HUB**

## 9.1 TAG AXLE HUB UNITIZED BEARING INSPECTION

### MAINTENANCE

**Tag axle unitized bearing**

Unitized bearing inspection should be made at the intervals specified by the Lubrication And Servicing Schedule in Section 24: LUBRICATION & SERVICING..

1. Apply parking brake, raise wheels off the ground and support axle on stands.
2. When the wheels are raised, they should revolve quite freely without roughness.
3. Place magnetic base of a dial indicator on brake caliper and position dial indicator stem against a convenient marked spot on face of hub flange.
4. With dial indicator in position pull hard but steadily on hub flange and oscillate at same time until a steady reading is achieved.
5. Without releasing the pressure, turn bearing so that dial indicator stem contacts marked spot and note reading on indicator.
6. Push bearing flange hard and oscillate as before until a steady reading is achieved.
7. Without releasing the pressure, turn bearing so that indicator stem again contacts the marked spot and note new reading on indicator.
8. The difference between readings is the amount of mounted end play in bearing unit.
9. Refer to the following table for allowed end plays:

| New Tag Axle Unitized Hub Bearing Axial Endplay | |
|---|---|
| Maximum axial clearance/end play | 0.0024 inch (0.061mm) based on clamp load of 20000 lbf (90 kN). |

**Tag Axle Unitized Hub Bearing Axial Endplay In Service**

- If the endplay is between 0 – 0.002 in (0 – 0.05 mm), the inspection is complete.
- If the endplay is greater than 0.002 in (0.05 mm), but less than 0.008 in (0.20mm), check and retighten the wheel bearing adjusting nut. Again check endplay to make sure that the clamping process is done properly.
- If the endplay is equal to or greater than 0.008 in (0.20mm), replace the unitized hub bearing as soon as possible since the hub assembly may not be safe to operate.

9.2 TAG AXLE HUB BEARING REMOVAL

1. Stop engine and apply parking brake.
2. Loosen wheel nuts about one turn (do not remove the nuts). This is not necessary if equipped with hydraulic powered gun.
3. Raise the vehicle by its jacking points on the body. See Section 18, *"Body"*, under heading *"Vehicle Jacking Points".*
4. Unscrew 10 wheel hex stud nuts and remove the wheel.
5. Unscrew 14 hub flange hex cap screws.

**Applicable to the tag axle: discard hub flange serrated cap screws (single-use only)**.

*NOTE: The following steps are similar to the front axle hub bearing removal procedure. The following images are generic images and do not show the tag axle hub but they remain representative of the following steps.*

6. Loosen but do not remove the hub flange bolts.
7. Remove 2 diametrically opposed hub flange bolts.

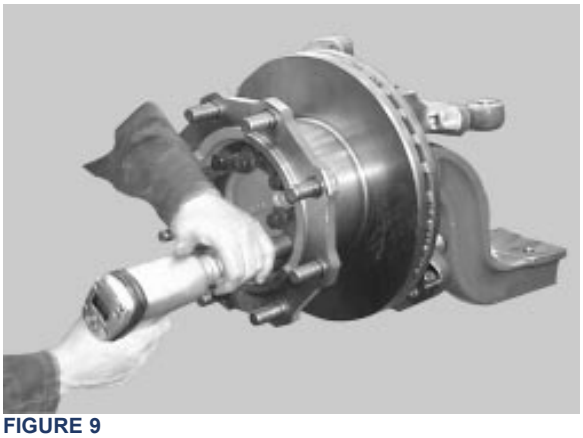

FIGURE 9

8. Replace 2 diametrically opposed hub flange bolts with 2 studs (loosely fitted).

NOTE: Replacement studs should protrude beyond front face of hub flange to aid removal.

9. Gently tap hub flange outwards using a hide faced hammer.
10. Support weight of hub flange and remove hub flange retaining bolts.

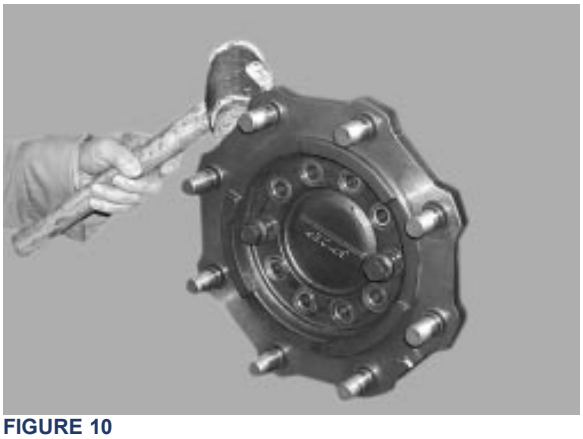

FIGURE 10

11. Remove the hub flange and place on a suitable workbench.
12. Inspect wheel stud and replace the ones that are found defective.
13. Once the hub flange has been removed, insert two bolts into brake disc extraction holes.
14. Tighten to free brake disc from hub bearing.

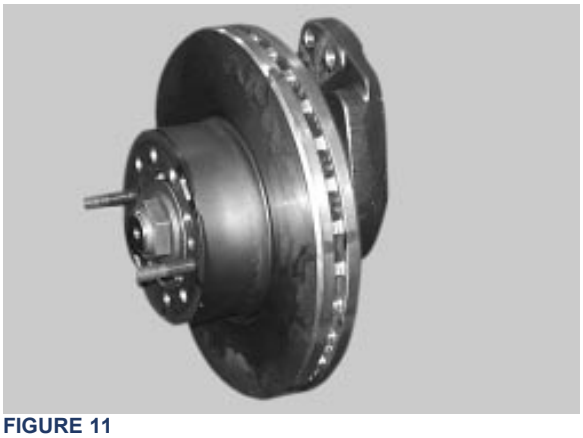

FIGURE 11

15. Support weight of brake disc and carefully slide along dummy studs to remove.

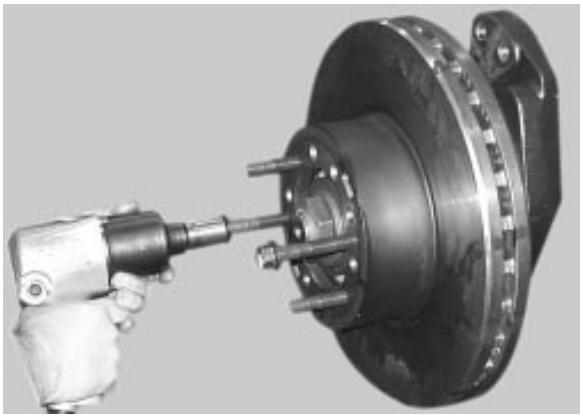

FIGURE 12

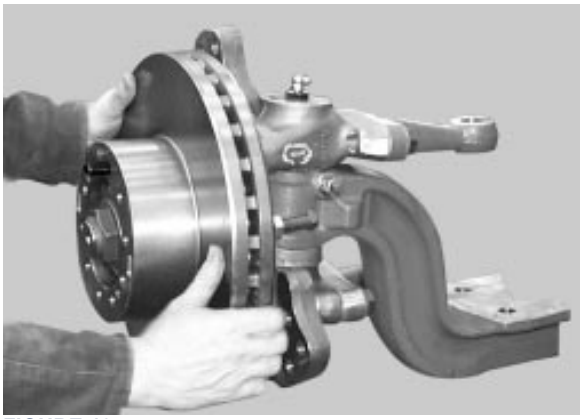

FIGURE 13

16. Using a small ended chisel, pry off the staking on the hub nut.

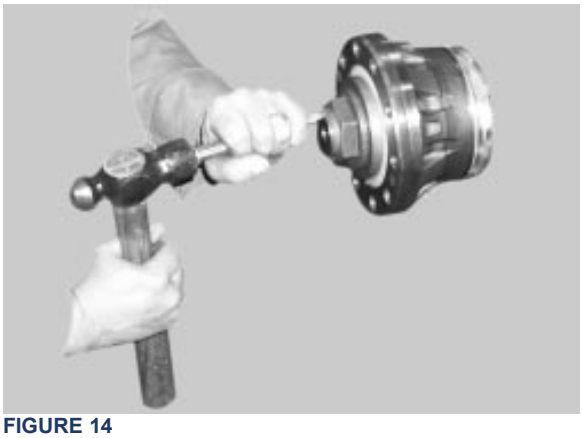

FIGURE 14

17. Unscrew hub nut and discard.

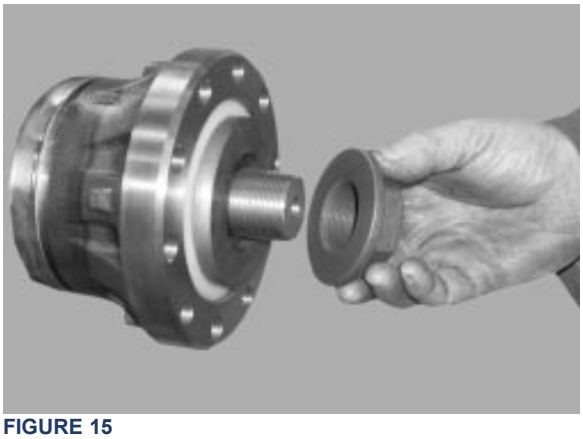

FIGURE 15

18. Remove the thrust washer.

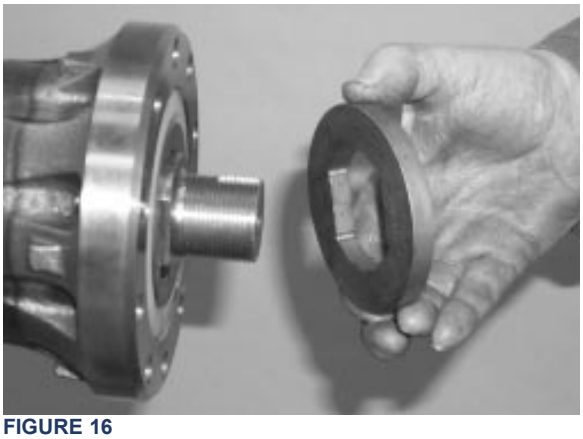

FIGURE 16

19. Screw insertion tool onto spindle (FIGURE 18).

| | |
|---|---|
| insertion tool tag axle | G32950 |
| insertion tool front axle | 491115 |



FIGURE 17: INSERTION TOOL

20. Carefully pull unitized bearing assembly and remove.

9.3 TAG AXLE HUB BEARING INSTALLATION

1. Clean spindle using EFX degreaser (Prevost #685313) or brake cleaner.
2. Screw insertion tool onto spindle (FIGURE 18).

| | |
|---|---|
| insertion tool tag axle | G32950 |
| insertion tool front axle | 491115 |



FIGURE 18: INSERTION TOOL

3. Apply a thin layer of antifriction/antifretting lubricant on spindle where bearing will be located (use Gleitmo 805 grease, Prevost #685274).



FIGURE 19: APPLY GLEITMO 805 GREASE

4. Slip unitized hub bearing over spindle.
5. Make sure the O-ring is present, see Figure 8.

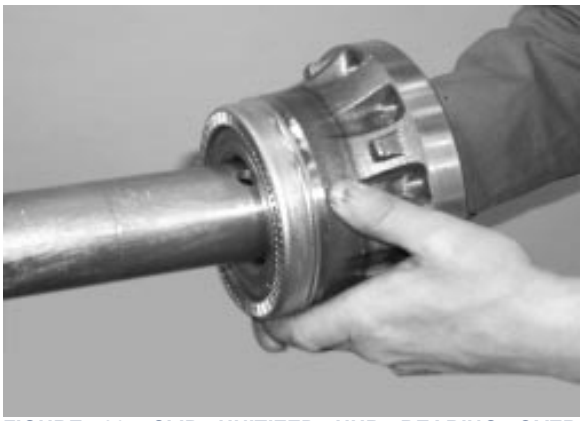

FIGURE 20: SLIP UNITIZED HUB BEARING OVER SPINDLE

*NOTE*

*If the inner rings are not properly guided (i.e. not in line to spindle) there may occur a seizing between inner ring and spindle before the assembly be completed. By pushing abruptly the hub unit back, there is a risk of separation of inner rings. The clip can be dislodged as per the two pictures below.*

*Always use an insertion tool*

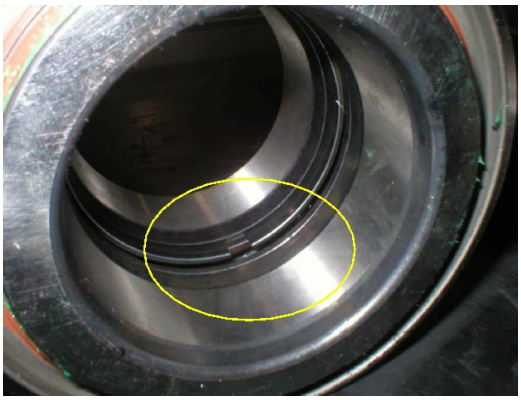



6. Remove the insertion tool.

7. Clean thrust washer both sides and hub nut using a good quality degreaser or brake cleaner.
8. Install thrust washer, hub nut then torque hub nut.

   **TORQUE: 563-687 lb-ft (763-931 Nm)**

NOTE: Rotate bearing, minimum 10 revolutions necessary (simultaneous rotation till final clamp torque is achieved).

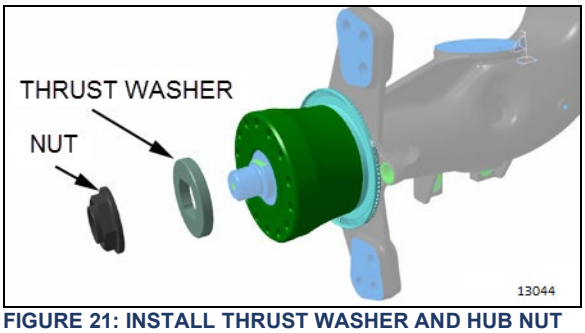


**FIGURE 21: INSTALL THRUST WASHER AND HUB NUT**

9. Make sure there is no play between the bearing and the spindle shoulder.

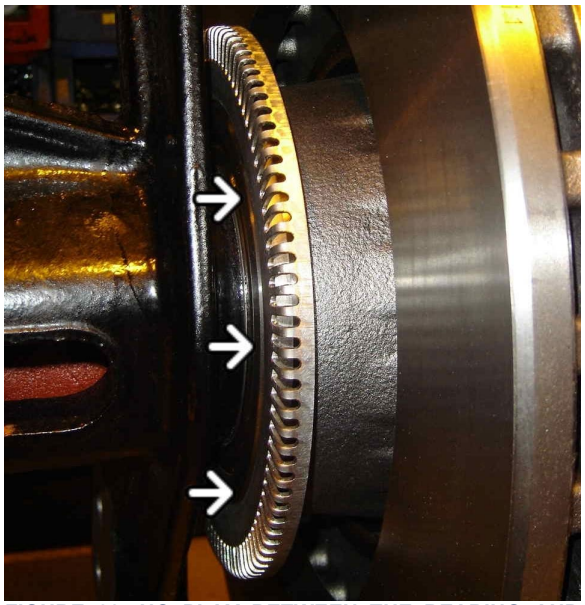

**FIGURE 22: NO PLAY BETWEEN THE BEARING AND THE SPINDLE SHOULDER**

10. Check the unitized bearing end play. Refer to paragraph *9.1 Tag Axle Bearing Inspection*.
11. Stake the hub nut by deforming with a round nosed chisel.

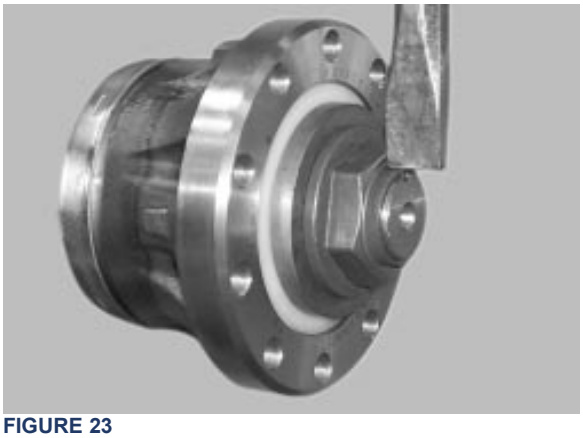

**FIGURE 23**

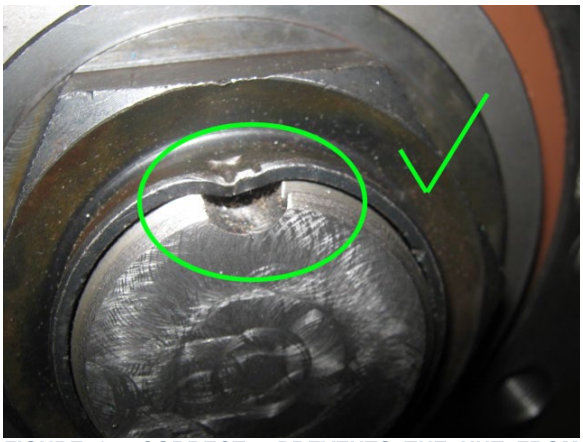

**FIGURE 24: CORRECT - PREVENTS THE NUT FROM GETTING LOOSE**

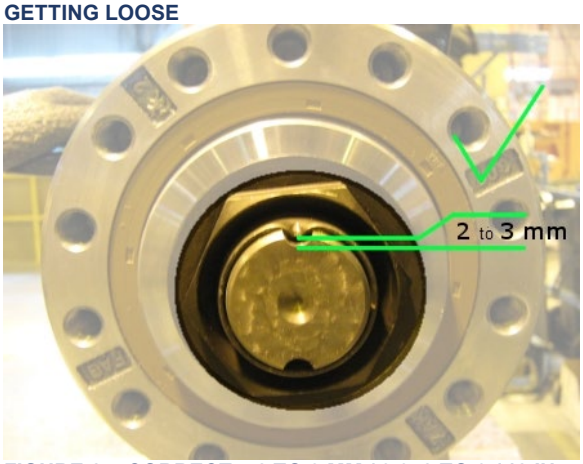


**FIGURE 25: CORRECT – 2 TO 3 MM / 0.078 TO 0.118 IN**



FIGURE 26: BROCKEN OR TORN LIP – REJECTED

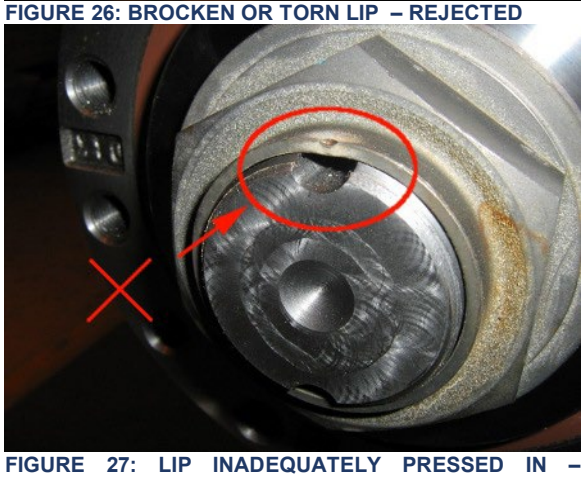

FIGURE 27: LIP INADEQUATELY PRESSED IN – REJECTED

12. Clean hub bearing, rotor and hub flange clamping surfaces using a good quality degreaser or brake cleaner.

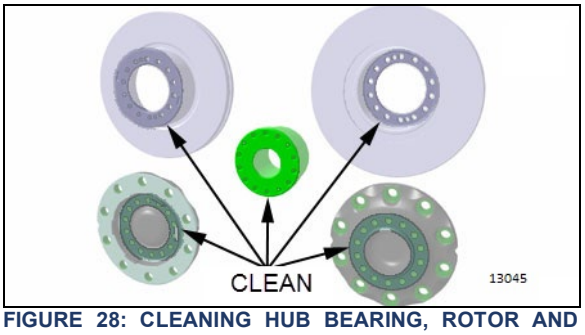


FIGURE 28: CLEANING HUB BEARING, ROTOR AND HUB FLANGE CLAMPING SURFACES

13. Install two guide studs on the unitized bearing.

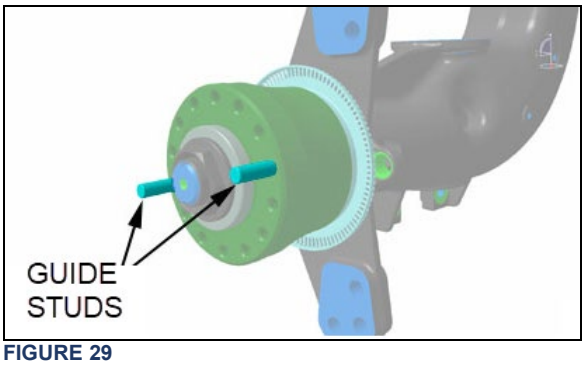


FIGURE 29

14. Install rotor onto hub bearing.

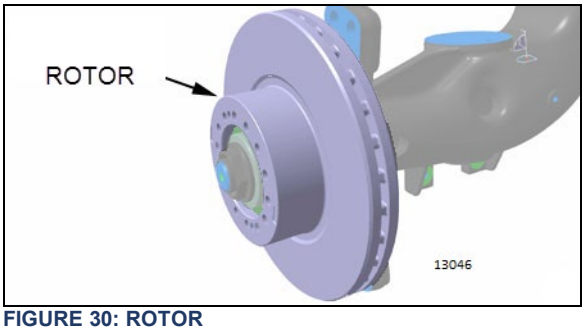


FIGURE 30: ROTOR

15. Add some grease (25-50 ml) (Fuchs Renolite LX PEP-2) (Prevost #685325) into the bottom of the hub flange cap. Mount hub flange onto rotor.

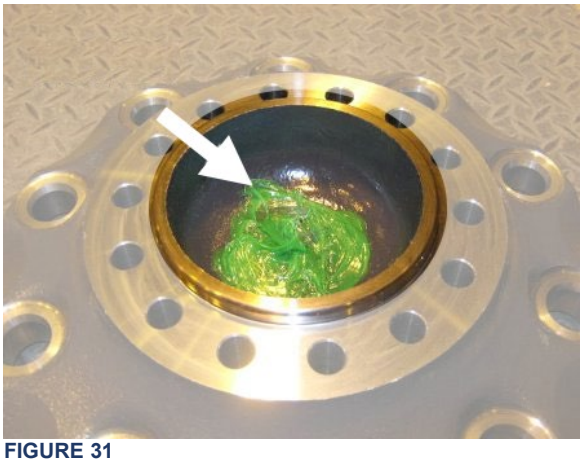

FIGURE 31

16. Secure hub flange and rotor to unitized hub bearing using 14 new cap screws (single-use only). Refer to FIGURE 30 for tightening sequence.

**TORQUE: 161-197 lb-ft (218-267 Nm)**

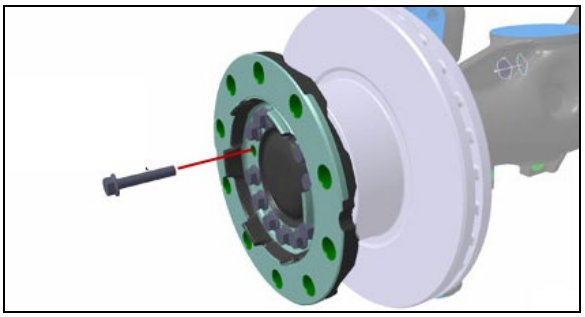

FIGURE 32: HUB FLANGE HEX CAP SCREW

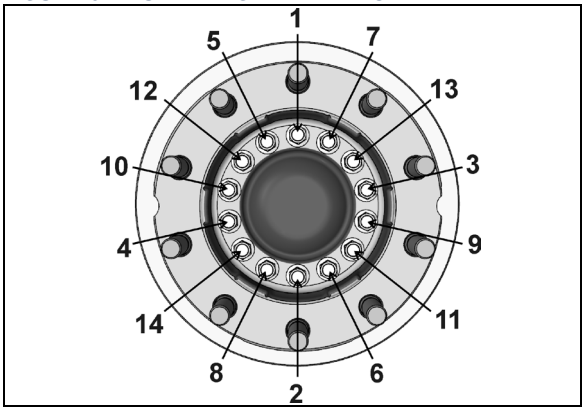


FIGURE 33: HUB FLANGE HEX CAP SCREW TIGHTENING SEQUENCE

17. Once the hub flange has been correctly fitted; it is necessary to check the axial run out of the brake disc.
18. Position a dial test indicator onto the axle in a suitable position.

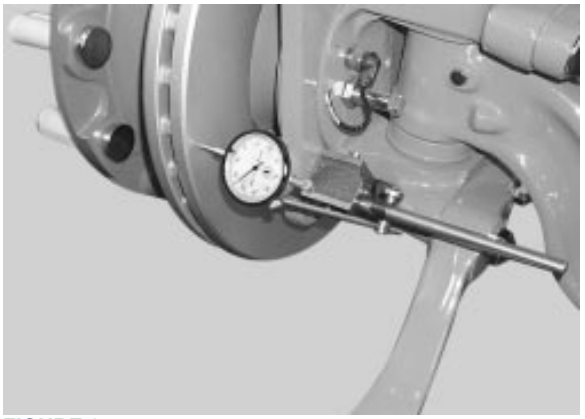

FIGURE 34

19. Position the stylus of dial test indicator onto brake disc as shown.

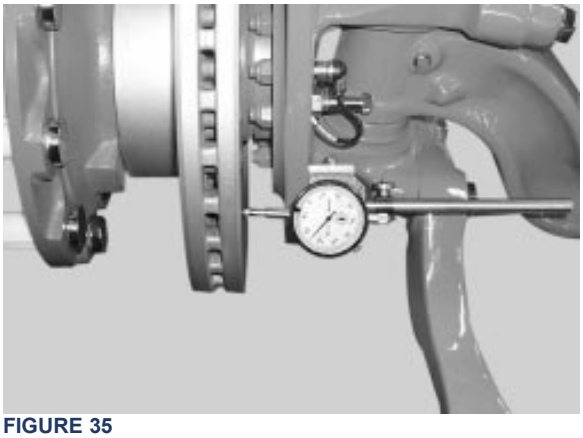

FIGURE 35

20. Rotate the hub through 360° and note any movement of the dial test indicator.

***THE MAXIMUM RUNOUT IS 0.1 mm / 0.004 in***

21. Remove and check out of specification disc to ensure no damage has occurred to the mounting faces, or that no dirt is present.
22. Remove any dirt found on the mounting faces and refit and re check disc.
23. Should it be found that a cleaned and refitted disc is still out of specification; it must be replaced.
24. Mount the brake caliper. Refer to Knorr Bremse manual.
25. Mount the wheel over studs, being careful not to damage stud threads.
26. Screw in the hex stud nuts (refer to FIGURE 3 for sequence) so that wheel will position itself concentrically with hub. This is important, otherwise wheel may be eccentric with hub and will not run straight. In this initial step, slightly tighten the nuts to correctly position the wheel.
27. Tighten stud nuts progressively as shown in Figure 3. The final tightening should be done with a torque wrench. Tighten stud nuts.

**TORQUE: 450-500 lb-ft (610-678 Nm)**

## 10. FRONT AXLE WHEEL HUBS

The FAG unitized hub bearings used on the NDS range of axles, are non-serviceable items. Bearings are pre-adjusted, lubricated and have seals fitted as part of the manufacturing process. The bearings are greased for life and there is no need or facility for re-lubrication.

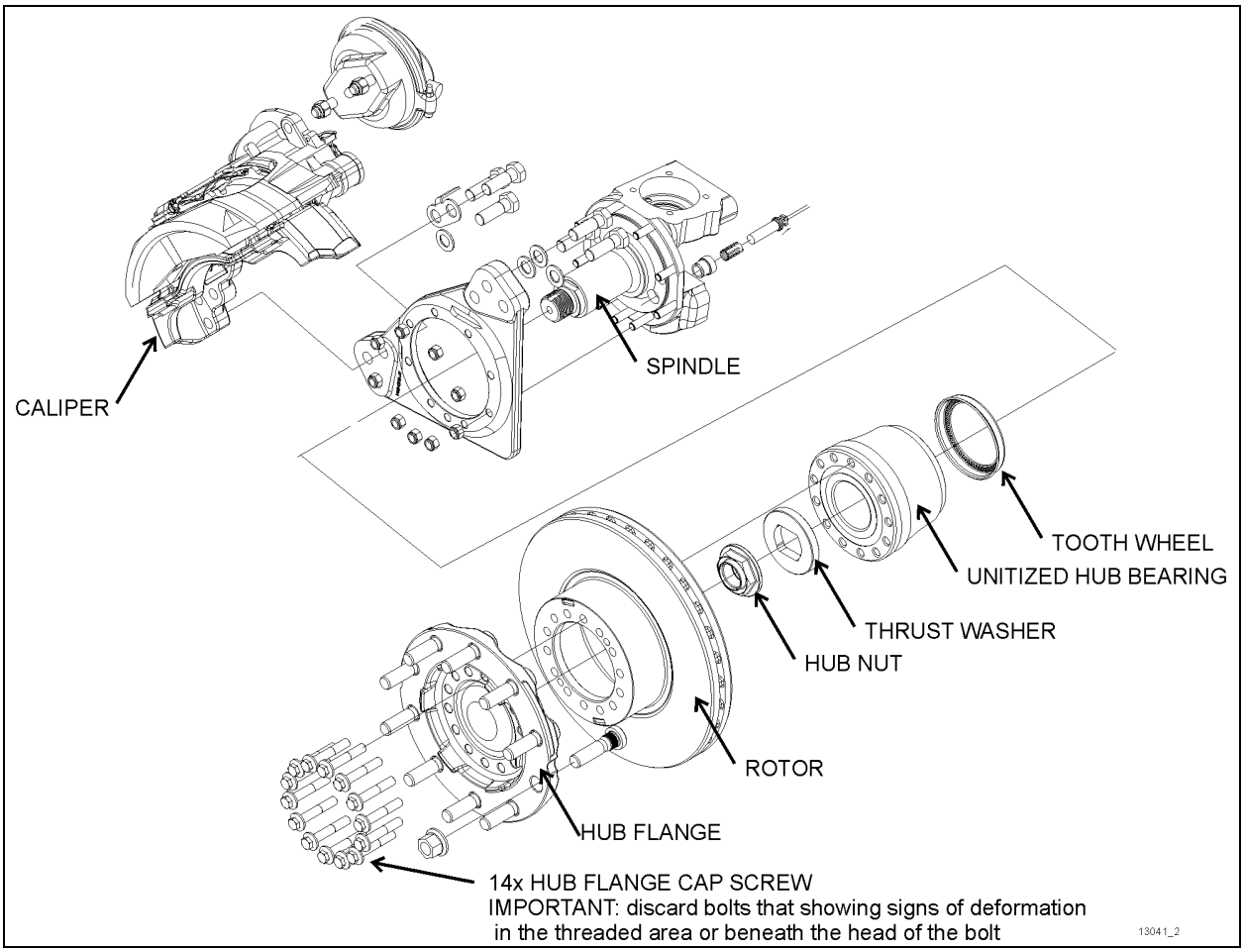


**FIGURE 36: FRONT AXLE HUB AND ROTOR ASSEMBLY**

## 10.1 FRONT AXLE HUB BEARING INSPECTION

### MAINTENANCE

**Front axle unitized bearing**

Unitized bearing inspection should be made at the intervals specified by the Lubrication And Servicing Schedule in Section 24: LUBRICATION & SERVICING..

1. The front axle hub bearing inspection procedure is similar to the tag axle hub bearing inspection. Refer to *9.1 Tag Axle Hub Unitized Bearing Inspection*.

**The mounted Unitized hub bearing axial endplay should not exceed:**

- **0.050 mm (0.002")** for a new bearing,
- **0.20 mm (0.008")** for a bearing which has been in service.

***NOTE***

*If original bearing unit is re-fitted, and end-float is measured at 1 mm, with hub not fully tightened to specified torque, then the retaining clip within the unit is damaged and a new unit must be fitted.*

## 10.2 FRONT AXLE HUB BEARING REMOVAL

The front axle hub bearing removal procedure is similar to the tag axle hub bearing removal. Refer to *9.2 Tag Axle Hub Bearing Removal*.

You can also find detailed information on front axle wheel hub bearing removal, refer to the following manual included on your vehicle Technical Publications USB flash drive in PDF format:

***Dana Parts & Service Instructions S84U Steer Axle HUB BEARING REWORK_ Manual NO 1963 A+B iss A.***

See OVERHAUL PROCEDURES, HUB END DISASSEMBLY, pages No. B3, B4, B5 & B6.

## 10.3 FRONT AXLE HUB BEARING INSTALLATION

The front axle hub bearing installation procedure is similar to the tag axle hub bearing installation. Refer to 9.3 *Tag Axle Hub Bearing Installation*.

You can also find detailed information on front axle wheel hub bearing removal, refer to the following manual included on your vehicle Technical Publications USB flash drive in PDF format:

***Dana Parts & Service Instructions S84U Steer Axle HUB BEARING REWORK_ Manual NO 1963 A+B iss A.***

See OVERHAUL PROCEDURES, HUB END REASSEMBLY, pages No. B23 up to B30.

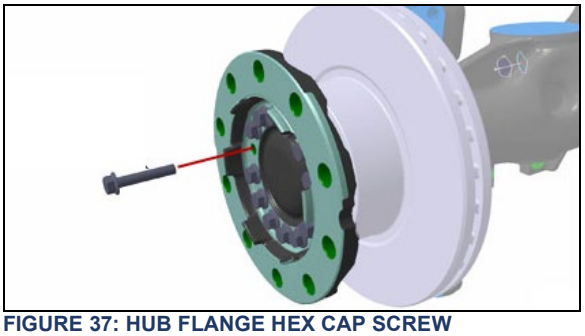

FIGURE 37: HUB FLANGE HEX CAP SCREW

Secure hub flange and rotor to unitized hub bearing using 14 hub flange cap screws. Refer to FIGURE 43 for tightening sequence.

**TORQUE: 174-192 lb-ft (236-260 Nm)**

***NOTE: discard bolts that start to show signs of deformation in the threaded area or beneath the head of the bolt.***

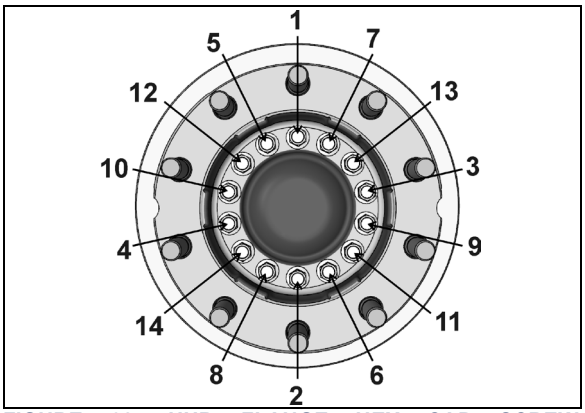


FIGURE 38: HUB FLANGE HEX CAP SCREW TIGHTENING SEQUENCE

## 11. MERITOR DRIVE AXLE WHEEL HUBS

Drive wheels use a single oil-seal assembly. They are lubricated from the oil supply in the differential housing. Bearings are tapered rollers, adjustable to compensate wear. Maintain differential oil level with general-purpose gear lubricant (refer to Section 24 *"Lubrication"* for proper oil grade selection) to ensure adequate oil supply to wheel bearings at all times.

Additional information is found in the following manuals, included on your vehicle Technical Publications USB flash drive:

- *Meritor Maintenance Manual 23A – Bus and Coach Rear Drive Axles*
- *Meritor Maintenance Manual 5A – single reduction differential carriers*

### 11.1 BEARING CHECK/ADJUSTMENT

To adjust drive wheel bearings, refer to “Adjustment – Wheel bearings” heading in Meritor Maintenance Manual 23A – Bus and Coach Rear Drive Axles.

**MAINTENANCE**

**Drive axle bearing end play**

Check drive axle bearing end play at the intervals specified by the Lubrication And Servicing Schedule in Section 24: LUBRICATION & SERVICING..

Refer to “Adjustment – Wheel bearings” heading in Meritor Maintenance Manual 23A – Bus and Coach Rear Drive Axles.

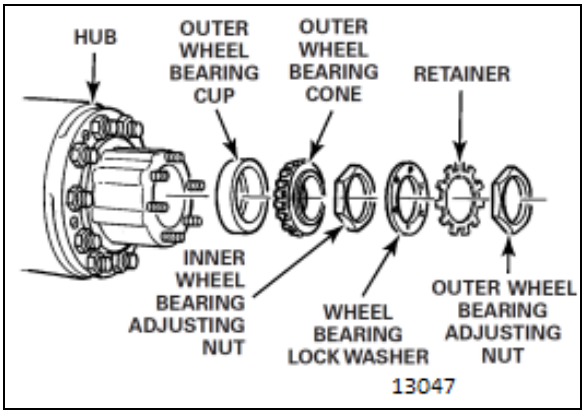


**FIGURE 39: DRIVE AXLE WHEEL HUB**

### 11.2 DISASSEMBLY AND REPAIR

Additional information is found in the following manual:

- ***Meritor Maintenance Manual 23A – Bus and Coach Rear Drive Axles***

1. Jack vehicle and remove axle shaft as indicated in *"Meritor - Maintenance Manual No. 23A*.
2. Remove wheels and tires.

*NOTE*

It is good practice to mark position of the wheel on the axle before removal and replace wheel at the same position during reinstallation.

3. Remove lock nut, lock ring and adjusting nut from axle housing to prevent the outer bearing from falling out. Remove outer bearing cone and roller assembly.
4. Remove screws attaching inner oil seal retainer to hub, and remove inner oil seal assembly. Remove inner bearing cone and roller assembly. Bearing cups can be separated from the hub using a hammer and a long brass drift.
5. Thoroughly clean all parts. Bearing cone and roller assemblies can be cleaned in a suitable cleaning solvent using a stiff brush to remove old lubricant.
6. In case that excessive wear, deterioration, cracking or pitting is present on the bearing cups, rollers or cones, the bearings should be replaced. Seals should be replaced each time they are removed from the hub. To install new oil seal, use a suitable adapter and drive the seal into the retainer bore until it bottoms.
7. When installing wheel on spindle, center the wheel hub with spindle to avoid damaging the seal with the end of the spindle. Push wheel straight over the spindle until inside diameter of seal press fits on wiper ring. Fill hub cavity with general-purpose gear lubricant (refer to Section 24 *"Lubrication"* for proper oil grade selection). Lubricate, then install outer bearing cone. Adjust bearing and lock.
8. Assemble axle flange to axle using a new gasket. Apply sealant in stud area. After both wheels have been assembled according to

above procedure, fill the differential with the recommended lubricant to the proper factory recommended level.

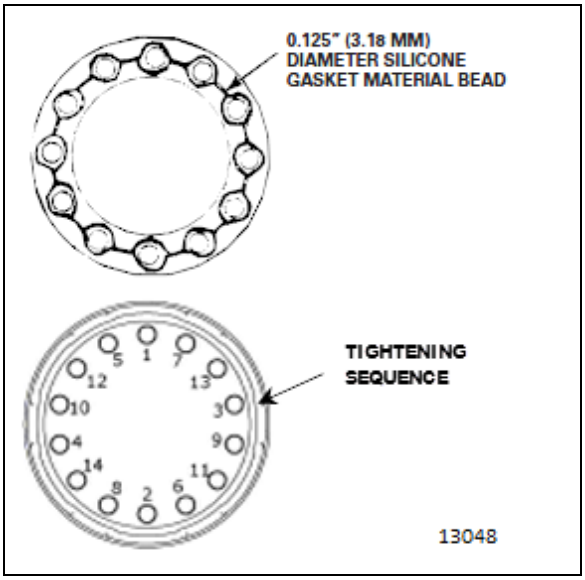


**FIGURE 40: AXLE FLANGE TIGHTENING SEQUENCE**

| *NOTE* |
| --- |
| *During regular inspection, do not forget to check lubricant level in differential. Clean thoroughly or replace vent as required.* |

## 12. ZF DRIVE AXLE WHEEL HUBS

The ZF A132 hypoid single reduction drive axle hub (**FIGURE 43**) is fitted with unitized bearing known as compact bearing in ZF's literature.

### 12.1 COMPACT BEARING (HUB UNIT) AXIAL PLAY CHECK

Check the compact bearing (hub unit) axial play at the intervals specified by the Lubrication And Servicing Schedule in Section 24: LUBRICATION & SERVICING. Furthermore, the bearing must be checked in case of brake disk change, ABS fault message and rising noise level at increasing speed.

Perform compact bearing (hub unit) axial play check as described in paragraph 6.2 HOW TO CHECK THE AXIAL PLAY of the following manual: OPERATING INSTRUCTIONS ZF AXLE A132 (version with US hub) #5871 207 982 EN.

**MAINTENANCE**

**Compact bearing (hub unit) axial play**

Check the bearing axial play at the intervals specified by the Lubrication And Servicing Schedule in Section 24: LUBRICATION & SERVICING.

### 12.2 COMPACT BEARING (HUB UNIT) GREASE CHANGE

When grease is changed within the scope of the maintenance, it is necessary to completely remove the compact bearing.

Perform compact bearing (hub unit) grease change as described in paragraph 7.3 GREASE CHANGE IN THE HUB of the following manual: OPERATING INSTRUCTIONS ZF AXLE A132 (version with US hub) #5871 207 982 EN.

## MAINTENANCE

**Compact bearing (hub unit) grease change – ZF Lubricant class 12H**

The compact bearing grease must be change at the intervals specified by the Lubrication And Servicing Schedule in Section 24: LUBRICATION & SERVICING.

The list of approved Lubricant Class 12H grease types is found in ZF's list of lubricants TE-ML 12.

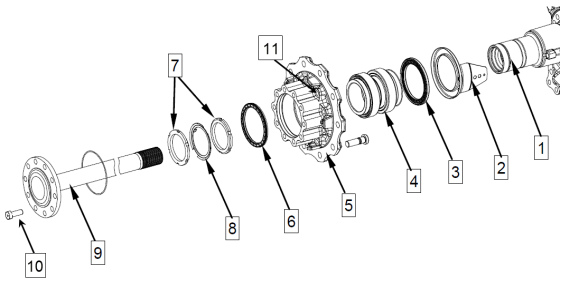


**FIGURE 41: ZF A-132 DRIVE AXLE HUB ASSEMBLY**

**1** hub carrier
2 screen sheet
3 shaft seal (with impulse disc)
4 compact bearing (hub unit)
5 hub
6 shaft seal
7 slotted nut
8 locking plate
9 flange shaft
10 cap screw M18x1.5x50mm G10.9
**TORQUE= 325 lb-ft (441 Nm)**
(use 14mm hex socket driver "Allen" )


14mm hex socket driver "Allen"

11 cap screw Torx M16x1.5x60,
**TORQUE= 221 lb-ft (300 Nm)**
(use E20 Torx socket)


E20 Torx socket

## 13. SPARE WHEEL

Tire failure is a rare event if tires are properly cared for. In case of a flat tire, move vehicle a safe distance away from traffic and apply parking brake. Remember to use the hazard flashers and according to the Highway Code regulations, set up the triangular reflectors (see *"Emergency Warning Reflectors"* in the Operator's Manual) at an adequate distance, to warn incoming motorists. This kit is located at the ceiling of the forward baggage compartment, on the R.H. side for H3 series vehicles and in the front service compartment on X3 Series.

The spare wheel is stored in a dedicated compartment behind the front bumper. To access, pull the release handle located in the front service compartment. Although the bumper is heavy, sprung hinges permit one person operation.

When closing bumper compartment, make sure bumper is securely installed.

*NOTE*

*Converted vehicles are not equipped with a spare wheel. Access to compartment is also obtained by pulling the release handle located in the front service compartment.*

## WARNING

This compartment has not been designed for storage. Never leave loose objects in this area since they may interfere with steering linkage mechanism. Make sure bumper is safely locked in place after closing the compartment.

### 13.1 SUPER SINGLE TIRE REPLACEMENT

Increase tire pressure to 125 PSI If you are using the supplied 365/70 R 22.5 spare tire to replace a super single tire on the drive axle.

## WARNING

- Spare tire pressure should be increased to 125 PSI.
- Do not exceed 80km/h (50 MPH)
- Repair and re-install original super-single wheel and tire **as soon as possible,** in this particular configuration, spare wheel is for temporary use only.

- While the spare tire is installed, avoid sharp turns, sudden acceleration and braking.

## 13.2 PULLING OUT SPARE WHEEL

To remove the spare on X3 series vehicles, untighten the pressure screw holding the tire in place, then press down on the spring loaded locking pin located at the top of the retaining bracket and remove the bracket.

On H3 series vehicles, Untighten the pressure screw holding the tire in place. Lift the pressure screw arm and move to the side.

Using the strap, pull the spare out of the compartment (refer to the following illustrations). Rollers ease manipulation. Remove the protective cover. Install the flat in place of the spare by reversing the procedure. Do not forget to have the flat repaired as soon as possible.

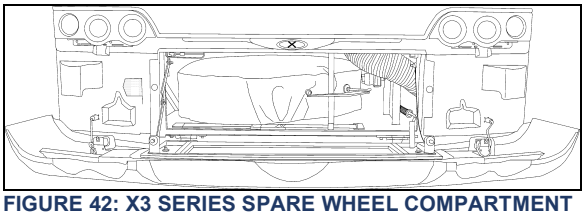

**FIGURE 42: X3 SERIES SPARE WHEEL COMPARTMENT 18614**

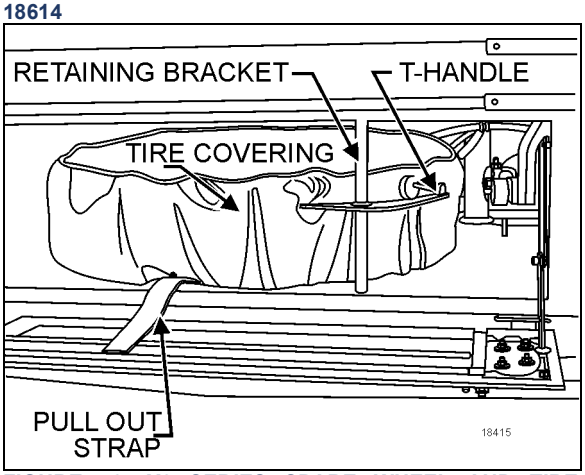


**FIGURE 43: X3 SERIES SPARE WHEEL AND TIRE 18415**

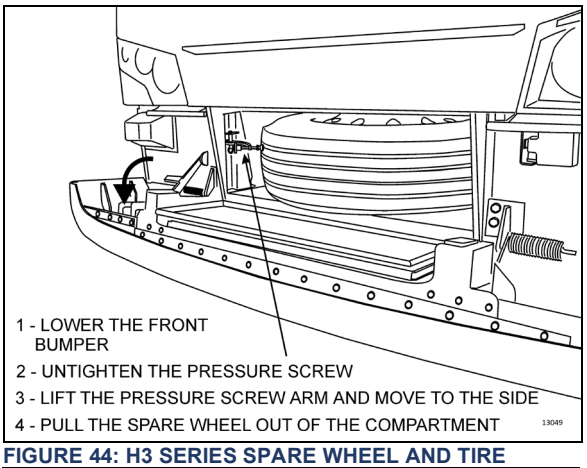


**FIGURE 44: H3 SERIES SPARE WHEEL AND TIRE**

***NOTE***

*On H3 series vehicles, the pressure screw arm must return to its initial position otherwise, the bumper cannot be latched in upper position.*

***NOTE***

*The jack and wheelnut wrench are stored in the front service compartment for X3 series vehicles and at the* ceiling of the forward baggage compartment, on the R.H. side for H3 series vehicles

The jack/tools kit contains a:

1. 30 ton hydraulic jack;
2. Wheel nut wrench and lever.

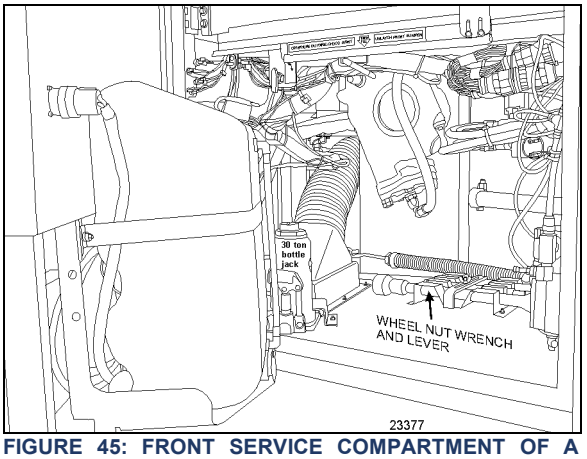


**FIGURE 45: FRONT SERVICE COMPARTMENT OF A X3 SERIES VEHICLE**

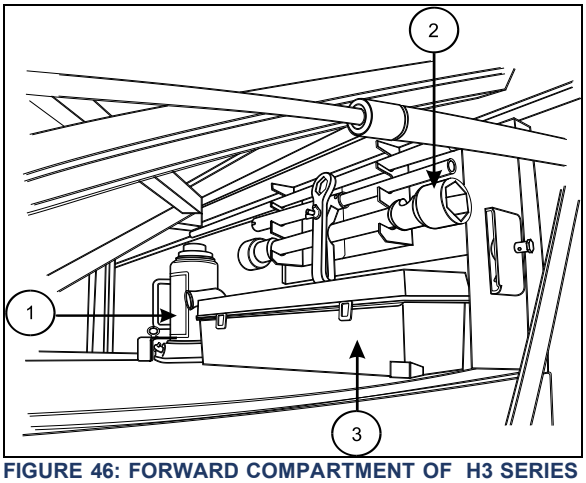


**FIGURE 46: FORWARD COMPARTMENT OF H3 SERIES VEHICLE WITH JACK, WRENCH AND REFLECTOR KIT.**

*NOTE*

*Check the inflation pressure of the spare tire periodically to keep it ready for use. Inflate spare tire to the pressure of the tire, which has the highest pressure on the vehicle. When installing, deflate to correct pressure if necessary.*

## 13.3 CHANGING A FLAT TIRE (COACHES ONLY)

In case of flat tire, refer to appropriate procedure under “Wheel Maintenance" heading in this section.

*NOTE*

*For hydraulic jack placement, refer to Section 18 "Body", under heading "Vehicle Jacking Points".*

**DANGER**

Place jack on stable and level ground; if necessary, place a board under the jack. Do not raise the vehicle until you are sure the jack is securely engaged.

**WARNING**

To prevent personal injury and/or equipment damage, use only the recommended jacking points. Passengers must not remain inside vehicle while wheel is being replaced.

**CAUTION**

Adjust tire pressure according to the appropriate cold tire inflation-pressure.

*NOTE*

*Store damaged wheel in spare tire compartment. Repair and balance the flat tire as soon as possible.*

## 13.4 CHANGING A FLAT TIRE (VIP & CONVERTED BUS SHELLS)

In case of a flat tire, turn *ON* the hazard flashers and bring the vehicle to a stop on the side of the road. Apply the parking brake. Make sure the vehicle is parked safely away from traffic. Set up the triangular reflectors in accordance with applicable highway regulations.

It is strongly suggested that you **do not** attempt to change a wheel, the wheel and tire are very heavy and there is usually no space available to put the removed flat. Also, the wheel nuts, especially those on inner dual, can become very tight after being on for only a short time. Often a heavy air wrench will be required to get the nuts loose. Get help via CB radio or cellular phone, There are truck tire service enterprises all over the country that can bring a wheel and make the change safely.

*NOTE*

*Bus shell vehicles contain no spare wheel. Access to compartment is obtained by pulling the release handle located in the front service compartment.*

**WARNING**

The reclining bumper compartment has not been designed for storage. Never leave loose objects in this area since they may interfere with steering linkage mechanism. Make sure bumper is safely locked in place after closing the compartment.

## 13.5 SPARE WHEEL MAINTENANCE

Maintenance of the spare wheel and tire consists in ensuring that tire inflation pressure is the same as the tire on the coach that has the highest inflation pressure (refer to “Specifications” in this section for the recommended tire inflation pressure). Inspect rim to ensure that there is no important corrosion. In addition, check if spare wheel

covering is in good condition and check that spare tire is securely fastened in compartment.

## 14. VALVE INSTALLATION

**CAUTION**

When replacing valve stems, lubricate the threads and O-ring with Permatex Dielectric Tune-Up grease (Prevost #**685324)** to avoid galvanic corrosion.

**Tip:** When installing the valves, use as needed a 15mm wrench to hold the valve and block the rotation.

<table>
<tr>
<td rowspan="1">Steel Wheels</td>
<td><u>All wheels</u><br>8.25 inches wheel, valve 650017<br>9 inches wheel, valve 650018 (shown)<br><br>Install the valve in place.<br>Torque 31-39 lb-ft (42-53 Nm)</td>
<td><br>#Prevost 650018</td>
<td></td>
</tr>
<tr>
<td rowspan="2">Aluminum Wheels</td>
<td><u>365 tire</u><br>Valve 650014<br><br>Install the valve in place.<br>Torque 106-133 lb-in (12-15 Nm)</td>
<td>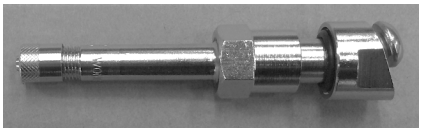<br>#Prevost 650014</td>
<td>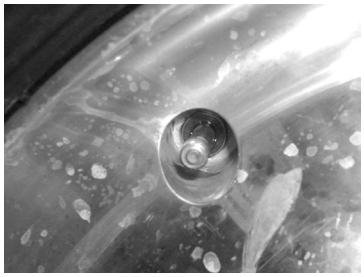</td>
</tr>
<tr>
<td><u>315 tire</u><br>Valve 650015<br><br>Install the valve in place.<br>Torque 106-133 lb-in (12-15 Nm)<br><br>Add an 1 3/8’’ extension, 650201 for wheels on:<br>-Front axle tire<br>-Tag axle tire<br>-Spare tire</td>
<td>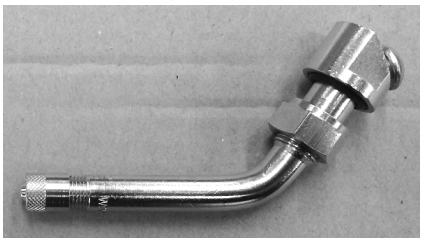<br>#Prevost 650015<br><br>#Prevost 650201</td>
<td></td>
</tr>
</table>

| | | | |
|---|---|---|---|
| | **Super Single tire**<br>Valve **650013**<br><br>Install the valve in place.<br>**Torque 106-133 lb-in (12-15 Nm)** | 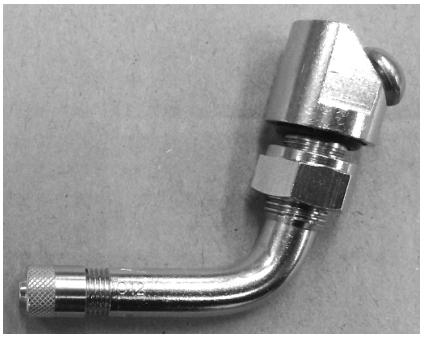<br>#Prevost **650013** |  |

14.1 TPMS SENSORS INSTALLATION

| | |
|---|---|
| **Check proper valve positioning before installing sensor onto valve (risk of damaging the sensor or air leaks).** |  |
| Pressure sensor #**560032.**<br><br>Remove bar code with supplied removable tie-rap.<br><br>**Make sure never to mix the bar code between the wheels. (bar code is linked to sensor)** | |
| Positioning the sensor on the wheel. Ensure that the sensor is well pressed onto the surface. | |
| Torx screw T-20<br>**TORQUE: 35 lb-in (4 Nm)**<br>**IMPORTANT**<br>-Put blue Loctite 243 to the threads.<br>-Use the screw only once.<br>-Replacement screw #**651084**. | |
| **Install bar code and tie it up using wheel holes. Use supplied removable tie-rap.** |  |

**Apply decal facing the valve.**




**#651091 ENGLISH #651090 BILINGUAL**



## 15. TIRE MAINTENANCE

The most critical factor in tire maintenance is proper inflation (Figure 49). No tire is impervious to loss of air pressure. To avoid the hazards of under inflation, always maintain tires at their recommended inflation pressure. Improper inflation decreases tire life.

*NOTE*

VIP & Converted Bus Shells vehicles are not at their maximum weight before their conversion and tire pressures are adjusted at lower level than the maximum allowed appearing on the DOT plate. Tires pressure must be re-adjusted once converted.

An under inflated tire builds up heat that can cause sudden tire destruction, resulting in improper vehicle handling and possible loss of vehicle control. At least once a week, before driving (when tires are cold), check inflation pressure on all the tires, including the spare tire. This is especially important in cases when different drivers operate the vehicle.

**WARNING**

Failure to maintain correct tire inflation pressure may result in sudden tire destruction, improper vehicle handling, and will cause rapid and irregular tire wear. Inflation pressure should be checked weekly and always before long distance trips.

### 15.1 INFLATION PRESSURE

- Vehicles equipped with BERU TPMS

On vehicles equipped with the Beru Tire Pressure Monitoring System (TPMS), it is better to use the TPMS display as the primary reference to judge when tire pressure need adjustment.

The TPMS presents pressure readings of each tire as a +/- deviation from the wanted target.

If a tire reads within +/- 3 PSI no adjustment is needed.

If a tire reads -4 PSI and below, re-inflate by the marked amount.

If a tire reads +4 PSI and above , deflate by the marked amount.

*NOTE*

Relying on the TPMS system is better than relying on a hand gage since the TPMS is temperature compensated and remain accurate no matter if the tires are cold or hot.

Tires take up to 3 hours to get down to ambient temperature after a ride. A common mistake consist of checking pressure while the tires have not fully cooled down which leads into under-inflated tires. Relying on the TPMS eliminates this mistake.

Running tires at optimal pressure reduces tire wear, improving safety and fuel economy.

The TPMS target pressures are factory set to equal the prevailing tire pressure at delivery time.

When tire pressures are increased to account for higher vehicle weight, the TPMS set point need to be increased accordingly.

- Vehicles not equipped with BERU TPMS

The condition and pressure of the tires can greatly affect both useful tire life and road safety.

At regular intervals, verify the tire pressures. Use an accurate tire pressure gauge when checking inflation pressures. Never exceed the maximum inflation pressure specified on each tire.

*NOTE*

*Inflation pressure should be checked when tires are cold. Cold tire inflation pressure can be measured when a vehicle has not been driven for at least 3 hours or less than 1 mile (1.6 km). Driving, even for a short distance, causes tires to heat up and air pressure to increase. Check inflation pressure on all tires (including the spare tire) using an accurate tire gauge.*

*NOTE*

*The recommended tire inflation pressures are given in the applicable documents supplied with the vehicle. In addition, cold tire inflation pressures are listed on the Department of Transport's certification plate, affixed on the panel behind the driver's seat for H3 series vehicles and on the left side control panel for X3 series vehicles. For special tire selection, a "PREVOST COACH SPECIAL SPECIFICATION" chart is supplied with the vehicle and is affixed on the left wall near the driver's seat. Remember, tire inflation*

*pressure must be adjusted according to vehicle loading - see table in "Coach Final Record"*

## CAUTION

These tire pressures are established in accordance with the maximum allowable load on each axle. A lower pressure is recommended if the axle load is less than the above specifications. Weigh vehicle fully loaded and pressurize according to tire manufacturer's recommendations. For other tire and wheel specifications, see Prevost tire pressure tabulation in "Coach Final Record".

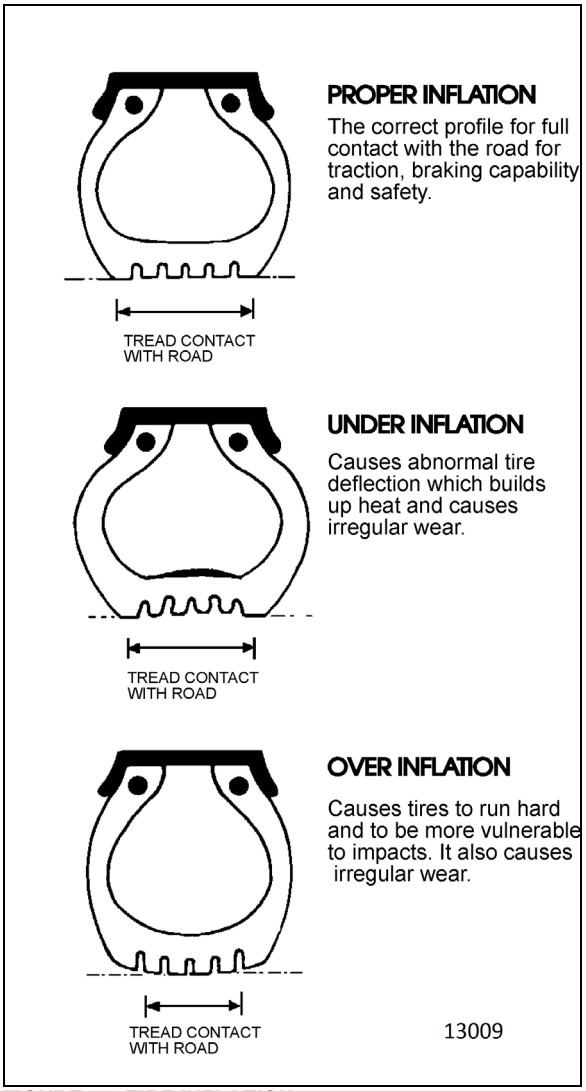


FIGURE 47: TIRE INFLATION

## CAUTION

Never bleed air from hot tires as tires will then be under inflated. Use an accurate tire gauge to check pressures (Do not kick tires as an inflation check. This is an unreliable method).

## WARNING

Incorrect tire pressures cause increased tire wear and adversely affect road holding of the vehicle, which may lead to loss of vehicle control.

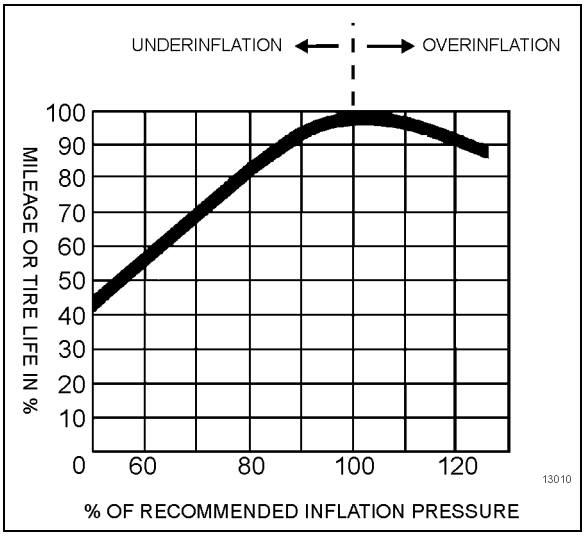


FIGURE 48: TIRE LIFE / INFLATION PRESSURE

## WARNING

Recommended tire inflation pressures and maximum allowable loads apply to speeds up to 65 mph (105 km/h). Do not drive vehicle at a higher speed than 65 mph (105 km/h) or above the posted speed limit.

## WARNING

All tires on the same axle should always be inflated to the same pressure. There should not be a difference in pressure between right and left tires on the same axle.

A 5 psi (35 kPa) under-inflation in one front tire can not only reduce vehicle maneuverability, but will create steering hazards which can lead to an accident.

## 15.2 TIRE MATCHING

Unmatched tires on drive axle will cause tire wear and scuffing, as well as possible damage to the drive unit. Consequently, It is recommended that tires be matched within 1/8" (3 mm) of the same rolling radius.

| *NOTE* |
| --- |
| *It is recommended that all tires on coach be of the same type.* |

## 15.3 WHEEL BALANCING

Before balancing, wheels must be clean and free from all foreign matter. The tires should be in good condition and properly mounted. An unbalanced wheel can be due to a bent wheel or improper mounting. Before removing the wheel from the vehicle, check for swaying movement and if necessary, check the wheel lateral run-out as outlined under heading *"Wheel Straightness Check".*

**⚠ WARNING**

When balancing wheel and tire assemblies, it is strongly recommended to closely follow instructions covering the operation of wheel balancer.

**⚠ CAUTION**

A maximum of 16-oz (450 g) of balancing weight is recommended. If more weight is necessary, check and correct the cause.

## 15.4 TIRE ROTATION

Radial tires should be rotated only when necessary. If the tires are wearing evenly, there is no need to rotate. If irregular wear becomes apparent or if the wear rate on the tires is perceptively different (from axle to axle), then tires should be rotated in such a manner as to alleviate the condition.

| *NOTE* |
| --- |
| *There is no restriction on criss-cross rotation.* |

## 16. SPECIFICATIONS

STEEL WHEELS

Wheel size.....9.0" X 22.5"

Tire size .....315/80 R 22.5

ALUMINUM WHEELS

Wheel size.....9" X 22.5"

Tire size .....315/80 R 22.5

OPTIONAL FRONT & TAG AXLE ALUMINUM WHEELS (Standard on VIP vehicles)

Wheel size.....10.5" X 22.5"

Tire size .....365/70 R 22.5

OPTIONAL WIDE BASE TIRE ALUMINUM WHEELS

Wheel size.....14" X 22.5"

Tire size .....455/55 R 22.5

RECOMMENDED TIRE INFLATION PRESSURE AT MAXIMUM LOAD (cold)

*NOTE*

*Vehicle is delivered with the specific inflation pressure certification plate according to the tire selection. For more information consult section 11 "Technical information" of the Owner's/Operator's manual under "DOT Certification Plate".*

**WARNING**

Special tire selection may lower maximum allowable speed limit, even below posted speed limit. For maximum safety, check with tire manufacturer.

**CAUTION**

Bus shell vehicles should be weighed fully loaded and tires pressurized according to tire manufacturer's recommendations.

**WARNING**

Recommended tire inflation pressures and maximum allowable loads apply to speeds up to 65 mph (105 km/hr). Do not drive vehicle at a higher speed than 65 mph (105 km/h) or above the posted speed limit.

## CONTENTS

**SECTION CHANGE LOG** ..... **4**

**1. TORQUE TABLES** ..... **5**

1.1 STEERING COLUMN ..... 5
1.2 MISCELLANEOUS TORQUES ..... 6

**2. STEERING SYSTEM** ..... **7**

2.1 FRONT I-BEAM AXLE STEERING SYSTEM DESCRIPTION ..... 7
2.2 INDEPENDENT FRONT SUSPENSION STEERING SYSTEM DESCRIPTION ..... 8

**3. POWER STEERING GEAR** ..... **9**

3.1 DESCRIPTION ..... 9
3.2 POWER STEERING GEAR REMOVAL ..... 10
3.3 POWER STEERING GEAR INSTALLATION ..... 10
3.4 TROUBLESHOOTING ..... 10

**4. STEERING GEARBOX HYDRAULIC END LIMITER ADJUSTMENT** ..... **10**

**5. BLEEDING POWER STEERING HYDRAULIC SYSTEM** ..... **11**

**6. HYDRAULIC PRESSURE TEST** ..... **11**

**7. POWER STEERING HYDRAULIC PUMP** ..... **11**

7.1 DESCRIPTION ..... 11
7.2 REMOVAL AND INSTALLATION ..... 11

**8. STEERING COLUMN** ..... **13**

8.1 REMOVAL ..... 13

**9. STEERING WHEEL** ..... **13**

9.1 REMOVAL ..... 13
9.2 INSTALLATION ..... 14
9.3 CLOCKSPRING REPLACEMENT ..... 14

**10. TURNING ANGLE ADJUSTMENT** ..... **15**

**11. STEERING LINKAGE ADJUSTMENT** ..... **16**

11.1 COACHES ..... 16
11.2 VIP & BUS SHELLS ..... 16

**12. PITMAN ARM** ..... **16**

12.1 REMOVAL ..... 16
12.2 INSTALLATION ..... 17
12.3 ADJUSTMENT ..... 17
12.4 TAG AXLE UNLOADING SWITCH ADJUSTMENT (OPTIONAL) ..... 18

**13. DRAG LINK (I-BEAM AXLE)** ..... **18**

13.1 LENGTH ADJUSTMENT ..... 18
*13.1.1 Adjustment System Thread Lengths* ..... *19*

**14. MAINTENANCE ..... 19**

14.1 POWER STEERING FLUID CONDITION ..... 20
*14.1.1 Power Steering Fluid Visual Inspection ..... 20*
14.2 POWER STEERING FLUID CHANGE ..... 20
14.3 POWER STEERING FLUID RESERVOIR ..... 21
*14.3.1 Fluid Level Check ..... 21*
*14.3.2 Filter Element Replacement ..... 22*
14.4 STEERING SYSTEM PLAY INSPECTION ..... 22
14.5 STEERING STABILIZER CYLINDER (DAMPER) ..... 23
14.6 DRAG LINK MAINTENANCE ..... 23
*14.6.1 IFS Drag Link ..... 23*
*Lubrication Fittings ..... 23*
*14.6.2 Front I-beam Axle Drag Link ..... 24*
14.7 FRONT I-BEAM AXLE TIE ROD ..... 25
14.8 TIE ROD INSPECTION PROCEDURE ..... 25
*14.8.1 Tube inspection ..... 26*
*14.8.2 Ball joint play inspection ..... 26*
*14.8.3 Fine adjustment sleeve play inspection ..... 26*
*14.8.4 Tie rod ball joint inspection for corrosion ..... 26*
14.9 DRAG LINK BALL JOINT INSPECTION FOR CORROSION ..... 27
14.10 STRAIGHT BODY TYPE BALL JOINT ..... 27
*14.10.1 Visual Inspection ..... 27*
*14.10.2 Straight Body Type Ball Joint End Play and Looseness ..... 28*

**15. DRIVING TIPS ..... 28**

**16. FRONT WHEEL ALIGNMENT ..... 28**

16.1 INDEPENDENT FRONT SUSPENSION ALIGNMENT ..... 28
*16.1.1 Alignment Terminology ..... 29*
*16.1.2 Front End Inspection ..... 29*
*16.1.3 Front Wheel Camber ..... 29*
*16.1.4 Front Wheel Toe-In ..... 30*
*16.1.5 Front Wheel Caster ..... 30*
*16.1.6 Major Damage ..... 30*
*16.1.7 Hydraulic End Limiter Adjustment After Wheel Alignment ..... 31*
*16.1.8 Alignment Specifications ..... 32*
16.2 I-BEAM AXLE - FRONT WHEEL ALIGNMENT ..... 36
*16.2.1 Inspection Before Alignment ..... 36*
*16.2.2 Minor Front Wheel Alignment ..... 36*
*16.2.3 Major Front Wheel Alignment ..... 36*
*16.2.4 Hydraulic End Limiter Adjustment After Wheel Alignment ..... 37*
*16.2.5 Turning Angle Adjustment ..... 37*
*16.2.6 R.H. Turn Adjustment ..... 37*
*16.2.7 L.H. Turn Adjustment ..... 37*
*16.2.8 Front Wheel Camber ..... 38*
16.3 CAMBER CHECK ..... 38
*16.3.1 Front Axle Caster ..... 38*
16.4 FRONT WHEEL TOE-IN ..... 39
*16.4.1 Inspection and Adjustment ..... 39*
16.5 FRONT WHEEL ALIGNMENT SPECIFICATIONS ..... 40

**17. TROUBLESHOOTING ..... 40**

**18. TORQUE SPECIFICATIONS ..... 42**

**19. SPECIFICATIONS ..... 42**

## SECTION CHANGE LOG

| | DESCRIPTION | DATE |
|---|---|---|
| 1 | | |
| 2 | | |
| 3 | | |
| 4 | | |
| 5 | | |
| 6 | | |

## 1. TORQUE TABLES

### 1.1 STEERING COLUMN

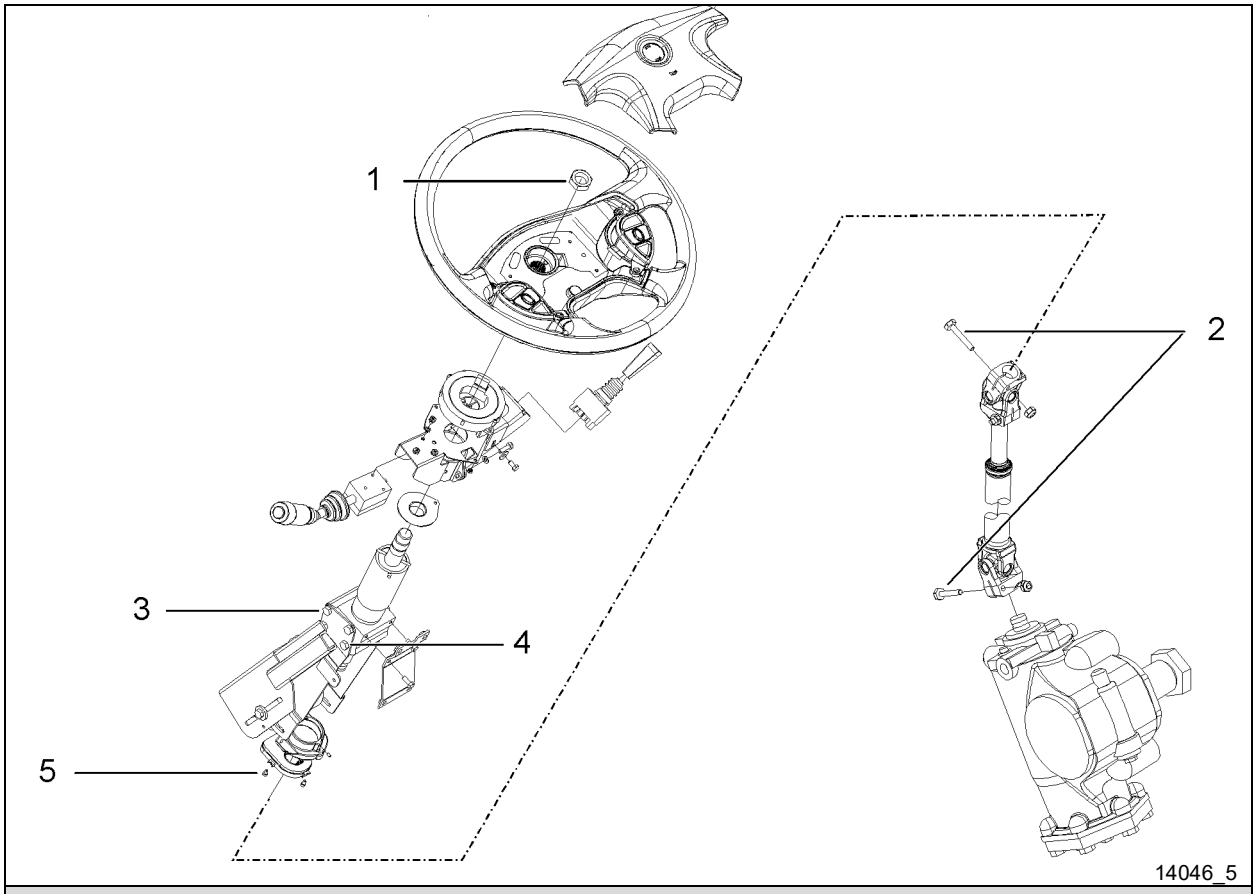


| STEERING COLUMN | | |
|---|---|---|
| No | DESCRIPTION | TORQUE |
| 1 | Steering Wheel Nut | 35-45 lb-ft (47-61 Nm) |
| 2 | U-Joint Clamp Nut | 48 lb-ft (65 Nm) |
| 3 | Column Support Fore Bolts | 11-13 lb-ft (15-18 Nm) |
| 4 | Column Support Aft Bolts | 15-19 lb-ft (20-26 Nm) |
| 5 | Steering Angle Sensor Mounting Screws | 9-12 lb-in (1.02-1.36 Nm) |

## 1.2 MISCELLANEOUS TORQUES

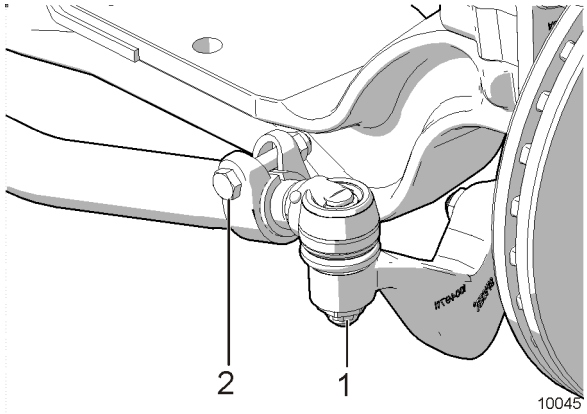


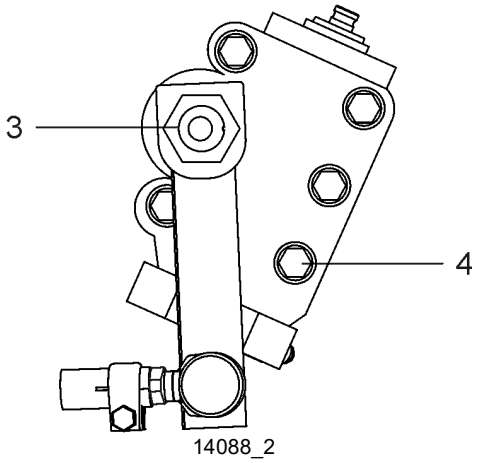


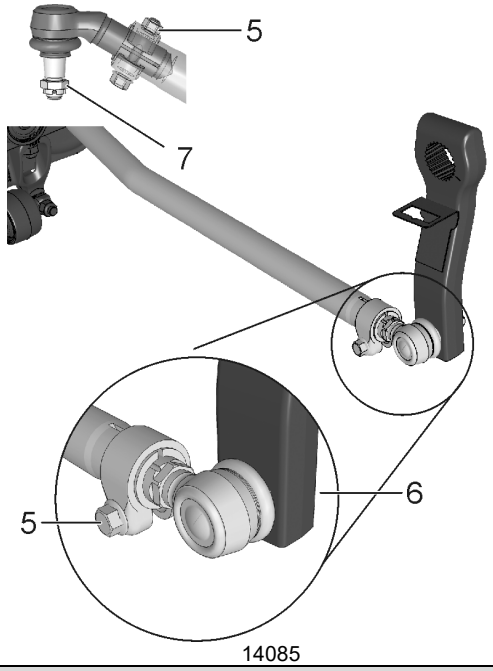


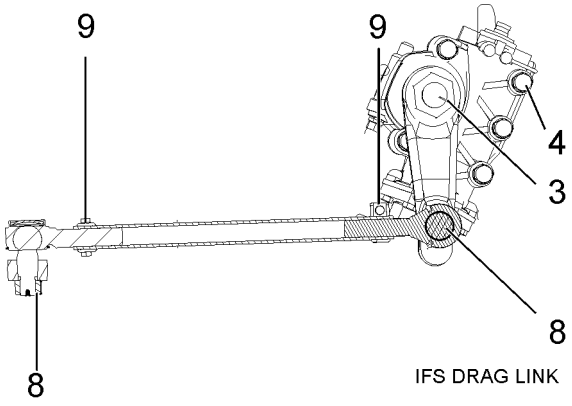


| MISCELLANEOUS | | |
|---|---|---|
| No | DESCRIPTION | TORQUE |
| 1 | Tie rod end ball pin self locking nuts - I-Beam Axle | 155-170 lb-ft (210-230 Nm) |
| 2 | Tie rod end clamp bolts - I-Beam Axle | 118-133 lb-ft (160-180 Nm) |
| 3 | Pitman Arm Fixing Nut | 470-570 lb-ft (637-773 Nm) |
| 4 | Steering Gear Mounting Bolts | 365-405 lb-ft (495-549 Nm) |
| 5 | Drag Link Clamp Bolts - I-Beam Axle | 118-133 lb-ft (160-180 Nm) |
| 6 | Drag Link Ball Joint Stud Nut (Fore) - I-Beam | 165-236 lb-ft (224-320 Nm) |
| 7 | Drag Link Ball Joint Stud Nut (Aft) - I-Beam | 140-200 lb-ft (190-271 Nm) |
| 8 | Drag Link Ball Joint Stud Nut - IFS | 245-270 lb-ft (332-366 Nm) |
| 9 | Draglink Clamp Bolt - IFS | 50-60 lb-ft (68-81 Nm) |

## 2. STEERING SYSTEM

### 2.1 FRONT I-BEAM AXLE STEERING SYSTEM DESCRIPTION

The steering system consists of the steering wheel and column assembly, a vane-type hydraulic pump, reservoir, filter, interconnecting system lines and hoses, integral power steering gear, linkage and steering damper (Figure 1). The steering linkage includes the pitman arm, drag link, steering arm, tie rod arms and tie rod.

Hydraulic components are added to transmit, increase and regulate steering control forces.

These elements are:

1. Steering stabilizer (damper);
2. A vane type hydraulic pump;
3. Hydraulic reservoir and hoses.

The steering stabilizer reduces road shocks and vibrations in the system. The steering gearbox is self-powered and provides movement with power assistance to the left wheel.

Steering stability and tire wear are influenced by wheels, hubs, tires, air suspension, brakes, front suspension and front end alignment which are all covered in their respective sections in this manual.

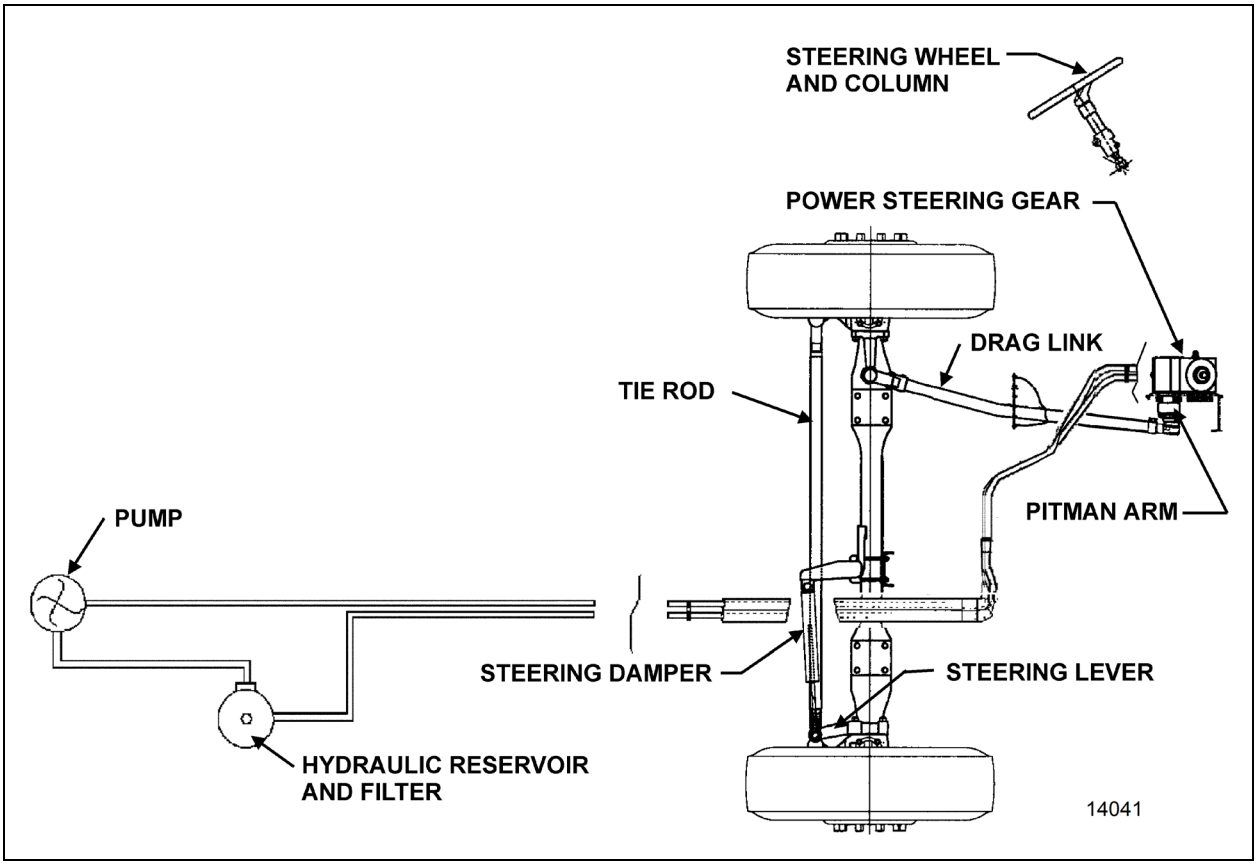


**FIGURE 1: I-BEAM AXLE STEERING SYSTEM SETUP** **14041**

## 2.2 INDEPENDENT FRONT SUSPENSION STEERING SYSTEM DESCRIPTION

The steering system consists of the steering wheel and column assembly, a vane-type hydraulic pump, reservoir, filter, interconnecting system lines and hoses, integral power steering gear and linkage (Figure 2). The steering linkage consists of tie rods connected to the bell crank and the steering arm at the left side of the coach, and to the idler arm and steering arm at the right side of the coach. The bell crank and idler arm are connected by a relay rod. A drag link connected to the bell crank and the pitman arm, which is mounted to the steering gear, transfers the turning motion of the steering wheel to the steering arms.

Hydraulic components are added to transmit, increase and regulate steering control forces.

These elements are:

1. A vane type hydraulic pump;
2. Hydraulic reservoir and hoses.
3. Hydraulic power cylinder (VIP & Bus Shells)

| *NOTE* |
| --- |
| *VIP vehicles and Bus Shells are also equipped with a hydraulic power cylinder. The hydraulic power cylinder provides an added source of assistance and being connected to the R.H. wheel, makes it such that the total steering forces are produced with minimal stress on mechanical linkages.* |

The steering gearbox is self-powered and provides movement with power assistance to the left wheel.

Steering stability and tire wear are influenced by wheels, hubs, tires, air suspension, brakes, front suspension and front end alignment which are all covered in their respective sections in this manual.

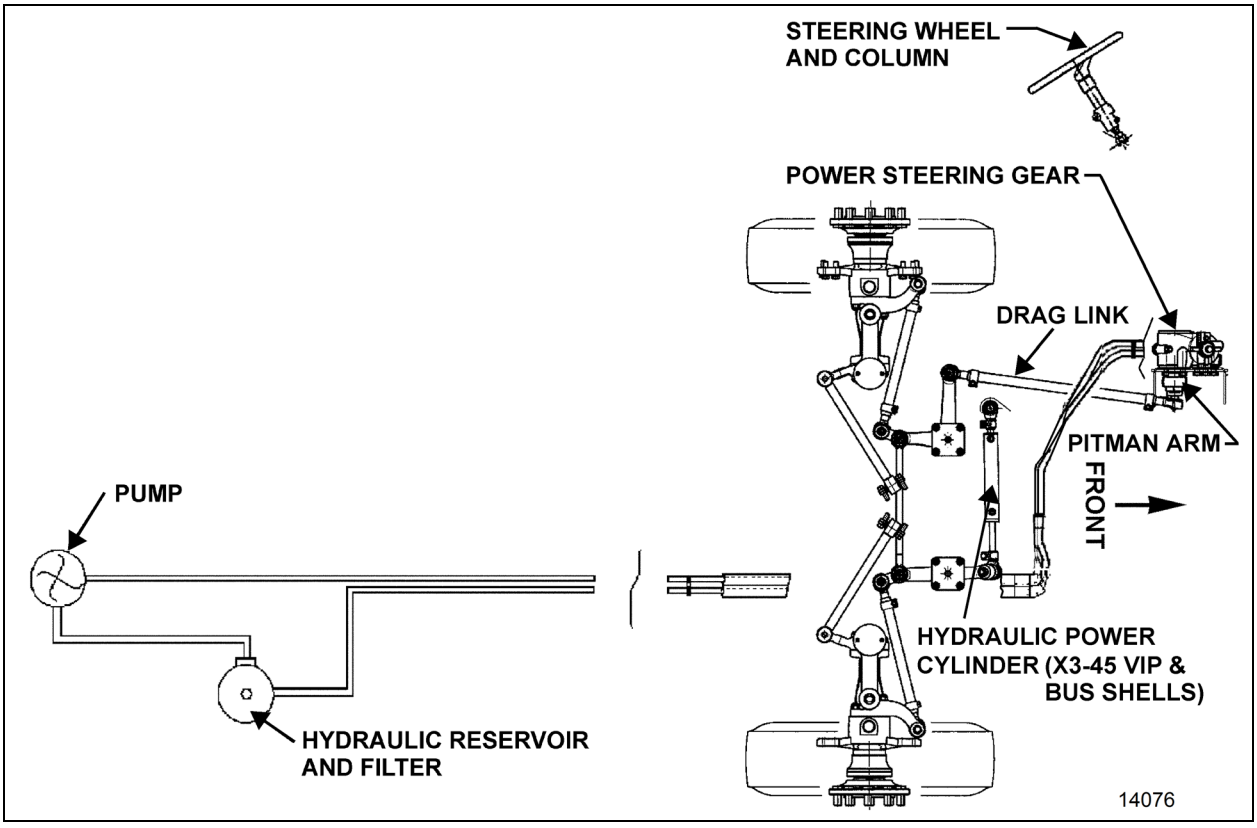


**FIGURE 2: IFS STEERING SYSTEM SETUP** 14076

## 3. POWER STEERING GEAR

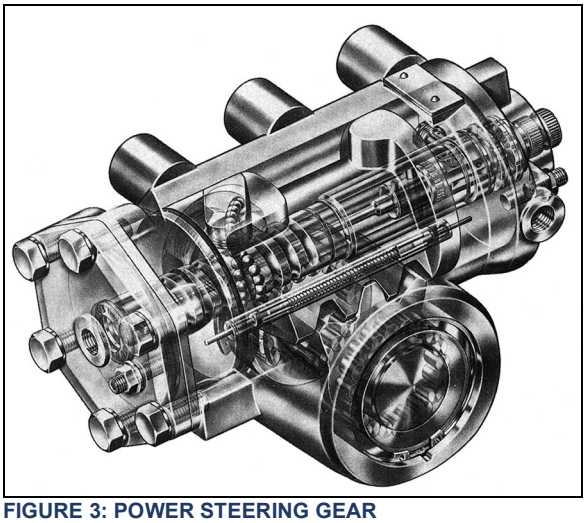

FIGURE 3: POWER STEERING GEAR

### 3.1 DESCRIPTION

The power steering gear is located in the lower part of front service compartment (Figs. 3 & 4). The housing of the ZF/Robert Bosch-Servocom contains a control valve, working cylinder and a complete mechanical steering gear. The pressure oil for the steering is delivered by a motor-driven oil pump which is supplied with oil from an oil tank.

The housing is designed as a cylinder for the piston, which converts the rotation of the steering shaft and the worm into an axial movement and transfers this to the steering worm sector shaft. The serration of the sector shaft is straight-cut with a high surface quality in such a way that it is only possible to set a unique setting without play on installation in the straight-ahead driving area by means of the two eccentrically designed lateral housing covers.

The piston and worm are connected via a ball chain. When the worm is turned, the balls are collected by a circulating pipe at one end of the chain and fed in again at the other end, thus producing an endless ball chain.

The control valve consists of the valve slide in a needle bearing in the worm, with six control grooves on the circumference and the control sleeve on the worm, which also has six control grooves. The valve slide, designed with steering shaft connection, turns together with the worm as the steering wheel is turned.

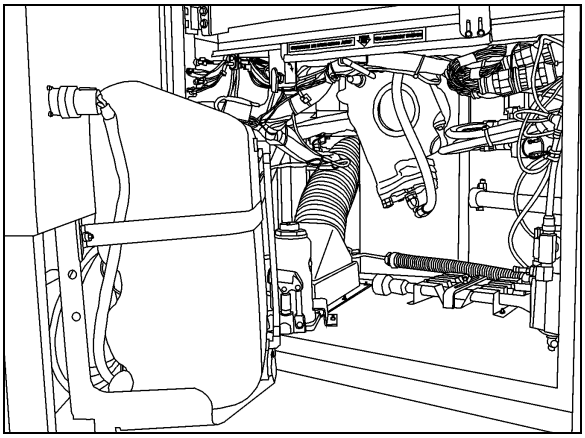

FIGURE 4: FRONT SERVICE COMPARTMENT

A torsion bar, which is pinned with the valve slide and the worm, keeps the control valve in the neutral position as long as no opposing force is applied to the steering wheel. The steering housing contains a pressure relief valve, which limits the discharge pressure of the oil pump to the maximum value required. A replenishing valve can also be used, through which oil is sucked from the return if steering is not hydraulically boosted. 14035

Compared with constant ratio, steering versions with variable ratio are more directly designed in the center area than outside the center area. The resulting smaller steering corrections benefit steering behavior in straight-ahead driving. At the same time, the indirect transmission means that there is a higher hydraulic torque available at the steering arm in parking movement. If the hydraulic assistance fails, the operating forces on the steering wheel are correspondingly lower in this area. This is achieved through a piston/steering worm sector shaft serration with differing modulus and angle of pressure.

Upon transfer of a torque from the steering shaft to the worm, or vice versa, the torsion bar is deformed in the elastic area so that there is torsion between the valve slide and the control sleeve. When the steering wheel is released, the torsion bar ensures that the valve is returned to the neutral position.

**Refer to the *"ZF-SERVOCOM Repair Manual"* and *"RB Robert Bosch Servocom - Service Manual (8090)"*, found on your Technical Publications USB flash drive, for the functional aspects and maintenance procedure of the steering gear.**

### 3.2 POWER STEERING GEAR REMOVAL

**WARNING**

The steering gearbox weighs approximately 100 lbs (45 kg) dry. Exercise caution when handling.

1. Put a container into place, and then disconnect both the inlet and outlet hoses from the power steering gear. Cover fittings to prevent fluid contamination.
2. Mark both the pitman arm and sector shaft with a line, then remove pitman arm. Refer to *"11.1 Pitman Arm Removal"* procedure.
3. Mark both the steering shaft universal joint yoke and steering gear input shaft with a line, then disconnect universal joint.
4. Unscrew and remove the power steering gear.

### 3.3 POWER STEERING GEAR INSTALLATION

Reverse *"Power Steering Gear Removal"* procedure paying particular attention to the following:

1. Tighten fasteners as recommended according to torque tables.
2. Bleed air from the system as per paragraph 4 (Bleeding power steering hydraulic system).

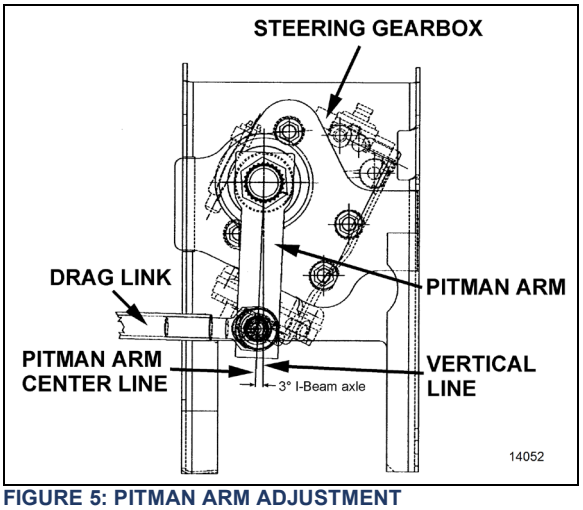


**FIGURE 5: PITMAN ARM ADJUSTMENT**

### 3.4 TROUBLESHOOTING

Perform troubleshooting of the steering gear as outlined in the *"ZF-SERVOCOM Repair Manual"* and "***RB Robert Bosch Servocom - Service Manual (8090)***" found on your Technical Publications USB flash drive.

## 4. STEERING GEARBOX HYDRAULIC END LIMITER ADJUSTMENT

Refer to the following technical information when experiencing steering gearbox jerking, wheels hard to turn and noisy gearbox when wheels are turned all the way.

Two potential failure modes could cause the problems described above:

1) Air in the system – Need to bleed the air in the system (refer to RB Robert Bosch Servocom - Service Manual (8090), available on the prevost Technical Publicatios site).
2) Pressure relief limiter screws not set correctly. **Replace the limiter screws** on the steering gearbox when setting the alignment that could have changed the mechanical end lock position of the vehicle or if the maintenance technician took the steering gearbox to a full lock position without having all the steering mechanical connections installed or linked.

A setting of the steering limitation is necessary if or when:

a) A new or repaired steering gearbox is fitted or

b) New screws (20 and 128) were fitted to the automatically adjusting steering limitation or

c) Alterations to or adjustments of the front axle were carried out.

**Find the end limiter adjustment procedure in Maintenance Information MI20-12 available on Prevost Technical Publications site.**

## 5. BLEEDING POWER STEERING HYDRAULIC SYSTEM

To bleed the power steering hydraulic system, refer to "*RB Robert Bosch Servocom - Service Manual (8090)"*, found on your Technical Publications USB flash drive, under heading *"Setting and Functional Test"*.

## 6. HYDRAULIC PRESSURE TEST

Perform a pressure test as outlined in the *"ZF-SERVOCOM Repair Manual"* annexed to this section under heading *"Setting and Functional Test"*.

| *NOTE* |
|---|
| *For vehicles equipped with ZF-SERVOCOMTRONIC (speed sensitive) unit, refer to the supplement to the repair manual ZF-SERVOCOM.* |

## 7. POWER STEERING HYDRAULIC PUMP

### 7.1 DESCRIPTION

The power steering pump is a gear driven hydraulic unit which supplies hydraulic pressure for the operation of the steering gear. The pump is mounted on the engine, at the flywheel end and is also used for driving the fuel pump.

### 7.2 REMOVAL AND INSTALLATION

The pump is accessible through the engine compartment R.H. access door.

To remove the pump, proceed as follows:

1. You must first remove the fuel feed pump.
2. Clean around the fuel pump and fuel lines. Position a container to catch any fuel that might drain from the pump or lines.
3. Remove the fuel pump.

| *NOTE* |
|---|
| *Only unfasten the bolts marked with arrows.* |

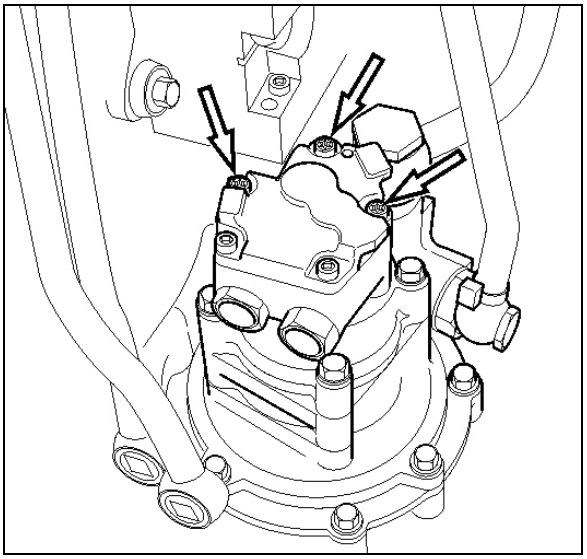

FIGURE 6: FUEL PUMP REMOVAL

| **CAUTION** |
|---|
| Ensure to clean around the head of the bolts. Debris will prevent the tool from fitting properly and cause damage to the fasteners. |

4. Check that the adapter and fuel pump drive axle are not damaged.

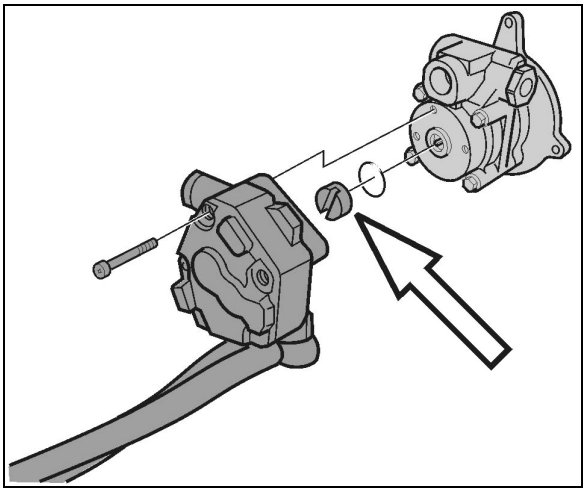

FIGURE 7: FUEL PUMP DRIVE AXLE

5. Set the fuel pump aside.
6. Clean around the power steering pump and loosen the steering lines. Position a container to catch any hydraulic fluid that might drain from the pump or lines.
7. Unfasten the power steering pump bolts.

| *NOTE* |
|---|
| *Only unfasten the bolts marked with arrows.* |

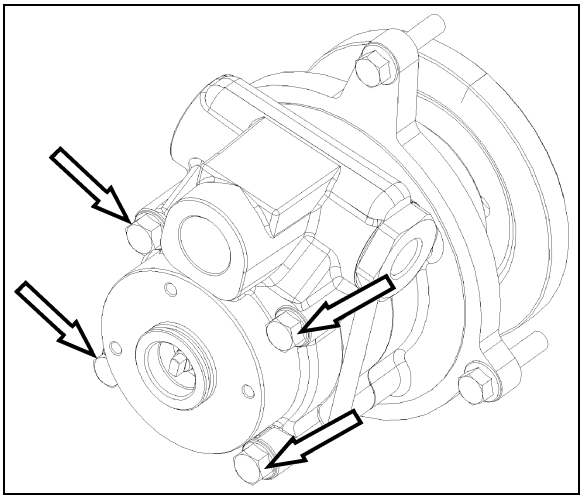

FIGURE 8: POWER STEERING PUMP REMOVAL

8. Install the new power steering pump. Torque-tighten bolts to specification.

| *NOTE* |
| --- |
| *Use a new gasket.* |

9. Connect the hydraulic lines to the power steering pump.
10. Install the fuel pump. Torque-tighten bolts to specification.

| *NOTE* |
| --- |
| *Use a new sealing ring. Check that the fuel pump drive axle sits correctly in the power steering pump.* |

11. Start the engine and let run for 5 minutes. Make sure that there are no leaks.

## 8. STEERING COLUMN

### 8.1 REMOVAL

To disassemble the steering column from system, refer to Figure 9 & Figure 10. The steering column has no lubrication points. The lower steering column U-joint is easily accessible through the front service compartment. The upper steering column U-joint and the steering slip joint are accessible from the front driver's area. To access these joints, proceed as follows:

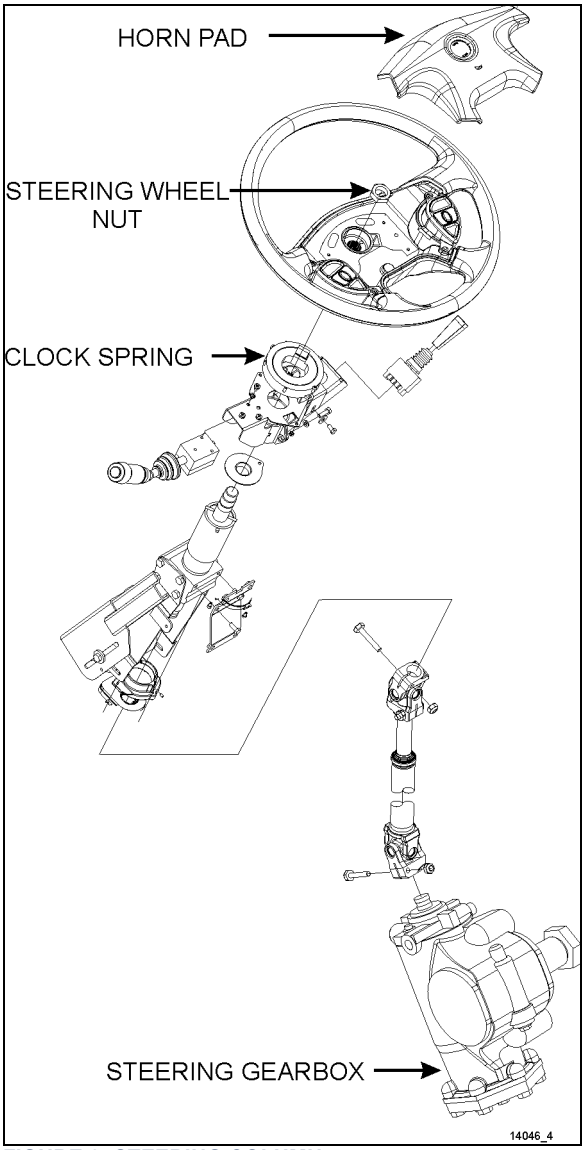


**FIGURE 9: STEERING COLUMN**

1. From the front driver's compartment area, remove the three plastic fasteners on steering column lower cover. Remove the lower cover (Figure 10).
2. Unscrew the four retaining screws on steering column middle cover.
3. Unscrew the four retaining screws fixing steering column upper cover to middle cover. Remove the steering column middle and upper covers.
4. Position the steering wheel in order to gain access to the joints.

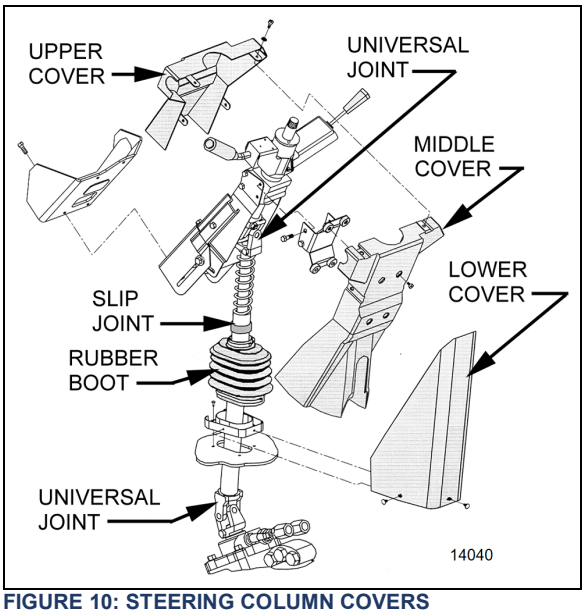


**FIGURE 10: STEERING COLUMN COVERS**

## 9. STEERING WHEEL

### 9.1 REMOVAL

| *NOTE* |
| --- |
| *Before undertaking the steering wheel removal, assure that the front wheels are pointing straight ahead, aligned with the vehicle.* |

1. Set the battery master switch located in the rear electrical compartment to the *"OFF"* position.
2. Pull the horn pad straight up gently to detach it from the steering wheel (Figure 11).
3. Disconnect the horn wire (white) connected to the horn pad and the steering wheel harness 4-pin connector.

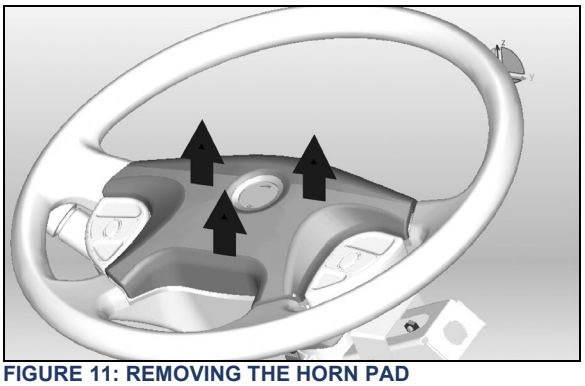

FIGURE 11: REMOVING THE HORN PAD

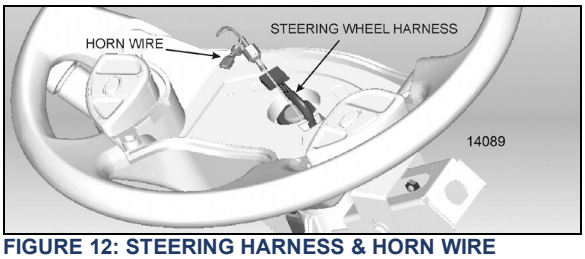


FIGURE 12: STEERING HARNESS & HORN WIRE

4. Unscrew the steering wheel nut. To simplify installation and ensure steering wheel alignment, mark the relationship of the spline shaft to the steering wheel hub (if marks don't already exist or don't line up).
5. Using an appropriate puller, separate the steering wheel from the spline shaft.
6. From behind the steering wheel, pull gently on the electrical wires passing through the rectangular opening in the steering wheel to finish removal of the steering wheel.
7. Once the steering wheel is removed, it is important to block any rotating movement of the clockspring in order to prevent it from losing its neutral position. Use two pieces of masking tape to lock it in place (Figure 13).

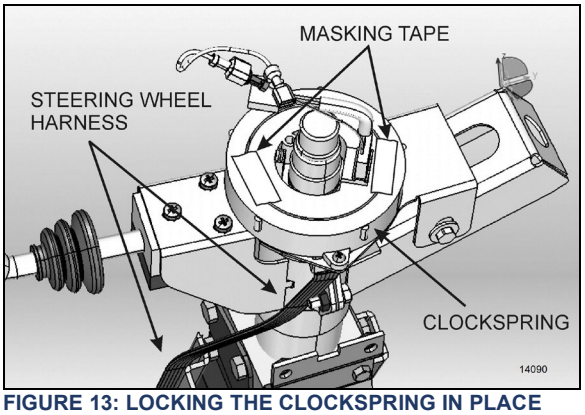


FIGURE 13: LOCKING THE CLOCKSPRING IN PLACE

*NOTE*

*The clockspring mechanism permits a certain number of turns in each direction. At the moment of reinstalling the steering wheel, if the clockspring is not at its neutral position, the number of available turns will be reduced. This may damage the clockspring if the steering wheel is turned to its maximum amplitude.*

## 9.2 INSTALLATION

1. Route the white horn wire and the 4-pin connector through the opening on the steering wheel.
2. Align the mark on the steering wheel hub with the mark on the spline shaft and slide the wheel onto the shaft.
3. Tighten steering wheel retaining nut.

**TORQUE : 35-45 lb-ft (47-61 Nm)**

4. Plug the 4-pin connector and connect the white horn wire to the center pad.
5. Reinstall the center pad and test for proper horn functioning.

## 9.3 CLOCKSPRING REPLACEMENT

1. Remove the steering wheel.
2. Remove the 2 clockspring mounting screws and then remove the clockspring. You will have to disconnect the clockspring harness connector located lower along the steering wheel column (Figure 14). If necessary, remove the steering column covers.
3. Route the new clockspring harness through the opening in the clockspring support (Figure 14). Plug the connector at the base of the steering wheel column and fix harness along the steering wheel column.

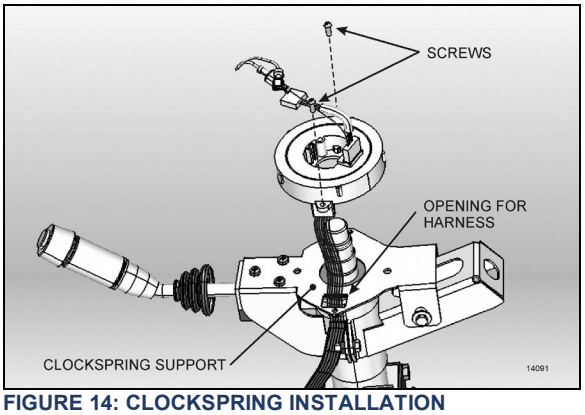


FIGURE 14: CLOCKSPRING INSTALLATION

4. Mount the clockspring in place with 2 screws.
5. Break the paper seal and rotate the center part of the clockspring about 50° clockwise (Figure 15). This step is necessary for the installation of the steering wheel.

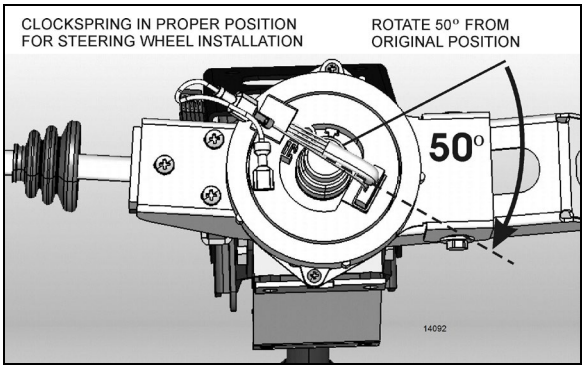


FIGURE 15: PROPER CLOCKSPRING POSITION

6. Reinstall the steering wheel.

## 10. TURNING ANGLE ADJUSTMENT

The maximum turning angle is set through two (2) steering stop screws installed on the knuckles, above the ABS wheel sensors. Steering stop screws are factory adjusted to accommodate the chassis design, and therefore, do not require adjustment on new vehicles. However, these should be checked and adjusted if necessary, any time a steering system component is repaired, disassembled or adjusted. Refer to section 10 *"Front Axle"* under heading *''6.4 ''Turning Angle Adjusment".*

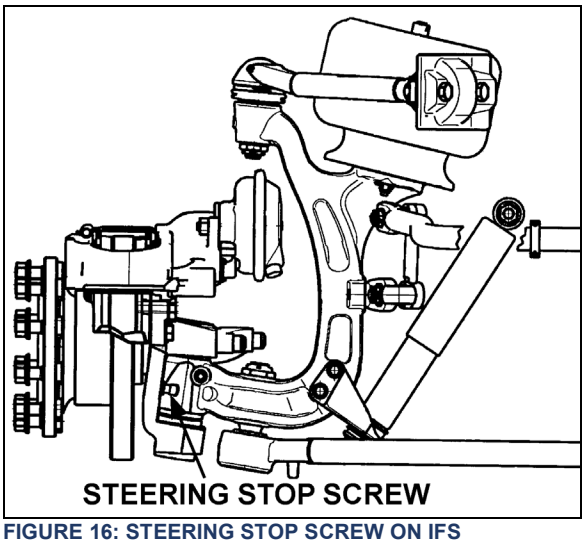


FIGURE 16: STEERING STOP SCREW ON IFS

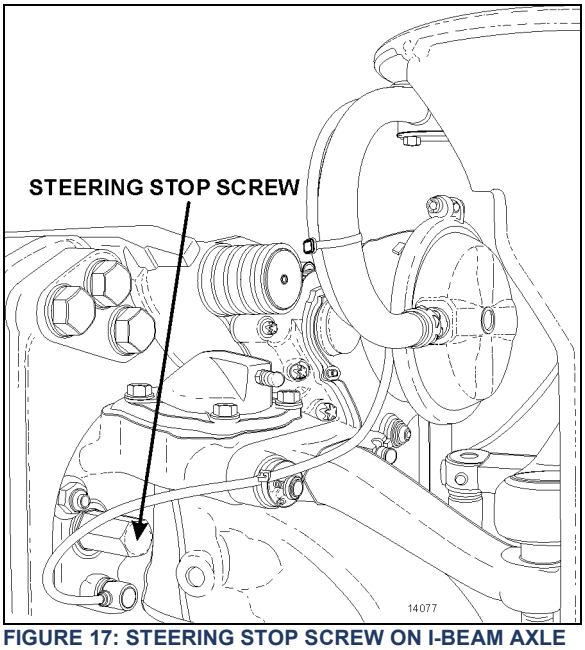


FIGURE 17: STEERING STOP SCREW ON I-BEAM AXLE

**CAUTION**

To prevent the steering damper from interfering with the adjustment of turning angles on vehicles equipped with I-Beam axle, make sure its fixing bracket is at correct location on the axle (refer to paragraph 13.5 "Steering Stabilizer Cylinder (Damper)).

**CAUTION**

Never maintain the relief pressure for more than 5 seconds, since damage to the power steering pump may occur.

**CAUTION**

*Reduce or shut off the power steering hydraulic pressure before the boss on the knuckle touches the stop screw. If not, the components of the front axle will be damaged (refer to "ZF-SERVOCOM Repair Manual" and "**RB Robert Bosch Servocom - Service Manual (8090)**", found on your Technical Publications USB flash drive, under heading "Setting The Steering Limiter" or **"Setting the hydraulic steering limitation").***

## 11. STEERING LINKAGE ADJUSTMENT

Steering linkage pivot points should be checked each time they are lubricated. Looseness can be visually detected while rotating the steering wheel in both directions. Replace defective parts.

### 11.1 COACHES

The steering linkage includes the pitman arm, drag link, steering arm, tie rod arms and tie rod.

**CAUTION**

*Front wheel alignment should be checked and adjusted if necessary, any time a component of the steering system is repaired, disassembled or adjusted. Refer to section 10* "Front Axle" *under heading* 6. "Front Wheel Alignment".

### 11.2 VIP & BUS SHELLS

The steering linkage consists of tie rods connected to the bell crank and the steering arm at the left side of the bus shell, and to the idler arm and steering arm at the right side of the bus shell.

**CAUTION**

Front wheel alignment should be checked and adjusted if necessary, any time a component of the steering system is repaired, disassembled or adjusted. Refer to section 16 "Suspension" under heading: "Front End Alignment".

## 12. PITMAN ARM

### 12.1 REMOVAL

1. Remove cotter pin, nut and washers from drag link ball stud at pitman arm.
2. Disconnect drag link from pitman arm, using jaw style pullers (pressure screw type).

**WARNING**

Always wear approved eye protection when operating pullers.

**CAUTION**

Do not drive (hammer in) pitman arm on or off pitman shaft as this can damage the steering gear.

**CAUTION**

Heating of components to aid in disassembly is not allowed because it has a detrimental effect on axle components and steering linkages.

3. Using a cold chisel, undo punch mark that locks fixing nut to the pitman arm.
4. Remove pitman arm fixing nut.
5. Check the radial position of the pitman arm in relation to the sector shaft prior to removal of pitman arm.

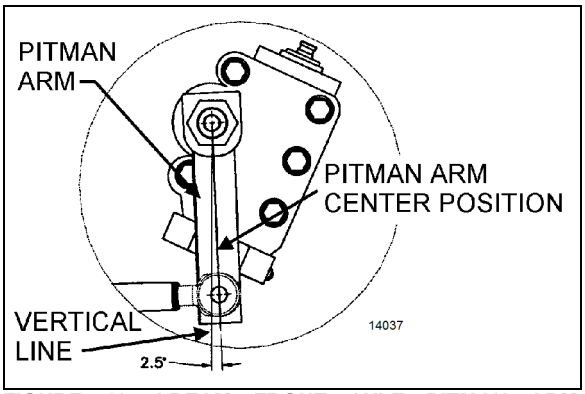


FIGURE 18: I-BEAM FRONT AXLE PITMAN ARM ADJUSTMENT

6. Add reference marks to the arm and shaft if necessary to ensure correct alignment at reassembly.

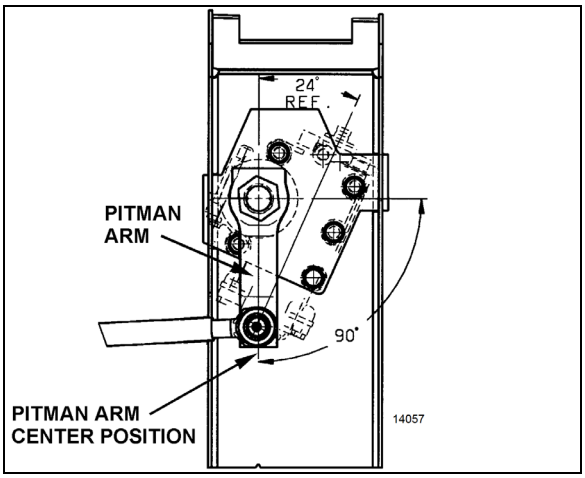


FIGURE 19: IFS PITMAN ARM ADJUSTMENT

7. Use a suitable puller and remove pitman arm.

12.2 INSTALLATION

1. Position pitman arm on sector gear shaft with reference marks aligned.
2. Install fixing nut.

**TORQUE: 470-570 lb-ft (637-773 Nm)**

| *NOTE* |
| --- |
| *Use a new nut if the previously removed nut was punched.* |

1. Lock nut with sector shaft using a punch mark into the groove (Refer to Figure 20).




FIGURE 20: FIXING NUT PUNCH MARK

2. Connect drag link to pitman arm while ensuring that rubber stabilizer is in place on the rod end. Install washers. Tighten nut and install a new cotter pin. Depending on axle type, select the appropriate torque,

*IFS,* **TORQUE: 245-270 lb-ft (332-366 Nm)**

*I-BEAM,* **TORQUE: 165-236 lb-ft (224-320 Nm)**

| **CAUTION** |
| --- |
| Input shaft marks must be aligned before adjusting pitman arm. |

12.3 ADJUSTMENT

1. Disconnect the drag link from pitman arm. Center steering wheel by dividing the total number of steering wheel turns in two. Scribe a reference mark on steering gearbox at the center previously determined.
2. Using a protractor, check the angle of the pitman arm (refer to Figure 18 & Figure 19 for details).
3. The pitman arm should be adjusted with reference marks aligned or to an angle of 2.5º towards front of vehicle (I-Beam axle) or 0° (Independent Front Suspension) in relation with the vertical axis. If not, unscrew and remove fixing nut. Remove the pitman arm according to the procedure outlined under

previous heading *"Pitman arm removal"*. Adjust to the proper angle.

4. When adjustment is achieved, replace fixing nut and tighten

**TORQUE: 470-570 lb-ft (637-773 Nm)**

### 12.4 TAG AXLE UNLOADING SWITCH ADJUSTMENT (OPTIONAL)

1. Make sure vehicle wheels are straight and facing forward.
2. Line up switch lever with reference to the bracket center (Refer to Figure 21).

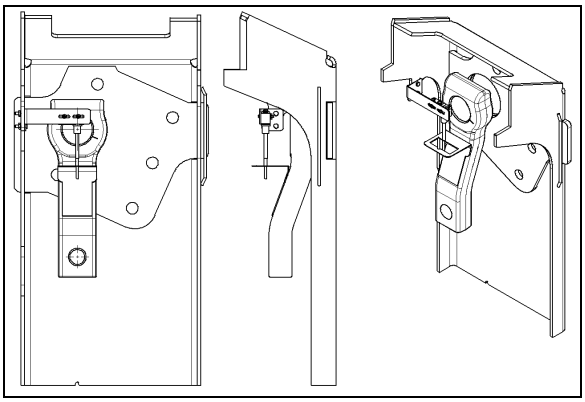

**FIGURE 21: TAG AXLE UNLOADING SWITCH ADJUSTMENT**

## 13. DRAG LINK (I-BEAM AXLE)

The draglink on your vehicle connects the steering gear pitman arm to the front axle's steering arm.

For additional details please refer to ZF assembly instructions LMN404-3 *and* Lemförder service information leaflet for the fine adjustment system.

**PINCH HAZARD**

Keep hands and fingers clear of pinch zones around pitman arm.

Pinch zones are between pitman arm and clamp, and between front of pitman arm and vehicle structure.

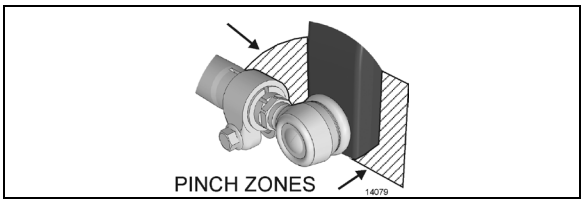


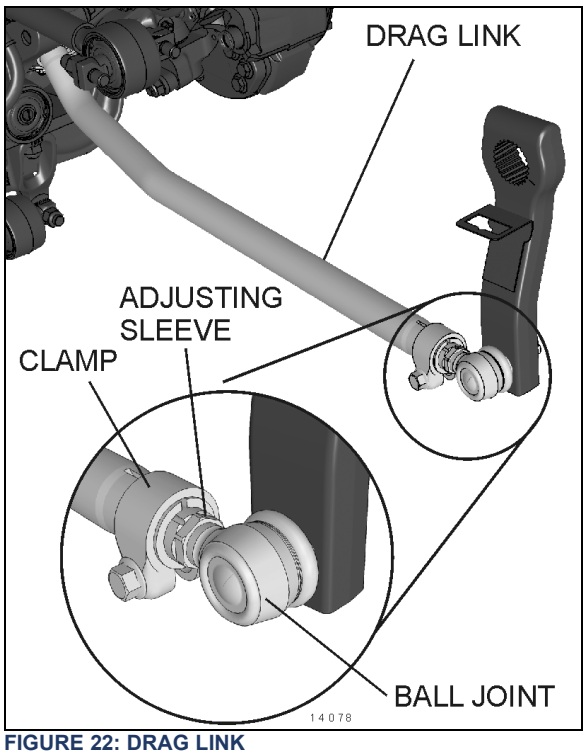


**FIGURE 22: DRAG LINK**

### 13.1 LENGTH ADJUSTMENT

The drag link fore end is provided with an adjusting sleeve which has internal and external left and right threads. Turning this sleeve allows fine adjustments to the length of the draglink.

Apply a small amount anti-seize compound on the threads for corrosion protection. Be sure to avoid smearing the ball joint boot.

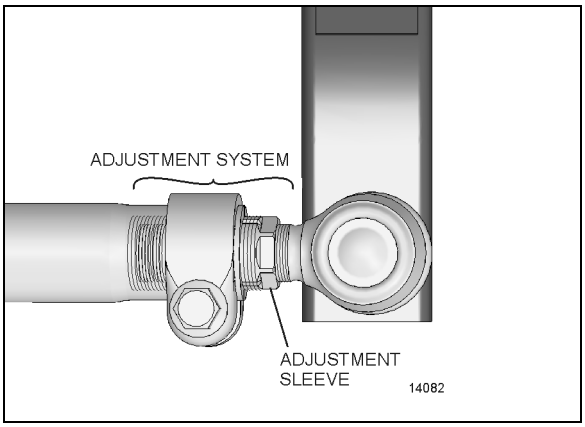


**FIGURE 23: DRAG LINK ADJUSTMENT SYSTEM**

**CAUTION**

Too little pressure on the clamp can destroy the threaded adjustment system sleeve.

Apply the recommended torque for clamp nut.

**TORQUE: 118-133 lb-ft (160-180 Nm)**

Fine adjustment of the drag link length should be performed exclusively by turning the adjuster sleeve.

Refer to maintenance information MI19-05 for detailed draglink length adjustment instructions.

13.1.1 Adjustment System Thread Lengths

When assembling the adjuster sleeve or ball joint, be sure to assemble the parts within the following prescribed thread lengths and values.

Lengths V and W should be measured prior to removal to restore the steering system to its original state.

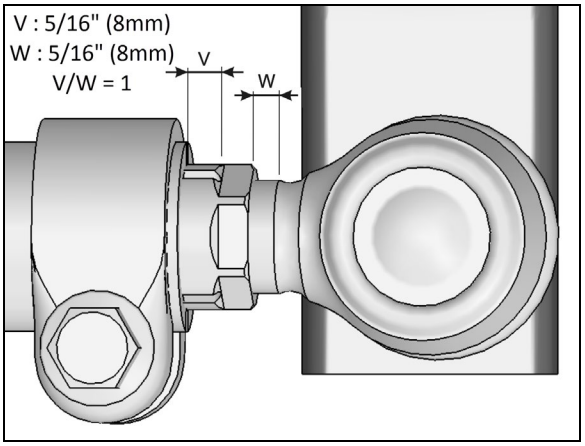


**FIGURE 24: DRAG LINK ADJUSTMENT SYSTEM**

- Dimension V and W should be equal: V/W = 1
- Dimension V: *5/16" (8mm)*
- Dimension W: *5/16" (8mm)*

**WARNING**

To preserve the integrity of the adjusting system, length V and W should *never* exceed 5/8"(16mm) ± 1 thread pitch.

Length V and W should be equal within ± 1mm

## 14. MAINTENANCE

The power steering system requires little maintenance. However, the system should be kept clean to ensure maximum operating performance and trouble-free service. Periodic inspections should also be made to check for leakage and all parts for damage or distortion.

When the slightest evidence of dirt, sludge or water is discovered in the system, disconnect fluid lines at the power steering gear to drain the system. Drain and refill the system with appropriate power steering fluid.

Air in the hydraulic system will cause spongy action and noisy operation. When a hose has been disconnected or when fluid has been lost for any reason, the system must be bled. Bleed system as outlined under paragraph 4*: "BLEEDING POWER STEERING HYDRAULIC SYSTEM".*

**CAUTION**

Do not operate the pump without fluid in the power steering fluid reservoir.

If the steering linkage between the steering gear and the two front wheels is not properly adjusted, or if it is bent, twisted or worn, the steering of the vehicle will be seriously impaired. Whenever a steering linkage part is repaired, replaced or adjusted, steering geometry and front wheel alignment must be checked and necessary corrections made. Refer to section 10 *"FRONT AXLE"* under heading 6: *"FRONT WHEEL ALIGNMENT"*.

At regular lubrication intervals, the steering linkage should be thoroughly inspected for worn or loose components.

After the vehicle has been operated continually and high mileage figures have been reached,

overhaul of the various steering units will be required. General overhaul procedure normally requires removal of the entire assembly, cleaning and inspection of all parts and final assembly. Careful inspection of all parts during overhaul is very important and must not be neglected.
Lubrication fittings must all be cleaned before applying lubricant. Moreover, always be sure the equipment used in applying lubricant is clean. Every precaution should be taken to prevent entry of dirt, grit, lint or other foreign matter into lubricant containers. Replace fittings that have become broken or damaged. Lubrication intervals, as well as the recommended lubricants for the steering components, are given in the *"LUBRICATION AND SERVICING SCHEDULE"* in Section 24 of this manual. The intervals given in the schedule are recommended for normal service. More frequent intervals may be required under severe operating conditions.

## 14.1 POWER STEERING FLUID CONDITION

The power steering fluid reservoir is filled with Automatic Transmission Fluid (ATF) (refer to FLUIDS & LUBRICANTS TABLE in Section 24: Lubrication & Servicing). A periodic power steering fluid change is not required. Change the power steering fluid only if the steering gear unit was repaired, replaced or if the visual inspection of the fluid shows that a change is necessary.



**MAINTENANCE**

Check power steering fluid condition at the intervals specified by the Lubrication And Servicing Schedule in Section 24: LUBRICATION & SERVICING

### 14.1.1 Power Steering Fluid Visual Inspection

The color of the power steering fluid can give you an idea of the fluid's condition and tell you that it needs to be changed. ATF gets darker with age, this process doesn't necessarily indicate a problem. If the fluid has darkened significantly, it may indicate that the power steering system is running hotter than normal and the fluid is overheating. Troubleshoot the overheating and have the fluid changed.

Get a sample of power steering fluid using the gauge located on top of the reservoir. Wipe it on a clean white rag. Check the fluid color, smell and consistency. Use the color chart below to determine if the power steering fluid needs to be changed.

| POWER STEERING FLUID CONDITION COLOR CHART | |
|---|---|
| | Translucent red<br>**New fluid** |
| | Semi-translucent dark red/light brown, thick oily consistency, relatively odorless<br>**Normal fluid** |
| | Opaque dark brown, appears to be thin<br>**Dirty, change fluid** |
| | Dark brown/black with burnt smell<br>**Bad condition**<br>*(internal damage may have already occurred)* |

## 14.2 POWER STEERING FLUID CHANGE

Please, refer to **Oil Change and Bleeding** in "*RB Robert Bosch Servocom - Service Manual (8090)"* found on your Technical Publications USB flash drive.

Replace the filter element simultaneously with the fluid change. See 13.3.2 Filter Element Replacement.

## 14.3 POWER STEERING FLUID RESERVOIR

The power steering reservoir is located on the R.H. side of the engine compartment.
On H series vehicles it is fixed on the main power compartment wall, accessible by the R.H. compressor door.

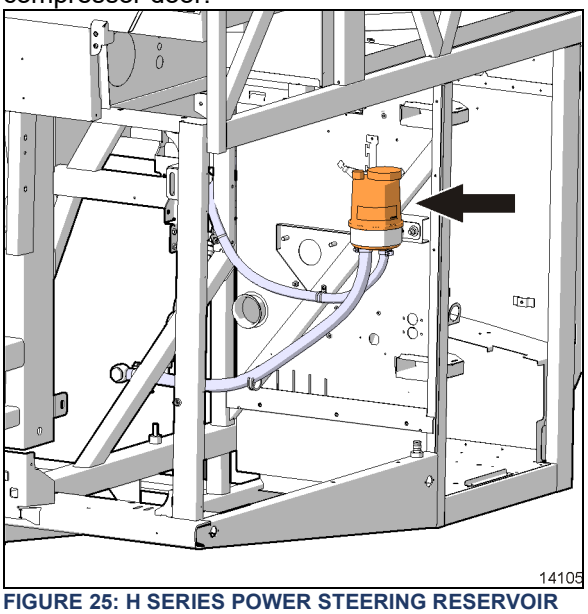


**FIGURE 25: H SERIES POWER STEERING RESERVOIR**

On X series vehicles it is located at the upper right side of the engine compartment, accessible by the engine compartment door.

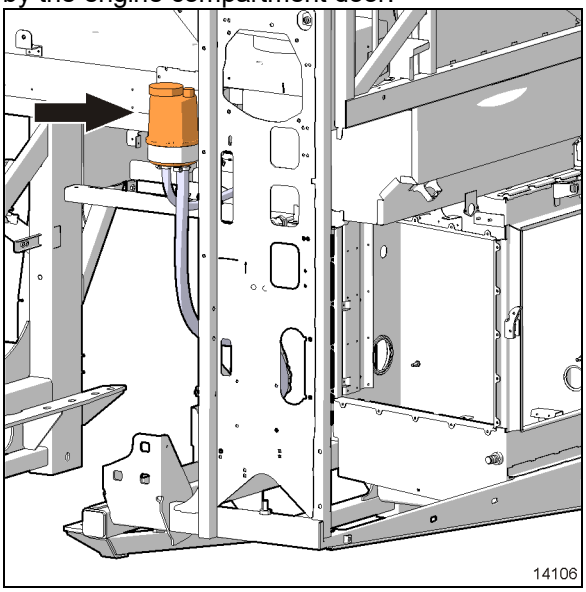


Figure 26: X SERIES POWER STEERING RESERVOIR

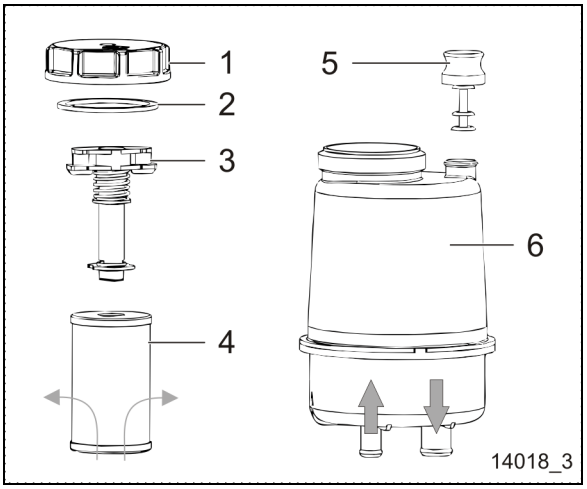


**FIGURE 27: POWER STEERING FLUID RESERVOIR**

1) Cap
2) Gasket
3) Filter screw
4) Filter
5) Breather cap
6) Reservoir

### 14.3.1 Fluid Level Check

**MAINTENANCE**

At regular intervals, fluid level should be checked in the reservoir and filter assembly. Furthermore, the oil filter element in the power steering reservoir should be replaced at the intervals specified by the Lubrication And Servicing Schedule in Section 24: LUBRICATION & SERVICING.

1. Stop the engine.
2. Open the engine compartment R.H. side door.
3. Thoroughly clean the reservoir and its immediate vicinity to protect the fluid from being soiled by impurities.
4. Check fluid level.
5. Open the cap and top up level to "FULL" mark.
6. Close the cap.

### 14.3.2 Filter Element Replacement

*NOTE*

*Note: Before taking the power steering fluid reservoir cover off, thoroughly clean the reservoir and caps to prevent the ingress of impurities into the hydraulic fluid.*

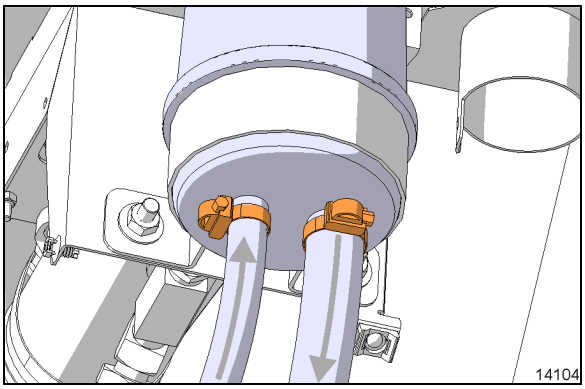


**FIGURE 28: HOSE CLAMPS**




**FIGURE 29: FILTER REMOVAL**

1. Remove the cap
2. Prepare an appropriate container.
3. Disconnect the larger suction hose first.
4. Disconnect the inlet hose.
5. Drain all fluid from the reservoir.
6. Press down and unscrew the filter.
7. Lift up the old filter and keep one finger under the filter's center hole, to prevent the impurities from the filter from entering the oil reservoir.
8. Drain any remaining oil.
9. Clean reservoir.
10. Transfer the screw to the new filter and insert it into the oil reservoir.
11. Check that the filter is positioned correctly and is locked in place securely.
12. Reconnect the hoses.

    Tighten the clamps to **30 lb-ft (41 Nm)**
13. Top up with fresh oil to the MAX marking.
14. Double check cleanliness of cap and install.
15. Discard the oil collected during the filter change.

**⚠ CAUTION**

**Protect the fluid from being soiled by impurities**

When removing the old filter element, make sure that power steering fluid doesn't flush back particles into the reservoir. If this situation occurs, contaminated fluid must be drained and the reservoir must be cleaned.

## 14.4 STEERING SYSTEM PLAY INSPECTION

Basically, the steering system play is checked with the engine running and the front wheels in the straight ahead driving position. The steering wheel is slowly turned in one direction until there is a perceptible movement of a front wheel. If a point on the steering wheel rim moves more than the value indicated below before perceptible return movement of the wheel under observation, there is excessive free play in the steering system.

**Steering wheel travel covered:**

**Maximum 1.732 inch (44mm) with Prevost 18-inch steering wheel**

*NOTE*

*The full procedure is described under paragraph* ***Checking the Steering Gear Play*** *in RB Robert Bosch Servocom - Service Manual (8090 manual).*

***Take note that the maximum travel covered value specified in the Servocom manual doesn't apply to the Prevost design which uses a 18-inch steering wheel.***

If the maximum value is exceeded, the steering system should be thoroughly inspected for worn or loose components, beginning with the steering linkage. If the steering linkage is in good condition, then the steering column and the steering gear should be inspected.

## MAINTENANCE

**I-BEAM FRONT AXLE**

Perform the steering play inspection every 185 000 miles (300 000 km) or once a year whichever comes first.

## MAINTENANCE

**INDEPENDENT FRONT SUSPENSION (Private use only)**

Perform the steering play inspection every 48 months.

### 14.5 STEERING STABILIZER CYLINDER (DAMPER)

The steering damper is located on R.H. side, aft of front axle (Figure 30).

The cylinder is non-adjustable and non-repairable. Check for oil leaks or lack of resistance. Disconnect the cylinder from axle, and then carefully attempt to extend and collapse it manually.

## MAINTENANCE

Steering damper ball joint (rod end) is provided with grease fitting for pressure lubrication. Under normal conditions, it should be serviced at the intervals specified by the Lubrication And Servicing Schedule in Section 24: LUBRICATION & SERVICING.

Check the ball joint for wear, and replace if necessary. Good quality lithium-base grease NLGI No. 2 like Shell Retinax LX is recommended.

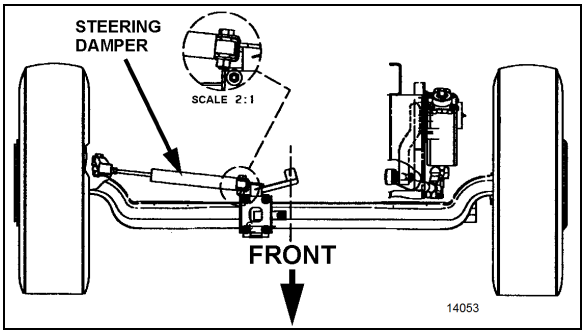


**FIGURE 30: STEERING STABILIZER (DAMPER)**

### 14.6 DRAG LINK MAINTENANCE

Visually inspect drag link components for broken, corroded or deformed clamps, loose, bent or corroded nuts and gauges on tube from rubbing parts.

#### 14.6.1 IFS Drag Link

Lubrication Fittings

All lubrication fittings must be clean before applying lubricant. Also, always be sure equipment used in applying lubricant is clean. Every precaution should be taken to prevent entry of dirt, grit, lint or other foreign matter into lubricant containers. Replace fitting when become broken or damaged.

Re-charge ball joint until grease can be seen escaping from socket. On ball joints fitted with a rubber boot, do not add to much grease as the rubber boot might expand and rupture.

In selecting proper lubricants, supplier reputation must be considered. The supplier must be

responsible for product quality. Figure 31 shows approximate location of steering lubrication fittings.

## MAINTENANCE

**Drag Link (with Independent Front Suspension)**

Drag link ends (ball joint) are provided with grease fittings for pressure lubrication.

To prevent corrosion from forming around the ball pin (particularly the drop type ball joint as it is exposed to dirt and water), remove the old grease bead and assure sufficient grease is applied to purge the old grease and fill the joint and dust seal.

## MAINTENANCE

Intervals below are recommended for normal service. More frequent intervals may be applied under severe operating conditions.

The lubrication fittings (see Figure 31 ) should be serviced at the intervals specified by the Lubrication And Servicing Schedule in Section 24: LUBRICATION & SERVICING.

(1) **Drag Link Ends:** Lubricate at four fittings, two at each end of link with good quality lithium-base grease NLGI No. 2 (Shell Retinax LX or equivalent).

(2) **Relay Rod Ends:** Lubricate at two fittings, one at each end of rod with good quality lithium-base grease NLGI No. 2 (Shell Retinax LX or equivalent).

(3) **Tie Rod Ends:** Lubricate at four fittings, one at each end of both tie rods, with good quality lithium-base grease NLGI No. 2 (Shell Retinax LX or equivalent).

(4) **Steering Knuckle (swivel assembly):** Refer to DANA SPICER MAINTENANCE MANUAL NDS AXLES Lubrication and Maintenance" for more details.

(5) **Idler Arm and Bell Crank:** Lubricate at two fittings, one on the idler arm and the other on the crank bell, with good quality lithium-base grease NLGI No. 2 (Shell Retinax LX or equivalent). Apply grease gun pressure to the fitting until lubricant appears at the top seal.

(6) **Upper A-Arm Ball Joint:** Lubricate at fitting until you see some grease on the relief valve nearby, with good quality lithium-base grease NLGI No. 2 (Shell Retinax LX or equivalent).

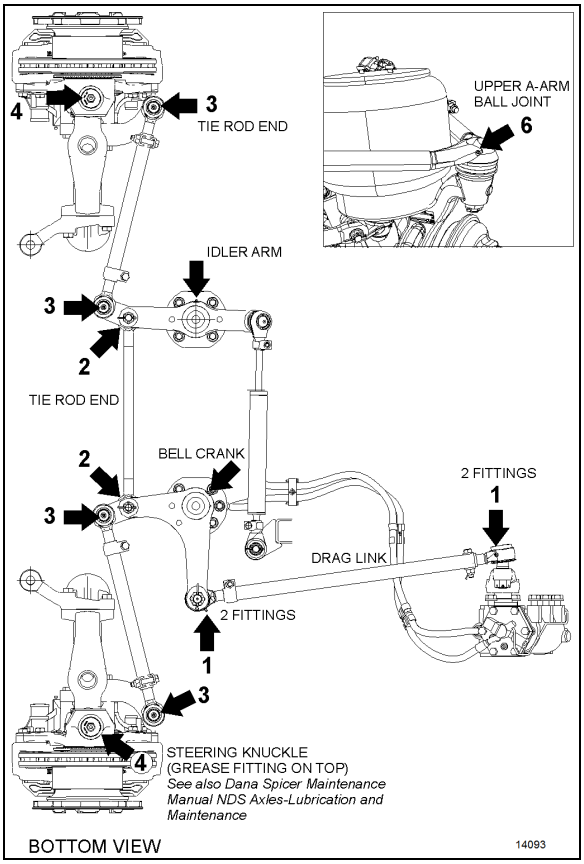


**FIGURE 31: LUBRICATION FITTINGS LOCATION**

### 14.6.2 Front I-beam Axle Drag Link

On vehicles equipped with I-beam front axle, the drag link features **lubricated for life** ball joints and a compact fine adjustment system.

Although the ball joints do not require greasing, they do require regular inspection, refer to the following sections for ball joint maintenance.

**Adjustment System Visual inspection**

Inspect the adjustment system to ensure the threads are firmly seated. Also, a visual inspection should be carried-out looking for damage or corrosion to the adjustment system components. Replace any part showing corrosion or damage.

**Adjustment System Functional inspection**

Clean the adjustment system with a brush and compressed air prior to inspection, if required.

With the engine running and the vehicle on the ground (with a load on the axle) turn the steering wheel left and right.

To verify that the threads are tight and do not present any play, use one of the following methods:

- Visual inspection
- Place a finger on the separation line from the adjuster sleeve to the threaded ball joint shaft.
  **Keep fingers clear of pinch zones**.
- Use a dial gage clamped to the tube and feelers aligned on the ball joint to indicate any play

*When play is discovered in the adjusting system, replace the complete drag link.*

**CAUTION**

**Do not re-use clamp hardware**.

Bolt and nut should be replaced every time they are unscrewed.

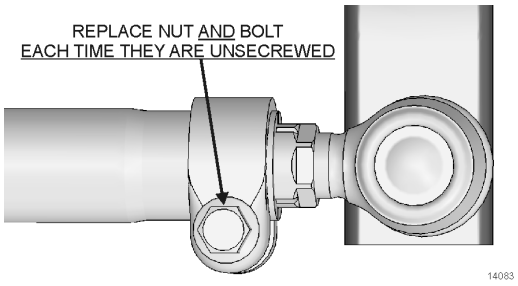


While assembling the clamp, make sure the bolt does not touch the draglink tube.

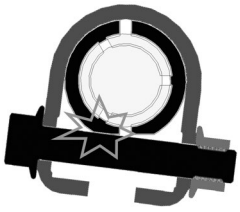

FIGURE 32: I-BEAM FRONT AXLE DRAG LINK

## 14.7 FRONT I-BEAM AXLE TIE ROD

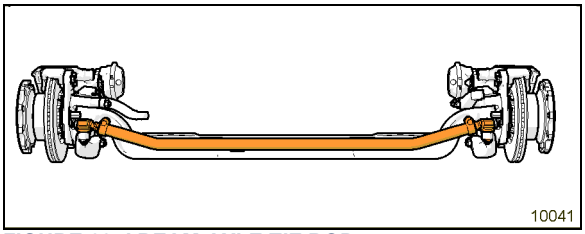


FIGURE 33: I BEAM AXLE TIE ROD

The tie rod includes a fine adjustment sleeve on one side.

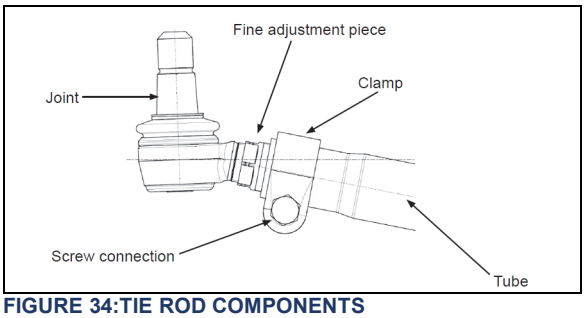


FIGURE 34:TIE ROD COMPONENTS

**CAUTION**

**Do not re-use tie rod joint nut**.

Joint nuts should be replaced every time they are unscrewed.

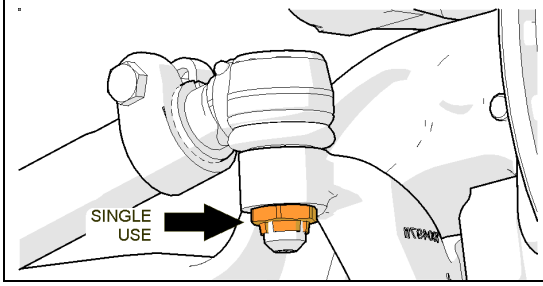


For additional details, refer to supplier information:
**TRW_Front_Axle_Steering_Bar_Service_Information_XSZ143**

## 14.8 TIE ROD INSPECTION PROCEDURE

The steering tie rod assembly requires several visual and functional inspections. If any of the described conditions are found, a complete replacement of the tie rod assembly or individual ball joints may be required.

**MAINTENANCE**

Inspect tie rod once a year.

14.8.1 Tube inspection

Check the tube for damage. If there are signs of deformation, replace the tie rod assembly.

14.8.2 Ball joint play inspection

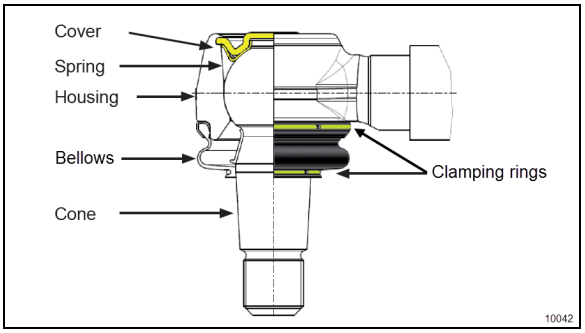


**FIGURE 35 TIE ROD BALL JOINT**

To inspect joint wear and play, turn the wheels alternately left and right until the wheels move. Perform this with the axle loaded normally. During this process, the spring deflection of the ball pivot against the housing should not exceed **0.020" (0.5 mm)** axially. Replace the joint if the movement of the ball stud exceeds **0.020"** (**0.5 mm)** *axially* in the housing.

Measure the distance with a caliper (Figure 36).

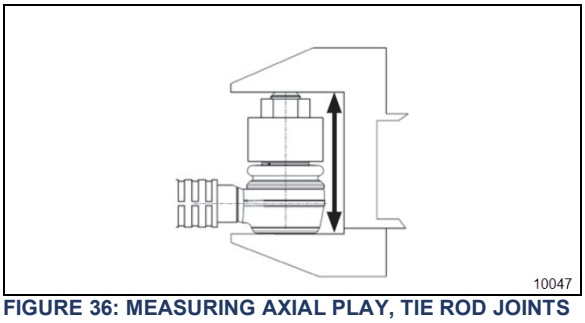


**FIGURE 36: MEASURING AXIAL PLAY, TIE ROD JOINTS**

14.8.3 Fine adjustment sleeve play inspection

Turn the wheels alternately left and right while keeping a finger on the threads to feel any movement in the threads. (Figure 37). If there is too much play in the sleeve, replace the tie rod.

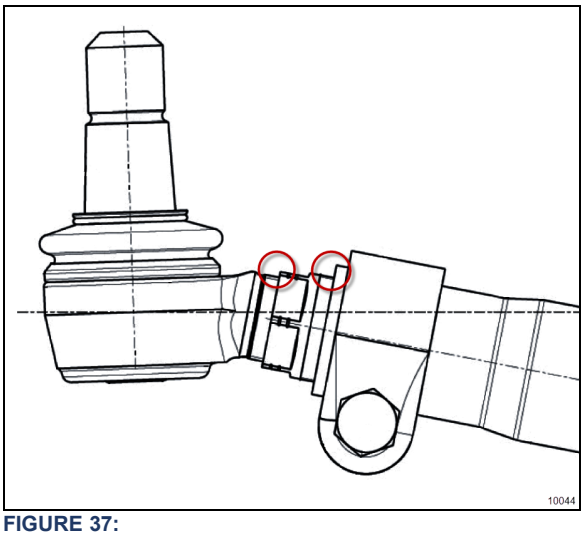


**FIGURE 37:**

14.8.4 Tie rod ball joint inspection for corrosion

**MAINTENANCE**

Inspect tie rod ball joints for corrosion once a year.

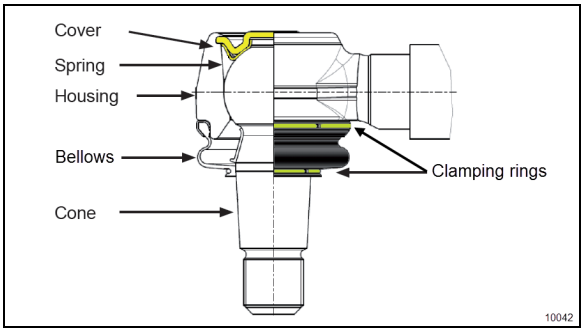


**FIGURE 38: TIE ROD BALL JOINT CONSTRUCTION**

1. Carefully clean the sealing boot contact area to ensure that no contaminants can get under the sealing bellows during the inspection procedure. Do not use cleaning agents or solvents, only use dry cloth or cotton wool.
2. **Housing:** The housing must not show any signs of deep rusting (depth of no more than approx. 1mm). Pay particular attention to the roll edge and cover, they must be rust free.

   Clean corrosion on the axle steering lever contact faces also.
3. **Bellows**: They must be in perfect condition to protect from corrosion. Squeeze the bellows by hand and make sure no grease is

expelled from the opening. Make sure the bellows is in good condition, without any holes, tears, scratches of chafing marks. Replace the joint if inspection result is not OK.

Tension rings and clamping rings must be well seated in their groove.

It must always be possible to turn the bellows on the housing by hand (do not use any tools). Hold the bellows in the area of the clamping ring and turn with a lot of manual force. Replace the tie rod if the result is not OK.

## 14.9 DRAG LINK BALL JOINT INSPECTION FOR CORROSION

Inspection of ball joints is important. Damaged sealing boots, salt and climatic conditions can cause loss of the corrosion protection coating applied at time of manufacturing.

**MAINTENANCE**

Inspect drag link joints for corrosion once a year.

1. Carefully clean the sealing boot or dirt seal contact area to ensure that no contaminants can get under the sealing boot or dirt seal during the inspection procedure. Do not use cleaning agents or solvents, only use dry cloth or cotton wool.
2. Use an appropriate inspection tool (e.g. spatula with cut out) to push up (sealing boot) or down (dirt seal) the seal (without damaging it) until ball pin surface is visible. Degrease the ball pin surface and inspect carefully.
3. If there is corrosion of the ball pin or the sealing boot has deteriorated through ageing or is damaged, replace the ball joint.
4. If there is corrosion of the steering arm or tie rod arm area which is in contact with the sealing boot or dirt seal, clean and eliminate all surface irregularities.
5. If there is no corrosion or damage to the sealing boot or dirt seal, smear the steering arm with Lithium grease and push seal back into its properly seated position.

When dismantling the drag link, ensure that no damage is caused to the sealing boots, dirt seals or ball joint housings.

## 14.10 STRAIGHT BODY TYPE BALL JOINT

This type includes ball joints where the threaded shank is slightly bent like those that are found on the tie rod and draglink.

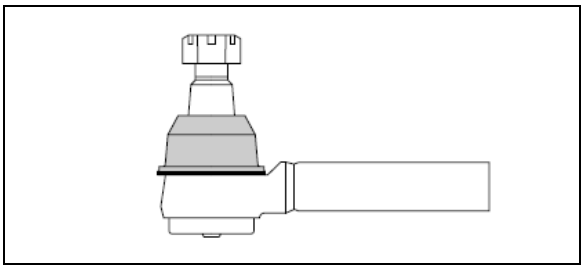

**FIGURE 39: STRAIGHT BODY TYPE BALL JOINT**

### 14.10.1 Visual Inspection

- Visually inspect for missing or damaged grease fittings and replace if required.
- Damaged sealing boot or improper sealing requires seal replacement or complete replacement.
- Check ball joint connection for missing cotter pins.
- Check for looseness in the ball/socket assembly.

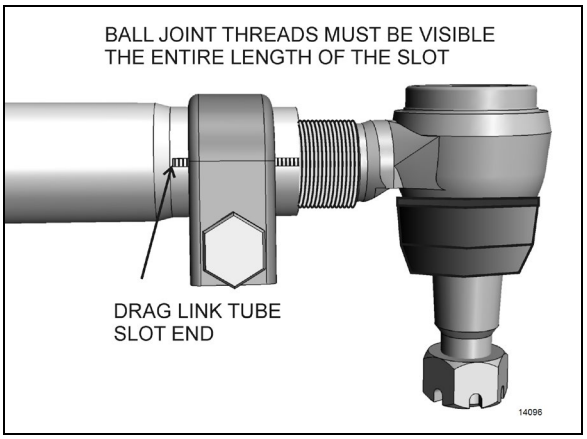


**FIGURE 40: ADEQUATE CLAMPING CONDITION**

For adequate clamping, the ball joint threads must be visible the entire length of the tube slot. If not, the tube must be adjusted or replaced. It is either the wrong size, or improper adjustment

was used to compensate for another problem (e.g. bent steering components).

No heavy corrosion is accepted for the clamps or screws.

Nuts and screws must be firmly in place.

### 14.10.2 Straight Body Type Ball Joint End Play and Looseness

**What creates movement in sockets?**

In each straight body type ball joints, the compressive force of the spring creates resistive torque by applying a constant load on the bearing and stud.

As wear occurs on the components, the spring creates less resistive torque. With less torque, you no longer have the precise joint needed for optimum steering, but you do still have a safe linkage. **When all compression is lost, it's time to replace the linkage**. This wear can be caused by impact, lack of lubrication and normal wear.

1. With vehicle engine on, lightly rock the steering wheel while checking for looseness in any threaded joint. Observe any looseness in the two mating tapers or any movement of the ball pin nut. Any looseness requires further inspection. If either of the mating tapered parts shows distortion or wear, both parts must be replaced.
2. With the engine off and wheels straight ahead and no force is being exerted on the linkage by the steering gear, push and pull the ball joint in and out by hand (approximately 100 lbs. force) in the direction of the ball pin. If no movement is detected, the ball joint is safe. **Any movement detected by hand will require the replacement of the ball joint.**

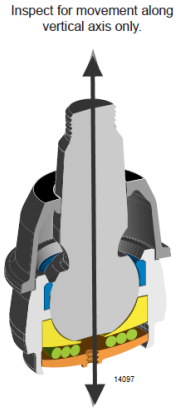


**CAUTION**

Do not use a wrench or other object to apply leverage when inspecting ball joint. Applying leverage with tools can give distorted results and damage components.

## 15. DRIVING TIPS

In order to maximize power steering pump service life, do not attempt to turn the steering wheel when the vehicle is stationary, and especially when service brakes are applied (wheel locking will oppose the effect of steering geometry which tends to make the front wheels rotate in opposite directions).

Persisting in turning, or maintaining the steering wheel with an extra effort, could make the hydraulic system work at the relief pressure, and consequently, cause the hydraulic fluid to become overheated.

**CAUTION**

Never maintain the hydraulic system at the relief pressure for longer than 5/10 seconds to avoid damaging the power steering pump.

*NOTE*

*Unequal or low tire pressure, oversize tires, and vehicle overloading are some of the causes that may increase steering effort.*

## 16. FRONT WHEEL ALIGNMENT

### 16.1 INDEPENDENT FRONT SUSPENSION ALIGNMENT

Proper front end alignment must be maintained to insure ease of steering and provide satisfactory tire life. When making front end alignment inspections, the vehicle must be level and empty with the full weight of the vehicle on the wheels.

Front end alignment inspections fall into two groups: regular service inspections performed at periodic intervals, and inspections to determine the extent of damage after a collision or severe service.

Regular service inspections concern toe-in, camber and caster.

Any variation from the specified alignment will indicate either a need for adjustment or a more thorough inspection to determine if parts replacement is required.

**WARNING**

During alignment, both camber and caster among other angles are adjusted. When adjusting these, we install or remove shims at the IFS lower A-arms. After performing alignment, make sure that the following is done:

- Installing a new lock nut after all shims are finalized.
- Torque replaced nuts as per Torque Table.
- Installing a longer bolt if less than 2 threads are remaining after the nut.
- Using a torque seal, leave a mark on the nut for future visual inspection.

### 16.1.1 Alignment Terminology

Wheel Camber: Camber is the number of degrees the top of the wheel is tilted inward or outward from a true vertical (Figure 45).

Wheel Toe-In: a slight forward convergence given to the wheels of motor vehicles to improve steering and equalize tire wear (D minus E, Figure 45).

Kingpin Inclination: The inclination of the kingpin from vertical toward the center of the vehicle at the top and outward at the bottom (B, Figure 45).

Front Axle Caster: The inclination of the kingpin from vertical in the fore and aft direction (C, Figure 45).

### 16.1.2 Front End Inspection

Before checking front end alignment, make the following inspection:

1. Check that the vehicle is at normal ride height (see paragraph 3.18 “Suspension Height Adjustment" in section 16 Suspension).
2. Check the tires for proper inflation.
3. Check wheel installation and run-out.
4. Check wheel bearing adjustment.
5. Check tie rods and drag link ends for looseness.
6. Check kingpins for looseness.
7. Check that the length of the torque rod is 21 17/64" (540 mm) and the length of the relay rod is 23 19/64" (592 mm).

### 16.1.3 Front Wheel Camber

Positive camber is the outward inclination of the wheels at the top, negative or reverse camber is the inward inclination of the wheels at the top. Camber variations may be caused by wear at the wheel bearings, wheel spindle bushings, or bent suspension parts.

Check camber, with an accurate gauge. If camber is incorrect, check suspension parts for wear and replace worn parts. If wear is not perceptible, suspension parts may be bent or lower A-arm may be improperly shimmed.

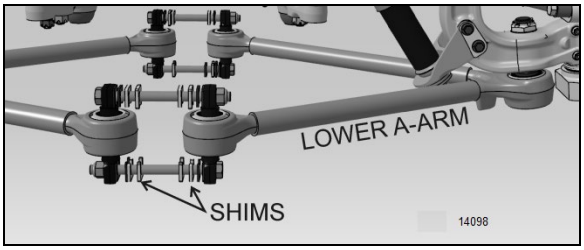


**FIGURE 41: SHIMS AT THE LOWER A-ARMS**

Check kingpin inclination. If kingpin inclination is incorrect, readjust the camber and check kingpin inclination again.

*NOTE*

*Camber is more important than kingpin inclination, so adjust camber and verify kingpin inclination.*

Shim the lower A-arm to adjust camber (Figure 41). If the kingpin inclination is incorrect, the wheel kingpin assembly may be bent and therefore should be replaced.

Excessive positive camber results in irregular wear of the tires at the outer shoulders. Negative or reverse camber causes wear at the inner shoulders.

| *NOTE* |
| --- |
| *Shim only the lower suspension arm to adjust the front wheel camber.* |

| **CAUTION** |
| --- |
| Once the perfect shim combination is achieved, always install new Stover nuts because the self-locking effect is lost after tightening and loosening of the nut. It is recommended to punch marks to detect loosening of the nuts during future visual inspections. |

### 16.1.4 Front Wheel Toe-In

Toe-in is measured from the center of the tire treads. Measurements at the front and rear of the tires must be made at the same height from the floor. Incorrect toe-in results in excessive tire wear and steering instability with a tendency to wander.

**Toe-In Check**

1. Check the camber adjustment and adjust if necessary.
2. Hoist the front of the vehicle and spin the wheels marking the centerline of the tire treads.
3. Place the wheels in the straight ahead position and lower the vehicle to rest on the floor.
4. Roll the vehicle ahead several feet. This removes any slack caused by looseness in the wheel bearings or steering connections.
5. Check the distance between the tire centerlines at the front and rear of the front tires. These two measurements must be made at the same height above the floor. The front measurement must be 3/32 ±1/32 of an inch less than the rear measurement.

**Toe-In Adjustment**

1. Loosen the tie rod clamp bolts.
2. Using a pipe wrench, turn the tie rod tubes to obtain the toe-in measurement specified in step 5 under paragraph "Toe-in Check".
3. Tighten the tie rod clamp bolts and recheck toe-in.
4. Check that the angular relationship of the pitman arm to the steering gear is as shown in Figure 42.

| *NOTE* |
| --- |
| *Use only tie rods to adjust toe-in.* |

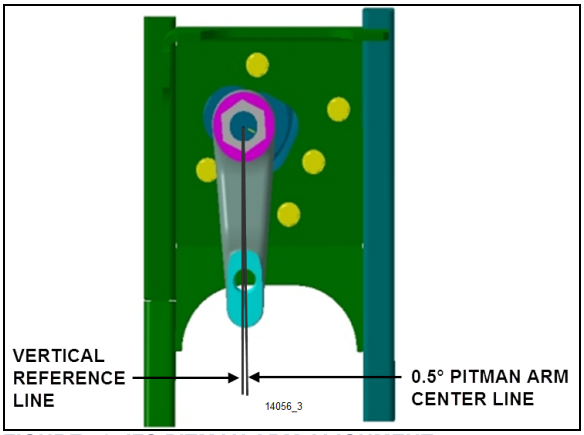


**FIGURE 42: IFS PITMAN ARM ALIGNMENT**

### 16.1.5 Front Wheel Caster

Positive caster is the inclination of the top of the kingpins toward the rear of the vehicle. Negative or reverse caster is the inclination of the kingpins toward the front of the vehicle. This vehicle is designed with positive caster. The purpose of caster is to provide steering stability by keeping the wheels in a straight ahead position.

Caster variations may be caused by bent upper suspension A-arm, lower suspension A-arm, or kingpin housing. Caster should be adjusted with shims. Precision instruments should be used to measure caster. Shim bell crank and idler arm to adjust caster (Figure 45).

Variations from the specified caster will affect steering stability, cause wandering, wheel shimmy, and reduce steer re-centering when pulling out of curves.

| *NOTE* |
| --- |
| *On Independent Front Suspension, caster on right wheel must be equal or greater than caster on left wheel, without exceeding 0.3°.* |

### 16.1.6 Major Damage

If the suspension has sustained major damage, it may be necessary to shim the bell crank and

the idler arm to avoid the bump steer or roll steer. Refer to section 16 "Suspension" for additional information.

16.1.7 Hydraulic End Limiter Adjustment After Wheel Alignment

| *NOTE* |
| --- |
| *Before steering limiter readjustment, verify vehicle wheel alignment and ensure that oil level is checked and that air bleeding is done.* |

A setting of the steering limitation is necessary if or when:

a) A new or repaired steering gearbox is fitted or

b) New screws (20 and 128) were fitted to the automatically adjusting steering limitation or

c) Alterations to or adjustments of the front axle were carried out.

**Find the end limiter adjustment procedure in Maintenance Information MI20-12 available on Prevost Technical Publications site.**

16.1.8 Alignment Specifications

Use static wheel alignment systems which work with angle measurements only, such as Josam or Hunter systems.

| *NOTE* |
|---|
| *On Independent Front Suspension, caster on right wheel must be equal or greater than caster on left wheel, with a maximum difference of 0.3°.* |

| X3-45 VIP<br>INDEPENDENT FRONT SUSPENSION | | | | | | |
|---|---|---|---|---|---|---|
| Load | Minimum value | | Nominal value | | Maximum value | |
| | Non-converted | Converted | Non-converted | Converted | Non-converted | Converted |
| Right camber | 0.20° | -0.20° | 0.30° | 0° | 0.50° | 0.20° |
| Left camber | 0.20° | -0.20° | 0.30° | 0° | 0.50° | 0.20° |
| Right caster | 2.55° | | 2.8° | | 3.05° | |
| Left caster | 2.55° | | 2.8° | | 3.05° | |
| Total toe | 0.02° | 0.04° | 0.04° | 0.06° | 0.06° | 0.08° |

| X3-45 Coaches<br>WITH INDEPENDENT FRONT SUSPENSION | | | |
|---|---|---|---|
| | Minimum value | Nominal value | Maximum value |
| Right camber | 0.0° | 0.150° | 0.30° |
| Left camber | 0.0° | 0.150° | 0.30° |
| Right caster | 2.35° | 2.6° | 2.85° |
| Left caster | 2.35° | 2.6° | 2.85° |
| Total toe-in | 0.04° | 0.06° | 0.08° |

| H3-45 VIP<br>INDEPENDENT FRONT SUSPENSION | | | | | | |
|---|---|---|---|---|---|---|
| Load | Minimum value | | Nominal value | | Maximum value | |
| | Non-converted | Converted | Non-converted | Converted | Non-converted | Converted |
| Right camber | 0.20° | -0.20° | 0.30° | 0° | 0.50° | 0.20° |
| Left camber | 0.20° | -0.20° | 0.30° | 0° | 0.50° | 0.20° |
| Right caster | 2.55° | | 2.8° | | 3.05° | |
| Left caster | 2.55° | | 2.8° | | 3.05° | |
| Total toe | 0.02° | 0.04° | 0.04° | 0.06° | 0.06° | 0.08° |

| H3-45 Coaches<br>WITH INDEPENDENT FRONT SUSPENSION | | | |
|---|---|---|---|
| | Minimum value | Nominal value | Maximum value |
| Right camber | 0.0° | 0.150° | 0.30° |
| Left camber | 0.0° | 0.150° | 0.30° |
| Right caster | 2.35° | 2.6° | 2.85° |
| Left caster | 2.35° | 2.6° | 2.85° |
| Total toe-in | 0.04° | 0.06° | 0.08° |

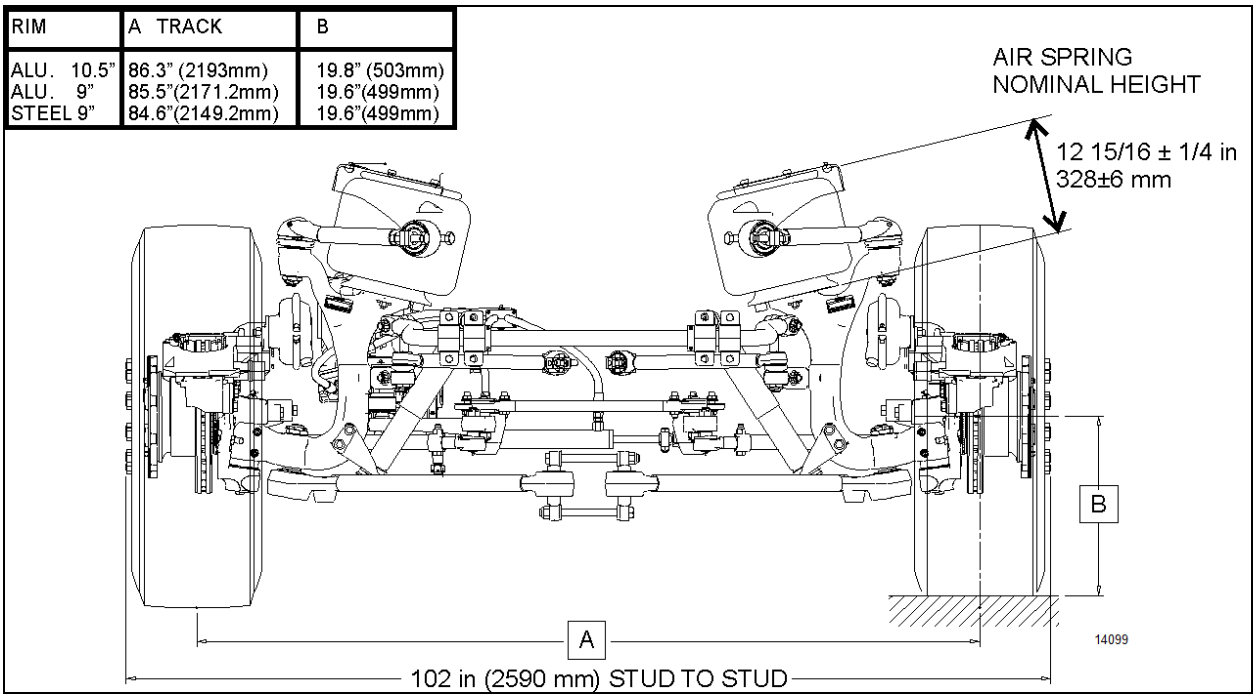


**FIGURE 43: IFS NOMINAL DIMENSIONS**

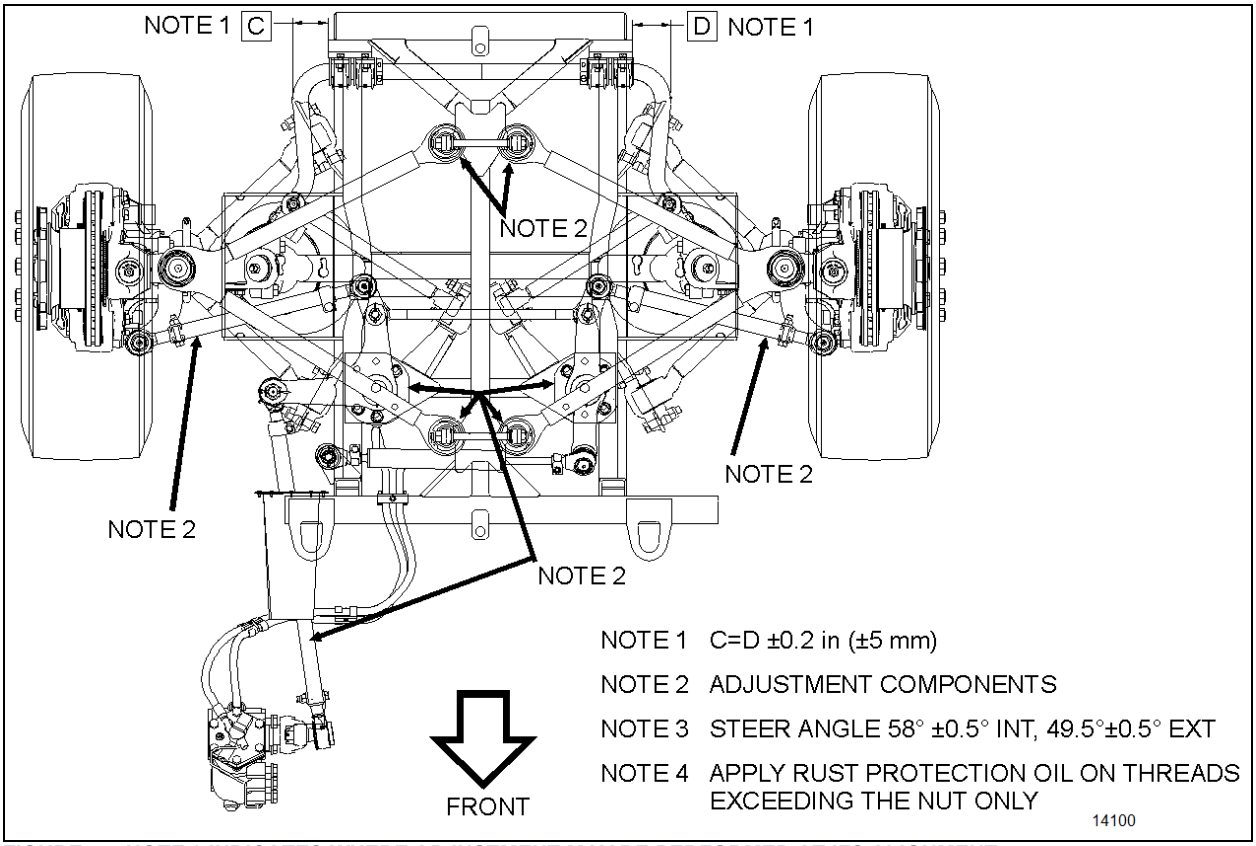


**FIGURE 44: NOTE 2 INDICATES WHERE ADJUSTMENT MAY BE PERFORMED AT IFS ALIGNMENT**

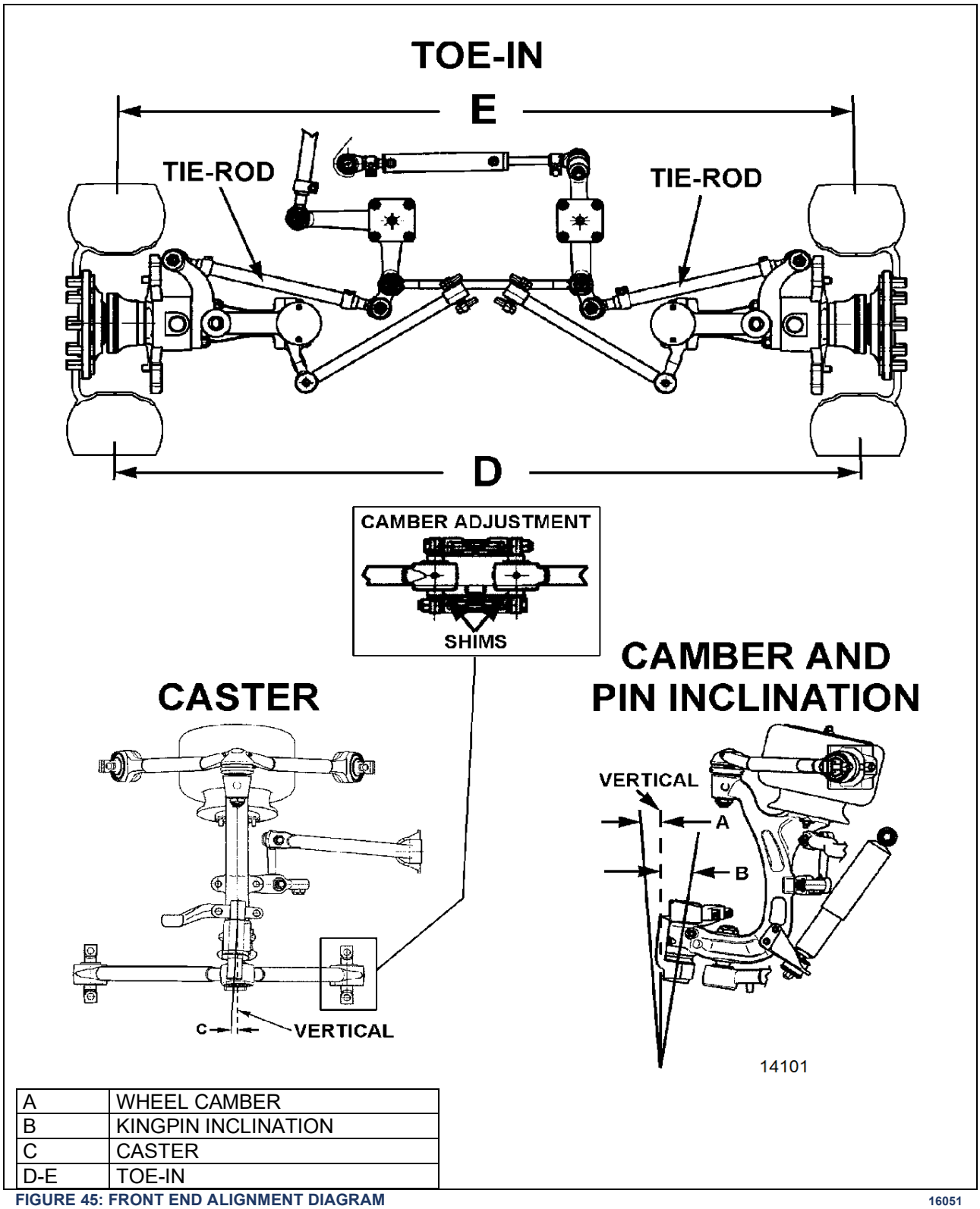


| | |
|---|---|
| A | WHEEL CAMBER |
| B | KINGPIN INCLINATION |
| C | CASTER |
| D-E | TOE-IN |

**FIGURE 45: FRONT END ALIGNMENT DIAGRAM** 16051

## 16.2 I-BEAM AXLE - FRONT WHEEL ALIGNMENT

Correct front wheel alignment must be maintained for steering comfort and satisfactory tire life. Road shocks and vibrations, as well as normal stress and strains on the front-end system can, under normal operating conditions, result in loss of front wheel alignment.

Check the front wheel alignment when the following occurs:

1. Every 200,000 miles (320 000 km) or 24 months (normal maintenance);
2. When the vehicle does not steer correctly; or
3. To correct a tire wear condition.

There are two types of front wheel alignment: minor alignment and major alignment.

### 16.2.1 Inspection Before Alignment

Check the following before doing a front wheel alignment:

1. Ensure that the vehicle is at normal riding height. See Section 16, *''Suspension''* under heading 7: *''Suspension Height Adjustment''*.
2. Ensure that front wheels are not the cause of the problem. See Section 13, *''Wheels, Hubs and Tires''*. Inspect the tires for wear patterns indicating suspension damage or misalignment.
   a. Make sure the tires are inflated to the specified pressure.
   b. Make sure the front tires are the same size and type.
   c. Make sure the wheels are balanced.
   d. Check wheel installation and straightness.
3. Check the wheel bearing adjustment. See Section 13, *''Wheels, Hubs and Tires''.*
4. Check steering linkage for bending and pivot points for looseness.
5. Check knuckle pins for evidence of excessive wear.
6. Check radius rods for bending and rubber bushings for evidence of excessive wear.
7. Make sure all fasteners are tightened to the specified torque. Use a torque wrench for verification. As soon as the fastener starts to move, record the torque. Correct if necessary. Replace any worn or damaged fasteners.

### 16.2.2 Minor Front Wheel Alignment

Perform a minor front wheel alignment for all normal maintenance conditions.

Perform the minor front wheel alignment in the following sequence:

1. Inspect all the systems that affect the wheel alignment. See paragraph 15.2.1, *''Inspection Before Alignment''* in this section.
2. Check the hub bearings. See section 13, *''Wheels, hubs and Tires''* under heading 8: Front and Tag Axle Wheel Hubs.
3. Check and adjust the toe-in.

### 16.2.3 Major Front Wheel Alignment

Perform a major front wheel alignment to correct steering and tire wear conditions.

Perform the major front wheel alignment in the following sequence:

1. Inspect all systems affecting the wheel alignment. See paragraph 15.2.1, *''Inspection Before Alignment''* in this section.
2. Check the hub bearings. See section 13, *''Wheels, hubs and Tires''* under heading 8: Front and Tag Axle Wheel Hubs.

| *NOTE* |
| --- |
| *If steering angle stoppers are changed, a special procedure is required for readjusting gearbox steering limiter. See paragraph 15.2.7 ''Hydraulic Stop'' in this section.* |

3. Check and adjust the turning angle adjustment.
4. Check the camber angle.
5. Check and adjust the caster angle.
6. Check and adjust the toe-in.

16.2.4 Hydraulic End Limiter Adjustment After Wheel Alignment

| *NOTE* |
| --- |
| *Before steering limiter readjustment, verify vehicle wheel alignment and ensure that oil level is checked and that air bleeding is done.* |

A setting of the steering limitation is necessary if or when:

d) A new or repaired steering gearbox is fitted or

e) New screws (20 and 128) were fitted to the automatically adjusting steering limitation or

f) Alterations to or adjustments of the front axle were carried out.

**Find the end limiter adjustment procedure in Maintenance Information MI20-12 available on Prevost Technical Publications site.**

16.2.5 Turning Angle Adjustment

The maximum turning angle is set through the two steering stop screws installed on the axle center. The turning angle is factory adjusted to accommodate the chassis design, and therefore, does not require adjustment on new vehicles. However, it should be checked and adjusted any time any component of the steering system is repaired, disassembled or adjusted.

Check if front tires rub against the frame or if the steering gear has been serviced.

Proceed with the following method to check the steering maximum turning angle:

16.2.6 R.H. Turn Adjustment

| **CAUTION** |
| --- |
| To prevent the steering damper from interfering with the adjustment of turning angles, make sure its fixing bracket is at the correct location on the axle center (refer to paragraph 13.5) |

1. Turn steering wheel to the right until the boss on the axle center touches the right stop screw.
2. Verify the nearest point of contact of the ball socket body with the air bellows support assembly. Measure the distance between those two points.
3. The distance between these two points should be approximately 1/8 inch (3 mm). If not, the steering stop screws must be readjusted.
4. Verify the nearest point of contact of the drag link with the tire. Measure the distance between those two points.
5. The distance should be 1 inch (25 mm) or more. If not, the steering stop screws must be readjusted.
6. This must be done for a full right turn.
7. If readjustment is required:
   a. Remove the swivel stop screw.
   b. Add to the stop screw the required number of washers to obtain the proper measure, tighten the stop screw afterwards. Two washers of different thickness are available: 1/16 inch and 3/16 inch.

16.2.7 L.H. Turn Adjustment

1. Turn steering wheel to the left until the boss on the axle center touches the left stop screw.
2. Verify the nearest point of contact of the ball socket body with the air bellows support assembly. Measure the distance between those two points.
3. The distance between these two points should be approximately 1/8 inch (3 mm). If not, the steering stop screws must be readjusted.
4. Check the stroke of the steering stabilizer cylinder (damper). It should not exceed 12.59 inches (320 mm).
5. The steering stopper screw must be in contact before the steering stabilizer reaches the end of the stroke.
6. This must be done for a full left turn.
7. If readjustment is required:
   a. Remove the swivel stop screw.
   b. Add to the stop screw the required number of washers to obtain the proper measure, tighten the stop screw afterwards. Two washers of different

thickness are available: 1/16 inch and 3/16 inch.

16.2.8 Front Wheel Camber

Wheel camber is the number of degrees the top of the wheel tilts outward (positive) or inward (negative) from a vertical angle (Figure 46).

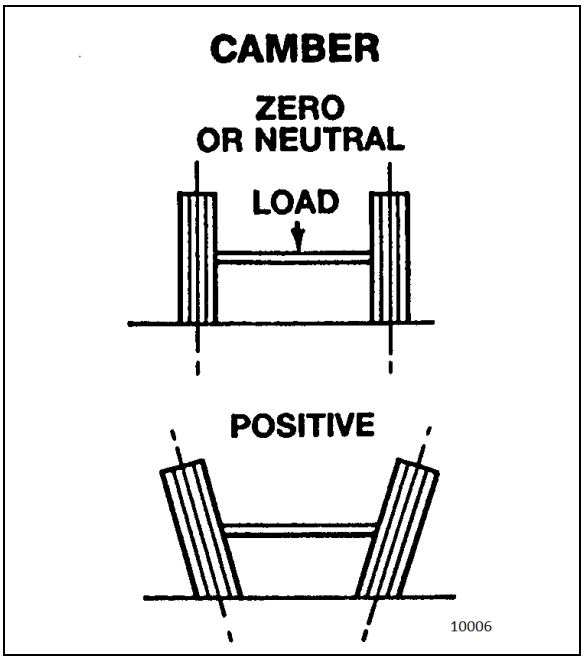


**FIGURE 46: CAMBER**

The camber angle is not adjustable. Camber variations may be caused by wear at the wheel bearings, steering knuckle pins or by a bent knuckle or sagging axle center. Steering effort is affected by improper camber, and uneven tire wear will result. Excessive positive camber causes an irregular wear of tire at the outer shoulder and excessive negative camber causes wear at the inner shoulder.

16.3 CAMBER CHECK

For camber specifications, refer to 16.5 FRONT WHEEL ALIGNMENT SPECIFICATIONS in this section

1. Use an alignment machine to check the camber angle.
2. If camber reading is not in the specifications, adjust the wheel bearings and repeat the check. If the reading is still not within specifications, verify the steering knuckle pins and axle center.
3. See instructions in “DANA SPICER Maintenance Manual Model NDS and Maintenance Manual NDS Axles”.
4. Check the wheel lateral distortion as instructed in Section 13, *”Wheels, Hubs and Tires”* under heading, *”Checking for Distorted Wheel on Vehicle”*. If distortion is excessive, straighten or replace wheel(s).

16.3.1 Front Axle Caster

For caster specifications, refer to 16.5 FRONT WHEEL ALIGNMENT SPECIFICATIONS. in this section.

Positive caster is the rearward tilt from the vertical axis of the knuckle pin. Negative caster is the forward tilt from the vertical axis of the knuckle pin (Figure 47). This vehicle is designed with a positive caster. The purpose of the caster angle is to give a trailing effect. This results in stabilized steering and a tendency for the wheels to return to the straight-ahead position after taking a turn.

Excessive caster results in hard steering around corners. A shimmy may also develop when returning to the straight ahead position (pulling out of curves).

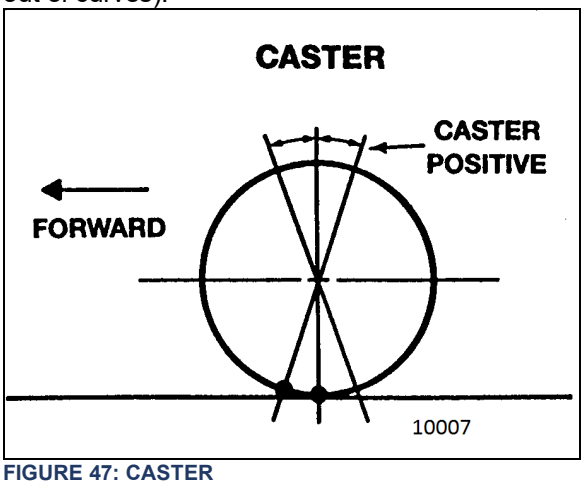


**FIGURE 47: CASTER**

Insufficient caster will cause wandering and steering instability. Caster variations may be caused by a bent axle, tilting or distortion of the side suspension supports, damaged radius rod bushings, or unequal tightening of the front and rear suspension support bolts. Incorrect caster must be corrected by replacing the damaged

suspension parts. A precision instrument should be used to measure the caster.

| NOTE |
| --- |
| *The caster of this vehicle is factory set and is not adjustable. However, if after replacing damaged parts or in case of improper caster due to irregular setting, the front axle caster needs adjustment; it can be adjusted by means of shims (Prevost #110663) on the left-hand side upper radius rod support in order to obtain minor adjustment.* |

## 16.4 FRONT WHEEL TOE-IN

Wheel toe-in is the degree (usually expressed in fractions of an inch) where the forward part of the vehicle front wheels are closer together than the rear part, measured at wheel centerline height with the wheels in the normal ''straight-ahead'' position of the steering gear.

Incorrect toe-in results in excessive tire wear caused by side slippage and also steering instability with a tendency to wander. Toe-in may be measured from the center of tire tread or from the inside of the tires. Take measurements at both front and rear of axle (see ''A'' and ''B'' in Figure 48).

When setting toe-in adjustment, the front suspension must be neutralized; that is, all component parts must be in the same relative position when making the adjustment as they will be when in operation.

To neutralize the suspension, the vehicle must be rolled forward, approximately ten feet.

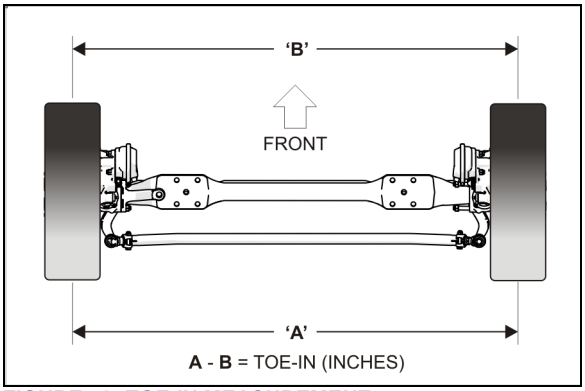


**FIGURE 48: TOE-IN MEASUREMENT**

For toe-in specifications, refer to 16.5 FRONT WHEEL ALIGNMENT SPECIFICATIONS.

By rolling the vehicle forward, all tolerances in the front suspension are taken up and the suspension is then in its normal operating position. Neutralizing the front suspension is extremely important, especially if the vehicle has been jacked up in order to mark the tires. Otherwise, the front wheels will not return to their normal operating position due to the tires gripping the floor surface when the vehicle jack is lowered.

| NOTE |
| --- |
| *''Toe-in'' measurements must be taken at the horizontal axis of the wheel centerline.* |

### 16.4.1 Inspection and Adjustment

Before checking front wheel toe-in, first check the camber angles and make the necessary corrections.

1. Measure the toe-in.
2. If the toe-in measurement is not within the specified tolerance, carry out the following procedure :
   a. Loosen the pinch bolt on the right hand (curb side) tie rod end where the adjuster sleeve is located.
   b. Turn the adjuster sleeve (Figure 49) until the specified toe-in measurement is obtained.
   c. Tighten the pinch bolt nuts

      **TORQUE:** 118-133 lb-ft (160-180 Nm)

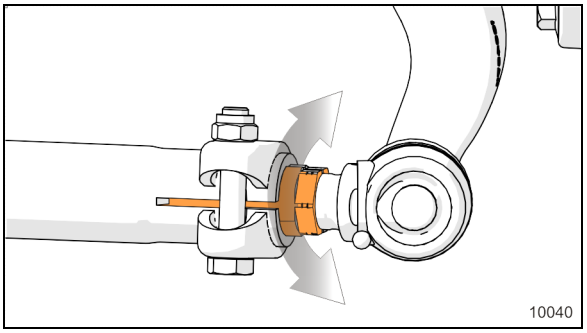


**FIGURE 49: FINE ADJUSTER SLEEVE ON TIE ROD**

16.5 FRONT WHEEL ALIGNMENT SPECIFICATIONS

Use static wheel alignment systems which work with angle measurements only, such as Josam or Hunter systems. Static alignment specifications are listed in the following tables:

| FRONT WHEEL ALIGNMENT<br>SPECIFICATIONS WITH I-BEAM AXLE | | | |
|---|---|---|---|
| **Front Wheel Alignment** | **Minimal** | **Nominal** | **Maximal** |
| Camber<br>R.H. and L.H. * (degrees) | -0.250 | 0.125 | 0.375 |
| Caster<br>R.H. and L.H. (degrees) | 2 | 2.75 | 3.5 |
| Total toe<br>(A minus B) (degrees) | 0.04 | 0.06 | 0.08 |

## 17. TROUBLESHOOTING

| CONDITION | CAUSE | CORRECTION |
|---|---|---|
| Tires wear out quickly or have uneven tire tread wear. | 1. Tires have incorrect air pressure.<br>2. Tires out-of-balance.<br>3. Incorrect tag axle alignment.<br>4. Incorrect toe-in setting.<br>5. Incorrect steering arm geometry. | 1. Put specified air pressure in tires.<br>2. Balance or replace tires.<br>3. Align tag axle.<br>4. Adjust toe-in specified setting.<br>5. Service steering system as necessary. |
| Vehicle is hard to steer. | 1. Low pressure in the power steering system.<br>2. Steering gear not assembled correctly.<br>3. Steering linkage needs lubrication.<br>4. King pins binding.<br>5. Incorrect steering arm geometry.<br>6. Caster improperly adjusted.<br>7. Tie rod ends hard to move.<br>8. Worn thrust bearing. | 1. Repair power steering system.<br>2. Assemble steering gear correctly.<br>3. Lubricate steering linkage.<br>4. Replace king pins.<br>5. Service steering system as necessary.<br>6. Adjust caster as necessary.<br>7. Replace tie rod ends.<br>8. Replace thrust bearing. |
| Bent or broken steering arm, steering top lever or tie rod assembly. | 1. Too much pressure in the power steering system.<br>2. Cut-off pressure of the power steering system improperly adjusted.<br>3. Vehicle not powered on correctly.<br>4. Power steering system not installed correctly. | 1. Replace damaged part(s), adjust power steering system to specified pressure.<br>2. Make sure vehicle is powered on correctly.<br>3. Correctly install the power steering system.<br>4. Correctly install the power steering system. |

| | | |
|---|---|---|
| Worn or broken steering ball pin. | 1. Drag link fasteners tightened past specified torque.<br>2. Lack of lubrication or incorrect lubricant.<br>3. Power steering stops improperly adjusted. | 1. Replace damaged part(s), tighten drag link fasteners to specified torque.<br>2. Lubricate linkage with specified lubricant.<br>3. Adjust stops to specified dimension. |
| Worn king pins and knuckle bushings. | 1. Worn or missing seals and gaskets.<br>2. Incorrect lubricant.<br>3. Axle not lubricated at scheduled frequency.<br>4. Incorrect lubrication procedures.<br>5. Lubrication schedule does not match operating conditions. | 1. Replace damaged part(s), replace seals and gaskets.<br>2. Lubricate axle with specified lubricant.<br>3. Lubricate axle at scheduled frequency.<br>4. Use correct lubrication schedule to match operating conditions.<br>5. Change lubrication schedule to match operating conditions. |
| Vibration or shimmy of front axle during operation. | 1. Caster not adjusted properly.<br>2. Wheels and/or tires out-of balance.<br>3. Worn steering stabilizer cylinder. | 1. Adjust caster.<br>2. Balance or replace wheels and/or tires.<br>3. Replace steering stabilizer cylinder. |

## 18. TORQUE SPECIFICATIONS

The torque specifications applicable to the front axle steering are grouped with information regarding the front suspension. Please refer to Section 16: SUSPENSION of this manual.

## 19. SPECIFICATIONS

**Power Steering Gear**

Make ..... ZF/ROBERT BOSCH-SERVOCOMTRONIC
Type .....Speed Sensitive
F.E.W. ..... 16,600 lbs (7 545 kg)
Pressure rating..... 2,175 psi (150 Bar)
Gear ratio (center).....22.2 : 1
Gear ratio (extremities).....26.2 : 1
Minimum pump flow for 1.5 hwt/sec ..... 4.22 gpm (16 lpm)

**Power Steering Gear**

Make ..... ZF/ROBERT BOSCH--SERVOCOM
F.E.W. ..... 16,600 lbs (7 545 kg)
Pressure rating..... 2,175 psi (150 Bar)
Gear ratio (center).....22.2 : 1
Gear ratio (extremities).....26.2 : 1
Minimum pump flow for 1.5 hwt/sec ..... 4.22 gpm (16 lpm)

**Power Steering Gear (with IFS)**

Make .....ZF/ROBERT BOSCH -SERVOCOM
Type. ..... 8098
F.E.W. ..... 19,000 lbs (8 618 kg)
Pressure rating..... 2,320 psi (160 Bar)

**Power Steering Reservoir**

Oil capacity .....4 US qts (3.7 liters)
Make .....Nelson Muffler

**Steering Stabilizer Cylinder (Damper)**

Extended length.....32.73±0.12"
Collapsed length .....20.26±0.12"
Stroke.....12.47±0.12"

**Front I-Beam Axle**

Make .....DANA SPICER EUROPE
Model ..... S84U
Front Track ..... 84.4 inches (2 145 mm)
Rated load capacity..... 16,500 lbs (7 500 kg)

# MAINTENANCE INFORMATION

**MI19-05A**

| | | |
|---|---|---|
| DATE : | February 2019 | SECTION : 14 STEERING |
| SUBJECT : | **660865, 660699 DRAGLINK ADJUSTMENT** | |

| | | |
|---|---|---|
| Revision: A | Added X3-45 commuter & US built vehicles | 2019-02-28 |

| *IMPORTANT NOTICE* |
|---|
| *This modification is recommended by Prevost to increase your vehicle's performance. Note that no reimbursement will be awarded for carrying out this modification.* |

## APPLICATION

| Model | VIN   |
|---|---|
| H3-41, H3-45 coaches<br>Model Year : 2014 - | From 2PCH3349X**E**C71**2505** up to … |
| X3-45 coaches<br>Model Year : 2014 - | US built from: 4RKG33495**F**973**7000** up to … |
| | Canadian built from: 2PCG33497**E**C73**5526** up to … |
| X3-45 Commuter<br>Model Year : 2017 - | US built from: 4RKJ33498**H**973**7386** up to … |
| | Canadian built from: 2PCJ33493**J**C73**6317** up to … |

## DESCRIPTION

For vehicles equipped with I-beam axles, follow these instructions to adjust the length of the draglink. This applies to model year 2014 and onward.

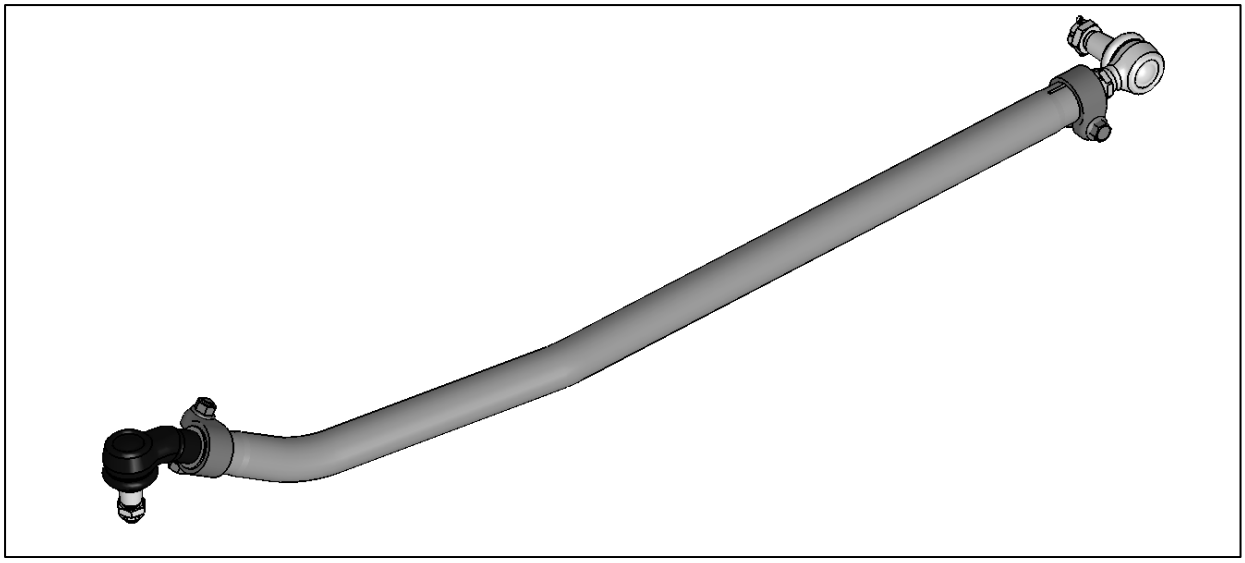

## MATERIAL

H series

| Part No. | Description | Qty |
|---|---|---|
| 660865 | DRAG LINK ASSEMBLY, H SERIES | 1 |
| 502104 | COTTER PIN 5/32 X 2 | 1 |

X series

| Part No. | Description | Qty |
|---|---|---|
| 660699 | DRAG LINK ASSEMBLY, X SERIES | 1 |
| 502104 | COTTER PIN 5/32 X 2 | 1 |

Other parts that may be required, depending on condition

| Part No. | Description | Qty |
|---|---|---|
| 660018 | COLLAR ASSY / W/BOLT & NUT | 2 |

| **NOTE** |
|---|
| *Material can be obtained through regular channels.* |

## PROCEDURE

| ⚠ **CAUTION** |
|---|
| CONFORM TO THE PRESCRIBED TORQUES AND FOLLOW ASSEMBLY GUIDELINES TO ENSURE VEHICLE SAFETY. |

Park vehicle safely, apply parking brake, stop engine and set battery master switch(es) to the OFF position prior to working on the vehicle.

## PINCH HAZARD

Keep hands and fingers clear of pinch zones around pitman arm.

Pinch zones are between pitman arm and clamp, and between front of pitman arm and vehicle structure.

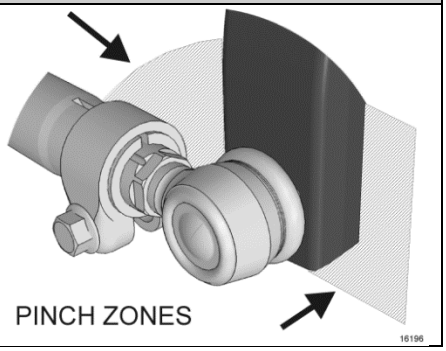


## REMOVAL OF EXISTING DRAG LINK

### CAUTION

Heating of components to aid in disassembly is not allowed because it has a detrimental effect on axle components and steering linkages.

### CAUTION

Do not drive (hammer in) pitman arm on or off pitman shaft as this can damage the steering gear.

1. Raise the vehicle by the wheels using mobile column lifts. Doing so will prevent a change in direction of the knuckles and preserve the relative positions of the steering components involved i.e. the steering arm and the pitman arm.
2. Remove cotter pin and nut from drag link ball joint stud at pitman arm.
3. Disconnect drag link from pitman arm, using jaw style pullers (pressure screw type).
4. Remove cotter pin and nut from drag link ball joint stud at the steering arm (near knuckle) and then disconnect the drag link.

## ADJUSTING THE DRAG LINK TO PROPER LENGTH - ELBOW BALL JOINT (KNUCKLE SIDE)

5. Adjust the length of the draglink. To do so, try to install it between the steering arm and the pitman arm. If the length is not adequate, it must be adjusted to the required length. Use dimension “A” and steps below to adjust the length of the replacement drag link or you may use the replaced drag link for length reference.

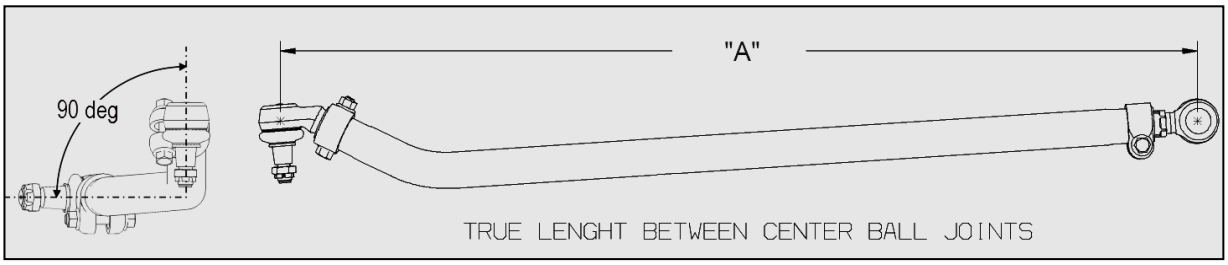


**FIGURE 1: HSERIES LENGTH**

H Series: Length A = 55” 7/8”± 1/16” (1420mm ± 2mm)

X Series: Length A = 53” 3/8”± 1/16” (1356mm ± 2mm)

6. Screw the drag link elbow ball joint (knuckle side) fully in drag link tube.

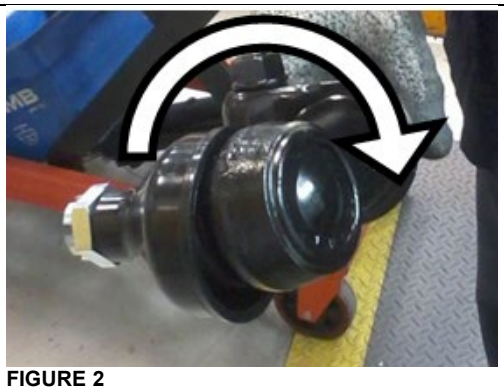

**FIGURE 2**

7. Unscrew the *drag link elbow* ball joint by **(not more than 1 turn)** so the tapered shank *points down* as shown on FIGURE 3.
   This will be the *initial / reference* position for next step.



**FIGURE 3**

8. Next, unscrew the *drag link elbow* ball joint back out.

   H Series: **Five (5) full turn** from the *initial / reference* position.

   X Series: **One (1) full** turn from the *initial / reference* position.

The tapered shank must point down as shown on (FIGURE 4).

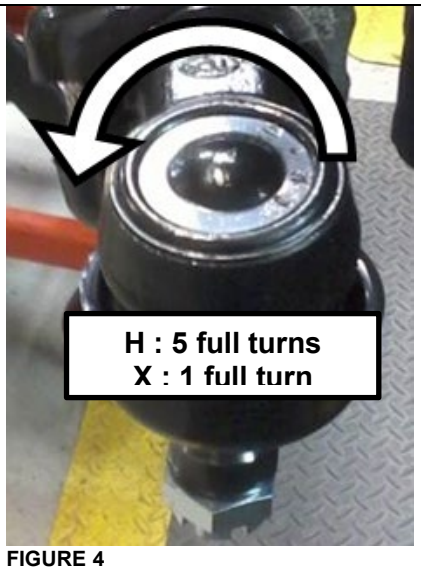


**FIGURE 4**

9. To prevent interference between the ball joint clamp bolts and other components of the steering system, the clamp bolt must be positioned vertically as shown on FIGURE 6. **Tighten the clamp nut to 118-133 lbf-ft**.

**CAUTION**

**Do not re-use clamp hardware**.

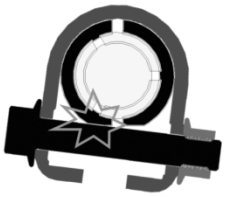

Bolt and nut should be replaced every time they are unscrewed. While assembling the clamp, make sure the bolt does not touch the drag link tube.

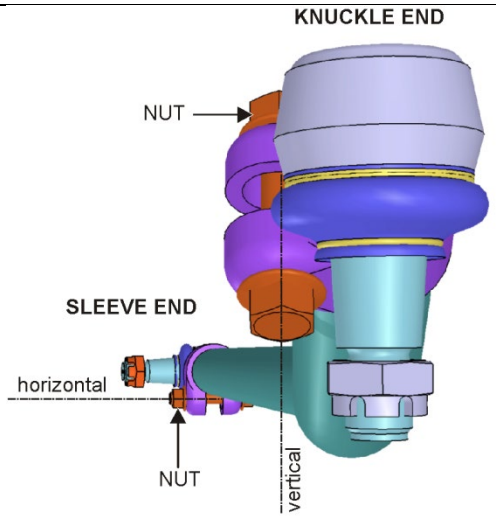


**FIGURE 5: NOTE THE VERTICAL ORIENTATION OF THE CLAMP BOLT AT THE KNUCKLE END AND ON WHICH SIDE THE NUT MUST BE POSITIONED**

## SLEEVE ADJUSTMENT PARAMETERS

10. On the drag link front end you will find an adjustment sleeve which has internal and external left and right threads.

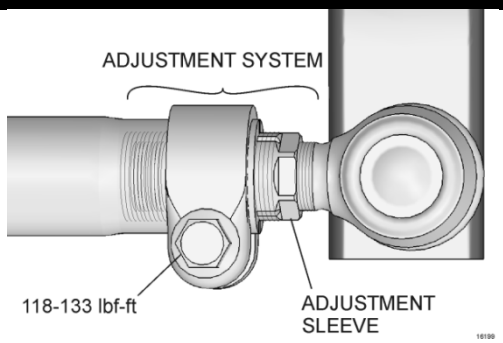


**FIGURE 6**

11. Fine adjustment of the drag link length if required should be performed exclusively by turning the adjustment sleeve while preventing the tube and joint from rotating.

***The only part rotating should be the sleeve***

- To extend, turn the sleeve clockwise.
- To retract, turn counter clockwise.

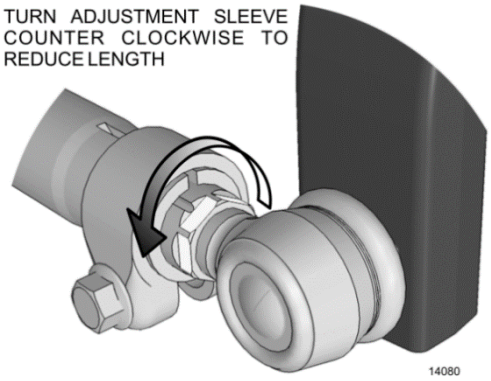


**FIGURE 7**

**GENERAL LIMITATIONS OF THE ADJUSTMENT SLEEVE**

Do not exceed the following maximum thread lengths and values.

- Max dimension **V** : 5/8” (16mm) ± 1 thread pitch
- Max dimension **W** : 5/8” (16mm) ± 1 thread pitch
- Max dimension **X** : 1” (25mm)
- Dimension **V** and **W** should be equal (V/W = 1)

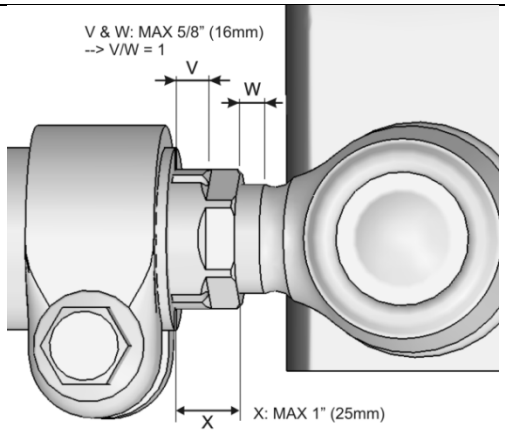


**FIGURE 8**

## SLEEVE ADJUSTMENT

12. Adjust sleeve to the values of FIGURE 10.

    10/32”=8mm

13. Once the proper length adjustment is done, tighten the sleeve end ball joint clamp. To prevent interference between the ball joint clamp bolts with other components of the steering system, the clamp bolt must be positioned horizontally as shown on FIGURE 11. **Tighten the clamp nut to 118-133 lbf-ft**.

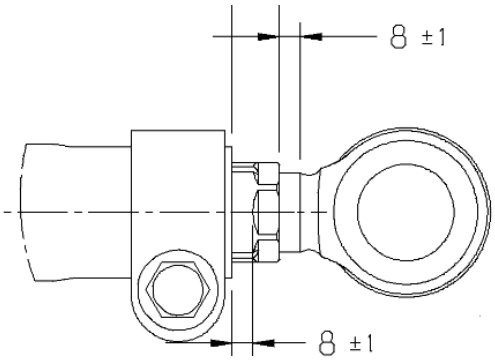


**FIGURE 9**

**CAUTION**

**Do not re-use clamp hardware**.

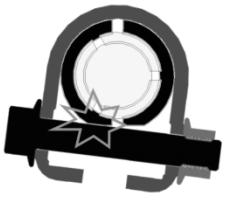

Bolt and nut should be replaced every time they are unscrewed. While assembling the clamp, make sure the bolt does not touch the drag link tube.

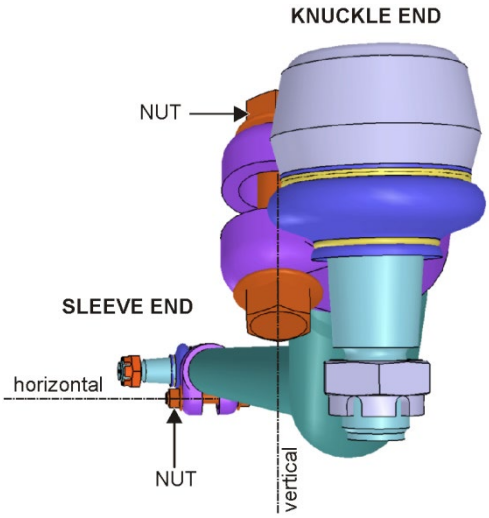


**FIGURE 10: NOTE THE HORIZONTAL ORIENTATION OF THE CLAMP BOLT AT THE SLEEVE END AND ON WHICH SIDE THE NUT MUST BE POSITIONED**

## DRAG LINK INSTALLATION

14. Install the drag link.
15. Ball joint castellated nut on <u>both ends</u> should be tightened to **150-200 lbf-ft**.
16. Install cotter pin **p/n 502104** and bend to lock bolt in place (see an example of a correct installation of a cotter pin on the image below).
17. Apply a small amount of anti-seize compound on all exposed threads for corrosion protection. Be sure to avoid smearing the ball joint boot.

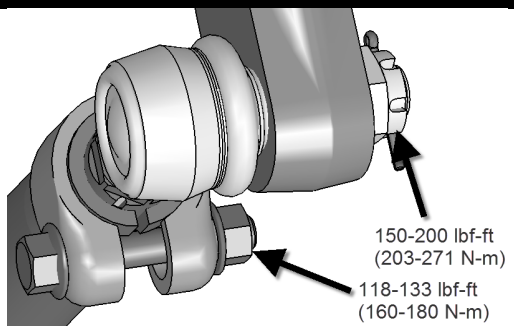

**FIGURE 11**

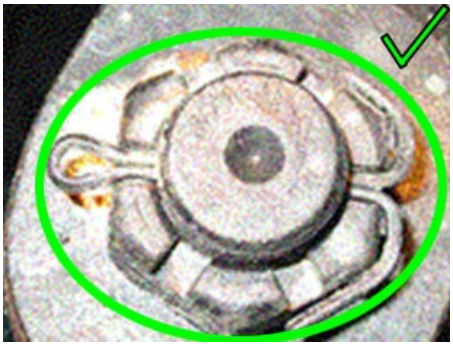

18. Make sure there is no binding or interference of the draglink with the vehicle structure by turning wheels fully in each direction. Min gap: 1/4” (6mm)
19. Inspect the gap between *tire* and *draglink* turning wheels *right*: Min gap 3/8” (9.5mm).

## PARTS / WASTE DISPOSAL

Discard according to applicable environmental regulations (Municipal/State[Prov.]/ Federal)

*Access all our Service Bulletins on <u>http://techpub.prevostcar.com/en/</u>*
*Or scan the QR-Code with your smart phone*
.

**Are you a Vehicle owner?**
*E-mail us at **<u>technicalpublications_prev@volvo.com</u>** and type “ADD” in the subject to receive warranty bulletins applicable to your vehicle(s) by e-mail.*

## CONTENTS

**SECTION CHANGE LOG** ..... **4**

**1 TORQUE TABLES** ..... **5**

1.1 FRONT I-BEAM AXLE AND RELATED COMPONENTS ..... 5
1.2 INDEPENDENT FRONT SUSPENSION ..... 7
1.3 REAR SUSPENSION ..... 9

**2 DESCRIPTION** ..... **14**

**3 FRONT I-BEAM AXLE SUSPENSION** ..... **14**

3.1 AIR SPRINGS ..... 14
*3.1.1 Inspection* ..... *14*
*3.1.2 Removal* ..... *14*
*3.1.3 Installation* ..... *15*
3.2 SHOCK ABSORBERS ..... 15
*3.2.1 Inspection* ..... *16*
*3.2.2 Removal* ..... *16*
*3.2.3 Installation* ..... *17*
3.3 RADIUS RODS ..... 17
*3.3.1 Inspection* ..... *17*
*3.3.2 Radius Rod Removal* ..... *18*
*3.3.3 Stripping Down* ..... *19*
*3.3.4 Radius Rod Assembly* ..... *19*
*3.3.5 Radius Rod Installation* ..... *19*
3.4 SWAY BAR ..... 19
*3.4.1 Removal* ..... *19*
*3.4.2 Installation* ..... *20*

**4 INDEPENDENT FRONT SUSPENSION (IFS)** ..... **21**

4.1 STEERING LINKAGE ..... 21
4.2 STEERING LINKAGE INSTALLATION SEQUENCE ..... 24
4.3 PITMAN ARM ..... 24
*4.3.1 Removal* ..... *24*
*4.3.2 Installation* ..... *24*
4.4 DRAG LINK ..... 25
*4.4.1 Adjustment* ..... *25*
4.5 BELL CRANK AND IDLER ARM ..... 25
*4.5.1 Bell Crank or Idler Arm Removal* ..... *25*
*4.5.2 Bell crank or Idler Arm Hub Disassembly* ..... *26*
*4.5.3 Bell Crank or Idler Arm Hub Reassembly* ..... *26*
4.6 RELAY ROD ..... 27
*4.6.1 Replacement* ..... *27*
4.7 TIE RODS ..... 27
*4.7.1 Removal* ..... *28*
*4.7.2 Installation* ..... *28*
4.8 STEERING ARMS ..... 29
*4.8.1 Removal* ..... *29*
*4.8.2 Installation* ..... *29*
4.9 LUBRICATION FITTINGS ..... 31

4.10 BALL JOINTS – GENERAL RECOMMENDATIONS ..... 32
4.11 FRONT-END ALIGNMENT ..... 32
4.12 LOWER AND UPPER A-ARM BALL PIN BUSHING REPAIR ..... 36
*4.12.1 Inspection ..... 36*
*4.12.2 Stripping Down ..... 36*
*4.12.3 Assembly ..... 36*
4.13 LOWER A-ARM BALL JOINT REPAIR ..... 37
*4.13.1 Stripping Down ..... 37*
*4.13.2 Assembly ..... 37*
4.14 UPPER A-ARM BALL JOINT ..... 37
*4.14.1 Visual Inspection ..... 37*
*4.14.2 Play Measurement ..... 37*
4.15 FRONT AIR SPRINGS ..... 38
*4.15.1 Inspection ..... 38*
*4.15.2 Removal ..... 38*
*4.15.3 Installation ..... 39*
4.16 SHOCK ABSORBERS ..... 39
*4.16.1 Shock Absorber Removal ..... 39*
*4.16.2 Shock Absorber Installation ..... 40*
4.17 SWAY BAR ..... 40
*4.17.1 Removal ..... 40*
*4.17.2 Installation ..... 41*

**5 REAR SUSPENSION ..... 42**

5.1 AIR SPRINGS ..... 43
*5.1.1 Inspection ..... 43*
*5.1.2 Removal ..... 43*
*5.1.3 Installation ..... 43*
5.2 SHOCK ABSORBERS ..... 44
*5.2.1 Inspection ..... 44*
*5.2.2 Removal ..... 45*
*5.2.3 Installation ..... 45*
5.3 RADIUS RODS ..... 45

**6 SUSPENSION AIR SYSTEM ..... 46**

6.1 INSPECTION ..... 46
6.2 AIR LINE TEST ..... 46

**7 SUSPENSION HEIGHT ADJUSTMENT ..... 46**

7.1 NORMAL RIDE HEIGHT ..... 46
7.2 HEIGHT CONTROL VALVES ..... 47
7.3 MAINTENANCE ..... 47
*7.3.1 Removal and installation ..... 47*
*7.3.2 Air leakage test ..... 49*

**8 "LEVEL-LOW" LEVELING SYSTEM – VIP SERIES OPTION ONLY ..... 49**

8.1 PRINCIPLES OF OPERATION ..... 49
8.2 MAINTENANCE ..... 49

**9 FRONT KNEELING SYSTEM (COACHES ONLY) ..... 50**

9.1 PRINCIPLE OF OPERATION ..... 50
9.2 MAINTENANCE ..... 50
9.3 AIR SPRING CONTROL SOLENOID VALVES ..... 50

*9.3.1 Removal and installation ..... 50*

**10 HIGH-BUOY SYSTEM (COACHES ONLY) ..... 51**

10.1 PRINCIPLES OF OPERATION ..... 51
10.2 MAINTENANCE ..... 51
10.3 HIGH-BUOY – PRESSURE REGULATOR ..... 51
*10.3.1 Adjustment ..... 51*
*10.3.2 Disassembly ..... 51*
*10.3.3 Cleaning ..... 51*
*10.3.4 Reassembly ..... 52*

**11 LOW-BUOY SYSTEM (COACHES ONLY) ..... 52**

11.1 PRINCIPLES OF OPERATION ..... 52
11.2 MAINTENANCE ..... 52

**12 AIR SYSTEM ..... 52**

12.1 AIR TANK MAINTENANCE ..... 53
*12.1.1 Wet Air Tank ..... 53*
*12.1.2 Primary Air Tank ..... 53*
*12.1.3 Secondary Air Tank ..... 54*
*12.1.4 Accessory Air Tank ..... 54*
*12.1.5 Expansion Air Tank ..... 54*
12.2 EMERGENCY FILL VALVES ..... 55

**13 TROUBLESHOOTING ..... 55**

**14 SPECIFICATIONS ..... 57**

# SECTION CHANGE LOG

| | DESCRIPTION | DATE |
|---|---|---|
| 1 | | |
| 2 | | |
| 3 | | |
| 4 | | |
| 5 | | |
| 6 | | |

# 1 TORQUE TABLES

## 1.1 FRONT I-BEAM AXLE AND RELATED COMPONENTS

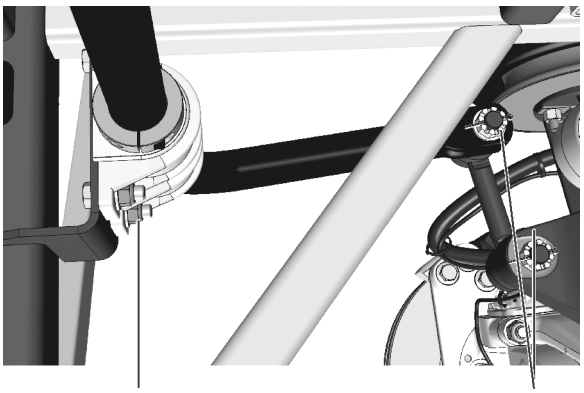


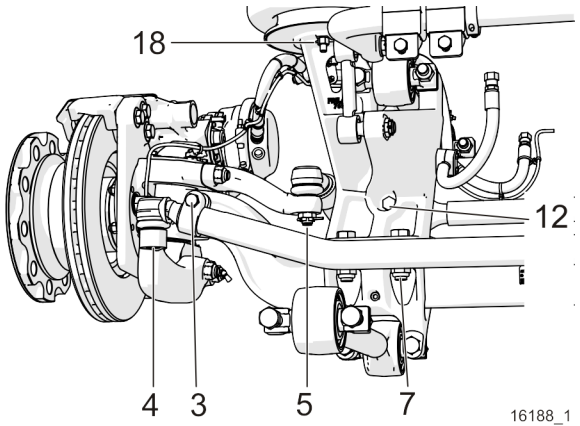


**16187**

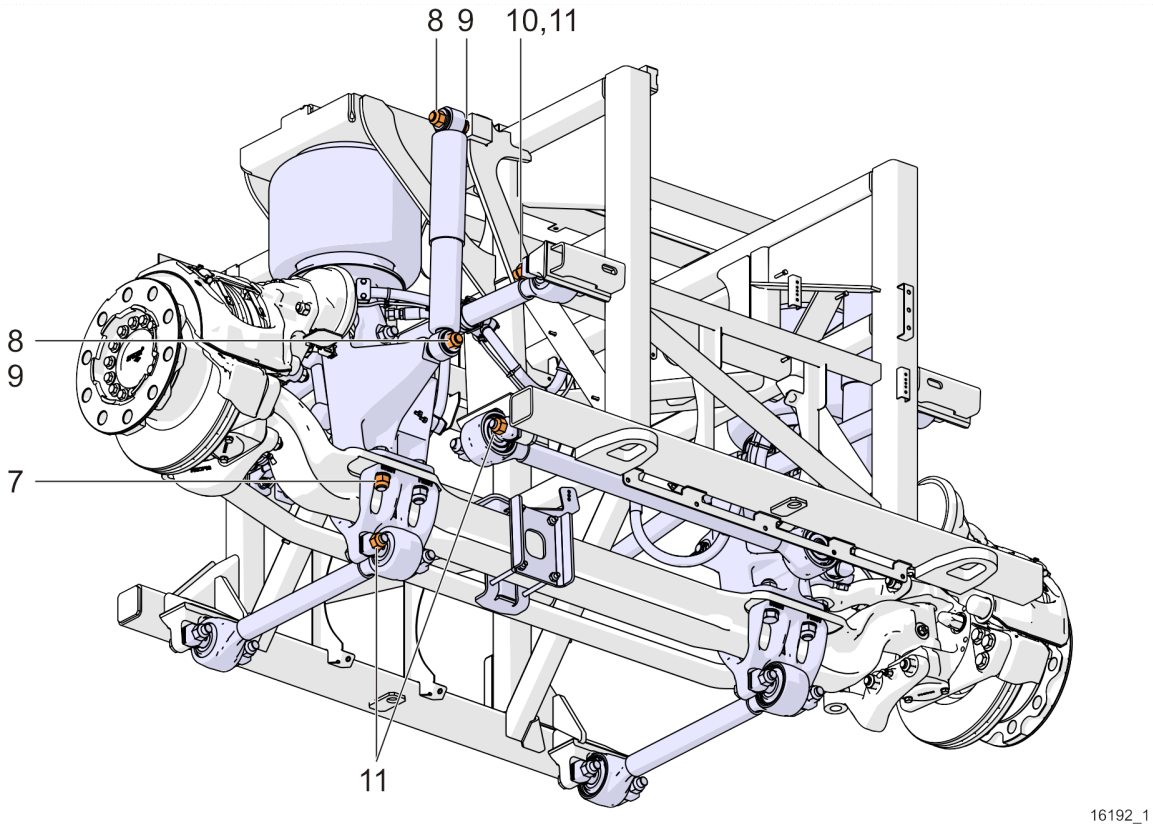

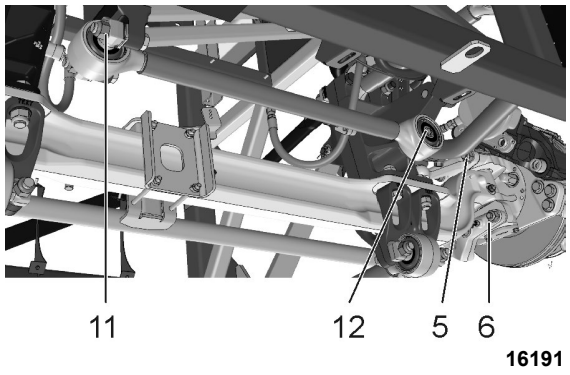


16191

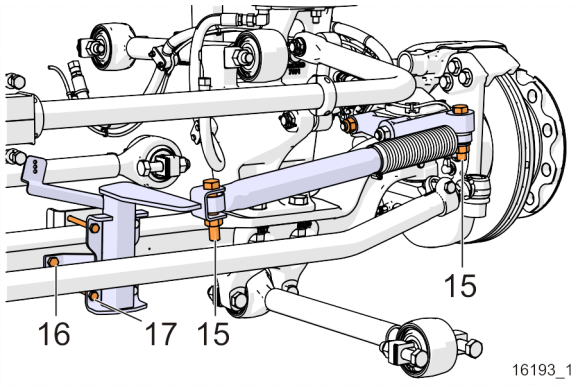


16193_1

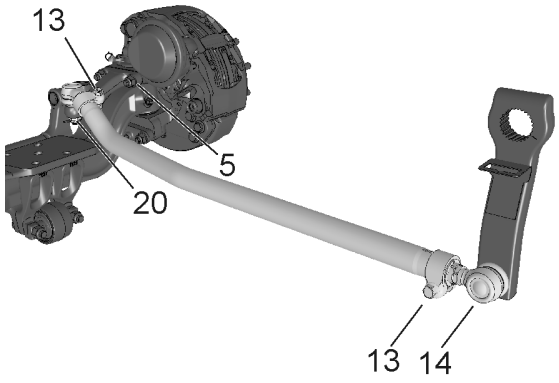


16194_1

| FRONT I-BEAM AXLE | | | |
|---|---|---|---|
| No | DESCRIPTION | QTY | TORQUE (dry) |
| 1 | Sway bar link, upper and lower nuts | 4 | 165-200 lb-ft (224-271 Nm) |
| 2 | Sway bar bushing collars (front suspension) | 8 | 80-100 lb-ft (108-136 Nm) |
| 3 | Tie rod end clamp nuts | 2 | 118-133 lb-ft (160-180 Nm) |
| 4 | Tie rod end ball pin nuts | 2 | 155-170 lb-ft (210-230 Nm) |
| 5 | Steering arm stud nuts | 2 | 285-315 lb-ft (386-427 Nm) |
| 6 | Tie rod arm stud nuts | 4 | 285-315 lb-ft (386-427 Nm) |
| 7 | I-beam axle mount nuts | 8 | 230-280 lb-ft (312-380 Nm) |
| 8 | Shock absorber upper & lower mounting nuts | 2 | 99-121 lb-ft (134-164 Nm) |
| 9 | Shock absorber pins, upper & lower | 2 | 350-400 lb-ft (475-542 Nm) |
| 10 | Radius rod retaining studs | 4 | 90-110 lb-ft (122-149 Nm) |
| 11 | Radius rod retaining nuts | 18 | 225-255 lb-ft (305-346 Nm) |
| 12 | Transverse radius rod taper pin screw | 1 | 206 lb-ft (279 Nm) |
| 13 | Drag link clamp bolts | 2 | 118-133 lb-ft (160-180 Nm) |
| 14 | Drag link ball joint stud nut, fore | 1 | 165-236 lb-ft (224-320 Nm) |
| 15 | Steering damper nuts | 2 | 100-120 lb-ft (136-163 Nm) |
| 16 | Steering damper bracket bolt | 1 | 39-45 lb-ft (53-61 Nm) |
| 17 | Steering damper bracket nuts | 4 | 30-36 lb-ft (41-49 Nm) |
| 18 | Air spring nut | 4 | 25 lb-ft (34 Nm) |
| 19 | Steering damper arm nuts | 2 | 285-315 lb-ft (386-427 Nm) |
| 20 | Drag link ball joint stud nut, aft | 1 | 140-200 lb-ft (190-271 Nm) |

## 1.2 INDEPENDENT FRONT SUSPENSION

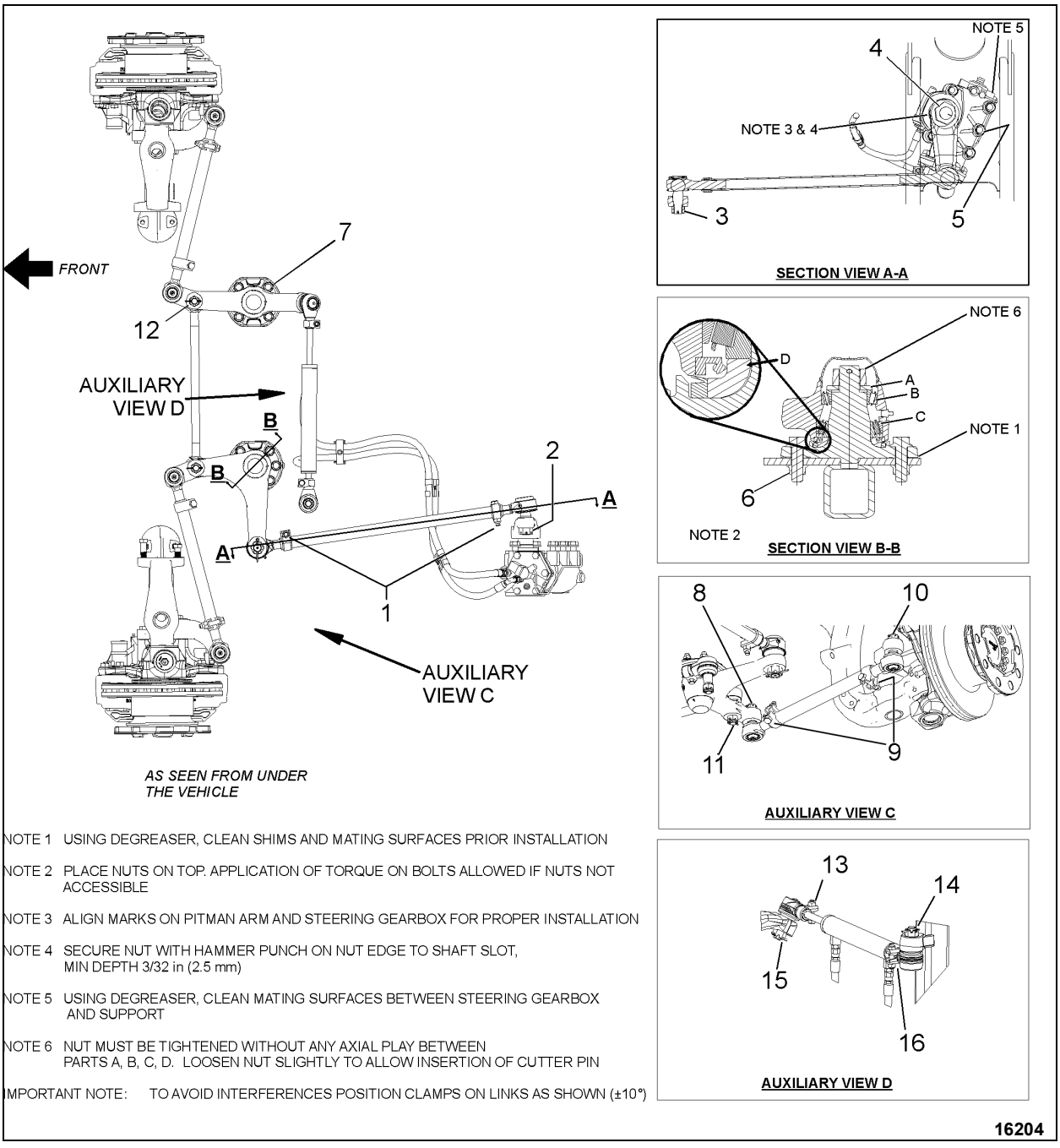


NOTE 1 USING DEGREASER, CLEAN SHIMS AND MATING SURFACES PRIOR INSTALLATION

NOTE 2 PLACE NUTS ON TOP. APPLICATION OF TORQUE ON BOLTS ALLOWED IF NUTS NOT ACCESSIBLE

NOTE 3 ALIGN MARKS ON PITMAN ARM AND STEERING GEARBOX FOR PROPER INSTALLATION

NOTE 4 SECURE NUT WITH HAMMER PUNCH ON NUT EDGE TO SHAFT SLOT, MIN DEPTH 3/32 in (2.5 mm)

NOTE 5 USING DEGREASER, CLEAN MATING SURFACES BETWEEN STEERING GEARBOX AND SUPPORT

NOTE 6 NUT MUST BE TIGHTENED WITHOUT ANY AXIAL PLAY BETWEEN PARTS A, B, C, D. LOOSEN NUT SLIGHTLY TO ALLOW INSERTION OF CUTTER PIN

IMPORTANT NOTE: TO AVOID INTERFERENCES POSITION CLAMPS ON LINKS AS SHOWN (±10°)

16204

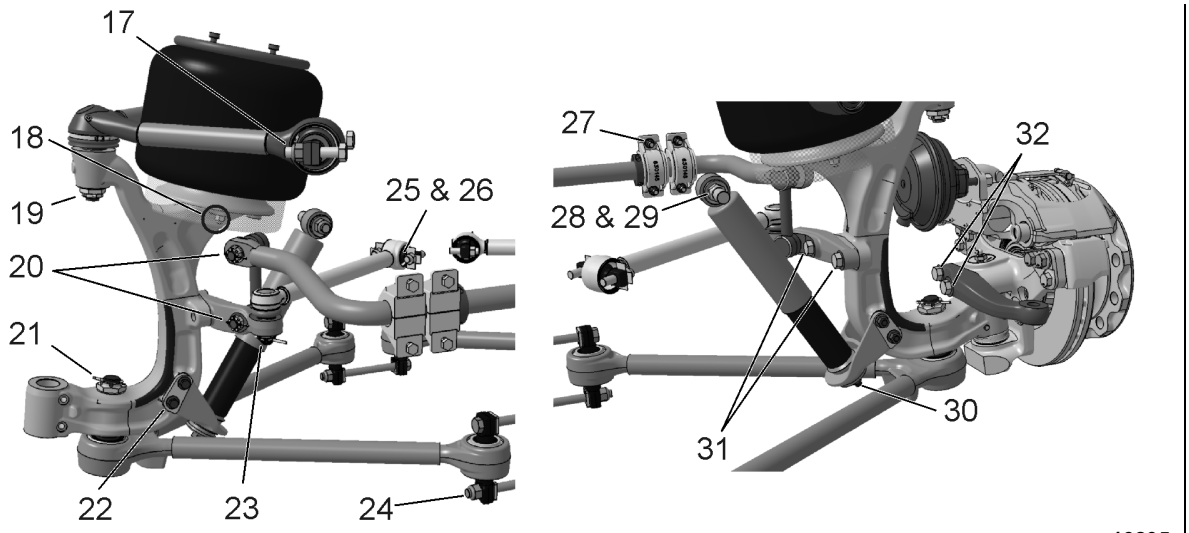


16205

| INDEPENDENT FRONT SUSPENSION | | | |
|---|---|---|---|
| No | DESCRIPTION | QTY | TORQUE (dry) |
| 1 | Drag link socket end clamp pinch bolt | 2 | 50-60 lb-ft (68-81 Nm) |
| 2 | Drag link ball stud nut to pitman arm | 1 | 245-270 lb-ft (332-366 Nm) |
| 3 | Drag link ball stud nut to bell crank | 1 | 245-270 lb-ft (332-366 Nm) |
| 4 | Pitman arm to steering gear fixing nut | 1 | 470-570 lb-ft (637-773 Nm) |
| 5 | Steering gearbox to mounting bracket bolt | 5 | 365-405 lb-ft (495-549 Nm) |
| 6 | Bell crank spindle mounting nut | 6 | 208-254 lb-ft (282-344 Nm) |
| 7 | Idler arm spindle mounting nut | 6 | 208-254 lb-ft (282-344 Nm) |
| 8 | Tie rod end ball stud nut to idler arm or bell crank | 2 | 150-200 lb-ft (203-271 Nm) |
| 9 | Tie rod end clamp pinch bolt | 4 | 50-60 lb-ft (68-81 Nm) |
| 10 | Tie rod end ball stud nut to steering arm stud * | 2 | 150-200 lb-ft (203-271 Nm) |
| 11 | Relay rod stud nut to bell crank * | 1 | 150-200 lb-ft (203-271 Nm) |
| 12 | Relay rod stud nut to idler arm * | 1 | 150-200 lb-ft (203-271 Nm) |
| 13 | Hydraulic power cylinder end clamp pinch bolt | 1 | 50-60 lb-ft (68-81 Nm) |
| 14 | Hydraulic power cylinder to bracket stud nut* | 1 | 150-200 lb-ft (203-271 Nm) |
| 15 | Hydraulic power cylinder to idler arm stud nut* | 1 | 150-200 lb-ft (203-271 Nm) |
| 16 | Hydraulic power cylinder end clamp pinch bolt | 1 | 50-60 lb-ft (68-81 Nm) |
| 17 | Upper a-arm ball joint | 4 | 230-255 lb-ft (312-346 Nm) |
| 18 | Air spring lower stud nut (6 air springs) | 2 | 31-38 lb-ft (42-52 Nm) |
| 19 | Upper a-arm central ball joint (castellated hex nut)* | 1 | 210-250 lb-ft (285-339 Nm) |
| 20 | Sway bar link, upper and lower ball stud nuts (front suspension)* | 2 | 165-200 lb-ft (224-271 Nm) |
| 21 | Lower a-arm central ball joint (castellated nut)* | 1 | 490-540 lb-ft (664-732 Nm) |
| 22 | Shock absorber support | 4 | 105-125 lb-ft (142-169 Nm) |
| 23 | Torque Rod ball stud nut* | 1 | 150-200 lb-ft (203-271 Nm) |
| 24 | Lower a-arm ball joint | 4 | 270-300 lb-ft (366-407 Nm) |

| | | | |
|---|---|---|---|
| 25 | Torque rod, nut | 2 | 158-193 lb-ft (214-262 Nm) |
| 26 | Torque rod, stud | 2 | 90-110 lb-ft (122-149 Nm) |
| 27 | Sway bar bushing collar (front suspension) | 8 | 80-100 lb-ft (108-136 Nm) |
| 28 | Shock absorber mounting stud nut | 1 | 99-121 lb-ft (134-164 Nm) |
| 29 | Shock absorber mounting stud | 1 | 350-400 lb-ft (475-542 Nm) |
| 30 | Shock absorber lower mounting pin nut | 1 | 60-75 lb-ft (81-102 Nm) |
| 31 | Torque rod lever bolt (M20-2.5) | 2 | 520-575 lb-ft (705-780 Nm) |
| 32 | Steering arm bolt (M22-2.5) | 2 | 642-708 lb-ft (870-960 Nm) |

* Tighten nut to specified torque, then advance to next aligning cotter pin slot and install a new cotter pin.

| *NOTE* |
|---|
| *Apply corrosion-protective compound on exposed threads.* |

## 1.3 REAR SUSPENSION

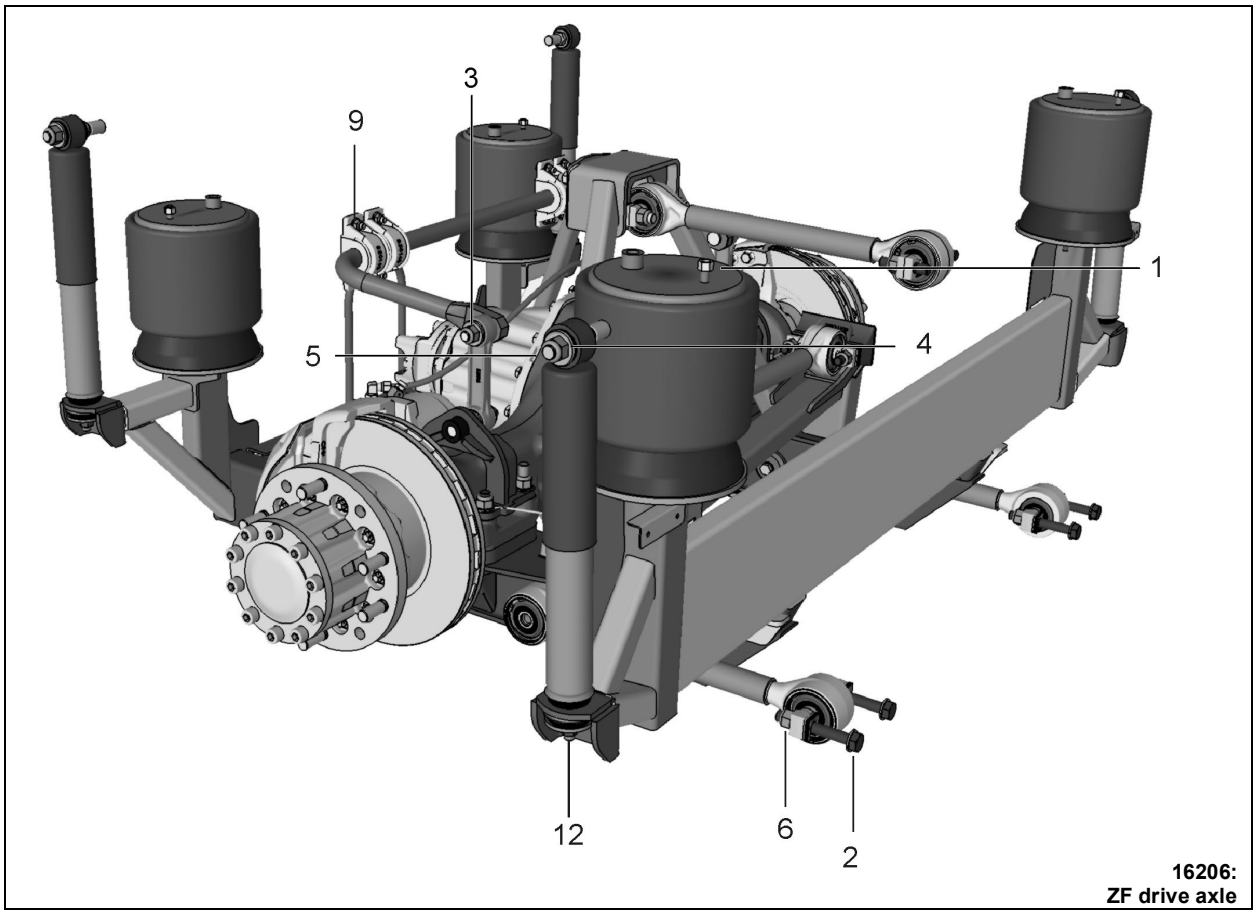


**16206:**
**ZF drive axle**

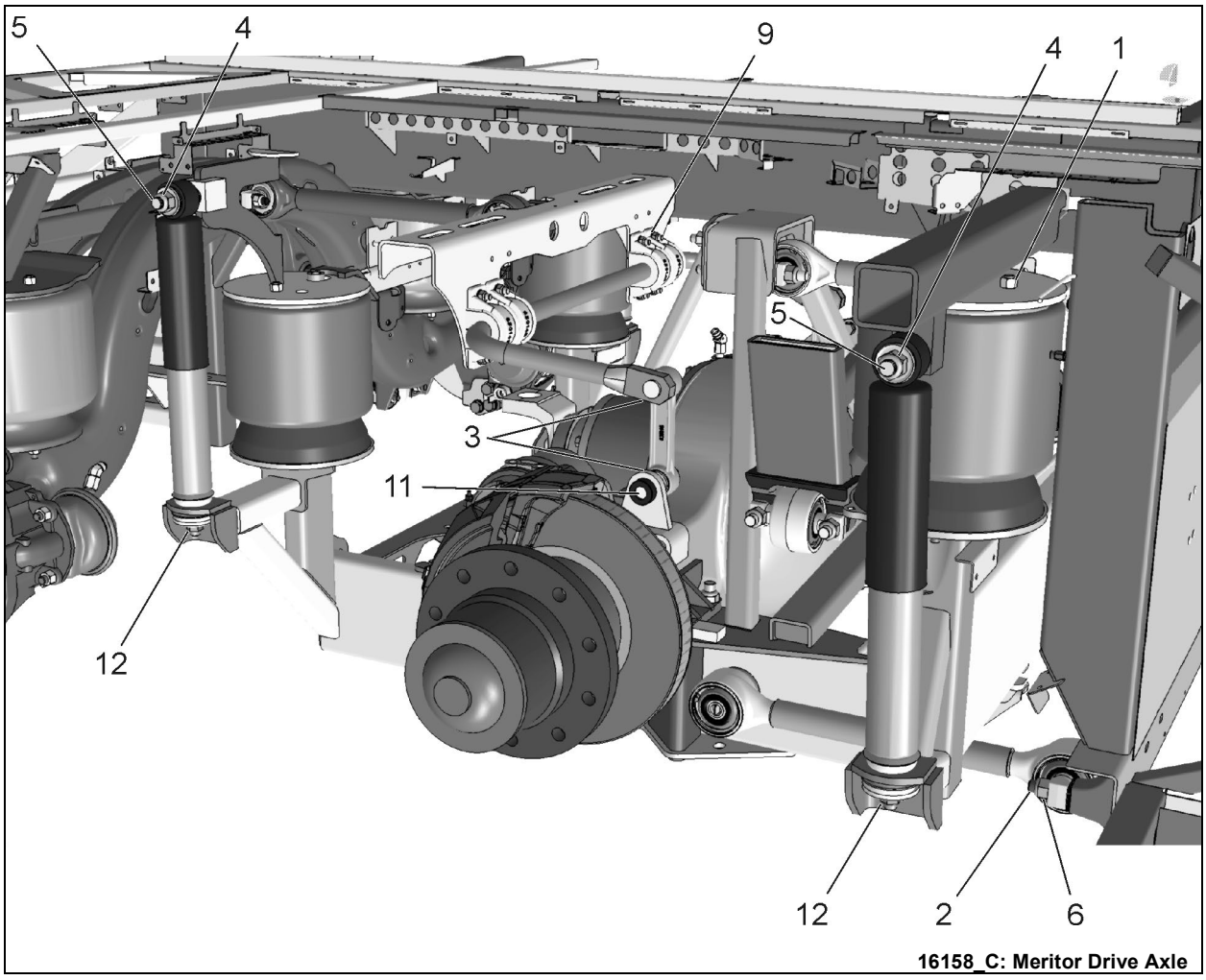


16158_C: Meritor Drive Axle

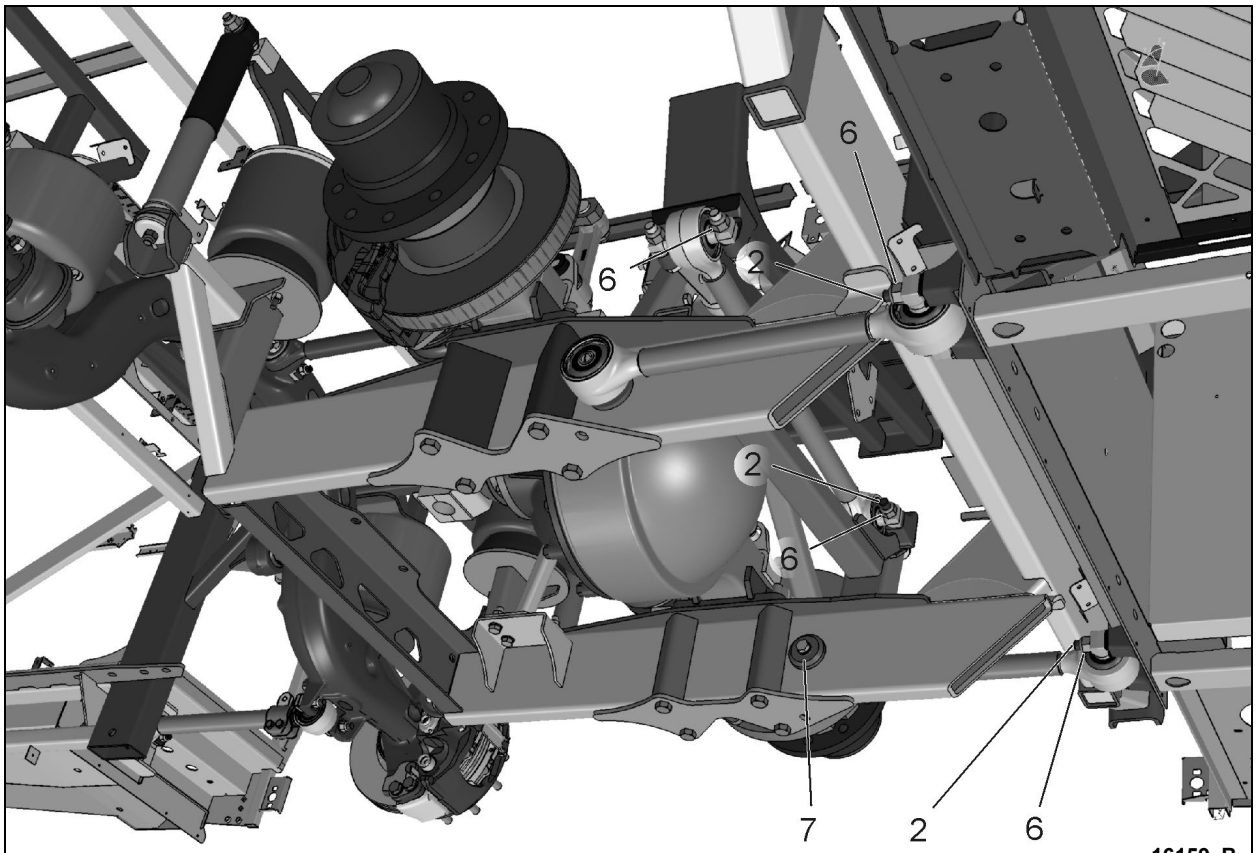


16159_B

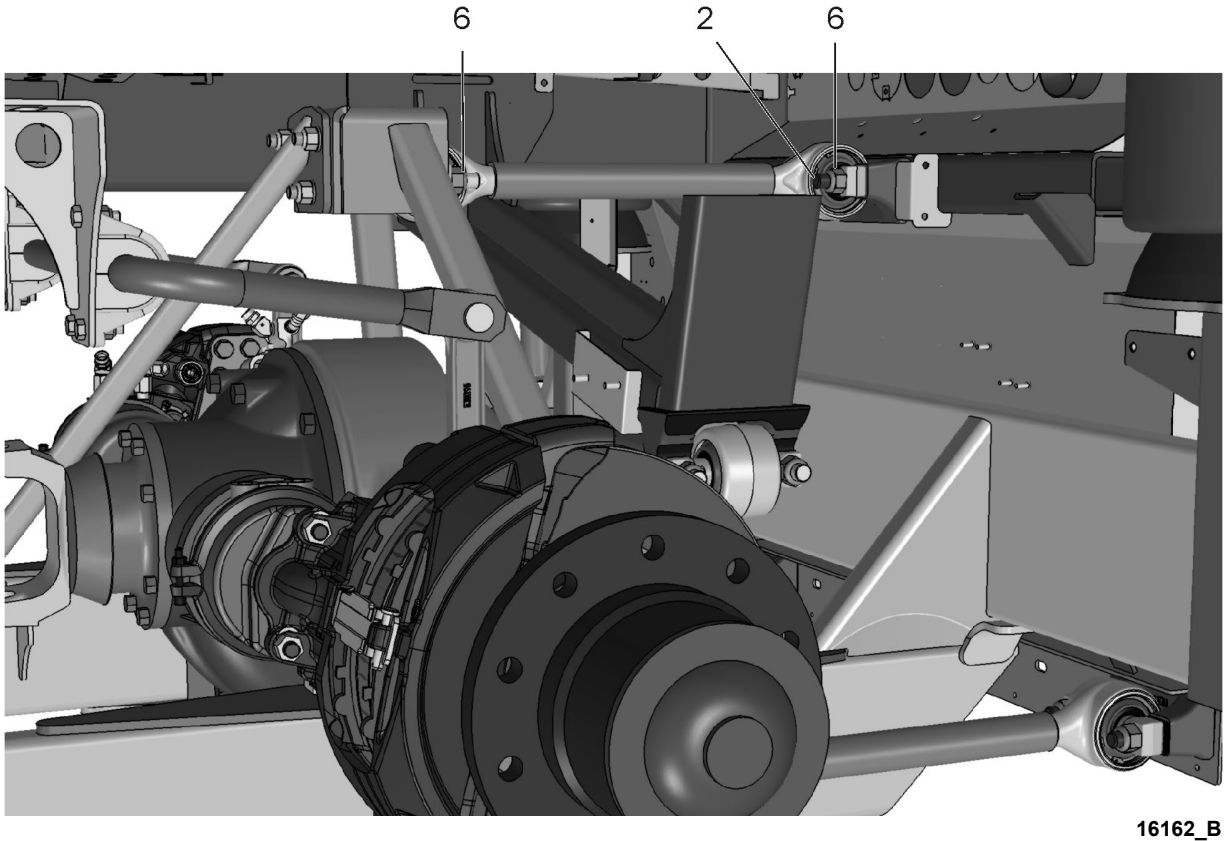


16162_B

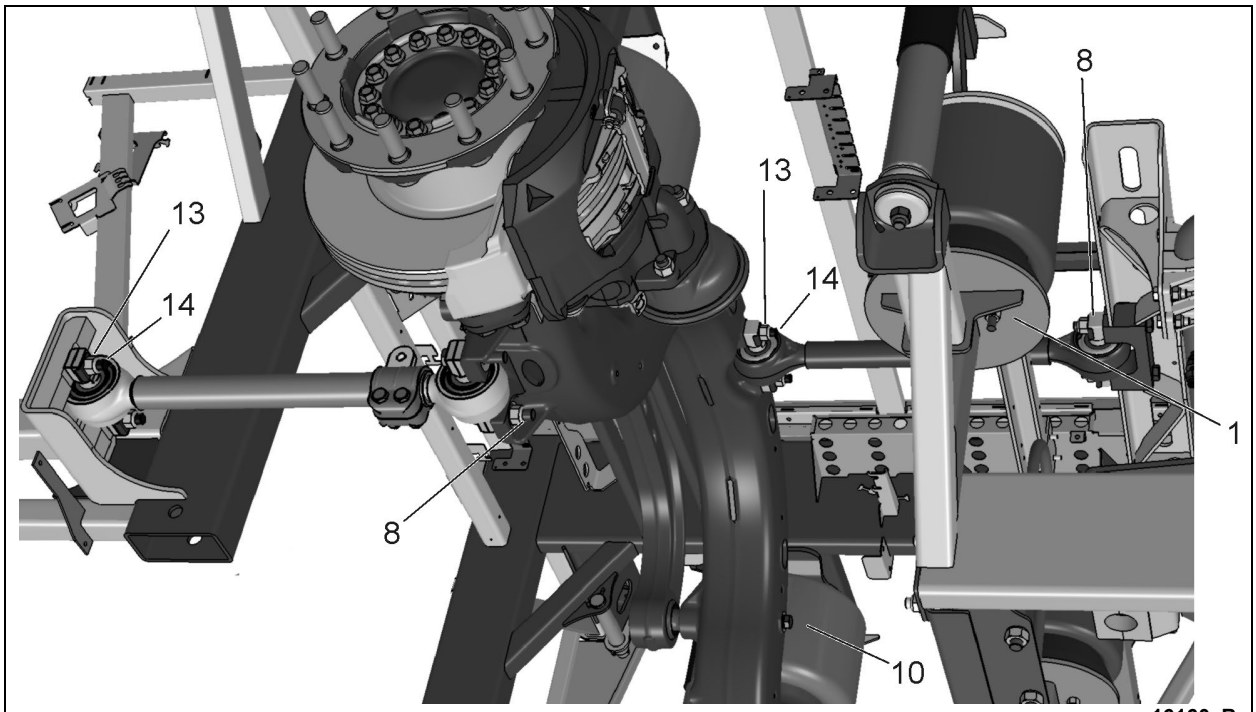


16160_B

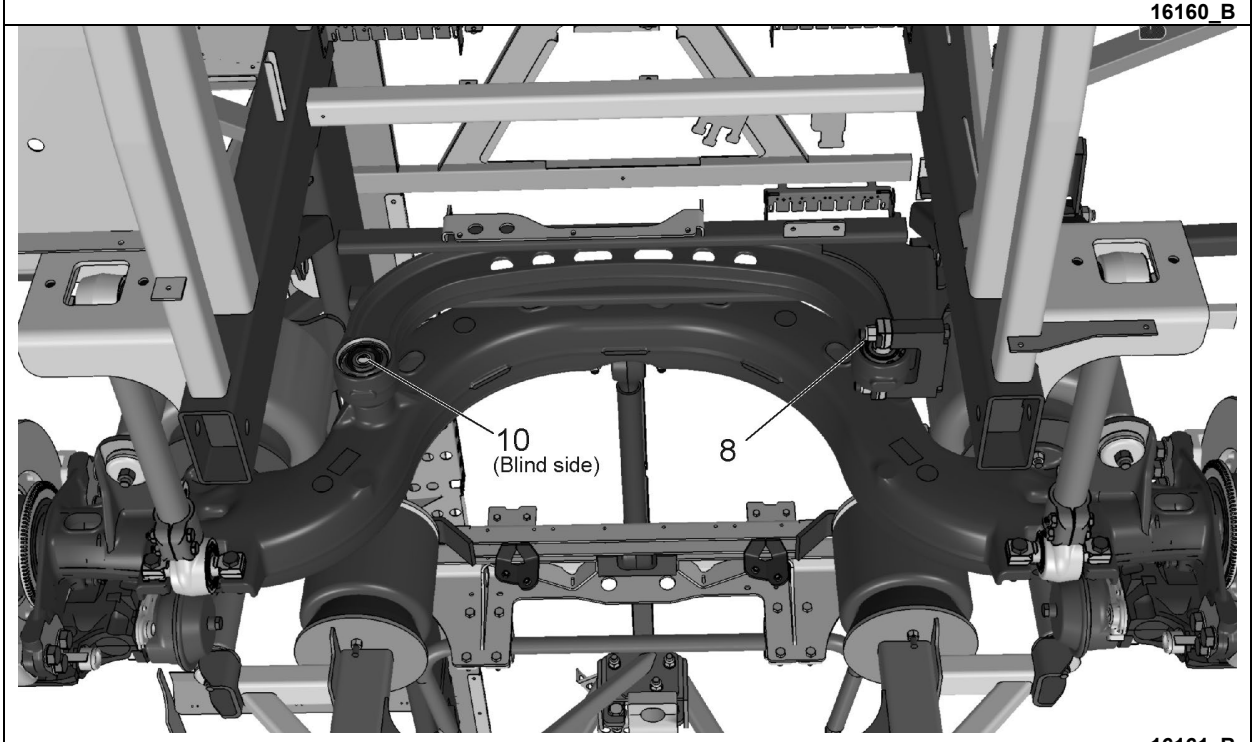


16161_B

| REAR SUSPENSION | | | |
|---|---|---|---|
| No | DESCRIPTION | QTY | TORQUE (dry) |
| 1 | Air Spring Upper & Lower Stud Nut | *12* | 31-38 lb-ft (42-52 Nm) |
| 2 | Drive & Tag Axle Radius Rod stud | *12* | 90-110 lb-ft (122-149 Nm) |
| 3 | Sway Bar Link Upper & Lower Nut | *4* | 99-121 lb-ft (134-164 Nm) |

| | | | |
|---|---|---|---|
| 4 | Shock Absorber Pin Nut | *6* | 99-121 lb-ft (134-164 Nm) |
| 5 | Shock Absorber Pin | *6* | 350-400 lb-ft (475-542 Nm) |
| 6 | Drive axle Radius Rod Nut/bolt | *6* | 225-255 lb-ft (305-346 Nm) |
| 7 | Drive Axle Longitudinal Radius Rod Retaining Bolt | *2* | 185-227 lb-ft (251-308 Nm) |
| 8 | Tag Axle Radius Rod Nut | *6* | 228-252 lb-ft (309-342 Nm) |
| 9 | Sway Bar Bushing Collar Bolt | *8* | 80-100 lb-ft (108-136 Nm) |
| 10 | Tag Axle Transversal Radius Rod (Casting) Retaining Bolt | *1* | 185-227 lb-ft (251-308 Nm) |
| 11 | Sway Bar Link Pin Stud | *4* | 350-400 lb-ft (475-542 Nm) |
| 12 | Shock Absorber Lower Nut | *6* | 60-75 lb-ft (81-102 Nm) |
| 13 | Tag Axle Radius Rod Nut | *6* | 158-193 lb-ft (214-262 Nm) |
| 14 | Tag Axle Radius Rod Stud | *6* | 90-110 lb-ft (122-149 Nm) |

| *NOTE* |
|---|
| *Apply corrosion-protective compound on exposed threads.* |

## 2 DESCRIPTION

The vehicle is provided with an air suspension system. The system consists of air springs, height control valves, radius rods, sway bars, tripod and shock absorbers (Figure 1 to Figure 7). The system operation is fully automatic and maintains a constant vehicle height regardless of load, or load distribution.

The vehicle can also be equipped with systems such as:

- Front Kneeling + Front High-Buoy;
- Front Kneeling + Full High-Buoy;
- Front Kneeling + Front High-Buoy and Low-Buoy Combination;
- Front Kneeling + Full High-Buoy and Low-Buoy Combination;

For a description of each of these systems, refer to the appropriate heading in this section

## 3 FRONT I-BEAM AXLE SUSPENSION

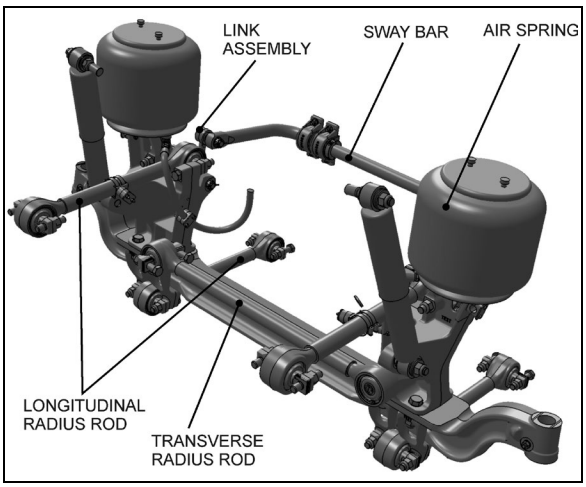


**FIGURE 1: FRONT I-BEAM AXLE SUSPENSION 16105**

### 3.1 AIR SPRINGS

The air springs are made from a special compound rubber molded to the proper contour and dimensions. The entire vertical load of the vehicle is supported by these springs. Each of the three axles is provided with air springs that are attached to the subframe and to the axles.

#### 3.1.1 Inspection

1. Check operation of bellows.
2. Visually inspect bellows for evidence of cracks, punctures, deterioration, or chafing. Replace the bellows if any damage is evident.
3. With the primary air system at normal operating pressure (122 - 140 psi (841 - 965 kPa)), coat all suspension air line connections and bellows mounting areas with a water and soap solution. Bubbles will indicate an air leak, and none is permissible. Repair or replace defective parts.

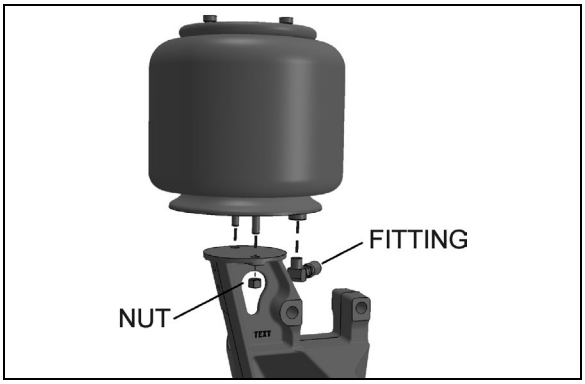


**FIGURE 2: AIR SPRING 16052**

*NOTE*

*If air spring is removed from vehicle, bellows can be lightly inflated and submerged in water to detect any leakage. If any leakage is detected, replace bellows.*

**WARNING**

To prevent personal injury, do not apply more than 10 psi (69 kPa) of air pressure to the uninstalled air spring.

#### 3.1.2 Removal

*NOTE*

*Front suspension air springs can be removed without removing the entire axle assembly.*

1. Safely support vehicle at the recommended body jacking points. To gain access to a given air spring, the corresponding wheel can be removed as follows:
   a) Jack vehicle until the tire clears the ground, and place safety supports underneath body.

**CAUTION**

Only the recommended jacking points must be used as outlined in Section 18, “Body”.

b) Support the axle with a suitable hydraulic floor jack at the recommended jacking points. Make sure that the measurement between the air spring mounting plates is greater than the normal clearance (normal ride height).

c) Remove wheel.

2. Exhaust compressed air from accessory air tank by opening drain cock under reservoir.
3. Disconnect the height control valve link and pull down the control arm to ensure all air is exhausted from air springs.

*NOTE*

*While performing this step, do not change the height control valve control arm adjustment.*

4. Disconnect air line from air spring, remove elbow (if applicable), and cover both the line end and fitting to prevent the entry of foreign matter.
5. Unscrew the two air spring lower mounting nuts.
6. Rotate the air spring clockwise (Figure 3) to free the upper attachments from the mounting plate.
7. Remove the air springs.

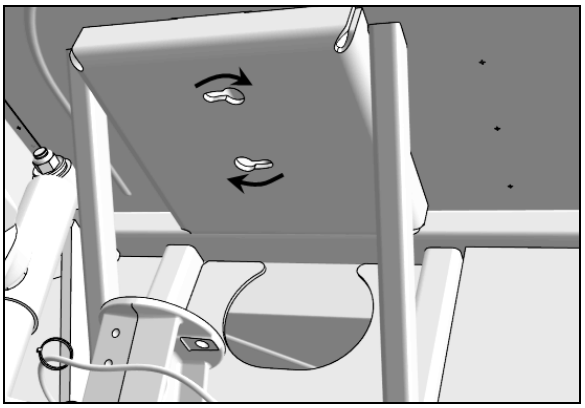

**FIGURE 3: AIR SPRING UPPER MOUNTING PLATE**

3.1.3 Installation

1. Compress air spring as necessary and position air spring between both the lower and upper mounting plates.
2. Align the upper attachments with holes in the mounting plate. Rotate air spring counterclockwise.
3. Thread the lower nuts a few turns.

*NOTE*

*To facilitate air spring installation, compress it manually then put a piece of tape over the air line threaded fitting. This prevents air from getting back into the air spring and keeps it compressed, thus enabling to place the air spring in between the mounting plates and greatly easing installation.*

4. Tighten and torque the lower stud nuts according to Torque Table under heading Torque Specifications.
5. Install elbow (if applicable), then connect air line.
6. Connect the height control valve link.
7. Build up air pressure in system.

*NOTE*

*To accelerate this operation, air reservoirs can be filled from an exterior air supply connected to the accessory tank fill valve or to the emergency fill valve.*

7. Check operation of bellows and with the primary air system at normal operating pressure (122 - 140 psi (841 - 965 kPa)), coat the air line connections and air spring mounting areas with a water and soap solution. Bubbles will indicate an air leak, and none is permissible. Repair or replace defective parts.
8. Reinstall wheel.
9. Remove the hydraulic floor jack from under the axle, then lower vehicle to ground.

## 3.2 SHOCK ABSORBERS

Double-action, telescoping-type shock absorbers ensure a smooth ride and enhance vehicle stability on the road. All shock absorbers are eye-type mountings. The front and tag axles

are each provided with two shock absorbers while the drive axle is provided with four of them.

Shock absorbers are non-adjustable and non-repairable. Maintenance requirements involve replacement of the rubber mounting bushings, and tightening of all shock absorber pins according to Torque Table under heading Torque Specifications when shock absorber replacement occurs. If a shock absorber becomes inoperative, complete unit must be replaced.

**⚠ CAUTION**

When a shock absorber is found defective, always replace with a new set on affected axle, except if there has been a recent replacement of one unit. The following method will help in determining if both shock absorbers on the same axle have to be replaced.

3.2.1 Inspection

Loosen lower mounting of both shocks, and then carefully attempt to raise and lower the bottom portion of each shock. Note the rate of effort for distance of travel. Replace both shocks if a definite differential rate is found.

The shock must be bench checked in an upright, vertical position. If checked in any other position, air will enter the cylinder tube and make the shock absorber appear defective.

Proceed as follows to check shock absorbers:

1. With the shock absorber in a vertical position (top end up), clamp the bottom mount in a vise.

**⚠ CAUTION**

Do not clamp the reservoir tube or the dust tube.

2. Rotate the dust tube. Notice any binding condition (may be compared with new unit). Binding condition indicates a scored rod. Units with scored rods should be replaced.
3. Fully extend shocks and check for leaks in the seal cover area. Shock fluid is a very thin hydraulic fluid that has a characteristic odor and dark brown tint. A slight trace of shock fluid around the seal cover area is not a cause for replacement (Refer to the SACHS document “Guideline to Evaluate Warranty Claims” annexed at the end of this section before replacing a shock). The shock seal is designed to permit a very slight seepage to lubricate the rod. Units that leak should be replaced.
4. Visually check shock for dents that could cause the shock to bind. Also, check for a bent rod.
5. Extend and collapse shock several times to determine that it has control (resistance) in both rebound and compression.
6. Visually inspect the shock mountings and vehicle mounting for:
   a. Broken mounts;
   b. Extreme bushing wear;
   c. Shifted bushing or sleeve;
   d. Deep cracks in bushing material (shallow surface cracks are normal);
   e. Loose shock absorber pins;
   f. Presence of convex washers, and their position relative to the rubber bushing.

3.2.2 Removal

1. Remove nuts and washers from shock absorbers on upper and lower mounting pins, taking care to identify the inner and outer washers to ease reinstallation. Refer to Figure 4 for details.
2. Remove the shock absorber assembly from pins.
3. Remove the two inner bushings from the shock absorber and discard them.

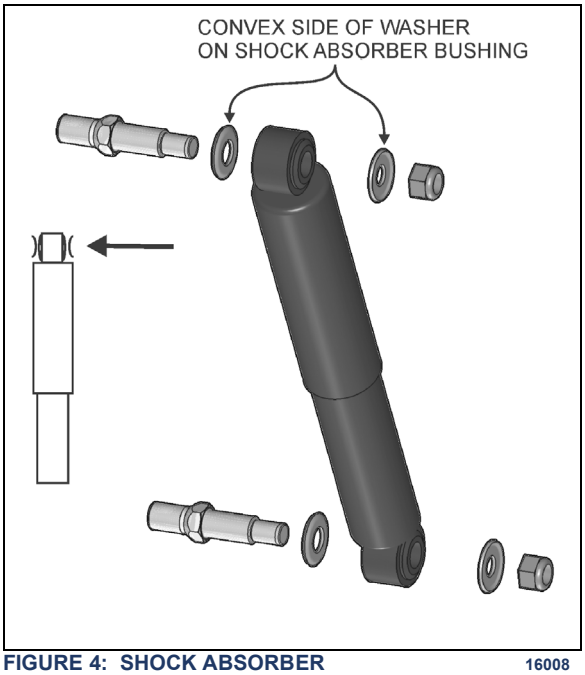


**FIGURE 4: SHOCK ABSORBER** 16008

### 3.2.3 Installation

1. Ensure that the shock absorber mounting pins are tight and that the threads are not stripped.
2. Install new rubber mounting bushings on shock absorbers (upper and lower).
3. Place the inner washers (with washer convex side facing the shock absorber rubber bushing) on each shock absorber pin.
4. Install the shock absorber eyes over the mounting pins, then the outer washers (with washer convex side facing the shock absorber rubber bushing) on each shock extremity.

| *NOTE* |
| --- |
| *If shock absorber pins are removed, they must be reinstalled using "Loctite" (see "Parts Specifications" in this section).* |

5. Place the lower and upper mounting pin stud nuts and torque according to paragraph 13 Torque Specifications.

## 3.3 RADIUS RODS

Radius rods are used to secure the axles in the proper transversal and longitudinal positions. Five radius rods are provided on the front I-beam axle suspension (four longitudinal and one transversal). Refer to Figure 1 and Figure 5 for details. These rods transmit both braking and driving forces from the axles to the vehicle body.

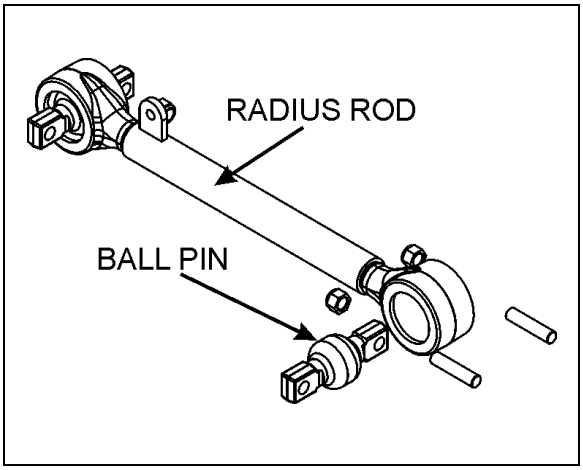


**FIGURE 5: TYPICAL RADIUS ROD SETUP** 16010

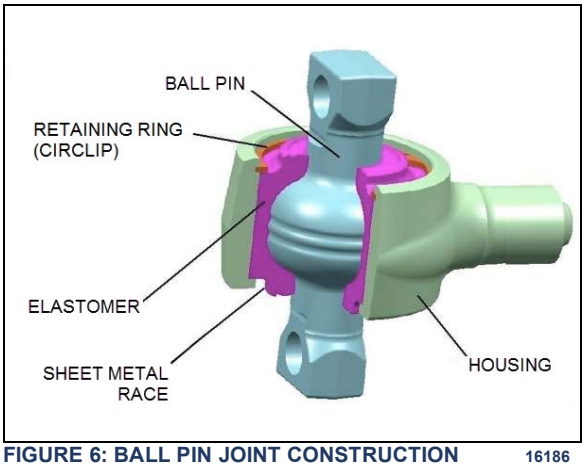


**FIGURE 6: BALL PIN JOINT CONSTRUCTION** 16186

### 3.3.1 Inspection

1. Clean all parts thoroughly.
2. Inspect radius rods for distortion and cracks. We recommend the "Magnaflux" process to detect cracks in the radius rod. Any damaged part should be replaced with a new one.

| *NOTE* |
| --- |
| *New bushings should be used when rods are replaced.* |

3. The radius rod bushings should be checked periodically for signs of shearing, deterioration, or damage. Any defective part should be replaced.

Take off the load from the ball joint by lifting the vehicle. Apply a load on the joint in all six degrees of freedom (axial, radial, etc) with a suitable lever bar. After the load is taken off, the joint has to spring back into its starting position. Free play is not acceptable.

Separation of rubber from ball pin or sheet metal race is permissible up to a third of the circumference.

When the following characteristics are noted, the joint must be replaced:

- Free play between ball pin and housing;
- Radial cracking of the external sheet-metal race (Figure 6)
- Any crack or fracture of a metal part
- Permanent deformation of the sheet metal race
- Loosened bolt
- Broken bolt
- Loss of bolt

- Circlip (retaining ring) detached from groove
- Broken Circlip
- Loss of Circlip
- Incipient crack

If damage to the inner housing contour or the Circlip groove is found during replacement of the molecular bearing, the entire radius rod must be replaced.

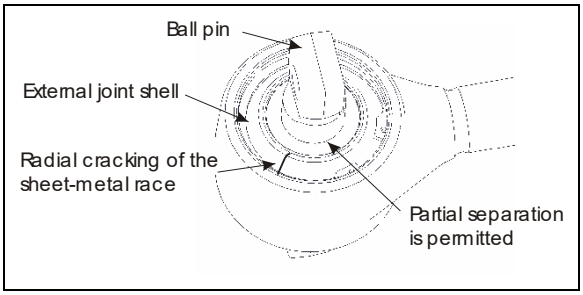


**FIGURE 7: BALL PIN BUSHING**

### 3.3.2 Radius Rod Removal

1. Unscrew the nuts (or bolts) at each extremity of the radius rod.
2. Remove the radius rod.

*NOTE*

*One end of the transversal radius rod is fitted with a conical (taper) pin that will require the use of an air hammer and a pointed 13mm (1/2inch) diameter chisel to remove it from the chassis (after the retaining nut is removed from the rod end).* ***Care must be taken not to damage the rod pin threads.***

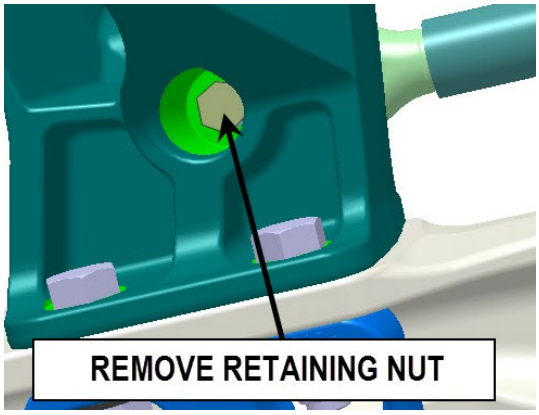


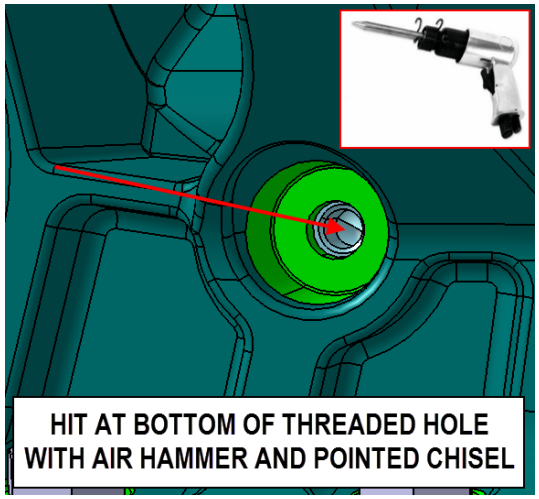


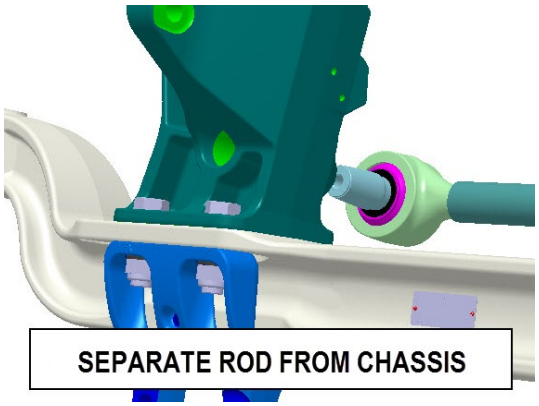

**CAUTION**

Do not hit the cast parts of the chassis to disengage taper radius rods; this could lead to cracking and/or deformations of the cast parts.



3.3.3 Stripping Down

Strip down the defective joint by removing the Circlip, and ball pin/bushing assembly.

Clean out housing bore and Circlip groove.

3.3.4 Radius Rod Assembly

The assembly work may be done only by a recognized specialized workshop. Ensure that old and new parts do not get mixed up with each other. For this reason, all the old parts are to be scrapped immediately after a joint has been stripped down.

A complete repair set must be used for each joint repaired, i.e. use of only part of a repair set is not permissible.

Execute assembly of the new joint parts in the following sequence:

1. Complete lubrication of the contact surface between housing bore and ball pin elastomer through application of grease.

*NOTE*

*Apply the supplied grease, only if you are using a repair kit.*

2. Insert ball pin/bushing, assembly. Ensure that the bolt bores are in the correct position in relation to the axis of the tube.
3. Place joint in receiving fixture and mount annular assembly tool on the housing. Then locate Circlip in the housing using axial load with the aid of the assembly matrix.
4. Opening of the Circlip is located at 45° to the housing shaft axis. Make sure that the Circlip is perfectly engaged in the housing.

3.3.5 Radius Rod Installation

1. Snug up the nuts (or bolts) and repeat at the other end.
2. Refer to heading *"Suspension Height Adjustment"* later in this section, and set the vehicle to normal ride height.
3. With the vehicle at normal ride height, tighten all radius rod anchor pin nuts or bolts as prescribed in Torque Table 1.

**CAUTION**

It is extremely important upon reconnection of the rods that the proper clearance height between the axle and body be maintained. Otherwise, the rubber bushings in radius rod ends will become preloaded, thus reducing their life span.

3.4 SWAY BAR

A sway bar is connected to the front axle to increase vehicle stability. It controls lateral motion (swaying movement) of the vehicle (Figure 8).

3.4.1 Removal

1. Disconnect the two links from sway bar.
2. Safely support the sway bar. Unbolt the four bushing brackets from subframe.
3. Remove sway bar.

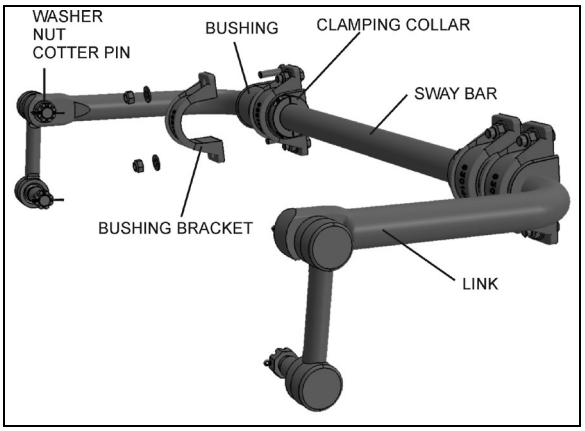


**FIGURE 8: SWAY BAR** 16028

| *NOTE* |
| --- |
| *Sway bar bushings are slit to ease their removal.* |

3.4.2 Installation

1. Loosely install the sway bar.
2. Tighten the eight bushing brackets nuts according to Torque Table 1 under heading Torque Specifications.
3. Tighten sway bar link upper nuts and lower nuts according to Torque Table 1 under heading Torque Specifications.
4. Install a cotter pin on each nut and bend.

## 4 INDEPENDENT FRONT SUSPENSION (IFS)

This section contains information and specifications unique to the independent front suspension (IFS), including suspension geometry and steering.

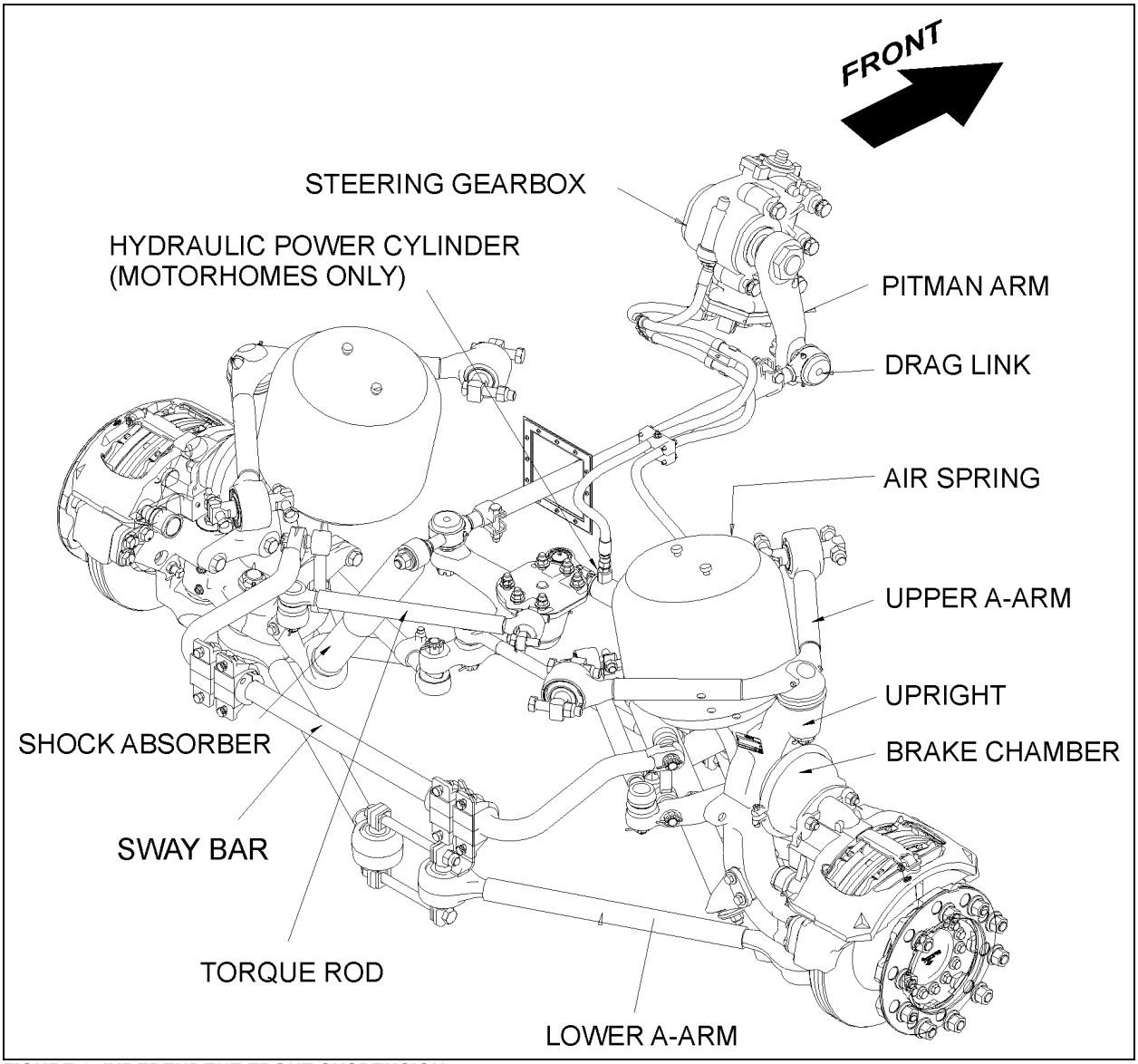


**FIGURE 9: INDEPENDENT FRONT SUSPENSION** 16124

### 4.1 STEERING LINKAGE

Turning motion of the steering wheel is transferred by the steering gear and steering linkage to the steering arms at the right and left front wheels. The steering linkage consists of tie rods connected to the bell crank and the steering arm at the left side of the coach, and to the idler arm and steering arm at the right side of the coach. The bell crank and idler arm are connected by a relay rod. A drag link connected to the bell crank and the pitman arm, which is mounted to the steering gear, transfers the turning motion of the steering wheel to the steering arms. On VIP series, a hydraulic power cylinder connected to the R.H. wheel provides

an added source of assistance and ensures that the total steering forces are produced with minimal stress on mechanical linkages.

Lower and upper A-arms are widely spaced. They are mounted on ball joints. Torque rods prevent rotation of the uprights around the lower and upper ball joints.

If the steering linkage is bent, twisted or worn, steering action of the coach will be seriously affected. Any time steering linkage components are replaced or adjusted, steering geometry and front wheel alignment must be checked as explained in this section.

**Turning Angle**

The maximum turning angle is set mechanically through the two steering stop screws installed on the swivel assembly. The turning angle mechanical stop is factory adjusted to accommodate the chassis design, and therefore, does not require adjustment on new vehicles.

However, turning angle should be checked and hydraulically adjusted, if necessary, any time a component of the steering system is repaired, disassembled or adjusted.

Turning angles are as follows:

Exterior: 49.5° ± 0.5°

Interior: 58° ± 0.5°

Before checking the turning angle, be sure the front end is properly aligned as described under paragraph FRONT END ALIGNMENT in this section.

To check steering maximum turning angle, proceed with the following method:

1. Lift the vehicle using the axles lifting points. Suspension must be at normal ride height.

2. Check if front tires rub against the frame or if the steering gear has been serviced.

3. While performing a full left and right turn, check for proper position of the tie rod end clamp bolt and nut and drag link end clamps in order to avoid clamps interfering with close parts. Refer to FIGURE 17 & FIGURE 18 for location and positioning of clamp bolts and nuts. Reposition if required.

**⚠ CAUTION**

Clamp bolts are either in a vertical or horizontal position. Reinstall clamp bolts exactly as they were before removal as they might interfere with other components.

4. If necessary readjust hydraulic steering limiter, see **Setting the hydraulic steering limitation** in the following manual:

   - RB Robert Bosch Servocom - Service Manual (8090)_2016

*NOTE*

*Prior to hydraulic steering limiter adjustment, verify vehicle wheel alignment, and ensure that oil level is adequate and that air bleeding is done.*

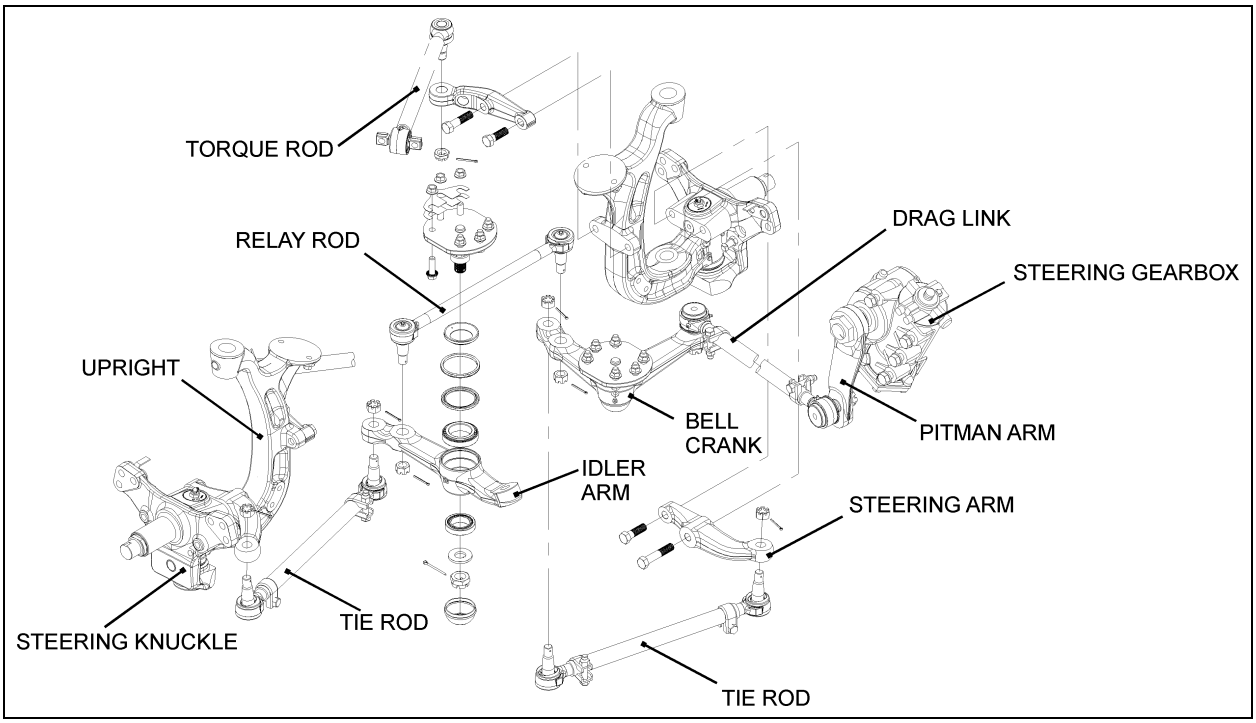


**FIGURE 10: IFS STEERING LINKAGE OVERVIEW**

## 4.2 STEERING LINKAGE INSTALLATION SEQUENCE

*NOTE*

*Whenever a steering linkage component has been removed and replaced, check steering geometry and front end alignment as directed in this Section. Check to insure that all stud nuts and mounting bolts and nuts have been tightened to prescribed torque.*

1. Position front wheels in straight ahead position.
2. Align the steering gearbox input shaft marks.
3. Afterwards, the pitman arm should be adjusted with output shaft and pitman arm reference marks aligned (for proper tightening torque, refer to Torque Table 2).

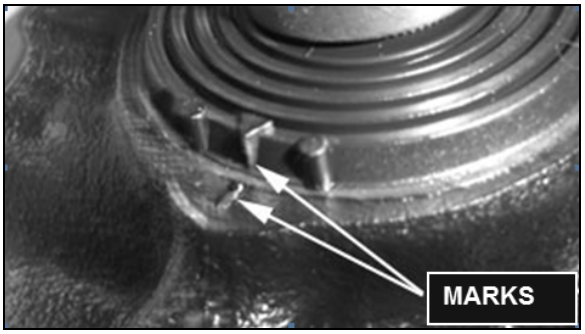


**FIGURE 11: STEERING GEARBOX INPUT SHAFT MARKS**

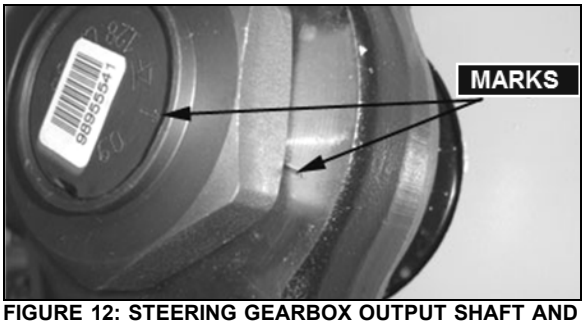


**FIGURE 12: STEERING GEARBOX OUTPUT SHAFT AND PITMAN ARM MARKS ALIGNED**

4. Locate centerline of vehicle then install relay rod in boss at steering bell crank and idler arm. Align center of relay rod with centerline of vehicle.
5. Install drag link to pitman arm and adjust opposite end of drag link to fit ball stud hole in bell crank.
6. Install tie rods then adjust toe-in as described in "Front End Alignment" in this section (for proper tightening torque, refer to Torque Table 2).

## 4.3 PITMAN ARM

### 4.3.1 Removal

1. Remove cotter pin, nut and washer from drag link ball stud at pitman arm.
2. Disconnect drag link from pitman arm, using jaw style pullers (pressure screw type).

**WARNING**

Always wear approved eye protection when operating pullers.

**CAUTION**

Do not drive pitman arm on or off sector gear shaft as this can damage the steering gear.

**CAUTION**

Heating of components to aid in disassembly is not allowed because it has a detrimental effect on axle components and steering linkage.

3. Remove pitman arm hold down nut.
4. Check the radial position of the pitman arm in relation to the sector shaft prior removal of pitman arm.
5. Locate the reference marks to the arm and shaft to ensure correct alignment at reassembly.
6. Use a puller to remove pitman arm.

### 4.3.2 Installation

1. Position pitman arm on sector gear shaft with reference marks aligned.
2. Install hold down nut. Tighten nut (dry) as per Torque Table 2.

*NOTE*

*Use a new nut if the previously removed nut was punched.*

**CAUTION**

Lock nut with sector shaft using a punch mark into the groove, minimum depth 3/32 inch (2.5mm) (see Figure 13).

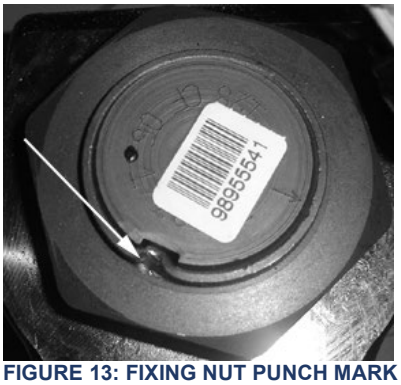


**FIGURE 13: FIXING NUT PUNCH MARK** 16098

3. Connect drag link to pitman arm. Ball stud and taper bore must be clean and free of grease. Install washers. Tighten nut (dry) as per Torque Table 2. Advance nut to next alignment cotter pin slot and install a new cotter pin.

## 4.4 DRAG LINK

Drag link assembly consists of three parts; a drag link and two end assemblies. Both end assemblies are identical and they are retained on the drag link with a clamp bolt and nut.

Stud nuts at the pitman arm and bell crank ends of the drag link must be kept tight or hole at ball stud end of drag link and hole in pitman arm may become enlarged as a result of excessive looseness. Subsequent tightening of stud nuts may draw studs too far into holes and dust cover parts may become damaged which can result in component failure.

Drag link end sockets are equipped with lubrication fittings and should be lubricated as directed in "Lubrication Fittings" in this section.

*NOTE*

*The drag link nominal length is 41 17/32 inch (1055 mm) measured from the center of one ball socket to the other. Nominal length is given only for preliminary adjustment.*

### 4.4.1 Adjustment

It should not be necessary to alter the length of the drag link except when a new link is installed or when removable end assembly has been replaced. If drag link adjustment is necessary, proceed as follows:

1. Position front wheels in straight ahead position.
2. Center steering gear as previously explained in "Steering Linkage Installation Sequence".
3. Remove cotter pin, nut and stud from drag link at bell crank. Locate centerline of vehicle and center of relay rod. With center of relay rod aligned with centerline of vehicle, loosen clamp bolt at socket end (bell crank end) of drag link and adjust length of socket end assembly to fit in boss of bell crank.

*NOTE*

*Do not change position of pitman arm.*

4. Install stud with nut and torque to proper torque. Ball stud and taper bore must be clean and free of grease. Align nut with cotter pin slot (tighten) and install a new cotter pin.
5. Torque mounting clamp bolt nut to prescribed torque, then test the adjustment. Front wheels should turn from full right to full left end of stroke without noticeable binding at drag link ends.

**CAUTION**

*Clamp bolts are either in a vertical or horizontal position. Reinstall clamp bolts exactly as they were before removal as they might interfere with other components.*

## 4.5 BELL CRANK AND IDLER ARM

Bell crank and idler arm are equipped with one lubrication fitting and should be lubricated as directed in "Lubrication Fittings" in this section.

### 4.5.1 Bell Crank or Idler Arm Removal

*NOTE*

*Use a piece of wire to support loosen end of*

*relay rod and tie rod in order to prevent placing an excessive load on opposite socket end.*

**Bell crank:** Disconnect drag link, tie rod and relay rod from bell crank by removing cotter pins and nuts from ball studs. Separate socket assemblies from the bell crank.

**Idler arm:** Remove cotter pins and nuts from ball studs connecting relay rod, tie rod and hydraulic power cylinder to idler arm. Separate socket assemblies from idler arm.

Remove nuts from bolts attaching bell crank or idler arm mounting spindle to vehicle subframe. Remove bell crank or idler arm mounting spindle.

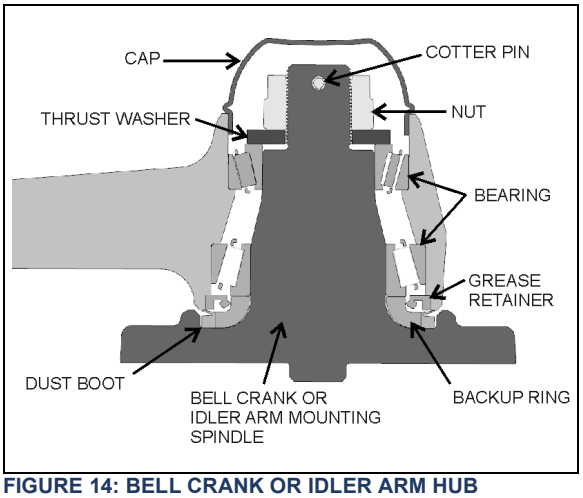


**FIGURE 14: BELL CRANK OR IDLER ARM HUB**

4.5.2 Bell crank or Idler Arm Hub Disassembly

1. Remove adjacent link assemblies from bell crank or idler arm as previously described.
2. Remove the cap (Figure 14).
3. Remove the cotter pin, nut and thrust washer. Remove bearings, grease retainer, backup ring and the bell crank or idler arm from its mounting spindle (Figure 14).

4.5.3 Bell Crank or Idler Arm Hub Reassembly

| NOTE |
| --- |
| *For bearing installation use tool Prevost # 110684.* |

| NOTE |
| --- |

*Install grease retainer according to Figure 14. Grease must be able to exit the bell crank or idler arm mechanism. For grease retainer installation use tool Prevost # 110683.*

| NOTE |
| --- |
| *Apply grease on bearings before installation.* |

1. Clean parts thoroughly with degreaser.
2. Insert the small bearing outer race into appropriate bore (done on a press).

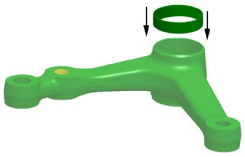

3. Insert the large bearing outer race into appropriate bore (done on a press).
4. Insert the large bearing into outer race and then, add grease retainer.

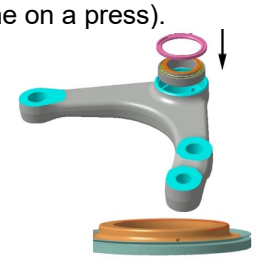

5. Apply good quality lithium grease (#680752) on backup ring and dust boot.



6. Install backup ring and dust boot on bell crank or idler arm spindle.
7. Apply a thin layer of grease on spindle shaft.
8. Install bell crank or idler arm onto its mounting spindle, while holding the bell crank or idler arm, slide on the small bearing assembly, thrust washer and secure using nut.

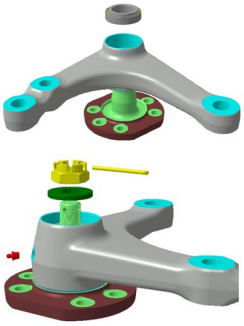

9. Tighten nut.

**TORQUE:130 lb-ft (176 Nm)**

10. Rotate assembly 3 turns in each direction.

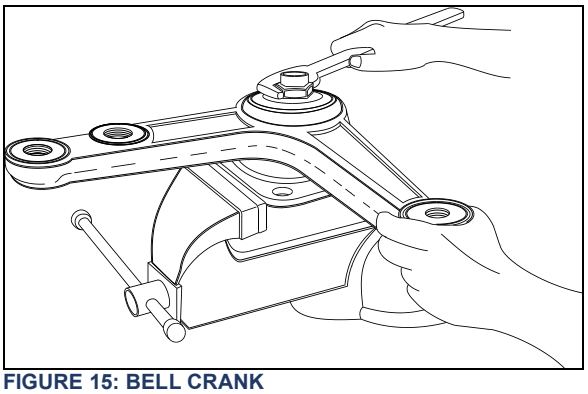

FIGURE 15: BELL CRANK 16044

11. Unscrew nut until bell crank or idler arm starts to turn with the application of 1 to 3 lbs force load as shown on Figure 16.
12. Check for loose bearings by applying an up and down load on bell crank or idler lever. The lever is not supposed to move in the vertical axis direction.

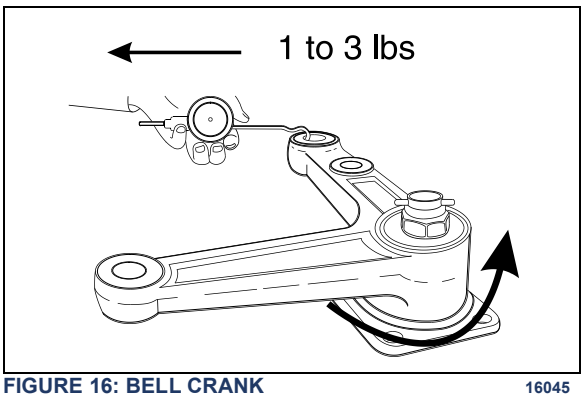


FIGURE 16: BELL CRANK 16045

13. Align nut with cotter pin slot (tighten) and install a new cotter pin.

| *NOTE* |
| --- |
| *Bend cotter pin around the nut. Do not bend the cotter pin in the direction of the cap as it may interfere with the cap.* |

14. Install the cap.
15. **Bell crank:** Install drag link, tie rod and relay rod as directed herein under each specific subject.
16. **Idler arm:** Install hydraulic power cylinder, tie rod and relay rod as directed herein under each specific subject.
17. Adjust turning angle as previously directed under paragraph "**Turning Angle**" and check front end alignment as specified under heading “Front End Alignment".

## 4.6 RELAY ROD

Relay rod ends are equipped with lubrication fittings and should be lubricated as directed in “Lubrication Fittings” in this section.

| *NOTE* |
| --- |
| *The relay rod is crimped in place and it is not possible to remove and replace the ball joint socket end assemblies.* |

### 4.6.1 Replacement

1. Remove cotter pins from bell crank and idler arm end of relay rod. Loosen nuts flush with end of studs.
2. Use a puller or place a sledge hammer behind the adjacent part to absorb shocks. Strike the studs with a brass hammer to loosen end assemblies.
3. Remove stud nuts then remove relay rod.
4. Position new relay rod studs into bell crank and idler arm then tap stud ends with a brass hammer to seat tapered surfaces. Ball stud and taper bore must be clean and free of grease.
5. Install stud nuts. Tighten nuts to prescribed torque (refer to Torque Table 2). Align cotter pin slot (tighten) and install a new cotter pin.

## 4.7 TIE RODS

Tie rod ends are connected to the bell crank and left steering arm, and to the idler arm and right steering arm. Each tie rod assembly consists of three parts; a tube and two socket end assemblies. The tie rod ends are threaded into the tube and secured with clamp bolts. Right and left hand threads are provided to ease toe-in adjustment. Tie rod assemblies are inter-changeable from the right to the left side of the coach.

Tie rod end sockets require periodic lubrication and inspection to see that ball studs are tight. Replace socket ends when there is excessive up and down motion, lost motion or end play at ball end of stud.

1. Periodically check bolt nut for tightness.
2. Inspect tie rod for bent condition and inspect tube for damaged threads. If tie rod is bent

or threads are damaged, replace the assembly.

3. Lubricate tie rod end fittings as directed in "Lubrication Fittings" in this section.

4.7.1 Removal

1. Remove cotter pins and stud nuts which attach tie rod socket ends to bell crank and left steering arm (or idler arm) and right steering arm.

2. Remove tie rod ball stud by tapping on steering arm and bell crank or idler arm with brass hammer, while using a sledge hammer to absorb shocks.

| *NOTE* |
| --- |
| *If tie rod end assemblies are damaged in any way, they must be replaced* |

4.7.2 Installation

1. Install socket end assemblies on tie rod. Be sure both ends are threaded an equal distance into the tube.
2. Make sure threads on stud and in stud nut are clean and not damaged.
3. Position ball studs (socket ends of tie rod) in holes in steering arm and bell crank or idler arm. Ball stud and taper bore must be clean and free of grease. Install a ball stud nut on each stud and tighten firmly.
4. Torque stud nuts to prescribed torque (refer to Torque Table 2). Align cotter pin slot (tighten) and install a new cotter pin.

| *NOTE* |
| --- |
| *Adjust toe-in as directed under heading "Toe-In Adjustment" in this section.* |

5. Make sure tie rod ends are properly aligned with ball studs, and then torque tie rod end clamp bolts to prescribed torque (refer to Torque Table 2).

| **CAUTION** |
| --- |
| Reinstall tie rod clamp as per FIGURE 17 & FIGURE 18 as they might interfere with other components. |

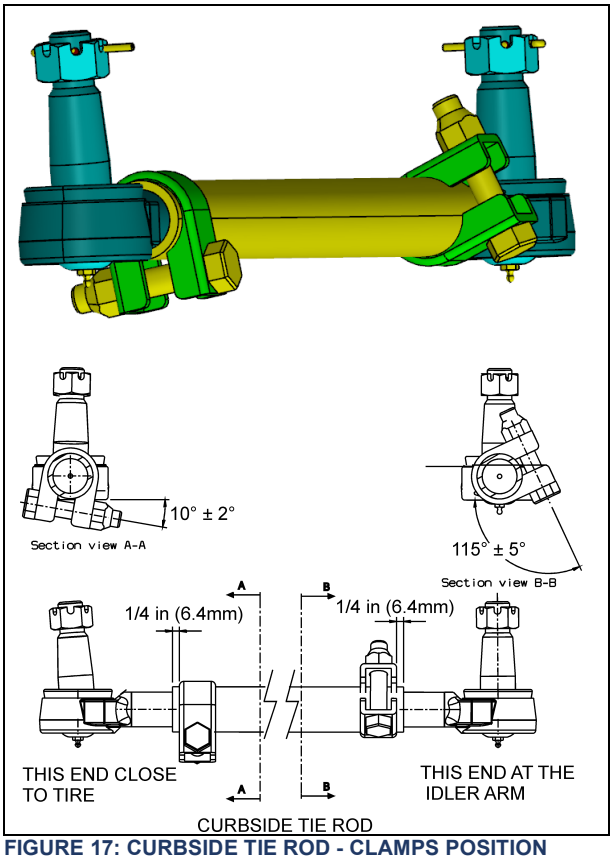


**FIGURE 17: CURBSIDE TIE ROD - CLAMPS POSITION**
16199

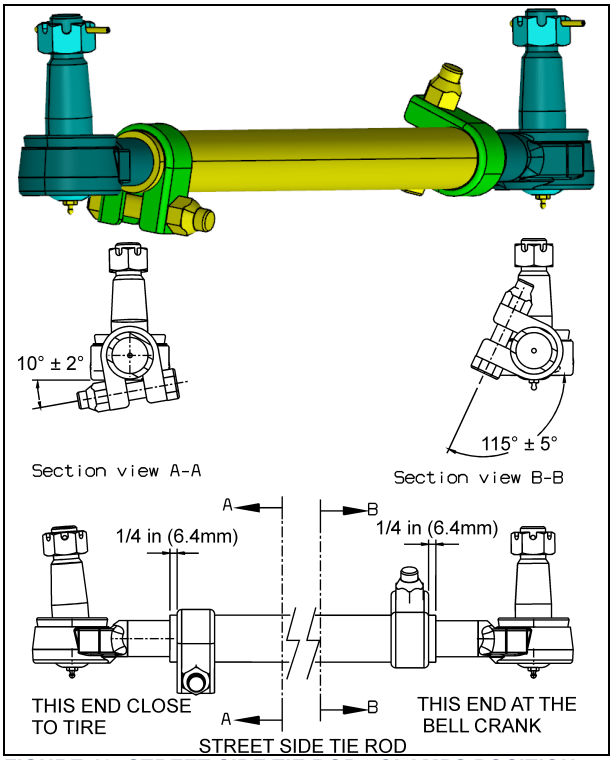


**FIGURE 18: STREET SIDE TIE ROD - CLAMPS POSITION**
16200

| *NOTE* |
| --- |
| *If tie rod is not properly aligned with stud, binding will result.* |

## 4.8 STEERING ARMS

The left and right wheel steering arms are secured to a steering knuckle at one end and to a tie rod at the other end.

### 4.8.1 Removal

1. Remove wheel as directed in Section 13, "Wheel, Hubs and Tires" of the maintenance manual.
2. Remove cotter pin and nut from stud securing tie rod to steering arm. Remove ball stud from steering arm by tapping on arm with a hammer, placing a sledge hammer underneath steering arm to absorb shocks.
3. Remove bolts securing steering arm to steering knuckle assembly. Remove steering arm from steering knuckle.

### 4.8.2 Installation

1. Install steering arm onto steering knuckle.
2. Torque steering arm to steering knuckle fixing bolts. Torque bolt to prescribed torque (refer to Torque Table 2).
3. Position tie rod ball stud in steering arm and tap with a brass hammer to seat ball stud in steering arm. Ball stud and taper bore must be clean and free of grease. Install nut on stud. Torque nut to prescribed torque (refer to Torque Table 2. Tighten nut to nearest cotter pin slot and install a new cotter pin.
4. Install wheel as directed in Section 13, "Wheel, Hubs and Tires" under paragraph "Installation" of the maintenance manual.

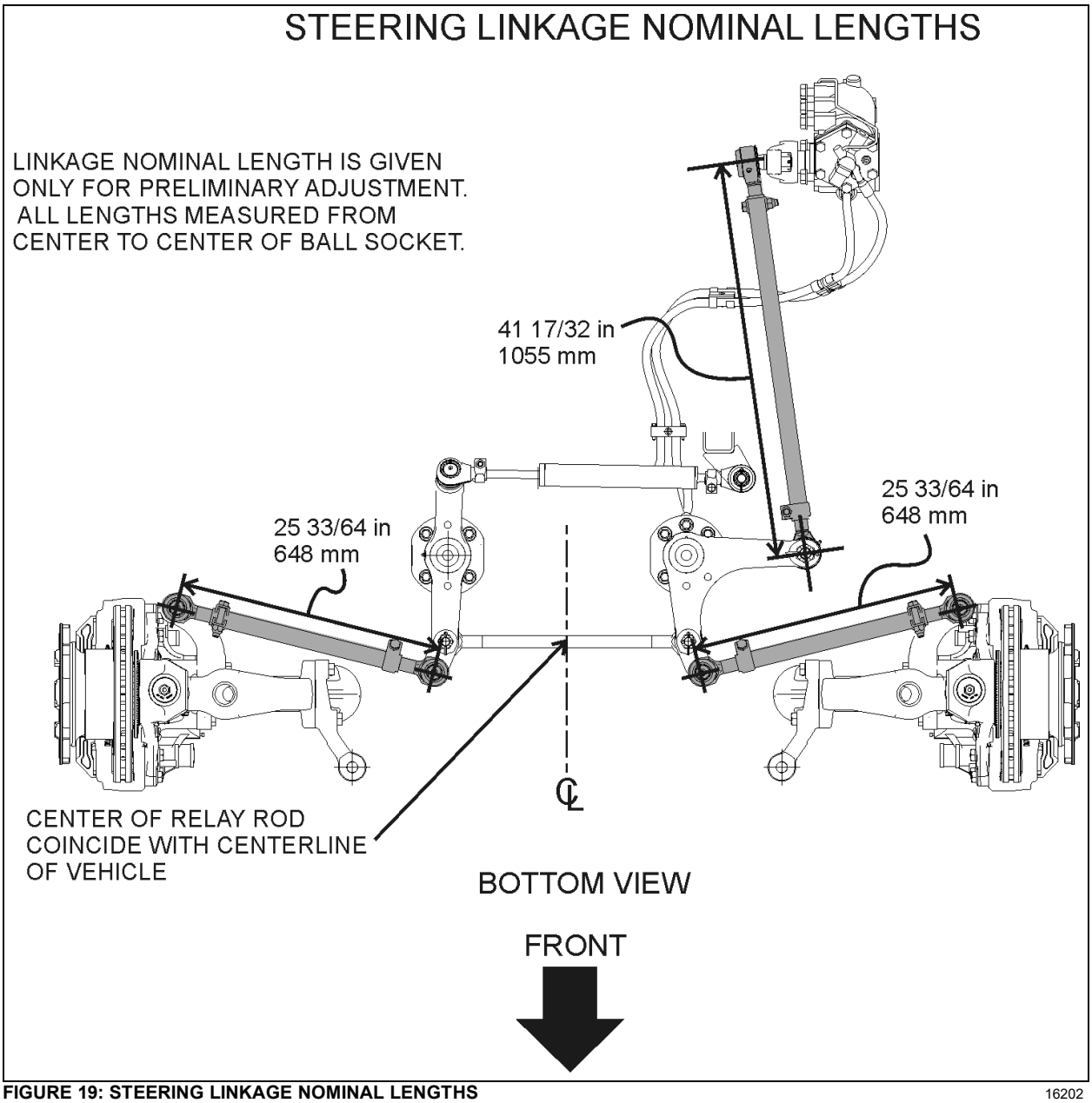


**FIGURE 19: STEERING LINKAGE NOMINAL LENGTHS** 16202

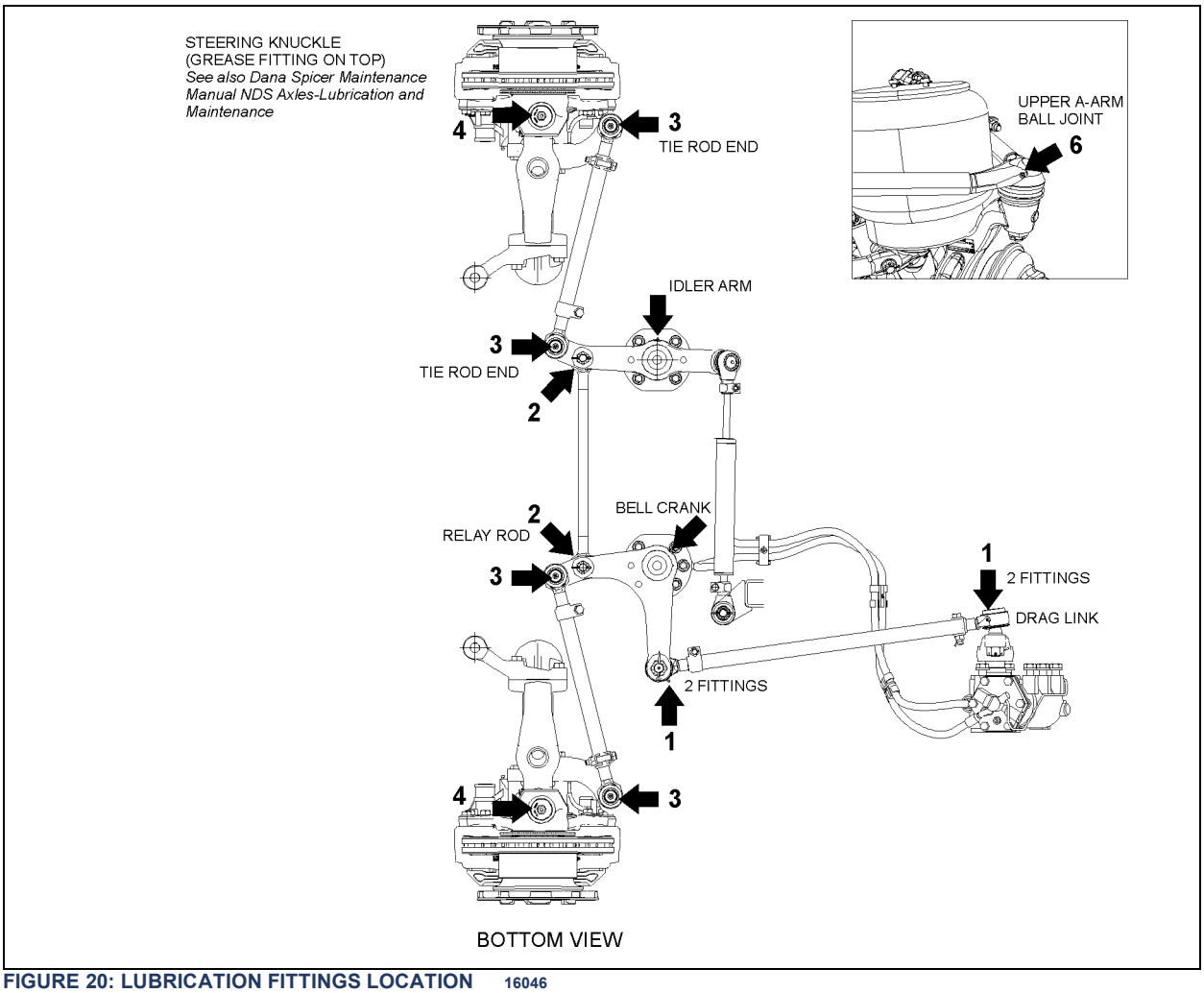


**FIGURE 20: LUBRICATION FITTINGS LOCATION** 16046

## 4.9 LUBRICATION FITTINGS

All lubrication fittings must be clean before applying lubricant. Also, always be sure equipment used in applying lubricant is clean. Every precaution should be taken to prevent entry of dirt, grit, lint or other foreign matter into lubricant containers. Replace fitting when become broken or damaged.

Re-charge ball joint until grease can be seen escaping from socket. On ball joints fitted with a rubber boot, do not add to much grease as the rubber boot might expand and rupture.

Intervals of application given in the following paragraphs are recommended for normal service. More frequent intervals may be applied under severe operating conditions. In selecting proper lubricants, supplier reputation must be considered. The supplier must be responsible for product quality. Figure 20 shows approximate location of steering lubrication fittings.

### MAINTENANCE

(1) **Drag Link Ends:** Lubricate at four fittings, two at each end of link, every 6,250 miles (10 000 km) with good quality lithium-base grease NLGI No. 2 (Shell Retinax LX or equivalent).

(2) **Relay Rod Ends:** Lubricate at two fittings, one at each end of rod, every 6,250 miles (10 000 km) with good quality lithium-base grease NLGI No. 2 (Shell Retinax LX or equivalent).

(3) **Tie Rod Ends:** Lubricate at four fittings, one at each end of both tie rods, every

6,250 miles (10 000 km) with good quality lithium-base grease NLGI No. 2 (Shell Retinax LX or equivalent).

(4) **Steering Knuckle (swivel assembly):** Refer to DANA SPICER MAINTENANCE MANUAL NDS AXLES Lubrication and Maintenance".

(5) **Idler Arm and Bell Crank:** Lubricate at two fittings, one on the idler arm and the other on the crank bell, every 6,250 miles (10 000 km) with good quality lithium-base grease NLGI No. 2 (Shell Retinax LX or equivalent). Apply grease gun pressure to the fitting until lubricant appears at the top seal.

(6) **Upper A-Arm Ball Joint:** Lubricate at fitting until you see some grease on the relief valve nearby, every 6,250 miles (10 000 km) with good quality lithium-base grease NLGI No. 2 (Shell Retinax LX or equivalent).

## 4.10 BALL JOINTS – GENERAL RECOMMENDATIONS

Visual Inspection

- Visually inspect for missing or damages grease fittings and replace if required.
- Check ball joint connection for missing cotter pins.
- Check for looseness in the ball/socket assembly.

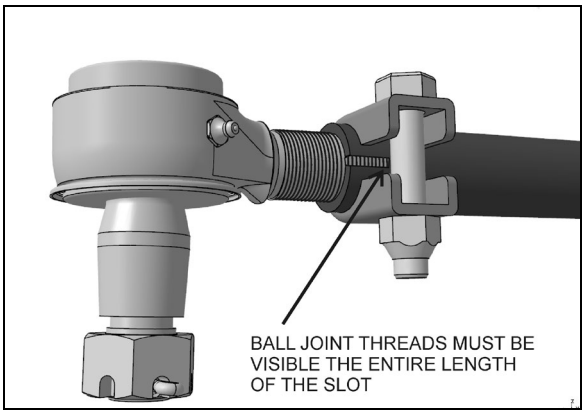


**FIGURE 21: ADEQUATE CLAMPING CONDITION**

For adequate clamping, the ball joint threads must be visible the entire length of the tube slot. If not, the drag link must be adjusted or replaced. It is either the wrong size, or improper adjustment was used to compensate for another problem (e.g. bent steering arm).

Damaged sealing boots, salt and climatic conditions can cause loss of the corrosion protection coating applied at time of manufacturing. To prevent corrosion from forming around the ball pin, remove the old grease bead and assure sufficient grease is applied to purge the old grease and fill the joint and dust seal (if applicable).

Good quality lithium-base mineral grease NLGI No. 2 like Shell Retinax LX is recommended.

## 4.11 FRONT-END ALIGNMENT

Refer to Section 14: STEERING for other details.

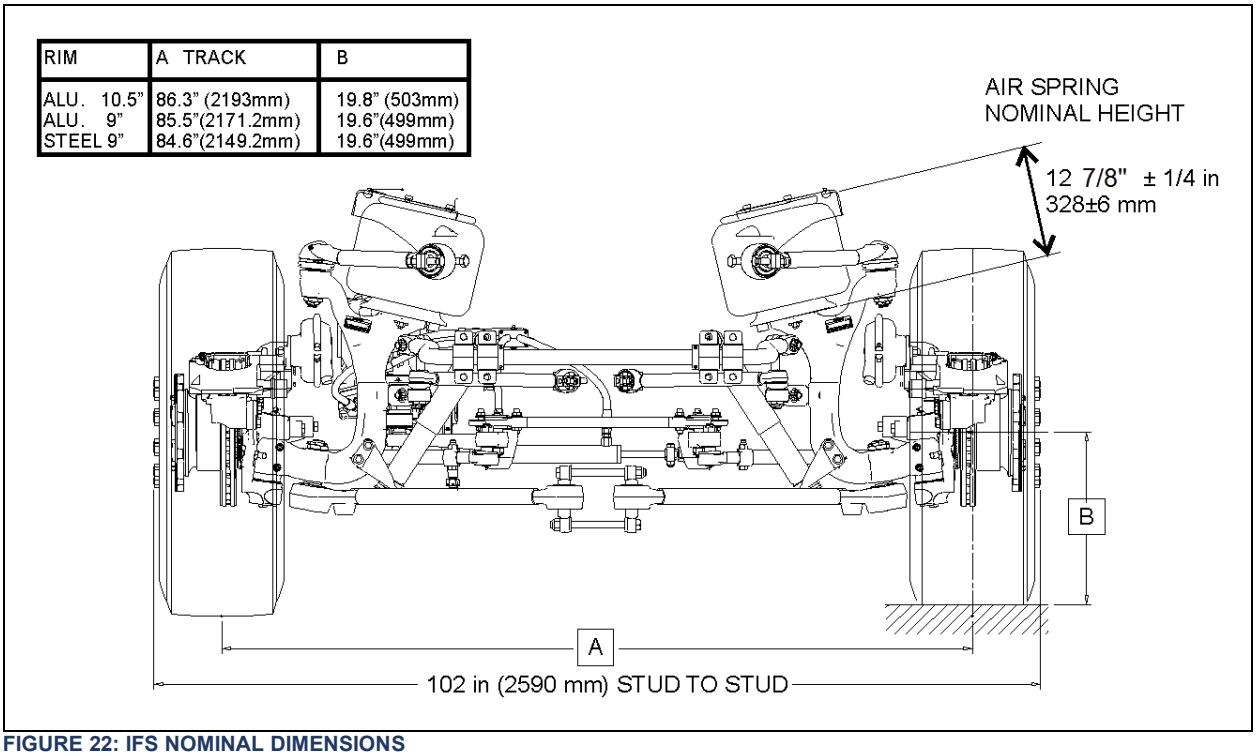


**FIGURE 22: IFS NOMINAL DIMENSIONS**

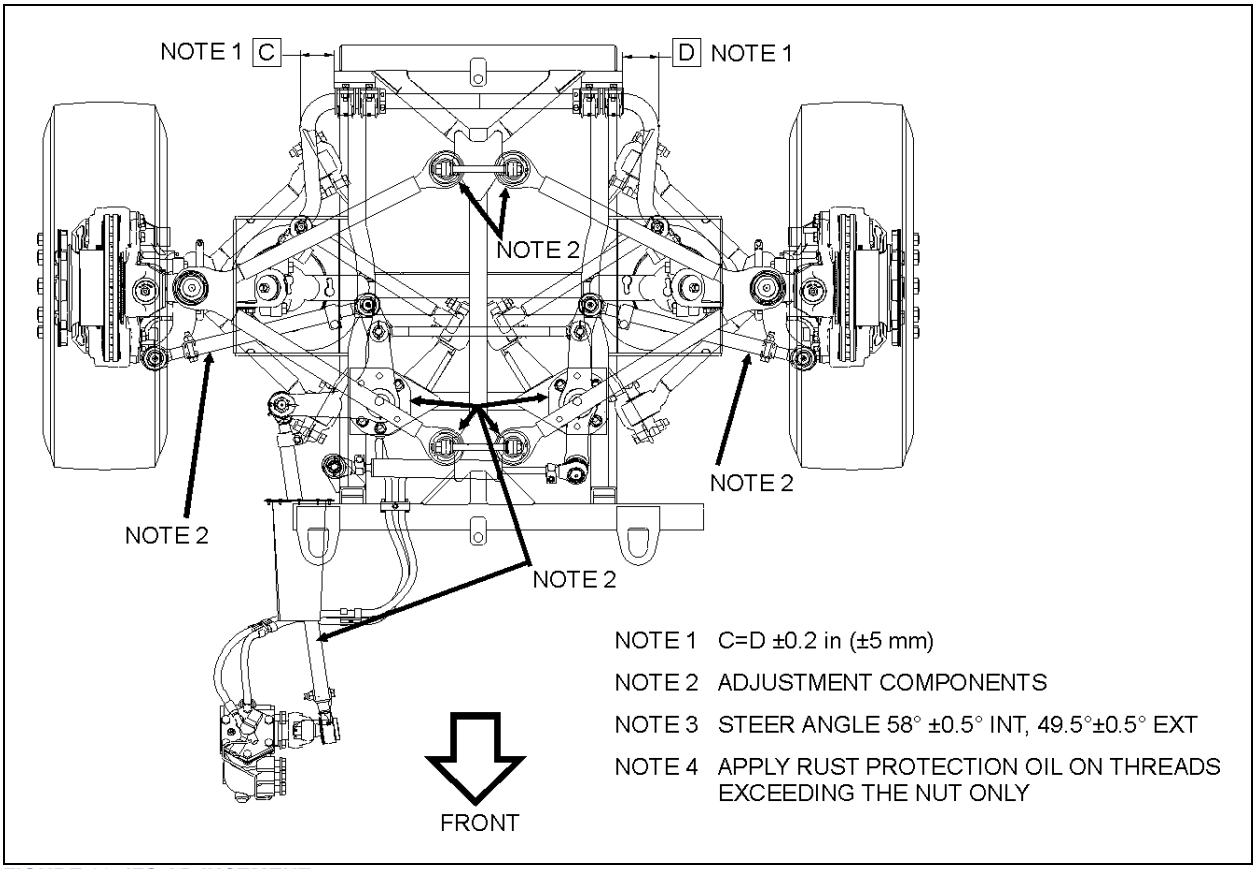


**FIGURE 23: IFS ADJUSTMENT**

Note 2 indicates where adjustment may be performed if needed when proceeding to IFS ALIGNMENT

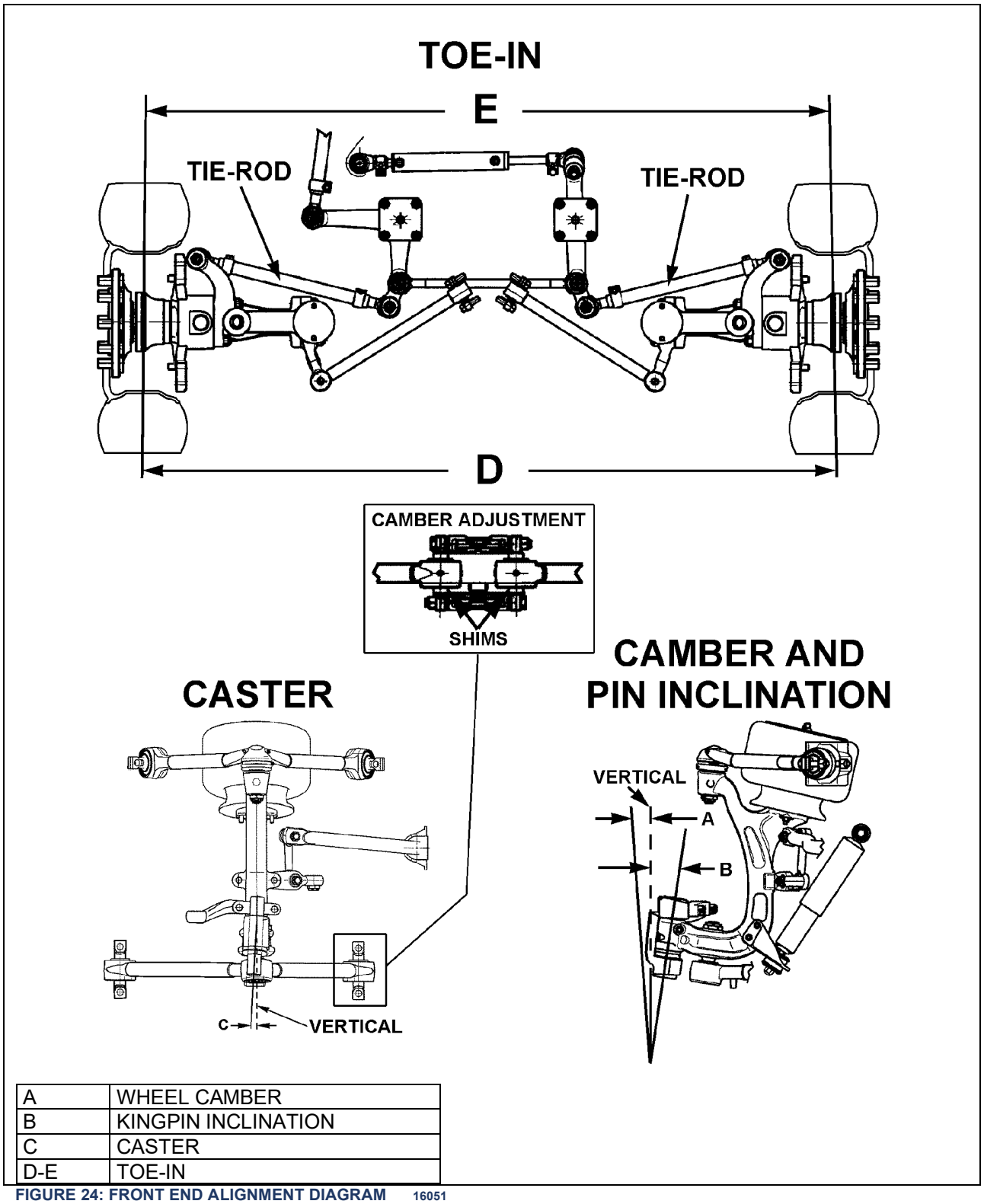


| | |
|---|---|
| A | WHEEL CAMBER |
| B | KINGPIN INCLINATION |
| C | CASTER |
| D-E | TOE-IN |

**FIGURE 24: FRONT END ALIGNMENT DIAGRAM** 16051

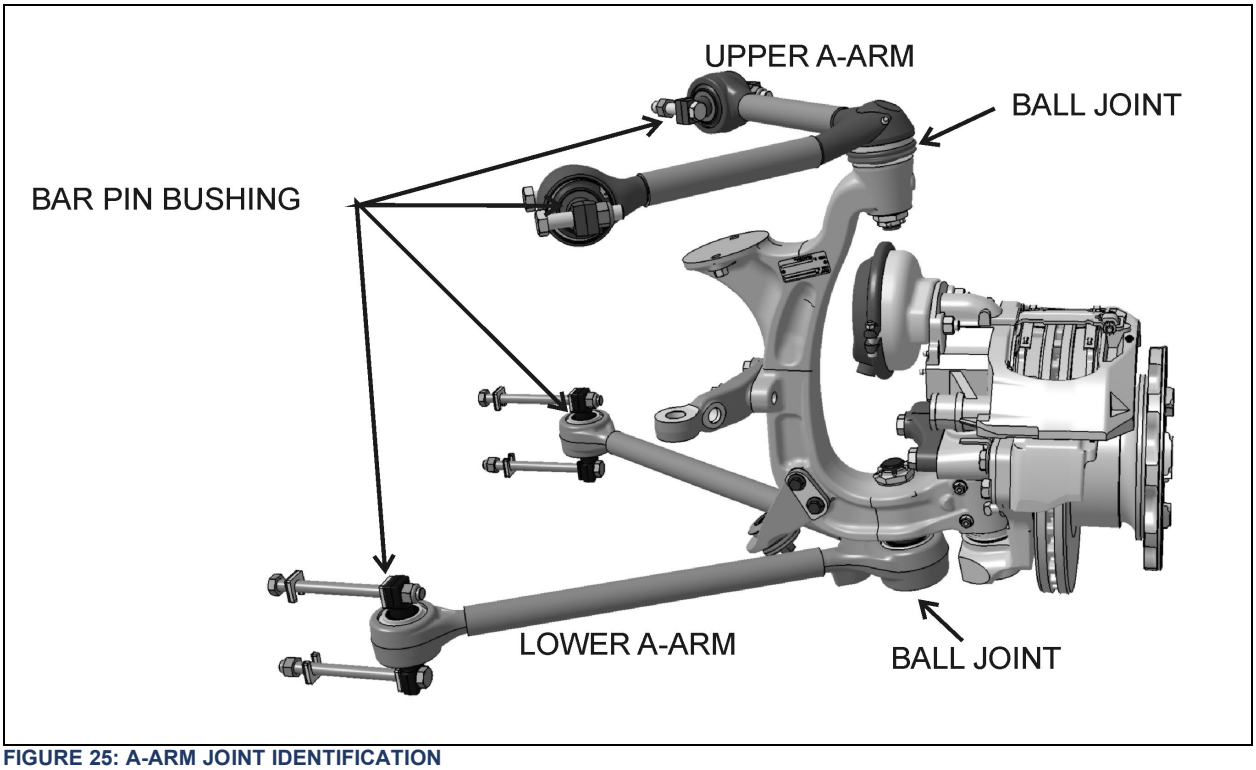


**FIGURE 25: A-ARM JOINT IDENTIFICATION**

## 4.12 LOWER AND UPPER A-ARM BALL PIN BUSHING REPAIR

The assembly work may be done only by a recognized specialized workshop. Ensure that old and new parts do not get mixed up with each other. For this reason, all the old parts are to be scrapped immediately after a joint has been stripped down. A complete repair set must be used for each joint repaired, i.e. use of only part of a repair set is not permissible.

### 4.12.1 Inspection

Take off the load from the joint by lifting the front of the vehicle. Apply a load on the joint in all six degrees of freedom (axial, radial, etc) with a suitable lever bar. After the load is taken off, the joint has to spring back into its starting position. Free play is not acceptable.

Separation of rubber from ball pin or external joint shell is in accordance with "normal wear characteristics".

When the following characteristics are noted, the joint is to be changed:

-Free play;

-Radial cracking of the external sheet-metal race.

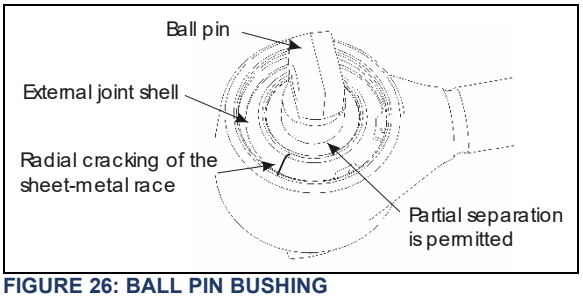


**FIGURE 26: BALL PIN BUSHING**

### 4.12.2 Stripping Down

Strip down the defective joint through removal of retaining ring, annular spacer and ball pin bushing assembly and thereafter clean out housing bore and locking circlips groove.

### 4.12.3 Assembly

Execute assembly of the new joint parts in the following sequence:

1. Complete lubrication of the contact surface between housing bore and ball pin bushing through application of the grease.

| *NOTE* |
| --- |
| *Apply grease, only in the case of repair kit (Prevost # 611114)).* |

2. Insert ball pin bushing assembly. In case of the two-bolt type, ensure that the bolt bores are in the correct position in relation to the axis of the tube.
3. Place joint in receiving fixture and mount annular assembly tool on the housing. Position annular spacer and retaining ring in the housing using axial load of the assembly matrix. If the ends of the annular spacer are not in contact with each other, the opening must be located 180° from the opening of the retaining ring. Pay attention during assembly to ensure that the retaining ring eyelets are located on both sides of the housing shaft axis (retaining ring eyelet lug points to tube), and that retaining ring is properly engaged in the groove of the housing.
4. When repairing defective ball pin assemblies, the necked down-bolt must regularly be replaced with a new one.

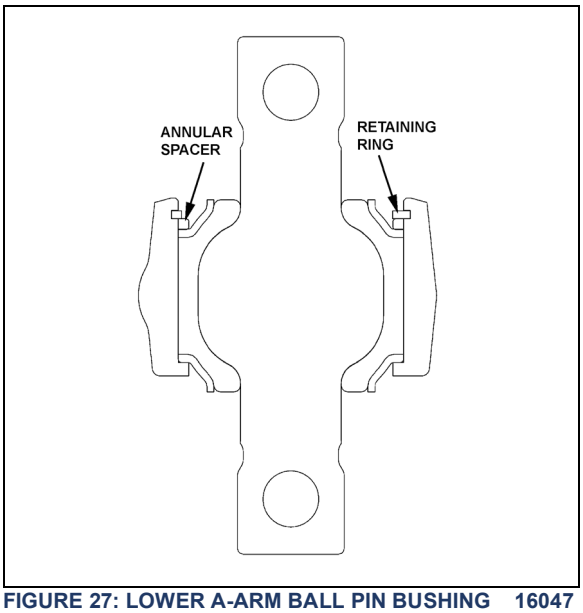


**FIGURE 27: LOWER A-ARM BALL PIN BUSHING 16047**

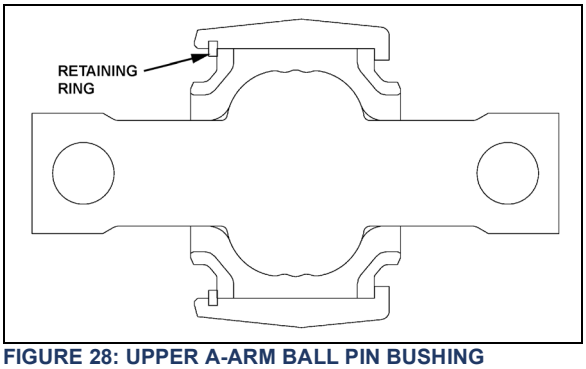


FIGURE 28: UPPER A-ARM BALL PIN BUSHING

## 4.13 LOWER A-ARM BALL JOINT REPAIR

Take off the load from the ball joint by lifting the front of the vehicle. Apply a load on the joint in all six degrees of freedom (axial, radial, etc) with a suitable lever bar. After the load is taken off, the joint has to spring back into its starting position. Free play is not acceptable.

Separation of rubber from ball pin or external joint bushing shell is in accordance with "normal wear characteristics".

When the following characteristics are noted, the joint is to be changed:

- Free play;
- Radial cracking of the external bushing shell.

### 4.13.1 Stripping Down

Strip down the defective joint through removal of retaining ring, annular spacer and ball pin/bushing, assembly and thereafter clean out housing bore and locking circlips groove

### 4.13.2 Assembly

Assemble the new component parts of the joint in the following sequence:

1. Complete moistening of the contact surface between housing bore and ball pin through application of the grease.
2. Place joint in receiving fixture and mount annular assembly tool on the housing. Position annular spacer and retaining ring in the housing using axial load of the assembly matrix. If the ends of the annular spacer are not in contact with each other, the opening must be located 180° from the opening of the retaining ring. Pay attention during assembly to ensure that the retaining ring eyelets are located on both sides of the housing shaft axis (retaining ring eyelet lug points to tube), and that retaining ring is properly engaged in the groove of the housing.
3. Properly apply grease by mechanical means to the complete bracket-outer core and entire ball-inner cone. Insert bracket outer cone in fixture with distance ring and then use press tool to apply pressure to press mount with ball-inner cone.

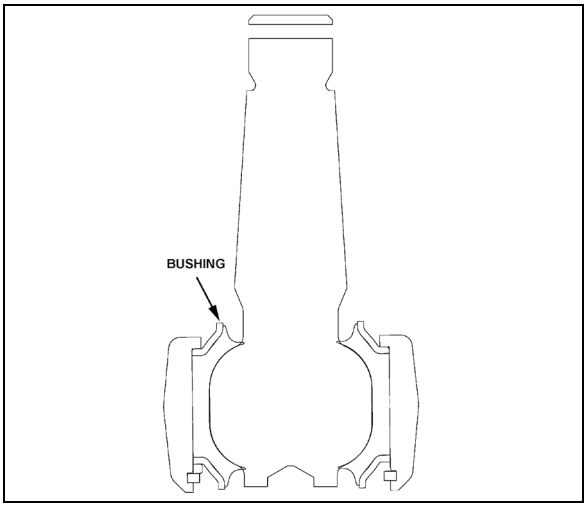


FIGURE 29: LOWER A-ARM BALL JOINT

## 4.14 UPPER A-ARM BALL JOINT

### 4.14.1 Visual Inspection

Check the condition of the sealing boot, in particular:

Check if the retainer ring, which secures the sealing boot at the conical section of the ball stud, is still present.

Check if grease is present on the external surface of the sealing boots. Escaped fluid and accumulations of grease on the sealing boot may be the result of the sealing boot's rupturing. In this case, the ball joint must be systematically replaced.

### 4.14.2 Play Measurement

1. Raise the vehicle and support through axle jacking points.

2. Using a caliper, measure dimension “A” on Figure 30.
3. With a lever tool, exert sufficient force under the upper A-arm as to separate the upper A-arm from the upright in order to have the ball joint to its maximum extent. Measure dimension A again. If the difference between the two dimensions is greater than 0.060" (1.5mm), then the ball joint should be replaced.

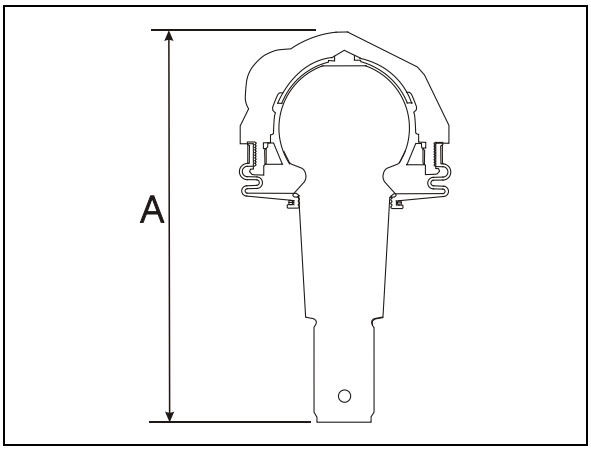


**FIGURE 30: UPPER A-ARM BALL JOINT** 16116

## 4.15 FRONT AIR SPRINGS

Two *"rolling lobe"* type air springs are used with the independent front suspension, one at each wheel. These air springs are special and use the complete piston as an extra reservoir to lower the spring stiffness. Front air springs are attached to the subframe and to uprights.

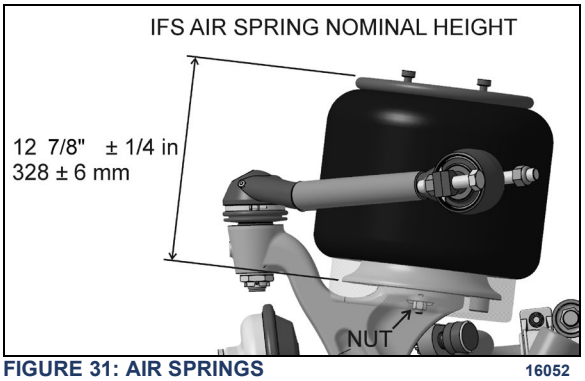


**FIGURE 31: AIR SPRINGS** 16052

### 4.15.1 Inspection

1. Check operation of air springs.
2. Visually inspect bellows for evidence of cracks, punctures, deterioration, or chafing. Replace the air spring if damage is evident.
3. With the primary air system at normal operating pressure (122 - 140 psi (841 - 965 kPa)), coat all suspension air line connections and bellows mounting areas with a water and soap solution. Bubbles will indicate an air leak, and none is permissible. Repair or replace defective parts.

| *NOTE* |
| --- |
| *If air spring is removed from vehicle, bellows can be lightly inflated and submerged in water to detect any leakage. If leakage is detected, replace air spring.* |

**WARNING**

To prevent personal injury, do not apply more than 10 psi (69 kPa) air pressure to the dismounted air spring.

### 4.15.2 Removal

| *NOTE* |
| --- |
| *Front air springs can be removed without removing the entire suspension assembly.* |

1. Jack up the vehicle using the axles jacking points.
2. Safely support the front of the vehicle at the recommended body jacking points.
3. To gain access to a given air spring, the corresponding wheel can be removed.

**CAUTION**

Only the recommended jacking points must be used as outlined in Section 18, "Body" in the maintenance manual.

**CAUTION**

Always adequately support the IFS assembly when lifting up the vehicle to avoid maximum extension of shock absorber.

4. Exhaust compressed air from accessory air tank by opening drain cock under reservoir.

5. Disconnect the height control valve link and pull down the control arm to ensure all air is exhausted from air springs.

6. Lower the IFS slightly while maintaining the vehicle body at the same level.

| *NOTE* |
| --- |
| *While performing this step, do not change the height control valve control arm adjustment.* |

7. Disconnect air line from air spring, remove elbow (if applicable), and cover both the line end and fitting to prevent the entry of foreign matter.

8. Unscrew the two air spring lower nuts (2 nuts). Rotate the air spring to disengage the upper mounting and remove the air spring.

4.15.3 Installation

| *NOTE* |
| --- |
| *To facilitate air spring installation, compress it manually then put a piece of tape over the air line threaded fitting. This prevents air from getting back into the bag and keeps it compressed, thus enabling to place the bag in between the mounting plates and greatly easing installation.* |

1. Compress air spring as necessary, then aligning studs with their holes, position air spring between both the lower and upper supports. Thread the lower nuts a few turns.

2. Tighten and torque the lower stud nuts as prescribed in Torque Table 2.

3. Install elbow (if applicable), then connect air line.

4. Connect the height control valve link.

5. Build up air pressure in system.

| *NOTE* |
| --- |
| *To accelerate this operation, air reservoirs can be filled from an exterior air supply connected to the accessory tank fill valve or to the emergency fill valve.* |

6. Check operation of air springs and with the primary air system at normal operating pressure(122 - 140 psi (841 - 965 kPa)), coat the air line connections and air spring mounting areas with a water and soap solution. Bubbles will indicate an air leak, and none is permissible. Repair or replace defective parts.

4.16 SHOCK ABSORBERS

The two front shock absorbers are double-acting and telescopic type. Shock absorbers ensure a smooth ride and enhance vehicle stability on the road. Front shock absorbers have eye-type mountings on the upper side and bayonet type on lower side. Shock absorbers are non-adjustable and non-repairable.

| **CAUTION** |
| --- |
| When a shock absorber is found defective, always replace with a new set on affected axle, except if there has been a recent replacement of one unit. The following method will help in determining if both shock absorbers on the same axle have to be replaced. (Refer to the SACHS document “Guideline To Evaluate Warranty Claims” annexed at the end of this section before replacing a shock). |

4.16.1 Shock Absorber Removal

1. Remove the nut, washer and rubber joint from shock absorber mounting stud. Discard the rubber joints.

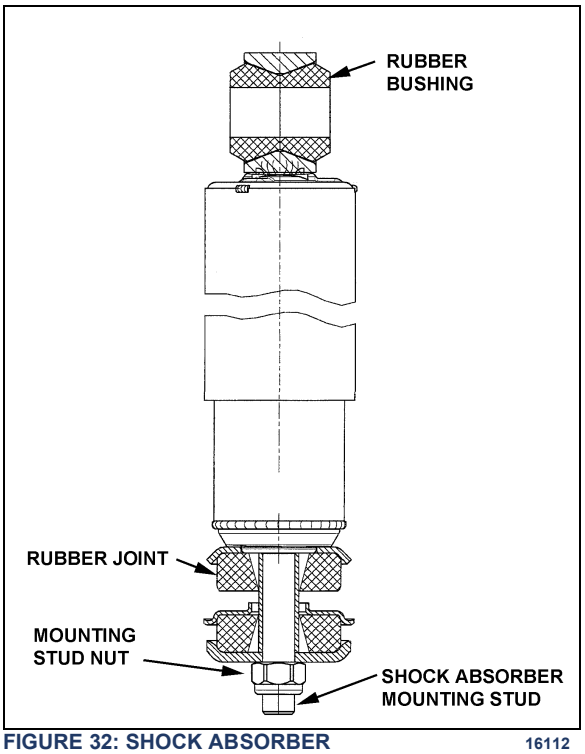


FIGURE 32: SHOCK ABSORBER 16112

2. Remove the nut and washer from shock absorber mounting pin (upper side), taking care to identify the inner and outer washers to ease reinstallation.
3. Remove the shock absorber from the vehicle.
4. Remove inner: washers, rubber joint and bushings from the shock absorber. Discard bushings and rubber joint.

### 4.16.2 Shock Absorber Installation

1. Check that the shock absorber mounting pin is tightened as prescribed in Torque Table 2. Ensure that the pin is clean and not stripped (upper end).
2. Install new rubber (mounting) bushing on shock absorber (upper end).
3. Place the inner washer on shock absorber stud.
4. On the lower mounting, take care to install the rubber joints with the wide end of the tapered hole as shown in Figure 33.

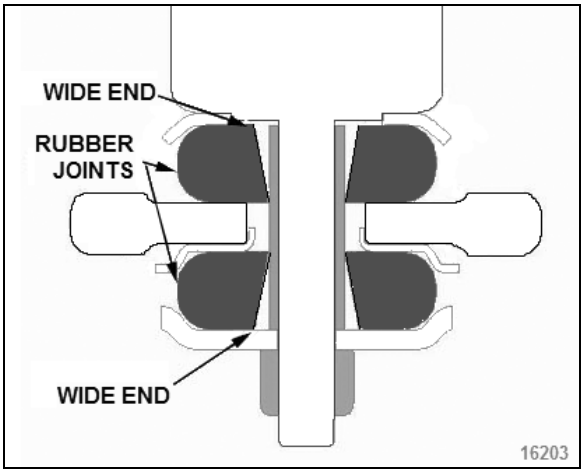


FIGURE 33: LOWER SHOCK MOUNTING BUSHINGS

5. Install the shock absorber as shown in Figure 32 with the mounting stud protruding through the hole in the mounting bracket and the shock absorber eyes over the mounting pins. Install the outer washer.
6. Place a rubber joint and washer on the shock absorber mounting stud. Place the lower shock absorber mounting stud nut and torque as prescribed in Torque Table 2.
7. Place the upper mounting pin stud nut and torque as prescribed in Torque Table 2.

## 4.17 SWAY BAR

A sway bar is provided on front and rear suspension to increase vehicle stability. It controls lateral motion (swaying movement) of vehicle.

### 4.17.1 Removal

1. Disconnect the two links from sway bar.
2. Safely support the sway bar. Unbolt bushing collars from subframe.
3. Remove sway bar.

| *NOTE* |
| --- |
| *Sway bar bushings are slit to ease their removal.* |

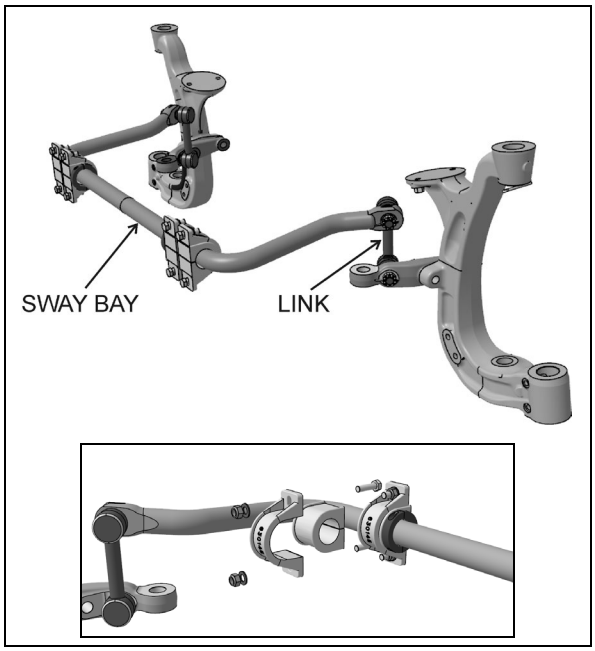


**FIGURE 34: SWAY BAR (INDEPENDENT FRONT SUSPENSION)**
**16138_C**

### 4.17.2 Installation

1. Loosely install the sway bar.
2. Torque bushing collar nuts as prescribed per Torque Table 2.
3. Torque sway bar link nuts as prescribed per Torque Table 2.

## 5 REAR SUSPENSION

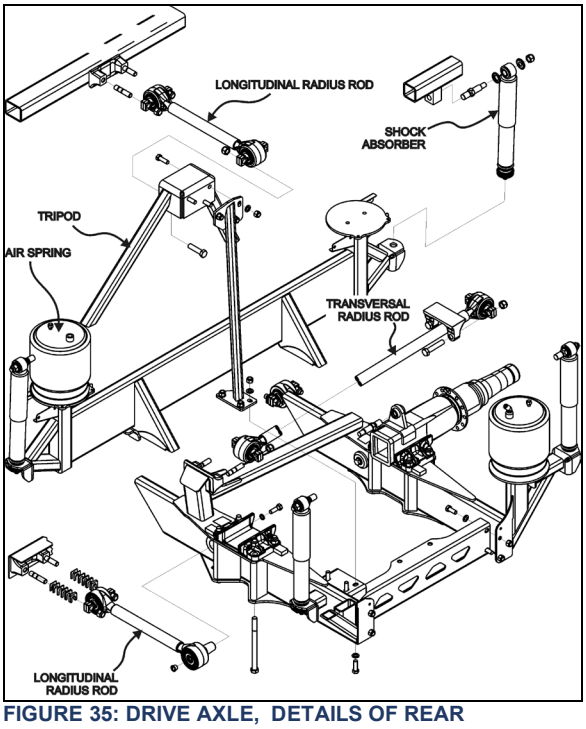


FIGURE 35: DRIVE AXLE, DETAILS OF REAR SUSPENSION 16106

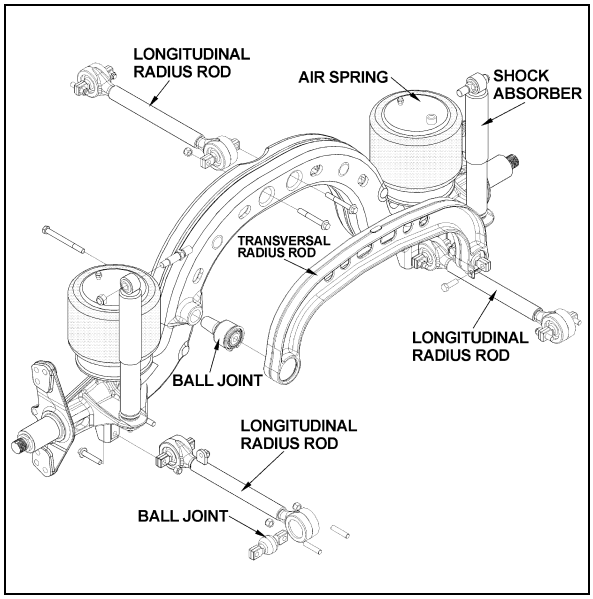


FIGURE 36: TAG AXLE SUSPENSION

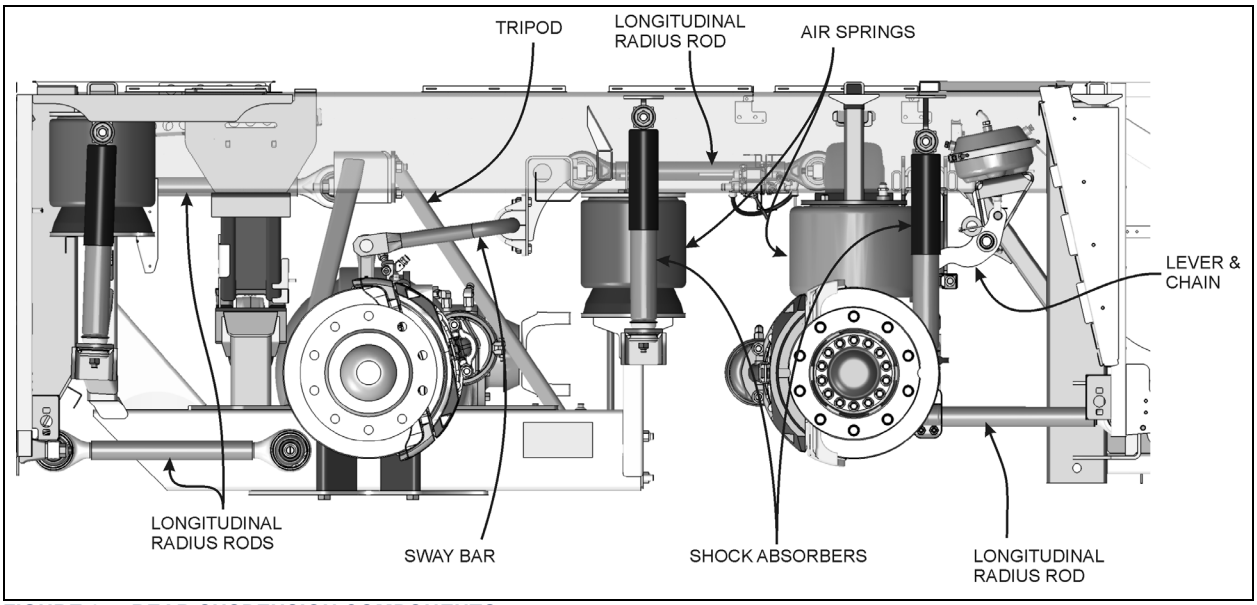


FIGURE 37: REAR SUSPENSION COMPONENTS 16003

## 5.1 AIR SPRINGS

The air springs are made from a special compound rubber molded to the proper contour and dimensions. The entire vertical load of the vehicle is supported by these springs. Each of the two axles is provided with air springs that are attached to the subframe and to the axles.

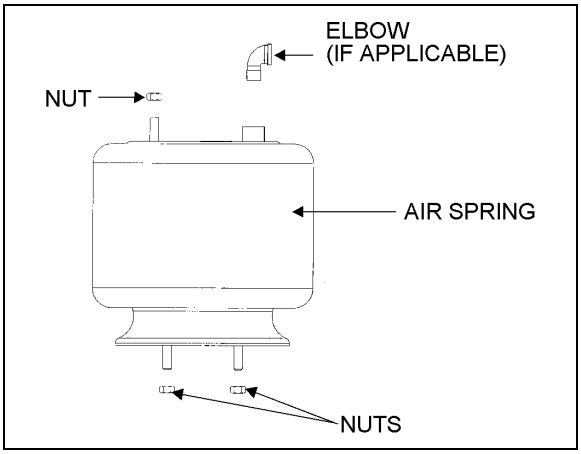


**FIGURE 38: AIR SPRING** 16052

### 5.1.1 Inspection

1. Check operation of bellows.
2. Visually inspect bellows for evidence of cracks, punctures, deterioration, or chafing. Replace the bellows if any damage is evident.
3. With the primary air system at normal operating pressure (122 - 140 psi (841 - 965 kPa)), coat all suspension air line connections and bellows mounting areas with a water and soap solution. Bubbles will indicate an air leak, and none is permissible. Repair or replace defective parts.

| *NOTE* |
|---|
| *If air spring is removed from vehicle, bellows can be lightly inflated and submerged in water to detect any leakage. If any leakage is detected, replace bellows.* |

| **WARNING** |
|---|
| To prevent personal injury, do not apply more than 10 psi (69 kPa) of air pressure to the uninstalled air spring. |

### 5.1.2 Removal

| *NOTE* |
|---|
| *Suspension air springs (drive and tag axles) can be removed without removing the entire axle assembly.* |

1. Safely support vehicle at the recommended body jacking points. To gain access to a given air spring, the corresponding wheel can be removed as follows.

   a) Jack vehicle until the tire clears the ground, and place safety supports underneath body.

| **CAUTION** |
|---|
| Only the recommended jacking points must be used as outlined in Section 18, “Body”. |

   b) Support the axle with a suitable hydraulic floor jack at the recommended jacking point.

   c) Remove wheel.

2. Exhaust compressed air from accessory air tank by opening drain cock under reservoir.
3. Disconnect the height control valve link and pull down the control arm to ensure all air is exhausted from air springs.

| *NOTE* |
|---|
| *While performing this step, do not change the height control valve control arm adjustment.* |

4. Disconnect air line from air spring, remove elbow (if applicable), and cover both the line end and fitting to prevent the entry of foreign matter.
5. Remove the air spring upper nut, and then the two lower nuts. Remove air spring.

### 5.1.3 Installation

1. Compress air spring as necessary, then aligning studs with their holes, position air spring between both the lower and upper

supports. Thread the lower nuts and the small upper nut a few turns.

*NOTE*

*To facilitate air spring installation, compress it manually then put a piece of tape over the air line threaded fitting. This prevents air from getting back into the bag and keeps it compressed, thus enabling to place the bag in between the mounting plates and greatly easing installation.*

2. Tighten and torque the lower stud nuts, and then the upper one as prescribed in Torque Table 3.
3. Thread the remaining upper nut (large nut) and tighten as prescribed in Torque Table 3.
4. Install elbow (if applicable), then connect air line.
5. Connect the height control valve link.
6. Build up air pressure in system.

*NOTE*

*To accelerate this operation, air reservoirs can be filled from an exterior air supply connected to the accessory tank fill valve or to the emergency fill valve.*

7. Check operation of bellows, and with the primary air system at normal operating pressure (122 - 140 psi (841 - 965 kPa)),coat the air line connections and air spring mounting areas with a water and soap solution. Bubbles will indicate an air leak, and none is permissible. Repair or replace defective parts.
8. Reinstall wheel.
9. Remove the hydraulic floor jack from under the axle, then lower vehicle to ground.

## 5.2 SHOCK ABSORBERS

Double-action, telescoping-type shock absorbers ensure a smooth ride and enhance vehicle stability on the road. The tag axle is provided with two shock absorbers while the drive axle is provided with four of them (Figure 39).

Shock absorbers are non-adjustable and non-repairable. Maintenance requirements involve replacement of the rubber mounting bushings, and tightening of all shock absorber mounting pins at the proper torque (refer to Torque Table 3) when shock absorber replacement occurs. If a shock absorber becomes inoperative, complete unit must be replaced.

**⚠ CAUTION**

When a shock absorber is found defective, always replace with a new set on affected axle, except if there has been a recent replacement of one unit. The following method will help in determining if both shock absorbers on the same axle have to be replaced.

### 5.2.1 Inspection

Loosen lower mounting of both shocks, and then carefully attempt to raise and lower the bottom portion of each shock. Note the rate of effort for distance of travel. Replace both shocks if a definite differential rate is found.

The shock must be bench checked in an upright, vertical position. If checked in any other position, air will enter the cylinder tube and make the shock absorber appear defective.

Proceed as follows to check shock absorbers:

1. With the shock absorber in a vertical position (top end up), clamp the bottom mount in a vise.

**⚠ CAUTION**

Do not clamp the reservoir tube or the dust tube.

2. Rotate the dust tube. Notice any binding condition (may be compared with new unit). Binding condition indicates a scored rod. Units with scored rods should be replaced.
3. Fully extend shocks and check for leaks in the seal cover area. Shock fluid is a very thin hydraulic fluid that has a characteristic odor and dark brown tint. A slight trace of shock fluid around the seal cover area is not a cause for replacement. The shock seal is designed to permit a very slight seepage to

lubricate the rod. Units that leak should be replaced.

4. Visually check shock for dents that could cause the shock to bind. Also, check for a bent rod.
5. Extend and collapse shock several times to determine that it has control (resistance) in both rebound and compression.
6. Visually inspect the shock mountings and vehicle mounting for:
   a) Broken mounts;
   b) Extreme bushing wear;
   c) Shifted bushing or sleeve;
   d) Deep cracks in bushing material (shallow surface cracks are normal);
   e) Loose shock absorber pins;
   f) Presence of convex washers, and their position relative to the rubber bushing.

5.2.2 Removal

1. Remove nuts and washers from shock absorbers on upper mounting pin and lower mounting bracket, taking care to identify the inner and outer washers to ease reinstallation. Refer to Figure 35 for details.
2. Remove the shock absorber assembly from pins.
4. Remove the two rubber joints from the shock absorber and discard them.

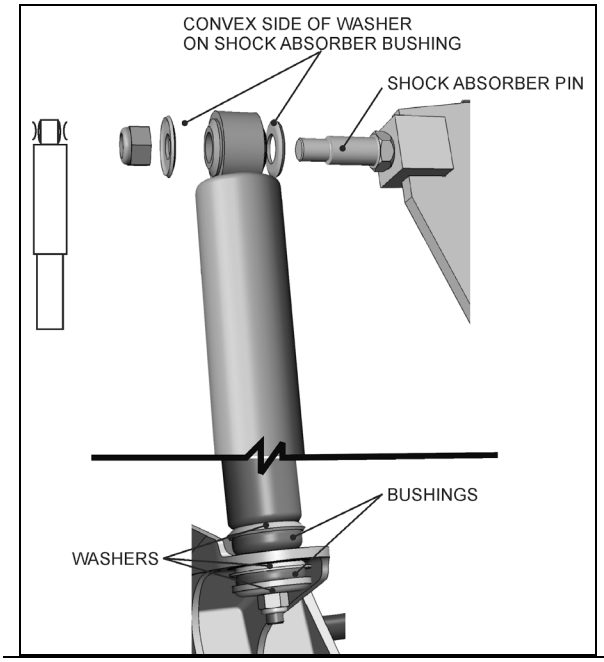


**FIGURE 39: TYPICAL SHOCK ABSORBER SETUP** 16009

5.2.3 Installation

1. Ensure that the shock absorber mounting pin is tight and that the threads are not stripped.
2. Install new upper rubber mounting bushings on shock absorber.
3. On the lower mounting, take care to install the rubber joints with the wide end of the tapered hole as shown in Figure 40.

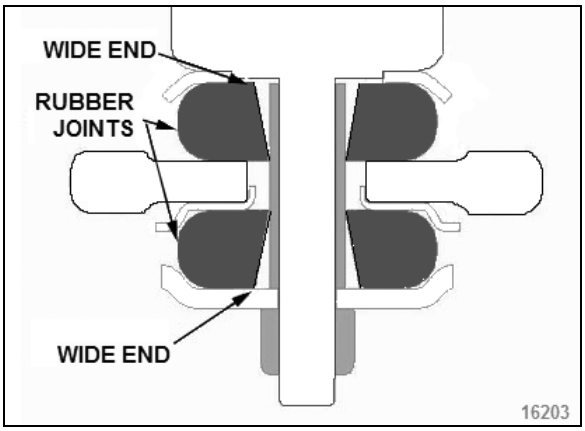


**FIGURE 40: LOWER SHOCK MOUNTING BUSHINGS**

4. At the upper mounting pin, place the inner washer with washer convex side facing the shock absorber rubber bushing.
5. Install the shock absorber eyes over the mounting pin, then the outer washers (with washer convex side facing the shock absorber rubber joints.

| *NOTE* |
| --- |
| *If shock absorber pins are removed, they must be reinstalled using "Loctite" (see "Parts Specifications" in this section).* |

5. Place the lower and upper mounting pin stud nuts and torque as prescribed in Torque Table 3.

5.3 RADIUS RODS

Radius rods are used to secure the axles in the proper transversal and longitudinal positions. Four radius rods are provided on the drive axle suspension (three longitudinal and one transversal) and four on the tag axle. These rods

transmit both braking and driving forces from the axles to the vehicle body.

Refer to section 2.3 for more information regarding radius rods.

## 6 SUSPENSION AIR SYSTEM

The suspension air system has its own air reservoir (accessory tank) which is located in the reclining bumper compartment. Pressurized air from the main tank (wet tank) flows through a pressure protection valve (PR-4), to the accessory air tank and through an air filter which is located in front service compartment.

The pressure protection valve (PR-4) is mounted to the supply port of the tank. This valve controls the pressure at which compressed air is delivered to the accessory air tank. The valve remains closed until a preset pressure is reached (approximately 70 psi (485 kPa)). It then opens and passes air out the delivery port.

The main use for this valve is to protect the main air system by ensuring at all times a sufficient air pressure in the main system (i.e. air delivered to the accessories will be shut off in case of a decrease in pressure). Maintenance and repair information on the pressure protection valve is supplied in the applicable booklet, annexed to Section 12, *"Brakes and Air System"* under reference number SD-03-2010.

**WARNING**

Depressurize parts prior to removal.

### 6.1 INSPECTION

The following inspection should be performed at established service inspection periods. Performing these procedures will allow substandard performance to be discovered before the condition becomes bad enough to cause operator complaints or failure during operation.

1. Visually inspect the suspension air lines for evidence of chafing on metal parts or other damage.
2. Visually inspect the air springs for cracks, abrasion or other damage.
3. Replace any parts found to be damaged.

### 6.2 AIR LINE TEST

With the main air system at normal operating pressure, coat all suspension air line connections and air spring mountings with a solution of soap and water. Air leakage will produce soap bubbles. Any leak found must be corrected as no air leakage is permissible.

## 7 SUSPENSION HEIGHT ADJUSTMENT

The flow of pressurized air from the accessory air tank to the air springs is controlled by three height control valves. These valves are mounted to the subframe and connected to the axles through an arm and link connection. This connection allows the valves to apportion air pressure in the springs to the vehicle load, maintaining normal ride height.

To adjust suspension height, refer to Maintenance Information MI16-14 SUSPENSION HEIGHT ADJUSTMENT USING HEIGHT CONTROL VALVES included after Section 16 in this Maintenance Manual.

### 7.1 NORMAL RIDE HEIGHT

The normal ride height is obtained by measuring and adjusting air spring height of front and rear suspension.

**FRONT SUSPENSION (I-BEAM AXLE)**

2 air springs

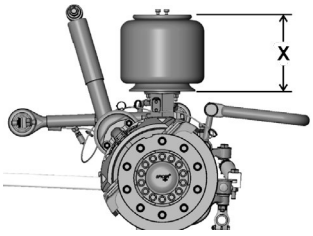


X = 11 ¾ ± ¼ inch (297 ± 6 mm)

**INDEPENDENT FRONT SUSPENSION (IFS)**

2 air springs

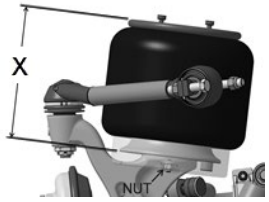


X = 12 7/8 ± 1/4 inch (327 ± 6 mm)

**REAR SUSPENSION**

4 air springs

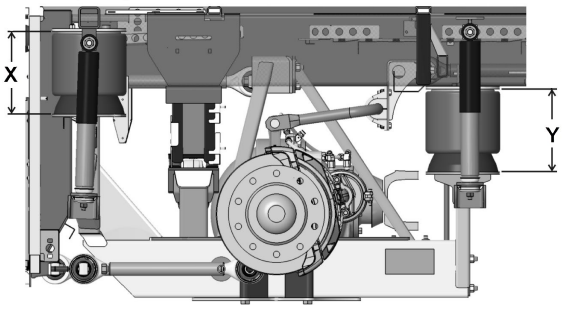


FORE AIR SPRINGS

X = 11 ½ ± 1/16 inch (292 ± 1.5 mm)

AFT AIR SPRINGS

Y = 11 ½ ± 1/4 inch (292 ± 6 mm)

## 7.2 HEIGHT CONTROL VALVES

**THE HEIGHT CONTROL VALVES AUTOMATICALLY ADD AIR TO, OR RELEASE AIR FROM AIR SPRINGS TO MAINTAIN CONSTANT SUSPENSION HEIGHT REGARDLESS OF LOAD, OR LOAD DISTRIBUTION. EACH VALVE ADJUSTS INDEPENDENTLY ACCORDING TO THE FOLLOWING CONDITIONS:**

### Loading position

As the load increases and lowers the vehicle body, the control arm commands the height control valve to add air to air springs.

### Neutral position

When vehicle body reaches the normal ride height, the height control valve control arm reaches the "neutral" position and keeps both the supply and exhaust ports closed to ensure normal ride height is maintained. This condition remains static until the vehicle load is altered.

### Unloading position

As the load decreases and raises the vehicle body, the control arm commands the height control valve to release air from air springs.

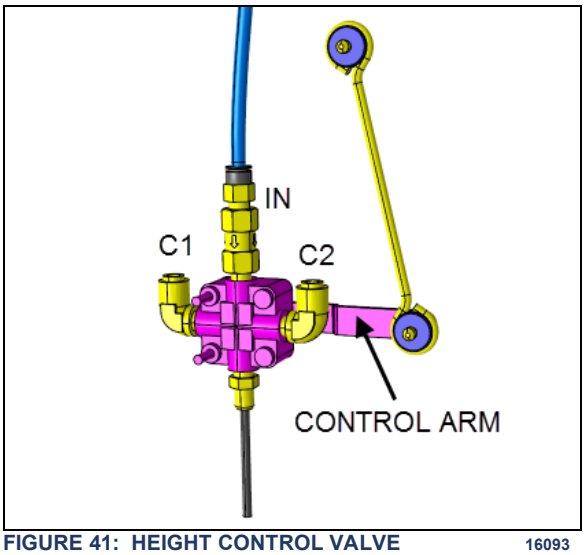


**FIGURE 41: HEIGHT CONTROL VALVE** 16093

## 7.3 MAINTENANCE

The height control valve requires no periodic maintenance. Height control valve linkage operates on rubber bushings and no lubrication should be attempted at this point. Inspect the valve for loose joints, air leaks and worn bushings.

### 7.3.1 Removal and installation

Before disconnecting any height control valve air lines, securely support the vehicle by its jacking points on the body, and place safety support underneath body. Refer to *"VEHICLE JACKING POINTS"* in Section 18, *"Body"*.

1. Exhaust air from air system by opening the drain cock on accessory air reservoir. Remove height control valves.
2. Disconnect overtravel lever from link and pull down lever to exhaust remaining air from air springs.
3. Disconnect air supply and delivery lines from the height control valve. Cover ends of the lines with tape to prevent entry of foreign matter.
4. Remove the nuts retaining the height control valve to the mounting bracket, then remove valve assembly.

   ***Note: The height control valve bolts equipped with a nylon insert should be replaced after the third (3rd) tightening.***

Reverse removal procedure to replace height control valve. After installation, check for leakage using a soap and water solution.

7.3.2 Air leakage test

| *NOTE* |
| --- |
| The following procedure applies when valve assembly has been removed from vehicle. |

1. Clean the exterior of valve assembly.
2. Connect air pressure line to air inlet port, then allow air pressure build-up (70- 100 psi (480 - 690 kPa)).
3. Dip the valve assembly in a container full of water, and watch for air bubbles when the control arm is in the center position. No air should escape from any point of the valve assembly.
4. If bubbles appear from the air spring port, this is an indication that the air inlet valve assembly is defective and must be replaced.
5. Remove air pressure line from air inlet fitting and connect it to the air spring port. If bubbles appear at the air inlet check valve port, this is an indication that the check valve unit is defective and must be replaced.
6. If bubbles appear at the exhaust port, this is an indication that the exhaust valve assembly is defective and must be replaced.
7. If bubbles appear around edge of valve cover plate, the cover plate gasket must be replaced.
8. If no leaks are found, remove valve assembly from water, then with air pressure still connected to the air spring port, actuate control arm to remove any excess water which may have entered exhaust valve chamber. Remove air line, connect it to the air inlet port, and repeat operation to remove water from the air inlet valve chamber.

## 8 "LEVEL-LOW" LEVELING SYSTEM – VIP SERIES OPTION ONLY

The purpose of the *Level-Low* leveling system is to adjust suspension in three separate points (front, rear right and rear left) in order to level vehicle body. This system can be put into service when the ignition key is turned to the *"ON"* position, and must be used only when the parking brake is applied. The *Level-Low* warning light on the dashboard indicates that the selector switch is not in the *"OFF"* position. Level low system controls are located on L.H. side control panel.

### 8.1 PRINCIPLES OF OPERATION

**Down**

The (front/rear right/rear left) control solenoid valve supplies air to the (front/rear right/rear left) five-way three-position air control valve, which bypasses the (front/rear right/rear left) height control valve, and opens a passage to allow the air control and exhaust valve to release air from (front/rear right/rear left) air springs.

**Up**

The (front/rear right/rear left) control solenoid valve supplies air to the (front/rear right/rear left) five-way three-position air control valve, which bypasses the (front/rear right/rear left) height control valve, and opens a passage to allow the air control and exhaust valve to supply air to (front/rear right/rear left) air springs.

**Drive**

When the ignition key is turned to the *"ON"* position with selector knob in the *"DRIVE"* position, the drive control solenoid valve supplies air to all five-way three-position air control valves, each one opening a passage to allow height control valves to accomplish their function.

When the ignition key is turned to the *"OFF"* position and selector knob to the *"DRIVE"* position, the air is entrapped between air springs and five-way three-position air control valves to ensure the adjusted level will be kept.

| ⚠ **WARNING** |
| --- |
| Never move vehicle with selector knob in any other position than the “DRIVE” position. |

### 8.2 MAINTENANCE

Since the kneeling action is issued from both the air system and electrical system, refer to Section: 12, *“Brake and Air System”* and Section 06, *“Electrical System*”.

For diagnosis and understanding of the system, refer to wiring diagrams, and to the appropriate

air system schematic diagram annexed to Section 12, *"Brake and Air System"*.

## 9 FRONT KNEELING SYSTEM (COACHES ONLY)

The kneeling system is used to lower front of vehicle. This allows passengers to board the vehicle with greater ease. The kneeling action is achieved by exhausting air from the front air springs (bellows). This system bypasses the height control valve to provide a fast up and down movement of the front suspension. Only seven seconds are required to lower vehicle from normal level to the lowered position, and approximately the same time to raise the vehicle back to normal level. The quick response is achieved by the kneeling air tank installed beside the secondary air reservoir (for exact position, refer to Section 12, *"Brake and Air System").*

This tank provides sufficient air supply to the kneeling system for some successive operations. The system is provided with two safety features; first, a speed switch will enable the kneeling system to work only below 5 mph (8 km/h). Secondly, the parking brake is automatically applied, and a limit switch will keep it applied as long as the vehicle has not returned to a certain height where the driver will be able to manually remove the parking brake.

The purpose of the front axle hi-buoy function in this system is to raise the front end of the vehicle to allow an extra ground clearance for particular situations. In driving condition, the height control valve is in operation and only the hi-buoy can be operated.

### 9.1 PRINCIPLE OF OPERATION

Refer to the air system schematic diagram annexed at the end of Section 12, *"Brake and Air System".*

DOWN (FRONT KNEELING):

Both the air spring control and air spring exhaust solenoid valves are energized, so the air control valves release air from front air springs. The height control valve is bypassed to ensure no air is forwarded to air springs while lowering the front suspension.

UP (FRONT HIGH-BUOY):

Only the air spring control solenoid valve is energized, so the air coming from the kneeling air tank is routed through air control valves, and up to front air springs.

The height control valve is bypassed until the kneeling proximity switch signals the kneeling module to cut off the air spring control solenoid valve, about 1" (25 mm) below normal ride height. The final height adjustment is achieved by the height control valve.

### 9.2 MAINTENANCE

Since the kneeling action is issued from both the air system and electrical system, refer to Section: 12, *"Brake and Air System"* and Section 06, *"Electrical System".*

For diagnosis and understanding of the system, refer to wiring diagrams, and to the appropriate air system schematic diagram annexed to Section 12, *"Brake and Air System".*

### 9.3 AIR SPRING CONTROL SOLENOID VALVES

#### 9.3.1 Removal and installation

1. On the rear side of steering compartment, locate both the air spring control and air spring exhaust solenoid valves.
2. Identify hoses and wires to ease reinstallation. Disconnect solenoid wires and the three flexible black hoses from solenoid valves.
3. Unscrew and remove the control solenoid valve and exhaust solenoid valve assembly. Place on a clean working place.

Reverse removal procedure to reinstall.

**⚠ CAUTION**

Always adjust on "fill cycle". If it is necessary to lower vehicle height, release sufficient air to be well below height, and adjust to height or fill cycle.

## 10 HIGH-BUOY SYSTEM (COACHES ONLY)

The purpose of the full high-buoy system is to raise the entire vehicle body about 4” (100 mm) in order to increase ground clearance to board a ferryboat, to jump a curb, etc. This system can be put into service during normal vehicle operation.

### 10.1 PRINCIPLES OF OPERATION

The rear high-buoy system is added over the front kneeling (with front high-buoy). The front end uses the same valves as the front kneeling (with front high-buoy). A solenoid valve is added to send air to the double shuttle valves for the rear end. It uses the same dash switch as the kneeling.

UP:

The air coming from the control valve flows through double shuttle valves, to supply air springs. The double shuttle valves prevent height control valves from releasing air from air springs.

DOWN:

The control valve, on the dashboard, cuts off air supply, so the double shuttle valves allow height control valves to accomplish their function. Height control valves release air from air springs until suspension returns to its normal position.

### 10.2 MAINTENANCE

Refer to the air system schematic diagram “OPT. FRONT KNEELING WITH REAR HIGH-BUOY COMBINATION.

### 10.3 HIGH-BUOY – PRESSURE REGULATOR

The H series vehicles pressure regulator is located on ceiling of the spare wheel and tire compartment and is accessible through the reclining bumper. On X series vehicles, the regulating valve is located in the front service compartment. This valve should be adjusted to 90 psi (621 kPa).

#### 10.3.1 Adjustment

1. Before turning on system air pressure, release jam nut (2, Figure 42) then turn regulator adjustment handle counter-clockwise until the load is removed from the regulating spring.
2. Turn on system pressure.
3. Turn regulator adjustment handle clockwise until the desired outlet pressure is reached.
4. To avoid minor readjustment after making a change in pressure setting, always approach the desired pressure from a lower pressure. When reducing from a higher to a lower setting, first reduce the pressure at a lower pressure, and then increase it to the desired level of pressure.
5. Tighten jam nut (2,Figure 42) to lock pressure setting.

#### 10.3.2 Disassembly

1. Shut off inlet pressure and reduce pressure in inlet and outlet lines to zero. Turn regulator adjustment handle (1, Figure 42) counterclockwise until all load is removed from regulating spring. Regulator can be disassembled without removal from air line.
2. Disassemble regulator in accordance with the item numbers on the exploded view.

| **Torque Table** | |
|---|---|
| Item | Value |
| 3 (Screw) | **25-35 lb-in (2.8-3.9 Nm)** |
| 17 (Bottom plug) | **20-25 lb-in (2.3-2.8 Nm)** |

#### 10.3.3 Cleaning

1. Clean parts with warm water and soap. Dry parts and blow out internal passages in body using clean, dry compressed air.
2. Inspect parts. Replace those found to be damaged.

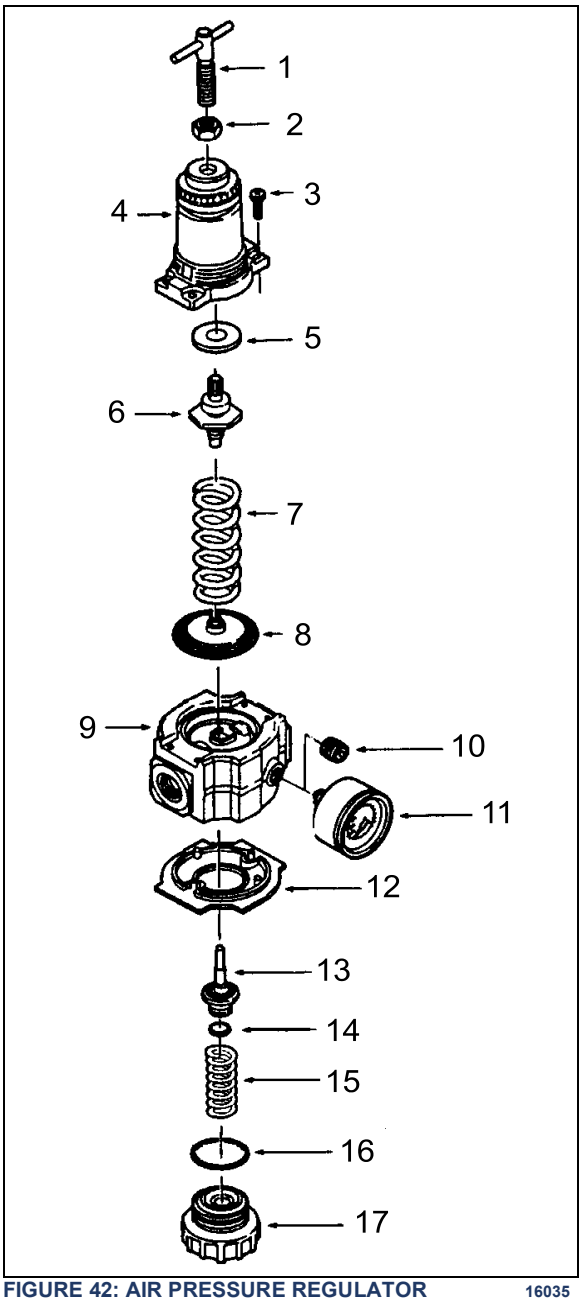


**FIGURE 42: AIR PRESSURE REGULATOR** 16035

10.3.4 Reassembly

1. Lubricate O-ring (14 and 16, Figure 42), valve stem (13), tip of adjusting screw (1), and the outer circumference and both sides of the thrust washer (8) with a light coat of good quality O-ring grease.
2. Assemble the regulator as shown in the exploded view.

## 11 LOW-BUOY SYSTEM (COACHES ONLY)

The purpose of the low-buoy system is to lower the whole suspension by about 4" (100 mm) in order to reduce the overall height for low clearances. This system can be put into service during normal vehicle operation.

### 11.1 PRINCIPLES OF OPERATION

The rear low-buoy is added over the front kneeling system. The control valve on the left console panel sends an electric signal from its pressure switch to control the front suspension as if kneeling. It also removes air from a relay valve that exhausts air supply to all leveling valves and the quick release in the rear section. Air from the rear suspension can then be depleted through the check valve-quick release assembly.

DOWN:

The control valve, on the L.H. control panel, cuts off air supply, so air is released from air springs. A relay valve prevents height control valves from supplying air springs.

UP:

The control valve, on the L.H. control panel, supplies air to close the passage between both the delivery and supply ports. A relay valve opens and provides air springs until the suspension reaches the normal ride height.

### 11.2 MAINTENANCE

Refer to the air system schematic diagram "OPT. FRONT KNEELING WITH REAR LOW-BUOY COMBINATION".

## 12 AIR SYSTEM

The basic air system consists of an air compressor, tanks, valves, filters and interconnecting lines and hoses (refer to Section 12, "Brake and Air System" for complete information). It provides a means for braking, operating controls and accessories, and suspension.

The air coming from the air dryer is first directed to the wet air tank, then to the primary (for the primary brake system), secondary (for the secondary brake system), and accessory (for

the pneumatic accessories) air tanks (Figure 43).

In addition, an expansion air tank is installed in series with each air spring.

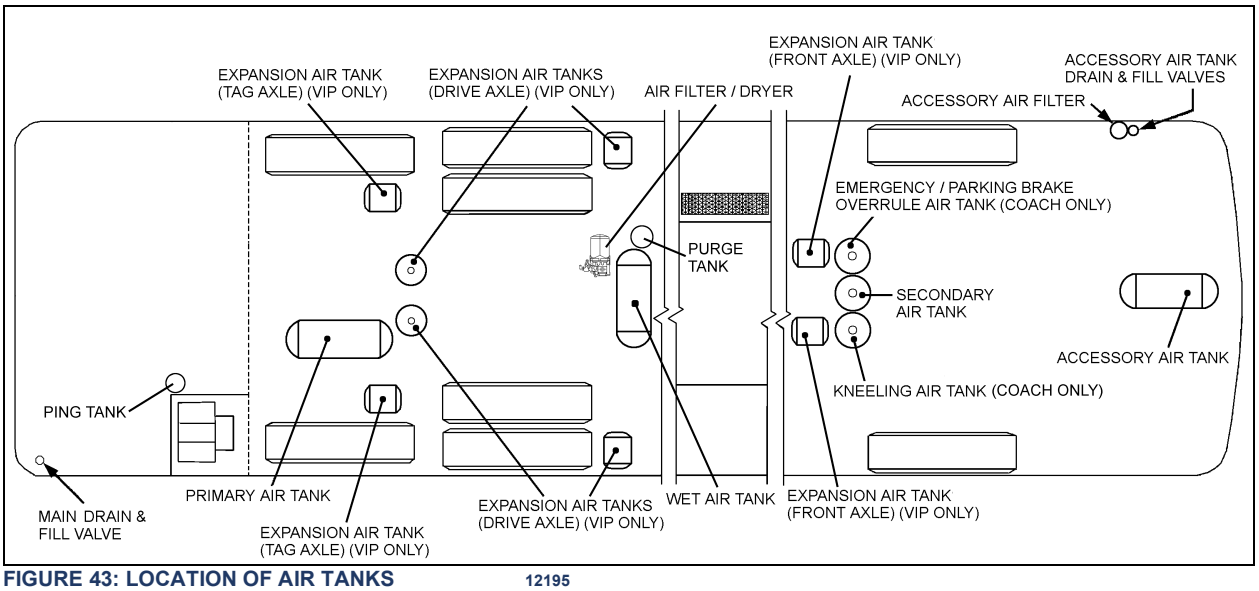


**FIGURE 43: LOCATION OF AIR TANKS** 12195

## 12.1 AIR TANK MAINTENANCE

Ensure that the accessory air tank is purged during pre-starting inspection. A good practice is to purge this tank at the end of every driving day by the remote air tank drain valve located in the service compartment (Figure 46).

Moreover, purge all tanks by their bottom drain valves at specified intervals.

### 12.1.1 Wet Air Tank

This tank is installed in front of and above drive axle in the rear wheel housing and is provided with a bottom drain valve.

**MAINTENANCE**

It is recommended to **purge** the wet air tank by its bottom drain valve every 12,500 miles (20 000 km), or once a year, whichever comes first.

A remote valve located in engine compartment and accessible through engine R.H. side door is used to **purge daily** (Figure 44).

### 12.1.2 Primary Air Tank

The primary air tank is located above tag axle.

This tank is also provided with a bottom drain valve.

**MAINTENANCE**

It is recommended to **purge** the primary air tank by its bottom drain valve every 12,500 miles (20 000 km), or once a year, whichever comes first.

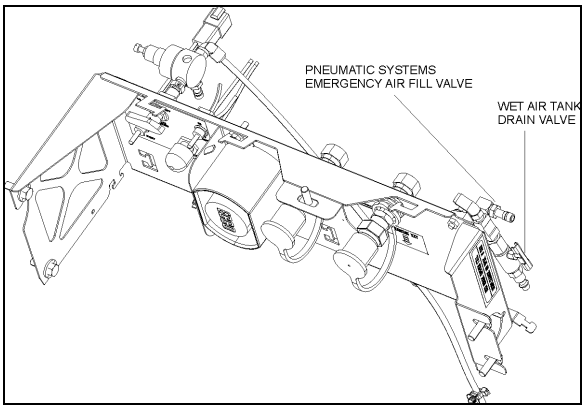

**FIGURE 44: REAR VALVE LOCATION ON H3 SERIES**
12162

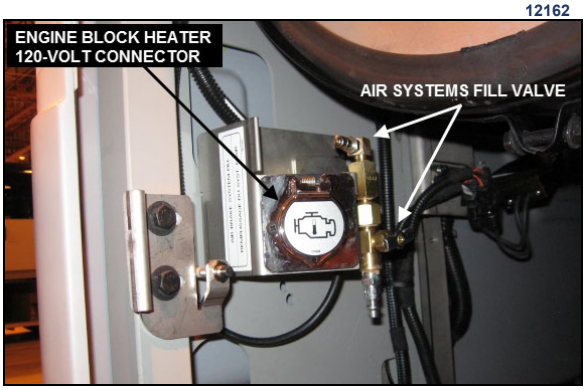


**FIGURE 45: REAR VALVE LOCATION ON X3 SERIES**

### 12.1.3 Secondary Air Tank

This tank is located in front wheel housing. The tank is installed vertically and is provided with a bottom drain valve.

**MAINTENANCE**

It is recommended to **purge** the secondary air tank by its bottom drain valve every 12,500 miles (20 000 km), or once a year, whichever comes first.

### 12.1.4 Accessory Air Tank

On H3 vehicles, the accessory air tank is installed at the ceiling of spare wheel compartment. On X3 series, it is installed next to the secondary air tank (the tank may be installed vertically depending on type of front suspension). The tank is provided with a bottom drain valve.

**MAINTENANCE**

It is recommended to **purge** the accessory air tank by its bottom drain valve every 12,500 miles (20 000 km), or once a year, whichever comes first.

A remote drain valve is located in front service compartment. Refer to Section 12, paragraph "5. Accessory Air Filter" of the maintenance manual for daily purge procedure.

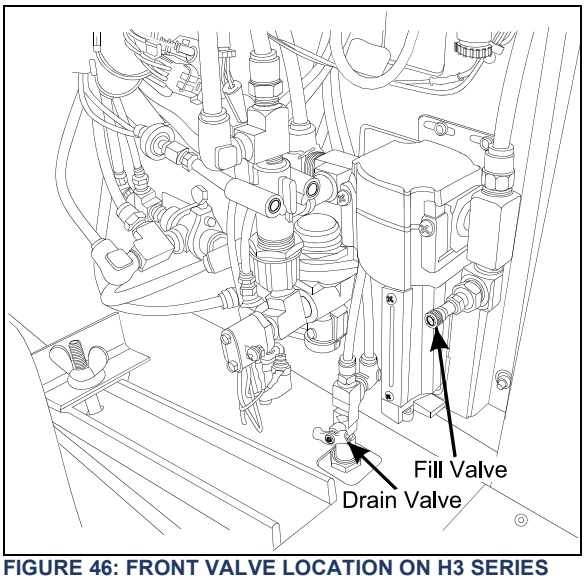


**FIGURE 46: FRONT VALVE LOCATION ON H3 SERIES**
12144

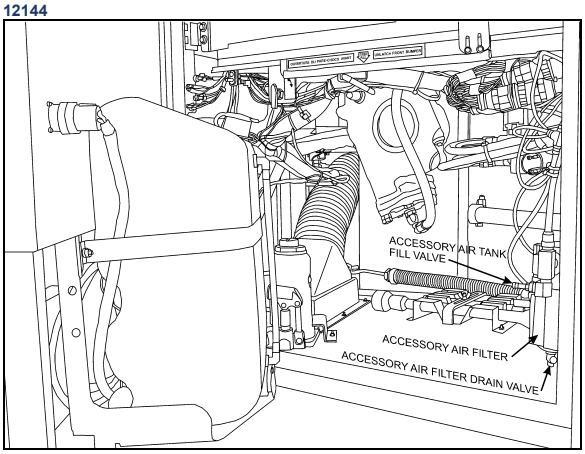


**FIGURE 47: FRONT VALVE LOCATION ON X3 SERIES**
12210

### 12.1.5 Expansion Air Tank

Two expansion tanks are located in front wheel housing. These air tanks are located behind secondary air tank. Also, six expansion tanks are located near rear air springs (Figure 43). Expansion tanks are connected in series with air springs. Expansion tanks are used to lower the stiffness of the air spring. They are provided with a bottom drain valve.

**MAINTENANCE**

It is recommended to **purge** the expansion air tanks every 12,500 miles (20 000 km), or once a year, whichever comes first.

12.2 EMERGENCY FILL VALVES

The vehicle is equipped with two air system emergency fill valves to supplement the air system when air pressure is low and engine cannot be operated.

**The rear valve** is located in engine compartment and accessible from engine R.H. side door (Figure 44).

**⚠ CAUTION**

No other point should be used to supply air system. The maximum allowable air pressure is 125 psi (860 kPa).

The front valve is located in the front service compartment close to accessory air filter (Figure 46).

These two air valves are fitted with the same valve stems as standard tires, and can be filled by any standard external air supply line.

The rear valve will supply air for all systems (brakes, suspension and accessories) while the front valve will supply air for accessories only.

**⚠ CAUTION**

Air filled through these two points will pass through the standard air filtering system provided by Prevost. Do not fill air through any other points.

*NOTE*

*Apply corrosion-protective compound on exposed threads.*

**13 TROUBLESHOOTING**

| Condition | Cause | Correction |
|---|---|---|
| Air springs deflate over time | 1. Defective check valve assembly.<br>2. Defective exhaust valve assembly.<br>3. Leak in air line and/or air springs.<br>4. Defective valve cover, rubber O-rings or gasket. | 1. Replace check valve assembly.<br>2. Replace exhaust valve assembly.<br>3. Replace air line or air springs.<br>4. Replace valve cover, O-rings or gasket. |
| Air springs raise to full height and fail to exhaust air pressure | 1. A clogged exhaust screen in height control valve assembly.<br>2. A combination clogged exhaust screen and defective air inlet valve | 1. Remove and clean screen.<br>2. Clean exhaust screen and replace |

| | | |
|---|---|---|
| | assembly. | air inlet valve assembly. |
| Erratic valve action | 1. Dirt or foreign matter in the air valve lever chamber.<br>2. Defectives valves. | 1. Remove valve cover and blow out dirt. Install cover using new gasket.<br>2. Overhaul height control valve assembly |
| Vehicle body fails to level to satisfactory ride height | 1. Improper height control valve control arm adjustment | 1. Adjust lever as directed. |

## 14 SPECIFICATIONS

**Independent Front Suspension Air Springs**

Make ..... Goodyear Tire and Rubber
Model……...140
0
Type.....Mae West
Diameter .....14 inches
Air Inlet.....1/2''-14 NPTF AIR INLET

**Front I-Beam axle air springs and tag axle air springs**

Make ..... Goodyear Tire and Rubber
Model……..1200
Type.....Mae West
Nominal diameter .....12” (304 mm)

**Drive axle air springs**

Make ..... Goodyear Tire and Rubber
Type.....Double Flare
Nominal diameter .....11.5” (279 mm)

**Independent Front Suspension - Shock Absorbers (Coaches)**

Make .....Arvin
Color .....Black
Piston Diam.....1 5/8 inch
Collapsed length.....14.16 inches
Extended length…….22.44 inches

**Front I-Beam axle shock absorbers**

Make ..... Sachs
Color ..... Black
Ext. Diam..... 75 mm
Collapsed length..... 15.51” (394 mm)
Extended length ..... 24.37” (619 mm)

**Drive and tag axle shock absorbers**

Make ..... Sachs
Color ..... Black
Ext. Diam..... 75 mm
Collapsed length..... 15.51” (394 mm)
Extended length ..... 24.37” (619 mm)

**Height control valve (IFS)**

Quantity used .....1

Prevost number..... Refer to Parts Manual

**Height control valve (coach, all axles & VIP, rear only)**

Quantity.....2 or 3

Prevost number..... Refer to Parts Manual

**Bellows control and exhaust solenoid valve assembly**

Make ..... Norgren

**Coil**

Voltage ..... 24 V DC

Current draw ..... 29 amperes

**Valve (3-way, 2 positions)**

Type ..... N/C

Type ..... N/O

**Radius rod bushing**

Make ..... Prevost

Prevost number ..... Refer to Parts Manual

**Sway bar bushing (Independent Front Suspension**

Make ..... Prevost

Prevost number ..... Refer to Parts Manual

**Sway bar bushing (Front Axle)**

Make ..... Prevost

Prevost number ..... Refer to Parts Manual

**Sway bar bushing (Drive Axle)**

Make ..... Prevost

Prevost number ..... Refer to Parts Manual

**Sway bar link bushings**

Prevost number ..... Refer to Parts Manual

**Shock absorber bushings**

Prevost number ..... Refer to Parts Manual

**High-Buoy Pressure regulator**

Recommended pressure setting ..... 90 psi (621 kPa)

Prevost number ..... Refer to Parts Manual

# MAINTENANCE INFORMATION

**MI16-14**

| | | |
|---|---|---|
| DATE : | JUNE 2016 | SECTION : 16 - Suspension |
| SUBJECT : | **SUSPENSION HEIGHT ADJUSTMENT USING HEIGHT CONTROL VALVES** | |

## APPLICATION

| Model |  |
|---|---|
| All models<br>Model Year : From 2014 | |

## DESCRIPTION

Use this procedure when a suspension height check or adjustment must be performed.

## HEIGHT CONTROL VALVES

Three height control valves automatically control air volume in the suspension air springs at three separate locations to maintain a constant vehicle height regardless of load or load distribution.

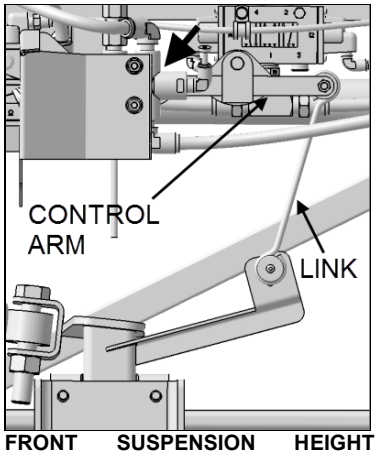


**FRONT SUSPENSION HEIGHT CONTROL VALVE (I-BEAM AXLE)**

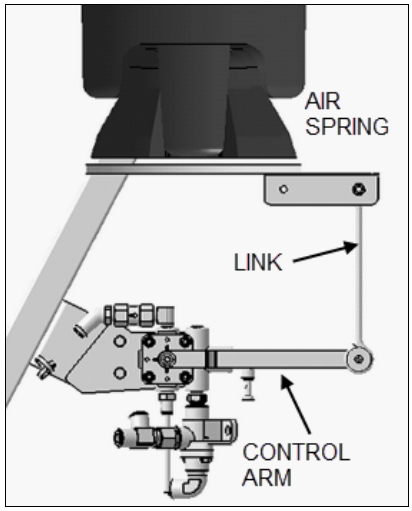


**REAR SUSPENSION HEIGHT CONTROL VALVE – UNDER FORE UNDERFRAME AIR SPRINGS**

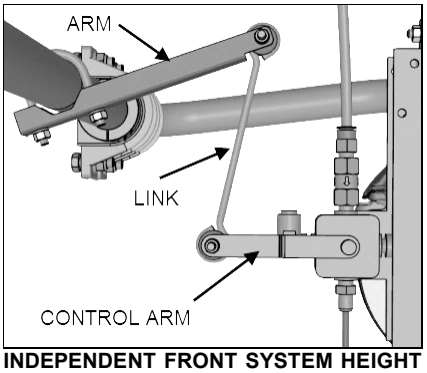


**INDEPENDENT FRONT SYSTEM HEIGHT CONTROL VALVE**

The **two rear suspension height control valves** are mounted to the chassis and connected to the fore air springs of the rear underframe through a control arm and link.

**One front suspension valve** is mounted to the chassis and connected to the front axle through a control arm and link.

On IFS, one height control valve is located on the center of the front sway bar.

If an adjustment is required, change the position of the control arm. The control arm should be moved up to supply air and raise vehicle height and should be moved down to release some air from air springs and lower vehicle height. Make sure that air pressure is greater than 90 psi.

The appropriate vehicle body height is checked by measuring the clearance of all the air springs installed on the front and rear suspension. The tag axle, by its nature, doesn't need to be adjusted.

***If an adjustment is required, begin with the rear suspension.***

## NORMAL RIDE HEIGHT

The normal ride height is obtained by measuring and adjusting **air spring** height of front and rear suspension.

**TABLE 1 – PRESCRIBED AIR SPRING HEIGHTS**

| | | |
|---|---|---|
| FRONT SUSPENSION (I-BEAM AXLE)<br>2 air springs | | 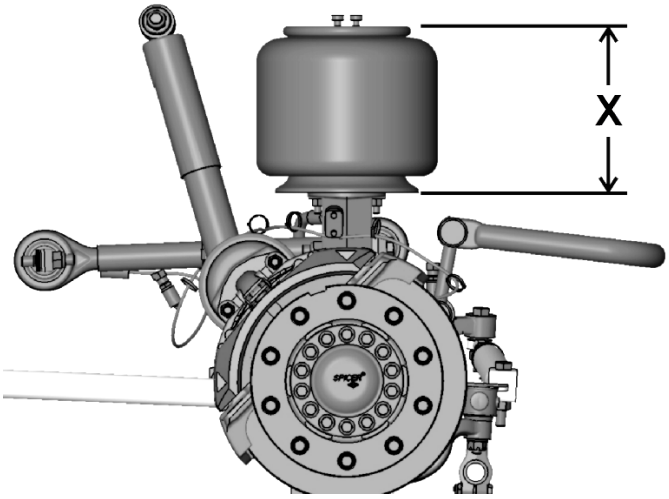 |
| INDEPENDENT FRONT SUSPENSION (IFS)<br>2 air springs | X = 12 7/8 ± 1/4 inch<br>(327 ± 6 mm) | 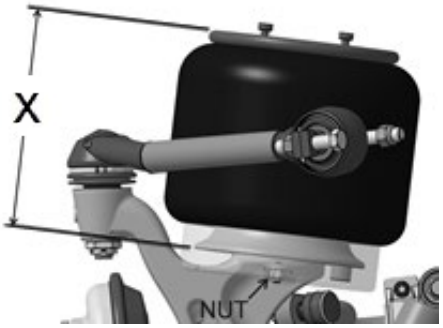 |
| REAR SUSPENSION<br>4 air springs | FORE AIR SPRINGS<br>X = 11 ½ ± 1/16 inch<br>(292 ± 1.5 mm)<br><br>AFT AIR SPRINGS<br>Y = 11 ½ ± 1/4 inch<br>(292 ± 6 mm) | 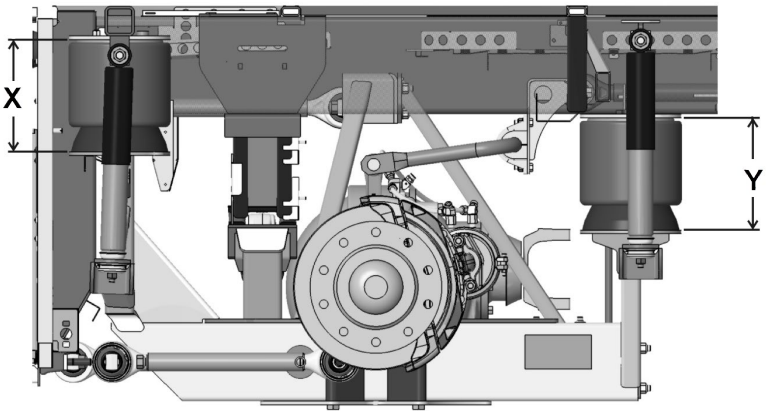 |

## PROCEDURE

**DANGER**

Park vehicle safely, apply parking brake, stop engine. Prior to working on the vehicle, set the ignition switch to the OFF position and trip the main circuit breakers equipped with a trip button. On Commuter type vehicles, set the battery master switch (master cut-out) to the OFF position.

# REAR SUSPENSION AIR SPRINGS ADJUSTMENT

## Measurement

1. Make sure that the air system pressure is at least **90 psi**.
2. Measure the drive axle air springs clearance **(all four air springs)**. To do so, measure the clearance between the round metal plate found above the air spring and the other round metal plate found under the air spring.
3. The clearance should be in accordance with the value of Table 1.







## Air spring height adjustment

**While proceeding with one side of the vehicle at a time, adjust the air springs clearance with the height control valve**

4. It is necessary to adjust clearance on *"fill cycle"*.
    a) Disconnect the link. This link is equipped with a rubber bushing that allows easy disconnection.
    b) Lower the control arm to release some air from air springs.
    c) Raise the control arm to fill the air springs (the valve is now in “fill cycle”) and connect the link back in place.

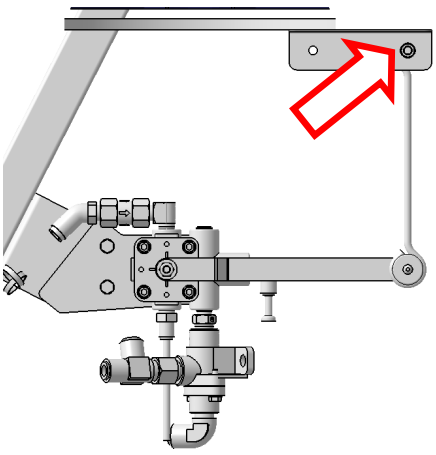

5. Loosen the lower mounting bolt shown.

   ***Take note that the bolt is equipped with a nylon insert. The bolt should be replaced after three (3) tightenings.***

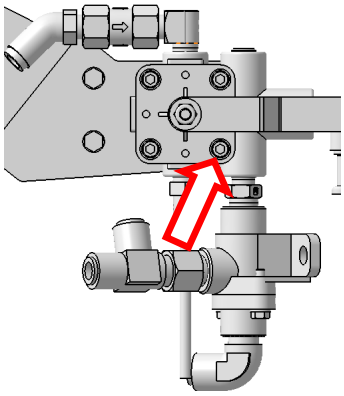

6. Rotate the valve body to increase or decrease the clearance as shown (the mounting bracket has a slotted hole).
7. Allow 15 minutes to the air system to settle before measuring the resulting clearance. Repeat previous step if necessary.
8. Tighten the lower mounting bolt once adjustment is done.
9. Repeat this procedure with the rear suspension height control valve located on the other side of the vehicle.

**INCREASING CLEARANCE**

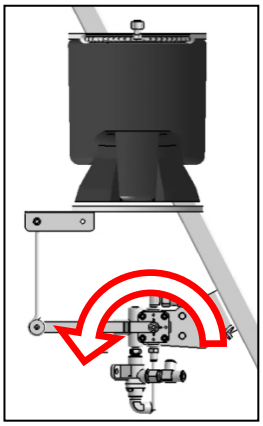

STREET SIDE

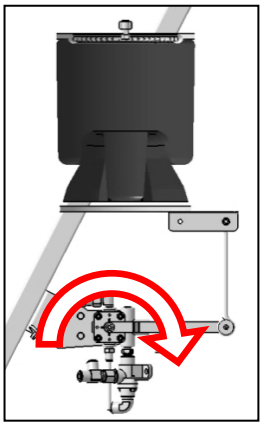

CURB SIDE

**DECREASING CLEARANCE**

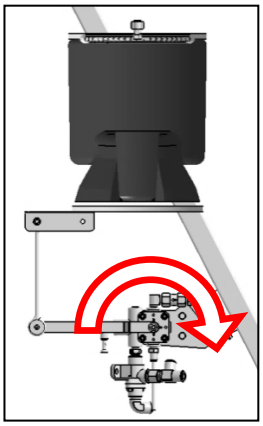

STREET SIDE

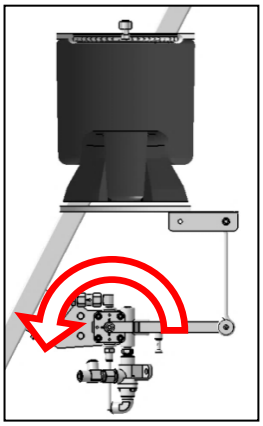

CURB SIDE

# FRONT SUSPENSION AIR SPRINGS ADJUSTMENT (I-BEAM AXLE)

## Measurement

1. Make sure that the air system pressure is at least **90 psi**.
2. Measure the front axle air springs clearance **(two air springs)**. To do so, measure the clearance between the support above the air spring and the lower end of the air spring *(if needed, use a small metal ruler to reach the lower end of the air spring)*.
3. The clearance should be in accordance with the value of Table 1.







## Air springs height adjustment

**Adjust the air springs clearance with the height control valve**

4. It is necessary to adjust clearance on *"fill cycle"*.
    a) Disconnect the link. It is equipped with a rubber bushing that allows easy disconnection.
    b) Lower the control arm to release some air from air springs.
    c) Raise the control arm to fill the air springs (the valve is now in “fill cycle”) and connect the link back in place.

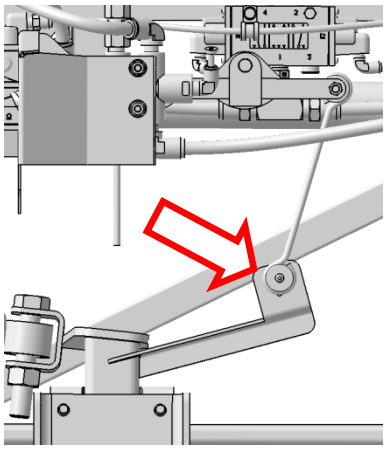

5. Loosen the lower mounting bolt shown.

***Take note that the bolt is equipped with a nylon insert. This bolt should be replaced after three (3) tightenings.***

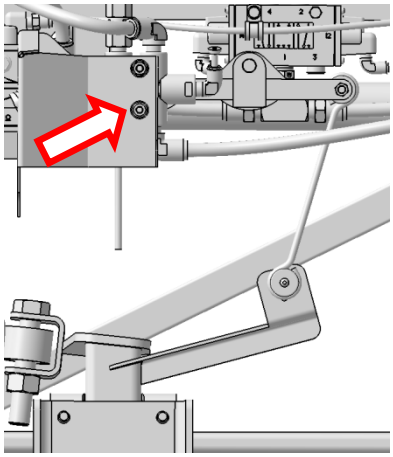

6. Rotate the valve body to increase or decrease the clearance as shown (the mounting bracket has a slotted hole).
7. Allow 15 minutes to the air system to settle before measuring the resulting clearance. Repeat previous step if necessary.

**INCREASING CLEARANCE**

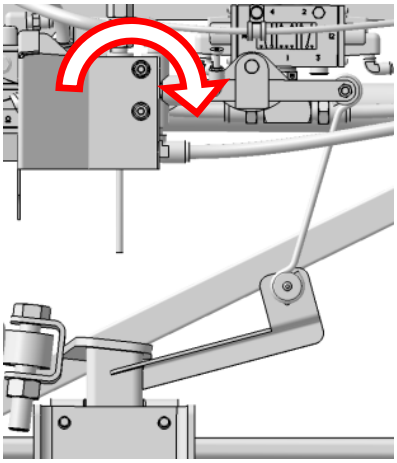

**DECREASING CLEARANCE**

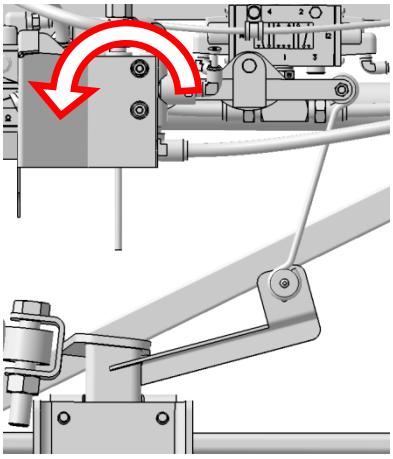

8. If rotation of the control valve is not enough to obtain the required adjustment, you can use one of the two (2) other holes.
9. Tighten the lower mounting bolt once adjustment is done.

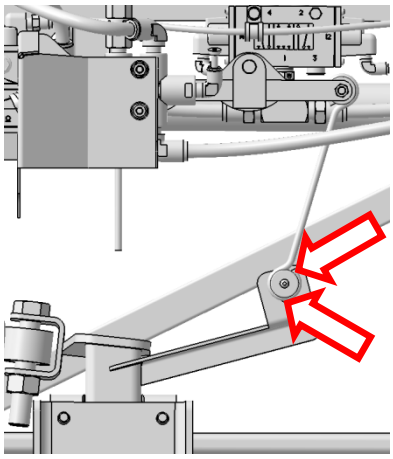

# INDEPENDENT FRONT SUSPENSION ADJUSTMENT

## Measurement

1. Make sure that the air system pressure is at least **90 psi**.
2. Measure that the air springs clearance **(two air springs)**. To do so, measure the clearance between the support found above the air spring and the lower end of the air spring *(if needed, use a metal ruler to reach the lower end of the air spring)*.
3. The clearance should be in accordance with the value of Table 1.





4. Take the measurement where indicated on the image preferably.

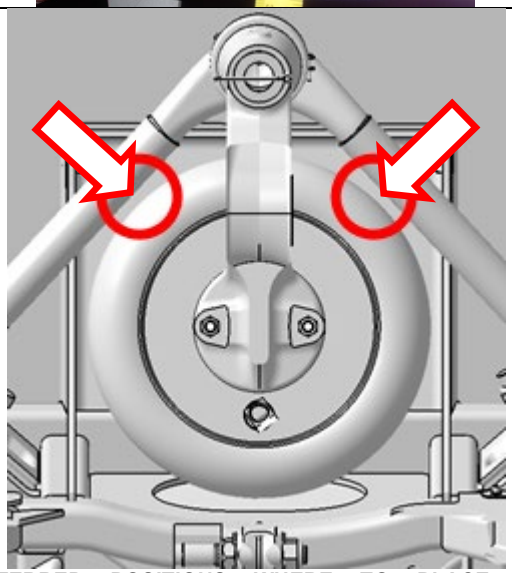

**PREFERRED POSITIONS WHERE TO PLACE THE MEASURING TAPE**

## Air springs height adjustment

**Adjust the air springs clearance with the height control valve**

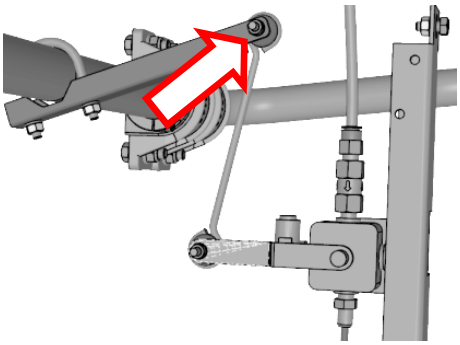

5. It is necessary to adjust clearance on *"fill cycle"*.
    a) Disconnect the link. It is equipped with a rubber bushing that allows easy disconnection.
    b) Lower the control arm to release some air from air springs.
    c) Raise the control arm to fill the air springs (the valve is now in “fill cycle”) and connect the link back in place.

6. Using a hammer, tap gently on the arm secured to the sway bar. Even if the fasteners are properly tightened, it will rotate around the sway bar. Rotate the arm secured to the sway bar to increase or decrease the clearance as shown.
7. Allow 15 minutes to the air system to settle then measure the new clearance. Repeat previous step if necessary.

**INCREASING CLEARANCE**

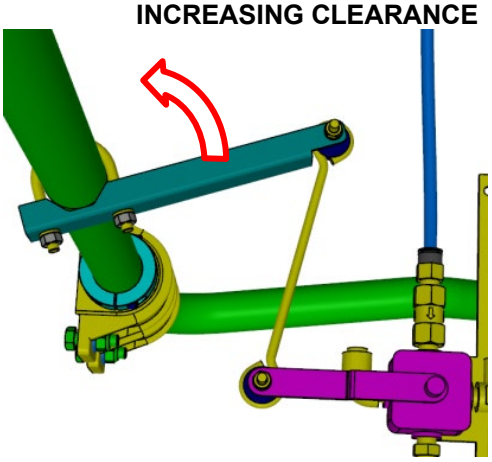

**DECREASING CLEARANCE**

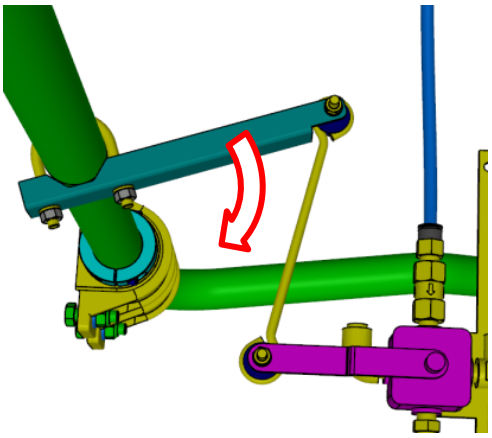

*E-mail us at **technicalpublications_prev@volvo.com** and type “ADD” in the subject to receive our warranty bulletins by e-mail.*

## CONTENTS

**SECTION CHANGE LOG ..... 5**

**1. TORQUE TABLES ..... 6**

**2. VEHICLE EXTERIOR ..... 9**

**3. VEHICLE JACKING POINTS ..... 11**

3.1 HYDRAULIC JACK ..... 11

**4. TOWING THE VEHICLE ..... 11**

**5. STRUCTURE ..... 11**

5.1 WELDING ..... 11

**6. EXTERIOR MAINTENANCE ..... 12**

6.1 CORROSION PREVENTION ..... 12
6.2 PREVENTIVE MAINTENANCE SCHEDULE ..... 13
6.3 RUST INHIBITOR APPLICATION ..... 14

**7. FIBERGLASS REPAIR ..... 18**

7.1 REPAIR USING FIBERGLASS CLOTH ..... 19
7.2 REPAIR USING FIBERGLASS PASTE ..... 19
7.3 TYPICAL FIBERGLASS REPAIR PROCEDURE ..... 20

**8. PAINTING ..... 21**

8.1 NEW PAINT CARE ..... 21
8.2 PAINT TOUCHUP ..... 21
8.3 PAINTING ..... 21
*8.3.1 Safety ..... 22*
*8.3.2 Surface Preparation and Paint Application ..... 22*
8.4 FRONT AND REAR BUMPERS ..... 23
*8.4.1 Paint touchup and surface preparation for vehicles equipped with urethane bumpers ..... 23*

**9. FRONT AND REAR BUMPERS ..... 23**

9.1 FRONT BUMPER REMOVAL AND INSTALLATION ..... 23
*9.1.1 Front Bumper Removal ..... 23*
*9.1.2 Front Bumper Skin Removal ..... 23*
*9.1.3 Front Bumper Assembly Removal including spare wheel compartment door. ..... 24*
9.2 FRONT BUMPER LICENSE PLATE SUPPORT INSTALLATION ..... 24
9.3 REAR BUMPER REMOVAL AND INSTALLATION ..... 24

**10. COACH ENTRANCE DOOR ..... 25**

10.1 OPERATION ..... 25
10.2 EMERGENCY EXIT VALVES ..... 25
*10.2.1 Without Air and/or Without Electricity ..... 26*
*10.2.2 With Air but Without Electricity ..... 26*
10.3 DOOR CYCLE SPEED ADJUSTMENT ..... 26
10.4 HORIZONTAL AND VERTICAL ADJUSTMENT ..... 27
10.5 DEPTH ADJUSTMENT ..... 28
10.6 ROD END ADJUSTMENT ..... 28

10.7 LUBRICATION ..... 28
10.8 TROUBLESHOOTING ..... 30

**11. ENTRANCE DOOR (V.I.P) ..... 31**

11.1 KEYLESS ENTRY SYSTEM ..... 31
11.2 DOOR ADJUSTMENT ..... 31
*11.2.1 Horizontal and Vertical Adjustments ..... 31*
11.3 DEPTH ADJUSTMENT ..... 31
11.4 DOOR LOWER SECTION ..... 32
11.5 REFLECTOR STRIPE INSTALLATION ..... 32
11.6 DOOR SEAL REPLACEMENT ..... 32
11.7 DOOR LUBRICATION ..... 33
11.8 DOOR LATCH MECHANISM ..... 33

**12. DRIVER'S POWER WINDOW ..... 33**

12.1 POWER WINDOW REMOVAL ..... 33
12.2 POWER WINDOW INSTALLATION ..... 34

**13. DASHBOARD – R.H. SIDE PANEL REMOVAL ..... 34**

**14. ROOF ESCAPE HATCH ..... 35**

14.1 REPAIR ..... 35
14.2 SEALING ..... 35
14.3 ESCAPE HATCH PANEL ASSEMBLY ..... 36
14.4 ESCAPE HATCH FRAME ..... 36

**15. REPAIR OR REPLACEMENT OF "TARABUS" FLOOR COVERING ..... 37**

15.1 FRONT STEPS REPLACEMENT PROCEDURE ..... 39
15.2 WELDING OF JOINT BETWEEN WHITE SAFETY STRIP AND "TARABUS" FLOOR COVERING ..... 42
15.3 REPAIR OF A WELDED JOINT ..... 43

**16. PASSENGER SEATS ..... 44**

16.1 ROTATING SEATS ..... 44
16.2 REMOVING FIXED SEATS ..... 45
16.3 UPHOLSTERY MAINTENANCE ..... 45
*16.3.1 Routine Cleaning ..... 45*
*16.3.2 Dry Cleaning ..... 46*
*16.3.3 Cleaning With Covers in Place ..... 46*

**17. COACH SIDE WINDOWS ..... 46**

17.1 HYDROPHOBIC TREATMENT ON SIDE WINDOWS ..... 46
17.2 EMERGENCY EXIT WINDOWS ..... 47
17.3 EMERGENCY EXIT RELEASE BAR ..... 47
*17.3.1 Emergency Exit Window Adjustment ..... 47*
17.4 FIXED WINDOW REPLACEMENT ..... 47
17.5 EMERGENCY EXIT WINDOW REPLACEMENT ..... 48
17.6 TRAPEZOIDAL WINDOW REPLACE-MENT ..... 48
17.7 SMALL REAR WINDOWS REPLACEMENT ..... 48
17.8 ADHESIVE-MOUNTED WINDOWS ..... 49
*17.8.1 Glass Window Replacement ..... 49*

**18. ELECTRIC AWNING WINDOW ..... 50**

18.1 OPERATION ..... 50

18.2 WINDOW REMOVAL ..... 51
18.3 ACTUATOR REPLACEMENT ..... 52
18.4 MOTOR REPLACEMENT ..... 52

**19. ELECTRIC SLIDING WINDOW ..... 54**

**20. WINDSHIELD ..... 57**

20.1 REMOVAL ..... 57
20.2 WINDSHIELD INSTALLATION ..... 57
*20.2.1 Preparation ..... 57*
*20.2.2 Installation of rubber extrusion ..... 59*
*20.2.3 Windshield insertion ..... 60*
*20.2.4 Locking strip insertion ..... 61*

**21. BODY PANELS AND DOORS ..... 63**

**22. WHEELCHAIR LIFT ACCESS DOOR ..... 64**

22.1 INSTALLATION ..... 64
22.2 ADJUSTMENT ..... 64

**23. BAGGAGE COMPARTMENT DOORS ..... 68**

23.1 PANTOGRAPH ADJUSTMENT ..... 68

**24. DOOR HANDLES ..... 69**

**25. ENGINE COMPARTMENT DOOR ..... 69**

25.1 ENGINE DOOR ADJUSTMENT ..... 69
25.2 MINOR TOP EDGE DEPTH ADJUSTMENT ..... 70
25.3 MINOR LOWER EDGE DEPTH ADJUSTMENT: ..... 70

**26. ENGINE AIR INTAKE GRILL ..... 70**

**27. RADIATOR DOOR ADJUSTMENT ..... 70**

27.1 DOOR HEIGHT ADJUSTMENT ..... 70
27.2 DOOR LATERAL ADJUSTMENT ..... 71
27.3 DOOR DEPTH ADJUSTMENT ..... 71

**28. CONDENSER DOOR ADJUSTMENT ..... 72**

**29. FUEL FILLER DOOR ..... 73**

**30. FRONT SERVICE COMPARTMENT ..... 73**

30.1 LATCH MECHANISM ADJUSTMENT ..... 74

**31. ENGINE COMPARTMENT R.H. SIDE DOOR ..... 74**

31.1 LATCH MECHANISM ADJUSTMENT ..... 74

**32. EVAPORATOR DOOR ADJUSTMENT ..... 75**

32.1 LATCH MECHANISM ADJUSTMENT ..... 75

**33. MAIN POWER COMPARTMENT ..... 75**

33.1 LATCH MECHANISM ADJUSTMENT ..... 76

**34. FENDERS ..... 76**

34.1 REAR FENDER REMOVAL ..... 76
34.2 FRONT FENDER REMOVAL ..... 76

**35. REAR CAP ..... 76**

**36. FRONT CAP ..... 77**

**37. SIDE PANEL INSTALLATION PROCEDURE FOR COACHES AND VIP ..... 78**

**38. REAR-VIEW MIRROR ..... 84**

38.1 ARM AND BRACKET POSITION ..... 84
38.2 REAR-VIEW MIRROR REMOVAL ..... 84
38.3 REPLACEMENT OF FLAT GLASS MIRROR ..... 85
38.4 REPLACEMENT OF CONVEX GLASS MIRROR ..... 85

**SPECIFICATIONS ..... 86**

## SECTION CHANGE LOG

| | DESCRIPTION | DATE |
|---|---|---|
| 1 | Update – new exterior rear-view mirror | Oct. 2023 |
| 2 | | |
| 3 | | |
| 4 | | |
| 5 | | |
| 6 | | |

## 1. TORQUE TABLES

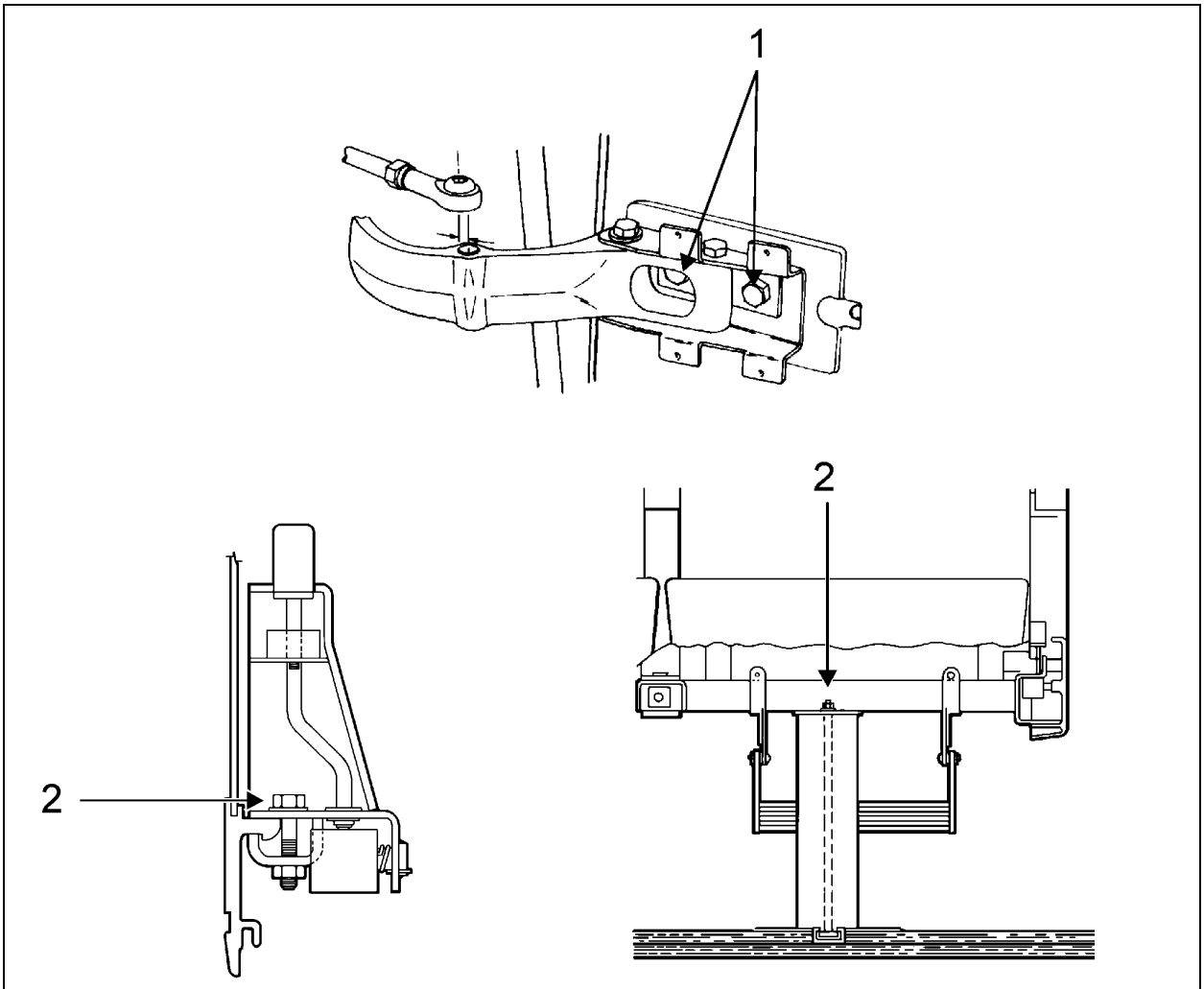


| BODY | | |
|---|---|---|
| No | DESCRIPTION | TORQUE |
| 1 | Entrance door horizontal adjusting bolts | 55-65 lb-ft (75-88 Nm) |
| 2 | Passenger seat mounting nuts (to sidewall and pedestal) | 27 lb-ft (37 Nm) |

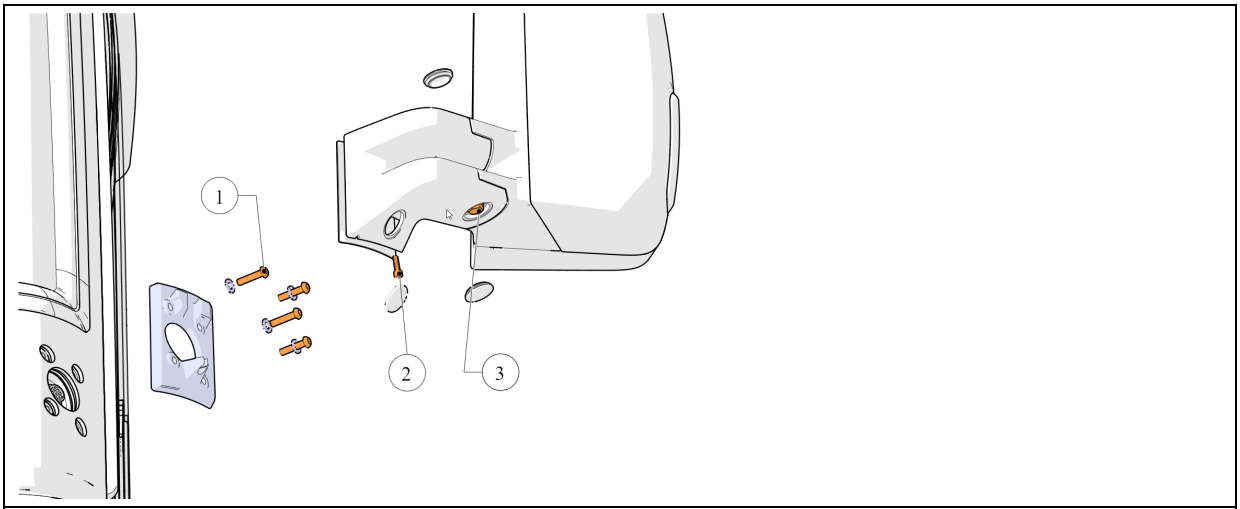


REAR VIEW MIRROR

| No | DESCRIPTION | TORQUE |
|---|---|---|
| 1 | Mounting plate screw (4x) 14 lb-pi | 14 lb-ft (19 Nm) |
| 2 | Clamping screw | 84 lb-in (9 Nm) |
| 3 | Bolt, arm (2x) | 25 lb-ft (34 Nm) |

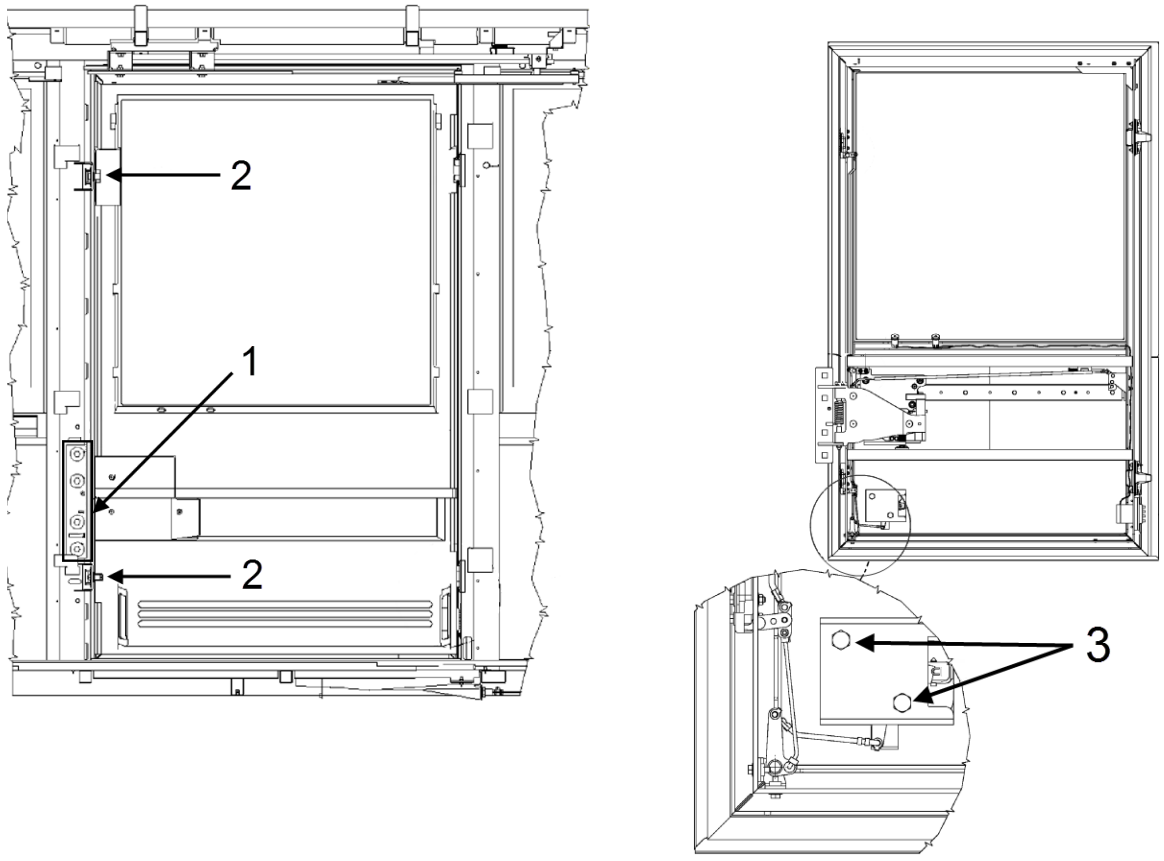


| WHEELCHAIR LIFT DOOR | | |
|---|---|---|
| No | DESCRIPTION | TORQUE |
| 1 | Wheelchair lift door – Center hinge bolts | 31-38 lb-ft (42-52 Nm) |
| 2 | Wheelchair lift door - striker pin adjustment bolts | 54-66 lb-ft (73-89 Nm) |
| 3 | Wheelchair lift door - opening mechanism nuts | 2.5-3.5 lb-ft (3.39-4.75 Nm) |

## 2. VEHICLE EXTERIOR

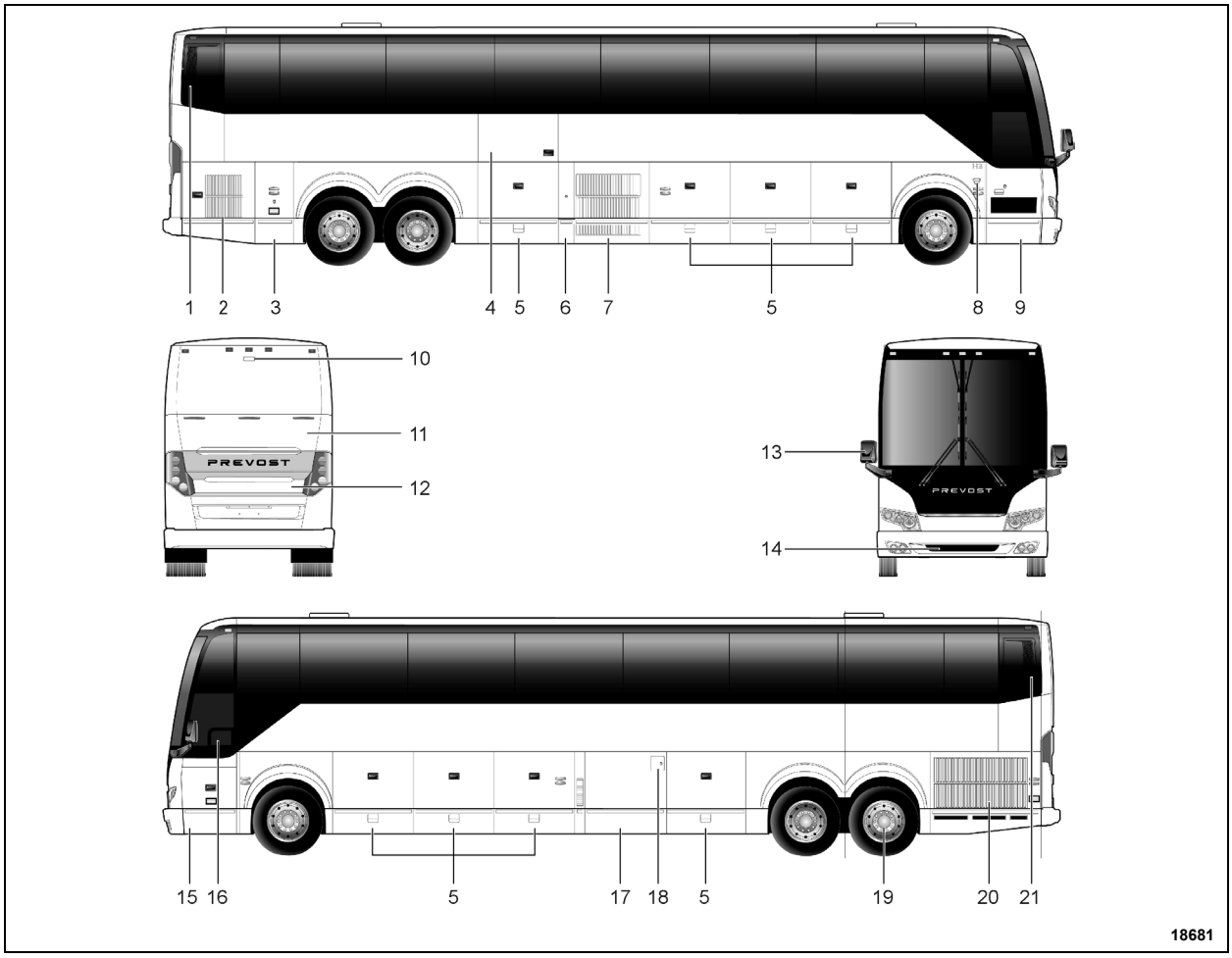


FIGURE 1: H3-45 (TYPICAL)

1. Engine air intake
2. Engine compartment curb-side door
3. Main power compartment (battery compartment)
4. Wheelchair access door (optional Ricon lift)
5. Baggage compartment
6. Fuel filler neck and diesel exhaust fluid (DEF) filler neck access door
7. Condenser compartment
8. Entrance door control switch
9. Entrance door
10. Back up camera (optional)
11. Diesel Particulate Filter (DPF) access door
12. Engine compartment rear door
13. Rear-view mirror
14. Spare wheel compartment
15. Front electrical and service compartment
16. Driver's power window
17. Evaporator compartment
18. Fuel filler neck access door
19. Tag axle
20. Radiator door
21. SCR catalytic converter access door

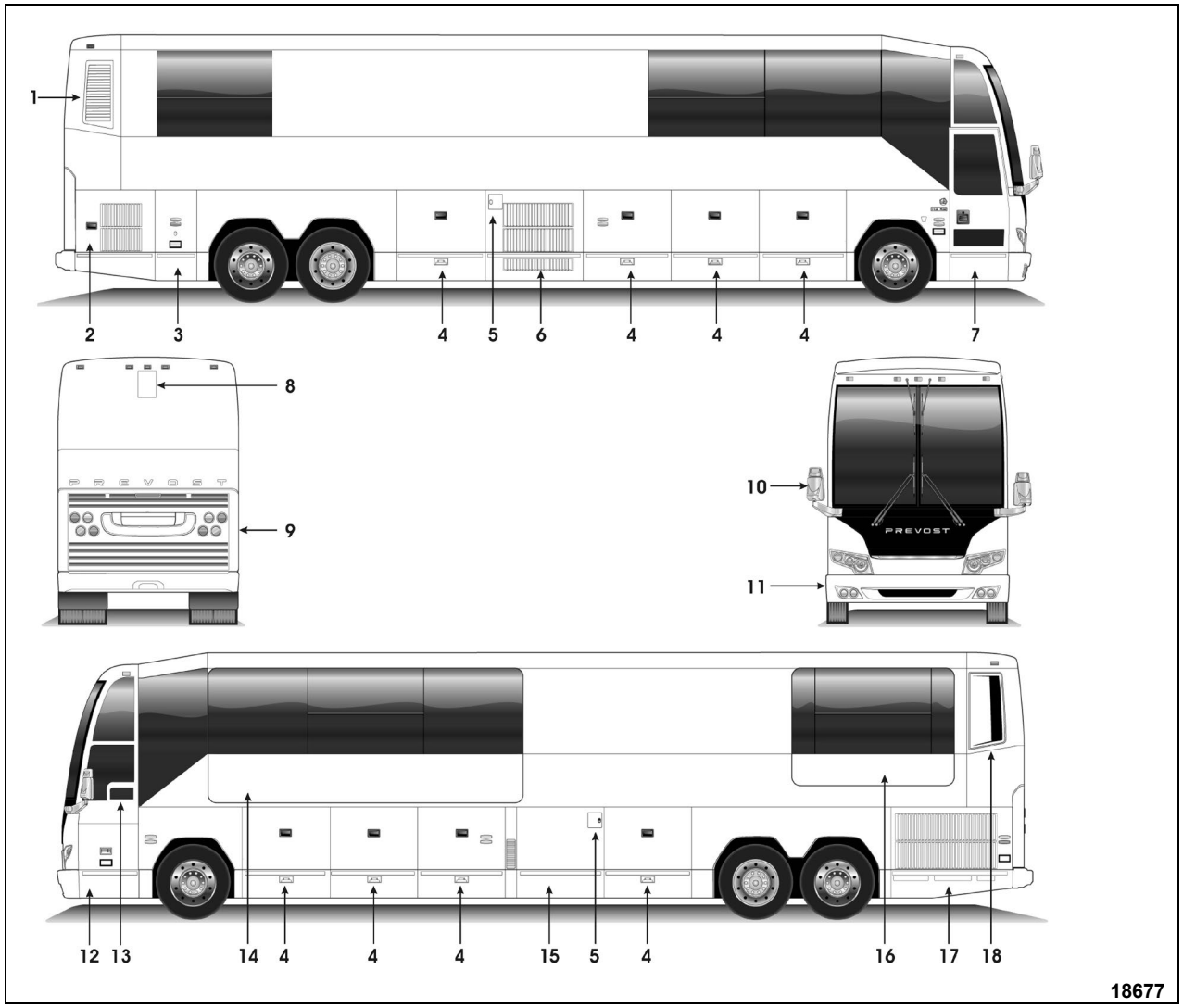


FIGURE 2: H3-45 VIP EXTERIOR VIEW

1. Engine air intake
2. Engine R.H. side access door
3. Main power compartment
4. Baggage compartment
5. Fuel filler door
6. A/C condenser compartment or baggage compartment
7. Entrance door
8. Retractable back up camera (optional)
9. Engine compartment rear door
10. Rear-view mirrors
11. Reclining bumper compartment
12. Front electrical and service compartment
13. Driver's power window
14. Front Slide-out
15. Heating, ventilating and air conditioning compartment (HVAC) or baggage compartment
16. Rear Slide-out
17. Engine radiator door
18. Diesel Particulate Filter (DPF) compartment access door

## 3. VEHICLE JACKING POINTS

For detailed instructions, refer to Maintenance information MI18-18, available on the technical publications USB flash drive and website.

### 3.1 HYDRAULIC JACK

To raise: turn release valve clockwise. Insert handle in socket and raise vehicle by pumping.

To lower: remove handle and turn the release valve slowly counterclockwise.

Always keep ram and extension screw retracted when jack is not in use.

Service: Check oil level when jack fails to raise to full height. Lower ram completely with release valve open and jack in upright position, remove filler plug and refill to level of filler hole with hydraulic jack oil. Never use brake fluid.

**DANGER**

Jack is intended for lifting only. Do not get under the vehicle or load for any reason unless it is properly supported with safety stands and securely blocked.

**DANGER**

Do not overload jack above rated capacity. Prevent "side loading", make sure load is centered on ram. Do not push or tilt load off jack.

## 4. TOWING THE VEHICLE

For detailed instructions, refer to Maintenance information MI18-18, available on the technical publications USB flash drive and website.

## 5. STRUCTURE

The body of the H3-41, H3-45 and VIP vehicles is an integral structure made of 14, 16 and 18 gauge welded and braced high tensile steel and stainless steel members. The roof arches are made with cold rolled, electrically welded (CREW) steel tubes, 1 ½" x 2" x 14 gauge. The inside is filled with urethane foam and the exterior is primed. The front subframe is made of open sections of high-strength steel alloy. These open sections permit a better application of primer and undercoating, and does not trap moisture. The rear subframe is made of closed sections of high tensile steel sealed at both ends.

### 5.1 WELDING

Since welding is a procedure that may be carried out either as specific instructions from Prevost or by an independent decision of the owner, the following information pertaining to welding should be read before beginning any welding procedure. The prohibitions and requirements outlined below must be followed during welding procedure:

1. Welding must be done only by a qualified and experienced person.
2. Adequate ground contacts and shields must be positioned as required to protect components from damage due to heat, contact by weld splatter, arcing, or other

potentially damaging events associated with welding.

3. Refer to "*PRECAUTIONS TO BE OBSERVED BEFORE WELDING*" in Section 00 General Information of this manual.
4. Always wear the appropriate safety equipment.

Weld in clean and well-ventilated area, and always have an appropriate fire extinguisher within your reach

## 6. EXTERIOR MAINTENANCE

Regular washing to remove dust and dirt is recommended. See *"Operator's Manual"* or *"Owner's Manual"* for more details on washing and cleaning your vehicle.

### 6.1 CORROSION PREVENTION

Preventive maintenance is a key factor in avoiding corrosion and must be considered as part of the regular service intervals. The entire underbody of the vehicle is sprayed with a heavy application of asphalt base undercoating.

The operating environment the vehicle is subjected to will largely influence the amount of dirt and corrosion that will accumulate over a given period. Corrosion is one of the most costly factors of part failure and shortened part life. It is, however, an item that can be controlled when it is conscientiously looked after and the proper steps are taken in a timely manner.

Certain areas of the coach are more vulnerable to corrosion than others, and it is these areas that should be addressed. For example, the rear baggage compartment bulkhead in the rear wheelhousing area contains many key components and should be examined regularly for corrosion. Other areas include the front wheelhousing area and the engine compartment.

Road splash will affect understructure, condenser coil and engine compartment. These areas must be thoroughly cleaned to remove dirt accumulations from flanges, channels and ledges. These places accumulate dirt and salt and hold it in direct contact with steel and aluminum surfaces. Use an understructure high pressure spray as part of a regular wash. Damaged undercoating or paint should be promptly repaired before corrosion can start.

Frequency of wash periods depends on operating conditions. During periods of exposure to salt, daily washing as described above is recommended. If underbody parts show evidence of rust or corrosion, treat as follows:

1. Remove dirt, grease and oil by solvent washing.
2. Remove corrosion as well as all loose coating by cleaning with a wire brush or sandblasting.

**⚠ CAUTION**

Sandblasting can be used for cleaning bulkheads, brackets and other structural members. It should not be used for exterior side paneling. Extreme care should be taken not to sandblast excessively.

3. Apply correct primer, paint and undercoating after removing all corrosion to prevent further damage.

## 6.2 PREVENTIVE MAINTENANCE SCHEDULE

| *NOTE* |
|---|
| *TECTYL 185 GW rust inhibitor may have been applied on your vehicle underbody as an option, if this is the case, follow this procedure thoroughly. For future application of product, refer to paragraph 3.3 in this section.* |

| DESCRIPTION | INTERVALS | | MAINTENANCE | CORRECTIVE ACTION | REFERENCE |
|---|---|---|---|---|---|
| | MONTHS | KM MILES | | | |
| BODY, EXTERNAL WINDOW FRAME | 6 | 40 000<br>25 000 | VISUALLY INSPECT SEALING BEADS CONDITION | REPAIR OR REPLACE SEALING BEADS IF NECESSARY | |
| VEHICLE UNDERBODY | 12 | 100 000<br>60 000 | USE A LOW PRESSURE SPRAY TO CLEAN UNDER-STRUCTURE AND VISUALLY INSPECT FOR CALCIUM DEPOSIT, CORROSION OR ANY DIRT ACCUMULATED ONTO EXPOSED SURFACES. VISUALLY INSPECT SEALING BEADS CONDITION.<br><br>VISUALLY INSPECT IF UNDERFLOOR IS PEALING. VISUALLY INSPECT WHEELHOUSING COATING.<br><br>MAKE SURE DISCHARGE TUBES ARE FREE FROM OBSTRUCTIONS | APPLY UNDERCOATING LOCALLY AS NECESSARY.<br><br>APPLY UNDERCOATING LOCALLY AS NECESSARY<br><br>REMOVE ANY OBSTRUCTION OR REPLACE DEFECTIVE TUBE | |
| SUSPENSION AND UNDERSTRUCTURE | 12 | 100 000<br>60 000 | VERIFY THE CONDITION OF ALL SUSPENSION AND UNDERSTRUCTURE FASTENERS AND CLAMPS | TIGHTEN OR REPLACE DEFECTIVE OR MISSING FASTENERS | |
| FLOOR COVERING | 3 | 20 000<br>12 500 | VISUALLY INSPECT IF FLOOR COVERING IS SHOWING SIGNS OF DETERIORATION SUCH AS CUTS, BURNS, ETC. ALSO, VISUALLY INSPECT SEALANT ALONGSIDE TRACKS. INSPECT WALL PANELS FROM BOTTOM TO WINDOWS | REPAIR OR REPLACE DEFECTIVE COVERING. MAKE SURE PROPER SEALANT IS USED. | |
| FLOOR CLEANING | | | CLEAN FLOOR COVERING AS NECESSARY | | |

**WARNING**

Failure to follow this preventive maintenance schedule will result in warranty void.

## 6.3 RUST INHIBITOR APPLICATION

Material: Tectyl 185 GW
R1KG21

Safety Rules: Use safety glasses
Supplied air hood
Solvent-resistant rubber gloves

| | |
|---|---|
| 1.0 Wash both wheelhousing mechanical parts before masking. | A water-hose nozzle is recommended. Water may be hot to reduce washing time especially during winter. If parts are soiled with oil, clean using R1KG21. Avoid rubber parts. |
| 2.0 Dry all water sprayed parts. Surface temperature and dew point must be respected before applying rust inhibitor. | Air pressure system may be used, refer to annex 1 for surface temperature and dew point. |
| 3.0 **Front wheelhousing**<br><br>a) Mask all rubber joints. Braking system must also be protected (refer to arrows). Commercial aluminum foil may be used for masking. | 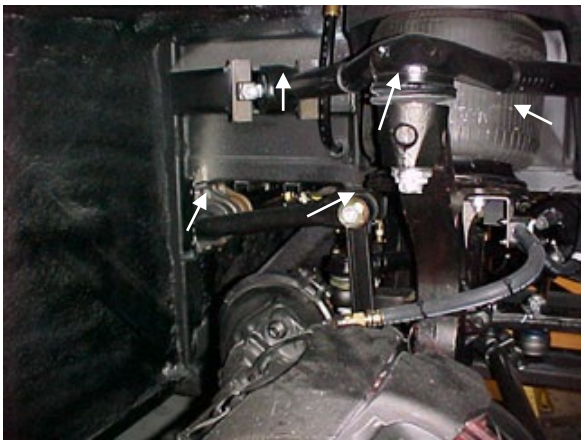 |
| 3.1 **Front wheelhousing**<br><br>Front view |  |

3.2 **Front wheelhousing**

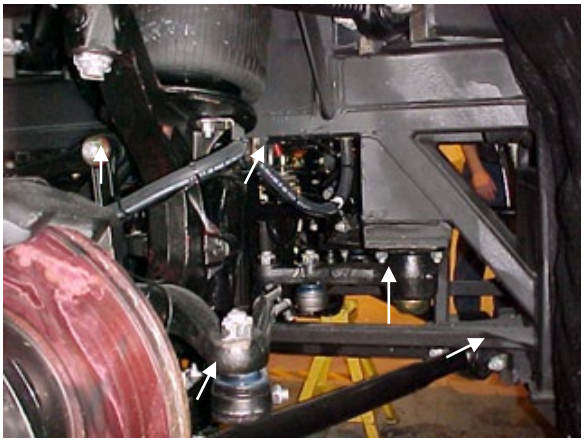

3.3 **Front wheelhousing**

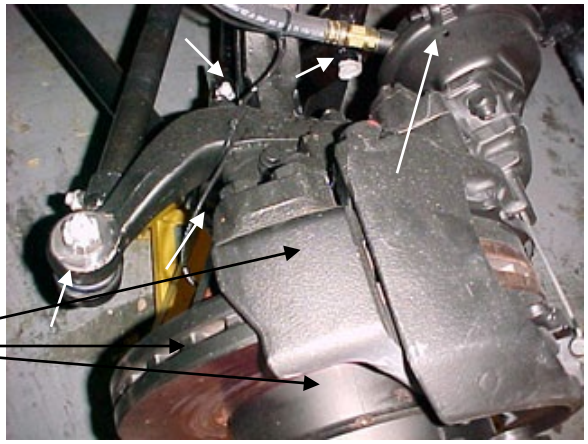

(Entire braking system)

4.0 **Rear wheelhousing**

a) Mask all rubber joints. Braking system must also be protected (refer to arrows). Commercial aluminum foil may be used for masking

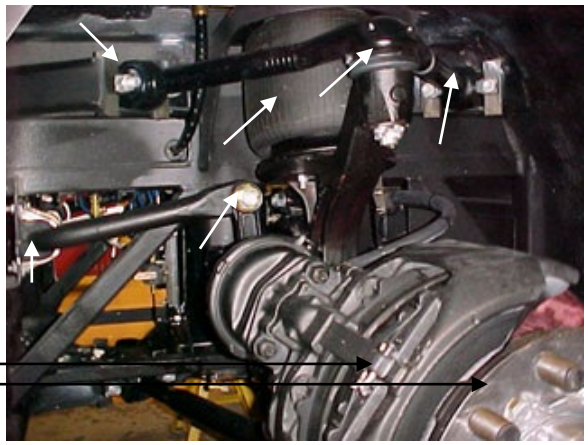

(Entire braking system)

| | |
|---|---|
| 4.1 **Rear wheelhousing**<br><br>(Entire braking system) | 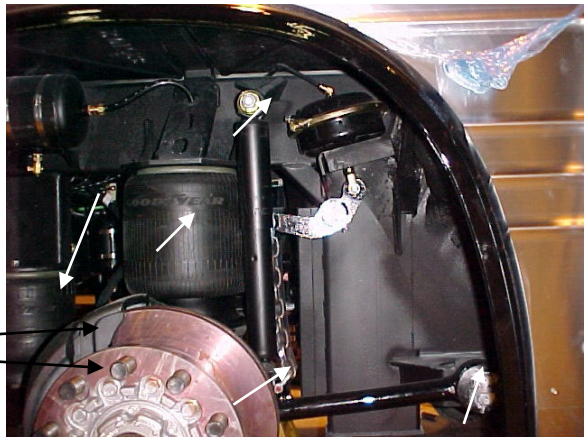 |
| 4.2 **Rear wheelhousing**<br><br>(Entire braking system) | 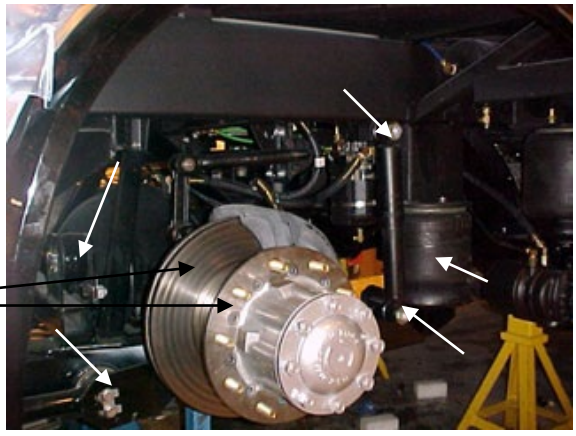 |
| 4.3 **Rear wheelhousing** | 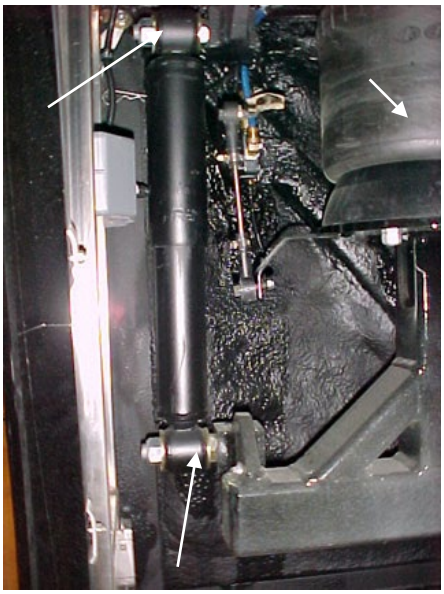 |
| 5.0 Close off wheelhousing using masking paper. | Prevent rust inhibitor from coming in contact with paint. To close off wheelhousing, a polythene sheet may be used. |

| | |
|---|---|
| 6.0 Apply TECTYL 185 GW black rust inhibitor onto wheelhousing mechanical parts. | A spray gun and pumping system are required to apply the rust inhibitor. If the application is done inside a paint room, select high speed ventilation. **Minimum required thickness is 10 mils wet or 5 mils dry**. |
| 7.0 Remove all masking material 30 minutes after application. | |

**ANNEX 1**

1. Check and confirm that dew point and surface temperature are in accordance with to the following criteria:

   Surface temperature > 10°C

   Surface temperature > or = to dew point + 3°C

| *NOTE* |
|---|
| *Use the following table to determine dew point*. |

2. Check and confirm that TECTYL temperature is between 10°C and 35°C.

| | DEW POINT | | | | | | | | | |
|---|---|---|---|---|---|---|---|---|---|---|
| | Relative Humidity (%) | | | | | | | | | |
| | 10 | 20 | 30 | 40 | 50 | 60 | 70 | 80 | 90 | 100 |
| Temp (c) | | | | | | | | | | |
| 0 | --- | -16 | -11 | -8 | -5 | -3 | -1 | 0 | 1 | 3 |
| 1 | --- | -15 | -10 | -7 | -5 | -3 | -1 | 1 | 2 | 4 |
| 2 | --- | -14 | -10 | -6 | -4 | -1 | 0 | 2 | 3 | 5 |
| 3 | --- | -13 | -9 | -5 | -3 | -1 | 1 | 2 | 4 | 6 |
| 4 | --- | -13 | -8 | -5 | -2 | 0 | 2 | 4 | 5 | 7 |
| 5 | --- | -11 | -7 | -4 | -1 | 1 | 3 | 5 | 6 | 8 |
| 6 | --- | -11 | -8 | -3 | 0 | 2 | 4 | 6 | 7 | 9 |
| 7 | -18 | -10 | -6 | -2 | 0 | 2 | 5 | 6 | 8 | 10 |
| 8 | -17 | -9 | -5 | -1 | 1 | 4 | 6 | 7 | 9 | 11 |
| 9 | -16 | -9 | -4 | -1 | 2 | 4 | 6 | 9 | 10 | 12 |
| 10 | -16 | -8 | -3 | 0 | 3 | 5 | 7 | 10 | 11 | 13 |
| 11 | -15 | -7 | -3 | 1 | 4 | 6 | 9 | 10 | 12 | 14 |
| 12 | -14 | -6 | -1 | 2 | 5 | 7 | 10 | 11 | 13 | 15 |
| 13 | -14 | -6 | -1 | 2 | 6 | 8 | 10 | 12 | 14 | 16 |
| 14 | -13 | -5 | 0 | 4 | 6 | 9 | 11 | 14 | 15 | 17 |
| 15 | -12 | -4 | 1 | 4 | 7 | 10 | 12 | 14 | 16 | 18 |
| 16 | -11 | -4 | 1 | 5 | 9 | 11 | 13 | 15 | 17 | 19 |
| 17 | -10 | -3 | 2 | 6 | 9 | 12 | 14 | 16 | 18 | 20 |
| 18 | -10 | -2 | 3 | 7 | 10 | 13 | 15 | 17 | 19 | 21 |
| 19 | -9 | -1 | 4 | 8 | 11 | 14 | 16 | 18 | 20 | 22 |
| 20 | -9 | 0 | 5 | 9 | 12 | 15 | 17 | 19 | 21 | 23 |
| 21 | -8 | 0 | 5 | 10 | 13 | 16 | 18 | 20 | 22 | 24 |
| 22 | -7 | 1 | 6 | 11 | 14 | 16 | 19 | 21 | 23 | 25 |
| 23 | -6 | 2 | 7 | 11 | 15 | 17 | 20 | 22 | 24 | 26 |
| 24 | -6 | 2 | 8 | 12 | 16 | 19 | 21 | 23 | 25 | 27 |
| 25 | -5 | 3 | 9 | 13 | 16 | 20 | 22 | 24 | 26 | 28 |
| 26 | -4 | 4 | 10 | 14 | 17 | 20 | 23 | 25 | 27 | 29 |
| 27 | -4 | 5 | 11 | 15 | 19 | 21 | 24 | 26 | 28 | 30 |
| 28 | -3 | 6 | 11 | 16 | 19 | 22 | 25 | 27 | 29 | 31 |
| 29 | -2 | 6 | 12 | 17 | 20 | 23 | 26 | 28 | 30 | 32 |
| 30 | -1 | 7 | 13 | 17 | 21 | 24 | 27 | 29 | 31 | 33 |
| 31 | -1 | 8 | 14 | 19 | 22 | 25 | 27 | 30 | 32 | 34 |
| 32 | 0 | 9 | 15 | 20 | 23 | 26 | 29 | 31 | 33 | 35 |

## 7. FIBERGLASS REPAIR

All repairs to fiberglass parts consist of filling the damaged area with fiberglass cloth and resin or strand fiberglass and resin. The repair is allowed to harden, and then finishing operations may be performed. Use of the various materials is determined by the type of repair to be made. Large holes, torn sections and separate joints require the adhesive qualities of the resin and the reinforcing qualities of the fiberglass.

Small dents, scratches or pits can be repaired using resin and strand fiberglass and filler mixed into paste. Instructions for either mix are explained under their respective headings in this section. For best results when making repairs, temperature should be between 70 and 75 °F (21-24 °C). Some people experience a skin reaction to resins. In such cases, wipe resin off with denatured alcohol or a good thinner. Use of protective hand cream is recommended.



**WARNING**

Always wear a respirator and goggles when grinding or sanding.

Extreme care must be taken if the sander is electrically operated, as dust from some resins is combustible when subjected to sparks or open flames. The proper tool for sanding resin is a low speed, air driven disc sander with a water attachment or a dry sander having a vacuum bag. Either will eliminate flying glass and resin dust.

The following additional tools and materials will assist in making repairs: hacksaw blade, assorted files, emery paper or cloth (150 or finer), scissors or tin snips, wax paper or cellophane sheets, a 3" (75 mm) paint roller, paint brush, putty knife, acetone and one or more heat lamps.

## 7.1 REPAIR USING FIBERGLASS CLOTH

Where necessary, sand paint away around damaged area and scrape away undercoating, if any, and wipe clean with solvent. Grind or file the damaged area to form a "V" at the broken or cracked portion. Sides of "V" should have a shallow pitch for maximum bonding area.

*NOTE*

*Roughening the surface improves adhesion of resin.*

If part is warped from original shape, use clamping equipment to straighten the surface. Preheat area to be repaired with one or two heat lamps placed 18 to 24 inches (450-610 mm) from repair.

**CAUTION**

Temperature should not exceed 140 °F (60 °C) during 30 minutes in order to avoid distortion.

Cut fiberglass cloth with scissors or tin snips, 1 to 3 inches (25-75 mm) larger than area to be repaired. Build area to desired height.

Mix resin and hardener following instructions on their containers. Saturate layers of fiberglass with mixture and place laminates over damaged area. Smooth out wrinkles and make sure general contour of area is maintained. Bubbles and wrinkles can be eliminated with a roller.

**CAUTION**

The pot life of the mix is approximately 15 minutes. Any accidental contamination to the skin, clothing, tools, etc. must be removed within this period. Use acetone to remove uncured resin.

Heat resin material again by placing heat lamps 18 to 24 inches (450-610 mm) from repaired area. Allow 12 to 15 minutes for repair to cure. After repair is cured, grind, file or sand to contour. Files other than body files may be more suitable. Featheredge and finish sanding.

If small pits or irregularities appear after making repair, correct by using a liberal amount of chopped strand or filler mixed with resin to form a paste. Refer to heading *"Repair with Fiberglass Paste"* in this section.

## 7.2 REPAIR USING FIBERGLASS PASTE

Fiberglass paste is used for repairing small dents, scratches, and pits. Paste is made by mixing resin, hardener and fiberglass strand or filler to the consistency of putty. Where necessary, sand paint away around damaged area. On underside of coach, scrape away undercoating from damaged area, and wipe clean with solvent.

Preheat the area to be repaired using heat lamps. Mix desired quantities of resin and hardener according to manufacturer's instructions. Add powdered fiberglass strand into mixture to thicken it into a putty state.

*NOTE*

*If repair is made on a vertical surface, adding powdered filler material to mixture will reduce*

*tendency of hot resin to flow or run.*

Apply the material with a putty knife or similar object, building material up to the desired contour. For deep filling and on vertical surfaces, several layers of material may be used.

A hacksaw blade, held flat to adjacent contour and then moved in a sawing action across the repair when the resin is in a gel state, will remove excess resin from repair. Finish repair with the same procedure as when using fiberglass cloth.

### 7.3 TYPICAL FIBERGLASS REPAIR PROCEDURE

Remove all loose particles or damaged material using a power sander or rasp. Clean area, overlapping hole approximately 1" to 1-½" (25-40 mm) all around. Remove all dirt, grease and paint from area to ensure good bonding surface. Feather the cleaned area all around (Figure 3).

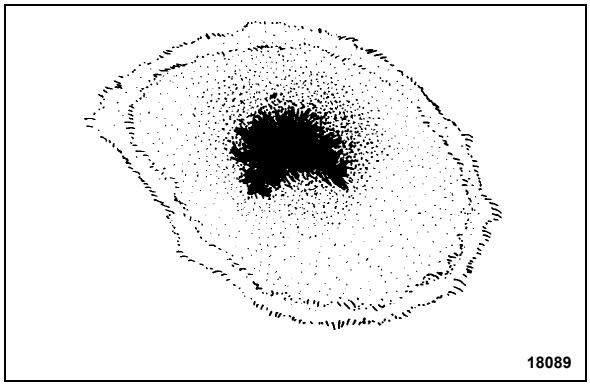


FIGURE 3: FIBERGLASS REPAIR

Cut a piece of fiberglass mat slightly larger than area being repaired. Impregnate mat with general purpose polyester resin catalyzed normally. Use a clean paint brush to apply the polyester resin. Apply impregnated mat over hole and press onto surface with brush to obtain good adherence. Another coat of general purpose polyester resin can be applied at this time (Figure 4).

***NOTE***

*Remove all air between surfaces being joined. Allow area to harden and sand surface to remove any wax.*

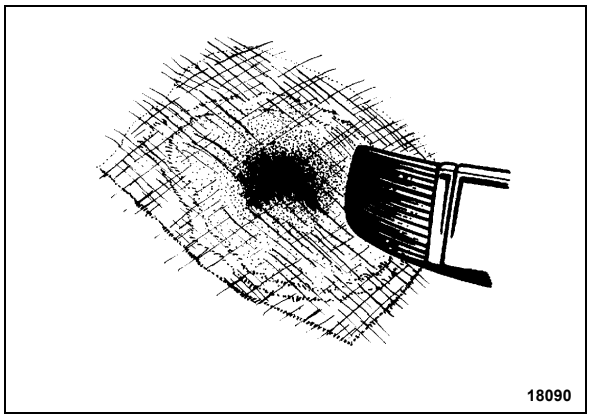


FIGURE 4: FIBERGLASS REPAIR

Apply another mat, followed by a cloth patch, and another mat. All layers must be thoroughly impregnated with polyester resin, brushed well and free of air. Apply more layers of mat and cloth as required until the desired strength and thickness is obtained, minimum two 1-½ oz (43 g) mats and one 9 oz (255 g) cloth (Figure 5).

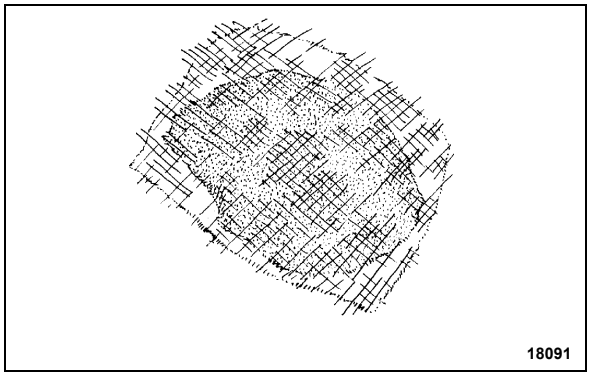


FIGURE 5: FIBERGLASS REPAIR

Allow area to harden and contour the area with coarse sandpaper #100 (Figure 6).

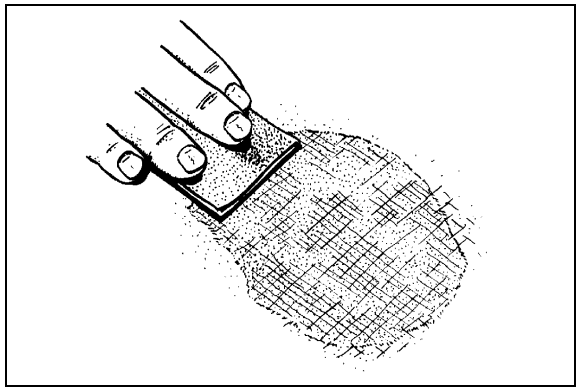

FIGURE 6: FIBERGLASS REPAIR 18092

Cover the area with a layer of resin putty and allow drying for approximately 15 to 20 minutes (FIGURE 7).

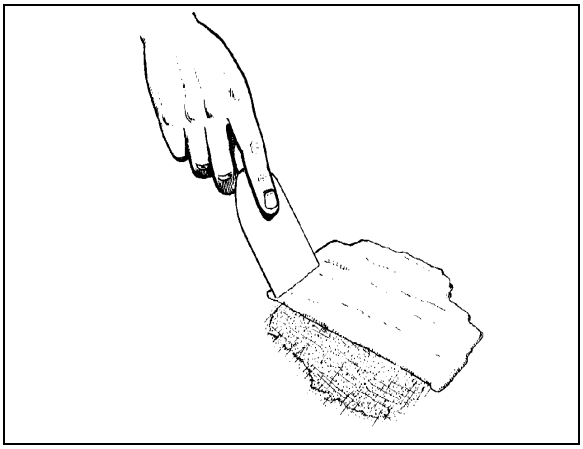

FIGURE 7: FIBERGLASS REPAIR 18093

Smooth off surface with coarse sandpaper #100 to desired shape. Further smooth surface with fine sandpaper #120 until repaired surface matches surrounding area paneling. Prime and paint the area to match surrounding paintwork.

## 8. PAINTING

### 8.1 NEW PAINT CARE

Our paint supplier recommends that you follow these simple precautions the first months of your new vehicle's life.

**CAUTION**

Apply these recommendations after repainting vehicle.

**During the first 30 days:**

- Do not use a commercial bus wash. Stiff brushes or sponges could mar the finish and damage the surface. Wash the vehicle by hand only and with cool water and a very mild bus wash solution. Be careful to use only a soft cloth or sponge;
- Wash vehicle in the shade, never in direct sunlight;
- Do not "dry wipe" vehicle –always use clean water. Dry wiping could scratch the finish;
- Avoid extreme heat and cold. Park vehicle in the shade whenever possible;
- Do not park under trees which drop sap or near factories with heavy smoke fallout. Tree sap and industrial fallout may mar or spot a freshly painted surface;
- Trees are also likely to attract birds. Bird droppings are highly acidic and will damage a freshly painted surface. Bird droppings, tree sap and industrial fallout should be washed off as soon as possible;
- Do not spill oil, gasoline, antifreeze, transmission fluid or windshield solvent on new finish. IMMEDIATELY rinse off any such spill with clean water, DO NOT WIPE;
- Do not drive on gravel roads. Paint finish easily chips during the first 30 days;
- Do not scrape ice or snow from the surface. A snow scraper can act like a paint scraper if the finish is new. Brush off loose material with a soft snow brush.

**During the first 90 days:**

- Do not wax or polish the vehicle. This will allow the finish to dry and harden completely.

### 8.2 PAINT TOUCHUP

When paint touchup or partial repainting is necessary, refer to the vehicle's paint scheme for color codes and paint brand.

Prevost recommends using the original paint brand to ease color matching.

In the event you sand through to the gelcoat surface you should prime the area with Standox "Non Stop Fill Primer (ST-11000)".

If you sand through to metal surface, first prime with Standox "Etch Primer (ST-11858)" then with Standox "Non Stop Fill Primer (ST-11000)".

**CAUTION**

Be sure to heed all paint manufacturer's recommendations, especially concerning paint dilution and application.

### 8.3 PAINTING

The standard paint used on the exterior of the vehicle is Standox Basislack. It is a high gloss polyurethane enamel finish designed for exposure to extreme conditions. Other types of

paint may be called for as options by owner but are not dealt with in this section.

8.3.1 Safety

Care should be exercised in storing, handling, mixing, and applying paint and chemicals listed in this manual. The topcoat, primer, solvent, catalysts, accelerators, and cleaners are highly volatile and/or toxic if not properly used. Observe all safety instructions marked on the different packagings, as well as the following:

1. Do not smoke in the paint room or in adjacent area exposed to residue fumes.
2. Wear respirators approved by the governing safety and health regulations.
3. Maintain adequate ventilation at all times.
4. Dispose of any leftover paint mix properly.
5. Wear rubber gloves, rubber apron, and face shield during all phases of paint and chemical handling.

8.3.2 Surface Preparation and Paint Application

| | Aluminum and / or Stainless Steel | Fiberglass | Comments |
|---|---|---|---|
| **Surface Preparation** | Sand using P-150 grit sandpaper. It is recommended to sandblast rivets and panel edges with OLIMAG 35-70 blast media. | Sand using P-180 or P-240 sandpaper. | Do not use paint remover over aluminum or fiberglass. |
| **Cleaning** | STANDOX silicone remover ST-11654 (68-2989) | | |
| **Priming** | STANDOX Reactive Etch Primer ST-13908<br>* Wait 30 minutes then apply STANDOX Non-Stop Füllprimer ST-11000 (68-2973) | STANDOX Non-Stop Füllprimer ST-11000 (68-2973) | Refer to product Technical Data sheet for proper mixing |
| **Basecoat** | Refer to paint scheme or coach record for proper color code and paint brand.<br>We recommend using the same paint brand to ease color matching. | | Refer to product Technical Data sheet for proper mixing |
| **Clearcoat** | STANDOX 2K MS Rapid Clear ST-11760 (68-2979)<br>Allow 16 hours for drying | | Refer to product Technical Data sheet for proper mixing |

**If assistance or technical information on STANDOX products is needed, please dial: 1 (800) 551-9296**

## 8.4 FRONT AND REAR BUMPERS

### 8.4.1 Paint touchup and surface preparation for vehicles equipped with urethane bumpers

| | COMMENTS | VIP | COACHES |
|---|---|---|---|
| **Cleaning** | Clean using red wool and Standoflex 11100 (ST-11425) thinner | YES | YES |
| | Clean again twice using Standoflex 11100 (ST-11425) thinner | YES | YES |
| **Priming** | Apply Non-Stop primer (ST-13320) with flexible agent dilution 2:1 10% in 2 or 3 coats, 15 min. flash/off between coats | YES | YES |
| **Sanding** | Sand Non-Stop primer using P-320 grit sandpaper | YES | YES |
| | Use a tack cloth | YES | YES |
| **Basecoat** | Apply basecoat. Wait 30 minutes. | YES | YES |
| **Varnish dilution** | Dilution without flexible agent | YES | YES |
| **Varnishing** | Apply varnish | YES | YES |

**If assistance or technical information on STANDOX products is needed, please dial: 1 (800) 551-9296**

## 9. FRONT AND REAR BUMPERS

### 9.1 FRONT BUMPER REMOVAL AND INSTALLATION

The front bumper is hinged to give access to the spare wheel compartment. Bumper must first be tilted down before its removal. Two people are required to remove and install the front bumper.

**⚠ WARNING**

Front bumper weighs approximately 180 lbs. (80 kg). Use proper lifting equipment to support the bumper during the removal and installation operations to avoid personal injury.

Pull on the release handle located in the front electrical and service compartment. The bumper assembly will lower gradually.

#### 9.1.1 Front Bumper Removal

Loosen 12 attaching bolts from inside the bumper, 6 over and 6 under the bumper beam (Figure 8). Let the bumper rest face down on the lifting equipment platform.

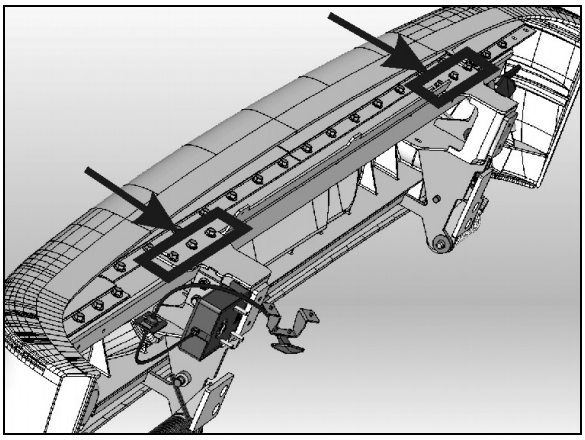

FIGURE 8: BUMPER ATTACHING BOLTS 18498

To reinstall the front bumper, reverse the procedure.

#### 9.1.2 Front Bumper Skin Removal

The bumper skin is pinched to the bumper beam by the use of aluminum extrusions bolted over and under the beam. First, remove the front bumper as per “Front Bumper Removal”. Let the bumper rest face down on the lifting equipment platform. Loosen the aluminum extrusion bolts as required and then detach the skin from the beam (Figure 9).

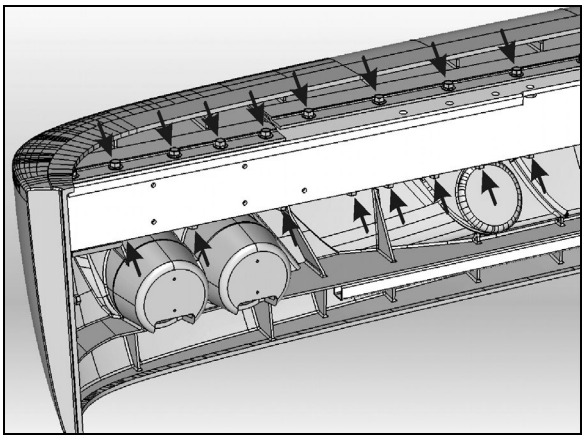

FIGURE 9: ALUMINUM EXTRUSIONS - BUMPER SKIN REMOVAL

9.1.3 Front Bumper Assembly Removal including spare wheel compartment door.

1. Ask assistant to relieve spring tension with assistant proper tool, and relieve spring tension on one locking pin and remove it. Slowly release spring tension and remove the second locking pin. The spring is free. Repeat procedure for the other spring.

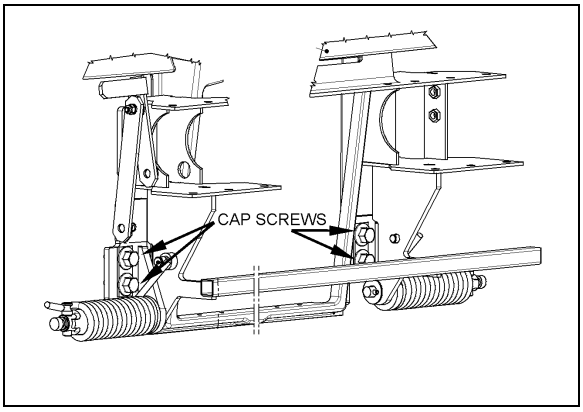


FIGURE 10: FRONT BUMPER ASSEMBLY

| *NOTE* |
| --- |
| *A special tool kit is available from Prevost: Kit # 410671 including tool #410708.* |

2. Remove 4 cap screws holding bumper to vehicle and remove bumper (Figure 10).
3. To install bumper, reverse the removal procedure.

9.2 FRONT BUMPER LICENSE PLATE SUPPORT INSTALLATION

License plate supports are stored in the first baggage compartment. Install supports as per Figure 11.

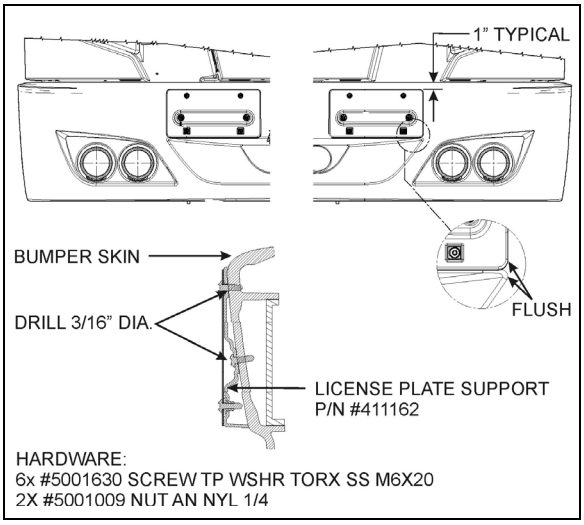


FIGURE 11: LICENSE PLATE SUPPORTS 18500A

9.3 REAR BUMPER REMOVAL AND INSTALLATION

| **WARNING** |
| --- |
| Rear bumper weighs approximately 180 lbs. (80 kg). Use proper lifting equipment to support the bumper during the removal and installation operations to avoid personal injury. |

1. Remove 6 nuts (3 on each side) holding bumper assembly to vehicle and remove bumper (Figure 12).
2. Let the bumper rest face down on the lifting equipment platform.
3. To install bumper, reverse the procedure.

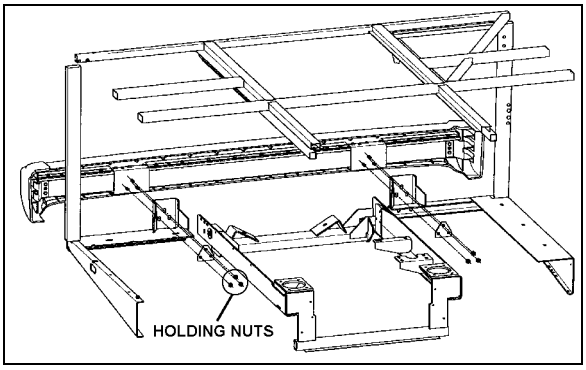


FIGURE 12: REAR BUMPER ASSEMBLY 18501

## 10. COACH ENTRANCE DOOR

An air operated “sedan type” entrance door, with an air door cylinder and damper assembly are installed under the right hand dash. The opening and closing door speed cycle is adjustable by a damper mounted in parallel with the door cylinder on the door hinge (Figure 15). Door activation is controlled by a relay panel, located near the defroster and wiper motors. The accessory air reservoir supplies air to this system.

The door is held in the closed position during coach operation by two air cylinder locking mechanisms (Figure 16). Air cylinders with return spring in the cylinder body are used. Air cylinders are controlled by an electrically operated solenoid valve energized by a rocker switch located under the right hand dashboard.

To open the door, initial movement of the rocker switch de-energizes the air lock solenoid valve, venting the door locking cylinders. The return locking spring pulls the door lock away from the latch, unlocking the door. Door movement starts only when pressure in the central air door lock is below 10 psi. The “air cylinder open solenoid valve” opens and allows air to flow to the door cylinder, “the air cylinder close solenoid valve” exhausts air from the rod side of the cylinder.

To close the door, initial movement of the switch energizes the “air cylinder close solenoid valve” and air flows to the cylinder by its rod side port. The “air cylinder open solenoid valve” exhausts air from cylinder. When entrance door latch is grounded with the door frame, the air lock solenoid valve is de-energized and loads the door lock cylinders. The cylinder moves the door lock in a position which engages a latch on the entrance door, holding the door positively closed.

Emergency exit valves, which open the air valve circuit, should be used only in emergencies, or when the door control system does not function properly.

Refer to the air system schematic and page 22 of the wiring diagram available on the technical publications web site.

### 10.1 OPERATION

The air-operated door is controlled from inside the coach by two push-button switches located on the R.H. dashboard.

Opening and closing of the door from outside the coach is accomplished by a momentary toggle switch located behind the coach model nameplate (Figure 13).

To close the door, the switch must be pushed towards the rear of the coach and held in position until the door has completed its movement.

To open the door, the switch must be pushed towards the front of the coach and held in position. When the door reaches the fully opened position, the system will keep pressure in the cylinder locking the door in that position. The door can be stopped in any position by releasing the switch. The door is not locked in position when not fully opened or closed.

If the door has been locked with the key, a lever on the door can be moved to unlock.

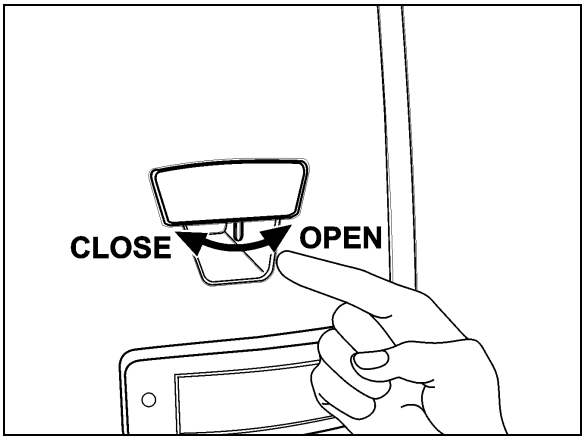


FIGURE 13: DOOR OPERATING SWITCH 18316

### 10.2 EMERGENCY EXIT VALVES

From inside the vehicle, an emergency exit valve located near the door on the dash panel, releases the pressure from the lock cylinders. From the exterior, an emergency exit valve

located in the front service compartment, also releases the air from the lock cylinders.

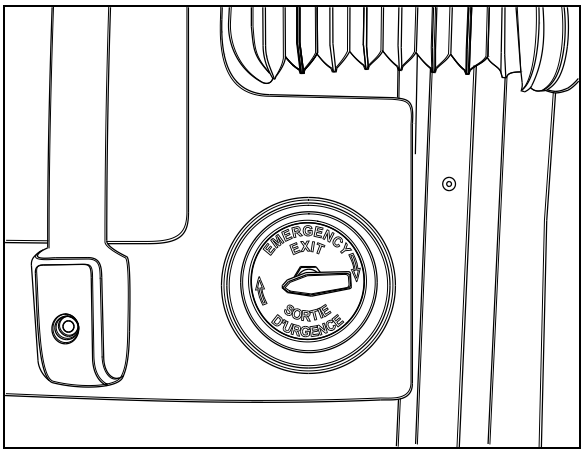


FIGURE 14: EMERGENCY EXIT VALVE 18321

10.2.1 Without Air and/or Without Electricity

If the air pressure drops while coach has or hasn't any electricity, the spring loaded cylinders will unlatch the door. In such a case, unlock the door by moving the lever on the door or by using the key, then open the door manually.

10.2.2 With Air but Without Electricity

From inside the vehicle, turn the emergency exit valve to the "UNLOCK" position. Move the lever. From the exterior, turn the emergency exit valve to the "UNLOCK" position. Open the door. Close it, lock with the key and reset the outside emergency exit valve to the "NORMAL" position.

10.3 DOOR CYCLE SPEED ADJUSTMENT

To do any adjustment, remove the two panels located next to the door hinge, as well as the door's upper hinge control.

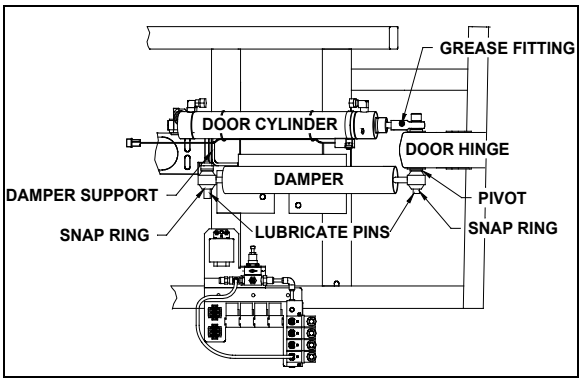


FIGURE 15: DOOR CYLINDER AND DAMPER 18161

**CAUTION**

It is important to make sure that damper does not reach end of stroke when door is completely closed or opened. The door cylinder must stop the door on opening. Screw or unscrew rod end to adjust if necessary.

To adjust opening and closing cycle speed on damper (Figure 17):

1. Remove the damper from the vehicle and hold it vertically with the lower eye or pin attachment in a vice. Use clamp plates to prevent damage.
2. Fully close the damper while turning the dust cap or piston rod slowly CCW until it is felt that the cams of the adjusting nut engage in the recesses of the foot valve assembly (Figure 17).

*NOTE*

*In* Figure 17*, if there is an indentation (B) in the dust cap (C) and the cover shows two holes (A), the damper is fitted with a bump rubber (D). If so, fully extend the damper and insert a round bar or screwdriver through the holes. Push the bump rubber down and remove. Remove the split plastic collar (E) (if fitted) from the piston rod.*

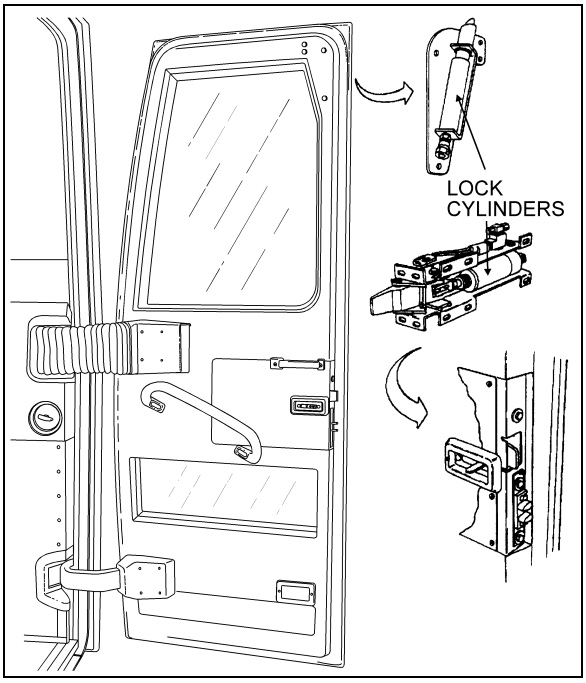


FIGURE 16: COACH ENTRANCE DOOR 18439

3. The damper may have already been adjusted. Therefore check whether the damper is adjusted or not by keeping it closed and gently turning further CCW, counting at the same time the half-turns until a stop is felt. Stop turning and do not force.
4. While keeping the damper closed, make two CW half-turns. In case of prior adjustment, add the number of half-turns previously counted. The total range is about five half-turns.
5. Pull the damper out vertically without turning for at least 3/8" (1cm) to disengage the adjusting mechanism. The dust cap or piston rod may now be turned freely.

| *NOTE* |
| --- |
| *Where a bump rubber was installed, refit same inside the dust cap and by fully closing the damper, the rubber will seat again at top of the dust cap. Refit the split plastic collar E (*Figure 17*)* |

6. The damper can now be refitted in the vehicle.
7. Reinstall panels and entrance door hinge cover.

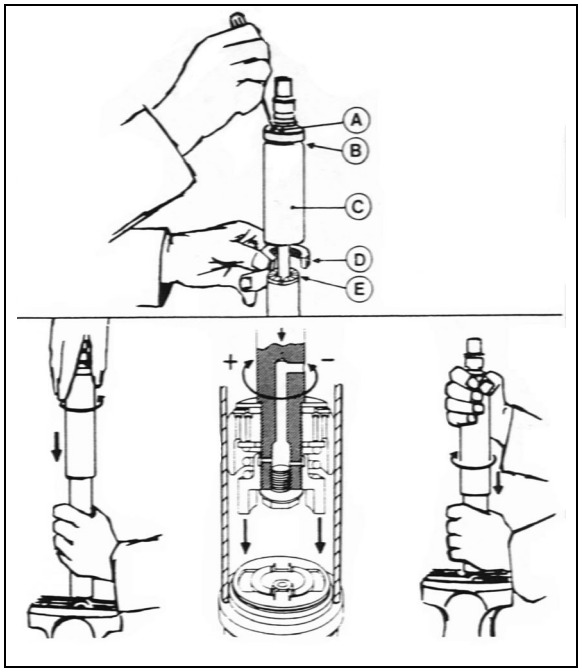


FIGURE 17: DAMPER

## 10.4 HORIZONTAL AND VERTICAL ADJUSTMENT

Before attempting to correct any door operating problem by adjusting any part of the air cylinder assembly, first perform the following mechanical checks and procedure.

Check around the perimeter of the door for binding. If any binding is found, adjust as follows:

1. Remove the screws and the plastic molding covering each of the hinges.

| *NOTE* |
| --- |
| *Ask an assistant to help you to perform the following adjustments.* |

2. Remove the Allen button head screw and the washer retaining the rod end with bearing to the upper hinge. See Figure 18.
3. Support the door with a wooden block and a hydraulic jack.
4. Loosen the horizontal bolts retaining the door to the hinges. Adjust the door horizontally and vertically with the jack. Tighten the bolts.

**TORQUE: 55-65 lb-ft (75-88 Nm)**

5. Remove the jack and the wooden block.

**CAUTION**

Make sure the entrance door does not interfere with the exterior panel.

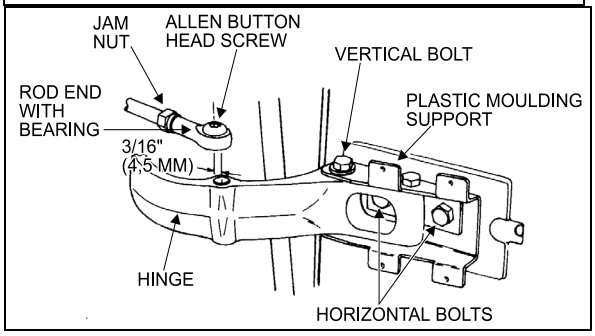


FIGURE 18: UPPER DOOR HINGE (COACH) 18058

6. Pull and fasten the rod end to the hinge with the washer and the button screw.
7. Screw the plastic moldings covering the hinges.

## 10.5 DEPTH ADJUSTMENT

1. Turn the emergency exit valve to the "UNLOCK" position.
2. Remove the screws and the plastic molding covering each of the hinges.

*NOTE*

*Ask an assistant to help you to perform the following adjustments.*

3. Remove the Allen button head screw and the washer retaining the ball and socket rod to the upper hinge. See Figure 17.
4. Loosen the vertical bolts on the hinges for the front section, and for the rear section, move the central door catch on the door frame.
5. To adjust the male dovetail on L.H. side of the door, remove the two screws and loosen the two bolts. Slide the male dovetail toward the interior and loosely tighten the two bolts. Close the door slowly but firmly, then slowly open it and tighten the two bolts. Attach dovetail to the door with screws. See Figure 19.

*NOTE*

*The frame dovetail is not adjustable.*

6. Pull and fasten the rod end to the hinge with the washer and the button screw.
7. Using the screws, attach the plastic moldings covering the hinges.
8. Reset the emergency exit valve to the normal position.

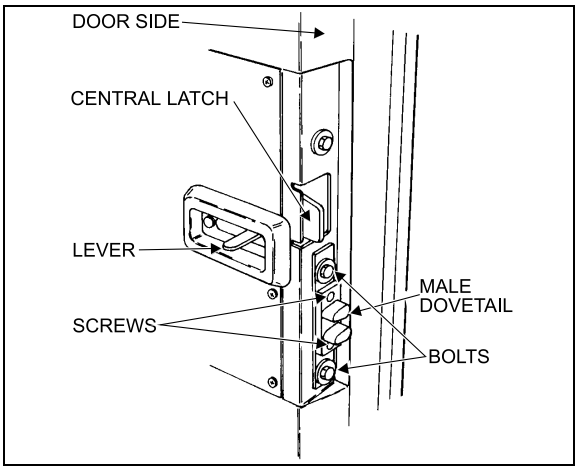


FIGURE 19: DOOR LATCH (COACH) 18059

## 10.6 ROD END ADJUSTMENT

1. Turn the emergency exit valve to the "UNLOCK" position.
2. Remove the screws and the plastic moldings covering the upper and lower hinges.
3. Remove the Allen button head screw and the washer retaining the rod end with bearing to upper hinge. See Figure 17.
4. Loosen the jam nut locking the door cylinder rod end. Close the door firmly, adjust the rod end center hole in order to be 3/16" (4,5 mm) eccentric toward the left with the hinge hole center. Tighten the jam nut.
5. Pull and fasten the rod end to the hinge with the washer and the button screw.
6. Using the screws, attach the plastic moldings covering the hinges.
7. Reset the emergency exit valve to the normal position.

## 10.7 LUBRICATION

| Part | Lubricant | Frequency |
|---|---|---|

| Part | Lubricant | Frequency |
|---|---|---|
| Latches<br>Upper door catch<br>Door cylinder rod end with bearing grease fitting (Figure 19) | Low temperature grease | Every six months |
| Door locking mechanism | White grease | Every six months |

| Part | Lubricant | Frequency |
|---|---|---|
| Key hole<br>Damper pins (Figure 15)<br>Hinges | Low viscosity oil | Every six months |

## 10.8 TROUBLESHOOTING

| SYMPTOM | PROBABLE CAUSE | REMEDY |
|---|---|---|
| DOOR WILL NOT OPEN FROM EXTERIOR SWITCH. | Manual door locks engaged. | Release manual door locks. |
| | Upper and lower solenoid locks do not disengage. | Check voltage at solenoid locks when door is open. If the voltage is 24 volts then replace solenoid #641217. Else, check circuit power. |
| | Relay module do not receive current. | Reset breaker "ON" or check batteries power supply. |
| | Opening solenoid door does not receive current. | Check voltage at opening solenoid door. If the voltage is 24 volts then replace it. Else replace control relay. |
| | Switch malfunction. | Replace switch. |
| DOOR WILL NOT CLOSE FROM EXTERIOR SWITCH. | Switch malfunction. | Replace switch. |
| | Solenoid failure. | Check voltage at solenoid. If the voltage is 24 volts then replace solenoid. Else replace control relay. |
| DOOR WILL NOT OPEN FROM INTERIOR SWITCH. | Manual door locks engaged. | Release manual door locks (open position) from vehicle exterior. |
| | Upper and lower solenoid locks do not disengage. | Check voltage at solenoid locks when door is open. If the voltage is 24 volts then replace solenoid #641217. Else, check circuit power and replace control relay. |
| | Module relay does not receive electric current. | Reset breaker "ON" or check batteries power supply. |
| | Door opening solenoid does not receive current. | Check voltage at door opening solenoid. If the voltage is 24 volts then replace it. Else replace control relay. |
| | Switch malfunction. | Replace switch. |
| | Upper lock stays engaged. | Lubricate upper lock assembly. Check wear and replace parts if necessary. |
| DOOR WILL NOT CLOSE FROM INTERIOR SWITCH. | Switch malfunction. | Replace switch. |
| | Door closing solenoid does not receive electric current. | Check voltage at door closing solenoid. If the voltage is 24 volts then replace it. Else replace control relay. |
| DOOR WILL NOT OPEN AFTER DRAINING AIR FROM SYSTEM BY EMERGENCY VALVE(S). | Manual door locks engaged. | Release manual door locks (open position) from vehicle exterior. |
| | Damper cylinder blocks the door. | Adjust or replace damper cylinder. |
| | The upper lock blocks the door | Adjust lower lock. Lubricate upper latch bolt. Adjust upper latch height. |
| DOOR LOCKS STAY ENGAGED WHEN DOOR IS OPEN. | Power supply is cut at solenoid. | Place switch in open position. |
| | Solenoid lock does not disengage. | Check voltage at solenoid locks when door is OPEN. If the voltage is 24 volts then replace solenoid #641217. Else, check circuit power and replace control relay. |
| DOOR DO NOT LOCK WHEN DOOR IS CLOSED. | Emergency valve is open. | Close emergency valve. |
| | Lock solenoid stays electrified. | Check latch bolt ground on door frame. If needed clean locks for better contact. Check ground circuit. |
| | Lock solenoid works in reverse. | Reverse air hoses at solenoid locks. |
| | Relay does not function. | Replace relay. |

## 11. ENTRANCE DOOR (V.I.P)

There are three ways of unlocking the entrance door from the inside of vehicle. The two first consist in actuating the rocker switch on the dashboard, but this last operation will also unlock the baggage compartments. Finally, you can unlock the door by sliding its lock lever to the left. If the orange tab on the door lock lever is visible, the door is unlocked.

You may lock/unlock the entrance door from the outside with the lock key provided with the vehicle. Turn key CCW to lock and CW to unlock the entrance door.

### 11.1 KEYLESS ENTRY SYSTEM

With this system, you can lock or unlock the entrance door as well as the baggage and service compartment doors. The keyboard is located below the entrance door handle. The module is pre-programmed by the manufacturer and this code can not be deleted. Moreover, you can program your own entry code. Refer to the "VIP Owner's Manual" for instructions on how to program your own entry code.

When you use the keyless entry system, the keyboard and stepwell lights illuminate. Do not push the buttons with a key, pencil or any other hard object as it could damage the buttons.

Although each button is provided with two digits separated by a vertical line, there is only one contact per button. Always press the center of the button (between the two digits, on the vertical line).

If you let more than five seconds pass between each button press, the system shuts down, and you have to enter your code again. If the keyless entry system does not work properly, use the key to lock or unlock entrance or compartment doors. To know more about the keyless system, refer to the "VIP Owner's Manual".

| *NOTE* |
| --- |
| *You must unlock the entrance door before you unlock with the appropriate key any baggage or service compartment doors.* |

### 11.2 DOOR ADJUSTMENT

Check around the perimeter of the door for binding. If any binding is found, adjust as follows:

#### 11.2.1 Horizontal and Vertical Adjustments

1. Remove the screws and the plastic molding covering each of the hinges.

| *NOTE* |
| --- |
| *Ask an assistant to help you to perform the following adjustments.* |

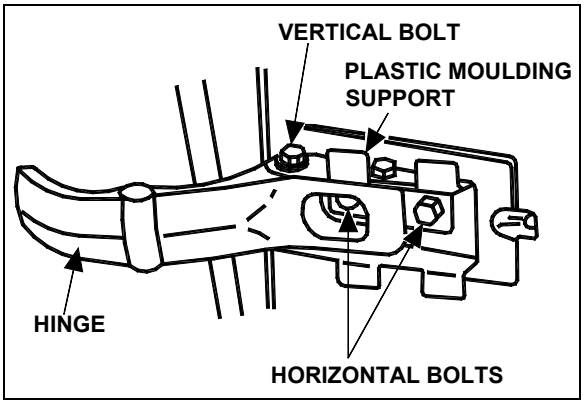


FIGURE 20: ENTRANCE DOOR (VIP) 18058VIP

2. Support the door with a wooden block and a hydraulic jack.
3. Loosen the horizontal bolts retaining the door to the hinges. Adjust the door horizontally and vertically with the jack. Tighten the bolts to

   **TORQUE: 55-65 lb-ft (75-88 Nm)**

   Remove the jack and the wooden block.
4. Check door fit.
5. Using the screws, fasten the plastic trim to cover the hinges.

### 11.3 DEPTH ADJUSTMENT

**To adjust door depth on the hinged side:**

1. Remove the screws and the trim covering each of the hinges.

| *NOTE* |
| --- |
| *Ask an assistant to help you to perform the following adjustments.* |

2. Slightly loosen, but not completely the vertical bolts on both door hinges.
3. Ask your assistant to press the door from the exterior, until it will adjust with the vehicle structure. Then, tighten the vertical bolts.

4. Repeat step 3 until depth is corrected to satisfaction.
5. Using the screws, install the trim hiding the hinges.

**To adjust door depth on lock side:**

Depth adjustment is done by moving the two door striker pins.

1. Slightly loosen the door striker pins.
2. Ask your assistant to press the door from the exterior, until it will adjust with the vehicle structure. Then tighten the striker pin.
3. Repeat until the door depth is corrected to satisfaction.

## 11.4 DOOR LOWER SECTION

When a plastic door lower section replacement is needed, proceed the following way:

1. Remove the reflective stripe at the top edge of the door's lower section. Unscrew the retaining screws located under the reflective stripe.
2. Remove the lower section.
3. With a sharp edge knife, scrape as much tape as possible and compound left on the fiberglass door surface. Note where adhesive tape and sealing compound was applied.
4. Sand the surface or the door where new adhesive tape will be applied with 240 grit sandpaper.

| *NOTE* |
| --- |
| *Tape adheres best to smooth surfaces such as glass or gelcoat finishes. Be careful surface is as smooth as possible before applying tape.* |

5. Clean contact surfaces with alcohol.
6. Clean the fiberglass door and the new plastic lower section with a "tack cloth". Make only one pass on the surface and never come back on a previously cleaned surface.



**WARNING**

Wear rubber gloves and do not smoke when cleaning.

7. Prepare the door lower section with Sika #205 and a clean rag. Make only one pass on the surface and never come back on a previously cleaned surface.

| *NOTE* |
| --- |
| Never use Sika #205 directly from the container to avoid contamination of the product. |

8. Wait at least 5 minutes before preceding the next step to allow complete evaporation of the product.
9. Put new adhesive tape where it was previously applied. Pass a 1" (25mm) roller on it to get a good adhesion on the fiberglass.
10. Apply Sika #252 (Prevost #682462) compound where it was previously applied.
11. Remove protective paper from the adhesive tape and install the door lower section. Apply pressure with a roller where the lower door section touches the fiberglass door.
12. Replace the retaining screws.

## 11.5 REFLECTOR STRIPE INSTALLATION

1. Clean contact surfaces with alcohol.
2. Prepare surface of reflector stripe and door lower section with Sika #205.
3. Put two rows of adhesive tape on the lower door section.
4. Apply Sika #252 (Prevost #682462) compound between parallel tape stripes.
5. Remove protective paper from the adhesive tape and press the reflective stripe in place.

## 11.6 DOOR SEAL REPLACEMENT

1. Inspect the seal; if cracked or torn, it must be replaced:
2. Remove the old seal and with a sharp edge knife, scrape tape left on the fiberglass door surface.
3. Sand the surface of the door where a new seal will be applied with 240 grit sandpaper.
4. Clean the surface with alcohol.

**WARNING**

Wear rubber gloves and do not smoke when cleaning.

5. Peel of protective paper from the seal. Position the seal in order to leave ¼" (6 mm) from the upper molded edge of the door and 3/16" (4,5 mm) from the sides and lower molded edges of the door.
6. Progress slowly all around the door.
7. Cut the seal and glue both ends with LOCTITE 414 glue.
8. To assure bonding, press a small roller on top of the new seal.

### 11.7 DOOR LUBRICATION

| Part | Lubricant | Frequency |
|---|---|---|
| Latches<br>Upper door catch | Low temperature grease | Every six months |
| Door locking mechanism | White grease | Every six months |
| Key hole<br>Hinges | Low viscosity oil | Every six months |

### 11.8 DOOR LATCH MECHANISM

Generally, when the latch mechanism malfunctions, a number of causes may be responsible for this situation. No single procedure will correct this situation. It is best to remove the protective cover and to look for binding, used or bent parts. Operate the latch mechanism and try to find where any binding occurs. Replacing a part or slightly bending a rod should be enough. Remember, having a global understanding of the mechanical activity will generally lead you to the cause of the problem, and ultimately to an easy repair.

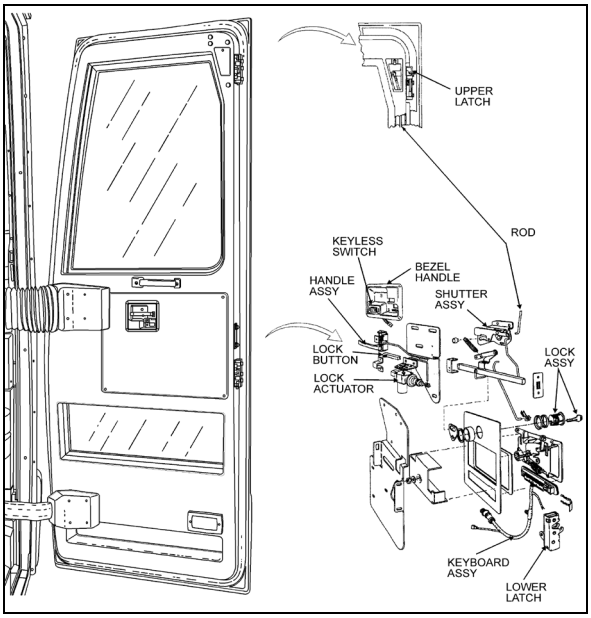


FIGURE 21: ENTRANCE DOOR (VIP, TYPICAL) 18440

## 12. DRIVER'S POWER WINDOW

To replace window or motor, the whole assembly must be removed. The following instructions refer to Figure 22.

### 12.1 POWER WINDOW REMOVAL

1. Raise the driver's power window.
2. Set the battery master switch to the OFF position.
3. The window must be held in upper position. To do so, use duct tape to hold it in place.
4. Gain access to the power window mechanism. Dismount the driver's area lateral control panel and left interior trim. It may be required to remove the driver's seat and dashboard panel.
5. Unfasten bolts (item 1) fixing the window to the lifting mechanism (actuator).
6. Remove the three bolts (item 2) holding the motor support and actuator assembly in place.
7. Detach the plastic water protection shield and remove the assembly by slipping it under the vehicle structural members.
8. Dismount the window support and lower the window completely to release it from its guides.

9. Detach the motor and actuator guide from the support and plastic shield. Replace parts as required.

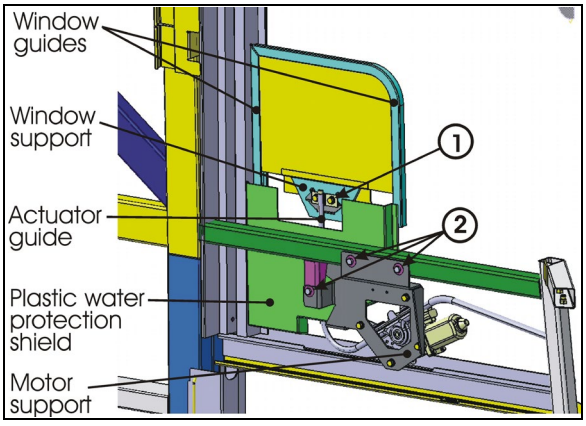


FIGURE 22: DRIVER'S WINDOW 23358

12.2 POWER WINDOW INSTALLATION

1. Energize the motor and position the actuator to its full extended position.
2. Using alcohol, a sharp knife or 240-grit sandpaper, clean off the butyl strip from the shield and frame. Install new butyl strip on plastic shield.
3. Install new window in opening. Use duct tape to hold it in upper position. Fix the window support using bolts recovered from disassembly. Use Loctite on threads.
4. Fasten window support to actuator using the recovered bolts (item 1). Use Loctite on threads.
5. Expose the other sticky side of the butyl strip. Install motor support and actuator assembly using recovered bolts (item 2). Stick plastic shield in place.

## 13. DASHBOARD – R.H. SIDE PANEL REMOVAL

The panel on the right side of the dashboard is secured with fasteners as seen in Figure 23 and Figure 24.

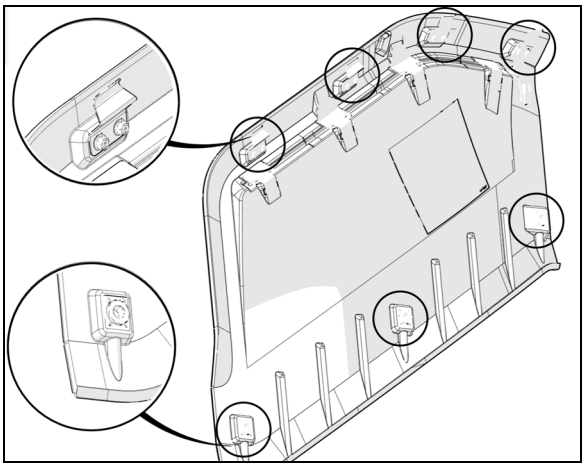

FIGURE 23: ATTACHMENT POINTS AT THE BACK OF THE PANEL

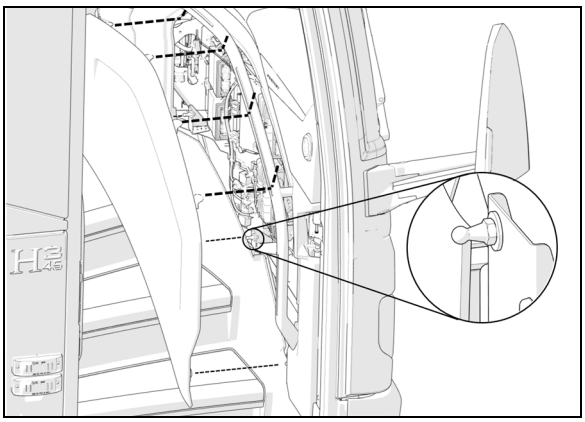

FIGURE 24

To remove the panel, detach the bottom of the panel in three places by pulling towards you and then pull the panel down to disengage the top.

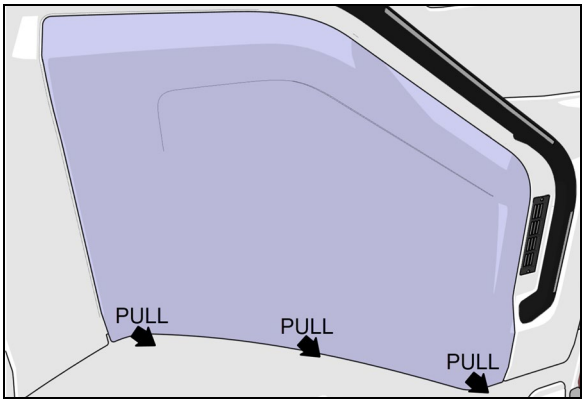


FIGURE 25

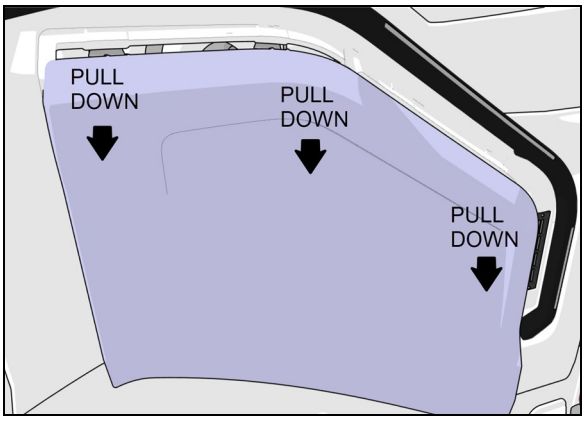

FIGURE 26

## 14. ROOF ESCAPE HATCH

The vehicle can be equipped with one or two escape hatches. The escape hatch is designed to provide years of reliable service with a minimum of maintenance. All components are rust proof, and moving parts are Teflon coated to eliminate need for lubrication. Should water infiltrate the vehicle from the escape hatch, refer to the heading "Sealing" in this section for procedures on how to seal this area.

**CAUTION**

Use of lubricants, paints, or other coatings such as graffiti deterring sprays is not recommended.

Suggested maintenance includes periodic inspection of fasteners for evidence of loosening due to tampering, and regular cleaning with mild soap and water.

Although there are other cleaning solutions available, some contain solvents and other chemicals that can attack the high strength materials used in the production of the escape hatch.

**CAUTION**

Ensure that cleaning solutions are compatible with the materials used on the escape hatch.

Graffiti removing cleaners often contain acetone, ether, lacquer thinner or other solvents known to destroy the high strength properties of many plastics. Use of these cleaners must be avoided.

Graffiti-resisting coatings often leave a sticky residue that interferes with smooth up/down movement of the hatch mechanism. Some of these coatings also contain solvents that will reduce the strength of certain components.

**CAUTION**

Use of these coatings is at considerable risk and should be avoided.

### 14.1 REPAIR

All components used in the production of the escape hatch are available as service parts, except for one hinge that represents a possible hazard when improperly reattached to a hidden tapping plate, itself often damaged whenever the hinge is damaged. The tapping plate is permanently laminated between the inner and outer cover assemblies, and it cannot be inspected or replaced. It is therefore necessary to replace the entire assembly following damage to the hinge. See Figure 27 and Figure 28.

**CAUTION**

Hinge assembly is critical and hinge should never be removed from cover assembly. Fasteners used in this assembly are special and have critical torque requirements and tamper-resistant heads to discourage tampering.

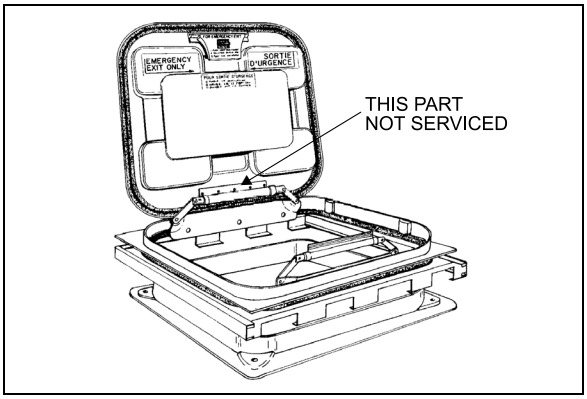

FIGURE 27: ESCAPE HATCH 18104

### 14.2 SEALING

1. Open and tilt up the escape hatch cover.
2. Join the 2 ends of the rubber seal.

**CAUTION**

Seal joint should be toward rear of vehicle.

3. Apply rubber adhesive CA-40 (Prevost # 681285) in the gap between the seal ends.
4. Apply Sikaflex 221 sealant (Prevost # 680532) along the outline of the escape hatch on the roof of vehicle.

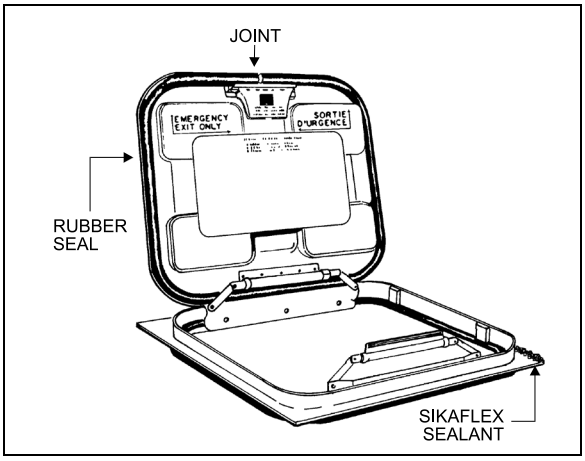


FIGURE 28: ESCAPE HATCH 18105

## 14.3 ESCAPE HATCH PANEL ASSEMBLY

The frame of the escape hatch is riveted to the roof of the vehicle. The escape hatch panel assembly can be replaced as a unit and a new panel assembly installed in the existing frame. To remove the panel assembly, remove the 4 bolts fastening the 2 hinges to the escape hatch frame and retain the 4 flat washers. Reinstall the panel assembly by fastening the 2 hinges with the 4 bolts and flat washers removed earlier.

**CAUTION**

When installing, roof escape hatch's hinge must be toward the front of vehicle, to prevent the hatch from being ripped out if accidentally opened while vehicle is running.

## 14.4 ESCAPE HATCH FRAME

When necessary, the escape hatch frame can be removed and replaced in the following way:

1. Support the frame from inside the vehicle.
2. Remove rivets.
3. Cut the rubber seal with a sharp edge knife and remove the hatch frame.
4. On vehicle top, using the knife, remove as much as possible the remaining rubber seal.
5. Drill holes (if needed) in the new metal frame.
6. Clean both vehicle top and new hatch frame with SIKA 205.
7. Apply rubber adhesive SIKA 221 under the hatch frame surface.
8. Install the frame in place and fix it with rivets.
9. Remove excess adhesive and clean all around.

## 15. REPAIR OR REPLACEMENT OF "TARABUS" FLOOR COVERING

"Tarabus" covering installed in H3 coaches may be replaced or repaired. The purpose of this paragraph is to explain the steps to be followed to ensure the best results and adherence.

**MATERIAL**

| Part No | Description | Qty |
|---|---|---|
| 680028 | Adhesive, Tarabus Floor Covering (White) | A/R |
| 684655 | Adhesive, Contact (3M) | 3.8L |
| 684654 | Adhesive, Contact (3M) | 18.9L |
| 680532 | Sikaflex 221 Gray | A/R |

1. Remove number of passenger seats required to perform repair.
2. Cut and remove damaged section of floor covering.

| *NOTE* |
|---|
| *It would be preferable to cut under two rows of seats so that repair is not as noticeable.* |

3. Clean plywood using a scraper.

| *NOTE* |
|---|
| *Make sure that no staples are sticking out beyond surface. Adjacent plywood sheets must be leveled.* |

4. Fill up holes and imperfections using MAPI PRP 110 then sand.
5. Remove dirt and adhesive residue.

| **CAUTION** |
|---|
| Do not leave floor covering folded down except temporarily during installation. |

6. Apply floor covering adhesive (680028) onto plywood using a serrated spreader with 1/8-inch serration. If required, apply contact adhesive (3M) (684655 or 684654) onto aluminum molding and also onto section of floor covering, which will be in contact with molding (refer to Figure 29).

| *NOTE* |
|---|
| *Allow adhesive to dry (3 to 5 minutes).* |

7. Compress floor covering using a roller so as to remove any trapped air bubble.
8. Apply Sikaflex 221 gray sealant (680532) alongside passenger seat fixing tracks (refer to Figure 30).

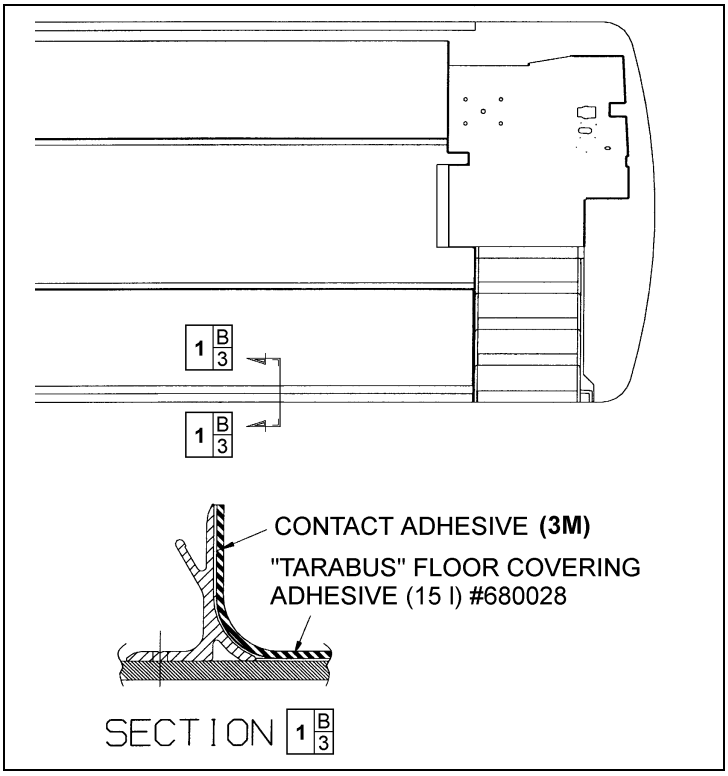


FIGURE 29: TARABUS FLOOR COVERING ADHESIVE APPLICATION

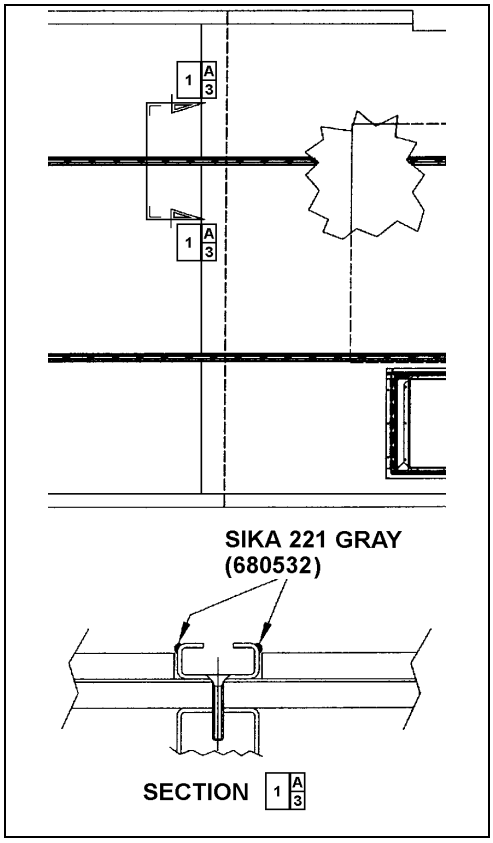


FIGURE 30: APPLICATION OF SIKA 221 GRAY

## 15.1 FRONT STEPS REPLACEMENT PROCEDURE

**MATERIAL**

| Part No | Description | Qty |
|---|---|---|
| 682989 | Anti-silicone | A/R |
| 683097 | Sika 205 (1 liter) | A/R |
| 685101 | Sika Remover 208 | A/R |
| 683916 | Sika 215 (1 liter) | A/R |
| 684654 | Adhesive, Contact (3M) | 3.8L |
| 684655 | Adhesive, Contact (3M) | 18.9L |
| 684517 | Sealant, gray | A/R |

1. Cut and remove damaged step(s).
2. Remove dirt and adhesive residue.

| *NOTE* |
|---|
| *In wintertime, condensation and cold temperature may greatly influence bonding parameters. Working area must be at a temperature sufficient to prevent reaching condensation point. Mechanically preheat working area (heat lamp or heat gun) or wait until vehicle reaches room temperature.* |

**PREPARATION OF "TARABUS" FLOOR COVERING**

1. Sand under step using "Scotchbrite".
2. Clean using anti-silicone (refer to Section A).

**Section A Alcohol or Anti-silicone**

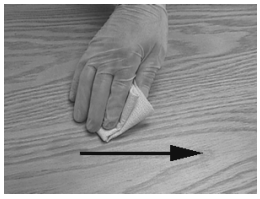

***1.*** **Apply**

**CHIX cloth**

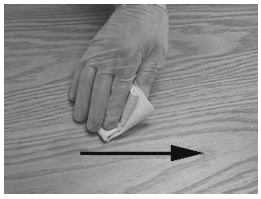

***2.*** **Dry immediately**

**Blue cloth**

***3.*** **Allow drying**

| | |
|---|---|
| **Mandatory** | **Minimum time : Wait for product to evaporate** |
| | **After 2 hours: Start cleaning operation again** |
| **Before applying any other product** | If surface seems dusty, greasy or with finger marks, start cleaning operation again. |

3. Apply Sika Primer 215 (refer to Section D).

# Section D Sika Primer 215

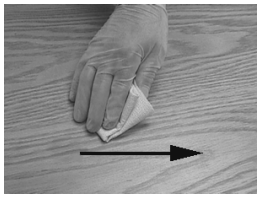

**1.** **Shake bottle to mix product**

**2.** **Apply a thin layer**

**CHIX cloth**

***3.*** **Allow drying**

| | | |
|---|---|---|
| **Mandatory** | **215** | **Minimum time : 20 minutes** |
| | | **After 2 hours : Remove dust using damp cloth (pure water)** |
| **Before applying any other product** | | If surface seems dusty, dust using damp cloth. |
| | | If surface seems greasy or with finger marks, reactivate with Aktivator. |

**PREPARATION OF FIBERGLASS**

1. Clean using anti-silicone (refer to Section A).
2. Apply Sika 205 (refer to Section B).

# Section B Sika 205

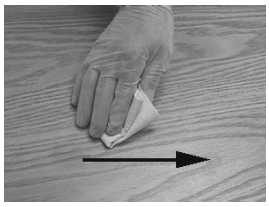

**1.** **Apply**

**CHIX cloth**

***2.*** **Allow drying**

| | | | |
|---|---|---|---|
| **Mandatory** | ***Minimum time*** | **- For a smooth surface (aluminum, stainless, steel, fiberglass (gelcoat side), etc.):** | **2 minutes** |
| | | **- For a porous surface (fiberglass (non gelcoat side), etc.)** | **10 minutes** |
| | **After 2 hours : Reactivate surface with Sika 205** | | |
| **Before applying any other product** | | If surface seems dusty, greasy or with finger marks, start operation again. | |

## H3 VEHICLE FRONT STEPS GLUING

1. Remove adhesive tape from underneath step.
2. Apply a thin and even layer of contact adhesive (3M) (684655 or 684654) onto fiberglass and step surfaces. Allow drying for 3 to 5 minutes.
3. Install step beginning with the back and finishing with step nosing. Compress step covering using a roller paying particular attention to corners, edges and front of step.
4. Apply a bead of sealant (684517) around the perimeter of steps. Smooth out the joints.

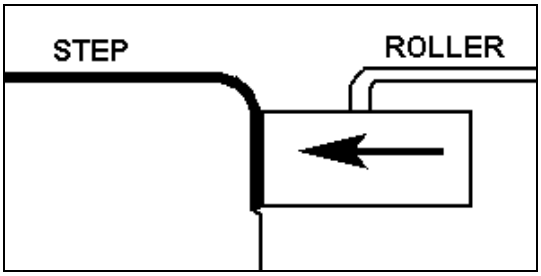


## GLUING OF WHITE SAFETY STRIP BETWEEN STEP AND "TARABUS" FLOOR COVERING

1. Sand fiberglass using "Scotchbrite".
2. Clean using tack cloth.
3. Clean twice using anti-silicone (refer to Section A).
4. Protect surfaces around the step with masking tape.

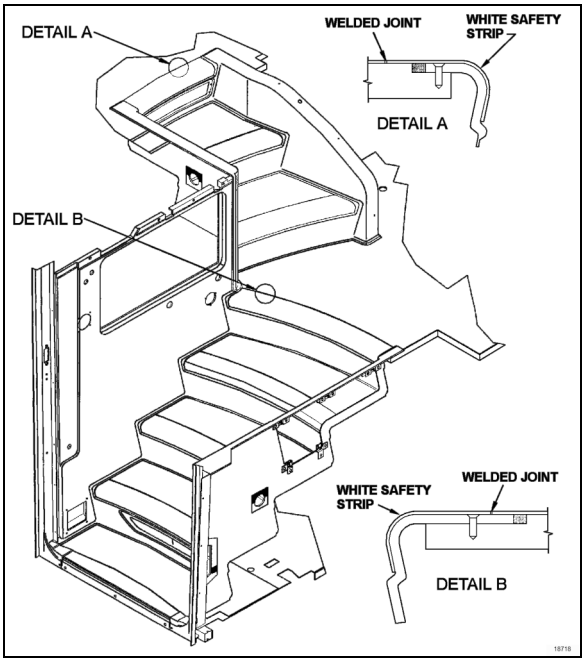


5. Apply contact adhesive (3M) (684655 or 684654) onto both surfaces to glue (fiberglass and back of white safety strip). Drying time: 4 to 5 minutes.

| *NOTE* |
| --- |
| *There should be no floor covering adhesive (680028) onto plywood before applying contact adhesive, otherwise the two surfaces won't stick.* |

6. Position white safety strip with reference to "Tarabus" step covering finishing with step nosing. Compress step covering using a roller paying particular attention to corners, edges and front of step.

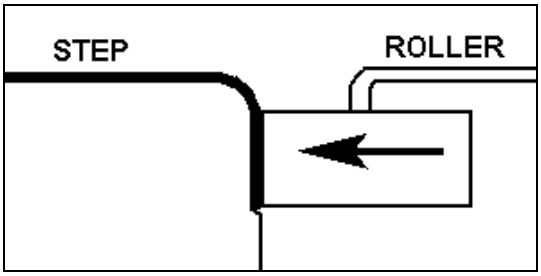


| *NOTE* |
| --- |
| Keep a gap of 1 to 1.5 mm between "Tarabus" covering and white safety strip. |

7. Remove masking tape.

## 15.2 WELDING OF JOINT BETWEEN WHITE SAFETY STRIP AND “TARABUS” FLOOR COVERING

1. Pre-heat welding torch;

   Set welding torch to position #4.5 (temperature of 500 °C),

   Heating time: 5 minutes.

2. Before welding, visually ensure that a 1 to 1.5 mm gap exists between white safety strip and “Tarabus” floor covering. Use a knife if this is not the case.

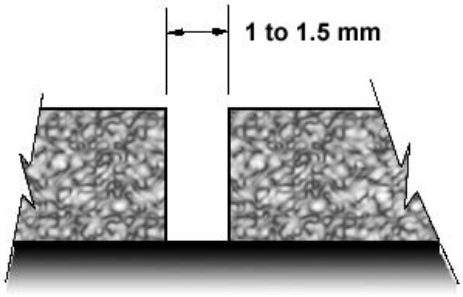


| *NOTE* |
| --- |
| There should be no excess of adhesive on top of surfaces, clean if required using “All-Sol”. |

3. Chamfer the joint.

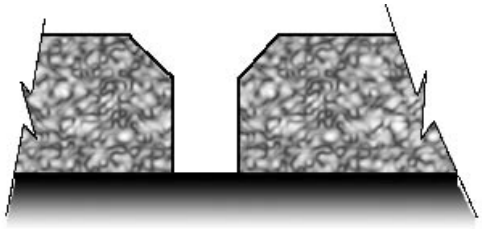

| *NOTE* |
| --- |
| The chamfer width must always be less than the filler bead diameter (between 2.5 and 3 mm). |

4. Use chamfer knife. **Be careful not to overcut or to cut to the side to prevent damaging “Tarabus” covering.**



5. Add (about 6 inches) some length to the required length of filler bead to make the joint then cut.
6. Take position with welding torch. The proper position is with a slight slope to the rear.



7. Once the welding torch is ready, insert the filler bead into the nozzle and immediately start welding. Move in a regular manner while pressing slightly with torch.



8. The heel of the fast nozzle must not lean against “Tarabus” covering (always parallel to the surface).

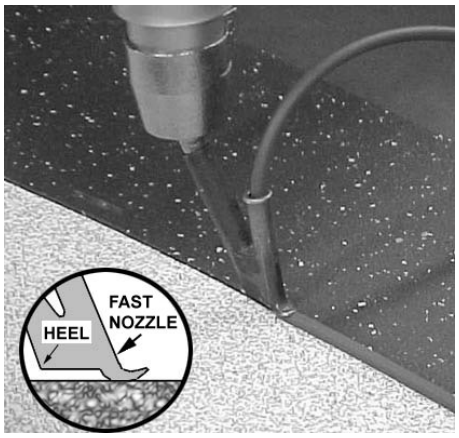


9. Allow cooling down of filler bead (about 5 minutes).

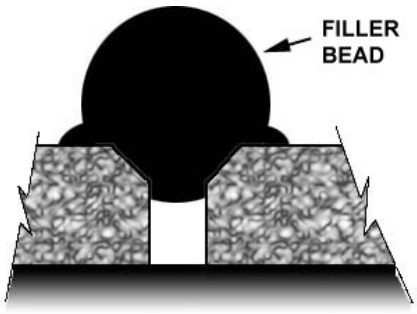


10. Shave filler bead to make it level to the floor. Use supplied knife designed for that purpose.

| *NOTE* |
|---|
| *To facilitate the cut, you can spray some soapy water onto the joint.* |

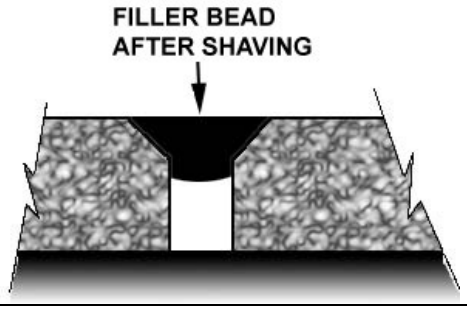


| **CAUTION** |
|---|
| The procedure for turning the torch off must absolutely be followed. If this step is not taken, the element may burn. |

11. Set temperature potentiometer to "0" position. Fan will evacuate residual heat. Leave the torch in operation as it is for 3 minutes.

12. Perform adhesion test using the tip of a flat screwdriver; apply a slight pressure on the joint.

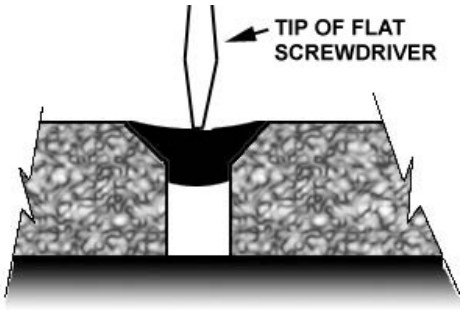


13. If welding was not performed properly, there will be a loss of adhesion on one side. If this is the case, repair the joint.

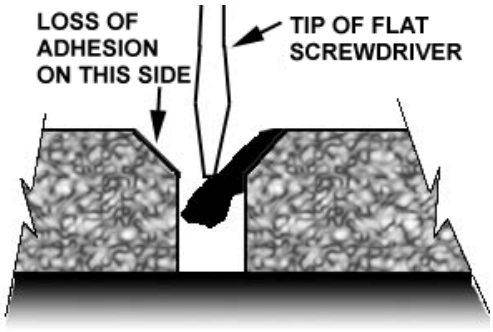


15.3 REPAIR OF A WELDED JOINT

| *NOTE* |
|---|
| *In wintertime, condensation and cold temperature may greatly influenced bonding parameters. Working area must be at a temperature sufficient to prevent reaching condensation point. Mechanically preheat working area (heat lamp or heat gun) or wait until vehicle reaches room temperature.* |

1. Using a knife, remove portion of joint to be repaired.

| *NOTE* |
|---|
| *Loss of adhesion may be local. If this is the case, repair may also be local.* |

2. Chamfer the joint again as indicated in paragraph 3, Section: WELDING OF JOINT BETWEEN WHITE SAFETY STRIP AND "TARABUS" FLOOR COVERING.

3. Re-weld the joint as indicated in paragraphs 6, 7 and 8. Use your thumb to hold the filler bead end.

**WARNING**

Nozzle is hot.



4. Always add an extra inch of filler bead at the beginning and at the end of repair.
5. Perform steps indicated in paragraphs 9, 10 and 11.

## 16. PASSENGER SEATS

The vehicle can be equipped with different seat models and installed in a variety of seating arrangements:

1. For coaches, standard seating arrangement includes two card tables, which can be folded and removed, and pivoting seats ahead of each card table. Each pair of seats is built on a welded steel frame fastened to the side wall and on a track-mounted pedestal.
2. The *"V.I.P."* seat model is an optional seat. *"V.I.P."* seats are mounted on one row of paired seats built on a common frame on one side of the vehicle, and a row of single seats on the other side of the vehicle with an off-center aisle. Each *"V.I.P."* seat has its own set of armrests.

Each seat has an easily removable bottom cushion. Upholstery is clipped on the cushion frame for cleaning or replacement. To remove the fabric, simply unclip from the frame. The standard seats have three armrests. The aisle and center armrests can be folded up and down manually, while the window armrest is fixed.

### 16.1 ROTATING SEATS

1. Loosen completely the threaded-stud knob under the seat on the aisle side (Figure 31).

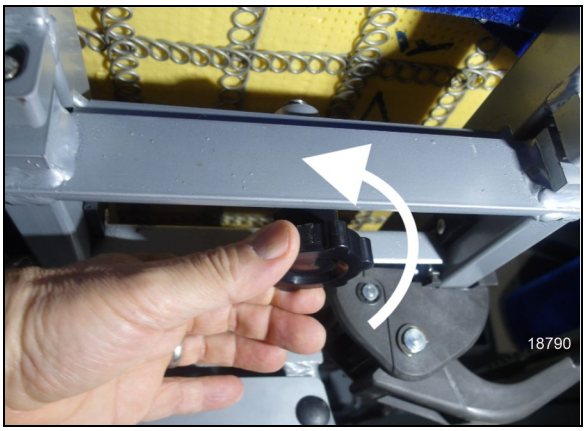


FIGURE 31: LOOSEN THE KNOB

2. Pull the seat toward the aisle to unlock the rotation (Figure 32).




FIGURE 32: PULL TO UNLOCK THE ROTATION

3. Rotate the seats until it stops (Figure 33, A) and push back toward the window to lock rotation (Figure 33, B).




FIGURE 33: FINAL POSITION

4. Fasten the threaded-stud knob under the seat on the aisle side.

## 16.2 REMOVING FIXED SEATS

| *NOTE* |
| --- |
| *Seats on one row are not interchangeable with seats of the other row.* |

To remove fixed seats, proceed as follows:

1. Remove 1 nut holding each seat bottom cushion from under the front part of the seat frame.
2. Lift front part of cushions and remove cushions.
3. Remove 4 finishing screws holding plastic cover between side wall and seat frame.
4. Remove 2 cap screws, nuts, and washers holding seat frame to side wall and retain the 2 holding brackets. See Figure 34 and Figure 35.

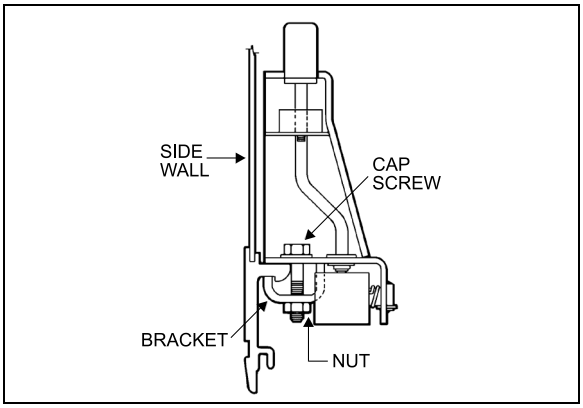


FIGURE 34: SIDE WALL MOUNTING 18106

5. Remove 2 nuts and washers holding seat frame to pedestal rods.

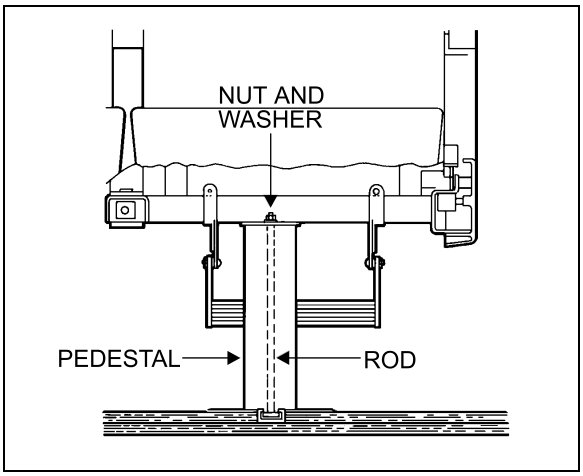


FIGURE 35: SEAT PEDESTAL ASSEMBLY 18107

| *NOTE* |
| --- |
| *Bottom end of rod is coated with Loctite and threaded in a steel block which slides in the floor track. Removal of rod is possible if loosened from block. Otherwise, slide rod and block assembly to the front end of track after removing all seats located in front.* |

6. Remove seat assembly.
7. Reverse the above procedure to install seat assembly. Tighten mounting nuts.

**TORQUE: 27 lb-ft (37 Nm)**

| *NOTE* |
| --- |
| *On newer vehicles, the rod consists of a carriage bolt inserted in a square plate sliding in the floor track. Removal is possible only by the front or rear end of track.* |

## 16.3 UPHOLSTERY MAINTENANCE

Coach seats are lightweight, with foam-padded backs and cushions. For both appearance and wearability, best results are obtained if upholstery is cleaned at regular intervals before dirt, dust and grit have been ground into the fabric. Seat fabric is made of 50% wool, 33% cotton, 9% nylon, and 8% acrylic.

### 16.3.1 Routine Cleaning

All that is required to remove the dirt is a gentle beating with the hand or the back of a brush.

This will bring the dirt to the surface where it is easily removed with a vacuum or brush in the direction of the pile which can easily be recognized by running a hand lightly over the pile. If the fabric become excessively dirty, particles of grit will cause gradual wear, reducing the life span of the fabric.

16.3.2 Dry Cleaning

If covers are to be removed for cleaning, dry cleaning is recommended since washing might cause some shrinkage, preventing the covers from being reapplied to the seats without damage. Other than spot cleaning the covers while they are in place, dry cleaning is not recommended, since the resulting fumes could be hazardous in the confines of the coach and the solvent could be detrimental to the foam padding of the seats.

16.3.3 Cleaning With Covers in Place

The most effective and economical method to clean the fabric seat covers is by washing with either an approved foam upholstery cleaner or with a mild household detergent.

Thoroughly vacuum the upholstery. Remove any spots or stains before the seats are washed to avoid a cleaning ring.

Dilute household detergent or liquid foam cleaner according to directions on the container. Pour a small quantity into a flat pan and work into a thick foam with a sponge or brush.

Apply only the foam to the fabric with a sponge or brush. Clean a small area of the fabric at a time with the foam. DO NOT SOAK. Rub vigorously.

Sponge the suds from the fabric with a clean sponge or cloth moistened with water. Rinse the sponge or cloth often and change the water when it becomes dirty.

Allow the upholstery to dry completely before the coach goes back into service. To speed up drying, excess moisture can be blown off the fabric with compressed air.

**⚠ CAUTION**

Oil in the air line will soil the fabric. Blow the line clear and test air discharge against a plain white piece of paper. It is also effective to press the edge of a flat hardwood stick down on the cushion and slowly draw it across the fabric.

Even very soiled areas can be returned to their original appearance by a thorough cleaning, but a regular schedule of cleaning that keeps the upholstery reasonably clean at all times will greatly enhance the life span of upholstery.

## 17. COACH SIDE WINDOWS

Seven passenger side windows are provided on each side on H3-41, while the H3-45 has eight. They are made of fixed, single or double-glazed, heat absorbing AS-3 glass. Windows are mounted in painted aluminum extrusions, which hold the glass in place from the top rail of the coach. The extrusion also serves as a hinge to allow the window to swing open when needed. The single-glazed windows are made of tinted tempered safety glass, while the double-glazed windows are made of tinted tempered safety glass outside and clear tempered glass inside.

The two trapezoidal windows are also mounted on an aluminum extrusion (except for H3-45 VIP, where they're mounted with adhesives. Refer to *"Adhesive Mounted Windows"* in this section, for more information on this type of installation). The trapezoidal windows are made of fixed, double glazed, heat absorbing AS-3 tempered safety glass inside and tempered glass outside.

17.1 HYDROPHOBIC TREATMENT ON SIDE WINDOWS

The new low profile window gasket creates an airflow that is closer to the vehicle. This reduces air drag but window soiling of the side windows becomes more likely.

A specific water repelling treatment is factory applied to the driver's and entrance door windows to counter this effect and prevent window soiling.

We suggest renewing the water repelling treatment each year or more frequently depending on operating conditions.

Should you notice increased soiling on the driver's and entrance door windows after several months of operation, the water repelling treatment can be renewed by making an appointment with your nearest Prevost Service Center.

The Hydrophobic compound is specially formulated for Prevost and can only be applied by Prevost technicians in Prevost service centers.

## 17.2 EMERGENCY EXIT WINDOWS

Except for the window upper edge, the three other glass edges are unprotected, which causes the workers to be exceptionally careful when manipulating or installing such windows.

In addition, when it becomes necessary to lay down the unprotected edges of the glass window, never use a steel or concrete floor support. It is recommended to use a wooden support, even better, a padded surface.

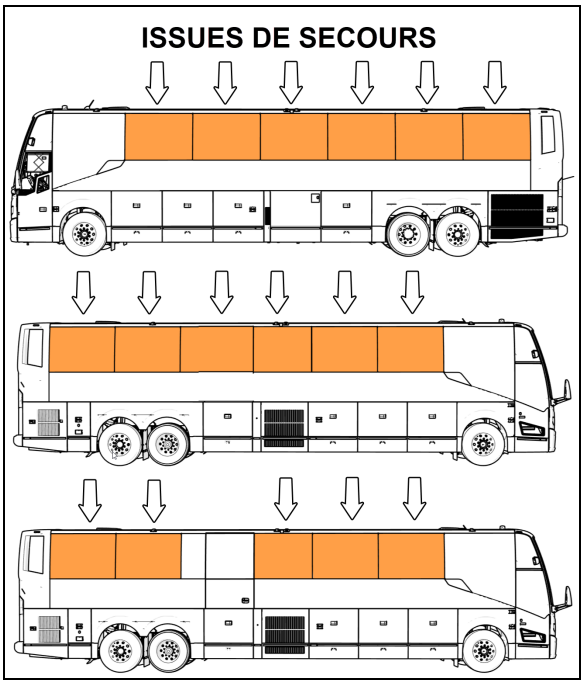


FIGURE 36: H3-45 COACH 18519

## 17.3 EMERGENCY EXIT RELEASE BAR

The emergency exit release bar system is generally maintenance free.

It has been designed to answer the twenty pound resistance criteria for opening the emergency window. If this handle should be replaced:

1. Remove the screws and bolts securing it to the emergency exit window;
2. To install a new release bar, reverse the procedure.

| NOTE |
| --- |
| *Check the legal twenty pound maximum resistance to be sure to comply with regulations.* |

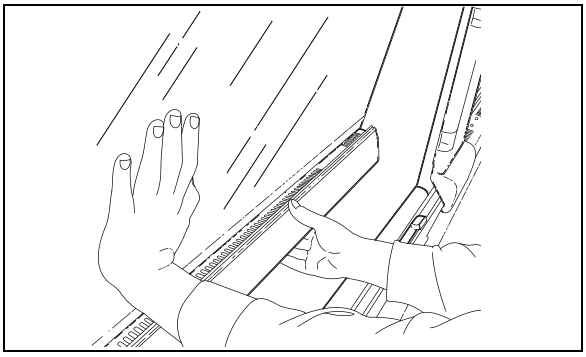

FIGURE 37: EMERGENCY EXIT WINDOW 18391

### 17.3.1 Emergency Exit Window Adjustment

Emergency exit windows should be checked periodically for easy opening and closing. Pulling the lower part of the release bar with both hands placed near the safety latches should disengage both locks on the window simultaneously. The tension required to release the window should not exceed twenty pounds (9 kg) of force.

The release bar mechanism itself has been designed such as no adjustments are necessary.

If too much effort is required to disengage the locks when pulling the release bar or if the window doesn't close tightly or rattles, check for interference by foreign objects or nearby parts into mechanism, such as the microswitch, rubber seal, wires, etc. Correct situation immediately.

| NOTE |
| --- |
| *Tangs on the lock must be in a horizontal position.* |

## 17.4 FIXED WINDOW REPLACEMENT

When it becomes necessary to replace the glass of a fixed-type window, follow this procedure:

1. Unscrew the decorative plate and the bottom window bar in order to get access to the window retaining devices.
2. Remove the window bottom retaining bolts.
3. Push the glass window out ninety degrees (90°).

**WARNING**

The window may fall out.

4. The window is free and can be unhooked.
5. Reverse procedure to install a new one.

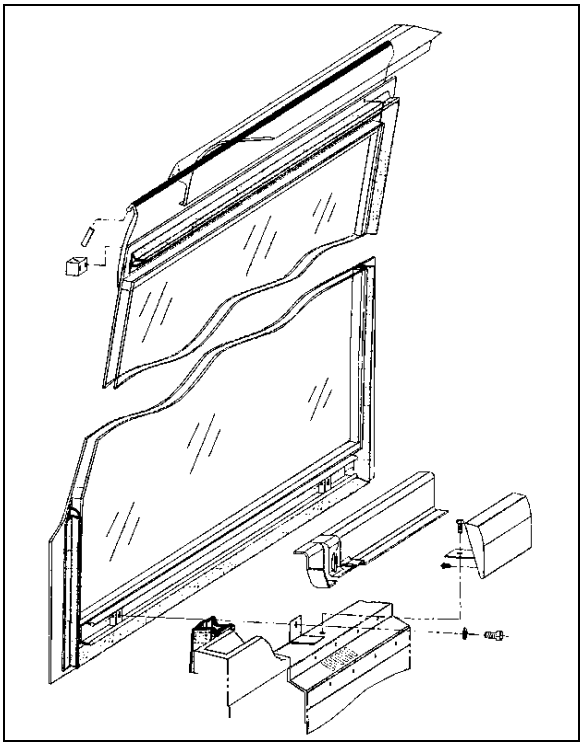

FIGURE 38: FIXED WINDOW 18434

*NOTE*

*For all window replacement, it is extremely important to center the top side between the window dividing posts with great precision in order to be able to attach the bottom of window and the structural posts.*

## 17.5 EMERGENCY EXIT WINDOW REPLACEMENT

1. Lift the bar release system and follow the same procedure mentioned above for fixed windows.
2. Remove the stop blocks from the top exterior of the window.
3. Reverse the procedure to install a new emergency exit window.

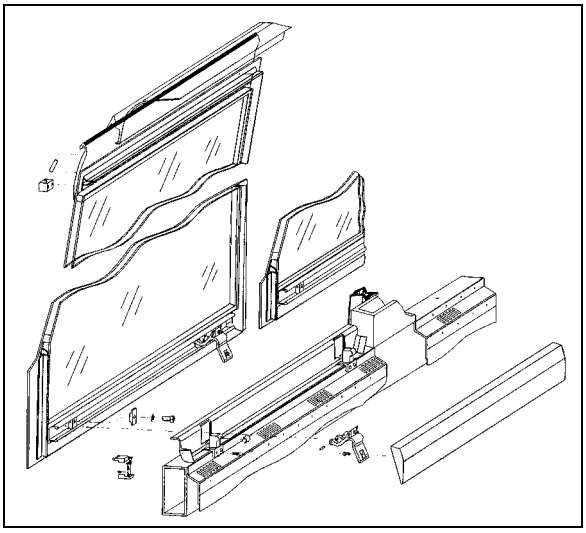

FIGURE 39: EMERGENCY WINDOW 18435

## 17.6 TRAPEZOIDAL WINDOW REPLACEMENT

Apply procedure for fixed window replacement described in this section but with these variations:

- The angle at which the window will detach is considerably smaller (about 45°);
- These windows are also glued to the structure at certain areas on their perimeter. Note where adhesives are used and apply gluing techniques at these areas to complete replacement of these windows.

## 17.7 SMALL REAR WINDOWS REPLACEMENT

These small windows are located at the vehicle's rear end, just forward of the lavatory.

Apply procedure for fixed window replacement described in this section but with these variations:

- The angle at which the window will detach is considerably smaller (about 45°);
- These windows are also glued to the structure at certain areas on their perimeter. Note where adhesives are used and apply gluing techniques at these areas to complete replacement of these windows.

Both the trapezoidal windows and the small rear window are fixed in place with adhesives. They are not serviceable, in the event that they may need replacement.

## 17.8 ADHESIVE-MOUNTED WINDOWS

These windows are located in the vehicle's front and rear caps (Figure 41).

The adhesive-mounted windows are fixed, double-glazed, heat absorbing AS-2 or AS-3 glass mounted in their opening with polyurethane windshield adhesive. The double-glazed windows are tempered safety glass outside and inside.

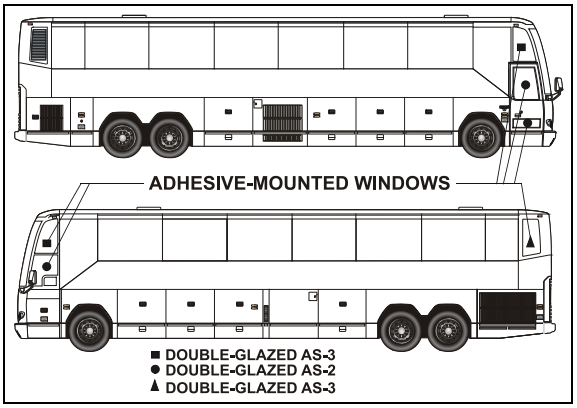


FIGURE 40: ADHESIVE-MOUNTED WINDOWS 18494

### 17.8.1 Glass Window Replacement

**Items Needed:**

- Scraper with new blade;
- Masking tape;
- Tremshield tape (Prevost #681089);
- Chix cloths (Prevost #682384);
- Isopropyl alcohol or enamel reducer or NAPA 6383 surface cleaner;
- Sika 205 cleaner;
- Sika 255 F.C. adhesive;
- Disposable vinyl gloves;

**⚠ WARNING**

Wear disposable vinyl gloves during this procedure. Do not smoke. Dispose of unused toxic material properly. Heed all warnings on product containers.

1. Remove old window glass and scrape off remaining material up to 1/16" to 1/8" (2 to 3 mm) thick.

*NOTE*

*Hardened adhesive will not remove easily. A new blade works best to remove all adhesive residue using care not to damage the fiber structure.*

2. Place the new window glass in the opening and center it to leave an even gap top and bottom, and from side to side.

*NOTE*

*Use small shims to raise the glass in proper position. Shims can be cut from the tremshield tape (*Figure 42*).*

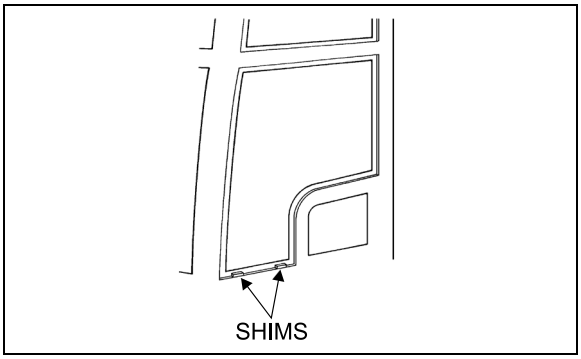


FIGURE 41: ADHESIVE-MOUNTED WINDOW 18079

3. Hold the window glass centered and have an assistant mark the inside contour of the opening on the glass with a china pencil. Remove glass and place it on a table with the pencil mark facing up.

4. Place masking tape on the inside surface of the glass to just cover the china pencil mark, leaving the outer surface exposed for the adhesive. This will make cleanup much easier. For ease of removal, do not overlap the tape at corners.

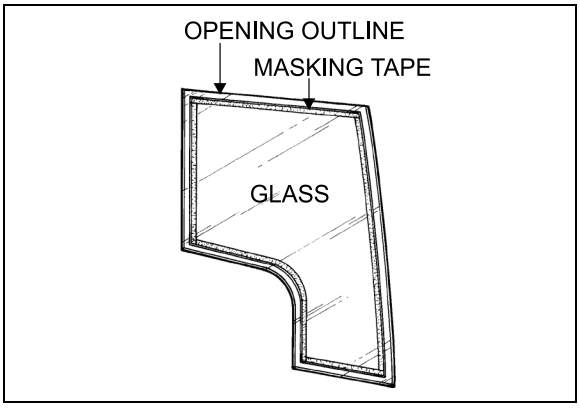


FIGURE 42: ADHESIVE-MOUNTED WINDOW 18080

5. Clean all around the window opening and the window glass edge with Sikaflex 205 (shake well before applying). Let dry 5-6 minutes minimum but no more than 8 hours.

**CAUTION**

There must be absolutely no silicone on glass or channel or Sikaflex 255 FC will not stick.

6. Put masking tape on the inner and outer contour of the window opening on the structure, approximately 1/16" (1,5 mm) from the edges of the contour.
7. Install Tremshield tape around the sealing surface of the window opening.

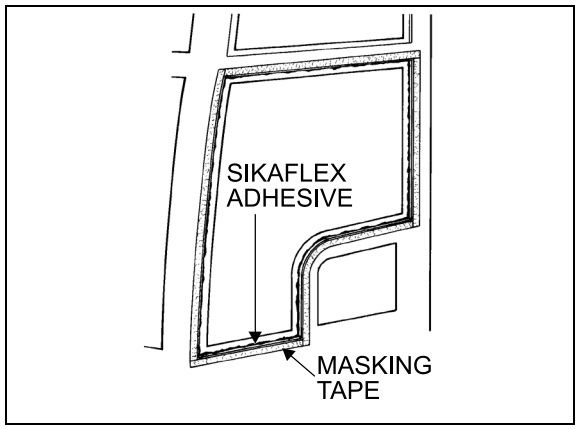


FIGURE 43: ADHESIVE-MOUNTED WINDOW 18081

8. Apply a generous bead of Sikaflex-255 FC polyurethane adhesive on the sealing surface around the window opening from outside the vehicle.

*NOTE*

*To ease applying of Sikaflex 255 FC, it may be heated to 86° F (30°C).*

*NOTE*

*Bead should touch the side surface of the window opening.*

9. Place shims correctly, and position window glass in the opening. Press firmly and evenly. Excess adhesive should flow out from behind glass.

*NOTE*

*Add adhesive in areas where overflow is minimal or if air bubbles are present.*

10. Smooth the adhesive joint using your finger (wear vinyl gloves). Remove excess material around both sides of the window as soon as possible before adhesive dries.

*NOTE*

*Remove most of the adhesive from the scraper or trowel with a rag, and then dip tool in solvent after each use for cleaning.*

**CAUTION**

Never use solvents to clean excess adhesive.

11. Remove masking tape at once, clamp window glass suitably and let dry overnight or at least 8 hours.
12. Spraying pure water on the joint will accelerate the drying process.

## 18. ELECTRIC AWNING WINDOW

The electric awning windows are connected directly on the batteries 24 V DC terminal block. As a result, they can be operated regardless of the state open or close of the master switch. However, the circuit is protected with fuse F41 (10A) located in the front service compartment.

### 18.1 OPERATION

Opening sequence: switch is set to the OPEN position. Window latch solenoid SOL1-A and SOL1-B are turned on along with M1 window motor. Once the latch is open, proximity switch PROX1 is de-activated, turning sol1-A and SOL1-B off.

Closing sequence: switch is set to the CLOSE position, turning on relay R1 which turns on M1 in reverse polarity, closing the window. Once the window is closed, PROX1 is activated, turning on SOL1-A and SOL1-B in reverse polarity latching the window closed.

## 18.2 WINDOW REMOVAL

Replacement awning window does not include a new motor. If in working order, transfer the motor of the replaced window to the replacement window. If not, the motor can be bought separately. When replacing the window, keep the components in working order as spare parts.

1. Push the vertical latch handle downwards to release the track and then open the window using the horizontal latch handle.
2. Take out the screw at the lower end of the track to let free the swiveling arm roller.
3. Unplug connector C7 & C9. Dismount the gas spring from the window.
4. Loosen the set screws #5 (Figure 46) (rotate the arm to get to the second set screw) and disengage the swiveling arm from the motor shaft extension.
5. Push the glass window out ninety degrees (90°).

**WARNING**

The window may fall out.

6. The window is free and can be unhooked.
7. Reverse procedure to install a new one.

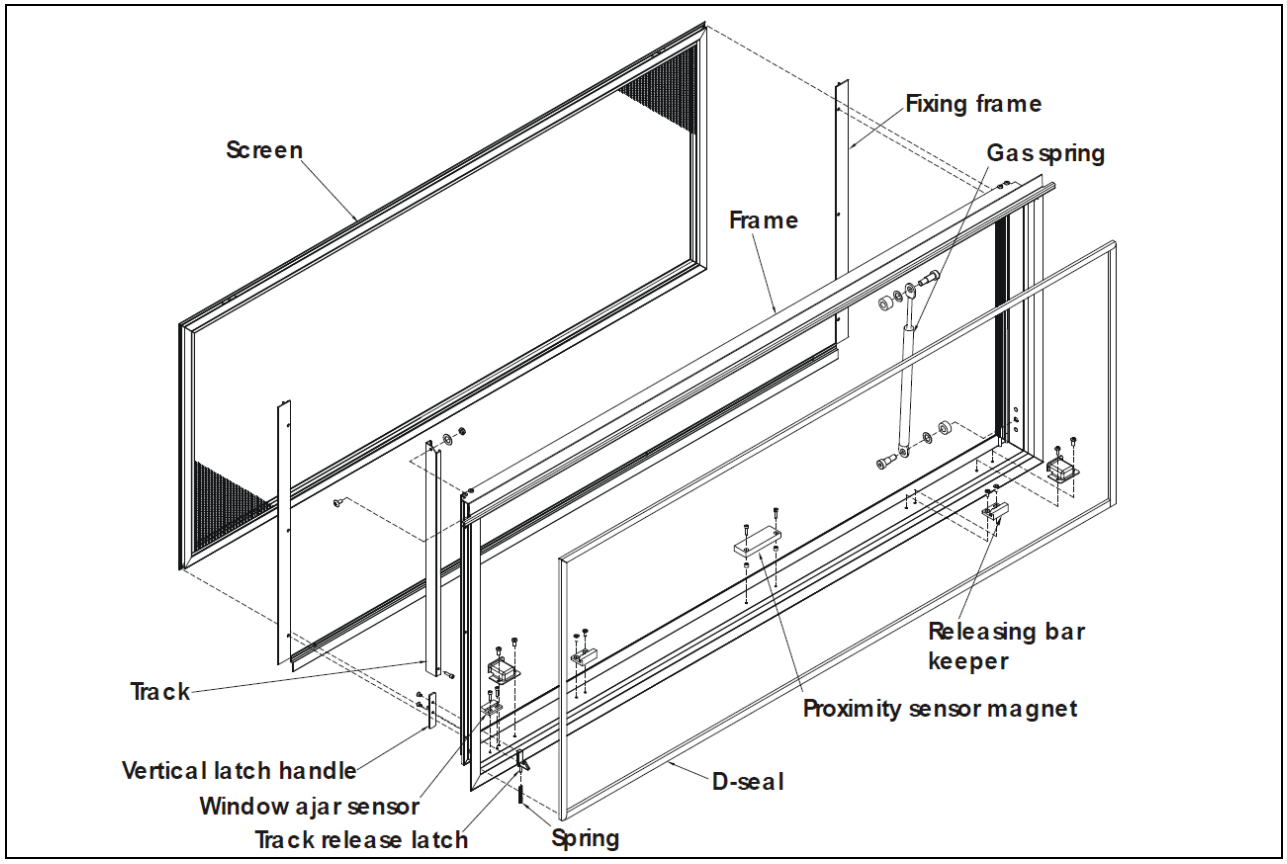


FIGURE 44: ELECTRIC AWNING WINDOW EXPLODED VIEW (FRAME) 18586

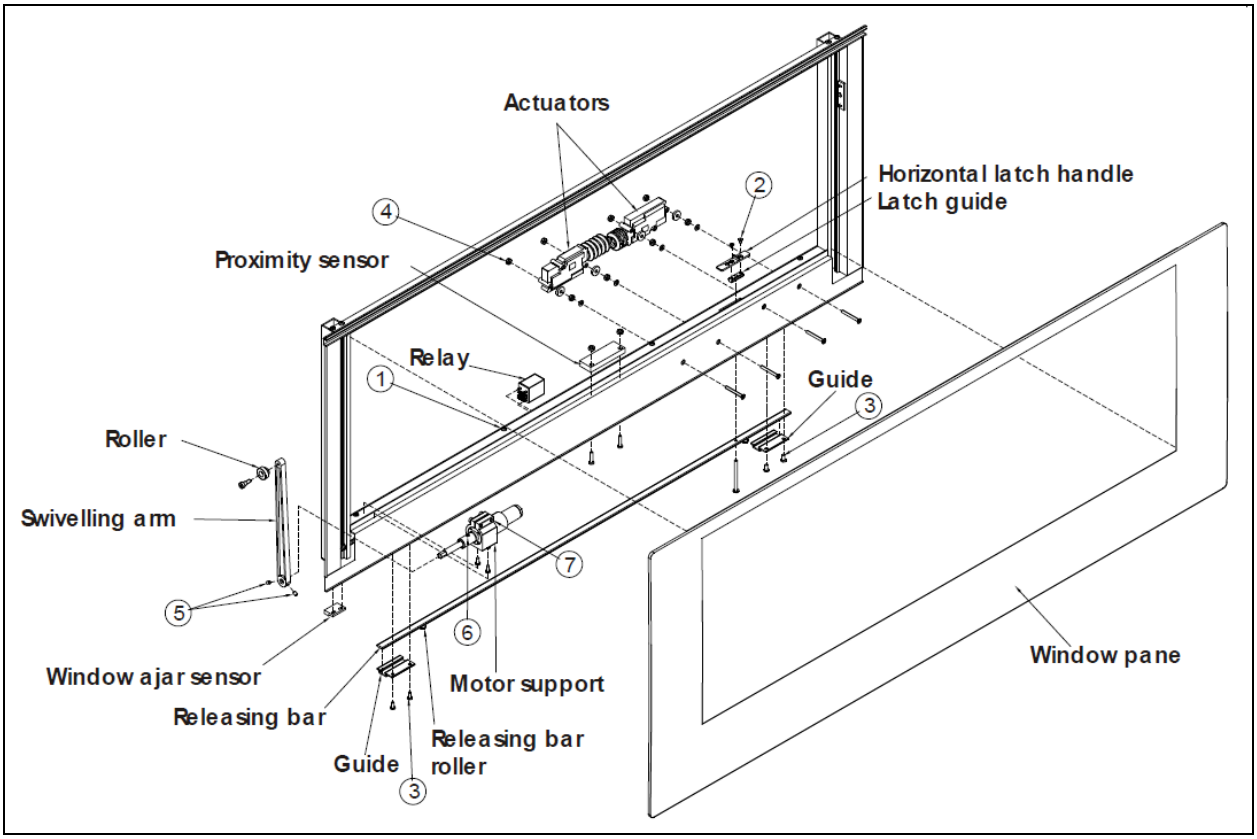


FIGURE 45: ELECTRIC AWNING WINDOW EXPLODED VIEW (SASH)
18583

## 18.3 ACTUATOR REPLACEMENT

1. Push the vertical latch handle downwards to release the track and then unlatch the window using the horizontal latch handle.
2. Remove actuator access cover by taking out screws #1 (8x).
3. Take out screws #2 (2x) and remove horizontal latch handle and guide.
4. Take out the guide screws #3 (4x) and remove releasing bar.
5. Unplug connector C3 or C4 from problem actuator, unscrew nuts #4 (2x) and remove the actuator.
6. Reverse operations for reinstallation.

## 18.4 MOTOR REPLACEMENT

1. Push the vertical latch handle downwards to release the track and then unlatch the window using the horizontal latch handle
2. Take out the screw at the lower end of the track to let free the swiveling arm roller.
3. Remove actuator access cover by taking out screws #1 (8x).
4. Loosen the set screws #5 (rotate the arm to get to the second set screw) and disengage the swiveling arm from the motor shaft extension.
5. Unplug motor connector C2 and dismount motor and support assembly.
6. The shaft extension is glued to the motor shaft. It has to be heated to break the binding to permit removal. Loosen set screw #6 and remove the shaft extension. Also loosen screw #7 and remove motor from the support.
7. Reverse operations for reinstallation.

| ELECTRIC AWNING WINDOW – CONVERTER CHECKLIST | |
|---|---|
| Check the electrical circuit & proximity sensor | A: The latching system will not operate without power.<br>Is there electrical power to the latching circuit? The horizontal latch handle, on the sill sash will be seen to move if there is power on this circuit, or it can be checked with an electrical tester. If there is no power to this circuit when the window is closed and either rocker switch are switched "ON", there is a problem with the electrical system.<br>B: The Proximity Sensor on the sash may not be switching power to the latching circuit if the magnet is not getting close enough to the switch OR the Proximity Sensor may be broken (or stuck in one position).<br>Is the proximity sensor switching when the window is closed? |
| Check the release force required to operate the horizontal latch handle | A: If the pull force required to move the latch is more than 20lbs the window will not latch properly. Average pull force during testing by manufacturer is 12lbs -15lbs.<br>What is the force required to release the handle? Check using a force gauge (same test done by manufacturer). |
| Check Installation | A: If the window is too tightly installed OR if the sequence for tightening the clamping frame screws Is incorrect the window may not close properly.<br>Was the window installed correctly?<br>Was the correct sequence (see below) used when tightening the clamping frame screws?<br>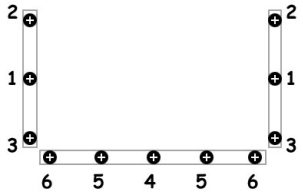<br><br>B: Removing the shipping blocks before the window is installed can create major problems.<br>Were the shipping blocks in place during installation?<br>C: Failure to remove the shipping blocks after installation can create interference between sash and frame.<br>Have the shipping blocks been removed after installation?<br>D: The window is misaligned or not installed squarely.<br>Is there interference with any coach parts?<br>Is there proper clearance between the bottom of the outer glass and the belt-line trim / seal? |
| Check for missing parts or misaligned parts | A: The frame and sash are misaligned.<br>Is there any interference between the sash and frame?<br>Is there clearance between the sash and the rocker switch covers?<br>B: Releasing bar guides are missing.<br>Check that the releasing bar guides are installed. There should be 4 installed on H windows, and 3 installed on XL2 windows. |

## 19. ELECTRIC SLIDING WINDOW

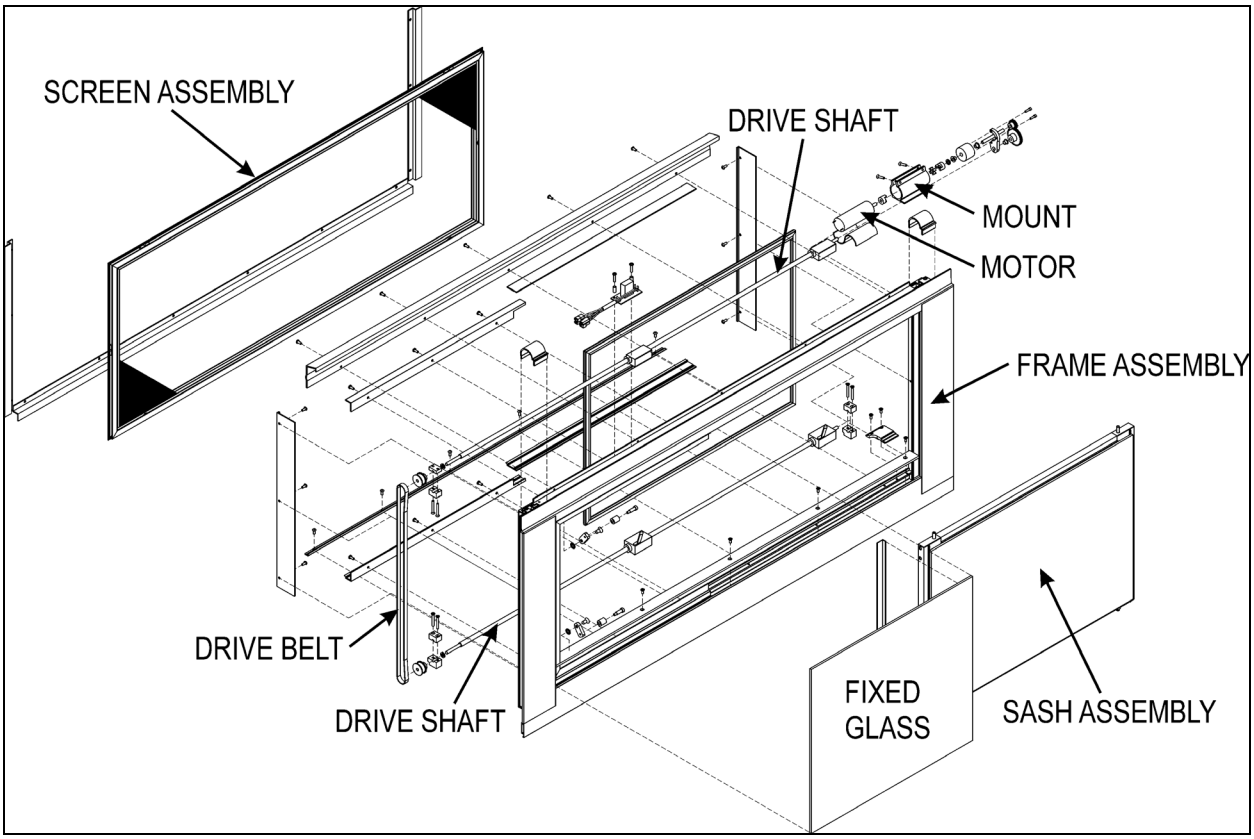


FIGURE 46: ELECTRIC SLIDING WINDOW EXPLODED VIEW

### Sash Removal

1. Remove the Screen Assembly
2. Pull down on both release latches simultaneously and rotate the sash inwards approximately 10 degrees.(Figure 48)



FIGURE 47: REMOVING THE SASH

3. Lift the sash up and out to disengage the bottom of the sash from the window frame. (Figure 49)



FIGURE 48: DISENGAGING THE BOTTOM OF THE SASH

**Installation**

1. Align the leading edge of the slot on the lower cam follower block with the sash stop. Use the power toggle switch to obtain the correct alignment. (Figure 50)

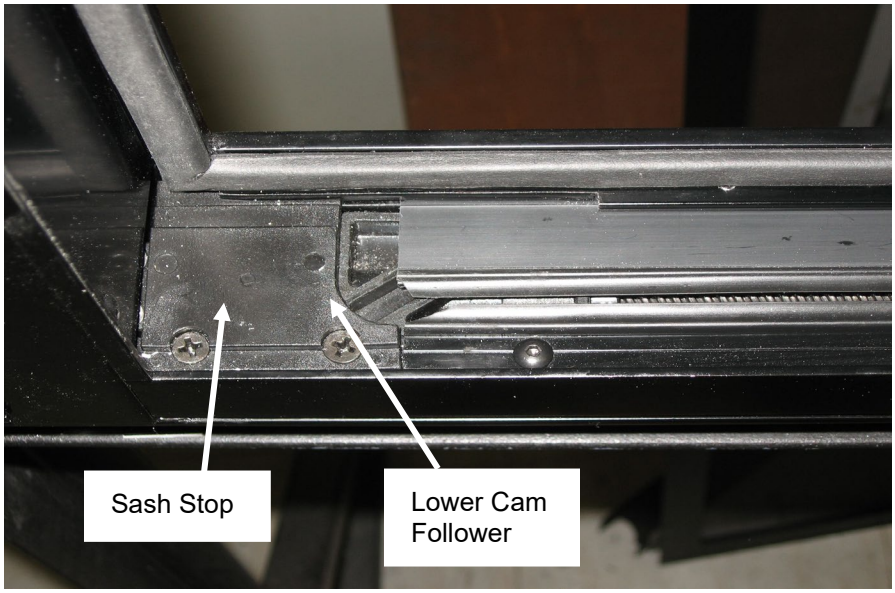


FIGURE 49: PROPER ALIGNMENT

2. Position the left hand lower corner of the sash over the front cam follower block (Figure 51)

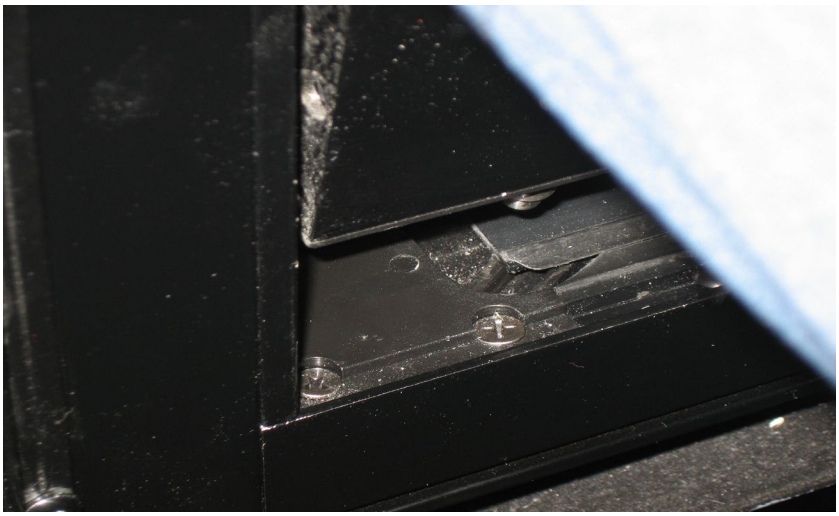

FIGURE 50: POSITIONING THE LOWER LEFT CORNER OF THE SASH

3. Engage the sash pin with the leading edge of the slot of the cam follower block. Do the same at the rear of the sash.
4. Pull down on the release latches and rotate the sash inwards until it is parallel with the window frame.
5. Release the latches to engage the latch pins with the upper cam follower blocks.
6. Confirm that both latches are in the closed (latched) position. The upper edge of the latch opening must be aligned with upper edge of the sash opening (Figure 52)

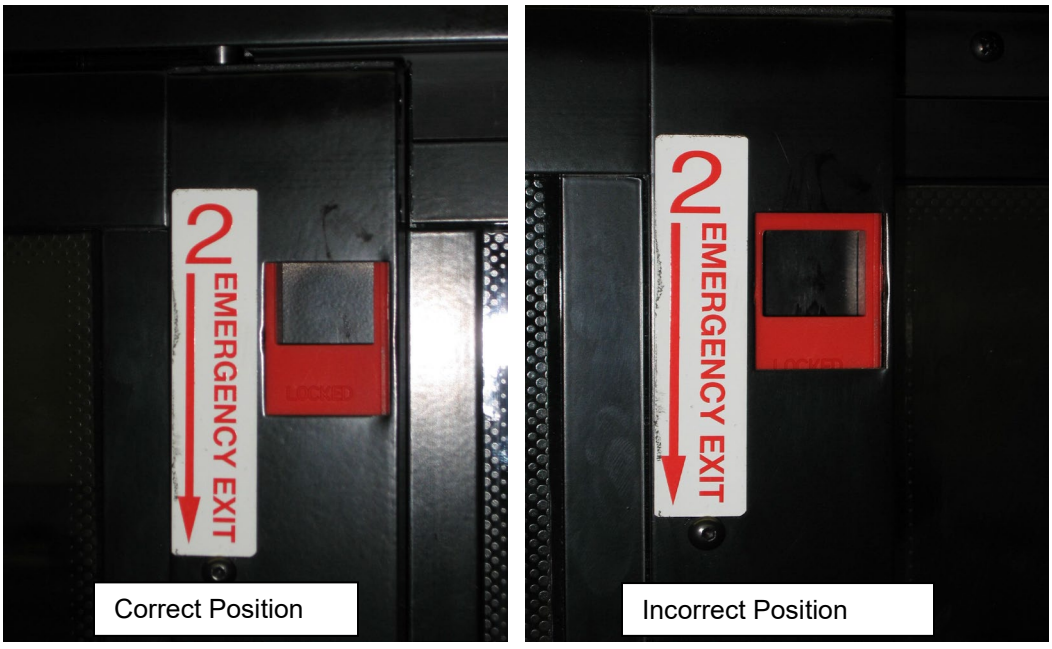


FIGURE 51: RELEASE LATCH PROPER POSITION

7. * Failure to confirm this step may lead to the sash becoming disengaged with the frame and could result in personal injury.
8. Operate the window to confirm that it opens and closes properly.

Install the screen assembly.

## 20. WINDSHIELD

The windshield is single-glazed AS-1 laminated safety glass. Each windshield is secured to a flange around the front structure opening by a one-piece black rubber extruded gasket

A low profile gasket with a single locking strip is now used on our vehicles.

Proper installation of the windshield ensures watertightness. Since glass varies in fit depending on the supplier, we recommend installing a replacement windshield obtained from Prevost Parts to ensure proper fit.

| *NOTE* |
| --- |
| *For more information on windshield removal or installation, a webinar is available from Prevost.* |

### 20.1 REMOVAL

**WARNING**

Removal and installation must be performed by more than one person. Wear protective gloves when handling the windshield.

1. Remove the wiper arms of the affected windshield.
2. To ease damaged windshield removal, remove the rubber locking strips from the rubber extrusion.

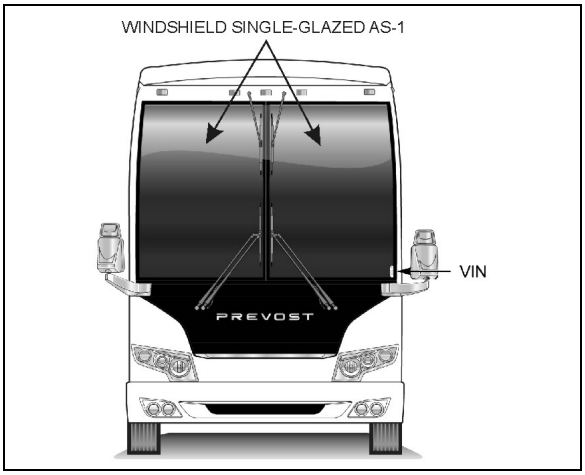


FIGURE 52: WINDSHIELD 18495A

3. From inside of vehicle, push against the top L.H. side corner of windshield for the removal of a R.H. side windshield. If the L.H. side windshield had to be removed, you would have to push against the top R.H. side corner.

| *NOTE* |
| --- |
| *We are referring to the L.H. and R.H. side as viewed from the inside of the vehicle.* |

4. At the same time, another person gradually lifts the rubber lip from the vehicle exterior using a plastic spatula from top to bottom.
5. Remove the entire damaged windshield and broken glass if applicable.
6. Clean the rubber extrusion channel with Standox anti-silicone. Refer to heading *"Windshield Installation"* in this section for instructions on how to reinstall windshield.

| *NOTE* |
| --- |
| *If the rubber extrusion is damaged, remove and discard it, then clean the windshield opening with Standox anti-silicone. Refer to heading "Installation of Rubber Extrusion" in this section for complete instructions.* |

### 20.2 WINDSHIELD INSTALLATION

This procedure is provided as a general guideline to install a new windshield with a new gasket on **a clean structure**. The method may vary depending on material aging and condition.

**WARNING**

Removal and installation must be performed by more than one person. Wear protective gloves when handling the windshield.

**CAUTION**

The rubber extrusion securing the windshield in the opening fits correctly in only one position. Find the correct position of the rubber extrusion now and make reference marks with a china marker to avoid searching for the correct position later in the procedure.

#### 20.2.1 Preparation

1. Clean the area shown on the image below with Standox anti-silicone and let dry.

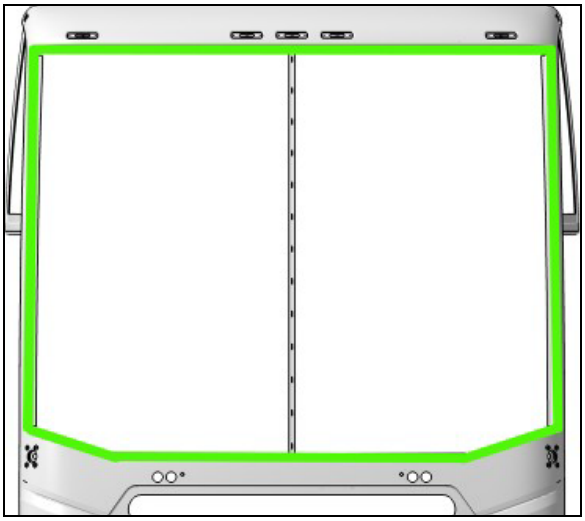

FIGURE 53

2. Clean the rubber extrusion groove (Figure 55) that will be in contact with the front fiber panel on the 3 sides and on a length of 8" at the bottom, both sides (Figure 56).

   A white powder may remain in the groove of new rubber extrusion. Do not leave the white powder in the groove.

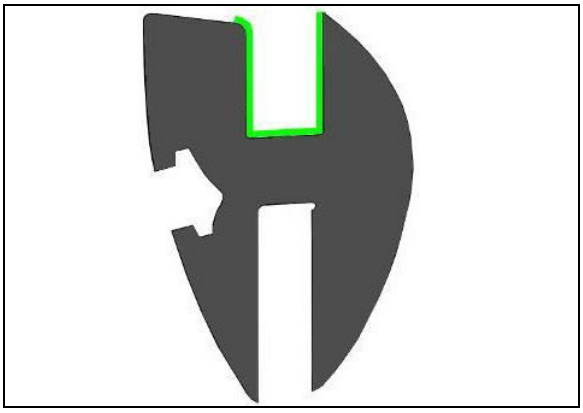

FIGURE 54

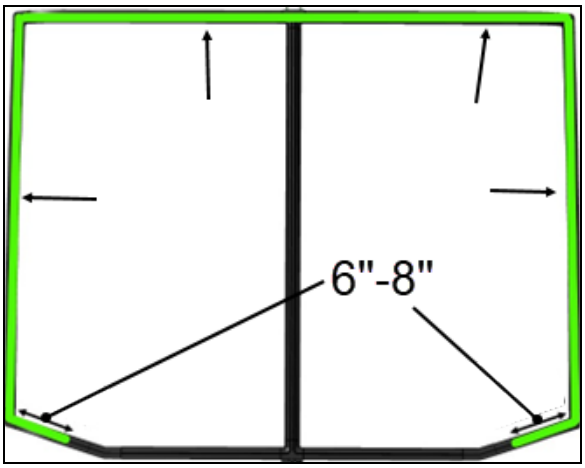


FIGURE 55

3. Apply a 1/8" (3 mm) bead of black Simson 70-03 sealant at the bottom of the groove (Figure 57) that will be in contact with the front fiber panel on the 3 sides and on a length of 8" at the bottom, both sides (Figure 56).

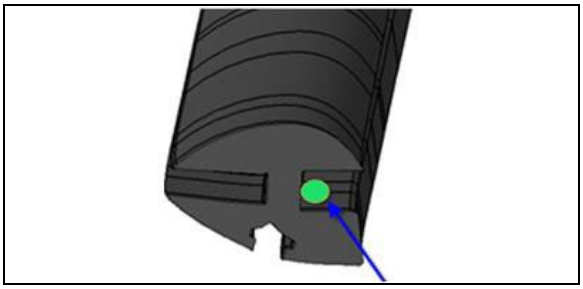

FIGURE 56: BEAD OF BLACK SIMSON 70-03 SEALANT

4. Apply a 1/8" (3 mm) bead of black Simson 70-03 sealant on the fiber panel as shown (Figure 58).

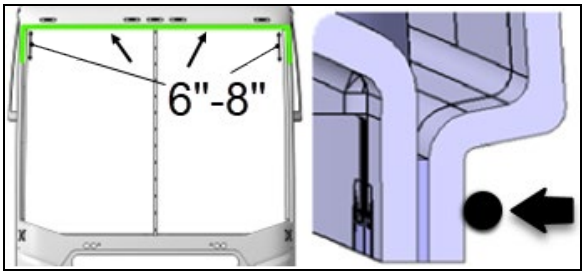


FIGURE 57: BEAD OF BLACK SIMSON 70-03 SEALANT

5. Spread the sealant on the fiber surface as shown (Figure 59).

   **Thickness 3/64”- 5/64” (1 mm – 2 mm)**

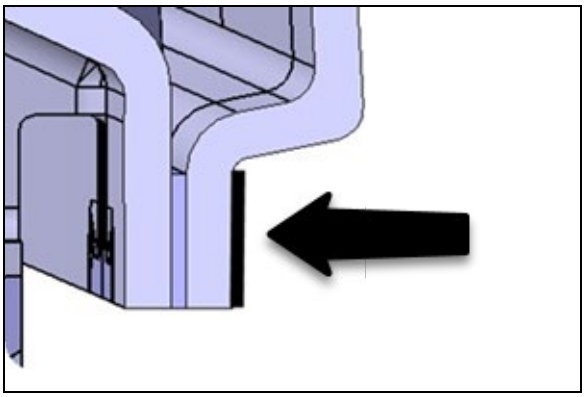

FIGURE 58

20.2.2 Installation of rubber extrusion

1. Begin installation of the rubber extrusion at the upper center (item 1, Figure 60). Make sure it is centered in relation to the vertical member.

**Do not use soapy water**

2. Insert the rubber extrusion at the location identified #2 (Figure 60).

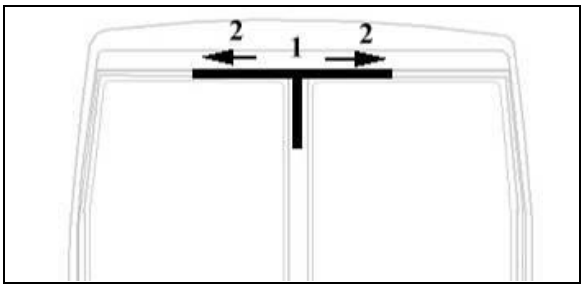


FIGURE 59

3. Bend the corners and insert at location identified #3 (Figure 61).

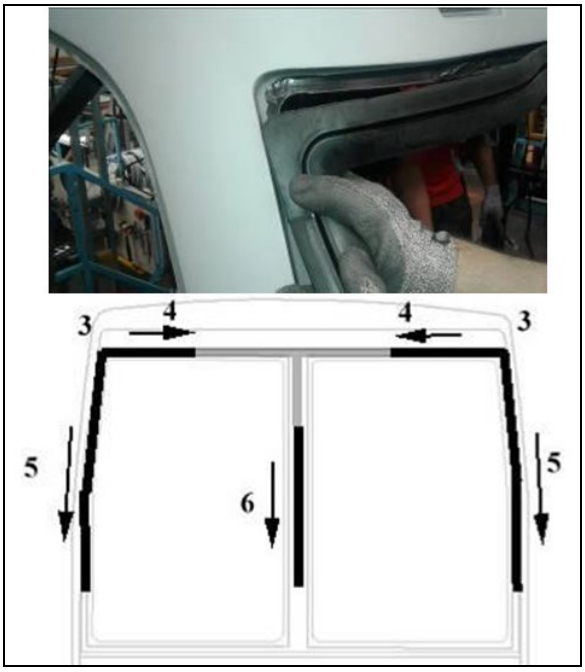


FIGURE 60

4. Insert the rubber extrusion at the location identified #4 (Figure 61).
5. Insert the rubber extrusion at the location identified #5 (Figure 61).
6. Insert the rubber extrusion at the location identified #6 (Figure 61). Use of soapy water is allowed for this section step.
7. Apply soapy water. Insert the rubber extrusion at the location identified #7 (Figure 62). Make sure it is centered in relation to the vertical member.
8. Insert the rubber extrusion at the location identified #8 (Figure 62).

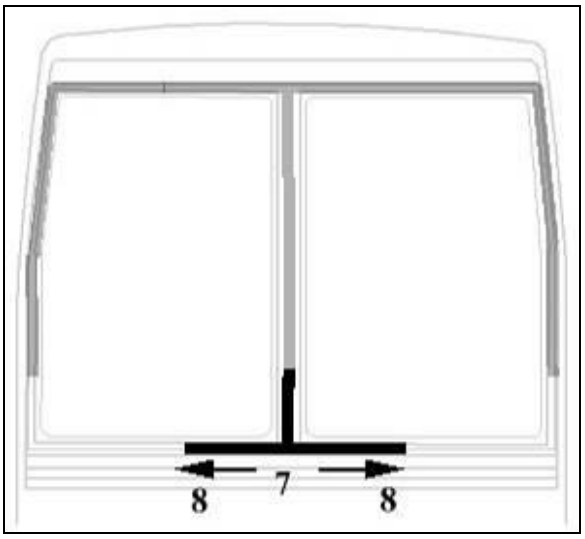


FIGURE 61

9. Bend the corners and insert at location identified #9 (Figure 63).

**Do not use soapy water**

10. Insert the rubber extrusion at the location identified #10 (Figure 63).
11. Insert the rubber extrusion at the location identified #11 (Figure 63).

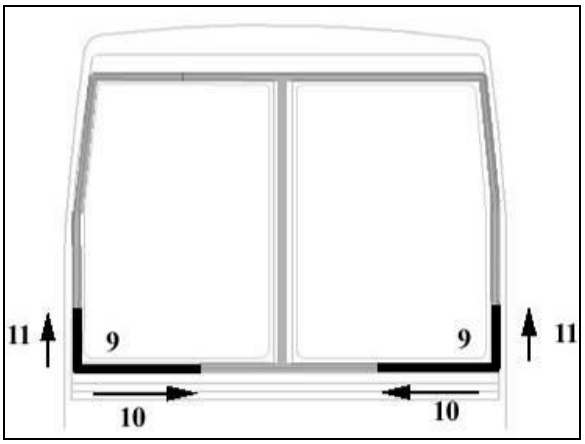


FIGURE 62

12. Apply masking tape (Figure 64 & Figure 65).
13. Wait for Simson adhesive to bond



FIGURE 63: MASKING TAPE APPLICATION

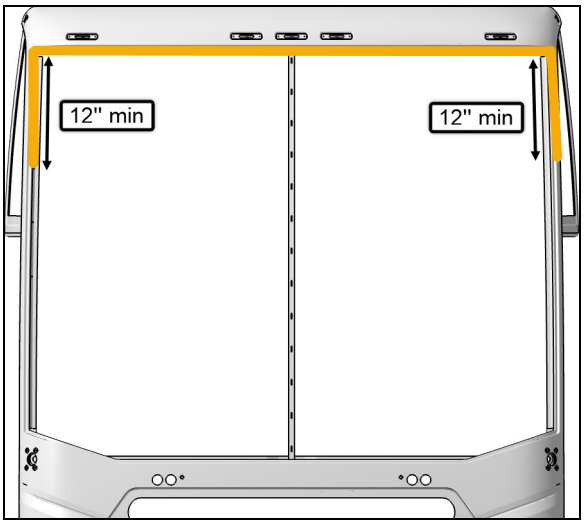


FIGURE 64: MASKING TAPE APPLICATION

20.2.3 Windshield insertion

1. Spray the groove at the bottom of the rubber extrusion with soapy water to ease windshield insertion (Figure 66).

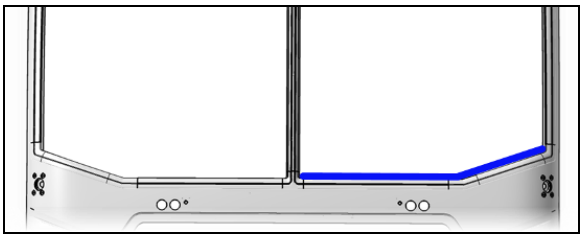

FIGURE 65

2. Slide windshield into rubber extrusion groove starting at the bottom Figure 67. Using a plastic spatula, move the rubber extrusion lip aside to gradually insert the windshield into the groove.

*NOTE*

*Spray soapy water on a regular basis to ease windshield insertion.*

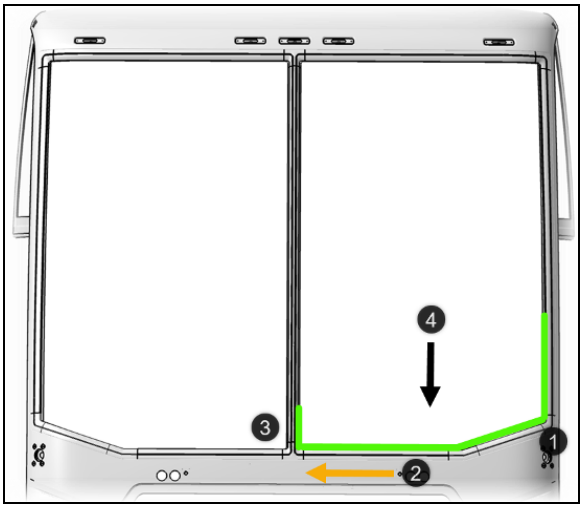


FIGURE 66

***NOTE***

*Make sure windshield bottom edge is well inserted into the rubber extrusion groove before proceeding with the sides.*

4. Then, working from both sides of windshield bottom to top, gradually move the rubber extrusion lip aside to insert the windshield into the groove. Use also soapy water on the inside of vehicle to insert the windshield into the rubber gasket groove.

5. Check from the inside, that the gasket has remained in place.

6. Insert the top curved corner then finish with the top of windshield.

### 20.2.4 Locking strip insertion

***NOTE***

*Locking strips retract with time. Install ends of locking strips as tight as possible in the V-channel.*

1. Spray locking strip and rubber extrusion groove generously with soapy water.

2. Insert the locking strip into insertion tool 680755.




FIGURE 67: LOCKING STRIP INSERTION TOOL 680755

3. Insert the strip into the rubber extrusion groove. Start in the middle, at the upper end of the windshield (Figure 70).

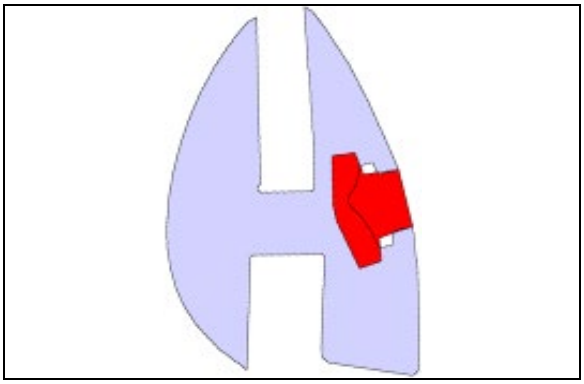

FIGURE 68: WINDSHIELD INSTALLATION SIDE VIEW

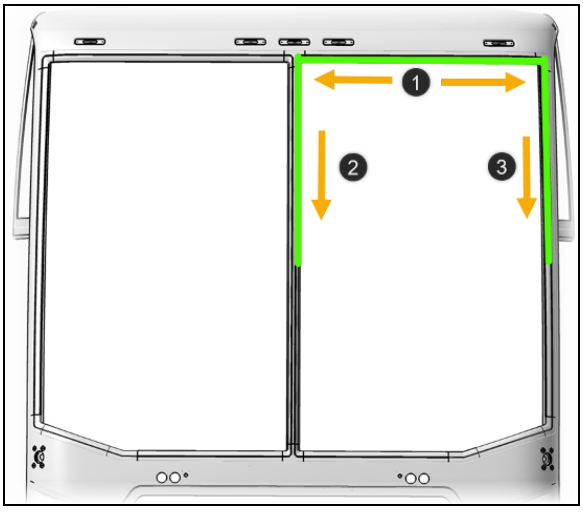


FIGURE 69

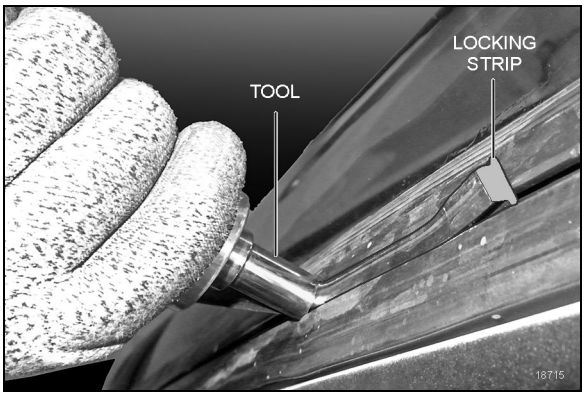


FIGURE 70

4. Carry on with the insertion of the strip into the rubber extrusion groove (Figure 72).

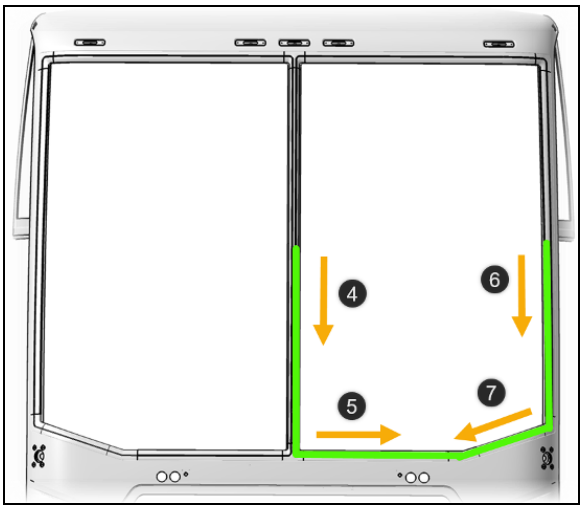


FIGURE 71

5. When strip insertion is almost complete, cut end at a 45° angle leaving ¼" of excess length to prevent contraction over time then insert strip into groove.

## 21. BODY PANELS AND DOORS

Each of the doors should be checked for proper operation. This includes latching. Also, inspect each of the doors for damage, missing, or loose parts. Repair or replace those parts as needed.

Unless otherwise noted, body panels and doors should be aligned and centered with surrounding panels. In general, a gap of ¼ inch (6 mm) is desirable between panels. Refer to Figure 73 for specified gaps.

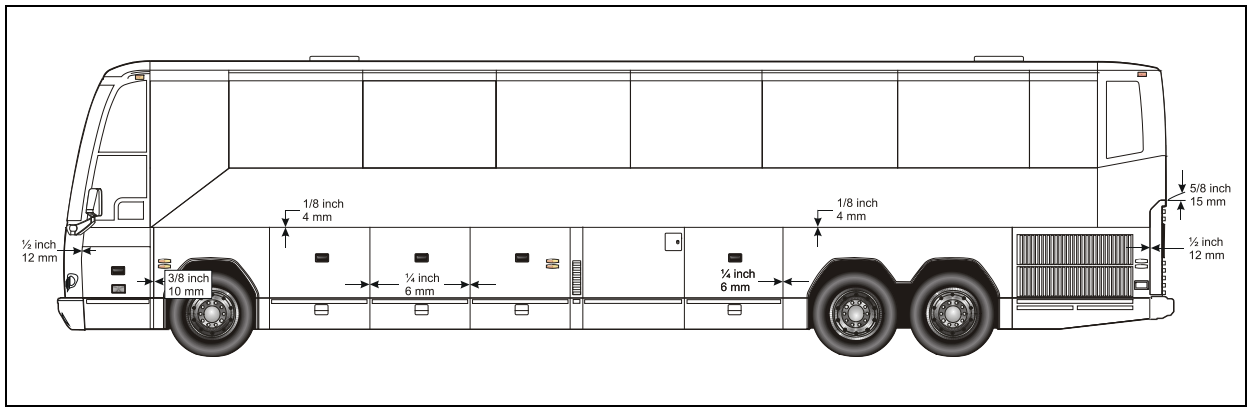


FIGURE 72: BODY PANEL SPACING 18496

## 22. WHEELCHAIR LIFT ACCESS DOOR

### 22.1 INSTALLATION

**CAUTION**

Install the sliding door onto a suitable lifting device that will allow proper lifting and positioning.

1. Lift and move the sliding door near the opening.
2. Push the door into the opening making sure the positioning lugs are properly inserted into their housing then pivot the main hinge and secure the door using 4 bolts. Do not fully tighten the bolts yet.
3. Remove the lifting device from the sliding door.

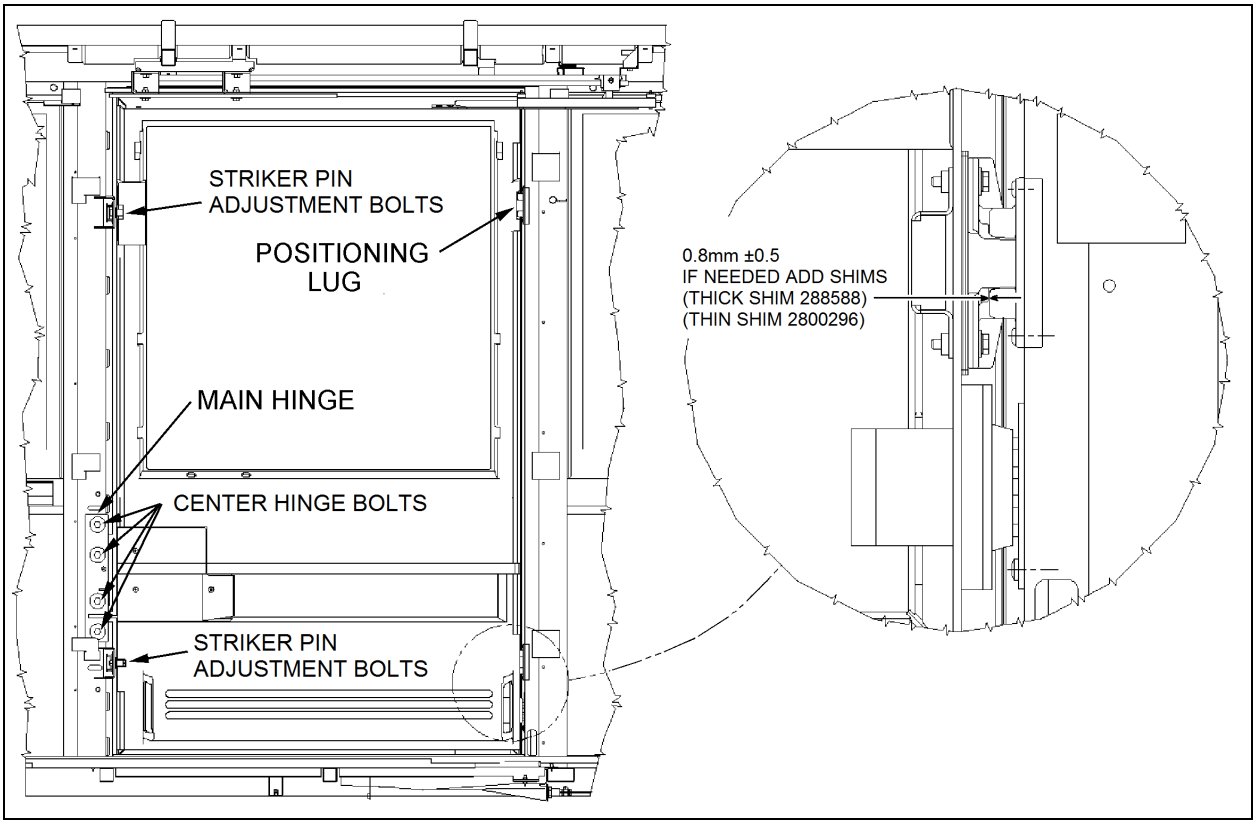


FIGURE 73: WCL SLIDING DOOR INSTALLATION 18739

### 22.2 ADJUSTMENT

1. Adjust sliding door height with reference to the side panels and windows.
2. Slide the top rail into the upper arm then bolt the rail to the structure. Do not fully tighten (Refer to Figure 75).

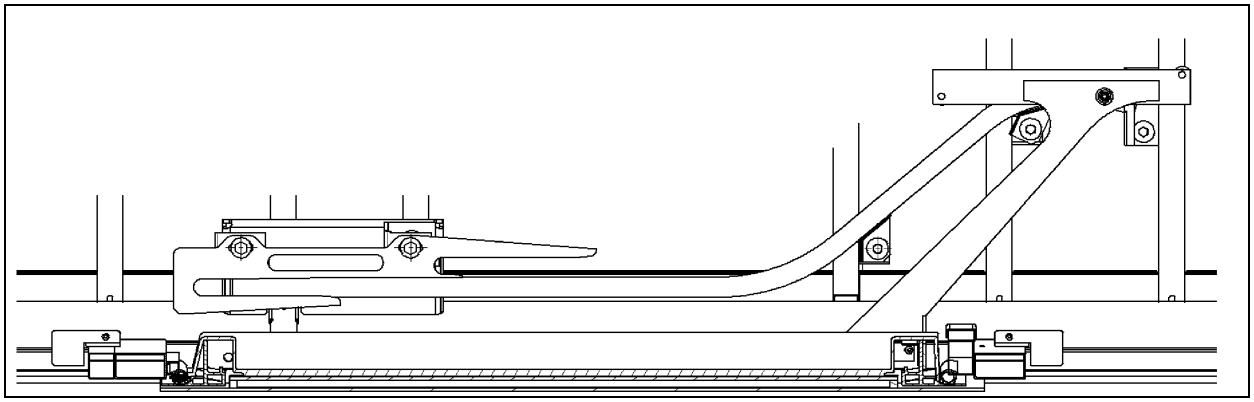

FIGURE 74: WCL UPPER ARM AND RAIL

3. Pull the door in or push from the outside to adjust the door with reference to the vehicle outside surface.
4. - Unfasten the upper arm bolt located on the door side.
   - Position the top rail at 3mm from the ceiling bracket.
   - Force the upper arm down then tighten the upper arm fixing bolt.
   - Pull the upper rail towards the inside in order to remove the play between the roller and the upper rail then tighten the rail fixing bolt at the back.
   - Push the lower rail towards the outside in order to remove the play between the roller and the lower rail then tighten the rail fixing bolt at the back.

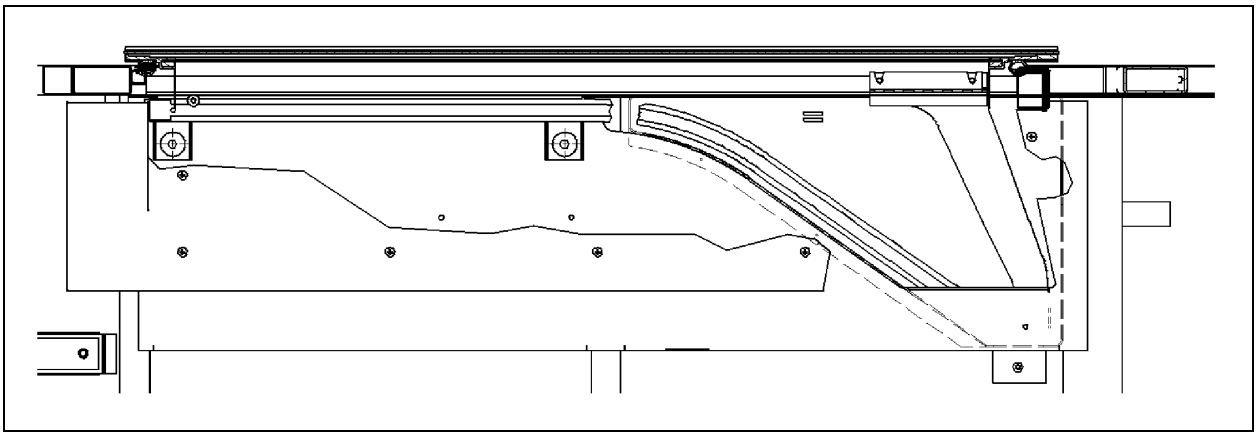

FIGURE 75: WCL LOWER RAIL INSTALLATION

5. Adjust the gap between the positioning lugs and their housing, required gap: 0.5 – 1.5mm. Add shims underneath the lugs to get the proper adjustment.
6. Take away the plays from the upper arm assembly by lifting the main hinge using a crowbar. Tighten the main hinge bolts

**TORQUE: 31-38 lb-ft (42-52 Nm)**

| *NOTE* |
| --- |
| *Do not exert too much force to lift the door.* |

7. Open WCL sliding door completely.

8. - Pull the upper rail towards the inside in order to remove the play between the roller and rail then bolt the rail at front and center. Add some shims if necessary between the rail and the structure before tightening the bolts.
   - Push the lower rail towards the outside of the vehicle in order to remove the play between the roller and rail then bolt the rail at front and center. Make sure the rollers stay in contact with the support when starting to close the door.
9. Adjust the distance between the bottom of the guide and the roller when the door is completely open. Required distance: 2 – 3mm. Make sure the roller stay in contact with the guide.
10. Install and adjust striker pins.

**TORQUE: 54-66 lb-ft (73-89 Nm)**

| *NOTE* |
| --- |
| *Make sure that a 2mm gap exists between the door structure and the striker.* |

11. Adjust latches releasing, the two latches must open simultaneously.

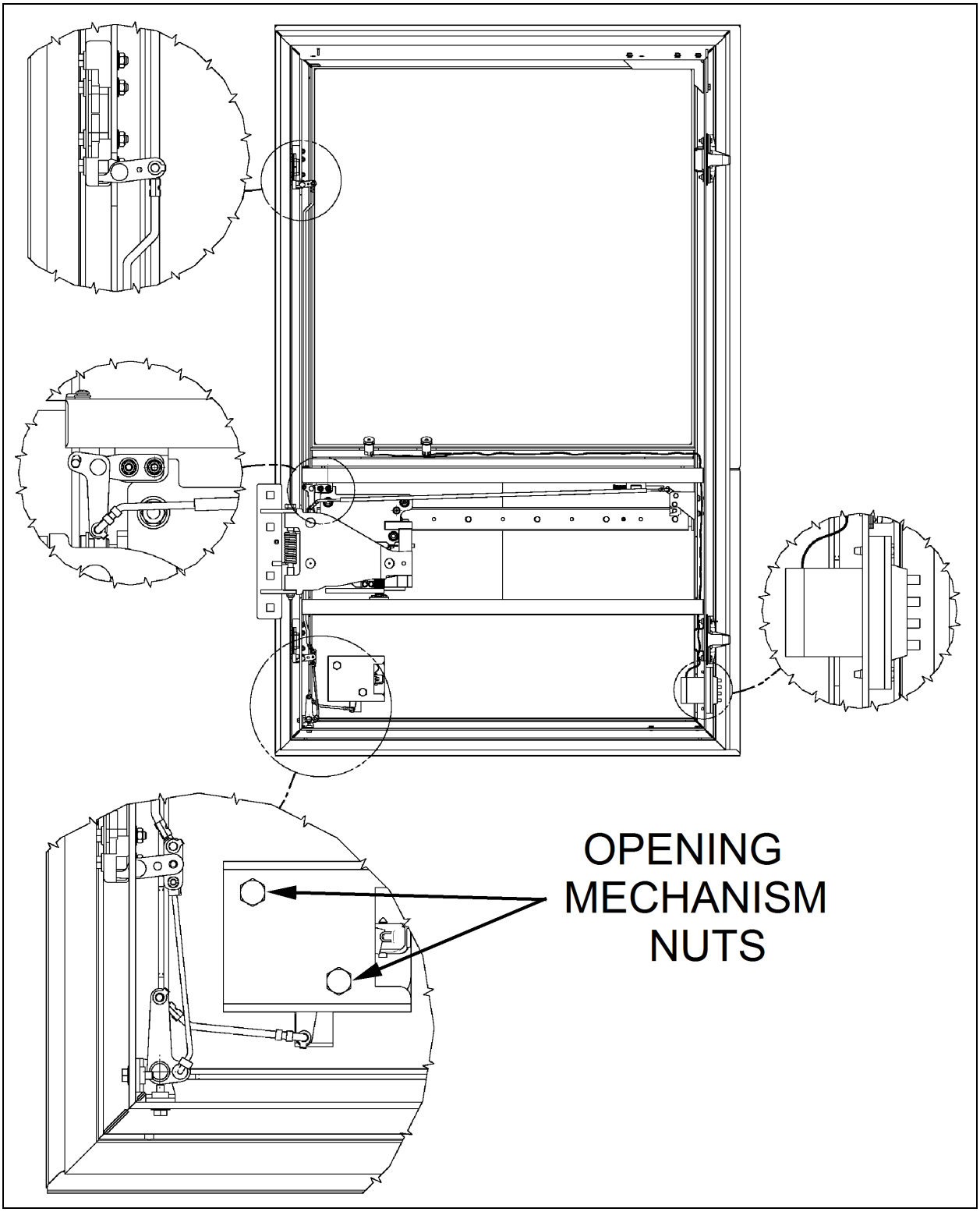


FIGURE 76: WCL SLIDING DOOR OPENING MECHANISM 18740

## 23. BAGGAGE COMPARTMENT DOORS

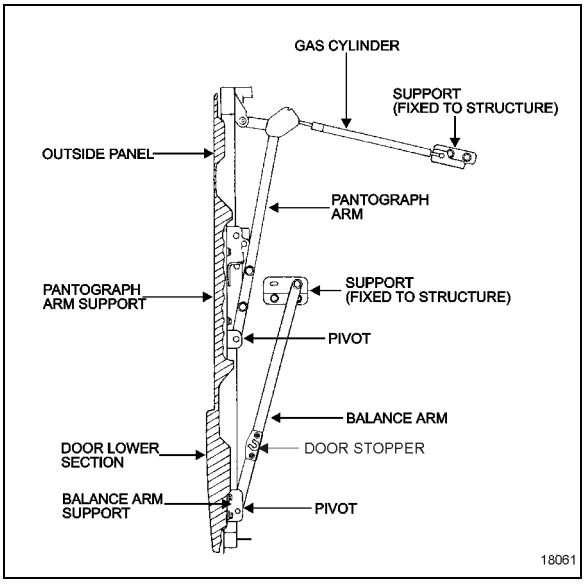


FIGURE 77: BAGGAGE COMPARTMENT DOOR

There are 6 pantograph doors serving as baggage compartment doors on the H3-41, while there are 8 on the H3-45 and the V.I.P (depending on options, VIP model may have even more pantograph doors). Each of these doors is of identical design. A centrally mounted, key-lockable door handle unlatches the door which can then be pulled out and raised up in a path parallel to the side of the vehicle. The door is held in open position by two fully extended gas-charged cylinders, giving clear access to the opening of the baggage compartment.

From its fully open position, the door can be closed by pulling down on the door panel, and letting go when you sense the door will close on its own. The door will easily hinge its way back in the contour of the compartment opening and will be held closed by two latches. Each door can be opened by lifting the centrally mounted handle to unlatch the door and lifting it all the way up. If the door does not remain in the fully open position, one or both gas cylinders on that door is (are) defective. To test the cylinders, first support the door in the fully open position with proper equipment. Disconnect the rod end of one cylinder and try to retract the rod. If strong resistance is felt, the gas cylinder is in good condition and can be reinstalled. If the rod retracts with little effort, the cylinder is defective and should be replaced at once. Test the other cylinder on that door the same way.

*NOTE*

*In case of malfunctioning or in specific situations, use door stoppers to secure the door in the open position.*

### 23.1 PANTOGRAPH ADJUSTMENT

**WARNING**

Park vehicle safely, apply parking brake, stop engine and set batteries master switches to the “OFF” position prior to working on the vehicle.

*NOTE*

*Refer, if needed, to* Figure 78 *for identification of door components.*

If the door bends when opening or if pantograph does not function properly, it is probably because the pantograph arms are misadjusted.

Measure distance between a pantograph arm end and a straight edge resting on structure. Repeat procedure for the other arm. The distance on each side should be equal. If not, bend appropriate arm until desired measure is obtained (Figure 80 & Figure 81).

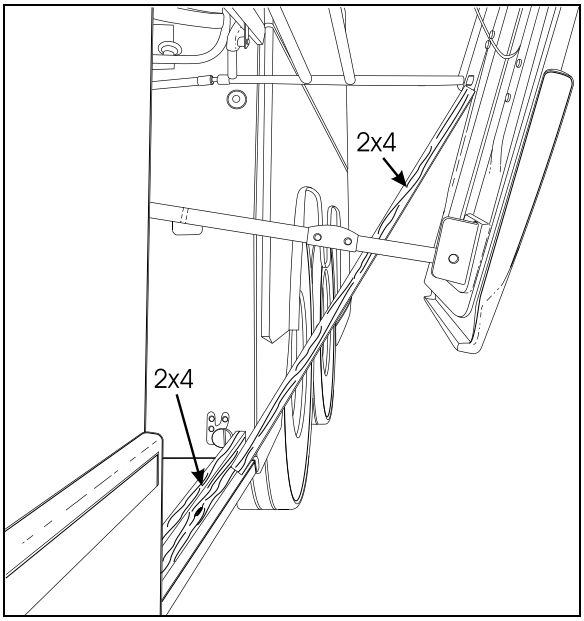


FIGURE 78: PANTOGRAPH ADJUSTMENT

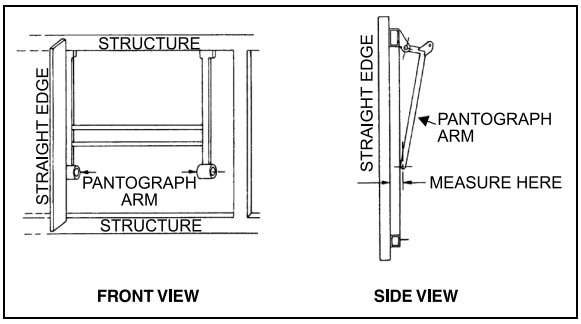


FIGURE 79: PANTOGRAPH DOOR ADJUSTMENT 18062

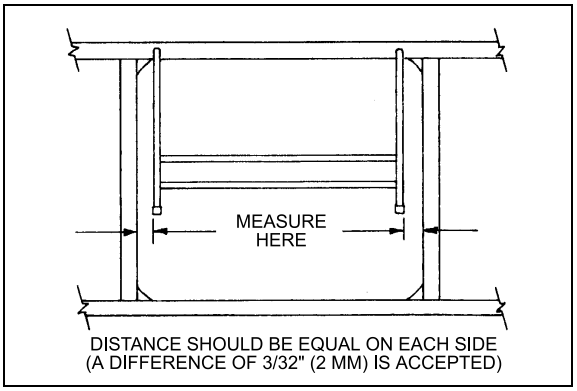


FIGURE 80: PANTOGRAPH DOOR ADJUSTMENT 18063

Doors can be adjusted by bending the arms as follows:

1. Open the door halfway up.
2. Install a piece of wood (a 2x4 will do) along the bottom of the baggage compartment. Arrange so it rests against the striker pins and is prevented from sliding further in the compartment.
3. Install another piece of 2x4 between the first piece and the bottom of the pivot of the lowest (or shortest) pantograph arm, (Figure 79).
4. Pull down on the opposite side of the door to bend the door around the pantograph arm pivot (prevented from moving by the 2x4).
5. When the door is straight, remove the 2x4's and check door operation and fit. A difference of 3/32" (2mm) between both sides is accepted (Figure 81).
6. Repeat as necessary.

## 24. DOOR HANDLES

Compartment door handles are non-serviceable. When a door handle has to be removed, proceed as follows:

1. Unscrew the four (4) retaining screws;
2. Remove the two (2) wires connecting the handle to the door latch locking mechanisms.
3. To install a new handle, reverse the procedure.

## 25. ENGINE COMPARTMENT DOOR

The engine compartment rear door (Figure 82) rises in the same way as the baggage compartment doors and is held open by three gas-charged cylinders (Prevost # 980024). The engine compartment opens by lifting a handle accessed from the R.H. side of the engine compartment.

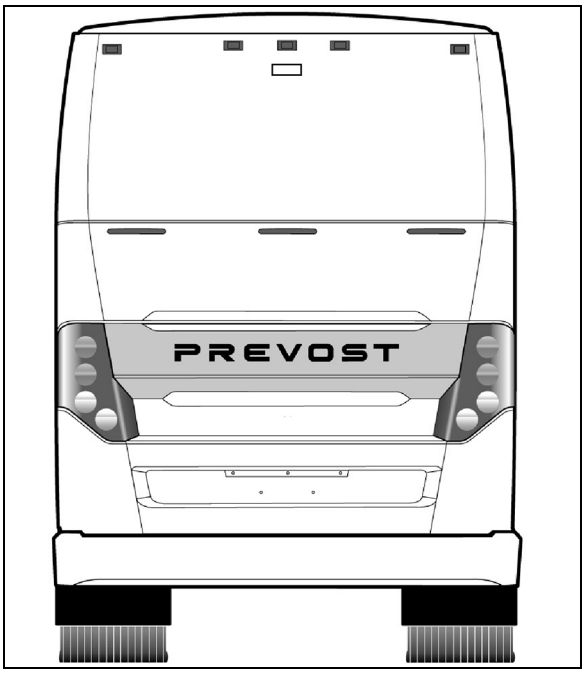


FIGURE 81: ENGINE COMPARTMENT DOOR 18747

When pushed up, the handle pulls on two steel wires, each steel wire connected to its respective door latch locking the rear door. Both steel wires are looped at the release handle and can be adjusted to proper length to ensure positive release of both catches when the handle is raised.

### 25.1 ENGINE DOOR ADJUSTMENT

As indicated above, the engine door mechanism is similar to the baggage door mechanism using a pantograph and 3 gas cylinders to move the door up and down.

For a minor horizontal or vertical adjustment:

1. Open the door mid-height;

2. With the help of an assistant, pull down one side of door while holding up the other side to bend the pantograph arms in the desired position;
3. Close the door and check the top edge parallelism between the door and the vehicle end cap structure. The space may be somewhere between 10 and 15 mm;
4. Repeat until satisfied.

### 25.2 MINOR TOP EDGE DEPTH ADJUSTMENT

Two rubber spring loaded stops may be adjusted. They are located near the top edge on each side of the rear door.

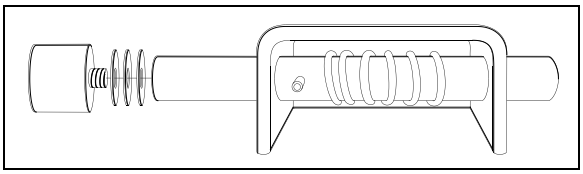

FIGURE 82: DOOR STOP 18324

To adjust:

1. Open door.
2. Unscrew rubber stop.
3. Add or remove washers as needed.
4. Firmly screw back rubber stop.

### 25.3 MINOR LOWER EDGE DEPTH ADJUSTMENT:

1. Open door.
2. Slightly loosen the striker pins on each side of door.
3. Using a hammer, strike striker pin gently in the desired direction (in or out).
4. Close the door slowly and check fit.
5. Repeat 3 and 4 to adjust the other striker pin.
6. When door depth is completed on the four corners, both vertical door sides should be parallel to the vehicle body structure.
7. Firmly tighten the striker pins (2) to lock them in position.

## 26. ENGINE AIR INTAKE GRILL

When needed, the engine air intake grill can be changed:

1. Cut the seal around the grill with a sharp edged knife.
2. Remove the grill from the vehicle.
3. On the vehicle grill opening, using the knife, remove as much adhesive as possible.
4. Sand the new grill backing edge to remove the glossy surface.
5. Clean with alcohol, wipe dry.
6. Apply SIKA 205 primer to the grill opening and the grill edges. Allow to dry at least 2 minutes for chemical evaporation.
7. Apply SIKA 255 FC adhesive on the grill edge.
8. Install the grill on the vehicle, adjust and fasten with masking tape. Allow 8 hours setting period.

## 27. RADIATOR DOOR ADJUSTMENT

### 27.1 DOOR HEIGHT ADJUSTMENT

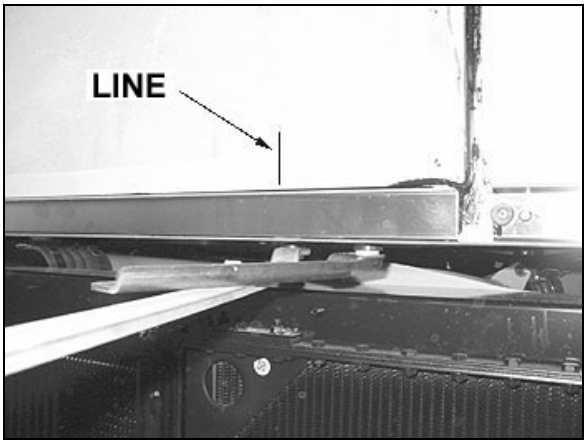


FIGURE 83: REFERENCE LINE

1. Using a pencil, draw a line onto the lateral panel in line with the balance arm.
2. Using a rubber mallet, adjust the lower part of pantograph arm in order to get 4 ± 1 mm between lateral panel and engine door (Refer to Figure 84 and Figure 85).

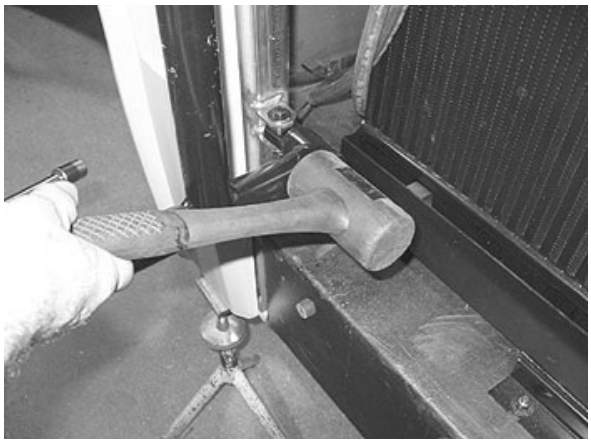

FIGURE 84: PANTOGRAPH ARM ADJUSTMENT

3. Tighten the bolt.

## 27.2 DOOR LATERAL ADJUSTMENT



FIGURE 85: DOOR LATERAL ADJUSTMENT

1. Using a rubber mallet, adjust radiator door positioning with reference to pantograph arm so that the door is parallel to the lateral panel and to the engine door.
2. Tighten the two bolts.

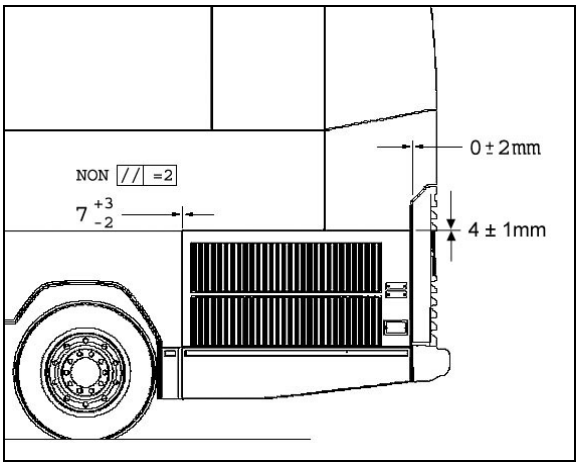


FIGURE 86: PROPER DOOR POSITIONING

## 27.3 DOOR DEPTH ADJUSTMENT

1. Close radiator door.
2. Check parallelism between radiator door and rear fender (max. 0 ± 2 mm).
3. If the door is too far inside, adjust using a rubber mallet (Refer to Figure 89).
4. Tighten the bolt.
5. Close the radiator door in order to verify that latches adjustment is proper. If the gap is too small or too big, adjust latch positioning.

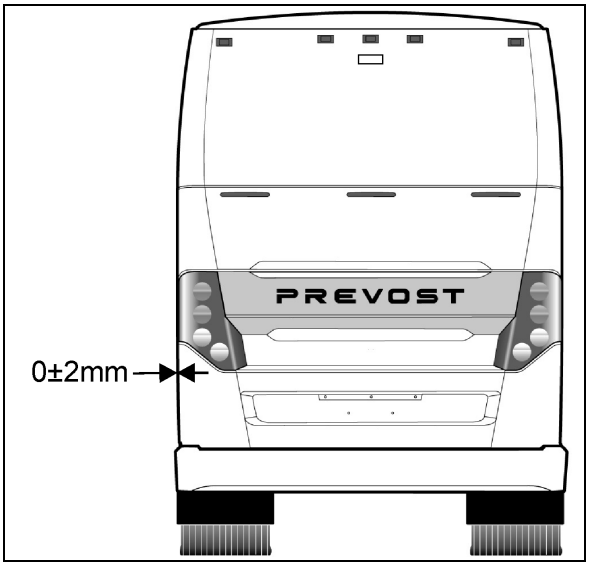


FIGURE 87: DOOR DEPTH ADJUSTMENT

6. Make sure that latch striker pin engages behind the strike plate at least 10 mm. Add or remove spacers if needed. Check door fit and operation. Tighten the latches bolts.



FIGURE 88: DEPTH ADJUSTMENT

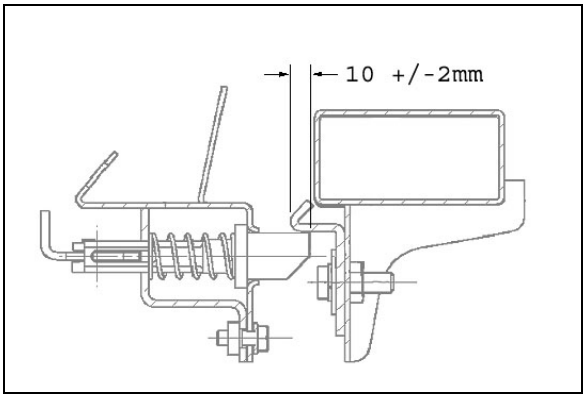


FIGURE 89: DOOR LATCHES ADJUSTMENT

5. Loosen bracket nuts holding the panel to condenser. Panel (6, Figure 91) may be shifted "IN or OUT", "LEFT or RIGHT" and "UP or DOWN".
6. Adjust condenser panel at brackets (2, Figure 91) and (5, Figure 91).
7. Tighten the nuts.
8. Respect the required gap between exterior finishing panels (Figure 73).
9. Check that the door swings freely and closes properly. It may be necessary to adjust the door latch to get proper fit and operation.

## 28. CONDENSER DOOR ADJUSTMENT

1. Open the condenser door.
2. Loosen the nuts (1, Figure 91) holding the hinge (3, Figure 91) to hinge attachment (4, Figure 91). Loosening nuts (1, Figure 91) allows the condenser assembly to be shifted "LEFT or RIGHT" and "UP or DOWN".
3. Adjust condenser assembly position at the hinge.
4. Tighten the nuts.

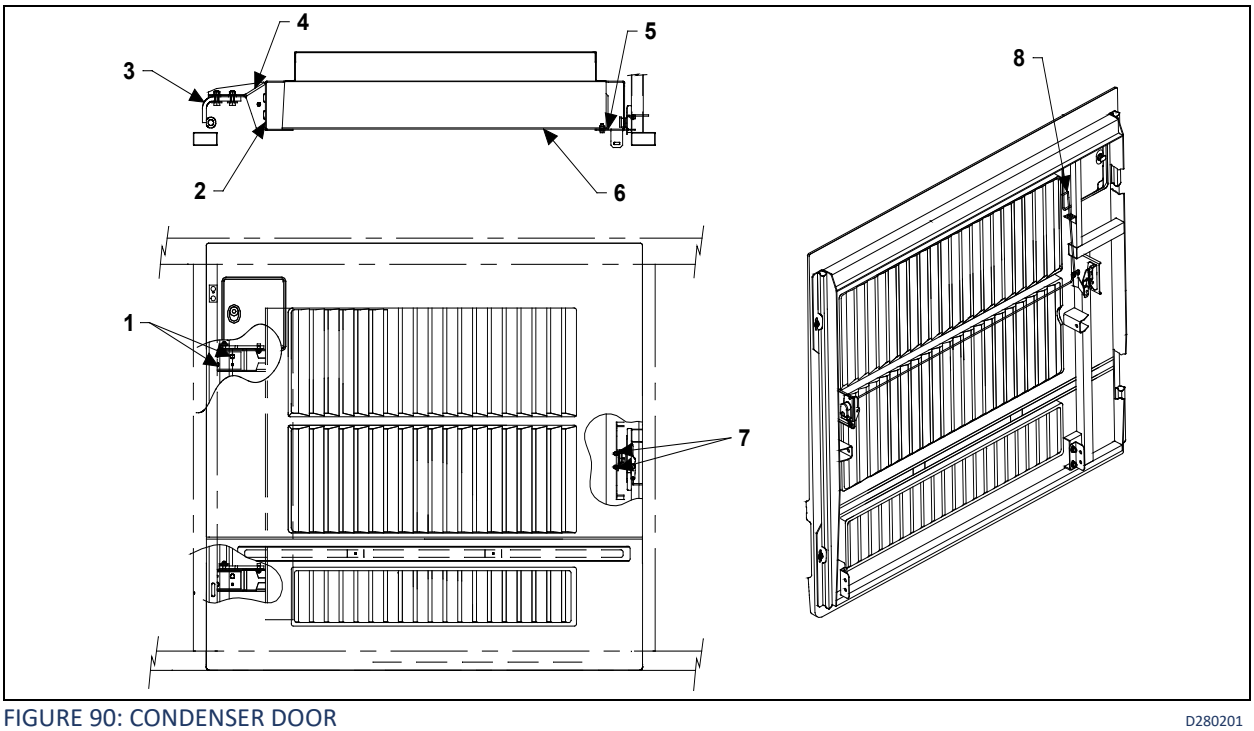


FIGURE 90: CONDENSER DOOR D280201

## 29. FUEL FILLER DOOR

1. Open the fuel filler door (1, Figure 92).

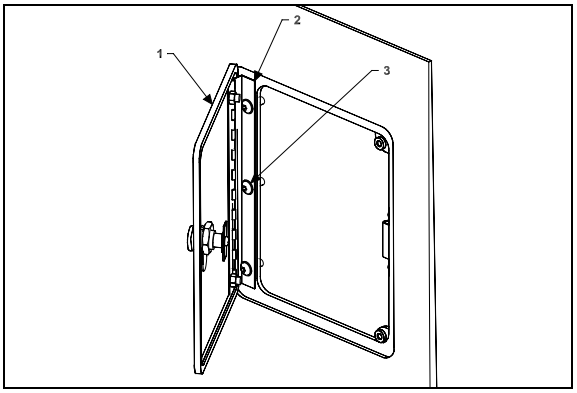


FIGURE 91: FUEL FILLER DOOR 1875003D

2. Loosen the screws (3,Figure 92) holding the panel to hinge (2,Figure 92) assembly.
3. Adjust the fuel filler door position according to distance required between exterior finishing parts (Figure 73).
4. Tighten the nuts.
5. Check that the door swings freely and closes properly.

## 30. FRONT SERVICE COMPARTMENT

Adjustment of the front service compartment door can be done by following these steps:

1. Open the door.
2. Loosen nut (2, Figure 93).
3. Move part (1, Figure 93), as close as possible to exterior of coach, so as to have enough clearance for proper door opening.
4. Tighten nut (2, Figure 93).
5. Loosen nut (3, Figure 93). Hinge allows the door to be shifted "IN or OUT".
6. Adjust door panel to have the same gap space as neighboring panels or refer to Figure 73 for specified gap space. Only if necessary, use the adjustment allowed by moving part 1, Figure 93.

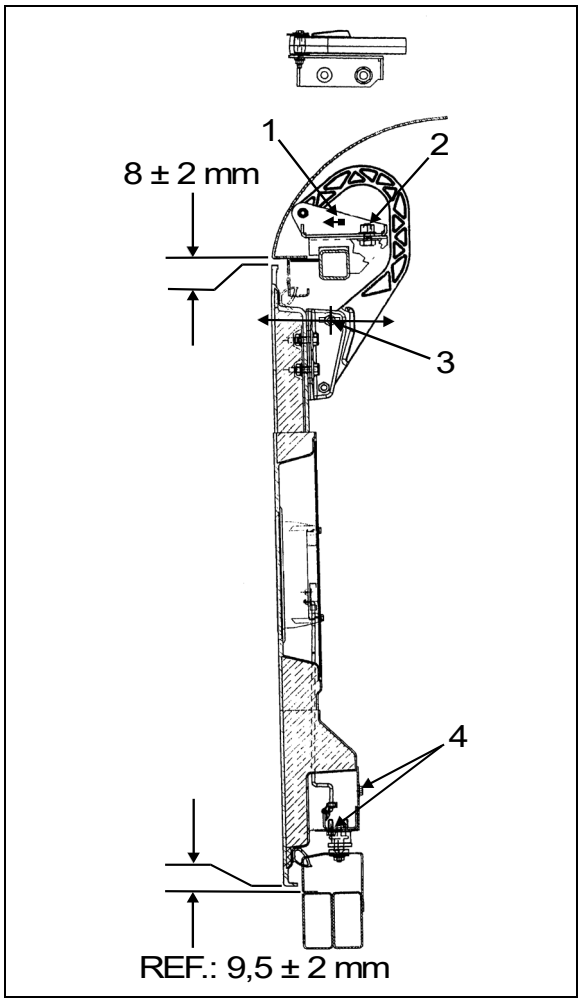


FIGURE 92: DOOR HINGE 18194

7. Loosen screws (5, Figure 94) to allow the door to be shifted "UP or DOWN".
8. Adjust the door position.
9. Tighten the screws.
10. Check that the door swings freely and closes properly. It may be necessary to adjust the door latch to get proper fit and operation.

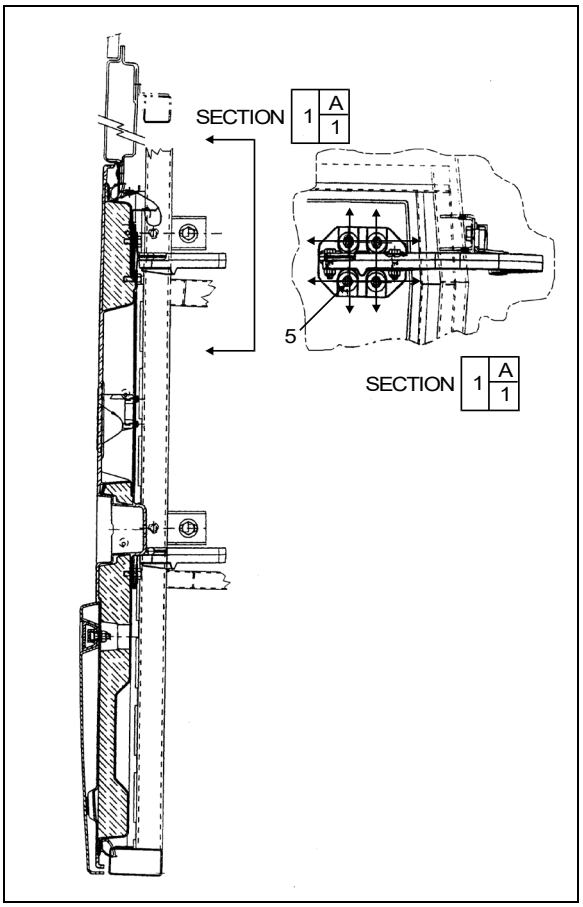


FIGURE 93: FRONT SERVICE DOOR 18195

30.1 LATCH MECHANISM ADJUSTMENT

To adjust the latch mechanism and the striker pin, open the door to access the striker pin. Slightly loosen the striker pin. Using a hammer, adjust the striker pin to center it in the door latch mechanism. Tighten the striker pin. Check door fit and operation.

## 31. ENGINE COMPARTMENT R.H. SIDE DOOR

The engine compartment R.H side door can be adjusted by following these steps:

1. Open the door.
2. Loosen nut (1, Figure 95).
3. Move part (3, Figure 95) as shown in figure for "LEFT or RIGHT" adjustment.
4. Tighten nut (1, Figure 95).
5. Loosen nut (2, Figure 95).
6. Hinge allows the door to be shifted "IN or OUT".
7. Adjust the door in accordance with the required distance between exterior finishing parts (Figure 73).
8. Loosen screws (4, Figure 96).
9. Screws allow the door to be shifted "UP or DOWN".
10. Adjust the door position according to the distance required between exterior finishing parts (Figure 73).
11. Tighten the screws.

Check that the door swings freely and closes properly. It may be necessary to adjust the door latch to get proper fit and operation.

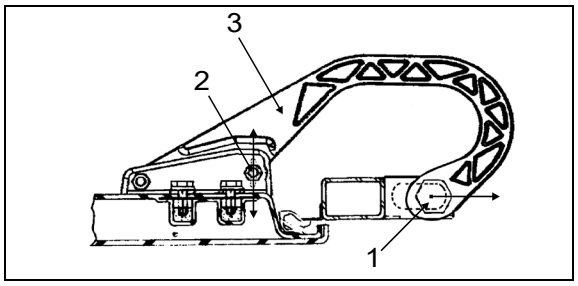


FIGURE 94: DOOR HINGE 18196

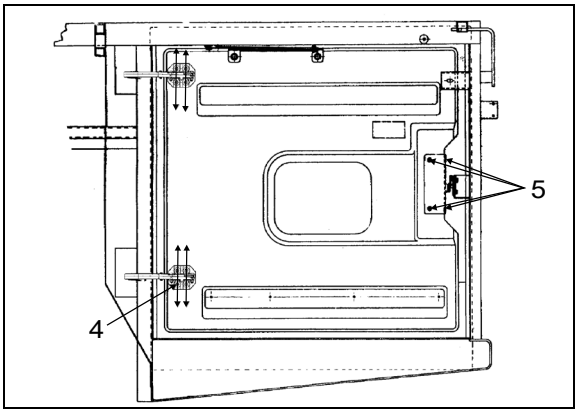


FIGURE 95: ENGINE COMPARTMENT R.H. DOOR 18197

31.1 LATCH MECHANISM ADJUSTMENT

To adjust the latch mechanism and the striker pin, open the door to access the striker pin. Slightly loosen the striker pin. Using a hammer, adjust the striker pin to center it in the door latch mechanism. Tighten the striker pin. Check door fit and operation.

## 32. EVAPORATOR DOOR ADJUSTMENT

1. Open the door.
2. Loosen nut (1, Figure 97).
3. Move part as shown in figure for "LEFT or RIGHT" adjustment.
4. Tighten nut (1, Figure 97).
5. Loosen nut (2, Figure 97). Hinge allows the door to be shifted "IN or OUT".
6. Adjust the door in accordance with the required distance between exterior finishing parts (Figure 73).
7. Loosen screws (3, Figure 97). Screws allow the door to be shifted "UP or DOWN".
8. Adjust the door position according to the distance required between exterior finishing parts (Figure 73).
9. Tighten the screws.

Check that the door swings freely and closes properly. It may be necessary to adjust the door latch to get proper fit and operation.

### 32.1 LATCH MECHANISM ADJUSTMENT

1. To adjust the latch mechanism and the striker pin:
2. Open the door to access the striker pin.
3. Loosen slightly the striker pin.
4. Using a hammer, adjust the striker pin to center it in the door latch mechanism.
5. Tighten the striker pin. Check door fit and operation.

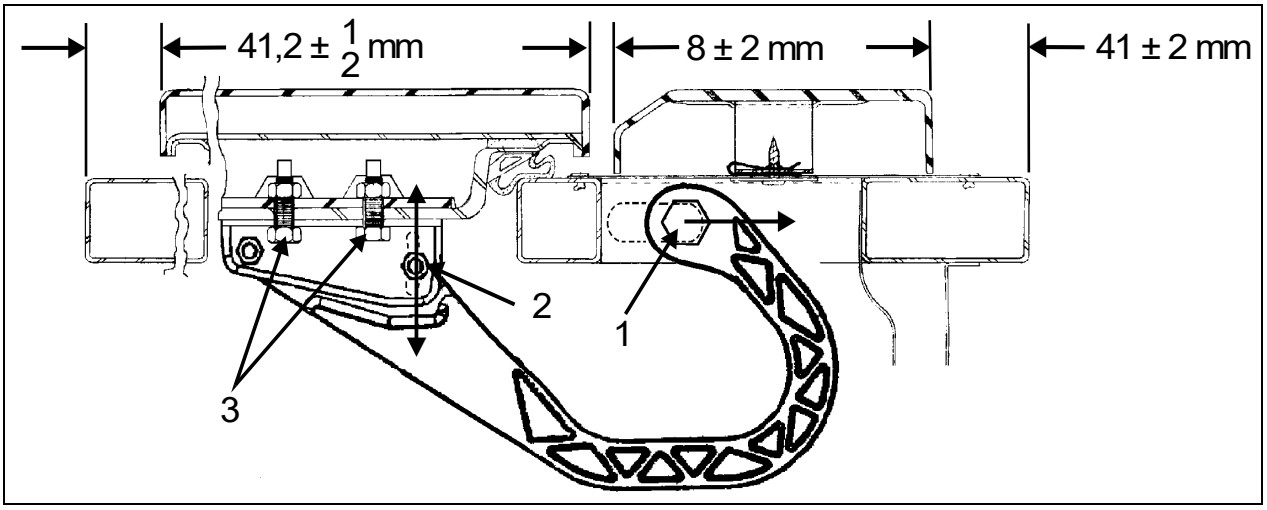


FIGURE 96: EVAPORATOR DOOR 18198

## 33. MAIN POWER COMPARTMENT

To adjust the main power compartment door:

1. Loosen nut (1, Figure 98).

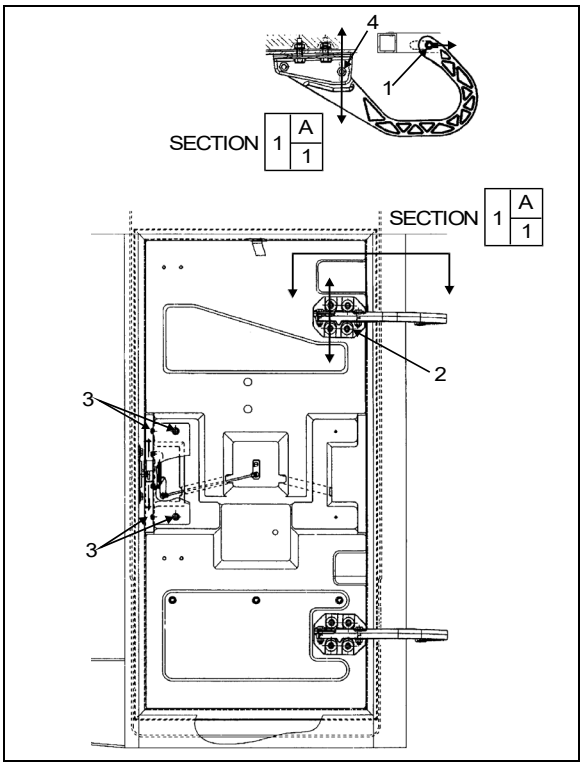


FIGURE 97: MAIN POWER COMP. DOOR 18199

2. Move part as shown in figure for "LEFT or RIGHT" adjustment.
3. Tighten nut (1, Figure 98).
4. Loosen nut (4, Figure 98).
5. Hinge allows the door to be shifted "IN or OUT".
6. Adjust door panel to have the same gap space as neighboring panels or refer to Figure 73 for specified gap space
7. Loosen screws (2, Figure 98). Screws allow the door to be shifted "UP or DOWN".
8. Adjust the door position.

Tighten the screws.

Check that the door swings freely and closes properly. It may be necessary to adjust the door latch to get proper fit and operation.

### 33.1 LATCH MECHANISM ADJUSTMENT

To adjust the latch mechanism and the striker pin:

1. Open the door to access the striker pin.
2. Loosen slightly the striker pin.
3. Using a hammer, adjust the striker pin to center it in the door latch mechanism.
4. Tighten the striker pin.

Check door fit and operation.

## 34. FENDERS

On the "H" series vehicle, all fenders are easily removable for maintenance on brakes and suspension. Each rear fender has three mechanical spring-loaded holding devices fixing it to the vehicle's structure.

### 34.1 REAR FENDER REMOVAL

1. Push the spring type rod sideways so that the lock disengages.
2. Support or have somebody hold the fender up.
3. As in 1, repeat to release both remaining holding devices.
4. Holding the fender firmly, pull it down until the top edge disengages from the holding plates.

To reinstall, reverse the procedure.

### 34.2 FRONT FENDER REMOVAL

1. At the bottom of fender, remove the retaining screws on one side of the fender.
2. Support or have someone hold the fender up.
3. Remove the screw on the other side of the fender.
4. Pull the fender down until the top edge disengages from the holding plates.

To reinstall, reverse the procedure.

## 35. REAR CAP

The fiberglass rear cap does not need any maintenance except painting as needed. For minor damages, refer to section 4 "Fiberglass Repair" and section 5 "Painting". If the rear cap ever has to be replaced:

1. Remove all accessories.
2. Drill out the retaining pop rivets.
3. With a sharp edge blade, cut the seal joint and remove the rear cap.

4. With the sharp edge blade, remove as much of the remaining seal pieces as possible.
5. Sand with #120 or #150 sandpaper.
6. Wipe clean with alcohol
7. Prepare surface with SIKA #205 and let dry for a minimum of 2 minutes.
8. Install a new seal using LOCTITE 414 glue.
9. Install the rear cap and fasten with pop rivets.

**CAUTION**

Do not attempt this procedure unless you are qualified and equipped to handle this job.

### 36. FRONT CAP

The front cap windshield frame does not need any maintenance. It is held in place with bolts and nuts. If it ever it has to be replaced, make an appointment at a Prevost service center near you.

## 37. SIDE PANEL INSTALLATION PROCEDURE FOR COACHES AND VIP

**Material:**

| | | | | | |
|---|---|---|---|---|---|
| Anti-silicone (682989) | √ | Blue cloth (682383) | √ | Sika 206 G+P 1 liter (683446) | √ |
| Tack cloth | √ | Pure water | √ | Sika 252 black | √ |
| CHIX cloth (682384) | √ | Scotchbrite gray (680226) | √ | Masking tape | √ |

**Equipment:**

| | | |
|---|---|---|
| Glue gun | √ | |
| Compression roller | √ | |

### SECTION #1 SIDE PANEL INSTALLATION

| | | |
|---|---|---|
| 1.00 | **SS Body structure preparation** | |
| | A) Clean using anti-silicone.<br>See SAV000001 section A.<br>Use Scotchbrite to sand structure.<br>Use 1 side of Scotchbrite for 1 side of vehicle. | 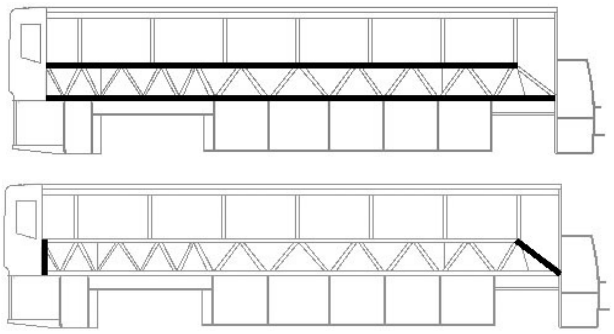 |

### SAV000001 Section A Alcohol or Anti-silicone

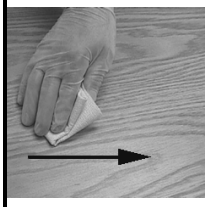

***1.*** **Apply**

**CHIX cloth**

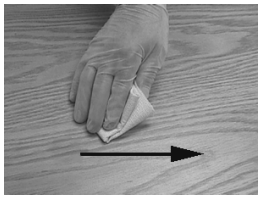

***2.*** **Dry immediately**

**Blue cloth**

***3.*** **Allow to dry**

| | |
|---|---|
| **Mandatory** | **Minimum time : Wait for product to evaporate** |
| | **After 2 hours: Start cleaning operation again** |
| **Before applying any other product** | If surface seems dusty, greasy or with finger marks, start cleaning operation again. |

| | |
|---|---|
| 1.05 | **Fiberglass panel preparation (fiber side)** |

| | | | |
|---|---|---|---|
| | A) | Clean using tack cloth.<br>Repeat if surface seems dusty. |  |
| | B) | Clean using anti-silicone<br>See SAV000001 section A. | |
| | C) | Apply primer 206 G+P.<br>See SAV000001 section D. | |

# SAV000001 Section D Sika Primer 206 G+P

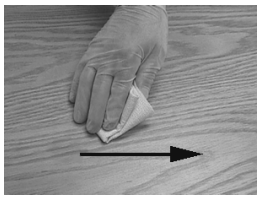

**3.** **Shake bottle to mix product**

**4.** **Apply a thin layer**

**CHIX cloth**

***3.*** **Allow to dry**

| | | |
|---|---|---|
| **Mandatory** | **206 G+P** | **Minimum time : 10 minutes** |
| | | **After 2 hours: Remove dust using damp cloth (pure water)** |
| | | **After 8 days : Reactivate with Aktivator as per section "C"** |
| **Before applying any other product** | | If surface seems dusty, dust using damp cloth. |
| | | If surface seems greasy or with finger marks, reactivate with Aktivator. |

| | | | |
|---|---|---|---|
| 1.10 | **SS Body structure preparation** | | |
| | A) | Clean using anti-silicone.<br>Clean structure at least twice. Repeat is necessary until cloth comes clean.<br>See SAV000001 section A. | 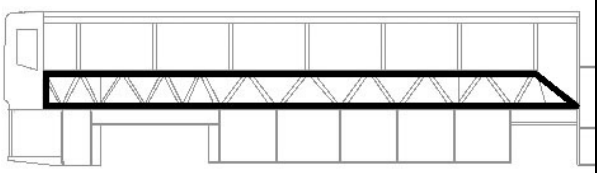 |
| | B) | Apply 1 ¼" protective tape along bottom structural tubing. | 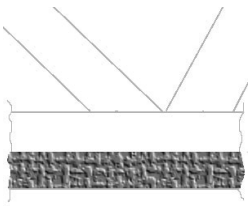 |

| | | | |
|---|---|---|---|
| | C) | Apply 206 G+P onto structure.<br><br>See SAV000001 section D. | 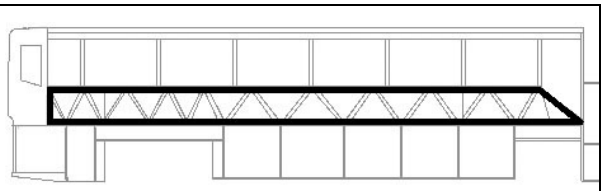 |
| 1.15 | Seal entrance door perimeter using Sika 252 black,<br><br>Smooth down the excess. | | 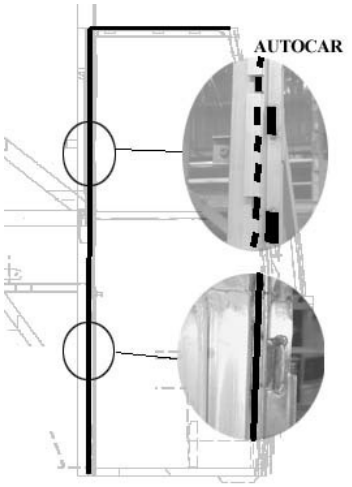 |
| 1.20 | | Install lateral panel supports onto bottom structural tubing. Install lateral panel onto supports to verify proper positioning. | |
| 1.25 | **Glue application** | | |
| | A) | Set (timer) or record time.<br><br>***No more than 45 minutes should elapse between beginning of glue application and panel installation.*** | |
| | B) | Apply Sika 252 black onto structure<br><br>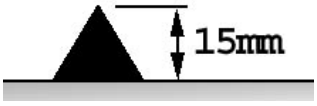 | |
| 1.30 * | A) | Install lateral panel onto supports and clamp panel in place using "C" clamps and square tubing to even out the pressure.<br><br>**Note: A maximum of clamps should be used (every 6 inches) to ensure proper bonding. Do not tighten too much.** | |

| | | | |
|---|---|---|---|
| | B) | At the rear, adjust panel height so that it is level with rear cap | 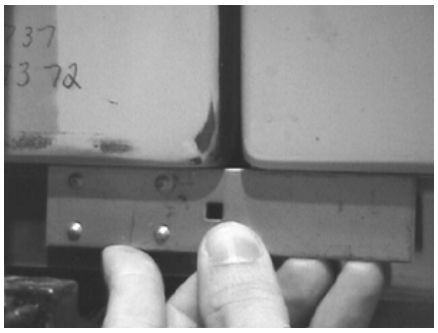 |
| | C) | Gap between lateral panel and rear cap must be 6mm +4/-3 and panels must be aligned within 1.5mm. | 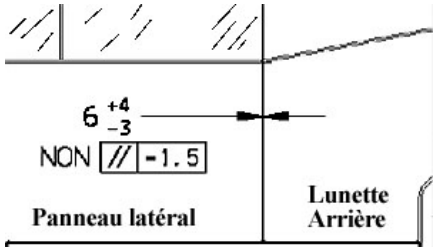 |
| | D) | Using a ruler, adjust front of lateral panel. | 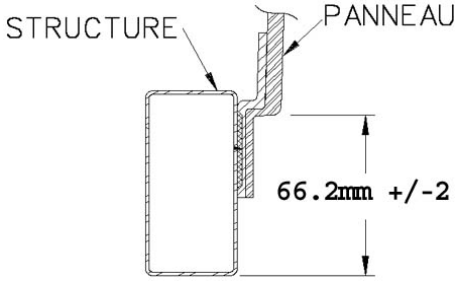 |
| | E) | Verify if panel upper corner is in the middle of window post. | 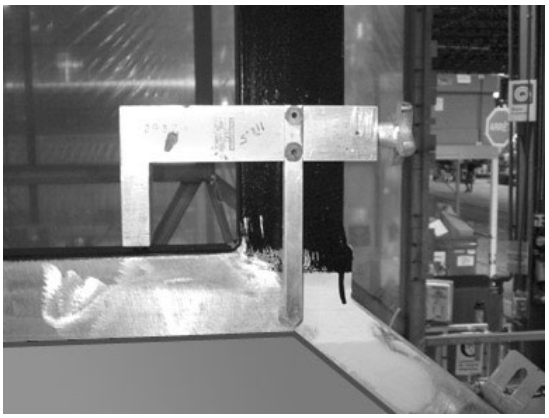 |
| 1.55 | Remove excess of glue using a spatula.<br><br>Apply a bead of Sika 252 at the top of panel<br><br>Spray pure water onto all the joints to speed up drying process | |  |

| | |
|---|---|
| 1.60 | Remove protective tape (installed at step 1.10b). |
| 1.70 | **Do not move the vehicle for 48 hours**<br>**Make sure room temperature is superior to 20°C (68°F) before gluing**<br>**Perform a visual inspection before installing side windows** |

| SECTION #2 DRIP MOLDING INSTALLATION | | | |
|---|---|---|---|
| 2.00 * | A) | Clean using Anti-silicone<br>See SAV000001 section A. |  |
| | B) | Apply Sika 206 G+P<br>See SAV000001 section D. | |
| 2.05 | Remove blue paper from drip molding. Remove protective tape from double-face self adhesive tape | | |
| 2.10 | Glue drip molding. Allow a gap of 1mm minimum between top of drip molding and panel. | | 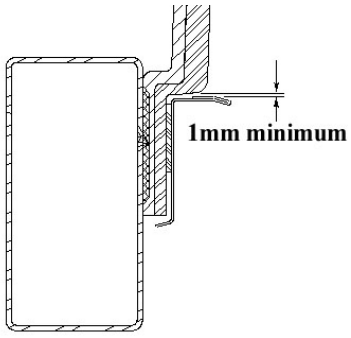 |
| 2.15 | Compress drip molding using the compression roller to increase adherence. | | |
| 2.20 | Round off rear and front drip molding corners. | | 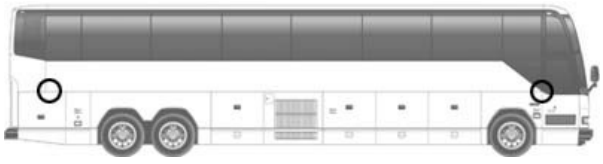 |

| SECTION #3 REPAIR | | |
|---|---|---|
| 4.00 | Remove fiberglass from structure using a screwdriver. Use wedges if necessary to hold down panel during the work. | |
| 4.05 | Remove as much glue as possible. If primer is removed, apply primer 206 G+P locally. If primer is OK, reactivate as per SAV000001 section D. | |
| 4.10 | Apply Ultrafast 2 glue (heated). | |
| 4.15 | Compress panel using clamps and a metal flat bar (for an even compression). Only use screws as a last resort to compress. | |
| 4.20 | **Vehicle must not move for the next 12 hours.** | |

## 38. REAR-VIEW MIRROR

The exterior rear-view mirrors are equipped with a flat glass as well as a convex glass mirror.

Flat and convex glass mirrors may be equipped with an optional electric heating system which serves to minimize ice and fog on the mirror glass. Integral thermostats are installed to prevent continuous heating.

Use the appropriate switch on the dashboard to activate the defogger system on both mirrors simultaneously.

Flat and convex glass mirrors can easily be replaced in case of breakage.

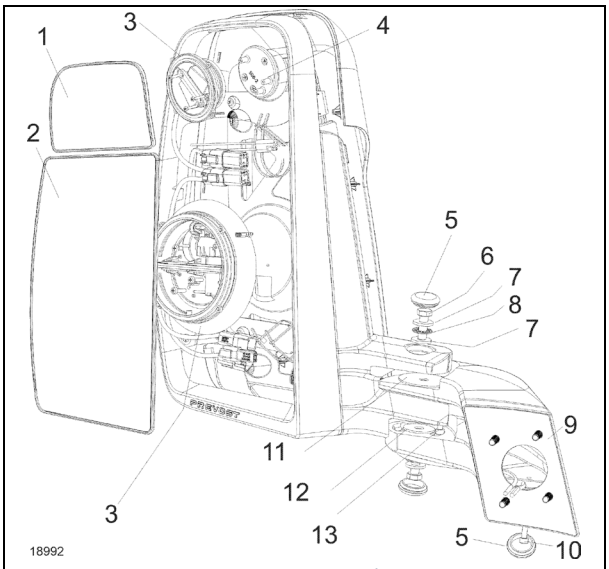


FIGURE 98: REAR-VIEW MIRROR (STREET SIDE SHOWN)

| # | DESCRIPTION | QTY |
|---|---|---|
| 1 | CONVEX GLASS MIRROR | 1 |
| 2 | FLAT GLASS MIRROR | 1 |
| 3 | SMALL 24V MOTOR ASM PREVOST | 1 |
| 3 | LARGE 24V MOTOR ASM PREVOST | 1 |
| 4 | SMALL MOTOR PLATE | 1 |
| 5 | BLACK PLASTIC CAP | 3 |
| 6 | ARM BOLT | 2 |
| 7 | THRUST BEARING WASHER | 4 |
| 8 | THRUST BEARING WASHER | 2 |
| 9 | RS SHIM W/ GASKET | 1 |
| 10 | CLAMPING SCREW | 1 |
| 11 | LARGE FRICTION WASHER, 33GF NYLON | 1 |
| 12 | SMALL FRICTION WASHER, 33GF NYLON | 1 |
| 13 | M6 X 12 mm HEX SOCKET HEAD CAP SCR | 1 |

See paragraph 1 TORQUE TABLES in Section 18A for prescribed torque.

### 38.1 ARM AND BRACKET POSITION

Arm and bracket should be positioned so that the surfaces are flush as shown on the images below.

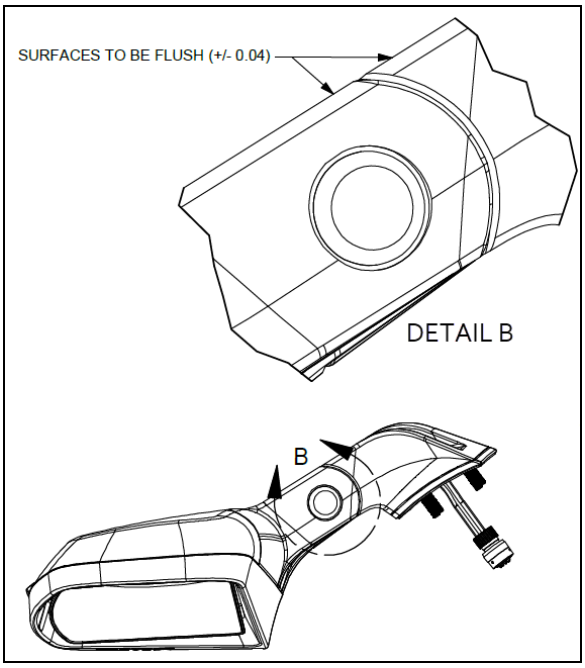


FIGURE 99: STREET SIDE REAR-VIEW MIRROR

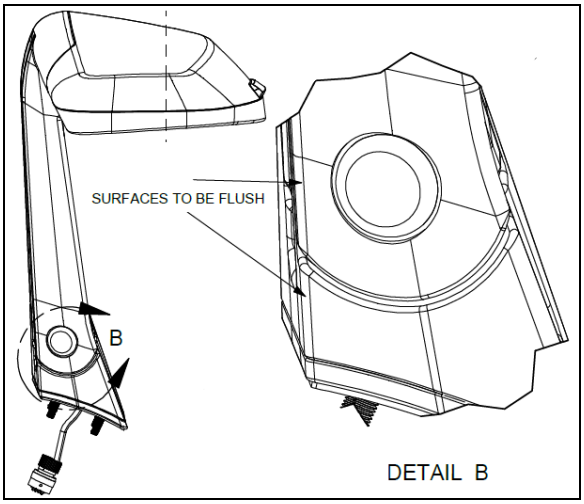


FIGURE 100: CURBSIDE REAR-VIEW MIRROR

### 38.2 REAR-VIEW MIRROR REMOVAL

To remove the complete rear-view mirror unit, proceed as follows:

1. Remove the black plastic cap (Figure 102).
2. Loosen the clamping screw (do not remove) so that the mirror unit can be lifted from the mounting plate (Figure 102).

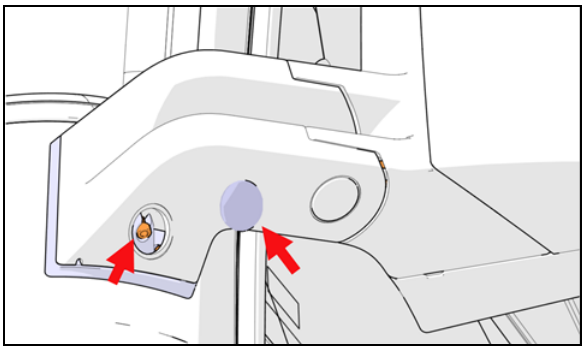

FIGURE 101

3. Lift the mirror unit (E1, Figure 103) from the mounting plate and tilt (E2, Figure 103) so it detaches from the mounting plate.

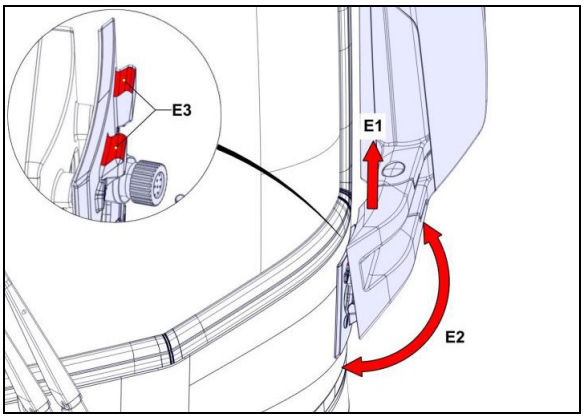


FIGURE 102

4. Unplug the connector.

## 38.3 REPLACEMENT OF FLAT GLASS MIRROR

The flat glass mirror assembly is mounted to a lock ring which is part of the motor assembly.

1. Underneath the mirror, reach for the tab of the locking ring (item 2, Figure 104).

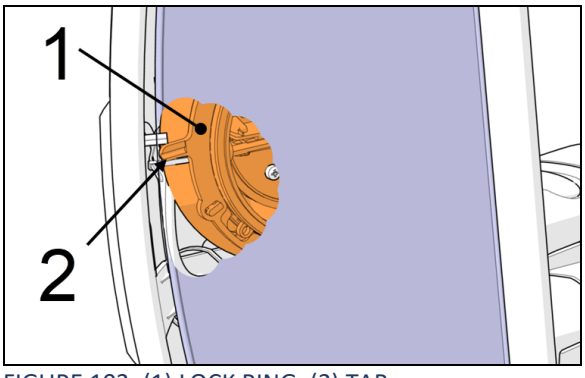


FIGURE 103: (1) LOCK RING; (2) TAB

2. Rotate the locking ring by pushing the tab downwards.
3. Detach the flat mirror.
4. Disconnect the heater wires.
5. Install the replacement flat glass mirror similarly but in reverse order. Push lock ring tab up to lock.

## 38.4 REPLACEMENT OF CONVEX GLASS MIRROR

The snap mounted convex mirror is mounted to a ring which is part of the motor assembly. Replaced as follows.

1. Remove the mirror by pulling gently on the side of the mirror.
2. Detach the mirror from the motor assembly mounting ring.
3. Disconnect the heater wires.

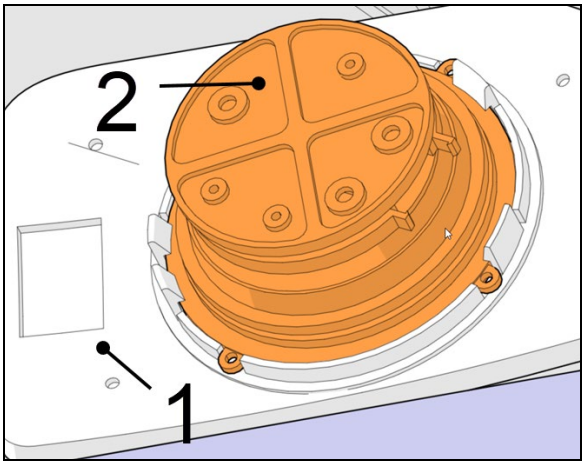


FIGURE 104: (1) CONVEX GLASS MIRROR; (2) MOTOR

**CAUTION**

Do not attach stick-on type convex mirror accessories to the heated mirror glass. This could impede uniform heat distribution on the mirror surface which could break the mirror.

## SPECIFICATIONS

### Door cylinder

Manufacturer ..... Bimba
Type ..... Pneumatic
I.D. ..... 1½" ( mm)
Stroke ..... 8" ( mm)

### Damper

Manufacturer ..... Koni

### Lock cylinder (upper)

Manufacturer ..... Bimba
Type ..... Air, single action, 1/8 NPT, hexagonal rod
I.D. ..... 7/8" (22 mm)
Stroke ..... 1" (25 mm)

### Lock cylinder (central)

Manufacturer ..... Bimba
Type ..... Air, single action, ¼ NPT
I.D. ..... 1¾" (45 mm)
Stroke ..... 1" (25 mm)

### Manifold solenoid

Manufacturer ..... Norgren
Type ..... 4 ports, 1/8 NPT
Voltage ..... 24 VDC
Power consumption ..... 6 watts
Maximum pressure ..... 150 psi (1035 kPa)

### Solenoid valve (Latching valve)

Manufacturer ..... Humphrey
Model ..... 310
Operating range ..... 0 to 125 psi (0 to 860 kPa)
Voltage ..... 24 VDC
Voltage tolerance ..... +10%, -15% of rated voltage
Power consumption ..... 4 watts
Leak rate (max allowed) ..... 0.245 in3/min @ 100 psi (4cc/min @ 690 kPa)
Type of operation ..... Direct solenoid
Lubrication ..... Not required (factory pre-lubed)
Filtration ..... 40 micron recommended

PREVOST

# MAINTENANCE INFORMATION

**MI15-18**

| | | |
|---|---|---|
| DATE : | MAY 2015 | SECTION : 18 - Body |
| SUBJECT : | **STRUCTURE INSPECTION FOR CORROSION - HOW TO PREVENT CORROSION** | |

| *IMPORTANT NOTICE* |
|---|
| *This maintenance is recommended by Prevost to increase your vehicle's performance. Note that no reimbursement will be awarded for carrying out this maintenance.* |

## APPLICATION

| Model | VIN |
|---|---|
| All Prevost models |  |

## DESCRIPTION

This procedure was made in order to support Prevost customers who are worried about their vehicle structure behavior due to corrosion.

Five year old vehicles and older should be subjected to a thorough structural inspection; especially if clear signs of moderate or deep corrosion are visible. The inspection can be conducted as described in the following procedure.

In this procedure, you will find information about:

**1) The important areas that should be inspected**

**2) When a structural inspection should be carried out**

**3) How to perform the inspection**

**4) What can be done to optimize corrosion protection during your vehicle's life**

| STRUCTURE INSPECTION – CORROSION | |
|---|---|
| **DESCRIPTION** | **INTERVAL** |
| Perform structural inspection for corrosion as described in this document | **Normal duty cycle vehicles and normal environment operation**<br>Every 5 years starting from the 5th year in service |
| | **Severe duty cycle vehicles and harsh environment operation**<br>Every 2 years starting from the 5th year in service |
| | Whenever a *visual inspection* discloses that corrosion seems to have caused damages to the structure such as perforation, flaking, separation of metal layers, loss of material, etc. |

**CAUTION**

**Reject member, chassis component, axle, etc. if:**

Cracked, broken, separated by corrosion or corroded to a depth as to weaken member so as to affect the safety and structural integrity of the vehicle.

**DANGER**

Park vehicle safely, apply parking brake, stop engine. Prior to working on the vehicle, set the ignition switch to the OFF position and trip the main circuit breakers equipped with a trip button. On Commuter type vehicles, set the battery master switch (master cut-out) to the OFF position.

## THE IMPORTANT AREAS THAT SHOULD BE INSPECTED

**Front & rear sub-frames, drive axle cradle and tag axle** (FIGURE 1) on Prevost structures are made of high strength steel. Although the structure on a Prevost vehicle receives a beneficial corrosion preventive compound application at the end of the manufacturing process, after many years of service with exposure to harsh environments (winter, frequent rains, road salt, stone projection, sand accumulation, etc.), the carbon steel can be subject to severe corrosion. The use of high strength steel remains a requirement to withstand peak loads.

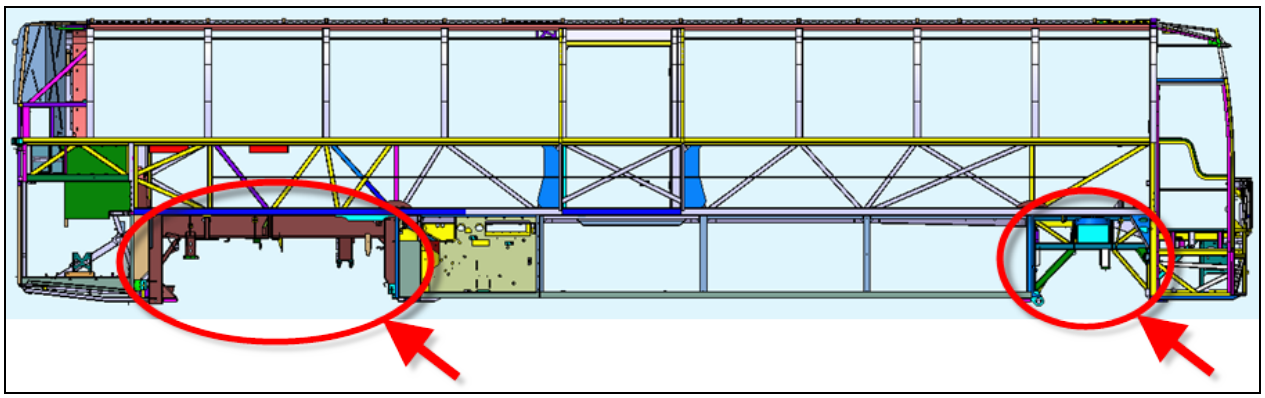

**FIGURE 1 – CRITICAL AREAS: FRONT SUB-FRAME, REAR SUB-FRAME, DRIVE AXLE CRADLE AND TAG AXLE**

## WHEN SHOULD A STRUCTURE INSPECTION BE CARRIED OUT?

Vehicles operating in harsh environments without an appropriate corrosion protection compound applied to the front and rear sub-frames, drive axle cradle and tag axle could be subject to corrosion. If parts of the tag axle or front and rear sub-frames structures present metal flaking, separation of metal layers, loss of material, perforation, etc. then they should be inspected in order to confirm that the minimum wall thickness remains (FIGURE 2 to FIGURE 5).



**FIGURE 2: METAL FLAKING. ACCUMULATED SAND AS SHOWN ON THE IMAGE SHOULD NOT BE LEFT IN PLACE**



**FIGURE 3: METAL FLAKING AND ACCUMULATED SAND**



**FIGURE 4: METAL FLAKING ON TAG AXLE - ACCUMULATED MATTER WILL RETAIN WATER THUS CREATING CONDITIONS PROMOTING ADDITIONAL CORROSION**



**FIGURE 5: HEAVILY CORRODED COACH WITH BROKEN TAG AXLE. THIS IMAGE SHOWS THE SPINDLE MOUNTING PLATE SEPARATED FROM THE REST OF THE TAG AXLE**

## STRUCTURE INSPECTION PROCEDURE

The thickness of main carbon steel parts on rear & front sub-frames, drive axle cradle and tag axle beam must be **at least 1/8 inch (0.125") (3mm)**. There are two options to properly monitor the wall thicknesses:

1- Using an ultrasonic wall thickness gauge.

2- Drilling holes and measuring wall thickness.

### 1- Structural Inspection Procedure Using Ultrasonic Wall Thickness Gauge

The ultrasonic wall thickness gauge has to be used on bare metal. The surface where the gauge will be put on has to be cleaned of rust, paint or other material. If the thickness is more than 1/8 inch (3mm), repaint the cleaned surface to prevent corrosion from occurring on this spot.

Use a grinder or another tool to remove rust or paint on the spot to check. The gauge has to be placed on the center of the cleaned spot. The gauge has to be perpendicular to the surface to get an accurate measure.

Inspection using ultrasonic wall thickness gauge is recommended over drilling holes because it minimize risk of altering the vehicle structure.



FIGURE 6: CLEANED SPOT ON STRUCTURAL MEMBER

### 2- Structural Inspection Procedure Using Drilled Holes

Drill a ¼ inch (6 mm) diameter hole in the most corroded wall of the part being checked. Use a caliper to measure the thickness of the drilled metal. Wall thickness should be at least 1/8 inch (0.125") (3mm). Drilled hole must then be welded (filled with metal) and repainted after measurement to prevent water infiltration and corrosion from occurring around the hole.

Clean/remove flaking rust on frame. Drill hole in the most corroded wall. The hole must be welded after to prevent corrosion and water infiltration. Filled hole must be painted to prevent corrosion.

**CAUTION**

Holes and welding can increase the risk of crack initiation. **Ultrasonic wall thickness gauge method is recommended.**



FIGURE 7: HOLE DRILLED IN STRUCTURAL MEMBER

## CORROSION PROTECTION ON OLD AND CORRODED FRAME

To maximize corrosion resistance on older frame exposed to harsh environment:

1) Clean rust on frame. If available, use sand blasting.

2) Apply a zinc-rich primer on cleaned surfaces.

3) Cover carbon steel parts with corrosion preventive compound Tectyl 185GW.

**CAUTION**

Avoid primer, paint, and corrosion preventive compounds on pneumatic valves and rubber bushings.



**FIGURE 8: CLEAN RUST**

## PROTECTION TO PREVENT CORROSION

Tectyl 185GW should be used to prevent corrosion propagation on frame.

1) Clean rust and dirt on the frame.
2) Apply Tectyl following the manufacturer's recommendation.
3) Apply Tectyl every year or as needed.

**CAUTION**

Avoid primer, paint, and corrosion preventive compounds on pneumatic valves and rubber bushings.



**FIGURE 9: TECTYL 185GW BLACK APPLICATION**

For more details on Tectyl 185GW, see QC Lubricants web site:

http://www.qclubricants.com/TECTYL185GWBlack.htm

**Tectyl 185GW Black**

**QC Lubricants carries Tectyl 185GW Black in pails and drums.**




TECTYL® 185GW Black is a solvent cutback, thixotropic corrosion preventive compound. The dry film is semi-firm and has a semi-gloss appearance. TECTYL® 185GW Black provides outstanding protection in marine, tropical, and industrial environments, and is widely used for transportation equipment. TECTYL® 185GW Black possesses dielectric strength of 800 volts per dry mil of coating. TECTYL® 185GW Black provides galvanic corrosion protection and can be applied on battery terminals for insulating purposes.

## PARTS / WASTE DISPOSAL

| |
|---|
| Discard according to applicable environmental regulations (Municipal/State[Prov.]/ Federal) |

*Access all our Service Bulletins on https://secureus5.volvo.com/technicalpublications/en/pub.asp*
*Or scan the QR-Code with your smart phone.*

*E-mail us at **technicalpublications_prev@volvo.com** and type "ADD" in the subject to receive our warranty bulletins by e-mail.*

# MAINTENANCE INFORMATION

**MI15-41**

| | |
|---|---|
| DATE : AUGUST 2015 | SECTION : 18 - Body |
| SUBJECT : | CRACKING OF POLYCARBONATE TAILLIGHTS CAUSED BY INAPPROPRIATE CLEANING PRODUCTS |

## APPLICATION

| Model | VIN |
|---|---|
| ALL MODELS | |

## DESCRIPTION

Prevost would like to remind its customers that only **cleaning products designed for external washing of vehicles** should be used for exterior vehicle wash and in particular, for the washing of polycarbonate taillights.

## POLYCARBONATE CRACKING

Degreasers designed to clean motors **must not be used** to clean the engine compartment door. These products are not compatible with polycarbonate. They cause cracking of the polycarbonate taillights housing and cracking of the bosses in which the mounting threaded rods are inserted (figures 2 & 3).

## CLEANING PRODUCT COMPATIBLE WITH POLYCARBONATE

Cleaning products designed for external washing of vehicles shall be used to clean your vehicle. Prevost suggests a high PH cleaner compatible with polycarbonate. See the description of the product in the following table

| Part No | Description | Qty |
|---|---|---|
| 686037 | EXTERIOR CLEANER (BODY) | 1 gallon / 4 liters |
| 686036 | EXTERIOR CLEANER (BODY) | 5.28 gallons / 20 liters |
| 685841 | EXTERIOR CLEANER (BODY) | 55 gallons / 210 liters |

| **NOTE** |
|---|
| *Material can be obtained through regular channels.* |

## High PH cleaning product compatible with polycarbonate - product sheet

# Traffic film remover

Will not make plastics crack

Perfect for trucks, cars, trains, buses and machinery. Safe for all types of plastics including polycarbonate. Designed for automatic or pressure washing.

### ADVANTAGES

- Easily removes traffic film, insects and grease.
- Safe for car and truck paint.
- Safe for use on metal, rubber, chrome, glass and plastic surfaces.
- Does not leave any deposit.
- Concentrated.
- Eco-friendly.
- Easy to rinse.
- Dries evenly.

### DIRECTIONS

Pressure washing :
1. Use product accordingly to dilution ratio.
2. Spray evenly on vehicle surface starting by the bottom.
3. Rinse thoroughly with cold or lukewarm water.

### MORE DETAILS

Do not wash in direct sunlight. Do not allow product to dry on surface.

### DILUTION RATIO

| DIRT | RATIO |
|---|---|
| Mild | 1 oz / 20 oz 50 ml / L |
| Average | 1 oz / 10 oz 100 ml / L |
| Strong | 1 oz / 6.67 oz 150 ml / L |



### PRECAUTIONS

Avoid all contact with eyes.
Avoid all contact with skin.
Wash hands with soap and water after handling.

### FIRST AID

- Skin: Wash contaminated skin with soap and water.
- Eyes: Flush immediately with running water for at least 15 minutes, occasionally lifting the upper and lower eyelids. Seek medical help.
- Ingestion: Do not induce vomiting. If the person is conscious, have them drink several glasses of water or milk. Seek medical help.

### PHYSICAL ATTIBUTE

| | |
|---|---|
| PHYSICAL STATE: | Liquid |
| APPEARANCE: | Clear |
| COLOR: | Transparent |
| SCENT: | Chemical |
| PH: | 13.1 |
| DENSITY (25°C): | 1.1 |

### SECURITY

| | |
|---|---|
| HEALTH | 1 |
| FLAMMABILITY | 0 |
| REACTIVITY | 0 |
| PERSONAL ROTECTION | B |

| | |
|---|---|
| 0 = | NEGLIGIBLE |
| 1 = | LOW |
| 2 = | MODERATE |
| 3 = | HIGHT |
| 4 = | EXTREME |

**FIGURE 1: PRODUCT SHEET**

## IMAGES SHOWING THE CRACKING ISSUE

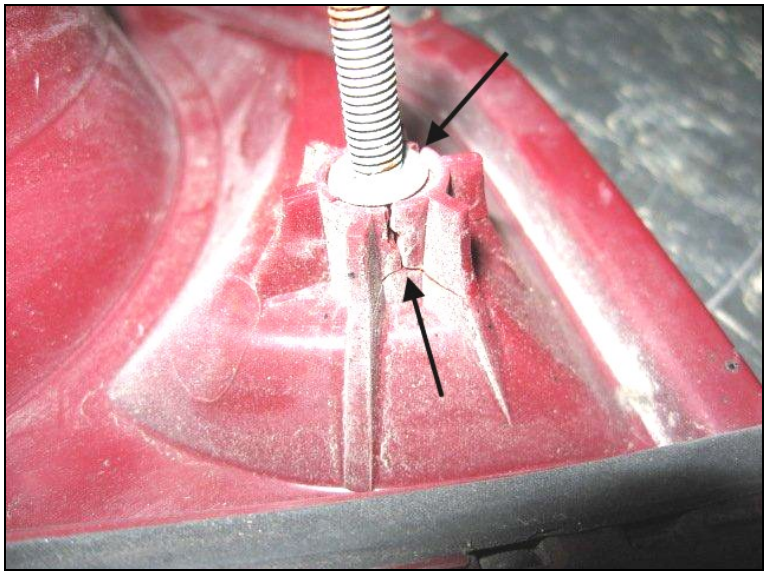

**FIGURE 2: Cracks at the boss and ribs due to the use of engine degreaser**

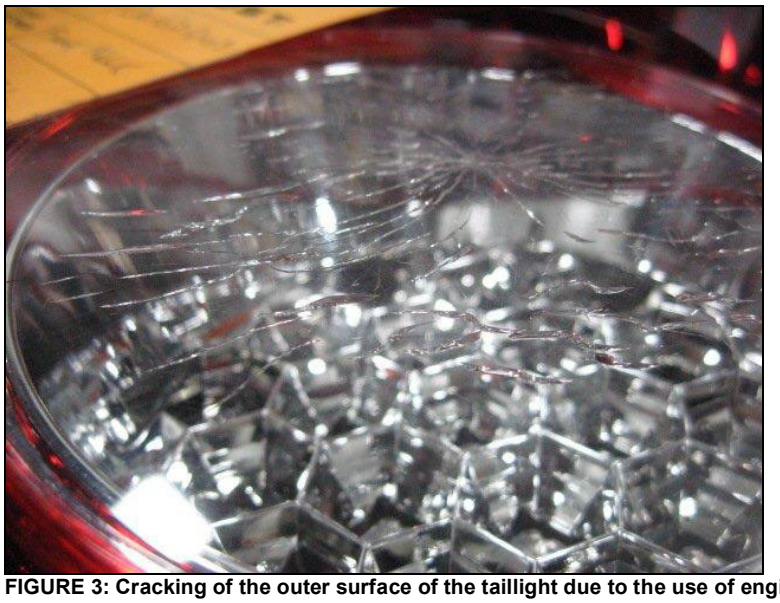

**FIGURE 3: Cracking of the outer surface of the taillight due to the use of engine degreaser**

*Access all our Service Bulletins on [https://secureus5.volvo.com/technicalpublications/en/pub.asp](https://secureus5.volvo.com/technicalpublications/en/pub.asp)*
*Or scan the QR-Code with your smart phone.*

*E-mail us at **technicalpublications_prev@volvo.com** and type "ADD" in the subject to receive our warranty bulletins by e-mail.*

# MAINTENANCE INFORMATION

**MI18-18B**

| | | |
|---|---|---|
| DATE : | June 2018 | SECTION : 18 BODY |
| SUBJECT : | **GENERAL HOISTING AND TOWING PROCEDURES** | |

Revision: B Updated 2.1 to show rubber chocks, secure front and rear. 2020-06-29

## APPLICATION

All Prevost vehicles models
Model Year : 2014 - Current

## DESCRIPTION

This maintenance information is for towing and hoisting Prevost vehicles.

Tower experience, local rules and regulations apply in conjunction with the procedures outlined in this document.

Images are for representation purpose only, actual vehicles may differ.

## Table of contents


**1. HOISTING AND TOWING POINTS ..... 2**

1.1 JACK STANDS ..... 3
1.2 AXLE HOISTING POINTS ..... 4
1.3 USING WHEELS AS LIFTING POINTS ..... 6
1.4 OPTIONAL CHASSIS HOISTING POINTS ..... 7

**2. TOWING ..... 9**

2.1 PREPARATION BEFORE TOWING ..... 9
*2.1.1 Engine compartment emergency air-fill valve ..... 10*
*2.1.2 X Series optional front air supply connections ..... 10*
*2.1.3 Drive Axle Flange Shaft Removal ..... 11*
*2.1.4 After Towing ..... 13*
2.2 TOWING FROM THE FRONT ..... 13
*2.2.1 First Lift ..... 14*
*2.2.2 Second Lift- Front Tow Eye Pads as Lifting Point for Towing ..... 15*
*2.2.3 Second Lift- Using I-Beam Front Axle as Lifting Point for Towing ..... 18*
2.3 X-SERIES RECOVERY USING OPTIONAL REAR TOW EYES ..... 22

**3. EMERGENCY TOWING ..... 23**

3.1 REAR TOW USING NON-APPROVED LIFTING POINTS - *EMERGENCY ONLY* ..... 23
*3.1.1 PRECAUTIONS ..... 23*
*3.1.2 FIRST LIFT ..... 24*
*3.1.3 SECOND LIFT ..... 25*
3.2 VOLVO *I-SHIFT* TRANSMISSION *TOWING MODE* ..... 29

## 1. HOISTING AND TOWING POINTS

As much as possible, use the wheels as the preferred lifting points. If lifting by the wheels is not possible or appropriate, there are several hoisting and towing points under the vehicle.

Lifting should be performed without passengers and no luggage remaining in the vehicle.

Use these points exclusively for hoisting and towing operations (Figure 1, Figure 2).

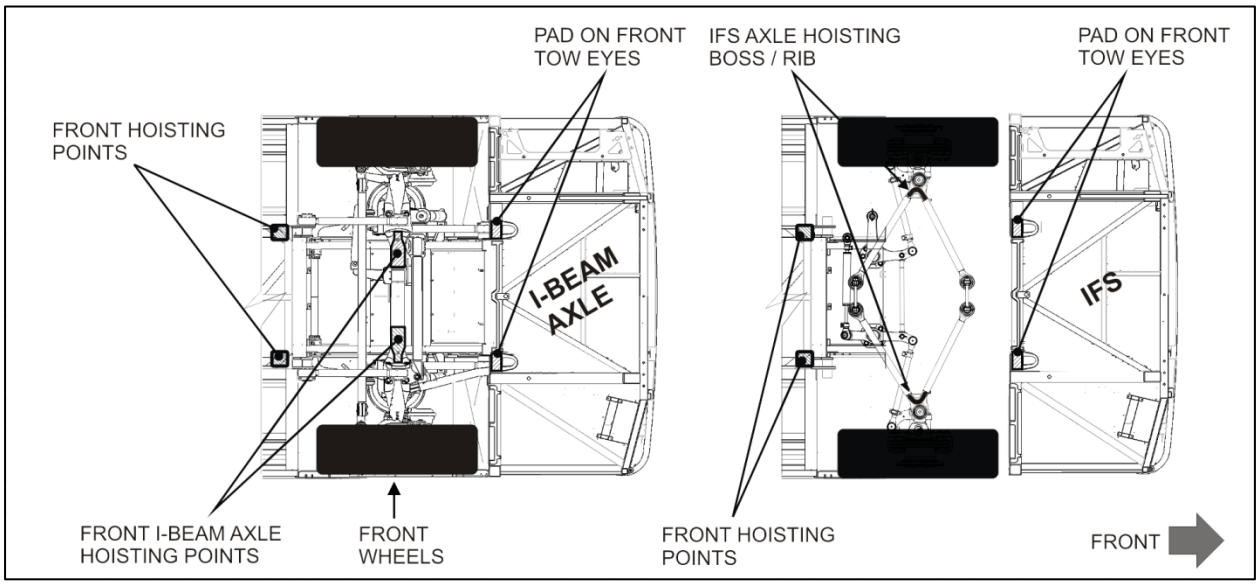


**FIGURE 1 *FRONT* HOISTING AND LIFTING POINTS DIAGRAM**

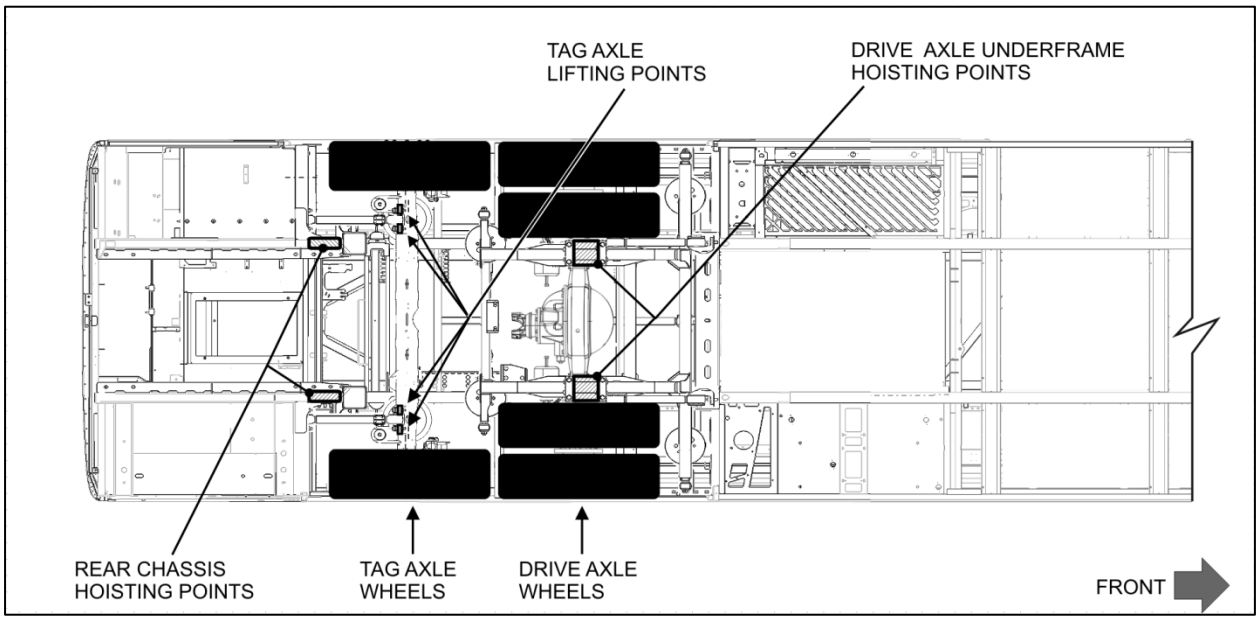


**FIGURE 2 *REAR* HOISTING AND LIFTING POINTS DIAGRAM**

The vehicle is provided with four standard chassis hoisting points. When axles or wheels are serviced, use the chassis hoisting points.

When using the chassis hoisting points to support the vehicle, **the tag axle must be unloaded at all times**. To prevent damage to the suspension, **always support the drive and front axles using jack stands** when using chassis hoisting points.

| CHASSIS HOISTING POINTS |
| --- |
| 2 hoisting points located aft of the tag axle (Figure3) |
| 2 hoisting points or optional hoisting pads with receptacles located aft of the front axle (Figure4) |



**FIGURE 3 : CHASSIS HOISTING POINTS - AFT OF TAG AXLE (BOTH SIDES)**

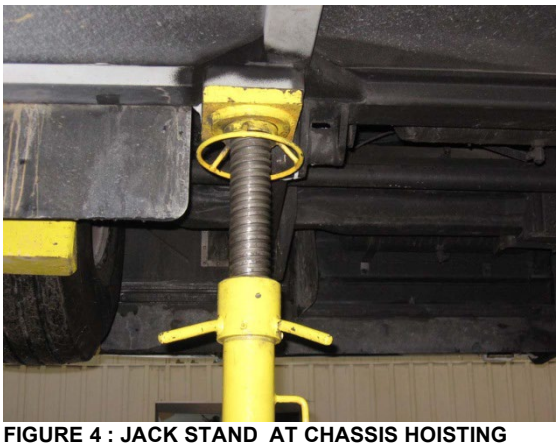

**FIGURE 4 : JACK STAND AT CHASSIS HOISTING POINT - AFT OF FRONT AXLE (BOTH SIDES)**

## 1.1 JACK STANDS

As a general recommendation, the minimum safe working load (SWL) for any jack stand should be 10 US tons (20 000 lb; 9072 kg). Figure5, Figure6 and Figure7 show general examples of this type of jack stand.

The vehicle can be supported at the chassis hoisting points (refer to HOISTING AND LIFTING POINTS diagram). Use a jack stand of 10 US tons (20 000 lb; 9072 kg) capacity at each of the four standard chassis hoisting points.

| ⚠ WARNING |
| --- |
| Hydraulic jacks are intended for lifting only. Do not get under the vehicle while using hydraulic jacks unless it is properly supported with safety jack stands. |



FIGURE 5 : 20 000 LB (10 US TON) CAPACITY JACK STAND



FIGURE 6 : 16500 LBF CAPACITY



FIGURE 7 : 40 000 LB (20 US TON) CAPACITY JACK STAND

## 1.2 AXLE HOISTING POINTS

| AXLE HOISTING POINTS |
|---|
| 2 front axle hoisting points (Figure8, Figure9, Figure10) |
| 2 drive axle sub frame hoisting points (Figure11) |
| 2 hoisting points under the tag axle (tag axle must be unloaded) (Figure12) |

**To ensure stability, always use the two hoisting points under a specific axle simultaneously**.

| **WARNING** |
|---|
| Two hoisting points are located under the tag axle. Using the tag axle as rear hoisting points for the vehicle should be avoided. When possible, use the drive axle as hoisting point. |

The vehicle can be lifted from the front axle and the drive axle sub frame using lifting equipment of appropriate capacity.

| APPROXIMATE WEIGHT PER AXLE | |
|---|---|
| **COACHES** | **MOTORHOMES / SPECIALTY VEHICLES** |
| Front axle: 12,000 lb. (5 443 kg)<br>Drive axle: 26,500 lb. (12 020 kg) | Contact the owner of the vehicle. The Gross Axle Weight Rating (GAWR) for the front and rear axle should not be exceeded.<br>GAWR values for a particular vehicle appear on the vehicle's certification plate installed on the driver's left-hand console. |

| **WARNING** |
|---|
| The suspension must be in the normal ride position before hoisting. |

| **WARNING** |
|---|
| To prevent damage to suspension components, always unload the tag axle before hoisting the vehicle. |

## FRONT AXLE HOISTING POINTS

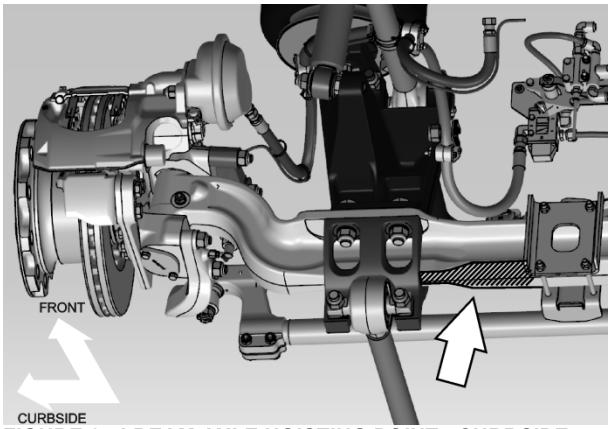


FIGURE 8 : I-BEAM AXLE HOISTING POINT - CURBSIDE

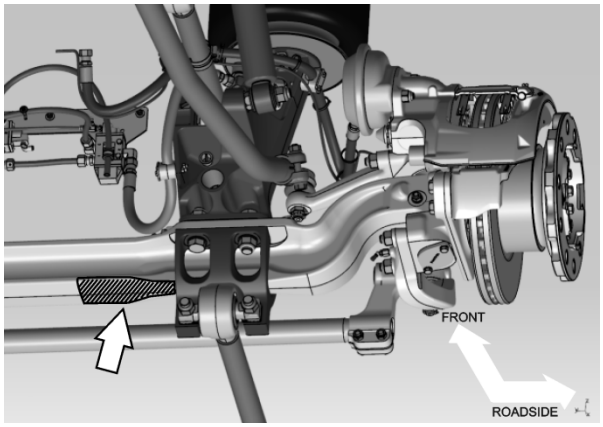


FIGURE 9 : I-BEAM AXLE HOISTING POINT – ROAD SIDE

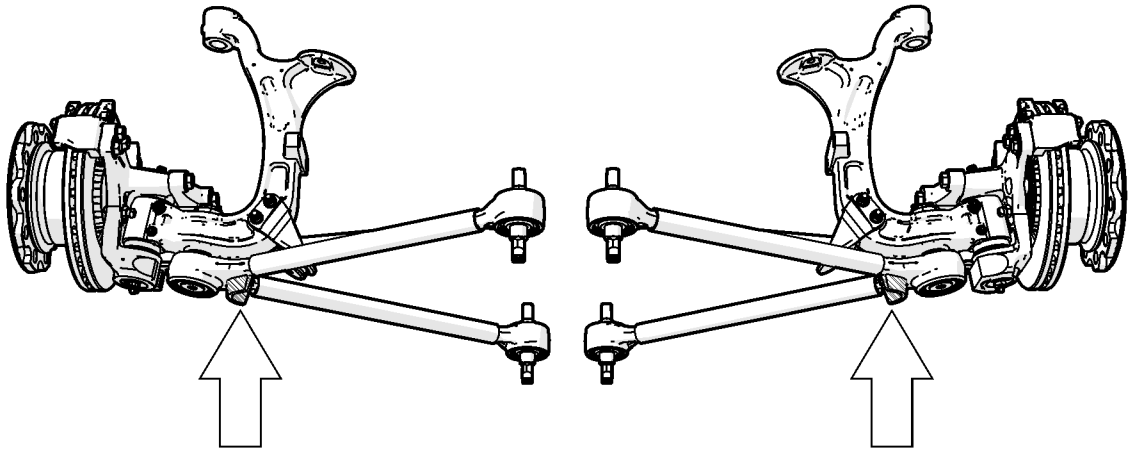

FIGURE 10 : INDEPENDENT FRONT SUSPENSION (IFS) HOISTING POINTS.

**DRIVE AXLE SUB FRAME HOISTING POINTS**

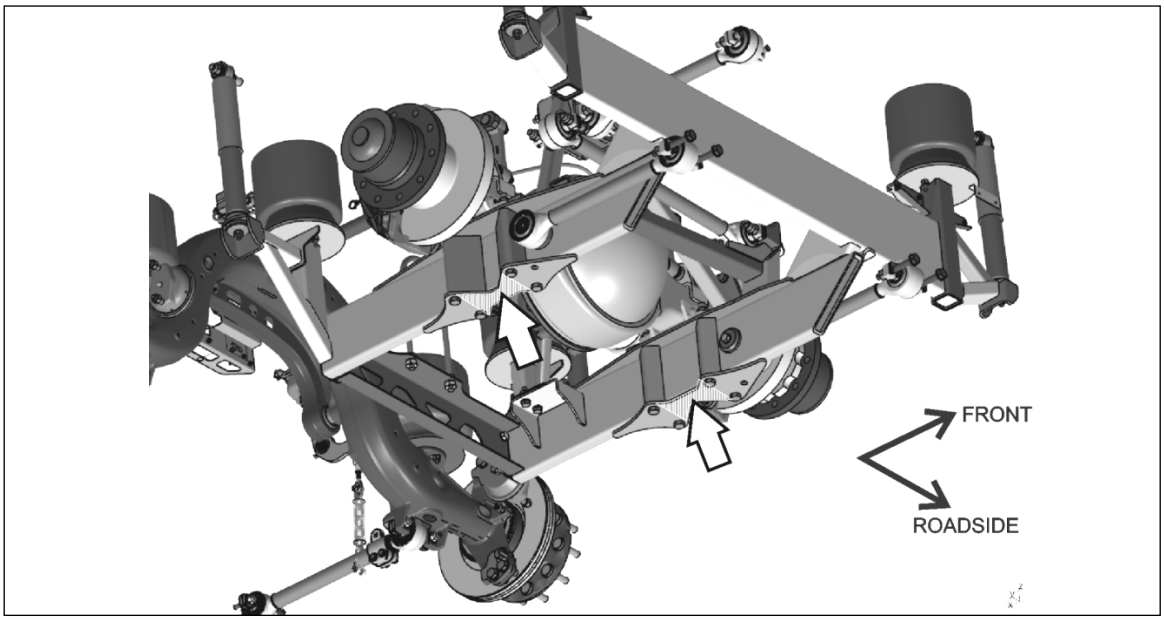


**FIGURE 11 : DRIVE AXLE SUB FRAME HOISTING POINTS.**

**TAG AXLE HOISTING POINTS**

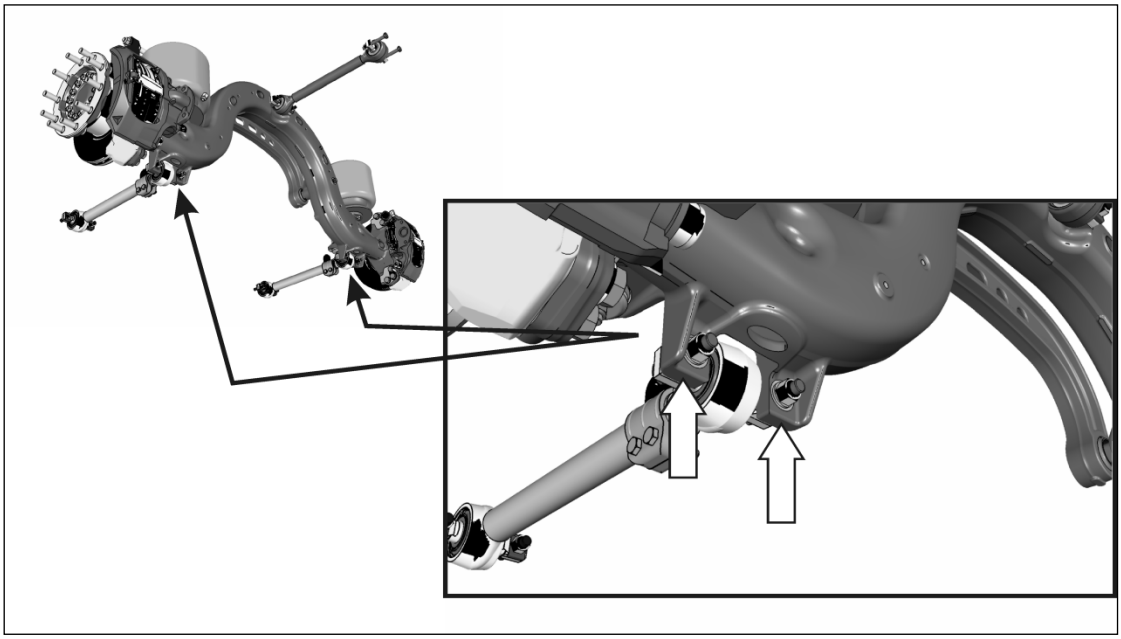

**FIGURE 12 : TAG AXLE HOISTING POINTS (USE ONLY TO SUPPORT THE TAG AXLE)**

## 1.3 USING WHEELS AS LIFTING POINTS

Use the front and drive axle wheels to lift the vehicle when using mobile column lifts. When doing so, the tag axle must be unloaded at all time.

Avoid using the tag axle wheels as the only lifting point for the rear of the vehicle. However, if the rear of the vehicle has to be lifted using the tag axle wheels, the tag axle must be unloaded at all times.

## 1.4 X-SERIES COMMUTER OPTIONAL CHASSIS HOISTING POINTS

On certain vehicles, lifting pads and rear emergency recovery toe eyes may be added on the chassis. When axles or wheels are serviced, use the chassis hoisting points.

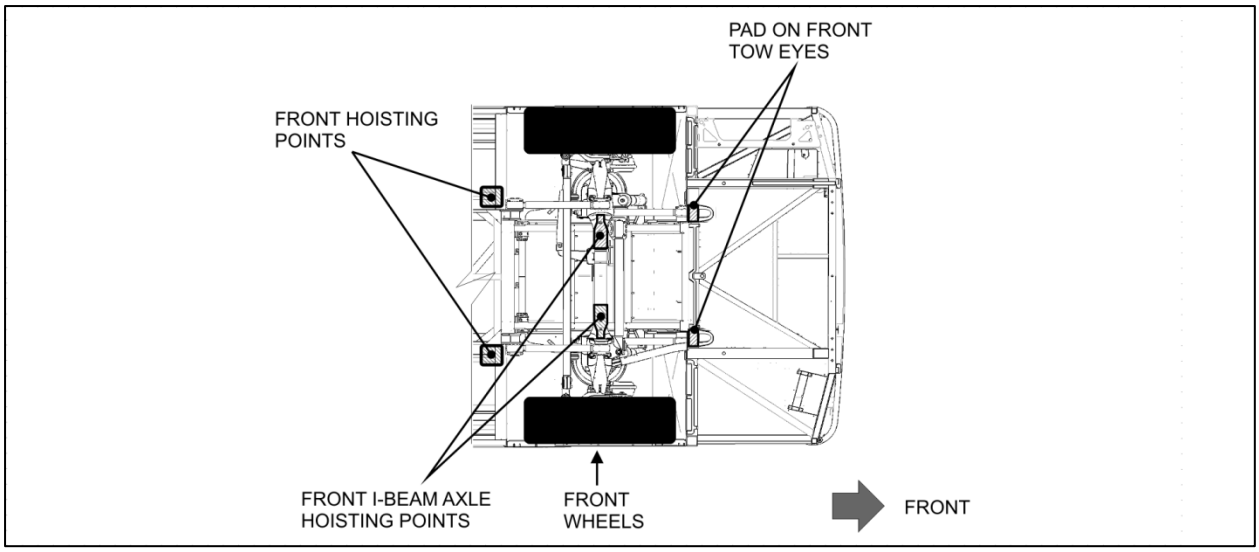


**FIGURE 13 : OPTIONAL FRONT CHASSIS HOISTING POINTS**

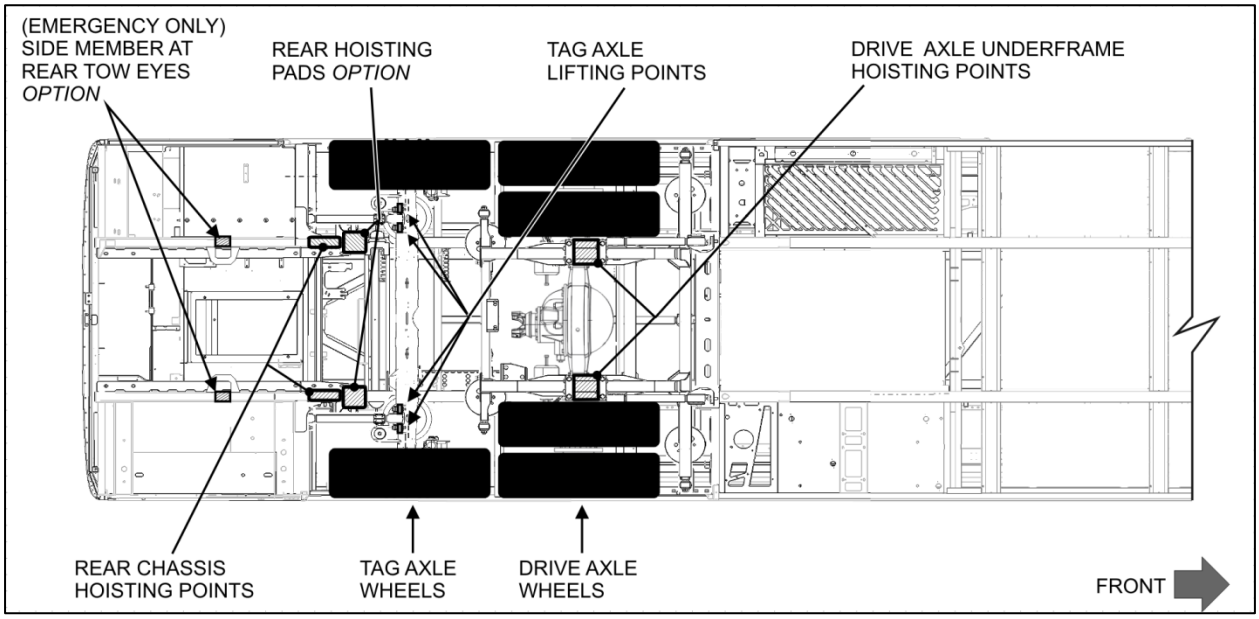


**FIGURE 14 : X-SERIES OPTIONAL REAR CHASSIS HOISTING POINTS**

When using the chassis hoisting points to support the vehicle, the tag axle must be unloaded at all times. To prevent damage to the suspension, always support the drive and front axles using jack stands when using chassis hoisting points.

| X-SERIES OPTIONAL CHASSIS HOISTING POINTS |
|---|
| 2 optional hoisting pads with receptacles located aft of the front axle (Figure16) |
| 2 optional hoisting pads with receptacles located aft of the tag axle (Figure15) |



**FIGURE 15 : OPTIONAL CHASSIS HOISTING RECEPTACLES - AFT OF TAG AXLE**



**FIGURE 16 : OPTIONAL CHASSIS HOISTING RECEPTACLES - AFT OF FRONT AXLE**



**FIGURE 17 : JACK STAND AT CHASSIS HOISTING RECEPTACLE - AFT OF FRONT AXLE, ROAD SIDE**



**FIGURE 18 : JACK STAND AT CHASSIS HOISTING RECEPTACLE - AFT OF FRONT AXLE, CURB SIDE**



**FIGURE 19 : JACK STAND AT CHASSIS HOISTING RECEPTACLE – AFT OF TAG AXLE, ROAD SIDE**



**FIGURE 20 : JACK STAND AT CHASSIS HOISTING RECEPTACLE – AFT OF TAG AXLE, CURB SIDE**

## 2. TOWING

Towing from the front is the recommended method. Prevost does not recommend towing from the rear using unapproved hoisting points as the vehicle may sustain structural damage.

Observe normal precautions including, but not limited to list below:

- Make sure the parking brake or the emergency brake is released at time of towing.
- Do not allow passengers to ride on board.
- Tow the vehicle at a safe speed.
- Accelerate and decelerate slowly and cautiously.
- Avoid sharp turns where possible.

**WARNING**

Do not carry passengers while the vehicle is being towed.

**CAUTION**

Avoid towing the vehicle from the rear using hoisting points that are not approved as this will cause structural damage. In case of damage to the drive train components use a low-bed semi-trailer.

**WARNING**

Engage the parking brake to prevent the vehicle from moving before you begin maintenance or service procedures that require you to be under the vehicle. Serious personal injury can result.

**CAUTION**

Lift the vehicle at the minimal height required for the vehicle to trail the tow truck.

### 2.1 PREPARATION BEFORE TOWING

**WARNING**

Prior to hoisting, park the vehicle on a level surface and apply parking brake.

Chock the *front and rear* wheels to prevent the vehicle from moving at time of releasing the parking brake during the towing preparation.

On the L.H. dashboard panel, turn on the hazard warning flashers. Preferably, use a towing light bar.



**FIGURE 21 CHOCK THE FRONT AND REAR WHEELS**

Place the front wheels in a straight-ahead position and keep the steering wheel from turning. To do so, slide the driver's seat close to the steering wheel. Wrap the safety belt around and through the steering wheel and then fasten safety belts.

This will ensure the vehicle rolls in straight direction to be stopped by the tow truck in case of mechanical failure of the lifting equipment.



**FIGURE 22**

### 2.1.1 Engine compartment emergency air-fill valve

Use the emergency fill valve to supply air to the system when the engine cannot be operated. This valve is located in the engine compartment (Figure23) and supplies air for all systems (brakes, suspension and accessories).

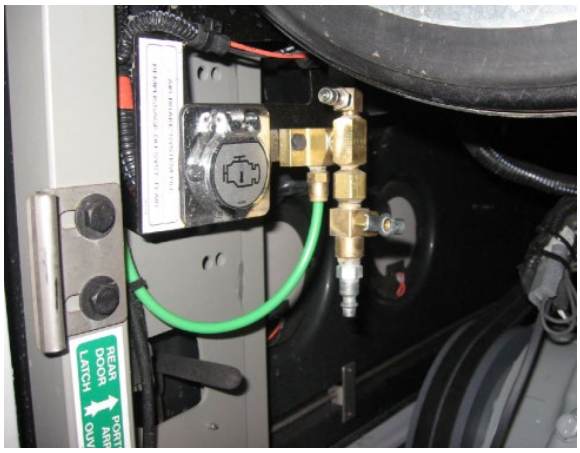


**FIGURE 23 : ENGINE COMPARTMENT EMERGENCY AIR-FILL VALVE**

> **CAUTION**
>
> Do not tow the vehicle without external air pressure applied to the emergency fill valve if the engine does not operate. Without brake system air pressure, the emergency spring brakes may apply automatically. If failure prevents releasing the parking brakes with air pressure, disengage the parking brakes mechanically.

### 2.1.2 X Series Optional Front Air Supply Connections

Operate the engine when towing to maintain brake system air pressure. If the engine cannot be operated, connect external air pressure lines from the tow truck.

**"Brake" quick connect fitting**

Flip down the access door located on the front bumper, connect an auxiliary air supply from the tow truck to the quick connect fitting identified BRAKE in order to supply air for operation of the vehicle **service brake** from the tow truck (Figure24, Figure25).

**"Air supply" quick connect fitting**

While the vehicle is being towed, connect an auxiliary air supply from the tow truck to the quick connect fitting identified AIR SUPPLY to supply air for all systems (brakes, suspension, accessories) through the air dryer (Figure24, Figure25).




FIGURE 24

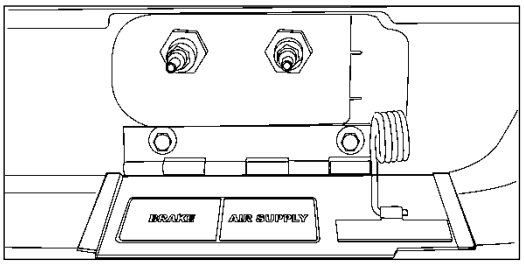


**FIGURE 25 : FRONT TOWING AIR SUPPLY ACCESS PANEL QUICK CONNECT FITTINGS**

### 2.1.3 Drive Axle Flange Shaft Removal

1. Apply the parking brake.
2. Remove the stud nuts and the washers (with Meritor drive axle) or cap screws (with ZF drive axle) from the flange shaft.

   **NOTE: there is oil behind the flange shaft which comes out during disassembly**

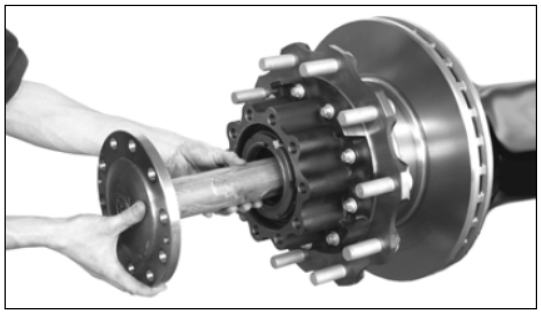

**FIGURE 26 : ZF A-132 AXLE**

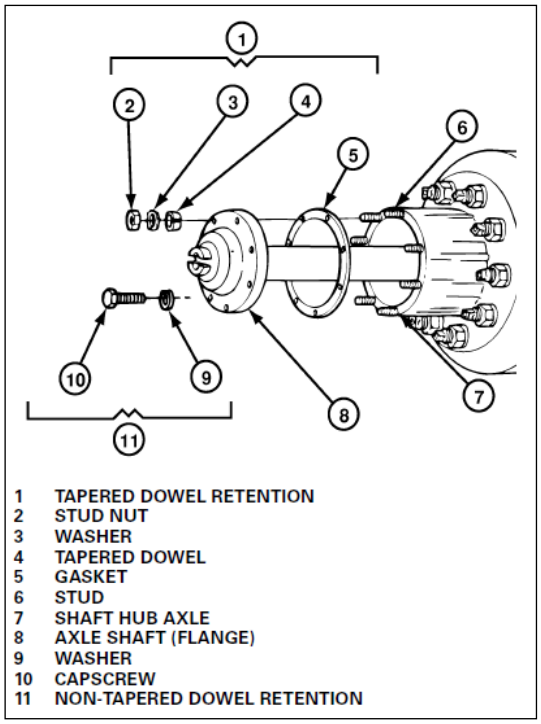


1 TAPERED DOWEL RETENTION
2 STUD NUT
3 WASHER
4 TAPERED DOWEL
5 GASKET
6 STUD
7 SHAFT HUB AXLE
8 AXLE SHAFT (FLANGE)
9 WASHER
10 CAPSCREW
11 NON-TAPERED DOWEL RETENTION

**FIGURE 27: MERITOR RC23-165 AXLE**

## CAUTION

Do not use a chisel or wedge to loosen the axle flange shaft and tapered dowels. Using a chisel or edge can result in damage to the axle shaft, the gasket and seal, and/or the axle hub.

3. Meritor axle: Loosen the tapered dowels in the flange of the axle shaft using the following methods.
   a) Do not strike the round driving lugs on the flange of an axle shaft. Pieces can break off and cause serious personal injury. A 1.5-inch (38.1 mm) diameter brass hammer can be used as a drift.
   b) Hold a 1.5-inch (38.1 mm) diameter brass drift against the center of the axle shaft flange, **inside the round driving lugs.**
   c) Hit the end of the drift with a large hammer (5 to 6 lbs.') to loosen the axle shaft and tapered dowels from the hub.
4. Identify each axle shaft that is removed from the axle assembly so they can be installed in the same location after transporting or repair is completed. (Example: Match mark a mating axle shaft and hub).

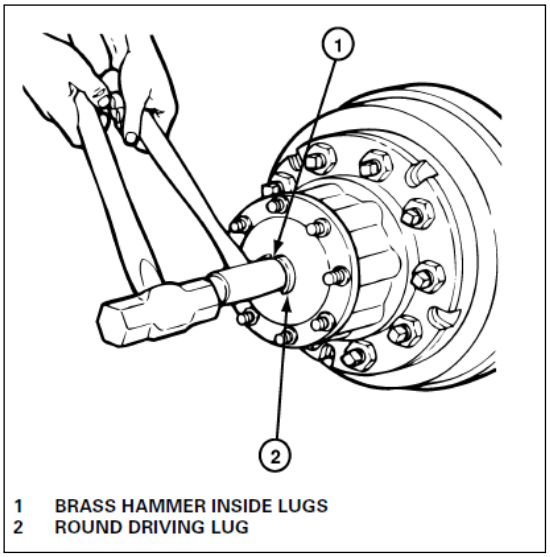


1 BRASS HAMMER INSIDE LUGS
2 ROUND DRIVING LUG

**FIGURE 28: MERITOR RC23-165 AXLE**

5. Remove the tapered dowels (if used), gasket or O-ring and the axle shaft from the axle assembly. Use a container to recover the oil.
6. Remove opposite flange shaft similarly.
7. Install a temporary cover over the open end of each hub where an axle shaft was removed. This will prevent dirt from entering the bearing cavity and loss of lubricant.

### 2.1.4 After Towing

1. Remove the covers from the hubs.
2. Install the gasket or O-ring, and axle shaft into the axle housing and carrier in the same location it was removed from. The gasket and flange of the axle shaft must be flat against the hub. Rotate the axle shaft and/or the driveline as necessary to align the splines and the holes in the flange with the studs or holes in the hub.
3. **Meritor axle only:** Install the dowels over each stud and into the tapered holes of the flange.
4. Install the washers and stud nuts or cap screws.

| MERITOR RC23-165 AXLE | ZF A-132 AXLE |
|---|---|
| Determine the size of the fasteners and tighten the nuts to the corresponding torque value shown below.<br>• 9/16-18 plain nuts: **110 - 165 lbf-ft** (149-224 Nm)<br>• 5/8-18 plain nuts: **150 - 230 lbf-ft** (203-312 Nm) | Tightening torque M18x1.5 G10.9 screw<br>**325 lbf-ft** (440 Nm) |

5. Mount opposite flange shaft similarly.
6. Inspect the lubricant level in the axles and hubs where the axle shafts were removed. Add the correct type and amount of lubricant if necessary.

**CAUTION**

Make sure axle shafts or driveshaft are installed correctly after towing. Tighten axle shaft and driveshaft nuts to the correct torque settings. Do not invert shafts.

## 2.2 TOWING FROM THE FRONT

The towed vehicle must be lifted from the front with front wheels off the ground. The tow truck must be equipped with the proper lifting equipment i.e. tow bar, axle forks and holders to reach under the ***front axle*** or the ***front tow eye pads***. No other lifting points are recommended for towing.

Lifting and towing from any other point is not authorized as it may cause structural damage. **To prevent overloading the drive axle, do not unload or raise the tag axle when towing the vehicle**.

To prevent damage to the vehicle, use the ***front tow eye pads*** fixed to the vehicle chassis between the front axle and the front bumper. Only use a solid link tow bar and safety chains to tow the vehicle.

1. Block the wheels to prevent the vehicle from moving.
2. Perform the PREPARATION BEFORE TOWING. Refer to paragraph 2.1.
3. Disconnect both drive axle shafts to prevent damage to the transmission. Plug axle tubes to prevent oil loss. Refer to 2.1.3 DRIVE AXLE FLANGE SHAFT REMOVAL.

## CAUTION

The axle shafts must be disconnected to avoid serious damage to the Allison transmission. Lubrication is inadequate when towing.

To prevent damage to the drive train components, disconnect drive axle shafts before towing. Do not attempt to push or pull start a vehicle equipped with an automatic transmission.

**Failure to disconnect the propeller shaft, remove the drive axle shafts or lift the drive wheels off the ground before towing can cause serious transmission damage and void the warranty.**

### 2.2.1 First Lift

To allow lifting equipment fitted with axle forks to reach under the front axle or tow eyes, it is necessary to perform a first lift of the front of the vehicle using the tow eye pads as lifting points. This first lift will allow tow cans or blocks to be placed underneath front tires.

1. Retract the tow truck stinger arm.
2. On the first lift, position the tow bar fork holders under the front tow eye pads (Figure 30 and Figure 31) to lift the vehicle in order to place the front wheels firmly on the tow cans or blocks.

*Center to center measurement between tow eyes= 37 inches (*Figure 29*)*

***Note: No axle forks are needed for this first lift***




**FIGURE 29**

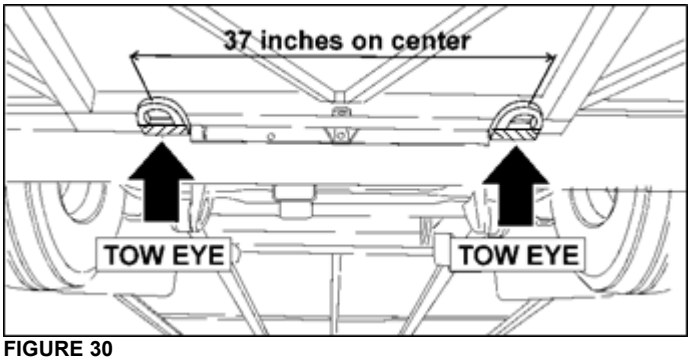


**FIGURE 30**



**FIGURE 31:** TOW EYE

3. Deploy the tow truck stinger arm, placing the axle fork holders under the tow eye pads (Figure 32).

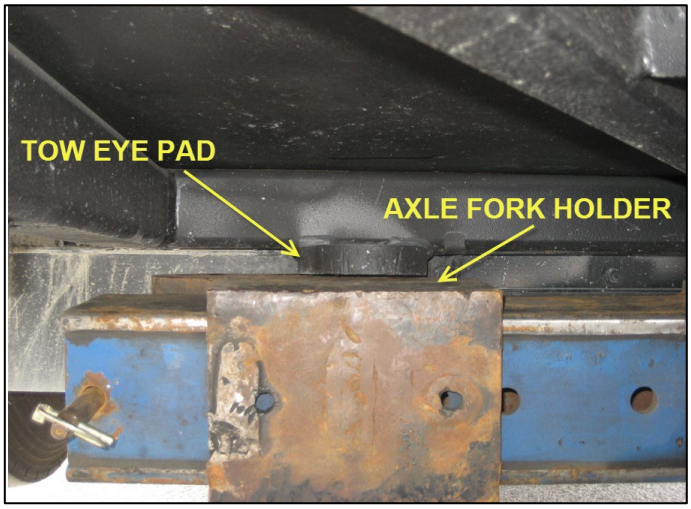


**FIGURE 32**

4. Lift the front end of the vehicle high enough to allow installation of tow cans or blocks. Place the tow cans or blocks perfectly centered underneath each front wheel (Figure 33).
5. With precaution, lower the front of the vehicle



**FIGURE 33**

### 2.2.2 Second Lift- Front Tow Eye Pads as Lifting Point for Towing

The tow eye pads are fixed to the vehicle chassis, fore of the front axle will be used as front end lifting points for towing.

1. Perform the first lift as instructed in paragraph 2.2.1 if not already done.

2. Place the axle forks on the tow bar fork holders (Figure 34).

**Use 3" to 4 ½" mouth axle forks preferably**



**REGULAR**

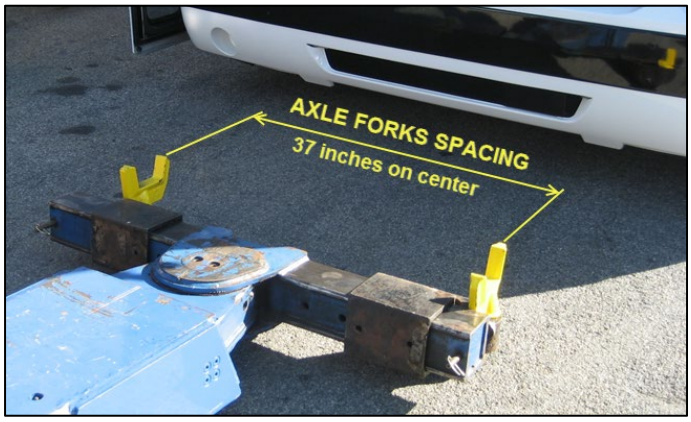


**FIGURE 34**

***Pre-adjust spacing between axle forks to = 37 inches***

3. Lower the tow bar and position under the front tow eye pads.

4. Adjust fork holder's position and hand guide the forks into each front tow eye. (Figure 35)

5. Lift the tow bar until the axle forks fit snugly into the front tow eyes (Figure 35).

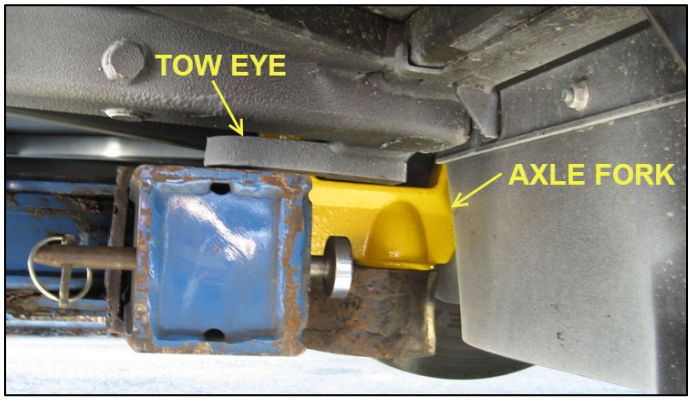


**FIGURE 35**

6. Raise the front of the vehicle.

7. Install a jack stand under the stinger arm for support and safety purposes and then lower the stinger arm so it rests on the jack stand (Figure 36). The tow cans or blocks can be removed from under the front axle wheels.

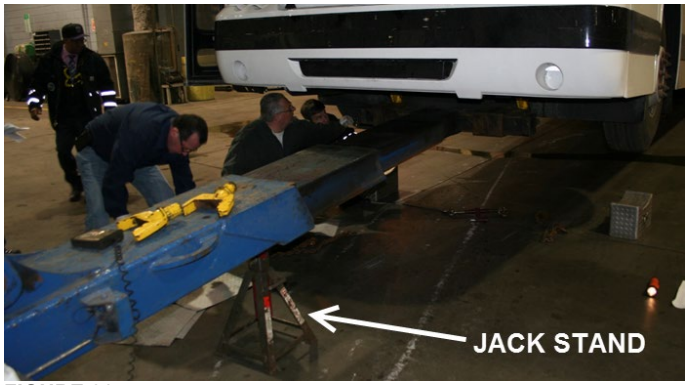


**FIGURE 36**

8. Tie the two choke chains together to secure the tow eyes to the tow bar attachment (Figure 38).

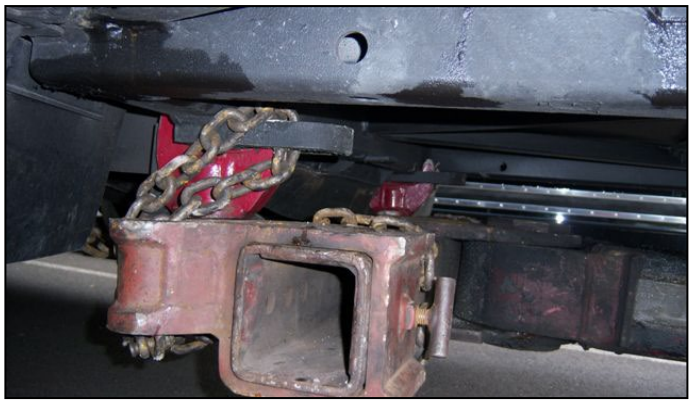

**FIGURE 37**

9. Attach the two tow truck safety chains from each of the two front lower radius rods (Figure 38) of the vehicle to the truck's tow eyes (Figure 38).



**FIGURE 38**

10. Confirm air is supplied to the vehicle. See 2.1 PREPARATION BEFORE TOWING



**FIGURE 39**

11. Raise the stinger arm and remove the support jack stand.
12. Lower the vehicle. The front tires should be 7″ to 8″ above the ground before the tow can proceed.
13. Use bungee cords to support the safety chains (Figure 40).



**FIGURE 40**

14. If required, use the appropriate jig to assure that the highest point on the vehicle **does not exceed** the maximum allowable height for towing (Figure 41).
15. Make sure the **parking brake** is released before moving the vehicle.
16. Observe safety precautions when towing.



**FIGURE 41**

***Avoid sharp turns where possible as safety chains may rub and damage the front bumper (***Figure 42***)***



**FIGURE 42**

### 2.2.3 Second Lift- Using I-Beam Front Axle as Lifting Point for Towing

This method uses the I-beam axle as lifting points for towing (Figure8 and Figure9).

1. Perform the first lift as instructed in paragraph 2.2.1 if not already done.

2. Install regular axle forks onto tow bar fork holders.



TALL REGULAR

***Pre-adjust spacing between axle forks***

Minimum spacing: 25 inches

Maximum spacing: 33 inches

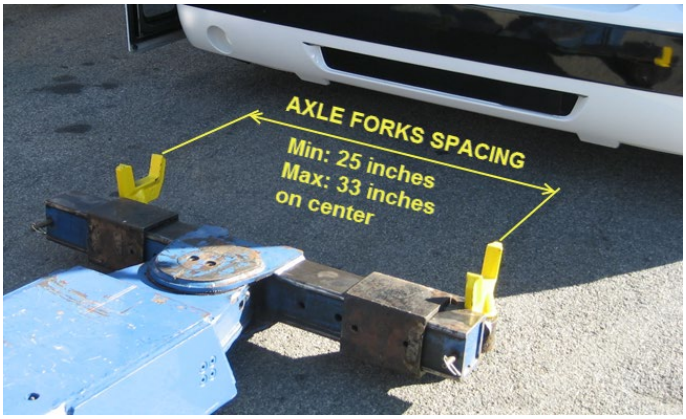


**FIGURE 43**

3. Lower the stinger arm to position the axle forks under the front axle hoisting points (Figure8 and Figure9).

4. Lift the tow bar until the axle forks grab the front axle I-beam at the hoisting points (Figure 44).

5. Raise the front of the vehicle.

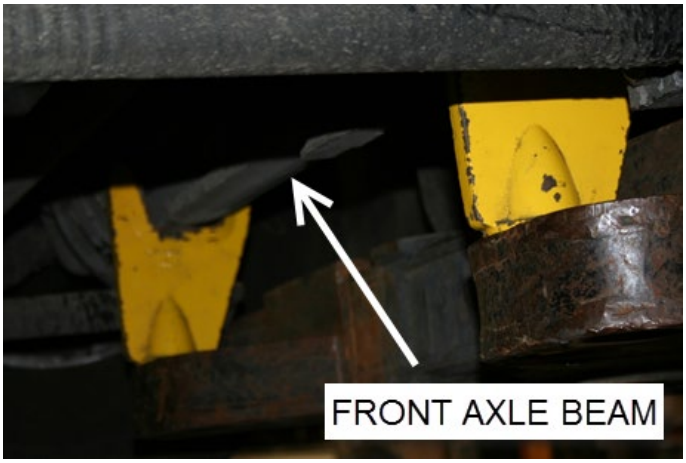


**FIGURE 44**




**FIGURE 45**

6. Install a jack stand under the stinger arm for support and safety purposes and then lower the stinger arm so it rests on the jack stand (Figure 47). The tow cans or blocks can be removed from under the front axle wheels.
7. Tie the two choke chains together to secure the front axle to the tow bar. Take up any slack that may remain and maintain proper tension on chains.

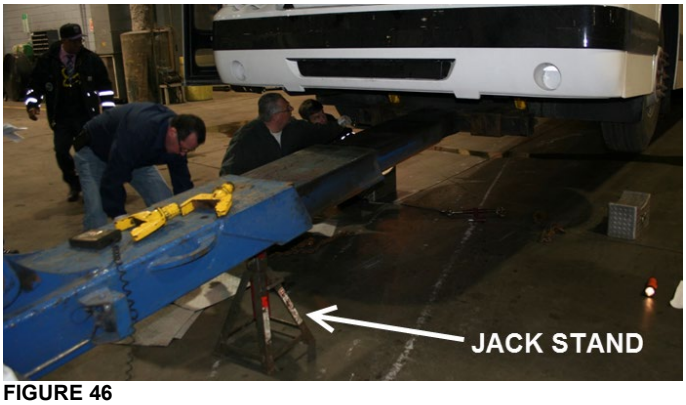

**FIGURE 46**

8. Attach the two tow truck safety chains from each of the two front tow eyes of the vehicle to the truck's tow eyes (Figure 47 and Figure 48).
9. Confirm air is supplied to the vehicle. See 2.1 PREPARATION BEFORE TOWING.


**FIGURE 47**

10. Raise the tow bar in order to remove the jack stand from under the stinger arm.
11. Lower the vehicle. The front tire should be about 7″ to 8″ above the ground before the tow can proceed.


**FIGURE 48**

12. Use bungee cords to support the safety chains (Figure 49).



**FIGURE 49**

13. Make sure that the **parking brake** is released before moving the vehicle.
14. Observe safety precautions when towing.




**FIGURE 50**

***Avoid sharp turns where possible as safety chains may rub and damage the front bumper (***Figure 51***)***



**FIGURE 51**

**CAUTION**

Make sure a safe distance is kept between the front of the vehicle and the tow truck. This space ensures that vehicle does not suffer damages when being towed.

**CAUTION**

Make sure axle shafts or driveshaft are installed correctly after towing. Tighten axle shaft and driveshaft nuts to the correct torque settings. Do not invert shafts.

**DANGER**

Do not carry passengers while the vehicle is being towed.

## 2.3 X-SERIES RECOVERY USING OPTIONAL REAR TOW EYES

Optional rear tow eyes allow recovery of a vehicle that is no longer on a drivable surface. Chains can be looped around or hooked to these rear tow eyes.

**CAUTION**

This recovery method should be used only for a short distance with all vehicle wheels on the ground

After the vehicle has been brought back on a drivable surface, it should be lifted and towed from the front, with front wheels off the ground.

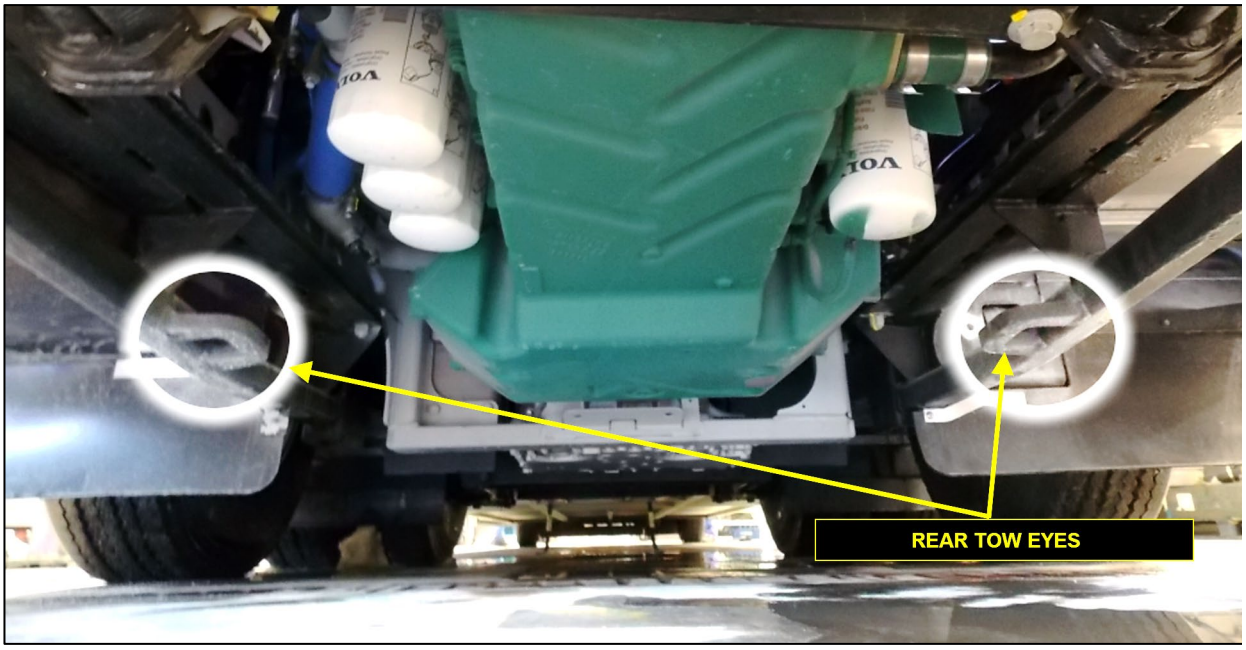


**FIGURE 52 :** OPTIONAL REAR TOW EYES ON SIDE MEMBERS UNDER ENGINE CRADLE SUPPORT RAILS

## 3. EMERGENCY TOWING

If the vehicle must be moved and standard towing procedures cannot be used, follow the alternate towing procedures below.

### 3.1 REAR TOW USING NON-APPROVED LIFTING POINTS - *EMERGENCY ONLY*

> **CAUTION**
>
> The vehicle should **NOT** be lifted and towed from the rear in normal situations.
>
> In an emergency, however, it can be moved from the rear over a very short distance such as in a parking lot or to place the vehicle back on pavement.
>
> Lifting the rear end from the engine cradle or from the side members located under the engine cradle support rails should be avoided. Doing so may cause structural damage (see image further in this document).

#### 3.1.1 PRECAUTIONS

**In an emergency or if the vehicle has to be moved over a short distance, the side members may be used as lifting point. Try to lift from the strongest location along the side members which is near the rear sub-frame vertical member (**Figure 53**).**

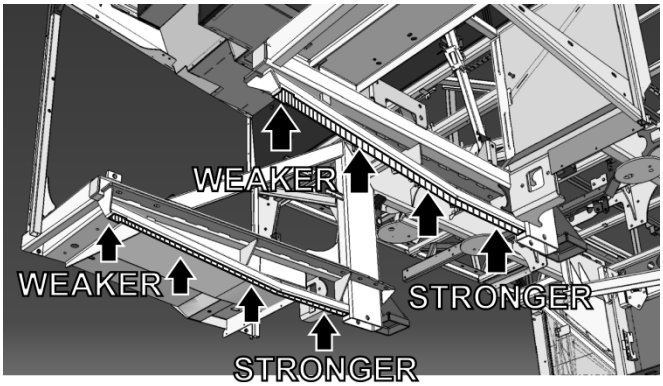


**FIGURE 53**: UNAPPROVED LIFTING POINTS FOR REAR END TOWING – SIDE MEMBERS LOCATED UNDER THE ENGINE CRADLE SUPPORT RAILS

Lift with precautions as the vehicle may sustain structural damage at the vertical structure shown on the image at right (Figure 54).

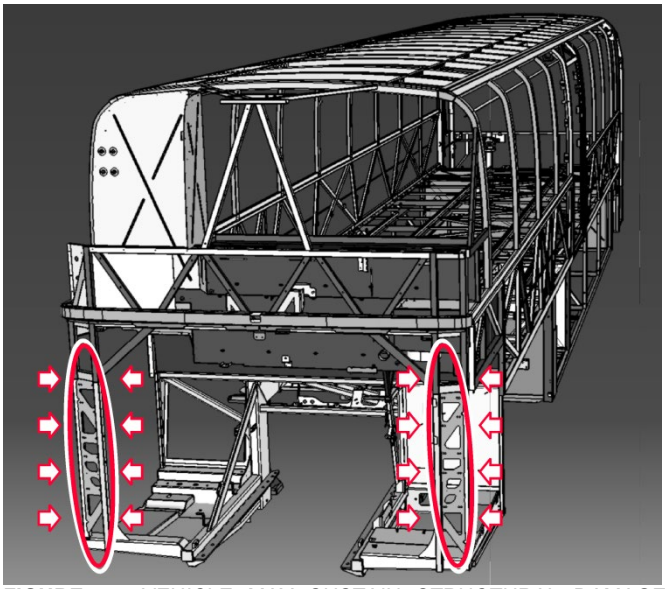

**FIGURE 54**: VEHICLE MAY SUSTAIN STRUCTURAL DAMAGE WHERE INDICATED WITH ARROWS DURING TOWING FROM THE REAR

**DANGER**

Do not carry passengers while the vehicle is being towed.

### 3.1.2 FIRST LIFT

A first lift of the vehicle is required. This first lift will allow tow cans or blocks to be placed underneath the drive axle tires.

1. Prepare the vehicle for towing as instructed in paragraphs 2.1 and 2.1.1
2. If not already done, chock the front wheels.
3. Retract the tow truck stinger arm (Figure 55).
4. Pre-adjust spacing between the axle fork holders. The spacing between the most distant edges of the folk holders should be **30 inches** (Figure 55).

   ***No axle forks will be used for this first lift***



TALL REGULAR

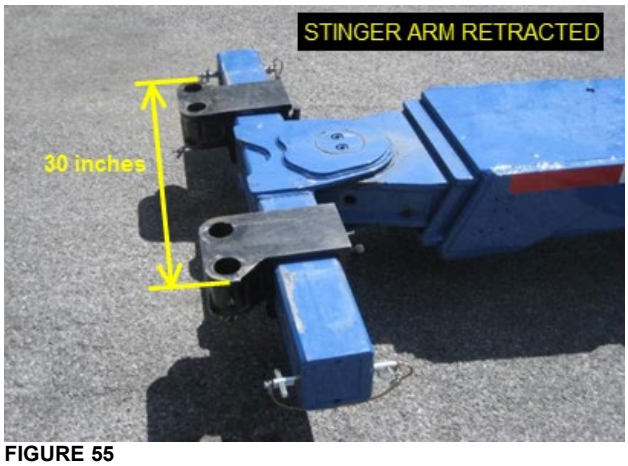


FIGURE 55

5. Deploy the tow truck stinger arm. Place the fork holders under the engine cradle transverse beam as shown on Figure 56. Lift the tow bar until the fork holders come into contact with the cradle transverse beam.

   ***Lifting from the engine cradle is the least preferred option and should be done only if lifting from under the side members shown on*** Figure 53 ***cannot be achieved***

**CAUTION**

Remember, lifting the rear end from the side members located under the engine cradle or by the engine cradle itself may cause structural damage.

**CAUTION**

Use caution when lifting from the engine cradle transverse beam. Maintain the vehicle in that situation during the shortest period of time.




FIGURE 56

6. Raise the tag axle to prevent it from hanging unsupported.

7. On X-Series commuter vehicles only, the tag axle air valve lever is located in the front service compartment. Move it forward as shown on Figure 57.

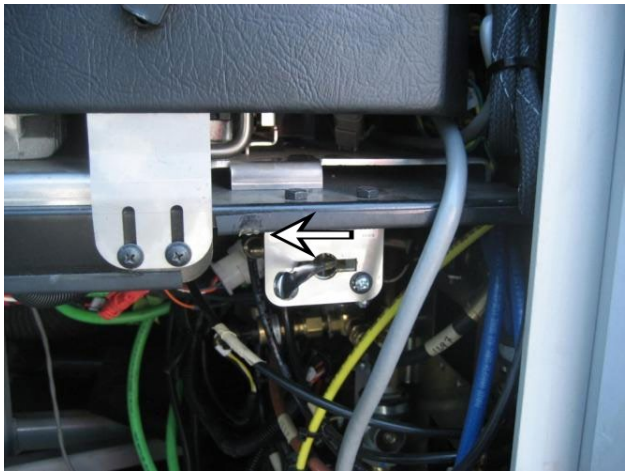

**FIGURE 57:LOCATION OF COMMUTER TAG AXLE AIR VALVE**

8. Lift the rear end of the vehicle high enough to allow installation of tow cans or blocks underneath the drive axle wheels (Figure 58).
9. With precautions, lower the rear of the vehicle.



**FIGURE 58: TOW CAN**

### 3.1.3 SECOND LIFT

1. Perform the first lift as instructed in paragraph 3.2 if not already done.
2. Retract the tow truck stinger arm.
3. Pre-adjust spacing between the axle fork holders to **43 inches**.




**FIGURE 59**

4. Install either long or short axle forks into fork holders.

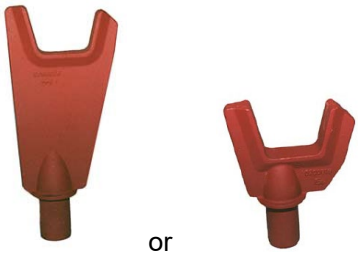

**TALL** or **REGULAR**

5. Deploy the tow truck stinger arm. Place the axle forks under the rear tow eyes if equipped or under the side members (Figure 60).

   Place the forks in a transversal position i.e. perpendicularly to the side members (Figure 61).

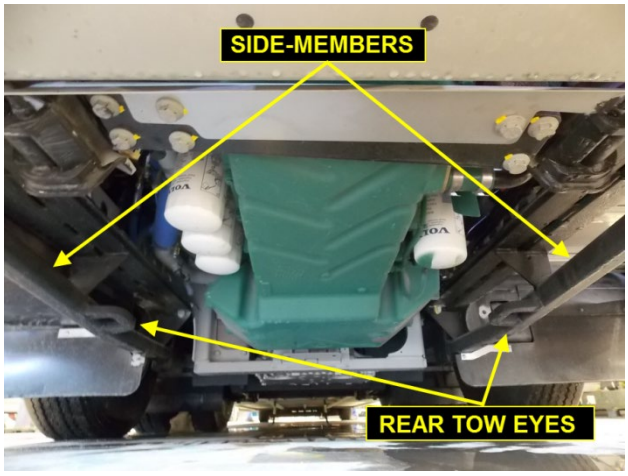


**FIGURE 60:** REAR TOW EYES ON SIDE MEMBERS LOCATED UNDER ENGINE CRADLE SUPPORT RAILS

6. Lift the tow bar until the axle forks grab the side members (Figure 61).

   If equipped with rear tow eyes, lift the tow bar until the axle forks fit snuggly into the side-members tow eyes.

   ***Avoid lifting at the side-members further toward the rear of the vehicle (close to the bumper)***

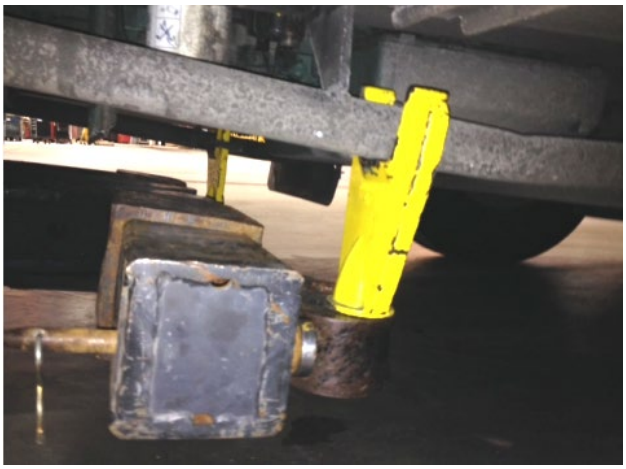

**FIGURE 61 :** PROPER LOCATION WHEN LIFTING THE SIDE MEMBERS

7. Place the fork's shorter finger outboard for better clearance (see Figure 62).




**FIGURE 62 :** PROPER LOCATION WHEN LIFTING THE SIDE MEMBERS – VEHICLE EQUIPPED WITH REAR TOW EYES

8. Raise the rear of the vehicle.
9. Install a jack stand under the stinger arm for support and safety purposes and then lower the stinger arm so it rests on the jack stand (Figure 63). The tow cans or blocks can be removed from under the drive axle wheels.



**FIGURE 63**

10. Install the choke chains. Tie the two choke chains together to secure the side members to the tow bar (Figure 64 and Figure 65). Take up any slack that may remain and maintain proper tension on chains.



**FIGURE 64**

11. Shorten the stinger arm to the safest minimum distance between the vehicle and the tow truck to allow the towed vehicle to be as close as possible to the truck yet allowing enough room for the vehicle to avoid collision with the tow truck during turns.

    **Stinger to the rear bumper: Between 59″ and 63″**



**FIGURE 65**

12. Attach the two tow truck safety chains from the vehicle engine cradle cross-member to the truck's tow eyes (Figure 66).
13. Raise the stinger arm and remove the support jack stand.
14. Lower the vehicle. The drive axle tires should be 5″ to 6″ above the ground before the short distance tow can proceed.



**FIGURE 66**

### 3.2 VOLVO *I-SHIFT* TRANSMISSION *TOWING MODE*

The procedure will activate "*tow mode"* on the transmission and will allow the vehicle to be towed flat on all wheels without having to remove the driveshaft.

| **CAUTION** |
|---|
| Check vehicle **VIN** before starting. Earlier vehicles do not have the proper software. |

**This special procedure applies to:**

| Model | VIN   |
|---|---|
| All X Series Vehicles<br>Model Year : 2014 - | *With I-shift gearbox*<br>From 2PCG33497**E**C73**5459** up to Current Vehicles |
| All H Series Vehicles<br>Model Year : 2013 - | *With I-shift gearbox*<br>From 2PCH33499**D**C71**2364** up to Current Vehicles |

| **CAUTION** |
|---|
| **Forward towing only!** Reverse towing (backing-up) is not allowed with this procedure or damage to the gearbox will occur. |

| **CAUTION** |
|---|
| This procedure should be used in emergency only.<br>This procedure does not have any visual indicator, therefore, make sure all steps of the procedure are fulfilled, or transmission damage may occur. |

Towing gear **3 HR** will be engaged if conditions below are fulfilled in the following sequence:

- **A.** *Ignition key must be in the "**ON**" position*
- **B.** *Engine not running*
- **C.** *Adequate **air pressure to the gearbox**/ Vehicle must have **electrical power***
- **D.** *Shift pad must be in **neutral***
- **E.** *Vehicle must be towed FORWARD only*

## PARTS / WASTE DISPOSAL

Discard according to applicable environmental regulations (Municipal/State[Prov.]/ Federal)

*Access all our Service Bulletins on http://techpub.prevostcar.com/en/*
*Or scan the QR-Code with your smart phone*
*.*

**Are you a vehicle owner?**
*E-mail us at **technicalpublications_prev@volvo.com** and type "ADD" in the subject to receive warranty bulletins applicable to your vehicle(s) by e-mail.*

PREVOST

# MAINTENANCE INFORMATION

**MI23-03**

| | | |
|---|---|---|
| DATE : | May 2023 | SECTION : 18 BODY |
| SUBJECT : | **DASHBOARD COVERS REMOVAL PROCEDURE** | |

First Release 05-31-2023

## APPLICATION

| Model | VIN  |
|---|---|
| H3-45 coaches<br>Model Year: 2024 - … | From 2PCH3349X***R***C72***1453*** |
| H3-45 VIP motorhomes<br>Model Year: 2023 - … | From 2PCVS3499***P***C72***1348*** |

## DESCRIPTION

Perform the following procedure to remove the dashboard covers. Reinstallation is similar to removal but in reverse order.

## Table of contents


SAFETY PRECAUTIONS....2
PART 1 - INSTRUMENT PANEL COVER REMOVAL....3
PART 2 - DASHBOARD COVER REMOVAL....5
PART 3 - RIGHT SIDE OF THE DASHBOARD – ACCESS PANEL REMOVAL....7
PART 4 - RIGHT SIDE OF DASHBOARD REMOVAL....9

## SAFETY PRECAUTIONS

- Eye protection should always be worn when working in a shop.
- Rules for Personal Protection Equipment should always be respected. Wear your PPE including but not limited to the following:

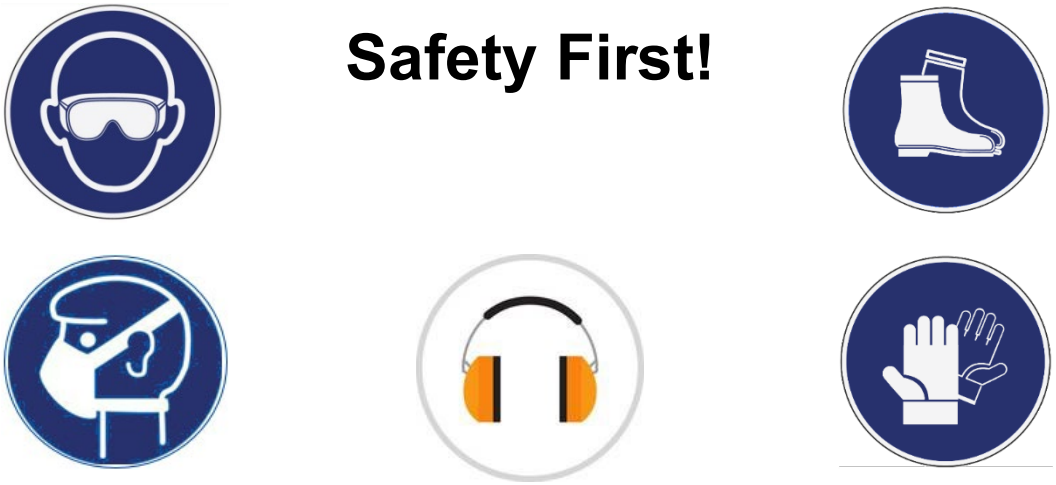


**DANGER**

Park vehicle safely, apply parking brake, stop the engine. Prior to working on the vehicle, set the ignition switch to the OFF position and trip the main circuit breakers equipped with a trip button. On Commuter type vehicles, set the battery master switch (master cut-out) to the OFF position.

Lockout & Tag out (LOTO) must be performed during set-up, maintenance or repair activities. Refer to your local procedure for detailed information regarding the control of hazardous energy.

# PART 1 - INSTRUMENT PANEL COVER REMOVAL

1. From underneath the instrument panel cover, unscrew two (2) socket hex screws.

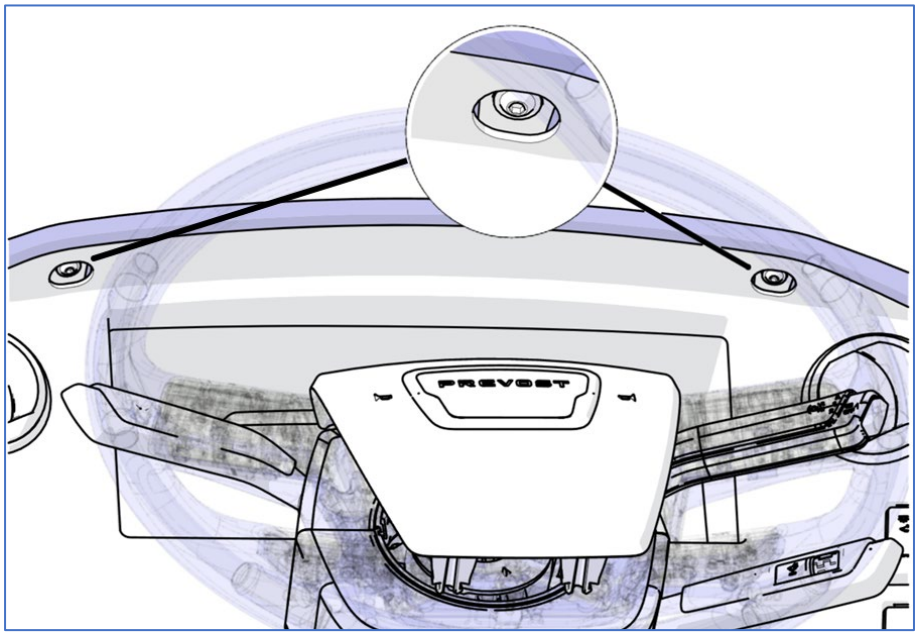


FIGURE 1

2. Look at the following image to understand how the instrument panel cover is held in place with flexible tabs close to the windshield.

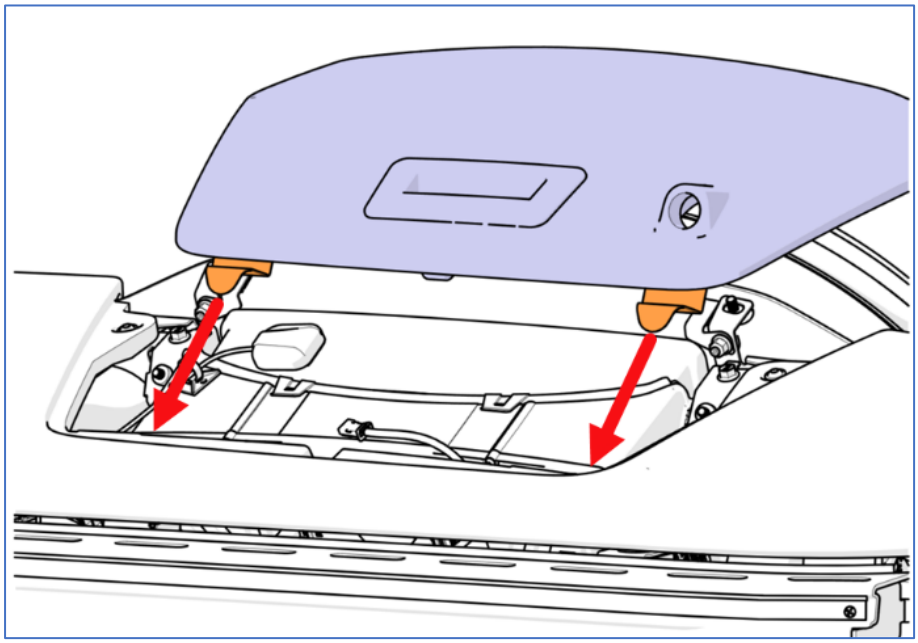

FIGURE 2

3. Lift the edge of the instrument panel cover with a light force then pull the cover toward you.

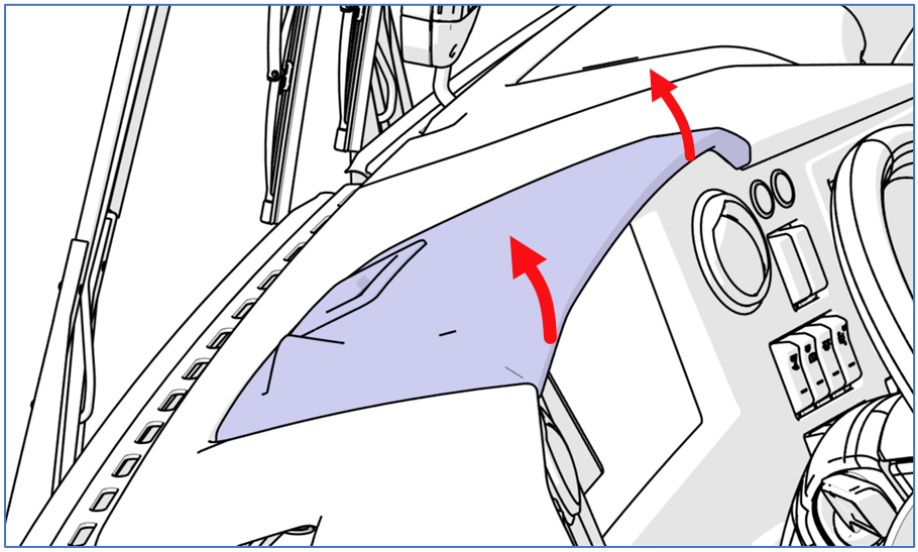

FIGURE 3

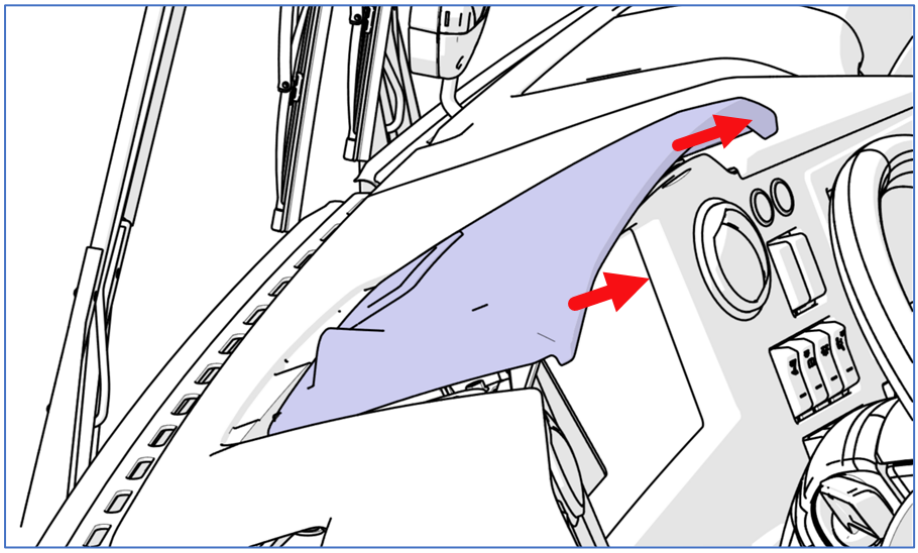

FIGURE 4

## PART 2 - DASHBOARD COVER REMOVAL

1. Remove the three (3) screws shown on the image below.

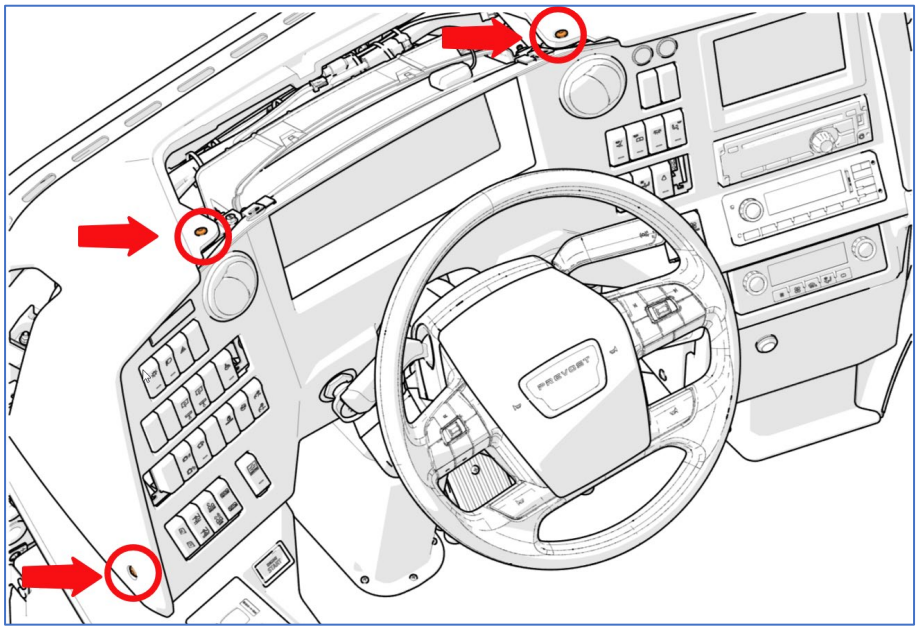

FIGURE 5

2. Unsnap the dashboard cover at the five (5) points identified on the image below.

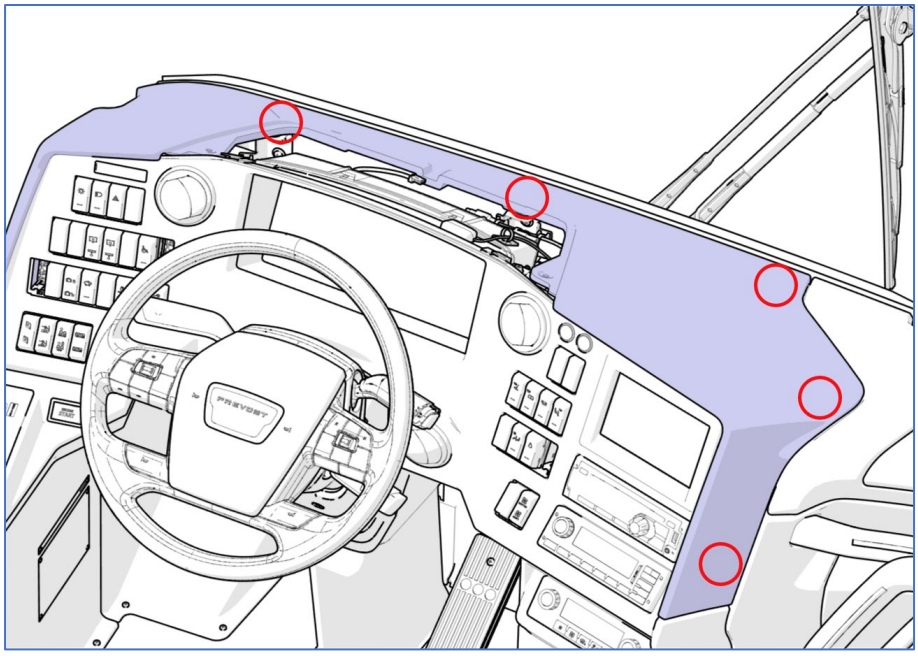

FIGURE 6

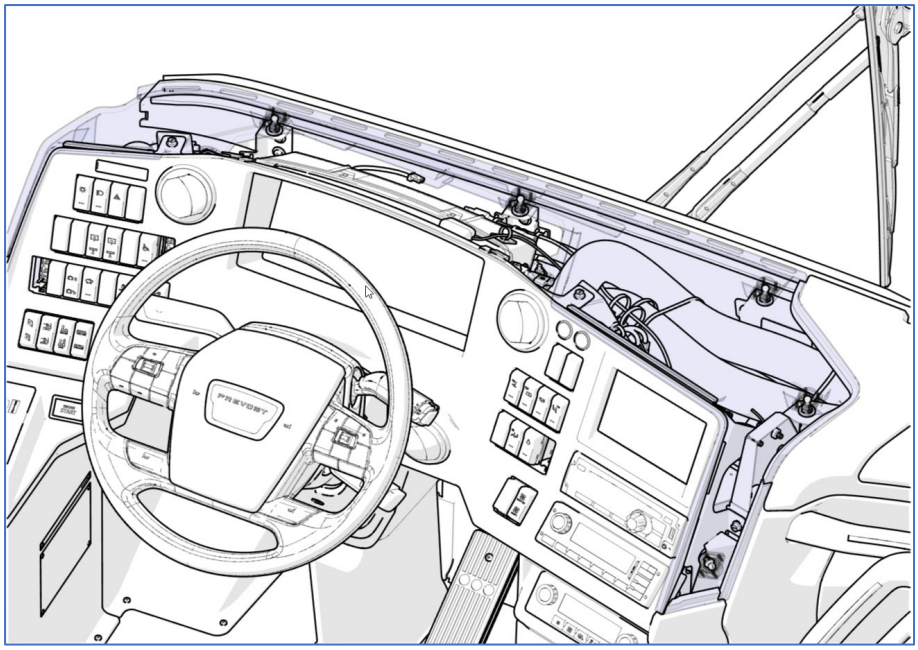

FIGURE 7

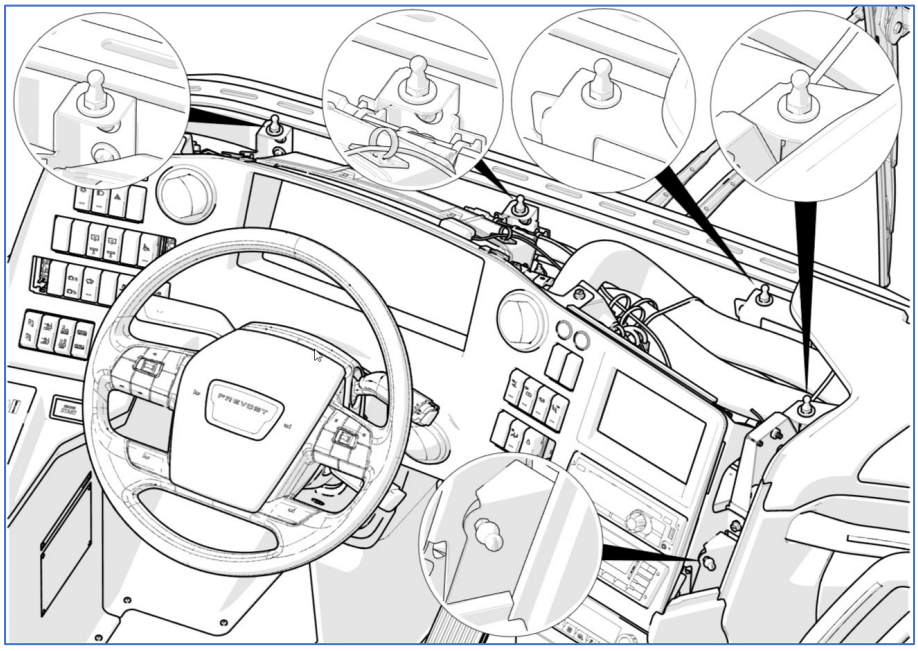

FIGURE 8

# PART 3 - RIGHT SIDE OF THE DASHBOARD – ACCESS PANEL REMOVAL

1. The panel on the right side of the dashboard is secured with fasteners as seen on the images below.

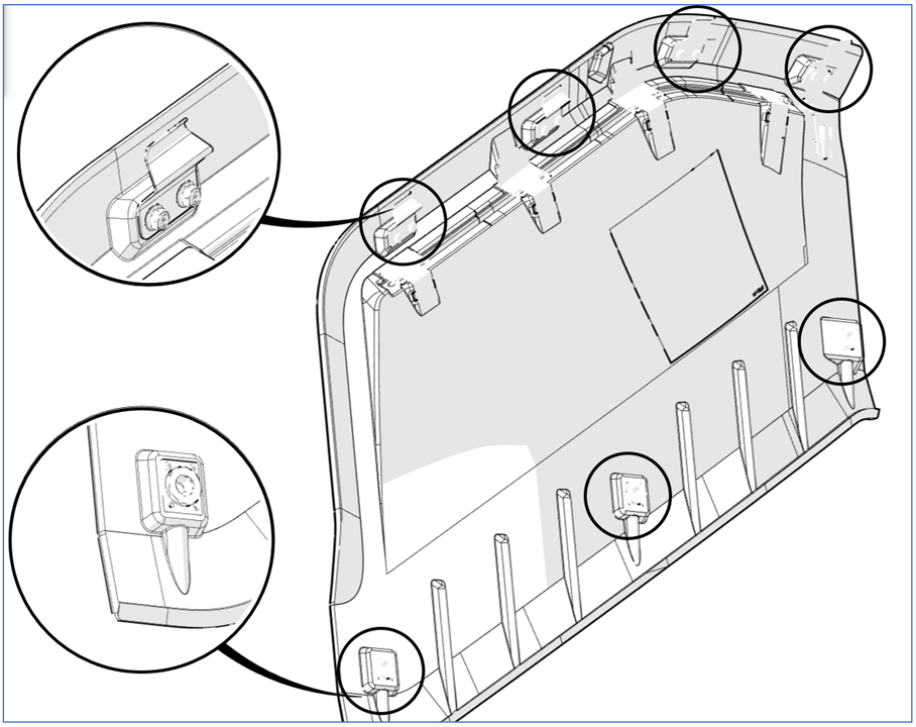

FIGURE 9: ATTACHMENT POINTS AT THE BACK OF THE PANEL

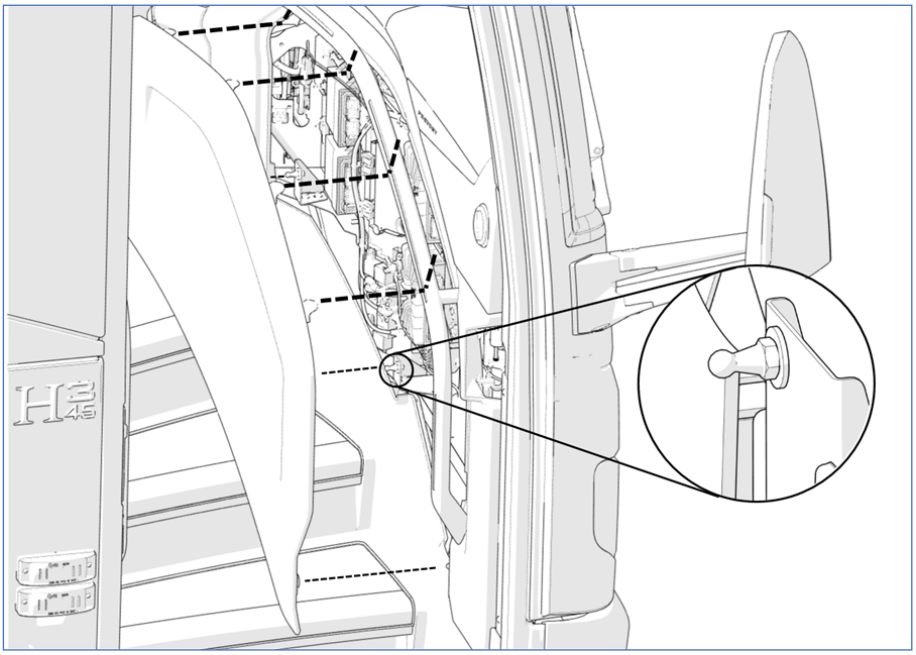

FIGURE 10

2. To remove the panel, pull (unsnap) the bottom of the panel in three (3) places by pulling toward you and then pull the panel down to disengage the top.

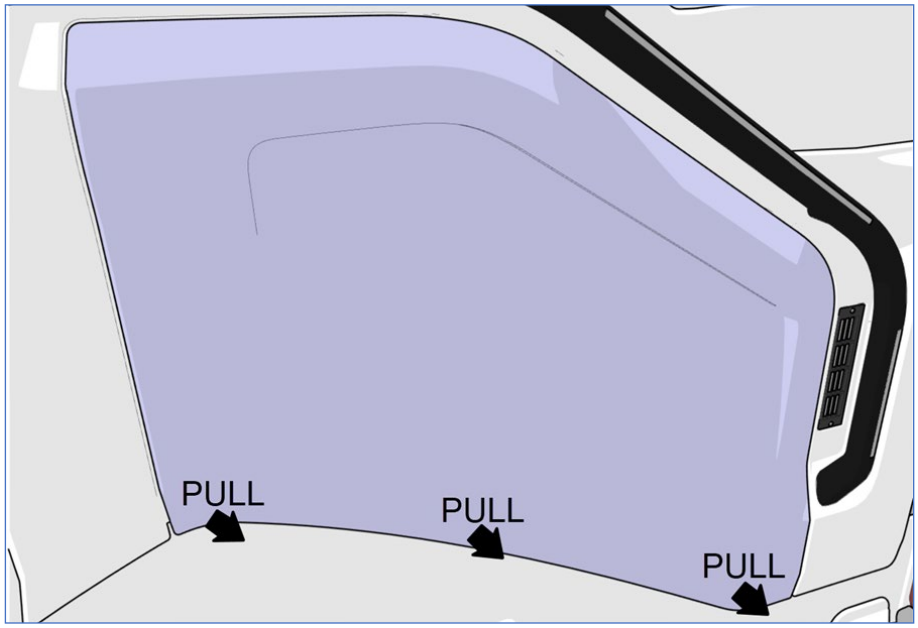


FIGURE 11

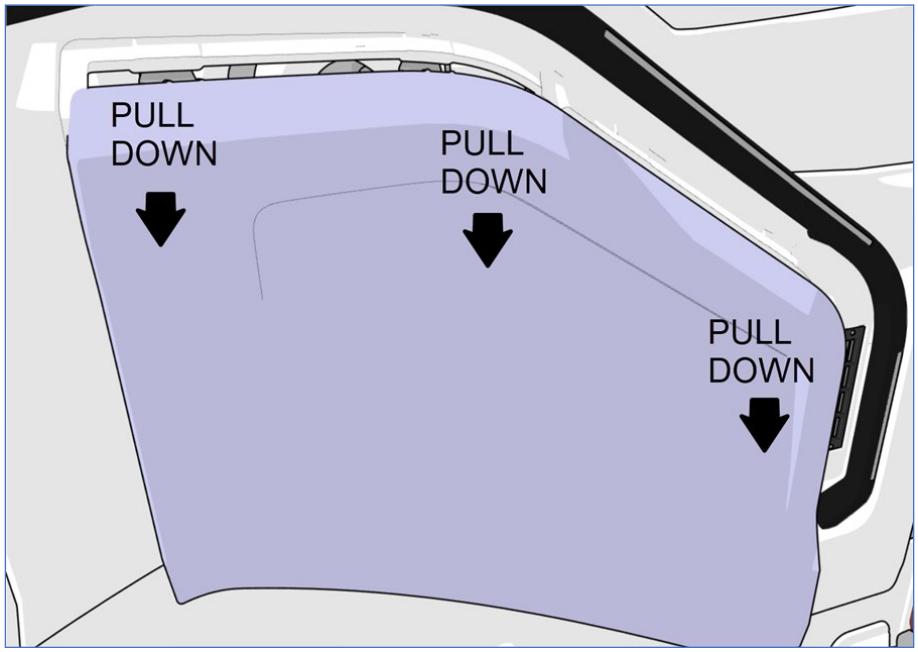


FIGURE 12

# PART 4 - RIGHT SIDE OF DASHBOARD REMOVAL

1. Perform Part 1, 2 & 3.
2. Remove the three (3) screws shown on the image below.

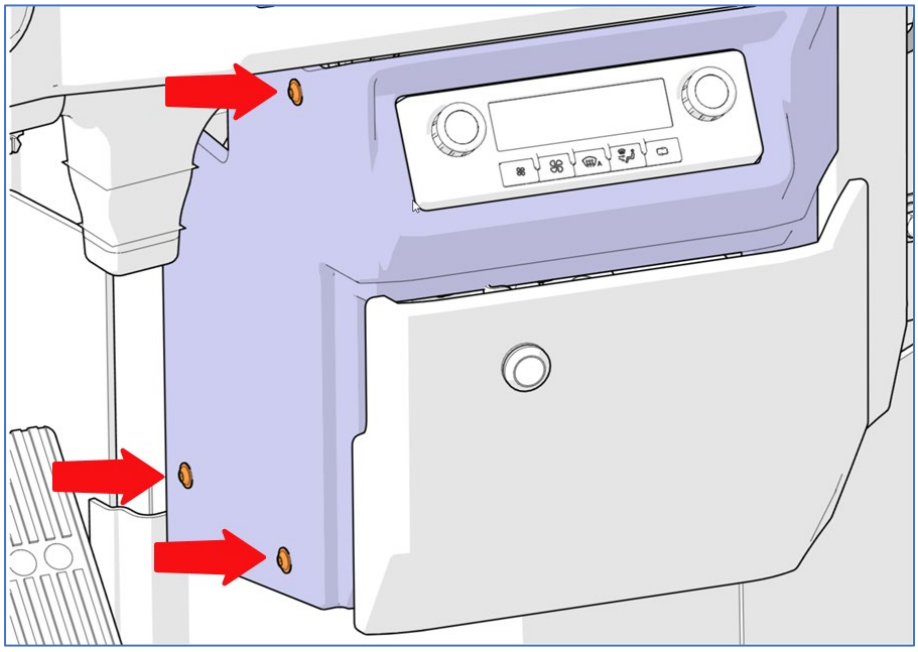

FIGURE 13

3. Remove the screw shown on the image below.

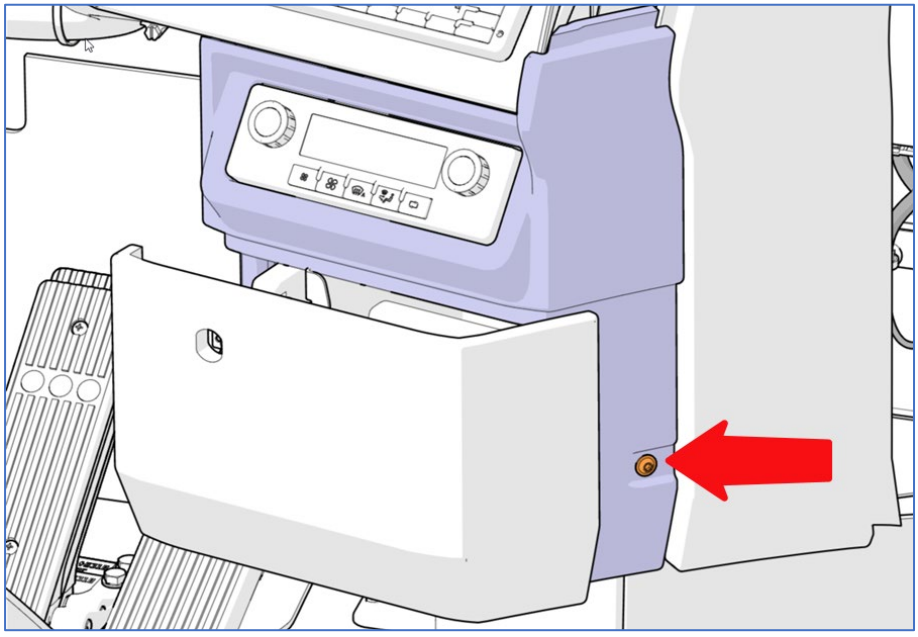

FIGURE 14

4. Open the utility compartment.

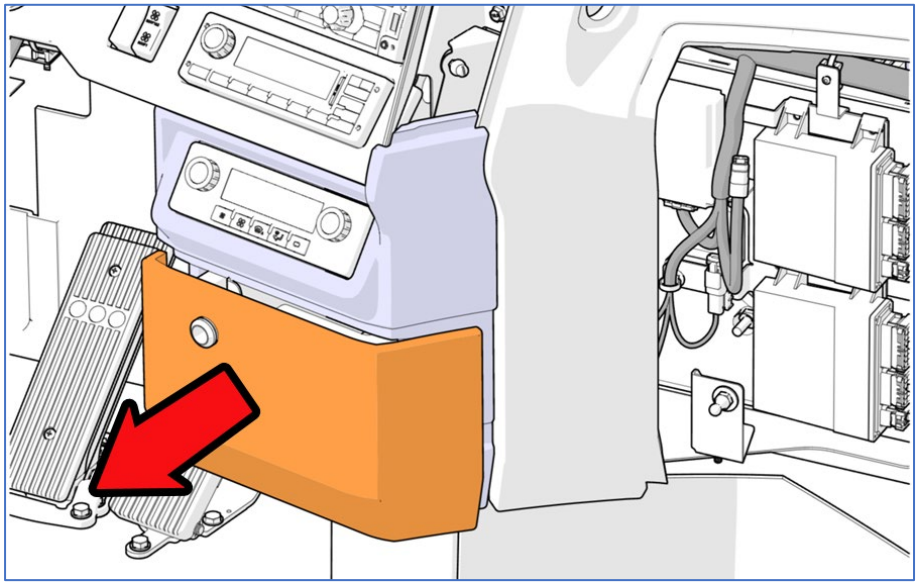

FIGURE 15

3. Unsnap the trim at the attachment point identified on the images below.

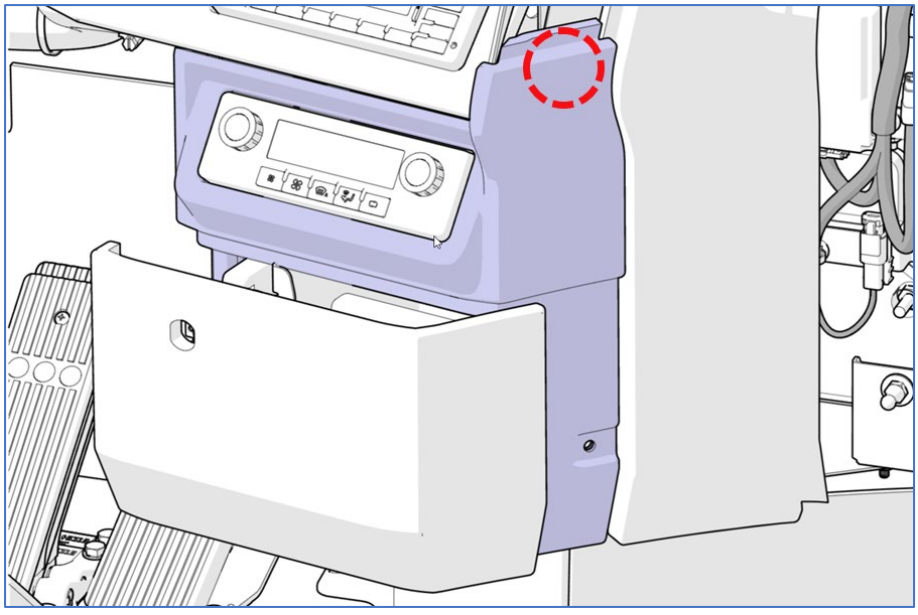

FIGURE 16



FIGURE 17

5. Pull the trim to uncover the circled area shown on the image below.

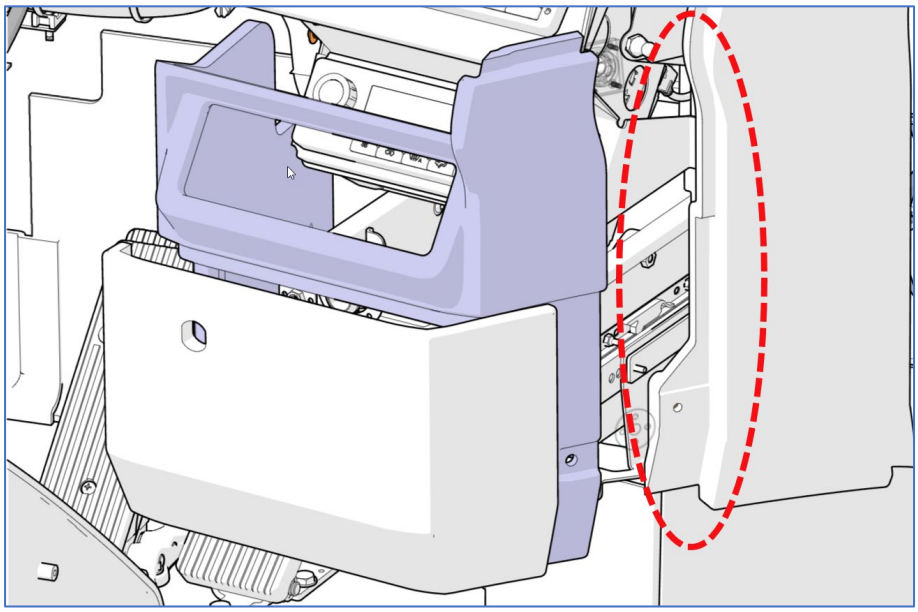

FIGURE 18

6. Disconnect the hose shown on the image below.

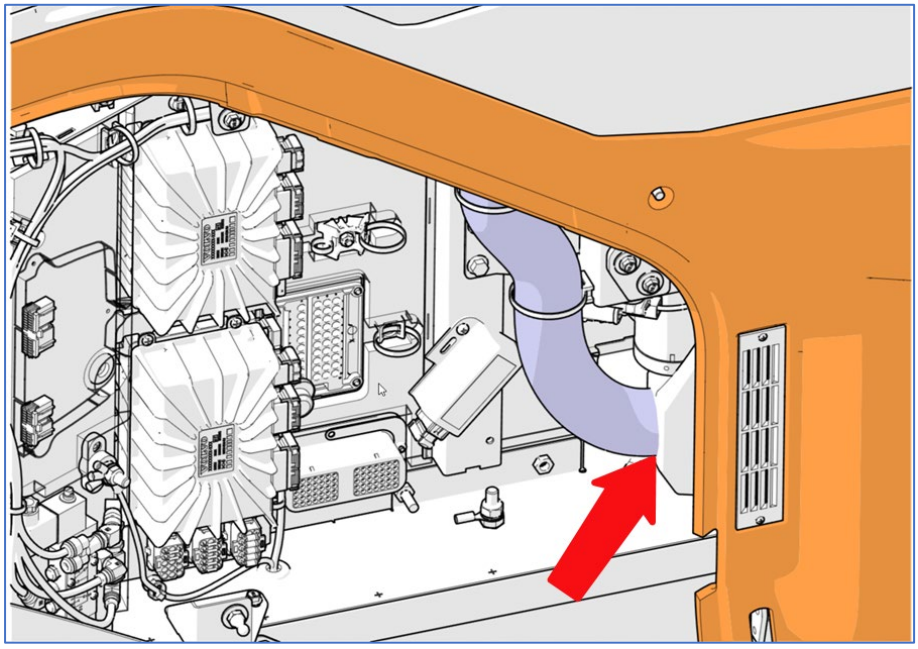

FIGURE 19

7. Remove the handrail. To do so, remove the three (3) cap screws shown on the image below.

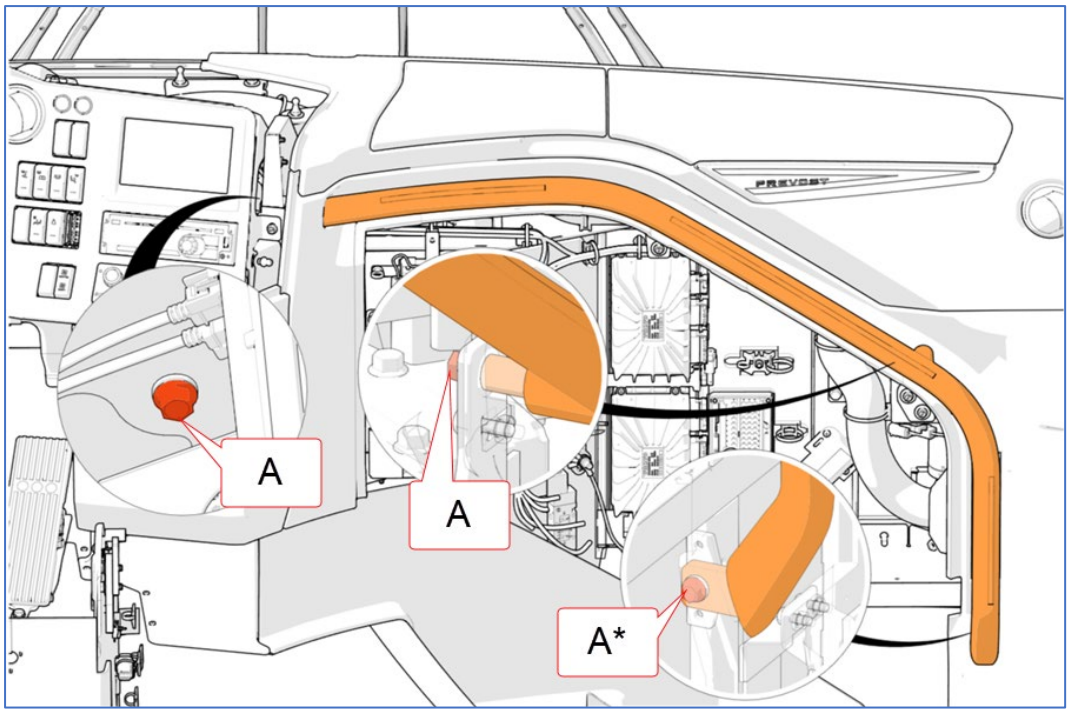


FIGURE 20

***A= cap screw + washer TORQUE 14 lb-ft***

***A*= cap screw + washer + square plate TORQUE 14 lb-ft***

8. Remove the panel shown on the image below. To do so, perform the following steps.

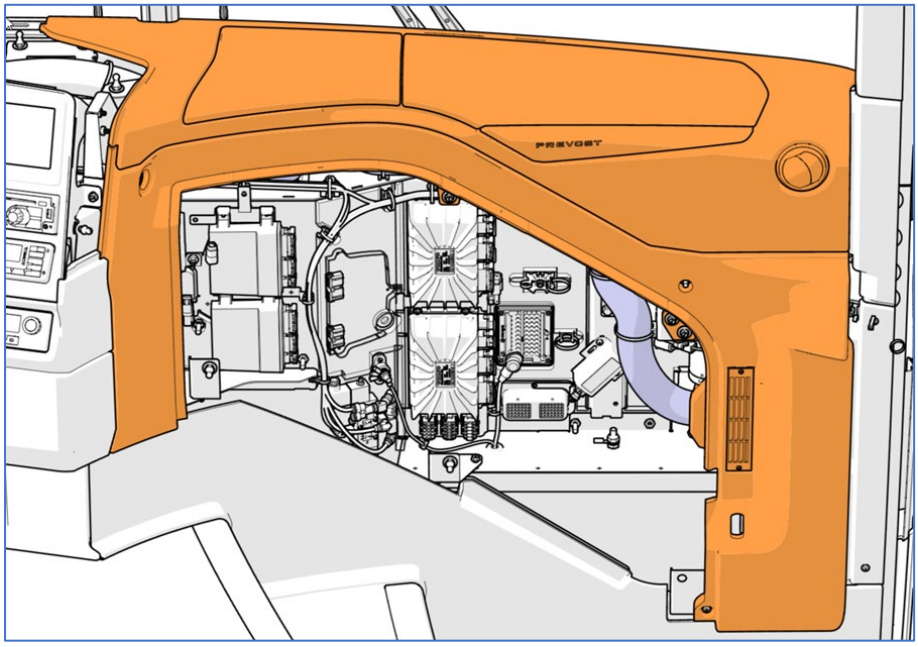

FIGURE 21

9. Remove the four (4) fasteners shown on the image below.

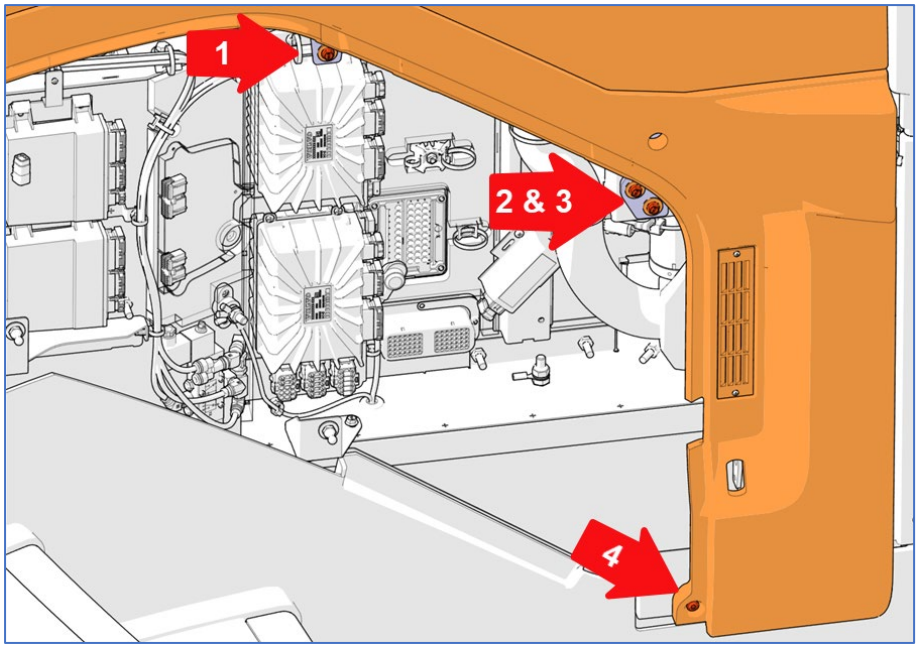


FIGURE 22

10. To remove the panel, first, remove the screw shown on the image below. ***NOTE: The panel is shown "ghosted" on the image to allow localization of the screw.***

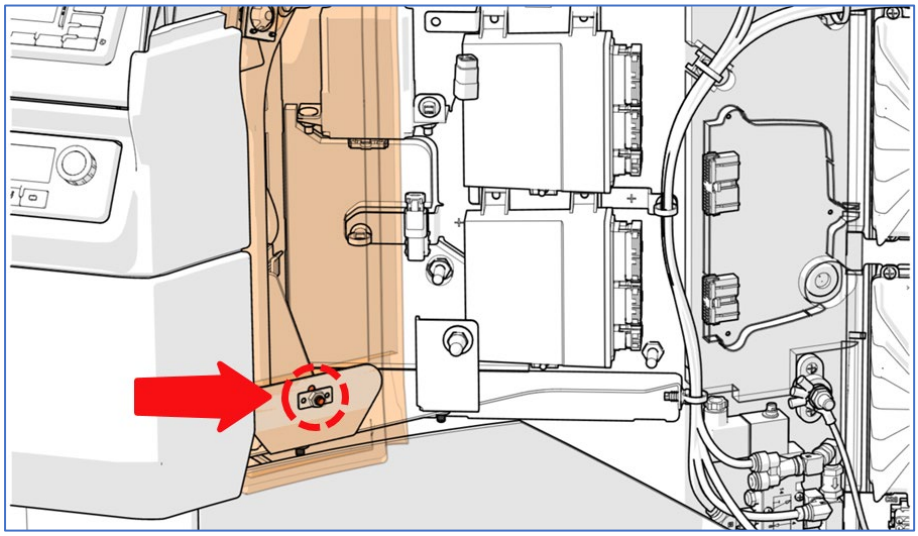

FIGURE 23

11. To remove the panel, first, remove the two (2) screws identified on the images below.

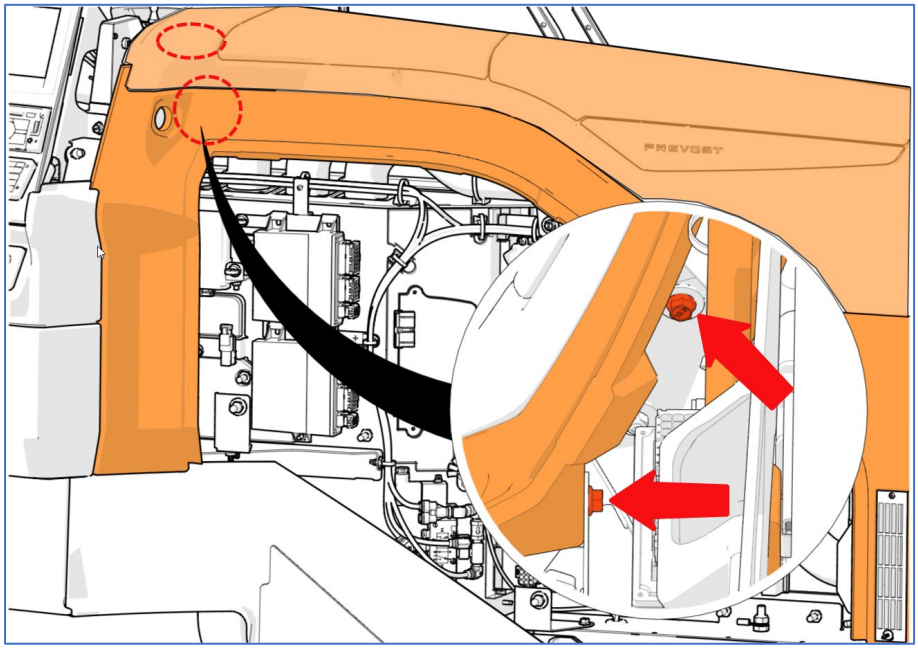

FIGURE 24

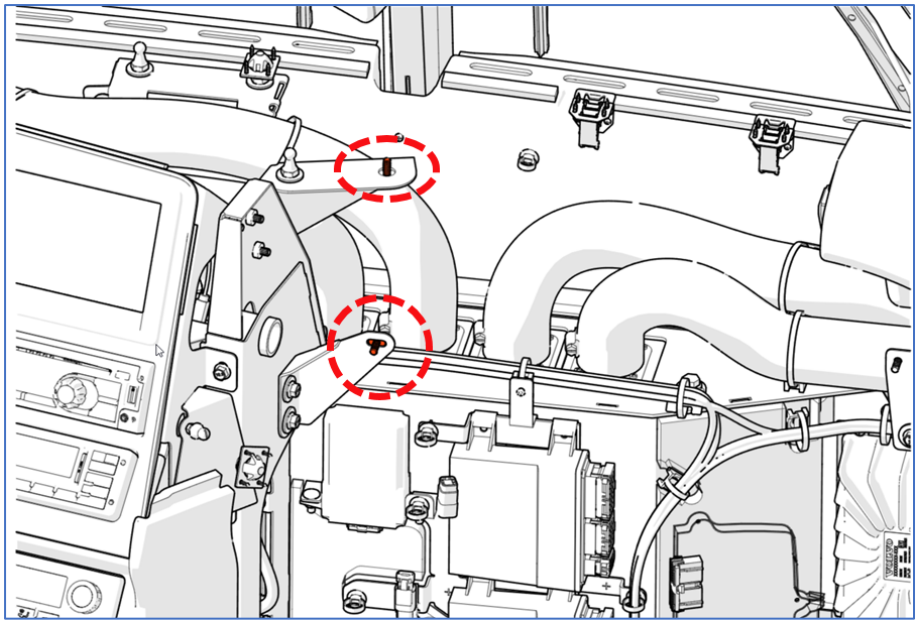

FIGURE 25: WITH PANEL GHOSTED TO HELP LOCATE THE POSITION OF THE SCREWS

12. To remove the panel, pull (unsnap) at the six (6) locations identified on the image below.

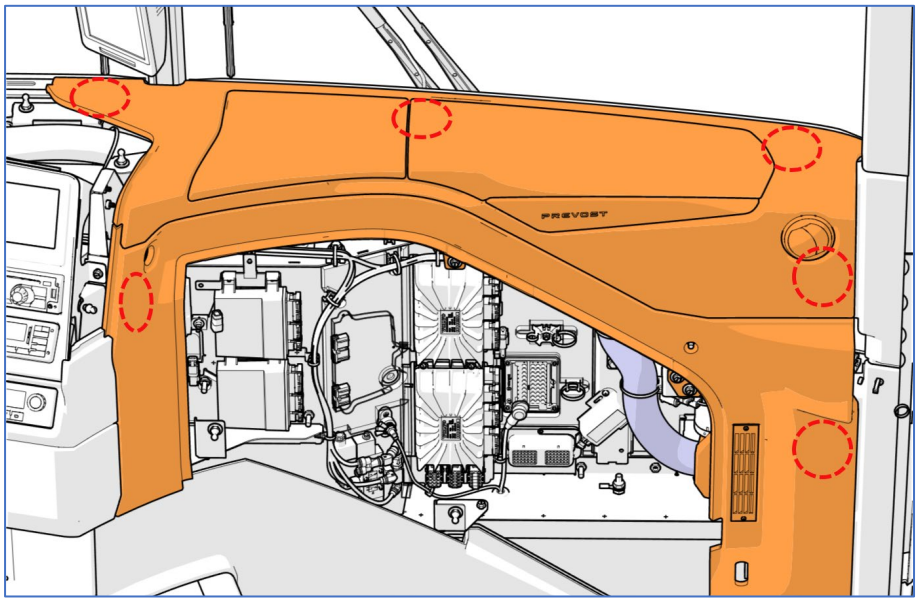


FIGURE 26

13. Once unsnap, pull with a light force to detach the panel.
14. Disconnect the register hose and the daylight sensor connector from the R.H. side of the panel.

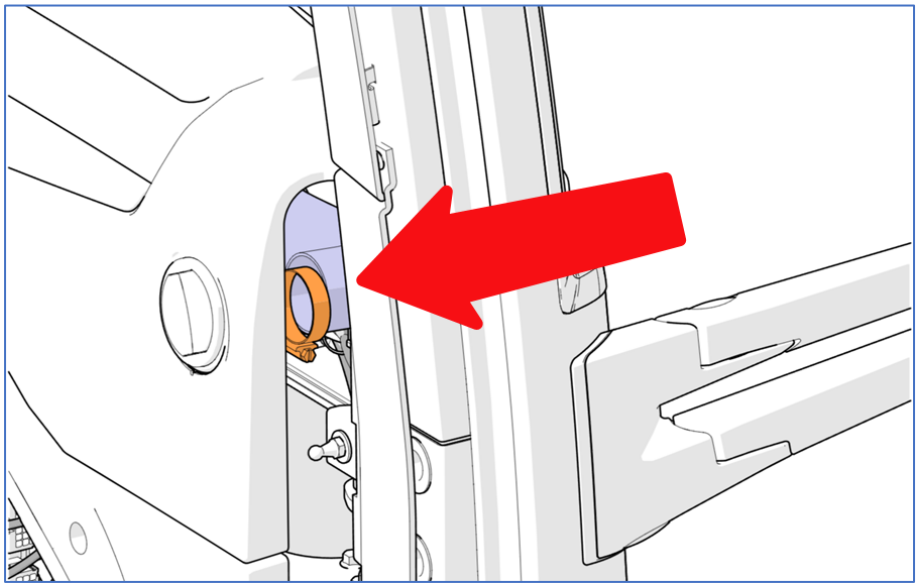

FIGURE 27

*Access all our Service Bulletins on http://techpub.prevostcar.com/en/*
*Or scan the QR-Code with your smart phone*
.

**Are you a Vehicle owner?**
*E-mail us at **technicalpublications_prev@volvo.com** and type "ADD" in the subject to receive warranty bulletins applicable to your vehicle(s) by e-mail.*

## CONTENTS

**SECTION CHANGE LOG ..... 5**

**1. TORQUE TABLES ..... 6**

**2. VEHICLE EXTERIOR ..... 9**

**3. VEHICLE JACKING POINTS ..... 11**

3.1 HYDRAULIC JACK ..... 11

**4. TOWING THE VEHICLE ..... 11**

**5. STRUCTURE ..... 11**

5.1 WELDING ..... 11

**6. EXTERIOR MAINTENANCE ..... 12**

6.1 CORROSION PREVENTION ..... 12
6.2 PREVENTIVE MAINTENANCE SCHEDULE ..... 13
6.3 RUST INHIBITOR APPLICATION ..... 14

**7. FIBERGLASS REPAIR ..... 18**

7.1 REPAIR USING FIBERGLASS CLOTH ..... 19
7.2 REPAIR USING FIBERGLASS PASTE ..... 19
7.3 TYPICAL FIBERGLASS REPAIR PROCEDURE ..... 20

**8. PAINTING ..... 21**

8.1 NEW PAINT CARE ..... 21
8.2 PAINT TOUCHUP ..... 21
8.3 PAINTING ..... 21
*8.3.1 Safety ..... 22*
*8.3.2 Surface Preparation and Paint Application ..... 22*
8.4 FRONT AND REAR BUMPERS ..... 23
*8.4.1 Paint touchup and surface preparation for vehicles equipped with urethane bumpers ..... 23*

**9. FRONT AND REAR BUMPERS ..... 23**

9.1 FRONT BUMPER REMOVAL AND INSTALLATION ..... 23
*9.1.1 Front Bumper Removal ..... 23*
*9.1.2 Front Bumper Skin Removal ..... 23*
*9.1.3 Front Bumper Assembly Removal including spare wheel compartment door. ..... 24*
9.2 FRONT BUMPER LICENSE PLATE SUPPORT INSTALLATION ..... 24
9.3 REAR BUMPER REMOVAL AND INSTALLATION ..... 24

**10. COACH ENTRANCE DOOR ..... 25**

10.1 OPERATION ..... 25
10.2 EMERGENCY EXIT VALVES ..... 25
*10.2.1 Without Air and/or Without Electricity ..... 26*
*10.2.2 With Air but Without Electricity ..... 26*
10.3 DOOR CYCLE SPEED ADJUSTMENT ..... 26
10.4 HORIZONTAL AND VERTICAL ADJUSTMENT ..... 27
10.5 DEPTH ADJUSTMENT ..... 28
10.6 ROD END ADJUSTMENT ..... 28

10.7 LUBRICATION ..... 29
10.8 TROUBLESHOOTING ..... 30

**11. ENTRANCE DOOR (V.I.P) ..... 31**

11.1 KEYLESS ENTRY SYSTEM ..... 31
11.2 DOOR ADJUSTMENT ..... 31
*11.2.1 Horizontal and Vertical Adjustments ..... 31*
11.3 DEPTH ADJUSTMENT ..... 31
11.4 DOOR LOWER SECTION ..... 32
11.5 REFLECTOR STRIPE INSTALLATION ..... 32
11.6 DOOR SEAL REPLACEMENT ..... 33
11.7 DOOR LUBRICATION ..... 33
11.8 DOOR LATCH MECHANISM ..... 33

**12. DRIVER'S POWER WINDOW ..... 33**

12.1 POWER WINDOW REMOVAL ..... 33
12.2 POWER WINDOW INSTALLATION ..... 34

**13. DASHBOARD – R.H. SIDE PANEL REMOVAL ..... 34**

**14. ROOF ESCAPE HATCH ..... 35**

14.1 REPAIR ..... 35
14.2 SEALING ..... 35
14.3 ESCAPE HATCH PANEL ASSEMBLY ..... 36
14.4 ESCAPE HATCH FRAME ..... 36

**15. REPAIR OR REPLACEMENT OF "TARABUS" FLOOR COVERING ..... 37**

15.1 FRONT STEPS REPLACEMENT PROCEDURE ..... 39
15.2 WELDING OF JOINT BETWEEN WHITE SAFETY STRIP AND "TARABUS" FLOOR COVERING ..... 42
15.3 REPAIR OF A WELDED JOINT ..... 43

**16. PASSENGER SEATS ..... 44**

16.1 ROTATING SEATS ..... 44
16.2 REMOVING FIXED SEATS ..... 45
16.3 UPHOLSTERY MAINTENANCE ..... 45
*16.3.1 Routine Cleaning ..... 45*
*16.3.2 Dry Cleaning ..... 46*
*16.3.3 Cleaning With Covers in Place ..... 46*

**17. COACH SIDE WINDOWS ..... 46**

17.1 HYDROPHOBIC TREATMENT ON SIDE WINDOWS ..... 46
17.2 EMERGENCY EXIT WINDOWS ..... 47
17.3 EMERGENCY EXIT RELEASE BAR ..... 47
*17.3.1 Emergency Exit Window Adjustment ..... 47*
17.4 FIXED WINDOW REPLACEMENT ..... 47
17.5 EMERGENCY EXIT WINDOW REPLACEMENT ..... 48
17.6 TRAPEZOIDAL WINDOW REPLACE-MENT ..... 48
17.7 SMALL REAR WINDOWS REPLACEMENT ..... 48
17.8 ADHESIVE-MOUNTED WINDOWS ..... 49
*17.8.1 Glass Window Replacement ..... 49*

**18. ELECTRIC AWNING WINDOW ..... 50**

18.1 OPERATION ..... 50

18.2 WINDOW REMOVAL ..... 51
18.3 ACTUATOR REPLACEMENT ..... 52
18.4 MOTOR REPLACEMENT ..... 52

**19. ELECTRIC SLIDING WINDOW ..... 54**

**20. WINDSHIELD ..... 57**

20.1 REMOVAL ..... 57
20.2 WINDSHIELD INSTALLATION ..... 58
*20.2.1 Preparation ..... 58*
*20.2.2 Installation of rubber extrusion ..... 59*
*20.2.3 Windshield insertion ..... 61*
*20.2.4 Locking strip insertion ..... 61*

**21. BODY PANELS AND DOORS ..... 63**

**22. WHEELCHAIR LIFT ACCESS DOOR ..... 64**

22.1 INSTALLATION ..... 64
22.2 ADJUSTMENT ..... 64

**23. BAGGAGE COMPARTMENT DOORS ..... 68**

23.1 PANTOGRAPH ADJUSTMENT ..... 68

**24. DOOR HANDLES ..... 69**

**25. ENGINE COMPARTMENT DOOR ..... 69**

25.1 ENGINE DOOR ADJUSTMENT ..... 69
25.2 MINOR TOP EDGE DEPTH ADJUSTMENT ..... 70
25.3 MINOR LOWER EDGE DEPTH ADJUSTMENT: ..... 70

**26. ENGINE AIR INTAKE GRILL ..... 70**

**27. RADIATOR DOOR ADJUSTMENT ..... 70**

27.1 DOOR HEIGHT ADJUSTMENT ..... 70
27.2 DOOR LATERAL ADJUSTMENT ..... 71
27.3 DOOR DEPTH ADJUSTMENT ..... 71

**28. CONDENSER DOOR ADJUSTMENT ..... 72**

**29. FUEL FILLER DOOR ..... 73**

**30. FRONT SERVICE COMPARTMENT ..... 73**

30.1 LATCH MECHANISM ADJUSTMENT ..... 74

**31. ENGINE COMPARTMENT R.H. SIDE DOOR ..... 74**

31.1 LATCH MECHANISM ADJUSTMENT ..... 75

**32. EVAPORATOR DOOR ADJUSTMENT ..... 75**

32.1 LATCH MECHANISM ADJUSTMENT ..... 75

**33. MAIN POWER COMPARTMENT ..... 76**

33.1 LATCH MECHANISM ADJUSTMENT ..... 76

**34. FENDERS ..... 76**

34.1 REAR FENDER REMOVAL ..... 77
34.2 FRONT FENDER REMOVAL ..... 77

**35. REAR CAP ..... 77**

**36. FRONT CAP ..... 77**

**37. SIDE PANEL INSTALLATION PROCEDURE FOR COACHES AND VIP ..... 78**

**38. REAR-VIEW MIRROR ..... 84**

38.1 ARM AND BRACKET POSITION ..... 84
38.2 REAR-VIEW MIRROR REMOVAL ..... 84
38.3 REPLACEMENT OF FLAT GLASS MIRROR ..... 85
38.4 REPLACEMENT OF CONVEX GLASS MIRROR ..... 86

**SPECIFICATIONS ..... 87**

## SECTION CHANGE LOG

| | DESCRIPTION | DATE |
|---|---|---|
| 1 | Update – new exterior rear-view mirror | Oct. 2023 |
| 2 | Update - additional information on flat glass mirror removing tool | Jan. 2025 |
| 3 | Update – new opening mechanism for emergency exit windows (rollover) | Jan. 2025 |
| 4 | | |
| 5 | | |
| 6 | | |

## 1. TORQUE TABLES

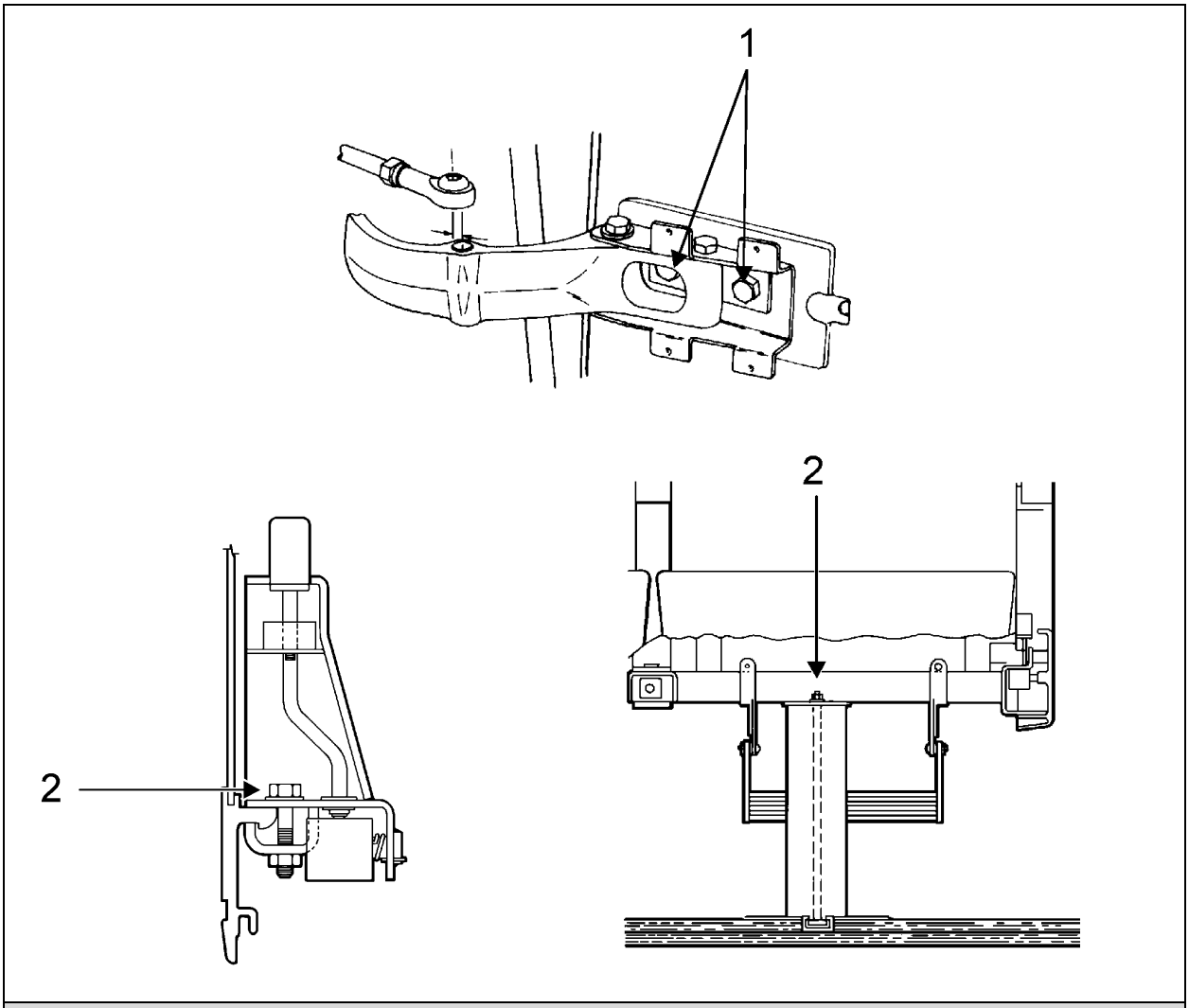


| BODY | | |
|---|---|---|
| No | DESCRIPTION | TORQUE |
| 1 | Entrance door horizontal adjusting bolts | 55-65 lb-ft (75-88 Nm) |
| 2 | Passenger seat mounting nuts (to sidewall and pedestal) | 27 lb-ft (37 Nm) |

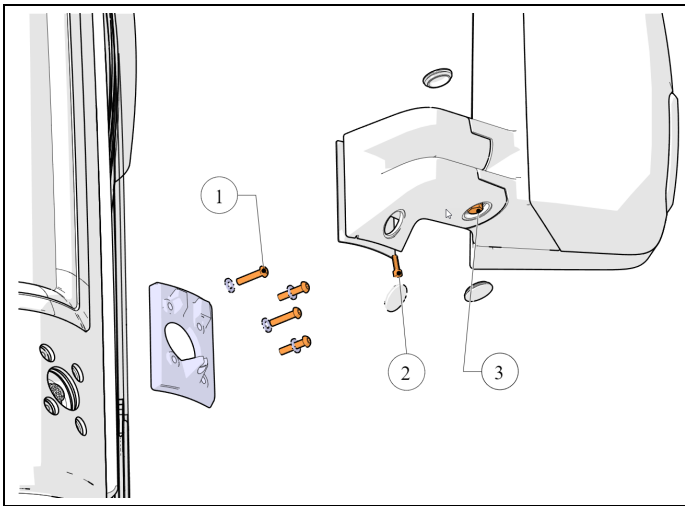


REAR VIEW MIRROR

| No | DESCRIPTION | TORQUE |
|---|---|---|
| 1 | Mounting plate screw (4x) 14 lb-pi | 14 lb-ft (19 Nm) |
| 2 | Clamping screw | 84 lb-in (9 Nm) |
| 3 | Bolt, arm (2x) | 25 lb-ft (34 Nm) |

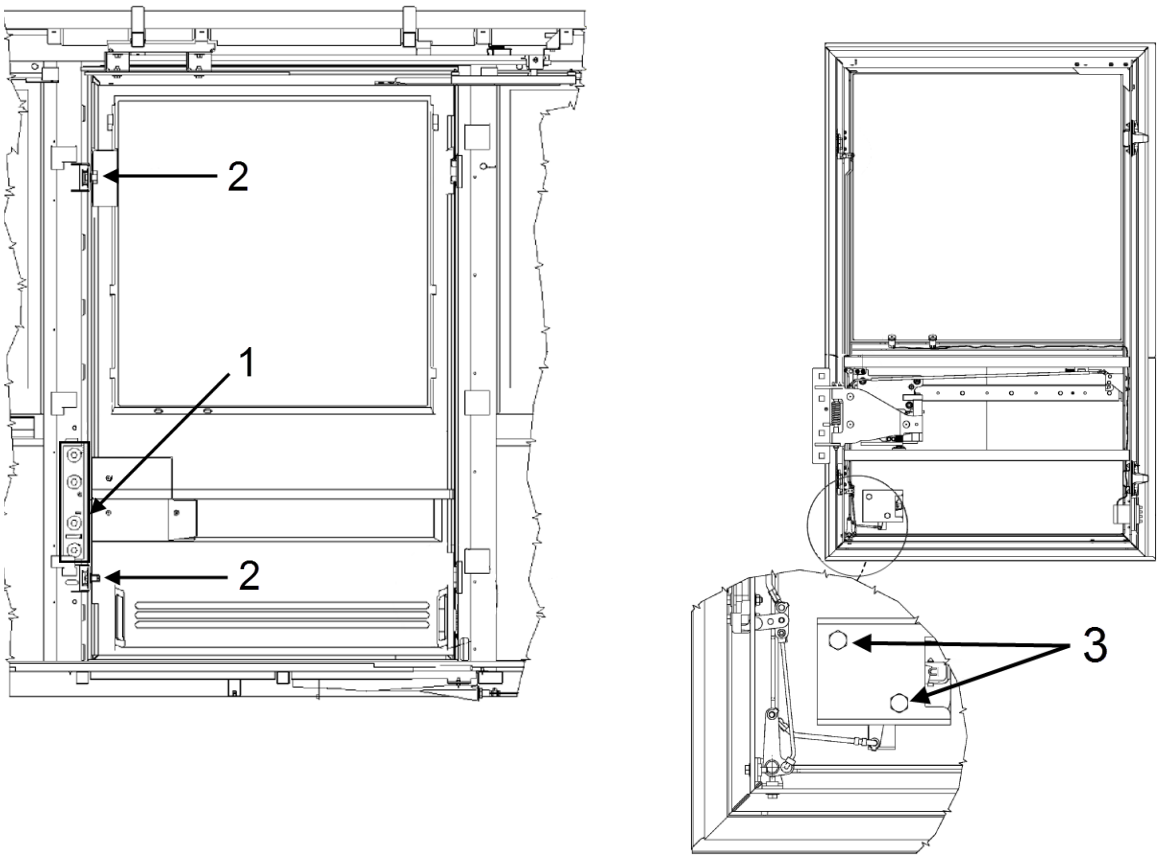


| WHEELCHAIR LIFT DOOR | | |
|---|---|---|
| No | DESCRIPTION | TORQUE |
| 1 | Wheelchair lift door – Center hinge bolts | 31-38 lb-ft (42-52 Nm) |
| 2 | Wheelchair lift door - striker pin adjustment bolts | 54-66 lb-ft (73-89 Nm) |
| 3 | Wheelchair lift door - opening mechanism nuts | 2.5-3.5 lb-ft (3.39-4.75 Nm) |

## 2. VEHICLE EXTERIOR

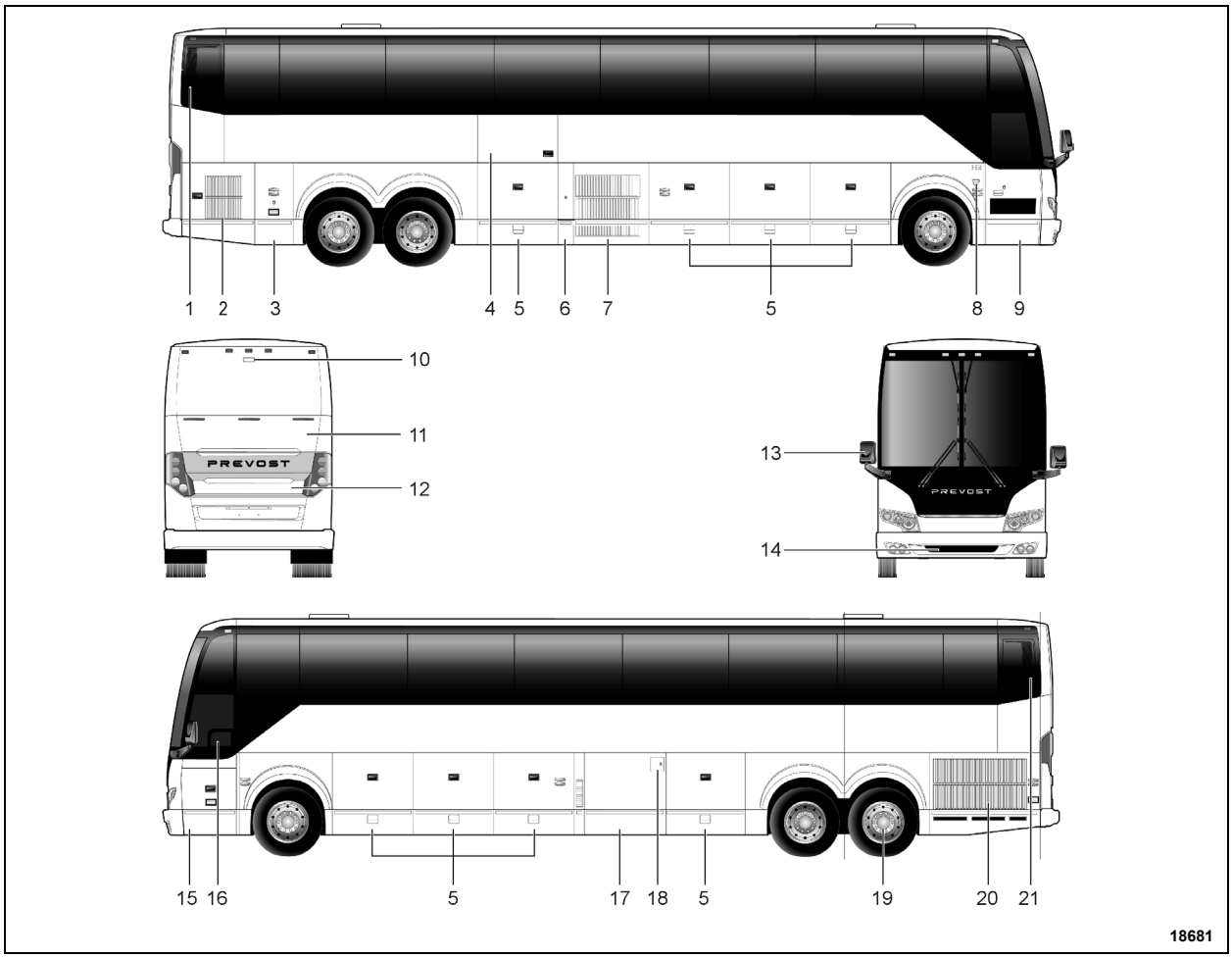


FIGURE 1: H3-45 (TYPICAL)

1. Engine air intake
2. Engine compartment curb-side door
3. Main power compartment (battery compartment)
4. Wheelchair access door (optional Ricon lift)
5. Baggage compartment
6. Fuel filler neck and diesel exhaust fluid (DEF) filler neck access door
7. Condenser compartment
8. Entrance door control switch
9. Entrance door
10. Back up camera (optional)
11. Diesel Particulate Filter (DPF) access door
12. Engine compartment rear door
13. Rear-view mirror
14. Spare wheel compartment
15. Front electrical and service compartment
16. Driver's power window
17. Evaporator compartment
18. Fuel filler neck access door
19. Tag axle
20. Radiator door
21. SCR catalytic converter access door

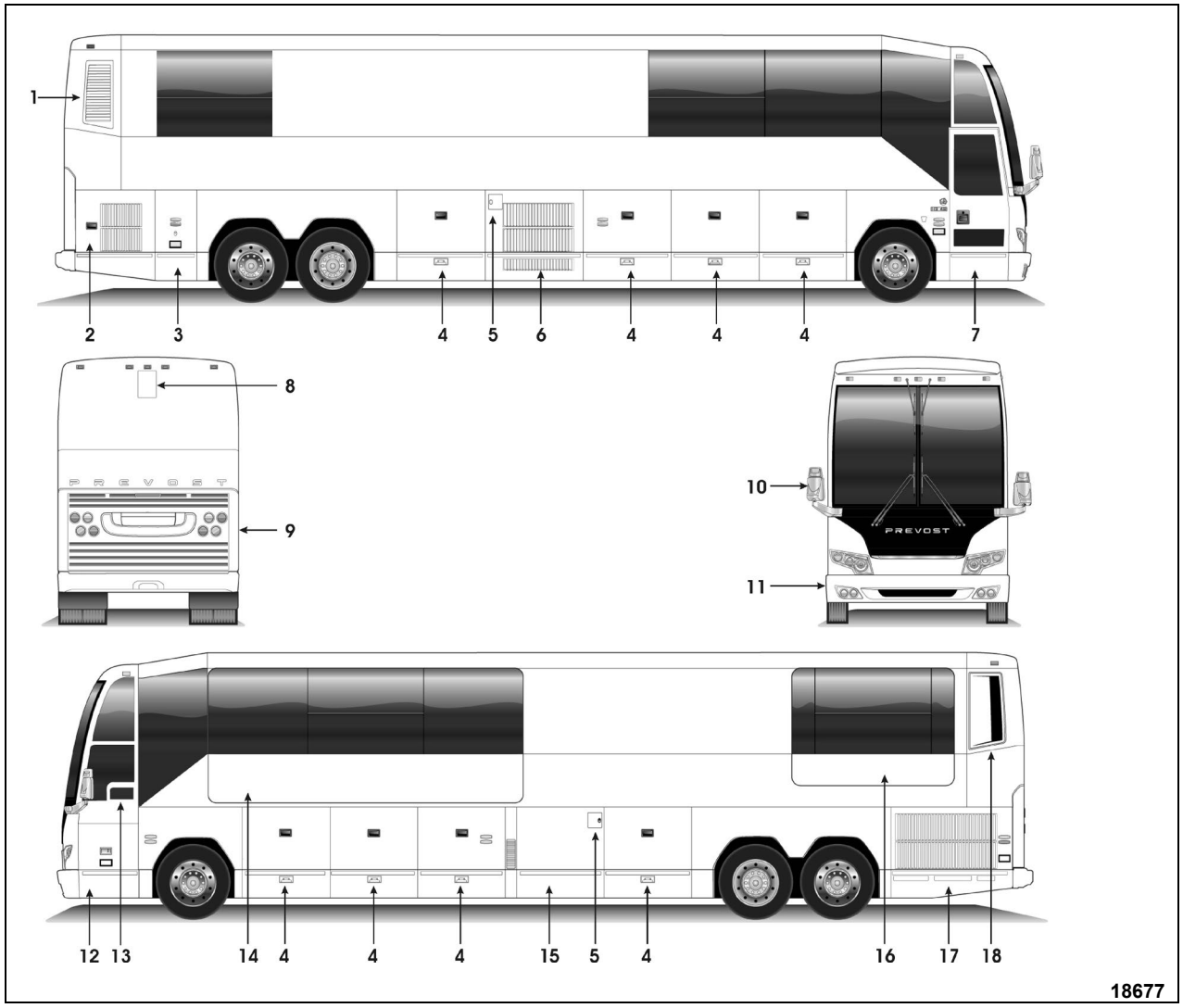


FIGURE 2: H3-45 VIP EXTERIOR VIEW

1. Engine air intake
2. Engine R.H. side access door
3. Main power compartment
4. Baggage compartment
5. Fuel filler door
6. A/C condenser compartment or baggage compartment
7. Entrance door
8. Retractable back up camera (optional)
9. Engine compartment rear door
10. Rear-view mirrors
11. Reclining bumper compartment
12. Front electrical and service compartment
13. Driver's power window
14. Front Slide-out
15. Heating, ventilating and air conditioning compartment (HVAC) or baggage compartment
16. Rear Slide-out
17. Engine radiator door
18. Diesel Particulate Filter (DPF) compartment access door

## 3. VEHICLE JACKING POINTS

For detailed instructions, refer to Maintenance information MI18-18, available on the technical publications USB flash drive and website.

### 3.1 HYDRAULIC JACK

To raise: turn release valve clockwise. Insert handle in socket and raise vehicle by pumping.

To lower: remove handle and turn the release valve slowly counterclockwise.

Always keep ram and extension screw retracted when jack is not in use.

Service: Check oil level when jack fails to raise to full height. Lower ram completely with release valve open and jack in upright position, remove filler plug and refill to level of filler hole with hydraulic jack oil. Never use brake fluid.

**DANGER**

Jack is intended for lifting only. Do not get under the vehicle or load for any reason unless it is properly supported with safety stands and securely blocked.

**DANGER**

Do not overload jack above rated capacity. Prevent "side loading", make sure load is centered on ram. Do not push or tilt load off jack.

## 4. TOWING THE VEHICLE

For detailed instructions, refer to Maintenance information MI18-18, available on the technical publications USB flash drive and website.

## 5. STRUCTURE

The body of the H3-41, H3-45 and VIP vehicles is an integral structure made of 14, 16 and 18 gauge welded and braced high tensile steel and stainless steel members. The roof arches are made with cold rolled, electrically welded (CREW) steel tubes, 1 ½" x 2" x 14 gauge. The inside is filled with urethane foam and the exterior is primed. The front subframe is made of open sections of high-strength steel alloy. These open sections permit a better application of primer and undercoating, and does not trap moisture. The rear subframe is made of closed sections of high tensile steel sealed at both ends.

### 5.1 WELDING

Since welding is a procedure that may be carried out either as specific instructions from Prevost or by an independent decision of the owner, the following information pertaining to welding should be read before beginning any welding procedure. The prohibitions and requirements outlined below must be followed during welding procedure:

1. Welding must be done only by a qualified and experienced person.
2. Adequate ground contacts and shields must be positioned as required to protect

components from damage due to heat, contact by weld splatter, arcing, or other potentially damaging events associated with welding.

3. Refer to "*PRECAUTIONS TO BE OBSERVED BEFORE WELDING*" in Section 00 General Information of this manual.
4. Always wear the appropriate safety equipment.

Weld in clean and well-ventilated area, and always have an appropriate fire extinguisher within your reach

## 6. EXTERIOR MAINTENANCE

Regular washing to remove dust and dirt is recommended. See *"Operator's Manual"* or *"Owner's Manual"* for more details on washing and cleaning your vehicle.

### 6.1 CORROSION PREVENTION

Preventive maintenance is a key factor in avoiding corrosion and must be considered as part of the regular service intervals. The entire underbody of the vehicle is sprayed with a heavy application of asphalt base undercoating.

The operating environment the vehicle is subjected to will largely influence the amount of dirt and corrosion that will accumulate over a given period. Corrosion is one of the most costly factors of part failure and shortened part life. It is, however, an item that can be controlled when it is conscientiously looked after and the proper steps are taken in a timely manner.

Certain areas of the coach are more vulnerable to corrosion than others, and it is these areas that should be addressed. For example, the rear baggage compartment bulkhead in the rear wheelhousing area contains many key components and should be examined regularly for corrosion. Other areas include the front wheelhousing area and the engine compartment.

Road splash will affect understructure, condenser coil and engine compartment. These areas must be thoroughly cleaned to remove dirt accumulations from flanges, channels and ledges. These places accumulate dirt and salt and hold it in direct contact with steel and aluminum surfaces. Use an understructure high pressure spray as part of a regular wash. Damaged undercoating or paint should be promptly repaired before corrosion can start.

Frequency of wash periods depends on operating conditions. During periods of exposure to salt, daily washing as described above is recommended. If underbody parts show evidence of rust or corrosion, treat as follows:

1. Remove dirt, grease and oil by solvent washing.
2. Remove corrosion as well as all loose coating by cleaning with a wire brush or sandblasting.

**⚠ CAUTION**

Sandblasting can be used for cleaning bulkheads, brackets and other structural members. It should not be used for exterior side paneling. Extreme care should be taken not to sandblast excessively.

3. Apply correct primer, paint and undercoating after removing all corrosion to prevent further damage.

## 6.2 PREVENTIVE MAINTENANCE SCHEDULE

| *NOTE* |
|---|
| *TECTYL 185 GW rust inhibitor may have been applied on your vehicle underbody as an option, if this is the case, follow this procedure thoroughly. For future application of product, refer to paragraph 3.3 in this section.* |

| DESCRIPTION | INTERVALS | | MAINTENANCE | CORRECTIVE ACTION | REFERENCE |
|---|---|---|---|---|---|
| | MONTHS | KM MILES | | | |
| BODY, EXTERNAL WINDOW FRAME | 6 | 40 000<br>25 000 | VISUALLY INSPECT SEALING BEADS CONDITION | REPAIR OR REPLACE SEALING BEADS IF NECESSARY | |
| VEHICLE UNDERBODY | 12 | 100 000<br>60 000 | USE A LOW PRESSURE SPRAY TO CLEAN UNDER-STRUCTURE AND VISUALLY INSPECT FOR CALCIUM DEPOSIT, CORROSION OR ANY DIRT ACCUMULATED ONTO EXPOSED SURFACES. VISUALLY INSPECT SEALING BEADS CONDITION.<br><br>VISUALLY INSPECT IF UNDERFLOOR IS PEALING. VISUALLY INSPECT WHEELHOUSING COATING.<br><br>MAKE SURE DISCHARGE TUBES ARE FREE FROM OBSTRUCTIONS | APPLY UNDERCOATING LOCALLY AS NECESSARY.<br><br>APPLY UNDERCOATING LOCALLY AS NECESSARY<br><br>REMOVE ANY OBSTRUCTION OR REPLACE DEFECTIVE TUBE | |
| SUSPENSION AND UNDERSTRUCTURE | 12 | 100 000<br>60 000 | VERIFY THE CONDITION OF ALL SUSPENSION AND UNDERSTRUCTURE FASTENERS AND CLAMPS | TIGHTEN OR REPLACE DEFECTIVE OR MISSING FASTENERS | |
| FLOOR COVERING | 3 | 20 000<br>12 500 | VISUALLY INSPECT IF FLOOR COVERING IS SHOWING SIGNS OF DETERIORATION SUCH AS CUTS, BURNS, ETC. ALSO, VISUALLY INSPECT SEALANT ALONGSIDE TRACKS. INSPECT WALL PANELS FROM BOTTOM TO WINDOWS | REPAIR OR REPLACE DEFECTIVE COVERING. MAKE SURE PROPER SEALANT IS USED. | |
| FLOOR CLEANING | | | CLEAN FLOOR COVERING AS NECESSARY | | |

| ⚠ **WARNING** |
|---|
| Failure to follow this preventive maintenance schedule will result in warranty void. |

## 6.3 RUST INHIBITOR APPLICATION

Material: Tectyl 185 GW
R1KG21

Safety Rules: Use safety glasses
Supplied air hood
Solvent-resistant rubber gloves

| | |
|---|---|
| 1.0 Wash both wheelhousing mechanical parts before masking. | A water-hose nozzle is recommended. Water may be hot to reduce washing time especially during winter. If parts are soiled with oil, clean using R1KG21. Avoid rubber parts. |
| 2.0 Dry all water sprayed parts. Surface temperature and dew point must be respected before applying rust inhibitor. | Air pressure system may be used, refer to annex 1 for surface temperature and dew point. |
| 3.0 **Front wheelhousing**<br><br>a) Mask all rubber joints. Braking system must also be protected (refer to arrows). Commercial aluminum foil may be used for masking. | 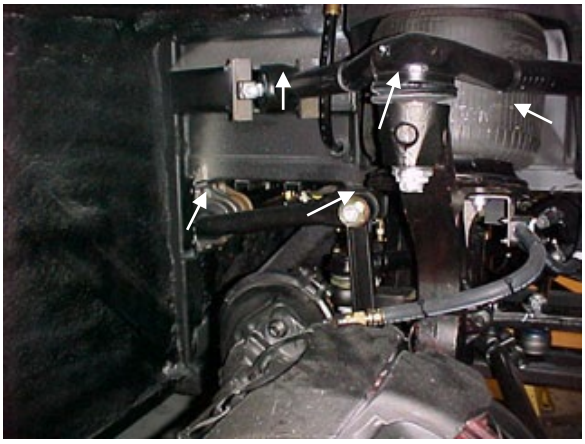 |
| 3.1 **Front wheelhousing**<br><br>Front view |  |

3.2 **Front wheelhousing**

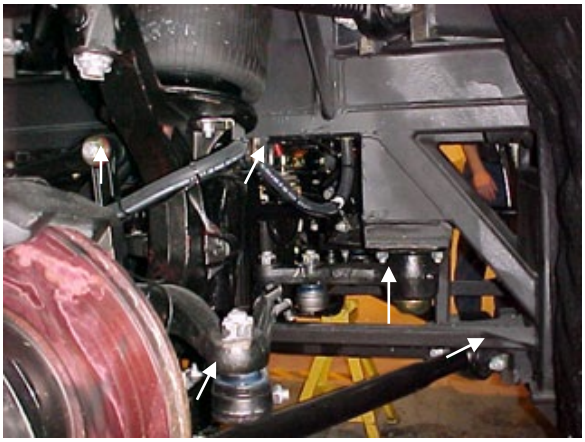

3.3 **Front wheelhousing**

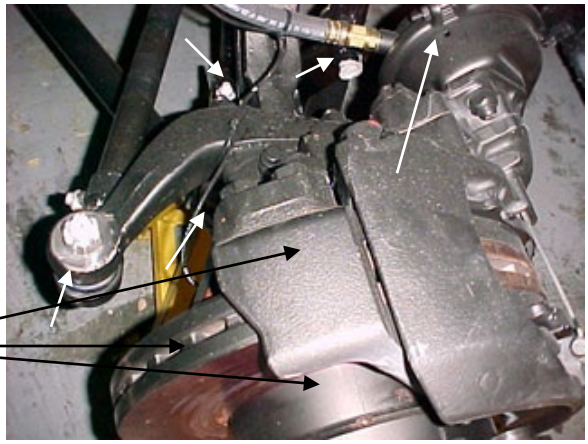

(Entire braking system)

4.0 **Rear wheelhousing**

a) Mask all rubber joints. Braking system must also be protected (refer to arrows). Commercial aluminum foil may be used for masking

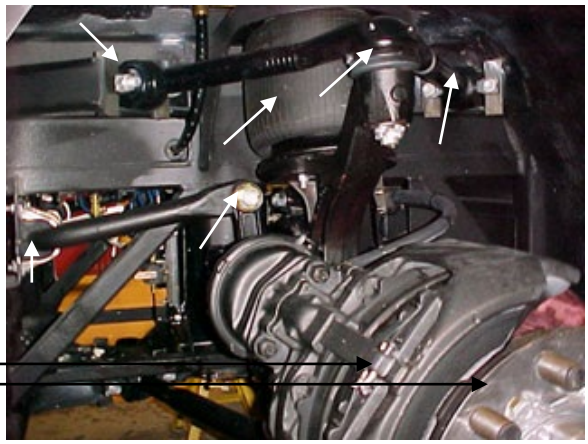

(Entire braking system)

| | |
|---|---|
| 4.1 **Rear wheelhousing**<br><br>(Entire braking system) | 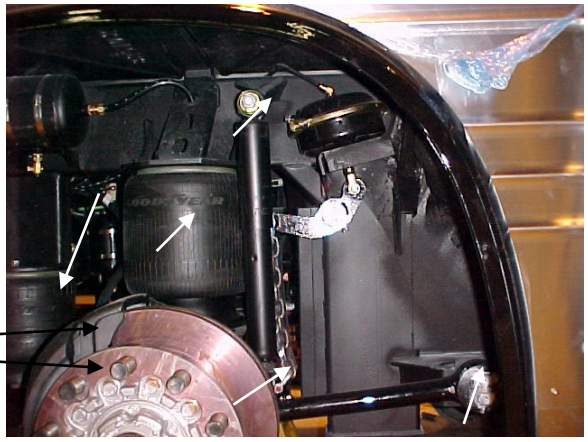 |
| 4.2 **Rear wheelhousing**<br><br>(Entire braking system) | 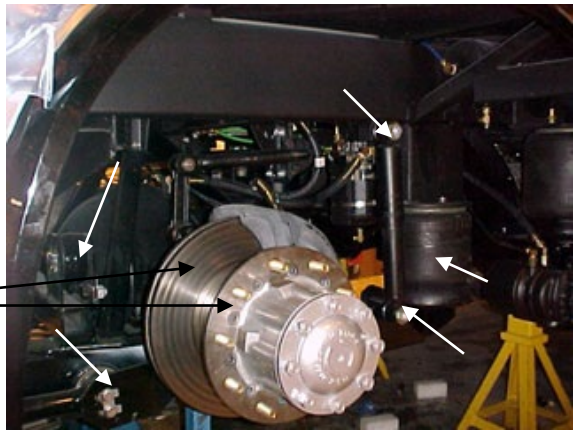 |
| 4.3 **Rear wheelhousing** | 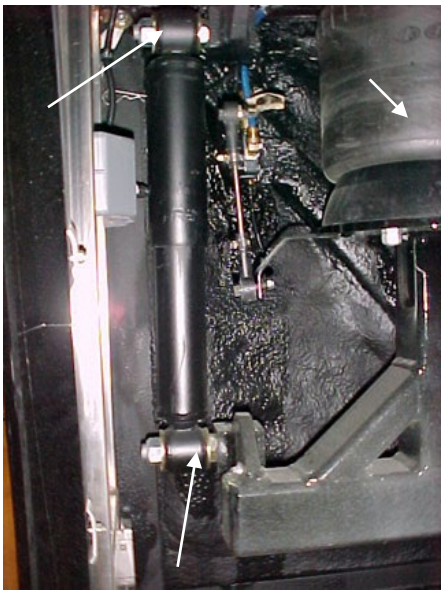 |
| 5.0 Close off wheelhousing using masking paper. | Prevent rust inhibitor from coming in contact with paint. To close off wheelhousing, a polythene sheet may be used. |

| | |
|---|---|
| 6.0 Apply TECTYL 185 GW black rust inhibitor onto wheelhousing mechanical parts. | A spray gun and pumping system are required to apply the rust inhibitor. If the application is done inside a paint room, select high speed ventilation. **Minimum required thickness is 10 mils wet or 5 mils dry**. |
| 7.0 Remove all masking material 30 minutes after application. | |

**ANNEX 1**

1. Check and confirm that dew point and surface temperature are in accordance with to the following criteria:

   Surface temperature > 10°C

   Surface temperature > or = to dew point + 3°C

| *NOTE* |
|---|
| *Use the following table to determine dew point.* |

2. Check and confirm that TECTYL temperature is between 10°C and 35°C.

| | DEW POINT | | | | | | | | | |
|---|---|---|---|---|---|---|---|---|---|---|
| | Relative Humidity (%) | | | | | | | | | |
| | 10 | 20 | 30 | 40 | 50 | 60 | 70 | 80 | 90 | 100 |
| Temp (c) | | | | | | | | | | |
| 0 | --- | -16 | -11 | -8 | -5 | -3 | -1 | 0 | 1 | 3 |
| 1 | --- | -15 | -10 | -7 | -5 | -3 | -1 | 1 | 2 | 4 |
| 2 | --- | -14 | -10 | -6 | -4 | -1 | 0 | 2 | 3 | 5 |
| 3 | --- | -13 | -9 | -5 | -3 | -1 | 1 | 2 | 4 | 6 |
| 4 | --- | -13 | -8 | -5 | -2 | 0 | 2 | 4 | 5 | 7 |
| 5 | --- | -11 | -7 | -4 | -1 | 1 | 3 | 5 | 6 | 8 |
| 6 | --- | -11 | -8 | -3 | 0 | 2 | 4 | 6 | 7 | 9 |
| 7 | -18 | -10 | -6 | -2 | 0 | 2 | 5 | 6 | 8 | 10 |
| 8 | -17 | -9 | -5 | -1 | 1 | 4 | 6 | 7 | 9 | 11 |
| 9 | -16 | -9 | -4 | -1 | 2 | 4 | 6 | 9 | 10 | 12 |
| 10 | -16 | -8 | -3 | 0 | 3 | 5 | 7 | 10 | 11 | 13 |
| 11 | -15 | -7 | -3 | 1 | 4 | 6 | 9 | 10 | 12 | 14 |
| 12 | -14 | -6 | -1 | 2 | 5 | 7 | 10 | 11 | 13 | 15 |
| 13 | -14 | -6 | -1 | 2 | 6 | 8 | 10 | 12 | 14 | 16 |
| 14 | -13 | -5 | 0 | 4 | 6 | 9 | 11 | 14 | 15 | 17 |
| 15 | -12 | -4 | 1 | 4 | 7 | 10 | 12 | 14 | 16 | 18 |
| 16 | -11 | -4 | 1 | 5 | 9 | 11 | 13 | 15 | 17 | 19 |
| 17 | -10 | -3 | 2 | 6 | 9 | 12 | 14 | 16 | 18 | 20 |
| 18 | -10 | -2 | 3 | 7 | 10 | 13 | 15 | 17 | 19 | 21 |
| 19 | -9 | -1 | 4 | 8 | 11 | 14 | 16 | 18 | 20 | 22 |
| 20 | -9 | 0 | 5 | 9 | 12 | 15 | 17 | 19 | 21 | 23 |
| 21 | -8 | 0 | 5 | 10 | 13 | 16 | 18 | 20 | 22 | 24 |
| 22 | -7 | 1 | 6 | 11 | 14 | 16 | 19 | 21 | 23 | 25 |
| 23 | -6 | 2 | 7 | 11 | 15 | 17 | 20 | 22 | 24 | 26 |
| 24 | -6 | 2 | 8 | 12 | 16 | 19 | 21 | 23 | 25 | 27 |
| 25 | -5 | 3 | 9 | 13 | 16 | 20 | 22 | 24 | 26 | 28 |
| 26 | -4 | 4 | 10 | 14 | 17 | 20 | 23 | 25 | 27 | 29 |
| 27 | -4 | 5 | 11 | 15 | 19 | 21 | 24 | 26 | 28 | 30 |
| 28 | -3 | 6 | 11 | 16 | 19 | 22 | 25 | 27 | 29 | 31 |
| 29 | -2 | 6 | 12 | 17 | 20 | 23 | 26 | 28 | 30 | 32 |
| 30 | -1 | 7 | 13 | 17 | 21 | 24 | 27 | 29 | 31 | 33 |
| 31 | -1 | 8 | 14 | 19 | 22 | 25 | 27 | 30 | 32 | 34 |
| 32 | 0 | 9 | 15 | 20 | 23 | 26 | 29 | 31 | 33 | 35 |

## 7. FIBERGLASS REPAIR

All repairs to fiberglass parts consist of filling the damaged area with fiberglass cloth and resin or strand fiberglass and resin. The repair is allowed to harden, and then finishing operations may be performed. Use of the various materials is determined by the type of repair to be made. Large holes, torn sections and separate joints require the adhesive qualities of the resin and the reinforcing qualities of the fiberglass.

Small dents, scratches or pits can be repaired using resin and strand fiberglass and filler mixed into paste. Instructions for either mix are explained under their respective headings in this section. For best results when making repairs, temperature should be between 70 and 75 ºF (21-24 ºC). Some people experience a skin reaction to resins. In such cases, wipe resin off with denatured alcohol or a good thinner. Use of protective hand cream is recommended.



**WARNING**

Always wear a respirator and goggles when grinding or sanding.

Extreme care must be taken if the sander is electrically operated, as dust from some resins is combustible when subjected to sparks or open flames. The proper tool for sanding resin is a low speed, air driven disc sander with a water attachment or a dry sander having a vacuum bag. Either will eliminate flying glass and resin dust.

The following additional tools and materials will assist in making repairs: hacksaw blade, assorted files, emery paper or cloth (150 or finer), scissors or tin snips, wax paper or cellophane sheets, a 3" (75 mm) paint roller, paint brush, putty knife, acetone and one or more heat lamps.

## 7.1 REPAIR USING FIBERGLASS CLOTH

Where necessary, sand paint away around damaged area and scrape away undercoating, if any, and wipe clean with solvent. Grind or file the damaged area to form a "V" at the broken or cracked portion. Sides of "V" should have a shallow pitch for maximum bonding area.

*NOTE*

*Roughening the surface improves adhesion of resin.*

If part is warped from original shape, use clamping equipment to straighten the surface. Preheat area to be repaired with one or two heat lamps placed 18 to 24 inches (450-610 mm) from repair.

**CAUTION**

Temperature should not exceed 140 ºF (60 ºC) during 30 minutes in order to avoid distortion.

Cut fiberglass cloth with scissors or tin snips, 1 to 3 inches (25-75 mm) larger than area to be repaired. Build area to desired height.

Mix resin and hardener following instructions on their containers. Saturate layers of fiberglass with mixture and place laminates over damaged area. Smooth out wrinkles and make sure general contour of area is maintained. Bubbles and wrinkles can be eliminated with a roller.

**CAUTION**

The pot life of the mix is approximately 15 minutes. Any accidental contamination to the skin, clothing, tools, etc. must be removed within this period. Use acetone to remove uncured resin.

Heat resin material again by placing heat lamps 18 to 24 inches (450-610 mm) from repaired area. Allow 12 to 15 minutes for repair to cure. After repair is cured, grind, file or sand to contour. Files other than body files may be more suitable. Featheredge and finish sanding.

If small pits or irregularities appear after making repair, correct by using a liberal amount of chopped strand or filler mixed with resin to form a paste. Refer to heading *"Repair with Fiberglass Paste"* in this section.

## 7.2 REPAIR USING FIBERGLASS PASTE

Fiberglass paste is used for repairing small dents, scratches, and pits. Paste is made by mixing resin, hardener and fiberglass strand or filler to the consistency of putty. Where necessary, sand paint away around damaged area. On underside of coach, scrape away undercoating from damaged area, and wipe clean with solvent.

Preheat the area to be repaired using heat lamps. Mix desired quantities of resin and hardener according to manufacturer's instructions. Add powdered fiberglass strand into mixture to thicken it into a putty state.

*NOTE*

*If repair is made on a vertical surface, adding powdered filler material to mixture will reduce tendency of hot resin to flow or run.*

Apply the material with a putty knife or similar object, building material up to the desired contour. For deep filling and on vertical surfaces, several layers of material may be used.

A hacksaw blade, held flat to adjacent contour and then moved in a sawing action across the repair when the resin is in a gel state, will remove excess resin from repair. Finish repair with the same procedure as when using fiberglass cloth.

## 7.3 TYPICAL FIBERGLASS REPAIR PROCEDURE

Remove all loose particles or damaged material using a power sander or rasp. Clean area, overlapping hole approximately 1" to 1-½" (25-40 mm) all around. Remove all dirt, grease and paint from area to ensure good bonding surface. Feather the cleaned area all around (Figure 3).

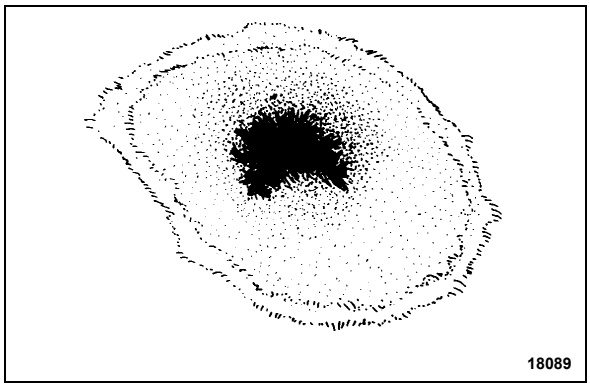


FIGURE 3: FIBERGLASS REPAIR

Cut a piece of fiberglass mat slightly larger than area being repaired. Impregnate mat with general purpose polyester resin catalyzed normally. Use a clean paint brush to apply the polyester resin. Apply impregnated mat over hole and press onto surface with brush to obtain good adherence. Another coat of general purpose polyester resin can be applied at this time (Figure 4).

| *NOTE* |
| --- |
| *Remove all air between surfaces being joined. Allow area to harden and sand surface to remove any wax.* |

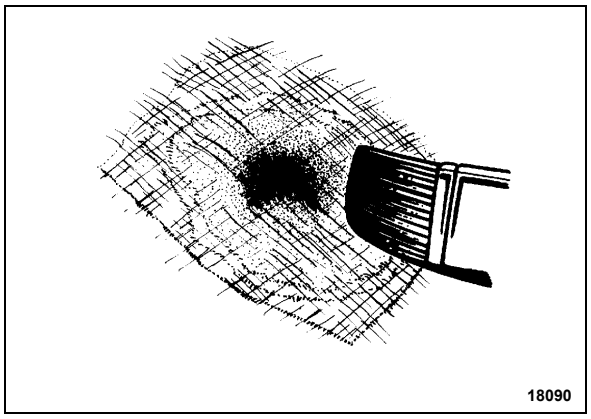


FIGURE 4: FIBERGLASS REPAIR

Apply another mat, followed by a cloth patch, and another mat. All layers must be thoroughly impregnated with polyester resin, brushed well and free of air. Apply more layers of mat and cloth as required until the desired strength and thickness is obtained, minimum two 1-½ oz (43 g) mats and one 9 oz (255 g) cloth (Figure 5).

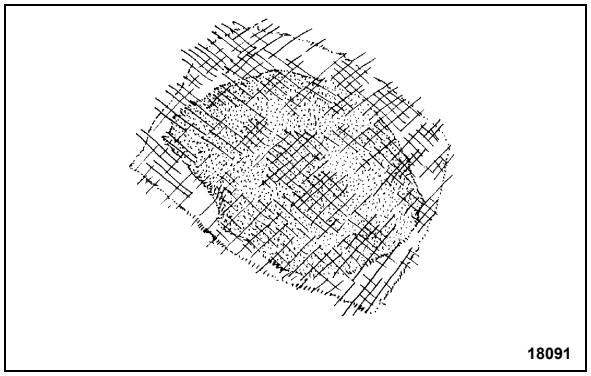


FIGURE 5: FIBERGLASS REPAIR

Allow area to harden and contour the area with coarse sandpaper #100 (Figure 6).

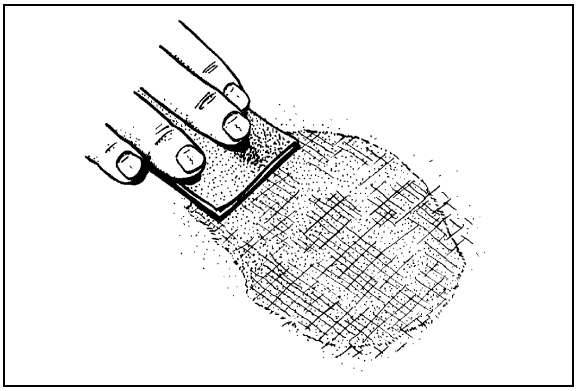

FIGURE 6: FIBERGLASS REPAIR 18092

Cover the area with a layer of resin putty and allow drying for approximately 15 to 20 minutes (FIGURE 7).

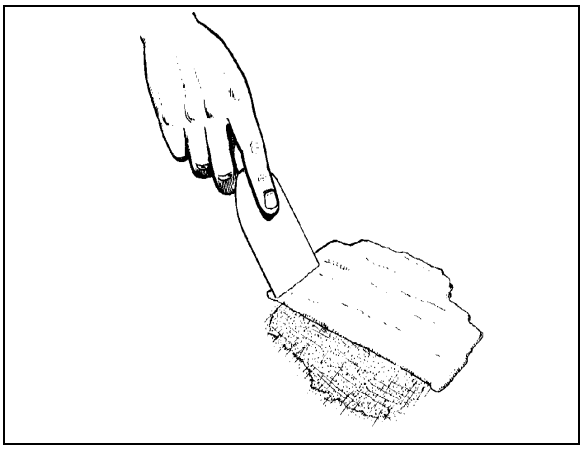

FIGURE 7: FIBERGLASS REPAIR 18093

Smooth off surface with coarse sandpaper #100 to desired shape. Further smooth surface with fine sandpaper #120 until repaired surface matches surrounding area paneling. Prime and paint the area to match surrounding paintwork.

## 8. PAINTING

### 8.1 NEW PAINT CARE

Our paint supplier recommends that you follow these simple precautions the first months of your new vehicle's life.

**CAUTION**

Apply these recommendations after repainting vehicle.

**During the first 30 days:**

- Do not use a commercial bus wash. Stiff brushes or sponges could mar the finish and damage the surface. Wash the vehicle by hand only and with cool water and a very mild bus wash solution. Be careful to use only a soft cloth or sponge;
- Wash vehicle in the shade, never in direct sunlight;
- Do not "dry wipe" vehicle –always use clean water. Dry wiping could scratch the finish;
- Avoid extreme heat and cold. Park vehicle in the shade whenever possible;
- Do not park under trees which drop sap or near factories with heavy smoke fallout. Tree sap and industrial fallout may mar or spot a freshly painted surface;
- Trees are also likely to attract birds. Bird droppings are highly acidic and will damage a freshly painted surface. Bird droppings, tree sap and industrial fallout should be washed off as soon as possible;
- Do not spill oil, gasoline, antifreeze, transmission fluid or windshield solvent on new finish. IMMEDIATELY rinse off any such spill with clean water, DO NOT WIPE;
- Do not drive on gravel roads. Paint finish easily chips during the first 30 days;
- Do not scrape ice or snow from the surface. A snow scraper can act like a paint scraper if the finish is new. Brush off loose material with a soft snow brush.

**During the first 90 days:**

- Do not wax or polish the vehicle. This will allow the finish to dry and harden completely.

### 8.2 PAINT TOUCHUP

When paint touchup or partial repainting is necessary, refer to the vehicle's paint scheme for color codes and paint brand.

Prevost recommends using the original paint brand to ease color matching.

In the event you sand through to the gelcoat surface you should prime the area with Standox "Non Stop Fill Primer (ST-11000)".

If you sand through to metal surface, first prime with Standox "Etch Primer (ST-11858)" then with Standox "Non Stop Fill Primer (ST-11000)".

**CAUTION**

Be sure to heed all paint manufacturer's recommendations, especially concerning paint dilution and application.

### 8.3 PAINTING

The standard paint used on the exterior of the vehicle is Standox Basislack. It is a high gloss

polyurethane enamel finish designed for exposure to extreme conditions. Other types of paint may be called for as options by owner but are not dealt with in this section.

### 8.3.1 Safety

Care should be exercised in storing, handling, mixing, and applying paint and chemicals listed in this manual. The topcoat, primer, solvent, catalysts, accelerators, and cleaners are highly volatile and/or toxic if not properly used. Observe all safety instructions marked on the different packagings, as well as the following:

1. Do not smoke in the paint room or in adjacent area exposed to residue fumes.
2. Wear respirators approved by the governing safety and health regulations.
3. Maintain adequate ventilation at all times.
4. Dispose of any leftover paint mix properly.
5. Wear rubber gloves, rubber apron, and face shield during all phases of paint and chemical handling.

### 8.3.2 Surface Preparation and Paint Application

| | Aluminum and / or Stainless Steel | Fiberglass | Comments |
|---|---|---|---|
| **Surface Preparation** | Sand using P-150 grit sandpaper. It is recommended to sandblast rivets and panel edges with OLIMAG 35-70 blast media. | Sand using P-180 or P-240 sandpaper. | Do not use paint remover over aluminum or fiberglass. |
| **Cleaning** | STANDOX silicone remover ST-11654 (68-2989) | | |
| **Priming** | STANDOX Reactive Etch Primer ST-13908<br>* Wait 30 minutes then apply STANDOX Non-Stop Füllprimer ST-11000 (68-2973) | STANDOX Non-Stop Füllprimer ST-11000 (68-2973) | Refer to product Technical Data sheet for proper mixing |
| **Basecoat** | Refer to paint scheme or coach record for proper color code and paint brand.<br>We recommend using the same paint brand to ease color matching. | | Refer to product Technical Data sheet for proper mixing |
| **Clearcoat** | STANDOX 2K MS Rapid Clear ST-11760 (68-2979)<br>Allow 16 hours for drying | | Refer to product Technical Data sheet for proper mixing |

**If assistance or technical information on STANDOX products is needed, please dial: 1 (800) 551-9296**

## 8.4 FRONT AND REAR BUMPERS

### 8.4.1 Paint touchup and surface preparation for vehicles equipped with urethane bumpers

| | COMMENTS | VIP | COACHES |
|---|---|---|---|
| **Cleaning** | Clean using red wool and Standoflex 11100 (ST-11425) thinner | YES | YES |
| | Clean again twice using Standoflex 11100 (ST-11425) thinner | YES | YES |
| **Priming** | Apply Non-Stop primer (ST-13320) with flexible agent dilution 2:1 10% in 2 or 3 coats, 15 min. flash/off between coats | YES | YES |
| **Sanding** | Sand Non-Stop primer using P-320 grit sandpaper | YES | YES |
| | Use a tack cloth | YES | YES |
| **Basecoat** | Apply basecoat. Wait 30 minutes. | YES | YES |
| **Varnish dilution** | Dilution without flexible agent | YES | YES |
| **Varnishing** | Apply varnish | YES | YES |

**If assistance or technical information on STANDOX products is needed, please dial: 1 (800) 551-9296**

# 9. FRONT AND REAR BUMPERS

## 9.1 FRONT BUMPER REMOVAL AND INSTALLATION

The front bumper is hinged to give access to the spare wheel compartment. Bumper must first be tilted down before its removal. Two people are required to remove and install the front bumper.

**WARNING**

Front bumper weighs approximately 180 lbs. (80 kg). Use proper lifting equipment to support the bumper during the removal and installation operations to avoid personal injury.

Pull on the release handle located in the front electrical and service compartment. The bumper assembly will lower gradually.

### 9.1.1 Front Bumper Removal

Loosen 12 attaching bolts from inside the bumper, 6 over and 6 under the bumper beam (Figure 8). Let the bumper rest face down on the lifting equipment platform.

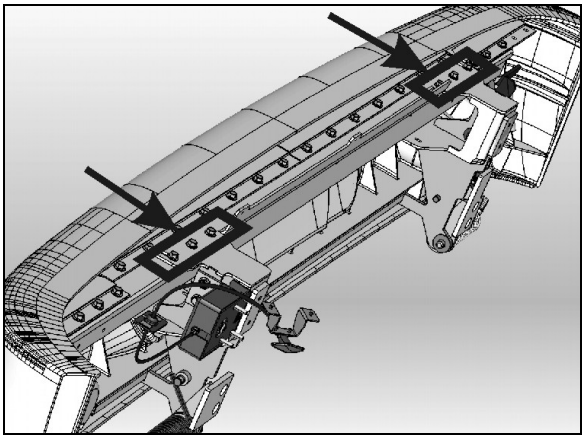

FIGURE 8: BUMPER ATTACHING BOLTS 18498

To reinstall the front bumper, reverse the procedure.

### 9.1.2 Front Bumper Skin Removal

The bumper skin is pinched to the bumper beam by the use of aluminum extrusions bolted over and under the beam. First, remove the front bumper as per “Front Bumper Removal”. Let the bumper rest face down on the lifting equipment platform. Loosen the aluminum extrusion bolts as required and then detach the skin from the beam (Figure 9).

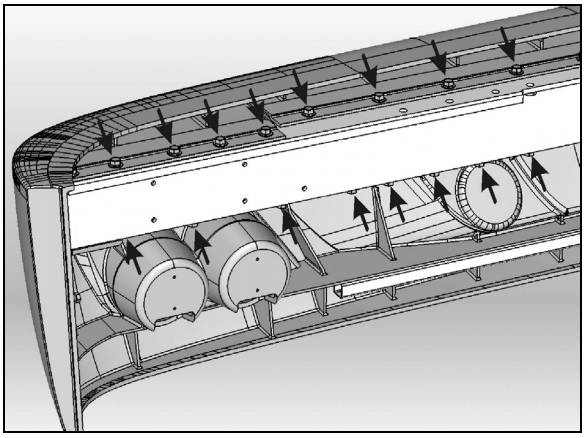

FIGURE 9: ALUMINUM EXTRUSIONS - BUMPER SKIN REMOVAL

### 9.1.3 Front Bumper Assembly Removal including spare wheel compartment door.

1. Ask assistant to relieve spring tension with assistant proper tool, and relieve spring tension on one locking pin and remove it. Slowly release spring tension and remove the second locking pin. The spring is free. Repeat procedure for the other spring.

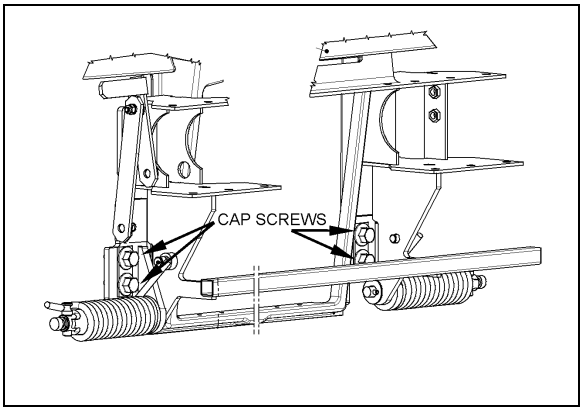


FIGURE 10: FRONT BUMPER ASSEMBLY

| *NOTE* |
| --- |
| *A special tool kit is available from Prevost: Kit # 410671 including tool #410708.* |

2. Remove 4 cap screws holding bumper to vehicle and remove bumper (Figure 10).
3. To install bumper, reverse the removal procedure.

## 9.2 FRONT BUMPER LICENSE PLATE SUPPORT INSTALLATION

License plate supports are stored in the first baggage compartment. Install supports as per Figure 11.

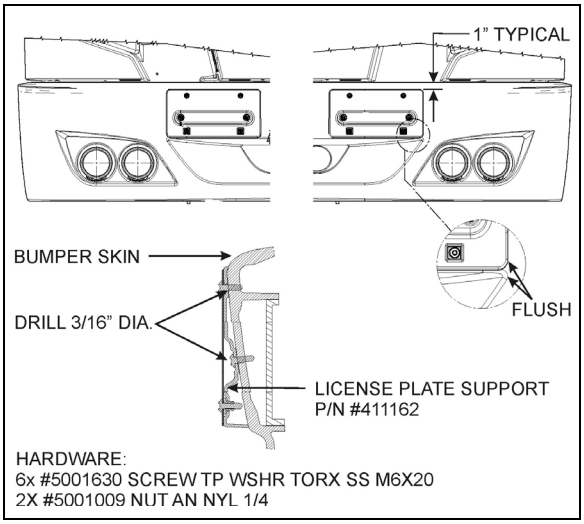


FIGURE 11: LICENSE PLATE SUPPORTS 18500A

## 9.3 REAR BUMPER REMOVAL AND INSTALLATION

**WARNING**

Rear bumper weighs approximately 180 lbs. (80 kg). Use proper lifting equipment to support the bumper during the removal and installation operations to avoid personal injury.

1. Remove 6 nuts (3 on each side) holding bumper assembly to vehicle and remove bumper (Figure 12).
2. Let the bumper rest face down on the lifting equipment platform.
3. To install bumper, reverse the procedure.

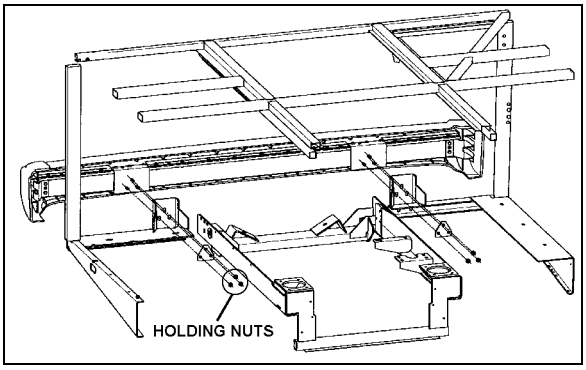


FIGURE 12: REAR BUMPER ASSEMBLY 18501

## 10. COACH ENTRANCE DOOR

An air operated “sedan type” entrance door, with an air door cylinder and damper assembly are installed under the right hand dash. The opening and closing door speed cycle is adjustable by a damper mounted in parallel with the door cylinder on the door hinge (Figure 15). Door activation is controlled by a relay panel, located near the defroster and wiper motors. The accessory air reservoir supplies air to this system.

The door is held in the closed position during coach operation by two air cylinder locking mechanisms (Figure 16). Air cylinders with return spring in the cylinder body are used. Air cylinders are controlled by an electrically operated solenoid valve energized by a rocker switch located under the right hand dashboard.

To open the door, initial movement of the rocker switch de-energizes the air lock solenoid valve, venting the door locking cylinders. The return locking spring pulls the door lock away from the latch, unlocking the door. Door movement starts only when pressure in the central air door lock is below 10 psi. The “air cylinder open solenoid valve” opens and allows air to flow to the door cylinder, “the air cylinder close solenoid valve” exhausts air from the rod side of the cylinder.

To close the door, initial movement of the switch energizes the “air cylinder close solenoid valve” and air flows to the cylinder by its rod side port. The “air cylinder open solenoid valve” exhausts air from cylinder. When entrance door latch is grounded with the door frame, the air lock solenoid valve is de-energized and loads the door lock cylinders. The cylinder moves the door lock in a position which engages a latch on the entrance door, holding the door positively closed.

Emergency exit valves, which open the air valve circuit, should be used only in emergencies, or when the door control system does not function properly.

Refer to the air system schematic and page 22 of the wiring diagram available on the technical publications web site.

### 10.1 OPERATION

The air-operated door is controlled from inside the coach by two push-button switches located on the R.H. dashboard.

Opening and closing of the door from outside the coach is accomplished by a momentary toggle switch located behind the coach model nameplate (Figure 13).

To close the door, the switch must be pushed towards the rear of the coach and held in position until the door has completed its movement.

To open the door, the switch must be pushed towards the front of the coach and held in position. When the door reaches the fully opened position, the system will keep pressure in the cylinder locking the door in that position. The door can be stopped in any position by releasing the switch. The door is not locked in position when not fully opened or closed.

If the door has been locked with the key, a lever on the door can be moved to unlock.

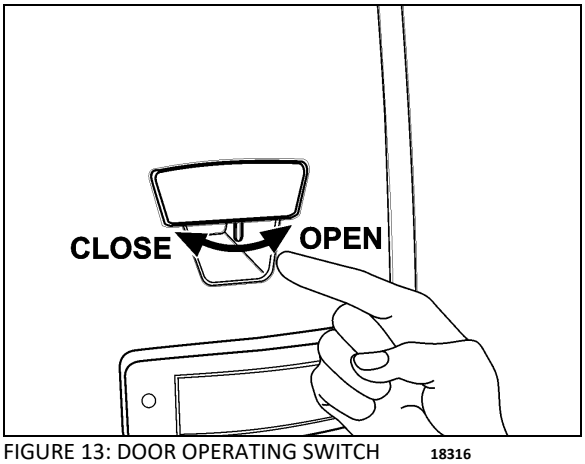


FIGURE 13: DOOR OPERATING SWITCH 18316

### 10.2 EMERGENCY EXIT VALVES

From inside the vehicle, an emergency exit valve located near the door on the dash panel,

releases the pressure from the lock cylinders. From the exterior, an emergency exit valve located in the front service compartment, also releases the air from the lock cylinders.

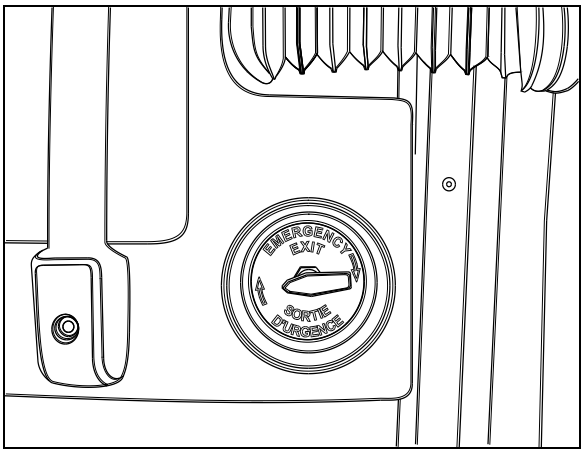


FIGURE 14: EMERGENCY EXIT VALVE 18321

### 10.2.1 Without Air and/or Without Electricity

If the air pressure drops while coach has or hasn't any electricity, the spring loaded cylinders will unlatch the door. In such a case, unlock the door by moving the lever on the door or by using the key, then open the door manually.

### 10.2.2 With Air but Without Electricity

From inside the vehicle, turn the emergency exit valve to the "UNLOCK" position. Move the lever. From the exterior, turn the emergency exit valve to the "UNLOCK" position. Open the door. Close it, lock with the key and reset the outside emergency exit valve to the "NORMAL" position.

## 10.3 DOOR CYCLE SPEED ADJUSTMENT

To do any adjustment, remove the two panels located next to the door hinge, as well as the door's upper hinge control.

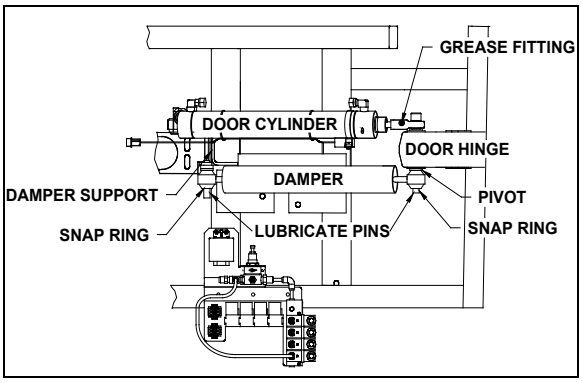


FIGURE 15: DOOR CYLINDER AND DAMPER 18161

**CAUTION**

It is important to make sure that damper does not reach end of stroke when door is completely closed or opened. The door cylinder must stop the door on opening. Screw or unscrew rod end to adjust if necessary.

To adjust opening and closing cycle speed on damper (Figure 17):

1. Remove the damper from the vehicle and hold it vertically with the lower eye or pin attachment in a vice. Use clamp plates to prevent damage.
2. Fully close the damper while turning the dust cap or piston rod slowly CCW until it is felt that the cams of the adjusting nut engage in the recesses of the foot valve assembly (Figure 17).

*NOTE*

*In* Figure 17*, if there is an indentation (B) in the dust cap (C) and the cover shows two holes (A), the damper is fitted with a bump rubber (D). If so, fully extend the damper and insert a round bar or screwdriver through the holes. Push the bump rubber down and remove. Remove the split plastic collar (E) (if fitted) from the piston rod.*

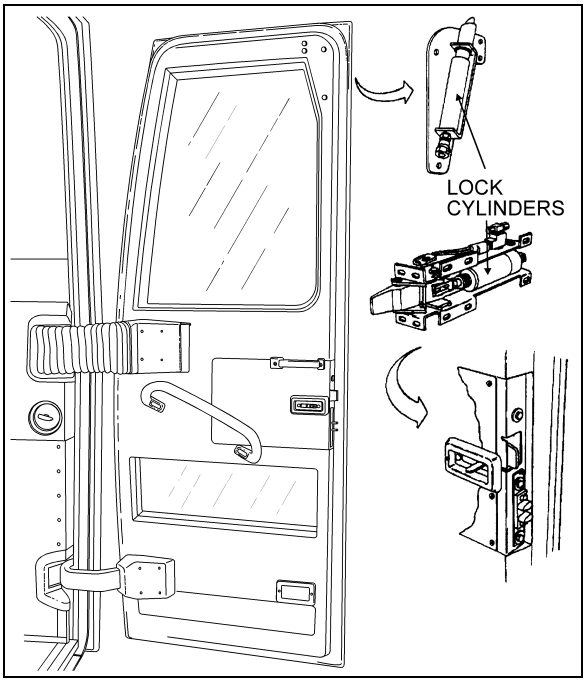


FIGURE 16: COACH ENTRANCE DOOR 18439

3. The damper may have already been adjusted. Therefore check whether the damper is adjusted or not by keeping it closed and gently turning further CCW, counting at the same time the half-turns until a stop is felt. Stop turning and do not force.
4. While keeping the damper closed, make two CW half-turns. In case of prior adjustment, add the number of half-turns previously counted. The total range is about five half-turns.
5. Pull the damper out vertically without turning for at least 3/8" (1cm) to disengage the adjusting mechanism. The dust cap or piston rod may now be turned freely.

| NOTE |
| --- |
| *Where a bump rubber was installed, refit same inside the dust cap and by fully closing the damper, the rubber will seat again at top of the dust cap. Refit the split plastic collar E (*Figure 17*)* |

6. The damper can now be refitted in the vehicle.
7. Reinstall panels and entrance door hinge cover.

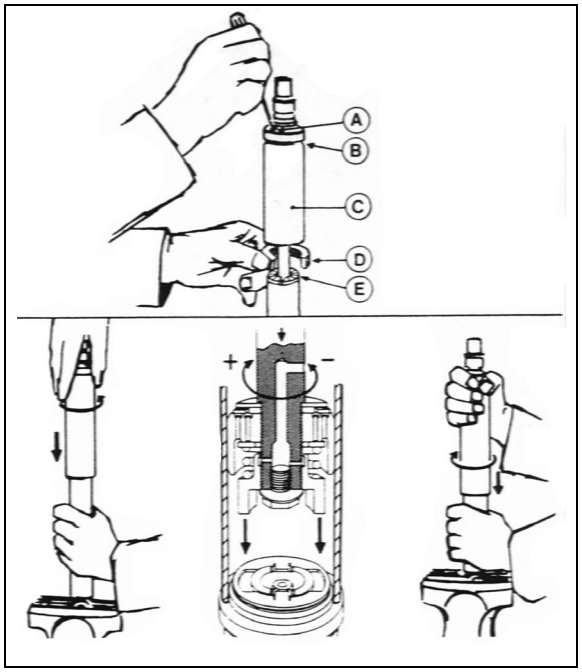


FIGURE 17: DAMPER

## 10.4 HORIZONTAL AND VERTICAL ADJUSTMENT

Before attempting to correct any door operating problem by adjusting any part of the air cylinder assembly, first perform the following mechanical checks and procedure.

Check around the perimeter of the door for binding. If any binding is found, adjust as follows:

1. Remove the screws and the plastic molding covering each of the hinges.

| NOTE |
| --- |
| *Ask an assistant to help you to perform the following adjustments.* |

2. Remove the Allen button head screw and the washer retaining the rod end with bearing to the upper hinge. See Figure 18.
3. Support the door with a wooden block and a hydraulic jack.
4. Loosen the horizontal bolts retaining the door to the hinges. Adjust the door horizontally and vertically with the jack. Tighten the bolts.

**TORQUE: 55-65 lb-ft (75-88 Nm)**

5. Remove the jack and the wooden block.

**CAUTION**

Make sure the entrance door does not interfere with the exterior panel.

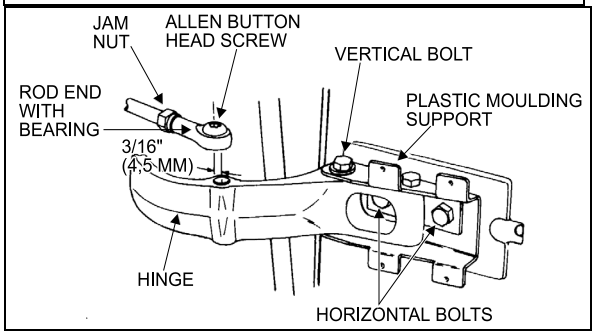


FIGURE 18: UPPER DOOR HINGE (COACH) 18058

6. Pull and fasten the rod end to the hinge with the washer and the button screw.
7. Screw the plastic moldings covering the hinges.

## 10.5 DEPTH ADJUSTMENT

1. Turn the emergency exit valve to the "UNLOCK" position.
2. Remove the screws and the plastic molding covering each of the hinges.

*NOTE*

*Ask an assistant to help you to perform the following adjustments.*

3. Remove the Allen button head screw and the washer retaining the ball and socket rod to the upper hinge. See Figure 17.
4. Loosen the vertical bolts on the hinges for the front section, and for the rear section, move the central door catch on the door frame.
5. To adjust the male dovetail on L.H. side of the door, remove the two screws and loosen the two bolts. Slide the male dovetail toward the interior and loosely tighten the two bolts. Close the door slowly but firmly, then slowly open it and tighten the two bolts. Attach dovetail to the door with screws. See Figure 19.

*NOTE*

*The frame dovetail is not adjustable.*

6. Pull and fasten the rod end to the hinge with the washer and the button screw.
7. Using the screws, attach the plastic moldings covering the hinges.
8. Reset the emergency exit valve to the normal position.

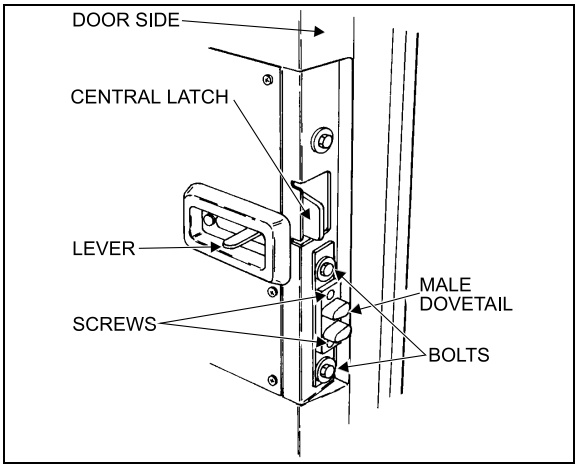


FIGURE 19: DOOR LATCH (COACH) 18059

## 10.6 ROD END ADJUSTMENT

1. Turn the emergency exit valve to the "UNLOCK" position.
2. Remove the screws and the plastic moldings covering the upper and lower hinges.
3. Remove the Allen button head screw and the washer retaining the rod end with bearing to upper hinge. See Figure 17.
4. Loosen the jam nut locking the door cylinder rod end. Close the door firmly, adjust the rod end center hole in order to be 3/16" (4,5 mm) eccentric toward the left with the hinge hole center. Tighten the jam nut.
5. Pull and fasten the rod end to the hinge with the washer and the button screw.
6. Using the screws, attach the plastic moldings covering the hinges.
7. Reset the emergency exit valve to the normal position.

## 10.7 LUBRICATION

| Part | Lubricant | Frequency |
|---|---|---|
| Latches<br>Upper door catch<br>Door cylinder rod end with bearing grease fitting (Figure 19) | Low temperature grease | Every six months |
| Door locking mechanism | White grease | Every six months |

## 10.8 TROUBLESHOOTING

| SYMPTOM | PROBABLE CAUSE | REMEDY |
|---|---|---|
| DOOR WILL NOT OPEN FROM EXTERIOR SWITCH. | Manual door locks engaged. | Release manual door locks. |
| | Upper and lower solenoid locks do not disengage. | Check voltage at solenoid locks when door is open. If the voltage is 24 volts then replace solenoid #641217. Else, check circuit power. |
| | Relay module do not receive current. | Reset breaker "ON" or check batteries power supply. |
| | Opening solenoid door does not receive current. | Check voltage at opening solenoid door. If the voltage is 24 volts then replace it. Else replace control relay. |
| | Switch malfunction. | Replace switch. |
| DOOR WILL NOT CLOSE FROM EXTERIOR SWITCH. | Switch malfunction. | Replace switch. |
| | Solenoid failure. | Check voltage at solenoid. If the voltage is 24 volts then replace solenoid. Else replace control relay. |
| DOOR WILL NOT OPEN FROM INTERIOR SWITCH. | Manual door locks engaged. | Release manual door locks (open position) from vehicle exterior. |
| | Upper and lower solenoid locks do not disengage. | Check voltage at solenoid locks when door is open. If the voltage is 24 volts then replace solenoid #641217. Else, check circuit power and replace control relay. |
| | Module relay does not receive electric current. | Reset breaker "ON" or check batteries power supply. |
| | Door opening solenoid does not receive current. | Check voltage at door opening solenoid. If the voltage is 24 volts then replace it. Else replace control relay. |
| | Switch malfunction. | Replace switch. |
| | Upper lock stays engaged. | Lubricate upper lock assembly. Check wear and replace parts if necessary. |
| DOOR WILL NOT CLOSE FROM INTERIOR SWITCH. | Switch malfunction. | Replace switch. |
| | Door closing solenoid does not receive electric current. | Check voltage at door closing solenoid. If the voltage is 24 volts then replace it. Else replace control relay. |
| DOOR WILL NOT OPEN AFTER DRAINING AIR FROM SYSTEM BY EMERGENCY VALVE(S). | Manual door locks engaged. | Release manual door locks (open position) from vehicle exterior. |
| | Damper cylinder blocks the door. | Adjust or replace damper cylinder. |
| | The upper lock blocks the door | Adjust lower lock. Lubricate upper latch bolt. Adjust upper latch height. |
| DOOR LOCKS STAY ENGAGED WHEN DOOR IS OPEN. | Power supply is cut at solenoid. | Place switch in open position. |
| | Solenoid lock does not disengage. | Check voltage at solenoid locks when door is OPEN. If the voltage is 24 volts then replace solenoid #641217. Else, check circuit power and replace control relay. |
| DOOR DO NOT LOCK WHEN DOOR IS CLOSED. | Emergency valve is open. | Close emergency valve. |
| | Lock solenoid stays electrified. | Check latch bolt ground on door frame. If needed clean locks for better contact. Check ground circuit. |
| | Lock solenoid works in reverse. | Reverse air hoses at solenoid locks. |
| | Relay does not function. | Replace relay. |

## 11. ENTRANCE DOOR (V.I.P)

There are three ways of unlocking the entrance door from the inside of vehicle. The two first consist in actuating the rocker switch on the dashboard, but this last operation will also unlock the baggage compartments. Finally, you can unlock the door by sliding its lock lever to the left. If the orange tab on the door lock lever is visible, the door is unlocked.

You may lock/unlock the entrance door from the outside with the lock key provided with the vehicle. Turn key CCW to lock and CW to unlock the entrance door.

### 11.1 KEYLESS ENTRY SYSTEM

With this system, you can lock or unlock the entrance door as well as the baggage and service compartment doors. The keyboard is located below the entrance door handle. The module is pre-programmed by the manufacturer and this code can not be deleted. Moreover, you can program your own entry code. Refer to the "VIP Owner's Manual" for instructions on how to program your own entry code.

When you use the keyless entry system, the keyboard and stepwell lights illuminate. Do not push the buttons with a key, pencil or any other hard object as it could damage the buttons.

Although each button is provided with two digits separated by a vertical line, there is only one contact per button. Always press the center of the button (between the two digits, on the vertical line).

If you let more than five seconds pass between each button press, the system shuts down, and you have to enter your code again. If the keyless entry system does not work properly, use the key to lock or unlock entrance or compartment doors. To know more about the keyless system, refer to the "VIP Owner's Manual".

| *NOTE* |
| --- |
| *You must unlock the entrance door before you unlock with the appropriate key any baggage or service compartment doors.* |

### 11.2 DOOR ADJUSTMENT

Check around the perimeter of the door for binding. If any binding is found, adjust as follows:

#### 11.2.1 Horizontal and Vertical Adjustments

1. Remove the screws and the plastic molding covering each of the hinges.

| *NOTE* |
| --- |
| *Ask an assistant to help you to perform the following adjustments.* |

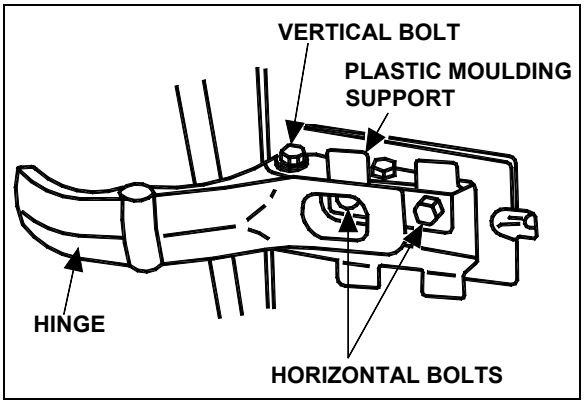


FIGURE 20: ENTRANCE DOOR (VIP)
**18058VIP**

2. Support the door with a wooden block and a hydraulic jack.
3. Loosen the horizontal bolts retaining the door to the hinges. Adjust the door horizontally and vertically with the jack. Tighten the bolts to

   **TORQUE: 55-65 lb-ft (75-88 Nm)**

   Remove the jack and the wooden block.
4. Check door fit.
5. Using the screws, fasten the plastic trim to cover the hinges.

### 11.3 DEPTH ADJUSTMENT

**To adjust door depth on the hinged side:**

1. Remove the screws and the trim covering each of the hinges.

| *NOTE* |
| --- |
| *Ask an assistant to help you to perform the* |

*following adjustments.*

2. Slightly loosen, but not completely the vertical bolts on both door hinges.
3. Ask your assistant to press the door from the exterior, until it will adjust with the vehicle structure. Then, tighten the vertical bolts.
4. Repeat step 3 until depth is corrected to satisfaction.
5. Using the screws, install the trim hiding the hinges.

**To adjust door depth on lock side:**

Depth adjustment is done by moving the two door striker pins.

1. Slightly loosen the door striker pins.
2. Ask your assistant to press the door from the exterior, until it will adjust with the vehicle structure. Then tighten the striker pin.
3. Repeat until the door depth is corrected to satisfaction.

## 11.4 DOOR LOWER SECTION

When a plastic door lower section replacement is needed, proceed the following way:

1. Remove the reflective stripe at the top edge of the door's lower section. Unscrew the retaining screws located under the reflective stripe.
2. Remove the lower section.
3. With a sharp edge knife, scrape as much tape as possible and compound left on the fiberglass door surface. Note where adhesive tape and sealing compound was applied.
4. Sand the surface or the door where new adhesive tape will be applied with 240 grit sandpaper.

*NOTE*

*Tape adheres best to smooth surfaces such as glass or gelcoat finishes. Be careful surface is as smooth as possible before applying tape.*

5. Clean contact surfaces with alcohol.
6. Clean the fiberglass door and the new plastic lower section with a "tack cloth". Make only one pass on the surface and never come back on a previously cleaned surface.



**WARNING**

Wear rubber gloves and do not smoke when cleaning.

7. Prepare the door lower section with Sika #205 and a clean rag. Make only one pass on the surface and never come back on a previously cleaned surface.

*NOTE*

Never use Sika #205 directly from the container to avoid contamination of the product.

8. Wait at least 5 minutes before preceding the next step to allow complete evaporation of the product.
9. Put new adhesive tape where it was previously applied. Pass a 1" (25mm) roller on it to get a good adhesion on the fiberglass.
10. Apply Sika #252 (Prevost #682462) compound where it was previously applied.
11. Remove protective paper from the adhesive tape and install the door lower section. Apply pressure with a roller where the lower door section touches the fiberglass door.
12. Replace the retaining screws.

## 11.5 REFLECTOR STRIPE INSTALLATION

1. Clean contact surfaces with alcohol.
2. Prepare surface of reflector stripe and door lower section with Sika #205.
3. Put two rows of adhesive tape on the lower door section.
4. Apply Sika #252 (Prevost #682462) compound between parallel tape stripes.
5. Remove protective paper from the adhesive tape and press the reflective stripe in place.

### 11.6 DOOR SEAL REPLACEMENT

1. Inspect the seal; if cracked or torn, it must be replaced:
2. Remove the old seal and with a sharp edge knife, scrape tape left on the fiberglass door surface.
3. Sand the surface of the door where a new seal will be applied with 240 grit sandpaper.
4. Clean the surface with alcohol.

**WARNING**

Wear rubber gloves and do not smoke when cleaning.

5. Peel of protective paper from the seal. Position the seal in order to leave ¼" (6 mm) from the upper molded edge of the door and 3/16" (4,5 mm) from the sides and lower molded edges of the door.
6. Progress slowly all around the door.
7. Cut the seal and glue both ends with LOCTITE 414 glue.
8. To assure bonding, press a small roller on top of the new seal.

### 11.7 DOOR LUBRICATION

| Part | Lubricant | Frequency |
|---|---|---|
| Latches<br>Upper door catch | Low temperature grease | Every six months |
| Door locking mechanism | White grease | Every six months |
| Key hole<br>Hinges | Low viscosity oil | Every six months |

### 11.8 DOOR LATCH MECHANISM

Generally, when the latch mechanism malfunctions, a number of causes may be responsible for this situation. No single procedure will correct this situation. It is best to remove the protective cover and to look for binding, used or bent parts. Operate the latch mechanism and try to find where any binding occurs. Replacing a part or slightly bending a rod should be enough. Remember, having a global understanding of the mechanical activity will generally lead you to the cause of the problem, and ultimately to an easy repair.

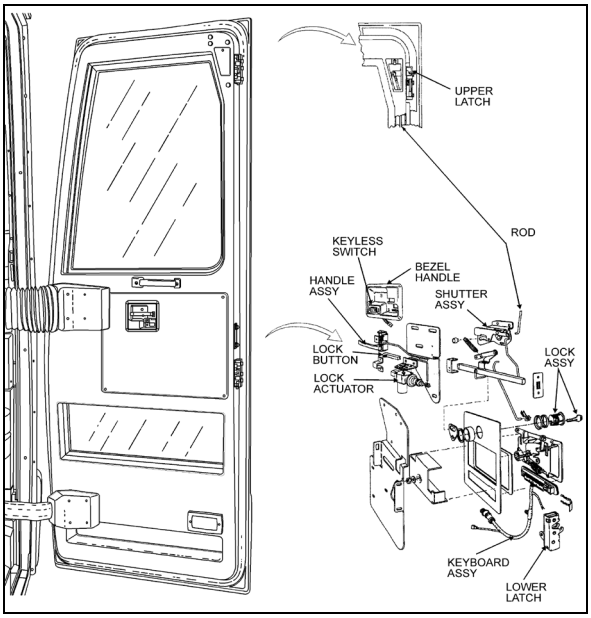


FIGURE 21: ENTRANCE DOOR (VIP, TYPICAL) 18440

## 12. DRIVER'S POWER WINDOW

To replace window or motor, the whole assembly must be removed. The following instructions refer to Figure 22.

### 12.1 POWER WINDOW REMOVAL

1. Raise the driver's power window.
2. Set the battery master switch to the OFF position.
3. The window must be held in upper position. To do so, use duct tape to hold it in place.
4. Gain access to the power window mechanism. Dismount the driver's area lateral control panel and left interior trim. It may be required to remove the driver's seat and dashboard panel.
5. Unfasten bolts (item 1) fixing the window to the lifting mechanism (actuator).
6. Remove the three bolts (item 2) holding the motor support and actuator assembly in place.

7. Detach the plastic water protection shield and remove the assembly by slipping it under the vehicle structural members.
8. Dismount the window support and lower the window completely to release it from its guides.
9. Detach the motor and actuator guide from the support and plastic shield. Replace parts as required.

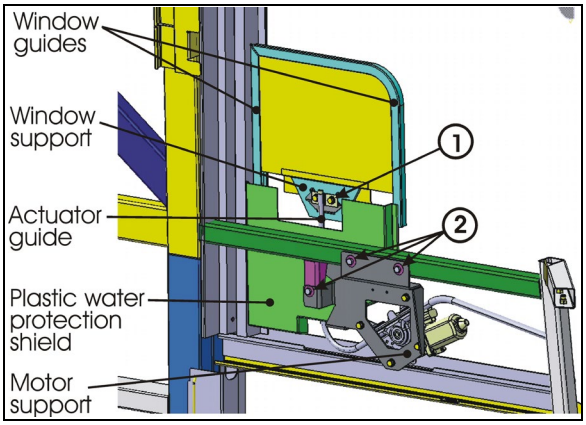

FIGURE 22: DRIVER'S WINDOW 23358

## 12.2 POWER WINDOW INSTALLATION

1. Energize the motor and position the actuator to its full extended position.
2. Using alcohol, a sharp knife or 240-grit sandpaper, clean off the butyl strip from the shield and frame. Install new butyl strip on plastic shield.
3. Install new window in opening. Use duct tape to hold it in upper position. Fix the window support using bolts recovered from disassembly. Use Loctite on threads.
4. Fasten window support to actuator using the recovered bolts (item 1). Use Loctite on threads.
5. Expose the other sticky side of the butyl strip. Install motor support and actuator assembly using recovered bolts (item 2). Stick plastic shield in place.

## 13. DASHBOARD – R.H. SIDE PANEL REMOVAL

The panel on the right side of the dashboard is secured with fasteners as seen in Figure 23 and Figure 24.

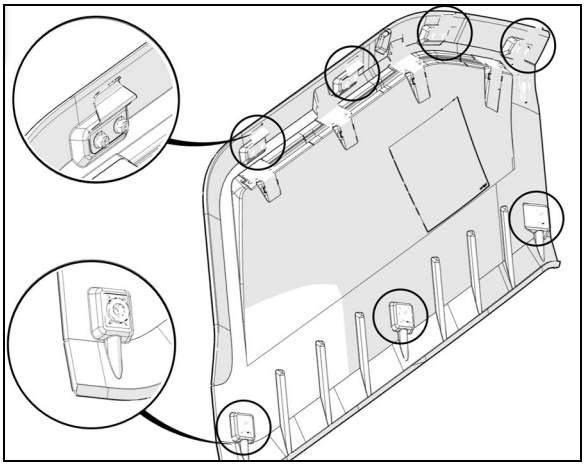
FIGURE 23: ATTACHMENT POINTS AT THE BACK OF THE PANEL

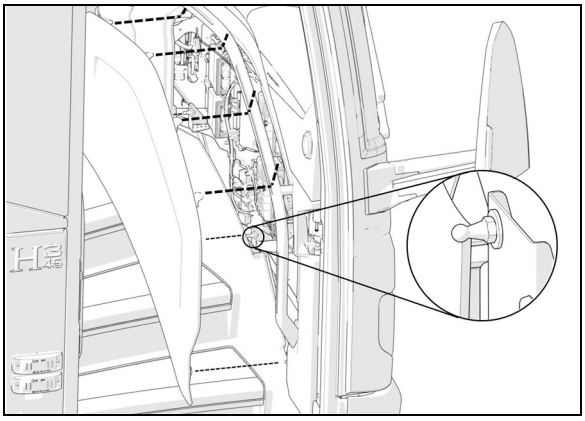
FIGURE 24

To remove the panel, detach the bottom of the panel in three places by pulling towards you and then pull the panel down to disengage the top.

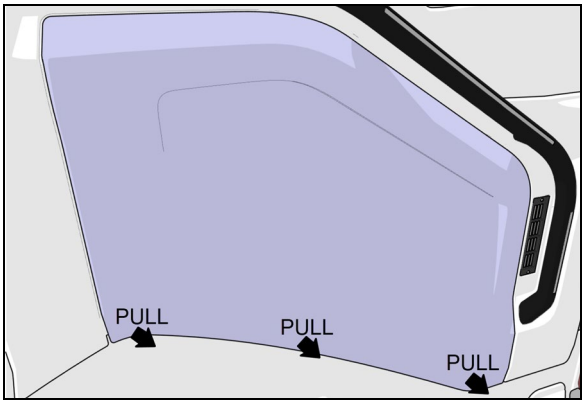

FIGURE 25

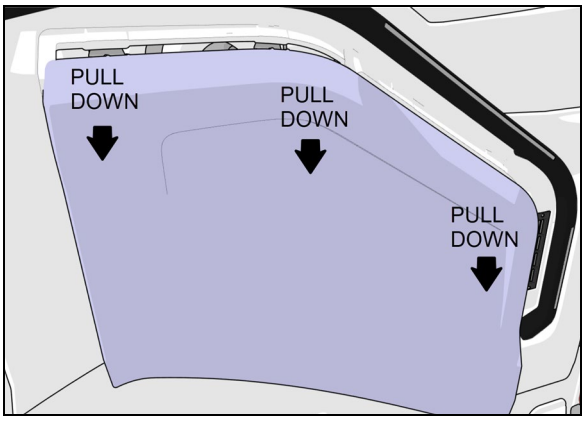

FIGURE 26

## 14. ROOF ESCAPE HATCH

The vehicle can be equipped with one or two escape hatches. The escape hatch is designed to provide years of reliable service with a minimum of maintenance. All components are rust proof, and moving parts are Teflon coated to eliminate need for lubrication. Should water infiltrate the vehicle from the escape hatch, refer to the heading "Sealing" in this section for procedures on how to seal this area.

**CAUTION**

Use of lubricants, paints, or other coatings such as graffiti deterring sprays is not recommended.

Suggested maintenance includes periodic inspection of fasteners for evidence of loosening due to tampering, and regular cleaning with mild soap and water.

Although there are other cleaning solutions available, some contain solvents and other chemicals that can attack the high strength materials used in the production of the escape hatch.

**CAUTION**

Ensure that cleaning solutions are compatible with the materials used on the escape hatch.

Graffiti removing cleaners often contain acetone, ether, lacquer thinner or other solvents known to destroy the high strength properties of many plastics. Use of these cleaners must be avoided.

Graffiti-resisting coatings often leave a sticky residue that interferes with smooth up/down movement of the hatch mechanism. Some of these coatings also contain solvents that will reduce the strength of certain components.

**CAUTION**

Use of these coatings is at considerable risk and should be avoided.

### 14.1 REPAIR

All components used in the production of the escape hatch are available as service parts, except for one hinge that represents a possible hazard when improperly reattached to a hidden tapping plate, itself often damaged whenever the hinge is damaged. The tapping plate is permanently laminated between the inner and outer cover assemblies, and it cannot be inspected or replaced. It is therefore necessary to replace the entire assembly following damage to the hinge. See Figure 27 and Figure 28.

**CAUTION**

Hinge assembly is critical and hinge should never be removed from cover assembly. Fasteners used in this assembly are special and have critical torque requirements and tamper-resistant heads to discourage tampering.

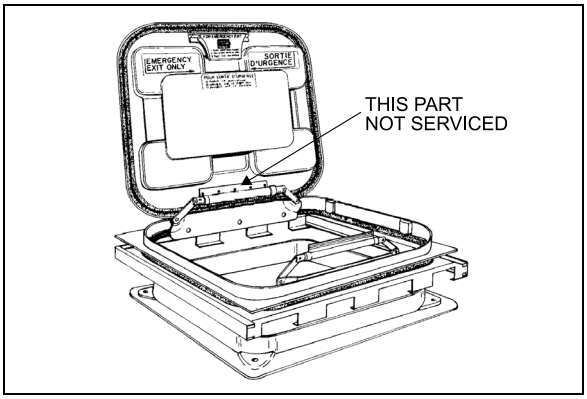

FIGURE 27: ESCAPE HATCH 18104

### 14.2 SEALING

1. Open and tilt up the escape hatch cover.

2. Join the 2 ends of the rubber seal.

> **CAUTION**
>
> Seal joint should be toward rear of vehicle.

3. Apply rubber adhesive CA-40 (Prevost # 681285) in the gap between the seal ends.
4. Apply Sikaflex 221 sealant (Prevost # 680532) along the outline of the escape hatch on the roof of vehicle.

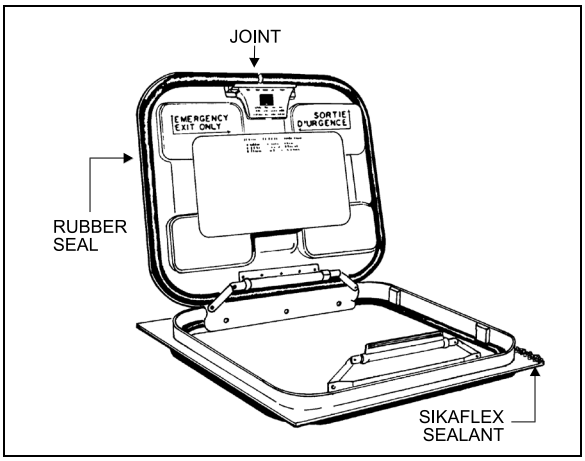


FIGURE 28: ESCAPE HATCH 18105

## 14.3 ESCAPE HATCH PANEL ASSEMBLY

The frame of the escape hatch is riveted to the roof of the vehicle. The escape hatch panel assembly can be replaced as a unit and a new panel assembly installed in the existing frame. To remove the panel assembly, remove the 4 bolts fastening the 2 hinges to the escape hatch frame and retain the 4 flat washers. Reinstall the panel assembly by fastening the 2 hinges with the 4 bolts and flat washers removed earlier.

> **CAUTION**
>
> When installing, roof escape hatch's hinge must be toward the front of vehicle, to prevent the hatch from being ripped out if accidentally opened while vehicle is running.

## 14.4 ESCAPE HATCH FRAME

When necessary, the escape hatch frame can be removed and replaced in the following way:

1. Support the frame from inside the vehicle.
2. Remove rivets.
3. Cut the rubber seal with a sharp edge knife and remove the hatch frame.
4. On vehicle top, using the knife, remove as much as possible the remaining rubber seal.
5. Drill holes (if needed) in the new metal frame.
6. Clean both vehicle top and new hatch frame with SIKA 205.
7. Apply rubber adhesive SIKA 221 under the hatch frame surface.
8. Install the frame in place and fix it with rivets.
9. Remove excess adhesive and clean all around.

## 15. REPAIR OR REPLACEMENT OF "TARABUS" FLOOR COVERING

"Tarabus" covering installed in H3 coaches may be replaced or repaired. The purpose of this paragraph is to explain the steps to be followed to ensure the best results and adherence.

**MATERIAL**

| Part No | Description | Qty |
|---|---|---|
| 680028 | Adhesive, Tarabus Floor Covering (White) | A/R |
| 684655 | Adhesive, Contact (3M) | 3.8L |
| 684654 | Adhesive, Contact (3M) | 18.9L |
| 680532 | Sikaflex 221 Gray | A/R |

1. Remove number of passenger seats required to perform repair.
2. Cut and remove damaged section of floor covering.

| *NOTE* |
|---|
| *It would be preferable to cut under two rows of seats so that repair is not as noticeable.* |

3. Clean plywood using a scraper.

| *NOTE* |
|---|
| *Make sure that no staples are sticking out beyond surface. Adjacent plywood sheets must be leveled.* |

4. Fill up holes and imperfections using MAPI PRP 110 then sand.
5. Remove dirt and adhesive residue.

| **CAUTION** |
|---|
| Do not leave floor covering folded down except temporarily during installation. |

6. Apply floor covering adhesive (680028) onto plywood using a serrated spreader with 1/8-inch serration. If required, apply contact adhesive (3M) (684655 or 684654) onto aluminum molding and also onto section of floor covering, which will be in contact with molding (refer to Figure 29).

| *NOTE* |
|---|
| *Allow adhesive to dry (3 to 5 minutes).* |

7. Compress floor covering using a roller so as to remove any trapped air bubble.
8. Apply Sikaflex 221 gray sealant (680532) alongside passenger seat fixing tracks (refer to Figure 30).

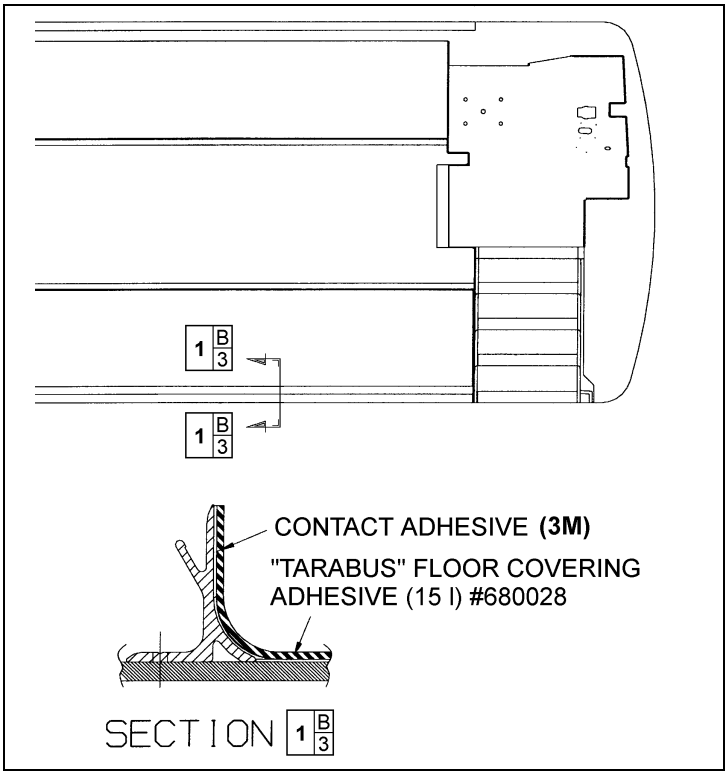


FIGURE 29: TARABUS FLOOR COVERING ADHESIVE APPLICATION

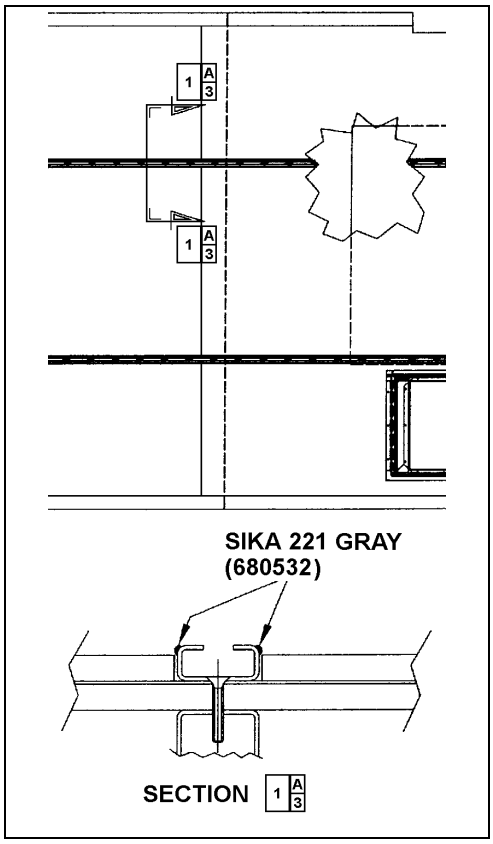


FIGURE 30: APPLICATION OF SIKA 221 GRAY

## 15.1 FRONT STEPS REPLACEMENT PROCEDURE

**MATERIAL**

| Part No | Description | Qty |
|---|---|---|
| 682989 | Anti-silicone | A/R |
| 683097 | Sika 205 (1 liter) | A/R |
| 685101 | Sika Remover 208 | A/R |
| 683916 | Sika 215 (1 liter) | A/R |
| 684654 | Adhesive, Contact (3M) | 3.8L |
| 684655 | Adhesive, Contact (3M) | 18.9L |
| 684517 | Sealant, gray | A/R |

1. Cut and remove damaged step(s).
2. Remove dirt and adhesive residue.

| *NOTE* |
|---|
| *In wintertime, condensation and cold temperature may greatly influence bonding parameters. Working area must be at a temperature sufficient to prevent reaching condensation point. Mechanically preheat working area (heat lamp or heat gun) or wait until vehicle reaches room temperature.* |

**PREPARATION OF "TARABUS" FLOOR COVERING**

1. Sand under step using "Scotchbrite".
2. Clean using anti-silicone (refer to Section A).

**Section A Alcohol or Anti-silicone**

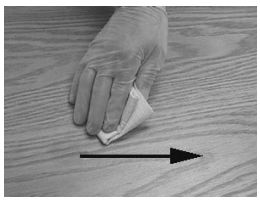

***1.*** **Apply**

**CHIX cloth**

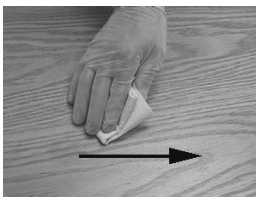

***2.*** **Dry immediately**

**Blue cloth**

***3.*** **Allow drying**

| | |
|---|---|
| **Mandatory** | **Minimum time : Wait for product to evaporate** |
| | **After 2 hours: Start cleaning operation again** |
| **Before applying any other product** | If surface seems dusty, greasy or with finger marks, start cleaning operation again. |

3. Apply Sika Primer 215 (refer to Section D).

# Section D Sika Primer 215

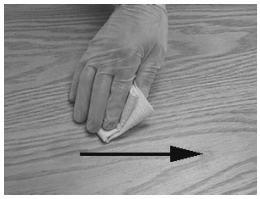

**1.** Shake bottle to mix product

**2.** Apply a thin layer

CHIX cloth

***3.*** **Allow drying**

| | | |
|---|---|---|
| **Mandatory** | **215** | **Minimum time : 20 minutes** |
| | | **After 2 hours : Remove dust using damp cloth (pure water)** |
| **Before applying any other product** | | If surface seems dusty, dust using damp cloth. |
| | | If surface seems greasy or with finger marks, reactivate with Aktivator. |

**PREPARATION OF FIBERGLASS**

1. Clean using anti-silicone (refer to Section A).
2. Apply Sika 205 (refer to Section B).

# Section B Sika 205

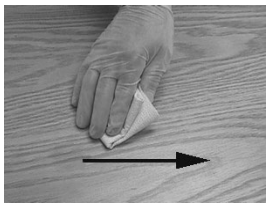

**1.** Apply

CHIX cloth

***2.*** **Allow drying**

| | | | |
|---|---|---|---|
| **Mandatory** | ***Minimum time*** | **- For a smooth surface (aluminum, stainless, steel, fiberglass (gelcoat side), etc.):** | **2 minutes** |
| | | **- For a porous surface (fiberglass (non gelcoat side), etc.)** | **10 minutes** |
| | **After 2 hours : Reactivate surface with Sika 205** | | |
| **Before applying any other product** | | If surface seems dusty, greasy or with finger marks, start operation again. | |

## H3 VEHICLE FRONT STEPS GLUING

1. Remove adhesive tape from underneath step.
2. Apply a thin and even layer of contact adhesive (3M) (684655 or 684654) onto fiberglass and step surfaces. Allow drying for 3 to 5 minutes.
3. Install step beginning with the back and finishing with step nosing. Compress step covering using a roller paying particular attention to corners, edges and front of step.
4. Apply a bead of sealant (684517) around the perimeter of steps. Smooth out the joints.

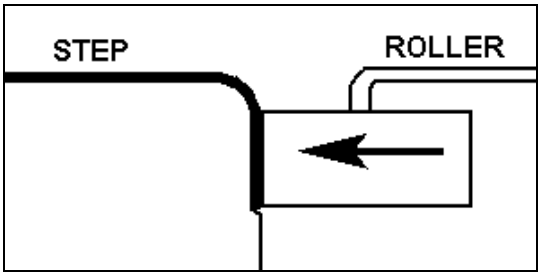


## GLUING OF WHITE SAFETY STRIP BETWEEN STEP AND "TARABUS" FLOOR COVERING

1. Sand fiberglass using "Scotchbrite".
2. Clean using tack cloth.
3. Clean twice using anti-silicone (refer to Section A).
4. Protect surfaces around the step with masking tape.

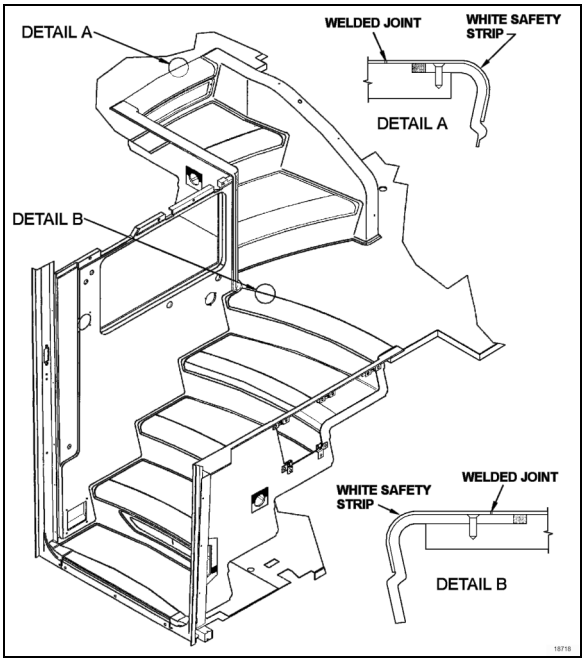


5. Apply contact adhesive (3M) (684655 or 684654) onto both surfaces to glue (fiberglass and back of white safety strip). Drying time: 4 to 5 minutes.

| *NOTE* |
| --- |
| *There should be no floor covering adhesive (680028) onto plywood before applying contact adhesive, otherwise the two surfaces won't stick.* |

6. Position white safety strip with reference to "Tarabus" step covering finishing with step nosing. Compress step covering using a roller paying particular attention to corners, edges and front of step.

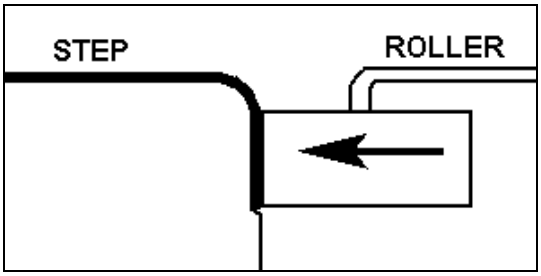


| *NOTE* |
| --- |
| Keep a gap of 1 to 1.5 mm between "Tarabus" covering and white safety strip. |

7. Remove masking tape.

## 15.2 WELDING OF JOINT BETWEEN WHITE SAFETY STRIP AND "TARABUS" FLOOR COVERING

1. Pre-heat welding torch;

   Set welding torch to position #4.5 (temperature of 500 °C),

   Heating time: 5 minutes.

2. Before welding, visually ensure that a 1 to 1.5 mm gap exists between white safety strip and "Tarabus" floor covering. Use a knife if this is not the case.

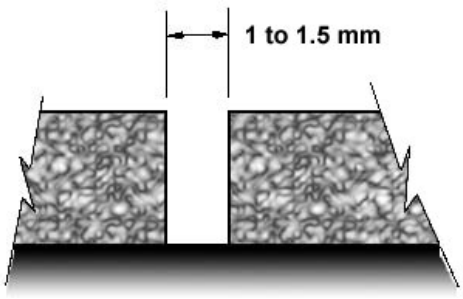


| *NOTE* |
| --- |
| There should be no excess of adhesive on top of surfaces, clean if required using "All-Sol". |

3. Chamfer the joint.

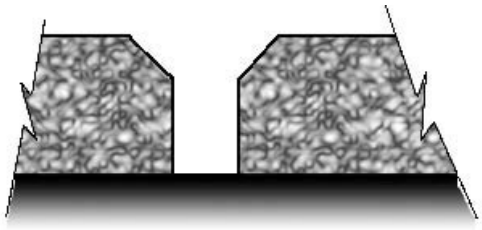

| *NOTE* |
| --- |
| The chamfer width must always be less than the filler bead diameter (between 2.5 and 3 mm). |

4. Use chamfer knife. **Be careful not to overcut or to cut to the side to prevent damaging "Tarabus" covering.**



5. Add (about 6 inches) some length to the required length of filler bead to make the joint then cut.
6. Take position with welding torch. The proper position is with a slight slope to the rear.



7. Once the welding torch is ready, insert the filler bead into the nozzle and immediately start welding. Move in a regular manner while pressing slightly with torch.



8. The heel of the fast nozzle must not lean against "Tarabus" covering (always parallel to the surface).

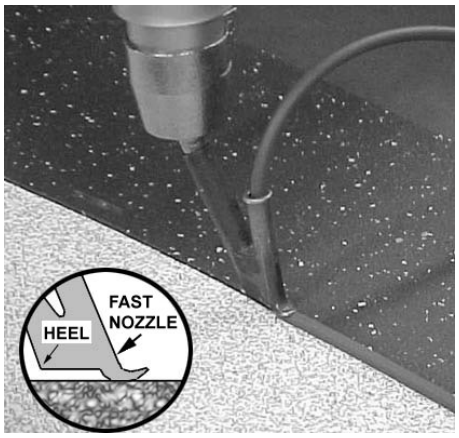


9. Allow cooling down of filler bead (about 5 minutes).

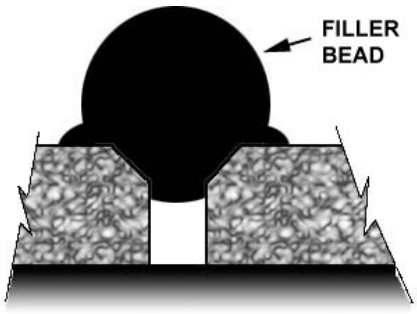


10. Shave filler bead to make it level to the floor. Use supplied knife designed for that purpose.

| *NOTE* |
| --- |
| *To facilitate the cut, you can spray some soapy water onto the joint.* |

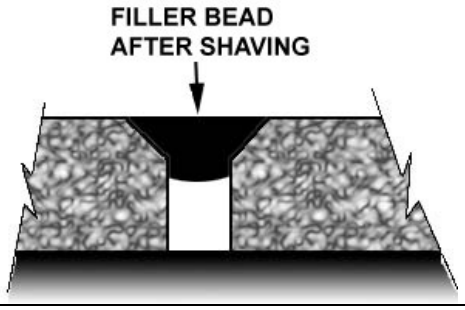


**CAUTION**

The procedure for turning the torch off must absolutely be followed. If this step is not taken, the element may burn.

11. Set temperature potentiometer to "0" position. Fan will evacuate residual heat. Leave the torch in operation as it is for 3 minutes.

12. Perform adhesion test using the tip of a flat screwdriver; apply a slight pressure on the joint.

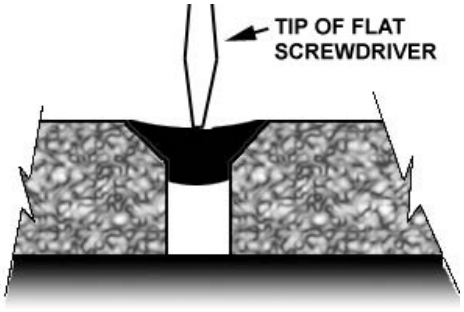


13. If welding was not performed properly, there will be a loss of adhesion on one side. If this is the case, repair the joint.

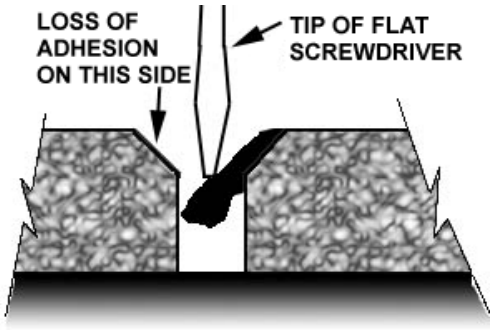


## 15.3 REPAIR OF A WELDED JOINT

| *NOTE* |
| --- |
| *In wintertime, condensation and cold temperature may greatly influenced bonding parameters. Working area must be at a temperature sufficient to prevent reaching condensation point. Mechanically preheat working area (heat lamp or heat gun) or wait until vehicle reaches room temperature.* |

1. Using a knife, remove portion of joint to be repaired.

| *NOTE* |
| --- |
| *Loss of adhesion may be local. If this is the case, repair may also be local.* |

2. Chamfer the joint again as indicated in paragraph 3, Section: WELDING OF JOINT BETWEEN WHITE SAFETY STRIP AND "TARABUS" FLOOR COVERING.
3. Re-weld the joint as indicated in paragraphs 6, 7 and 8. Use your thumb to hold the filler bead end.

**WARNING**

Nozzle is hot.



4. Always add an extra inch of filler bead at the beginning and at the end of repair.
5. Perform steps indicated in paragraphs 9, 10 and 11.

## 16. PASSENGER SEATS

The vehicle can be equipped with different seat models and installed in a variety of seating arrangements:

1. For coaches, standard seating arrangement includes two card tables, which can be folded and removed, and pivoting seats ahead of each card table. Each pair of seats is built on a welded steel frame fastened to the side wall and on a track-mounted pedestal.
2. The *"V.I.P."* seat model is an optional seat. *"V.I.P."* seats are mounted on one row of paired seats built on a common frame on one side of the vehicle, and a row of single seats on the other side of the vehicle with an off-center aisle. Each *"V.I.P."* seat has its own set of armrests.

Each seat has an easily removable bottom cushion. Upholstery is clipped on the cushion frame for cleaning or replacement. To remove the fabric, simply unclip from the frame. The standard seats have three armrests. The aisle and center armrests can be folded up and down manually, while the window armrest is fixed.

### 16.1 ROTATING SEATS

1. Loosen completely the threaded-stud knob under the seat on the aisle side (Figure 31).

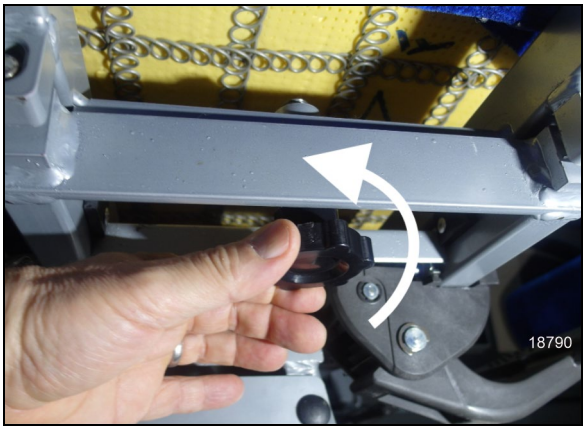


FIGURE 31: LOOSEN THE KNOB

2. Pull the seat toward the aisle to unlock the rotation (Figure 32).




FIGURE 32: PULL TO UNLOCK THE ROTATION

3. Rotate the seats until it stops (Figure 33, A) and push back toward the window to lock rotation (Figure 33, B).




FIGURE 33: FINAL POSITION

4. Fasten the threaded-stud knob under the seat on the aisle side.

## 16.2 REMOVING FIXED SEATS

> ***NOTE***
>
> *Seats on one row are not interchangeable with seats of the other row.*

To remove fixed seats, proceed as follows:

1. Remove 1 nut holding each seat bottom cushion from under the front part of the seat frame.
2. Lift front part of cushions and remove cushions.
3. Remove 4 finishing screws holding plastic cover between side wall and seat frame.
4. Remove 2 cap screws, nuts, and washers holding seat frame to side wall and retain the 2 holding brackets. See Figure 34 and Figure 35.

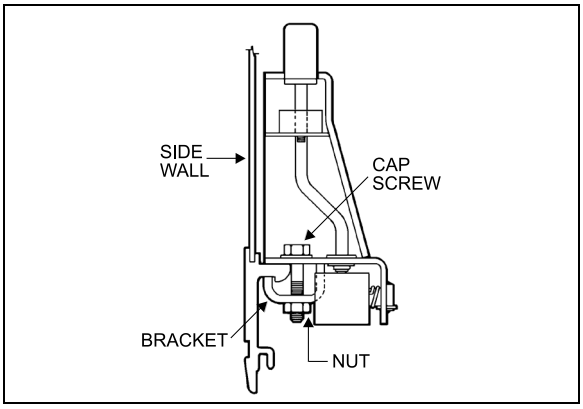


FIGURE 34: SIDE WALL MOUNTING 18106

5. Remove 2 nuts and washers holding seat frame to pedestal rods.

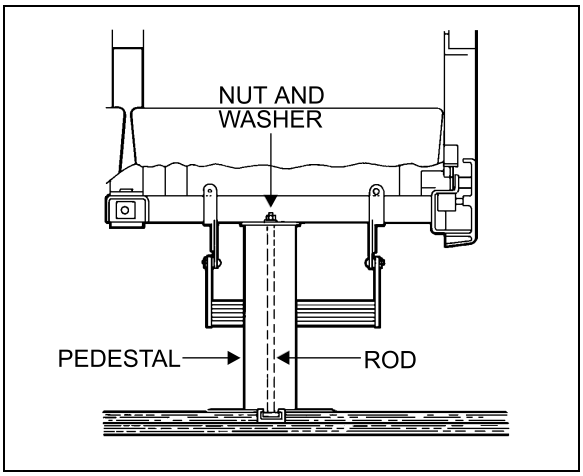


FIGURE 35: SEAT PEDESTAL ASSEMBLY 18107

> ***NOTE***
>
> *Bottom end of rod is coated with Loctite and threaded in a steel block which slides in the floor track. Removal of rod is possible if loosened from block. Otherwise, slide rod and block assembly to the front end of track after removing all seats located in front.*

6. Remove seat assembly.
7. Reverse the above procedure to install seat assembly. Tighten mounting nuts.

**TORQUE: 27 lb-ft (37 Nm)**

> ***NOTE***
>
> *On newer vehicles, the rod consists of a carriage bolt inserted in a square plate sliding in the floor track. Removal is possible only by the front or rear end of track.*

## 16.3 UPHOLSTERY MAINTENANCE

Coach seats are lightweight, with foam-padded backs and cushions. For both appearance and wearability, best results are obtained if upholstery is cleaned at regular intervals before dirt, dust and grit have been ground into the fabric. Seat fabric is made of 50% wool, 33% cotton, 9% nylon, and 8% acrylic.

### 16.3.1 Routine Cleaning

All that is required to remove the dirt is a gentle beating with the hand or the back of a brush. This will bring the dirt to the surface where it is

easily removed with a vacuum or brush in the direction of the pile which can easily be recognized by running a hand lightly over the pile. If the fabric become excessively dirty, particles of grit will cause gradual wear, reducing the life span of the fabric.

### 16.3.2 Dry Cleaning

If covers are to be removed for cleaning, dry cleaning is recommended since washing might cause some shrinkage, preventing the covers from being reapplied to the seats without damage. Other than spot cleaning the covers while they are in place, dry cleaning is not recommended, since the resulting fumes could be hazardous in the confines of the coach and the solvent could be detrimental to the foam padding of the seats.

### 16.3.3 Cleaning With Covers in Place

The most effective and economical method to clean the fabric seat covers is by washing with either an approved foam upholstery cleaner or with a mild household detergent.

Thoroughly vacuum the upholstery. Remove any spots or stains before the seats are washed to avoid a cleaning ring.

Dilute household detergent or liquid foam cleaner according to directions on the container. Pour a small quantity into a flat pan and work into a thick foam with a sponge or brush.

Apply only the foam to the fabric with a sponge or brush. Clean a small area of the fabric at a time with the foam. DO NOT SOAK. Rub vigorously.

Sponge the suds from the fabric with a clean sponge or cloth moistened with water. Rinse the sponge or cloth often and change the water when it becomes dirty.

Allow the upholstery to dry completely before the coach goes back into service. To speed up drying, excess moisture can be blown off the fabric with compressed air.

**CAUTION**

Oil in the air line will soil the fabric. Blow the line clear and test air discharge against a plain white piece of paper. It is also effective to press the edge of a flat hardwood stick down on the cushion and slowly draw it across the fabric.

Even very soiled areas can be returned to their original appearance by a thorough cleaning, but a regular schedule of cleaning that keeps the upholstery reasonably clean at all times will greatly enhance the life span of upholstery.

## 17. COACH SIDE WINDOWS

The H3-45 has seven windows on each passenger side. On a vehicle equipped with a wheelchair lift system, only six side windows are installed on the curb side. They are made of single or double-glazed, heat absorbing AS-3 glass. Windows are mounted in painted aluminum extrusions, which hold the glass in place from the top rail of the coach. The extrusion also serves as a hinge to allow the window to swing open when needed. The single-glazed windows are made of tinted tempered safety glass, while the double-glazed windows are made of tinted tempered safety glass outside and clear tempered glass inside.

The two trapezoidal windows are also mounted on an aluminum extrusion (except for H3-45 VIP, where they're mounted with adhesives. Refer to *"Adhesive Mounted Windows"* in this section, for more information on this type of installation). The trapezoidal windows are made of fixed, double glazed, heat absorbing AS-3 tempered safety glass inside and tempered glass outside.

### 17.1 HYDROPHOBIC TREATMENT ON SIDE WINDOWS

The new low profile window gasket creates an airflow that is closer to the vehicle. This reduces air drag but window soiling of the side windows becomes more likely.

A specific water repelling treatment is factory applied to the driver's and entrance door windows to counter this effect and prevent window soiling.

We suggest renewing the water repelling treatment each year or more frequently depending on operating conditions.

Should you notice increased soiling on the driver's and entrance door windows after several months of operation, the water repelling treatment can be renewed by making an appointment with your nearest Prevost Service Center.

The Hydrophobic compound is specially formulated for Prevost and can only be applied by Prevost technicians in Prevost service centers.

## 17.2 EMERGENCY EXIT WINDOWS

Except for the window upper edge, the three other glass edges are unprotected, which causes the workers to be exceptionally careful when manipulating or installing such windows.

In addition, when it becomes necessary to lay down the unprotected edges of the glass window, never use a steel or concrete floor support. It is recommended to use a wooden support, even better, a padded surface.

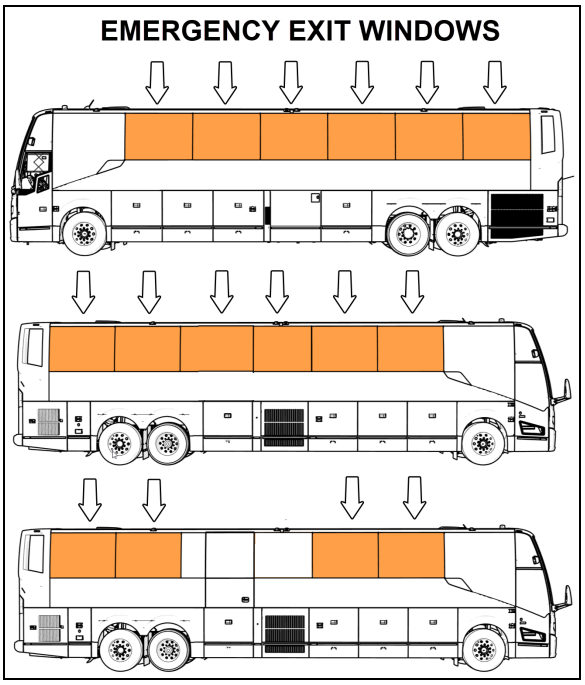


FIGURE 36: H3-45 COACH 18519

## 17.3 EMERGENCY EXIT RELEASE BAR

The emergency exit release bar system is generally maintenance free.

It has been designed to answer the twenty pound resistance criteria for opening the emergency window. If this handle should be replaced:

1. Remove the screws and bolts securing it to the emergency exit window;
2. To install a new release bar, reverse the procedure.

| NOTE |
| --- |
| *Check the legal twenty pound maximum resistance to be sure to comply with regulations.* |

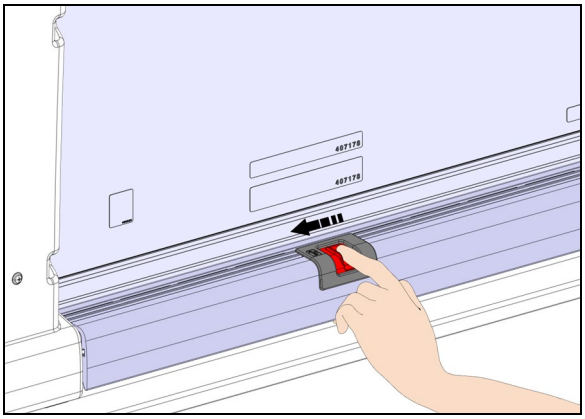

FIGURE 37: EMERGENCY EXIT WINDOW 18391

### 17.3.1 Emergency Exit Window Adjustment

Emergency exit windows should be checked periodically for easy opening and closing. Sliding the red button on the release bar should disengage both locks on the window simultaneously. The tension required to release the window should not exceed twenty pounds (9 kg) of force. The release bar mechanism itself has been designed such as no adjustments are necessary.

If too much effort is required to disengage the locks when pulling the release bar or if the window doesn't close tightly or rattles, check for interference by foreign objects or nearby parts into mechanism, such as the microswitch, rubber seal, wires, etc. Correct situation immediately.

| NOTE |
| --- |
| *Tangs on the lock must be in a horizontal position.* |

## 17.4 FIXED WINDOW REPLACEMENT

When it becomes necessary to replace the glass of a fixed-type window, follow this procedure:

1. Unscrew the decorative plate and the bottom window bar in order to get access to the window retaining devices.
2. Remove the window bottom retaining bolts.

3. Push the glass window out ninety degrees (90°).

**WARNING**

The window may fall out.

4. The window is free and can be unhooked.
5. Reverse procedure to install a new one.

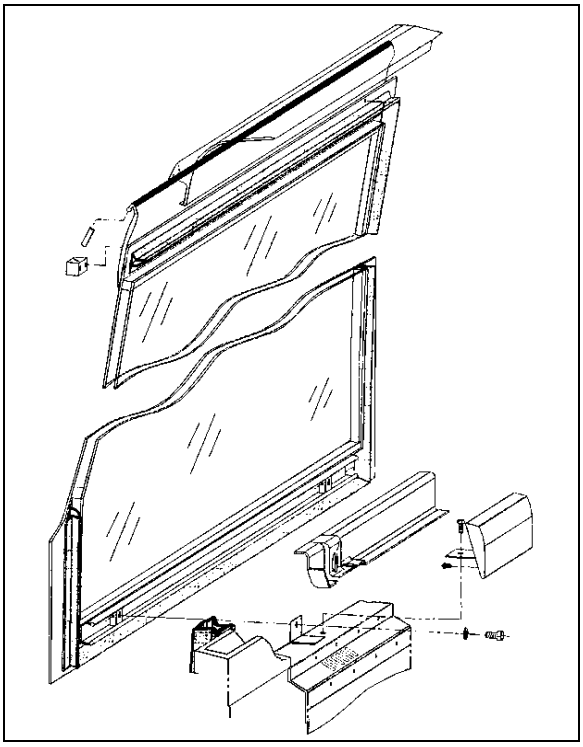

FIGURE 38: FIXED WINDOW 18434

*NOTE*

*For all window replacement, it is extremely important to center the top side between the window dividing posts with great precision in order to be able to attach the bottom of window and the structural posts.*

## 17.5 EMERGENCY EXIT WINDOW REPLACEMENT

1. Slide the red button to tilt up the release bar and follow the same procedure mentioned above for fixed windows.
2. Remove the stop blocks from the top exterior of the window.
3. Reverse the procedure to install a new emergency exit window.

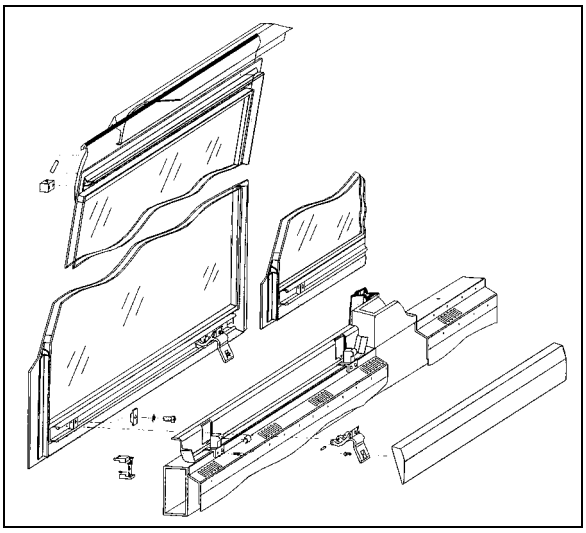

FIGURE 39: EMERGENCY WINDOW 18435

## 17.6 TRAPEZOIDAL WINDOW REPLACEMENT

Apply procedure for fixed window replacement described in this section but with these variations:

- The angle at which the window will detach is considerably smaller (about 45º);
- These windows are also glued to the structure at certain areas on their perimeter. Note where adhesives are used and apply gluing techniques at these areas to complete replacement of these windows.

## 17.7 SMALL REAR WINDOWS REPLACEMENT

These small windows are located at the vehicle's rear end, just forward of the lavatory.

Apply procedure for fixed window replacement described in this section but with these variations:

- The angle at which the window will detach is considerably smaller (about 45º);
- These windows are also glued to the structure at certain areas on their perimeter. Note where adhesives are used and apply gluing techniques at these areas to complete replacement of these windows.

Both the trapezoidal windows and the small rear window are fixed in place with adhesives. They

are not serviceable, in the event that they may need replacement.

## 17.8 ADHESIVE-MOUNTED WINDOWS

These windows are located in the vehicle's front and rear caps (Figure 40).

The adhesive-mounted windows are fixed, double-glazed, heat absorbing AS-2 or AS-3 glass mounted in their opening with polyurethane windshield adhesive. The double-glazed windows are tempered safety glass outside and inside.

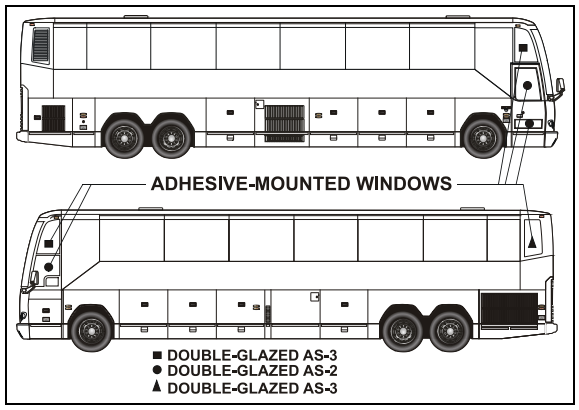


FIGURE 40: ADHESIVE-MOUNTED WINDOWS 18494

### 17.8.1 Glass Window Replacement

**Items Needed:**

- Scraper with new blade;
- Masking tape;
- Tremshield tape (Prevost #681089);
- Chix cloths (Prevost #682384);
- Isopropyl alcohol or enamel reducer or NAPA 6383 surface cleaner;
- Sika 205 cleaner;
- Sika 255 F.C. adhesive;
- Disposable vinyl gloves;

**WARNING**

Wear disposable vinyl gloves during this procedure. Do not smoke. Dispose of unused toxic material properly. Heed all warnings on product containers.

1. Remove old window glass and scrape off remaining material up to 1/16" to 1/8" (2 to 3 mm) thick.

*NOTE*

*Hardened adhesive will not remove easily. A new blade works best to remove all adhesive residue using care not to damage the fiber structure.*

2. Place the new window glass in the opening and center it to leave an even gap top and bottom, and from side to side.

*NOTE*

*Use small shims to raise the glass in proper position. Shims can be cut from the tremshield tape (*Figure 41*).*

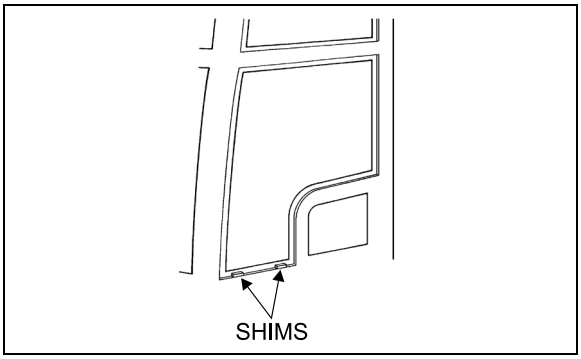


FIGURE 41: ADHESIVE-MOUNTED WINDOW 18079

3. Hold the window glass centered and have an assistant mark the inside contour of the opening on the glass with a china pencil. Remove glass and place it on a table with the pencil mark facing up.

4. Place masking tape on the inside surface of the glass to just cover the china pencil mark, leaving the outer surface exposed for the adhesive. This will make cleanup much easier. For ease of removal, do not overlap the tape at corners.

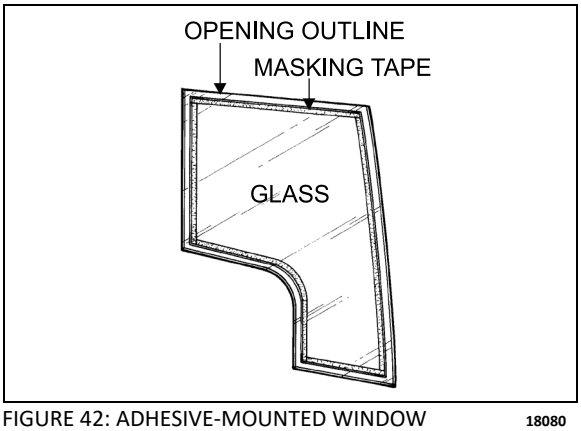


FIGURE 42: ADHESIVE-MOUNTED WINDOW 18080

5. Clean all around the window opening and the window glass edge with Sikaflex 205 (shake well before applying). Let dry 5-6 minutes minimum but no more than 8 hours.

**CAUTION**

There must be absolutely no silicone on glass or channel or Sikaflex 255 FC will not stick.

6. Put masking tape on the inner and outer contour of the window opening on the structure, approximately 1/16" (1,5 mm) from the edges of the contour.
7. Install Tremshield tape around the sealing surface of the window opening.

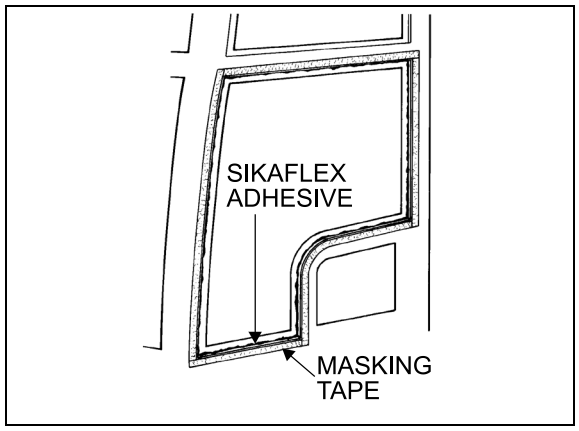


FIGURE 43: ADHESIVE-MOUNTED WINDOW 18081

8. Apply a generous bead of Sikaflex-255 FC polyurethane adhesive on the sealing surface around the window opening from outside the vehicle.

*NOTE*

*To ease applying of Sikaflex 255 FC, it may be heated to 86° F (30°C).*

*NOTE*

*Bead should touch the side surface of the window opening.*

9. Place shims correctly, and position window glass in the opening. Press firmly and evenly. Excess adhesive should flow out from behind glass.

*NOTE*

*Add adhesive in areas where overflow is minimal or if air bubbles are present.*

10. Smooth the adhesive joint using your finger (wear vinyl gloves). Remove excess material around both sides of the window as soon as possible before adhesive dries.

*NOTE*

*Remove most of the adhesive from the scraper or trowel with a rag, and then dip tool in solvent after each use for cleaning.*

**CAUTION**

Never use solvents to clean excess adhesive.

11. Remove masking tape at once, clamp window glass suitably and let dry overnight or at least 8 hours.
12. Spraying pure water on the joint will accelerate the drying process.

## 18. ELECTRIC AWNING WINDOW

The electric awning windows are connected directly on the batteries 24 V DC terminal block. As a result, they can be operated regardless of the state open or close of the master switch. However, the circuit is protected with fuse F41 (10A) located in the front service compartment.

### 18.1 OPERATION

Opening sequence: switch is set to the OPEN position. Window latch solenoid SOL1-A and SOL1-B are turned on along with M1 window motor. Once the latch is open, proximity switch PROX1 is de-activated, turning sol1-A and SOL1-B off.

Closing sequence: switch is set to the CLOSE position, turning on relay R1 which turns on M1 in reverse polarity, closing the window. Once the window is closed, PROX1 is activated, turning on SOL1-A and SOL1-B in reverse polarity latching the window closed.

## 18.2 WINDOW REMOVAL

Replacement awning window does not include a new motor. If in working order, transfer the motor of the replaced window to the replacement window. If not, the motor can be bought separately. When replacing the window, keep the components in working order as spare parts.

1. Push the vertical latch handle downwards to release the track and then open the window using the horizontal latch handle.
2. Take out the screw at the lower end of the track to let free the swiveling arm roller.
3. Unplug connector C7 & C9. Dismount the gas spring from the window.
4. Loosen the set screws #5 (Figure 45) (rotate the arm to get to the second set screw) and disengage the swiveling arm from the motor shaft extension.
5. Push the glass window out ninety degrees (90°).

**⚠ WARNING**

The window may fall out.

6. The window is free and can be unhooked.
7. Reverse procedure to install a new one.

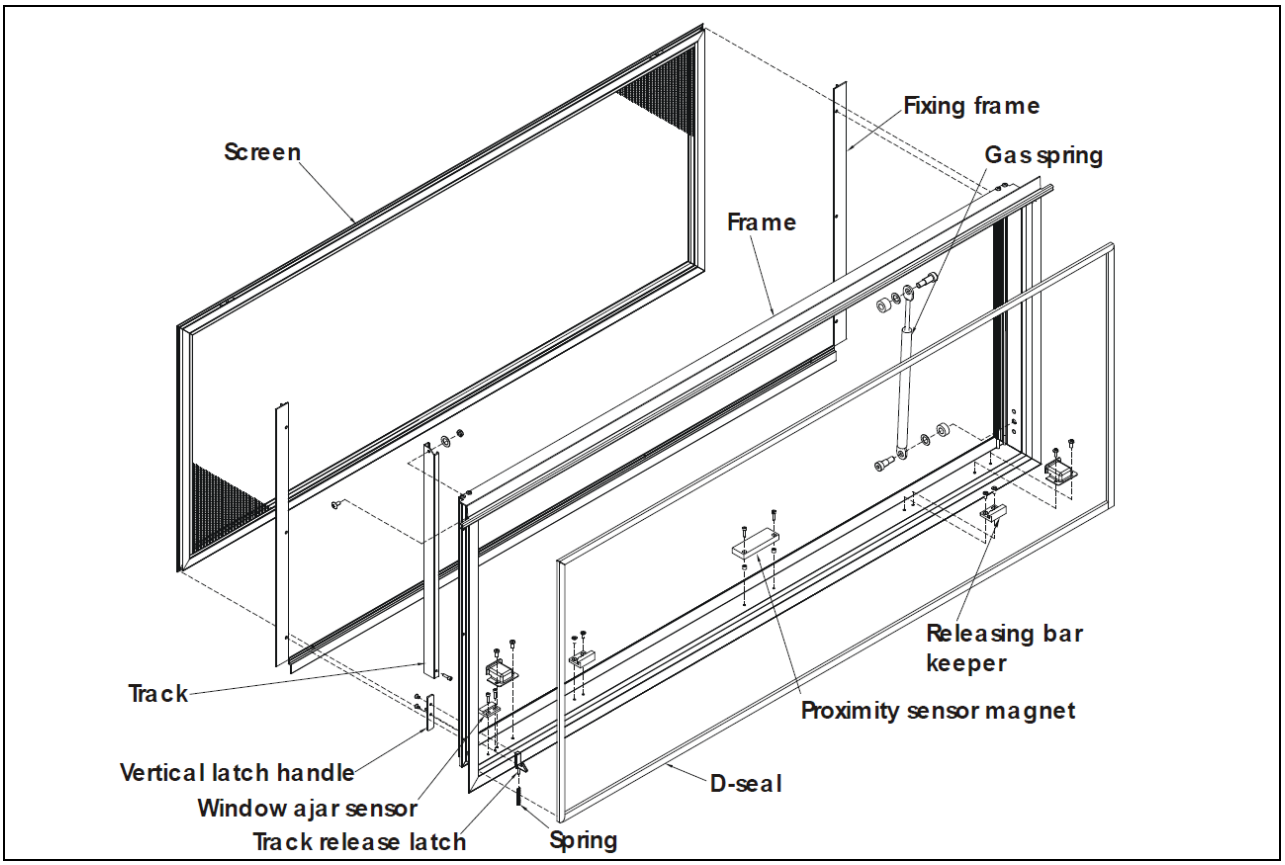


FIGURE 44: ELECTRIC AWNING WINDOW EXPLODED VIEW (FRAME) 18586

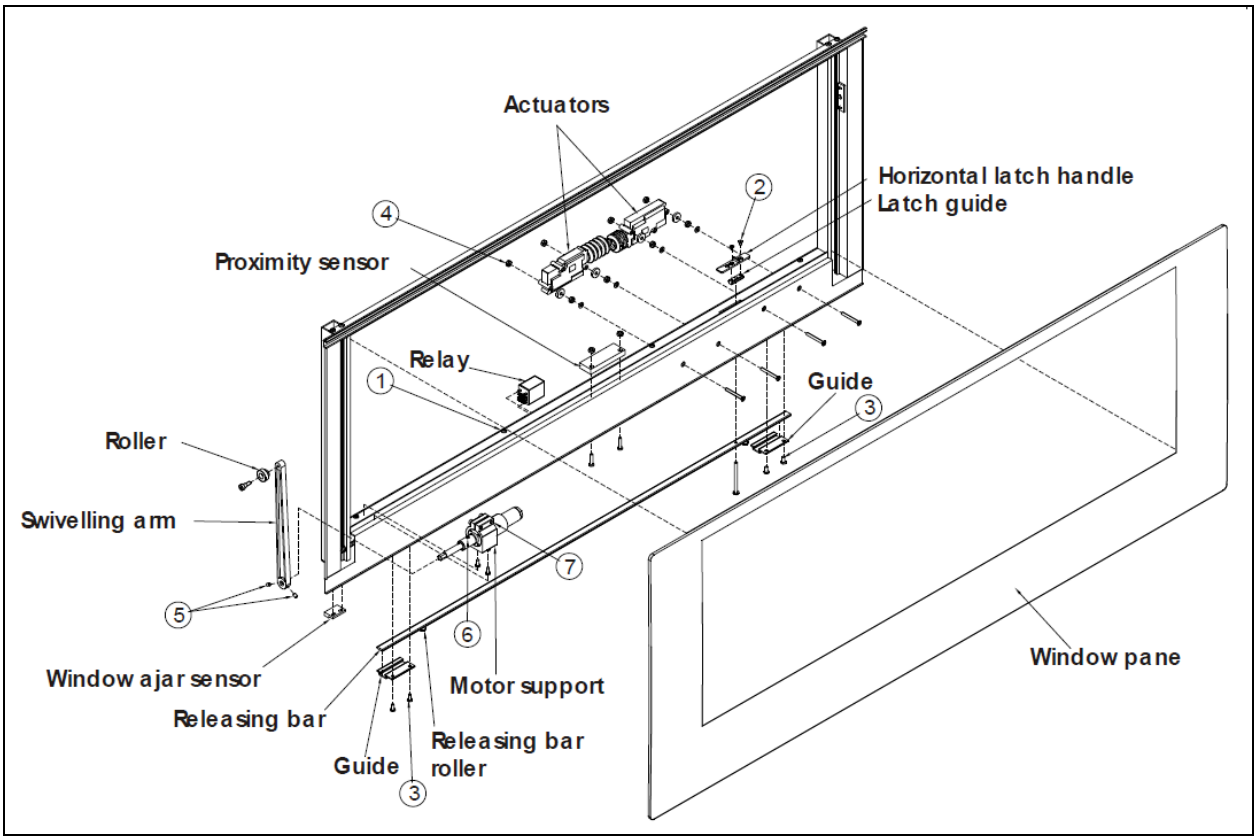


FIGURE 45: ELECTRIC AWNING WINDOW EXPLODED VIEW (SASH) 18583

## 18.3 ACTUATOR REPLACEMENT

1. Push the vertical latch handle downwards to release the track and then unlatch the window using the horizontal latch handle.
2. Remove actuator access cover by taking out screws #1 (8x).
3. Take out screws #2 (2x) and remove horizontal latch handle and guide.
4. Take out the guide screws #3 (4x) and remove releasing bar.
5. Unplug connector C3 or C4 from problem actuator, unscrew nuts #4 (2x) and remove the actuator.
6. Reverse operations for reinstallation.

## 18.4 MOTOR REPLACEMENT

1. Push the vertical latch handle downwards to release the track and then unlatch the window using the horizontal latch handle
2. Take out the screw at the lower end of the track to let free the swiveling arm roller.
3. Remove actuator access cover by taking out screws #1 (8x).
4. Loosen the set screws #5 (rotate the arm to get to the second set screw) and disengage the swiveling arm from the motor shaft extension.
5. Unplug motor connector C2 and dismount motor and support assembly.
6. The shaft extension is glued to the motor shaft. It has to be heated to break the binding to permit removal. Loosen set screw #6 and remove the shaft extension. Also loosen screw #7 and remove motor from the support.
7. Reverse operations for reinstallation.

| ELECTRIC AWNING WINDOW – CONVERTER CHECKLIST | |
|---|---|
| Check the electrical circuit & proximity sensor | A: The latching system will not operate without power.<br>Is there electrical power to the latching circuit? The horizontal latch handle, on the sill sash will be seen to move if there is power on this circuit, or it can be checked with an electrical tester. If there is no power to this circuit when the window is closed and either rocker switch are switched "ON", there is a problem with the electrical system.<br>B: The Proximity Sensor on the sash may not be switching power to the latching circuit if the magnet is not getting close enough to the switch OR the Proximity Sensor may be broken (or stuck in one position).<br>Is the proximity sensor switching when the window is closed? |
| Check the release force required to operate the horizontal latch handle | A: If the pull force required to move the latch is more than 20lbs the window will not latch properly. Average pull force during testing by manufacturer is 12lbs -15lbs.<br>What is the force required to release the handle? Check using a force gauge (same test done by manufacturer). |
| Check Installation | A: If the window is too tightly installed OR if the sequence for tightening the clamping frame screws Is incorrect the window may not close properly.<br>Was the window installed correctly?<br>Was the correct sequence (see below) used when tightening the clamping frame screws?<br>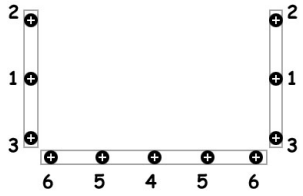<br><br>B: Removing the shipping blocks before the window is installed can create major problems.<br>Were the shipping blocks in place during installation?<br>C: Failure to remove the shipping blocks after installation can create interference between sash and frame.<br>Have the shipping blocks been removed after installation?<br>D: The window is misaligned or not installed squarely.<br>Is there interference with any coach parts?<br>Is there proper clearance between the bottom of the outer glass and the belt-line trim / seal? |
| Check for missing parts or misaligned parts | A: The frame and sash are misaligned.<br>Is there any interference between the sash and frame?<br>Is there clearance between the sash and the rocker switch covers?<br>B: Releasing bar guides are missing.<br>Check that the releasing bar guides are installed. There should be 4 installed on H windows, and 3 installed on XL2 windows. |

## 19. ELECTRIC SLIDING WINDOW

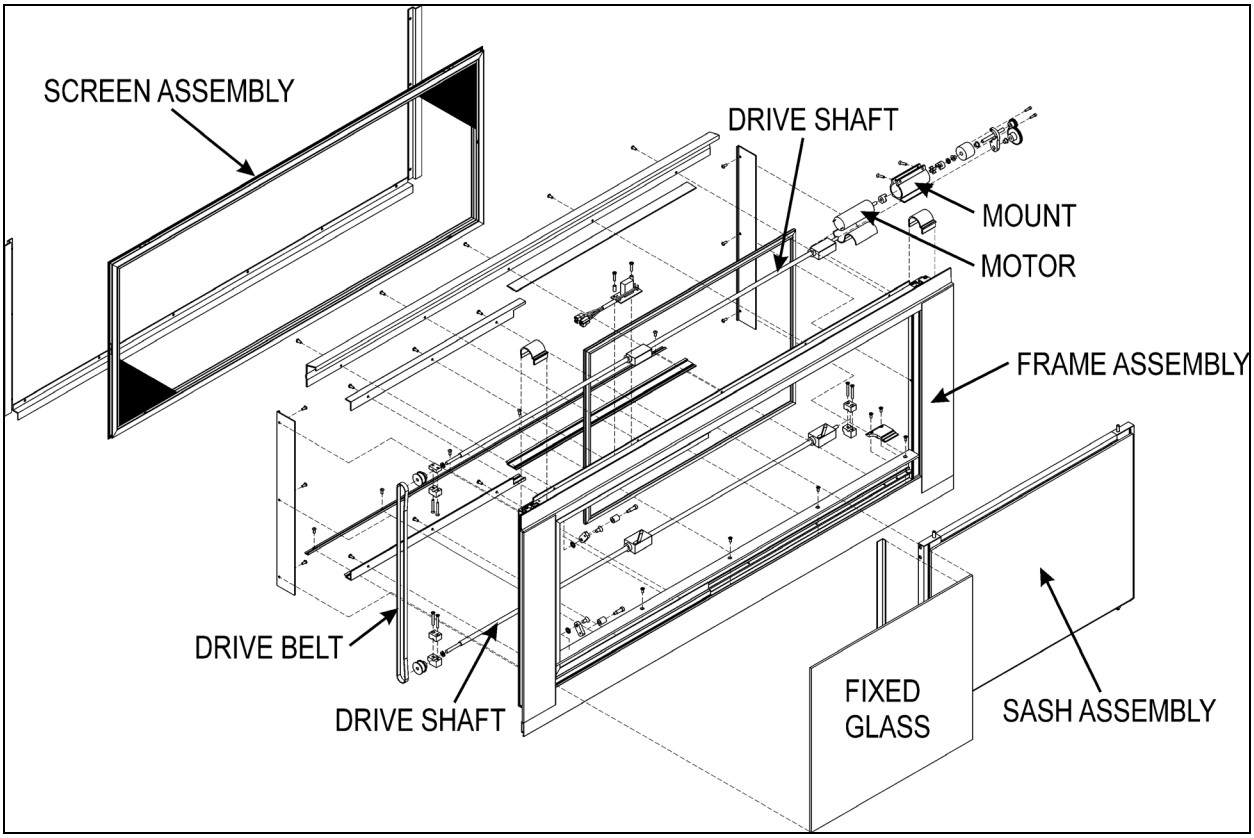


FIGURE 46: ELECTRIC SLIDING WINDOW EXPLODED VIEW

**Sash Removal**

1. Remove the Screen Assembly
2. Pull down on both release latches simultaneously and rotate the sash inwards approximately 10 degrees.(Figure 47)



FIGURE 47: REMOVING THE SASH

3. Lift the sash up and out to disengage the bottom of the sash from the window frame. (Figure 48)



FIGURE 48: DISENGAGING THE BOTTOM OF THE SASH

**Installation**

1. Align the leading edge of the slot on the lower cam follower block with the sash stop. Use the power toggle switch to obtain the correct alignment. (Figure 49)

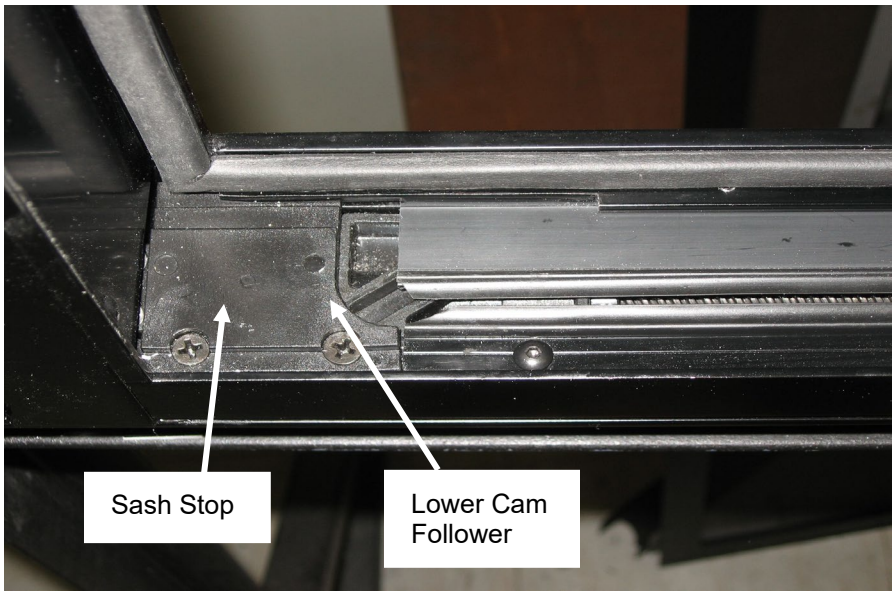


FIGURE 49: PROPER ALIGNMENT

2. Position the left hand lower corner of the sash over the front cam follower block (Figure 50)

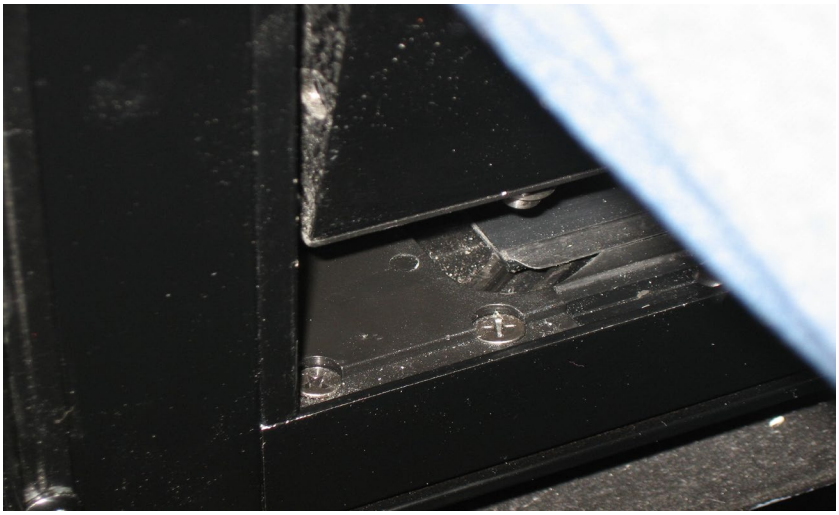

FIGURE 50: POSITIONING THE LOWER LEFT CORNER OF THE SASH

3. Engage the sash pin with the leading edge of the slot of the cam follower block. Do the same at the rear of the sash.
4. Pull down on the release latches and rotate the sash inwards until it is parallel with the window frame.
5. Release the latches to engage the latch pins with the upper cam follower blocks.
6. Confirm that both latches are in the closed (latched) position. The upper edge of the latch opening must be aligned with upper edge of the sash opening (Figure 51)

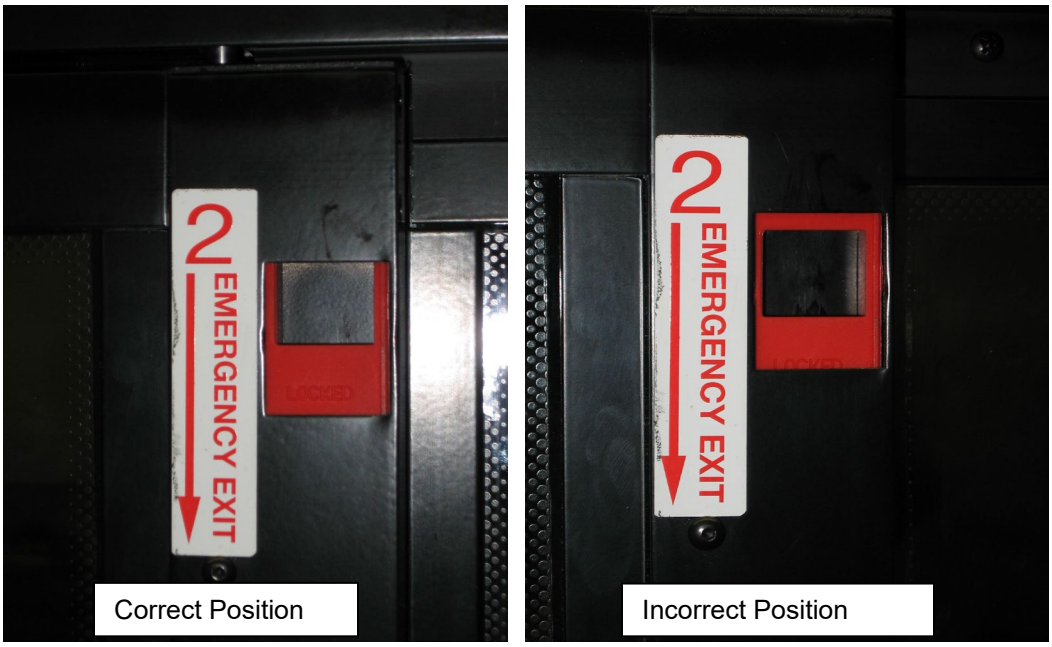


FIGURE 51: RELEASE LATCH PROPER POSITION

7. * Failure to confirm this step may lead to the sash becoming disengaged with the frame and could result in personal injury.
8. Operate the window to confirm that it opens and closes properly.

Install the screen assembly.

## 20. WINDSHIELD

The windshield is single-glazed AS-1 laminated safety glass. Each windshield is secured to a flange around the front structure opening by a one-piece black rubber extruded gasket

A low profile gasket with a single locking strip is now used on our vehicles.

Proper installation of the windshield ensures watertightness. Since glass varies in fit depending on the supplier, we recommend installing a replacement windshield obtained from Prevost Parts to ensure proper fit.

| *NOTE* |
| --- |
| *For more information on windshield removal or installation, a webinar is available from Prevost.* |

### 20.1 REMOVAL

**WARNING**

Removal and installation must be performed by more than one person. Wear protective gloves when handling the windshield.

1. Remove the wiper arms of the affected windshield.
2. To ease damaged windshield removal, remove the rubber locking strips from the rubber extrusion.

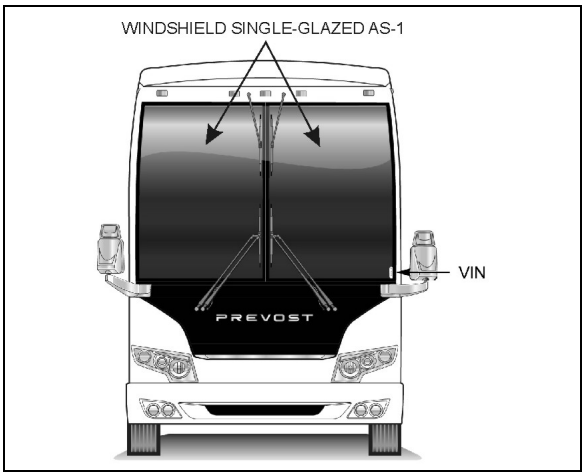


FIGURE 52: WINDSHIELD 18495A

3. From inside of vehicle, push against the top L.H. side corner of windshield for the removal of a R.H. side windshield. If the L.H. side windshield had to be removed, you would have to push against the top R.H. side corner.

| *NOTE* |
| --- |
| *We are referring to the L.H. and R.H. side as viewed from the inside of the vehicle.* |

4. At the same time, another person gradually lifts the rubber lip from the vehicle exterior using a plastic spatula from top to bottom.
5. Remove the entire damaged windshield and broken glass if applicable.
6. Clean the rubber extrusion channel with Standox anti-silicone. Refer to heading *"Windshield Installation"* in this section for instructions on how to reinstall windshield.

| *NOTE* |
| --- |
| *If the rubber extrusion is damaged, remove and discard it, then clean the windshield opening with Standox anti-silicone. Refer to heading "Installation of Rubber Extrusion" in this section for complete instructions.* |

## 20.2 WINDSHIELD INSTALLATION

This procedure is provided as a general guideline to install a new windshield with a new gasket on **a clean structure**. The method may vary depending on material aging and condition.

| **WARNING** |
| --- |
| Removal and installation must be performed by more than one person. Wear protective gloves when handling the windshield. |

| **CAUTION** |
| --- |
| The rubber extrusion securing the windshield in the opening fits correctly in only one position. Find the correct position of the rubber extrusion now and make reference marks with a china marker to avoid searching for the correct position later in the procedure. |

### 20.2.1 Preparation

1. Clean the area shown on the image below with Standox anti-silicone and let dry.

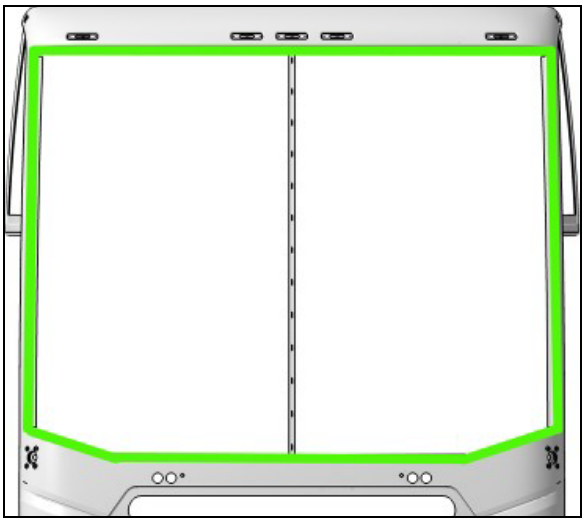

FIGURE 53

2. Clean the rubber extrusion groove (Figure 54) that will be in contact with the front fiber panel on the 3 sides and on a length of 8" at the bottom, both sides (Figure 55).

   A white powder may remain in the groove of new rubber extrusion. Do not leave the white powder in the groove.

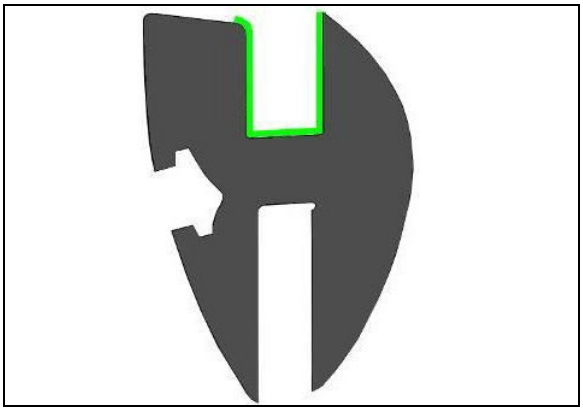

FIGURE 54

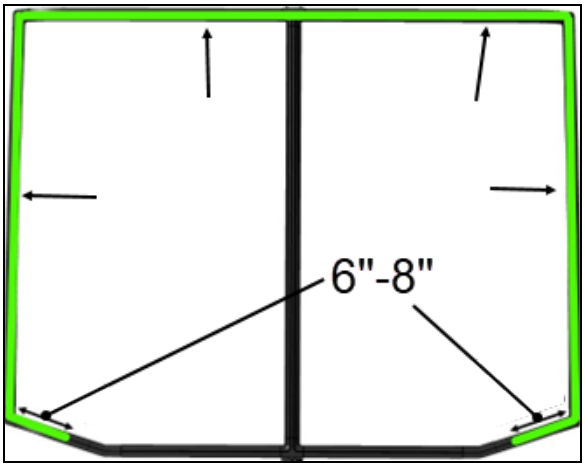

FIGURE 55

3. Apply a 1/8" (3 mm) bead of black Simson 70-03 sealant at the bottom of the groove (Figure 56) that will be in contact with the front fiber panel on the 3 sides and on a length of 8" at the bottom, both sides (Figure 55).

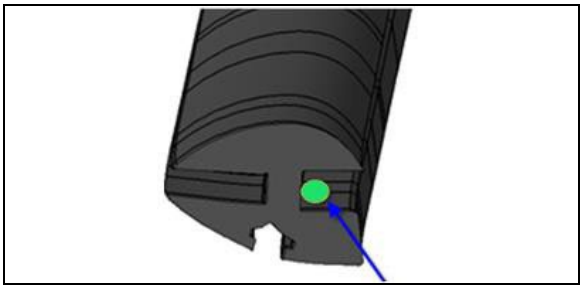
FIGURE 56: BEAD OF BLACK SIMSON 70-03 SEALANT

4. Apply a 1/8" (3 mm) bead of black Simson 70-03 sealant on the fiber panel as shown (Figure 57).

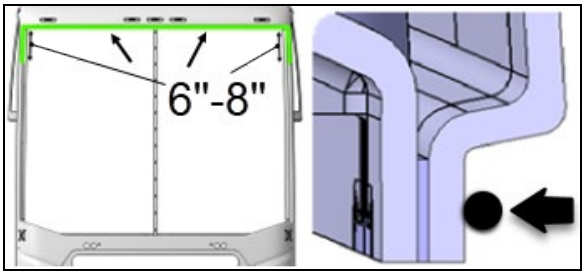

FIGURE 57: BEAD OF BLACK SIMSON 70-03 SEALANT

5. Spread the sealant on the fiber surface as shown (Figure 58).

   **Thickness 3/64"- 5/64" (1 mm – 2 mm)**

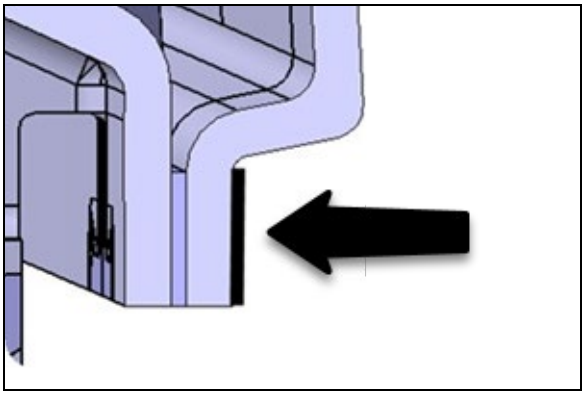
FIGURE 58

### 20.2.2 Installation of rubber extrusion

1. Begin installation of the rubber extrusion at the upper center (item 1, Figure 59). Make sure it is centered in relation to the vertical member.

   **Do not use soapy water**

2. Insert the rubber extrusion at the location identified #2 (Figure 59).

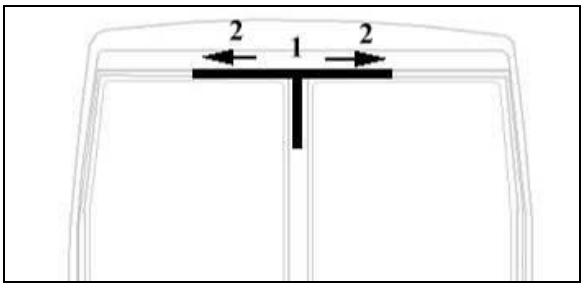

FIGURE 59

3. Bend the corners and insert at location identified #3 (Figure 60).

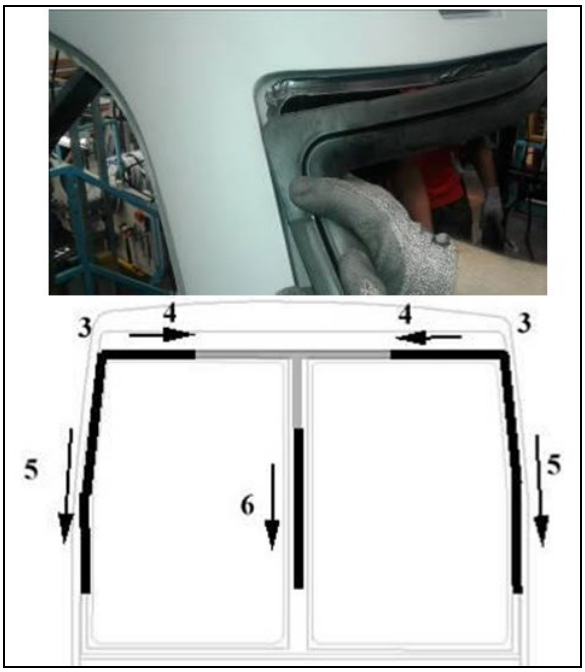


FIGURE 60

4. Insert the rubber extrusion at the location identified #4 (Figure 60).
5. Insert the rubber extrusion at the location identified #5 (Figure 60).
6. Insert the rubber extrusion at the location identified #6 (Figure 60). Use of soapy water is allowed for this section step.
7. Apply soapy water. Insert the rubber extrusion at the location identified #7 (Figure 61). Make sure it is centered in relation to the vertical member.
8. Insert the rubber extrusion at the location identified #8 (Figure 61).

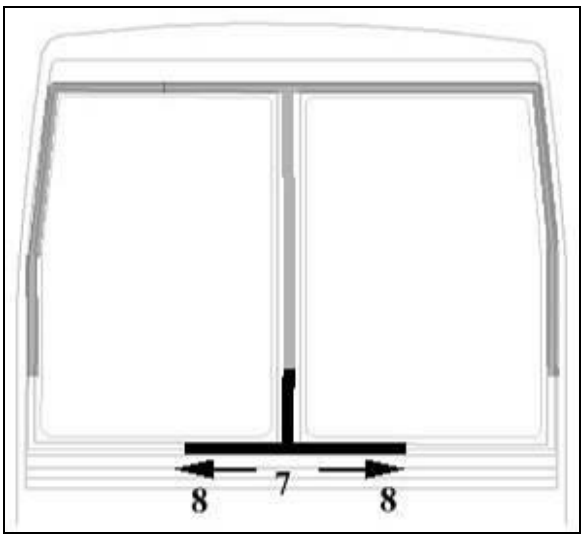


FIGURE 61

9. Bend the corners and insert at location identified #9 (Figure 62).

**Do not use soapy water**

10. Insert the rubber extrusion at the location identified #10 (Figure 62).
11. Insert the rubber extrusion at the location identified #11 (Figure 62).

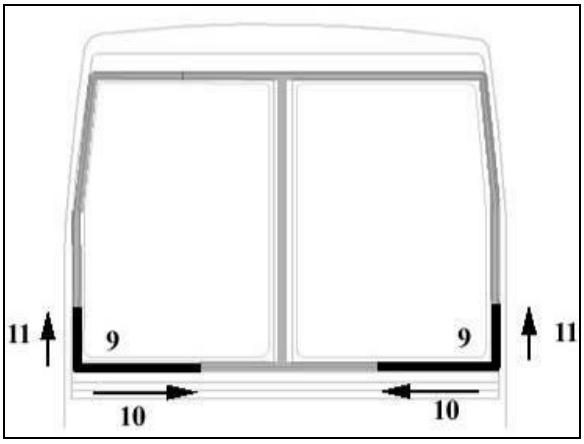


FIGURE 62

12. Apply masking tape (Figure 63 & Figure 64).
13. Wait for Simson adhesive to bond



FIGURE 63: MASKING TAPE APPLICATION

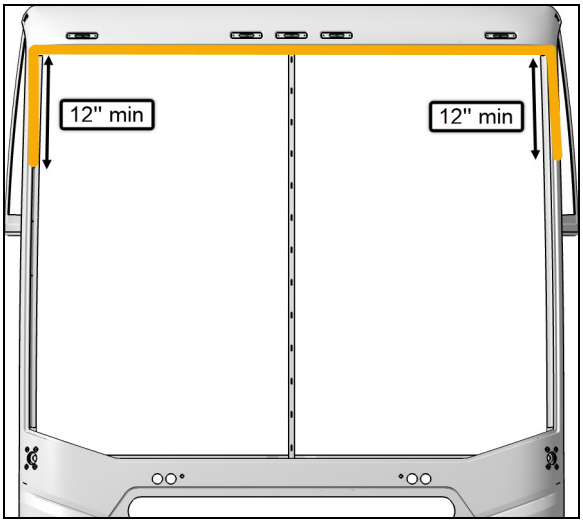


FIGURE 64: MASKING TAPE APPLICATION

### 20.2.3 Windshield insertion

1. Spray the groove at the bottom of the rubber extrusion with soapy water to ease windshield insertion (Figure 65).

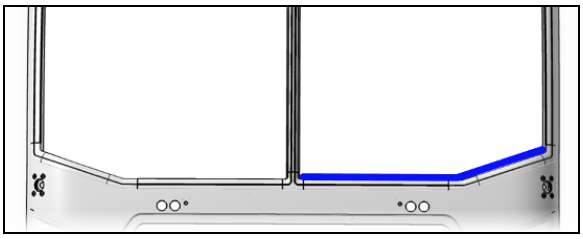

FIGURE 65

2. Slide windshield into rubber extrusion groove starting at the bottom Figure 66. Using a plastic spatula, move the rubber extrusion lip aside to gradually insert the windshield into the groove.

| NOTE |
| --- |
| *Spray soapy water on a regular basis to ease windshield insertion.* |

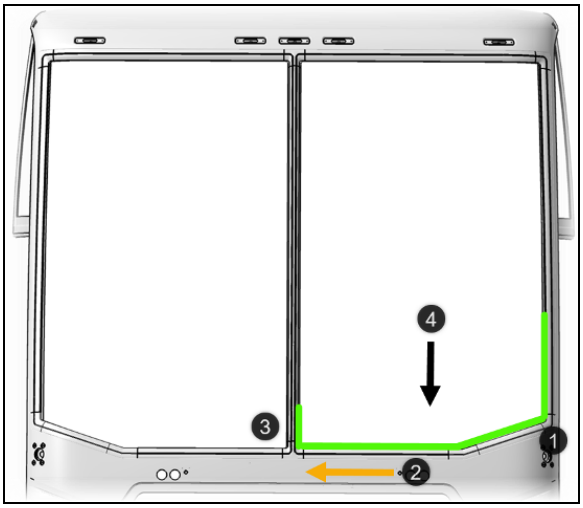


FIGURE 66

| NOTE |
| --- |
| *Make sure windshield bottom edge is well inserted into the rubber extrusion groove before proceeding with the sides.* |

4. Then, working from both sides of windshield bottom to top, gradually move the rubber extrusion lip aside to insert the windshield into the groove. Use also soapy water on the inside of vehicle to insert the windshield into the rubber gasket groove.

5. Check from the inside, that the gasket has remained in place.

6. Insert the top curved corner then finish with the top of windshield.

### 20.2.4 Locking strip insertion

| NOTE |
| --- |
| *Locking strips retract with time. Install ends of locking strips as tight as possible in the V-channel.* |

1. Spray locking strip and rubber extrusion groove generously with soapy water.

2. Insert the locking strip into insertion tool 680755.




FIGURE 67: LOCKING STRIP INSERTION TOOL 680755

3. Insert the strip into the rubber extrusion groove. Start in the middle, at the upper end of the windshield (Figure 69).

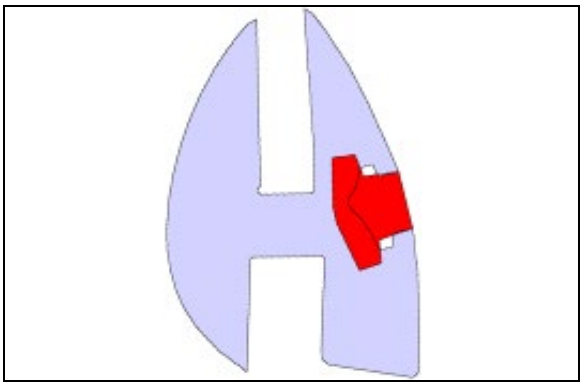

FIGURE 68: WINDSHIELD INSTALLATION SIDE VIEW

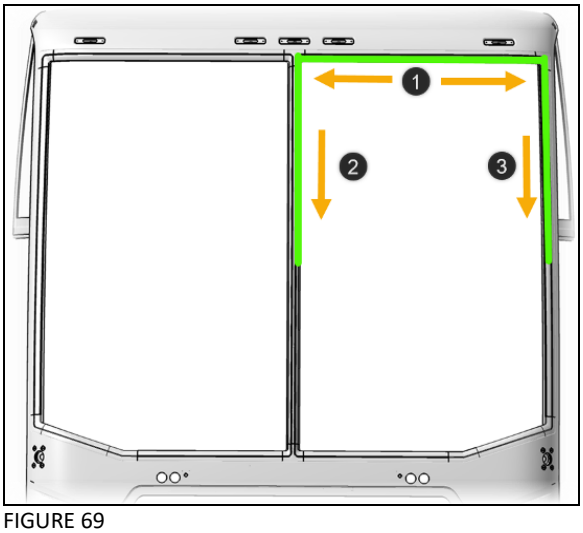


FIGURE 69

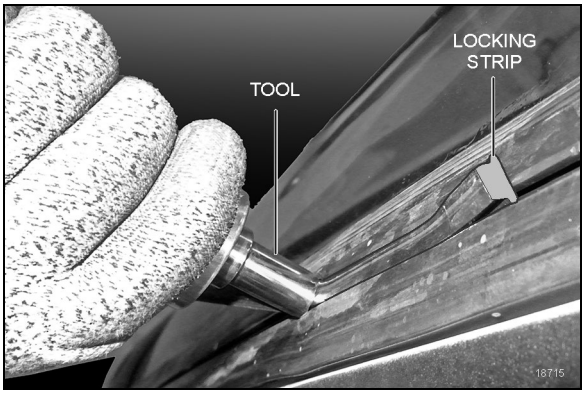


FIGURE 70

4. Carry on with the insertion of the strip into the rubber extrusion groove (Figure 71).

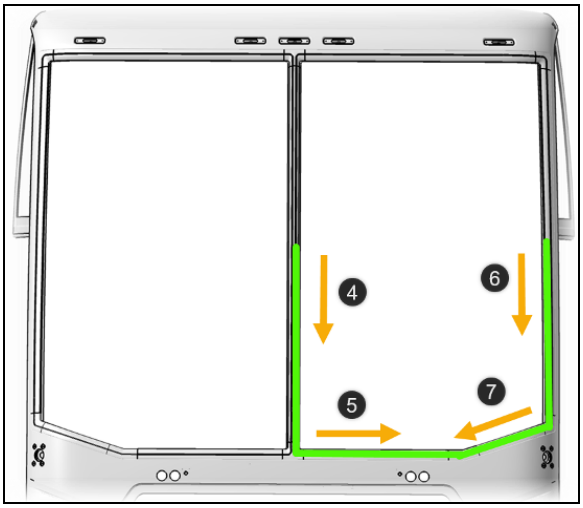


FIGURE 71

5. When strip insertion is almost complete, cut end at a 45° angle leaving ¼" of excess length to prevent contraction over time then insert strip into groove.

## 21. BODY PANELS AND DOORS

Each of the doors should be checked for proper operation. This includes latching. Also, inspect each of the doors for damage, missing, or loose parts. Repair or replace those parts as needed.

Unless otherwise noted, body panels and doors should be aligned and centered with surrounding panels. In general, a gap of ¼ inch (6 mm) is desirable between panels. Refer to Figure 72 for specified gaps.

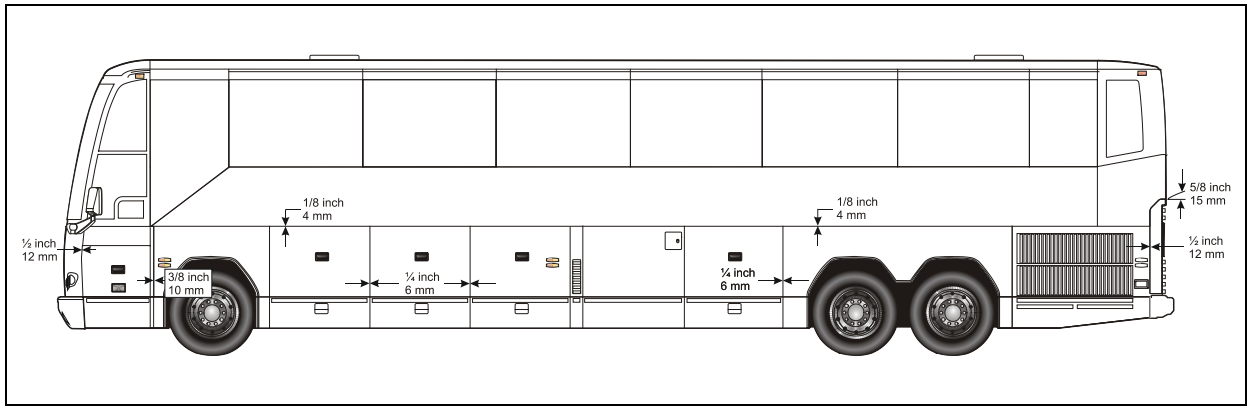


FIGURE 72: BODY PANEL SPACING 18496

## 22. WHEELCHAIR LIFT ACCESS DOOR

### 22.1 INSTALLATION

**CAUTION**

Install the sliding door onto a suitable lifting device that will allow proper lifting and positioning.

1. Lift and move the sliding door near the opening.
2. Push the door into the opening making sure the positioning lugs are properly inserted into their housing then pivot the main hinge and secure the door using 4 bolts. Do not fully tighten the bolts yet.
3. Remove the lifting device from the sliding door.

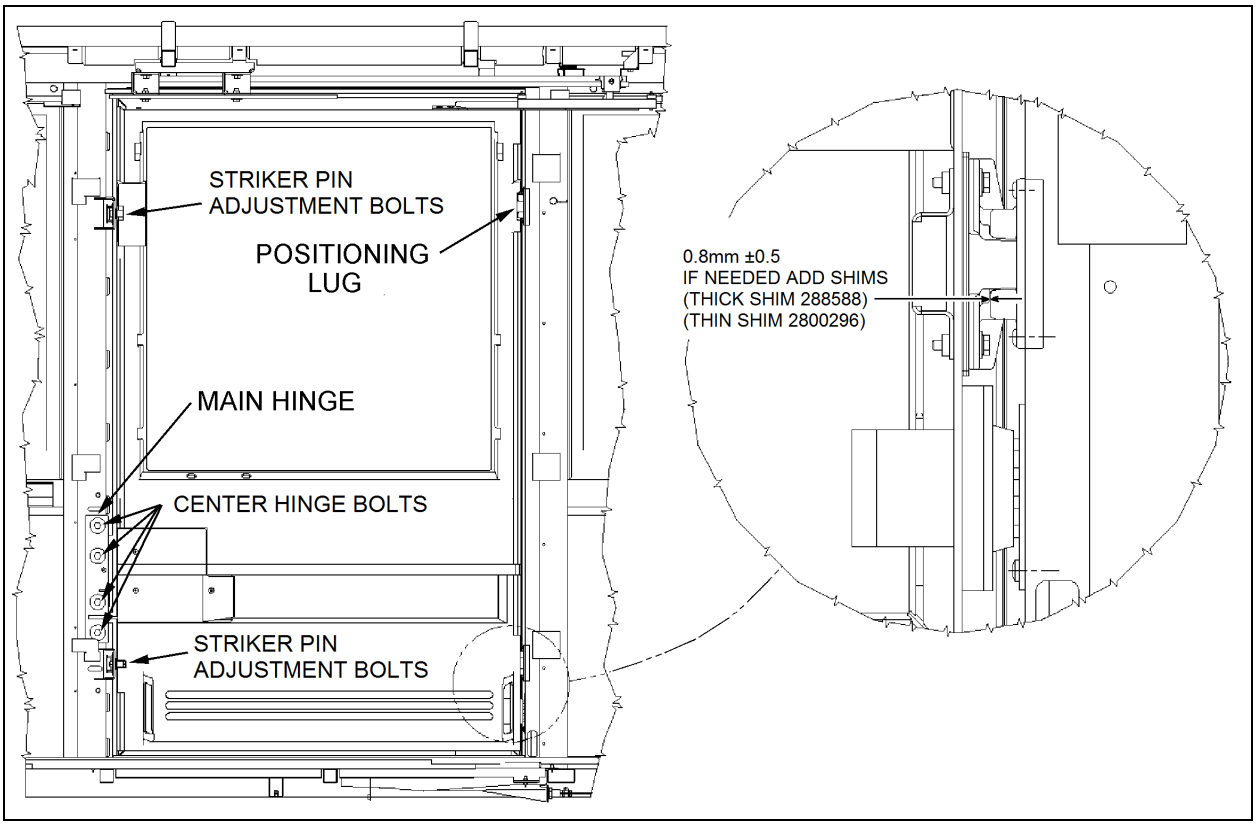


FIGURE 73: WCL SLIDING DOOR INSTALLATION 18739

### 22.2 ADJUSTMENT

1. Adjust sliding door height with reference to the side panels and windows.
2. Slide the top rail into the upper arm then bolt the rail to the structure. Do not fully tighten (Refer to Figure 74).

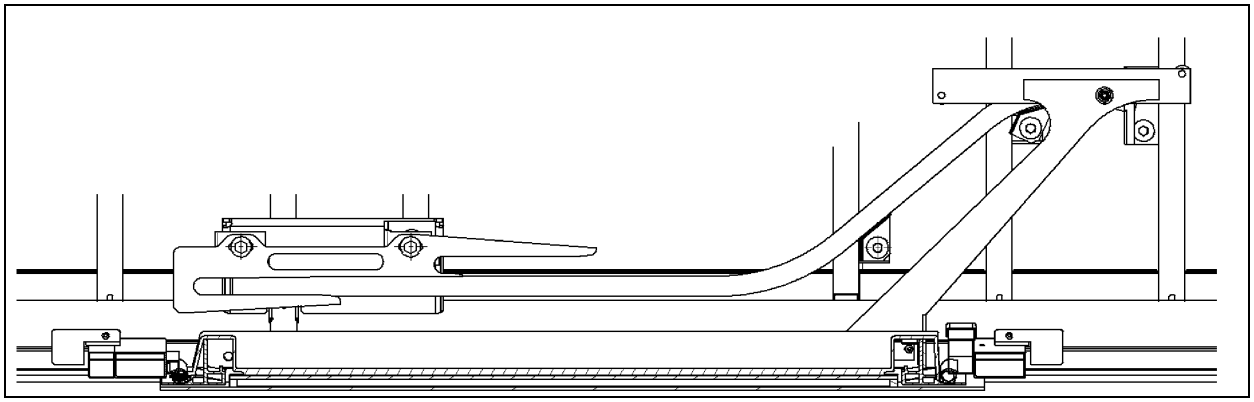

FIGURE 74: WCL UPPER ARM AND RAIL

3. Pull the door in or push from the outside to adjust the door with reference to the vehicle outside surface.
4. - Unfasten the upper arm bolt located on the door side.
   - Position the top rail at 3mm from the ceiling bracket.
   - Force the upper arm down then tighten the upper arm fixing bolt.
   - Pull the upper rail towards the inside in order to remove the play between the roller and the upper rail then tighten the rail fixing bolt at the back.
   - Push the lower rail towards the outside in order to remove the play between the roller and the lower rail then tighten the rail fixing bolt at the back.

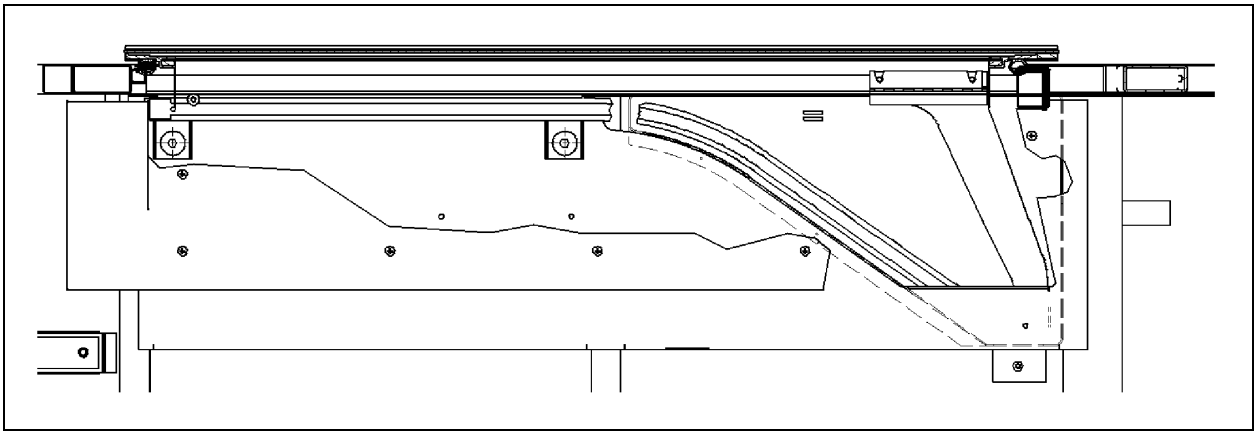

FIGURE 75: WCL LOWER RAIL INSTALLATION

5. Adjust the gap between the positioning lugs and their housing, required gap: 0.5 – 1.5mm. Add shims underneath the lugs to get the proper adjustment.
6. Take away the plays from the upper arm assembly by lifting the main hinge using a crowbar. Tighten the main hinge bolts

**TORQUE: 31-38 lb-ft (42-52 Nm)**

| *NOTE* |
| --- |
| *Do not exert too much force to lift the door.* |

7. Open WCL sliding door completely.
8. - Pull the upper rail towards the inside in order to remove the play between the roller and rail then bolt the rail at front and center. Add some shims if necessary between the rail and the structure before tightening the bolts.

- Push the lower rail towards the outside of the vehicle in order to remove the play between the roller and rail then bolt the rail at front and center. Make sure the rollers stay in contact with the support when starting to close the door.

9. Adjust the distance between the bottom of the guide and the roller when the door is completely open. Required distance: 2 – 3mm. Make sure the roller stay in contact with the guide.
10. Install and adjust striker pins.

**TORQUE: 54-66 lb-ft (73-89 Nm)**

| *NOTE* |
| --- |
| *Make sure that a 2mm gap exists between the door structure and the striker.* |

11. Adjust latches releasing, the two latches must open simultaneously.

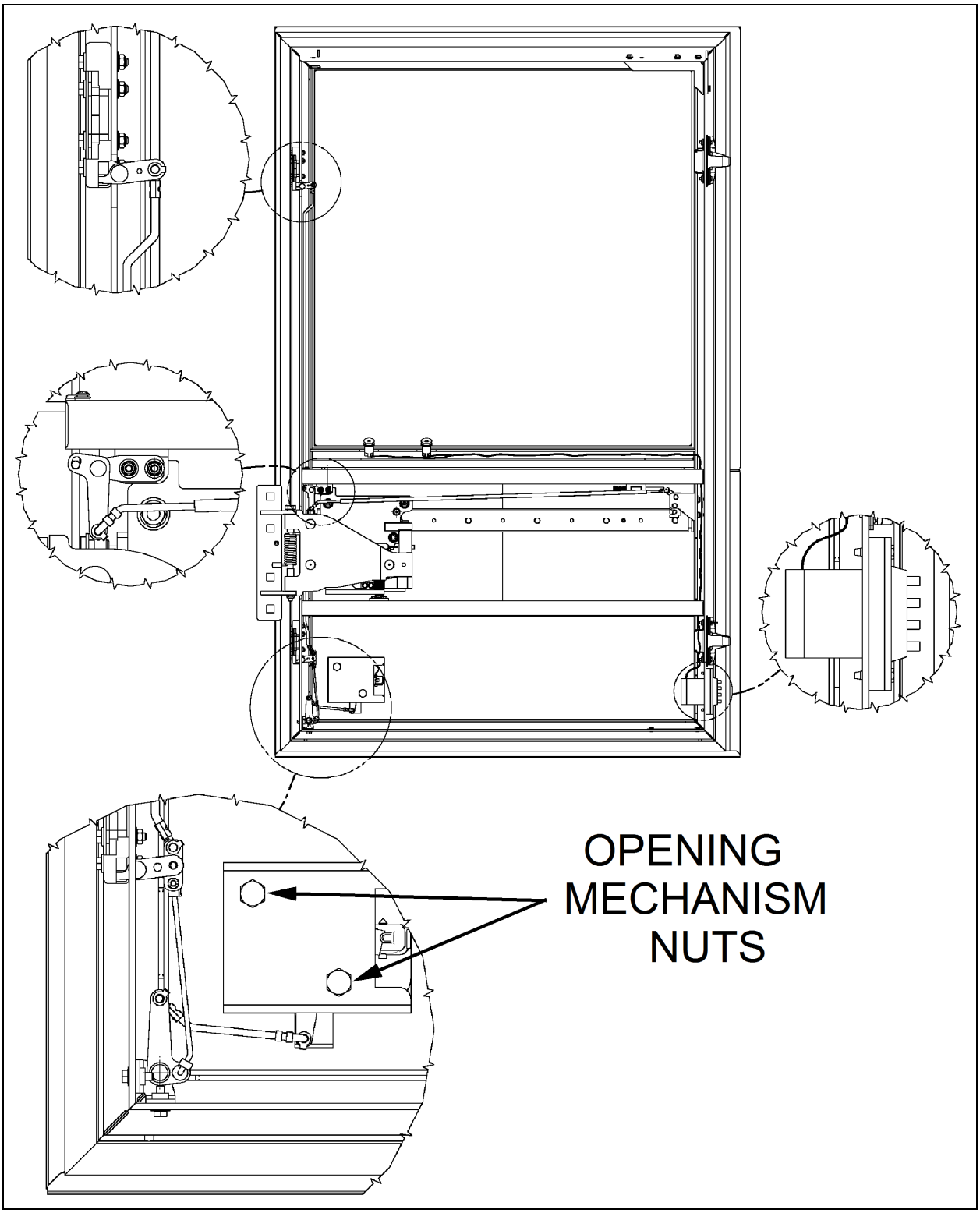


FIGURE 76: WCL SLIDING DOOR OPENING MECHANISM 18740

## 23. BAGGAGE COMPARTMENT DOORS

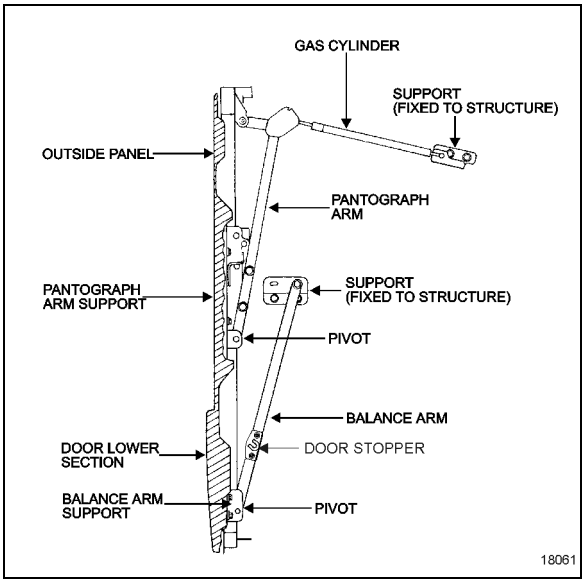


FIGURE 77: BAGGAGE COMPARTMENT DOOR

There are 6 pantograph doors serving as baggage compartment doors on the H3-41, while there are 8 on the H3-45 and the V.I.P (depending on options, VIP model may have even more pantograph doors). Each of these doors is of identical design. A centrally mounted, key-lockable door handle unlatches the door which can then be pulled out and raised up in a path parallel to the side of the vehicle. The door is held in open position by two fully extended gas-charged cylinders, giving clear access to the opening of the baggage compartment.

From its fully open position, the door can be closed by pulling down on the door panel, and letting go when you sense the door will close on its own. The door will easily hinge its way back in the contour of the compartment opening and will be held closed by two latches. Each door can be opened by lifting the centrally mounted handle to unlatch the door and lifting it all the way up. If the door does not remain in the fully open position, one or both gas cylinders on that door is (are) defective. To test the cylinders, first support the door in the fully open position with proper equipment. Disconnect the rod end of one cylinder and try to retract the rod. If strong resistance is felt, the gas cylinder is in good condition and can be reinstalled. If the rod retracts with little effort, the cylinder is defective and should be replaced at once. Test the other cylinder on that door the same way.

***NOTE***

*In case of malfunctioning or in specific situations, use door stoppers to secure the door in the open position.*

### 23.1 PANTOGRAPH ADJUSTMENT

**⚠ WARNING**

Park vehicle safely, apply parking brake, stop engine and set batteries master switches to the “OFF” position prior to working on the vehicle.

***NOTE***

*Refer, if needed, to* Figure 77 *for identification of door components.*

If the door bends when opening or if pantograph does not function properly, it is probably because the pantograph arms are misadjusted.

Measure distance between a pantograph arm end and a straight edge resting on structure. Repeat procedure for the other arm. The distance on each side should be equal. If not, bend appropriate arm until desired measure is obtained (Figure 79 & Figure 80).

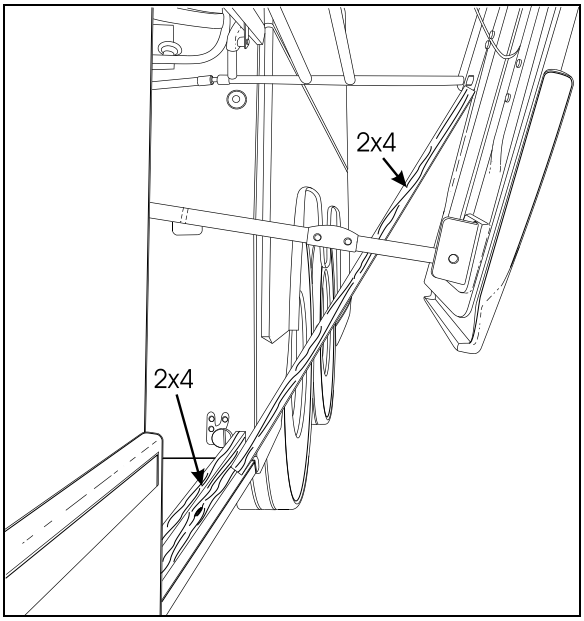


FIGURE 78: PANTOGRAPH ADJUSTMENT 18319

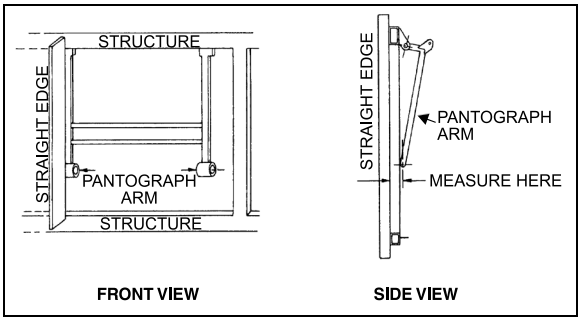


FIGURE 79: PANTOGRAPH DOOR ADJUSTMENT 18062

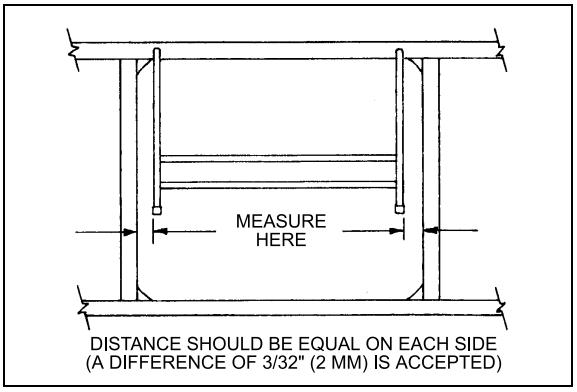


FIGURE 80: PANTOGRAPH DOOR ADJUSTMENT 18063

Doors can be adjusted by bending the arms as follows:

1. Open the door halfway up.
2. Install a piece of wood (a 2x4 will do) along the bottom of the baggage compartment. Arrange so it rests against the striker pins and is prevented from sliding further in the compartment.
3. Install another piece of 2x4 between the first piece and the bottom of the pivot of the lowest (or shortest) pantograph arm, (Figure 78).
4. Pull down on the opposite side of the door to bend the door around the pantograph arm pivot (prevented from moving by the 2x4).
5. When the door is straight, remove the 2x4's and check door operation and fit. A difference of 3/32" (2mm) between both sides is accepted (Figure 80).
6. Repeat as necessary.

## 24. DOOR HANDLES

Compartment door handles are non-serviceable. When a door handle has to be removed, proceed as follows:

1. Unscrew the four (4) retaining screws;
2. Remove the two (2) wires connecting the handle to the door latch locking mechanisms.
3. To install a new handle, reverse the procedure.

## 25. ENGINE COMPARTMENT DOOR

The engine compartment rear door (Figure 81) rises in the same way as the baggage compartment doors and is held open by three gas-charged cylinders (Prevost # 980024). The engine compartment opens by lifting a handle accessed from the R.H. side of the engine compartment.

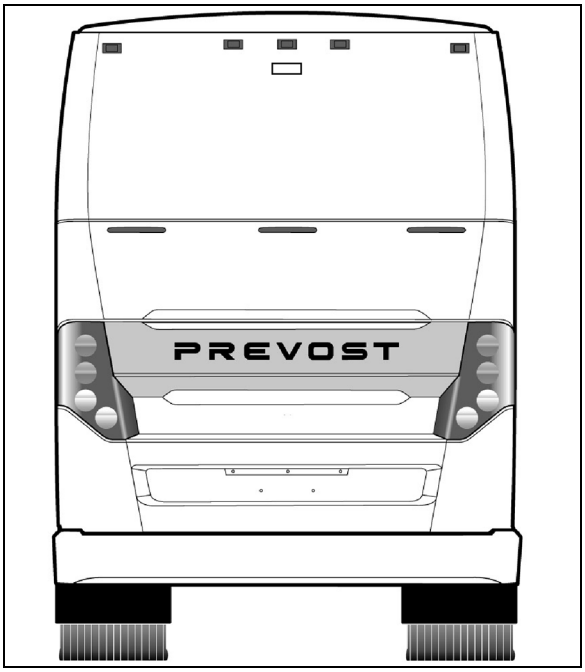


FIGURE 81: ENGINE COMPARTMENT DOOR 18747

When pushed up, the handle pulls on two steel wires, each steel wire connected to its respective door latch locking the rear door. Both steel wires are looped at the release handle and can be adjusted to proper length to ensure positive release of both catches when the handle is raised.

### 25.1 ENGINE DOOR ADJUSTMENT

As indicated above, the engine door mechanism is similar to the baggage door mechanism using a pantograph and 3 gas cylinders to move the door up and down.

For a minor horizontal or vertical adjustment:

1. Open the door mid-height;
2. With the help of an assistant, pull down one side of door while holding up the other side to bend the pantograph arms in the desired position;
3. Close the door and check the top edge parallelism between the door and the vehicle end cap structure. The space may be somewhere between 10 and 15 mm;
4. Repeat until satisfied.

### 25.2 MINOR TOP EDGE DEPTH ADJUSTMENT

Two rubber spring loaded stops may be adjusted. They are located near the top edge on each side of the rear door.

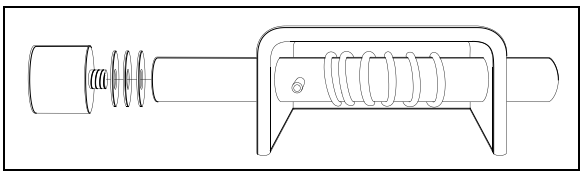

FIGURE 82: DOOR STOP 18324

To adjust:

1. Open door.
2. Unscrew rubber stop.
3. Add or remove washers as needed.
4. Firmly screw back rubber stop.

### 25.3 MINOR LOWER EDGE DEPTH ADJUSTMENT:

1. Open door.
2. Slightly loosen the striker pins on each side of door.
3. Using a hammer, strike striker pin gently in the desired direction (in or out).
4. Close the door slowly and check fit.
5. Repeat 3 and 4 to adjust the other striker pin.
6. When door depth is completed on the four corners, both vertical door sides should be parallel to the vehicle body structure.
7. Firmly tighten the striker pins (2) to lock them in position.

## 26. ENGINE AIR INTAKE GRILL

When needed, the engine air intake grill can be changed:

1. Cut the seal around the grill with a sharp edged knife.
2. Remove the grill from the vehicle.
3. On the vehicle grill opening, using the knife, remove as much adhesive as possible.
4. Sand the new grill backing edge to remove the glossy surface.
5. Clean with alcohol, wipe dry.
6. Apply SIKA 205 primer to the grill opening and the grill edges. Allow to dry at least 2 minutes for chemical evaporation.
7. Apply SIKA 255 FC adhesive on the grill edge.
8. Install the grill on the vehicle, adjust and fasten with masking tape. Allow 8 hours setting period.

## 27. RADIATOR DOOR ADJUSTMENT

### 27.1 DOOR HEIGHT ADJUSTMENT

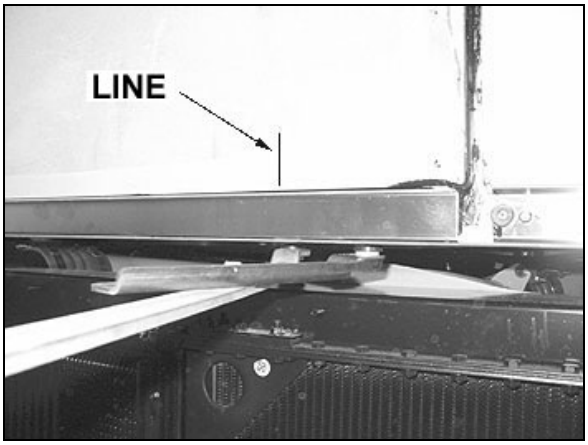


FIGURE 83: REFERENCE LINE

1. Using a pencil, draw a line onto the lateral panel in line with the balance arm.
2. Using a rubber mallet, adjust the lower part of pantograph arm in order to get 4 ± 1 mm between lateral panel and engine door (Refer to Figure 83 and Figure 84).

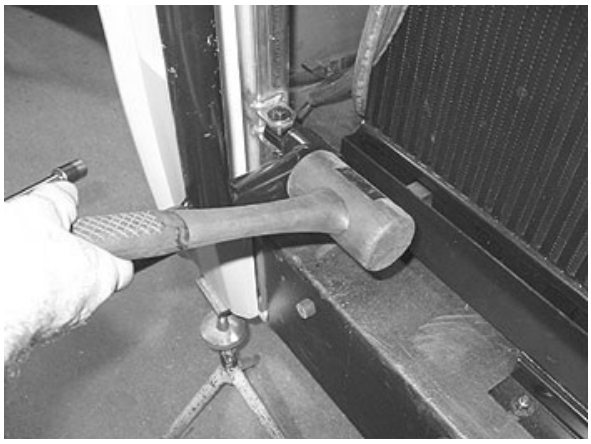

FIGURE 84: PANTOGRAPH ARM ADJUSTMENT

3. Tighten the bolt.

## 27.2 DOOR LATERAL ADJUSTMENT



FIGURE 85: DOOR LATERAL ADJUSTMENT

1. Using a rubber mallet, adjust radiator door positioning with reference to pantograph arm so that the door is parallel to the lateral panel and to the engine door.
2. Tighten the two bolts.

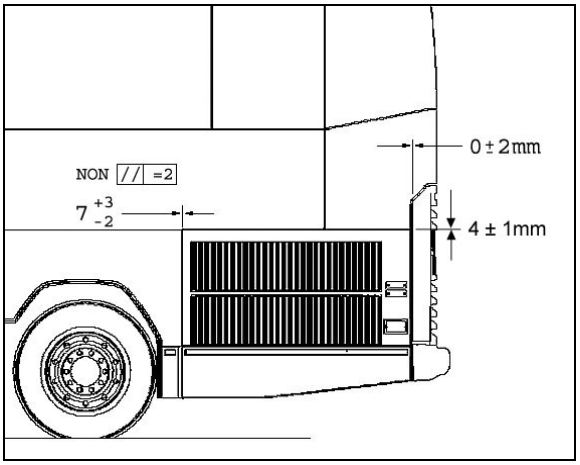


FIGURE 86: PROPER DOOR POSITIONING

## 27.3 DOOR DEPTH ADJUSTMENT

1. Close radiator door.
2. Check parallelism between radiator door and rear fender (max. 0 ± 2 mm).
3. If the door is too far inside, adjust using a rubber mallet (Refer to Figure 88).
4. Tighten the bolt.
5. Close the radiator door in order to verify that latches adjustment is proper. If the gap is too small or too big, adjust latch positioning.

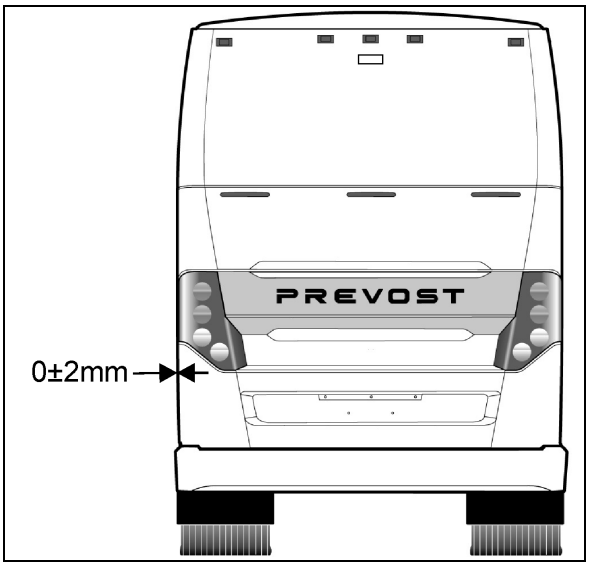


FIGURE 87: DOOR DEPTH ADJUSTMENT

6. Make sure that latch striker pin engages behind the strike plate at least 10 mm. Add or remove spacers if needed. Check door fit and operation. Tighten the latches bolts.



FIGURE 88: DEPTH ADJUSTMENT

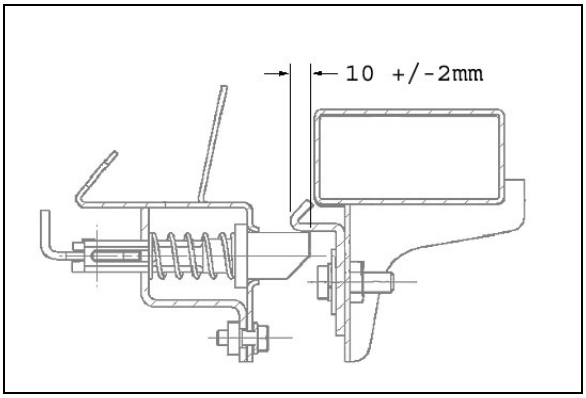


FIGURE 89: DOOR LATCHES ADJUSTMENT

## 28. CONDENSER DOOR ADJUSTMENT

1. Open the condenser door.
2. Loosen the nuts (1, Figure 90) holding the hinge (3, Figure 90) to hinge attachment (4, Figure 90). Loosening nuts (1, Figure 90) allows the condenser assembly to be shifted "LEFT or RIGHT" and "UP or DOWN".
3. Adjust condenser assembly position at the hinge.
4. Tighten the nuts.
5. Loosen bracket nuts holding the panel to condenser. Panel (6, Figure 90) may be shifted "IN or OUT", "LEFT or RIGHT" and "UP or DOWN".
6. Adjust condenser panel at brackets (2, Figure 90) and (5, Figure 90).
7. Tighten the nuts.
8. Respect the required gap between exterior finishing panels (Figure 72).
9. Check that the door swings freely and closes properly. It may be necessary to adjust the door latch to get proper fit and operation.

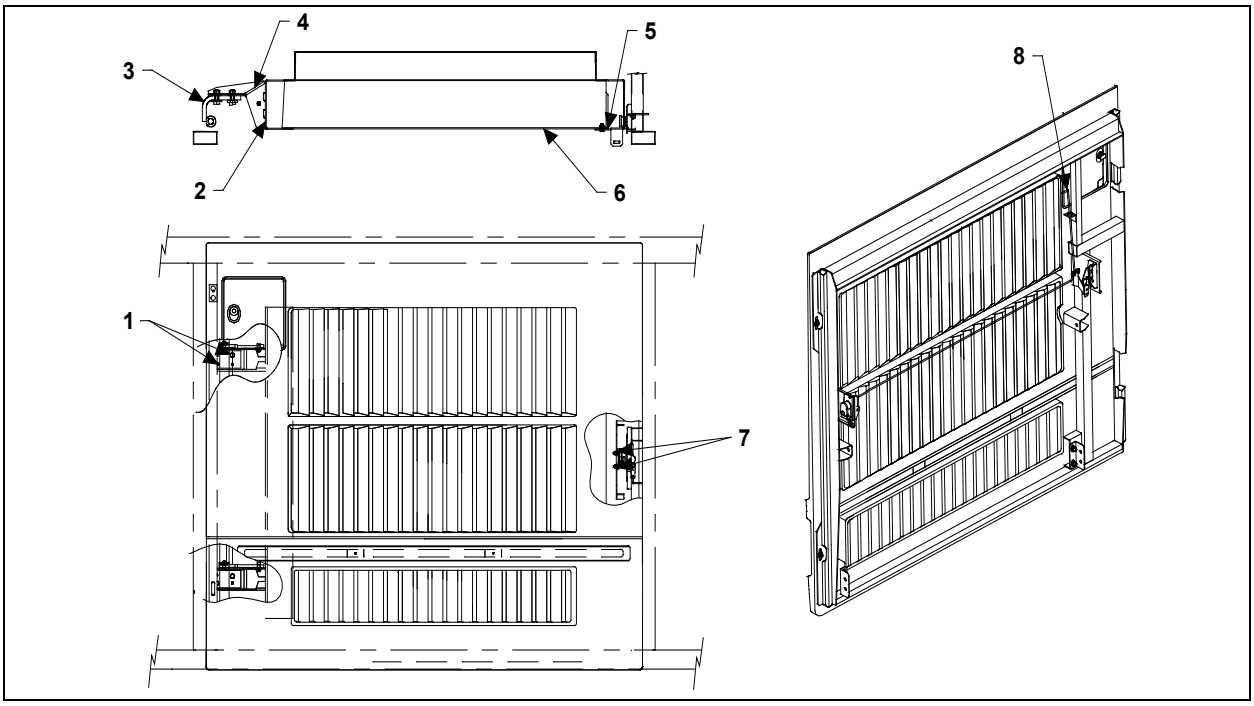


FIGURE 90: CONDENSER DOOR D280201

## 29. FUEL FILLER DOOR

1. Open the fuel filler door (1, Figure 91).

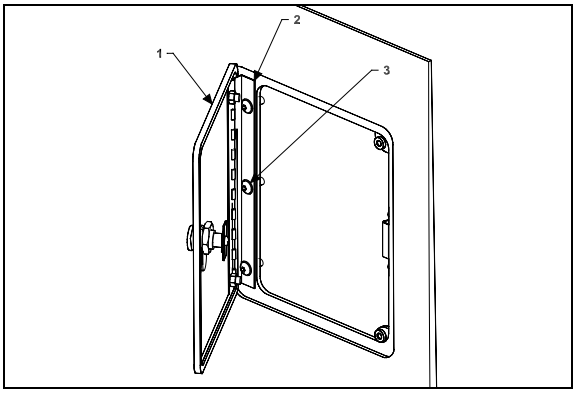


FIGURE 91: FUEL FILLER DOOR 1875003D

2. Loosen the screws (3,Figure 91) holding the panel to hinge (2,Figure 91) assembly.
3. Adjust the fuel filler door position according to distance required between exterior finishing parts (Figure 72).
4. Tighten the nuts.
5. Check that the door swings freely and closes properly.

## 30. FRONT SERVICE COMPARTMENT

Adjustment of the front service compartment door can be done by following these steps:

1. Open the door.
2. Loosen nut (2, Figure 92).
3. Move part (1, Figure 92), as close as possible to exterior of coach, so as to have enough clearance for proper door opening.
4. Tighten nut (2, Figure 92).
5. Loosen nut (3, Figure 92). Hinge allows the door to be shifted "IN or OUT".
6. Adjust door panel to have the same gap space as neighboring panels or refer to Figure 72 for specified gap space. Only if necessary, use the adjustment allowed by moving part 1, Figure 92.

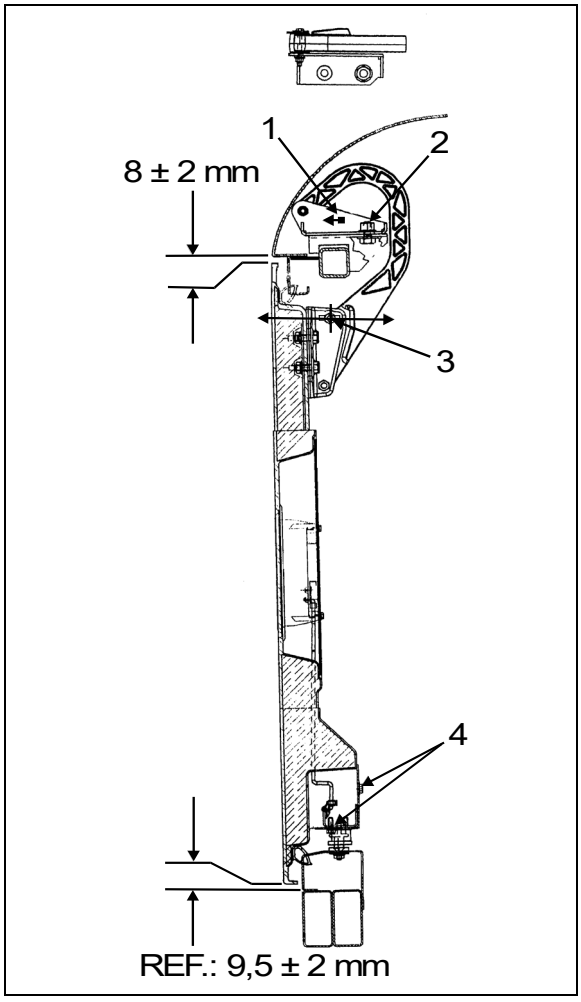


FIGURE 92: DOOR HINGE 18194

7. Loosen screws (5, Figure 93) to allow the door to be shifted "UP or DOWN".
8. Adjust the door position.
9. Tighten the screws.
10. Check that the door swings freely and closes properly. It may be necessary to adjust the door latch to get proper fit and operation.

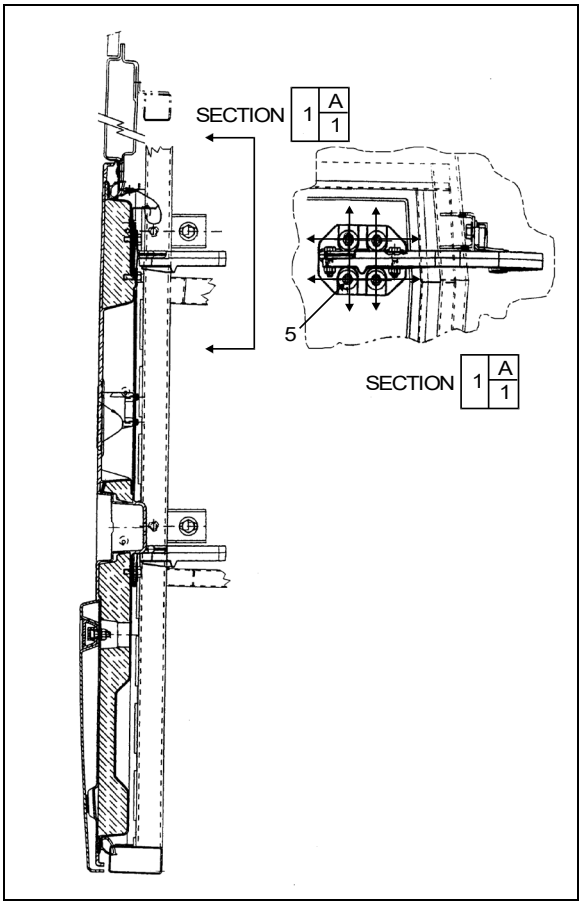


FIGURE 93: FRONT SERVICE DOOR 18195

### 30.1 LATCH MECHANISM ADJUSTMENT

To adjust the latch mechanism and the striker pin, open the door to access the striker pin. Slightly loosen the striker pin. Using a hammer, adjust the striker pin to center it in the door latch mechanism. Tighten the striker pin. Check door fit and operation.

## 31. ENGINE COMPARTMENT R.H. SIDE DOOR

The engine compartment R.H side door can be adjusted by following these steps:

1. Open the door.
2. Loosen nut (1, Figure 94).
3. Move part (3, Figure 94) as shown in figure for "LEFT or RIGHT" adjustment.
4. Tighten nut (1, Figure 94).
5. Loosen nut (2, Figure 94).

6. Hinge allows the door to be shifted "IN or OUT".
7. Adjust the door in accordance with the required distance between exterior finishing parts (Figure 72).
8. Loosen screws (4, Figure 95).
9. Screws allow the door to be shifted "UP or DOWN".
10. Adjust the door position according to the distance required between exterior finishing parts (Figure 72).
11. Tighten the screws.

Check that the door swings freely and closes properly. It may be necessary to adjust the door latch to get proper fit and operation.

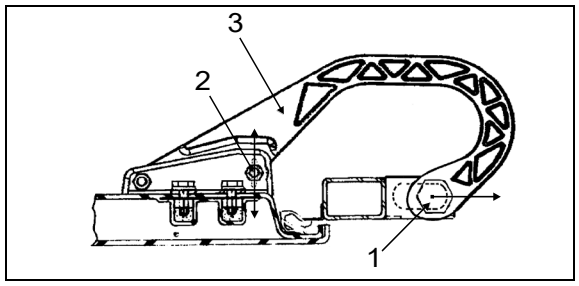


FIGURE 94: DOOR HINGE 18196

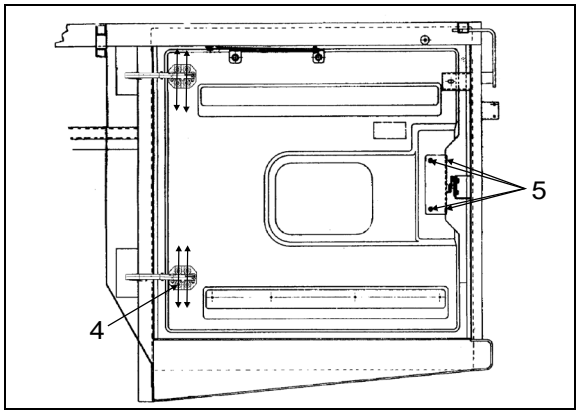


FIGURE 95: ENGINE COMPARTMENT R.H. DOOR 18197

### 31.1 LATCH MECHANISM ADJUSTMENT

To adjust the latch mechanism and the striker pin, open the door to access the striker pin. Slightly loosen the striker pin. Using a hammer, adjust the striker pin to center it in the door latch mechanism. Tighten the striker pin. Check door fit and operation.

## 32. EVAPORATOR DOOR ADJUSTMENT

1. Open the door.
2. Loosen nut (1, Figure 96).
3. Move part as shown in figure for "LEFT or RIGHT" adjustment.
4. Tighten nut (1, Figure 96).
5. Loosen nut (2, Figure 96). Hinge allows the door to be shifted "IN or OUT".
6. Adjust the door in accordance with the required distance between exterior finishing parts (Figure 72).
7. Loosen screws (3, Figure 96). Screws allow the door to be shifted "UP or DOWN".
8. Adjust the door position according to the distance required between exterior finishing parts (Figure 72).
9. Tighten the screws.

Check that the door swings freely and closes properly. It may be necessary to adjust the door latch to get proper fit and operation.

### 32.1 LATCH MECHANISM ADJUSTMENT

1. To adjust the latch mechanism and the striker pin:
2. Open the door to access the striker pin.
3. Loosen slightly the striker pin.
4. Using a hammer, adjust the striker pin to center it in the door latch mechanism.
5. Tighten the striker pin. Check door fit and operation.

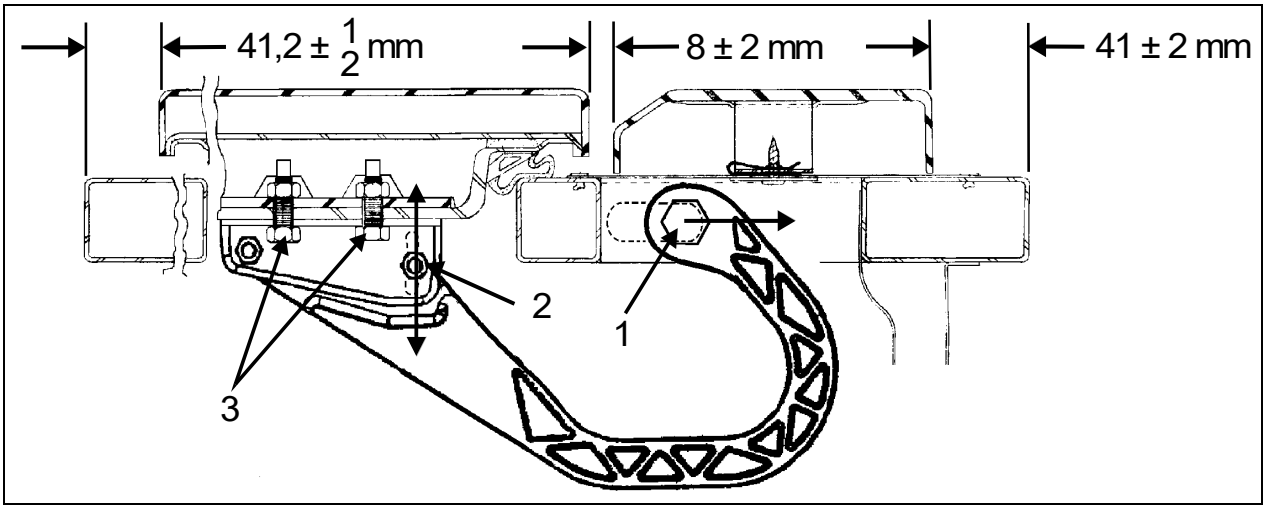


FIGURE 96: EVAPORATOR DOOR 18198

## 33. MAIN POWER COMPARTMENT

To adjust the main power compartment door:

1. Loosen nut (1, Figure 97).

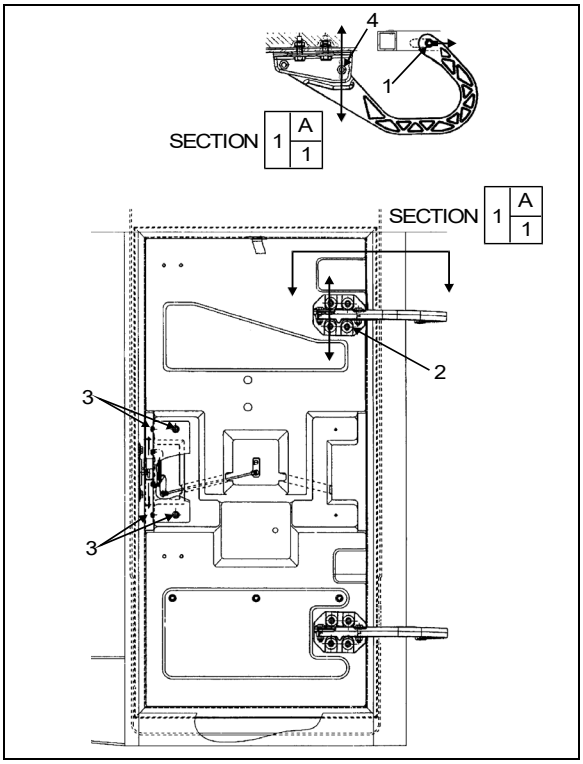


FIGURE 97: MAIN POWER COMP. DOOR 18199

2. Move part as shown in figure for "LEFT or RIGHT" adjustment.
3. Tighten nut (1, Figure 97).
4. Loosen nut (4, Figure 97).
5. Hinge allows the door to be shifted "IN or OUT".
6. Adjust door panel to have the same gap space as neighboring panels or refer to Figure 72 for specified gap space
7. Loosen screws (2, Figure 97). Screws allow the door to be shifted "UP or DOWN".
8. Adjust the door position.

Tighten the screws.

Check that the door swings freely and closes properly. It may be necessary to adjust the door latch to get proper fit and operation.

### 33.1 LATCH MECHANISM ADJUSTMENT

To adjust the latch mechanism and the striker pin:

1. Open the door to access the striker pin.
2. Loosen slightly the striker pin.
3. Using a hammer, adjust the striker pin to center it in the door latch mechanism.
4. Tighten the striker pin.

Check door fit and operation.

## 34. FENDERS

On the "H" series vehicle, all fenders are easily removable for maintenance on brakes and suspension. Each rear fender has three

mechanical spring-loaded holding devices fixing it to the vehicle's structure.

### 34.1 REAR FENDER REMOVAL

1. Push the spring type rod sideways so that the lock disengages.
2. Support or have somebody hold the fender up.
3. As in 1, repeat to release both remaining holding devices.
4. Holding the fender firmly, pull it down until the top edge disengages from the holding plates.

To reinstall, reverse the procedure.

### 34.2 FRONT FENDER REMOVAL

1. At the bottom of fender, remove the retaining screws on one side of the fender.
2. Support or have someone hold the fender up.
3. Remove the screw on the other side of the fender.
4. Pull the fender down until the top edge disengages from the holding plates.

To reinstall, reverse the procedure.

## 35. REAR CAP

The fiberglass rear cap does not need any maintenance except painting as needed. For minor damages, refer to section 4 "Fiberglass Repair" and section 5 "Painting". If the rear cap ever has to be replaced:

1. Remove all accessories.
2. Drill out the retaining pop rivets.
3. With a sharp edge blade, cut the seal joint and remove the rear cap.
4. With the sharp edge blade, remove as much of the remaining seal pieces as possible.
5. Sand with #120 or #150 sandpaper.
6. Wipe clean with alcohol
7. Prepare surface with SIKA #205 and let dry for a minimum of 2 minutes.
8. Install a new seal using LOCTITE 414 glue.
9. Install the rear cap and fasten with pop rivets.

**CAUTION**

Do not attempt this procedure unless you are qualified and equipped to handle this job.

## 36. FRONT CAP

The front cap windshield frame does not need any maintenance. It is held in place with bolts and nuts. If it ever it has to be replaced, make an appointment at a Prevost service center near you.

## 37. SIDE PANEL INSTALLATION PROCEDURE FOR COACHES AND VIP

**Material:**

| | | | | | |
|---|---|---|---|---|---|
| Anti-silicone (682989) | √ | Blue cloth (682383) | √ | Sika 206 G+P 1 liter (683446) | √ |
| Tack cloth | √ | Pure water | √ | Sika 252 black | √ |
| CHIX cloth (682384) | √ | Scotchbrite gray (680226) | √ | Masking tape | √ |

**Equipment:**

| | | |
|---|---|---|
| Glue gun | √ | |
| Compression roller | √ | |

### SECTION #1 SIDE PANEL INSTALLATION

| | | |
|---|---|---|
| 1.00 | **SS Body structure preparation** | |
| | A) | Clean using anti-silicone.<br>See SAV000001 section A.<br>Use Scotchbrite to sand structure.<br>Use 1 side of Scotchbrite for 1 side of vehicle. |

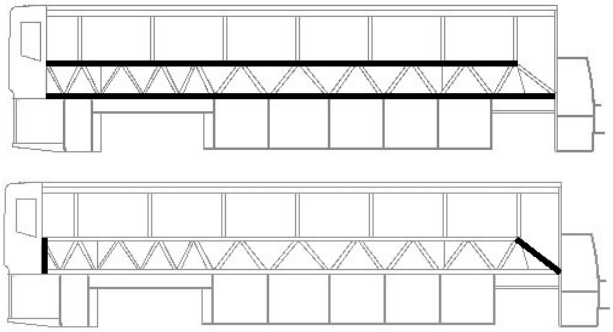

### SAV000001 Section A Alcohol or Anti-silicone

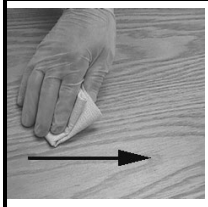

***1.*** **Apply**

**CHIX cloth**

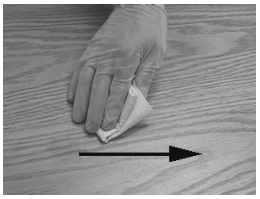

***2.*** **Dry immediately**

**Blue cloth**

***3.*** **Allow to dry**

| | |
|---|---|
| **Mandatory** | **Minimum time : Wait for product to evaporate** |
| | **After 2 hours: Start cleaning operation again** |
| **Before applying any other product** | If surface seems dusty, greasy or with finger marks, start cleaning operation again. |

| | | |
|---|---|---|
| 1.05 | **Fiberglass panel preparation (fiber side)** | |

| | | | |
|---|---|---|---|
| | A) | Clean using tack cloth.<br>Repeat if surface seems dusty. |  |
| | B) | Clean using anti-silicone<br>See SAV000001 section A. | |
| | C) | Apply primer 206 G+P.<br>See SAV000001 section D. | |

# SAV000001 Section D Sika Primer 206 G+P

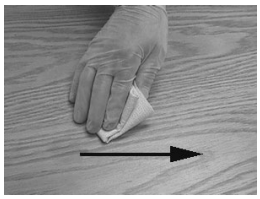

**3.** **Shake bottle to mix product**

**4.** **Apply a thin layer**

**CHIX cloth**

***3.*** **Allow to dry**

| | | |
|---|---|---|
| **Mandatory** | **206 G+P** | **Minimum time : 10 minutes** |
| | | **After 2 hours: Remove dust using damp cloth (pure water)** |
| | | **After 8 days : Reactivate with Aktivator as per section "C"** |
| **Before applying any other product** | | If surface seems dusty, dust using damp cloth. |
| | | If surface seems greasy or with finger marks, reactivate with Aktivator. |

| | | | |
|---|---|---|---|
| 1.10 | **SS Body structure preparation** | | |
| | A) | Clean using anti-silicone.<br>Clean structure at least twice. Repeat is necessary until cloth comes clean.<br>See SAV000001 section A. | 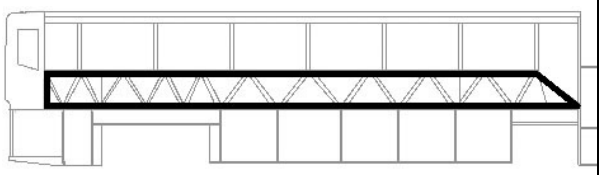 |
| | B) | Apply 1 ¼" protective tape along bottom structural tubing. | 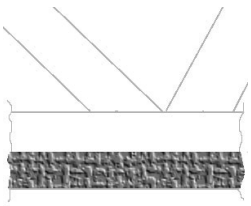 |

| | | | |
|---|---|---|---|
| | C) | Apply 206 G+P onto structure.<br><br>See SAV000001 section D. | 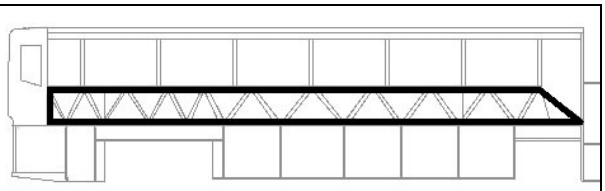 |
| 1.15 | Seal entrance door perimeter using Sika 252 black,<br><br>Smooth down the excess. | | 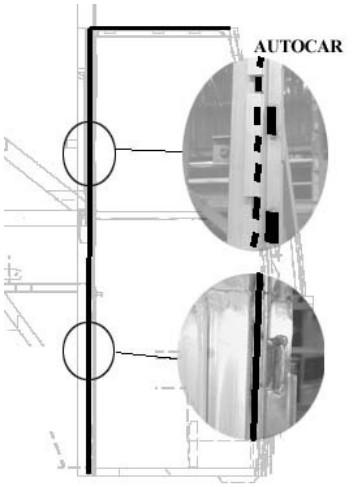 |
| 1.20 | | Install lateral panel supports onto bottom structural tubing. Install lateral panel onto supports to verify proper positioning. | |
| 1.25 | **Glue application** | | |
| | A) | Set (timer) or record time.<br><br>***No more than 45 minutes should elapse between beginning of glue application and panel installation.*** | |
| | B) | Apply Sika 252 black onto structure<br><br>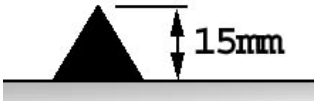 | |
| 1.30 * | A) | Install lateral panel onto supports and clamp panel in place using "C" clamps and square tubing to even out the pressure.<br><br>**Note: A maximum of clamps should be used (every 6 inches) to ensure proper bonding. Do not tighten too much.** | |

| | | | |
|---|---|---|---|
| | B) | At the rear, adjust panel height so that it is level with rear cap | 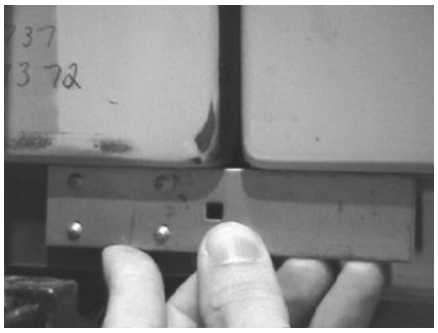 |
| | C) | Gap between lateral panel and rear cap must be 6mm +4/-3 and panels must be aligned within 1.5mm. | 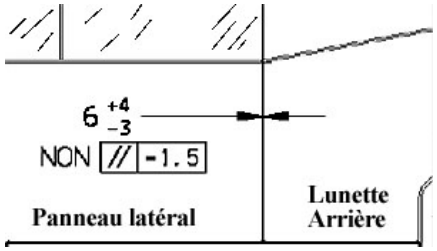 |
| | D) | Using a ruler, adjust front of lateral panel. | 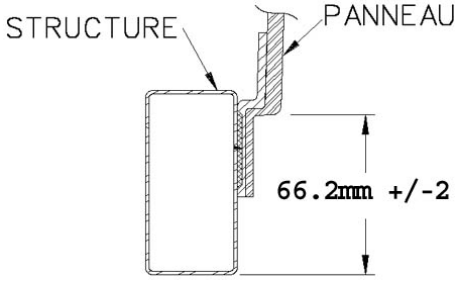 |
| | E) | Verify if panel upper corner is in the middle of window post. | 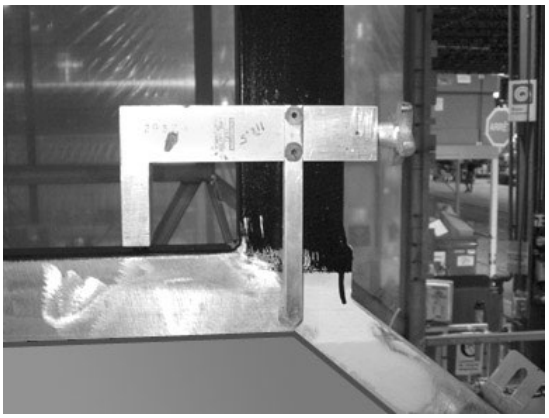 |
| 1.55 | Remove excess of glue using a spatula.<br><br>Apply a bead of Sika 252 at the top of panel<br><br>Spray pure water onto all the joints to speed up drying process | |  |

| | |
|---|---|
| 1.60 | Remove protective tape (installed at step 1.10b). |
| 1.70 | **Do not move the vehicle for 48 hours**<br>**Make sure room temperature is superior to 20°C (68°F) before gluing**<br>**Perform a visual inspection before installing side windows** |

| SECTION #2 DRIP MOLDING INSTALLATION | | | |
|---|---|---|---|
| 2.00 * | A) | Clean using Anti-silicone<br>See SAV000001 section A. |  |
| | B) | Apply Sika 206 G+P<br>See SAV000001 section D. | |
| 2.05 | | Remove blue paper from drip molding. Remove protective tape from double-face self adhesive tape | |
| 2.10 | | Glue drip molding. Allow a gap of 1mm minimum between top of drip molding and panel. | 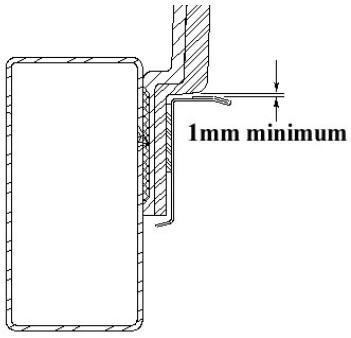 |
| 2.15 | | Compress drip molding using the compression roller to increase adherence. | |
| 2.20 | | Round off rear and front drip molding corners. |  |

| SECTION #3 REPAIR | | |
|---|---|---|
| 4.00 | Remove fiberglass from structure using a screwdriver. Use wedges if necessary to hold down panel during the work. | |
| 4.05 | Remove as much glue as possible. If primer is removed, apply primer 206 G+P locally. If primer is OK, reactivate as per SAV000001 section D. | |
| 4.10 | Apply Ultrafast 2 glue (heated). | |
| 4.15 | Compress panel using clamps and a metal flat bar (for an even compression). Only use screws as a last resort to compress. | |
| 4.20 | **Vehicle must not move for the next 12 hours.** | |

## 38. REAR-VIEW MIRROR

The exterior rear-view mirrors are equipped with a flat glass as well as a convex glass mirror.

Flat and convex glass mirrors may be equipped with an optional electric heating system which serves to minimize ice and fog on the mirror glass. Integral thermostats are installed to prevent continuous heating.

Use the appropriate switch on the dashboard to activate the defogger system on both mirrors simultaneously.

Flat and convex glass mirrors can easily be replaced in case of breakage.

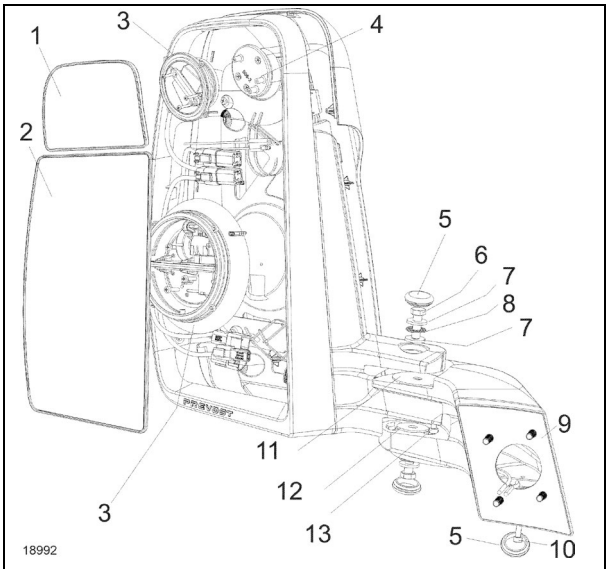


FIGURE 98: REAR-VIEW MIRROR (STREET SIDE SHOWN)

| # | DESCRIPTION | QTY |
|---|---|---|
| 1 | CONVEX GLASS MIRROR | 1 |
| 2 | FLAT GLASS MIRROR | 1 |
| 3 | SMALL 24V MOTOR ASM PREVOST | 1 |
| 3 | LARGE 24V MOTOR ASM PREVOST | 1 |
| 4 | SMALL MOTOR PLATE | 1 |
| 5 | BLACK PLASTIC CAP | 3 |
| 6 | ARM BOLT | 2 |
| 7 | THRUST BEARING WASHER | 4 |
| 8 | THRUST BEARING WASHER | 2 |
| 9 | RS SHIM W/ GASKET | 1 |
| 10 | CLAMPING SCREW | 1 |
| 11 | LARGE FRICTION WASHER, 33GF NYLON | 1 |
| 12 | SMALL FRICTION WASHER, 33GF NYLON | 1 |
| 13 | M6 X 12 mm HEX SOCKET HEAD CAP SCR | 1 |

See paragraph 1 TORQUE TABLES in Section 18A for prescribed torque.

### 38.1 ARM AND BRACKET POSITION

Arm and bracket should be positioned so that the surfaces are flush as shown on the images below.

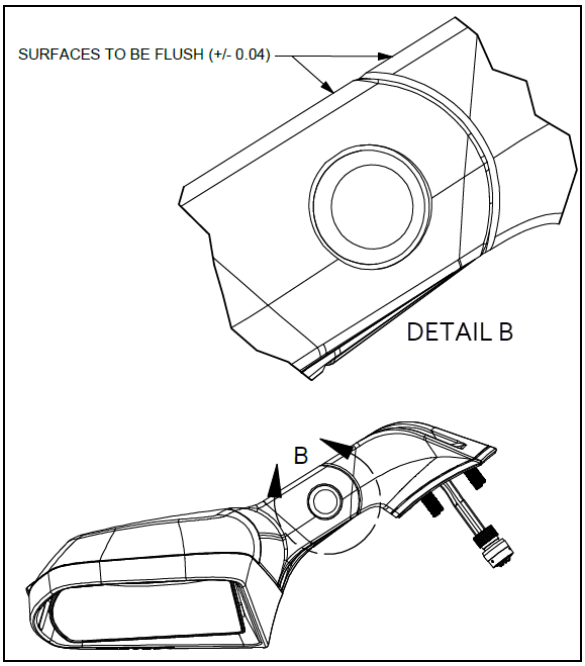


FIGURE 99: STREET SIDE REAR-VIEW MIRROR

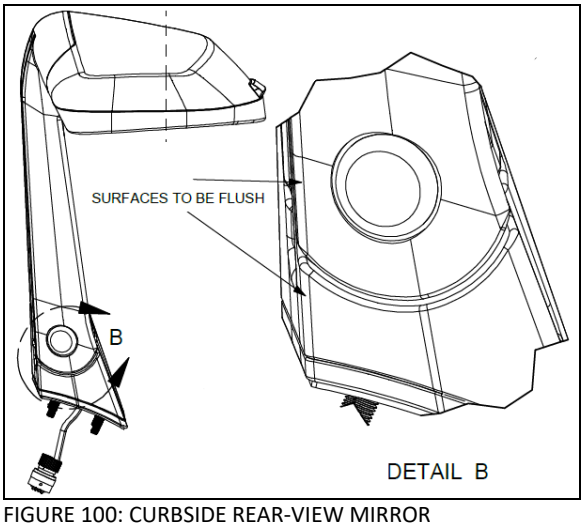


FIGURE 100: CURBSIDE REAR-VIEW MIRROR

### 38.2 REAR-VIEW MIRROR REMOVAL

To remove the complete rear-view mirror unit, proceed as follows:

1. Remove the black plastic cap (Figure 101).

2. Loosen the clamping screw (do not remove) so that the mirror unit can be lifted from the mounting plate (Figure 101).

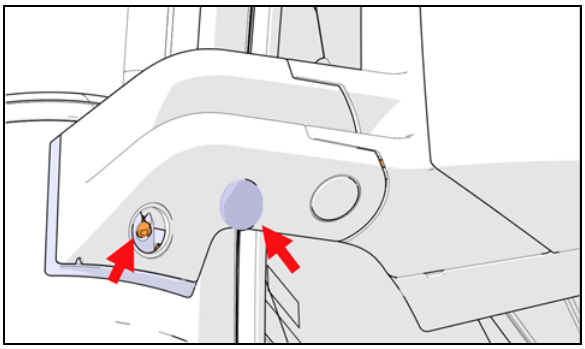

FIGURE 101

3. Lift the mirror unit (E1, Figure 102) from the mounting plate and tilt (E2, Figure 102) so it detaches from the mounting plate.

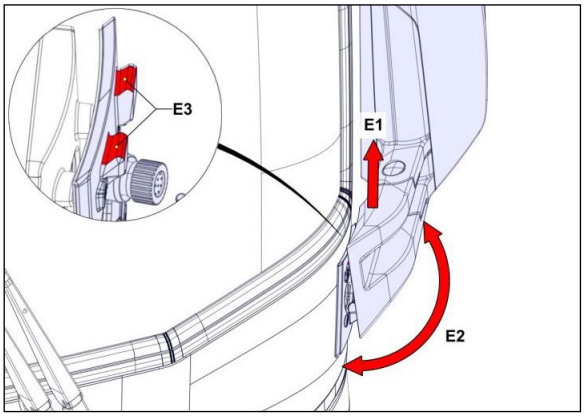


FIGURE 102

4. Unplug the connector.

## 38.3 REPLACEMENT OF FLAT GLASS MIRROR

The flat glass mirror assembly is mounted to a lock ring which is part of the motor assembly.

1. Underneath the mirror, reach for the tab of the locking ring (item 2, Figure 103).

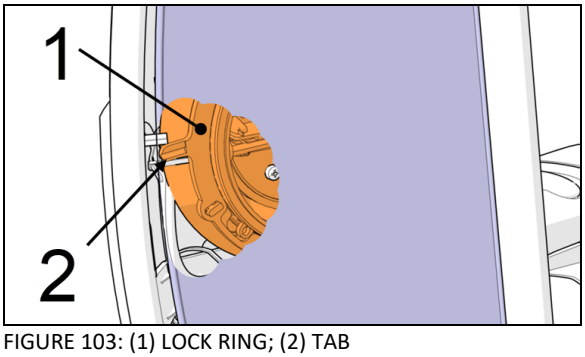


FIGURE 103: (1) LOCK RING; (2) TAB

2. Use tool 990684 to rotate the lock ring by pushing the tab downwards on the R.H. mirror or upwards on the L.H. mirror (Figure 104).




FIGURE 104: TOOL

3. Detach the flat mirror.
4. Disconnect the heater wires.
5. Remove the lock ring from the motor (item 1, Figure 105).

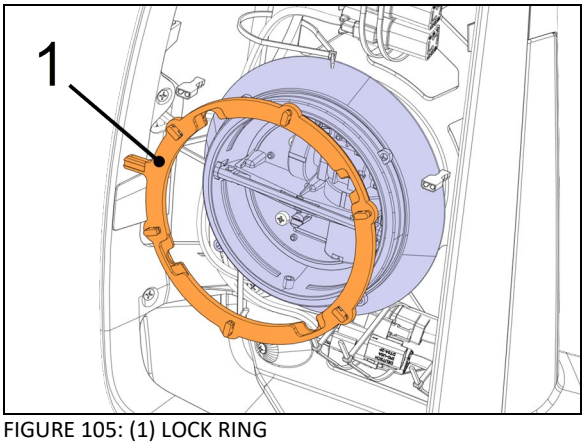


FIGURE 105: (1) LOCK RING

6. Install the lock ring on the new glass mirror (item 1, Figure 106).

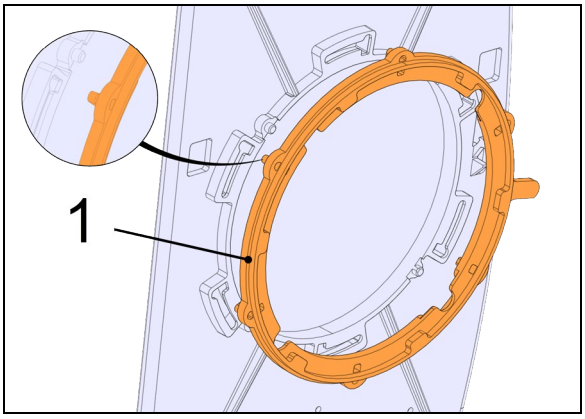


FIGURE 106: (1) LOCK RING

7. Adjust the lock ring to center the pin (4x) in the notch of lock ring.
8. Install the new glass mirror pin (4x) into the motor holes (4x) (Figure 107).

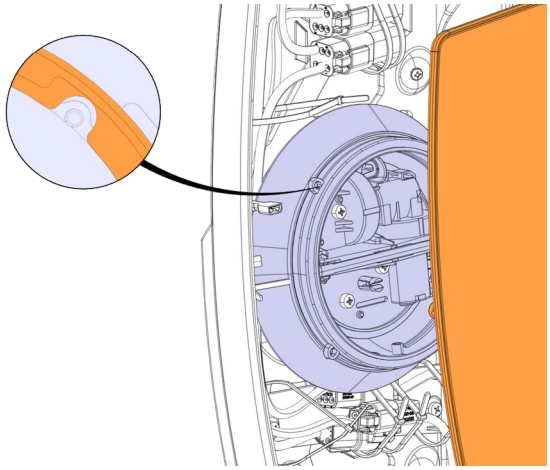

FIGURE 107

9. Use tool 990684 to push lock ring tab upwards right-hand mirror or downwards for left-hand mirror to lock the mirror glass in place. (Figure 104).

## 38.4 REPLACEMENT OF CONVEX GLASS MIRROR

The snap mounted convex mirror is mounted to a ring which is part of the motor assembly. Replaced as follows.

1. Remove the mirror by pulling gently on the side of the mirror.
2. Detach the mirror from the motor assembly mounting ring.
3. Disconnect the heater wires.

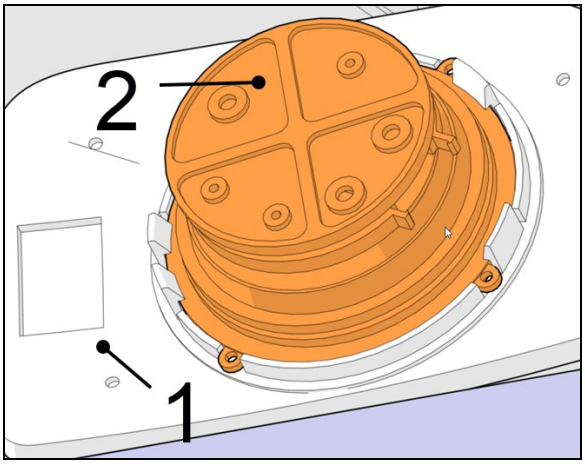


FIGURE 108: (1) CONVEX GLASS MIRROR; (2) MOTOR

**CAUTION**

Do not attach stick-on type convex mirror accessories to the heated mirror glass. This could impede uniform heat distribution on the mirror surface which could break the mirror.

## SPECIFICATIONS

**Door cylinder**

Manufacturer ..... Bimba
Type ..... Pneumatic
I.D. ..... 1½" ( mm)
Stroke ..... 8" ( mm)

**Damper**

Manufacturer ..... Koni

**Lock cylinder (upper)**

Manufacturer ..... Bimba
Type ..... Air, single action, 1/8 NPT, hexagonal rod
I.D. ..... 7/8" (22 mm)
Stroke ..... 1" (25 mm)

**Lock cylinder (central)**

Manufacturer ..... Bimba
Type ..... Air, single action, ¼ NPT
I.D. ..... 1¾" (45 mm)
Stroke ..... 1" (25 mm)

**Manifold solenoid**

Manufacturer ..... Norgren
Type ..... 4 ports, 1/8 NPT
Voltage ..... 24 VDC
Power consumption ..... 6 watts
Maximum pressure ..... 150 psi (1035 kPa)

**Solenoid valve (Latching valve)**

Manufacturer ..... Humphrey
Model ..... 310
Operating range ..... 0 to 125 psi (0 to 860 kPa)
Voltage ..... 24 VDC
Voltage tolerance ..... +10%, -15% of rated voltage
Power consumption ..... 4 watts
Leak rate (max allowed) ..... 0.245 in3/min @ 100 psi (4cc/min @ 690 kPa)
Type of operation ..... Direct solenoid
Lubrication ..... Not required (factory pre-lubed)
Filtration ..... 40 micron recommended

PREVOST

# MAINTENANCE INFORMATION

**MI15-18**

| | | |
|---|---|---|
| DATE : | MAY 2015 | SECTION : 18 - Body |
| SUBJECT : | **STRUCTURE INSPECTION FOR CORROSION - HOW TO PREVENT CORROSION** | |

| *IMPORTANT NOTICE* |
|---|
| *This maintenance is recommended by Prevost to increase your vehicle's performance. Note that no reimbursement will be awarded for carrying out this maintenance.* |

## APPLICATION

| Model | VIN |
|---|---|
| All Prevost models |  |

## DESCRIPTION

This procedure was made in order to support Prevost customers who are worried about their vehicle structure behavior due to corrosion.

Five year old vehicles and older should be subjected to a thorough structural inspection; especially if clear signs of moderate or deep corrosion are visible. The inspection can be conducted as described in the following procedure.

In this procedure, you will find information about:

**1) The important areas that should be inspected**

**2) When a structural inspection should be carried out**

**3) How to perform the inspection**

**4) What can be done to optimize corrosion protection during your vehicle's life**

| STRUCTURE INSPECTION – CORROSION | |
|---|---|
| **DESCRIPTION** | **INTERVAL** |
| Perform structural inspection for corrosion as described in this document | **Normal duty cycle vehicles and normal environment operation**<br>Every 5 years starting from the 5th year in service |
| | **Severe duty cycle vehicles and harsh environment operation**<br>Every 2 years starting from the 5th year in service |
| | Whenever a *visual inspection* discloses that corrosion seems to have caused damages to the structure such as perforation, flaking, separation of metal layers, loss of material, etc. |

**CAUTION**

**Reject member, chassis component, axle, etc. if:**

Cracked, broken, separated by corrosion or corroded to a depth as to weaken member so as to affect the safety and structural integrity of the vehicle.

**DANGER**

Park vehicle safely, apply parking brake, stop engine. Prior to working on the vehicle, set the ignition switch to the OFF position and trip the main circuit breakers equipped with a trip button. On Commuter type vehicles, set the battery master switch (master cut-out) to the OFF position.

## THE IMPORTANT AREAS THAT SHOULD BE INSPECTED

**Front & rear sub-frames, drive axle cradle and tag axle** (FIGURE 1) on Prevost structures are made of high strength steel. Although the structure on a Prevost vehicle receives a beneficial corrosion preventive compound application at the end of the manufacturing process, after many years of service with exposure to harsh environments (winter, frequent rains, road salt, stone projection, sand accumulation, etc.), the carbon steel can be subject to severe corrosion. The use of high strength steel remains a requirement to withstand peak loads.

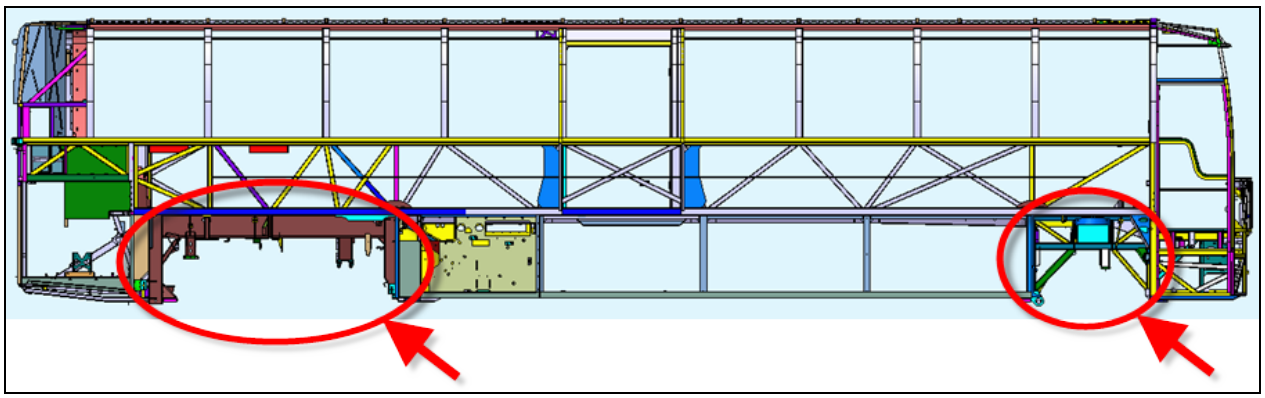

**FIGURE 1 – CRITICAL AREAS: FRONT SUB-FRAME, REAR SUB-FRAME, DRIVE AXLE CRADLE AND TAG AXLE**

## WHEN SHOULD A STRUCTURE INSPECTION BE CARRIED OUT?

Vehicles operating in harsh environments without an appropriate corrosion protection compound applied to the front and rear sub-frames, drive axle cradle and tag axle could be subject to corrosion. If parts of the tag axle or front and rear sub-frames structures present metal flaking, separation of metal layers, loss of material, perforation, etc. then they should be inspected in order to confirm that the minimum wall thickness remains (FIGURE 2 to FIGURE 5).



**FIGURE 2: METAL FLAKING. ACCUMULATED SAND AS SHOWN ON THE IMAGE SHOULD NOT BE LEFT IN PLACE**



**FIGURE 3: METAL FLAKING AND ACCUMULATED SAND**



**FIGURE 4: METAL FLAKING ON TAG AXLE - ACCUMULATED MATTER WILL RETAIN WATER THUS CREATING CONDITIONS PROMOTING ADDITIONAL CORROSION**



**FIGURE 5: HEAVILY CORRODED COACH WITH BROKEN TAG AXLE. THIS IMAGE SHOWS THE SPINDLE MOUNTING PLATE SEPARATED FROM THE REST OF THE TAG AXLE**

## STRUCTURE INSPECTION PROCEDURE

The thickness of main carbon steel parts on rear & front sub-frames, drive axle cradle and tag axle beam must be **at least 1/8 inch (0.125") (3mm)**. There are two options to properly monitor the wall thicknesses:

1- Using an ultrasonic wall thickness gauge.

2- Drilling holes and measuring wall thickness.

### 1- Structural Inspection Procedure Using Ultrasonic Wall Thickness Gauge

The ultrasonic wall thickness gauge has to be used on bare metal. The surface where the gauge will be put on has to be cleaned of rust, paint or other material. If the thickness is more than 1/8 inch (3mm), repaint the cleaned surface to prevent corrosion from occurring on this spot.

Use a grinder or another tool to remove rust or paint on the spot to check. The gauge has to be placed on the center of the cleaned spot. The gauge has to be perpendicular to the surface to get an accurate measure.

Inspection using ultrasonic wall thickness gauge is recommended over drilling holes because it minimize risk of altering the vehicle structure.



FIGURE 6: CLEANED SPOT ON STRUCTURAL MEMBER

### 2- Structural Inspection Procedure Using Drilled Holes

Drill a ¼ inch (6 mm) diameter hole in the most corroded wall of the part being checked. Use a caliper to measure the thickness of the drilled metal. Wall thickness should be at least 1/8 inch (0.125") (3mm). Drilled hole must then be welded (filled with metal) and repainted after measurement to prevent water infiltration and corrosion from occurring around the hole.

Clean/remove flaking rust on frame. Drill hole in the most corroded wall. The hole must be welded after to prevent corrosion and water infiltration. Filled hole must be painted to prevent corrosion.

**CAUTION**

Holes and welding can increase the risk of crack initiation. **Ultrasonic wall thickness gauge method is recommended.**



FIGURE 7: HOLE DRILLED IN STRUCTURAL MEMBER

## CORROSION PROTECTION ON OLD AND CORRODED FRAME

To maximize corrosion resistance on older frame exposed to harsh environment:

1) Clean rust on frame. If available, use sand blasting.

2) Apply a zinc-rich primer on cleaned surfaces.

3) Cover carbon steel parts with corrosion preventive compound Tectyl 185GW.

**CAUTION**

Avoid primer, paint, and corrosion preventive compounds on pneumatic valves and rubber bushings.



**FIGURE 8: CLEAN RUST**

## PROTECTION TO PREVENT CORROSION

Tectyl 185GW should be used to prevent corrosion propagation on frame.

1) Clean rust and dirt on the frame.
2) Apply Tectyl following the manufacturer's recommendation.
3) Apply Tectyl every year or as needed.

**CAUTION**

Avoid primer, paint, and corrosion preventive compounds on pneumatic valves and rubber bushings.



**FIGURE 9: TECTYL 185GW BLACK APPLICATION**

For more details on Tectyl 185GW, see QC Lubricants web site:

http://www.qclubricants.com/TECTYL185GWBlack.htm

**Tectyl 185GW Black**

**QC Lubricants carries Tectyl 185GW Black in pails and drums.**




TECTYL® 185GW Black is a solvent cutback, thixotropic corrosion preventive compound. The dry film is semi-firm and has a semi-gloss appearance. TECTYL® 185GW Black provides outstanding protection in marine, tropical, and industrial environments, and is widely used for transportation equipment. TECTYL® 185GW Black possesses dielectric strength of 800 volts per dry mil of coating. TECTYL® 185GW Black provides galvanic corrosion protection and can be applied on battery terminals for insulating purposes.

## PARTS / WASTE DISPOSAL

| |
|---|
| Discard according to applicable environmental regulations (Municipal/State[Prov.]/ Federal) |

*Access all our Service Bulletins on https://secureus5.volvo.com/technicalpublications/en/pub.asp*
*Or scan the QR-Code with your smart phone.*

*E-mail us at **technicalpublications_prev@volvo.com** and type "ADD" in the subject to receive our warranty bulletins by e-mail.*

# MAINTENANCE INFORMATION

**MI15-41**

| | |
|---|---|
| DATE : AUGUST 2015 | SECTION : 18 - Body |
| SUBJECT : | CRACKING OF POLYCARBONATE TAILLIGHTS CAUSED BY INAPPROPRIATE CLEANING PRODUCTS |

## APPLICATION

| Model | VIN |
|---|---|
| ALL MODELS | |

## DESCRIPTION

Prevost would like to remind its customers that only **cleaning products designed for external washing of vehicles** should be used for exterior vehicle wash and in particular, for the washing of polycarbonate taillights.

## POLYCARBONATE CRACKING

Degreasers designed to clean motors **must not be used** to clean the engine compartment door. These products are not compatible with polycarbonate. They cause cracking of the polycarbonate taillights housing and cracking of the bosses in which the mounting threaded rods are inserted (figures 2 & 3).

## CLEANING PRODUCT COMPATIBLE WITH POLYCARBONATE

Cleaning products designed for external washing of vehicles shall be used to clean your vehicle. Prevost suggests a high PH cleaner compatible with polycarbonate. See the description of the product in the following table

| Part No | Description | Qty |
|---|---|---|
| 686037 | EXTERIOR CLEANER (BODY) | 1 gallon / 4 liters |
| 686036 | EXTERIOR CLEANER (BODY) | 5.28 gallons / 20 liters |
| 685841 | EXTERIOR CLEANER (BODY) | 55 gallons / 210 liters |

| **NOTE** |
|---|
| *Material can be obtained through regular channels.* |

## High PH cleaning product compatible with polycarbonate - product sheet

# Traffic film remover

Will not make plastics crack

Perfect for trucks, cars, trains, buses and machinery. Safe for all types of plastics including polycarbonate. Designed for automatic or pressure washing.

### ADVANTAGES

- Easily removes traffic film, insects and grease.
- Safe for car and truck paint.
- Safe for use on metal, rubber, chrome, glass and plastic surfaces.
- Does not leave any deposit.
- Concentrated.
- Eco-friendly.
- Easy to rinse.
- Dries evenly.

### DIRECTIONS

Pressure washing :
1. Use product accordingly to dilution ratio.
2. Spray evenly on vehicle surface starting by the bottom.
3. Rinse thoroughly with cold or lukewarm water.

### MORE DETAILS

Do not wash in direct sunlight. Do not allow product to dry on surface.

### DILUTION RATIO

| DIRT | RATIO |
|---|---|
| Mild | 1 oz / 20 oz 50 ml / L |
| Average | 1 oz / 10 oz 100 ml / L |
| Strong | 1 oz / 6.67 oz 150 ml / L |



### PRECAUTIONS

Avoid all contact with eyes.
Avoid all contact with skin.
Wash hands with soap and water after handling.

### FIRST AID

- Skin: Wash contaminated skin with soap and water.
- Eyes: Flush immediately with running water for at least 15 minutes, occasionally lifting the upper and lower eyelids. Seek medical help.
- Ingestion: Do not induce vomiting. If the person is conscious, have them drink several glasses of water or milk. Seek medical help.

### PHYSICAL ATTIBUTE

| | |
|---|---|
| PHYSICAL STATE: | Liquid |
| APPEARANCE: | Clear |
| COLOR: | Transparent |
| SCENT: | Chemical |
| PH: | 13.1 |
| DENSITY (25°C): | 1.1 |

### SECURITY

| | |
|---|---|
| HEALTH | 1 |
| FLAMMABILITY | 0 |
| REACTIVITY | 0 |
| PERSONAL ROTECTION | B |

| | |
|---|---|
| 0 = | NEGLIGIBLE |
| 1 = | LOW |
| 2 = | MODERATE |
| 3 = | HIGHT |
| 4 = | EXTREME |

**FIGURE 1: PRODUCT SHEET**

## IMAGES SHOWING THE CRACKING ISSUE

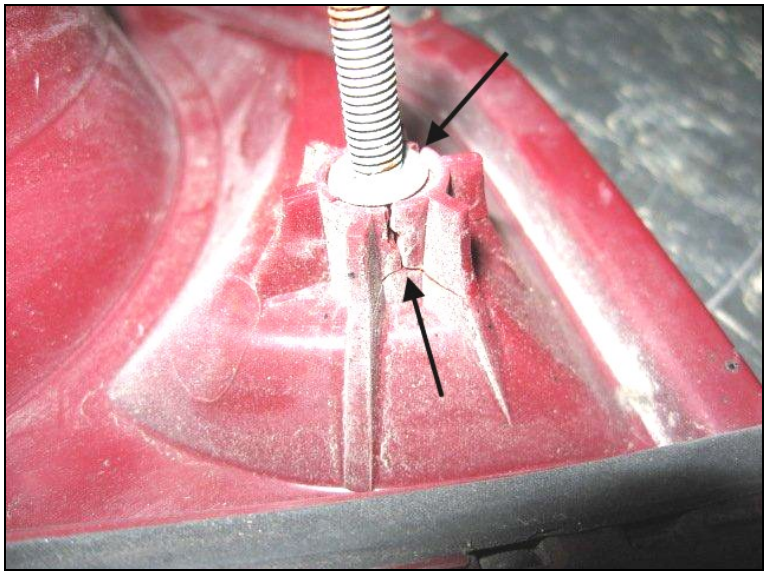

**FIGURE 2: Cracks at the boss and ribs due to the use of engine degreaser**

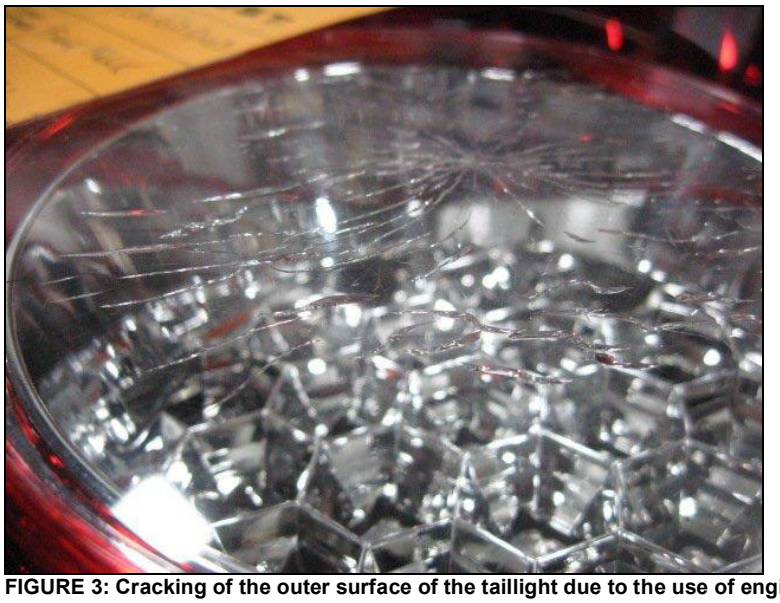

**FIGURE 3: Cracking of the outer surface of the taillight due to the use of engine degreaser**

*Access all our Service Bulletins on [https://secureus5.volvo.com/technicalpublications/en/pub.asp](https://secureus5.volvo.com/technicalpublications/en/pub.asp)*
*Or scan the QR-Code with your smart phone.*

*E-mail us at **technicalpublications_prev@volvo.com** and type "ADD" in the subject to receive our warranty bulletins by e-mail.*

# MAINTENANCE INFORMATION

**MI18-18B**

| | | |
|---|---|---|
| DATE : | June 2018 | SECTION : 18 BODY |
| SUBJECT : | **GENERAL HOISTING AND TOWING PROCEDURES** | |

Revision: B Updated 2.1 to show rubber chocks, secure front and rear. 2020-06-29

## APPLICATION

All Prevost vehicles models
Model Year : 2014 - Current

## DESCRIPTION

This maintenance information is for towing and hoisting Prevost vehicles.

Tower experience, local rules and regulations apply in conjunction with the procedures outlined in this document.

Images are for representation purpose only, actual vehicles may differ.

## Table of contents


**1. HOISTING AND TOWING POINTS ..... 2**

1.1 JACK STANDS ..... 3
1.2 AXLE HOISTING POINTS ..... 4
1.3 USING WHEELS AS LIFTING POINTS ..... 6
1.4 OPTIONAL CHASSIS HOISTING POINTS ..... 7

**2. TOWING ..... 9**

2.1 PREPARATION BEFORE TOWING ..... 9
*2.1.1 Engine compartment emergency air-fill valve ..... 10*
*2.1.2 X Series optional front air supply connections ..... 10*
*2.1.3 Drive Axle Flange Shaft Removal ..... 11*
*2.1.4 After Towing ..... 13*
2.2 TOWING FROM THE FRONT ..... 13
*2.2.1 First Lift ..... 14*
*2.2.2 Second Lift- Front Tow Eye Pads as Lifting Point for Towing ..... 15*
*2.2.3 Second Lift- Using I-Beam Front Axle as Lifting Point for Towing ..... 18*
2.3 X-SERIES RECOVERY USING OPTIONAL REAR TOW EYES ..... 22

**3. EMERGENCY TOWING ..... 23**

3.1 REAR TOW USING NON-APPROVED LIFTING POINTS - *EMERGENCY ONLY* ..... 23
*3.1.1 PRECAUTIONS ..... 23*
*3.1.2 FIRST LIFT ..... 24*
*3.1.3 SECOND LIFT ..... 25*
3.2 VOLVO *I-SHIFT* TRANSMISSION *TOWING MODE* ..... 29

## 1. HOISTING AND TOWING POINTS

As much as possible, use the wheels as the preferred lifting points. If lifting by the wheels is not possible or appropriate, there are several hoisting and towing points under the vehicle.

Lifting should be performed without passengers and no luggage remaining in the vehicle.

Use these points exclusively for hoisting and towing operations (Figure 1, Figure 2).

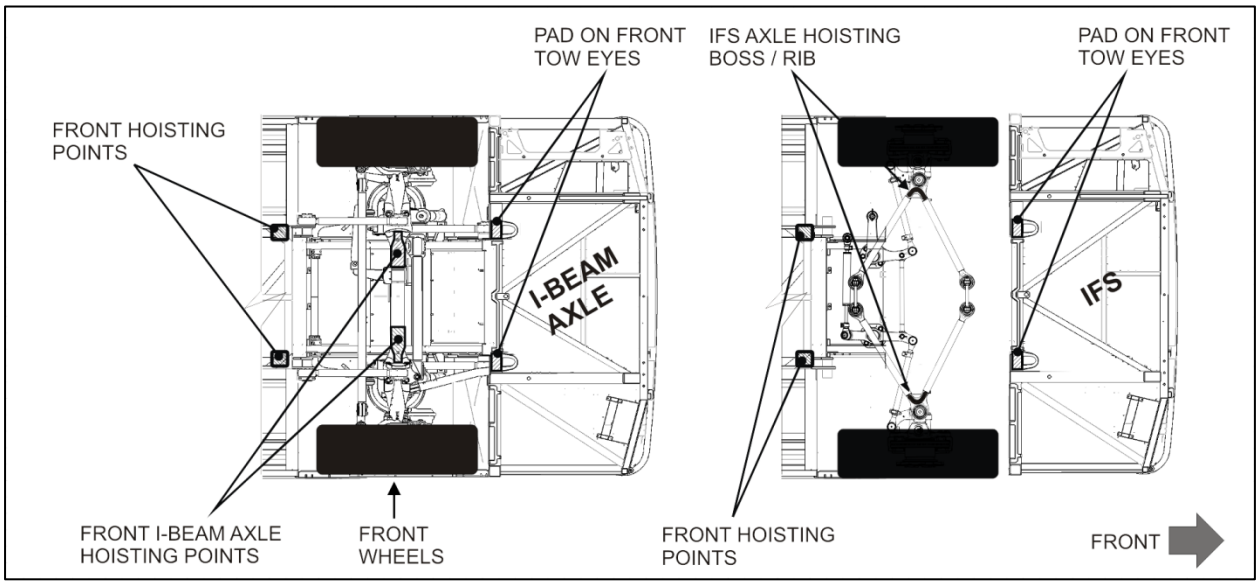


**FIGURE 1 *FRONT* HOISTING AND LIFTING POINTS DIAGRAM**

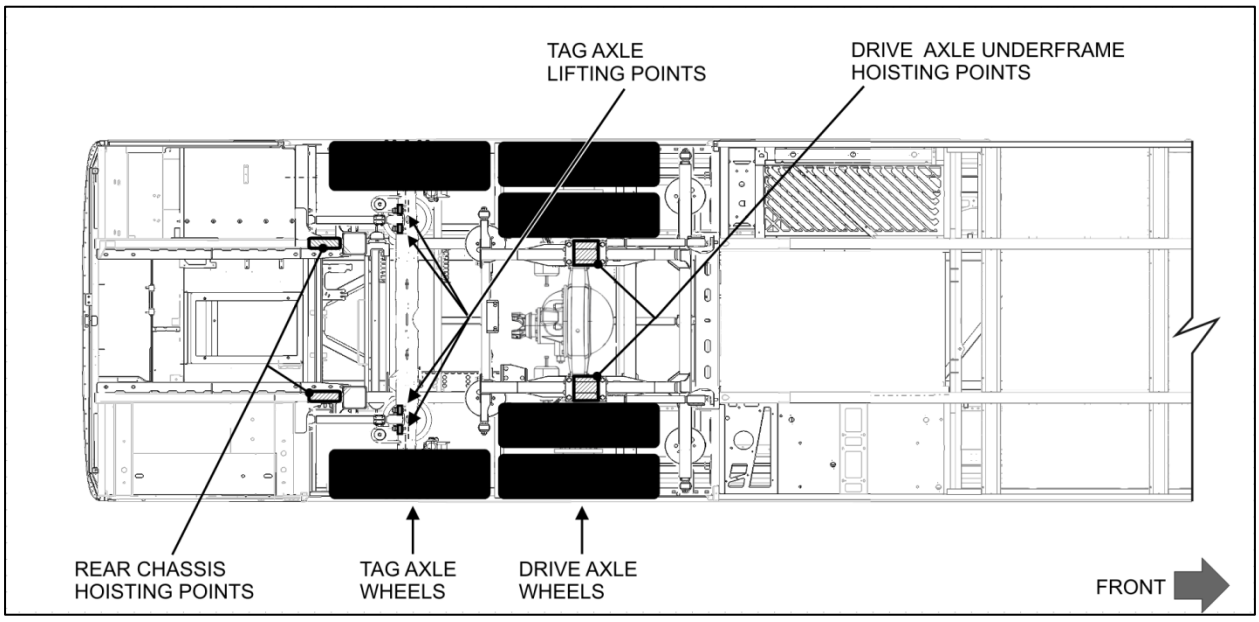


**FIGURE 2 *REAR* HOISTING AND LIFTING POINTS DIAGRAM**

The vehicle is provided with four standard chassis hoisting points. When axles or wheels are serviced, use the chassis hoisting points.

When using the chassis hoisting points to support the vehicle, **the tag axle must be unloaded at all times**. To prevent damage to the suspension, **always support the drive and front axles using jack stands** when using chassis hoisting points.

| CHASSIS HOISTING POINTS |
| --- |
| 2 hoisting points located aft of the tag axle (Figure3) |
| 2 hoisting points or optional hoisting pads with receptacles located aft of the front axle (Figure4) |



**FIGURE 3 : CHASSIS HOISTING POINTS - AFT OF TAG AXLE (BOTH SIDES)**

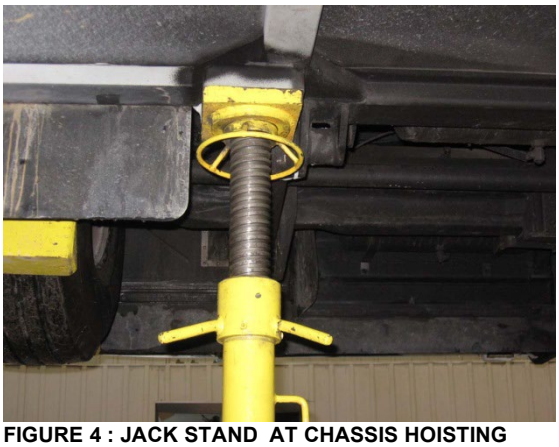

**FIGURE 4 : JACK STAND AT CHASSIS HOISTING POINT - AFT OF FRONT AXLE (BOTH SIDES)**

## 1.1 JACK STANDS

As a general recommendation, the minimum safe working load (SWL) for any jack stand should be 10 US tons (20 000 lb; 9072 kg). Figure5, Figure6 and Figure7 show general examples of this type of jack stand.

The vehicle can be supported at the chassis hoisting points (refer to HOISTING AND LIFTING POINTS diagram). Use a jack stand of 10 US tons (20 000 lb; 9072 kg) capacity at each of the four standard chassis hoisting points.

| ⚠ WARNING |
| --- |
| Hydraulic jacks are intended for lifting only. Do not get under the vehicle while using hydraulic jacks unless it is properly supported with safety jack stands. |



FIGURE 5 : 20 000 LB (10 US TON) CAPACITY JACK STAND



FIGURE 6 : 16500 LBF CAPACITY



FIGURE 7 : 40 000 LB (20 US TON) CAPACITY JACK STAND

## 1.2 AXLE HOISTING POINTS

| AXLE HOISTING POINTS |
|---|
| 2 front axle hoisting points (Figure8, Figure9, Figure10) |
| 2 drive axle sub frame hoisting points (Figure11) |
| 2 hoisting points under the tag axle (tag axle must be unloaded) (Figure12) |

**To ensure stability, always use the two hoisting points under a specific axle simultaneously**.

| **WARNING** |
|---|
| Two hoisting points are located under the tag axle. Using the tag axle as rear hoisting points for the vehicle should be avoided. When possible, use the drive axle as hoisting point. |

The vehicle can be lifted from the front axle and the drive axle sub frame using lifting equipment of appropriate capacity.

| APPROXIMATE WEIGHT PER AXLE | |
|---|---|
| **COACHES** | **MOTORHOMES / SPECIALTY VEHICLES** |
| Front axle: 12,000 lb. (5 443 kg)<br>Drive axle: 26,500 lb. (12 020 kg) | Contact the owner of the vehicle. The Gross Axle Weight Rating (GAWR) for the front and rear axle should not be exceeded.<br>GAWR values for a particular vehicle appear on the vehicle's certification plate installed on the driver's left-hand console. |

| **WARNING** |
|---|
| The suspension must be in the normal ride position before hoisting. |

| **WARNING** |
|---|
| To prevent damage to suspension components, always unload the tag axle before hoisting the vehicle. |

## FRONT AXLE HOISTING POINTS

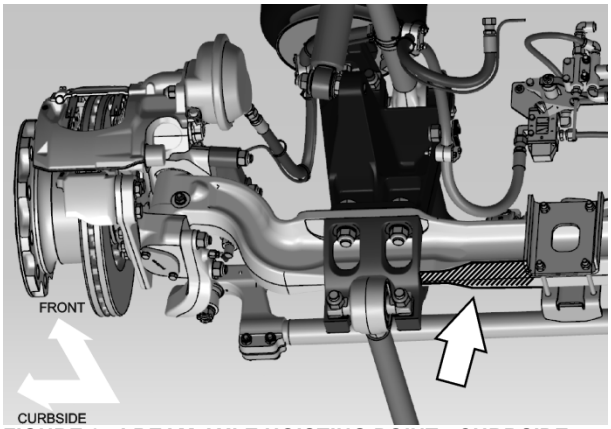


FIGURE 8 : I-BEAM AXLE HOISTING POINT - CURBSIDE

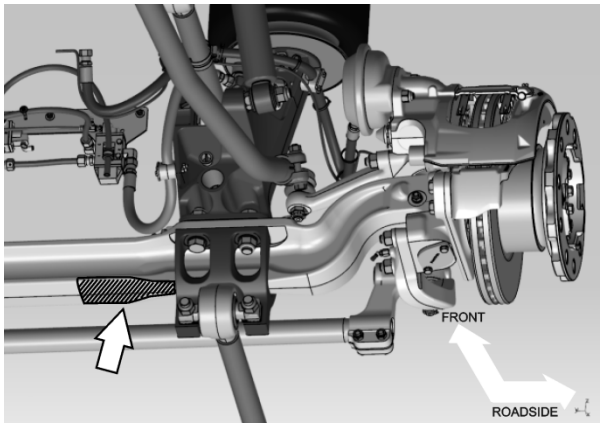


FIGURE 9 : I-BEAM AXLE HOISTING POINT – ROAD SIDE

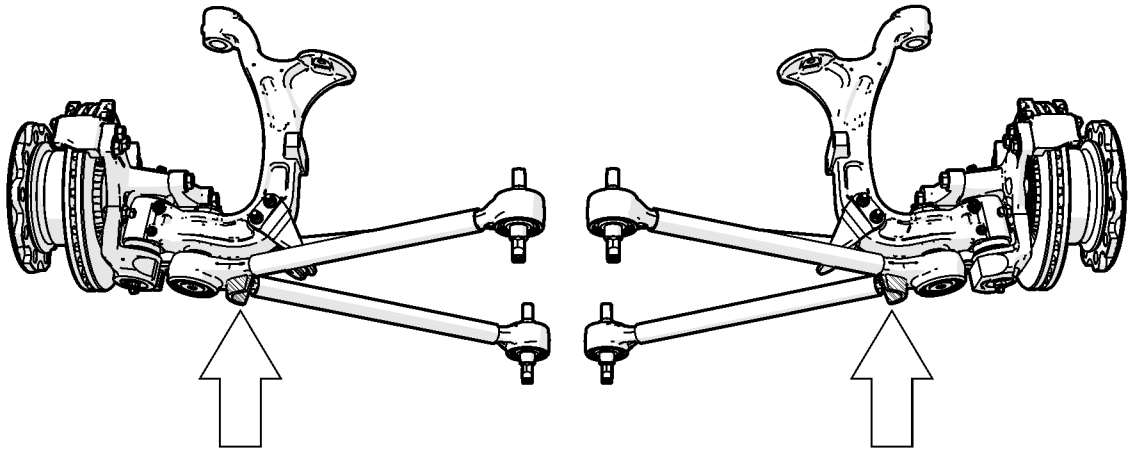

FIGURE 10 : INDEPENDENT FRONT SUSPENSION (IFS) HOISTING POINTS.

**DRIVE AXLE SUB FRAME HOISTING POINTS**

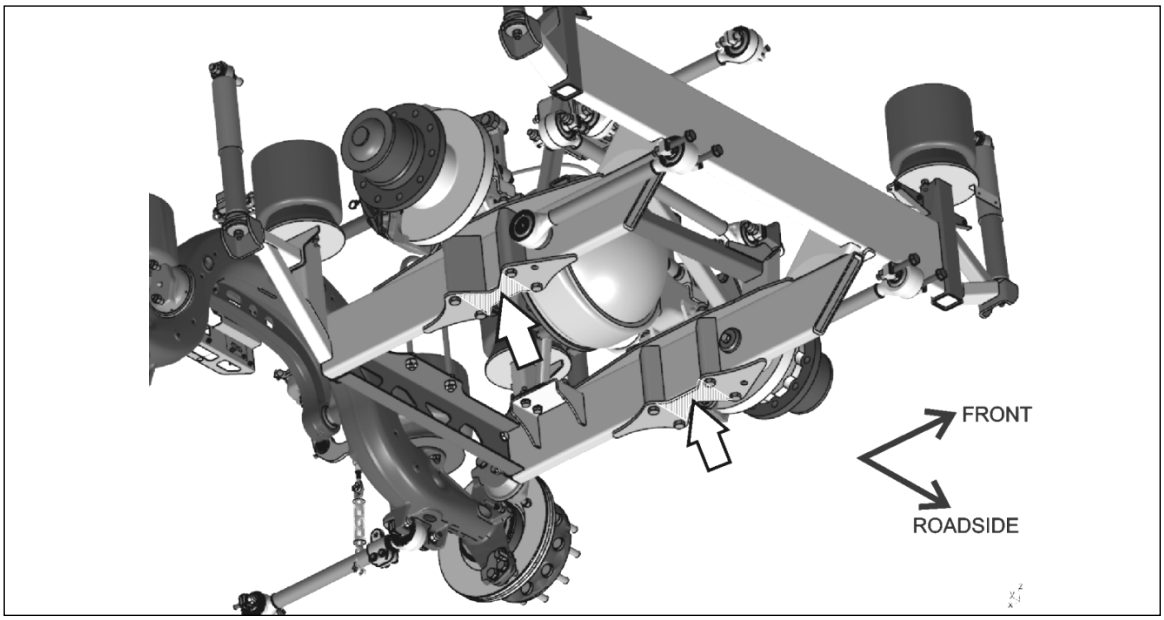


**FIGURE 11 : DRIVE AXLE SUB FRAME HOISTING POINTS.**

**TAG AXLE HOISTING POINTS**

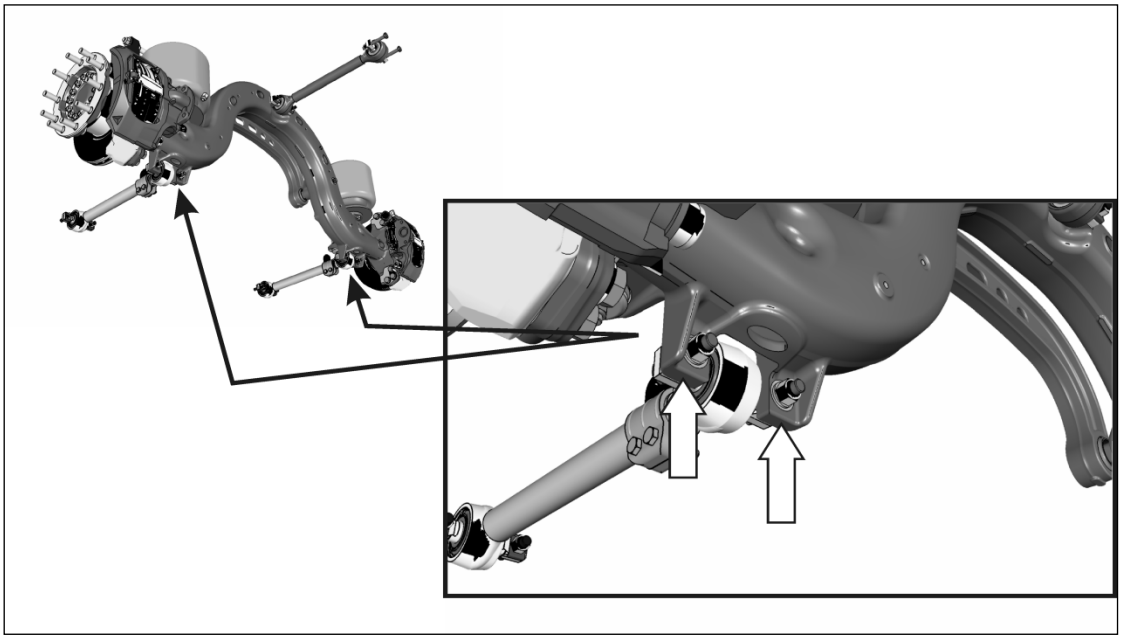

**FIGURE 12 : TAG AXLE HOISTING POINTS (USE ONLY TO SUPPORT THE TAG AXLE)**

## 1.3 USING WHEELS AS LIFTING POINTS

Use the front and drive axle wheels to lift the vehicle when using mobile column lifts. When doing so, the tag axle must be unloaded at all time.

Avoid using the tag axle wheels as the only lifting point for the rear of the vehicle. However, if the rear of the vehicle has to be lifted using the tag axle wheels, the tag axle must be unloaded at all times.

## 1.4 X-SERIES COMMUTER OPTIONAL CHASSIS HOISTING POINTS

On certain vehicles, lifting pads and rear emergency recovery toe eyes may be added on the chassis. When axles or wheels are serviced, use the chassis hoisting points.

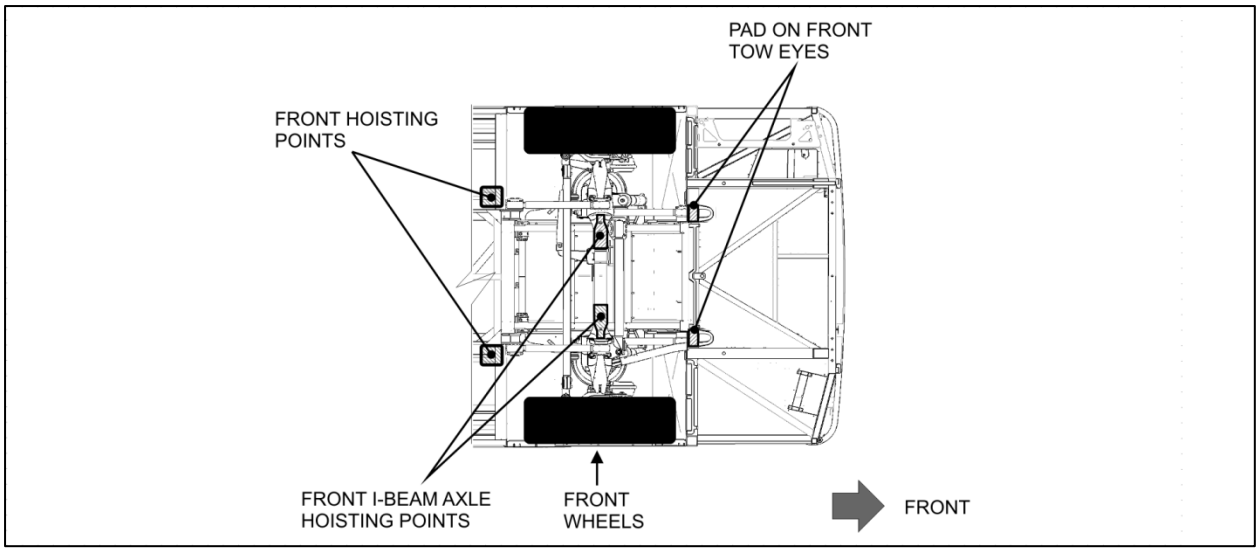


**FIGURE 13 : OPTIONAL FRONT CHASSIS HOISTING POINTS**

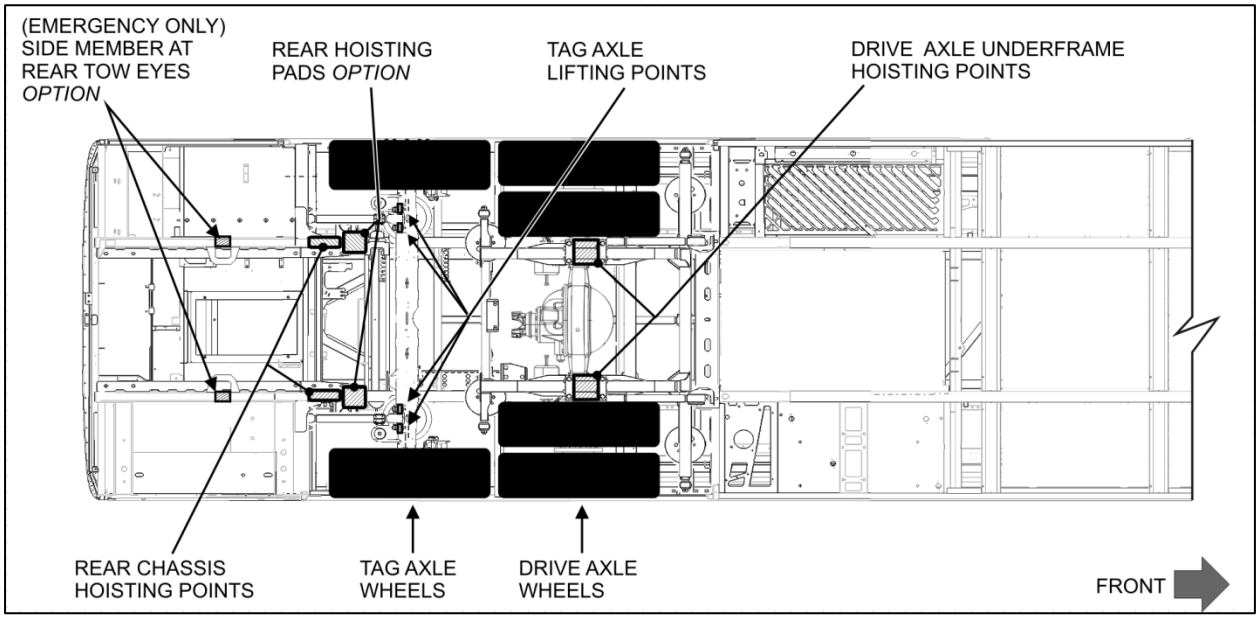


**FIGURE 14 : X-SERIES OPTIONAL REAR CHASSIS HOISTING POINTS**

When using the chassis hoisting points to support the vehicle, the tag axle must be unloaded at all times. To prevent damage to the suspension, always support the drive and front axles using jack stands when using chassis hoisting points.

| X-SERIES OPTIONAL CHASSIS HOISTING POINTS |
|---|
| 2 optional hoisting pads with receptacles located aft of the front axle (Figure16) |
| 2 optional hoisting pads with receptacles located aft of the tag axle (Figure15) |



**FIGURE 15 : OPTIONAL CHASSIS HOISTING RECEPTACLES - AFT OF TAG AXLE**



**FIGURE 16 : OPTIONAL CHASSIS HOISTING RECEPTACLES - AFT OF FRONT AXLE**



**FIGURE 17 : JACK STAND AT CHASSIS HOISTING RECEPTACLE - AFT OF FRONT AXLE, ROAD SIDE**



**FIGURE 18 : JACK STAND AT CHASSIS HOISTING RECEPTACLE - AFT OF FRONT AXLE, CURB SIDE**



**FIGURE 19 : JACK STAND AT CHASSIS HOISTING RECEPTACLE – AFT OF TAG AXLE, ROAD SIDE**



**FIGURE 20 : JACK STAND AT CHASSIS HOISTING RECEPTACLE – AFT OF TAG AXLE, CURB SIDE**

## 2. TOWING

Towing from the front is the recommended method. Prevost does not recommend towing from the rear using unapproved hoisting points as the vehicle may sustain structural damage.

Observe normal precautions including, but not limited to list below:

- Make sure the parking brake or the emergency brake is released at time of towing.
- Do not allow passengers to ride on board.
- Tow the vehicle at a safe speed.
- Accelerate and decelerate slowly and cautiously.
- Avoid sharp turns where possible.

**WARNING**

Do not carry passengers while the vehicle is being towed.

**CAUTION**

Avoid towing the vehicle from the rear using hoisting points that are not approved as this will cause structural damage. In case of damage to the drive train components use a low-bed semi-trailer.

**WARNING**

Engage the parking brake to prevent the vehicle from moving before you begin maintenance or service procedures that require you to be under the vehicle. Serious personal injury can result.

**CAUTION**

Lift the vehicle at the minimal height required for the vehicle to trail the tow truck.

### 2.1 PREPARATION BEFORE TOWING

**WARNING**

Prior to hoisting, park the vehicle on a level surface and apply parking brake.

Chock the *front and rear* wheels to prevent the vehicle from moving at time of releasing the parking brake during the towing preparation.

On the L.H. dashboard panel, turn on the hazard warning flashers. Preferably, use a towing light bar.



**FIGURE 21 CHOCK THE FRONT AND REAR WHEELS**

Place the front wheels in a straight-ahead position and keep the steering wheel from turning. To do so, slide the driver's seat close to the steering wheel. Wrap the safety belt around and through the steering wheel and then fasten safety belts.

This will ensure the vehicle rolls in straight direction to be stopped by the tow truck in case of mechanical failure of the lifting equipment.



**FIGURE 22**

### 2.1.1 Engine compartment emergency air-fill valve

Use the emergency fill valve to supply air to the system when the engine cannot be operated. This valve is located in the engine compartment (Figure23) and supplies air for all systems (brakes, suspension and accessories).

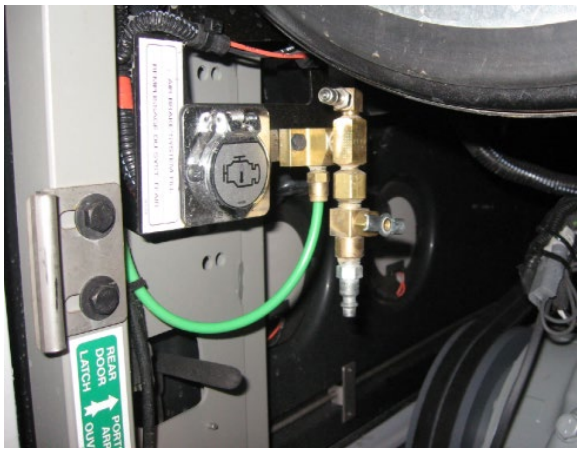


**FIGURE 23 : ENGINE COMPARTMENT EMERGENCY AIR-FILL VALVE**

> **CAUTION**
>
> Do not tow the vehicle without external air pressure applied to the emergency fill valve if the engine does not operate. Without brake system air pressure, the emergency spring brakes may apply automatically. If failure prevents releasing the parking brakes with air pressure, disengage the parking brakes mechanically.

### 2.1.2 X Series Optional Front Air Supply Connections

Operate the engine when towing to maintain brake system air pressure. If the engine cannot be operated, connect external air pressure lines from the tow truck.

**"Brake" quick connect fitting**

Flip down the access door located on the front bumper, connect an auxiliary air supply from the tow truck to the quick connect fitting identified BRAKE in order to supply air for operation of the vehicle **service brake** from the tow truck (Figure24, Figure25).

**"Air supply" quick connect fitting**

While the vehicle is being towed, connect an auxiliary air supply from the tow truck to the quick connect fitting identified AIR SUPPLY to supply air for all systems (brakes, suspension, accessories) through the air dryer (Figure24, Figure25).




FIGURE 24

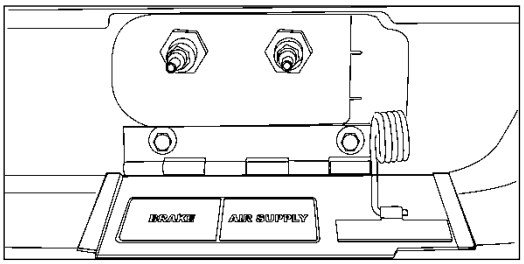


**FIGURE 25 : FRONT TOWING AIR SUPPLY ACCESS PANEL QUICK CONNECT FITTINGS**

### 2.1.3 Drive Axle Flange Shaft Removal

1. Apply the parking brake.
2. Remove the stud nuts and the washers (with Meritor drive axle) or cap screws (with ZF drive axle) from the flange shaft.

   **NOTE: there is oil behind the flange shaft which comes out during disassembly**

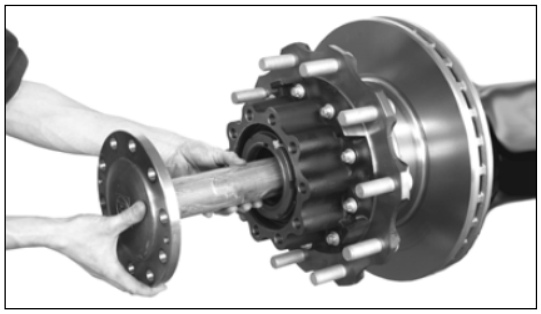

**FIGURE 26 : ZF A-132 AXLE**

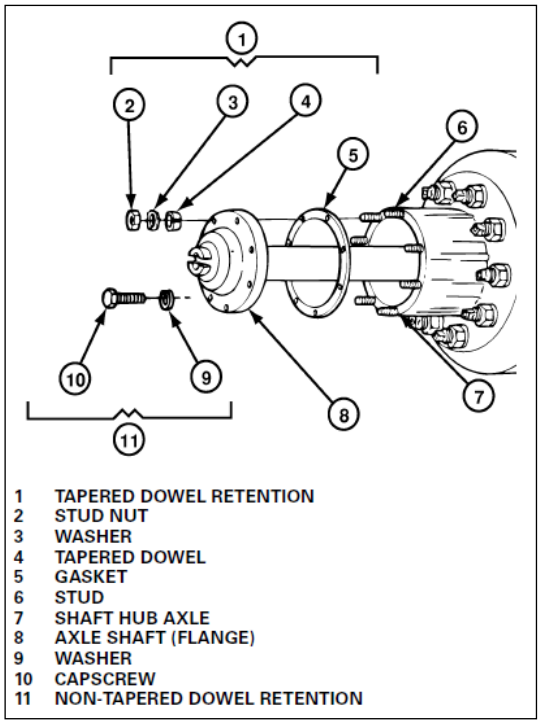


1 TAPERED DOWEL RETENTION
2 STUD NUT
3 WASHER
4 TAPERED DOWEL
5 GASKET
6 STUD
7 SHAFT HUB AXLE
8 AXLE SHAFT (FLANGE)
9 WASHER
10 CAPSCREW
11 NON-TAPERED DOWEL RETENTION

**FIGURE 27: MERITOR RC23-165 AXLE**

## CAUTION

Do not use a chisel or wedge to loosen the axle flange shaft and tapered dowels. Using a chisel or edge can result in damage to the axle shaft, the gasket and seal, and/or the axle hub.

3. Meritor axle: Loosen the tapered dowels in the flange of the axle shaft using the following methods.
   a) Do not strike the round driving lugs on the flange of an axle shaft. Pieces can break off and cause serious personal injury. A 1.5-inch (38.1 mm) diameter brass hammer can be used as a drift.
   b) Hold a 1.5-inch (38.1 mm) diameter brass drift against the center of the axle shaft flange, **inside the round driving lugs.**
   c) Hit the end of the drift with a large hammer (5 to 6 lbs.') to loosen the axle shaft and tapered dowels from the hub.
4. Identify each axle shaft that is removed from the axle assembly so they can be installed in the same location after transporting or repair is completed. (Example: Match mark a mating axle shaft and hub).

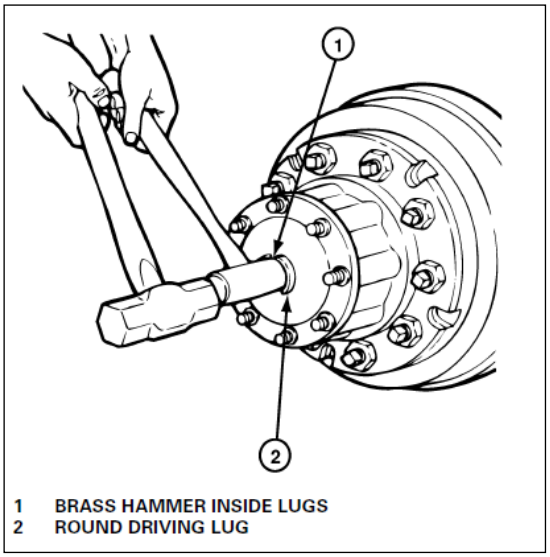


1 BRASS HAMMER INSIDE LUGS
2 ROUND DRIVING LUG

**FIGURE 28: MERITOR RC23-165 AXLE**

5. Remove the tapered dowels (if used), gasket or O-ring and the axle shaft from the axle assembly. Use a container to recover the oil.
6. Remove opposite flange shaft similarly.
7. Install a temporary cover over the open end of each hub where an axle shaft was removed. This will prevent dirt from entering the bearing cavity and loss of lubricant.

### 2.1.4 After Towing

1. Remove the covers from the hubs.
2. Install the gasket or O-ring, and axle shaft into the axle housing and carrier in the same location it was removed from. The gasket and flange of the axle shaft must be flat against the hub. Rotate the axle shaft and/or the driveline as necessary to align the splines and the holes in the flange with the studs or holes in the hub.
3. **Meritor axle only:** Install the dowels over each stud and into the tapered holes of the flange.
4. Install the washers and stud nuts or cap screws.

| MERITOR RC23-165 AXLE | ZF A-132 AXLE |
|---|---|
| Determine the size of the fasteners and tighten the nuts to the corresponding torque value shown below.<br>• 9/16-18 plain nuts: **110 - 165 lbf-ft** (149-224 Nm)<br>• 5/8-18 plain nuts: **150 - 230 lbf-ft** (203-312 Nm) | Tightening torque M18x1.5 G10.9 screw<br>**325 lbf-ft** (440 Nm) |

5. Mount opposite flange shaft similarly.
6. Inspect the lubricant level in the axles and hubs where the axle shafts were removed. Add the correct type and amount of lubricant if necessary.

**CAUTION**

Make sure axle shafts or driveshaft are installed correctly after towing. Tighten axle shaft and driveshaft nuts to the correct torque settings. Do not invert shafts.

## 2.2 TOWING FROM THE FRONT

The towed vehicle must be lifted from the front with front wheels off the ground. The tow truck must be equipped with the proper lifting equipment i.e. tow bar, axle forks and holders to reach under the ***front axle*** or the ***front tow eye pads***. No other lifting points are recommended for towing.

Lifting and towing from any other point is not authorized as it may cause structural damage. **To prevent overloading the drive axle, do not unload or raise the tag axle when towing the vehicle**.

To prevent damage to the vehicle, use the ***front tow eye pads*** fixed to the vehicle chassis between the front axle and the front bumper. Only use a solid link tow bar and safety chains to tow the vehicle.

1. Block the wheels to prevent the vehicle from moving.
2. Perform the PREPARATION BEFORE TOWING. Refer to paragraph 2.1.
3. Disconnect both drive axle shafts to prevent damage to the transmission. Plug axle tubes to prevent oil loss. Refer to 2.1.3 DRIVE AXLE FLANGE SHAFT REMOVAL.

## CAUTION

The axle shafts must be disconnected to avoid serious damage to the Allison transmission. Lubrication is inadequate when towing.

To prevent damage to the drive train components, disconnect drive axle shafts before towing. Do not attempt to push or pull start a vehicle equipped with an automatic transmission.

**Failure to disconnect the propeller shaft, remove the drive axle shafts or lift the drive wheels off the ground before towing can cause serious transmission damage and void the warranty.**

### 2.2.1 First Lift

To allow lifting equipment fitted with axle forks to reach under the front axle or tow eyes, it is necessary to perform a first lift of the front of the vehicle using the tow eye pads as lifting points. This first lift will allow tow cans or blocks to be placed underneath front tires.

1. Retract the tow truck stinger arm.
2. On the first lift, position the tow bar fork holders under the front tow eye pads (Figure 30 and Figure 31) to lift the vehicle in order to place the front wheels firmly on the tow cans or blocks.

*Center to center measurement between tow eyes= 37 inches (*Figure 29*)*

***Note: No axle forks are needed for this first lift***




**FIGURE 29**

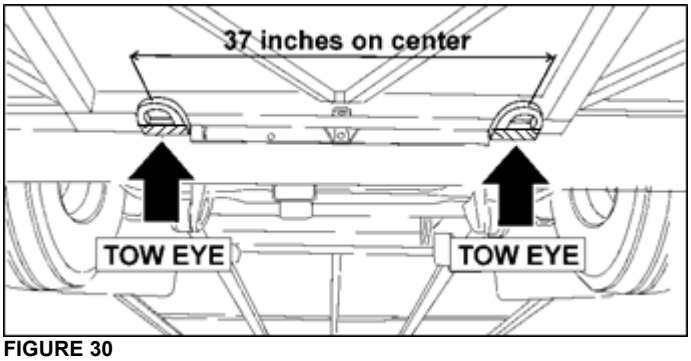


**FIGURE 30**



**FIGURE 31:** TOW EYE

3. Deploy the tow truck stinger arm, placing the axle fork holders under the tow eye pads (Figure 32).

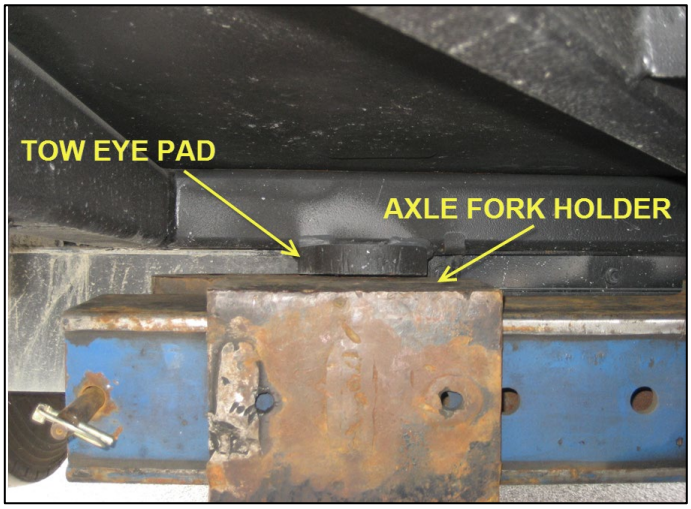


**FIGURE 32**

4. Lift the front end of the vehicle high enough to allow installation of tow cans or blocks. Place the tow cans or blocks perfectly centered underneath each front wheel (Figure 33).
5. With precaution, lower the front of the vehicle



**FIGURE 33**

### 2.2.2 Second Lift- Front Tow Eye Pads as Lifting Point for Towing

The tow eye pads are fixed to the vehicle chassis, fore of the front axle will be used as front end lifting points for towing.

1. Perform the first lift as instructed in paragraph 2.2.1 if not already done.

2. Place the axle forks on the tow bar fork holders (Figure 34).

**Use 3" to 4 ½" mouth axle forks preferably**



**REGULAR**

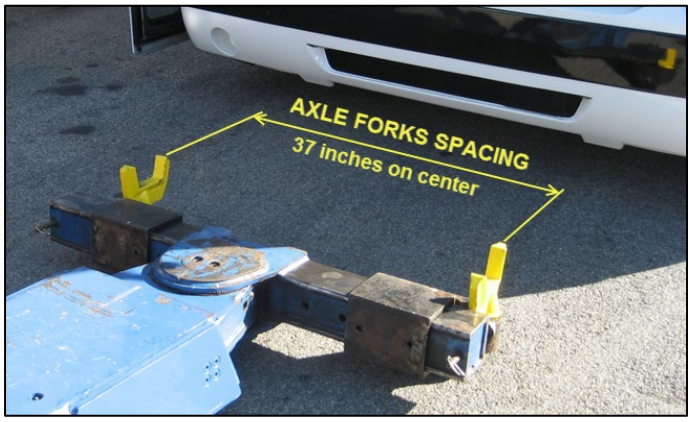


**FIGURE 34**

***Pre-adjust spacing between axle forks to = 37 inches***

3. Lower the tow bar and position under the front tow eye pads.

4. Adjust fork holder's position and hand guide the forks into each front tow eye. (Figure 35)

5. Lift the tow bar until the axle forks fit snugly into the front tow eyes (Figure 35).

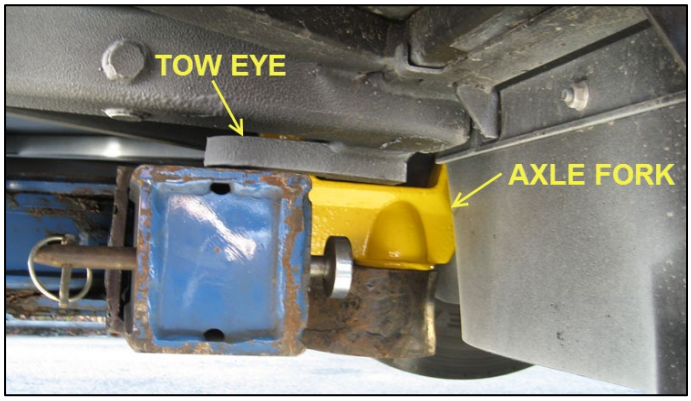


**FIGURE 35**

6. Raise the front of the vehicle.

7. Install a jack stand under the stinger arm for support and safety purposes and then lower the stinger arm so it rests on the jack stand (Figure 36). The tow cans or blocks can be removed from under the front axle wheels.

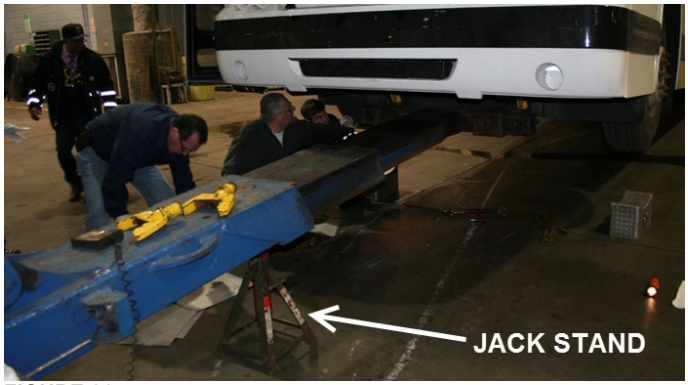


**FIGURE 36**

8. Tie the two choke chains together to secure the tow eyes to the tow bar attachment (Figure 38).

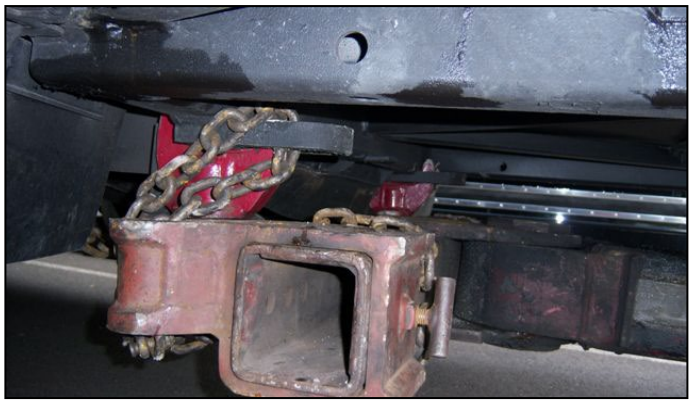

**FIGURE 37**

9. Attach the two tow truck safety chains from each of the two front lower radius rods (Figure 38) of the vehicle to the truck's tow eyes (Figure 38).



**FIGURE 38**

10. Confirm air is supplied to the vehicle. See 2.1 PREPARATION BEFORE TOWING



**FIGURE 39**

11. Raise the stinger arm and remove the support jack stand.
12. Lower the vehicle. The front tires should be 7″ to 8″ above the ground before the tow can proceed.
13. Use bungee cords to support the safety chains (Figure 40).



**FIGURE 40**

14. If required, use the appropriate jig to assure that the highest point on the vehicle **does not exceed** the maximum allowable height for towing (Figure 41).
15. Make sure the **parking brake** is released before moving the vehicle.
16. Observe safety precautions when towing.



**FIGURE 41**

***Avoid sharp turns where possible as safety chains may rub and damage the front bumper (***Figure 42***)***



**FIGURE 42**

### 2.2.3 Second Lift- Using I-Beam Front Axle as Lifting Point for Towing

This method uses the I-beam axle as lifting points for towing (Figure8 and Figure9).

1. Perform the first lift as instructed in paragraph 2.2.1 if not already done.

2. Install regular axle forks onto tow bar fork holders.



TALL REGULAR

***Pre-adjust spacing between axle forks***

Minimum spacing: 25 inches

Maximum spacing: 33 inches

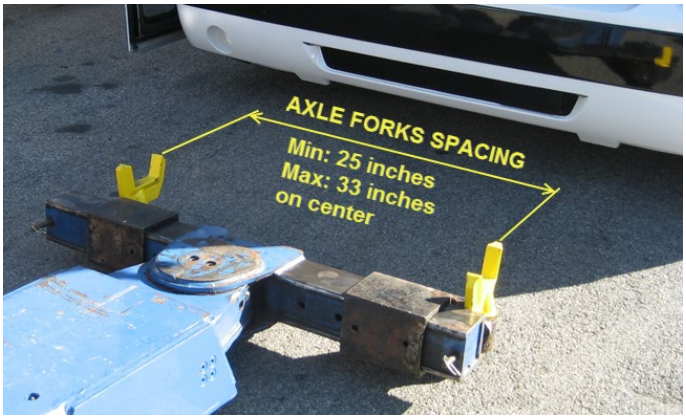


**FIGURE 43**

3. Lower the stinger arm to position the axle forks under the front axle hoisting points (Figure8 and Figure9).

4. Lift the tow bar until the axle forks grab the front axle I-beam at the hoisting points (Figure 44).

5. Raise the front of the vehicle.

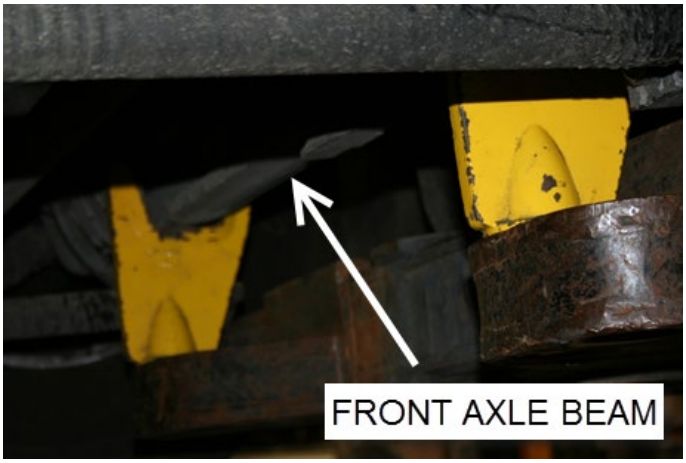


**FIGURE 44**




**FIGURE 45**

6. Install a jack stand under the stinger arm for support and safety purposes and then lower the stinger arm so it rests on the jack stand (Figure 47). The tow cans or blocks can be removed from under the front axle wheels.
7. Tie the two choke chains together to secure the front axle to the tow bar. Take up any slack that may remain and maintain proper tension on chains.

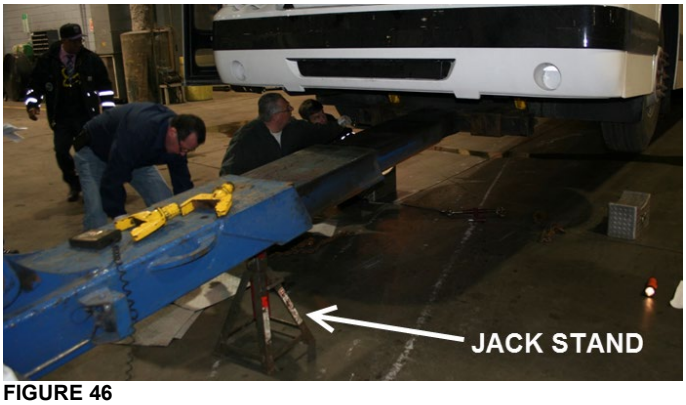

**FIGURE 46**

8. Attach the two tow truck safety chains from each of the two front tow eyes of the vehicle to the truck's tow eyes (Figure 47 and Figure 48).
9. Confirm air is supplied to the vehicle. See 2.1 PREPARATION BEFORE TOWING.


**FIGURE 47**

10. Raise the tow bar in order to remove the jack stand from under the stinger arm.
11. Lower the vehicle. The front tire should be about 7″ to 8″ above the ground before the tow can proceed.


**FIGURE 48**

12. Use bungee cords to support the safety chains (Figure 49).



**FIGURE 49**

13. Make sure that the **parking brake** is released before moving the vehicle.
14. Observe safety precautions when towing.




**FIGURE 50**

***Avoid sharp turns where possible as safety chains may rub and damage the front bumper (***Figure 51***)***



**FIGURE 51**

**CAUTION**

Make sure a safe distance is kept between the front of the vehicle and the tow truck. This space ensures that vehicle does not suffer damages when being towed.

**CAUTION**

Make sure axle shafts or driveshaft are installed correctly after towing. Tighten axle shaft and driveshaft nuts to the correct torque settings. Do not invert shafts.

**DANGER**

Do not carry passengers while the vehicle is being towed.

## 2.3 X-SERIES RECOVERY USING OPTIONAL REAR TOW EYES

Optional rear tow eyes allow recovery of a vehicle that is no longer on a drivable surface. Chains can be looped around or hooked to these rear tow eyes.

**CAUTION**

This recovery method should be used only for a short distance with all vehicle wheels on the ground

After the vehicle has been brought back on a drivable surface, it should be lifted and towed from the front, with front wheels off the ground.

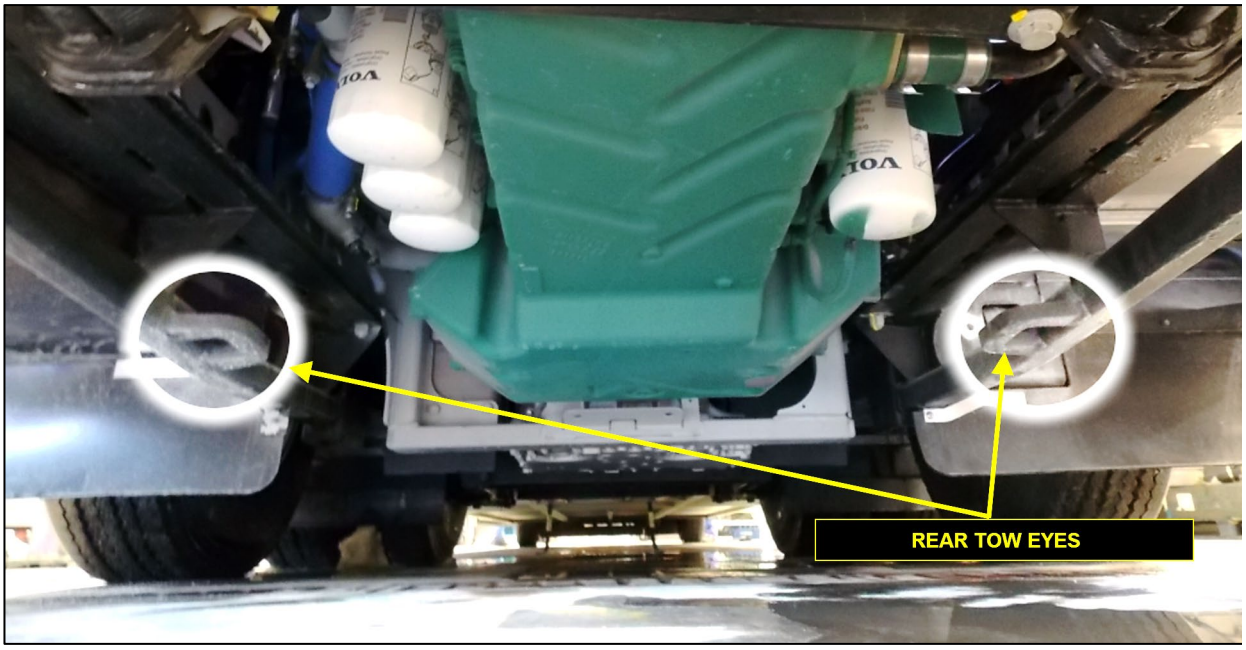


**FIGURE 52 :** OPTIONAL REAR TOW EYES ON SIDE MEMBERS UNDER ENGINE CRADLE SUPPORT RAILS

## 3. EMERGENCY TOWING

If the vehicle must be moved and standard towing procedures cannot be used, follow the alternate towing procedures below.

### 3.1 REAR TOW USING NON-APPROVED LIFTING POINTS - *EMERGENCY ONLY*

> **CAUTION**
>
> The vehicle should **NOT** be lifted and towed from the rear in normal situations.
>
> In an emergency, however, it can be moved from the rear over a very short distance such as in a parking lot or to place the vehicle back on pavement.
>
> Lifting the rear end from the engine cradle or from the side members located under the engine cradle support rails should be avoided. Doing so may cause structural damage (see image further in this document).

#### 3.1.1 PRECAUTIONS

**In an emergency or if the vehicle has to be moved over a short distance, the side members may be used as lifting point. Try to lift from the strongest location along the side members which is near the rear sub-frame vertical member (**Figure 53**).**

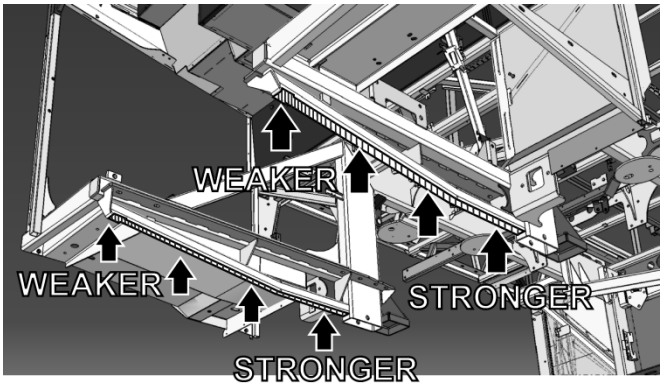


**FIGURE 53**: UNAPPROVED LIFTING POINTS FOR REAR END TOWING – SIDE MEMBERS LOCATED UNDER THE ENGINE CRADLE SUPPORT RAILS

Lift with precautions as the vehicle may sustain structural damage at the vertical structure shown on the image at right (Figure 54).

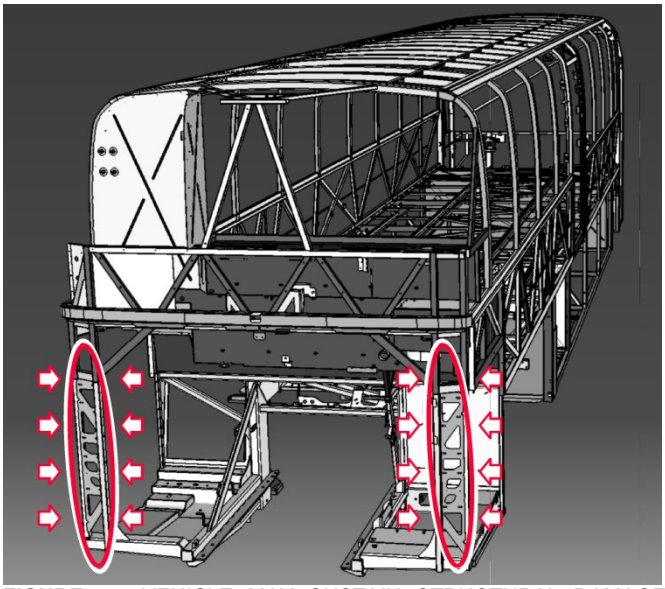

**FIGURE 54**: VEHICLE MAY SUSTAIN STRUCTURAL DAMAGE WHERE INDICATED WITH ARROWS DURING TOWING FROM THE REAR

**DANGER**

Do not carry passengers while the vehicle is being towed.

### 3.1.2 FIRST LIFT

A first lift of the vehicle is required. This first lift will allow tow cans or blocks to be placed underneath the drive axle tires.

1. Prepare the vehicle for towing as instructed in paragraphs 2.1 and 2.1.1
2. If not already done, chock the front wheels.
3. Retract the tow truck stinger arm (Figure 55).
4. Pre-adjust spacing between the axle fork holders. The spacing between the most distant edges of the folk holders should be **30 inches** (Figure 55).

   ***No axle forks will be used for this first lift***



TALL REGULAR

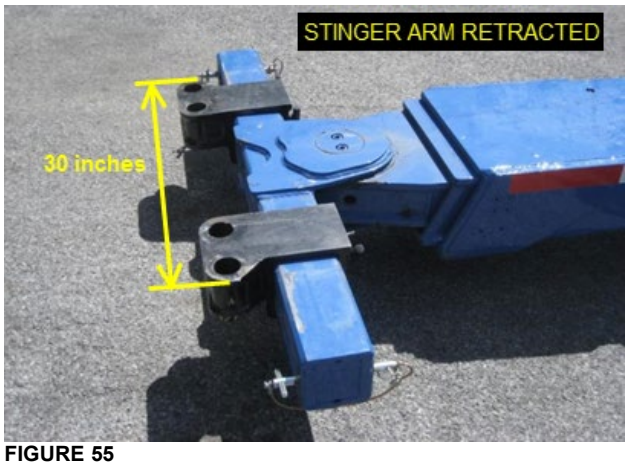


FIGURE 55

5. Deploy the tow truck stinger arm. Place the fork holders under the engine cradle transverse beam as shown on Figure 56. Lift the tow bar until the fork holders come into contact with the cradle transverse beam.

   ***Lifting from the engine cradle is the least preferred option and should be done only if lifting from under the side members shown on*** Figure 53 ***cannot be achieved***

**CAUTION**

Remember, lifting the rear end from the side members located under the engine cradle or by the engine cradle itself may cause structural damage.

**CAUTION**

Use caution when lifting from the engine cradle transverse beam. Maintain the vehicle in that situation during the shortest period of time.




FIGURE 56

6. Raise the tag axle to prevent it from hanging unsupported.

7. On X-Series commuter vehicles only, the tag axle air valve lever is located in the front service compartment. Move it forward as shown on Figure 57.

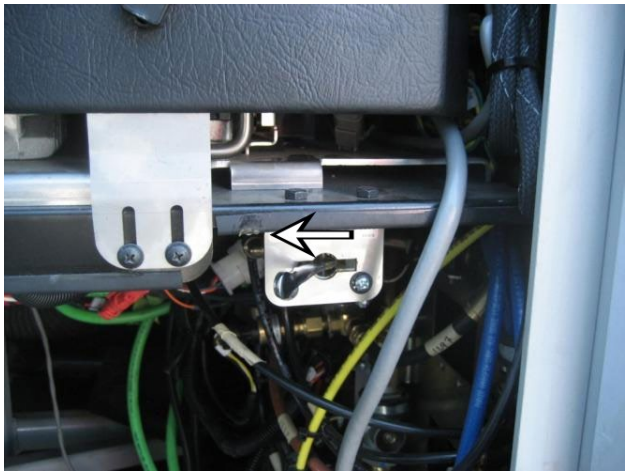

**FIGURE 57:LOCATION OF COMMUTER TAG AXLE AIR VALVE**

8. Lift the rear end of the vehicle high enough to allow installation of tow cans or blocks underneath the drive axle wheels (Figure 58).
9. With precautions, lower the rear of the vehicle.



**FIGURE 58: TOW CAN**

### 3.1.3 SECOND LIFT

1. Perform the first lift as instructed in paragraph 3.2 if not already done.
2. Retract the tow truck stinger arm.
3. Pre-adjust spacing between the axle fork holders to **43 inches**.




**FIGURE 59**

4. Install either long or short axle forks into fork holders.

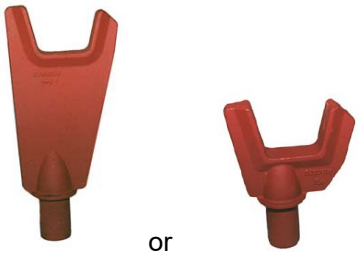

**TALL** or **REGULAR**

5. Deploy the tow truck stinger arm. Place the axle forks under the rear tow eyes if equipped or under the side members (Figure 60).

   Place the forks in a transversal position i.e. perpendicularly to the side members (Figure 61).

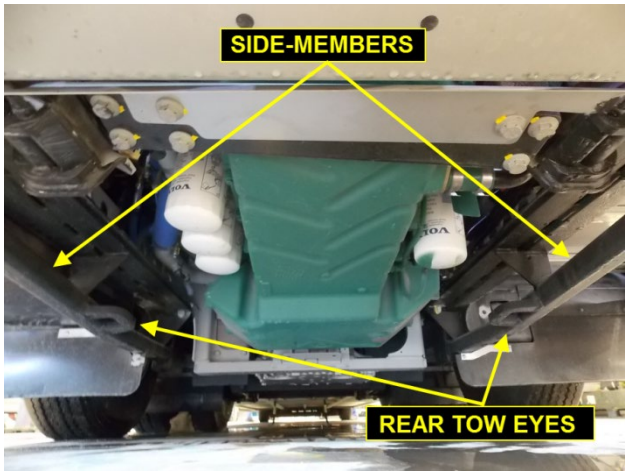


**FIGURE 60:** REAR TOW EYES ON SIDE MEMBERS LOCATED UNDER ENGINE CRADLE SUPPORT RAILS

6. Lift the tow bar until the axle forks grab the side members (Figure 61).

   If equipped with rear tow eyes, lift the tow bar until the axle forks fit snuggly into the side-members tow eyes.

   ***Avoid lifting at the side-members further toward the rear of the vehicle (close to the bumper)***

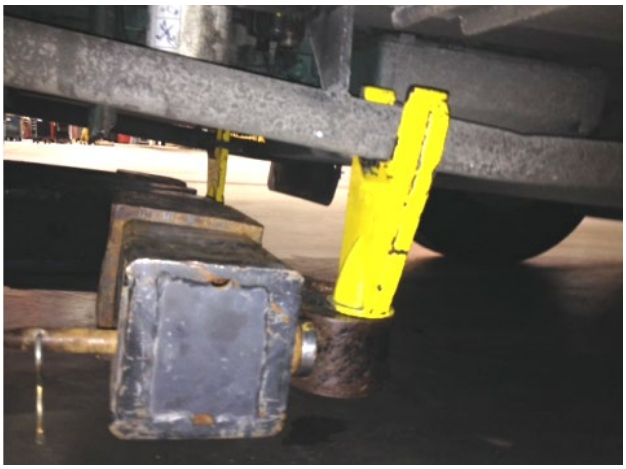

**FIGURE 61 :** PROPER LOCATION WHEN LIFTING THE SIDE MEMBERS

7. Place the fork's shorter finger outboard for better clearance (see Figure 62).




**FIGURE 62 :** PROPER LOCATION WHEN LIFTING THE SIDE MEMBERS – VEHICLE EQUIPPED WITH REAR TOW EYES

8. Raise the rear of the vehicle.
9. Install a jack stand under the stinger arm for support and safety purposes and then lower the stinger arm so it rests on the jack stand (Figure 63). The tow cans or blocks can be removed from under the drive axle wheels.



**FIGURE 63**

10. Install the choke chains. Tie the two choke chains together to secure the side members to the tow bar (Figure 64 and Figure 65). Take up any slack that may remain and maintain proper tension on chains.



**FIGURE 64**

11. Shorten the stinger arm to the safest minimum distance between the vehicle and the tow truck to allow the towed vehicle to be as close as possible to the truck yet allowing enough room for the vehicle to avoid collision with the tow truck during turns.

    **Stinger to the rear bumper: Between 59″ and 63″**



**FIGURE 65**

12. Attach the two tow truck safety chains from the vehicle engine cradle cross-member to the truck's tow eyes (Figure 66).
13. Raise the stinger arm and remove the support jack stand.
14. Lower the vehicle. The drive axle tires should be 5″ to 6″ above the ground before the short distance tow can proceed.



**FIGURE 66**

### 3.2 VOLVO *I-SHIFT* TRANSMISSION *TOWING MODE*

The procedure will activate "*tow mode"* on the transmission and will allow the vehicle to be towed flat on all wheels without having to remove the driveshaft.

| **CAUTION** |
|---|
| Check vehicle **VIN** before starting. Earlier vehicles do not have the proper software. |

**This special procedure applies to:**

| Model | VIN   |
|---|---|
| All X Series Vehicles<br>Model Year : 2014 - | *With I-shift gearbox*<br>From 2PCG33497**E**C73**5459** up to Current Vehicles |
| All H Series Vehicles<br>Model Year : 2013 - | *With I-shift gearbox*<br>From 2PCH33499**D**C71**2364** up to Current Vehicles |

| **CAUTION** |
|---|
| **Forward towing only!** Reverse towing (backing-up) is not allowed with this procedure or damage to the gearbox will occur. |

| **CAUTION** |
|---|
| This procedure should be used in emergency only.<br>This procedure does not have any visual indicator, therefore, make sure all steps of the procedure are fulfilled, or transmission damage may occur. |

Towing gear **3 HR** will be engaged if conditions below are fulfilled in the following sequence:

- **A.** *Ignition key must be in the "**ON**" position*
- **B.** *Engine not running*
- **C.** *Adequate **air pressure to the gearbox**/ Vehicle must have **electrical power***
- **D.** *Shift pad must be in **neutral***
- **E.** *Vehicle must be towed FORWARD only*

## PARTS / WASTE DISPOSAL

Discard according to applicable environmental regulations (Municipal/State[Prov.]/ Federal)

*Access all our Service Bulletins on http://techpub.prevostcar.com/en/*
*Or scan the QR-Code with your smart phone*
*.*

**Are you a vehicle owner?**
*E-mail us at **technicalpublications_prev@volvo.com** and type "ADD" in the subject to receive warranty bulletins applicable to your vehicle(s) by e-mail.*

PREVOST

# MAINTENANCE INFORMATION

**MI23-03**

| | | |
|---|---|---|
| DATE : | May 2023 | SECTION : 18 BODY |
| SUBJECT : | **DASHBOARD COVERS REMOVAL PROCEDURE** | |

First Release 05-31-2023

## APPLICATION

| Model | VIN  |
|---|---|
| H3-45 coaches<br>Model Year: 2024 - … | From 2PCH3349X***R***C72***1453*** |
| H3-45 VIP motorhomes<br>Model Year: 2023 - … | From 2PCVS3499***P***C72***1348*** |

## DESCRIPTION

Perform the following procedure to remove the dashboard covers. Reinstallation is similar to removal but in reverse order.

## Table of contents


SAFETY PRECAUTIONS....2
PART 1 - INSTRUMENT PANEL COVER REMOVAL....3
PART 2 - DASHBOARD COVER REMOVAL....5
PART 3 - RIGHT SIDE OF THE DASHBOARD – ACCESS PANEL REMOVAL....7
PART 4 - RIGHT SIDE OF DASHBOARD REMOVAL....9

## SAFETY PRECAUTIONS

- Eye protection should always be worn when working in a shop.
- Rules for Personal Protection Equipment should always be respected. Wear your PPE including but not limited to the following:

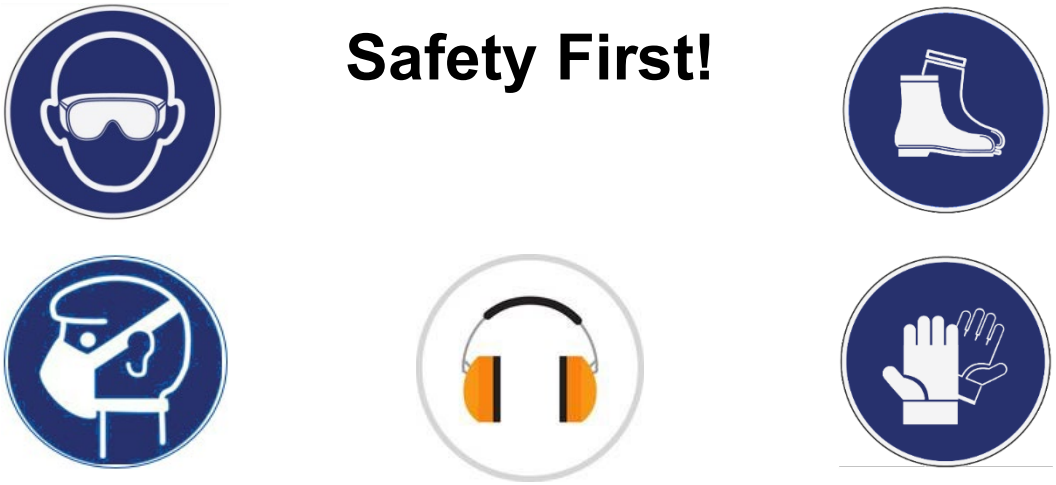


**DANGER**

Park vehicle safely, apply parking brake, stop the engine. Prior to working on the vehicle, set the ignition switch to the OFF position and trip the main circuit breakers equipped with a trip button. On Commuter type vehicles, set the battery master switch (master cut-out) to the OFF position.

Lockout & Tag out (LOTO) must be performed during set-up, maintenance or repair activities. Refer to your local procedure for detailed information regarding the control of hazardous energy.

# PART 1 - INSTRUMENT PANEL COVER REMOVAL

1. From underneath the instrument panel cover, unscrew two (2) socket hex screws.

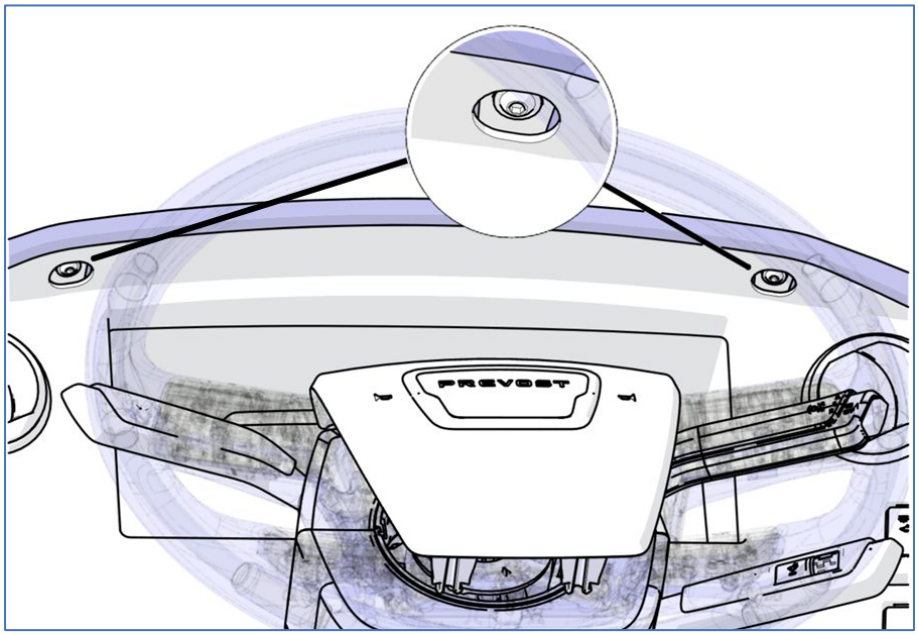


FIGURE 1

2. Look at the following image to understand how the instrument panel cover is held in place with flexible tabs close to the windshield.

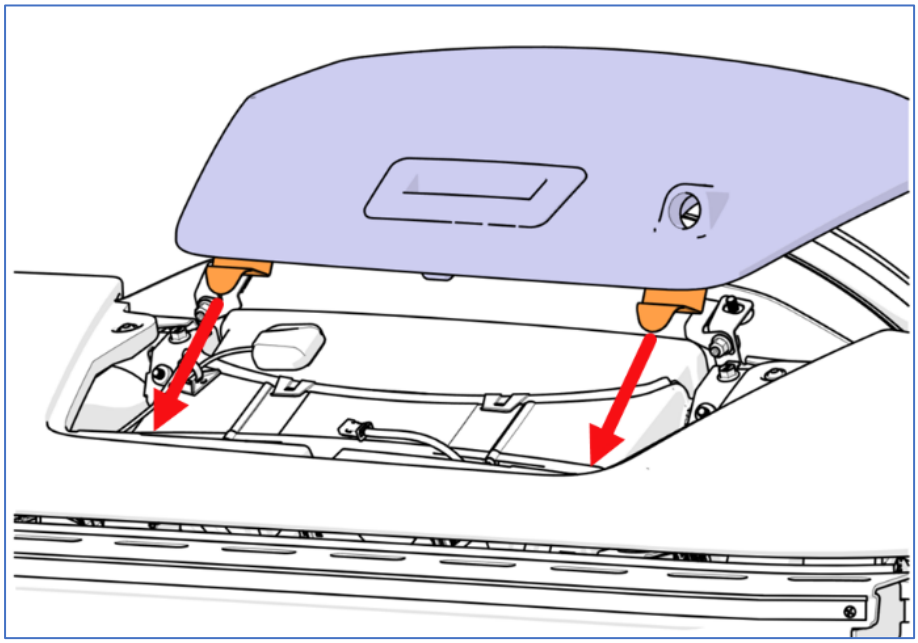

FIGURE 2

3. Lift the edge of the instrument panel cover with a light force then pull the cover toward you.

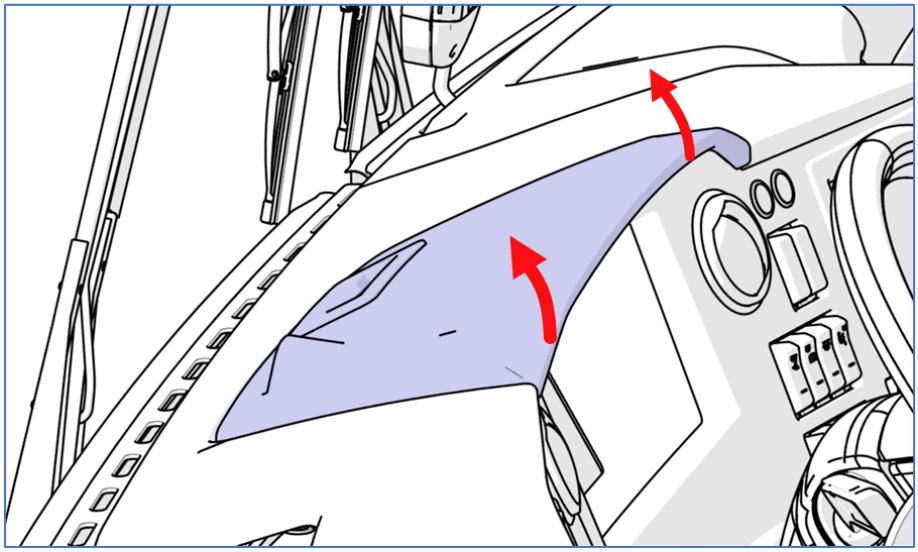

FIGURE 3

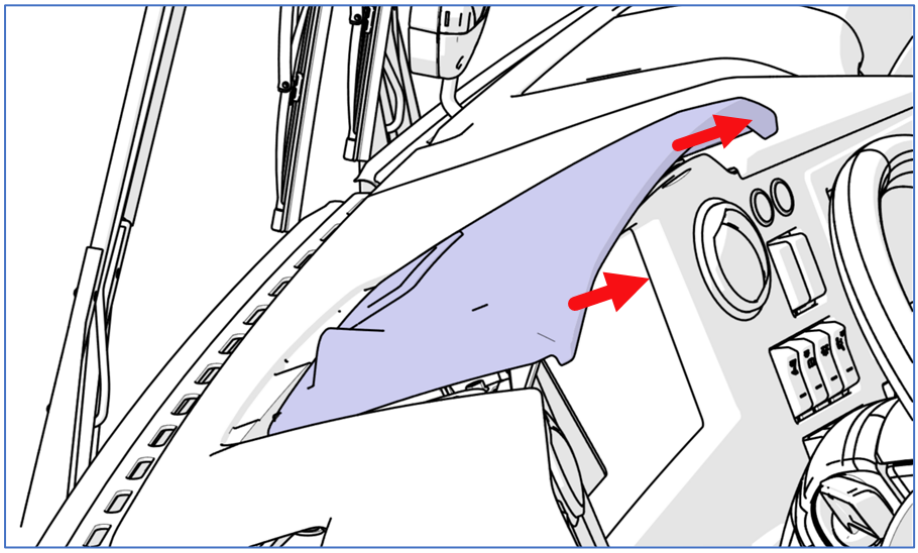

FIGURE 4

## PART 2 - DASHBOARD COVER REMOVAL

1. Remove the three (3) screws shown on the image below.

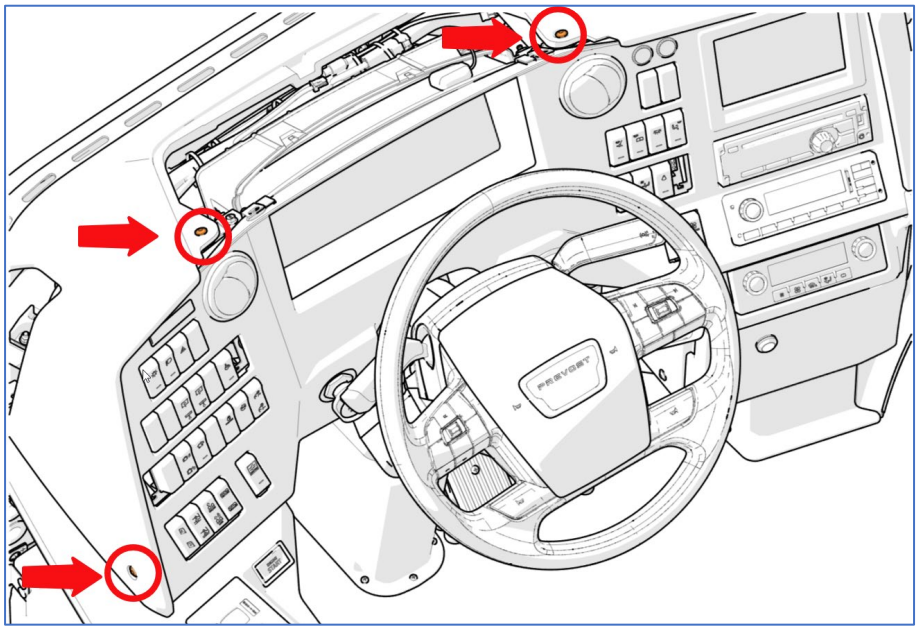

FIGURE 5

2. Unsnap the dashboard cover at the five (5) points identified on the image below.

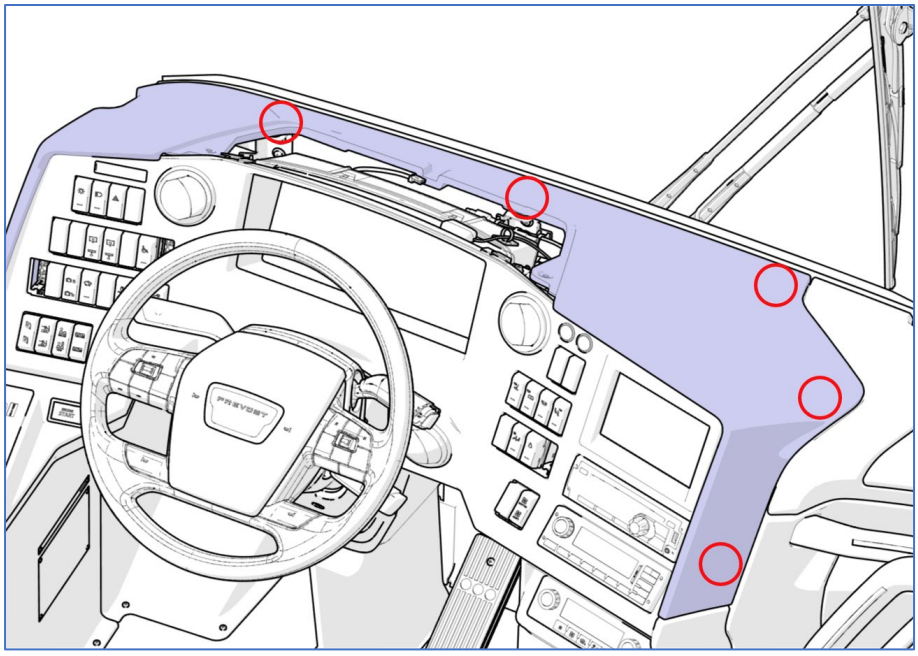

FIGURE 6

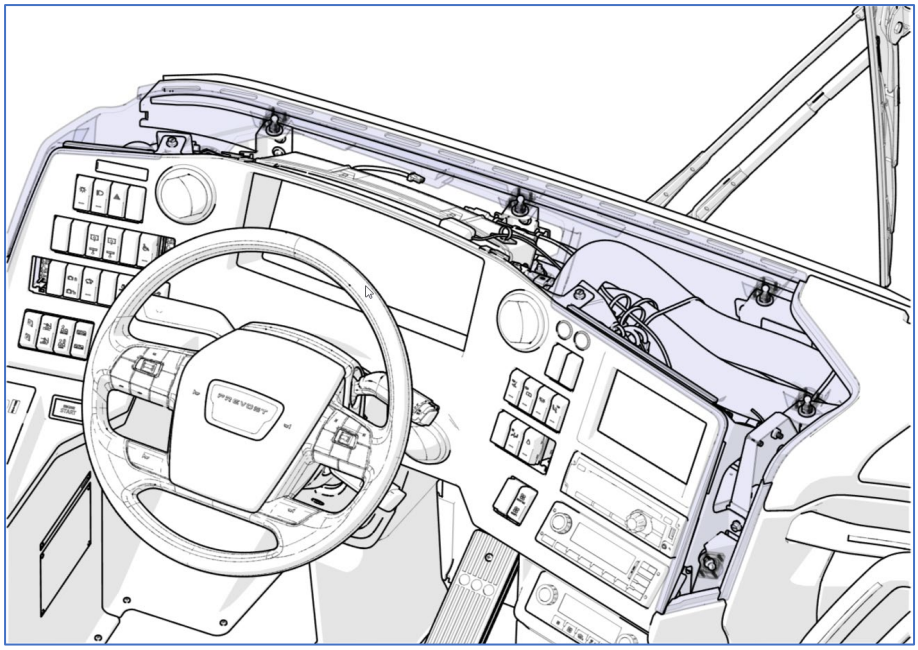

FIGURE 7

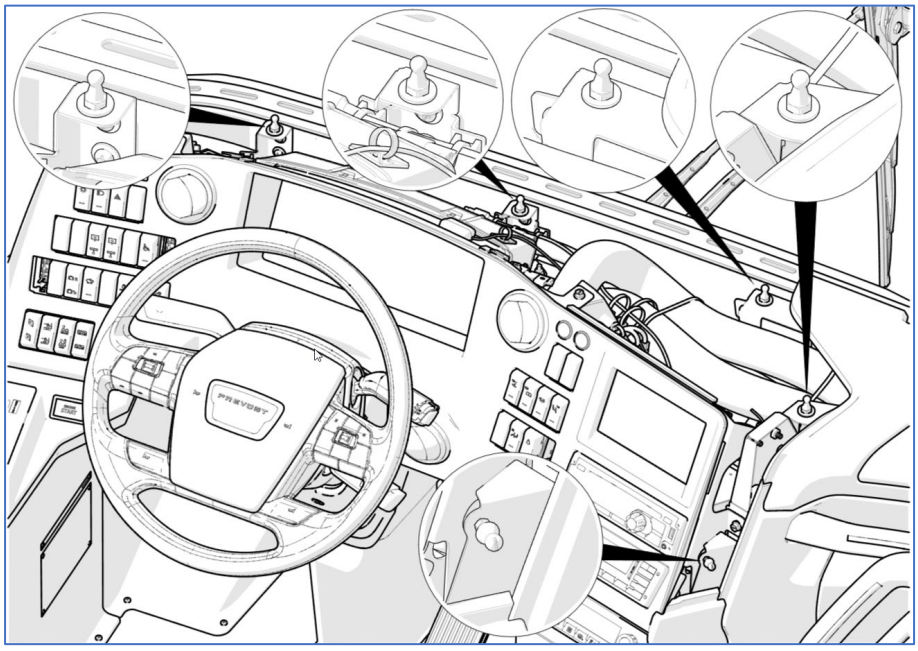

FIGURE 8

# PART 3 - RIGHT SIDE OF THE DASHBOARD – ACCESS PANEL REMOVAL

1. The panel on the right side of the dashboard is secured with fasteners as seen on the images below.

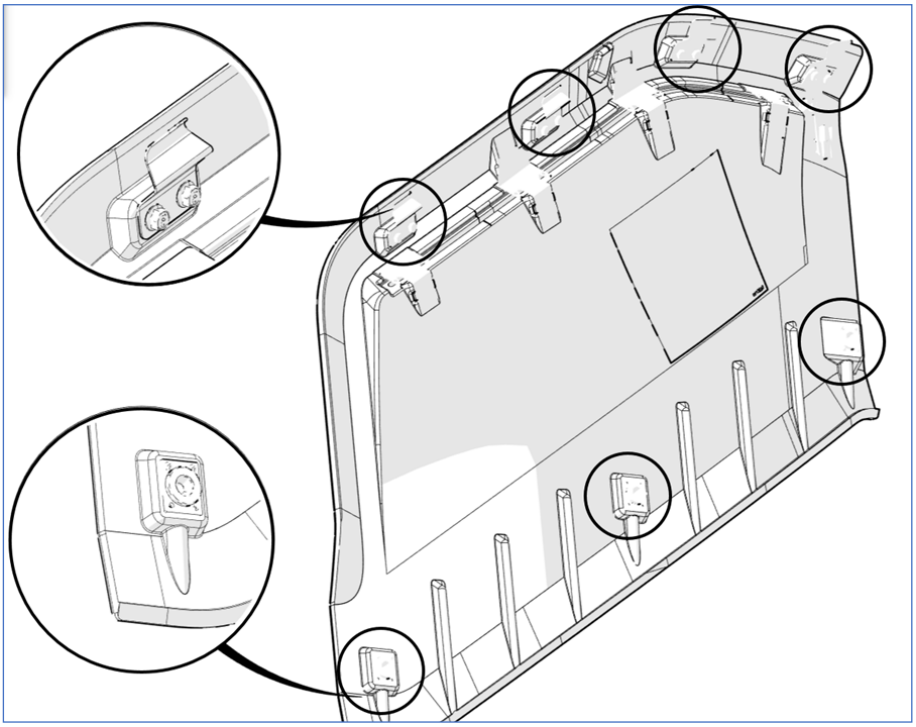

FIGURE 9: ATTACHMENT POINTS AT THE BACK OF THE PANEL

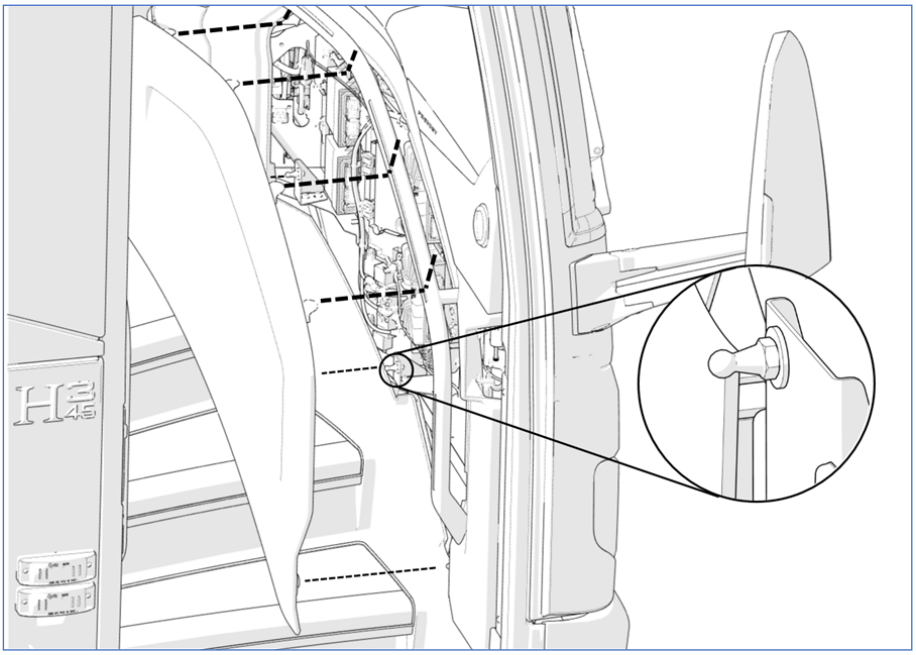

FIGURE 10

2. To remove the panel, pull (unsnap) the bottom of the panel in three (3) places by pulling toward you and then pull the panel down to disengage the top.

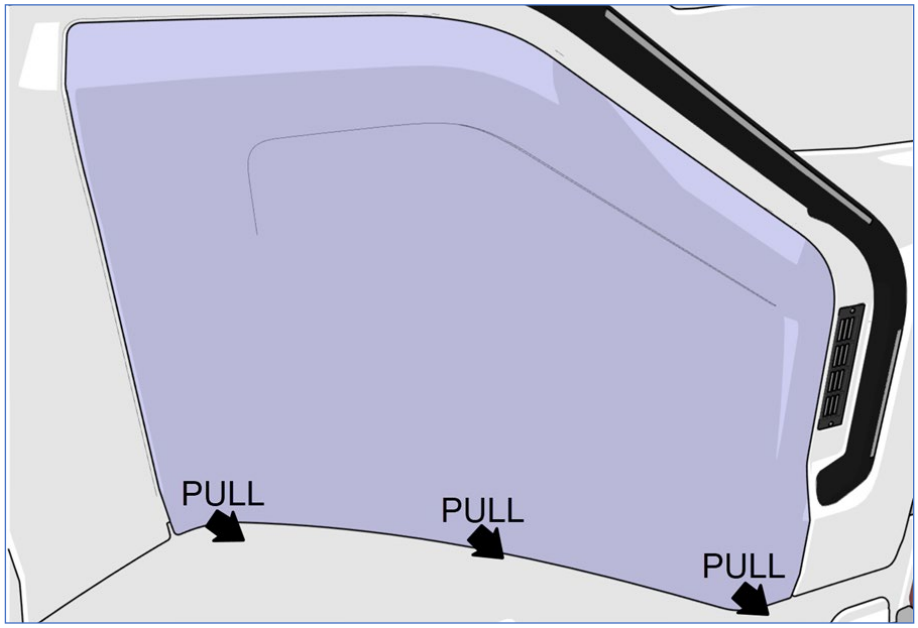


FIGURE 11

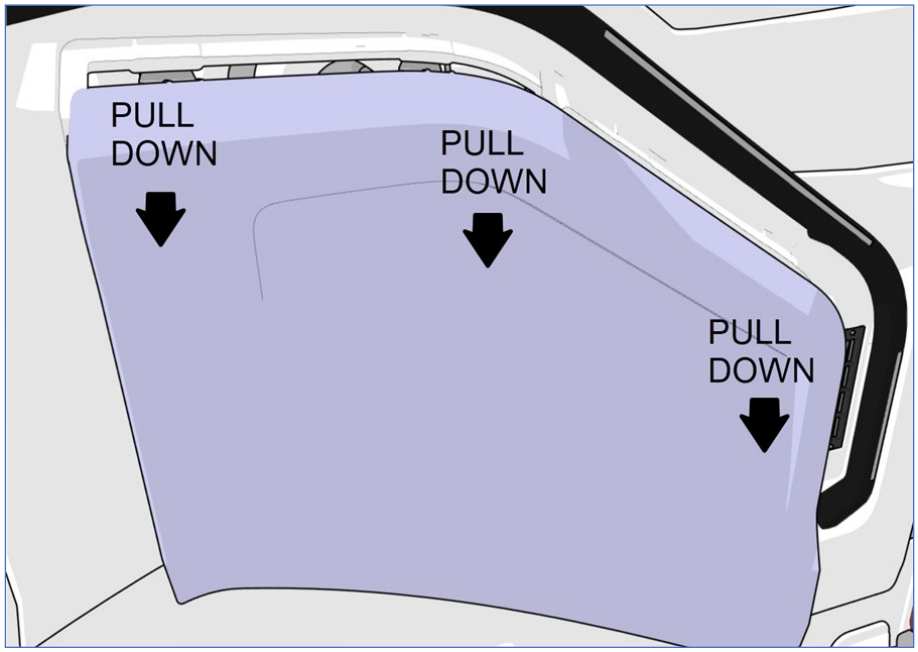


FIGURE 12

# PART 4 - RIGHT SIDE OF DASHBOARD REMOVAL

1. Perform Part 1, 2 & 3.
2. Remove the three (3) screws shown on the image below.

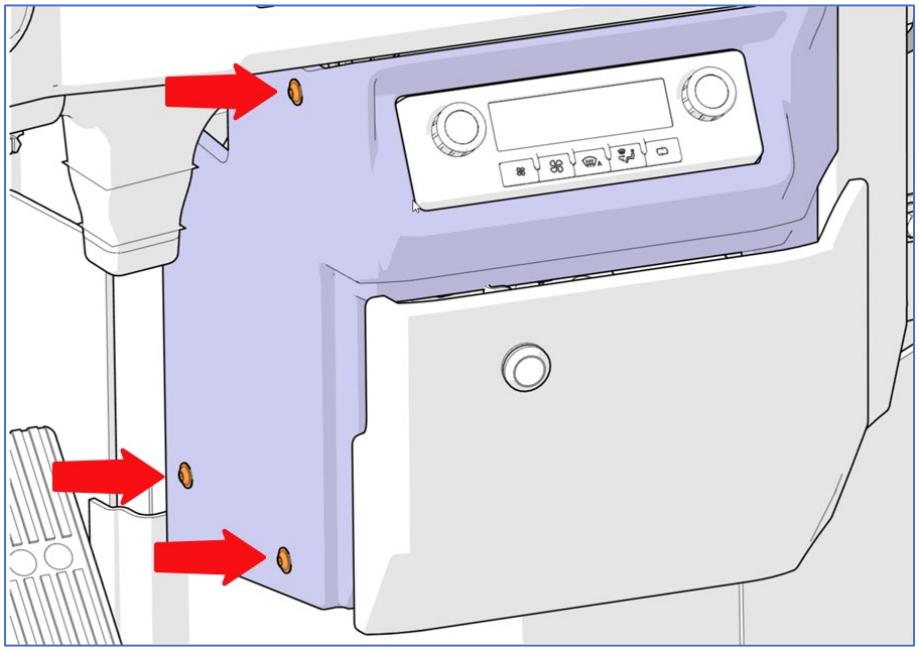

FIGURE 13

3. Remove the screw shown on the image below.

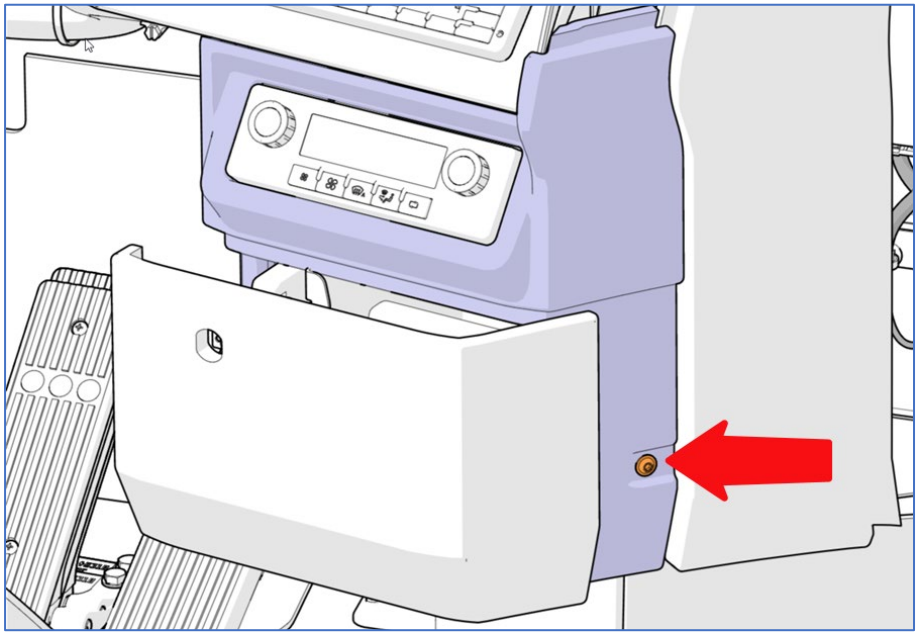

FIGURE 14

4. Open the utility compartment.

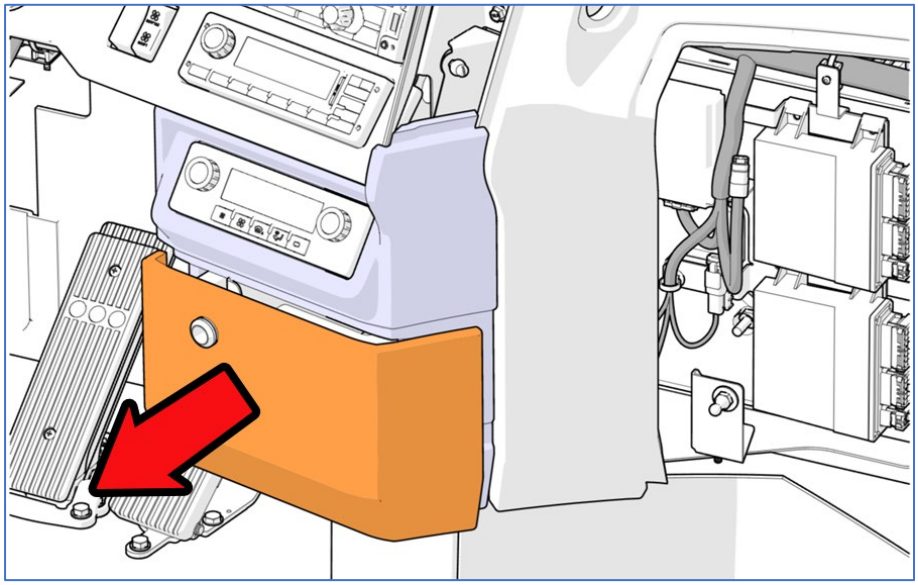

FIGURE 15

3. Unsnap the trim at the attachment point identified on the images below.

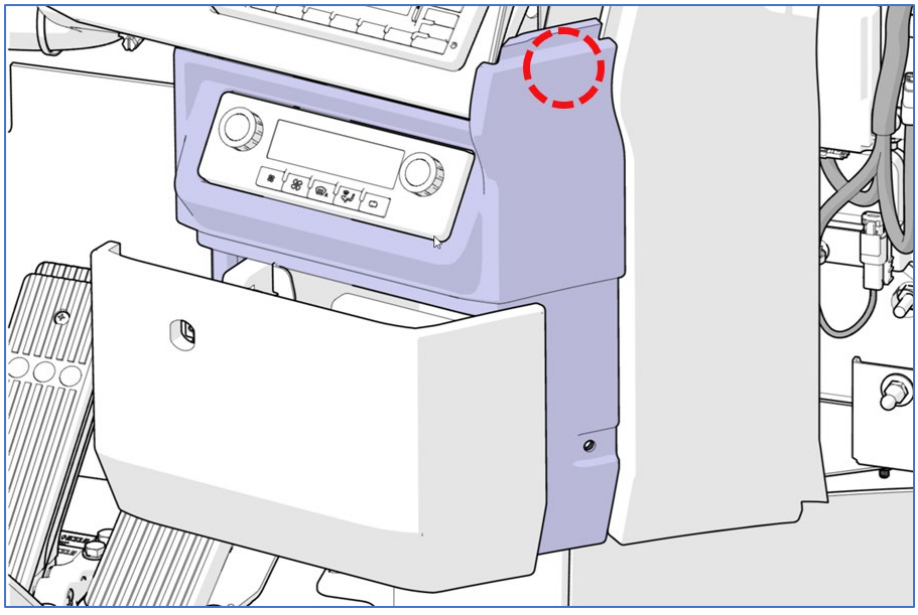

FIGURE 16



FIGURE 17

5. Pull the trim to uncover the circled area shown on the image below.

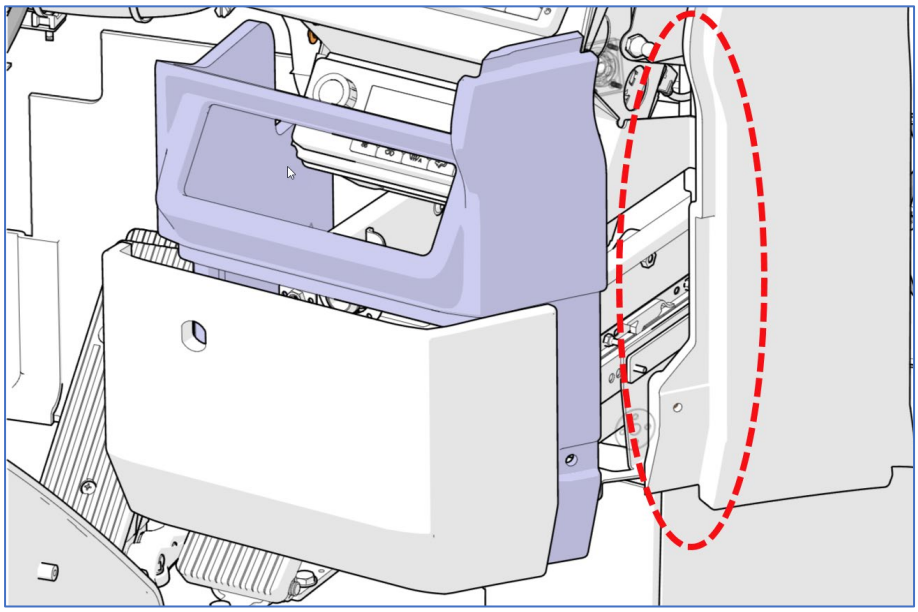

FIGURE 18

6. Disconnect the hose shown on the image below.

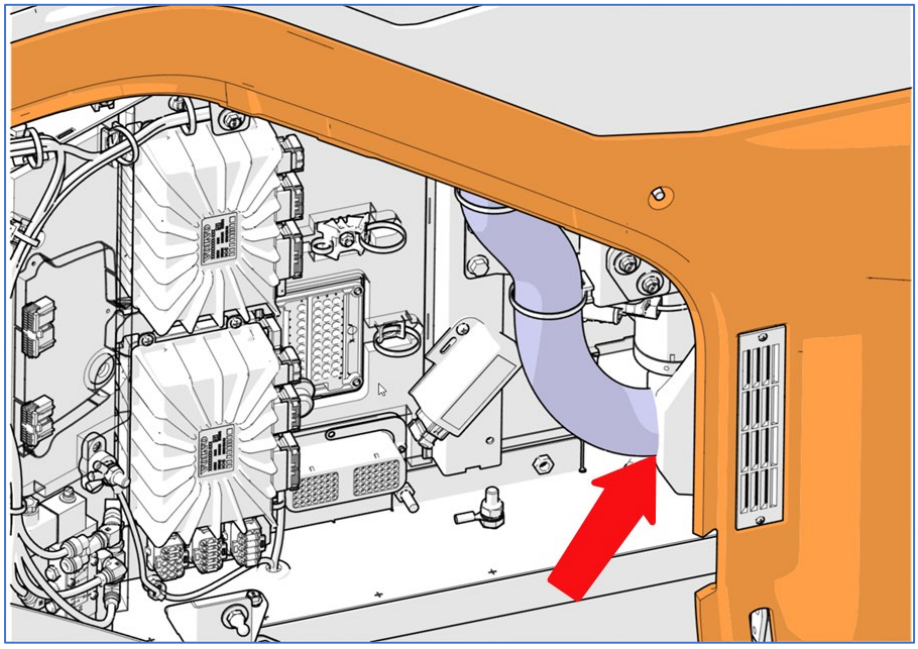

FIGURE 19

7. Remove the handrail. To do so, remove the three (3) cap screws shown on the image below.

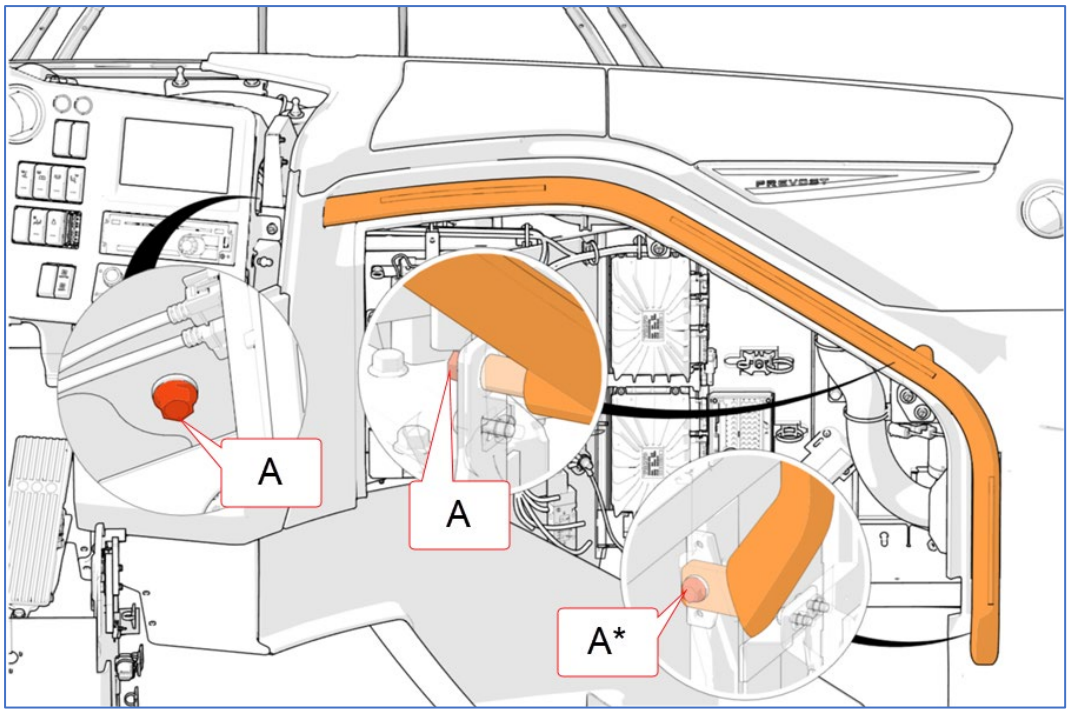


FIGURE 20

***A= cap screw + washer TORQUE 14 lb-ft***

***A*= cap screw + washer + square plate TORQUE 14 lb-ft***

8. Remove the panel shown on the image below. To do so, perform the following steps.

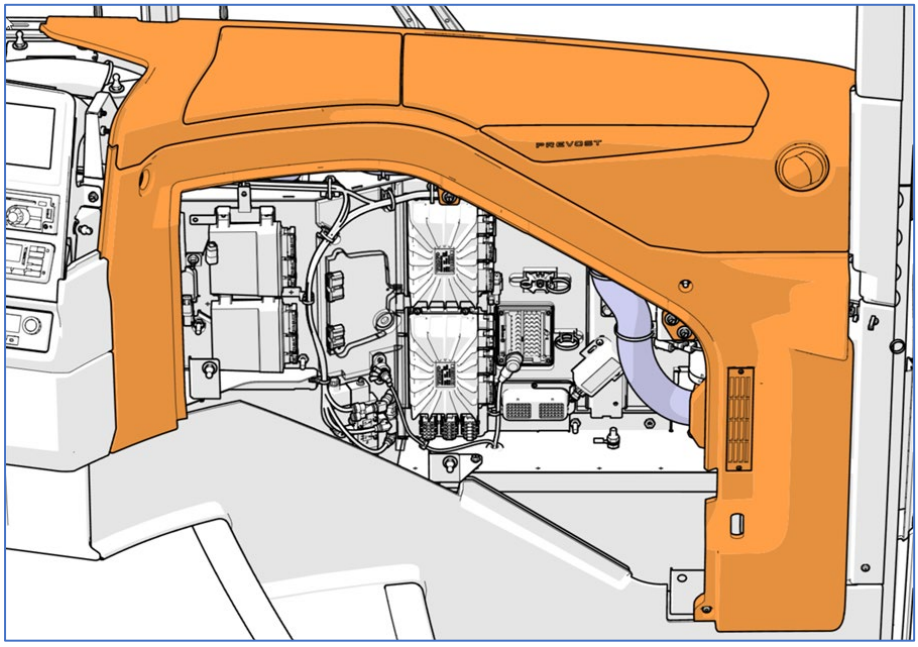

FIGURE 21

9. Remove the four (4) fasteners shown on the image below.

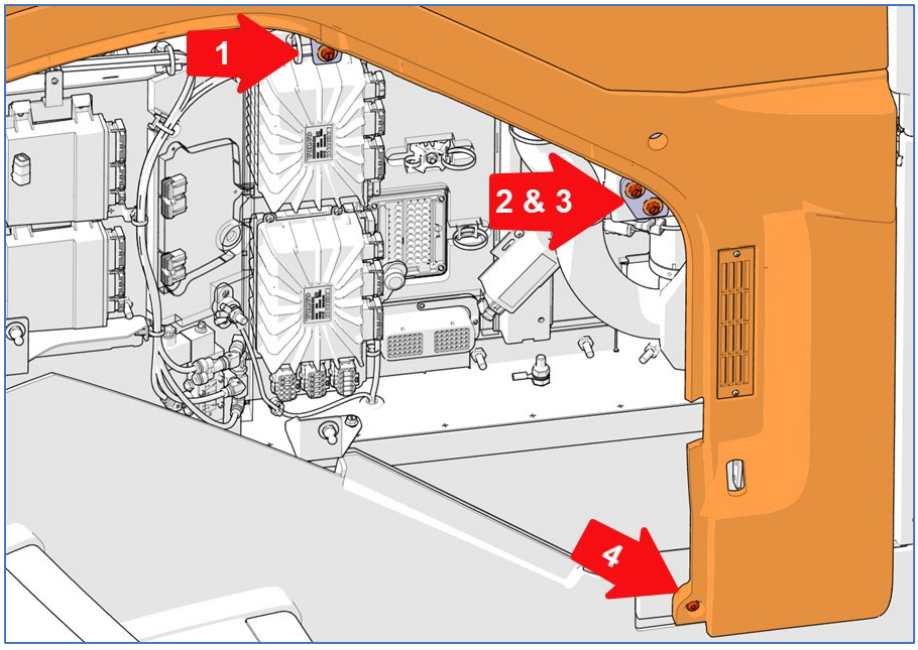


FIGURE 22

10. To remove the panel, first, remove the screw shown on the image below. ***NOTE: The panel is shown "ghosted" on the image to allow localization of the screw.***

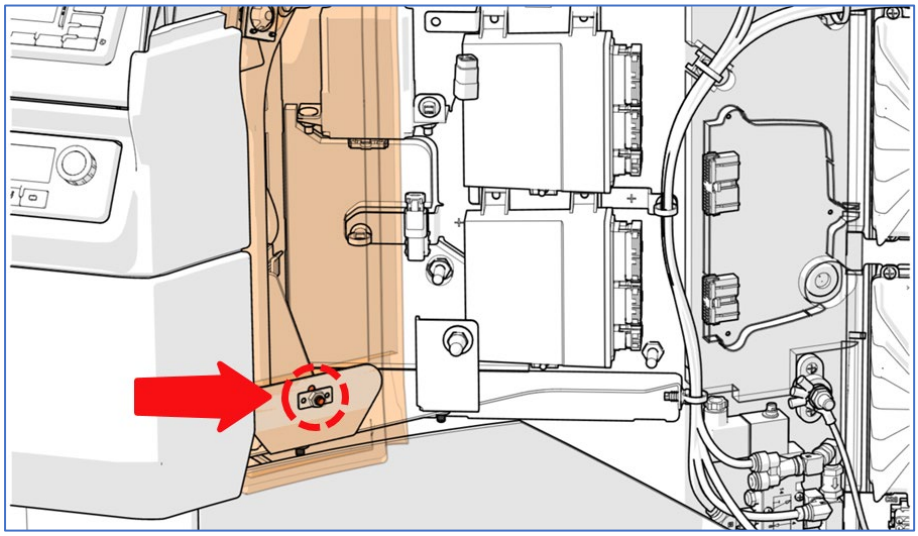

FIGURE 23

11. To remove the panel, first, remove the two (2) screws identified on the images below.

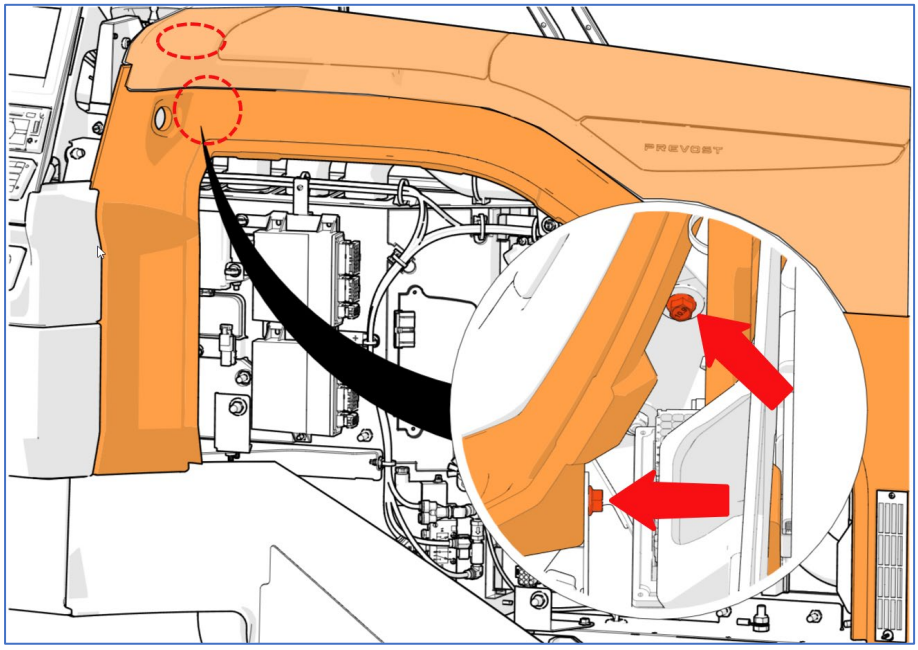

FIGURE 24

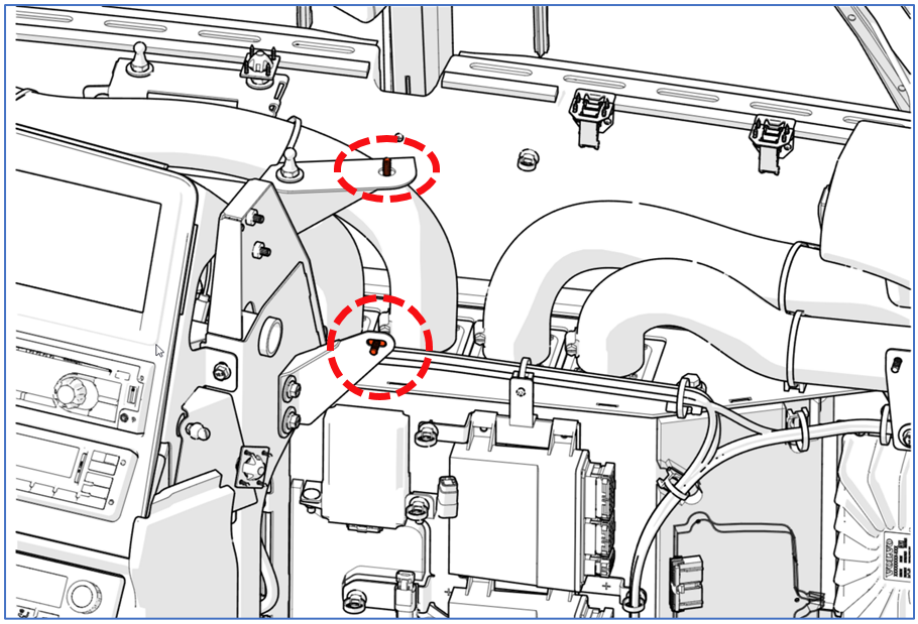

FIGURE 25: WITH PANEL GHOSTED TO HELP LOCATE THE POSITION OF THE SCREWS

12. To remove the panel, pull (unsnap) at the six (6) locations identified on the image below.

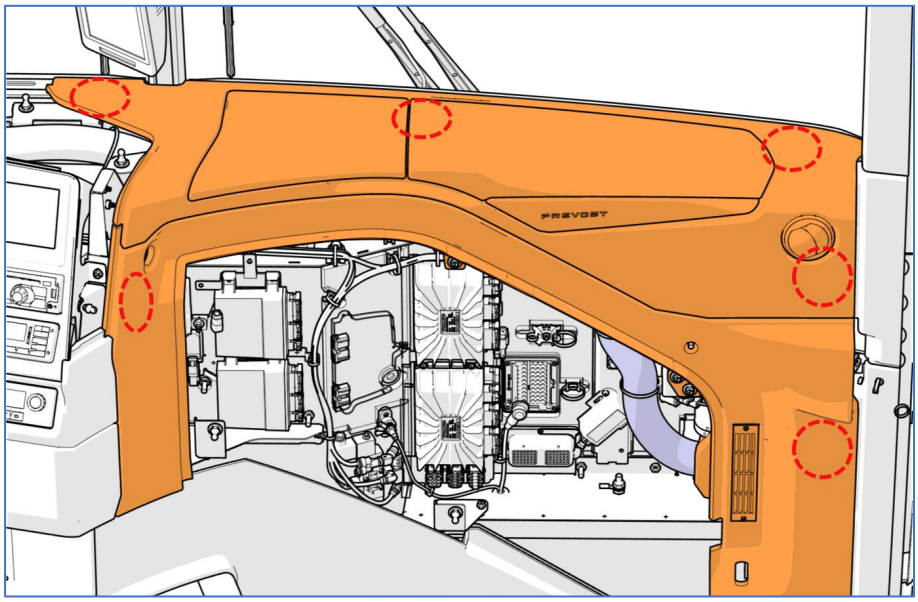


FIGURE 26

13. Once unsnap, pull with a light force to detach the panel.
14. Disconnect the register hose and the daylight sensor connector from the R.H. side of the panel.

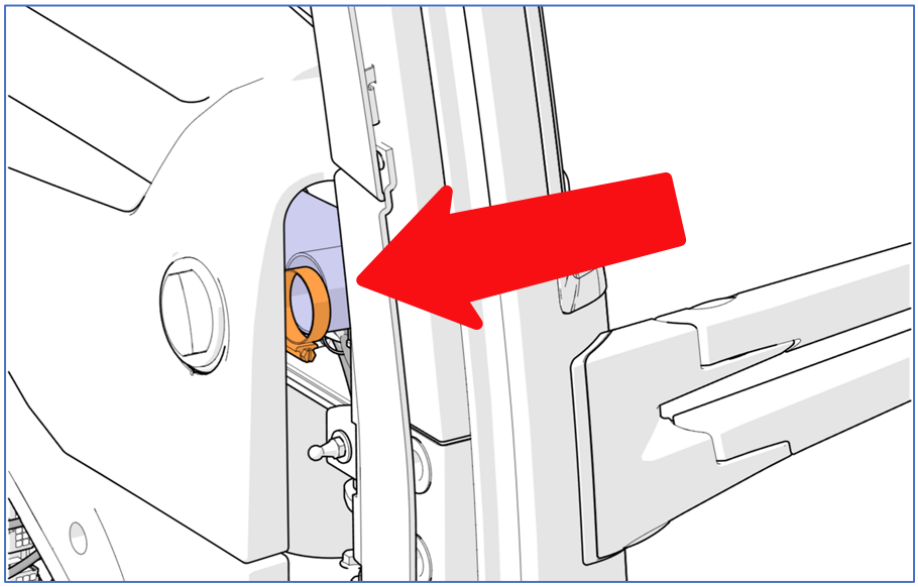

FIGURE 27

*Access all our Service Bulletins on http://techpub.prevostcar.com/en/*
*Or scan the QR-Code with your smart phone*
.

**Are you a Vehicle owner?**
*E-mail us at **technicalpublications_prev@volvo.com** and type "ADD" in the subject to receive warranty bulletins applicable to your vehicle(s) by e-mail.*

## CONTENTS


**1 TORQUE TABLES ..... 5**

**2 VEHICLE EXTERIOR ..... 7**

**3 VEHICLE JACKING POINTS ..... 11**

3.1 HYDRAULIC JACK ..... 11

**4 TOWING THE VEHICLE ..... 11**

**5 VEHICLE STRUCTURE ..... 11**

**6 VEHICLE EXTERIOR MAINTENANCE ..... 11**

6.1 CORROSION PREVENTION ..... 11
6.2 PREVENTIVE MAINTENANCE SCHEDULE ..... 13
6.3 RUST INHIBITOR APPLICATION ..... 14

**7 COMMON FIBERGLASS REPAIR PROCEDURE ..... 19**

7.1 REPAIR USING FIBERGLASS CLOTH ..... 19
7.2 REPAIR USING FIBERGLASS PASTE ..... 19
7.3 TYPICAL FIBERGLASS REPAIR PROCEDURE ..... 20

**8 COMMON PAINTING PROCEDURE ..... 21**

8.1 NEW PAINT CARE ..... 21
8.2 PAINT TOUCHUP ..... 21
8.3 PAINTING ..... 22
*8.3.1 Safety ..... 22*
*8.3.2 Surface Preparation and Paint Application ..... 22*

**9 X3-45 COACHES EXTERIOR FINISHING AND BODY REPAIR ..... 23**

9.1 ZONE 1 ..... 23
*9.1.1 Front Bumper ..... 24*
*9.1.2 Headlights ..... 24*
*9.1.3 Rear View Mirrors (RAMCO) ..... 24*
*9.1.4 Optional Rear View Mirrors (ROSCO) ..... 26*
*9.1.5 Windshield Wipers ..... 28*
*9.1.6 Windshield ..... 29*
*9.1.7 Regular Entrance Door (Coaches) ..... 32*
*9.1.8 Commuter Type Entrance Door ..... 40*
*9.1.9 Front Electrical & Service Compartment Door Body Panel and Window ..... 44*
*9.1.10 Front Cap ..... 50*
9.2 ZONE 2 ..... 51
*9.2.1 Side Windows ..... 51*
*9.2.2 Emergency Exit Windows ..... 51*
*9.2.3 Roof Escape Hatch ..... 54*
9.3 ZONE 3 ..... 56
*9.3.1 Rear Cap ..... 56*
*9.3.2 Engine Compartment Door ..... 56*
*9.3.3 Rear Bumper ..... 57*
*9.3.4 Exhaust Aftertreatment System Access Door ..... 57*

9.4 ZONE 4 ..... 58
*9.4.1 Rear Fender ..... 58*
*9.4.2 Engine R. H. Side Access Door Adjustment ..... 58*
*9.4.3 Engine Radiator Door ..... 63*
9.5 ZONE 5 ..... 66
*9.5.1 Baggage Compartment Doors (Aluminum) ..... 66*
*9.5.2 Wheelchair Lift Cassette Compartment Door ..... 69*
*9.5.3 Wheelchair Lift access door installation ..... 71*
*9.5.4 Baggage Compartment Floor ..... 74*
*9.5.5 Evaporator Compartment Door ..... 78*
*9.5.6 Condenser Compartment Door ..... 80*
*9.5.7 Fuel Filler Door ..... 81*
9.6 ZONE 6 ..... 82
*9.6.1 Front Fender ..... 82*
9.7 ZONE 7 ..... 83
*9.7.1 X3 Smooth Side Panel Replacement Procedure ..... 83*
*9.7.2 Side Crest ..... 91*
9.8 BODY PANEL AND WINDOW SPACING ..... 92
9.9 PASSENGER SEATS ..... 93
*9.9.1 Rotating Seats ..... 93*
*9.9.2 Removing Fixed Seats ..... 93*
*9.9.3 Upholstery Maintenance ..... 94*
9.10 TARABUS FLOOR COVERING REPAIR OR REPLACEMENT ..... 95
*9.10.1 Front Steps Replacement Procedure ..... 97*
*9.10.2 Welding Of Joint Between White Safety Strip And "Tarabus" Floor Covering ..... 101*
*9.10.3 Repair Of A Welded Joint ..... 102*

**10 X3-45 VIP EXTERIOR FINISHING AND BODY REPAIR ..... 104**

*10.1.1 Front Bumper ..... 106*
*10.1.2 Headlights ..... 106*
*10.1.3 Rear View Mirrors ..... 106*
*10.1.4 Windshield Wipers ..... 108*
*10.1.5 Windshield ..... 108*
*10.1.6 Entrance Door ..... 112*
*10.1.7 Front Electrical & Service Compartment Door ..... 112*
*10.1.8 Upper Lateral Window ..... 112*
*10.1.9 Front Cap ..... 113*
10.2 ZONE 2 ..... 114
*10.2.1 Upper Side Panel ..... 114*
*10.2.2 Fixed Windows ..... 114*
*10.2.3 Electric Awning Windows ..... 115*
*10.2.4 Electric Sliding Windows ..... 118*
10.3 ZONE 3 ..... 121
*10.3.1 Rear Cap ..... 121*
*10.3.2 Engine Compartment Doors ..... 122*
*10.3.3 Rear Bumper ..... 123*
10.4 ZONE 4 ..... 124
*10.4.1 Rear Fender ..... 124*
*10.4.2 Engine R. H. Side Access Door ..... 124*
*10.4.3 Engine Radiator Door ..... 130*
10.5 ZONE 5 ..... 132
*10.5.1 Pantograph Baggage Compartment Doors (Aluminum) ..... 132*

*10.5.2 Hinged Baggage Compartment Doors (Aluminum) ..... 135*
*10.5.3 Condenser Compartment Door ..... 137*
*10.5.4 Evaporator Compartment Door (Aluminum) ..... 138*
*10.5.5 Fuel Filler Door ..... 140*
10.6 ZONE 6 ..... 141
*10.6.1 Front Fender ..... 141*
10.7 ZONE 7 ..... 142
*10.7.1 Side Panel for Vehicles Not Fitted With Slide-Out ..... 142*
*10.7.2 Side Panel for Vehicles Fitted With Slide-Out ..... 143*
*10.7.3 Side Crest ..... 143*
10.8 ZONE 8 ..... 144
*10.8.1 Slide-Out Exterior Finishing Panels & Windows ..... 144*
10.9 ZONE 9 ..... 145
*10.9.1 Slide-Out Exterior Finishing Panels & Windows ..... 145*
10.10 BODY PANEL AND WINDOW SPACING FOR X3-45 VIP NOT FITTED WITH SLIDE-OUT ..... 146
10.11 BODY PANEL AND WINDOW SPACING FOR X3-45 VIP WITH FRONT AND REAR SLIDE-OUT ..... 147
10.12 BODY PANEL AND WINDOW SPACING FOR X3-45 VIP FITTED WITH FRONT SLIDE-OUT ..... 148

**11 SPECIFICATIONS ..... 149**

## SECTION CHANGE LOG

| | DESCRIPTION | DATE |
|---|---|---|
| 1 | | |
| 2 | | |
| 3 | | |
| 4 | | |
| 5 | | |
| 6 | | |

## 1 TORQUE TABLES

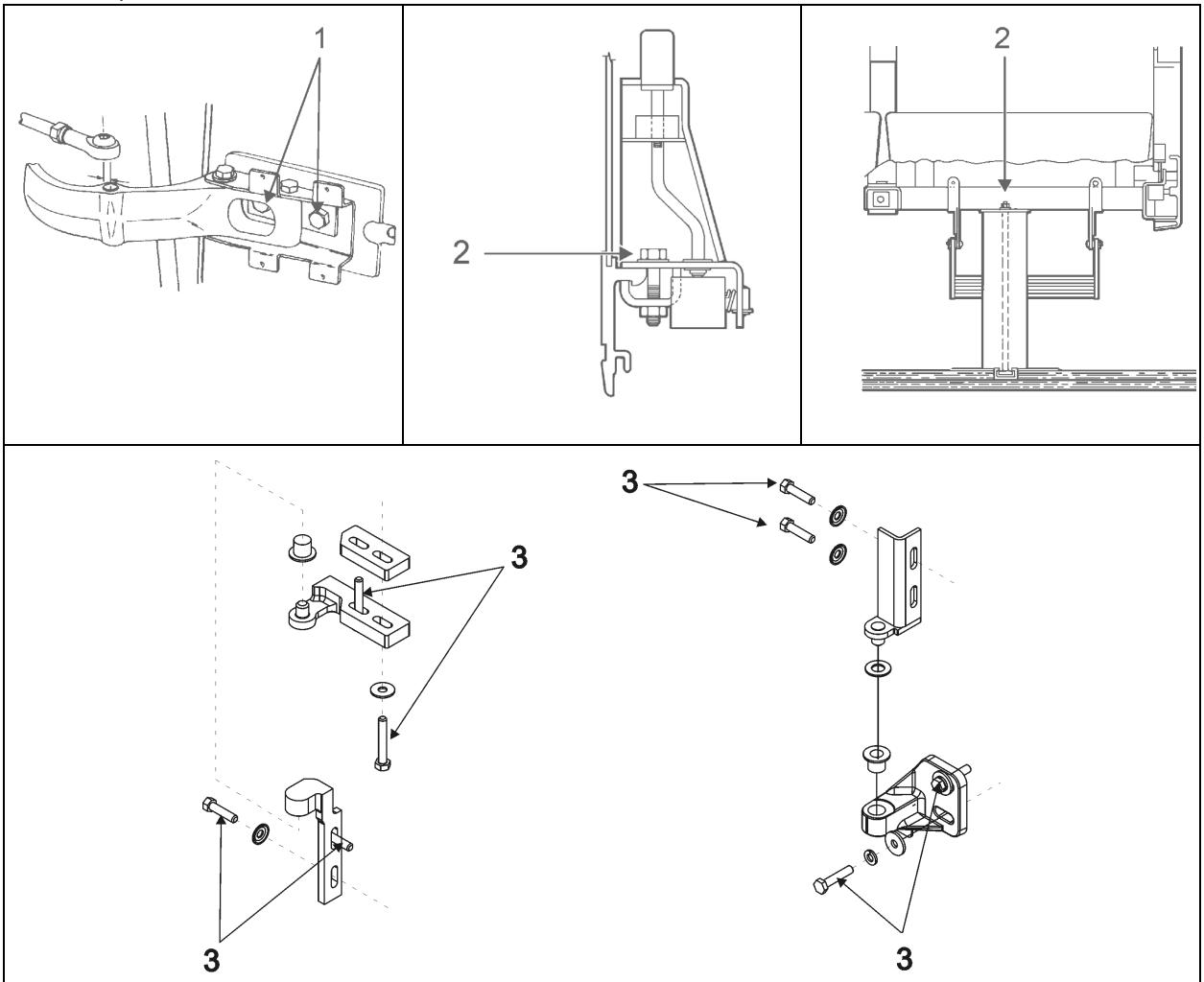


| BODY | | |
|---|---|---|
| No | DESCRIPTION | TORQUE |
| 1 | Entrance door horizontal adjusting bolts | 55-65 lb-ft (75-88 Nm) |
| 2 | Passenger seat mounting nuts (to sidewall and pedestal) | 27 lb-ft (37 Nm) |
| 3 | Radiator door hinges bolts | 68 lb-in (8 Nm) |

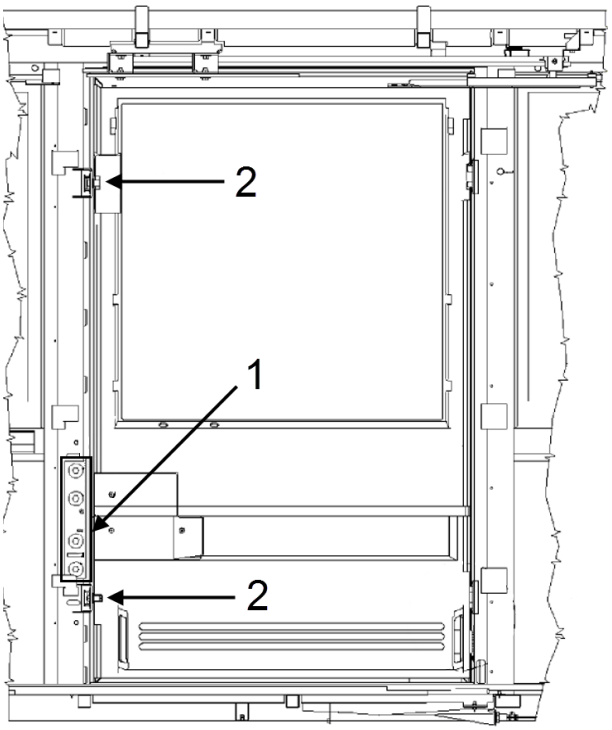


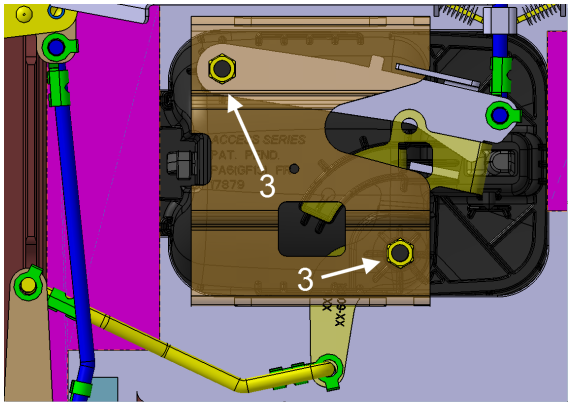


| WHEELCHAIR LIFT DOOR | | |
|---|---|---|
| No | DESCRIPTION | TORQUE |
| 1 | Wheelchair lift door – Center hinge bolts | 31-38 lb-ft (42-52 Nm) |
| 2 | Wheelchair lift door - striker pin adjustment bolts | 54-66 lb-ft (73-89 Nm) |
| 3 | Wheelchair lift door - opening mechanism nuts | 2.5-3.5 lb-ft (3.39-4.75 Nm) |

## 2 VEHICLE EXTERIOR

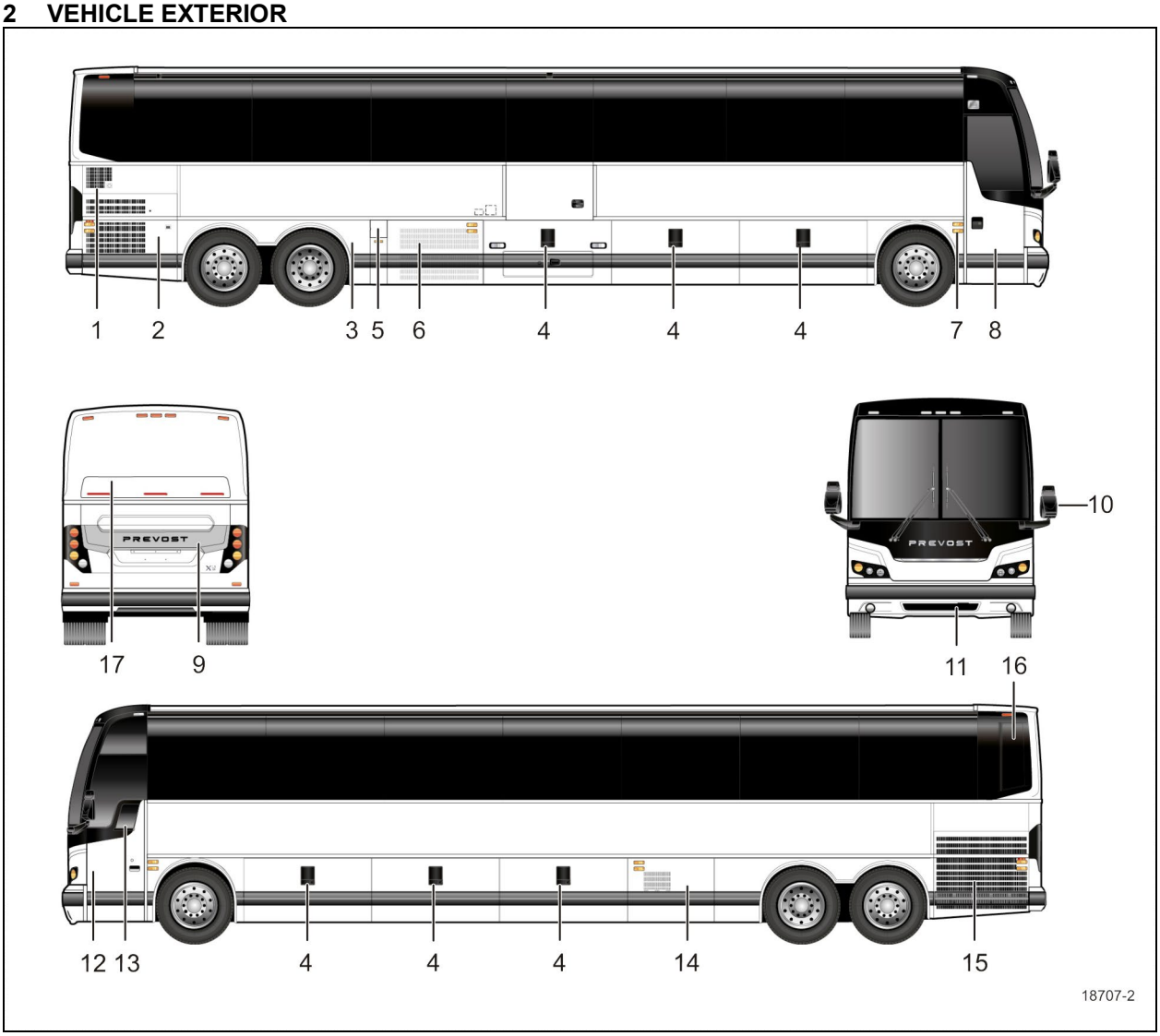


**FIGURE 1: X3 COACHES EXTERIOR VIEW**

1. Engine air intake
2. Engine compartment R.H. side door
3. Hinged rear fender
4. Baggage compartment
5. Fuel filler door
6. Condenser or baggage compartment
7. Entrance door switch
8. Entrance door
9. Engine compartment rear door
10. Rear-view mirror
11. Reclining bumper
12. Front electrical and service compartment
13. Driver's power window
14. Evaporator or baggage compartment
15. Radiator door
16. Catalytic Converter access door
17. Slide-Out (Optional)
18. Exhaust Aftertreatment System access door

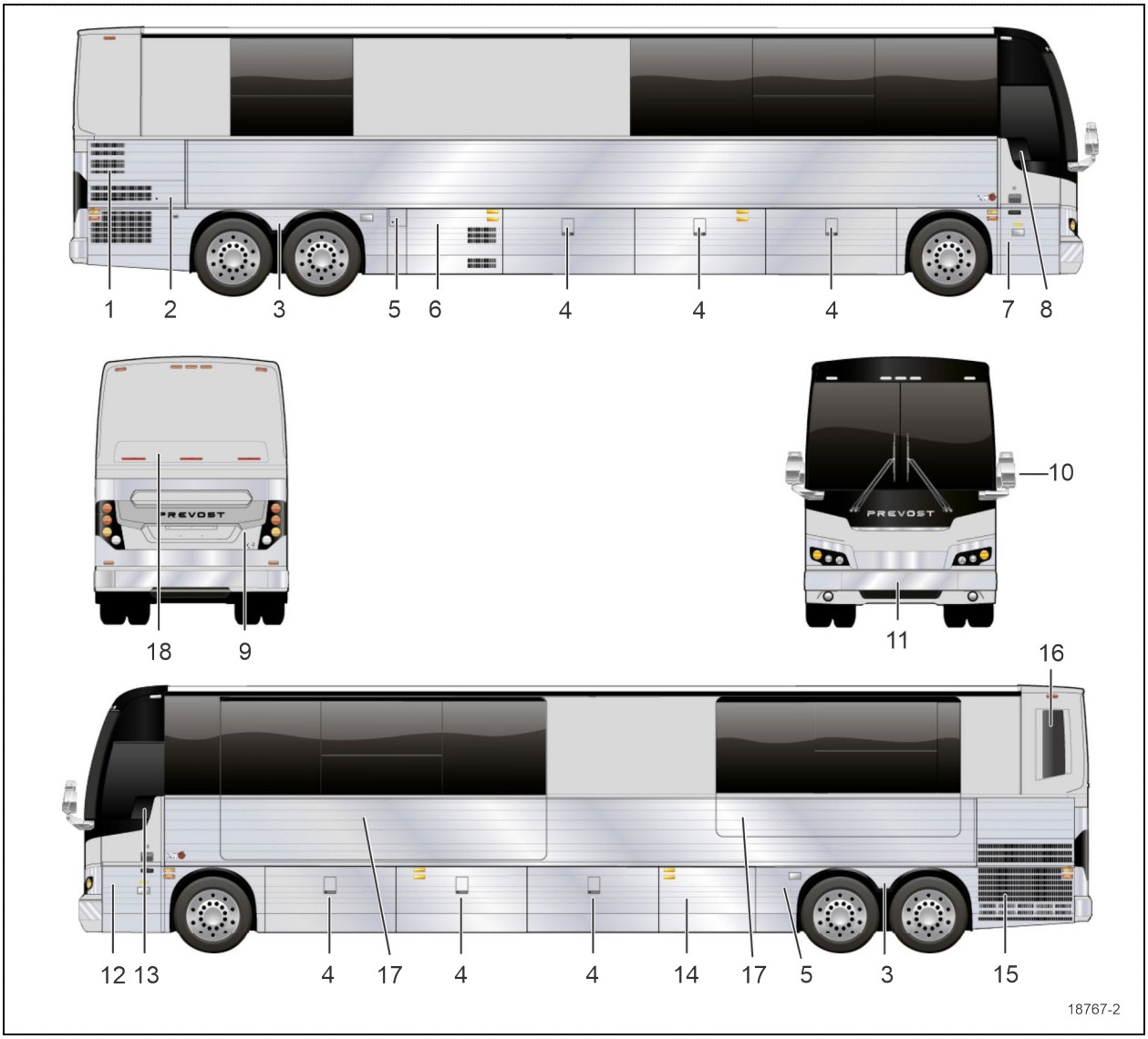


**FIGURE 2: X3-45 VIP MOTORHOME EXTERIOR VIEW (TYPICAL)**

1. Engine air intake
2. Engine compartment R.H. side door
3. Hinged rear fender
4. Baggage compartment
5. Fuel filler door
6. Condenser or baggage compartment
7. Entrance door
8. Entrance door power window
9. Engine compartment rear door
10. Rear-view mirror
11. Reclining bumper
12. Front electrical and service compartment
13. Driver's power window
14. Evaporator or baggage compartment
15. Radiator door
16. Catalytic Converter access door
17. Slide-Out (Optional)
18. Exhaust Aftertreatment System access door

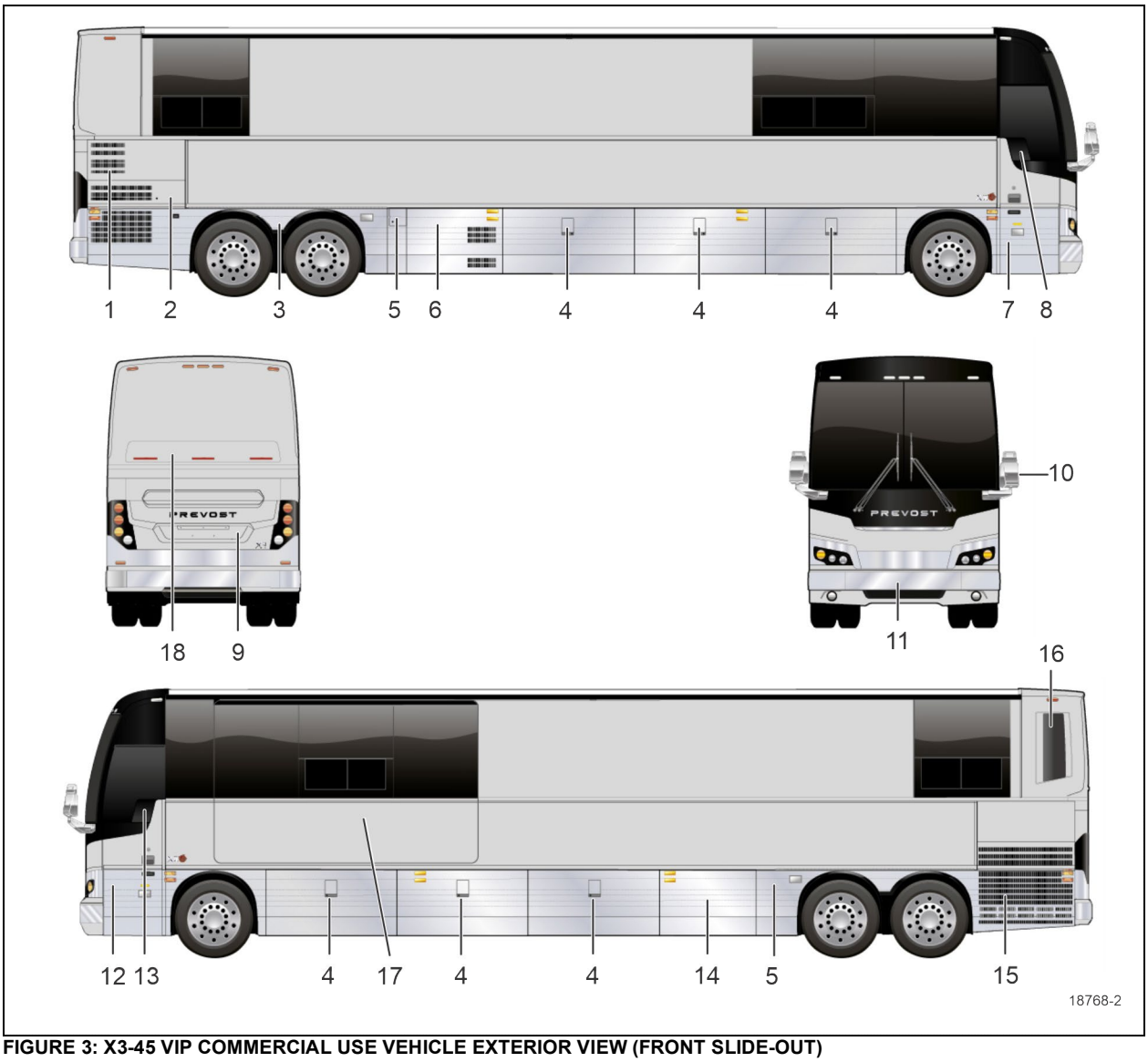


**FIGURE 3: X3-45 VIP COMMERCIAL USE VEHICLE EXTERIOR VIEW (FRONT SLIDE-OUT)**

1. Engine air intake
2. Engine compartment R.H. side door
3. Hinged rear fender
4. Baggage compartment
5. Fuel filler door
6. Condenser compartment
7. Entrance door
8. Entrance door power window
9. Engine compartment rear door
10. Rear-view mirror
11. Front reclining bumper
12. Front electrical and service compartment
13. Driver's power window
14. Evaporator compartment
15. Radiator door
16. Catalytic Converter access door
17. Front Slide-Out (Optional)
18. Exhaust Aftertreatment System access door

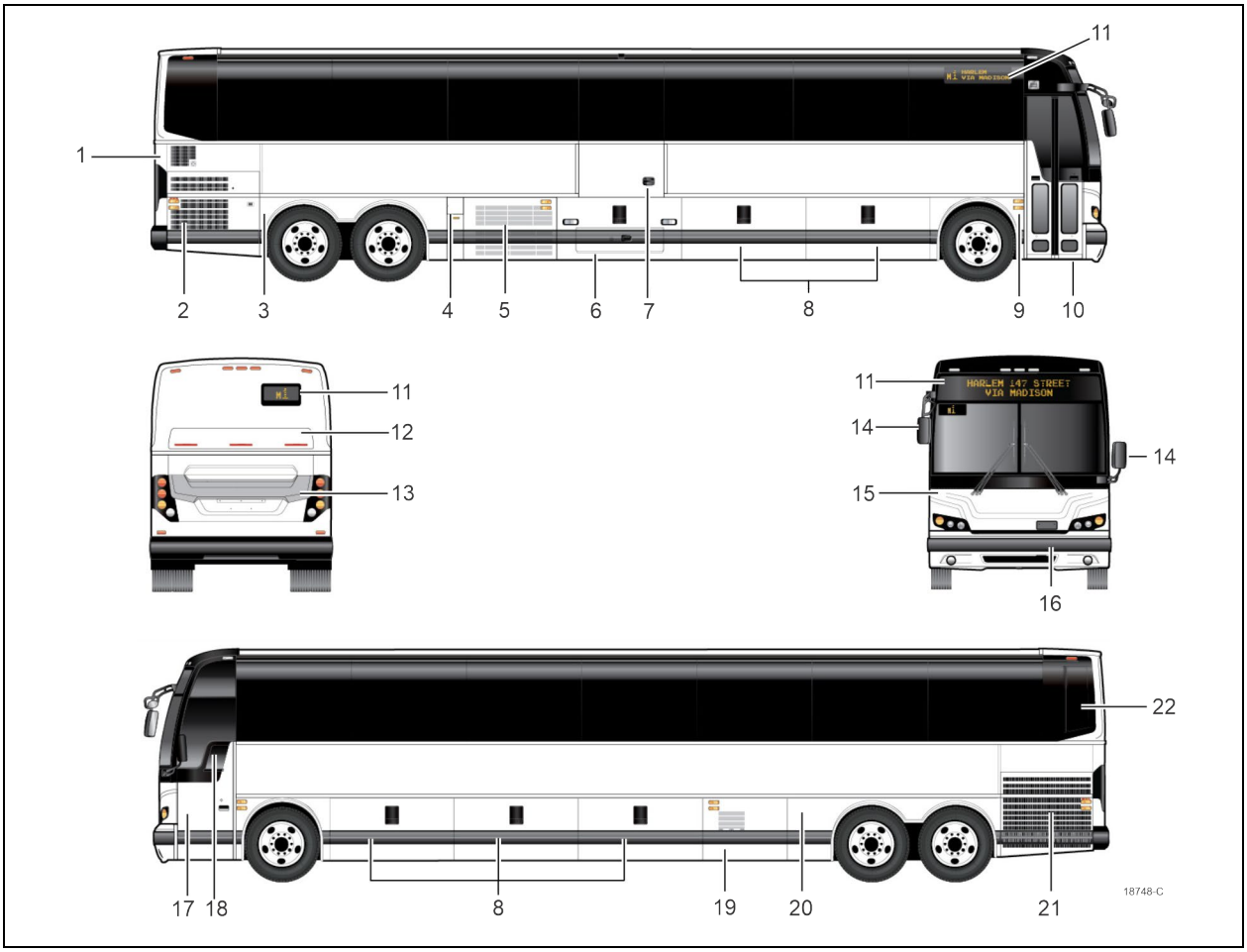


**FIGURE 4: X3-45 COMMUTER EXTERIOR VIEW (TYPICAL)**

1. Engine air intake
2. Engine compartment curbside door
3. Hinged rear fenders
4. Fuel filler neck & DEF filler neck door
5. Condenser compartment
6. Lift mechanism access door
7. Wheelchair access door
8. Baggage compartment
9. Entrance door control switch
10. Commuter type entrance door
11. Electronic destination sign or route number
12. Exhaust aftertreatment system access door
13. Engine compartment rear door
14. Rear-view mirrors
15. Transmission retarder off indicator light
16. Front towing air supply connectors access door and electrical receptacle.
17. Front electrical and service compartment
18. Driver's power window
19. Evaporator compartment
20. Coolant heater & air dryer compartment
21. Radiator door
22. SCR converter access door

## 3 VEHICLE JACKING POINTS

For detailed instructions, refer to Maintenance information MI18-18, available on the technical publications USB flash drive and website.

### 3.1 HYDRAULIC JACK

To raise: turn release valve clockwise. Insert handle in socket and raise vehicle by pumping.

To lower: remove handle and turn the release valve slowly counterclockwise.

Always keep ram and extension screw retracted when jack is not in use.

Service: Check oil level when jack fails to raise to full height. Lower ram completely with release valve open and jack in upright position, remove filler plug and refill to level of filler hole with hydraulic jack oil. Never use brake fluid.

**DANGER**

Jack is intended for lifting only. Do not get under the vehicle or load for any reason unless it is properly supported with safety stands and securely blocked.

**DANGER**

Do not overload jack above rated capacity. Prevent "side loading", make sure load is centered on ram. Do not push or tilt load off jack.

## 4 TOWING THE VEHICLE

For detailed instructions, refer to Maintenance information MI18-18, available on the technical publications USB flash drive and website.

## 5 VEHICLE STRUCTURE

The body of the X Series vehicles is an integral structure made of 14, 16 and 18 gauge welded and braced high tensile steel and stainless steel members. All stainless exterior panels are glued to anti-corrosion coated members. The complete structure is protected against corrosion prior to assembly. The front and rear caps are made of molded fiberglass. The main roof is made of high tensile aluminum panels riveted to the roof structure. The floor is made of 2 layers of ½" (13 mm) thick plywood separated by a 1/8" (3 mm) insulation to reduce power train and road noises.

**Welding**

Since welding is a procedure that may be carried out either as specific instructions from Prevost or by an independent decision of the owner, the following information pertaining to welding should be read before beginning any welding procedure. The prohibitions and requirements outlined below must be followed during welding procedure:

1. Welding must be done only by a qualified and experienced person.
2. Adequate ground contacts and shields must be positioned as required to protect components from damage due to heat, contact by weld splatter, arcing, or other potentially damaging events associated with welding.
3. The following precautions are to be taken to protect the electronic control components. Refer to section 00, paragraph 3: “PRECAUTIONS TO BE OBSERVED BEFORE WELDING” in this manual.
4. Always wear the appropriate safety equipment.
5. Weld in clean and well-ventilated area, and always have an appropriate fire extinguisher within your reach.

## 6 VEHICLE EXTERIOR MAINTENANCE

Regular washing to remove dust and dirt is recommended. See *"Owner's Manual"* for more details on washing and cleaning your vehicle.

### 6.1 CORROSION PREVENTION

Preventive maintenance is a key factor in avoiding corrosion and must be considered as part of the regular service intervals. The entire underside of the vehicle is sprayed with a heavy application of asphalt base undercoating.

The operating environment the vehicle is subjected to will largely influence the amount of dirt and corrosion that will accumulate over a given period. Corrosion is one of the most costly factors of part failure and shortened part life. It

is, however, an item that can be controlled when it is conscientiously looked after and the proper steps are taken in a timely manner.

Certain areas of the coach are more vulnerable to corrosion than others, and it is these areas that should be addressed. For example, the rear baggage compartment bulkhead in the rear wheelhousing area contains many key components and should be examined regularly for corrosion. Other areas include the front wheelhousing area and the engine compartment.

Road splash will affect undercarriage, condenser coil and engine compartment. These areas must be thoroughly cleaned to remove dirt accumulations from flanges, channels and ledges. These places accumulate dirt and salt and hold it in direct contact with steel and aluminum surfaces. Use an understructure high pressure spray as part of a regular wash. Damaged undercoating or paint should be promptly repaired before corrosion can start.

Frequency of wash periods depends on operating conditions. During periods of exposure to salt, daily washing as described above is recommended. If underbody parts show evidence of rust or corrosion, treat as follows:

1. Remove dirt, grease and oil by solvent washing.
2. Remove corrosion as well as all loose coating by cleaning with a wire brush or sandblasting.

**⚠ CAUTION**

Sandblasting can be used for cleaning bulkheads, brackets and other structural members. It should not be used for exterior side paneling. Extreme care should be taken not to sandblast excessively.

3. Apply correct primer, paint and undercoating after removing all corrosion to prevent further damage.

## 6.2 PREVENTIVE MAINTENANCE SCHEDULE

*NOTE*

*TECTYL 185 GW rust inhibitor may have been applied on your vehicle underbody as an option, if this is the case, follow this procedure thoroughly. For future application of product, refer to paragraph 3.3 in this section.*

| DESCRIPTION | INTERVALS | | MAINTENANCE | CORRECTIVE ACTION | REFERENCE |
|---|---|---|---|---|---|
| | MONTHS | KM MILES | | | |
| BODY, EXTERNAL WINDOW FRAME | 6 | 40 000<br>25 000 | VISUALLY INSPECT SEALING BEADS CONDITION | REPAIR OR REPLACE SEALING BEADS IF NECESSARY | |
| VEHICLE UNDERBODY | 12 | 100 000<br>60 000 | USE A LOW PRESSURE SPRAY TO CLEAN UNDER-STRUCTURE AND VISUALLY INSPECT FOR CALCIUM DEPOSIT, CORROSION OR ANY DIRT ACCUMULATED ONTO EXPOSED SURFACES. VISUALLY INSPECT SEALING BEADS CONDITION.<br><br>VISUALLY INSPECT IF UNDERFLOOR IS PEALING. VISUALLY INSPECT WHEELHOUSING COATING.<br><br>MAKE SURE DISCHARGE TUBES ARE FREE FROM OBSTRUCTIONS | APPLY UNDERCOATING LOCALLY AS NECESSARY.<br><br>APPLY UNDERCOATING LOCALLY AS NECESSARY<br><br>REMOVE ANY OBSTRUCTION OR REPLACE DEFECTIVE TUBE | |
| SUSPENSION AND UNDER-STRUCTURE | 12 | 100 000<br>60 000 | VERIFY THE CONDITION OF ALL SUSPENSION AND UNDERSTRUCTURE FASTENERS AND CLAMPS | TIGHTEN OR REPLACE DEFECTIVE OR MISSING FASTENERS | |
| FLOOR COVERING | 3 | 20 000<br>12 500 | VISUALLY INSPECT IF FLOOR COVERING IS SHOWING SIGNS OF DETERIORATION SUCH AS CUTS, BURNS, ETC. ALSO, VISUALLY INSPECT SEALANT ALONGSIDE TRACKS. INSPECT WALL PANELS FROM BOTTOM TO WINDOWS | REPAIR OR REPLACE DEFECTIVE COVERING. MAKE SURE PROPER SEALANT IS USED. | |
| FLOOR CLEANING | | | CLEAN FLOOR COVERING AS NECESSARY | | |

**WARNING**

Failure to follow this preventive maintenance schedule will result in warranty void.

## 6.3 RUST INHIBITOR APPLICATION

Material: Tectyl 185 GW R1KG21

Safety Rules: Use safety glasses
Supplied air hood
Solvent-resistant rubber gloves

| | |
|---|---|
| 1.0 Wash both wheelhousing mechanical parts before masking. | A water-hose nozzle is recommended. Water may be hot to reduce washing time especially during winter. If parts are soiled with oil, clean using R1KG21. Avoid rubber parts. |
| 2.0 Dry all water sprayed parts. Surface temperature and dew point must be respected before applying rust inhibitor. | Air pressure system may be used, refer to annex 1 for surface temperature and dew point. |
| 3.0 **Front wheelhousing**<br>a) Mask all rubber joints. Braking system must also be protected (refer to arrows). Commercial aluminum foil may be used for masking. | 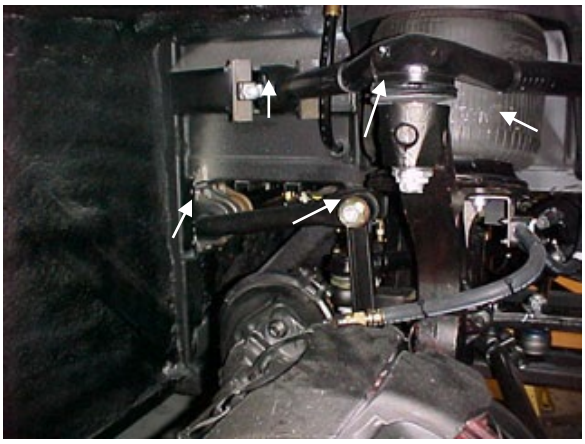 |
| 3.1 **Front wheelhousing**<br>Front view |  |

3.2 **Front wheelhousing**

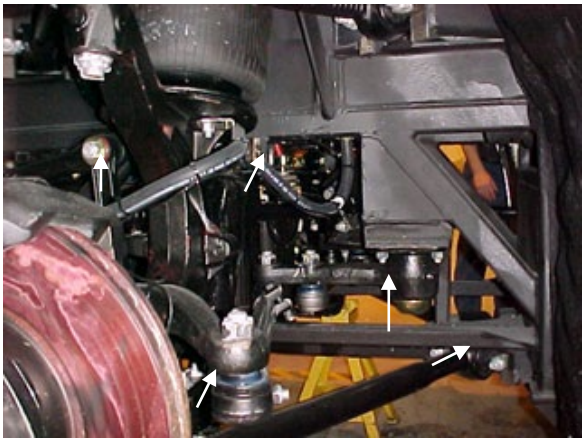

3.3 **Front wheelhousing**

(Entire braking system)

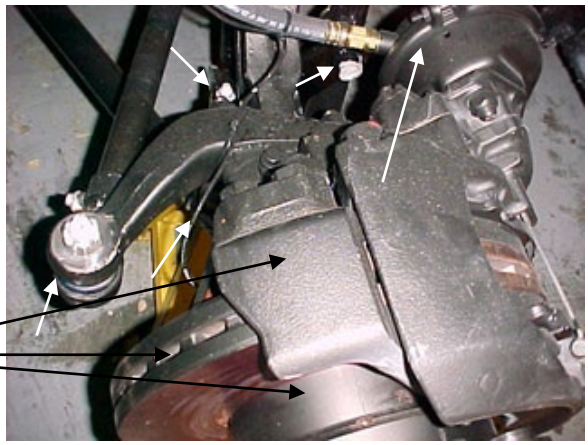

4.0 **Rear wheelhousing**

a) Mask all rubber joints. Braking system must also be protected (refer to arrows). Commercial aluminum foil may be used for masking

(Entire braking system)

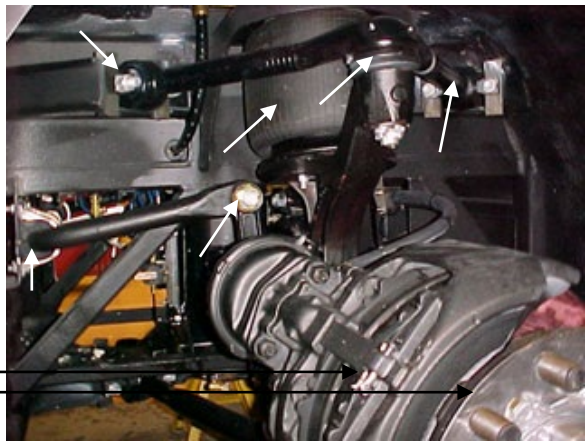

| | |
|---|---|
| 4.1 **Rear wheelhousing**<br><br>(Entire braking system) | 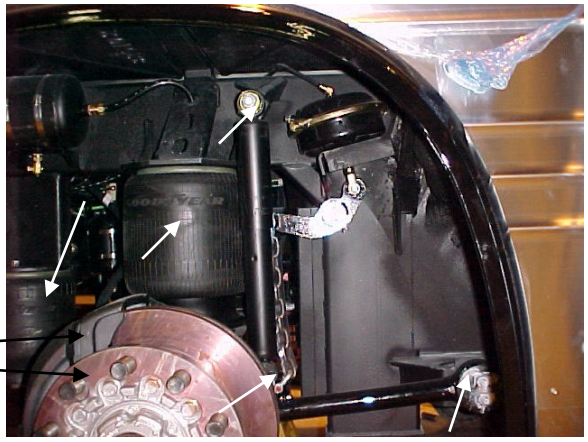 |
| 4.2 **Rear wheelhousing**<br><br>(Entire braking system) | 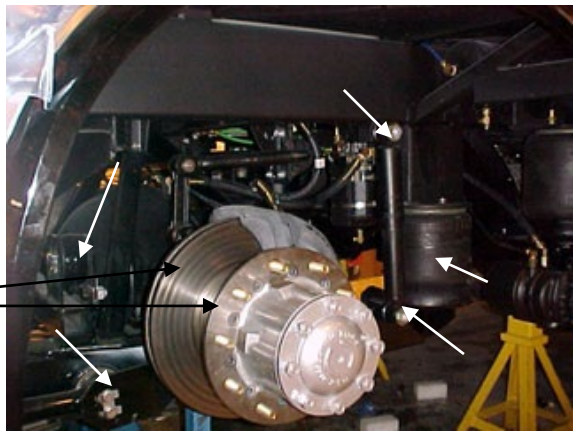 |
| 4.3 **Rear wheelhousing** | 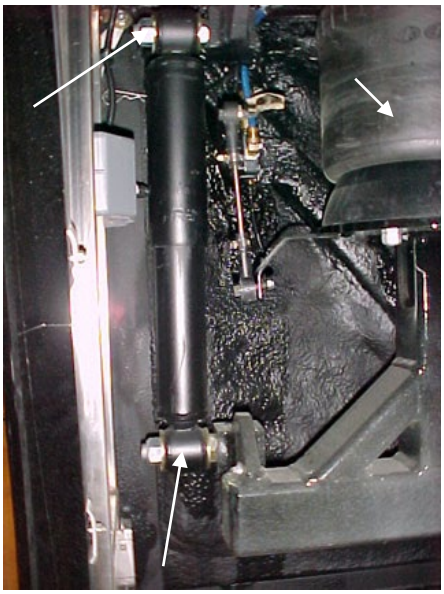 |
| 5.0 Close off wheelhousing using masking paper. | Prevent rust inhibitor from coming in contact with paint. To close off wheelhousing, a polythene sheet may be used. |
| 6.0 Apply TECTYL 185 GW black rust inhibitor onto wheelhousing mechanical parts. | A spray gun and pumping system are required to apply the rust inhibitor. If the application is done inside a paint room, select high speed ventilation. **Minimum required** |

| | |
|---|---|
| | **thickness is 10 mils wet or 5 mils dry**. |
| 7.0 Remove all masking material 30 minutes after application. | |

**ANNEX 1**

1. Check and confirm that dew point and surface temperature are in accordance with the following criteria, *Use the following table to determine dew point*.:

   Surface temperature > 10°C

   Surface temperature > or = to dew point + 3°C

2. Check and confirm that TECTYL temperature is between 10°C and 35°C.

## DEW POINT

| | Relative Humidity (%) | | | | | | | | | |
|---|---|---|---|---|---|---|---|---|---|---|
| | 10 | 20 | 30 | 40 | 50 | 60 | 70 | 80 | 90 | 100 |
| Temp (c) | | | | | | | | | | |
| 0 | --- | -16 | -11 | -8 | -5 | -3 | -1 | 0 | 1 | 3 |
| 1 | --- | -15 | -10 | -7 | -5 | -3 | -1 | 1 | 2 | 4 |
| 2 | --- | -14 | -10 | -6 | -4 | -1 | 0 | 2 | 3 | 5 |
| 3 | --- | -13 | -9 | -5 | -3 | -1 | 1 | 2 | 4 | 6 |
| 4 | --- | -13 | -8 | -5 | -2 | 0 | 2 | 4 | 5 | 7 |
| 5 | --- | -11 | -7 | -4 | -1 | 1 | 3 | 5 | 6 | 8 |
| 6 | --- | -11 | -8 | -3 | 0 | 2 | 4 | 6 | 7 | 9 |
| 7 | -18 | -10 | -6 | -2 | 0 | 2 | 5 | 6 | 8 | 10 |
| 8 | -17 | -9 | -5 | -1 | 1 | 4 | 6 | 7 | 9 | 11 |
| 9 | -16 | -9 | -4 | -1 | 2 | 4 | 6 | 9 | 10 | 12 |
| 10 | -16 | -8 | -3 | 0 | 3 | 5 | 7 | 10 | 11 | 13 |
| 11 | -15 | -7 | -3 | 1 | 4 | 6 | 9 | 10 | 12 | 14 |
| 12 | -14 | -6 | -1 | 2 | 5 | 7 | 10 | 11 | 13 | 15 |
| 13 | -14 | -6 | -1 | 2 | 6 | 8 | 10 | 12 | 14 | 16 |
| 14 | -13 | -5 | 0 | 4 | 6 | 9 | 11 | 14 | 15 | 17 |
| 15 | -12 | -4 | 1 | 4 | 7 | 10 | 12 | 14 | 16 | 18 |
| 16 | -11 | -4 | 1 | 5 | 9 | 11 | 13 | 15 | 17 | 19 |
| 17 | -10 | -3 | 2 | 6 | 9 | 12 | 14 | 16 | 18 | 20 |
| 18 | -10 | -2 | 3 | 7 | 10 | 13 | 15 | 17 | 19 | 21 |
| 19 | -9 | -1 | 4 | 8 | 11 | 14 | 16 | 18 | 20 | 22 |
| 20 | -9 | 0 | | 5 | 9 | 12 | 15 | 17 | 19 | 21 23 |
| 21 | -8 | 0 | | 5 | 10 | 13 | 16 | 18 | 20 | 22 24 |
| 22 | -7 | 1 | | 6 | 11 | 14 | 16 | 19 | 21 | 23 25 |
| 23 | -6 | 2 | | 7 | 11 | 15 | 17 | 20 | 22 | 24 26 |
| 24 | -6 | 2 | | 8 | 12 | 16 | 19 | 21 | 23 | 25 27 |
| 25 | -5 | 3 | | 9 | 13 | 16 | 20 | 22 | 24 | 26 28 |
| 26 | -4 | 4 | | 10 | 14 | 17 | 20 | 23 | 25 | 27 29 |
| 27 | -4 | 5 | | 11 | 15 | 19 | 21 | 24 | 26 | 28 30 |
| 28 | -3 | 6 | | 11 | 16 | 19 | 22 | 25 | 27 | 29 31 |
| 29 | -2 | 6 | | 12 | 17 | 20 | 23 | 26 | 28 | 30 32 |
| 30 | -1 | 7 | | 13 | 17 | 21 | 24 | 27 | 29 | 31 33 |
| 31 | -1 | 8 | | 14 | 19 | 22 | 25 | 27 | 30 | 32 34 |
| 32 | 0 | 9 | | 15 | 20 | 23 | 26 | 29 | 31 | 33 35 |

## 7 COMMON FIBERGLASS REPAIR PROCEDURE

All repairs to fiberglass parts consist of filling the damaged area with fiberglass cloth and resin or strand fiberglass and resin. The repair is allowed to harden, and then finishing operations may be performed. Use of the various materials is determined by the type of repair to be made. Large holes, torn sections and separate joints require the adhesive qualities of the resin and the reinforcing qualities of the fiberglass. Small dents, scratches or pits can be repaired using resin and strand fiberglass and filler mixed into paste. Instructions for either mix are explained under their respective headings in this section. For best results when making repairs, temperature should be between 70 and 75 °F (21-24 °C). Some people experience a skin reaction to resins. In such cases, wipe resin off with denatured alcohol or a good thinner. Use of protective hand cream is recommended.



**WARNING**

Always wear a respirator and goggles when grinding or sanding.

Extreme care must be taken if the sander is electrically operated, as dust from some resins is combustible when subjected to sparks or open flames. The proper tool for sanding resin is a low speed, air driven disc sander with a water attachment or a dry sander having a vacuum bag. Either will eliminate flying glass and resin dust.

The following additional tools and materials will assist in making repairs: hacksaw blade, assorted files, emery paper or cloth (150 or finer), scissors or tin snips, wax paper or cellophane sheets, a 3" (75 mm) paint roller, paint brush, putty knife, acetone and one or more heat lamps.

### 7.1 REPAIR USING FIBERGLASS CLOTH

Where necessary, sand paint away around damaged area and scrape away undercoating, if any, and wipe clean with solvent. Grind or file the damaged area to form a "V" at the broken or cracked portion. Sides of "V" should have a shallow pitch for maximum bonding area.

*NOTE*

*Roughening the surface improves adhesion of resin.*

If part is warped from original shape, use clamping equipment to straighten the surface. Preheat area to be repaired with one or two heat lamps placed 18 to 24 inches (450-610 mm) from repair.

**CAUTION**

Temperature should not exceed 140 °F (60 °C) during 30 minutes in order to avoid distortion.

Cut fiberglass cloth with scissors or tin snips, 1 to 3 inches (25-75 mm) larger than area to be repaired. Build area to desired height.

Mix resin and hardener following instructions on their containers. Saturate layers of fiberglass with mixture and place laminates over damaged area. Smooth out wrinkles and make sure general contour of area is maintained. Bubbles and wrinkles can be eliminated with a roller.

**CAUTION**

The pot life of the mix is approximately 15 minutes. Any accidental contamination to the skin, clothing, tools, etc. must be removed within this period. Use acetone to remove uncured resin.

Heat resin material again by placing heat lamps 18 to 24 inches (450-610 mm) from repaired area. Allow 12 to 15 minutes for repair to cure. After repair is cured, grind, file or sand to contour. Files other than body files may be more suitable. Featheredge and finish sanding.

If small pits or irregularities appear after making repair, correct by using a liberal amount of chopped strand or filler mixed with resin to form a paste. Refer to heading *"Repair using Fiberglass Paste"* in this section.

### 7.2 REPAIR USING FIBERGLASS PASTE

Fiberglass paste is used for repairing small dents, scratches, and pits. Paste is made by mixing resin, hardener and fiberglass strand or filler to the consistency of putty. Where it may be necessary, sand paint away around damaged

area. On underside of coach, scrape away undercoating from damaged area, and wipe clean with solvent.

Preheat the area to be repaired using heat lamps. Mix desired quantities of resin and hardener according to manufacturer's instructions. Add powdered fiberglass strand into mixture to thicken it into a putty state.

| *NOTE* |
| --- |
| *If repair is made on a vertical surface, adding powdered filler material to mixture will reduce tendency of hot resin to flow or run.* |

Apply the material with a putty knife or similar object, building material up to the desired contour. For deep filling and on vertical surfaces, several layers of material may be used.

A hacksaw blade, held flat to adjacent contour and then moved in a sawing action across the repair when the resin is in a gel state, will remove excess resin from repair. Finish repair with the same procedure as when using fiberglass cloth.

### 7.3 TYPICAL FIBERGLASS REPAIR PROCEDURE

Remove all loose particles or damaged material using a power sander or rasp. Clean area, overlapping hole approximately 1" to 1-½" (25-40 mm) all around. Remove all dirt, grease and paint from area to ensure good bonding surface. Feather the cleaned area all around (Figure 5).

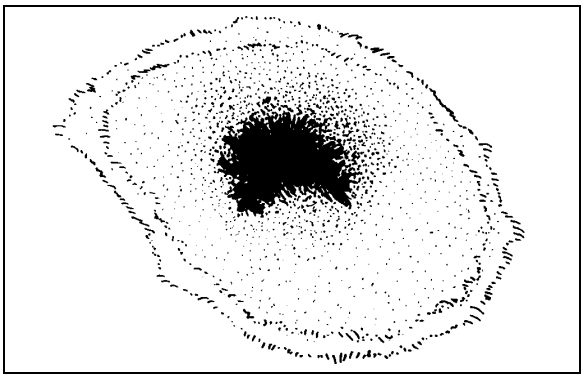

**FIGURE 5: FIBERGLASS REPAIR** 18089

Cut a piece of fiberglass mat slightly larger than area being repaired. Impregnate mat with general purpose polyester resin catalyzed normally. Use a clean paint brush to apply the polyester resin. Apply impregnated mat over hole and press onto surface with brush to obtain good adherence. Another coat of general purpose polyester resin can be applied at this time (Figure 6).

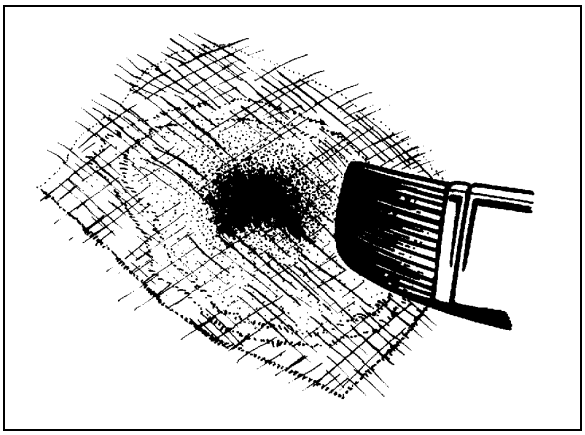

**FIGURE 6: FIBERGLASS REPAIR** 18090

| *NOTE* |
| --- |
| *Remove all air between surfaces being joined. Allow area to harden and sand surface to remove any wax.* |

Apply another mat, followed by a cloth patch, and another mat. All layers must be thoroughly impregnated with polyester resin, brushed well and free of air. Apply more layers of mat and cloth as required until the desired strength and thickness is obtained, minimum two 1-½ oz (43 g) mats and one 9 oz (255 g) cloth (Figure 7).

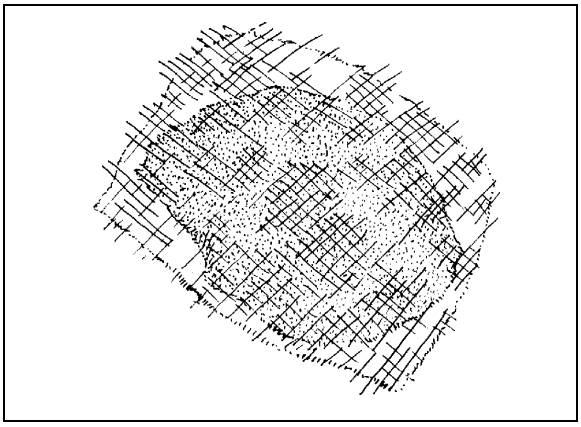

**FIGURE 7: FIBERGLASS REPAIR** 18091

Allow area to harden and contour the area with coarse sandpaper #100 (Figure 8).

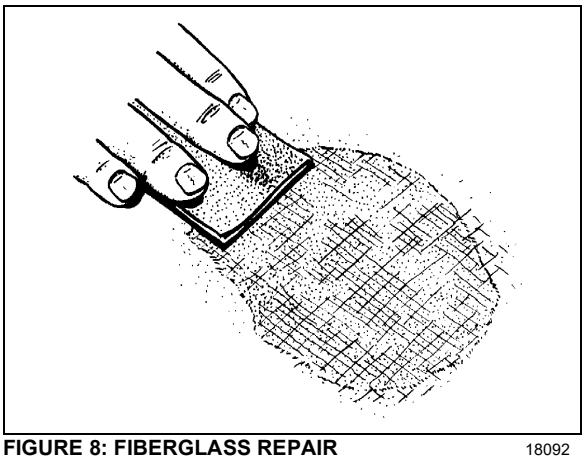

**FIGURE 8: FIBERGLASS REPAIR** 18092

Cover the area with a layer of resin putty and allow drying for approximately 15 to 20 minutes (Figure 9).

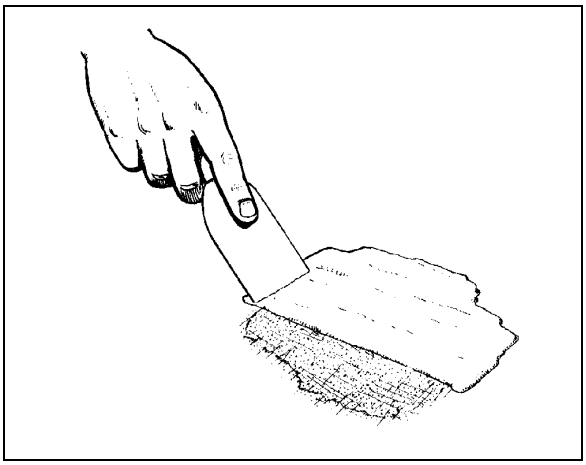

**FIGURE 9: FIBERGLASS REPAIR** 18093

Smooth off surface with coarse sandpaper #100 to desired shape. Further smooth surface with fine sandpaper #120 until repaired surface matches surrounding area paneling. Prime and paint the area to match surrounding paintwork.

## 8 COMMON PAINTING PROCEDURE

### 8.1 NEW PAINT CARE

Our paint supplier recommends that you follow these simple precautions the first months of your new vehicle's life.

**CAUTION**

Apply these recommendations after repainting vehicle.

**During the first 30 days:**

- Do not use a commercial bus wash. Stiff brushes or sponges could mar the finish and damage the surface. Wash the vehicle by hand only and with cool water and a very mild bus wash solution. Be careful to use only a soft cloth or sponge;
- Wash vehicle in the shade, never in direct sunlight;
- Do not "dry wipe" vehicle –always use clean water. Dry wiping could scratch the finish;
- Avoid extreme heat and cold. Park vehicle in the shade whenever possible;
- Do not park under trees which drop sap or near factories with heavy smoke fallout. Tree sap and industrial fallout may mar or spot a freshly painted surface;
- Trees are also likely to attract birds. Bird droppings are highly acidic and will damage a freshly painted surface. Bird droppings, tree sap and industrial fallout should be washed off as soon as possible;
- Do not spill oil, gasoline, antifreeze, transmission fluid or windshield solvent on new finish. IMMEDIATELY rinse off any such spill with clean water, DO NOT WIPE;
- Do not drive on gravel roads. Paint finish easily chips during the first 30 days;
- Do not scrape ice or snow from the surface. A snow scraper can act like a paint scraper if the finish is new. Brush off loose material with a soft snow brush.

**During the first 90 days:**

- Do not wax or polish the vehicle. This will allow the finish to dry and harden completely.

### 8.2 PAINT TOUCHUP

When paint touchup or partial repainting is necessary, refer to the vehicle's paint scheme for color codes and paint brand.

Prevost recommends using the original paint brand to ease color matching.

In the event you sand through to the gelcoat surface you should prime the area with Standox "Non Stop Fill Primer (ST-11000)".

If you sand through to metal surface, first prime with Standox "Etch Primer (ST-11858)" then with Standox "Non Stop Fill Primer (ST-11000)".

**⚠ CAUTION**

Be sure to heed all paint manufacturer's recommendations, especially concerning paint dilution and application.

8.3 PAINTING

The standard paint used on the exterior of the vehicle is Standox Basislack. It is a high gloss polyurethane enamel finish designed for exposure to extreme conditions. Other types of paint may be called for as options by owner but are not dealt with in this section.

### 8.3.1 Safety

Care should be exercised in storing, handling, mixing, and applying paint and chemicals listed in this manual. The topcoat, primer, solvent, catalysts, accelerators, and cleaners are highly volatile and/or toxic if not properly used. Observe all safety instructions marked on the different packaging, as well as the following:

1. Do not smoke in the paint room or in adjacent area exposed to residue fumes.
2. Wear respirators approved by the governing safety and health regulations.
3. Maintain adequate ventilation at all times.
4. Dispose of any leftover paint mix properly.
5. Wear rubber gloves, rubber apron, and face shield during all phases of paint and chemical handling

### 8.3.2 Surface Preparation and Paint Application

| | Aluminum and / or Stainless Steel | Fiberglass | Comments |
|---|---|---|---|
| **Surface Preparation** | Sand using P-150 grit sandpaper. It is recommended to sandblast rivets and panel edges with OLIMAG 35-70 blast media. | Sand using P-180 or P-240 sandpaper. | Do not use paint remover over aluminum or fiberglass. |
| **Cleaning** | STANDOX silicone remover ST-16203 | | |
| **Priming** | STANDOX Reactive Etch Primer ST-13908<br>* Wait 30 minutes then apply STANDOX HS primer ST-15161 | STANDOX Non-Stop Füllprimer ST-11000 (68-2973) | Refer to product Technical Data sheet for proper mixing |
| **Basecoat** | Refer to paint scheme or coach record for proper color code and paint brand.<br>We recommend using the same paint brand to ease color matching. | | Refer to product Technical Data sheet for proper mixing |
| **Clearcoat** | Axalta Imron Clear 8430 S<br>Allow 16 hours for drying | | Refer to product Technical Data sheet for proper mixing |

*NOTE*

*Product listing above is based on factory applied products. Local VOC (Volatile Organic Compound) regulations may vary, consult your paint supplier and use a VOC compliant product that matches the factory recommendations if required to do so.*

## 9 X3-45 COACHES EXTERIOR FINISHING AND BODY REPAIR

The following procedures cover repair, installation and replacement for various doors, panels and windows. The paragraph divides the vehicle into zones to facilitate the search; each zone is then sub-divided into components.

Refer to the appropriate zone and component for complete procedure.

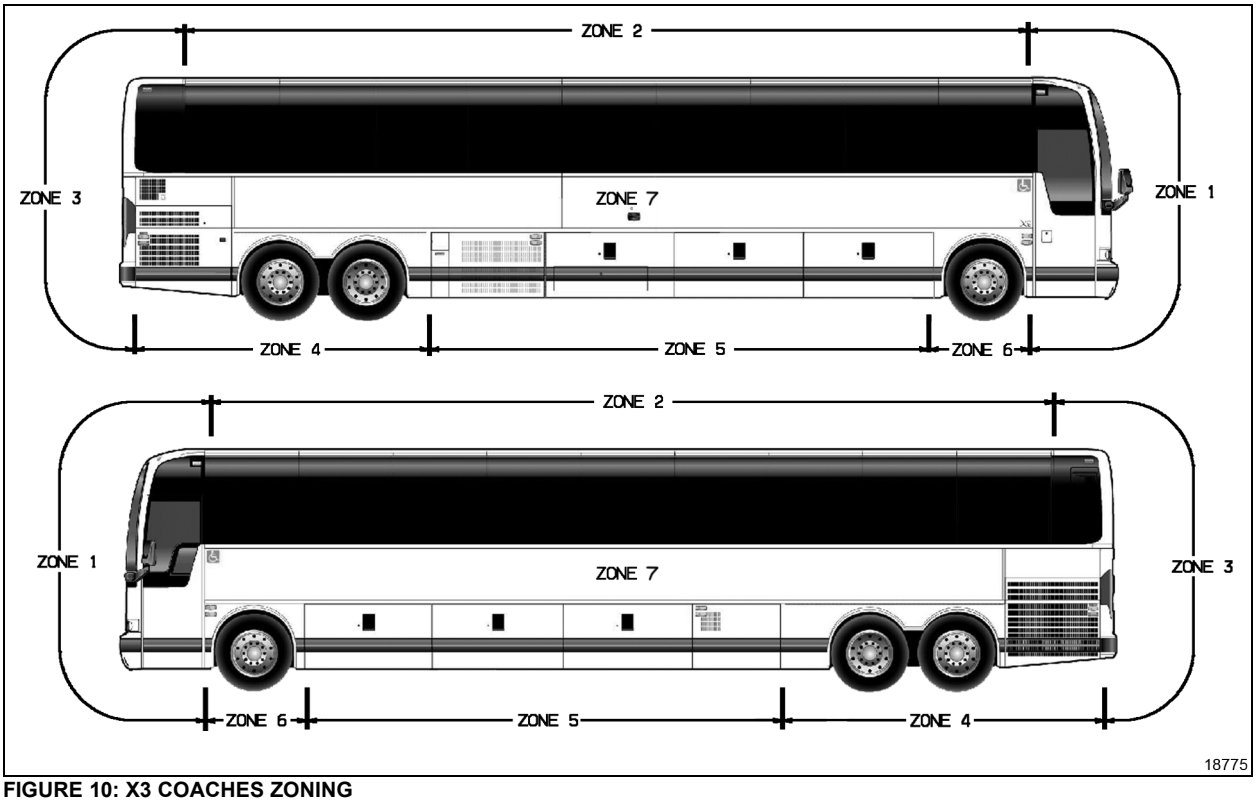


**FIGURE 10: X3 COACHES ZONING**

### 9.1 ZONE 1

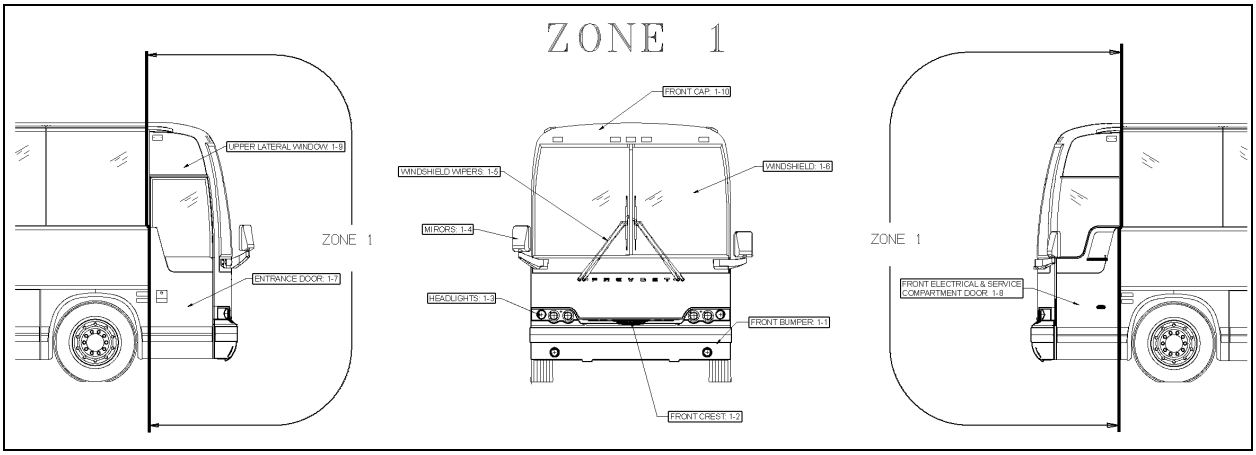


**FIGURE 11: ZONE 1** 18624

### 9.1.1 Front Bumper

The front bumper is hinged to give access to the spare wheel and tire compartment. Pull the handle located in the front service compartment to open the spare wheel and tire compartment. Bumper must first be tilted down before its removal. Two people are required to remove and install the front bumper. Safely support the bumper and remove the two bolts on each bumper side to separate the bumper from the spare wheel compartment door. To install bumper, reverse the removal procedure.

*NOTE*

*On Commuter type vehicles, the front bumper is hinged to give access to the steering gear and to facilitate removal and installation. To remove the bumper,* ***unscrew the top retaining bolts, located on each side next to the headlights,*** *and tilt down the bumper.*

**WARNING**

Front bumper is heavy. Use proper lifting equipment to support the bumper during the removal and installation operations to avoid personal injury.

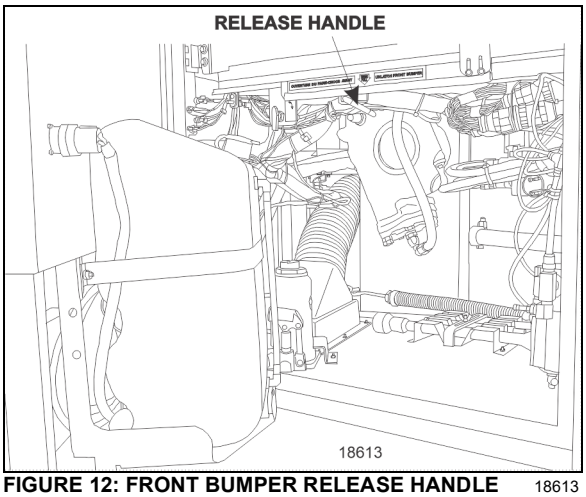


**FIGURE 12: FRONT BUMPER RELEASE HANDLE** 18613

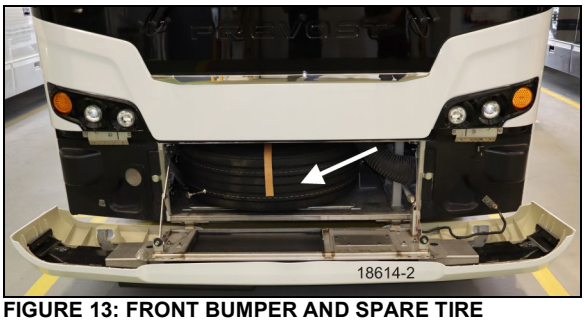


**FIGURE 13: FRONT BUMPER AND SPARE TIRE**

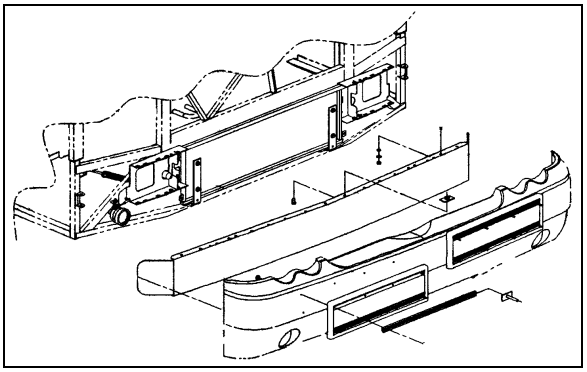

**FIGURE 14: FRONT BUMPER REMOVAL** 18565

### 9.1.2 Headlights

Refer to Paragraph Headlights, included in Section 06: Electrical of the Maintenance Manual for complete information on headlights.

### 9.1.3 Rear View Mirrors (RAMCO)

Your vehicle is equipped with two exterior mirrors.

The mirrors may be equipped with an optional electric heating system which serves to minimize ice and condensation on the mirror glass in extreme weather conditions. Integral thermostats are installed in both mirrors to avoid continuous heating. Use the appropriate switch on the dashboard to activate the defroster system on both mirrors simultaneously. The mirrors can easily be adjusted by using the remote controls located on the L.H. side control panel. The mirrors have easy to replace glass in case of breakage. Remote control motors can also be replaced.

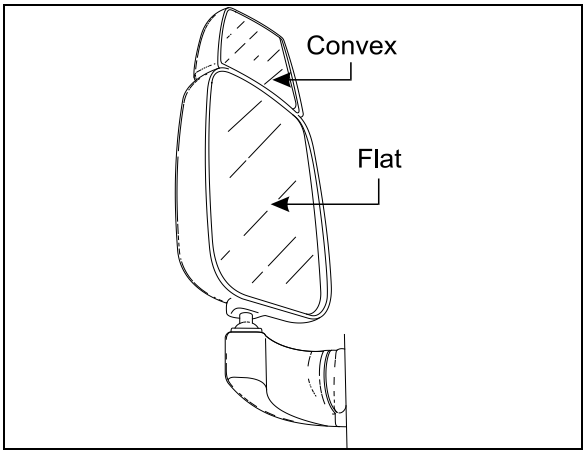


**FIGURE 15: REAR VIEW MIRROR (RAMCO)** 18398A

- **Adjustment**

At the base of the mirror arm, loosen the mounting bolt to swing arm in or out.
To pivot the mirror head, loosen the setscrews on each side of the ball stub at the base of the mirror head to facilitate the adjustment.

- **Disassembly**

At end of mirror arm, loosen the setscrews to relieve tension on the ball stem. Remove the ball stem from the arm.
Remove the four screws fastening the mirror arm base to the coach.

- **Assembly**

Mount the mirror arm base to the coach. Insert the ball stem into the mirror arm and tighten the socket setscrews.

*NOTE*

*Position the ball cup halves so the joint between them lies on the centerline of the arm. Ensure that the setscrews are not on the joint between the cup halves.*

- **Replacement of Mirror Glass**

Remove the broken glass.

Position new glass in mirror head and press to lock the Velcro in place.

- **Heated / Remote Controlled Rear View Mirrors**

Heated/remote controlled external rear view mirrors may be provided to prevent the mirrors from frosting up in cold weather.

The remote controlled external rear view mirrors attach to support arms using a pivot collar secured by setscrews. Loosening the setscrews allows the whole head assembly to turn on the support arm for initial adjustment. A mounting bolt and washer hold the arm support to the mounting bracket. The arm support can be moved to position the mirror head into or away from the coach body.

The mirror heat switch is located to the left of the driver on the dashboard. This switch must be activated before the mirror heating element will energize. Once energized, the mirror heating element is kept at a sustained temperature (between 60-80°F) by a thermostat. Refer to wiring diagram annexed in the technical publication box.

**⚠ CAUTION**

Do not attach stick-on type convex mirror accessories to the heated mirror glass. This could impede uniform heat distribution on the mirror surface which could break the mirror.

- **Mirror Control**

The remote control pointer knob(s) for the mirror(s) is (are) mounted on the L.H. side control panel. The harness to the mirror head runs through the arm support. The remote motor is mounted to the mirror head behind the mirror glass.

Turn pointer knob to the left for mirror head adjustments and to the right for convex mirror adjustment, then push down on either of the button's (4) sides to adjust the selected mirror viewing angle.

- **Disassembly**

At end of mirror arm, loosen the setscrews to relieve tension on the ball stud. Remove the ball stud. Remove the ball stud from the arm and gently pull the harness out until the connector is exposed.

Remove the four screws fastening the mirror arm base to the coach. Slide the harness free of the mirror arm base.

- **Assembly**

Attach a stiff wire (snake) to the end of the harness and insert the wire through the mirror arm base and arm, gently pull the harness through the arm and disconnect the "snake".
Connect the mirror head harness. Insert the harness connector back into the mirror arm.
Insert the ball stud into the mirror arm and tighten the socket setscrews.

| *NOTE* |
| --- |
| *Position the ball cup halves so the joint between them lies on the centerline of the arm. Ensure that the setscrews are not on the joint between the cup halves.* |

- **Convex & Flat Mirror Removal**

The mirror glass assembly is mounted to the control mechanism or to mirror base with Velcro strips. Remove the mirror glass by gently pulling the lens to release the Velcro. Disconnect the heater grid at the two connectors.
Connect the connectors of the new mirror's grid to the harness. Install the lens by positioning the lens in the mirror frame and pressing to lock the Velcro in place.

### 9.1.4 Optional Rear View Mirrors (ROSCO)

Commuter type vehicles may be equipped with two Rosco exterior mirrors.

The mirrors can easily be adjusted by using the remote controls located on the L.H. side control panel. The mirrors have easy to replace glass in case of breakage. Remote control motors can also be replaced.

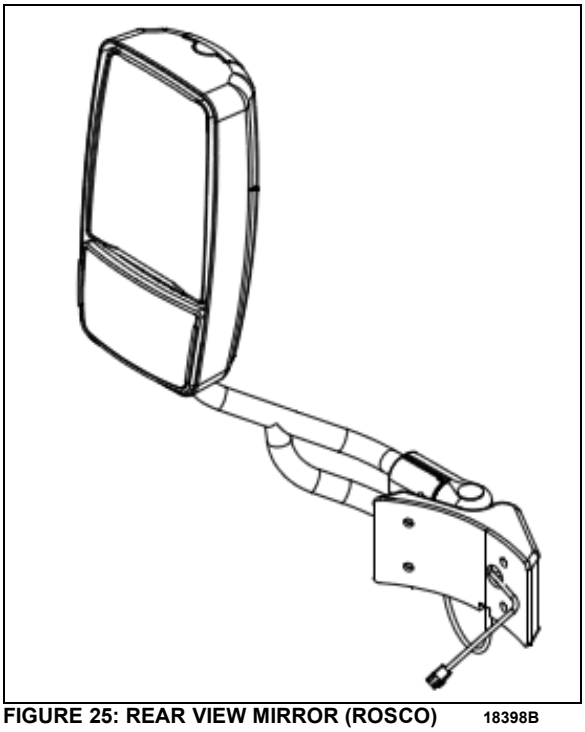

**FIGURE 25: REAR VIEW MIRROR (ROSCO)** 18398B

- **Adjustment**

At the base of the mirror arm, loosen the mounting bolt to swing arm in or out.

To pivot the mirror head, loosen the setscrews on each side of the ball stub at the base of the mirror head to facilitate the adjustment.

- **Disassembly**

At end of mirror arm, loosen the setscrews to relieve tension on the ball stem. Remove the ball stem from the arm.

Remove the four screws fastening the mirror arm base to the coach.

- **Assembly**

Mount the mirror arm base to the coach. Insert the ball stem into the mirror arm and tighten the socket setscrews.

| *NOTE* |
| --- |
| *Position the ball cup halves so the joint between them lies on the centerline of the arm. Ensure that the setscrews are not on the joint between the cup halves.* |

- **Remote Controlled Rear View Mirrors**

The remote controlled external rear view mirrors attach to support arms using a pivot collar secured by setscrews. Loosening the setscrews allows the whole head assembly to turn on the support arm for initial adjustment. A mounting bolt and washer hold the arm support to the mounting bracket. The arm support can be moved to position the mirror head into or away from the coach body.

- **Mirror Control**

The remote control pointer knob(s) for the mirrors is (are) mounted on the L.H. side control panel. The harness to the mirror head runs through the arm support. The remote motor is mounted to the mirror head behind the mirror glass.
**Choose the side to be adjusted by pressing the "L" (left) or "R" (right) button on the control pad. The flat mirror is then adjusted by pressing the "upper" button and the convex mirror by pressing the "lower" button. The selected mirror can now be adjusted left to right or up and down by using the arrow keys on the control pad. The R/H side round mirror is non-adjustable.**

| *NOTE* |
| --- |
| *The mirrors heater function (HTR button and LED indicator) is optional and not connected on this vehicle.* |

- **Disassembly**

At end of mirror arm, loosen the setscrews to relieve tension on the ball stud. Remove the ball stud. Remove the ball stud from the arm and gently pull the harness out until the connector is exposed.

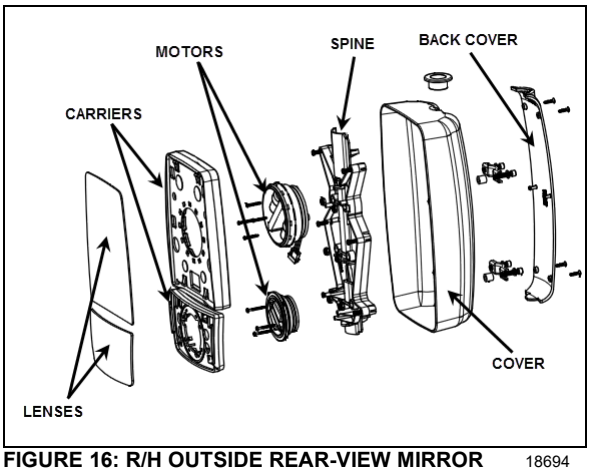


**FIGURE 16: R/H OUTSIDE REAR-VIEW MIRROR** 18694

Remove the four screws fastening the mirror arm base to the coach. Slide the harness free of the mirror arm base.

- **Assembly**

Attach a stiff wire (snake) to the end of the harness and insert the wire through the mirror arm base and arm, gently pull the harness through the arm and disconnect the "snake".

Connect the mirror head harness. Insert the harness connector back into the mirror arm.
Insert the ball stud into the mirror arm and tighten the socket setscrews.

| *NOTE* |
| --- |
| *Position the ball cup halves so the joint between them lies on the centerline of the arm. Ensure that the setscrews are not on the joint between the cup halves.* |

- **Glass removal and installation**

Using a non-metallic flat wedge, insert the edge under the over-hang tab covering the mirror glass.

Raise the wedge to spread the over-hang tab. By continuing to raise the wedge, the glass will begin to pop out.

Do not force the glass further than half an inch outward. A secondary adhesive holds the glass. This adhesive is used to cushion the glass and dampen vibration. It is soft and can be cut fairly easily.

Slide a straight edge, such as a ruler, behind the glass and make a slicing motion back and forth. The mirror glass will come free.

Remove the glass after the adhesive has been cut. Some adhesive will remain on the mirror

carrier. These adhesive spots are soft and pressure sensitive. They will adhere again when the glass is reinserted.

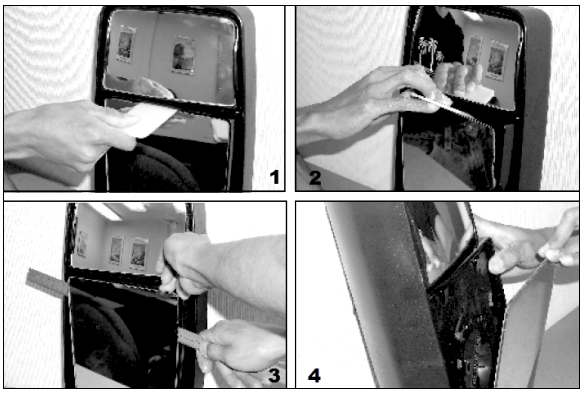


**FIGURE 17: REAR VIEW MIRROR GLASS REMOVAL**

To re-insert the glass, slide one side under the over-hang tab and spread the opposite over-hang tab with the wedge until the mirror glass is permitted to snap or drop in place.

### 9.1.5 Windshield Wipers

Refer to Paragraph “Windshield Wipers and Washers”, included in Section 23: Accessories of the Maintenance Manual for complete information on windshield wipers.

### 9.1.6 Windshield

The windshield is single-glazed AS-1 laminated safety glass. Each windshield is secured to a flange around the front structure opening by a one-piece black rubber extruded gasket

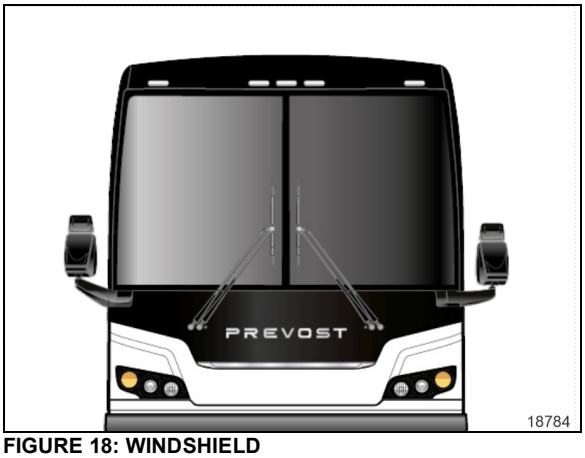


**FIGURE 18: WINDSHIELD**

A low profile gasket with a single locking strip is now used on our vehicles.

Proper installation of the windshield ensures watertightness. Since glass varies in fit depending on the supplier, we recommend installing a replacement windshield obtained from Prevost Parts to ensure proper fit.

| *NOTE* |
| --- |
| *For more information on windshield removal or installation, a webinar is available from Prevost.* |

#### 9.1.6.1 Hydrophobic Treatment on Side Windows

The new low profile window gasket creates an airflow that is closer to the vehicle. This reduces air drag but window soiling of the side windows becomes more likely.

A specific water repelling treatment is factory applied to the driver's and entrance door windows to counter this effect and prevent window soiling.

We suggest renewing the water repelling treatment each year or more frequently depending on operating conditions.

If you notice increased soiling on the driver's and entrance door windows after several months of operation, the water repelling treatment can be renewed by making an appointment with your nearest Prevost Service Center.

The Hydrophobic compound is specially formulated for Prevost and can only be applied by Prevost technicians in Prevost service centers.

#### 9.1.6.2 Removal

| **WARNING** |
| --- |
| Removal and installation must be performed by more than one person. Wear protective gloves when handling the windshield. |

1. Remove the wiper arms of the affected windshield.
2. To ease damaged windshield removal, remove the rubber locking strips from the rubber extrusion.
3. From inside of vehicle, push against the top L.H. side corner of windshield for the removal of a R.H. side windshield. If the L.H. side windshield had to be removed, you would have to push against the top R.H. side corner.

| *NOTE* |
| --- |
| *We are referring to the L.H. and R.H. side as viewed from the inside of the vehicle.* |

4. At the same time, another person gradually lifts the rubber lip from the vehicle exterior using a plastic spatula from top to bottom.
5. Remove the entire damaged windshield and broken glass if applicable.
6. Clean the rubber extrusion channel with Standox anti-silicone. Refer to heading *"Windshield Installation"* in this section for instructions on how to reinstall windshield.

| *NOTE* |
| --- |
| *If the rubber extrusion is damaged, remove and discard it, then clean the windshield opening with Standox anti-silicone. Refer to heading "Installation of Rubber Extrusion and Windshield" in this section for complete instructions.* |

#### 9.1.6.3 Windshield Installation

This procedure is provided as a general guideline to install a new windshield with a new

gasket on a clean structure. The method may vary depending on material aging and condition.

1. Spray rubber extrusion with soapy water to ease windshield insertion.
2. Slide windshield into rubber extrusion groove starting with the bottom curved side edge. Using a plastic spatula, move the rubber extrusion lip aside to gradually insert the windshield into the groove.

| NOTE |
| --- |
| *Spray soapy water on a regular basis to ease windshield insertion.* |

4. Using the same type of plastic spatula, repeat the same operation from inside of vehicle, gradually inserting the windshield into the groove.

| NOTE |
| --- |
| *Make sure windshield bottom edge is well inserted into the rubber extrusion groove before proceeding with the sides.* |

5. Then, working from both sides of windshield bottom to top, gradually move the rubber extrusion lip aside to insert the windshield into the groove. Use also soapy water on the inside of vehicle to insert the windshield into the rubber gasket groove.

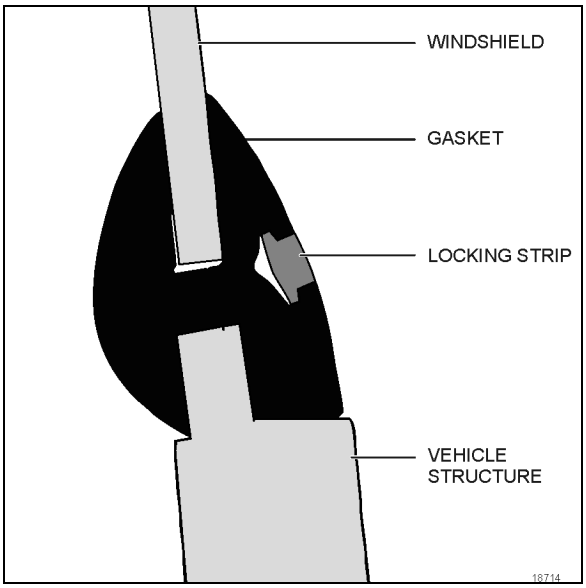


**FIGURE 19: WINDSHIELD INSTALLATION SIDE VIEW**

6. Insert the top curved corner then finish with the top of windshield.
9. Spray locking strip and rubber extrusion groove generously with soapy water.

| NOTE |
| --- |
| *Locking strips retract with time. Install ends of locking strips as tight as possible in the V-channel.* |

10. Using insertion tool 680755, insert the strip into the rubber extrusion groove. Gradually insert strip making sure to leave a 2 inch excess length at the extremity.

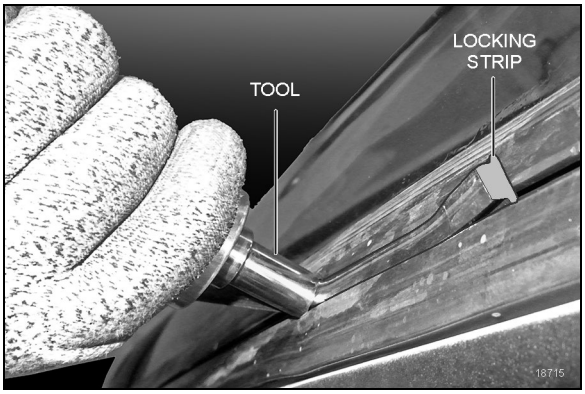


11. IMPORTANT: Every 6 inches or so, slide backwards to compress the strip due to its tendency to contract during drying process.
12. When strip insertion is almost complete, cut end at a 45° angle leaving ¼" of excess length to prevent contraction over time then insert strip into groove.
13. Reinstall windshield wiper and destination sign if applicable.

### 9.1.6.4 Installation of Rubber Extrusion and Windshield

> **CAUTION**
>
> The black rubber extrusion securing the windshield in the opening fits correctly in only one position. Find the correct position of the rubber extrusion now, and make reference marks with a china marker to avoid searching for the correct position later in the procedure.

1. Clean the windshield opening sealing surfaces with anti-silicone and let dry.
2. Apply a 1/8" bead of black Simson adhesive #684685 to all four corner of the gasket in the groove outside corner as illustrated in Figure 20. Do this *before* placing gasket on vehicle structure to control quality and continuity of bead. This method helps achieve a watertight installation.
3. Place gasket on vehicle and secure the upper sections with tape
4. Wait for Simson adhesive to bond Install windshield as per paragraph 9.1.6.3: *"Windshield Installation"*

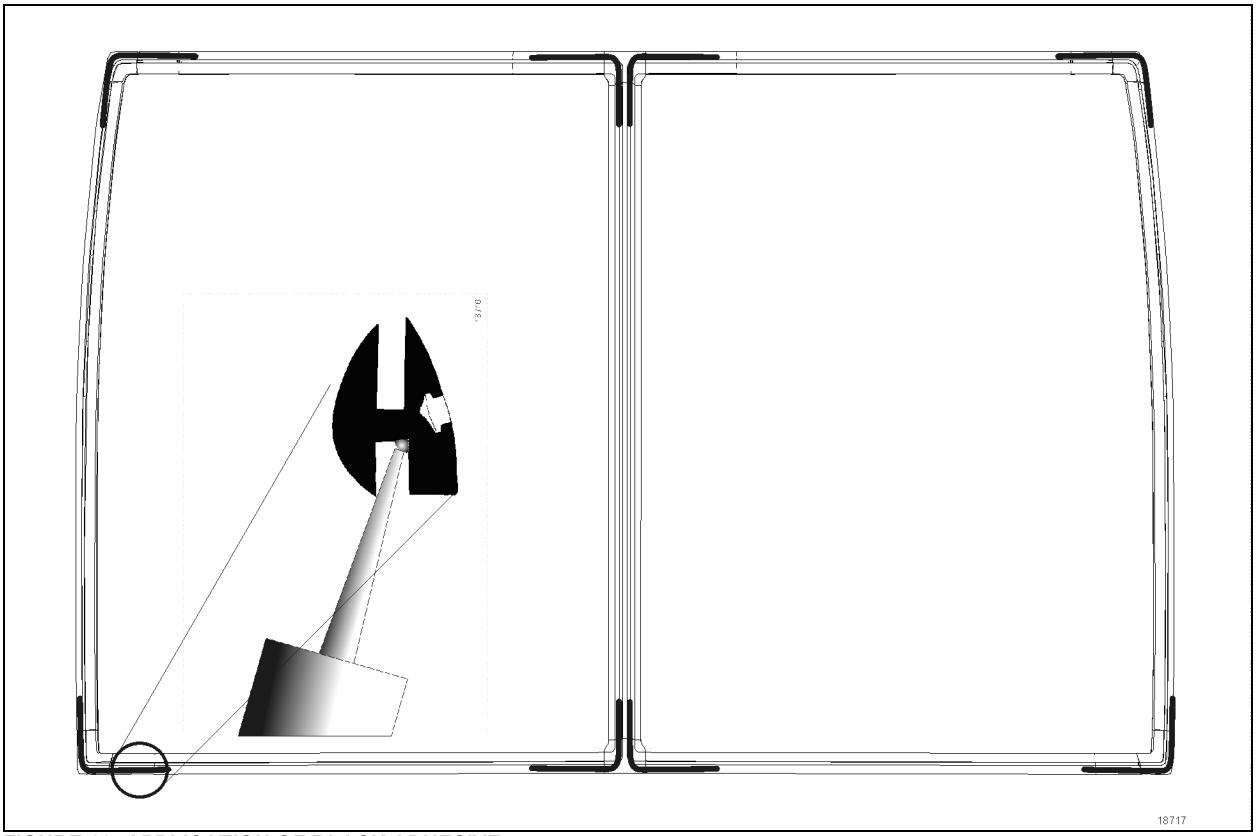


**FIGURE 20: APPLICATION OF BLACK ADHESIVE**

### 9.1.7 Regular Entrance Door (Coaches)

An air operated “sedan type” entrance door, with an air door cylinder and damper assembly are installed under the right hand dash. The opening and closing door speed cycle is adjustable by a damper mounted in parallel with the door cylinder on the door hinge. Door activation is controlled by a panel (Figure 21), located near the defroster and wiper motors. The accessory air reservoir supplies air to this system.

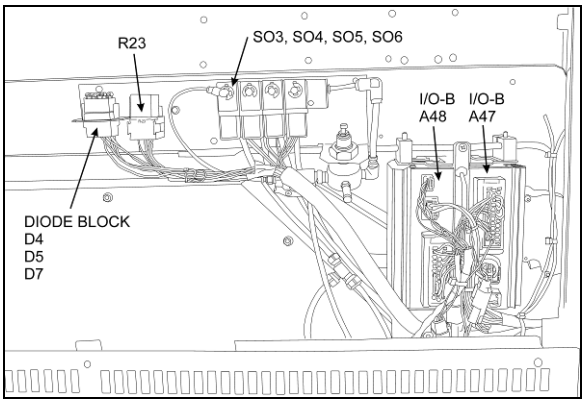


**FIGURE 21: ENTRANCE DOOR & WIPER CONTROL PANEL** 06619

The door is held in the closed position during coach operation by a two air cylinder locking mechanisms (Figure 23). Air cylinders with return spring in the cylinder body are used. Air cylinders are controlled by an electrically operated solenoid valve energized by a rocker switch located under the right hand dashboard.

To open the door, initial movement of the rocker switch energizes the air lock solenoid valve, venting the door locking cylinders. The return locking spring pulls the door lock away from the latch, unlocking the door. Door movement starts only when pressure in the central air door lock is below 10 psi. The “air cylinder open solenoid valve” opens and allows air to flow to the door cylinder, “the air cylinder close solenoid valve” exhausts air from the rod side of the cylinder.

To close the door, initial movement of the switch energizes the “air cylinder close solenoid valve” and air flows to the cylinder by its rod side port. The “air cylinder open solenoid valve” exhausts air from cylinder. When the reed switch signals the door as closed, the air lock solenoid valve is de-energized and loads the door lock cylinders. The cylinder moves the door lock in a position which engages a latch on the entrance door, holding the door positively closed.

Emergency exit valve, which opens the air valve circuit should be used only in emergencies, or when the door control system does not function properly.

Refer to the air system schematic diagram annexed at the end of section 12, “Brakes” and to page 22 of the wiring diagram.

- **Operation**

The air-operated door is controlled from inside the coach by two push-button switches located on the R.H. dashboard.

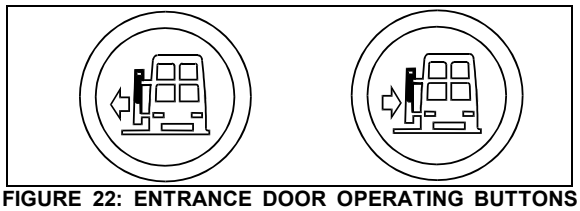

**FIGURE 22: ENTRANCE DOOR OPERATING BUTTONS** 06464

Opening and closing of the door from outside the coach is accomplished by a momentary toggle switch located under the front R.H. side marker light (Figure 24).

To close the door, the switch must be pushed towards the rear of the coach and held in position until the door has completed its movement.

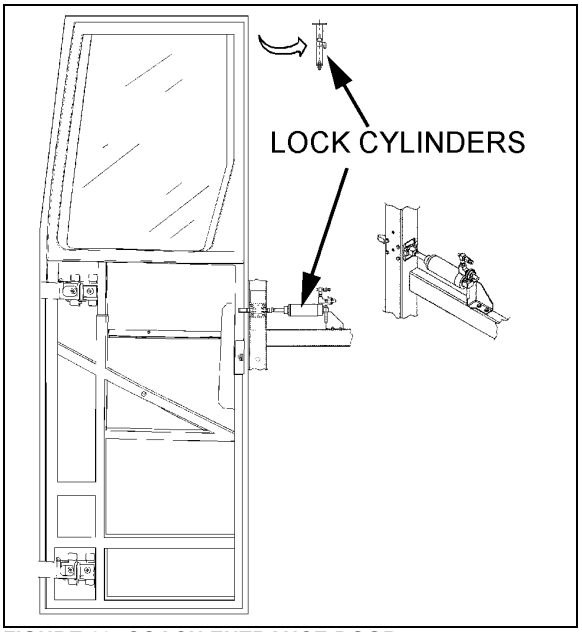


**FIGURE 23: COACH ENTRANCE DOOR** 18642

To open the door, the switch must be pushed towards the front of the coach and held in position. When the door reaches the fully opened position, the system will keep pressure in the cylinder locking the door in that position. The door can be stopped in any position by releasing the switch. The door is not locked in position when not fully opened or closed.

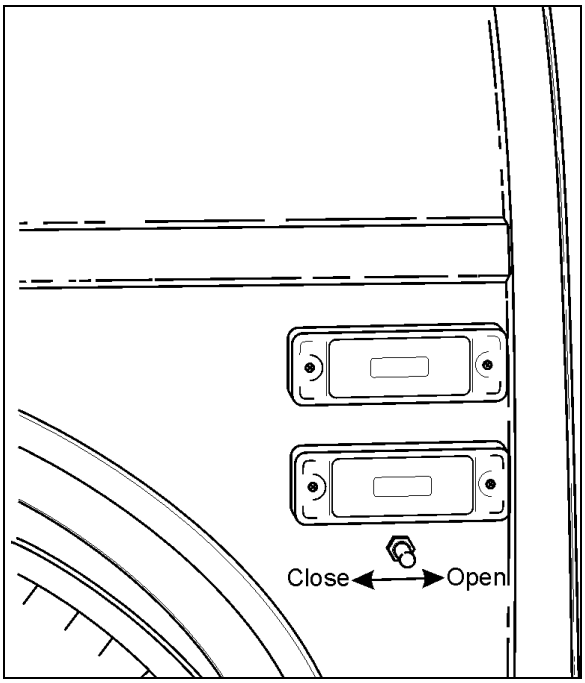


**FIGURE 24: ENTRANCE DOOR CONTROL SWITCH** 18599

If the door has been locked with the key, a lever on the door can be moved to unlock.

- **Emergency Exit Valves**

From inside the vehicle, an emergency exit valve located near the door on the dash panel, releases the pressure from the lock cylinder. From the exterior, an emergency exit valve located in the front service compartment, also releases the air from the lock cylinder.

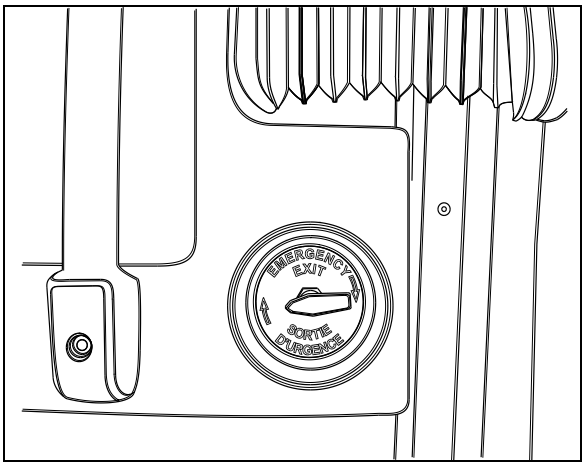


**FIGURE 25: INTERIOR UNLATCH AIR VALVE** 18330

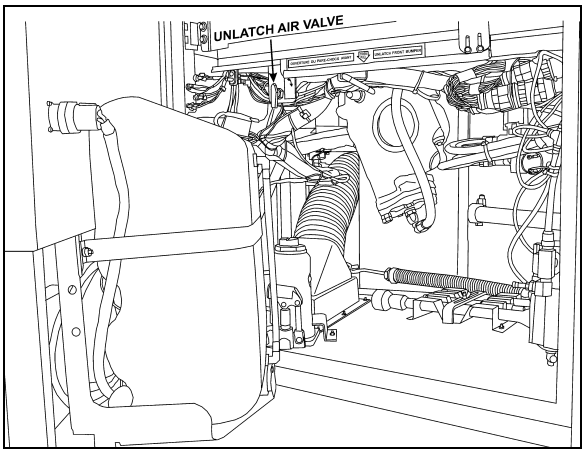


**FIGURE 26: EXTERIOR UNLATCH AIR VALVE** 12209

Without Air and/or Without Electricity

If the air pressure drops while the coach has or hasn't any electricity, the spring loaded cylinders will unlatch the door. In such a case, unlock the door by moving the lever on the door or by using the key, then open the door manually.

With Air but Without Electricity

From inside the vehicle, turn the emergency exit valve to the "UNLOCK" position. Move the lever. From the exterior, turn the emergency exit valve to the "UNLOCK" position. Open the door. Close it, lock with the key and reset the outside emergency exit valve to the "NORMAL" position.

- **Door Cycle Speed Adjustment**

To do any adjustment, remove the two panels located next to the door hinge, as well as the door's upper hinge control.

**CAUTION**

It is important to make sure that damper does not reach end of stroke when door is completely closed or opened. The door cylinder must stop the door on opening. Screw or unscrew rod end to adjust if necessary.

To adjust opening and closing cycle speed on damper (Figure 27):

1. Remove the damper from the vehicle and hold it vertically with the lower eye or pin attachment in a vice. Use clamp plates to prevent damage.
2. Fully close the damper while turning the dust cap or piston rod slowly CCW until it is felt that the cams of the adjusting nut engage in the recesses of the foot valve assembly (Figure 27).

*NOTE*

*In* Figure 27*, if there is an indentation (B) in the dust cap (C) and the cover shows two holes (A), the damper is fitted with a bump rubber (D). If so, fully extend the damper and insert a round bar or screwdriver through the holes. Push the bump rubber down and remove. Remove the split plastic collar (E) (if fitted) from the piston rod.*

3. The damper may have already been adjusted. Therefore check whether the damper is adjusted or not by keeping it closed and gently turning further CCW, counting at the same time the half-turns until a stop is felt. Stop turning and do not force.
4. While keeping the damper closed, make two CW half-turns. In case of prior adjustment, add the number of half-turns previously counted. The total range is about five half-turns. Pull the damper out vertically without turning for at least 3/8" (1cm) to disengage the adjusting mechanism. The dust cap or piston rod may now be turned freely.
5. The damper can now be refitted in the vehicle.

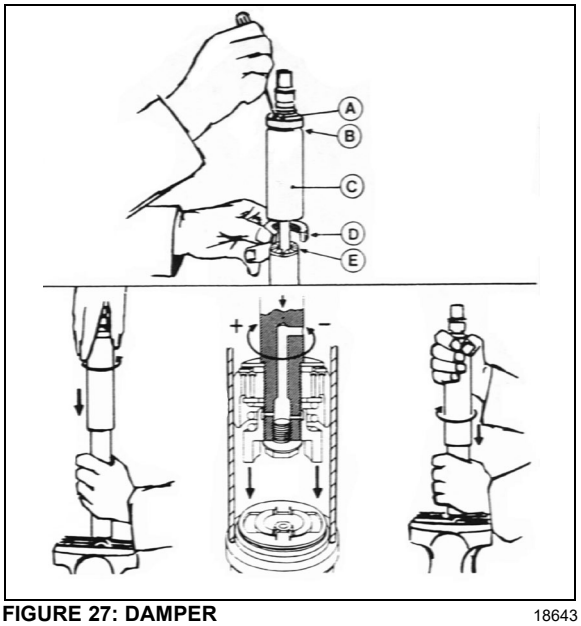


**FIGURE 27: DAMPER** 18643

*NOTE*

*Where a bump rubber was installed, refit same inside the dust cap and by fully closing the damper, the rubber will seat again at top of the dust cap. Refit the split plastic collar E (*Figure 27*).*

6. Reinstall panels and entrance door hinge cover.

- **Horizontal And Vertical Adjustment**

Before attempting to correct any door operating problem by adjusting any part of the air cylinder assembly, first perform the following mechanical checks and procedure.

Check around the perimeter of the door for binding. If any binding is found, adjust as follows:

1. Remove the screws and the plastic molding covering each of the hinges.

*NOTE*

*Ask an assistant to help you to perform the following adjustments.*

2. Remove the Allen button head screw and the washer retaining the rod end with bearing to the upper hinge. See Figure 28.

3. Support the door with a wooden block and a hydraulic jack.

4. Loosen the horizontal bolts retaining the door to the hinges. Adjust the door horizontally and vertically with the jack. Tighten the bolts.

   **TORQUE: 55-65 lb-ft (75-88 Nm)**

   Remove the jack and the wooden block.

**CAUTION**

Make sure the front side door does not interfere with the exterior panel.

5. Pull and fasten the rod end to the hinge with the washer and the button screw.
6. Screw the plastic moldings covering the hinges.

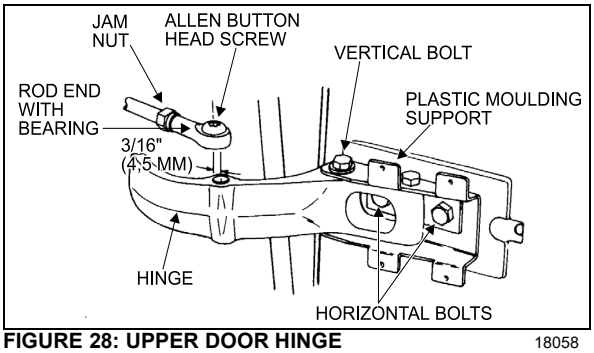


**FIGURE 28: UPPER DOOR HINGE** 18058

Seal Compression Adjustment

1. Turn the emergency exit valve to the "UNLOCK" position and close the door.
2. From the outside of vehicle, insert a straight edge in the gap along the door outside perimeter. Measure the distance between the door frame and the door outside surface at the door four corners (refer to Figure 29).

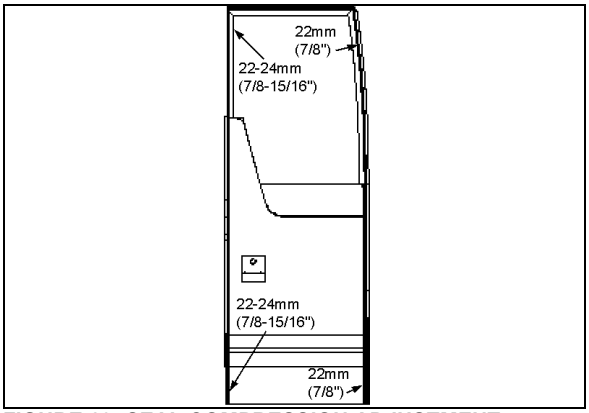


**FIGURE 29: SEAL COMPRESSION ADJUSTMENT** 18632

*NOTE*

*The front measurements are the most important. If required, ask an assistant to help you to perform the following adjustments.*

3. If required loosen the bolts retaining the door to the hinges. Adjust the bolts to obtain the proper seal compression.

Door Seal Replacement

1. Inspect the seal; if cracked or torn, it must be replaced:
2. Remove the old seal and with a sharp edge knife, scrape tape left on the fiberglass door surface.
3. Sand the surface of the door where a new seal will be applied with 240 grit sandpaper.
4. Clean the surface with alcohol or anti-silicone.

**WARNING**

Wear rubber gloves and do not smoke when cleaning.

5. Peel off protective paper from the seal. Position the seal flush with the top, sides and lower edges of the door.
6. Progress slowly all around the door.
7. Cut the seal and glue both ends with LOCTITE 414 glue.
8. To assure bonding, press a small conical roller on top of the new seal all around 3 times.

- **Troubleshooting**

| SYMPTOMS | PROBABLE CAUSES | REMEDY |
|---|---|---|
| DOOR WILL NOT OPEN FROM EXTERIOR SWITCH. | Manual door locks engaged. | Release manual door locks. |
| | Upper and lower solenoid locks do not disengage. | Check voltage at solenoid locks when door is open. If the voltage is 24 volts then replace solenoid #641217. Else, check circuit power. |
| | Relay module do not receive current. | Reset breaker "ON" or check batteries power supply. |
| | Opening solenoid door does not receive current. | Check voltage at opening solenoid door. If the voltage is 24 volts then replace it. Else replace control relay. |
| | Switch malfunction. | Replace switch. |
| DOOR WILL NOT CLOSE FROM EXTERIOR SWITCH. | Switch malfunction. | Replace switch. |
| | Solenoid failure. | Check voltage at solenoid. If the voltage is 24 volts then replace solenoid. Else replace control relay. |
| DOOR WILL NOT OPEN FROM INTERIOR SWITCH. | Manual door locks engaged. | Release manual door locks (open position) from vehicle exterior. |
| | Upper and lower solenoid locks do not disengage. | Check voltage at solenoid locks when door is open. If the voltage is 24 volts then replace solenoid #641217. Else, check circuit power and replace control relay. |
| | Module relay does not receive electric current. | Reset breaker "ON" or check batteries power supply. |
| | Door opening solenoid does not receive current. | Check voltage at door opening solenoid. If the voltage is 24 volts then replace it. Else replace control relay. |
| | Switch malfunction. | Replace switch. |
| | Upper lock stays engaged | Lubricate upper lock assembly. Check wear and replace parts if necessary. |
| DOOR WILL NOT CLOSE FROM INTERIOR SWITCH. | Switch malfunction. | Replace switch. |
| | Door closing solenoid does not receive electric current. | Check voltage at door closing solenoid. If the voltage is 24 volts then replace it. Else replace control relay. |
| DOOR WILL NOT OPEN AFTER DRAINING AIR FROM SYSTEM BY EMERGENCY VALVE(S). | Manual door locks engaged. | Release manual door locks (open position) from vehicle exterior. |
| | Damper cylinder blocks the door. | Adjust or replace damper cylinder. |
| | The upper lock blocks the door. | Adjust upper lock. Lubricate upper latch bolt. Adjust upper latch height. |
| DOOR LOCKS STAY | Power supply is cut at solenoid. | Place switch in open position. |

| SYMPTOMS | PROBABLE CAUSES | REMEDY |
|---|---|---|
| ENGAGED WHEN DOOR IS OPEN. | Lock solenoid does not disengage. | Check voltage at solenoid lock when door is OPEN. If the voltage is 24 volts then replace solenoid #641217. Else, check circuit power and replace control relay. |
| | | |
| DOOR LOCKS DO NOT LOCK WHEN DOOR IS CLOSED. | Emergency valve is open. | Close emergency valve. |
| | Lock solenoid stays electrified. | Check latch bolt ground on door frame. If needed clean locks for better contact. Check ground circuit. |
| | Lock solenoid works in reverse. | Reverse air hoses at solenoid locks. |
| | Relay does not function. | Replace relay. |

- **Lubrication**

| Part | Lubricant | Frequency |
|---|---|---|
| ▪ Latches<br>▪ Upper door catch<br>▪ Door cylinder rod end with bearing grease fitting | *Low temperature grease* | Every six months |
| ▪ Door locking mechanism | *White grease* | Every six months |
| ▪ Key hole<br>▪ Damper pins<br>▪ Hinges | *Low viscosity oil* | Every six months |

- **Entrance Door Body Panel and Window**

  Window

For the removal of entrance door window, you will need:

Pneumatic hammer tool (Zip Gun);
Razor sharp window scraper;
"Olfa" knife;
Face shield.

- Open entrance door.
- Mark the position of the entrance door window for future reference.
- Remove interior finishing panel.
- From inside of vehicle, cut Sika bead around window perimeter using a "Zip gun" while another person hold the window from the outside.

| *NOTE* |
|---|
| *Wear ear plugs during this operation.* |

- Then, move outside of vehicle and cut Sika bead to free window while somebody else hold the window from the inside.
- Carefully remove window from frame, ask for help if needed.
- Using a razor sharp window scraper, remove Sika bead and double-face self-adhesive tape residue from window frame.
- Clean window using window cleaner.
- Apply Sika Aktivator around window perimeter.
- Clean door frame using anti-silicone.
- Using a scratch pad "Scotch Brite", scratch the perimeter of the window frame where the adhesive will be applied.
- Clean door frame again using anti-silicone.
- Apply some Sika 206 G+P onto door frame.
- Apply Sika 255 onto door frame structure.

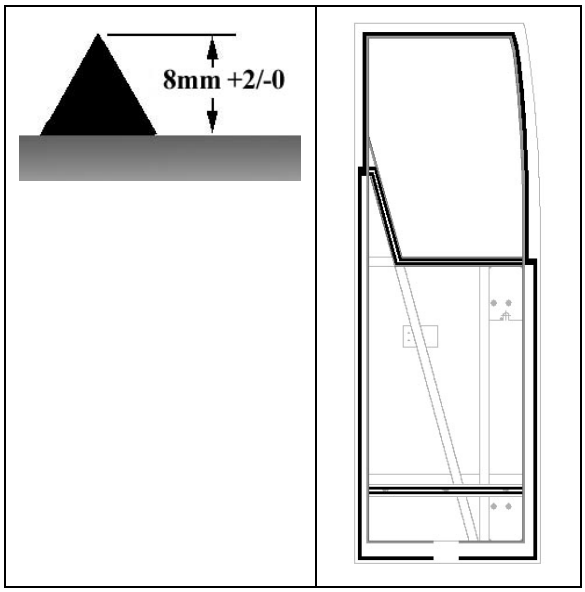


- Apply Sika 255 at junction of frame and window.

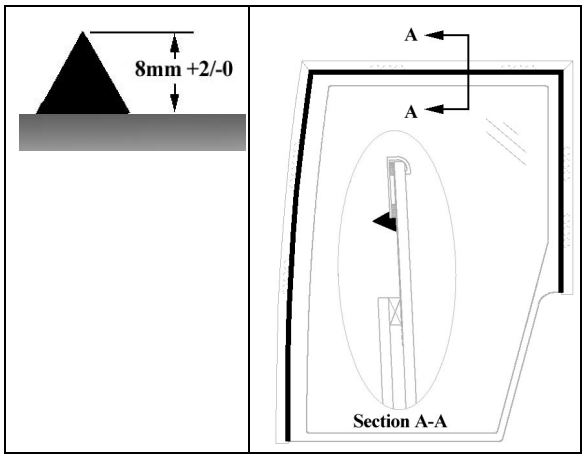


- Install and center window onto door frame. Using your hands, compress window.
- Discard waste according to applicable environmental regulations, use dangerous waste containers.
- Apply masking tape before applying Sika glue to protect paint and adjacent surfaces during surface treatment

Body Panel

For the removal of entrance door body panel, you will need:

Pneumatic hammer tool (Zip Gun);
Razor sharp window scraper;

- Open entrance door.
- Remove interior finishing panels to access rub rail fixing bolts, then remove rub rail.
- Remove door lock and interior lighting.
- Using the "**Zip Gun**", cut Sika bead located ¼ inch (7-8 mm) from each body panel edge.

| *NOTE* |
| --- |
| *Wear ear plugs during this operation.* |

- Separate body panel from door.
- Using a razor sharp window scraper, remove from door frame Sika bead and double-face self adhesive tape residue.
- Using a scratch pad "Scotch Brite", scratch the perimeter of the door frame where the adhesive will be applied.
- Clean door frame again using anti-silicone.
- Apply some Sika 206 G+P onto door frame.

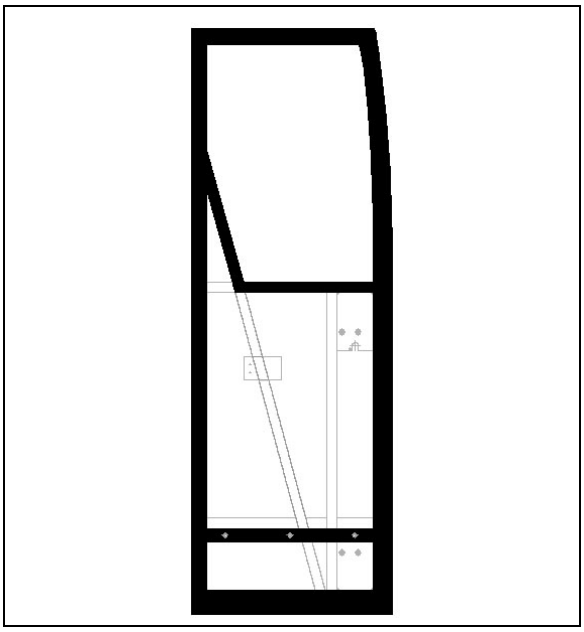

- Using a scratch pad "Scotch Brite", scratch the perimeter of the body panel where the adhesive will be applied.
- Clean body panel using anti-silicone.
- Apply some Sika 206 G+P onto body panel.

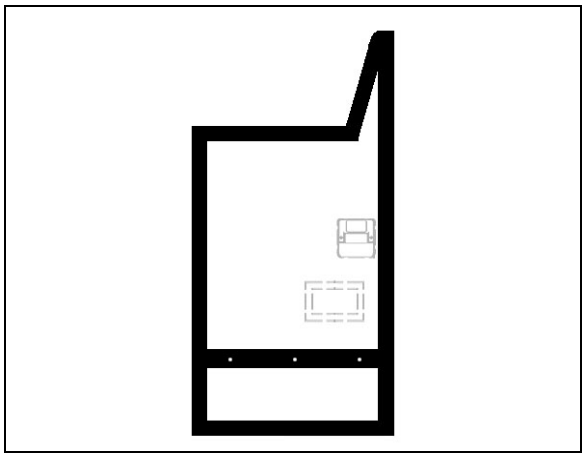

- Apply 1/8 x1/4 double face self-adhesive tape onto door frame.

*NOTE*

*Leave some space at the bottom (50mm) for water dripping*

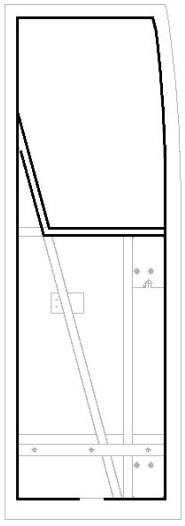

- Apply Sika 255 onto door frame structure.

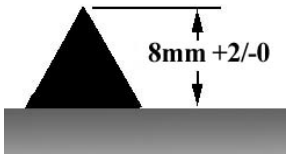


*Note: Leave some space at the bottom (50mm) for water dripping.*

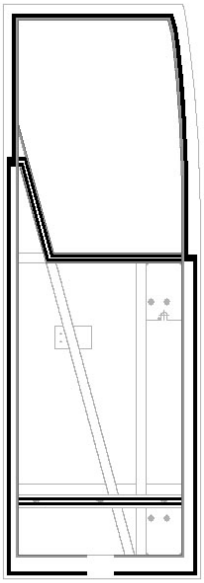

- Install and center fiber glass body panel onto door frame leaving an excess of 3mm all around the frame.

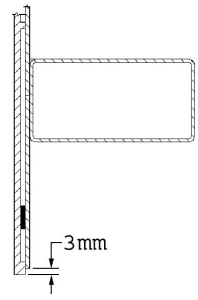


- Line-up body panel with window. There must be a gap of 4±2mm between window and body panel.

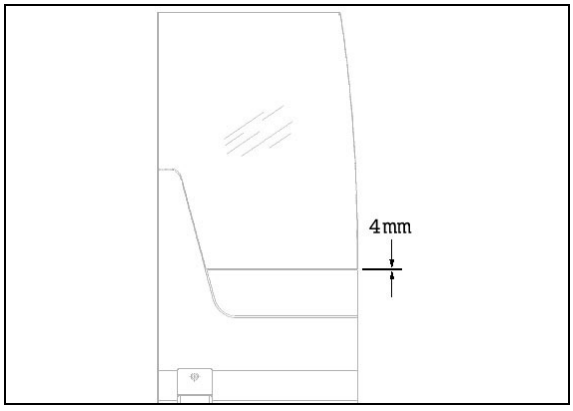


- Apply some masking tape **1mm** from window edge and body panel.

- Fill the gap between window and body panel with Sika 255.
- Smooth down the joint with a plastic scraper then remove masking tape.
- Wet Sika joint using water to accelerate the curing process and put the finishing touch with your finger.

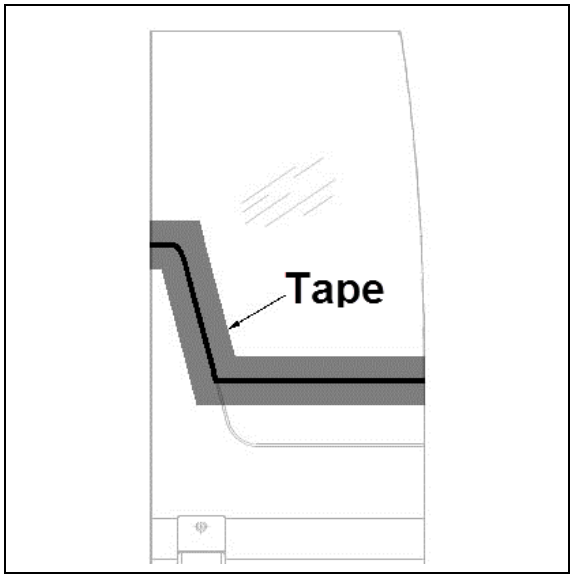


- Discard waste according to applicable environmental regulations, use dangerous waste containers.

### 9.1.8 Commuter Type Entrance Door

An air operated entrance door, with an air door cylinder and damper assembly installed under the right hand dash for the R.H. door panel opening. Another air door cylinder is installed behind the wall to the right of the first curb-side passengers' seat for the L.H. door panel opening. The opening and closing door speed cycle is adjustable by a damper mounted in parallel with the R.H. door panel cylinder on the door hinge. Door activation is controlled by a panel (Figure 30), located near the defroster and wiper motors. The accessory air reservoir supplies air to this system.



**FIGURE 30: ENTRANCE DOOR & WIPER CONTROL PANEL** 06619

The door is held in the closed position during coach operation by a two air cylinder locking mechanisms (Figure 31).

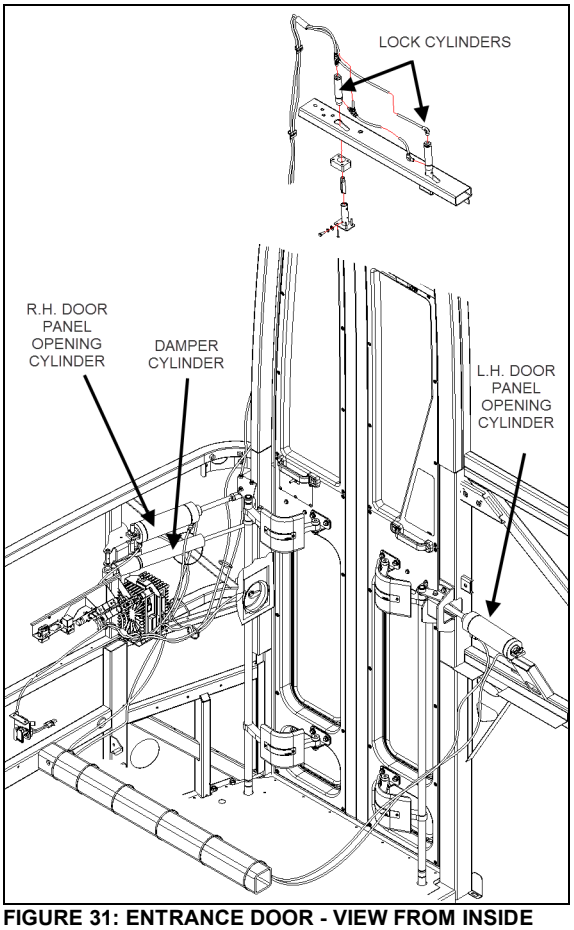


**FIGURE 31: ENTRANCE DOOR - VIEW FROM INSIDE**

Air cylinders with return spring in the cylinder body are used. Air cylinders are controlled by an electrically operated solenoid valve energized by a multiplex module located under the right hand dashboard.

To open the door, initial action from multiplex module output energizes the air lock solenoid valve, venting the door locking cylinders. The return locking spring pulls the door lock away from the latch, unlocking the door. Door movement starts only when pressure in the central air door lock is below 10 psi. The “air cylinder open solenoid valve” opens and allows air to flow to the door cylinders, “the air cylinder close solenoid valve” exhausts air from the rod side of the cylinders.

To close the door, initial movement of the switch energizes the “air cylinder close solenoid valve” and air flows to the cylinders by their rod side ports. The “air cylinder open solenoid valve” exhausts air from cylinders. When the sensor signals the door as closed, the air lock solenoid valve is de-energized and loads the door lock cylinders. The cylinder moves the door lock in a position which engages a latch on the entrance door, holding the door positively closed.

Emergency exit valve, which opens the air valve circuit should be used only in emergencies, or when the door control system does not function properly.

Refer to the air system schematic diagram and to page 29.1 of the wiring diagram.

- **Operation**

Lock or unlock the entrance door from outside the vehicle by turning the key in the door lock (counterclockwise to lock, clockwise to unlock). The entrance door can be unlocked from the inside using the small lever located on the door.

The air-operated door is controlled from inside the coach by two push-button switches located on the R.H. dashboard.

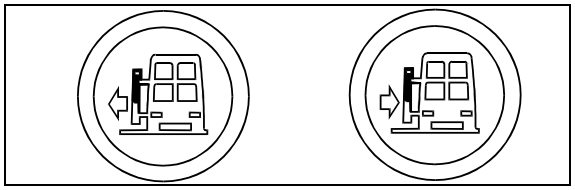

**FIGURE 32: ENTRANCE DOOR OPERATING BUTTONS**
06464

From the inside, open the door by pressing the door opening switch (L.H. button) on the R.H. dashboard panel. The door will open to full open position within 5 seconds.

Close by pressing and holding the door closing switch (R.H. button) on the dashboard. If the closing switch is released before the door is fully closed, the door will stop in that position.

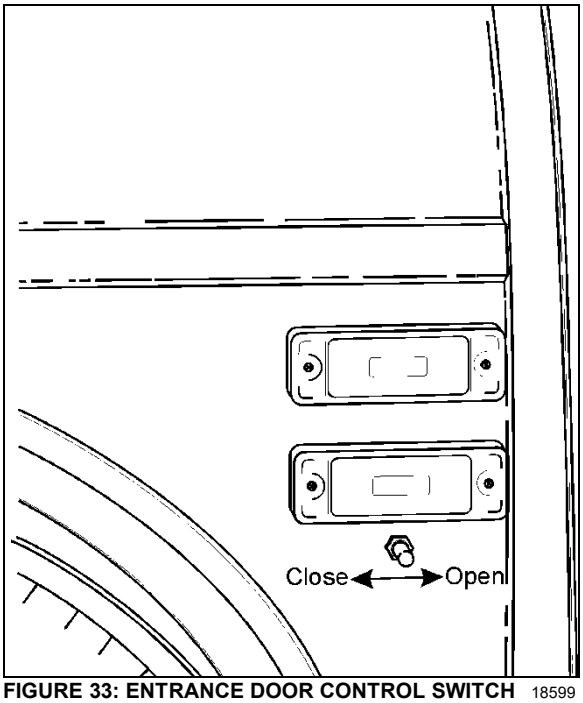


**FIGURE 33: ENTRANCE DOOR CONTROL SWITCH** 18599

Opening and closing of the door from outside the coach is accomplished by a momentary toggle switch located under the front R.H. side marker light (Figure 33).

To close the door, the switch must be pushed towards the rear of the coach and held in position until the door has completed its movement. The door can be closed to any position by releasing the switch (or button, if inside) when the desired position is attained. However, the door is not locked in any position other than fully closed. The door can then be closed further by pushing or pulling on the door.

To open the door, the switch must be pushed towards the front of the coach and held in position. When the door reaches the fully opened position, the system will keep pressure in the cylinder locking the door in that position.

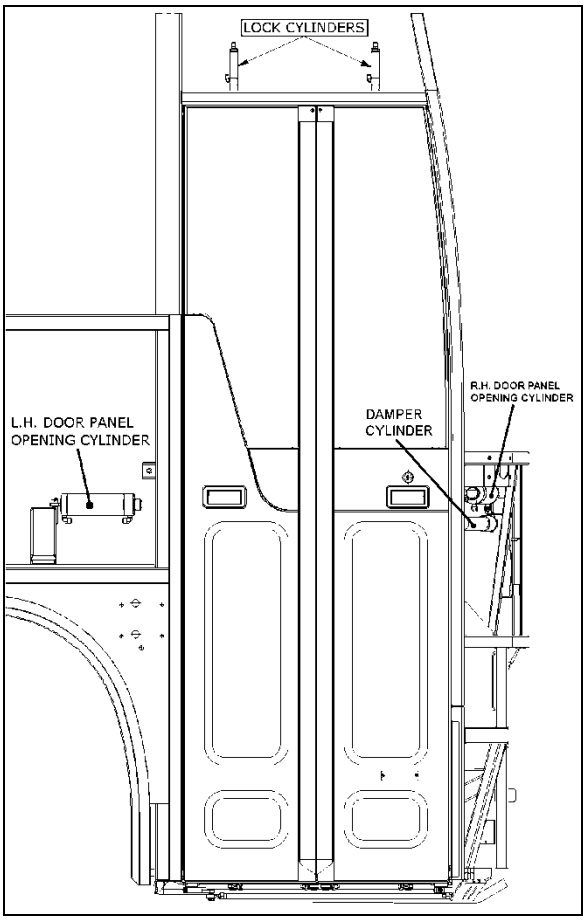


**FIGURE 34: ENTRANCE DOOR - VIEW FROM OUTSIDE**

- **Emergency Exit Valves**

From inside the vehicle, an emergency exit valve located on the dashboard R.H. side near the entrance door, releases the pressure from the lock cylinders. From the exterior, an emergency exit valve located in the front service compartment, also releases the air from the lock cylinders.

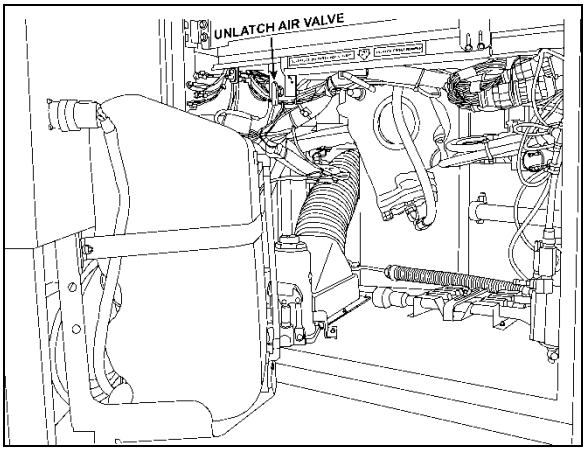


**FIGURE 35: EXTERIOR UNLATCH AIR VALVE** 12209

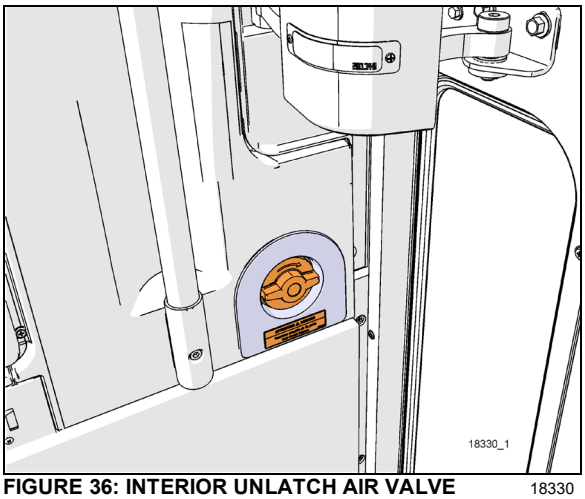


**FIGURE 36: INTERIOR UNLATCH AIR VALVE** 18330

Without Air and/or Without Electricity

If the air pressure drops while the coach has or hasn't any electricity, the spring loaded cylinders will unlatch the door. In such a case, unlock the door by moving the lever on the door or by using the key, then open the door manually.

With Air but Without Electricity

From inside the vehicle, turn the emergency exit valve to the "UNLOCK" position. Move the lever. From the exterior, turn the emergency exit valve to the "UNLOCK" position. Open the door. Close it, lock with the key and reset the outside emergency exit valve to the "NORMAL" position.

- **Door Cycle Speed Adjustment**

To do any adjustment, remove the panels located next to the R.H door panel hinges.

> **CAUTION**
>
> It is important to make sure that damper does not reach end of stroke when entrance door is completely closed or opened. The door cylinders must stop the door on opening. Screw or unscrew rod end to adjust if necessary.

To adjust opening and closing cycle speed on damper (Figure 37):

7. Remove the damper from the vehicle and hold it vertically with the lower eye or pin attachment in a vice. Use clamp plates to prevent damage.

8. Fully close the damper while turning the dust cap or piston rod slowly CCW until it is felt that the cams of the adjusting nut engage in the recesses of the foot valve assembly (Figure 37).

| *NOTE* |
| --- |
| *In figure 23, if there is an indentation (B) in the dust cap (C) and the cover shows two holes (A), the damper is fitted with a bump rubber (D). If so, fully extend the damper and insert a round bar or screwdriver through the holes. Push the bump rubber down and remove. Remove the split plastic collar (E) (if fitted) from the piston rod.* |

9. The damper may have already been adjusted. Therefore check whether the damper is adjusted or not by keeping it closed and gently turning further CCW, counting at the same time the half-turns until a stop is felt. Stop turning and do not force.
10. While keeping the damper closed, make two CW half-turns. In case of prior adjustment, add the number of half-turns previously counted. The total range is about five half-turns. Pull the damper out vertically without turning for at least 3/8" (1cm) to disengage the adjusting mechanism. The dust cap or piston rod may now be turned freely.
11. The damper can now be refitted in the vehicle.

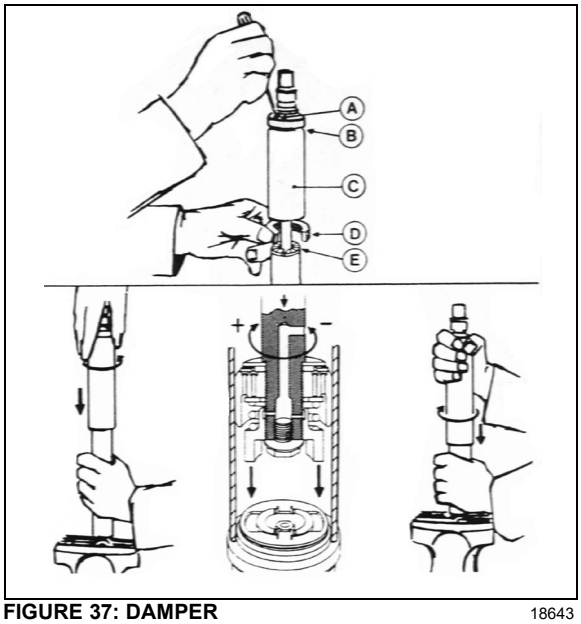


**FIGURE 37: DAMPER** 18643

| *NOTE* |
| --- |
| *Where a bump rubber was installed, refit same inside the dust cap and by fully closing the damper, the rubber will seat again at top of the dust cap. Refit the split plastic collar E (*Figure 37*).* |

12. Reinstall panels and R.H. entrance door panel hinge cover.

- **Entrance Door Panel Adjustments**

Before attempting to correct any entrance door operating problem by adjusting any part of the air cylinder assembly, first perform the following mechanical checks and procedure.

Check around the perimeter of the door for binding. If any binding is found, adjust as follows:

- Horizontal and vertical adjustment

7. Support the door panel with a wooden block and a hydraulic jack.
8. Unfasten the bolts fixing the door panel plates. See figure 24

| *NOTE* |
| --- |
| *Ask an assistant to help you to perform the following adjustments.* |

9. Adjust the door horizontally and vertically with the jack. Tighten the bolts. Remove the jack and the wooden block.

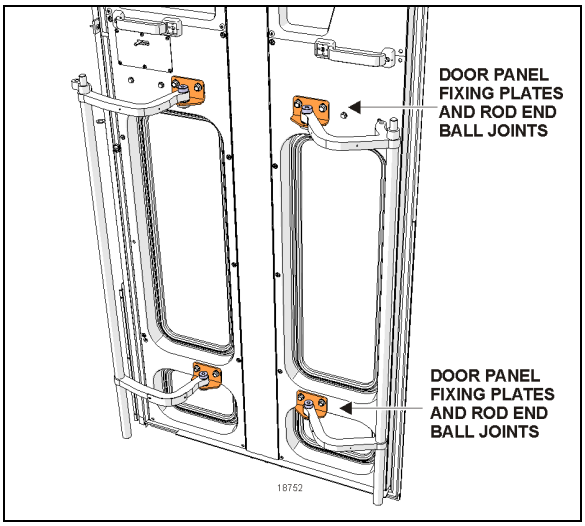


**FIGURE 38: DOOR PANEL ADJUSTMENTS**

- Depth adjustment

1. Support the door panel with a wooden block and a hydraulic jack.
2. Unfasten and then disconnect rod ends from door panel fixing plates. Screw or unscrew rod end in order to adjust door panel depth.
3. Tighten the bolts. Remove the jack and the wooden block

### 9.1.9 Front Electrical & Service Compartment Door Body Panel and Window

Door Body Panel

For the removal of front electrical & service compartment door body panel, you will need:

Pneumatic hammer tool (Zip Gun);

Razor sharp window scraper;

- Open service door.
- Remove interior finishing panels to access rub rail fixing bolts, then remove rub rail.
- Remove windshield washer reservoir, door lock and power window connector.
- Using the "**Zip Gun**", cut Sika bead located ¼ inch (7-8 mm) from each body panel edge.

| *NOTE* |
| --- |
| *Wear ear plugs during this operation.* |

- Separate body panel from door.
- Using a razor sharp window scraper, remove from door frame Sika bead and double-face self-adhesive tape residue.
- Clean door frame using anti-silicone.
- Using a scratch pad "Scotch Brite", scratch the perimeter of the door frame where the adhesive will be applied.
- Clean door frame again using anti-silicone.
- Apply some Sika 206 G+P onto door frame.

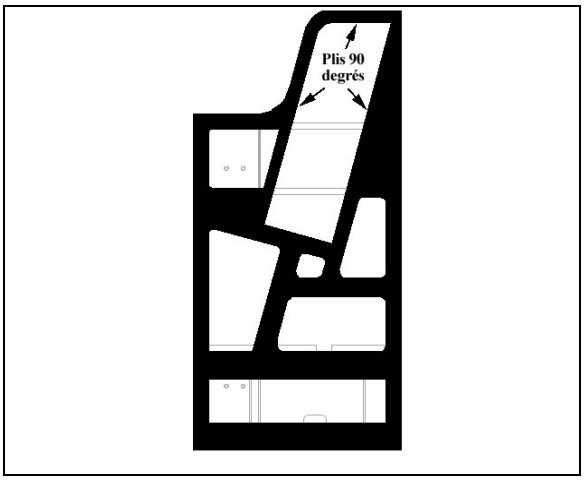


- Prepare new body panel using a scratch pad "Scotch Brite".
- Use a tack cloth to remove any dust or residue from the body panel surface.
- Clean body panel using anti-silicone.
- Apply some Sika 206 G+P onto body panel.

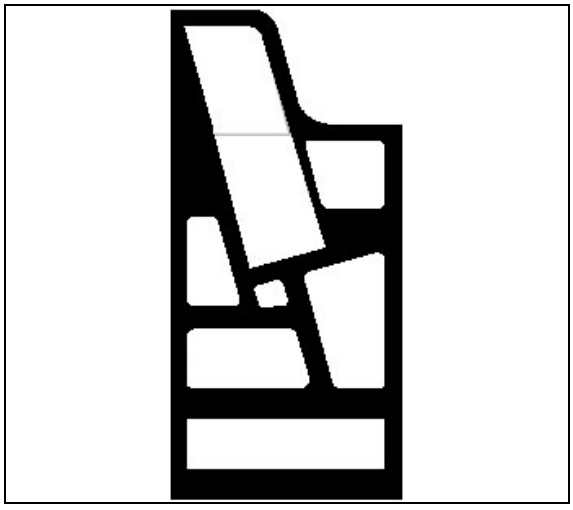

➢ Apply an even coat of Sika 255 onto the door frame.

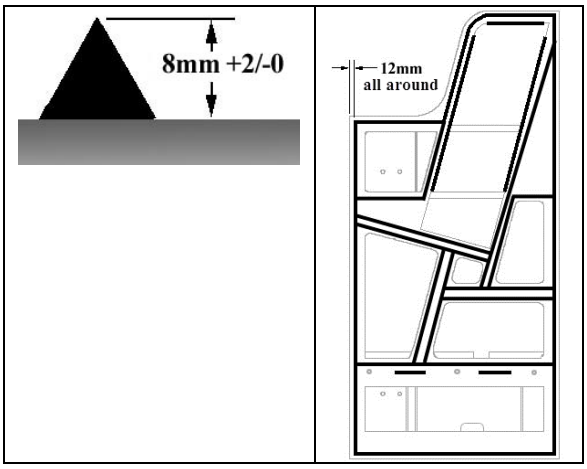


- Position body panel onto door frame and compress with your hands. Use a ruler.

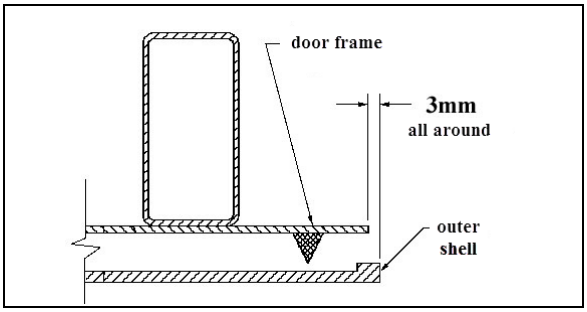


- Check body panel flatness using a 2-foot ruler (must be within 2mm).

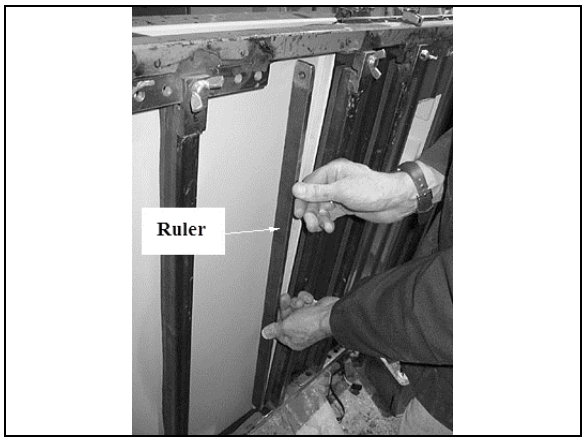


- Check proper power window sliding inside window frame.
- If applicable, remove excess of Sika adhesive all around door frame using Sika 208.
- From the inside of the door, apply some Sika 221 between door body panel and frame and on welding spots as per figure.

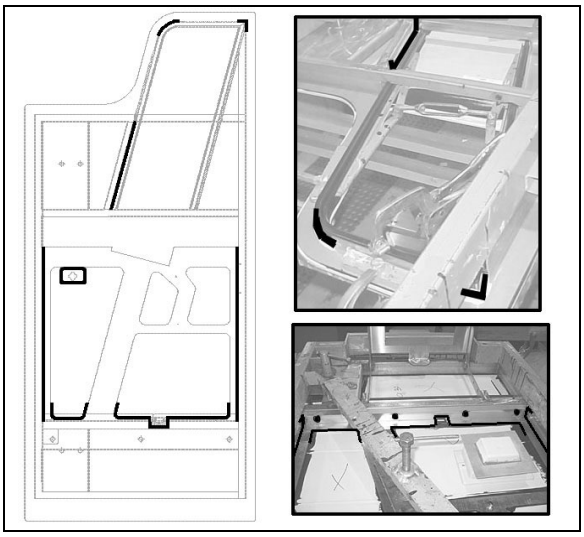

- Apply some #680066 glue inside fiber glass groove and fix power window wiper.

| *NOTE* |
|---|
| *Anti-friction side must be on glass side.* |

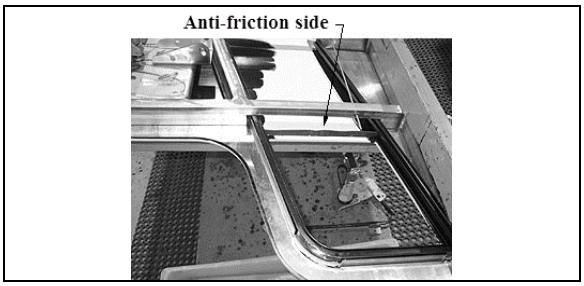


- From inside the door, apply some Sika 252 at the corners of window wiper.

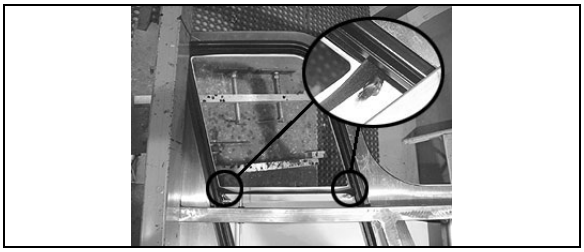

- Apply some #680066 glue inside finishing panel groove and fix power window wiper.

| *NOTE* |
|---|
| *Anti-friction side must be on glass side.* |

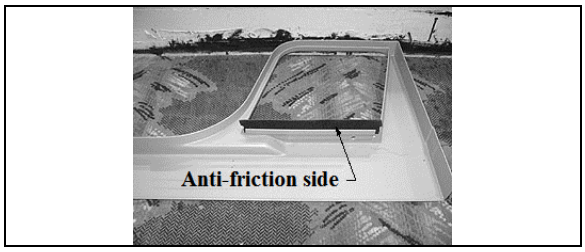


- Discard waste according to applicable environmental regulations, use dangerous waste containers.

Electrical Power Window

- Insert 2 seals in the window frame.
- Apply some #680066 glue at the intersection of the 2 seals and also sparingly in order to fix the seal to the window frame.

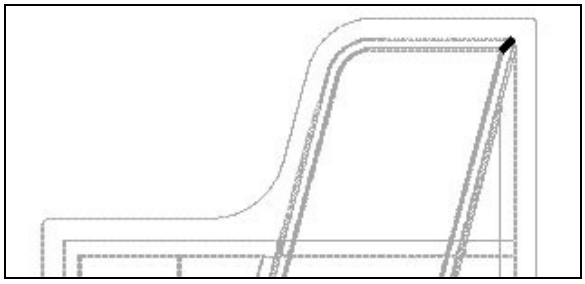

- Clean window using window cleaner.
- Insert window into frame.
- Secure window pane to raising mechanism.

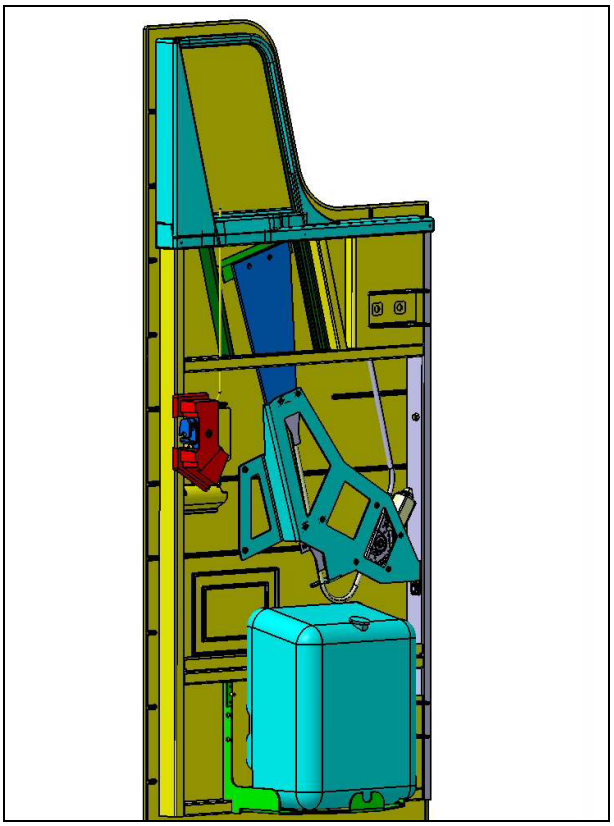

- Adjust window travel (6±3mm above window wiper).

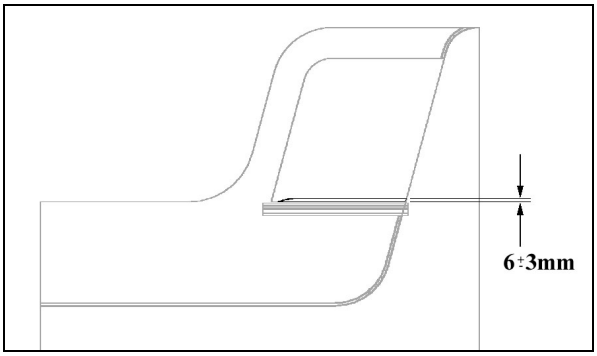


Driver's Window Gutter

- Dry fit the gutter on the vehicle. If required, straighten up gutter using a hammer and a wooden block.




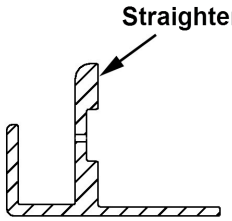


- Apply anti-silicone inside right angle.

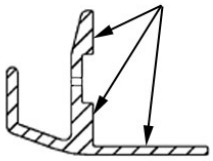


- Apply Sika 205 inside right angle.




- Apply 1/16 x1/4 double face self-adhesive tape onto gutter.

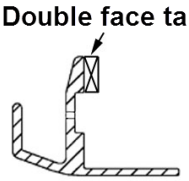


- Peel the back from double face self-adhesive tape.
- Apply Sika 252 inside right angle.

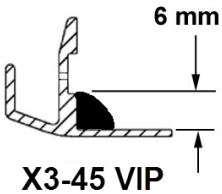


- If applicable, remove plastic film at the bottom of driver's window.
- Remove excess of Sika underneath driver's window.
- Clean bottom of driver's window using window cleaner.
- Apply Sika Aktivator at the bottom of driver's window.
- Install gutter under driver's window then compress in order to fix double face self-adhesive tape.
- Install 3 clamps and allow curing for 4 hours.

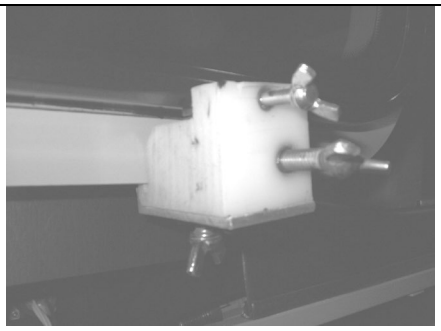

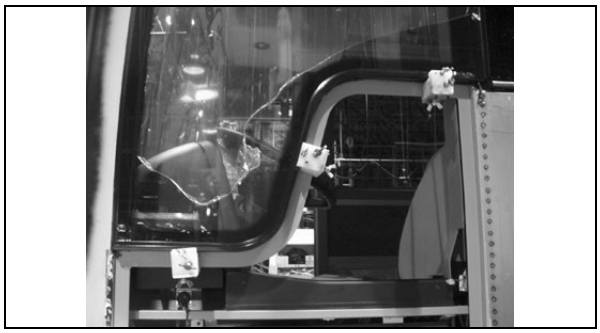

- **Upper Lateral Window**

For the removal of driver's window or upper lateral window, you will need:

Pneumatic hammer tool (Zip Gun);
Razor sharp window scraper;
"Olfa" knife;
Face shield.

- In the case of driver's window only, open front service compartment door.
- Mark the position of the driver's window for future reference.
- From inside of vehicle, cut Sika bead around window perimeter using a "Zip gun" while another person hold the window from the outside.

| *NOTE* |
| --- |
| *Wear ear plugs during this operation.* |

- Then, move outside of vehicle and cut Sika bead to free window while somebody else hold the window from the inside.
- Carefully remove window from frame, ask for help if needed.
- Using a razor sharp window scraper, remove from window frame Sika bead and double-face self adhesive tape residue.
- First of all, check Sika 205 cleaner expiration date.
- Before applying Sika cleaner, fold "Chix" cloth twice for proper width.
- Apply an even coat onto the inside of window frame and allow drying for 2 minutes (maximum 2 hours).
- Discard waste according to applicable environmental regulations, use dangerous waste containers.
- Apply masking tape before applying Sika glue to protect paint and adjacent window during surface treatment.

For gluing of upper lateral window, refer to procedure **SAV00632**.

- **Glued Molding Installation**
  - Clean window gluing area using window cleaner.
  - Apply Sika Aktivator onto gluing area making sure to avoid Sika adhesive if it is not cured yet.

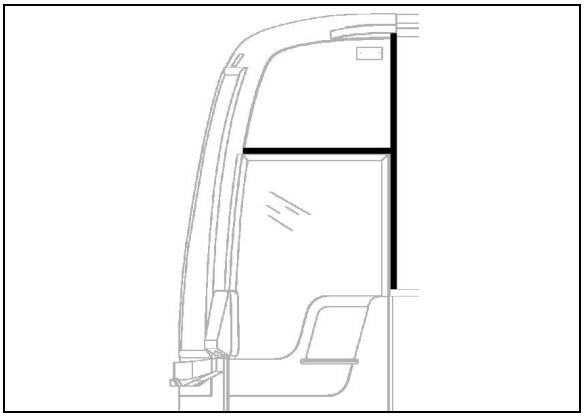

  - Apply anti-silicone onto molding.
  - Apply Sika 205.

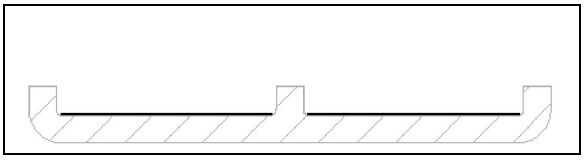

  - Clean gutter using anti-silicone.

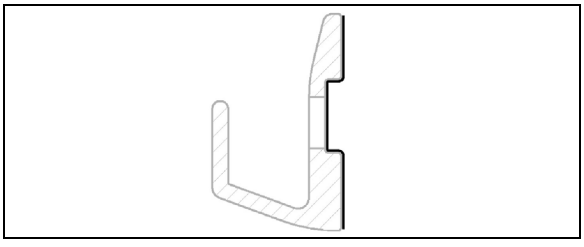

  - To seal screw holes, remove screw, apply Sika 205 inside the hole then apply Sika 252.



- Apply a double-face self adhesive tape 1/8 by ¼ inch inside the molding onto the whole length.

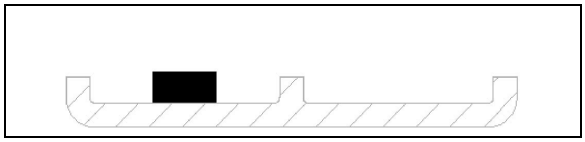

- Apply a double-face self adhesive tape 1/32 by ¼ inch onto the whole length of the gutter.

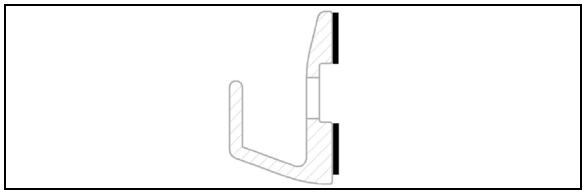

- Apply Sika 252 inside the moldings onto the whole length.

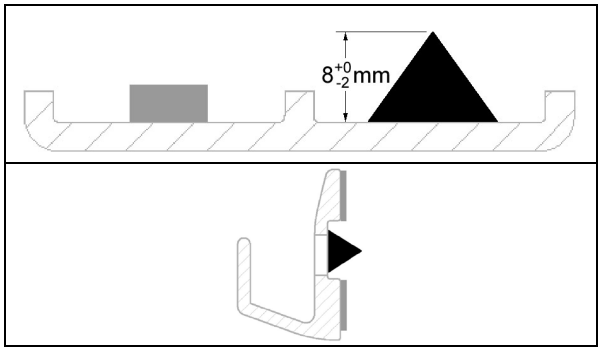


- Position and fix vertical molding. Lean vertical molding against lateral molding. Make sure vertical molding lines up with structural tubing.

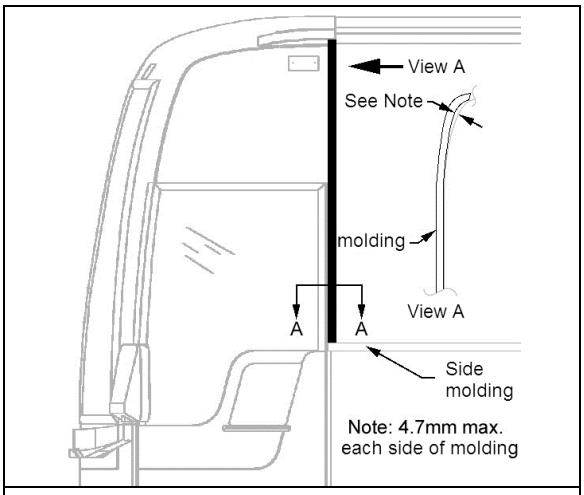


**SECTION VIEW A-A**

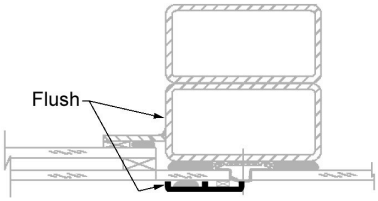


- Position and fix horizontal molding (gutter). Lean gutter against vertical molding. Position gutter just above Sika finishing joint.

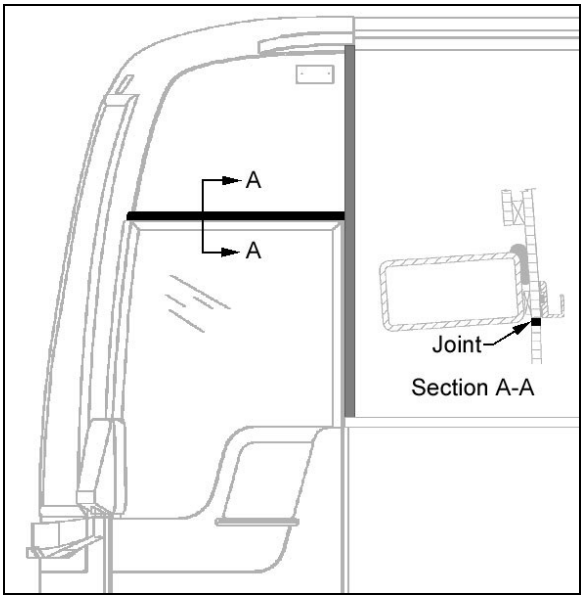

- Apply masking tape on each side of vertical molding. Apply Sika 252 to fill the gap between molding and windows.
- Smooth down the joint with finger.
- If required, clean surfaces using Sika 208.



### 9.1.10 Front Cap

The fiberglass front cap does not need any maintenance except painting as needed. It is held in place with adhesive. If ever it has to be replaced, make an appointment at a Prevost service center near you. For minor damages, refer to paragraph 7 “COMMON FIBERGLASS REPAIR PROCEDURE” and paragraph 8 “COMMON PAINTING PROCEDURE”.

9.2 ZONE 2

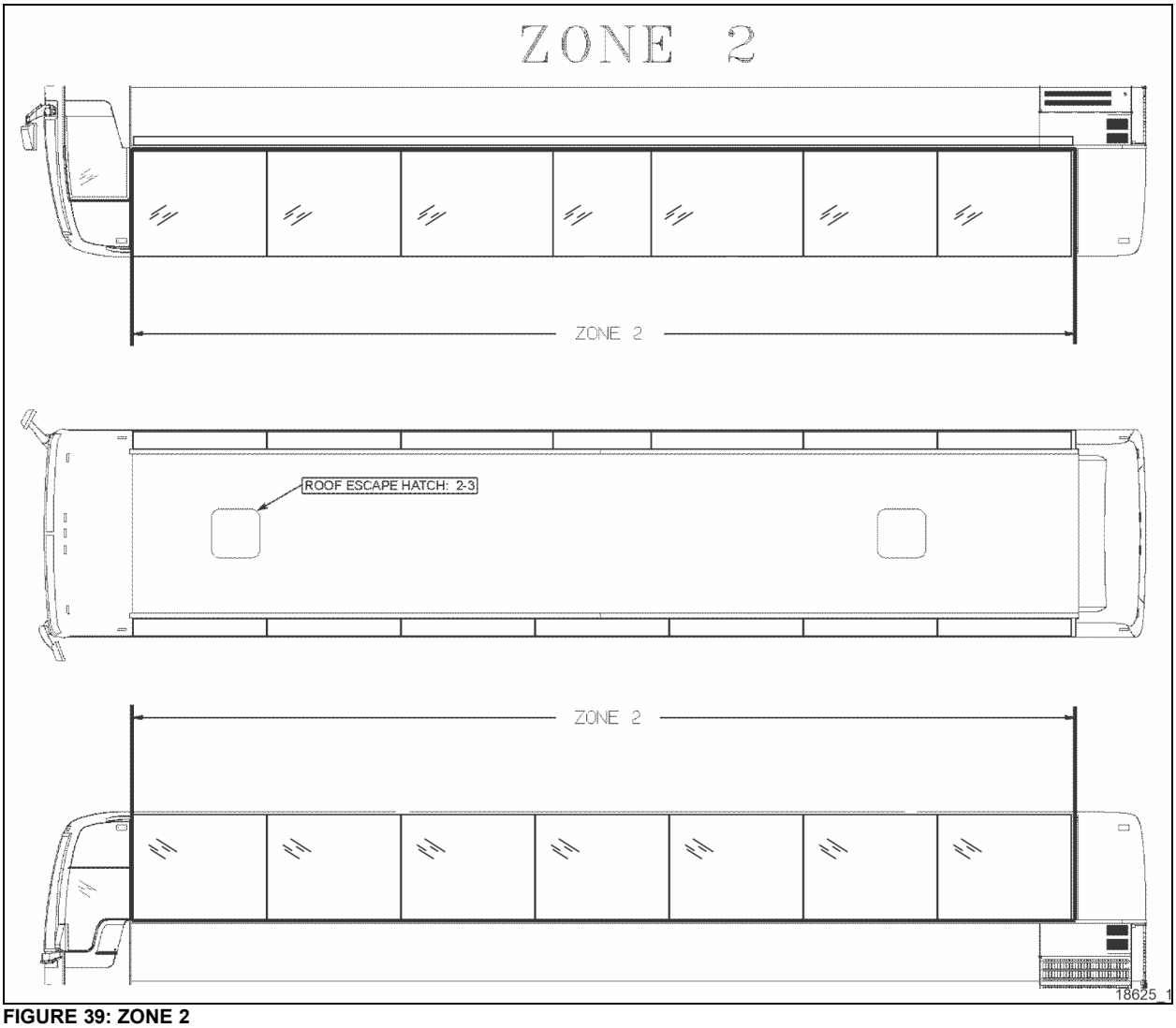


**FIGURE 39: ZONE 2**

### 9.2.1 Side Windows

Nine passenger side windows are installed on each side on X3-45. They are made, single or double-glazed, heat absorbing AS-3 glass. Windows are mounted in painted aluminum extrusions, which hold the glass in place from the top rail of the coach. The extrusion also serves as a hinge to allow the window to swing open when needed.

The single-glazed windows are made of tinted tempered safety glass, while the double-glazed windows are made of tinted tempered safety glass outside and clear tempered glass inside.

### 9.2.2 Emergency Exit Windows

All side windows of the X3-45 serve as emergency exits.

Except for the top window edge, the three glass edges are unprotected. The workers must be extra careful when manipulating or installing such windows.

In addition, when it becomes necessary to lay down the unprotected edges of the glass window, never use a steel or concrete floor as support. It is recommended to use a wooden support, or even better, a padded surface.

18617

An emergency exit window can be opened by pulling the lower part of the release bar to disengage the safety latches, and then by pushing out the window frame (Figure 40).

Emergency operating instruction decals are affixed under each emergency exit window. To close the window, pull back the window and push down the release bar.

- **Emergency Exit Release Bar**

The emergency exit release bar system is generally maintenance free. It has been designed to answer the twenty pound resistance criteria for opening the emergency window. If this handle should be replaced:

1. Remove the screws and bolts securing it to the emergency exit window;
2. Install a new release bar, reverse the procedure.

| *NOTE* |
| --- |
| *Check the legal requirement of twenty pound maximum resistance to be sure to comply with FMVSS No 217.* |

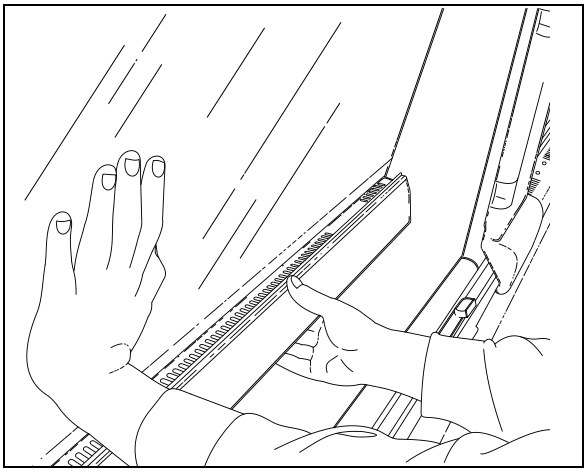

**FIGURE 40: EMERGENCY EXIT WINDOW** 18008

- **Emergency Exit Window Adjustment**

Emergency exit windows should be checked periodically for easy opening and closing. Pulling the lower part of the release bar with both hands placed near the safety latches should disengage both locks on the window simultaneously. The tension required to release the window should not exceed twenty pounds (9 kg) of force.

The release bar mechanism itself has been designed such as no adjustments are necessary.

If too much effort is required to disengage the locks when pulling the release bar or if the window doesn't close tightly or rattles, check for interference by foreign objects or nearby parts into mechanism, such as the microswitch, rubber seal, wires, etc. Correct situation immediately.

| *NOTE* |
| --- |
| *Tangs on the lock must be in a horizontal position.* |

- **Emergency Exit Window Replacement**

| *NOTE* |
| --- |
| Window is heavy and fragile. Use suction cup handles and help from teammates.<br>Prepare a soft material surface to receive the removed window. |

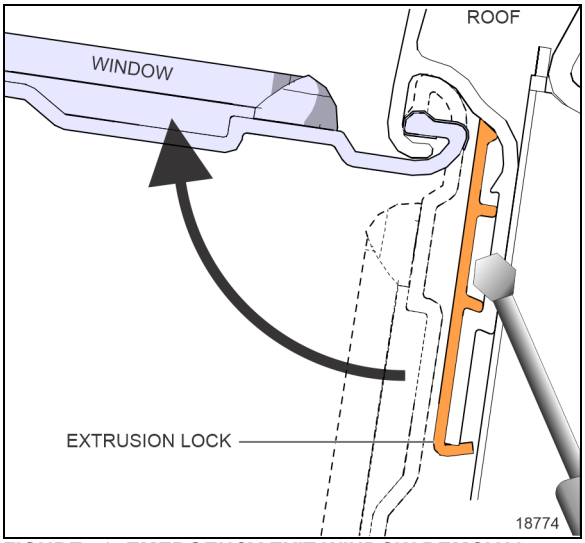


**FIGURE 41: EMERGENCY EXIT WINDOW REMOVAL**

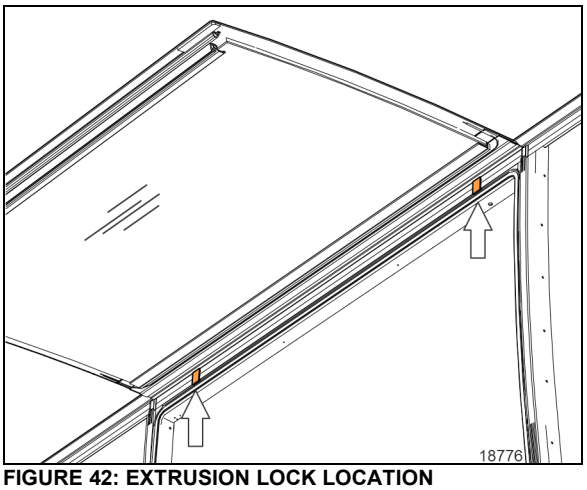


**FIGURE 42: EXTRUSION LOCK LOCATION**

1. Lift the bar release system;
2. Partly lift the window and support it so it stays open.
3. Remove the two extrusion locks with a flat screwdriver.
4. With the help of teammates, slowly rotate the window outward ninety degrees (90°). At this angle the window can be released by slightly pushing the window inward.

**WARNING**

Ask teammates to support the window else it may fall out.

5. The window is free and can be unhooked.

Reverse the procedure to install a new emergency exit window.

### 9.2.3 Roof Escape Hatch

The vehicle can be equipped with one or two escape hatches. The escape hatch is designed to provide years of reliable service with a minimum of maintenance. All components are rust proof, and moving parts are Teflon coated to eliminate need for lubrication. Should water infiltrate the vehicle from the escape hatch, refer to the heading "Sealing" in this paragraph for procedures on how to seal this area.

**CAUTION**

Use of lubricants, paints, or other coatings such as graffiti deterring sprays is not recommended.

Suggested maintenance includes periodic inspection of fasteners for evidence of loosening due to tampering, and regular cleaning with mild soap and water.

Although there are other cleaning solutions available, some contain solvents and other chemicals that can attack the high strength materials used in the production of the escape hatch.

**CAUTION**

Ensure that cleaning solutions are compatible with the materials used on the escape hatch.

Graffiti removing cleaners often contain acetone, ether, lacquer thinner or other solvents known to destroy the high strength properties of many plastics. Use of these cleaners must be avoided. Graffiti-resisting coatings often leave a sticky residue that interferes with smooth up/down movement of the hatch mechanism. Some of these coatings also contain solvents that will reduce the strength of certain components.

**CAUTION**

Use of these coatings is at considerable risk and should be avoided.

- **Repair**

All components used in the production of the escape hatch are available as service parts, except for one hinge that represents a possible hazard when improperly reattached to a hidden tapping plate, itself often damaged whenever the hinge is damaged. The tapping plate is permanently laminated between the inner and outer cover assemblies, and it cannot be inspected or replaced. It is therefore necessary to replace the entire assembly following damage to the hinge. See Figure 43.

**CAUTION**

Hinge assembly is critical and hinge should never be removed from cover assembly. Fasteners used in this assembly are special and have critical torque requirements and tamper-resistant heads to discourage tampering.

- **Sealing**

1. Open and tilt up the escape hatch cover.
2. Join the 2 ends of the rubber seal.

**CAUTION**

Seal joint should be toward rear of vehicle.

3. Apply rubber adhesive CA-40 (Prevost # 681285) in the gap between the seal ends.
4. Apply Sikaflex 221 sealant (Prevost # 680532) along the outline of the escape hatch on the roof of vehicle.

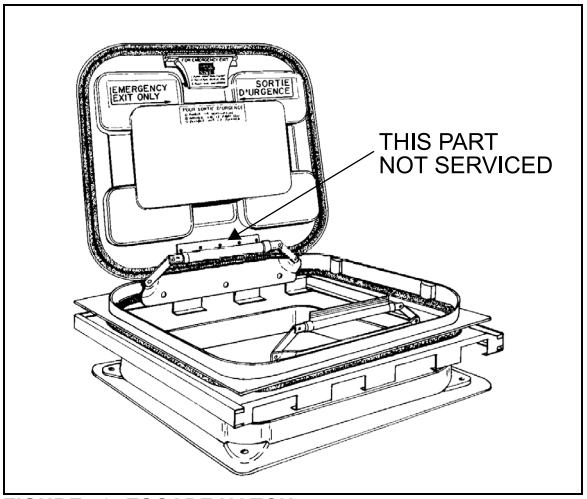


**FIGURE 43: ESCAPE HATCH** 18104

- **Escape Hatch Panel Assembly**

The frame of the escape hatch is riveted to the roof of the vehicle. The escape hatch panel

assembly can be replaced as a unit and a new panel assembly installed in the existing frame. To remove the panel assembly, remove the 4 bolts fastening the 2 hinges to the escape hatch frame and retain the 4 flat washers. Reinstall the panel assembly by fastening the 2 hinges with the 4 bolts and flat washers removed earlier.

**CAUTION**

When installing, roof escape hatch's hinge must be toward the front of vehicle, to prevent the hatch from being ripped out if accidentally opened while vehicle is running.

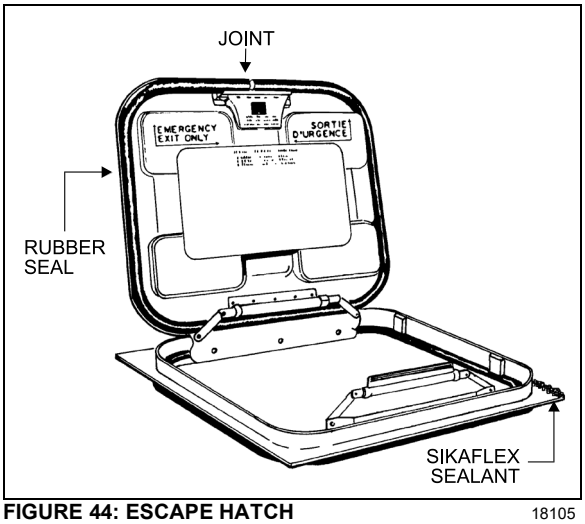


**FIGURE 44: ESCAPE HATCH** 18105

- **Escape Hatch Frame**

When necessary, the escape hatch frame can be removed and replaced in the following way:

1. Support the frame from inside the vehicle.
2. Remove rivets.
3. Cut the rubber seal with a sharp edge knife and remove the hatch frame.
4. On vehicle top, using the knife, remove as much as possible the remaining rubber seal.
5. Drill holes (if needed) in the new metal frame.
6. Clean both vehicle top and new hatch frame with SIKA 205.
7. Apply rubber adhesive SIKA 221 under the hatch frame surface.
8. Install the frame in place and fix it with rivets.
9. Remove excess adhesive and clean all around.

9.3 ZONE 3

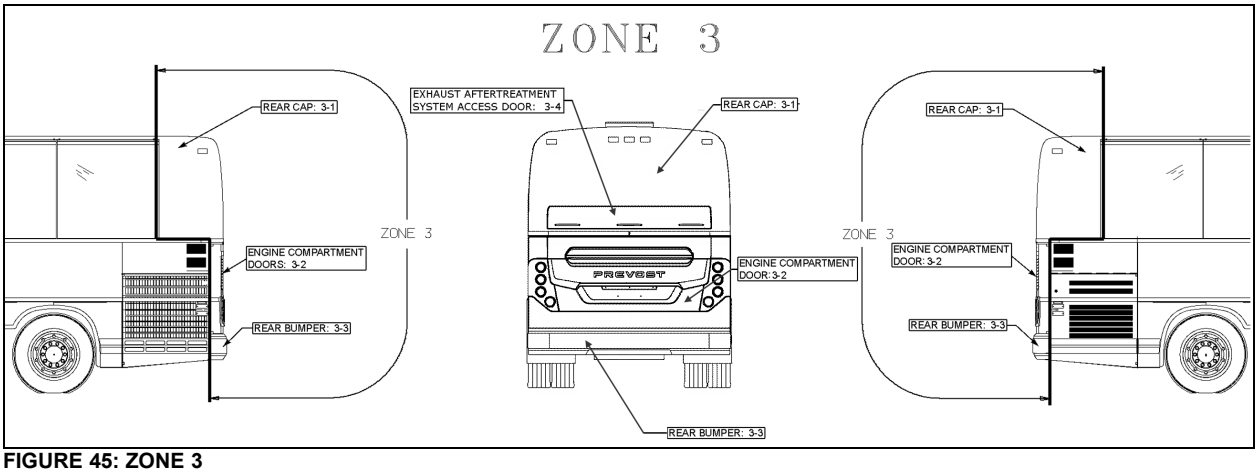


**FIGURE 45: ZONE 3**

18626

### 9.3.1 Rear Cap

The fiberglass rear cap does not need any maintenance except painting as needed. It is held in place with adhesive. If ever it has to be replaced, take an appointment at a Prevost service center near you. For minor damages, refer to Paragraph 4 "Common Fiberglass Repair Procedure" and Paragraph 5 "Common Painting Procedure".

### 9.3.2 Engine Compartment Door

The engine compartment door may be adjusted for proper fit by untightening support bolts:

| *NOTE* |
| --- |
| *Consult the "BODY PANEL AND WINDOW SPACING DIAGRAM" for proper door gaps adjustment. (*Figure 86*)* |

1. To adjust the door VERTICAL position, loosen the bolts (4 on each side) holding the door supporting arm and gas springs bracket to the *vehicle structure* (Figure 46).
2. To adjust the door LATERAL position, loosen the bolts (3 on each side) holding the door supporting arm and gas springs bracket to the *door* (Figure 46).
3. Adjust the door FORE & AFT position by screwing/unscrewing the rubber door stops on each side of the door opening (Figure 46).
4. Check that the door swings freely and close properly. *It may be necessary to adjust the door latch to get proper fit and operation*.

To adjust the latch mechanism and the striker pin:

1. Open the door to access the striker pin.
2. *Slightly* loosen the striker pin.
3. Using a hammer, adjust the striker pin to center it in the door latch mechanism.
4. Tighten the striker pin.
5. Check door fit and operation.

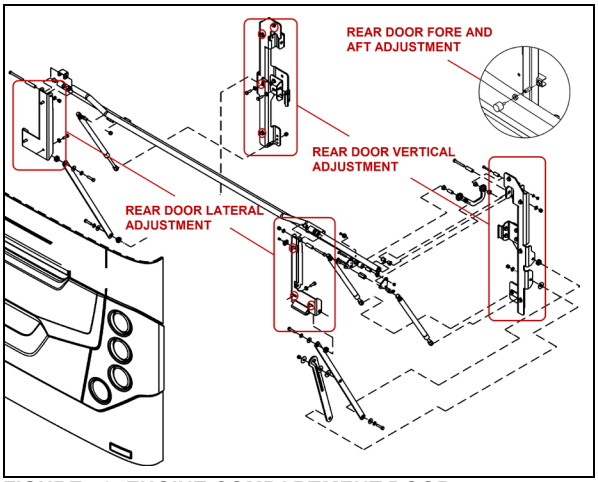


**FIGURE 46: ENGINE COMPARTMENT DOOR** 18633_1

### 9.3.3 Rear Bumper

Remove three bolts on each side holding bumper to vehicle and remove bumper.

To install bumper, reverse the procedure.

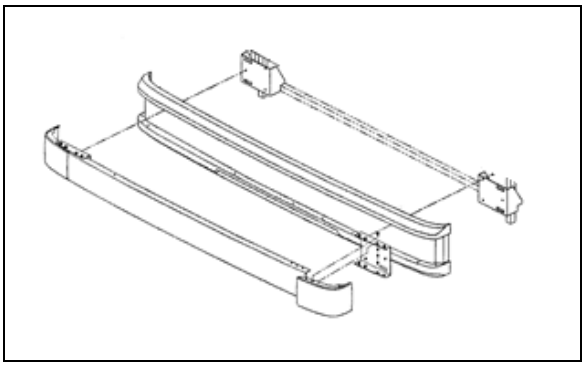

**FIGURE 47: REAR BUMPER** 18634

### 9.3.4 Exhaust Aftertreatment System Access Door

1. Open exhaust aftertreatment system access door.
2. Loosen the screws holding the panel to hinge assembly.
3. Adjust the door position according to distance required between exterior finishing parts.
4. Tighten the nuts.
5. Check that the door swings freely and closes properly.

9.4 ZONE 4

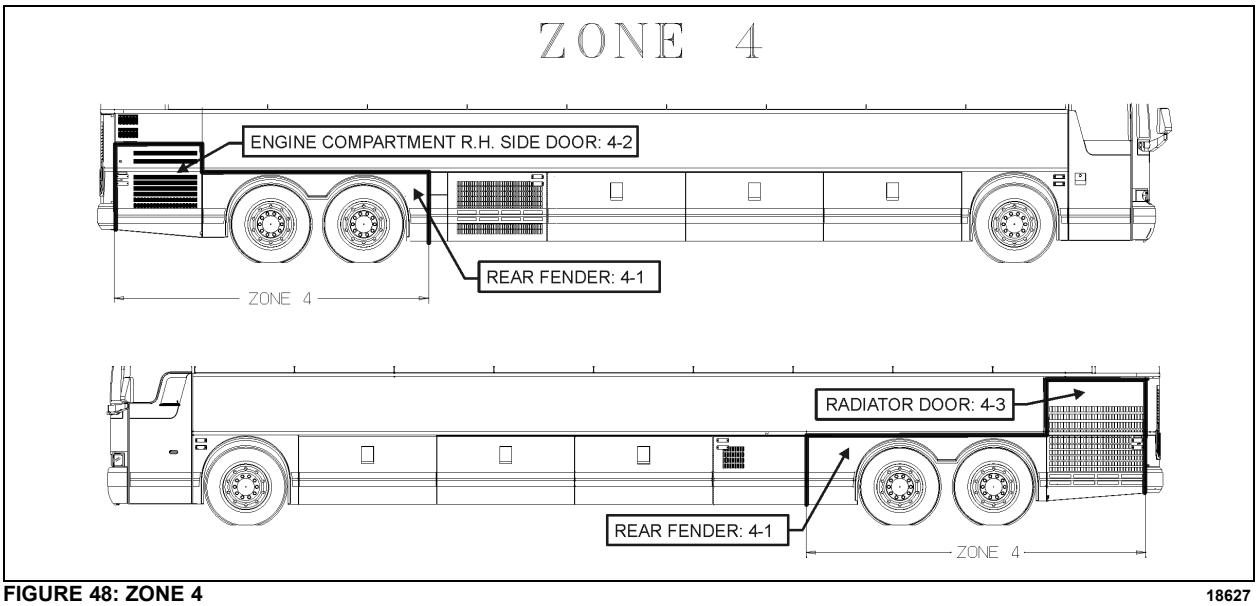


**FIGURE 48: ZONE 4** 18627

### 9.4.1 Rear Fender

Rear fenders are hinged for maintenance on brakes and suspension. Each rear fender panel has two mechanical spring loaded holding devices fixing it to the vehicle's structure. Push the spring type rod sideways to disengage the lock.

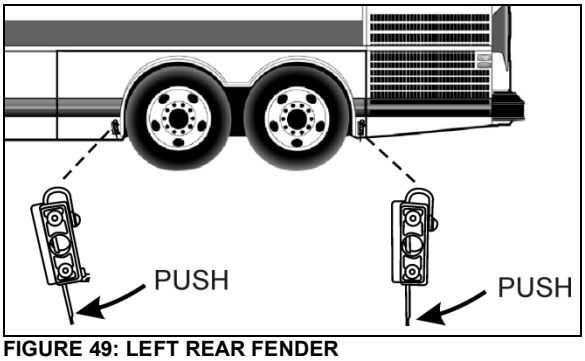


**FIGURE 49: LEFT REAR FENDER**

| *NOTE* |
| --- |
| *Commuter type vehicles may be equipped with a secondary lock. Pull the handle to disengage the lock*. |

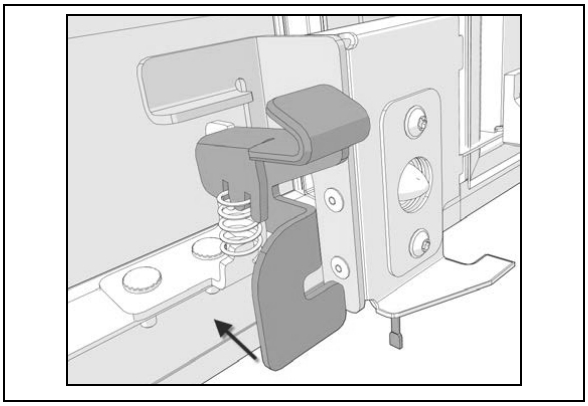

### 9.4.2 Engine R. H. Side Access Door Adjustment

Engine R. H. side access door may be adjusted for proper fit. To do so, follow the steps below:

1. To adjust the position, the door must be free to move without any restriction. For this reason, remove pin E and strike plate C (Figure 50).

   Temporarily secure the secondary lock in the depressed position with a cable tie so it does not interfere with adjustments. Remove cable tie once completed.

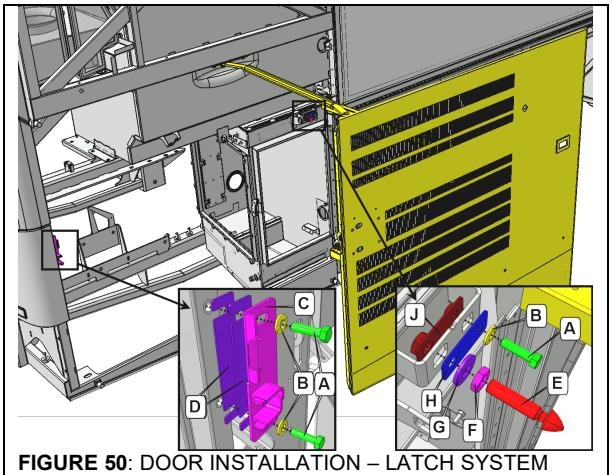


**FIGURE 50**: DOOR INSTALLATION – LATCH SYSTEM

A - BOLT
B - BELLEVILLE WASHER
C - STRIKE PLATE
D - SPACER
E - PIN
F – LOCK NUT
G - BELLEVILLE WASHER
H - PLATE

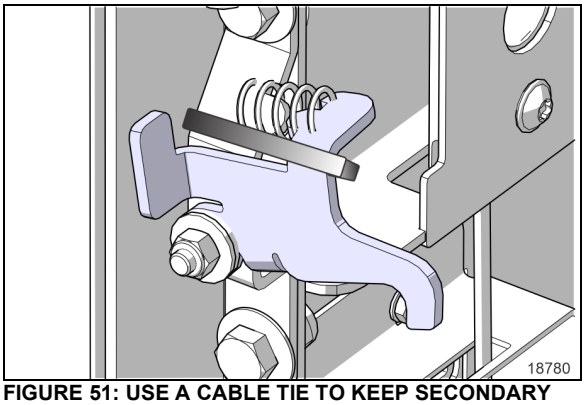


**FIGURE 51: USE A CABLE TIE TO KEEP SECONDARY LOCK DEPRESSED DURING ADJUSTMENT**

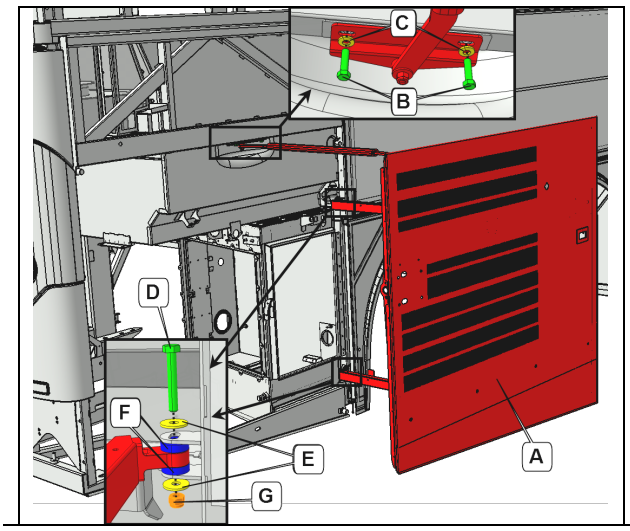


**FIGURE 52: HINGES**

A – ENGINE R.H. SIDE ACCESS DOOR
B - BOLT
C - BELLEVILLE WASHER
D - BOLT
E - WASHER
F –SPACER
G - NUT

## Vertical adjustment

2. Make sure bolts A are tight (**FIGURE 53**).

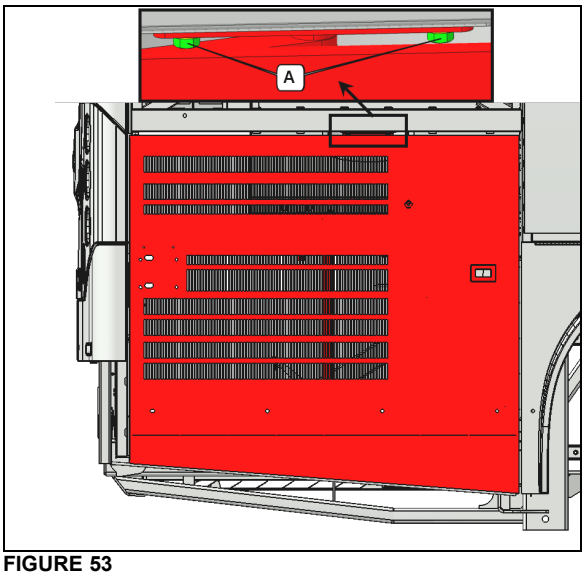


**FIGURE 53**

3. Compare the lower edge of the door level with the lower edge of the rear fender. The door should be flush with the fender (FIGURE 54).

***Tolerance is ± 3/32" (± 2mm)***

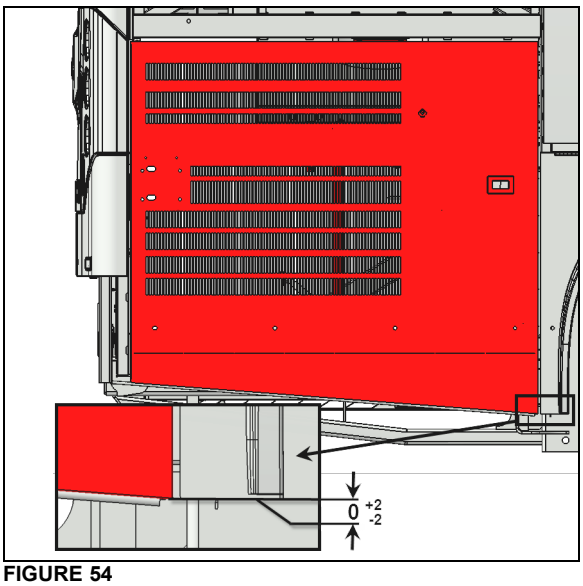


**FIGURE 54**

4. If the vertical position is out of tolerance, release the locking plate (Figure 56) and rotate the door using the adjustment provided on the inner side of the door, at the attachment points between the arm and the door (**FIGURE 55**).
   Tighten the locking plate nut to 14 lb-ft (19 Nm) to preserve adjustment.

   ***Perform the adjustment with the lower adjustment point preferably.***

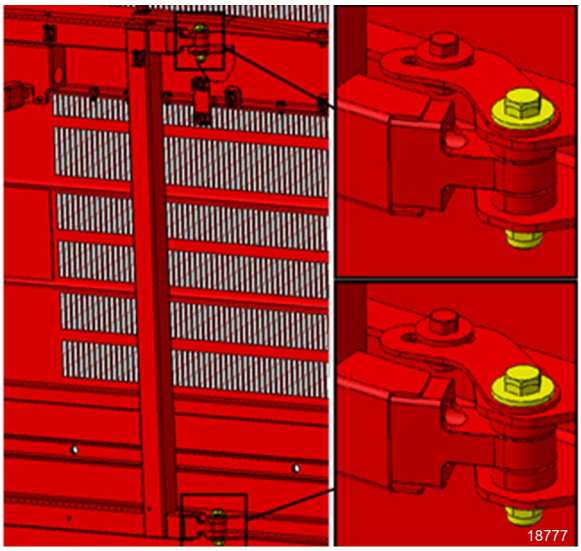


**FIGURE 55**

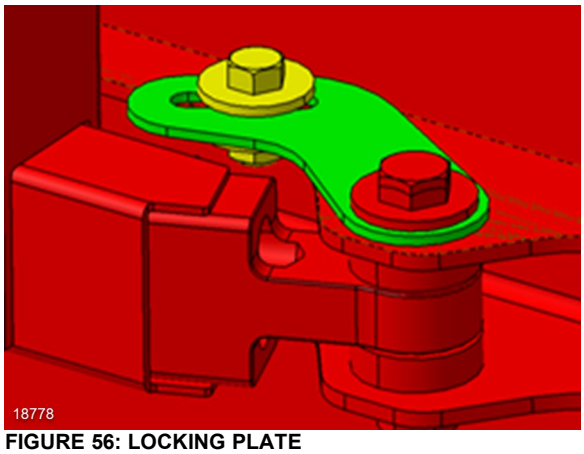


**FIGURE 56: LOCKING PLATE**

## Longitudinal adjustment

5. Check the gap between the door and the adjacent panel at the level of the upper attachment point of the arm on the door. The gap should be ¼" (6 mm) (FIGURE 57).

   ***Gap 1/4" (6 mm)***

   ***Tolerance is ± 3/64" (± 1mm)***

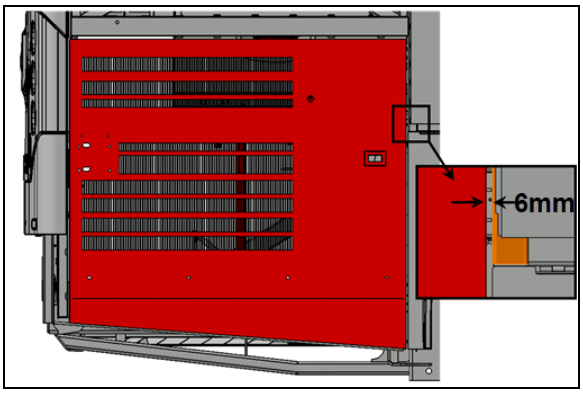


**FIGURE 57**

6. If the longitudinal position is out of tolerance, adjust using the adjustment provided on the inner side of the door, at the upper attachment point of the arm on the door (FIGURE 58).

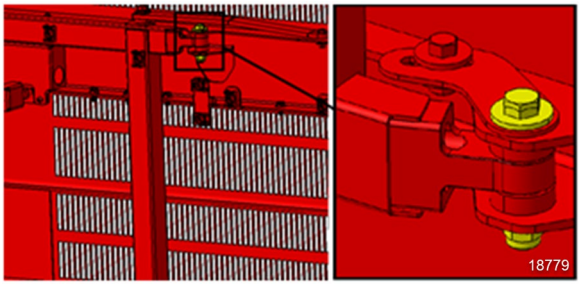


**FIGURE 58**

7. Check the gap between the door and the adjacent panel at the level of the lower attachment point of the arm on the door. The gap should be ¼" (6 mm) (FIGURE 59).

   Gap 1/4" (6 mm)

   Tolerance is ± 3/64" (± 1mm)

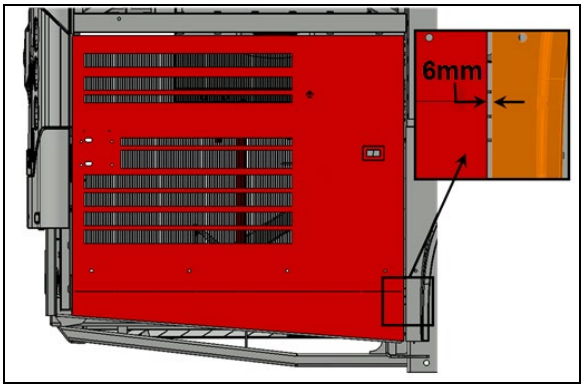


**FIGURE 59**

8. If the longitudinal position is out of tolerance, adjust using the adjustment provided on the lower attachment point of the arm on the vehicle chassis (FIGURE 60).

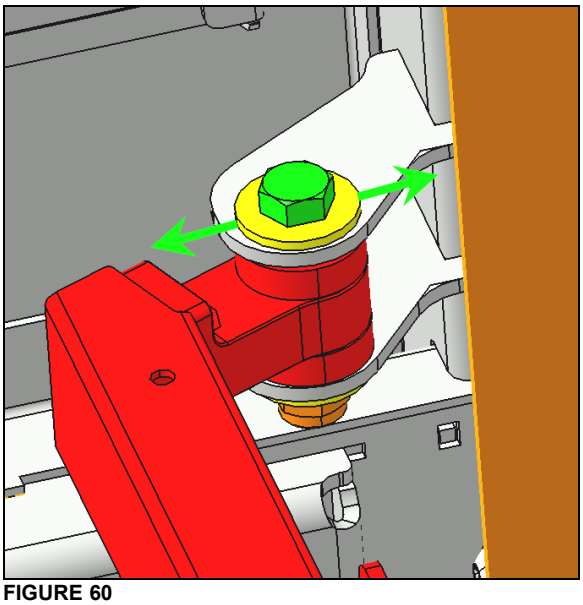

FIGURE 60

## Latch installation

9. Install strike plate C and pin E centered in the available adjustment position provided by respective slotted holes (FIGURE 61). The components should be snug but not tight so that they can move when the door will be closed later on in this procedure.

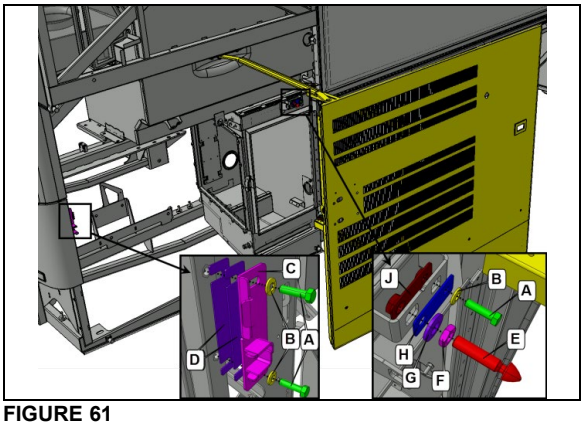


FIGURE 61

10. Check that the two items identified with arrows are snug but not tight (FIGURE 62).

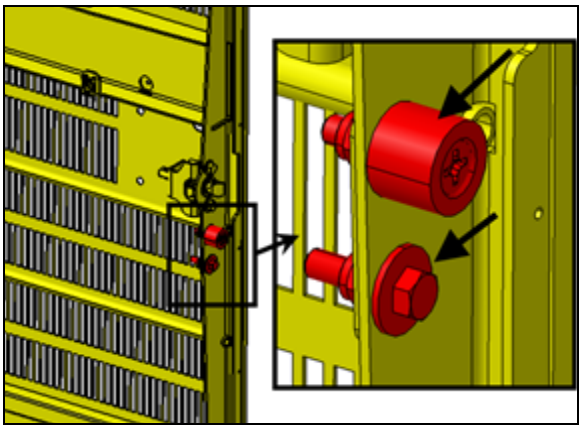

FIGURE 62

11. Before adjusting the pin, make sure that it doesn't exceed more than 2" (50mm) at the first closing of the door (FIGURE 63). Damage to the door can result if this condition is not respected.

***Not more than 2" (50mm)***

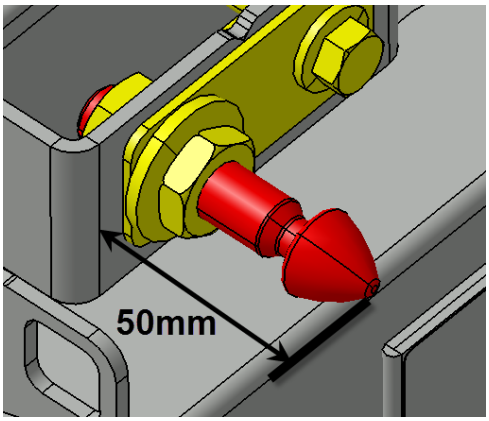


FIGURE 63

12. Close the door gently.

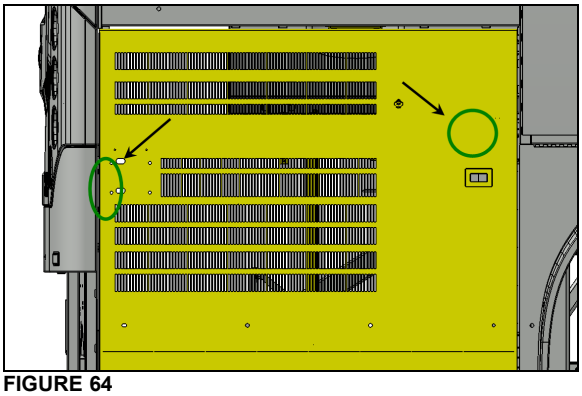

FIGURE 64

13. Open the door and perform a final tightening to the items indicated with arrows (FIGURE 65).

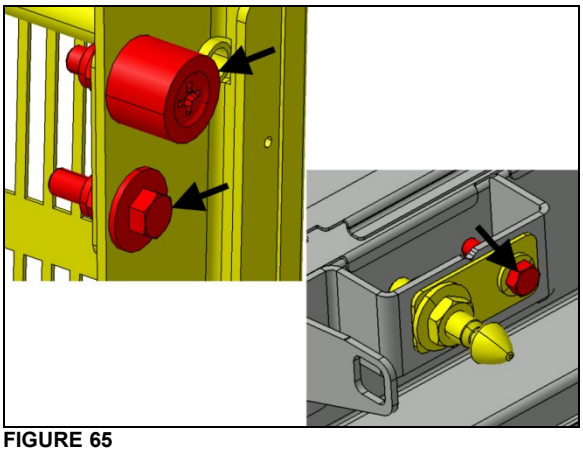

FIGURE 65

## Transversal adjustment

14. Once closed, the door surface must be even with the adjacent steel panel.

    ***Tolerance is 3/64" (1mm)***



FIGURE 66: USE A RULER (SHOWN IN BLACK) TO CHECK THAT SURFACES ARE EVEN

15. Use the pin to adjust the door so it is even with the adjacent panel. Screw or unscrew the pin as required and then apply final tightening to the jam nut (FIGURE 67).

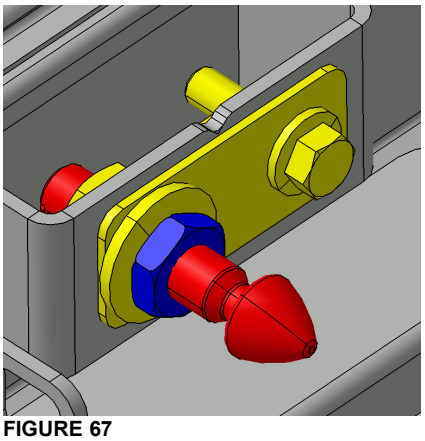

FIGURE 67

16. The R.H. side engine access door must exceed the engine compartment by 5/32" (4mm).

    ***Tolerance is ±3/64" (±1mm)***

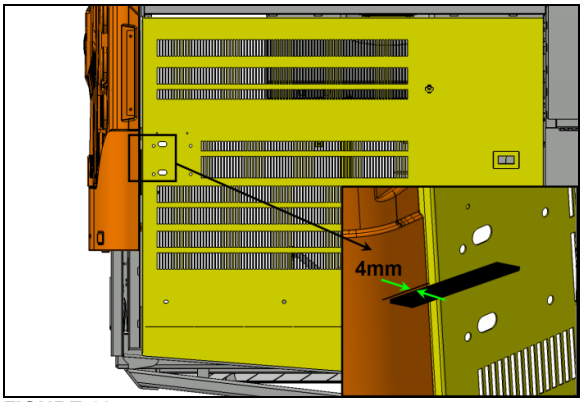


FIGURE 68

17. Perform the transversal adjustment by moving the strike plate using the slotted holes (FIGURE 69).

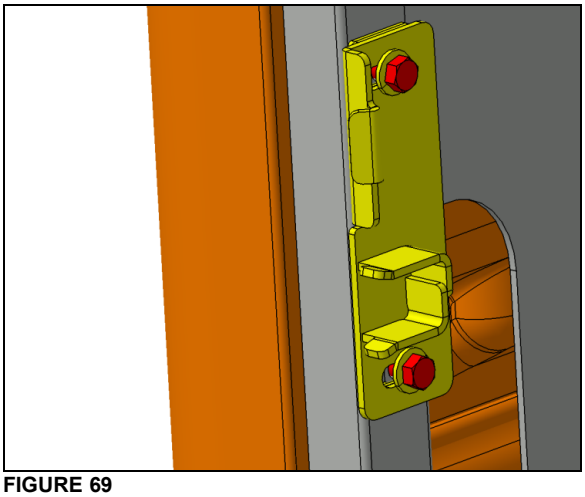

FIGURE 69

18. The latch bolt must engage not less than 13/32” (10mm) behind the strike plate.

***13/32” (10mm) min***

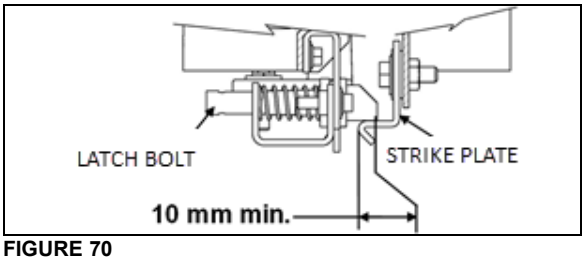


**FIGURE 70**

19. Screw in or out the two upper stoppers so that the upper part of the door exceeds the horizontal member by 5/32" to 3/16" (4mm to 5mm) (see FIGURE 71 & FIGURE 72).

20. Adjust the lower stopper in order to have the lower part of the door even with the fender.

***Tolerance is ± 3/64" (± 1mm)***

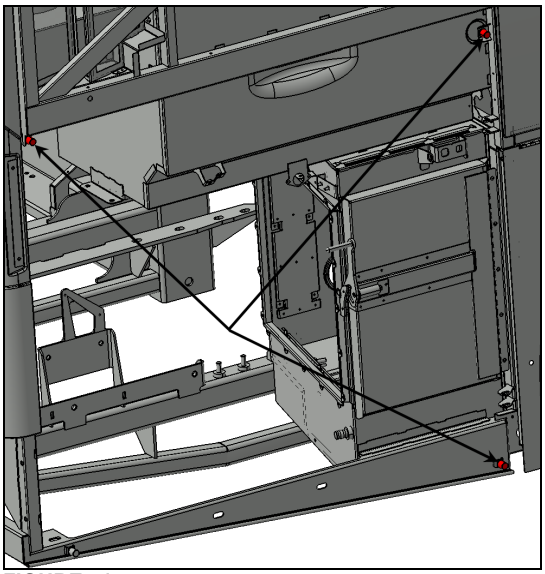

**FIGURE 71**

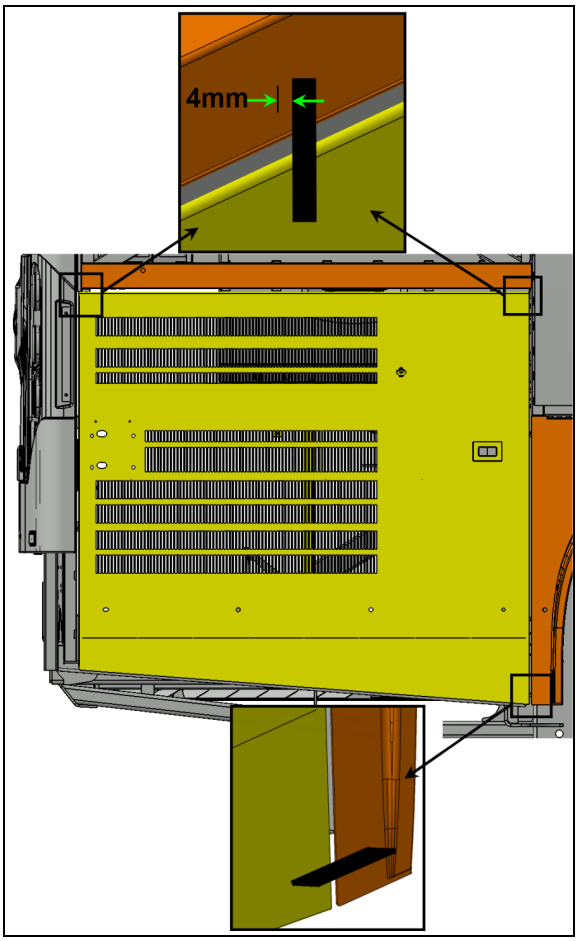


**FIGURE 72**

### 9.4.3 Engine Radiator Door

Radiator door may be adjusted for proper fit by untightening hinge bolts:

1. Loosen the bolts, (“A” & “C”, Figure 74) holding the hinge to the vehicle structure to shift the door "LEFT or RIGHT".

2. Loosening the bolts (“B” and “D”, Figure 74) allows the door to be shifted "UP or DOWN".

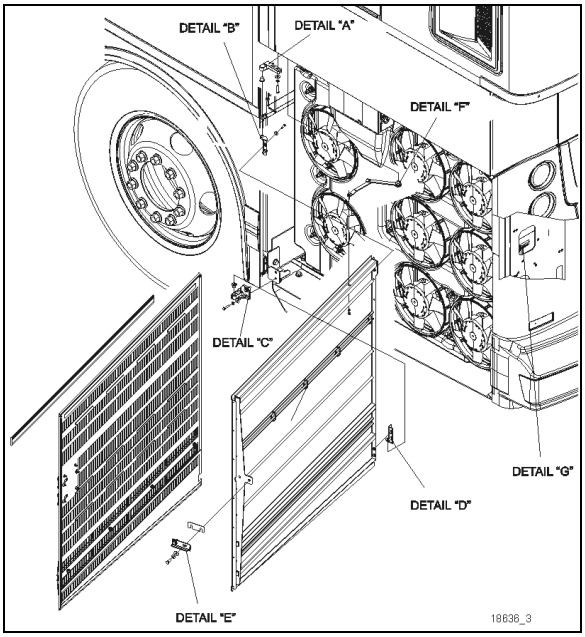


**FIGURE 73: RADIATOR DOOR**

3. Adjust the door position depending on the gap needed between exterior finishing panels.
4. Tighten the bolts

   **Torque : 68 lb-in (8 Nm)**
5. Check that the door swings freely and closes properly. It may be necessary to adjust the door latch tab to get proper fit and operation.

To adjust the latch mechanism ("E" and "G", Figure 74) and the striker pin:

1. Open the door and slightly loosen the latch tab ("E", Figure 74).
2. Place shims between tab and door frame to increase tab engagement length in the latch.
3. Move tab left or right to increase engagement depth in the latch.
4. Check door fit and operation.

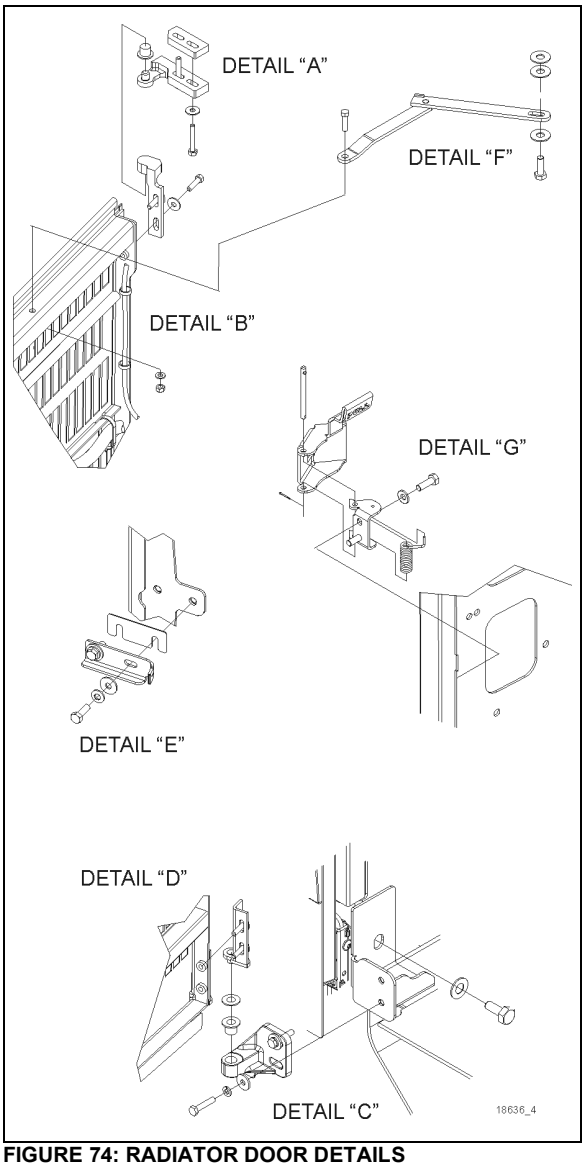


**FIGURE 74: RADIATOR DOOR DETAILS**

| *NOTE* |
| --- |
| *The striker pin must engage at least 13/32" (10mm). Add spacers between the latch and the vehicle body to adjust the engagement.* |

| *NOTE* |
| --- |
| *There should be no gap between the washer and the hinge upper and lower halves.* |

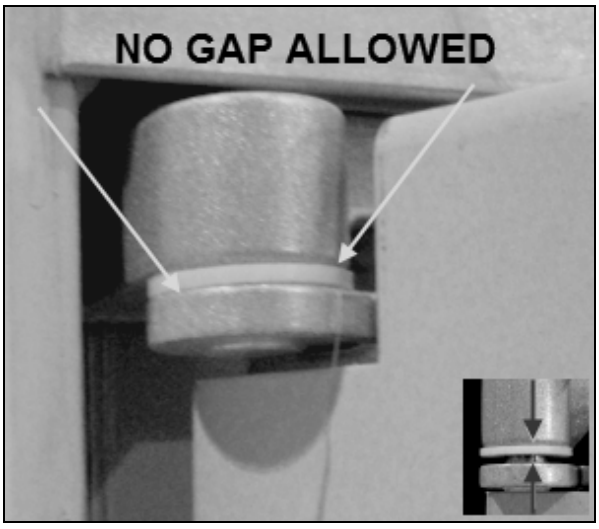
NO GAP ALLOWED

9.5 ZONE 5

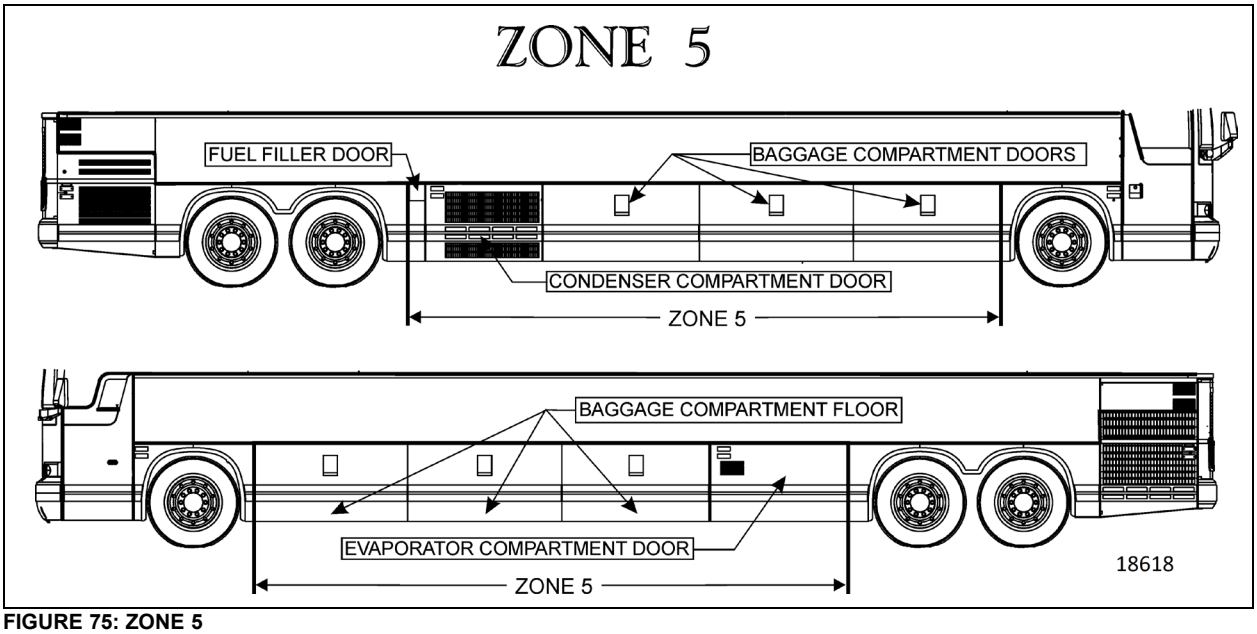


**FIGURE 75: ZONE 5**

### 9.5.1 Baggage Compartment Doors (Aluminum)

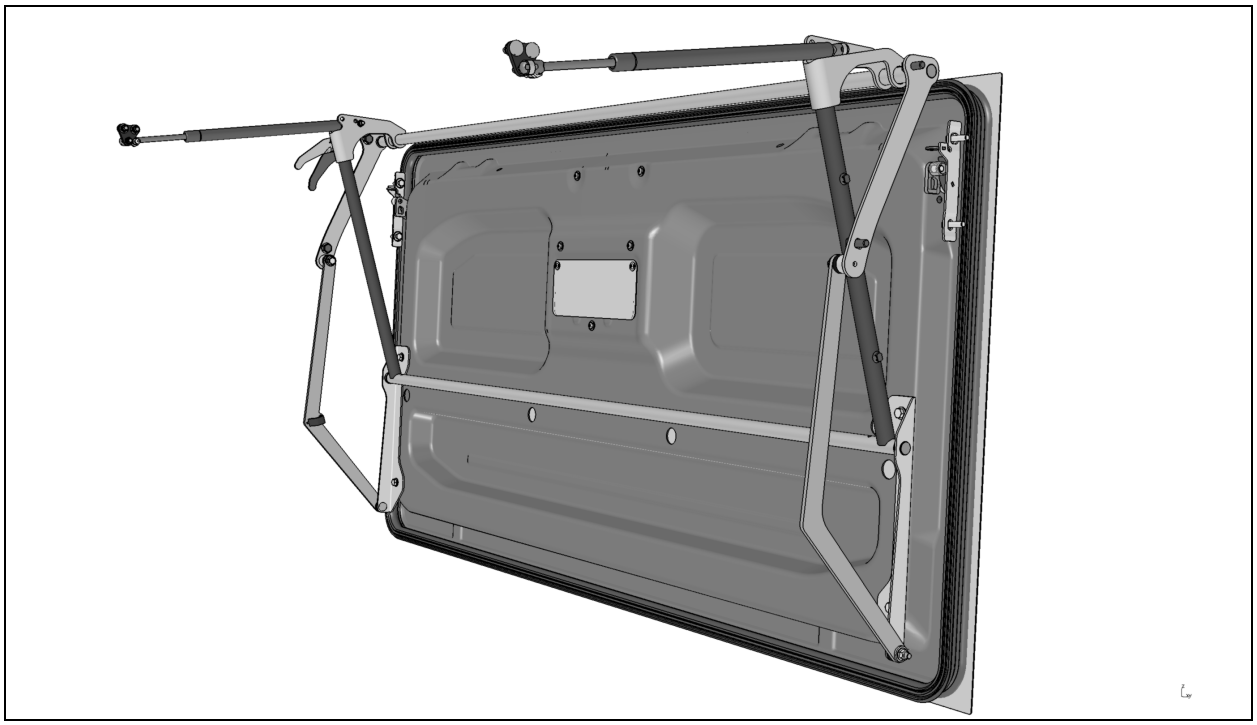

For the removal and installation of a baggage compartment door body panel, you will need:

A drill with drill bits;

Pneumatic hammer tool (Zip Gun);

Razor sharp window scraper or putty knife;

- Open damaged compartment door and unfasten rub rail fixing bolts. Remove rub rail.
- Unfasten bolts and disconnect cable if necessary in order to remove door from vehicle.
- Preferably install the door onto a work surface where it can be solidly fixed.

- **Door Panel replacement**
  - Refer to SAV10054-67.

- **Baggage Compartment Door Adjustment**

1. Adjust door to get a 6mm gap at the top.

2. All adjustments are to be made with door closed, unless specified.

| *NOTE* |
| --- |
| *Vertical adjustment is achieved by moving the door along the mounting plate slots.* |

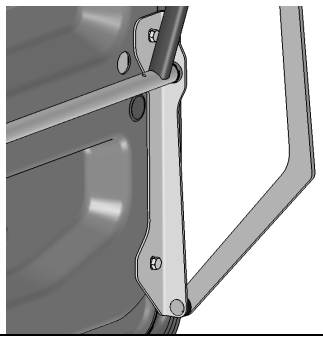

3. Center door in the opening using the retaining rings.

| *NOTE* |
| --- |
| *Lateral adjustment is made by adding/ removing retaining rings in these locations.* |

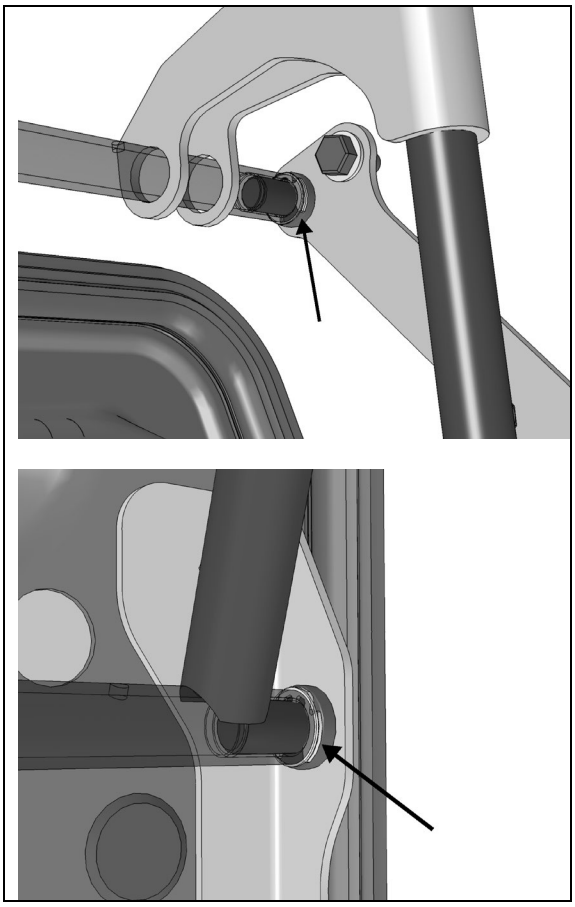

4. Adjust door position and evenness with reference to adjacent panels and doors.

| *NOTE* |
| --- |
| *Adjustment is made by moving IN or OUT the lock plates. Adjust one corner at a time.* |

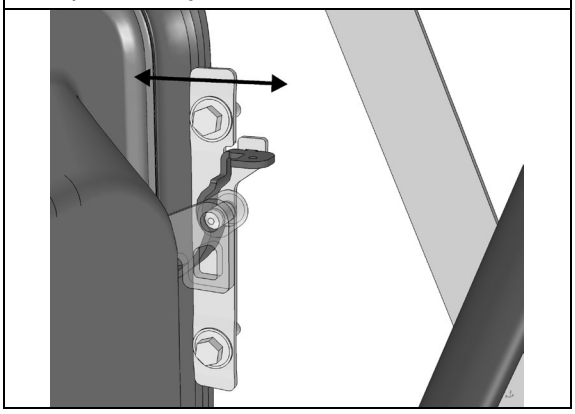

5. Check handle adjustment. Handle must remain tight against its plastic housing.

| *NOTE* |
| --- |
| *Adjustment is made by moving UP or DOWN the lock plates.* |



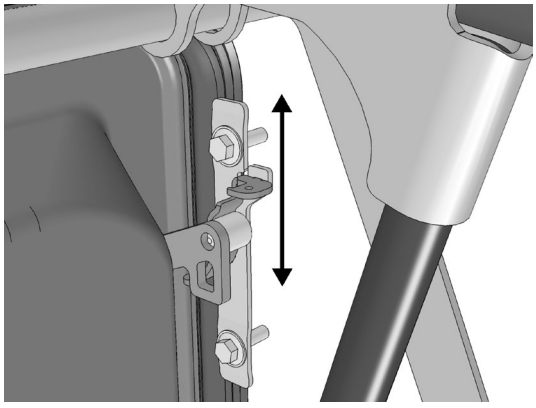

6. Open baggage compartment door and adjust using the cylinder mounting block.

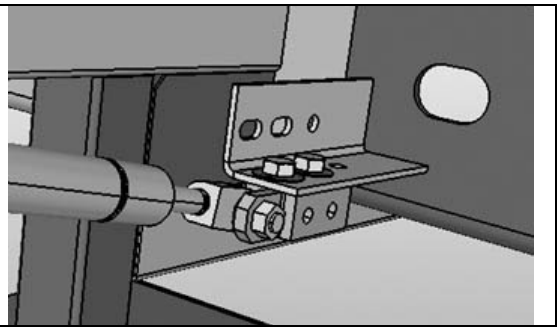

7. Door should be adjusted in reference to neighboring doors.
8. Target is to have 5 ½" (140mm) from bus body panel to door panel and +/- 2mm vertically between doors.

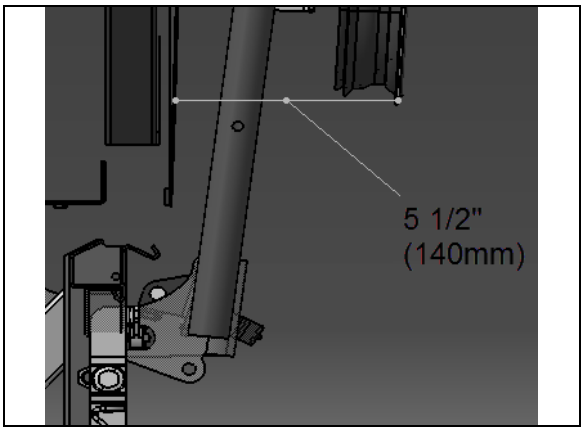


9. Tighten cylinder block fixing screws.
10. Door bottom edge compression can be adjusted by moving in or out the pantograph arms at this location.

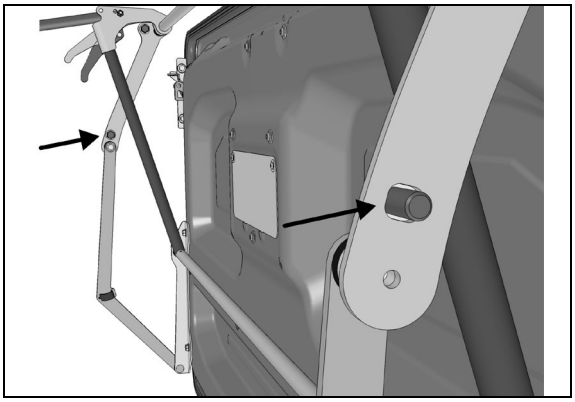

### 9.5.2 Wheelchair Lift Cassette Compartment Door

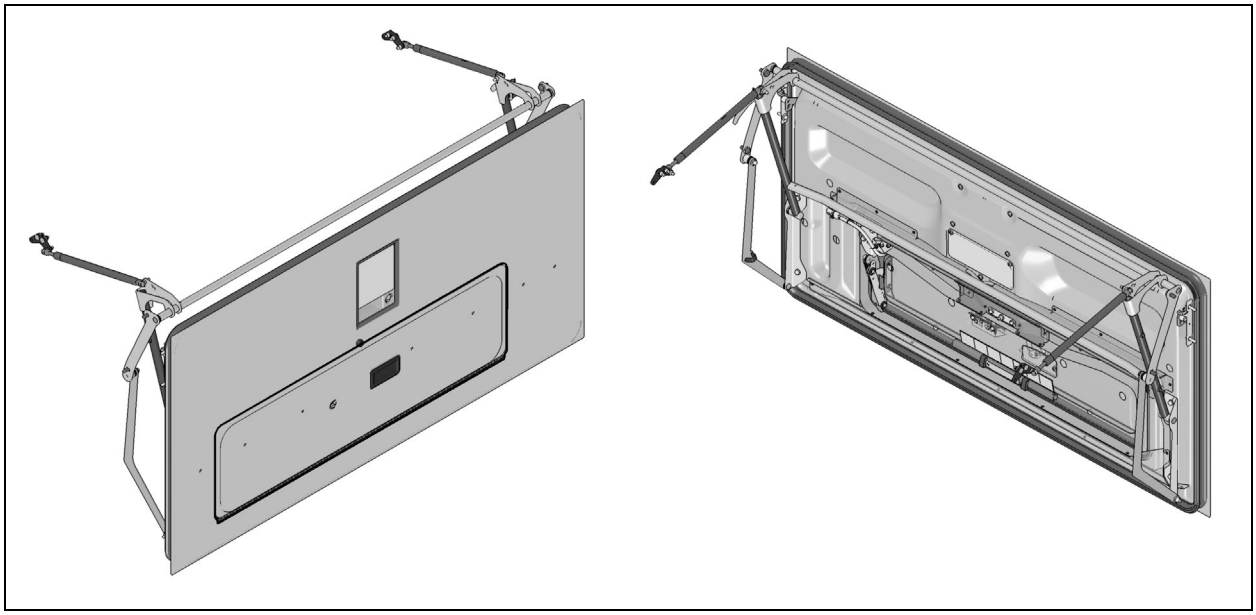

For the removal and installation of a wheelchair lift (WCL) cassette compartment door body panel, you will need:

A drill with drill bits;

Pneumatic hammer tool (Zip Gun);

Razor sharp window scraper or putty knife;

- Open damaged compartment door and unfasten rub rail fixing bolts. Remove rub rail.
- Unfasten bolts and disconnect cable if necessary in order to remove door from vehicle.
- Preferably install the door onto a work surface where it can be solidly fixed.

- **Door Panel replacement**
  - Refer to SAV10054-67.
- **Compartment Door Adjustment**
  - Refer to baggage compartment door procedure.
- **WCL Cassette Door Adjustment**

The small door has a piano hinge on its lower edge.

1. Install only two of the mounting screws, at each end to adjust the door.

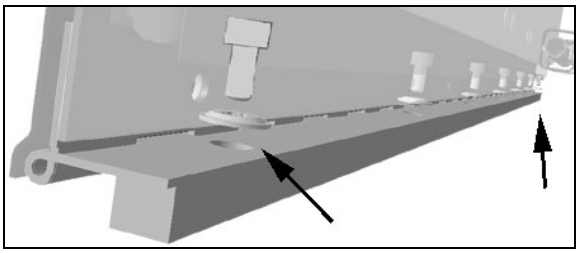

2. Close door and adjust in opening. A 1mm maximum difference between left and right measured gap is accepted.
3. Door should close flush with the larger door panel. Maximum flatness deviation within 1mm.
4. Install the remaining screws and seal with liquid Teflon #680098.

- **WCL Cassette Door latch adjustment**

To allow adjustment of the latch mechanism, lightly tighten the retaining hardware on receptacle and striker support (arrows).

1. Place centering tool G34148_500 in the receptacle cavity.

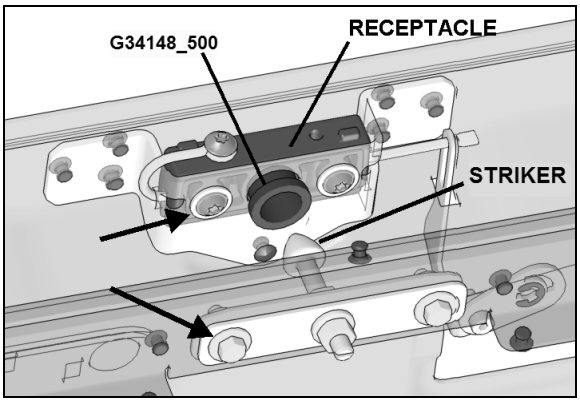


2. Close the door to center the latch mechanism.
3. Tighten screws
4. Check that the door swings freely and closes properly without interference or excessive force

### 9.5.3 Wheelchair Lift access door installation

**CAUTION**

Install the sliding door onto a suitable lifting device that will allow proper lifting and positioning.

1. Lift and move the sliding door near the opening.
2. Push the door into the opening making sure the positioning lugs are properly inserted into their housing then pivot the main hinge and secure the door using 4 bolts. Do not fully tighten the bolts yet.
3. Remove the lifting device from the sliding door.

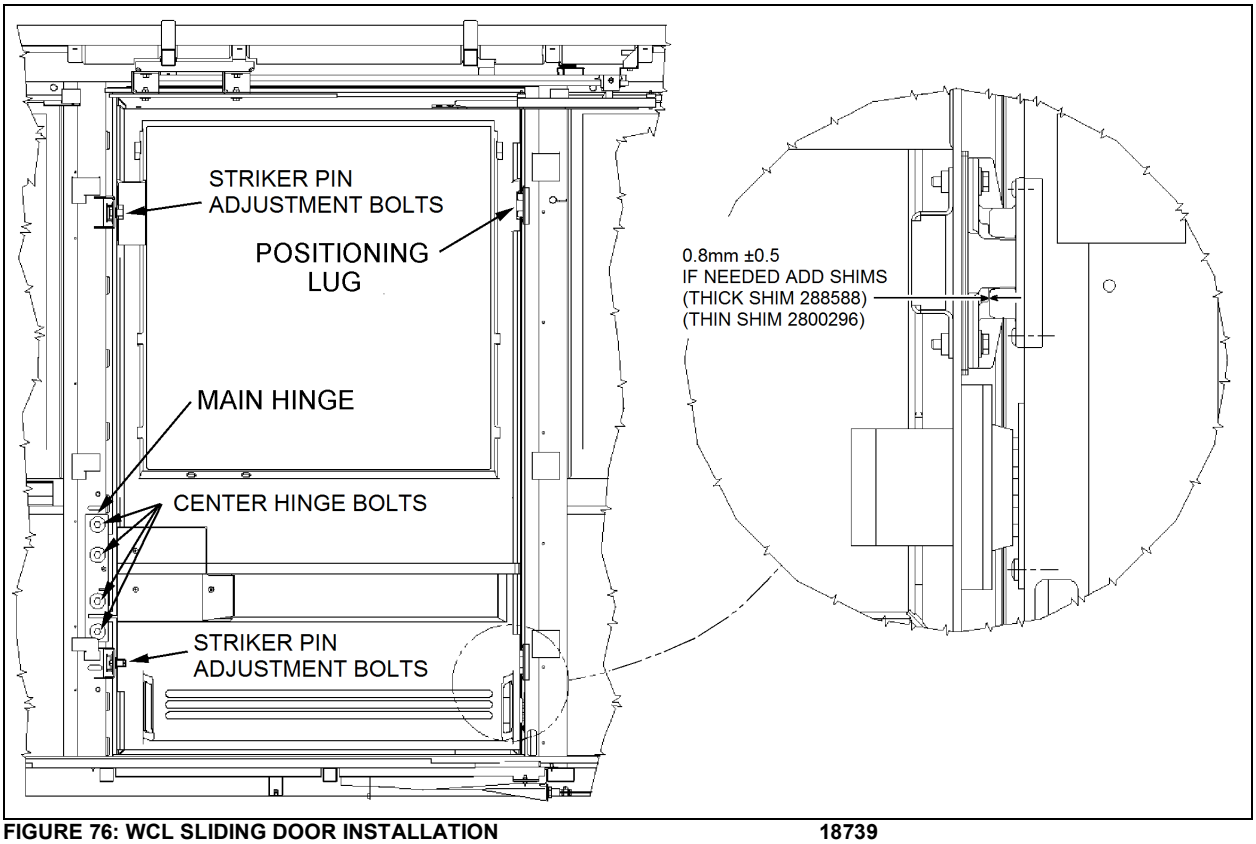


**FIGURE 76: WCL SLIDING DOOR INSTALLATION** **18739**

Adjustment:

1. Adjust sliding door height with reference to the side panels and windows.
2. Slide the top rail into the upper arm then bolt the rail to the structure. Do not fully tighten (Refer to Figure 77).

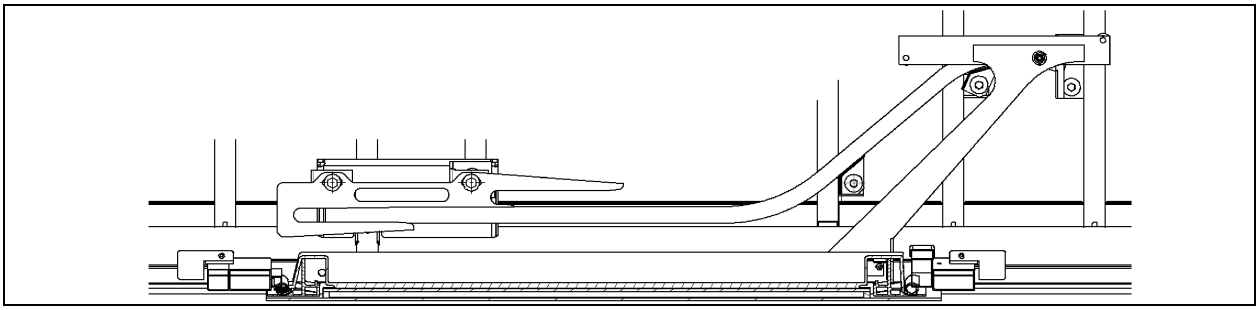

**FIGURE 77: WCL UPPER ARM AND RAIL**

3. Pull the door in or push from the outside to adjust the door with reference to the vehicle outside surface.
4. - Unfasten the upper arm bolt located on the door side.
   - Position the top rail at 3mm from the ceiling bracket.
   - Force the upper arm down then tighten the upper arm fixing bolt.
   - Pull the upper rail towards the inside in order to remove the play between the roller and the upper rail then tighten the rail fixing bolt at the back.
   - Push the lower rail towards the outside in order to remove the play between the roller and the lower rail then tighten the rail fixing bolt at the back.

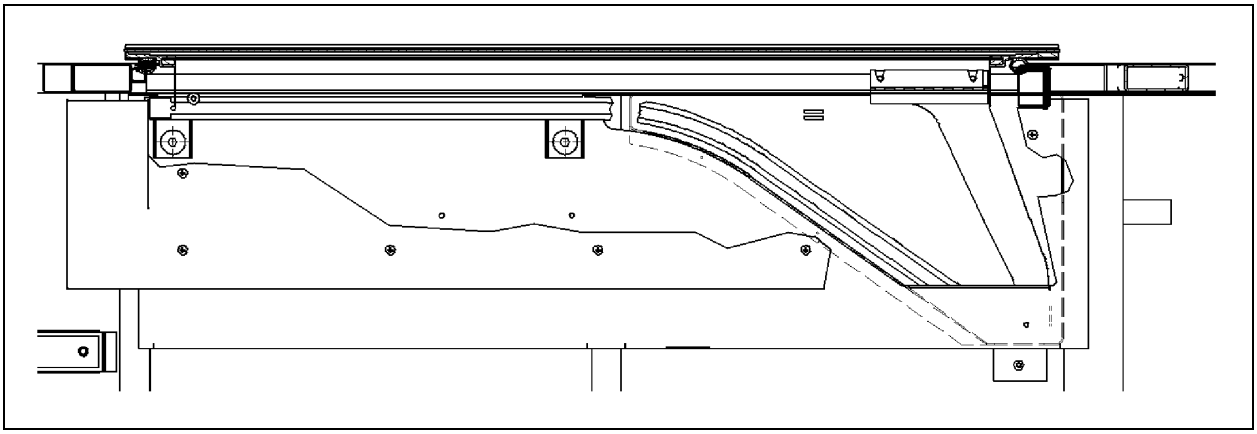

**FIGURE 78: WCL LOWER RAIL INSTALLATION**

5. Adjust the gap between the positioning lugs and their housing, required gap: 0.5 – 1.5mm. Add shims underneath the lugs to get the proper adjustment.
6. Take away the plays from the upper arm assembly by lifting the main hinge using a crowbar. Tighten the main hinge bolts

**TORQUE: 31-38 lb-ft (42-52 Nm)**

| *NOTE* |
| --- |
| *Do not exert too much force to lift the door.* |

7. Open WCL sliding door completely.

8. - Pull the upper rail towards the inside in order to remove the play between the roller and rail then bolt the rail at front and center. Add some shims if necessary between the rail and the structure before tightening the bolts.
   - Push the lower rail towards the outside of the vehicle in order to remove the play between the roller and rail then bolt the rail at front and center. Make sure the rollers stay in contact with the support when starting to close the door.
9. Adjust the distance between the bottom of the guide and the roller when the door is completely open. Required distance: 2 – 3mm. Make sure the roller stay in contact with the guide.
10. Install and adjust striker pins.

**TORQUE: 54-66 lb-ft (73-89 Nm)**

| *NOTE* |
| --- |
| *Make sure that a 2mm gap exists between the door structure and the striker.* |

11. Adjust latches releasing, the two latches must open simultaneously.

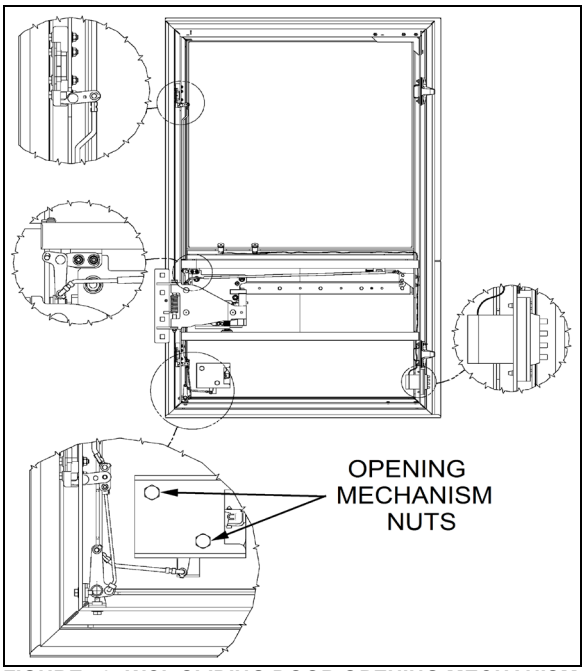


**FIGURE 79: WCL SLIDING DOOR OPENING MECHANISM 18740**

### 9.5.4 Baggage Compartment Floor

- **Repair of Mantex Urethane Covering**

Minor Repair

Use “Dupont IMRON” paint. Apply using a paint brush or roller depending on gravity.

Paint Code: #J4099U

Major Repair (Hole)

Chamfer the whole perimeter of the damaged area. If applicable, remove loose covering. Remove dust and particles.

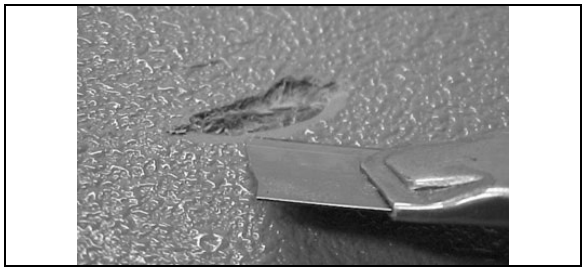

Cover and protect damaged area surroundings.

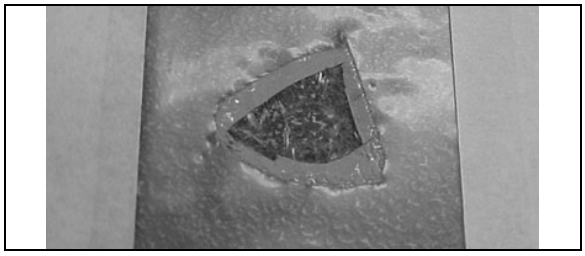

Using a plastic spatula, apply some Sika 221 grey onto the damaged area.

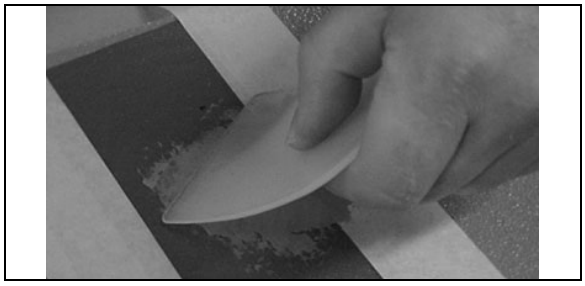

Remove masking tape and protection around damaged area.

Spray pure water onto Sika. Use a floor sample to create some texture onto the adhesive.

If possible spray some more water onto the adhesive to accelerate curing.

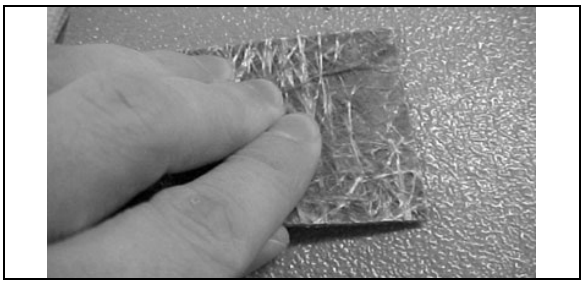

Allow drying for at least **2 hours** then repaint as per paragraph: Minor Repair.

- **Baggage Compartment Floor Installation**

Preparation and Installation

Clean baggage compartment support structure using anti-silicone.

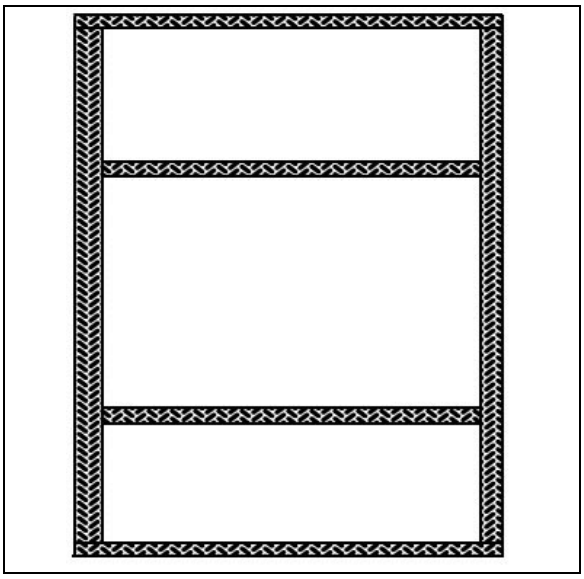

Glue spacers (790392) about 16-inch apart.

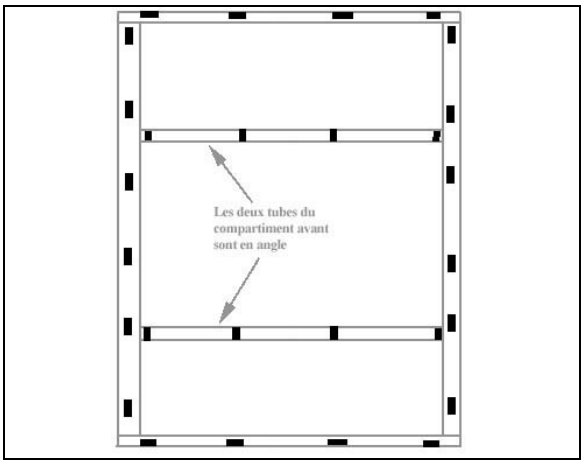


Rear baggage compartment without WCL.

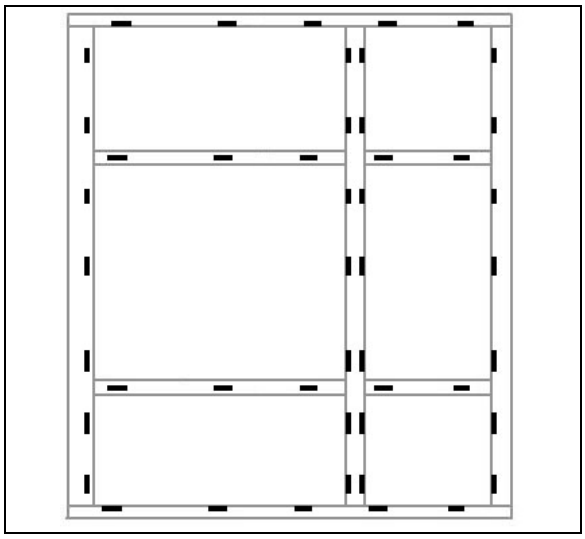

Rear baggage compartment equipped with WCL

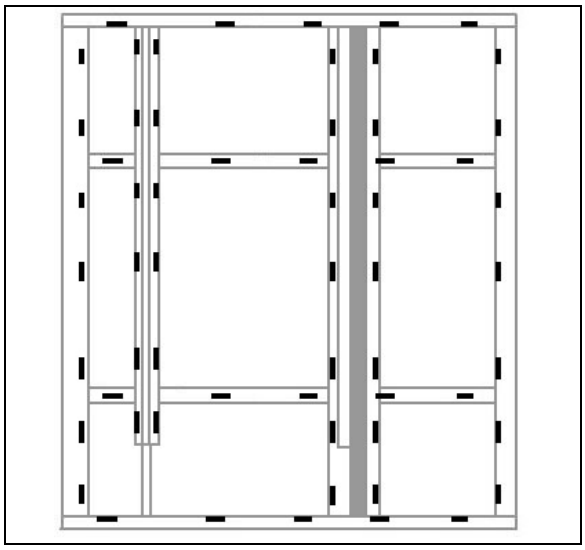

Prepare baggage compartment Mantex floor. Clean panel underside and edges.

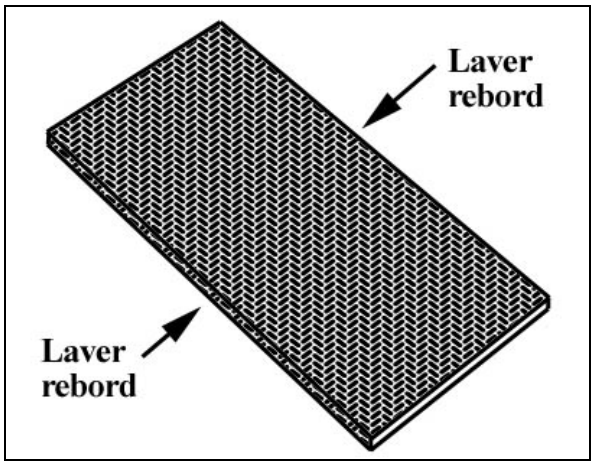


Using a triangular nozzle, apply “Simson” glue (685126) onto support structure.

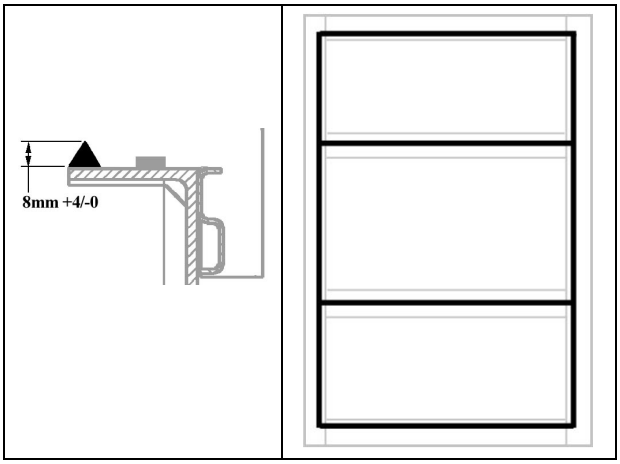


Rear baggage compartment without WCL.

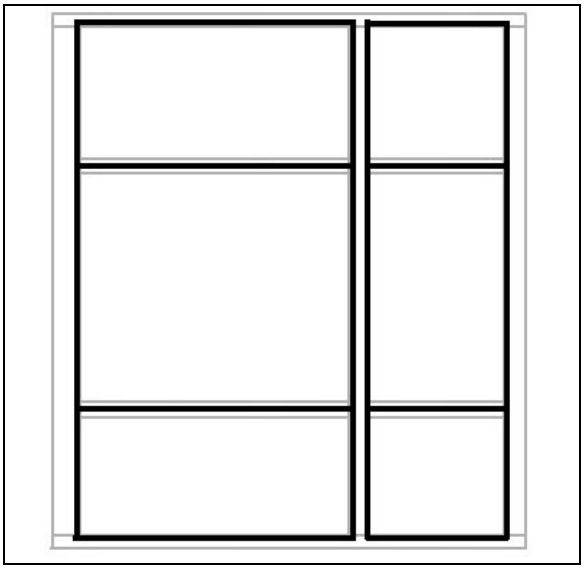

Rear baggage compartment equipped with WCL

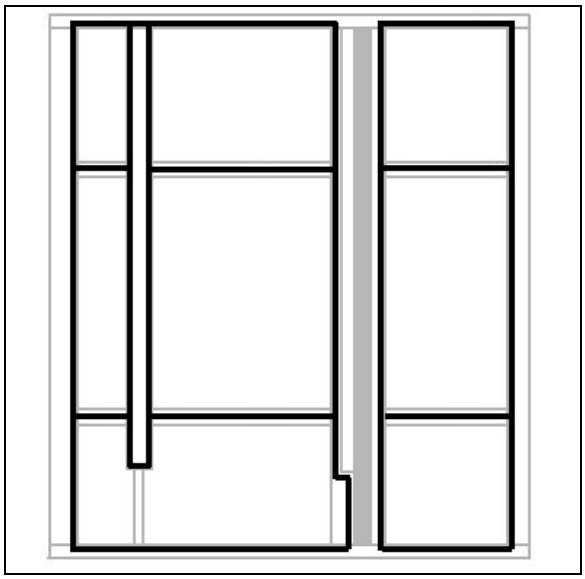

Carefully install panel onto support structure.

Evenly distribute and install conforming weights (6 to 8) (80 to 100 lbs **total**) onto panel for at least **4 hours**. Make sure panel does not move.

Finishing Joints

In the case of lateral finishing joint, apply some masking tape ¼“ from panel edge and ¼” above panel.

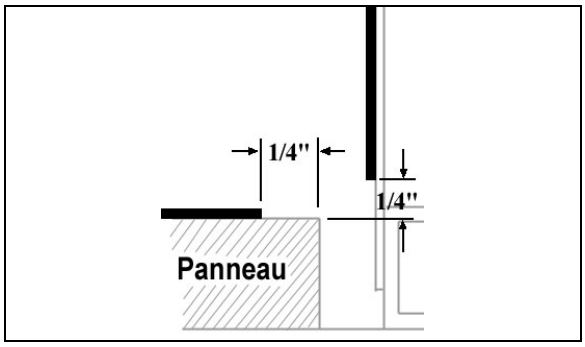


In the case of front finishing joint, apply some masking tape on each side of joint.

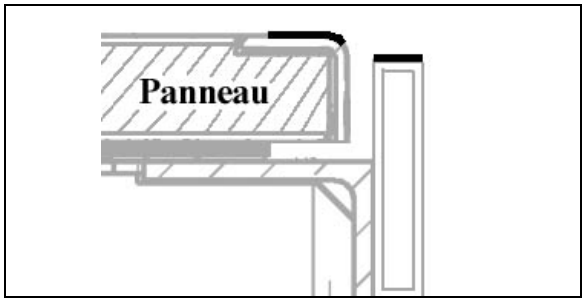


Clean with anti-silicone the area where the Simson glue will be applied.

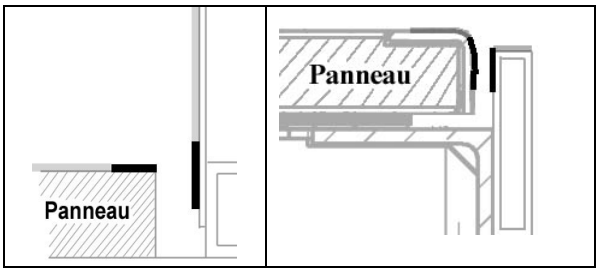


Apply some Simson glue to fill the gap.

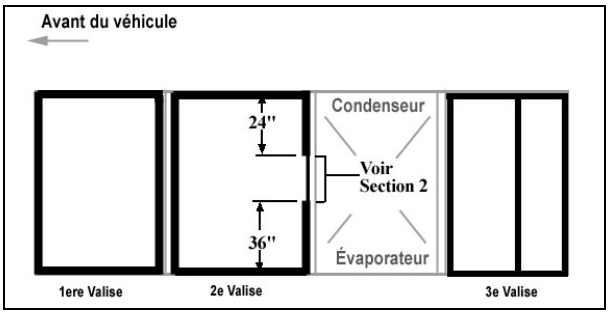


Front finishing joint

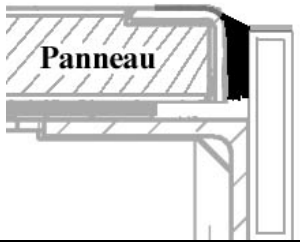


Section 2
Flat joint in front of fuel tank access panel

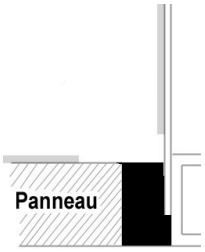


Use plastic spatula #682838 to perform radius

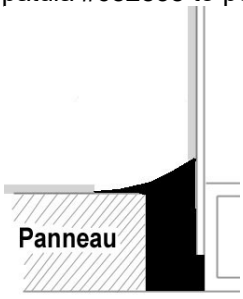


Rear baggage compartment equipped with WCL

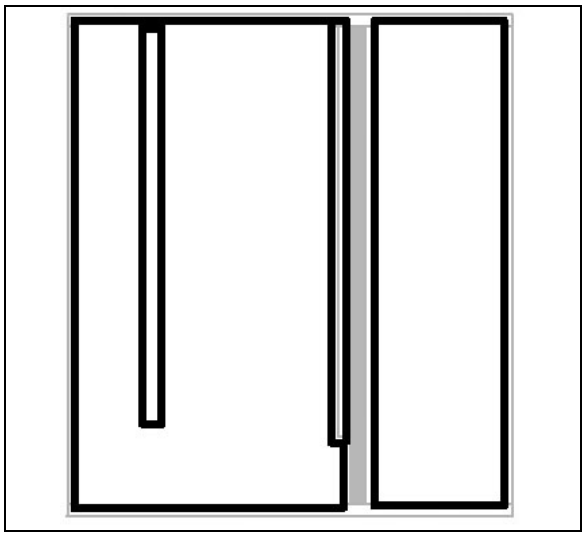

Rear baggage compartment without WCL.

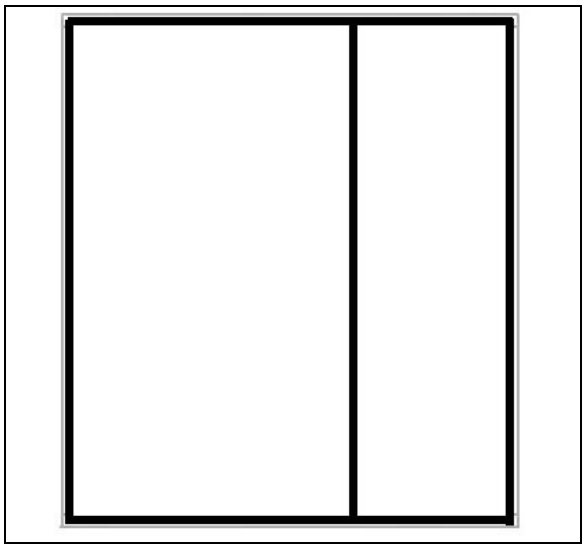

Remove masking tape.

Smooth down joints using soapy water.

### 9.5.5 Evaporator Compartment Door

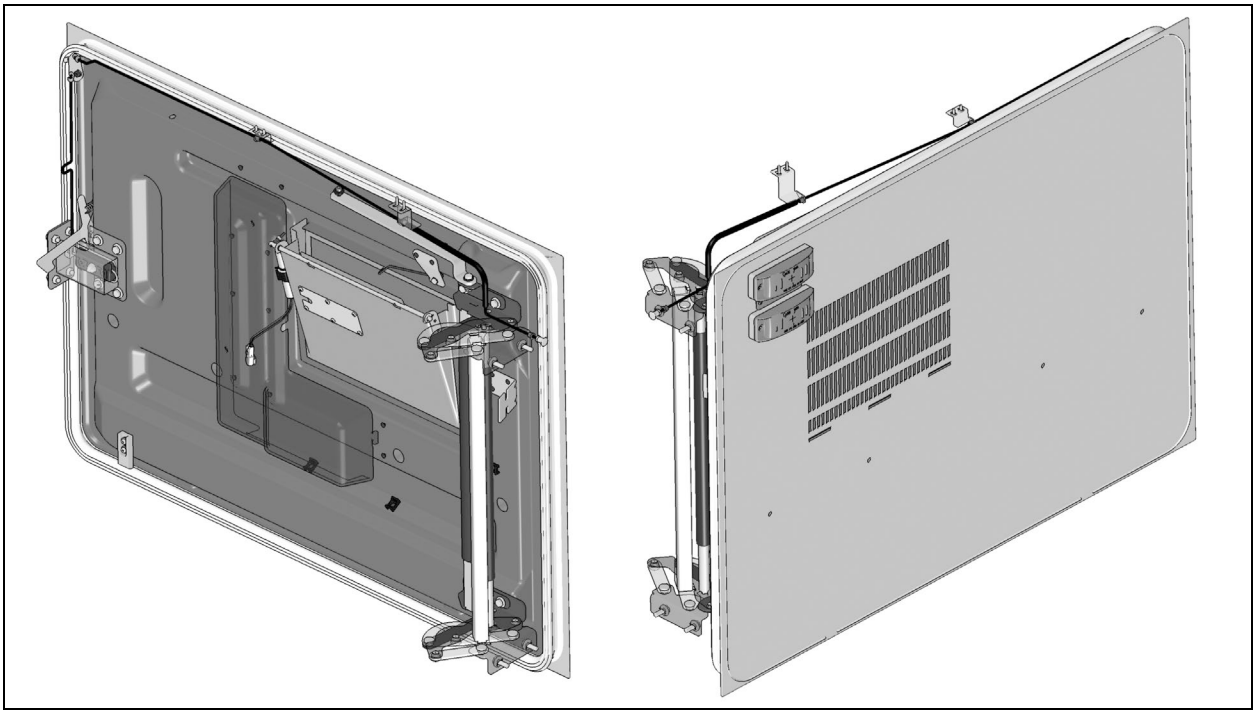

**FIGURE 80: EVAPORATOR DOOR (ALUMINUM)**

For the adjustment of an evaporator door, you will need:

- Centering tool G34148_500

- **Door adjustment**

1. Open the evaporator door.
2. Loosen the screws fixing the hinge to hinge attachment or hinge to door assembly. Loosening the screws allows the evaporator door assembly to be shifted "LEFT or RIGHT" and "UP or DOWN" or “IN and OUT”.
3. Adjust evaporator door assembly position at the hinge.
4. Door exterior panel on hinge side should be positioned at 29mm +/- 2mm measured from bus frame out.

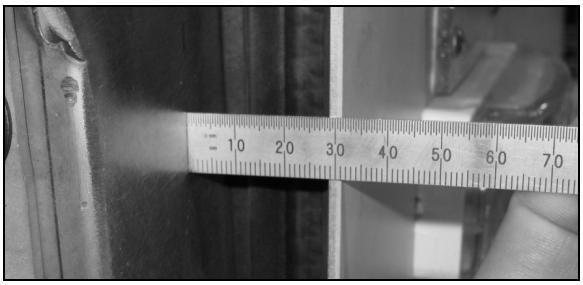


5. Respect the required gap between exterior finishing panels.
6. Tighten the hinge screws.
7. To allow adjustment of the latch mechanism, lightly tighten the retaining hardware on receptacle and receptacle support to frame.
8. Place centering tool G34148_500 in the receptacle cavity.

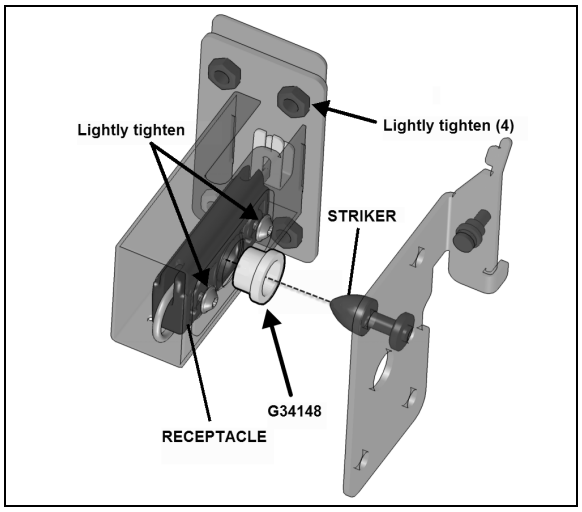


9. Close door to center the latch assembly.
10. Tighten the Receptacle screws only.
11. .Door exterior panel on latch side should be positioned at 8mm +1mm from frame. Make the adjustments by moving the receptacle support.

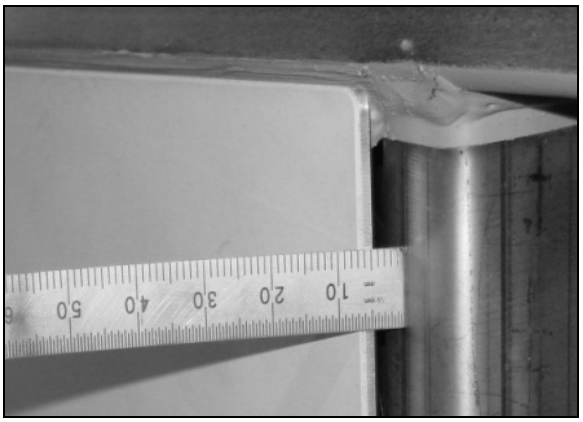

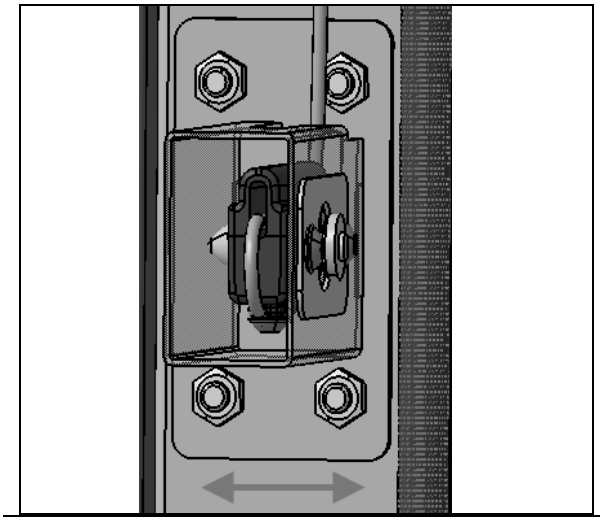

12. Make sure that backing plate is parallel to structure before tightening hardware
13. Make sure that skid bar only touches slightly bus structure at bottom. The door should not move up when closing.

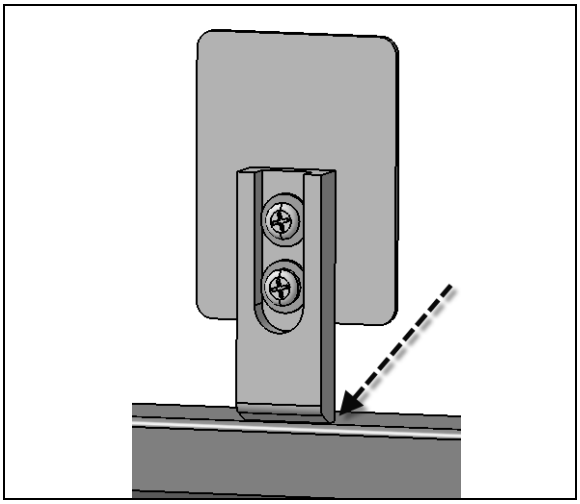

14. Check that the door swings freely and closes properly.

- **Door release in the event of a latch failure.**

If the door release mechanism is damaged or ceases to function for any reason, the door can be released by removing these screws on the fore wall of the fender side



### 9.5.6 Condenser Compartment Door

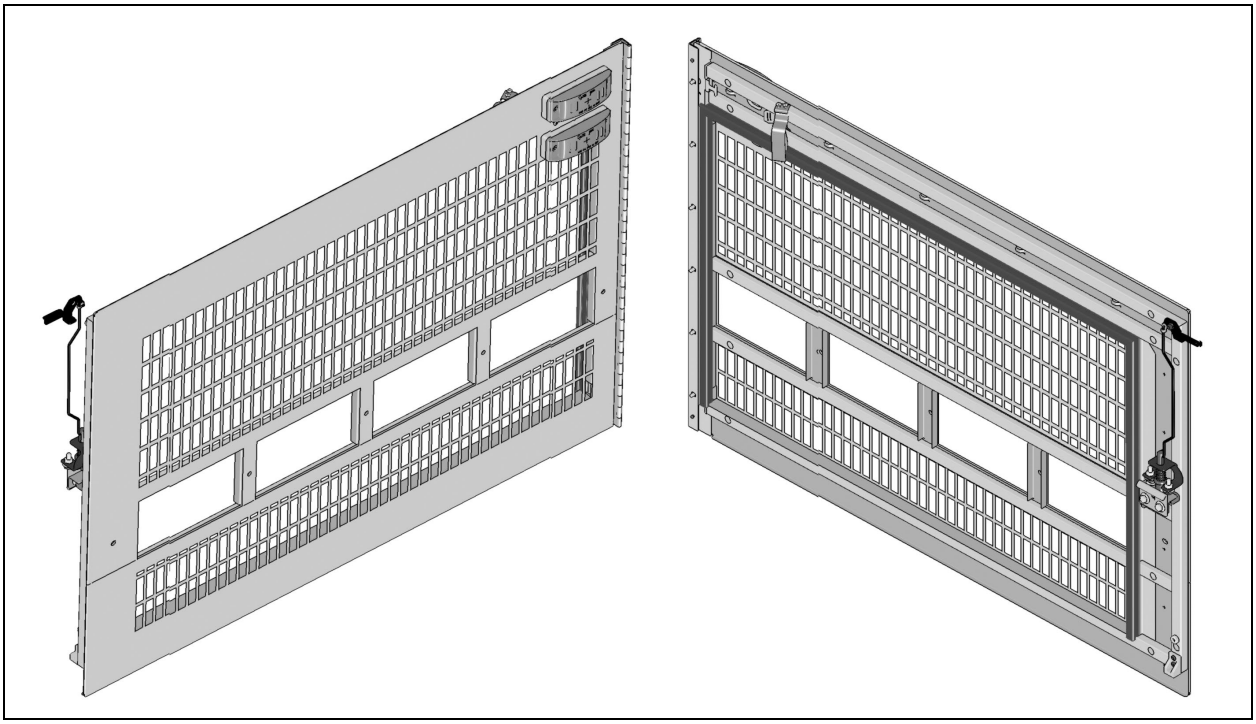

**FIGURE 81: CONDENSER DOOR**

1. Open the condenser door.

2. Loosen the screws fixing the hinge to hinge attachment or hinge to door assembly. Loosening the screws allows the condenser door assembly to be shifted "LEFT or RIGHT" and "UP or DOWN" or “IN and OUT”.
3. Adjust condenser door assembly position at the hinge.
4. Respect the required gap between exterior finishing panels.
5. Tighten the screws.
6. Check that the door swings freely and closes properly. It may be necessary to adjust the door latch to get proper fit and operation.

### 9.5.7 Fuel Filler Door

1. Open the fuel filler door.
2. Loosen the screws holding the panel to hinge assembly.
3. Adjust the fuel filler door position according to distance required between exterior finishing panels.
4. Tighten the nuts.
5. Check that the door swings freely and closes properly.

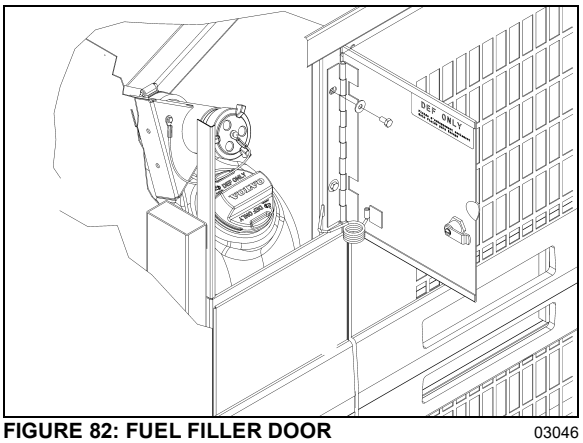


**FIGURE 82: FUEL FILLER DOOR** 03046

9.6 ZONE 6

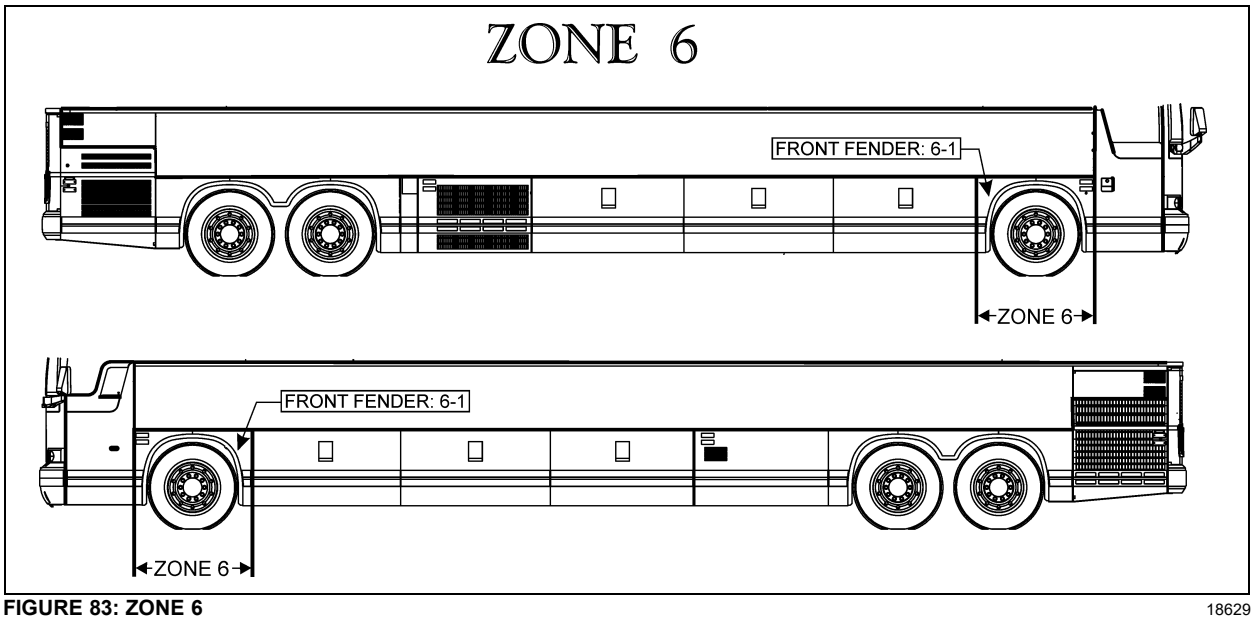


**FIGURE 83: ZONE 6** 18629

### 9.6.1 Front Fender

Front fender may be removed using the following procedure:

Remove the nuts on the inside of the fender. Remove the fender from the vehicle. To reinstall, reverse the procedure.

9.7 ZONE 7

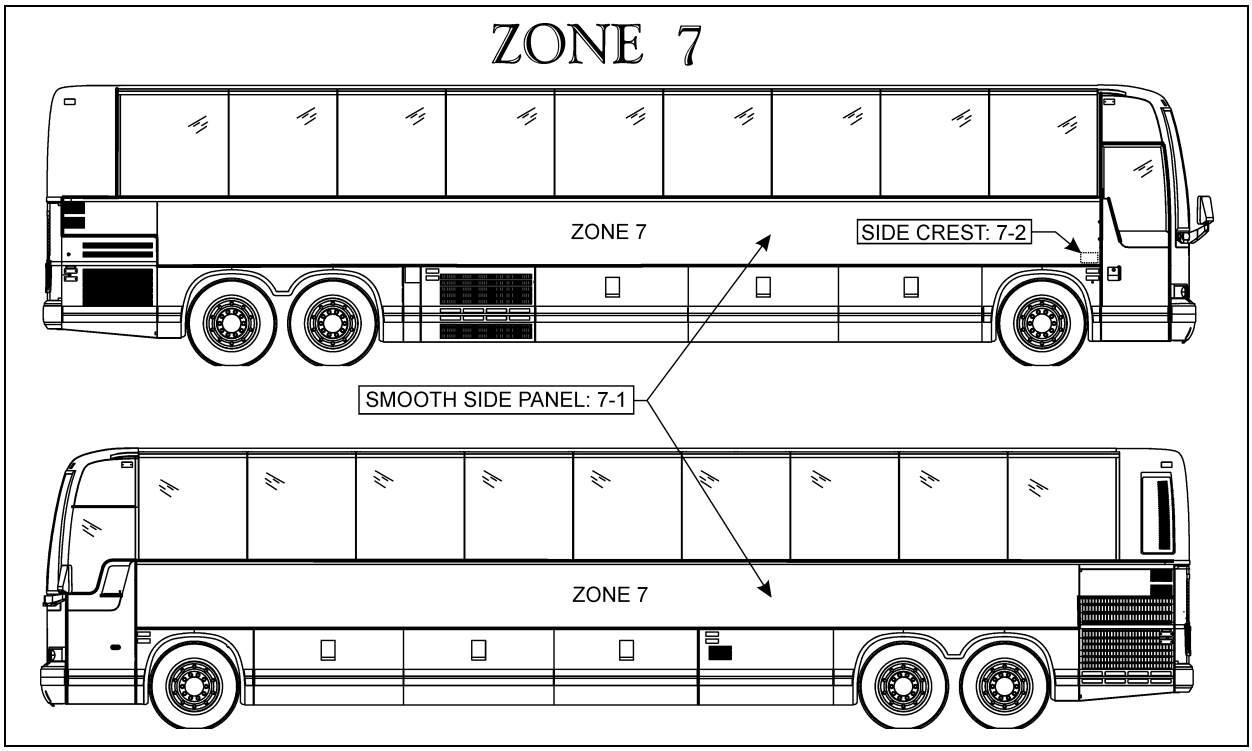


**FIGURE 84: ZONE 7** 18630

### 9.7.1 X3 Smooth Side Panel Replacement Procedure

**Material:**

| | | | | | |
|---|---|---|---|---|---|
| Anti-silicone (682989) | √ | Scotchbrite gray (680226) | √ | Sika 221 gray | √ |
| CHIX cloth (682384) | √ | Sika 205 1liter (683097) | √ | Sika 252 black | √ |
| Blue cloth (682383) | √ | | | | |

**Equipment:**

| | | | |
|---|---|---|---|
| Glue gun | √ | | |
| Pencil | √ | | |

| SECTION 1 SMOOTH SIDE PANEL REMOVAL | | | |
|---|---|---|---|
| 1.00 | **REMOVAL** | | |
| | A) | Remove finishing molding. Insert a screwdriver into snap-on finishing molding joint. Bend finishing molding enough to be able to fix a pair of locking pliers. Using the pair of locking pliers, pull the stainless steel molding and at the same time gradually cut Sika bead with a sharp knife. | Be careful not to damage the adjacent surfaces. |
| | B) | Using a hammer and punch, drive out rivet shanks from top and bottom and from front and rear finishing molding supports. Use a #11 titanium drill bit to remove rivet heads. | |

| | | | |
|---|---|---|---|
| | C) | Grind tig weld spots at each end of side panel. | |
| | D) | Safely support or temporary fix side panel. | **Warning: Panel weights over 200 pounds** |
| | E) | Insert a flat screwdriver between the side panel and the vehicle chassis, in the top left and right corners. Make sure to separate side panel from structure. | Be careful not to damage the adjacent surfaces. |
| | F) | Use the c-clamp to separate the side panel from the back structural panel and at the same time gradually cut Sika bead with a sharp knife. | Ideally, the hoist or chain block must be fastened to the floor while pulling from a 45° angle so as not to damage the vehicle structure |
| | G) | Remove as much glue as possible from the structure using a putty knife or pneumatic knife without damaging 206 G+P primer. | Never heat SikaFlex adhesive to remove. |
| | H) | Check panel horizontal supports for straightness using a straight edge. Take measurements with a ruler. | Tolerance : 1mm towards the outside and 1.5mm towards the inside. |

| SECTION 2 PREPARATION OF SURFACES | | | |
|---|---|---|---|
| 2.00 | **VEHICLE SURFACE PREPARATION** | | |
| | A) | Clean using "anti-silicone" until all clothes come clean.<br>See SAV00001 section A. | 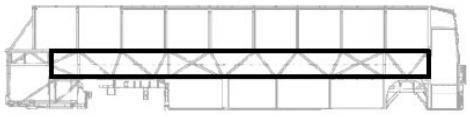 |
| | B) | Use the belt sander (grit coarse)<br>Use a new paper on each vehicle side. | |
| | C) | Clean using "anti-silicone" until all clothes come clean.<br>See SAV00001 section A. | |
| | D) | Apply – Sika 205<br>See SAV00001 section C. | |
| 2.05 | **SIDE PANEL PREPARATION** | | |
| | A) | Clean using “anti-silicone” until all clothes come clean. See SAV00001 section A. | |
| | B) | Use the belt sander (grit coarse)<br>Use a new paper on each vehicle side panel. | 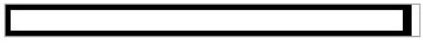 |
| | C) | Clean using “anti-silicone” until all clothes come clean. See SAV00001 section A. | |
| | D) | Apply – Sika 205<br>See SAV00001 section C. | |

# SAV00001 Section A Alcohol or Anti-silicone

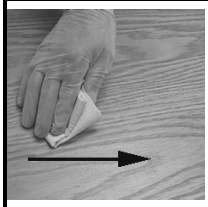

*1.* **Apply**

**CHIX cloth**

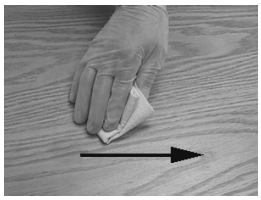

*2.* **Dry immediately**

**Blue cloth**

*3.* **Allow to dry**

| | |
|---|---|
| **Mandatory** | **Minimum time : Wait for product to evaporate** |
| | **After 2 hours: Start cleaning operation again** |
| **Before applying any other product** | If surface seems dusty, greasy or with finger marks, start cleaning operation again. |

# Section B Sika 205

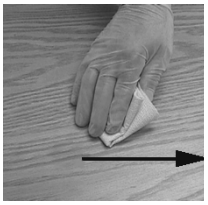

*1.* **Apply**

**CHIX cloth**

*2.* **Allow drying**

| | | | |
|---|---|---|---|
| **Mandatory** | **Minimum time** | **- For a smooth surface (aluminum, stainless, steel, fiber glass (gelcoat side), etc.):** | **2 minutes** |
| | | **- Pour a porous surface (fiber glass (non gelcoat side), etc.)** | **10 minutes** |
| | **After 2 hours : Reactivate surface with Sika 205** | | |
| **Before applying any other product** | If surface seems dusty, greasy or with finger marks, start operation again. | | |

## SECTION 3 SIDE PANEL INSTALLATION

| | | | |
|---|---|---|---|
| 3.00 | A) | Using a pencil, mark the double-face self-adhesive tape position onto vehicle side. | 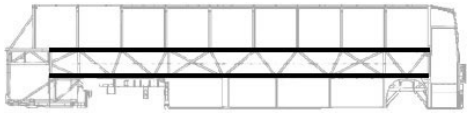 |
| | B) | Apply 1/8 X ½"double-face tape as per marking. | |
| | C) | Compress tape | 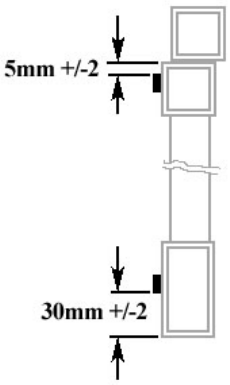 |
| | D) | Remove protective film from double-face self-adhesive tape center section. | 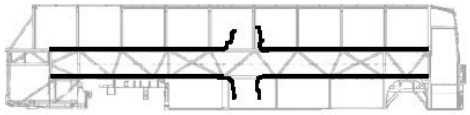 |
| 3.05 | Install 1/8 X ½" foam tape onto middle reinforcement then compress. | | 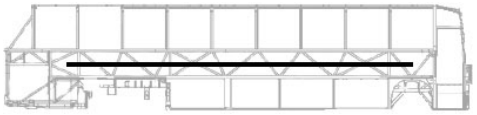 |
| 3.10 | Apply Sika 252<br>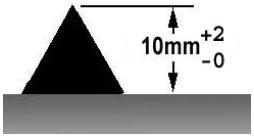<br>– Onto vehicle surface<br>– Cut nozzle as per template<br>– Use the guide for the application<br>Bead must be continuous for the whole perimeter. | | 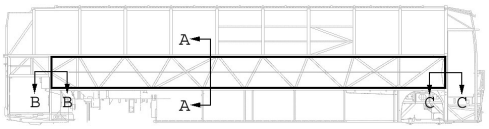<br>Section A-A \| Section B-B \| Section C-C<br>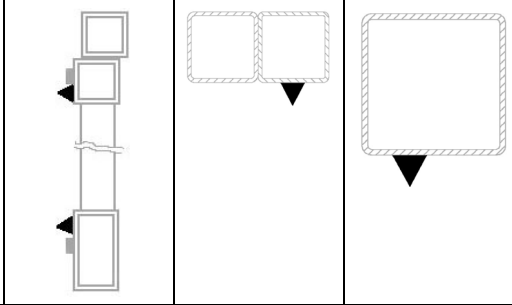 |
| 3.15 | A) | Install side panel onto support jig. | 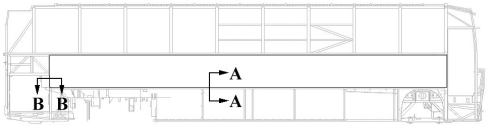 |

| | | | | |
|---|---|---|---|---|
| | B) | Position side panel in front of vehicle structure | **Section A-A**<br>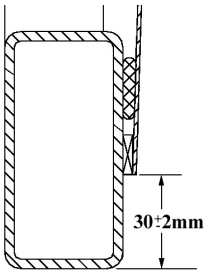 | **Section B-B**<br>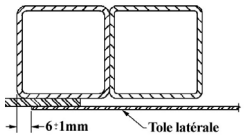 |
| | C) | Perform final adjustment to make sure that side panel is true and square | – 30 mm. ± 2 with reference to bottom tubing<br>– 6 mm ± 1 with reference to vertical tubing | |
| | D) | Sand rear of side panel 2" wide | 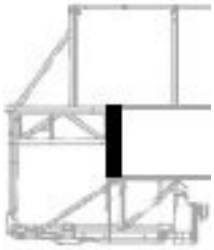 | |
| | E) | Perform tig spot welding (1” apart) | Quantity of "tig spot": 30 minimum. | |
| 3.20 | A) | Install pulling equipment at the other end of side panel | | |
| | B) | Make a final adjustment in height | | |
| | C) | Sand front of side panel 2" wide |  | |
| | D) | Pull side panel so that panel moves 1/8” | Make sure the equipment pulls along the whole width of side panel | |
| | E) | Perform tig spot welding | Quantity of "tig spot": 30 minimum. | |
| 3.30 | Remove pulling equipment | | | |
| 3.40 | A) | Remove protective film from double-face self-adhesive tape. | | |

| | | | |
|---|---|---|---|
| | B) | Compress top and bottom section of side panel |  |
| 3.50 | A) | Cut excess of side panel. Make sure that cut is parallel with tubing. |  |
| | B) | Grind side panel end to line up with door tubing. | |
| 3.60 | To seal each panel end, apply masking tape on each side of side panel joint. Use a caulking nozzle and grey Sikaflex 221 adhesive to fill the cavity between the panel and vehicle structure.<br>Clean using Sika 205. Allow 5 minutes minimum for drying.<br>Wear surgical gloves and smooth down the joint with your finger. | | |

| SECTION 4 ENGINE AIR INTAKE PANEL INSTALLATION | | |
|---|---|---|
| 4.00 | Make sure that sealing of structure has been performed properly |  |
| 4.05 | Prepare vehicle surface as for side panel. | Refer to step # 2.00 |
| 4.10 | Prepare air intake panel as for side panel | Refer to step # 2.05 |

| | | |
|---|---|---|
| 4.15 | Install foam tape 1/8" X ¼" onto structure, as shown in picture | 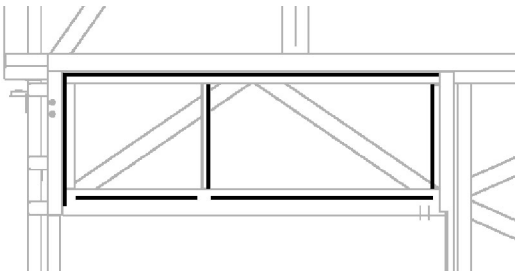 |
| 4.20 | Install foam tape 1/16" X ¼ onto air intake panel pleat |  |
| 4.25 | Apply a bead of 252 onto structure as per picture<br>Important: Make sure bead is continuous<br>Triangular bead: 10mm x 8mm | 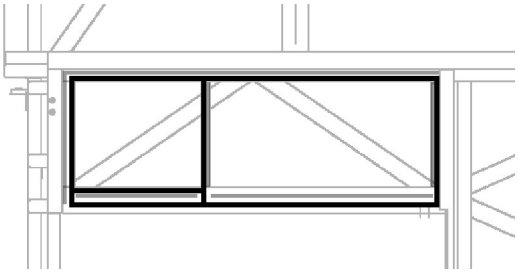 |
| 4.30 | Install panel onto structure | Use a jig to make sure that panel is lined up with engine door tubing. |
| 4.40 | Use a brush to compress Sika bead | |

| | | | |
|---|---|---|---|
| 5.00 * | **Finition Joint** | |  |
| | A) | Install a protective tape onto the tubing above welding | 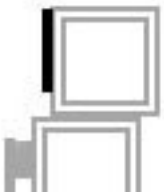 |
| | B) | Apply Sika 205<br>Use a plastic spatula inside a Chix cloth to ensure that Sika 205 reaches as far as the corner.<br>See SAV00001 section C. |  |
| | C) | Apply Sika 252 black at the junction of both tubing.<br>Smooth down the joint |  |
| | D) | Remove protective tape | |

### 9.7.2 Side Crest

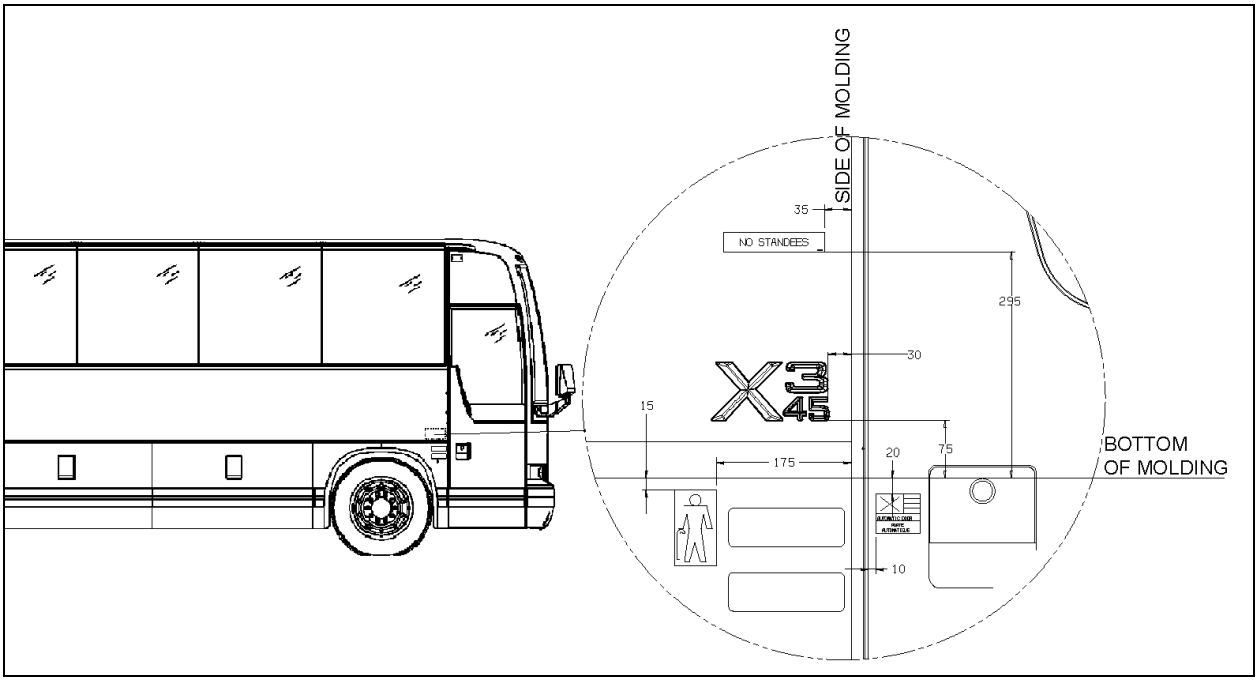


**FIGURE 85: SIDE CREST POSITIONING** 18639

- Clean vehicle surface using anti-silicone where the side crest and stickers will be applied.
- Using hands apply and compress side crest.
- Apply required stickers.

## 9.8 BODY PANEL AND WINDOW SPACING

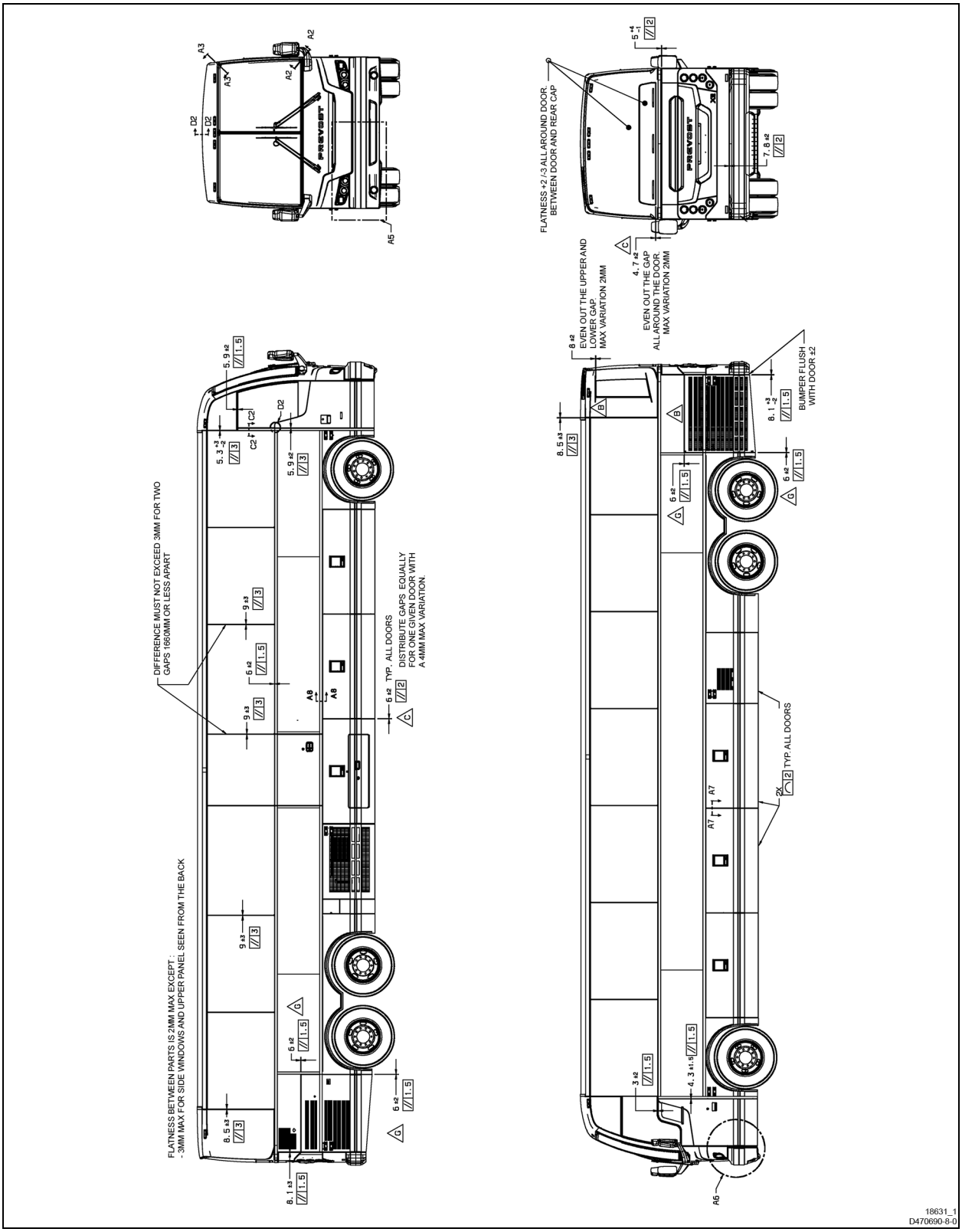


**FIGURE 86: BODY PANEL AND WINDOW SPACING**

## 9.9 PASSENGER SEATS

The vehicle can be equipped with different seat models and installed in a variety of seating arrangements:

1. For coaches, standard seating arrangement includes two card tables, which can be folded and removed, and pivoting seats ahead of each card table. Each pair of seats is built on a welded steel frame fastened to the side wall and on a track-mounted pedestal.
2. The *"V.I.P."* seat model is an optional seat. *"V.I.P."* seats are mounted on one row of paired seats built on a common frame on one side of the vehicle, and a row of single seats on the other side of the vehicle with an off-center aisle. Each *"V.I.P."* seat has its own set of armrests.

Each seat has an easily removable bottom cushion. Upholstery is clipped on the cushion frame for cleaning or replacement. To remove the fabric, simply unclip from the frame. The standard seats have three armrests. The aisle and center armrests can be folded up and down manually, while the window armrest is fixed.

### 9.9.1 Rotating Seats

1. Loosen completely the threaded-stud knob under the seat on the aisle side (Figure 87).

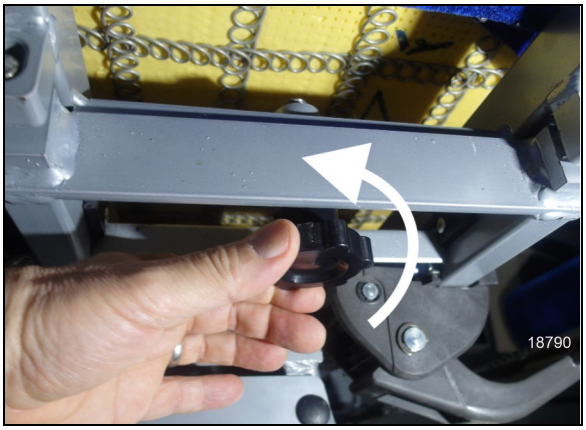


**FIGURE 87: LOOSEN THE KNOB**

2. Pull the seat toward the aisle to unlock the rotation (Figure 88).




**FIGURE 88: PULL TO UNLOCK THE ROTATION**

3. Rotate the seats until it stops (Figure 89, A) and push back toward the window to lock rotation (Figure 89, B).




**FIGURE 89: FINAL POSITION**

4. Fasten the threaded-stud knob under the seat on the aisle side.

### 9.9.2 Removing Fixed Seats

| *NOTE* |
| --- |
| *Seats on one row are not interchangeable with seats of the other row.* |

To remove fixed seats, proceed as follows:

1. Remove 1 nut holding each seat bottom cushion from under the front part of the seat frame.
2. Lift front part of cushions and remove cushions.

3. Remove 4 finishing screws holding plastic cover between side wall and seat frame.
4. Remove 2 cap screws, nuts, and washers holding seat frame to side wall and retain the 2 holding brackets. See Figure 90.
5. Remove 2 nuts and washers holding seat frame to pedestal rods. See Figure 91.

*NOTE*

*Bottom end of rod is coated with Loctite and threaded in a steel block which slides in the floor track. Removal of rod is possible if loosened from block. Otherwise, slide rod and block assembly to the front end of track after removing all seats located in front.*

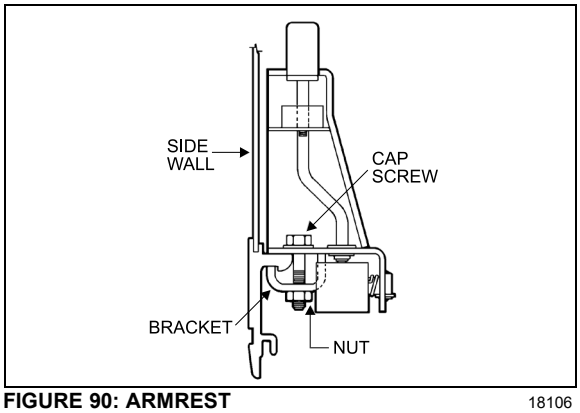


**FIGURE 90: ARMREST** 18106

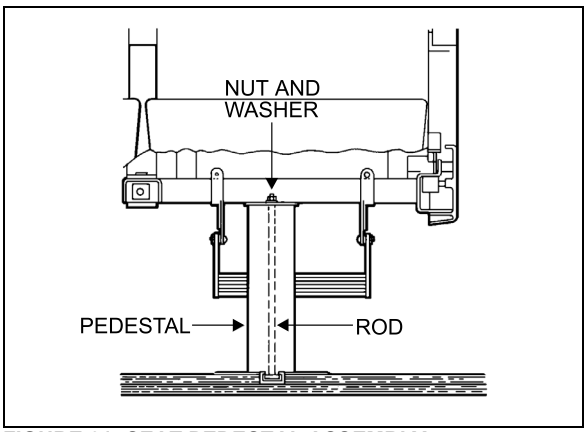


**FIGURE 91: SEAT PEDESTAL ASSEMBLY** 18107

6. Remove seat assembly.
7. Reverse the above procedure to install seat assembly. Tighten mounting nuts.

**TORQUE: 27 lb-ft (37 Nm)**

*NOTE*

*On newer vehicles, the rod consists of a carriage bolt inserted in a square plate sliding in the floor track. Removal is possible only by the front or rear end of track.*

### 9.9.3 Upholstery Maintenance

Coach seats are lightweight, with foam-padded backs and cushions. For both appearance and durability, best results are obtained if upholstery is cleaned at regular intervals before dirt, dust and grit have been ground into the fabric. Seat fabric is made of 50% wool, 33% cotton, 9% nylon, and 8% acrylic.

- **Routine Cleaning**

All that is required to remove the dirt is a gentle beating with the hand or the back of a brush. This will bring the dirt to the surface where it is easily removed with a vacuum or brush in the direction of the pile which can easily be recognized by running a hand lightly over the pile. If the fabric becomes excessively dirty, particles of grit will cause gradual wear, reducing the life span of the fabric.

- **Dry Cleaning**

If covers are to be removed for cleaning, dry cleaning is recommended since washing might cause some shrinkage, preventing the covers from being reapplied to the seats without damage. Other than spot cleaning the covers while they are in place, dry cleaning is not recommended, since the resulting fumes could be hazardous in the confines of the coach and the solvent could be detrimental to the foam padding of the seats.

- **Cleaning With Covers in Place**

The most effective and economical method to clean the fabric seat covers is by washing with either an approved foam upholstery cleaner or with a mild household detergent.

Thoroughly vacuum the upholstery. Remove any spots or stains before the seats are washed to avoid a cleaning ring.

Dilute household detergent or liquid foam cleaner according to directions on the container.

Pour a small quantity into a flat pan and work into a thick foam with a sponge or brush.

Apply only the foam to the fabric with a sponge or brush. Clean a small area of the fabric at a time with the foam. DO NOT SOAK. Rub vigorously. Sponge the suds from the fabric with a clean sponge or cloth moistened with water. Rinse the sponge or cloth often and change the water when it becomes dirty.

Allow the upholstery to dry completely before the coach goes back into service. To speed up drying, excess moisture can be blown off the fabric with compressed air.

**CAUTION**

Oil in the air line will soil the fabric. Blow the line clear and test air discharge against a plain white piece of paper. It is also effective to press the edge of a flat hardwood stick down on the cushion and slowly draw it across the fabric.

Even very soiled areas can be returned to their original appearance by a thorough cleaning, but a regular schedule of cleaning that keeps the upholstery reasonably clean at all times will greatly enhance the life span of upholstery.

## 9.10 TARABUS FLOOR COVERING REPAIR OR REPLACEMENT

On X3-45 coaches equipped with “Tarabus” covering, it is possible to replace or repair this covering. The purpose of this paragraph is to explain the steps to be followed to ensure the best results and adherence.

**MATERIAL**

| Part No | Description | Qty |
|---|---|---|
| 680028 | Adhesive, Tarabus Floor Covering (White) | A/R |
| 684655 | Adhesive, Contact (3M) | 3.8L |
| 684654 | Adhesive, Contact (3M) | 18.9L |
| 680532 | Sikaflex 221 Gray | A/R |

*NOTE*

*Material can be obtained through regular channels.*

1. Remove number of passenger seats required to perform repair.
2. Cut and remove damaged section of floor covering.

*NOTE*

*It would be preferable to cut under two rows of seats so that repair is not as noticeable.*

3. Clean plywood using a scraper.

*NOTE*

*Make sure that no staples are sticking out beyond surface. Adjacent plywood sheets must be leveled.*

4. Fill up holes and imperfections using MAPI PRP 110 then sand.
5. Remove dirt and adhesive residue.

**CAUTION**

Do not leave floor covering folded down except temporarily during installation.

6. Apply floor covering adhesive (680028) onto plywood using a serrated spreader with 1/8-inch serration. If required, apply contact adhesive (3M) (684655 or 684654) onto aluminum molding and also onto section of floor covering, which will be in contact with molding (refer to Figure 92).

*NOTE*

*Allow adhesive to dry (3 to 5 minutes).*

7. Compress floor covering using a roller so as to remove any trapped air bubble.
8. Apply Sikaflex 221 gray sealant (680532) alongside passenger seat fixing tracks (refer to Figure 93).

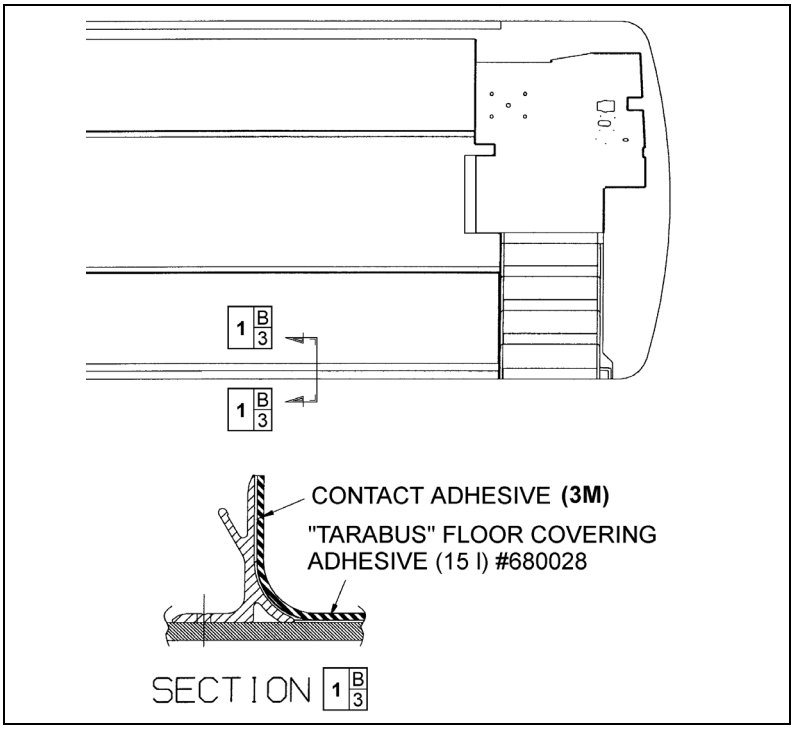


**FIGURE 92: TARABUS FLOOR COVERING ADHESIVE APPLICATION** 18640

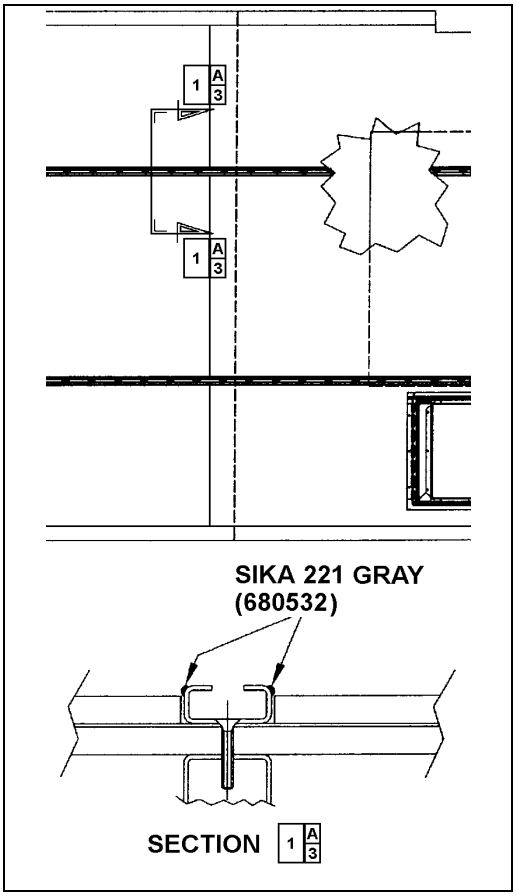


**FIGURE 93: APPLICATION OF SIKA 221 GRAY** 18641

### 9.10.1 Front Steps Replacement Procedure

**MATERIAL**

| Part No | Description | Qty |
|---|---|---|
| 682989 | Anti-silicone | A/R |
| 683097 | Sika 205 (1 liter) | A/R |
| 685101 | Sika Remover 208 | A/R |
| 683916 | Sika 215 (1 liter) | A/R |

1. Cut and remove damaged step(s).
2. Remove dirt and adhesive residue.

| *NOTE* |
|---|
| *In wintertime, condensation and cold temperature may greatly influence bonding parameters. Working area must be at a temperature sufficient to prevent reaching condensation point. Mechanically preheat working area (heat lamp or heat gun) or wait until vehicle reaches room temperature.* |

**PREPARATION OF "TARABUS" FLOOR COVERING**

1. Sand under step using “Scotchbrite”.
2. Clean using anti-silicone (refer to Section A).

## Section A Alcohol or Anti-silicone

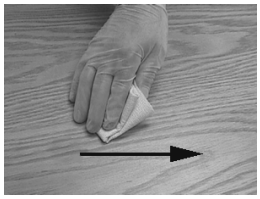

**1.** **Apply**

**CHIX cloth**

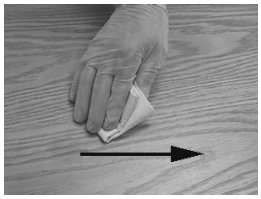

**2.** **Dry immediately**

**Blue cloth**

***3.*** **Allow drying**

| | |
|---|---|
| **Mandatory** | **Minimum time : Wait for product to evaporate** |
| | **After 2 hours: Start cleaning operation again** |
| **Before applying any other product** | If surface seems dusty, greasy or with finger marks, start cleaning operation again. |

3. Apply Sika Primer 215 (refer to Section D).

## Section D Sika Primer 215

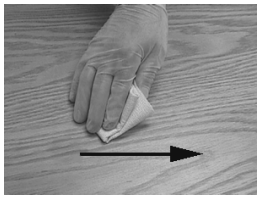

**1.** **Shake bottle to mix product**

**2.** **Apply a thin layer**

**CHIX cloth**

***3.*** **Allow drying**

| | | |
|---|---|---|
| **Mandatory** | **215** | **Minimum time : 20 minutes** |
| | | **After 2 hours : Remove dust using damp cloth (pure water)** |
| **Before applying any other product** | | If surface seems dusty, dust using damp cloth. |
| | | If surface seems greasy or with finger marks, reactivate with Aktivator. |

**PREPARATION OF FIBERGLASS**

1. Clean using anti-silicone (refer to Section A).
2. Apply Sika 205 (refer to Section B).

# Section B Sika 205

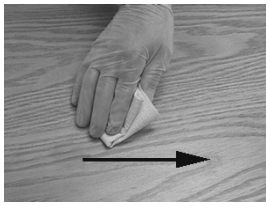

***1.*** **Apply**

**CHIX cloth**

***2.*** **Allow drying**

| | | | |
|---|---|---|---|
| **Mandatory** | **Minimum time** | **- For a smooth surface (aluminum, stainless, steel, fiberglass (gelcoat side), etc.):** | **2 minutes** |
| | | **- For a porous surface (fiberglass (non gelcoat side), etc.)** | **10 minutes** |
| | **After 2 hours : Reactivate surface with Sika 205** | | |
| **Before applying any other product** | If surface seems dusty, greasy or with finger marks, start operation again. | | |

**FRONT STEPS GLUING**

1. Use step nosing to measure and cut necessary length of white safety strip.
2. Use a screw to check depth of countersinking in step nosing. Screw top must not stick out beyond the aluminum surface. Countersink if needed.

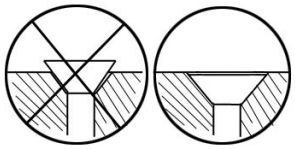

3. Apply some Sika 252 onto the step; make sure to cover the whole surface of the step. Use a serrated spreader with 1/8-inch serration to spread Sika.
4. Apply a bead of Sika 221 onto the perimeter of the step.
5. Install step and press with hands. If Sika overflows, clean with Sika 208. Repeat previous stages for each step if applicable.
6. Remove protective film from double-coated self-adhesive tape located underneath step nosing, position step nosing then press. Drill and fix using screws.

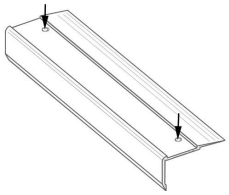

7. Clean top of step nosing using Sika 205 (refer to Section B).

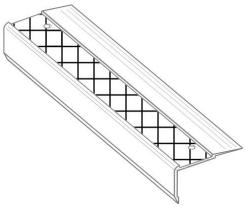

8. Apply some Sika 221 onto white safety strip, spread with a spatula to cover the whole surface.

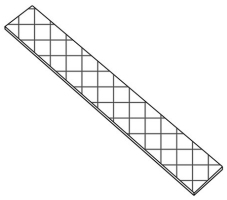

9. Position white safety strip then press using hands. If Sika overflows, clean with Sika 208.

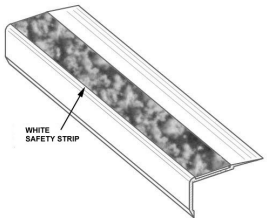


10. Temporarily fix white safety strip with a piece of duct tape, leaving 1 to 2 inches free at each end.

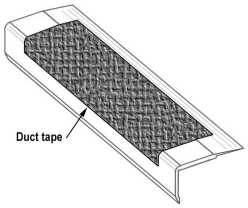


11. Apply some masking tape onto the step perimeter, clean using Sika 205 (refer to Section B) then apply a bead of Sika 252 black. Smooth out the joints then remove masking tape.
12. Install weights onto the steps. Minimum waiting time: 2 hours.

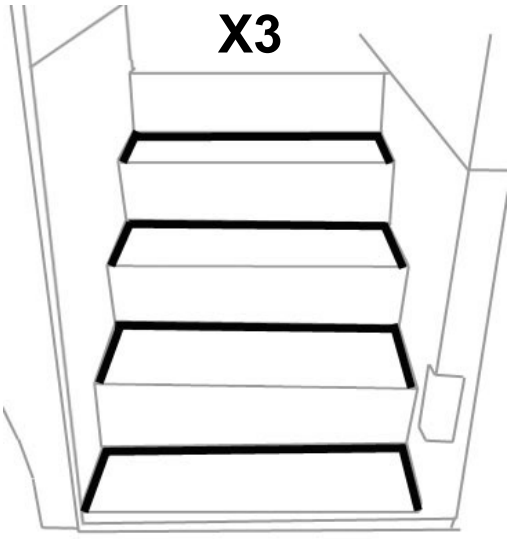

### 9.10.2 Welding Of Joint Between White Safety Strip And "Tarabus" Floor Covering

1. Pre-heat welding torch;

   Set welding torch to position #4.5 (temperature of 500 °C),

   Heating time: 5 minutes.

2. Before welding, visually ensure that a 1 to 1.5 mm gap exists between white safety strip and "Tarabus" floor covering. Use a knife if this is not the case.

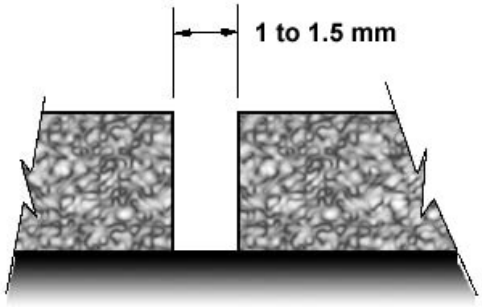


| *NOTE* |
| --- |
| There should be no excess of adhesive on top of surfaces, clean if required using "All-Sol". |

3. Chamfer the joint.

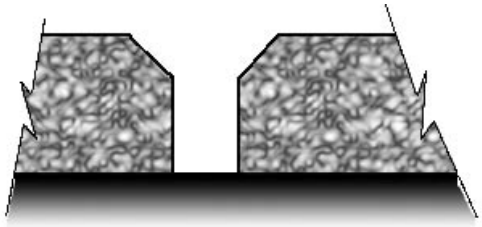

| *NOTE* |
| --- |
| The chamfer width must always be less than the filler bead diameter (between 2.5 and 3 mm). |

4. Use chamfer knife. **Be careful not to overcut or to cut to the side to prevent damaging "Tarabus" covering.**



5. Add (about 6 inches) some length to the required length of filler bead to make the joint then cut.
6. Take position with welding torch. The proper position is with a slight slope to the rear.



7. Once the welding torch is ready, insert the filler bead into the nozzle and immediately start welding. Move in a regular manner while pressing slightly with torch.



8. The heel of the fast nozzle must not lean against “Tarabus” covering (always parallel to the surface).

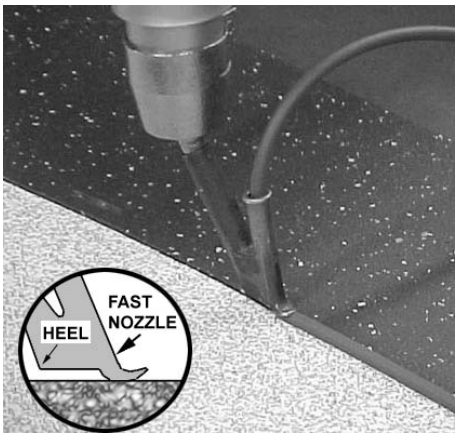


9. Allow cooling down of filler bead (about 5 minutes).

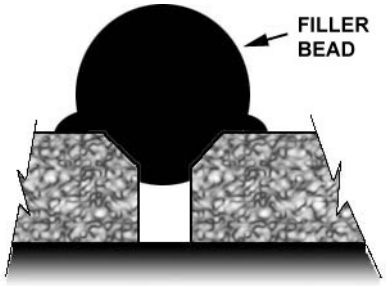


10. Shave filler bead to make it level to the floor. Use supplied knife designed for that purpose.

| *NOTE* |
| --- |
| *To facilitate the cut, you can spray some soapy water onto the joint.* |

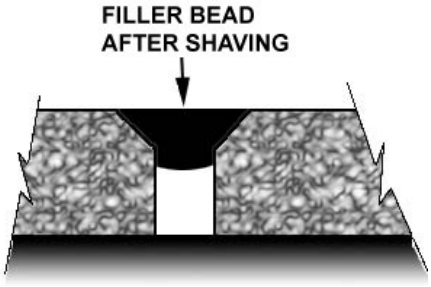


| **CAUTION** |
| --- |
| The procedure for turning the torch off must absolutely be followed. If this step is not taken, the element may burn. |

11. Set temperature potentiometer to “0” position. Fan will evacuate residual heat. Leave the torch in operation as it is for 3 minutes.
12. Perform adhesion test using the tip of a flat screwdriver; apply a slight pressure on the joint.

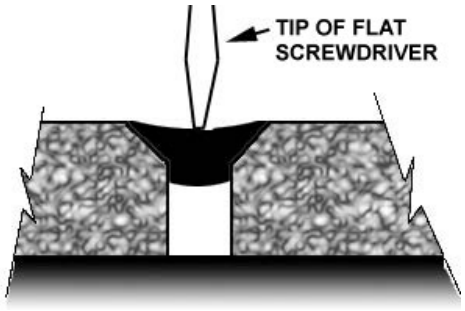


13. If welding was not performed properly, there will a loss of adhesion on one side. If this is the case, repair the joint.

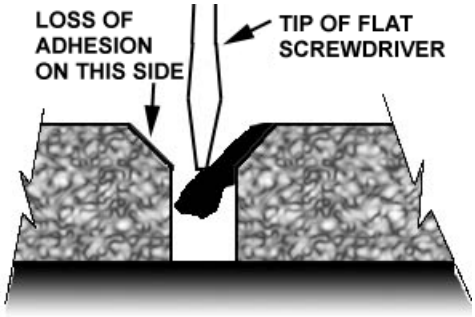


### 9.10.3 Repair Of A Welded Joint

| *NOTE* |
| --- |
| *In wintertime, condensation and cold temperature may greatly influence bonding parameters. Working area must be at a temperature sufficient to prevent reaching condensation point. Mechanically preheat working area (heat lamp or heat gun) or wait until vehicle reaches room temperature.* |

1. Using a knife, remove portion of joint to be repaired.

| *NOTE* |
| --- |
| *Loss of adhesion may be local. If this is the case, repair may also be local.* |

2. Chamfer the joint again as indicated in paragraph 6.10.2, Section: Welding Of Joint Between White Safety Strip And “Tarabus” Floor Covering.
3. Re-weld the joint as indicated in paragraphs 6, 7 and 8. Use your thumb to hold the filler bead end.

**WARNING**

Nozzle is hot.



4. Always add an extra inch of filler bead at the beginning and at the end of repair.
5. Perform steps indicated in paragraphs 9, 10 and 11.

## 10 X3-45 VIP EXTERIOR FINISHING AND BODY REPAIR

The following procedures cover repair, installation and replacement of various doors, panels and windows pertaining to X3-45 VIP. The paragraph divides the vehicle into zones to facilitate the search; each zone is then sub-divided into components.

Refer to the appropriate zone and component for the complete procedure.

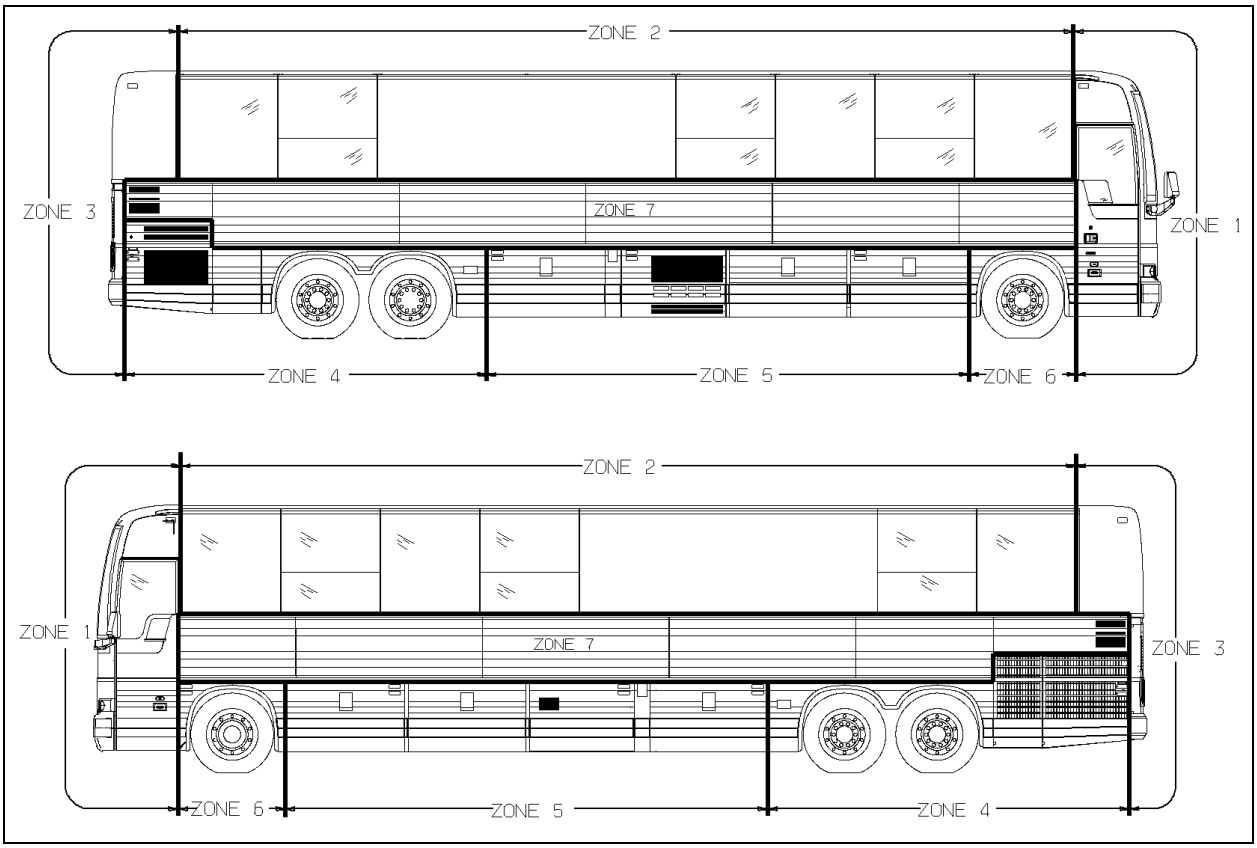


**FIGURE 94: X3-45 VIP ZONES**

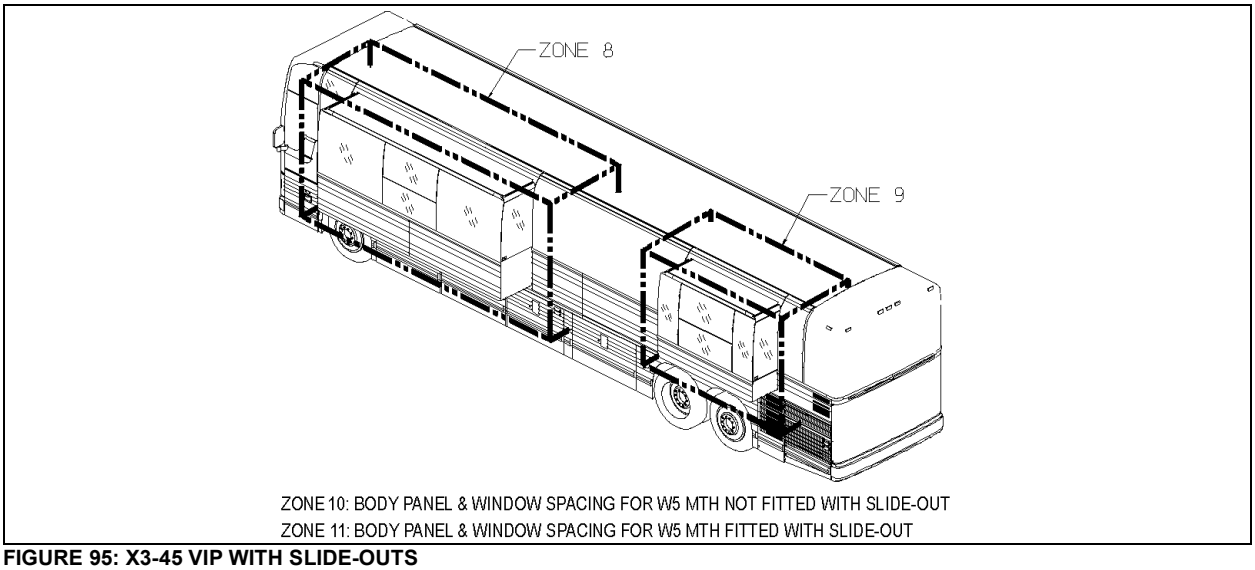


**FIGURE 95: X3-45 VIP WITH SLIDE-OUTS**

ZONE 1

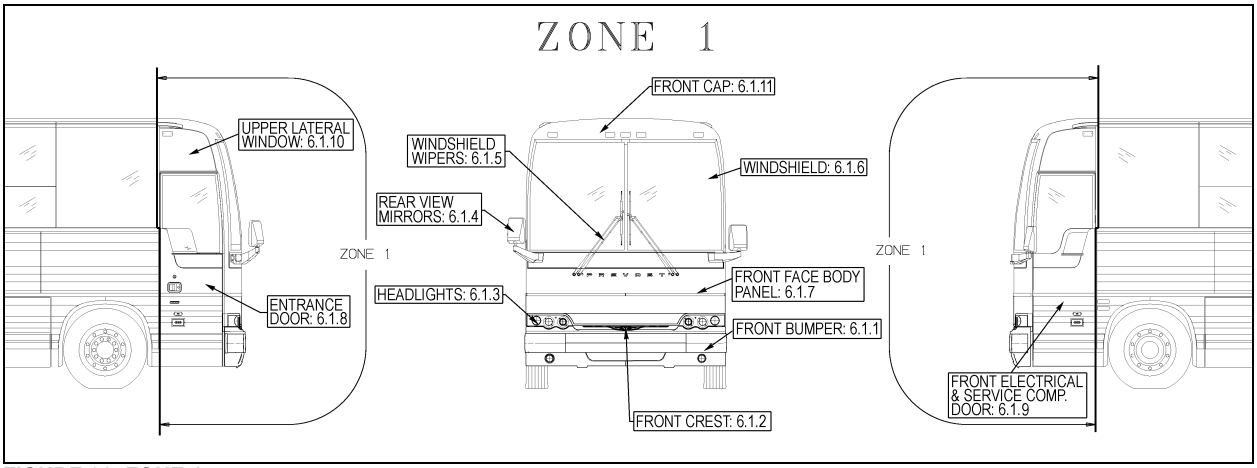


**FIGURE 96: ZONE 1**

### 10.1.1 Front Bumper

The front bumper can be tilted downward to give access to the bumper compartment. Pull the release handle located inside front service compartment to unlock. Tilt down the entire bumper assembly to access the compartment. Push the bumper back up firmly in place to lock in position.

Two people are required to remove and install the front bumper. Safely support the bumper and remove the two bolts on each bumper side to separate the bumper from the spare wheel compartment door. To install bumper, reverse the removal procedure.

**WARNING**

Front bumper is heavy. Use proper lifting equipment to support the bumper during the removal and installation operations to avoid personal injury.

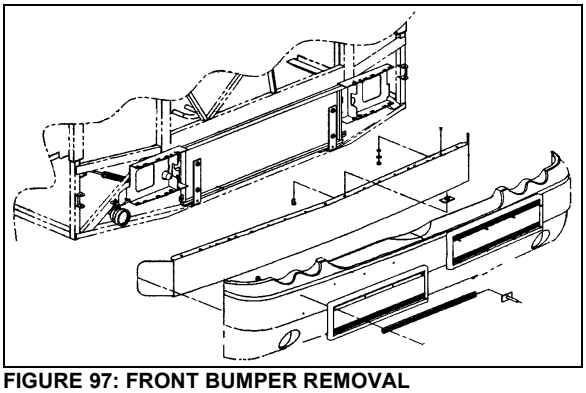

**FIGURE 97: FRONT BUMPER REMOVAL**

**WARNING**

The compartment behind the bumper is not designed for storage. Never store loose objects in this compartment since they can interfere with the steering linkage mechanism.

Use care when opening or closing the reclining bumper compartment to prevent personal injury.

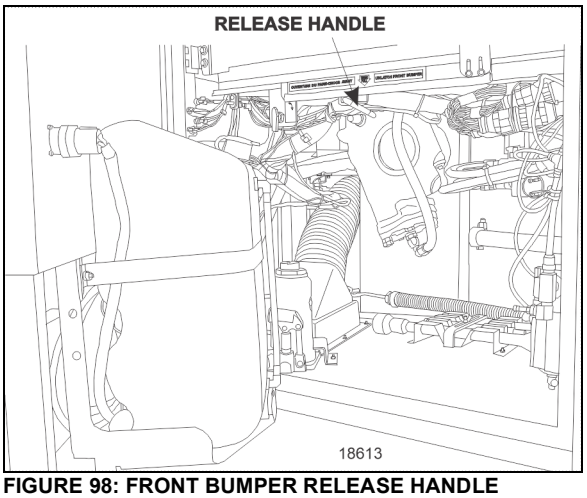


**FIGURE 98: FRONT BUMPER RELEASE HANDLE**

For gluing of front bumper panel refer to procedure **SAV00198** .

### 10.1.2 Headlights

Refer to Paragraph Headlights, included in Section 06: Electrical of the Maintenance Manual for complete information on headlights.

### 10.1.3 Rear View Mirrors

Your vehicle is equipped with two exterior mirrors.

The mirrors may be equipped with an optional electric heating system which serves to minimize ice and condensation on the mirror glass in extreme weather conditions. Integral thermostats are installed in both mirrors to avoid continuous heating. Use the appropriate switch on the dashboard to activate the defroster system on both mirrors simultaneously. The mirrors can easily be adjusted by using the remote controls located on the L.H. side control panel. The mirrors have easy to replace glass in case of breakage. Remote control motors can also be replaced.

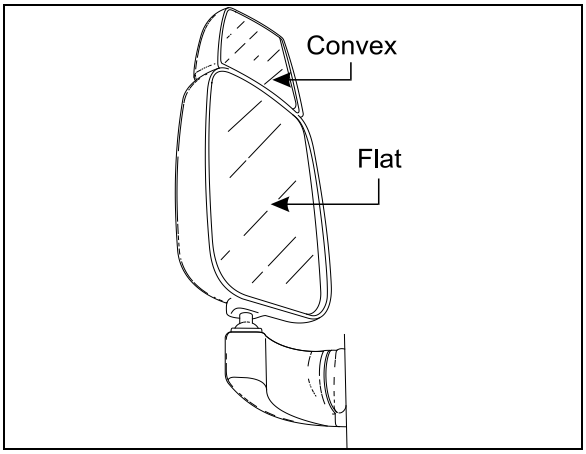


**FIGURE 99: REAR VIEW MIRROR (RAMCO)** 18398A

❖ **Adjustment**

At the base of the mirror arm, loosen the mounting bolt to swing arm in or out.

To pivot the mirror head, loosen the setscrews on each side of the ball stub at the base of the mirror head to facilitate the adjustment.

❖ **Disassembly**

At end of mirror arm, loosen the setscrews to relieve tension on the ball stem. Remove the ball stem from the arm.

Remove the four screws fastening the mirror arm base to the coach.

❖ **Assembly**

Mount the mirror arm base to the coach. Insert the ball stem into the mirror arm and tighten the socket setscrews.

*NOTE*

*Position the ball cup halves so the joint between them lies on the centerline of the arm. Ensure that the setscrews are not on the joint between the cup halves.*

❖ **Replacement of Mirror Glass**

Remove the broken glass.

Position new glass in mirror head and press to lock the Velcro in place.

❖ **Heated / Remote Controlled Rear View Mirrors**

Heated/remote controlled external rear view mirrors may be provided to prevent the mirrors from frosting up in cold weather.

The remote controlled external rear view mirrors attach to support arms using a pivot collar secured by setscrews. Loosening the setscrews allows the whole head assembly to turn on the support arm for initial adjustment. A mounting bolt and washer hold the arm support to the mounting bracket. The arm support can be moved to position the mirror head into or away from the coach body.

The mirror heat switch is located to the left of the driver on the dashboard. This switch must be activated before the mirror heating element will energize. Once energized, the mirror heating element is kept at a sustained temperature (between 60-80°F) by a thermostat. Refer to wiring diagram annexed in the technical publication box.

**CAUTION**

Do not attach stick-on type convex mirror accessories to the heated mirror glass. This could impede uniform heat distribution on the mirror surface which could break the mirror.

- Mirror Control

The remote control pointer knob(s) for the mirrors is (are) mounted on the L.H. side control panel. The harness to the mirror head runs through the arm support. The remote motor is mounted to the mirror head behind the mirror glass.

Turn pointer knob to the left for mirror head adjustments and to the right for convex mirror adjustment, then push down on either of the button's (4) sides to adjust the selected mirror viewing angle.

- Disassembly

At end of mirror arm, loosen the setscrews to relieve tension on the ball stud. Remove the ball stud. Remove the ball stud from the arm and gently pull the harness out until the connector is exposed.

Remove the four screws fastening the mirror arm base to the coach. Slide the harness free of the mirror arm base.

- Assembly

Attach a stiff wire (snake) to the end of the harness and insert the wire through the mirror

arm base and arm, gently pull the harness through the arm and disconnect the "snake".
Connect the mirror head harness. Insert the harness connector back into the mirror arm.
Insert the ball stud into the mirror arm and tighten the socket setscrews.

| *NOTE* |
| --- |
| *Position the ball cup halves so the joint between them lies on the centerline of the arm. Ensure that the setscrews are not on the joint between the cup halves.* |

- Convex & Flat Mirror Removal

The mirror glass assembly is mounted to the control mechanism or to mirror base with Velcro strips. Remove the mirror glass by gently pulling the lens to release the Velcro. Disconnect the heater grid at the two connectors.

Connect the connectors of the new mirror's grid to the harness. Install the lens by positioning the lens in the mirror frame and pressing to lock the Velcro in place.

### 10.1.4 Windshield Wipers

Refer to Paragraph 23.7 Windshield Wipers and Washers, included in Section 23: Accessories of the Maintenance Manual for complete information on windshield wipers.

### 10.1.5 Windshield

The windshield is single-glazed AS-1 laminated safety glass. Each windshield is secured to a flange around the front structure opening by a one-piece black rubber extruded gasket

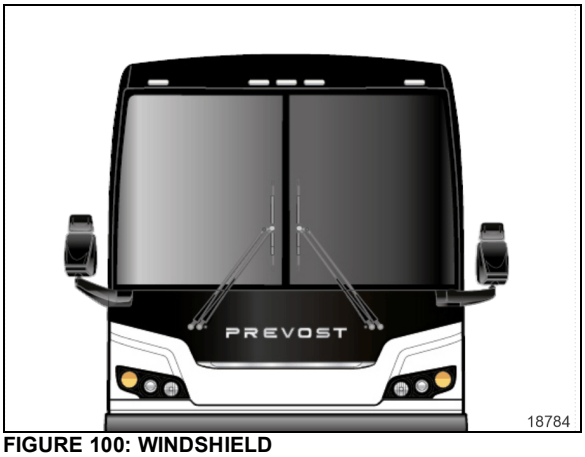


**FIGURE 100: WINDSHIELD**

A low profile gasket with a single locking strip is now used on our vehicles.

Proper installation of the windshield ensures watertightness. Since glass varies in fit depending on the supplier, we recommend installing a replacement windshield obtained from Prevost Parts to ensure proper fit.

| *NOTE* |
| --- |
| *For more information on windshield removal or installation, a webinar is available from Prevost.* |

#### 10.1.5.1 Hydrophobic Treatment on Side Windows

The new low profile window gasket creates an airflow that is closer to the vehicle. This reduces air drag but window soiling of the side windows becomes more likely.

A specific water repelling treatment is factory applied to the driver's and entrance door windows to counter this effect and prevent window soiling.

We suggest renewing the water repelling treatment each year or more frequently depending on operating conditions.

If you notice increased soiling on the driver's and entrance door windows after several months of operation, the water repelling treatment can be renewed by making an appointment with your nearest Prevost Service Center.

The Hydrophobic compound is specially formulated for Prevost and can only be applied by Prevost technicians in Prevost service centers.

#### 10.1.5.2 Removal

| **WARNING** |
| --- |
| Removal and installation must be performed by more than one person. Wear protective gloves when handling the windshield. |

7. Remove the wiper arms of the affected windshield.
8. To ease damaged windshield removal, remove the rubber locking strips from the rubber extrusion.
9. From inside of vehicle, push against the top L.H. side corner of windshield for the removal of a R.H. side windshield. If the L.H. side windshield had to be removed, you

would have to push against the top R.H. side corner.

| *NOTE* |
| --- |
| *We are referring to the L.H. and R.H. side as viewed from the inside of the vehicle.* |

10. At the same time, another person gradually lifts the rubber lip from the vehicle exterior using a plastic spatula from top to bottom.
11. Remove the entire damaged windshield and broken glass if applicable.
12. Clean the rubber extrusion channel with Standox anti-silicone. Refer to heading *"Windshield Installation"* in this section for instructions on how to reinstall windshield.

| *NOTE* |
| --- |
| *If the rubber extrusion is damaged, remove and discard it, then clean the windshield opening with Standox anti-silicone. Refer to heading "Installation of Rubber Extrusion and Windshield" in this section for complete instructions.* |

### 10.1.5.3 Windshield Installation

This procedure is provided as a general guideline to install a new windshield with a new gasket on a clean structure. The method may vary depending on material aging and condition.

3. Spray rubber extrusion with soapy water to ease windshield insertion.
4. Slide windshield into rubber extrusion groove starting with the bottom curved side edge. Using a plastic spatula, move the rubber extrusion lip aside to gradually insert the windshield into the groove.

| *NOTE* |
| --- |
| *Spray soapy water on a regular basis to ease windshield insertion.* |

7. Using the same type of plastic spatula, repeat the same operation from inside of vehicle, gradually inserting the windshield into the groove.

| *NOTE* |
| --- |
| *Make sure windshield bottom edge is well inserted into the rubber extrusion groove before proceeding with the sides.* |

8. Then, working from both sides of windshield bottom to top, gradually move the rubber extrusion lip aside to insert the windshield into the groove. Use also soapy water on the inside of vehicle to insert the windshield into the rubber gasket groove.

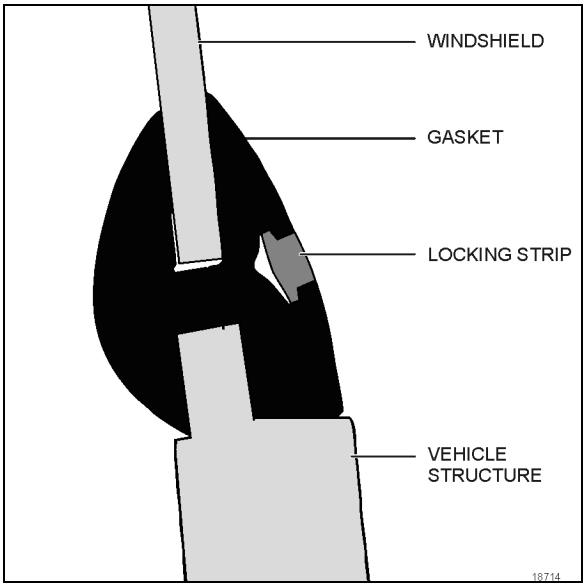


**FIGURE 101: WINDSHIELD INSTALLATION SIDE VIEW**

9. Insert the top curved corner then finish with the top of windshield.
14. Spray locking strip and rubber extrusion groove generously with soapy water.

| *NOTE* |
| --- |
| *Locking strips retract with time. Install ends of locking strips as tight as possible in the V-channel.* |

15. Using insertion tool 680755, insert the strip into the rubber extrusion groove. Gradually insert strip making sure to leave a 2 inch excess length at the extremity.

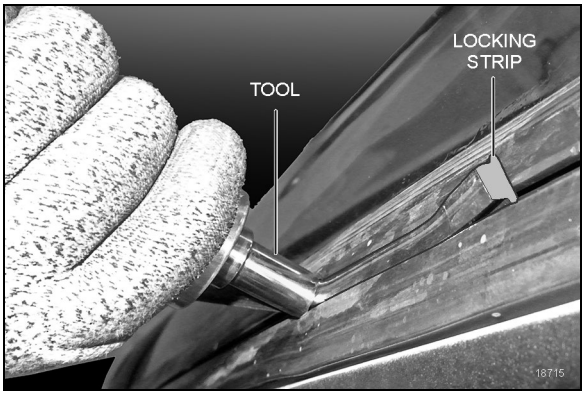

16. IMPORTANT: Every 6 inches or so, slide backwards to compress the strip due to its tendency to contract during drying process.
17. When strip insertion is almost complete, cut end at a 45° angle leaving ¼" of excess length to prevent contraction over time then insert strip into groove.
18. Reinstall windshield wiper and destination sign if applicable.

### 10.1.5.4 Installation of Rubber Extrusion and Windshield

> **CAUTION**
>
> The black rubber extrusion securing the windshield in the opening fits correctly in only one position. Find the correct position of the rubber extrusion now, and make reference marks with a china marker to avoid searching for the correct position later in the procedure.

5. Clean the windshield opening sealing surfaces with anti-silicone and let dry.
6. Apply a 1/8" bead of black Simson adhesive #684685 to all four corner of the gasket in the groove outside corner as illustrated in Figure 20. Do this *before* placing gasket on vehicle structure to control quality and continuity of bead. This method helps achieve a watertight installation.
7. Place gasket on vehicle and secure the upper sections with tape
8. Wait for Simson adhesive to bond Install windshield as per paragraph 9.1.6.3: *"Windshield Installation"*

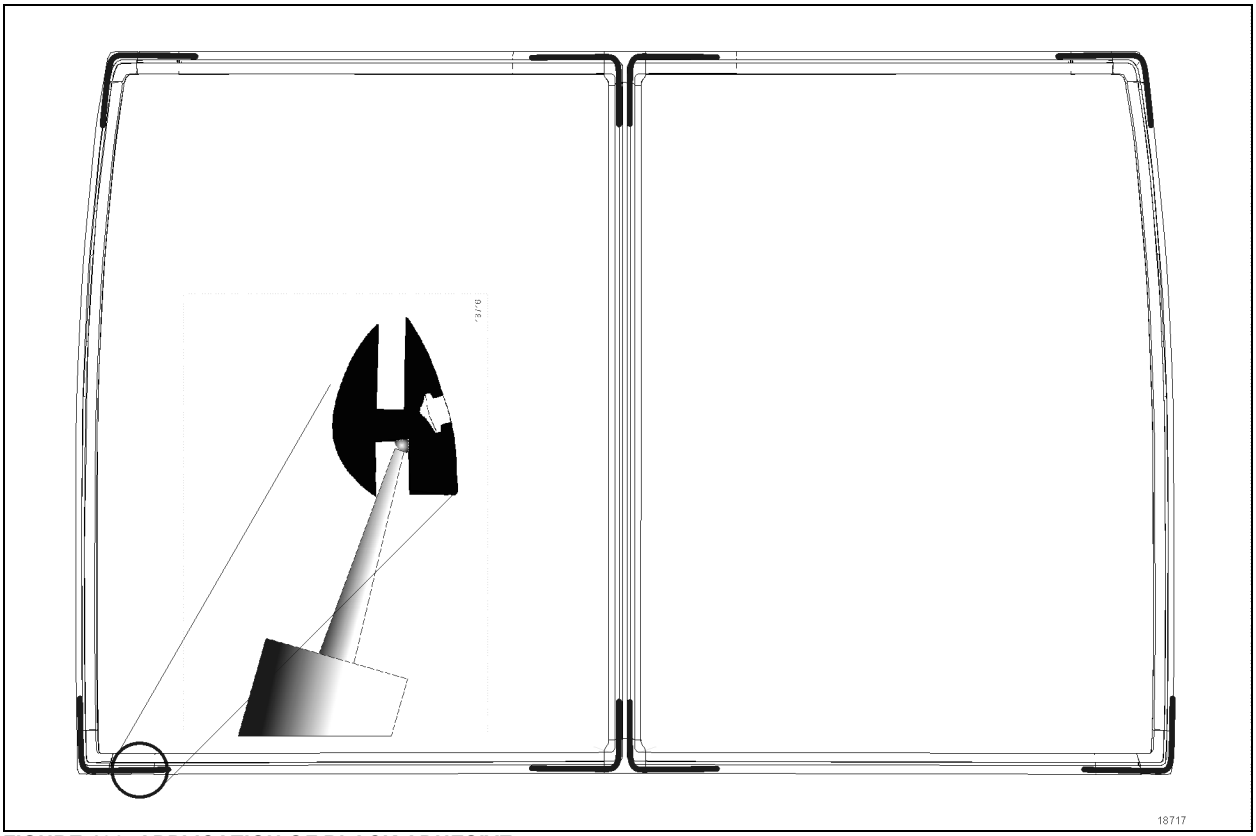


**FIGURE 102: APPLICATION OF BLACK ADHESIVE**

### 10.1.6 Entrance Door

For the removal of entrance door body panel, you will need:

Pneumatic hammer tool (Zip Gun);
Razor sharp window scraper;

- Before removing body panel, you can to ease repair uninstall entrance door from vehicle. If applicable, remove reflector, keyless system keyboard and cornering light.
- You must also remove horizontal finishing molding located underneath the window. This molding is glued and will have to be replaced because it will be damaged at removal.
- Remove interior finishing panel to access rub rail fixing bolts, then remove rub rail.
- Using the "**Zip Gun**", cut Sika bead located ¼ inch (7-8 mm) from each body panel edge and around cornering light.
- Separate body panel from door.
- Remove from door surface Sika bead and double-face self-adhesive tape residue using a razor sharp window scraper.
- Use a Chix cloth and anti-silicone to remove any dust or residue.

For assembly, gluing or finishing joints of entrance door, refer to procedure **SAV280020** .

For gluing of entrance door horizontal finishing molding, refer to procedure **SAV00213** .

For the installation of entrance door, refer to procedure **SAV280022**.

### 10.1.7 Front Electrical & Service Compartment Door

For the removal of front electrical & service door body panel, you will need:

Pneumatic hammer tool (Zip Gun);
Razor sharp window scraper;

- Before removing body panel, you can to ease repair uninstall front electrical & service door from vehicle. If applicable, remove reflector and cornering light.
- You must also remove horizontal finishing molding located underneath the window. This molding is glued and will have to be replaced because it will be damaged at removal.
- Remove interior finishing panel to access rub rail fixing bolts, then remove rub rail.
- Using the "**Zip Gun**", cut Sika bead located ¼ inch (7-8 mm) from each body panel edge and around cornering light.
- Separate body panel from door.
- Remove from door surface Sika bead and double-face self-adhesive tape residue using a razor sharp window scraper.
- Use a Chix cloth and anti-silicone to remove any dust or residue.

For assembly, gluing or finishing joints of front electrical & service compartment door, refer to procedure **SAV280021**.

For gluing of driver's window, refer to procedure **SAV290013**.

For gluing of front electrical & service compartment door horizontal finishing molding, refer to procedure **SAV00213**.

For the installation of front electrical & service compartment door, refer to procedure **SAV280022**.

### 10.1.8 Upper Lateral Window

For the removal of driver's window or upper lateral window, you will need:

Pneumatic hammer tool (Zip Gun);
Razor sharp window scraper;
"Olfa" knife;
Face shield.

- In the case of driver's window only, open front service compartment door.
- Mark the position of the driver's window for future reference.
- From inside of vehicle, cut Sika bead around window perimeter using a "Zip gun" while another person hold the window from the outside.

| *NOTE* |
| --- |
| *Wear ear plugs during this operation.* |

- Then, move outside of vehicle and cut Sika bead to free window while somebody else hold the window from the inside.
- Carefully remove window from frame, ask for help if needed.
- Using a razor sharp window scraper, remove from window frame Sika bead and double-face self-adhesive tape residue.
- First of all, check Sika 205 cleaner expiration date.
- Before applying Sika cleaner, fold “Chix” cloth twice for proper width.
- Apply an even coat onto the inside of window frame and allow drying for 2 minutes (maximum 2 hours).
- Discard waste according to applicable environmental regulations, use dangerous waste containers.
- Apply masking tape before applying Sika glue to protect paint and adjacent window during surface treatment.

For gluing of upper lateral window, refer to procedure **SAV290016**.

### 10.1.9 Front Cap

The fiberglass front cap does not need any maintenance except painting as needed. It is held in place with adhesive. If ever it has to be replaced, make an appointment at a Prevost service center near you. For minor damages, refer to paragraph 4 "Common Fiberglass Repair procedure" and paragraph 5 "Common Painting Procedure".

10.2 ZONE 2

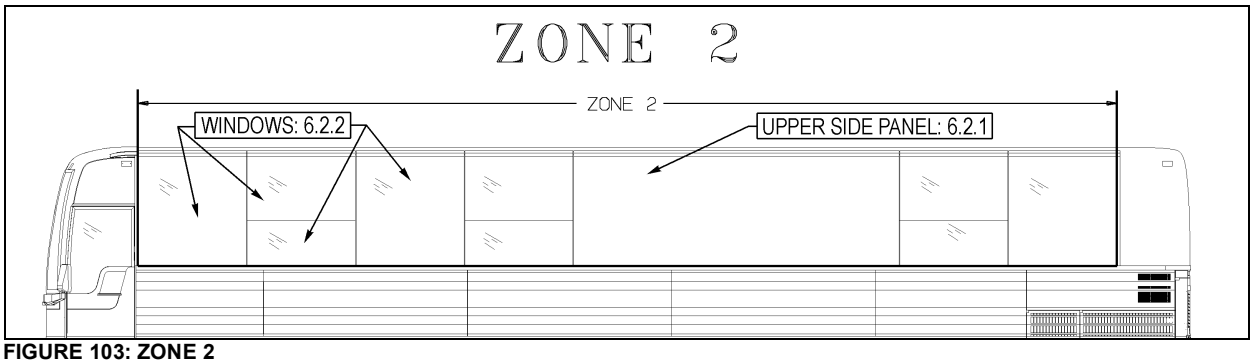


**FIGURE 103: ZONE 2**

### 10.2.1 Upper Side Panel

For structure preparation, refer to procedure **SAV00035**.

For installation of upper side panel neoprene foam tapes, refer to procedure **SAV00036**.

For installation of upper side panel, refer to procedure **SAV00041**.

### 10.2.2 Fixed Windows

Depending on the method chosen for fixed side window removal or installation, you may need:

* Drill equipped with a sharp pointed rod into which a small hole was drilled;
* Razor sharp window scraper;
* Braided windshield wire and a pair of handles;
* Gloves, goggles or face shield.

**Fixed Window Removal**

**1st Method**

| *NOTE* |
|---|
| *This method is used only in the case of a regular fixed side window. For the fixed upper portion of awning or sliding windows, you must use method number 2.* |

- Apply a sticky plastic film onto all of window outside surface for safety reason.
- Using a drill equipped with the special sharp pointed rod, drill through the window seal into one of the bottom corners, from a 30º angle with reference to the vehicle.
- This procedure requires accuracy and it is possible not to succeed on the first attempt. From the inside of vehicle, a second person ensures the rod passes through.
- Remove the rod; thread the wire into the small hole. Reinsert the rod and the wire into the hole far enough so that the person inside the vehicle can pull the rod using a pair of pliers.
- Attach the wire ends to the specially designed handles.
- Pull in turn from the inside and the outside of vehicle to gradually cut the Sika bead on the window perimeter.
- When you reach top corner, detach wire from the outside handle, secure it to a fish wire or rod and thread it underneath the aluminum molding behind the rivets.
- Detach wire from fish wire and continue cutting using the handle.
- Cut Sika bead until you come back to starting point, then you can remove the window by carefully pushing it out from the inside of vehicle.

**2nd Method**

- Apply a sticky plastic film onto all of window outside surface.
- To limit as much damage as possible, remove any interior molding in the way. Install a plastic film on the window interior surface and secure using masking tape onto all of window perimeter.

| *NOTE* |
|---|
| *Do not stretch plastic film and leave enough* |

*play to be able to push window out without tearing the plastic film.*

- Using a ball peen hammer, hit one of the window bottom corners from the **outside**.
- Carefully push window out and lift it up sufficiently to separate it from the aluminum molding.
- Attach the windshield wire to a fish wire and thread it underneath the aluminum molding behind the rivets.
- Detach wire from fish wire and continue cutting using the handle.
- Make a notch at each window top corner to make sure you pass underneath the remaining pieces of glass.
- Remove the aluminum molding and clean up the frame using the window scraper.

For gluing of lateral fixed window behind driver, refer to procedure **SAV00046**.

For gluing of lateral fixed half-window, refer to procedure **SAV00045**.

For the installation of awning or sliding window, refer to procedure **SAV00038**.

For gluing of lateral fixed window, refer to various procedures: **SAV00037** for gluing vertical and bottom rubber seals; **SAV00043** for the installation of lateral fixed window and **SAV00044** for making the Simson joint around fixed windows.

### 10.2.3 Electric Awning Windows

The electric awning windows are connected directly on the batteries 24 V DC terminal block. As a result, they can be operated regardless of the state open or close of the master switch.

**Window Removal**

Replacement awning window does not include a new motor. If in working order, transfer the motor of the replaced window to the replacement window. If not, the motor can be bought separately. When replacing the window, keep the components in working order as spare parts.

1. Push the vertical latch handle downwards to release the track and then open the window using the horizontal latch handle.
2. Take out the screw at the lower end of the track to let free the swiveling arm roller.
3. Unplug connectors. Dismount the gas spring from the window.
4. Loosen the set screws #5 (Figure 104) (rotate the arm to get to the second set screw) and disengage the swiveling arm from the motor shaft extension.
5. Push the glass window out ninety degrees (90°).

**CAUTION**

The window may fall out.

6. The window is free and can be unhooked.
7. Reverse procedure to install a new one.

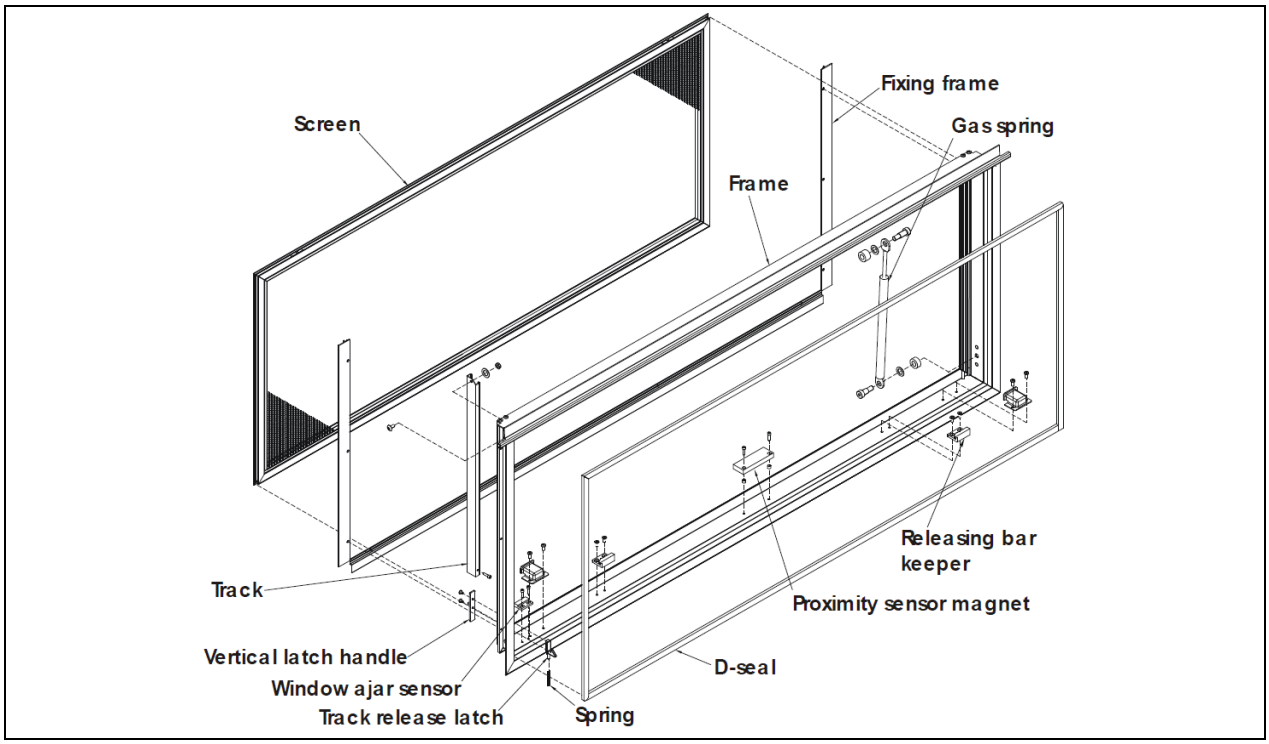


**FIGURE 104: ELECTRIC AWNING WINDOW EXPLODED VIEW (FRAME)** 18586

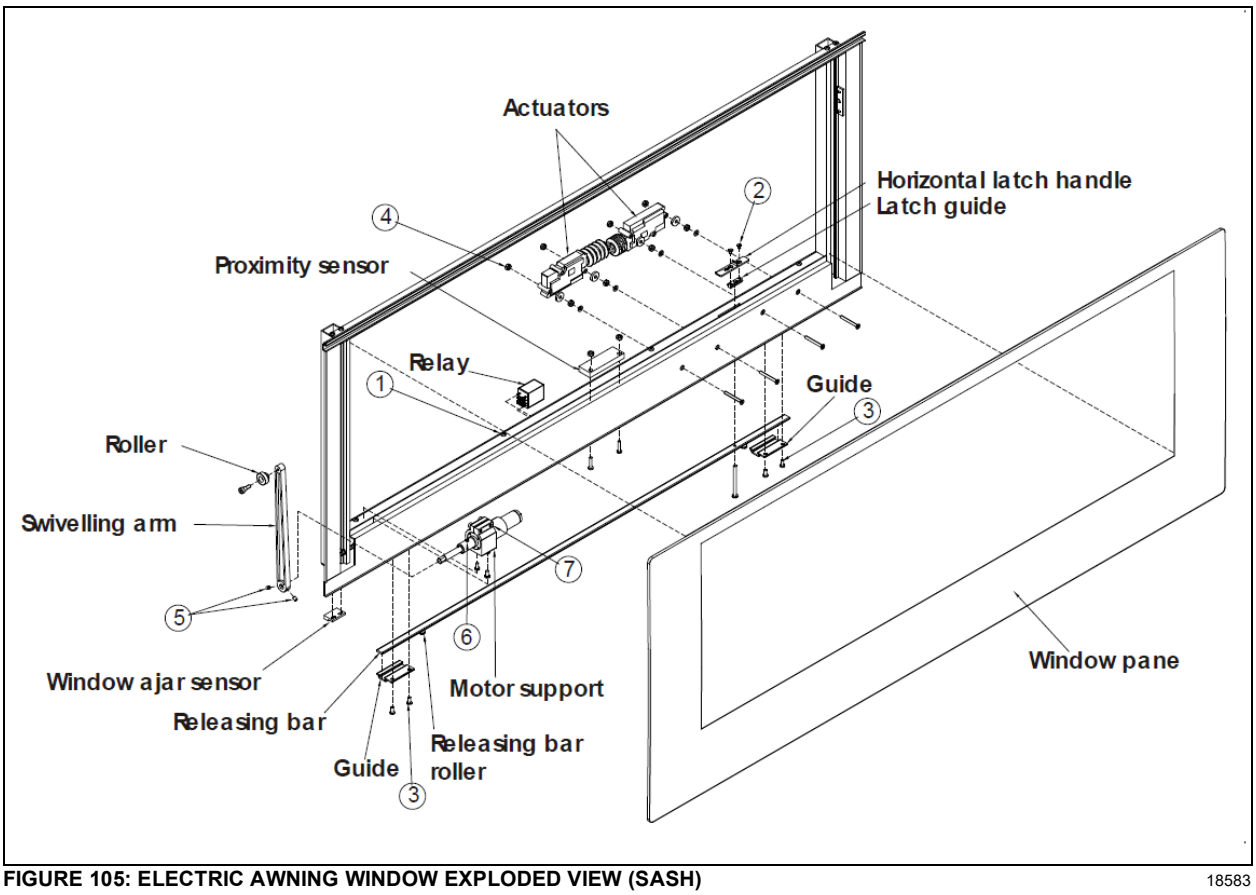


**FIGURE 105: ELECTRIC AWNING WINDOW EXPLODED VIEW (SASH)** 18583

### Actuator Replacement

1. Push the vertical latch handle downwards to release the track and then unlatch the window using the horizontal latch handle.
2. Remove actuator access cover by taking out screws #1 (8x).
3. Take out screws #2 (2x) and remove horizontal latch handle and guide.
4. Take out the guide screws #3 (4x) and remove releasing bar.
5. Unplug connectors from defective actuator, unscrew nuts #4 (2x) and remove the actuator.
6. Reverse operations for reinstallation.

### Motor Replacement

1. Push the vertical latch handle downwards to release the track and then unlatch the window using the horizontal latch handle
2. Take out the screw at the lower end of the track to let free the swiveling arm roller.
3. Remove actuator access cover by taking out screws #1 (8x).
4. Loosen the set screws #5 (rotate the arm to get to the second set screw) and disengage the swiveling arm from the motor shaft extension.
5. Unplug motor connector and dismount motor and support assembly.
6. The shaft extension is glued to the motor shaft. It has to be heated to break the binding to permit removal. Loosen set screw #6 and remove the shaft extension. Also loosen screw #7 and remove motor from the support.

Reverse operations for reinstallation.

| ELECTRIC AWNING WINDOW – CONVERTER CHECKLIST | |
|---|---|
| Check the electrical circuit & proximity sensor | A: The latching system will not operate without power.<br>Is there electrical power to the latching circuit? The horizontal latch handle, on the sill sash will be seen to move if there is power on this circuit, or it can be checked with an electrical tester. If there is no power to this circuit when the window is closed and either rocker switch are switched "ON", there is a problem with the electrical system.<br>B: The Proximity Sensor on the sash may not be switching power to the latching circuit if the magnet is not getting close enough to the switch OR the Proximity Sensor may be broken (or stuck in one position).<br>Is the proximity sensor switching when the window is closed? |
| Check the release force required to operate the horizontal latch handle | A: If the pull force required to move the latch is more than 20lbs the window will not latch properly. Average pull force during testing by manufacturer is 12lbs -15lbs.<br>What is the force required to release the handle? Check using a force gauge (same test done by manufacturer). |
| Check Installation | A: If the window is too tightly installed OR if the sequence for tightening the clamping frame screws Is incorrect the window may not close properly.<br>Was the window installed correctly?<br>Was the correct sequence (see below) used when tightening the clamping frame screws?<br>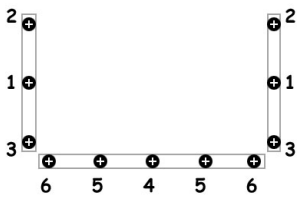<br><br>B: Removing the shipping blocks before the window is installed can create major problems. |

| | |
|---|---|
| | Were the shipping blocks in place during installation?<br>C: Failure to remove the shipping blocks after installation can create interference between sash and frame.<br>Have the shipping blocks been removed after installation?<br>D: The window is misaligned or not installed squarely.<br>Is there interference with any coach parts?<br>Is there proper clearance between the bottom of the outer glass and the belt-line trim / seal? |
| Check for missing parts or misaligned parts | A: The frame and sash are misaligned.<br>Is there any interference between the sash and frame?<br>Is there clearance between the sash and the rocker switch covers?<br>B: Releasing bar guides are missing.<br>Check that the releasing bar guides are installed. There should be 4 installed on H windows, and 3 installed on X3-45 VIP windows. |

### 10.2.4 Electric Sliding Windows

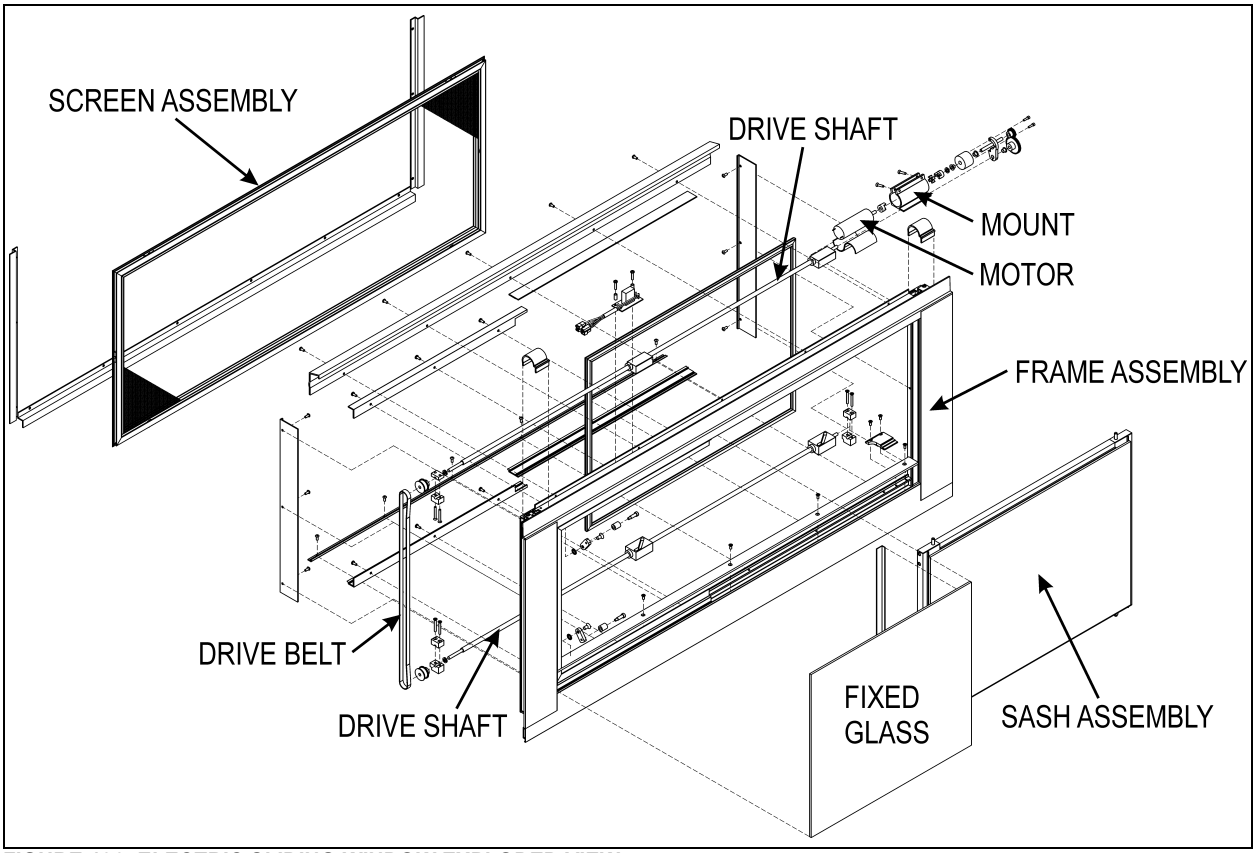


**FIGURE 106: ELECTRIC SLIDING WINDOW EXPLODED VIEW**

**Sash Removal**

1. Remove the Screen Assembly
2. Pull down on both release latches simultaneously and rotate the sash inwards approximately 10 degrees.(Figure 107)



**FIGURE 107: REMOVING THE SASH**

3. Lift the sash up and out to disengage the bottom of the sash from the window frame. (Figure 108)



**FIGURE 108: DISENGAGING THE BOTTOM OF THE SASH**

**Installation**

1. Align the leading edge of the slot on the lower cam follower block with the sash stop. Use the power toggle switch to obtain the correct alignment. (Figure 109)

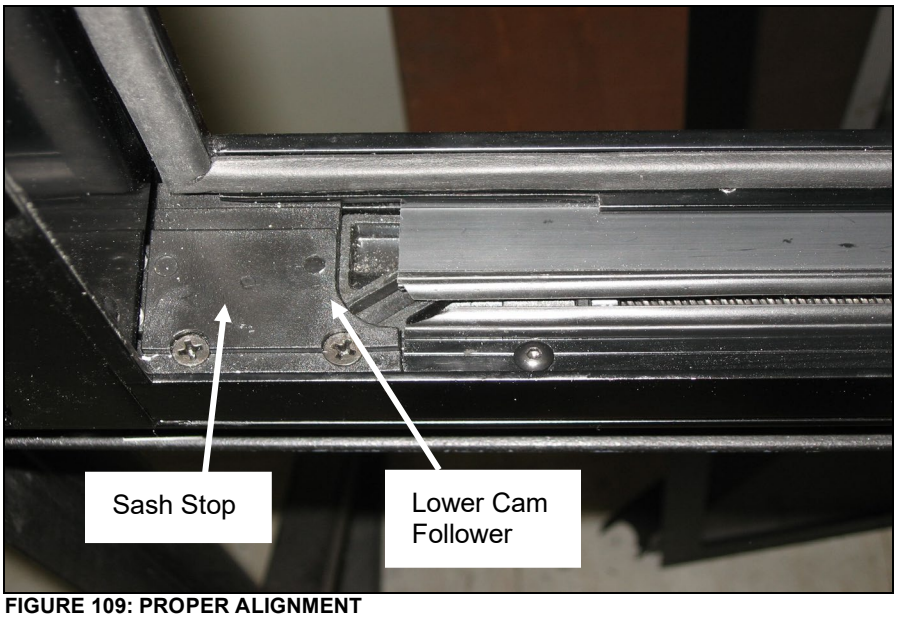


**FIGURE 109: PROPER ALIGNMENT**

2. Position the left hand lower corner of the sash over the front cam follower block (Figure 110)



**FIGURE 110: POSITIONING THE LOWER LEFT CORNER OF THE SASH**

3. Engage the sash pin with the leading edge of the slot of the cam follower block. Do the same at the rear of the sash.
4. Pull down on the release latches and rotate the sash inwards until it is parallel with the window frame.
5. Release the latches to engage the latch pins with the upper cam follower blocks.

6. Confirm that both latches are in the closed (latched) position. The upper edge of the latch opening must be aligned with upper edge of the sash opening (Figure 111)

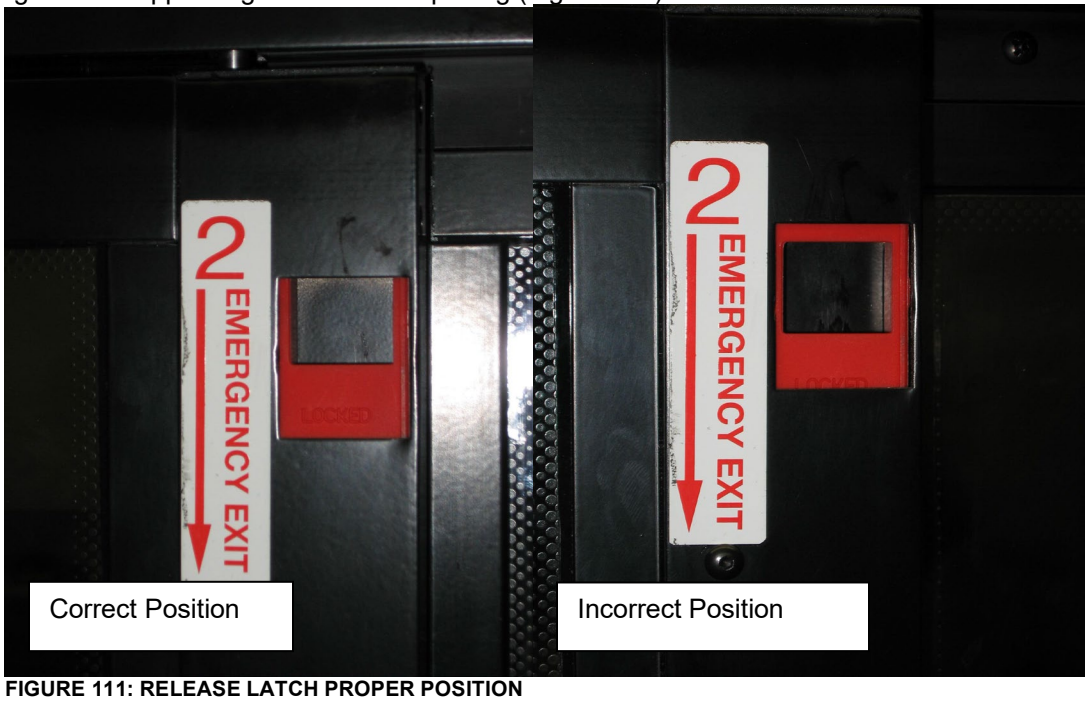


**FIGURE 111: RELEASE LATCH PROPER POSITION**

7. * Failure to confirm this step may lead to the sash becoming disengaged with the frame and could result in personal injury.
8. Operate the window to confirm that it opens and closes properly.
9. Install the screen assembly.

## 10.3 ZONE 3

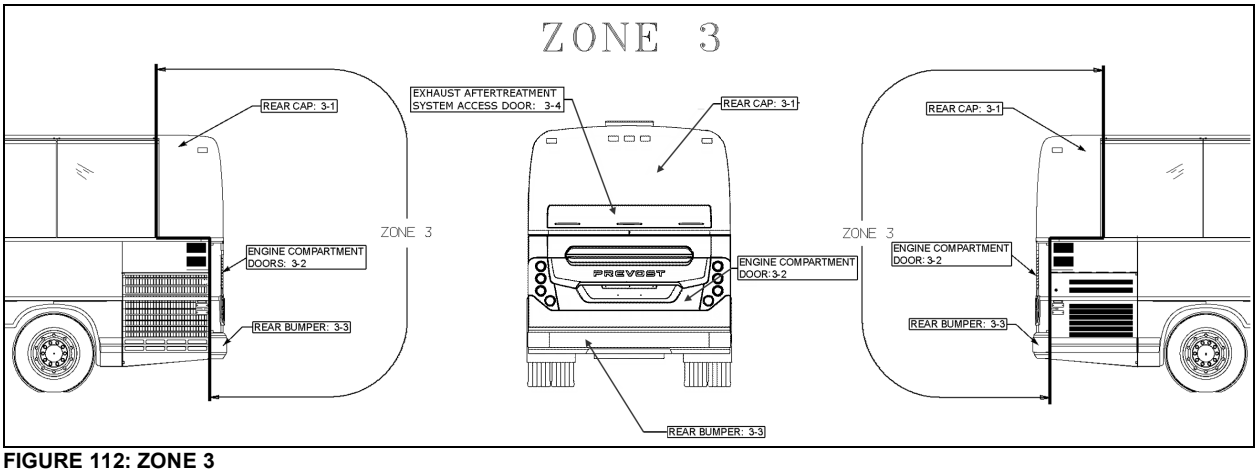


**FIGURE 112: ZONE 3**

### 10.3.1 Rear Cap

The fiberglass rear cap does not need any maintenance except painting as needed. It is held in place with adhesive. If ever it has to be replaced, make an appointment at a Prevost service center near you.

For minor damages, refer to Paragraph 4 "Common Fiberglass Repair Procedure" and Paragraph 5 "Common Painting Procedure".

### 10.3.2 Engine Compartment Doors

❖ **Engine Compartment Doors Adjustment**

The engine compartment door may be adjusted for proper fit by untightening support bolts:

| *NOTE* |
| --- |
| *Consult the "BODY PANEL AND WINDOW SPACING DIAGRAM" for proper door gaps adjustment. (*Figure 86*)* |

1. To adjust the door VERTICAL position, loosen the bolts (4 on each side) holding the door supporting arm and gas springs bracket to the *vehicle structure* (Figure 113).
2. To adjust the door LATERAL position, loosen the bolts (3 on each side) holding the door supporting arm and gas springs bracket to the *door* (Figure 113).
3. Adjust the door FORE & AFT position by screwing/unscrewing the rubber door stops on each side of the door opening (Figure 113).
4. Check that the door swings freely and close properly. *It may be necessary to adjust the door latch to get proper fit and operation*.

To adjust the latch mechanism and the striker pin:

1. Open the door to access the striker pin.
2. *Slightly* loosen the striker pin.
3. Using a hammer, adjust the striker pin to center it in the door latch mechanism.
4. Tighten the striker pin.
5. Check door fit and operation.

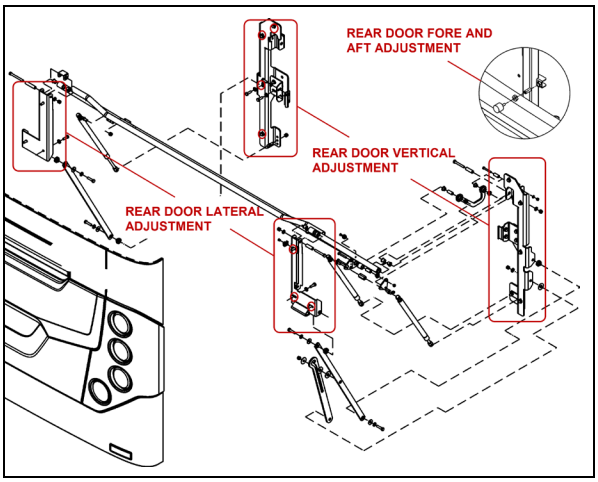


**FIGURE 113: ENGINE COMPARTMENT DOOR** 18633_1

❖ **Engine Compartment Door Body Panel Removal**

For the removal of engine compartment door body panel, you will need:

Pneumatic hammer tool (Zip Gun);
Razor sharp window scraper;
A pair of locking pliers;
Isopropyl alcohol.

- Remove damaged engine compartment door from vehicle.
- Install the damaged door onto an appropriate support.
- Wearing gloves, goggles and ear plugs, pry loose body panel using a “Zip gun” or lever starting from the edge opposite the curved side.
- Use the “Zip gun” to detach completely the stainless steel body panel from door frame.

**CAUTION**

Do not damage painted surface.

- Use a second person equipped with a pair of locking pliers to pull the body panel as you cut the Sika bead.

**WARNING**

Be very careful when pulling the body panel, somebody could get hurt if the body panel suddenly detach from the door surface without notice.

- Using the window scraper, remove any Sika bead or self-adhesive tape residue left on the fiber glass surface.

For gluing of engine compartment doors molding, refer to procedure **SAV00211**.

For engine compartment door body panel installation, refer to procedure **SAV280032**.

### 10.3.3 Rear Bumper

Remove three bolts on each side holding bumper to vehicle and remove bumper.

To install bumper, reverse the procedure.

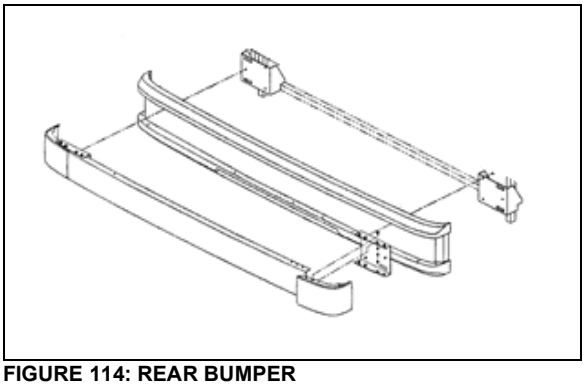

**FIGURE 114: REAR BUMPER**

## 10.4 ZONE 4

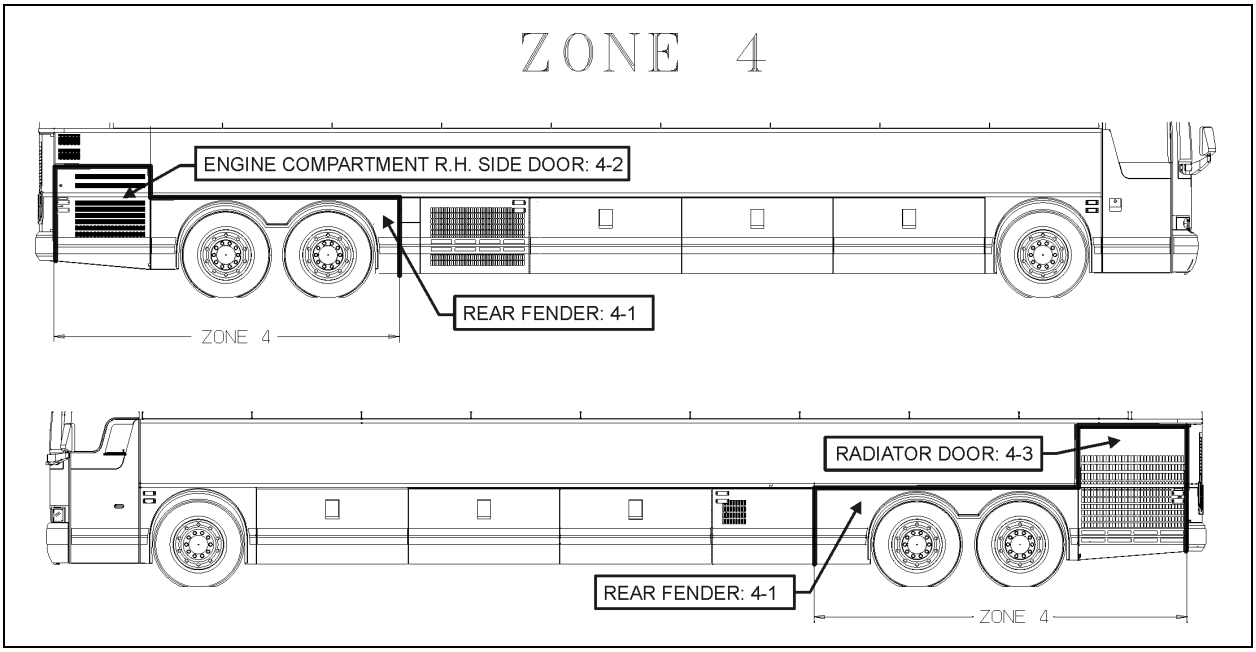


**FIGURE 115: ZONE 4**

### 10.4.1 Rear Fender

On X3-45 VIP vehicles, rear fenders are hinged for maintenance on brakes and suspension. Each rear fender panel has two mechanical spring loaded holding devices fixing it to the vehicle's structure. Push the spring type rod sideways to disengage the lock.

For the installation of rear fender body panel, refer to procedure **SAV470046**.

### 10.4.2 Engine R. H. Side Access Door

Engine R. H. side access door may be adjusted for proper fit. To do so, follow the steps below:

21. To adjust the position, the door must be free to move without any restriction. For this reason, remove pin E and strike plate C (Figure 50).

    Temporarily secure the secondary lock in the depressed position with a cable tie so it does not interfere with adjustments. Remove cable tie once completed.

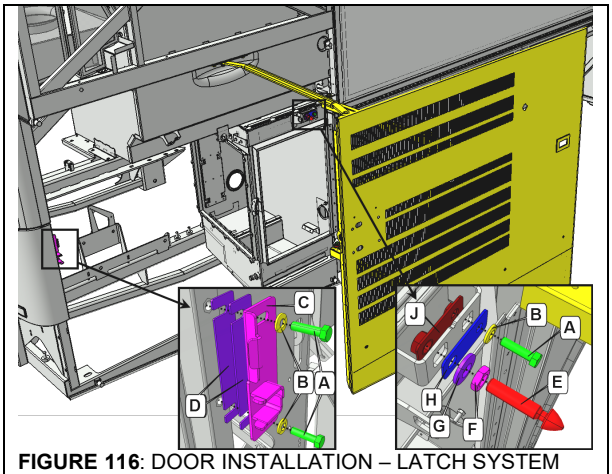


**FIGURE 116**: DOOR INSTALLATION – LATCH SYSTEM

A - BOLT
B - BELLEVILLE WASHER
C - STRIKE PLATE
D - SPACER
E - PIN
F – LOCK NUT
G - BELLEVILLE WASHER
H - PLATE

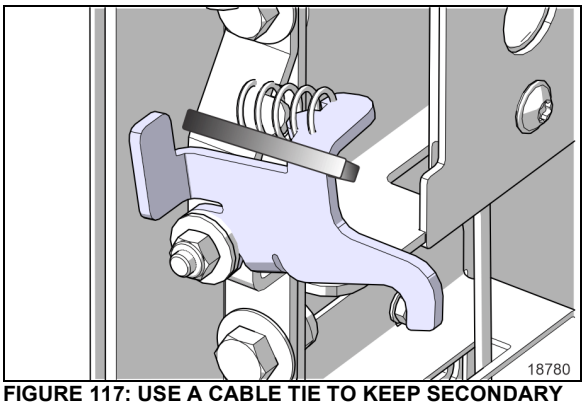


**FIGURE 117: USE A CABLE TIE TO KEEP SECONDARY LOCK DEPRESSED DURING ADJUSTMENT**

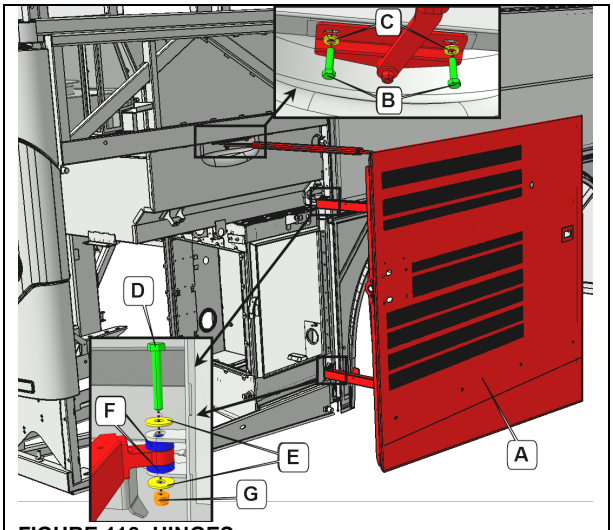


**FIGURE 118: HINGES**

A – ENGINE R.H. SIDE ACCESS DOOR
B - BOLT
C - BELLEVILLE WASHER
D - BOLT
E - WASHER
F –SPACER
G - NUT

## Vertical adjustment

22. Make sure bolts A are tight (**FIGURE 53**).

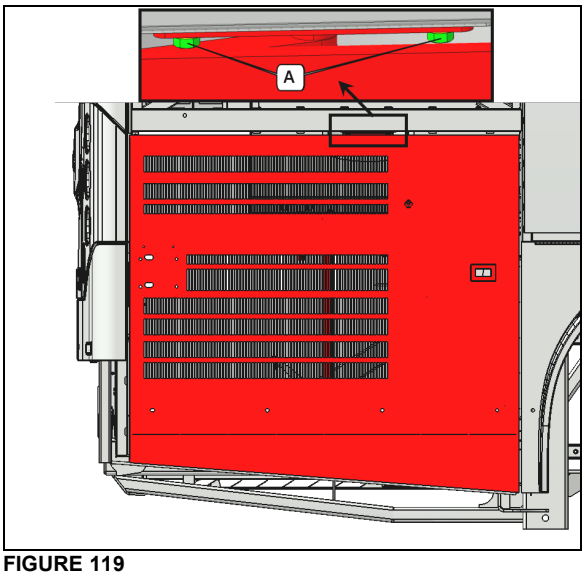


**FIGURE 119**

23. Compare the lower edge of the door level with the lower edge of the rear fender. The door should be flush with the fender (FIGURE 54).

    ***Tolerance is ± 3/32" (± 2mm)***

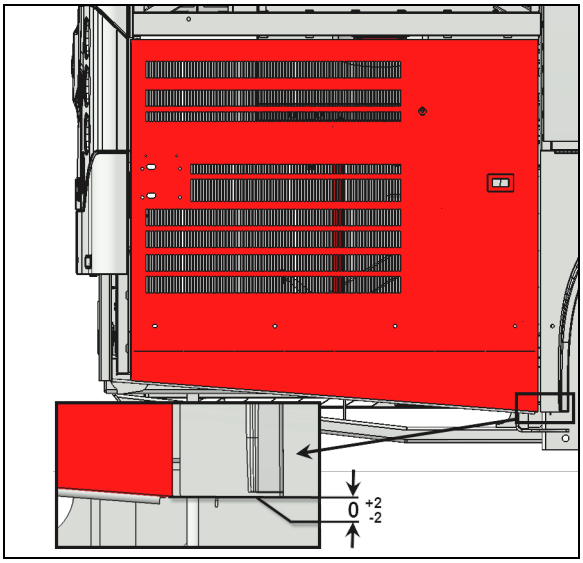


**FIGURE 120**

24. If the vertical position is out of tolerance, release the locking plate (Figure 56) and rotate the door using the adjustment provided on the inner side of the door, at the attachment points between the arm and the door (**FIGURE 55**).
    Tighten the locking plate nut to 14 lb-ft (19 Nm) to preserve adjustment.

***Perform the adjustment with the lower adjustment point preferably.***

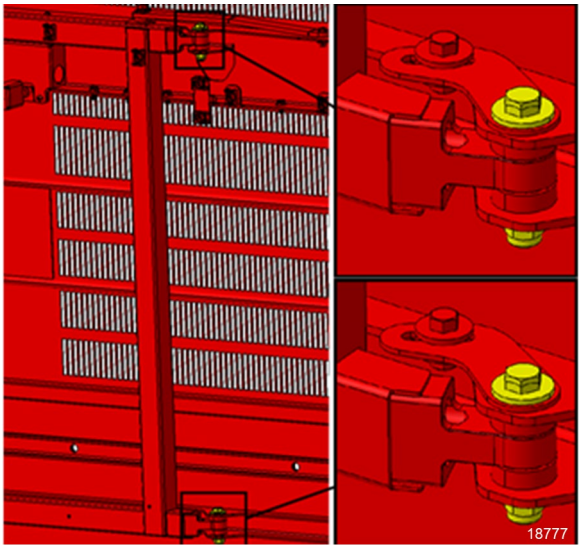


**FIGURE 121**

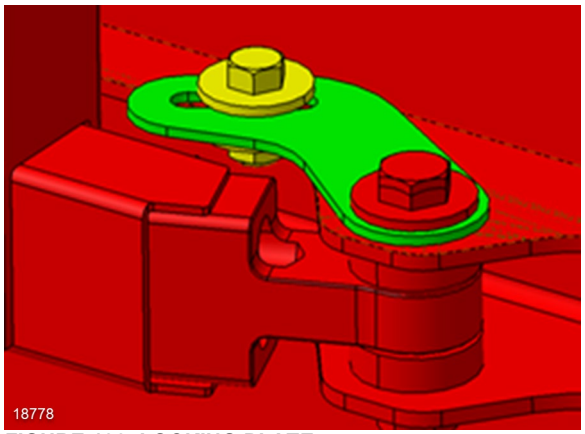


**FIGURE 122: LOCKING PLATE**

## Longitudinal adjustment

25. Check the gap between the door and the adjacent panel at the level of the upper attachment point of the arm on the door. The gap should be ¼" (6 mm) (FIGURE 57).

    ***Gap 1/4" (6 mm)***

    ***Tolerance is ± 3/64" (± 1mm)***

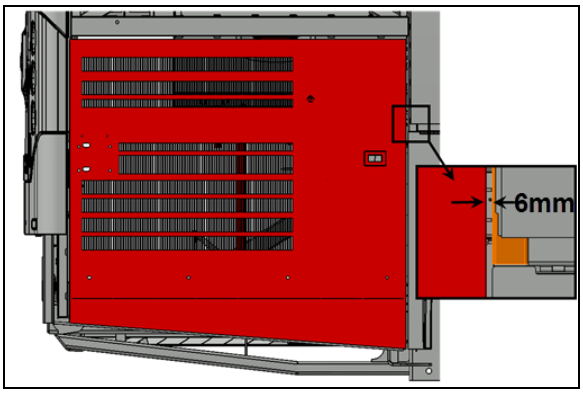


**FIGURE 123**

26. If the longitudinal position is out of tolerance, adjust using the adjustment provided on the inner side of the door, at the upper attachment point of the arm on the door (FIGURE 58).

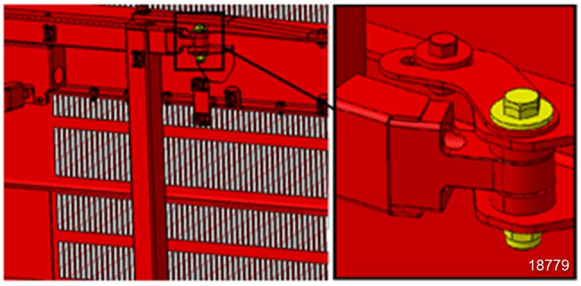


**FIGURE 124**

27. Check the gap between the door and the adjacent panel at the level of the lower attachment point of the arm on the door. The gap should be ¼" (6 mm) (FIGURE 59).

    Gap 1/4" (6 mm)

    Tolerance is ± 3/64" (± 1mm)

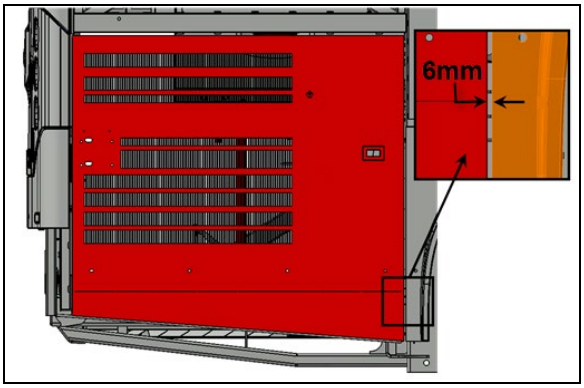


**FIGURE 125**

28. If the longitudinal position is out of tolerance, adjust using the adjustment provided on the lower attachment point of the arm on the vehicle chassis (FIGURE 60).

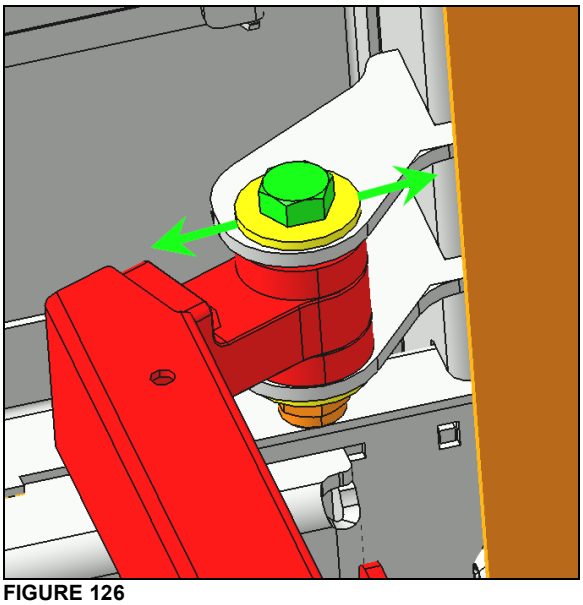

FIGURE 126

## Latch installation

1. Install strike plate C and pin E centered in the available adjustment position provided by respective slotted holes (FIGURE 127). The components should be snug but not tight so that they can move when the door will be closed later on in this procedure.

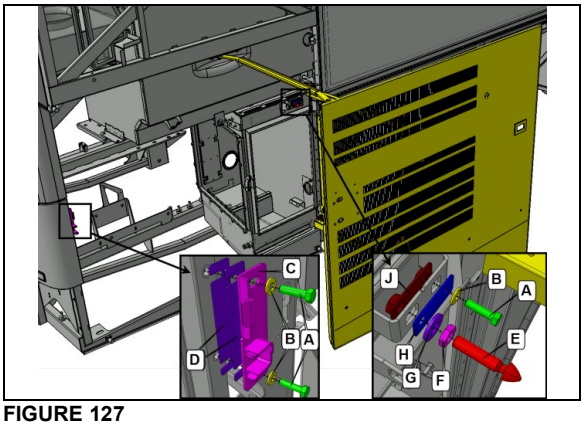


FIGURE 127

2. Check that the two items identified with arrows are snug but not tight (FIGURE 128).

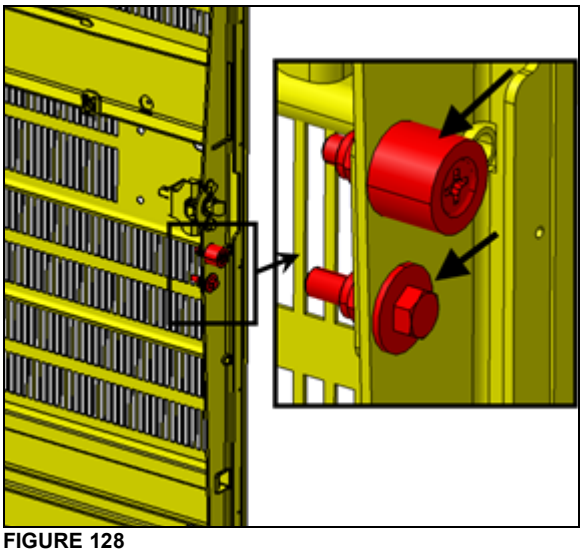

FIGURE 128

3. Before adjusting the pin, make sure that it doesn't exceed more than 2" (50mm) at the first closing of the door (FIGURE 129). Damage to the door can result if this condition is not respected.

***Not more than 2" (50mm)***

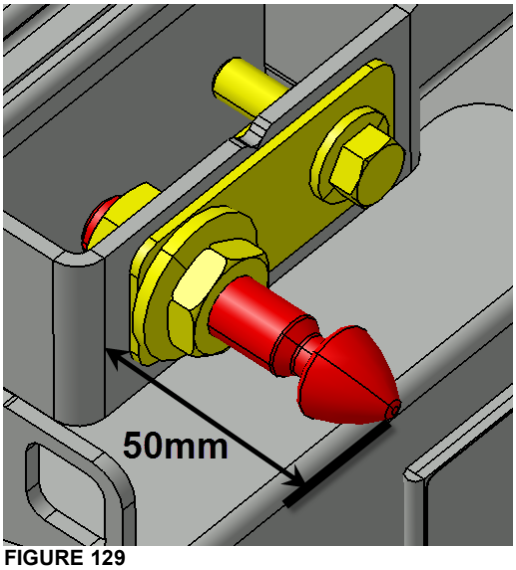


FIGURE 129

4. Close the door gently.

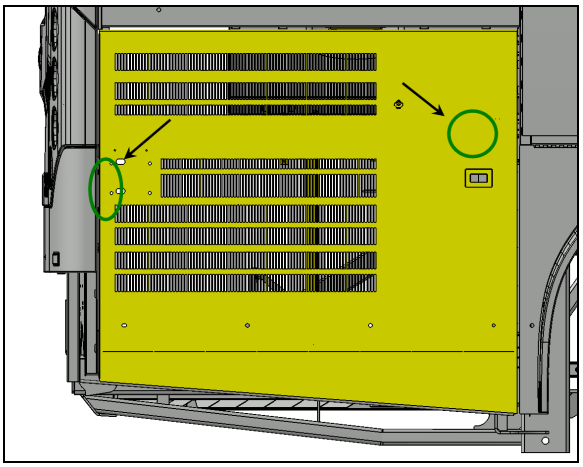

FIGURE 130

5. Open the door and perform a final tightening to the items indicated with arrows (FIGURE 131).

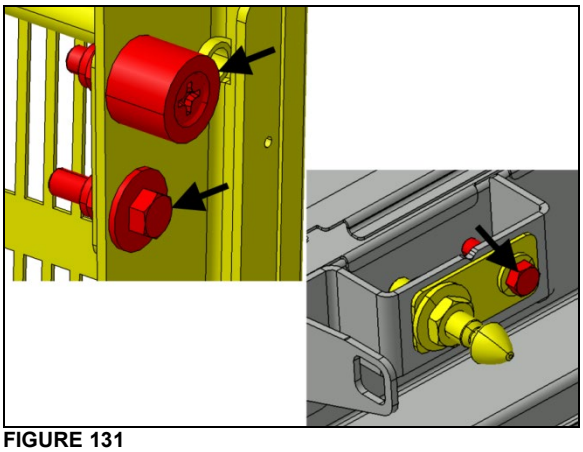

FIGURE 131

## Transversal adjustment

6. Once closed, the door surface must be even with the adjacent steel panel.

   ***Tolerance is 3/64" (1mm)***

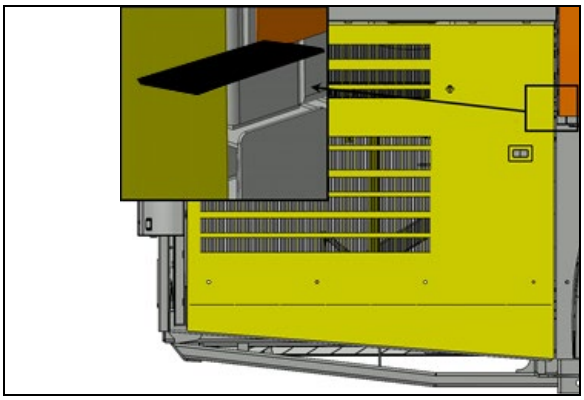

FIGURE 132: USE A RULER (SHOWN IN BLACK) TO CHECK THAT SURFACES ARE EVEN

7. Use the pin to adjust the door so it is even with the adjacent steel sheet. Screw or unscrew the pin as required and then apply final tightening to the jam nut (FIGURE 133).

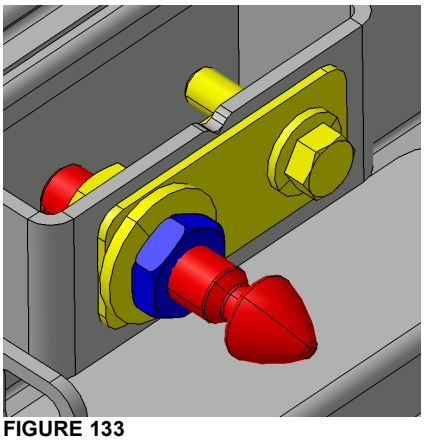

FIGURE 133

8. The R.H. side engine access door must exceed the engine compartment by 5/32" (4mm).

   ***Tolerance is ±3/64" (±1mm)***

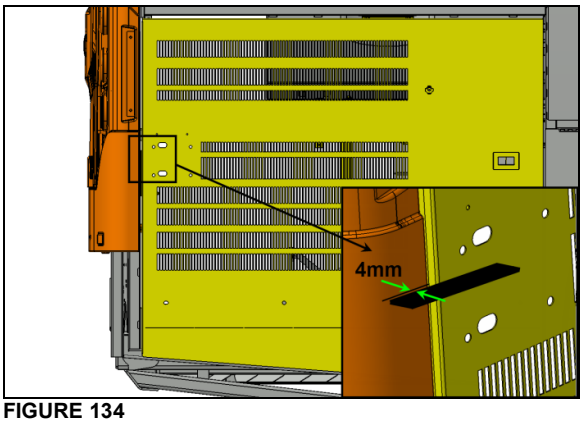


FIGURE 134

14. Perform the transversal adjustment by moving the strike plate using the slotted holes (FIGURE 135).

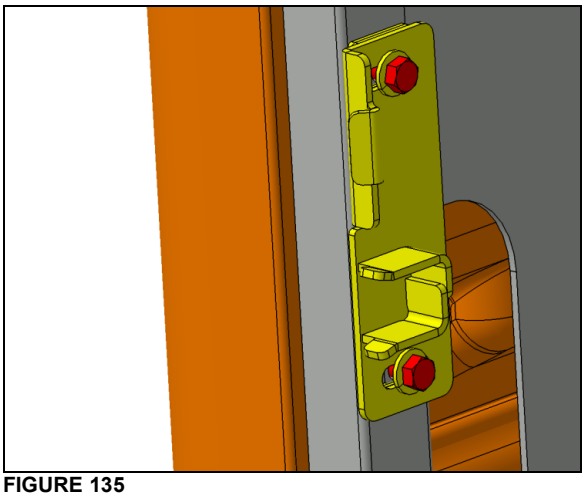

**FIGURE 135**

9. The latch bolt must engage not less than 13/32” (10mm) behind the strike plate.

   ***13/32” (10mm) min***

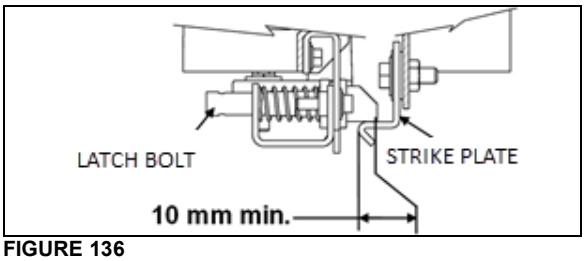


**FIGURE 136**

10. Screw in or out the two upper stoppers so that the upper part of the door exceeds the horizontal member by 5/32" to 3/16" (4mm to 5mm) (see FIGURE 137 & FIGURE 138).

11. Adjust the lower stopper in order to have the lower part of the door even with the fender.

    ***Tolerance is ± 3/64" (± 1mm)***

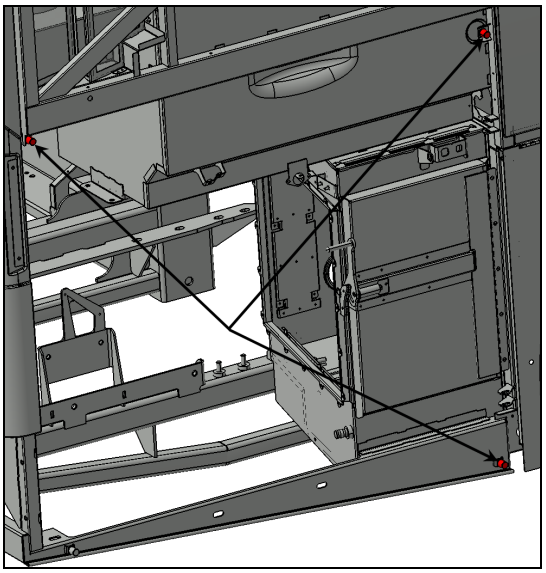

**FIGURE 137**

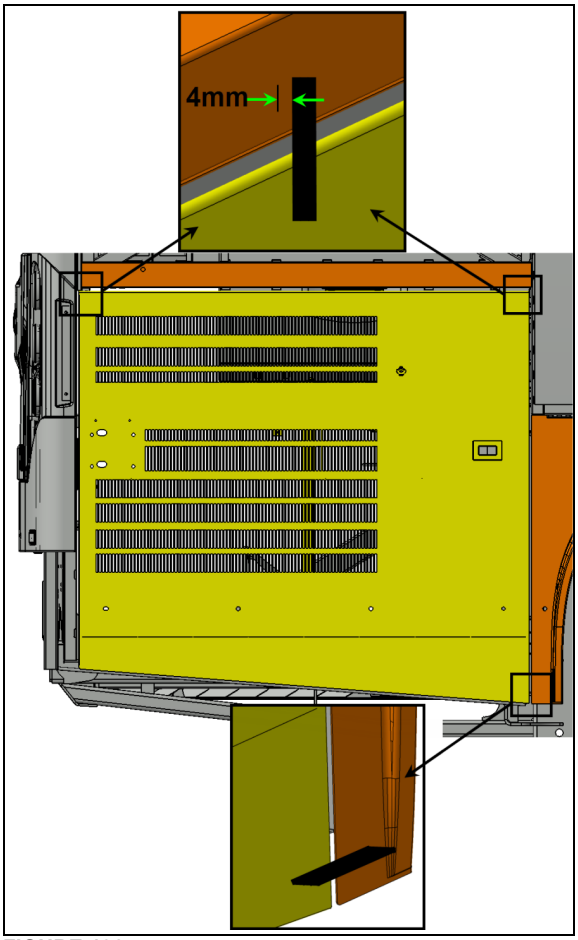


**FIGURE 138**

### 10.4.3 Engine Radiator Door

Radiator door may be adjusted for proper fit by untightening hinge bolts:

6. Loosen the bolts, (details “A” & “C”, Figure 139) holding the hinge to the vehicle structure to shift the door "LEFT or RIGHT".
7. Loosening the bolts (details “B” and “D”, Figure 139) allows the door to be shifted "UP or DOWN".

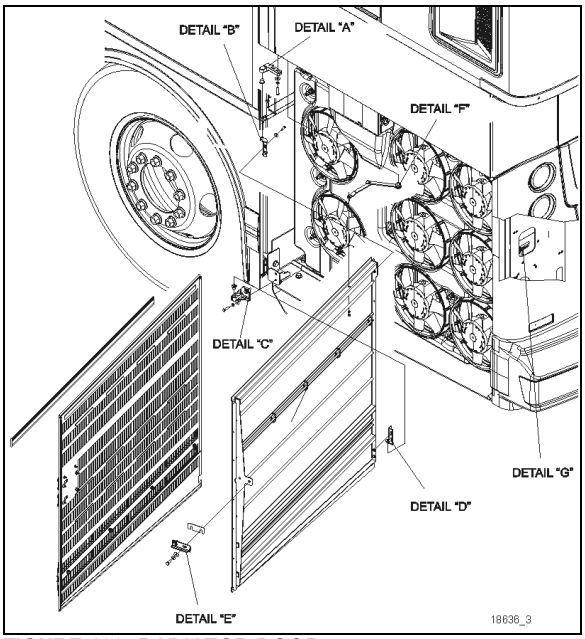


**FIGURE 139: RADIATOR DOOR**

8. Adjust the door position depending on the gap needed between exterior finishing panels.
9. Tighten the bolts.
10. Check that the door swings freely and closes properly. It may be necessary to adjust the door latch tab to get proper fit and operation.

To adjust the latch mechanism (details “E” and “G”, Figure 140) and the striker pin:

5. Open the door and slightly loosen the latch tab (detail “E”, Figure 140).
6. Place shims between tab and door frame to increase tab engagement length in the latch.
7. Move tab left or right to increase engagement depth in the latch.
8. Check door fit and operation.

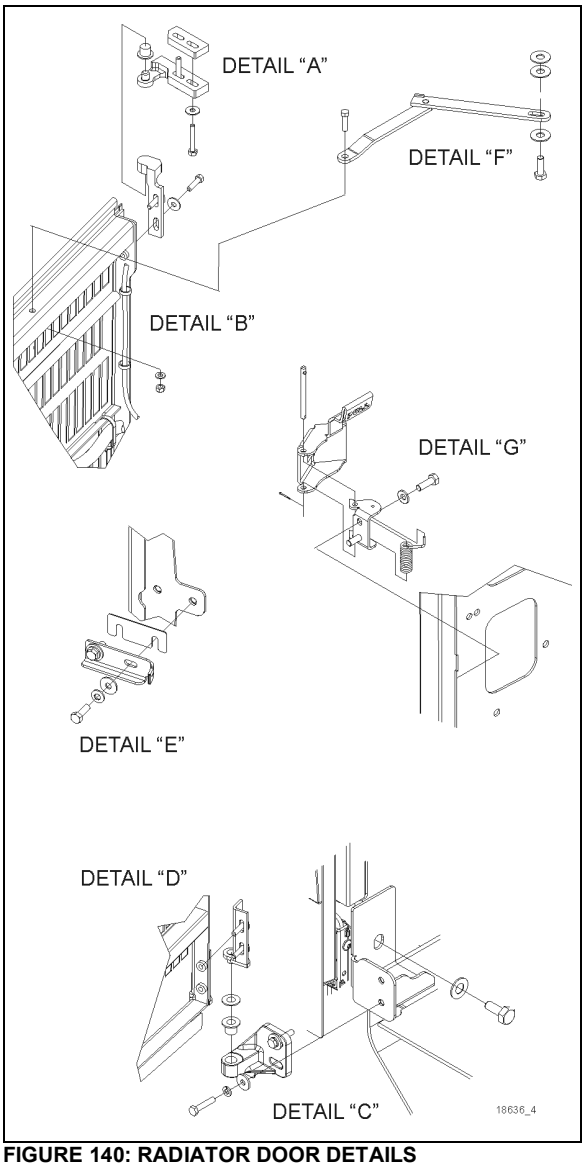


**FIGURE 140: RADIATOR DOOR DETAILS**

| *NOTE* |
| --- |
| *The striker pin must engage at least 13/32” (10mm). Add spacers between the latch and the vehicle body to adjust the engagement.* |

| *NOTE* |
| --- |
| *There should be no gap between the washer and the hinge upper and lower halves.* |

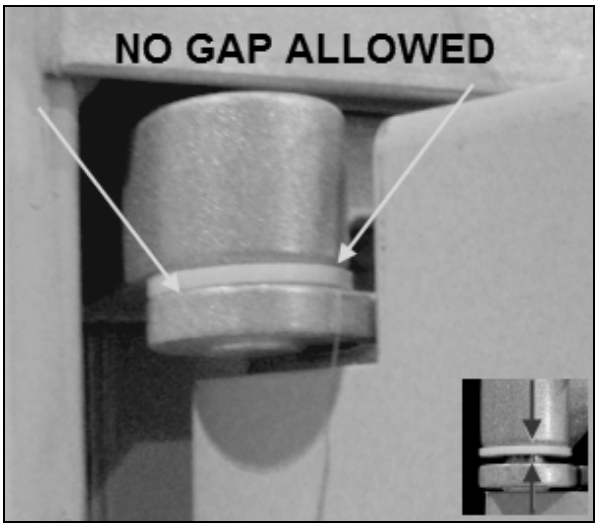
NO GAP ALLOWED

10.5 ZONE 5

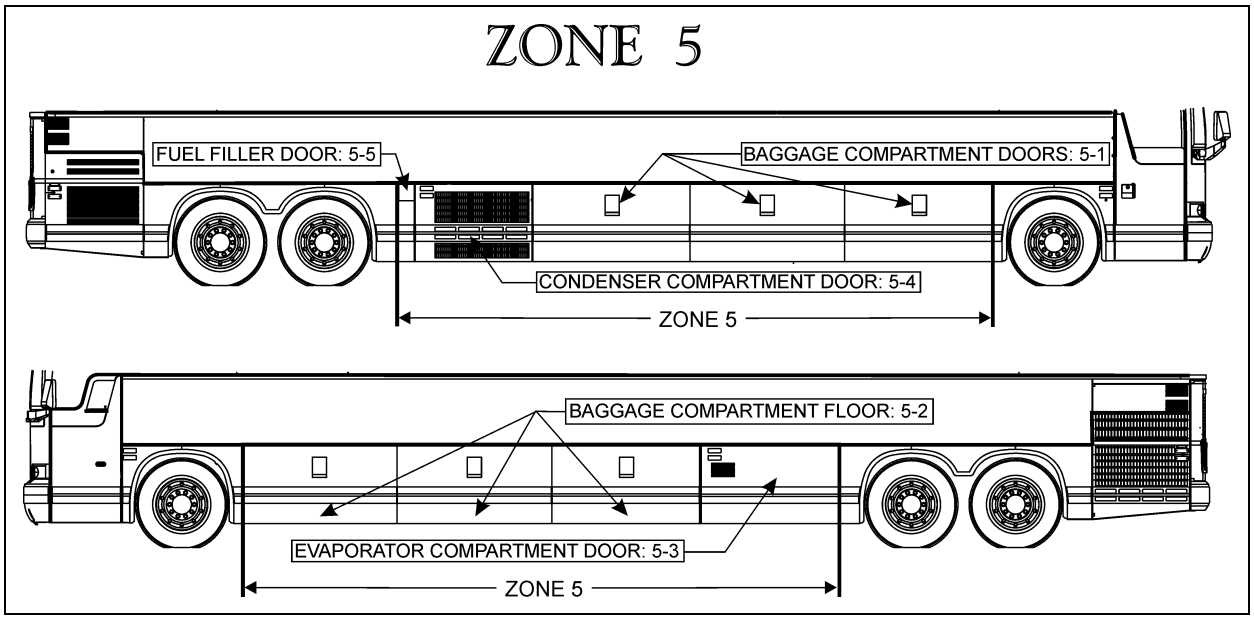


**FIGURE 141: ZONE 5**

### 10.5.1 Pantograph Baggage Compartment Doors (Aluminum)

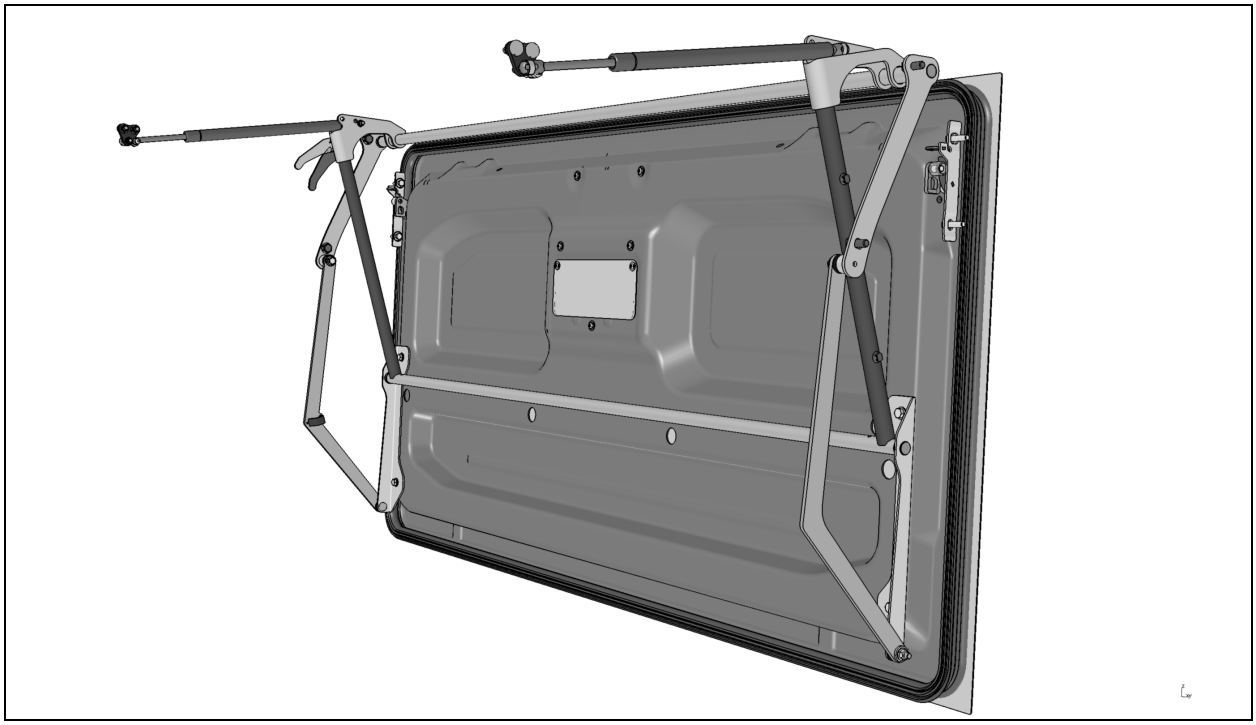

For the removal and installation of a baggage compartment door body panel, you will need:

- A drill with drill bits;

- Pneumatic hammer tool (Zip Gun);
- Razor sharp window scraper or putty knife;

➢ Open damaged compartment door and unfasten rub rail fixing bolts. Remove rub rail.

➢ Unfasten bolts and disconnect cable if necessary in order to remove door from vehicle.

➢ Preferably install the door onto a work surface where it can be solidly fixed.

- **Door Panel replacement**

➢ Refer to SAV10054-67.

- **Baggage Compartment Door Adjustment**

11. Adjust door to get a 6mm gap at the top.

12. All adjustments are to be made with door closed, unless specified.

13. Center door in the opening using the retaining rings.

| *NOTE* |
| --- |
| *Lateral adjustment is made by adding/ removing retaining rings in these locations.* |

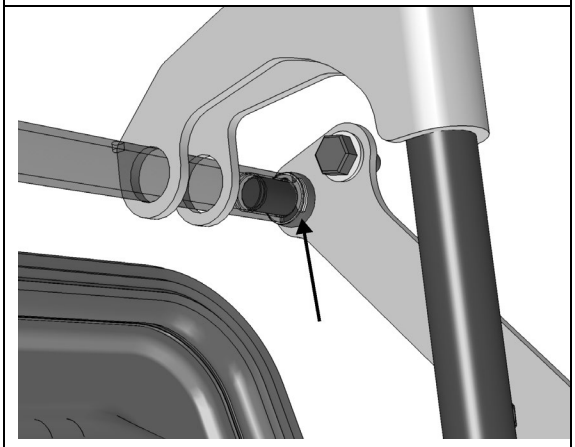

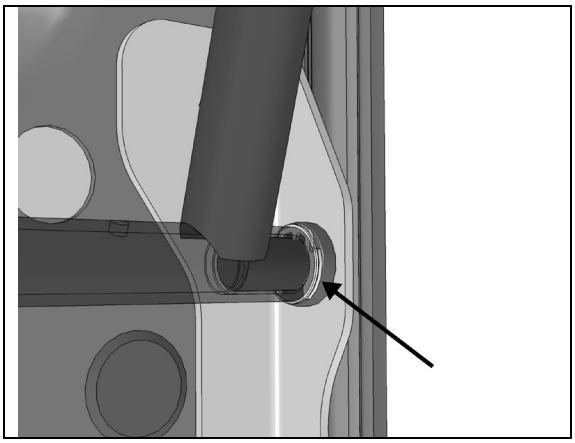

14. Adjust door position and evenness with reference to adjacent panels and doors.

| *NOTE* |
| --- |
| *Vertical adjustment is achieved by moving the door along the mounting plates slots.* |

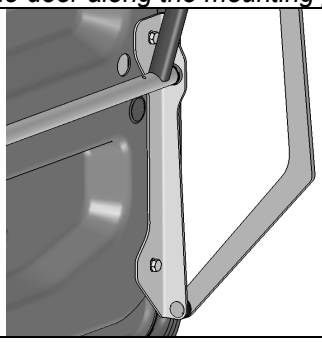

| *NOTE* |
| --- |
| *Adjustment is made by moving IN or OUT the lock plates. Adjust one corner at a time.* |

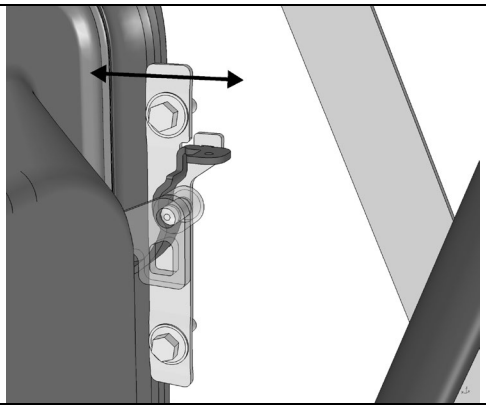

15. Check handle adjustment. Handle must remain tight against its plastic housing.

*NOTE*

*Adjustment is made by moving UP or DOWN the lock plates.*



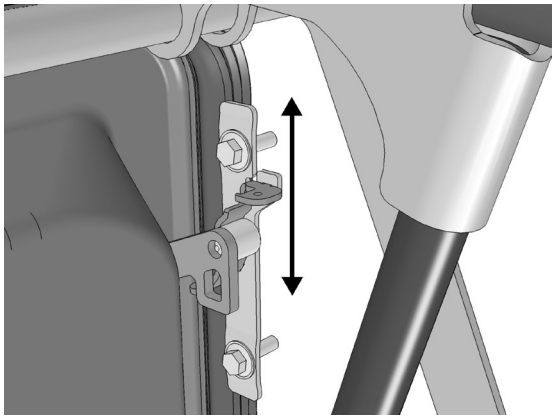

16. Open baggage compartment door and adjust using the cylinder mounting block.

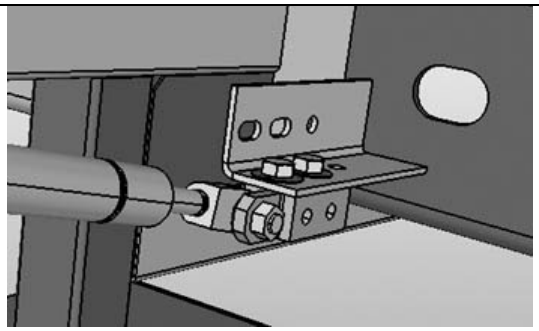

17. Door should be adjusted in reference to neighboring doors.
18. Target is to have 5 ½" (140mm) from bus body panel to door panel and +/- 2mm vertically between doors.

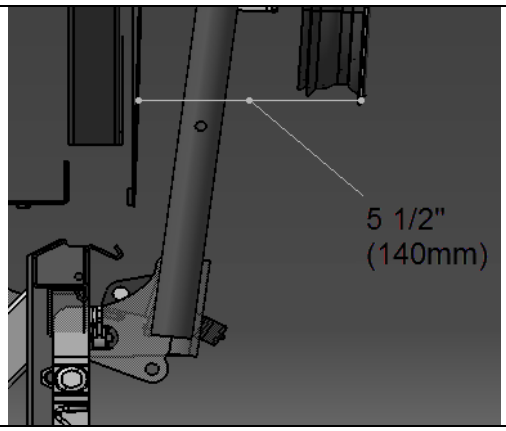


19. Tighten cylinder block fixing screws.
20. Door bottom edge compression can be adjusted by moving in or out the pantograph arms at this location.

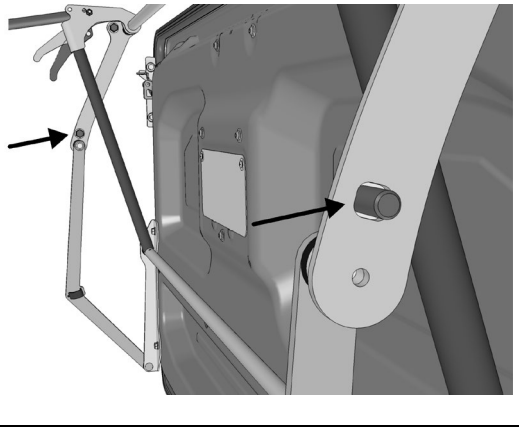

### 10.5.2 Hinged Baggage Compartment Doors (Aluminum)

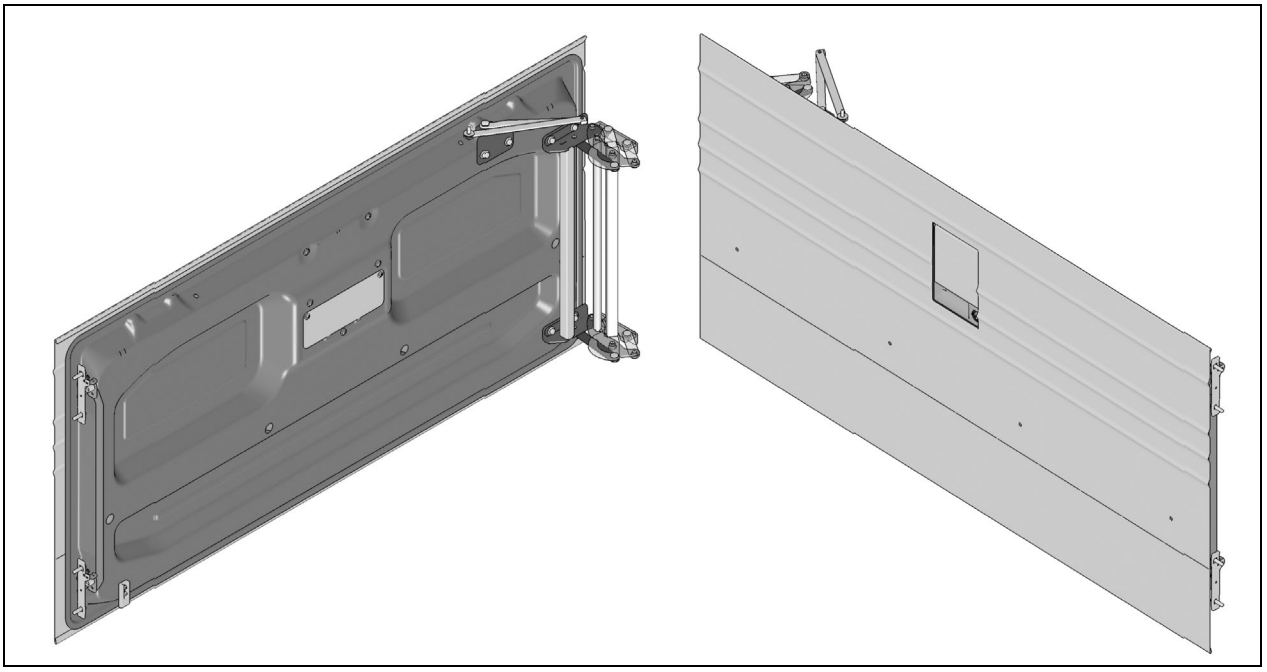

- **Door Adjustment**

1. Open the door.
2. Loosen the screws fixing the hinge to door assembly. Loosening the screws allows the door assembly to be shifted "LEFT or RIGHT" and "UP or DOWN".

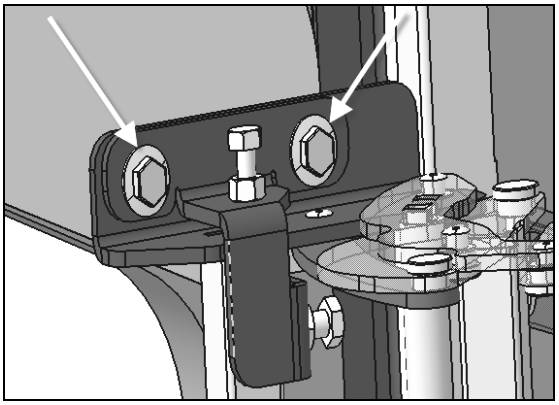

3. Using the top adjusting screws, adjust door to get a 6mm gap at the top.

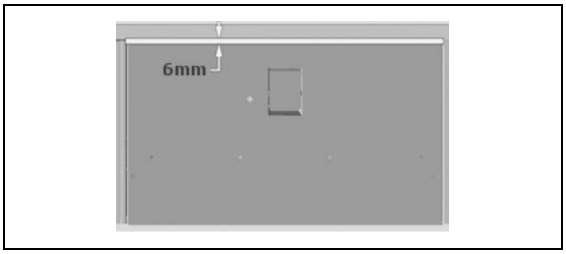


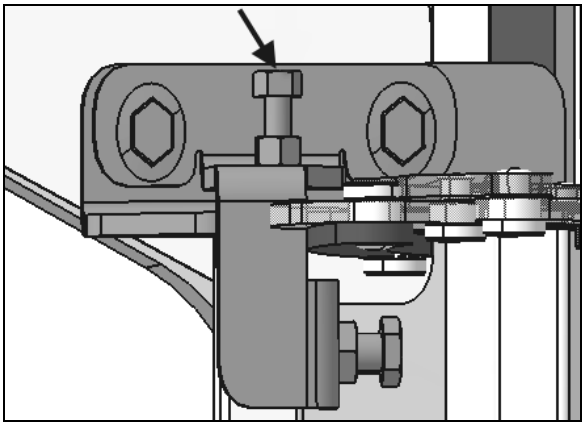

4. Using the 2 side adjusting screws (top and bottom), adjust door to get a 6mm to 8mm lateral gap (gap must be equal on both side).

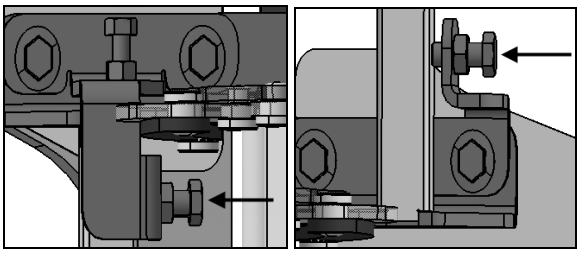

5. To adjust door depth, loosen the screws fixing the hinge to frame assembly and slide the hinge horizontally to move the door in or out. Depth should be calculated at 29mm +/- 2mm measured from bus frame out **or** 5mm +1mm if measurement is taken from small square tube on frame.



6. Tighten the hinge screws.

7. Make final adjustment of door position and evenness with reference to adjacent panels and doors as required.

8. Checks handle adjustment. Handle must remain tight against its plastic housing.

| *NOTE* |
| --- |
| *Adjustment is made by moving UP or DOWN the lock plates.* |



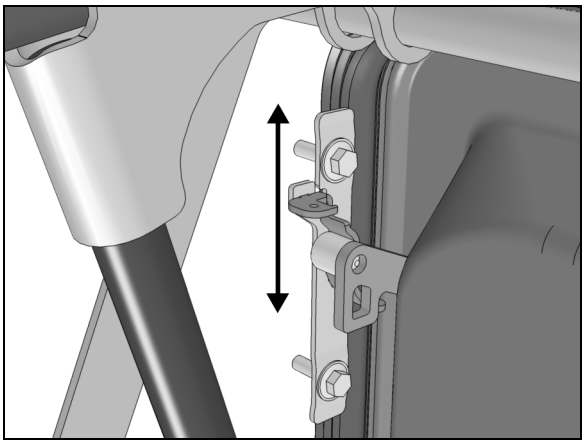

9. Make sure that skid bar only touches slightly bus structure at bottom. The door should not move up when closing.

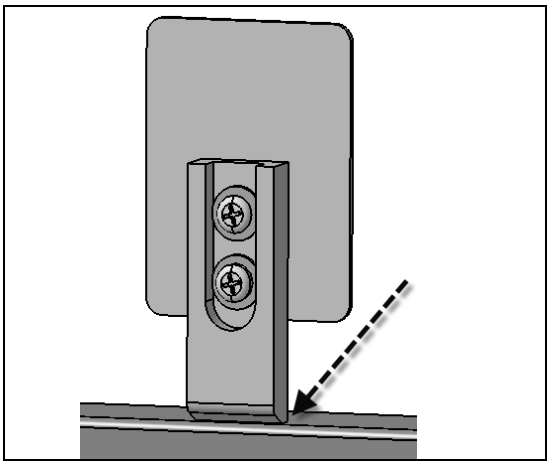

### 10.5.3 Condenser Compartment Door

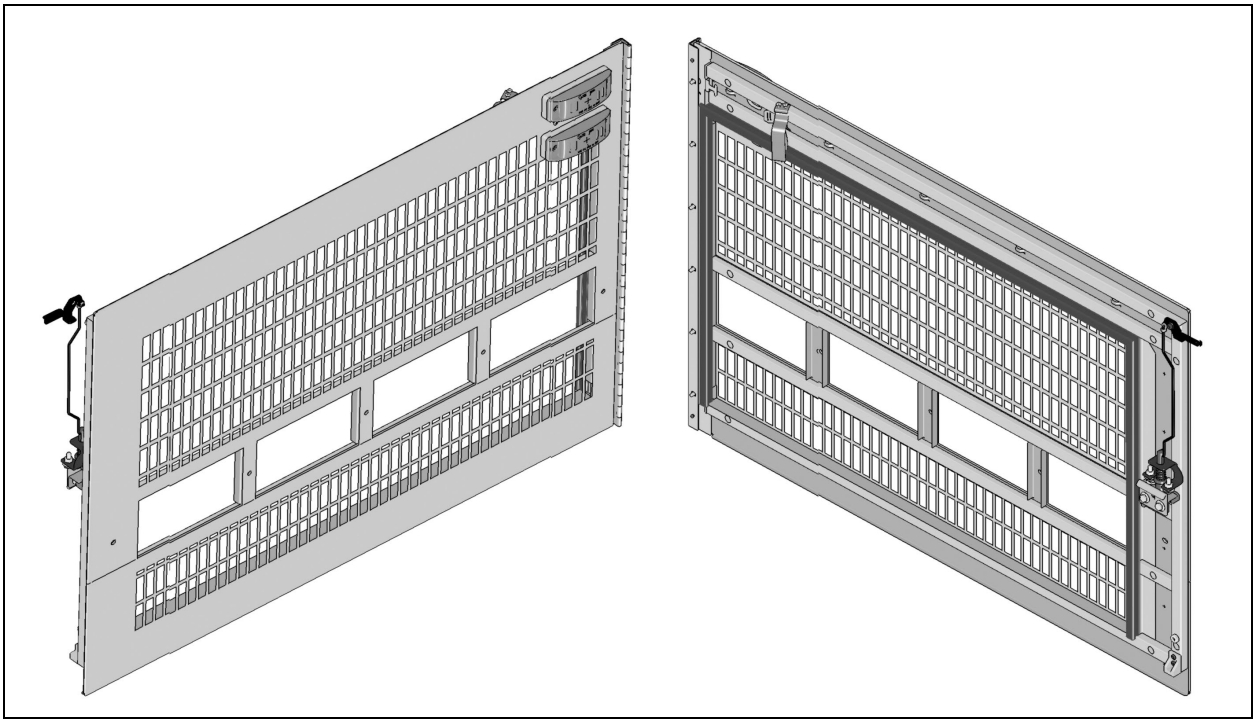

**FIGURE 142: CONDENSER DOOR**

- **Door Adjustment**

1. Open the condenser door.
2. Loosen the screws fixing the hinge to hinge attachment or hinge to door assembly. Loosening the screws allows the condenser door assembly to be shifted "LEFT or RIGHT" and "UP or DOWN" or “IN and OUT”.
3. Adjust condenser door assembly position at the hinge.
4. Respect the required gap between exterior finishing panels.
5. Tighten the screws.
6. Check that the door swings freely and closes properly. It may be necessary to adjust the door latch to get proper fit and operation.

### 10.5.4 Evaporator Compartment Door (Aluminum)

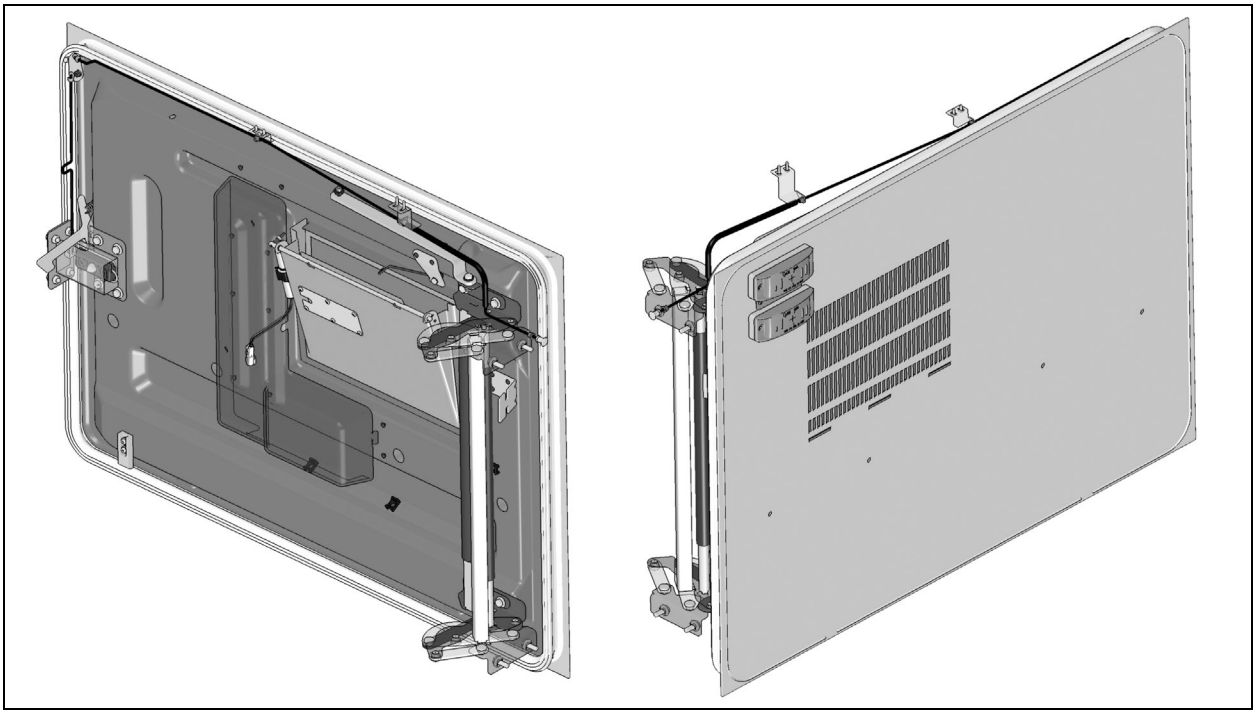

**FIGURE 143: EVAPORATOR DOOR (ALUMINUM)**

For the adjustment of an evaporator door, you will need:

- Centering tool G34148_500

- **Door Adjustment**

1. Open the evaporator door.
2. Loosen the screws fixing the hinge to hinge attachment or hinge to door assembly. Loosening the screws allows the evaporator door assembly to be shifted "LEFT or RIGHT" and "UP or DOWN" or “IN and OUT”.
3. Adjust evaporator door assembly position at the hinge.
4. Door exterior panel on hinge side should be positioned at 29mm +/- 2mm measured from bus frame out.

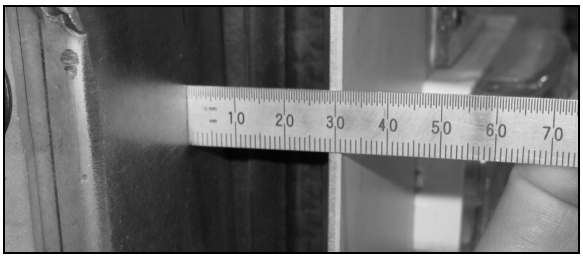


5. Respect the required gap between exterior finishing panels.
6. Tighten the hinge screws.
7. To allow adjustment of the latch mechanism, lightly tighten the retaining hardware on receptacle and receptacle support to frame.
8. Place centering tool G34148_500 in the receptacle cavity.

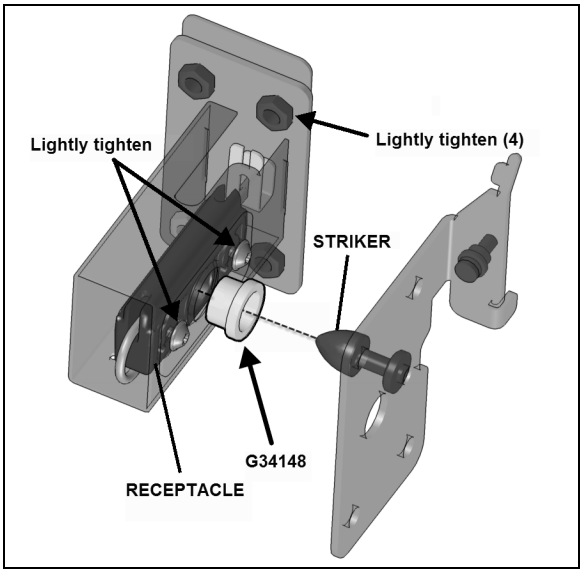


9. Close door to center the latch assembly.
10. Tighten the receptacle screws only.
11. .Door exterior panel on latch side should be positioned at 8mm +1mm from frame. Make the adjustments by moving the receptacle support.

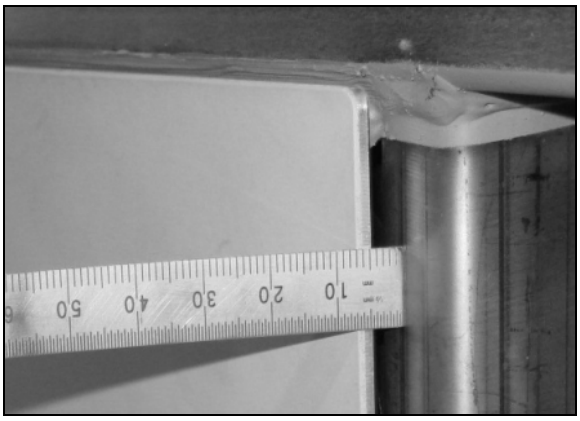

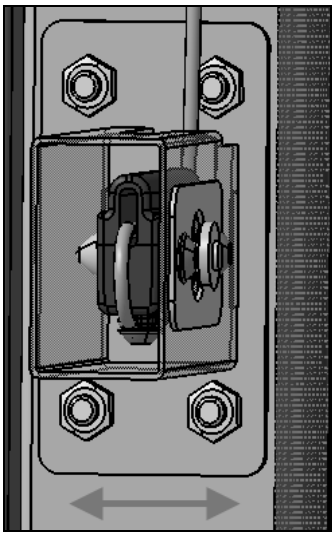

12. Make sure that backing plate is parallel to structure before tightening the retainer support hardware
13. Make sure that skid bar only touches slightly bus structure at bottom. The door should not move up when closing.

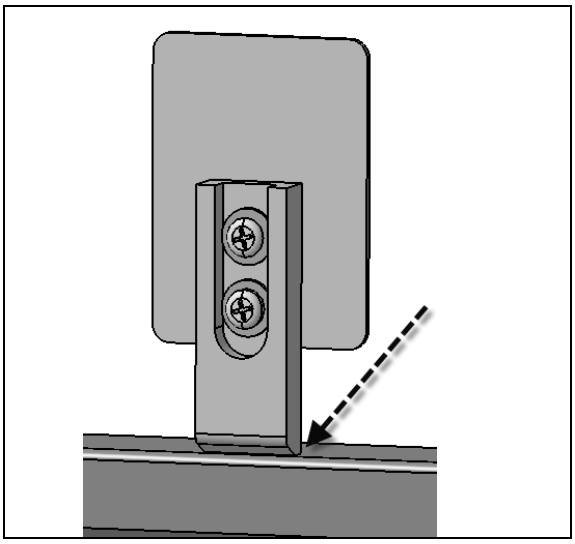

14. Check that the door swings freely and closes properly.

- **Door release in the event of a latch failure.**

If the door release mechanism is damaged or ceases to function for any reason, the door can be released by removing these screws on the fore wall of the rear fender side



### 10.5.5 Fuel Filler Door

- Open the fuel filler door.
- Loosen the screws holding the panel to hinge assembly.
- Adjust the fuel filler door position according to distance required between exterior finishing panels.
- Tighten the nuts.
- Check that the door swings freely and closes properly.

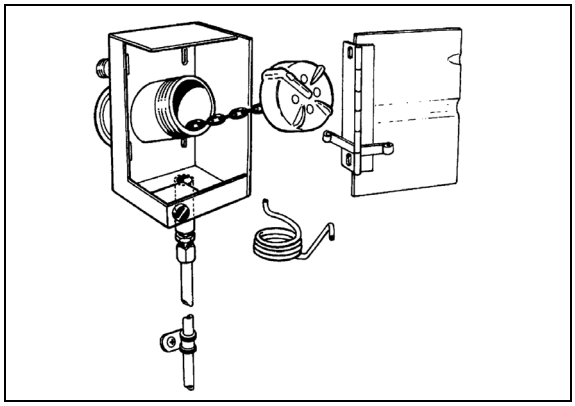

**FIGURE 144: FUEL FILLER DOOR** 03046

## 10.6 ZONE 6

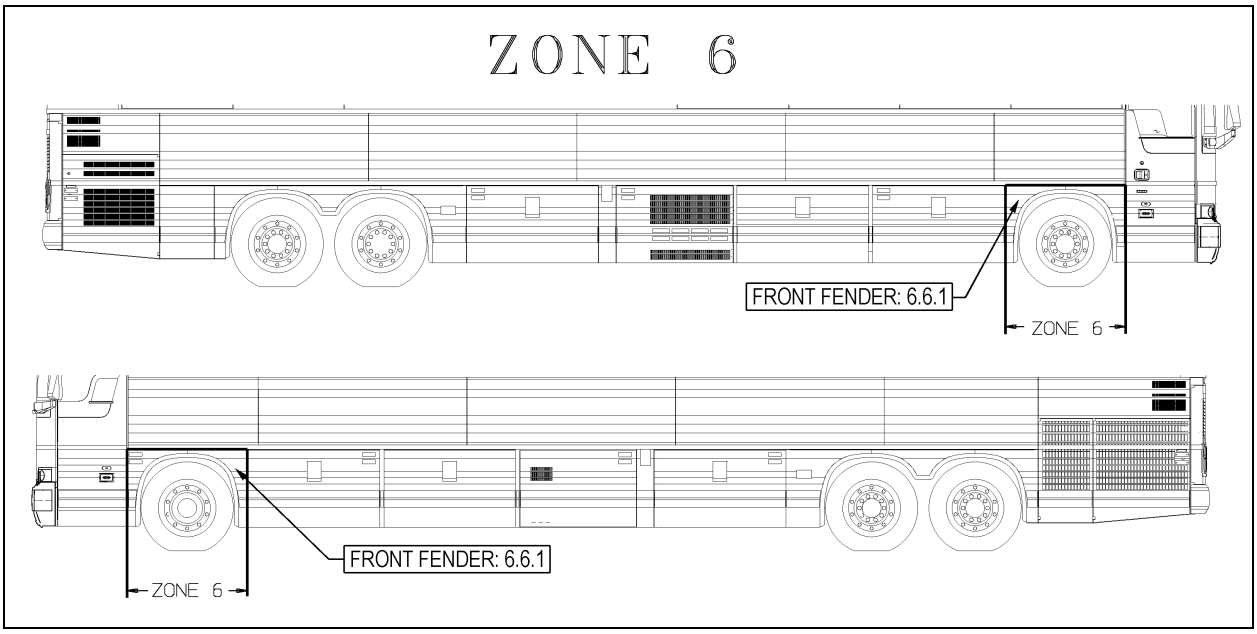


**FIGURE 145: ZONE 6**

### 10.6.1 Front Fender

Front fender may be removed using the following procedure:

Remove the nuts on the inside of the fender. Remove the fender from the vehicle. To reinstall, reverse the procedure.

For the installation of front fender body panel, refer to procedure **SAV470024**.

## 10.7 ZONE 7

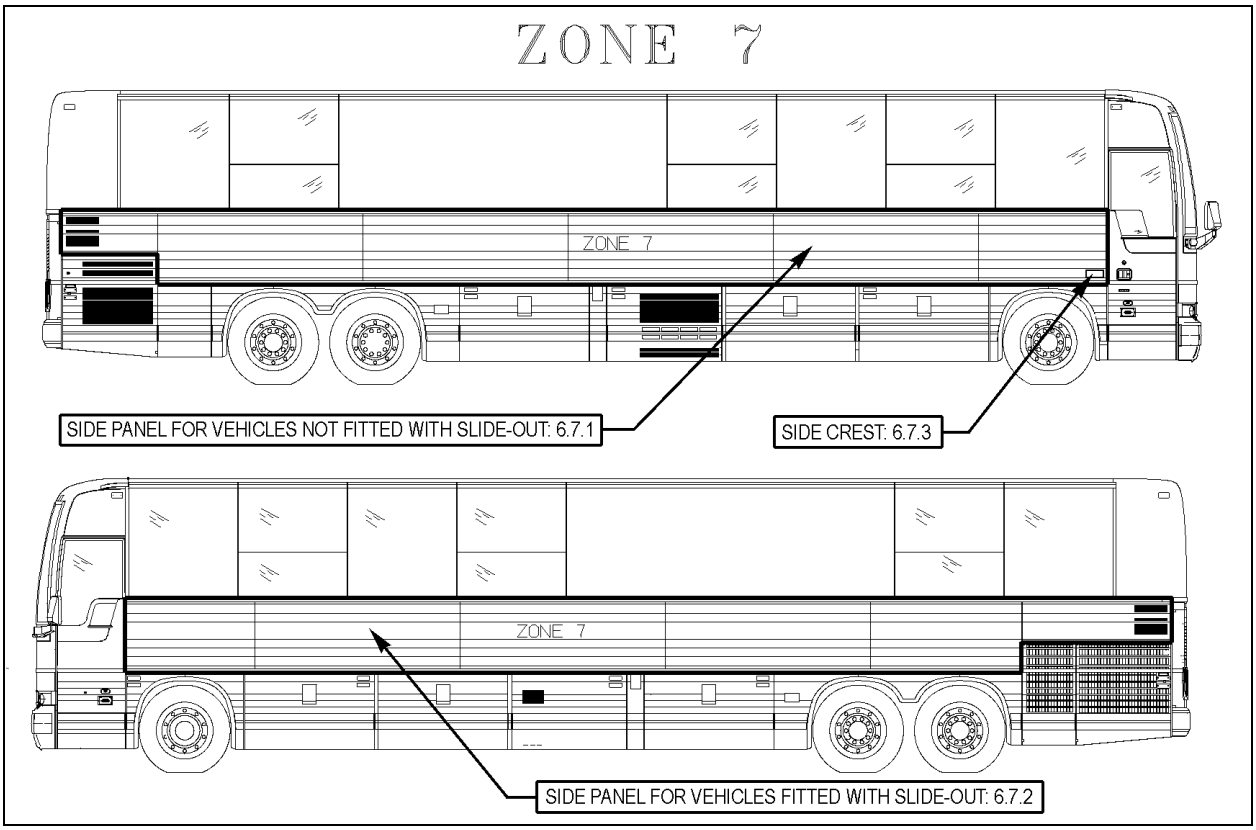


**FIGURE 146: ZONE 7**

### 10.7.1 Side Panel for Vehicles Not Fitted With Slide-Out

❖ **Removal**

| | |
|---|---|
| Remove top and bottom finishing moldings. Insert a screwdriver into snap-on finishing molding joint. Bend finishing molding enough to be able to fix a pair of locking pliers. Using the pair of locking pliers, pull the stainless steel molding and at the same time gradually cut Sika bead with a sharp knife. | Be careful not to damage the adjacent surfaces<br>You need to remove the finishing molding support and rivets in the case of engine air intake panel. |
| Insert a flat screwdriver between the side panel and the vehicle chassis, in the top left and right corners. | |
| Use the c-clamp to peel the side panel from the back structural panel as far as the middle and at the same time gradually cut Sika bead with a sharp knife. Do the same for the other corner. | Ideally, the hoist or chain block must be fastened to the floor while pulling from a 45° angle so as not to damage the vehicle structure |
| Remove as much glue as possible from the structure using a putty knife or pneumatic knife without damaging 206 G+P primer. | Never heat SikaFlex adhesive to remove. |
| Check panel horizontal supports for straightness | Tolerance: 1mm towards the outside and 1.5mm |

| | |
|---|---|
| using a straight edge. Take measurements with a ruler. | towards the inside. |

For the structure preparation before the installation of a ridged side panel, refer to procedure **SAV00027**.

For gluing of ridged side panels, refer to procedure **SAV00028**.

For sealing the side panels' upper portion, refer to procedure **SAV00030**.

For gluing of horizontal finishing molding, refer to procedure **SAV00208**.

### 10.7.2 Side Panel for Vehicles Fitted With Slide-Out

❖ **Removal**

Refer to paragraph 7.7.1 for procedure.

**CAUTION**

Because most junction panels are only riveted and not spot welded, be careful when removing a side panel not to damage adjacent panels.

For the slide-out junction panel preparation before the installation of a ridged side panel, refer to procedure **SAV00031**.

For gluing of ridged side panels on vehicles fitted with slide-out, refer to procedure **SAV00029**.

### 10.7.3 Side Crest

- Clean vehicle surface using anti-silicone where the side crest and stickers will be applied.
- Using hands apply and compress side crest.
- Apply required stickers.

## 10.8 ZONE 8

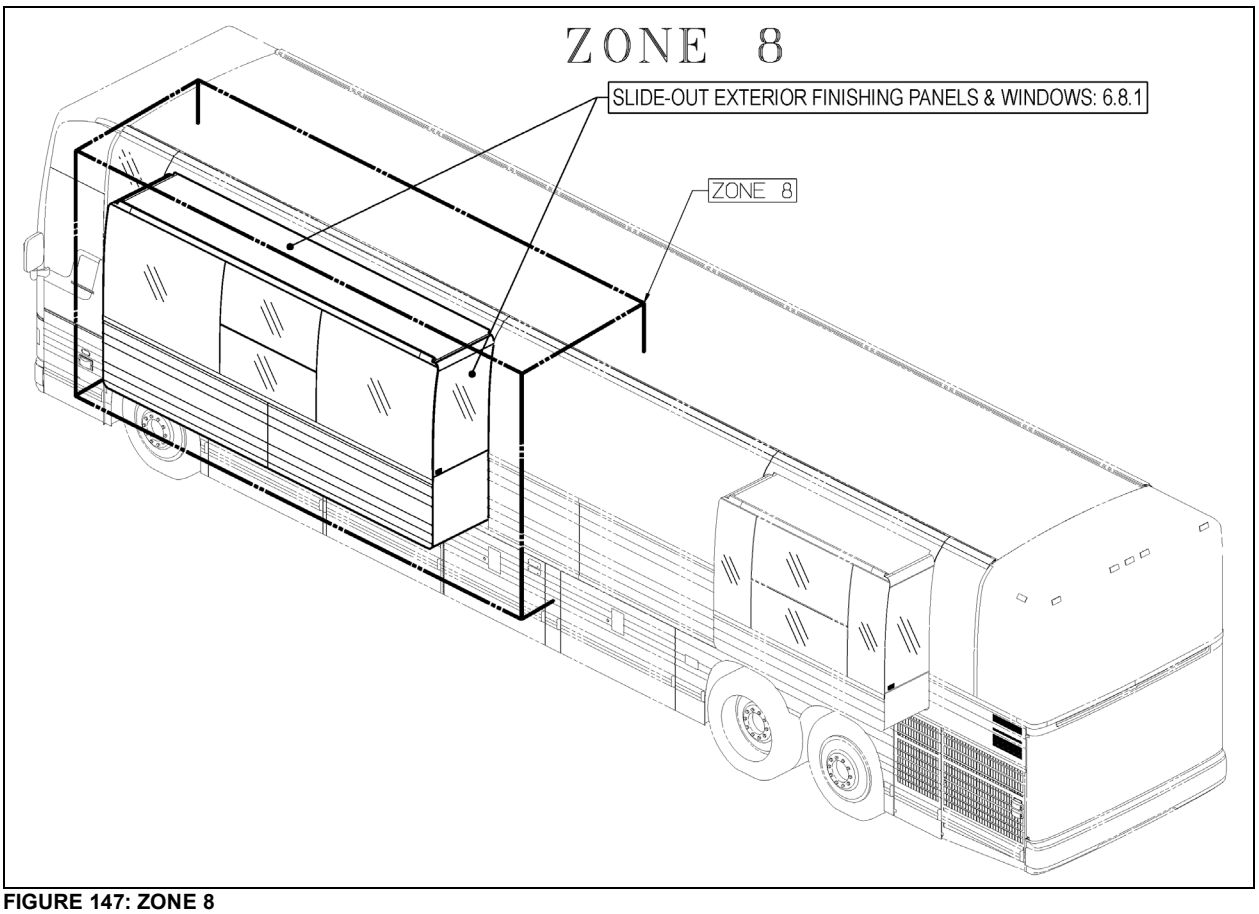


**FIGURE 147: ZONE 8**

### 10.8.1 Slide-Out Exterior Finishing Panels & Windows

For maintenance and procedures, refer to paragraphs on the vehicle's finishing panels and windows.

Methods, procedures, tools, cleaning products, adhesives and other products are the same as those used for the vehicle body.

## 10.9 ZONE 9

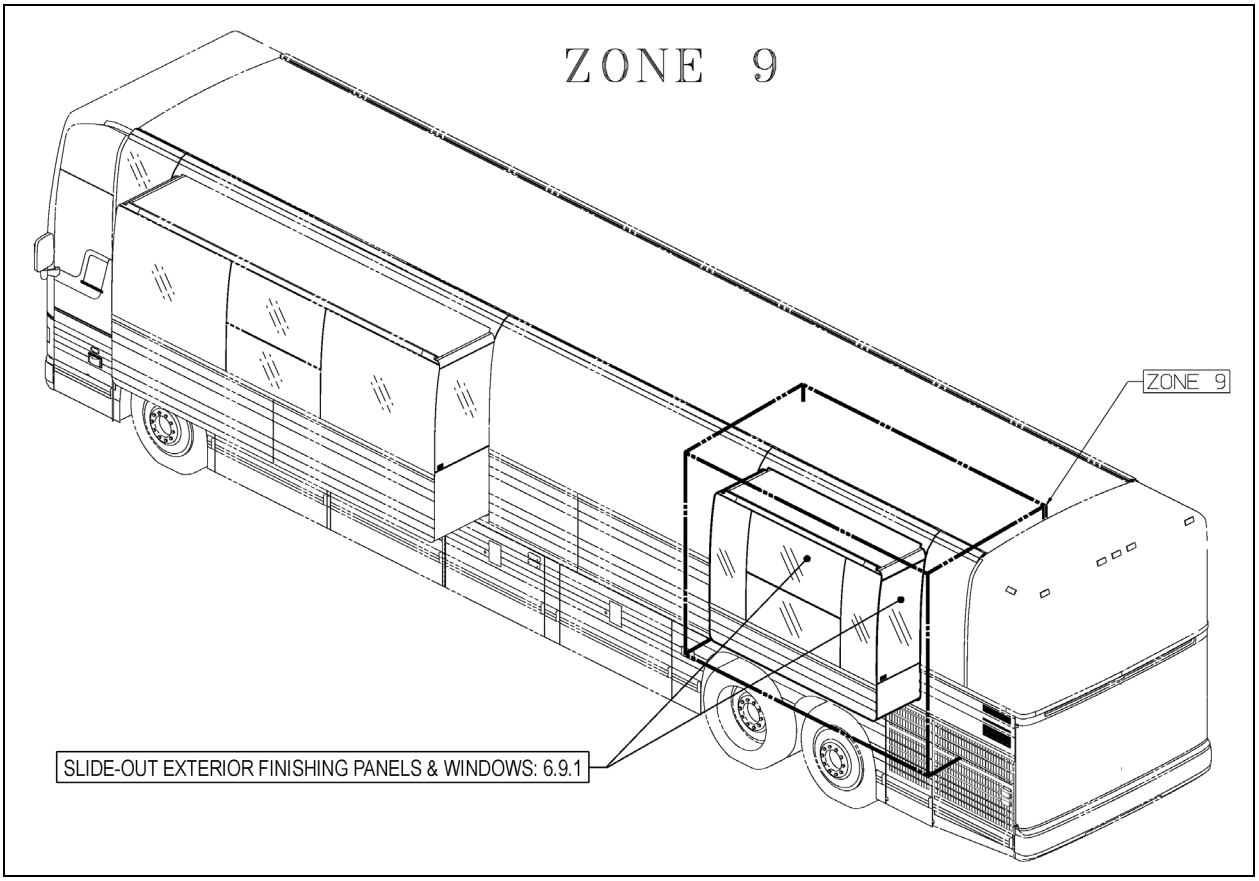


**FIGURE 148: ZONE 9**

### 10.9.1 Slide-Out Exterior Finishing Panels & Windows

For maintenance and procedures, refer to paragraphs on the vehicle's finishing panels and windows.

Methods, procedures, tools, cleaning products, adhesives and other products are the same as those used for the vehicle body.

## 10.10 BODY PANEL AND WINDOW SPACING FOR X3-45 VIP NOT FITTED WITH SLIDE-OUT

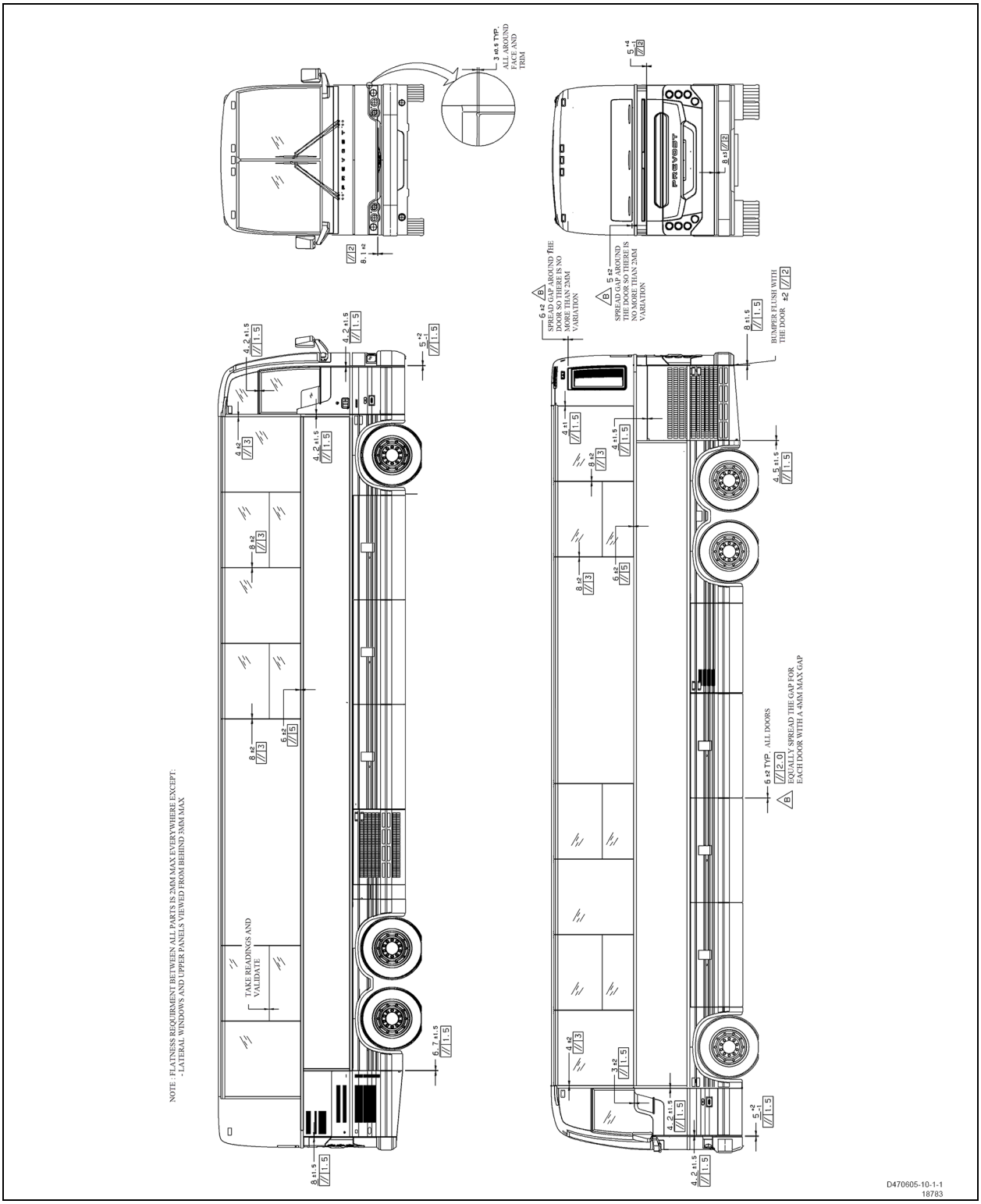


**FIGURE 149: BODY PANEL & WINDOW SPACING FOR X3-45 VIP NOT FITTED WITH SLIDE-OUT**

## 10.11 BODY PANEL AND WINDOW SPACING FOR X3-45 VIP WITH FRONT AND REAR SLIDE-OUT

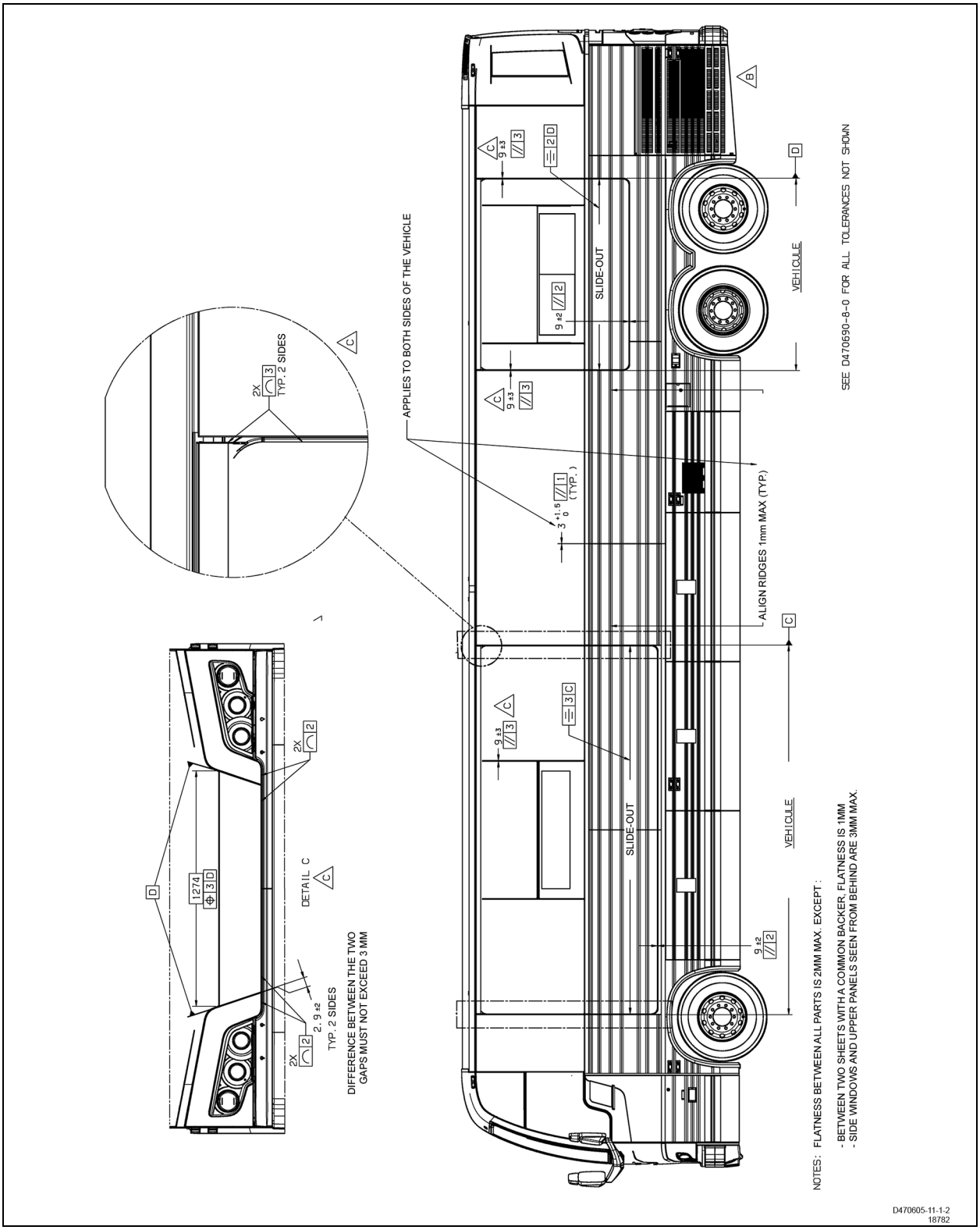


**FIGURE 150: BODY PANEL & WINDOW SPACING FOR X3-45 VIP WITH SLIDE-OUT, FRONT AND REAR**

## 10.12 BODY PANEL AND WINDOW SPACING FOR X3-45 VIP FITTED WITH FRONT SLIDE-OUT

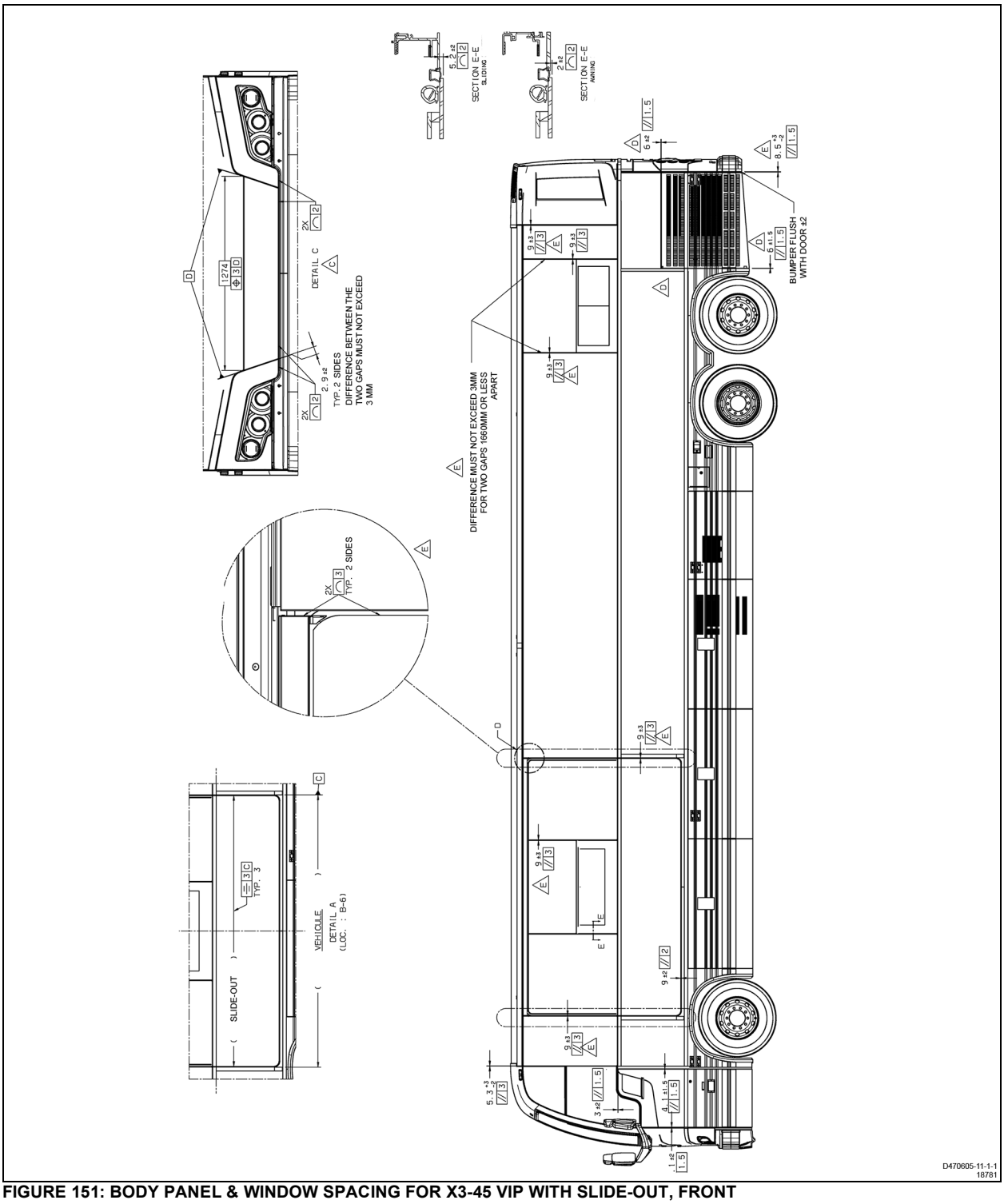


**FIGURE 151: BODY PANEL & WINDOW SPACING FOR X3-45 VIP WITH SLIDE-OUT, FRONT**

## 11 SPECIFICATIONS

**Door cylinder**

Manufacturer ..... Bimba
Type ..... Pneumatic
I.D. ..... 1½" ( mm)
Stroke ..... 8" ( mm)
Prevost number ..... 780595

**Damper**

Manufacturer ..... Koni
Prevost number ..... 780565

**Lock cylinder (upper)**

Manufacturer ..... Bimba
Type ..... Air, single action, 1/8 NPT, hexagonal rod
I.D. ..... 7/8" (22 mm)
Stroke ..... 1" (25 mm)
Prevost number ..... 641392

**Lock cylinder (central)**

Manufacturer ..... Bimba
Type ..... Air, single action, ¼ NPT
I.D. ..... 1¾" (45 mm)
Stroke ..... 1" (25 mm)
Prevost number ..... 641209

**Manifold solenoid**

Manufacturer ..... Norgren
Type ..... 4 ports, 1/8 NPT
Voltage ..... 24 VDC
Power consumption ..... 6 watts
Maximum pressure ..... 150 psi (1035 kPa)
Prevost number ..... 641448

**Solenoid valve (Latching valve)**

Manufacturer ..... Humphrey
Model ..... 310
Operating range ..... 0 to 125 psi (0 to 860 kPa)
Voltage ..... 24 VDC
Voltage tolerance ..... +10%, -15% of rated voltage
Power consumption ..... 4 watts
Leak rate (max allowed) ..... 0.245 in3/min @ 100 psi (4cc/min @ 690 kPa)
Type of operation ..... Direct solenoid
Lubrication ..... Not required (factory pre-lubed)
Filtration ..... 40 micron recommended
Prevost number ..... 641412

PREVOST

# MAINTENANCE INFORMATION

**MI15-18**

| | | |
|---|---|---|
| DATE : | MAY 2015 | SECTION : 18 - Body |
| SUBJECT : | **STRUCTURE INSPECTION FOR CORROSION - HOW TO PREVENT CORROSION** | |

| *IMPORTANT NOTICE* |
|---|
| *This maintenance is recommended by Prevost to increase your vehicle's performance. Note that no reimbursement will be awarded for carrying out this maintenance.* |

## APPLICATION

| Model | VIN |
|---|---|
| All Prevost models |  |

## DESCRIPTION

This procedure was made in order to support Prevost customers who are worried about their vehicle structure behavior due to corrosion.

Five year old vehicles and older should be subjected to a thorough structural inspection; especially if clear signs of moderate or deep corrosion are visible. The inspection can be conducted as described in the following procedure.

In this procedure, you will find information about:

**1) The important areas that should be inspected**

**2) When a structural inspection should be carried out**

**3) How to perform the inspection**

**4) What can be done to optimize corrosion protection during your vehicle's life**

| STRUCTURE INSPECTION – CORROSION | |
|---|---|
| **DESCRIPTION** | **INTERVAL** |
| Perform structural inspection for corrosion as described in this document | **Normal duty cycle vehicles and normal environment operation**<br>Every 5 years starting from the 5th year in service |
| | **Severe duty cycle vehicles and harsh environment operation**<br>Every 2 years starting from the 5th year in service |
| | Whenever a *visual inspection* discloses that corrosion seems to have caused damages to the structure such as perforation, flaking, separation of metal layers, loss of material, etc. |

**CAUTION**

**Reject member, chassis component, axle, etc. if:**

Cracked, broken, separated by corrosion or corroded to a depth as to weaken member so as to affect the safety and structural integrity of the vehicle.

**DANGER**

Park vehicle safely, apply parking brake, stop engine. Prior to working on the vehicle, set the ignition switch to the OFF position and trip the main circuit breakers equipped with a trip button. On Commuter type vehicles, set the battery master switch (master cut-out) to the OFF position.

## THE IMPORTANT AREAS THAT SHOULD BE INSPECTED

**Front & rear sub-frames, drive axle cradle and tag axle** (FIGURE 1) on Prevost structures are made of high strength steel. Although the structure on a Prevost vehicle receives a beneficial corrosion preventive compound application at the end of the manufacturing process, after many years of service with exposure to harsh environments (winter, frequent rains, road salt, stone projection, sand accumulation, etc.), the carbon steel can be subject to severe corrosion. The use of high strength steel remains a requirement to withstand peak loads.

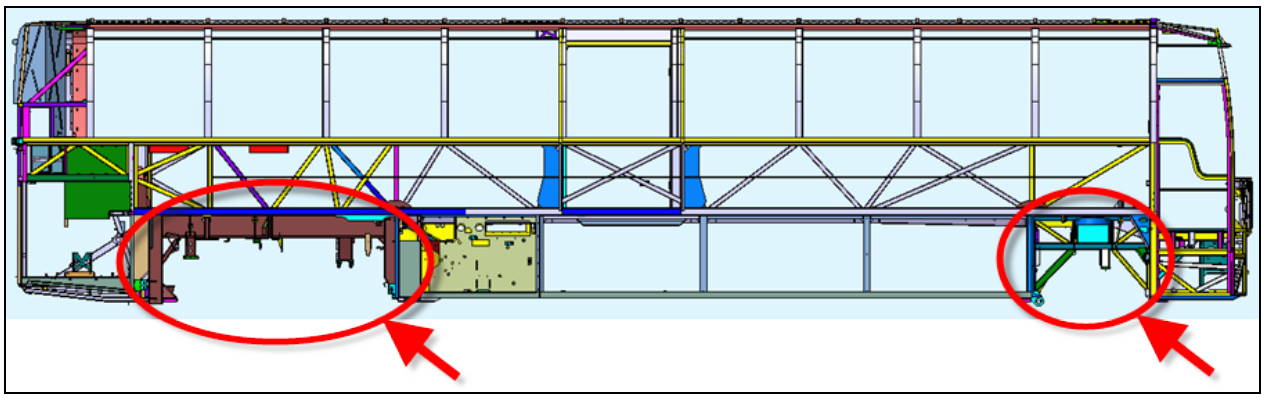

**FIGURE 1 – CRITICAL AREAS: FRONT SUB-FRAME, REAR SUB-FRAME, DRIVE AXLE CRADLE AND TAG AXLE**

## WHEN SHOULD A STRUCTURE INSPECTION BE CARRIED OUT?

Vehicles operating in harsh environments without an appropriate corrosion protection compound applied to the front and rear sub-frames, drive axle cradle and tag axle could be subject to corrosion. If parts of the tag axle or front and rear sub-frames structures present metal flaking, separation of metal layers, loss of material, perforation, etc. then they should be inspected in order to confirm that the minimum wall thickness remains (FIGURE 2 to FIGURE 5).



**FIGURE 2: METAL FLAKING. ACCUMULATED SAND AS SHOWN ON THE IMAGE SHOULD NOT BE LEFT IN PLACE**



**FIGURE 3: METAL FLAKING AND ACCUMULATED SAND**



**FIGURE 4: METAL FLAKING ON TAG AXLE - ACCUMULATED MATTER WILL RETAIN WATER THUS CREATING CONDITIONS PROMOTING ADDITIONAL CORROSION**



**FIGURE 5: HEAVILY CORRODED COACH WITH BROKEN TAG AXLE. THIS IMAGE SHOWS THE SPINDLE MOUNTING PLATE SEPARATED FROM THE REST OF THE TAG AXLE**

## STRUCTURE INSPECTION PROCEDURE

The thickness of main carbon steel parts on rear & front sub-frames, drive axle cradle and tag axle beam must be **at least 1/8 inch (0.125") (3mm)**. There are two options to properly monitor the wall thicknesses:

1- Using an ultrasonic wall thickness gauge.

2- Drilling holes and measuring wall thickness.

### 1- Structural Inspection Procedure Using Ultrasonic Wall Thickness Gauge

The ultrasonic wall thickness gauge has to be used on bare metal. The surface where the gauge will be put on has to be cleaned of rust, paint or other material. If the thickness is more than 1/8 inch (3mm), repaint the cleaned surface to prevent corrosion from occurring on this spot.

Use a grinder or another tool to remove rust or paint on the spot to check. The gauge has to be placed on the center of the cleaned spot. The gauge has to be perpendicular to the surface to get an accurate measure.

Inspection using ultrasonic wall thickness gauge is recommended over drilling holes because it minimize risk of altering the vehicle structure.



FIGURE 6: CLEANED SPOT ON STRUCTURAL MEMBER

### 2- Structural Inspection Procedure Using Drilled Holes

Drill a ¼ inch (6 mm) diameter hole in the most corroded wall of the part being checked. Use a caliper to measure the thickness of the drilled metal. Wall thickness should be at least 1/8 inch (0.125") (3mm). Drilled hole must then be welded (filled with metal) and repainted after measurement to prevent water infiltration and corrosion from occurring around the hole.

Clean/remove flaking rust on frame. Drill hole in the most corroded wall. The hole must be welded after to prevent corrosion and water infiltration. Filled hole must be painted to prevent corrosion.

**CAUTION**

Holes and welding can increase the risk of crack initiation. **Ultrasonic wall thickness gauge method is recommended.**



FIGURE 7: HOLE DRILLED IN STRUCTURAL MEMBER

## CORROSION PROTECTION ON OLD AND CORRODED FRAME

To maximize corrosion resistance on older frame exposed to harsh environment:

1) Clean rust on frame. If available, use sand blasting.

2) Apply a zinc-rich primer on cleaned surfaces.

3) Cover carbon steel parts with corrosion preventive compound Tectyl 185GW.

**CAUTION**

Avoid primer, paint, and corrosion preventive compounds on pneumatic valves and rubber bushings.



**FIGURE 8: CLEAN RUST**

## PROTECTION TO PREVENT CORROSION

Tectyl 185GW should be used to prevent corrosion propagation on frame.

1) Clean rust and dirt on the frame.
2) Apply Tectyl following the manufacturer's recommendation.
3) Apply Tectyl every year or as needed.

**CAUTION**

Avoid primer, paint, and corrosion preventive compounds on pneumatic valves and rubber bushings.



**FIGURE 9: TECTYL 185GW BLACK APPLICATION**

For more details on Tectyl 185GW, see QC Lubricants web site:

http://www.qclubricants.com/TECTYL185GWBlack.htm

**Tectyl 185GW Black**

**QC Lubricants carries Tectyl 185GW Black in pails and drums.**




TECTYL® 185GW Black is a solvent cutback, thixotropic corrosion preventive compound. The dry film is semi-firm and has a semi-gloss appearance. TECTYL® 185GW Black provides outstanding protection in marine, tropical, and industrial environments, and is widely used for transportation equipment. TECTYL® 185GW Black possesses dielectric strength of 800 volts per dry mil of coating. TECTYL® 185GW Black provides galvanic corrosion protection and can be applied on battery terminals for insulating purposes.

## PARTS / WASTE DISPOSAL

| |
|---|
| Discard according to applicable environmental regulations (Municipal/State[Prov.]/ Federal) |

*Access all our Service Bulletins on https://secureus5.volvo.com/technicalpublications/en/pub.asp*
*Or scan the QR-Code with your smart phone.*

*E-mail us at **technicalpublications_prev@volvo.com** and type "ADD" in the subject to receive our warranty bulletins by e-mail.*

# MAINTENANCE INFORMATION

**MI15-41**

| | |
|---|---|
| DATE : AUGUST 2015 | SECTION : 18 - Body |
| SUBJECT : | CRACKING OF POLYCARBONATE TAILLIGHTS CAUSED BY INAPPROPRIATE CLEANING PRODUCTS |

## APPLICATION

| Model | VIN |
|---|---|
| ALL MODELS | |

## DESCRIPTION

Prevost would like to remind its customers that only **cleaning products designed for external washing of vehicles** should be used for exterior vehicle wash and in particular, for the washing of polycarbonate taillights.

## POLYCARBONATE CRACKING

Degreasers designed to clean motors **must not be used** to clean the engine compartment door. These products are not compatible with polycarbonate. They cause cracking of the polycarbonate taillights housing and cracking of the bosses in which the mounting threaded rods are inserted (figures 2 & 3).

## CLEANING PRODUCT COMPATIBLE WITH POLYCARBONATE

Cleaning products designed for external washing of vehicles shall be used to clean your vehicle. Prevost suggests a high PH cleaner compatible with polycarbonate. See the description of the product in the following table

| Part No | Description | Qty |
|---|---|---|
| 686037 | EXTERIOR CLEANER (BODY) | 1 gallon / 4 liters |
| 686036 | EXTERIOR CLEANER (BODY) | 5.28 gallons / 20 liters |
| 685841 | EXTERIOR CLEANER (BODY) | 55 gallons / 210 liters |

| **NOTE** |
|---|
| *Material can be obtained through regular channels.* |

## High PH cleaning product compatible with polycarbonate - product sheet

# Traffic film remover

Will not make plastics crack

Perfect for trucks, cars, trains, buses and machinery. Safe for all types of plastics including polycarbonate. Designed for automatic or pressure washing.

### ADVANTAGES

- Easily removes traffic film, insects and grease.
- Safe for car and truck paint.
- Safe for use on metal, rubber, chrome, glass and plastic surfaces.
- Does not leave any deposit.
- Concentrated.
- Eco-friendly.
- Easy to rinse.
- Dries evenly.

### DIRECTIONS

Pressure washing :
1. Use product accordingly to dilution ratio.
2. Spray evenly on vehicle surface starting by the bottom.
3. Rinse thoroughly with cold or lukewarm water.

### MORE DETAILS

Do not wash in direct sunlight. Do not allow product to dry on surface.

### DILUTION RATIO

| DIRT | RATIO |
|---|---|
| Mild | 1 oz / 20 oz 50 ml / L |
| Average | 1 oz / 10 oz 100 ml / L |
| Strong | 1 oz / 6.67 oz 150 ml / L |



### PRECAUTIONS

Avoid all contact with eyes.
Avoid all contact with skin.
Wash hands with soap and water after handling.

### FIRST AID

- Skin: Wash contaminated skin with soap and water.
- Eyes: Flush immediately with running water for at least 15 minutes, occasionally lifting the upper and lower eyelids. Seek medical help.
- Ingestion: Do not induce vomiting. If the person is conscious, have them drink several glasses of water or milk. Seek medical help.

### PHYSICAL ATTIBUTE

| | |
|---|---|
| PHYSICAL STATE: | Liquid |
| APPEARANCE: | Clear |
| COLOR: | Transparent |
| SCENT: | Chemical |
| PH: | 13.1 |
| DENSITY (25°C): | 1.1 |

### SECURITY

| | |
|---|---|
| HEALTH | 1 |
| FLAMMABILITY | 0 |
| REACTIVITY | 0 |
| PERSONAL ROTECTION | B |

| | |
|---|---|
| 0 = | NEGLIGIBLE |
| 1 = | LOW |
| 2 = | MODERATE |
| 3 = | HIGHT |
| 4 = | EXTREME |

**FIGURE 1: PRODUCT SHEET**

## IMAGES SHOWING THE CRACKING ISSUE

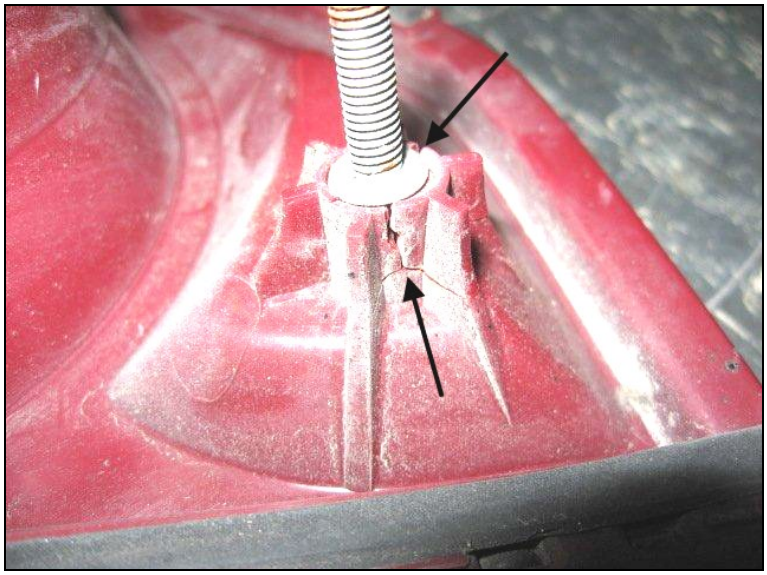

**FIGURE 2: Cracks at the boss and ribs due to the use of engine degreaser**

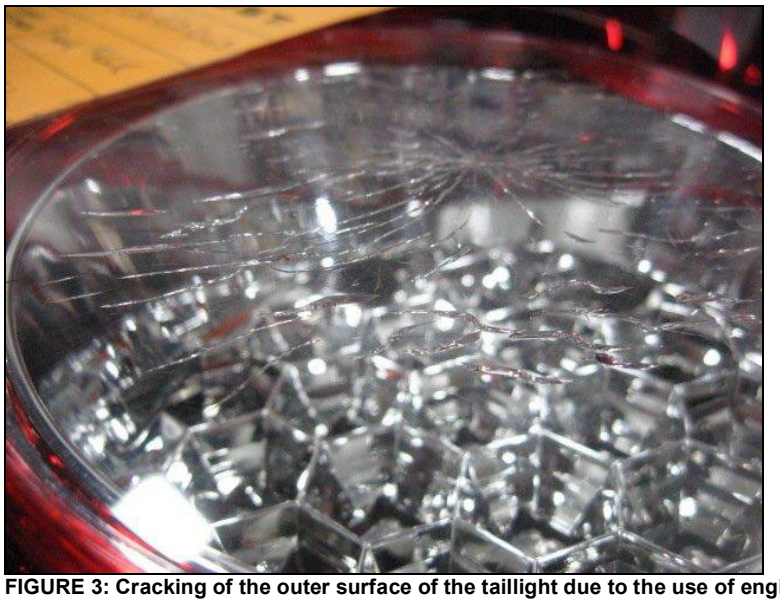

**FIGURE 3: Cracking of the outer surface of the taillight due to the use of engine degreaser**

*Access all our Service Bulletins on [https://secureus5.volvo.com/technicalpublications/en/pub.asp](https://secureus5.volvo.com/technicalpublications/en/pub.asp)*
*Or scan the QR-Code with your smart phone.*

*E-mail us at **technicalpublications_prev@volvo.com** and type "ADD" in the subject to receive our warranty bulletins by e-mail.*

# MAINTENANCE INFORMATION

**MI18-18B**

| | | |
|---|---|---|
| DATE : | June 2018 | SECTION : 18 BODY |
| SUBJECT : | **GENERAL HOISTING AND TOWING PROCEDURES** | |

Revision: B Updated 2.1 to show rubber chocks, secure front and rear. 2020-06-29

## APPLICATION

All Prevost vehicles models
Model Year : 2014 - Current

## DESCRIPTION

This maintenance information is for towing and hoisting Prevost vehicles.

Tower experience, local rules and regulations apply in conjunction with the procedures outlined in this document.

Images are for representation purpose only, actual vehicles may differ.

## Table of contents


**1. HOISTING AND TOWING POINTS ..... 2**

1.1 JACK STANDS ..... 3
1.2 AXLE HOISTING POINTS ..... 4
1.3 USING WHEELS AS LIFTING POINTS ..... 6
1.4 OPTIONAL CHASSIS HOISTING POINTS ..... 7

**2. TOWING ..... 9**

2.1 PREPARATION BEFORE TOWING ..... 9
*2.1.1 Engine compartment emergency air-fill valve ..... 10*
*2.1.2 X Series optional front air supply connections ..... 10*
*2.1.3 Drive Axle Flange Shaft Removal ..... 11*
*2.1.4 After Towing ..... 13*
2.2 TOWING FROM THE FRONT ..... 13
*2.2.1 First Lift ..... 14*
*2.2.2 Second Lift- Front Tow Eye Pads as Lifting Point for Towing ..... 15*
*2.2.3 Second Lift- Using I-Beam Front Axle as Lifting Point for Towing ..... 18*
2.3 X-SERIES RECOVERY USING OPTIONAL REAR TOW EYES ..... 22

**3. EMERGENCY TOWING ..... 23**

3.1 REAR TOW USING NON-APPROVED LIFTING POINTS - *EMERGENCY ONLY* ..... 23
*3.1.1 PRECAUTIONS ..... 23*
*3.1.2 FIRST LIFT ..... 24*
*3.1.3 SECOND LIFT ..... 25*
3.2 VOLVO *I-SHIFT* TRANSMISSION *TOWING MODE* ..... 29

## 1. HOISTING AND TOWING POINTS

As much as possible, use the wheels as the preferred lifting points. If lifting by the wheels is not possible or appropriate, there are several hoisting and towing points under the vehicle.

Lifting should be performed without passengers and no luggage remaining in the vehicle.

Use these points exclusively for hoisting and towing operations (Figure 1, Figure 2).

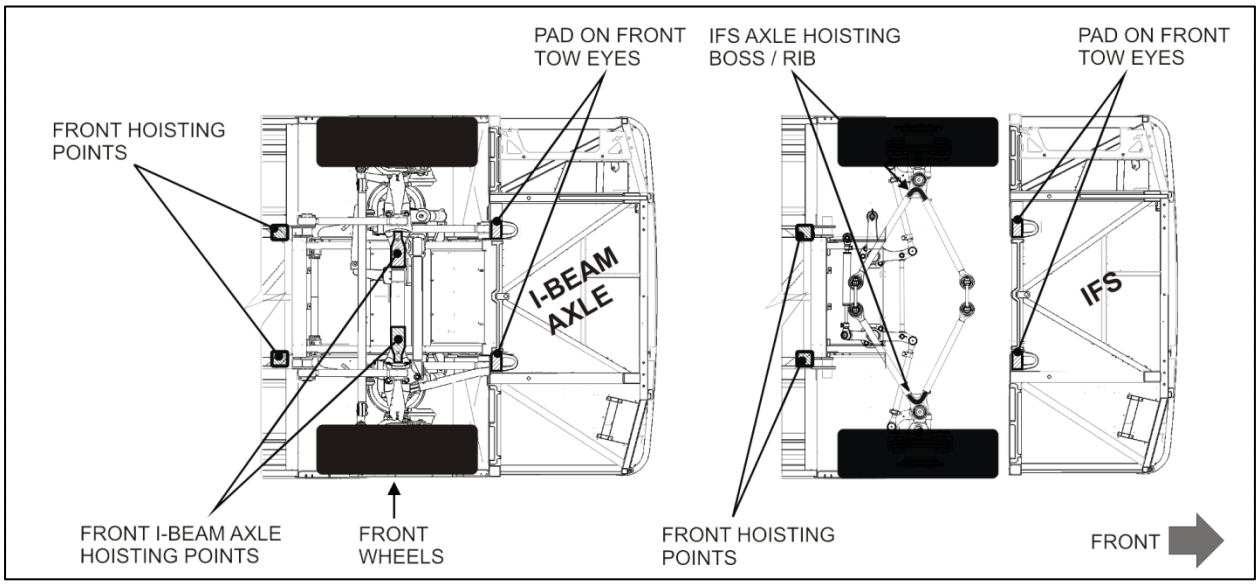


**FIGURE 1 *FRONT* HOISTING AND LIFTING POINTS DIAGRAM**

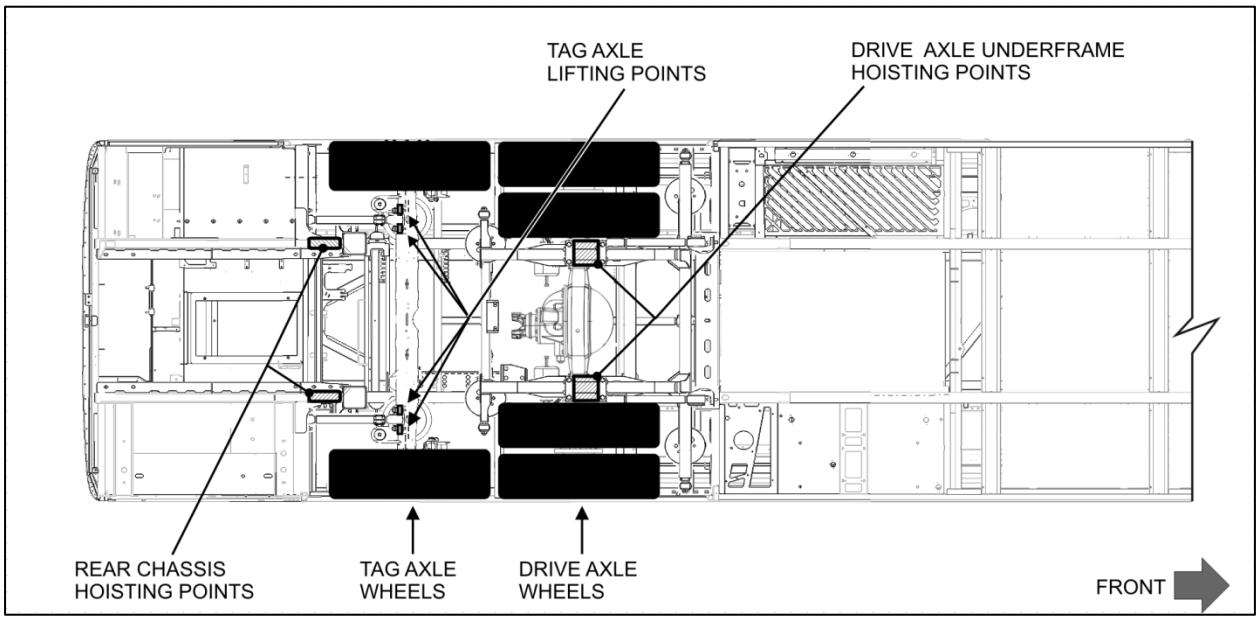


**FIGURE 2 *REAR* HOISTING AND LIFTING POINTS DIAGRAM**

The vehicle is provided with four standard chassis hoisting points. When axles or wheels are serviced, use the chassis hoisting points.

When using the chassis hoisting points to support the vehicle, **the tag axle must be unloaded at all times**. To prevent damage to the suspension, **always support the drive and front axles using jack stands** when using chassis hoisting points.

| CHASSIS HOISTING POINTS |
| --- |
| 2 hoisting points located aft of the tag axle (Figure3) |
| 2 hoisting points or optional hoisting pads with receptacles located aft of the front axle (Figure4) |



**FIGURE 3 : CHASSIS HOISTING POINTS - AFT OF TAG AXLE (BOTH SIDES)**

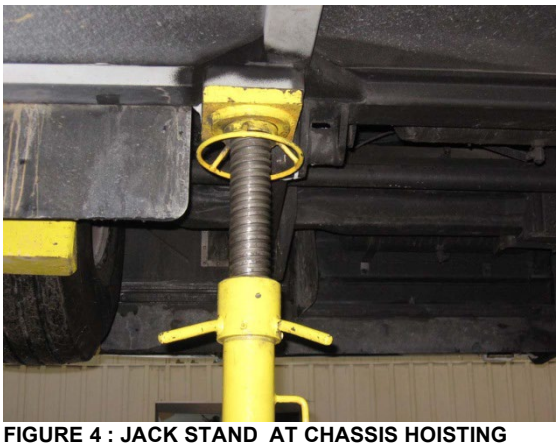

**FIGURE 4 : JACK STAND AT CHASSIS HOISTING POINT - AFT OF FRONT AXLE (BOTH SIDES)**

## 1.1 JACK STANDS

As a general recommendation, the minimum safe working load (SWL) for any jack stand should be 10 US tons (20 000 lb; 9072 kg). Figure5, Figure6 and Figure7 show general examples of this type of jack stand.

The vehicle can be supported at the chassis hoisting points (refer to HOISTING AND LIFTING POINTS diagram). Use a jack stand of 10 US tons (20 000 lb; 9072 kg) capacity at each of the four standard chassis hoisting points.

| ⚠ WARNING |
| --- |
| Hydraulic jacks are intended for lifting only. Do not get under the vehicle while using hydraulic jacks unless it is properly supported with safety jack stands. |



FIGURE 5 : 20 000 LB (10 US TON) CAPACITY JACK STAND



FIGURE 6 : 16500 LBF CAPACITY



FIGURE 7 : 40 000 LB (20 US TON) CAPACITY JACK STAND

## 1.2 AXLE HOISTING POINTS

| AXLE HOISTING POINTS |
|---|
| 2 front axle hoisting points (Figure8, Figure9, Figure10) |
| 2 drive axle sub frame hoisting points (Figure11) |
| 2 hoisting points under the tag axle (tag axle must be unloaded) (Figure12) |

**To ensure stability, always use the two hoisting points under a specific axle simultaneously**.

| **WARNING** |
|---|
| Two hoisting points are located under the tag axle. Using the tag axle as rear hoisting points for the vehicle should be avoided. When possible, use the drive axle as hoisting point. |

The vehicle can be lifted from the front axle and the drive axle sub frame using lifting equipment of appropriate capacity.

| APPROXIMATE WEIGHT PER AXLE | |
|---|---|
| **COACHES** | **MOTORHOMES / SPECIALTY VEHICLES** |
| Front axle: 12,000 lb. (5 443 kg)<br>Drive axle: 26,500 lb. (12 020 kg) | Contact the owner of the vehicle. The Gross Axle Weight Rating (GAWR) for the front and rear axle should not be exceeded.<br>GAWR values for a particular vehicle appear on the vehicle's certification plate installed on the driver's left-hand console. |

| **WARNING** |
|---|
| The suspension must be in the normal ride position before hoisting. |

| **WARNING** |
|---|
| To prevent damage to suspension components, always unload the tag axle before hoisting the vehicle. |

## FRONT AXLE HOISTING POINTS

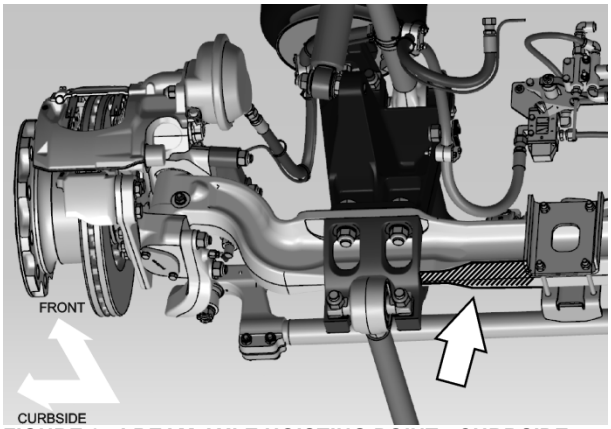


FIGURE 8 : I-BEAM AXLE HOISTING POINT - CURBSIDE

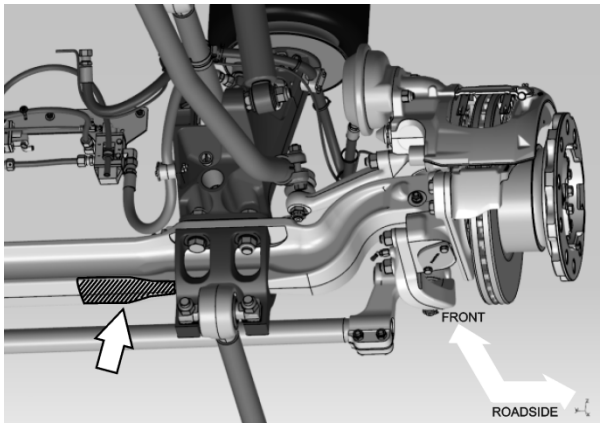


FIGURE 9 : I-BEAM AXLE HOISTING POINT – ROAD SIDE

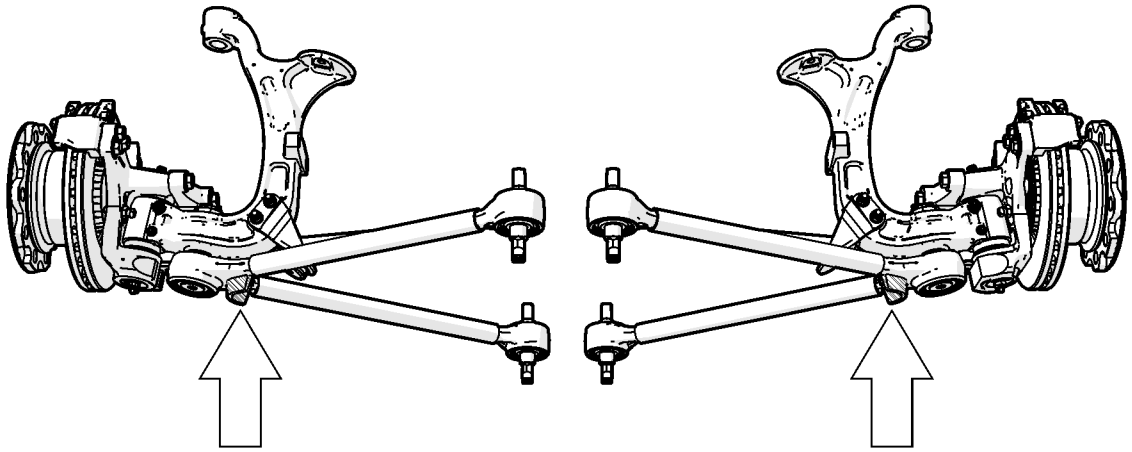

FIGURE 10 : INDEPENDENT FRONT SUSPENSION (IFS) HOISTING POINTS.

**DRIVE AXLE SUB FRAME HOISTING POINTS**

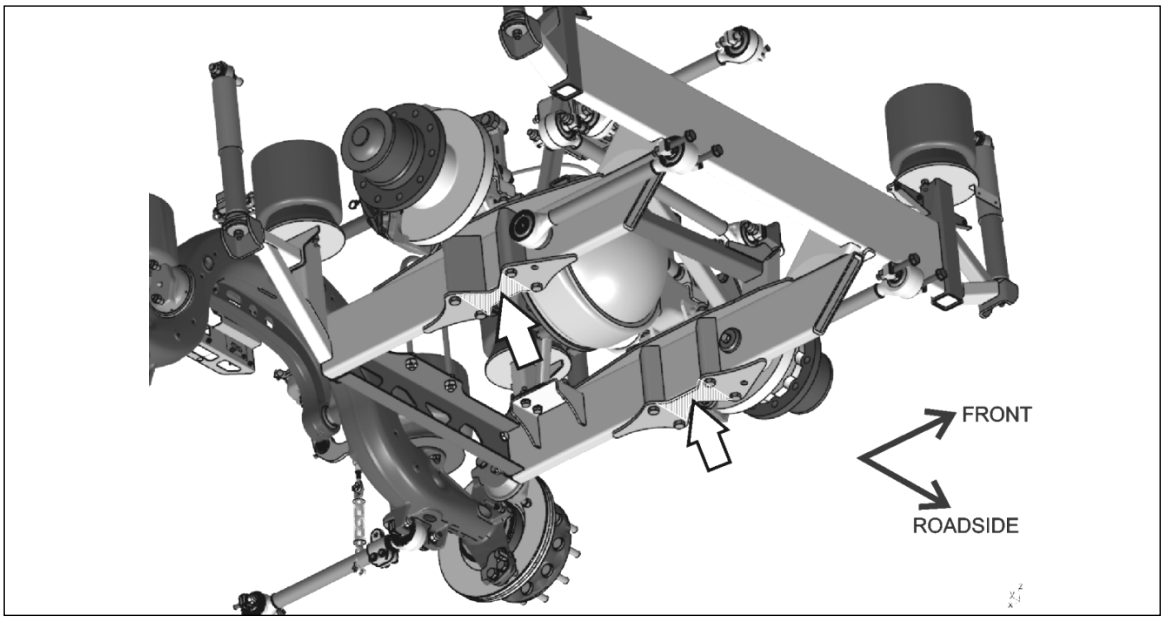


**FIGURE 11 : DRIVE AXLE SUB FRAME HOISTING POINTS.**

**TAG AXLE HOISTING POINTS**

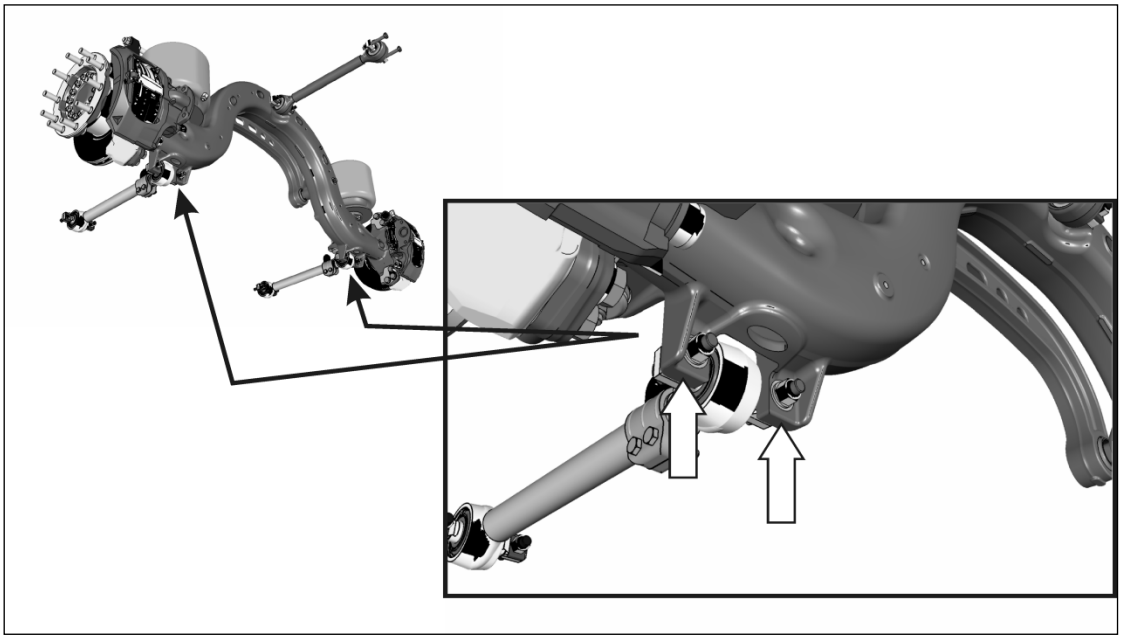

**FIGURE 12 : TAG AXLE HOISTING POINTS (USE ONLY TO SUPPORT THE TAG AXLE)**

## 1.3 USING WHEELS AS LIFTING POINTS

Use the front and drive axle wheels to lift the vehicle when using mobile column lifts. When doing so, the tag axle must be unloaded at all time.

Avoid using the tag axle wheels as the only lifting point for the rear of the vehicle. However, if the rear of the vehicle has to be lifted using the tag axle wheels, the tag axle must be unloaded at all times.

## 1.4 X-SERIES COMMUTER OPTIONAL CHASSIS HOISTING POINTS

On certain vehicles, lifting pads and rear emergency recovery toe eyes may be added on the chassis. When axles or wheels are serviced, use the chassis hoisting points.

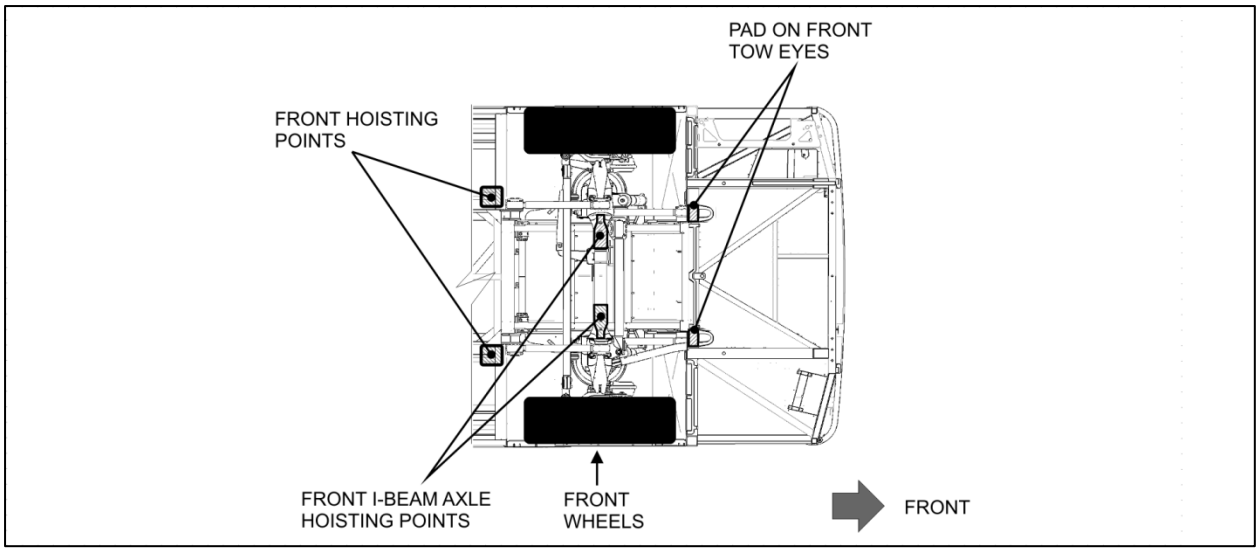


**FIGURE 13 : OPTIONAL FRONT CHASSIS HOISTING POINTS**

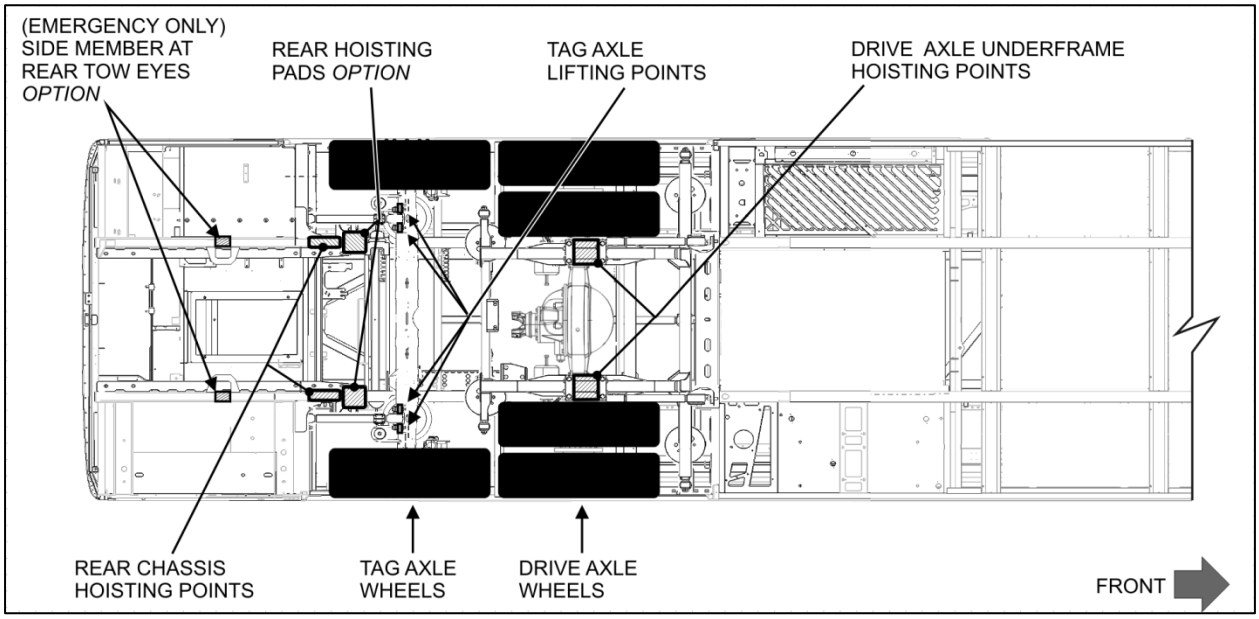


**FIGURE 14 : X-SERIES OPTIONAL REAR CHASSIS HOISTING POINTS**

When using the chassis hoisting points to support the vehicle, the tag axle must be unloaded at all times. To prevent damage to the suspension, always support the drive and front axles using jack stands when using chassis hoisting points.

| X-SERIES OPTIONAL CHASSIS HOISTING POINTS |
|---|
| 2 optional hoisting pads with receptacles located aft of the front axle (Figure16) |
| 2 optional hoisting pads with receptacles located aft of the tag axle (Figure15) |



**FIGURE 15 : OPTIONAL CHASSIS HOISTING RECEPTACLES - AFT OF TAG AXLE**



**FIGURE 16 : OPTIONAL CHASSIS HOISTING RECEPTACLES - AFT OF FRONT AXLE**



**FIGURE 17 : JACK STAND AT CHASSIS HOISTING RECEPTACLE - AFT OF FRONT AXLE, ROAD SIDE**



**FIGURE 18 : JACK STAND AT CHASSIS HOISTING RECEPTACLE - AFT OF FRONT AXLE, CURB SIDE**



**FIGURE 19 : JACK STAND AT CHASSIS HOISTING RECEPTACLE – AFT OF TAG AXLE, ROAD SIDE**



**FIGURE 20 : JACK STAND AT CHASSIS HOISTING RECEPTACLE – AFT OF TAG AXLE, CURB SIDE**

## 2. TOWING

Towing from the front is the recommended method. Prevost does not recommend towing from the rear using unapproved hoisting points as the vehicle may sustain structural damage.

Observe normal precautions including, but not limited to list below:

- Make sure the parking brake or the emergency brake is released at time of towing.
- Do not allow passengers to ride on board.
- Tow the vehicle at a safe speed.
- Accelerate and decelerate slowly and cautiously.
- Avoid sharp turns where possible.

**WARNING**

Do not carry passengers while the vehicle is being towed.

**CAUTION**

Avoid towing the vehicle from the rear using hoisting points that are not approved as this will cause structural damage. In case of damage to the drive train components use a low-bed semi-trailer.

**WARNING**

Engage the parking brake to prevent the vehicle from moving before you begin maintenance or service procedures that require you to be under the vehicle. Serious personal injury can result.

**CAUTION**

Lift the vehicle at the minimal height required for the vehicle to trail the tow truck.

### 2.1 PREPARATION BEFORE TOWING

**WARNING**

Prior to hoisting, park the vehicle on a level surface and apply parking brake.

Chock the *front and rear* wheels to prevent the vehicle from moving at time of releasing the parking brake during the towing preparation.

On the L.H. dashboard panel, turn on the hazard warning flashers. Preferably, use a towing light bar.



**FIGURE 21 CHOCK THE FRONT AND REAR WHEELS**

Place the front wheels in a straight-ahead position and keep the steering wheel from turning. To do so, slide the driver's seat close to the steering wheel. Wrap the safety belt around and through the steering wheel and then fasten safety belts.

This will ensure the vehicle rolls in straight direction to be stopped by the tow truck in case of mechanical failure of the lifting equipment.



**FIGURE 22**

### 2.1.1 Engine compartment emergency air-fill valve

Use the emergency fill valve to supply air to the system when the engine cannot be operated. This valve is located in the engine compartment (Figure23) and supplies air for all systems (brakes, suspension and accessories).

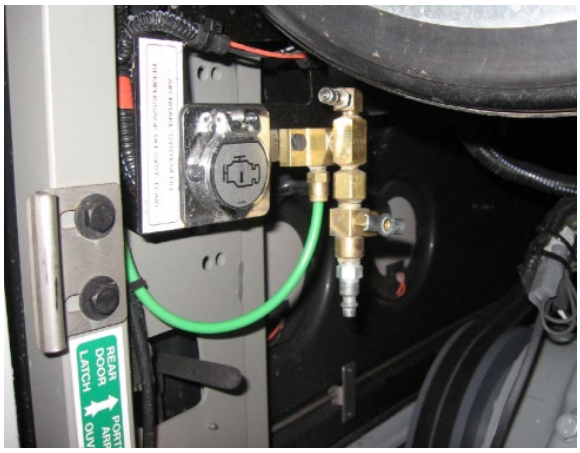


**FIGURE 23 : ENGINE COMPARTMENT EMERGENCY AIR-FILL VALVE**

> **CAUTION**
>
> Do not tow the vehicle without external air pressure applied to the emergency fill valve if the engine does not operate. Without brake system air pressure, the emergency spring brakes may apply automatically. If failure prevents releasing the parking brakes with air pressure, disengage the parking brakes mechanically.

### 2.1.2 X Series Optional Front Air Supply Connections

Operate the engine when towing to maintain brake system air pressure. If the engine cannot be operated, connect external air pressure lines from the tow truck.

**"Brake" quick connect fitting**

Flip down the access door located on the front bumper, connect an auxiliary air supply from the tow truck to the quick connect fitting identified BRAKE in order to supply air for operation of the vehicle **service brake** from the tow truck (Figure24, Figure25).

**"Air supply" quick connect fitting**

While the vehicle is being towed, connect an auxiliary air supply from the tow truck to the quick connect fitting identified AIR SUPPLY to supply air for all systems (brakes, suspension, accessories) through the air dryer (Figure24, Figure25).




FIGURE 24

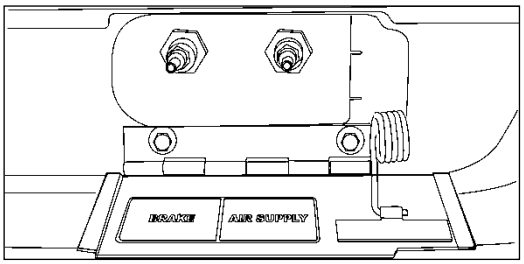


**FIGURE 25 : FRONT TOWING AIR SUPPLY ACCESS PANEL QUICK CONNECT FITTINGS**

### 2.1.3 Drive Axle Flange Shaft Removal

1. Apply the parking brake.
2. Remove the stud nuts and the washers (with Meritor drive axle) or cap screws (with ZF drive axle) from the flange shaft.

   **NOTE: there is oil behind the flange shaft which comes out during disassembly**

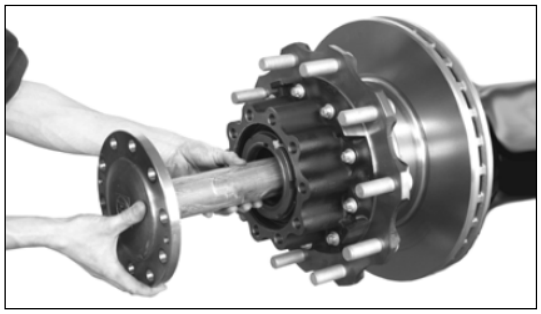

**FIGURE 26 : ZF A-132 AXLE**

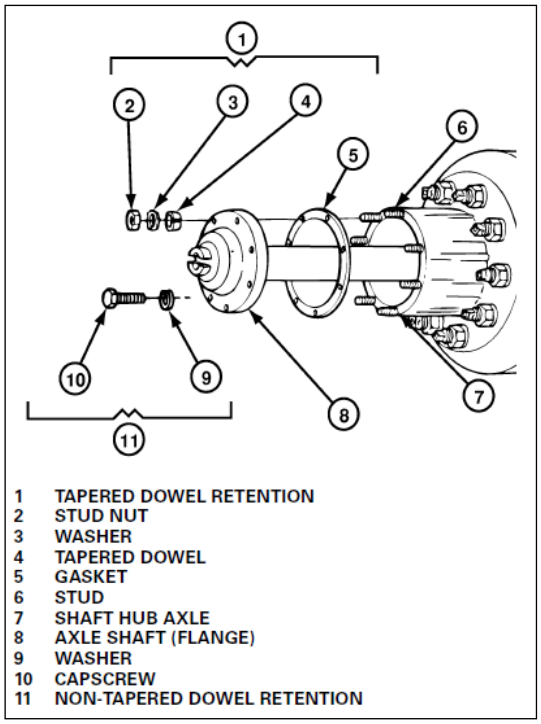


1 TAPERED DOWEL RETENTION
2 STUD NUT
3 WASHER
4 TAPERED DOWEL
5 GASKET
6 STUD
7 SHAFT HUB AXLE
8 AXLE SHAFT (FLANGE)
9 WASHER
10 CAPSCREW
11 NON-TAPERED DOWEL RETENTION

**FIGURE 27: MERITOR RC23-165 AXLE**

## CAUTION

Do not use a chisel or wedge to loosen the axle flange shaft and tapered dowels. Using a chisel or edge can result in damage to the axle shaft, the gasket and seal, and/or the axle hub.

3. Meritor axle: Loosen the tapered dowels in the flange of the axle shaft using the following methods.
   a) Do not strike the round driving lugs on the flange of an axle shaft. Pieces can break off and cause serious personal injury. A 1.5-inch (38.1 mm) diameter brass hammer can be used as a drift.
   b) Hold a 1.5-inch (38.1 mm) diameter brass drift against the center of the axle shaft flange, **inside the round driving lugs.**
   c) Hit the end of the drift with a large hammer (5 to 6 lbs.') to loosen the axle shaft and tapered dowels from the hub.
4. Identify each axle shaft that is removed from the axle assembly so they can be installed in the same location after transporting or repair is completed. (Example: Match mark a mating axle shaft and hub).

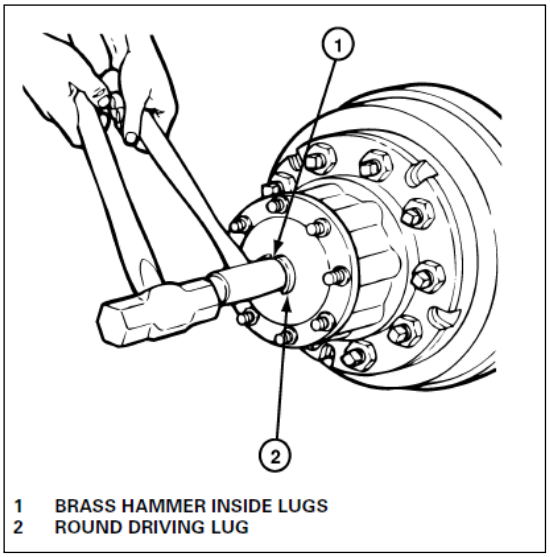


1 BRASS HAMMER INSIDE LUGS
2 ROUND DRIVING LUG

**FIGURE 28: MERITOR RC23-165 AXLE**

5. Remove the tapered dowels (if used), gasket or O-ring and the axle shaft from the axle assembly. Use a container to recover the oil.
6. Remove opposite flange shaft similarly.
7. Install a temporary cover over the open end of each hub where an axle shaft was removed. This will prevent dirt from entering the bearing cavity and loss of lubricant.

### 2.1.4 After Towing

1. Remove the covers from the hubs.
2. Install the gasket or O-ring, and axle shaft into the axle housing and carrier in the same location it was removed from. The gasket and flange of the axle shaft must be flat against the hub. Rotate the axle shaft and/or the driveline as necessary to align the splines and the holes in the flange with the studs or holes in the hub.
3. **Meritor axle only:** Install the dowels over each stud and into the tapered holes of the flange.
4. Install the washers and stud nuts or cap screws.

| MERITOR RC23-165 AXLE | ZF A-132 AXLE |
|---|---|
| Determine the size of the fasteners and tighten the nuts to the corresponding torque value shown below.<br>• 9/16-18 plain nuts: **110 - 165 lbf-ft** (149-224 Nm)<br>• 5/8-18 plain nuts: **150 - 230 lbf-ft** (203-312 Nm) | Tightening torque M18x1.5 G10.9 screw<br>**325 lbf-ft** (440 Nm) |

5. Mount opposite flange shaft similarly.
6. Inspect the lubricant level in the axles and hubs where the axle shafts were removed. Add the correct type and amount of lubricant if necessary.

**CAUTION**

Make sure axle shafts or driveshaft are installed correctly after towing. Tighten axle shaft and driveshaft nuts to the correct torque settings. Do not invert shafts.

## 2.2 TOWING FROM THE FRONT

The towed vehicle must be lifted from the front with front wheels off the ground. The tow truck must be equipped with the proper lifting equipment i.e. tow bar, axle forks and holders to reach under the ***front axle*** or the ***front tow eye pads***. No other lifting points are recommended for towing.

Lifting and towing from any other point is not authorized as it may cause structural damage. **To prevent overloading the drive axle, do not unload or raise the tag axle when towing the vehicle**.

To prevent damage to the vehicle, use the ***front tow eye pads*** fixed to the vehicle chassis between the front axle and the front bumper. Only use a solid link tow bar and safety chains to tow the vehicle.

1. Block the wheels to prevent the vehicle from moving.
2. Perform the PREPARATION BEFORE TOWING. Refer to paragraph 2.1.
3. Disconnect both drive axle shafts to prevent damage to the transmission. Plug axle tubes to prevent oil loss. Refer to 2.1.3 DRIVE AXLE FLANGE SHAFT REMOVAL.

## CAUTION

The axle shafts must be disconnected to avoid serious damage to the Allison transmission. Lubrication is inadequate when towing.

To prevent damage to the drive train components, disconnect drive axle shafts before towing. Do not attempt to push or pull start a vehicle equipped with an automatic transmission.

**Failure to disconnect the propeller shaft, remove the drive axle shafts or lift the drive wheels off the ground before towing can cause serious transmission damage and void the warranty.**

### 2.2.1 First Lift

To allow lifting equipment fitted with axle forks to reach under the front axle or tow eyes, it is necessary to perform a first lift of the front of the vehicle using the tow eye pads as lifting points. This first lift will allow tow cans or blocks to be placed underneath front tires.

1. Retract the tow truck stinger arm.
2. On the first lift, position the tow bar fork holders under the front tow eye pads (Figure 30 and Figure 31) to lift the vehicle in order to place the front wheels firmly on the tow cans or blocks.

*Center to center measurement between tow eyes= 37 inches (*Figure 29*)*

***Note: No axle forks are needed for this first lift***




**FIGURE 29**

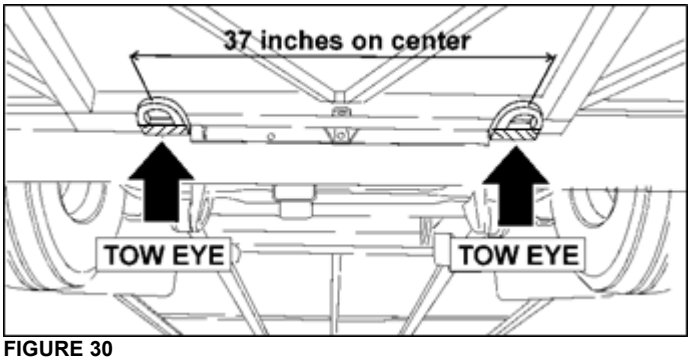


**FIGURE 30**



**FIGURE 31:** TOW EYE

3. Deploy the tow truck stinger arm, placing the axle fork holders under the tow eye pads (Figure 32).

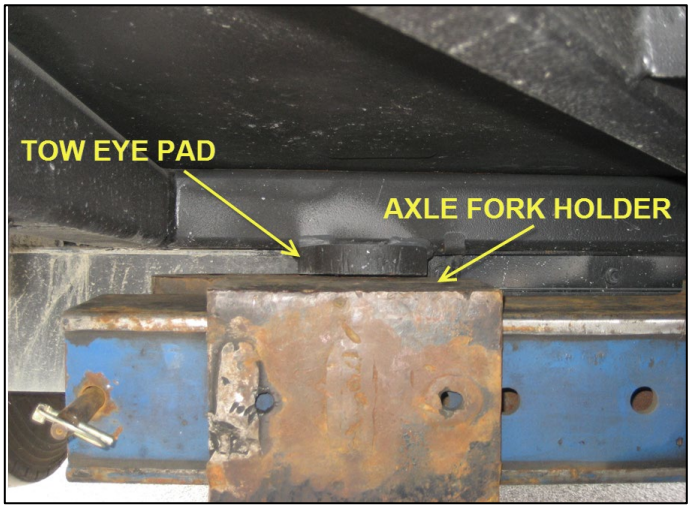


**FIGURE 32**

4. Lift the front end of the vehicle high enough to allow installation of tow cans or blocks. Place the tow cans or blocks perfectly centered underneath each front wheel (Figure 33).
5. With precaution, lower the front of the vehicle



**FIGURE 33**

### 2.2.2 Second Lift- Front Tow Eye Pads as Lifting Point for Towing

The tow eye pads are fixed to the vehicle chassis, fore of the front axle will be used as front end lifting points for towing.

1. Perform the first lift as instructed in paragraph 2.2.1 if not already done.

2. Place the axle forks on the tow bar fork holders (Figure 34).

**Use 3" to 4 ½" mouth axle forks preferably**



**REGULAR**

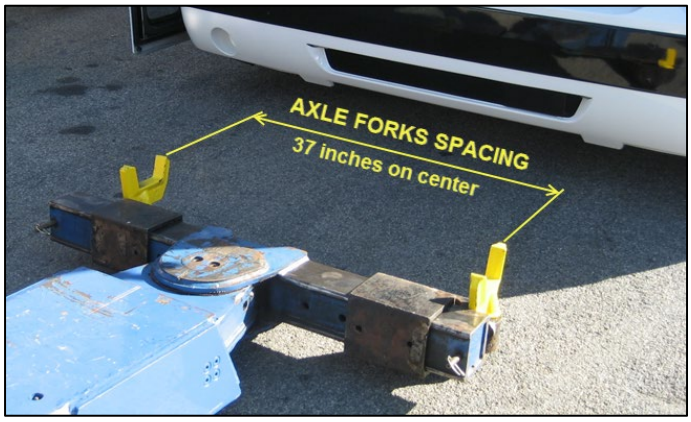


**FIGURE 34**

***Pre-adjust spacing between axle forks to = 37 inches***

3. Lower the tow bar and position under the front tow eye pads.

4. Adjust fork holder's position and hand guide the forks into each front tow eye. (Figure 35)

5. Lift the tow bar until the axle forks fit snugly into the front tow eyes (Figure 35).

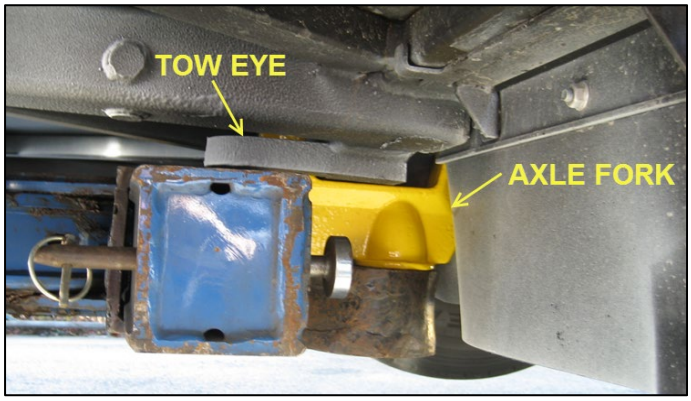


**FIGURE 35**

6. Raise the front of the vehicle.

7. Install a jack stand under the stinger arm for support and safety purposes and then lower the stinger arm so it rests on the jack stand (Figure 36). The tow cans or blocks can be removed from under the front axle wheels.

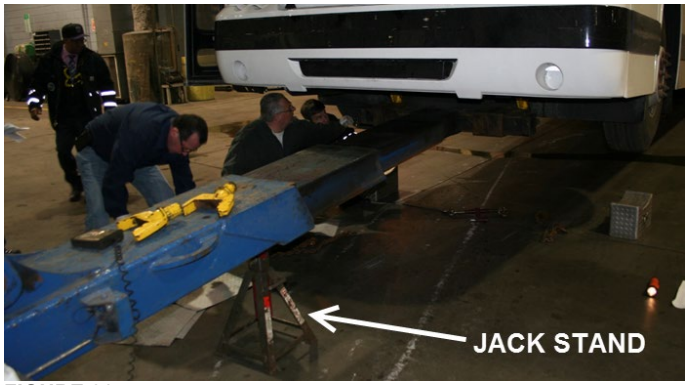


**FIGURE 36**

8. Tie the two choke chains together to secure the tow eyes to the tow bar attachment (Figure 38).

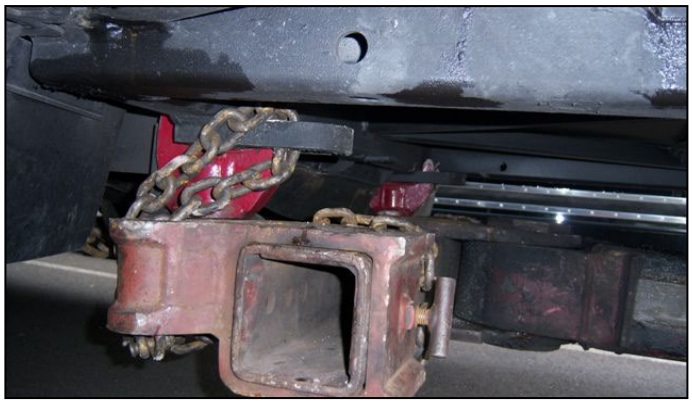

**FIGURE 37**

9. Attach the two tow truck safety chains from each of the two front lower radius rods (Figure 38) of the vehicle to the truck's tow eyes (Figure 38).



**FIGURE 38**

10. Confirm air is supplied to the vehicle. See 2.1 PREPARATION BEFORE TOWING



**FIGURE 39**

11. Raise the stinger arm and remove the support jack stand.
12. Lower the vehicle. The front tires should be 7″ to 8″ above the ground before the tow can proceed.
13. Use bungee cords to support the safety chains (Figure 40).



**FIGURE 40**

14. If required, use the appropriate jig to assure that the highest point on the vehicle **does not exceed** the maximum allowable height for towing (Figure 41).
15. Make sure the **parking brake** is released before moving the vehicle.
16. Observe safety precautions when towing.



**FIGURE 41**

***Avoid sharp turns where possible as safety chains may rub and damage the front bumper (***Figure 42***)***



**FIGURE 42**

### 2.2.3 Second Lift- Using I-Beam Front Axle as Lifting Point for Towing

This method uses the I-beam axle as lifting points for towing (Figure8 and Figure9).

1. Perform the first lift as instructed in paragraph 2.2.1 if not already done.

2. Install regular axle forks onto tow bar fork holders.



TALL REGULAR

***Pre-adjust spacing between axle forks***

Minimum spacing: 25 inches

Maximum spacing: 33 inches

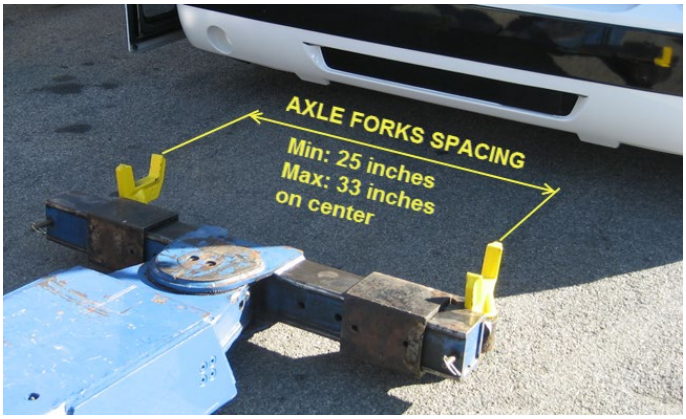


**FIGURE 43**

3. Lower the stinger arm to position the axle forks under the front axle hoisting points (Figure8 and Figure9).

4. Lift the tow bar until the axle forks grab the front axle I-beam at the hoisting points (Figure 44).

5. Raise the front of the vehicle.

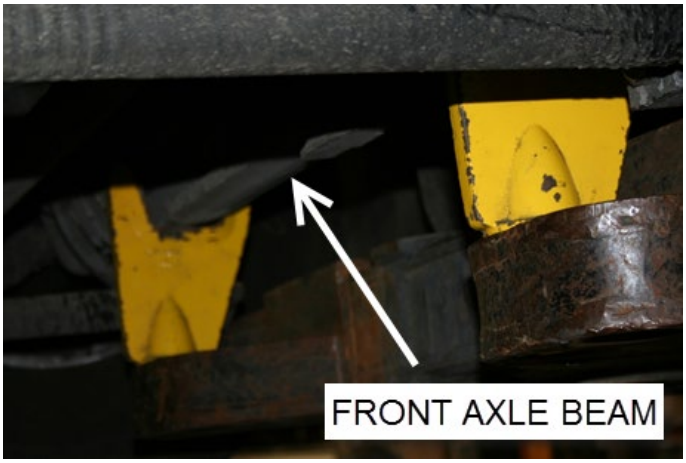


**FIGURE 44**




**FIGURE 45**

6. Install a jack stand under the stinger arm for support and safety purposes and then lower the stinger arm so it rests on the jack stand (Figure 47). The tow cans or blocks can be removed from under the front axle wheels.
7. Tie the two choke chains together to secure the front axle to the tow bar. Take up any slack that may remain and maintain proper tension on chains.

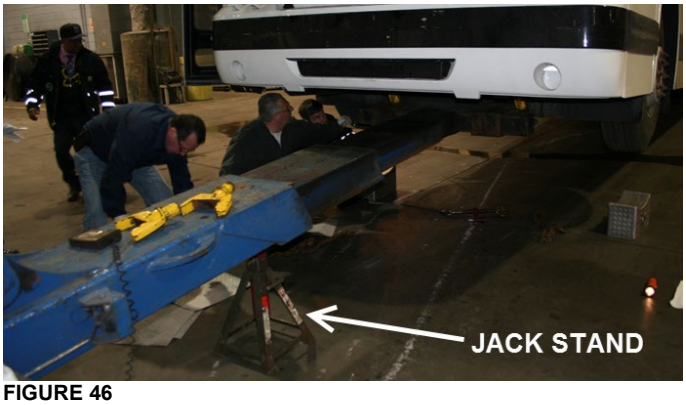

**FIGURE 46**

8. Attach the two tow truck safety chains from each of the two front tow eyes of the vehicle to the truck's tow eyes (Figure 47 and Figure 48).
9. Confirm air is supplied to the vehicle. See 2.1 PREPARATION BEFORE TOWING.


**FIGURE 47**

10. Raise the tow bar in order to remove the jack stand from under the stinger arm.
11. Lower the vehicle. The front tire should be about 7″ to 8″ above the ground before the tow can proceed.


**FIGURE 48**

12. Use bungee cords to support the safety chains (Figure 49).



**FIGURE 49**

13. Make sure that the **parking brake** is released before moving the vehicle.
14. Observe safety precautions when towing.




**FIGURE 50**

***Avoid sharp turns where possible as safety chains may rub and damage the front bumper (***Figure 51***)***



**FIGURE 51**

**CAUTION**

Make sure a safe distance is kept between the front of the vehicle and the tow truck. This space ensures that vehicle does not suffer damages when being towed.

**CAUTION**

Make sure axle shafts or driveshaft are installed correctly after towing. Tighten axle shaft and driveshaft nuts to the correct torque settings. Do not invert shafts.

**DANGER**

Do not carry passengers while the vehicle is being towed.

## 2.3 X-SERIES RECOVERY USING OPTIONAL REAR TOW EYES

Optional rear tow eyes allow recovery of a vehicle that is no longer on a drivable surface. Chains can be looped around or hooked to these rear tow eyes.

**CAUTION**

This recovery method should be used only for a short distance with all vehicle wheels on the ground

After the vehicle has been brought back on a drivable surface, it should be lifted and towed from the front, with front wheels off the ground.

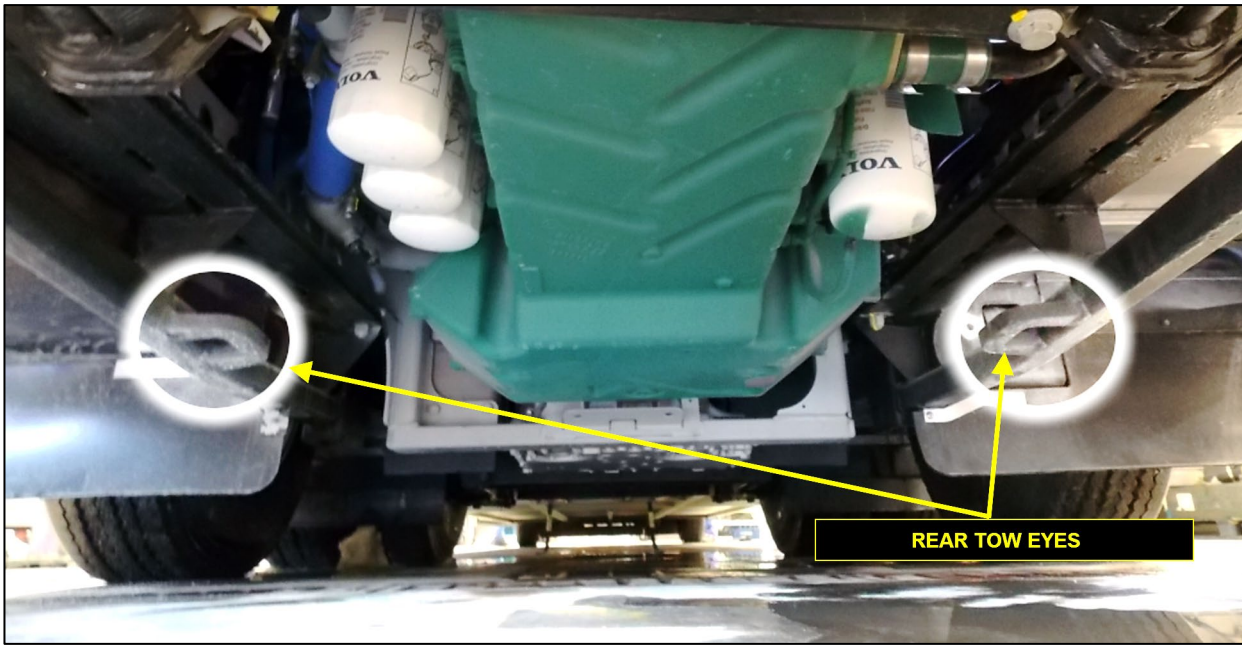


**FIGURE 52 :** OPTIONAL REAR TOW EYES ON SIDE MEMBERS UNDER ENGINE CRADLE SUPPORT RAILS

## 3. EMERGENCY TOWING

If the vehicle must be moved and standard towing procedures cannot be used, follow the alternate towing procedures below.

### 3.1 REAR TOW USING NON-APPROVED LIFTING POINTS - *EMERGENCY ONLY*

> **CAUTION**
>
> The vehicle should **NOT** be lifted and towed from the rear in normal situations.
>
> In an emergency, however, it can be moved from the rear over a very short distance such as in a parking lot or to place the vehicle back on pavement.
>
> Lifting the rear end from the engine cradle or from the side members located under the engine cradle support rails should be avoided. Doing so may cause structural damage (see image further in this document).

#### 3.1.1 PRECAUTIONS

**In an emergency or if the vehicle has to be moved over a short distance, the side members may be used as lifting point. Try to lift from the strongest location along the side members which is near the rear sub-frame vertical member (**Figure 53**).**

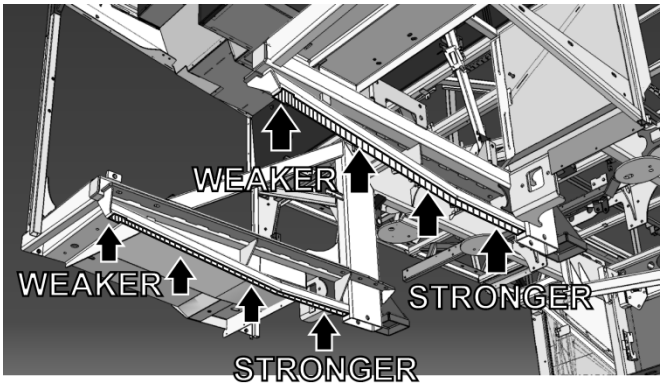


**FIGURE 53**: UNAPPROVED LIFTING POINTS FOR REAR END TOWING – SIDE MEMBERS LOCATED UNDER THE ENGINE CRADLE SUPPORT RAILS

Lift with precautions as the vehicle may sustain structural damage at the vertical structure shown on the image at right (Figure 54).

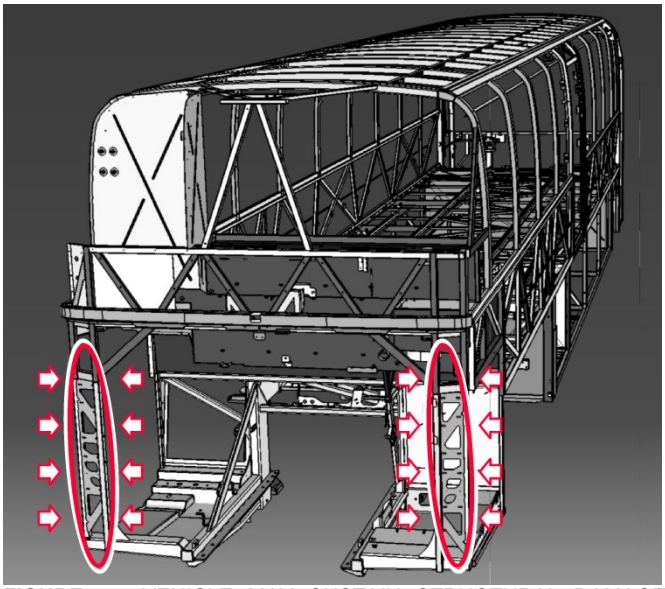

**FIGURE 54**: VEHICLE MAY SUSTAIN STRUCTURAL DAMAGE WHERE INDICATED WITH ARROWS DURING TOWING FROM THE REAR

**DANGER**

Do not carry passengers while the vehicle is being towed.

### 3.1.2 FIRST LIFT

A first lift of the vehicle is required. This first lift will allow tow cans or blocks to be placed underneath the drive axle tires.

1. Prepare the vehicle for towing as instructed in paragraphs 2.1 and 2.1.1
2. If not already done, chock the front wheels.
3. Retract the tow truck stinger arm (Figure 55).
4. Pre-adjust spacing between the axle fork holders. The spacing between the most distant edges of the folk holders should be **30 inches** (Figure 55).

   ***No axle forks will be used for this first lift***



TALL REGULAR

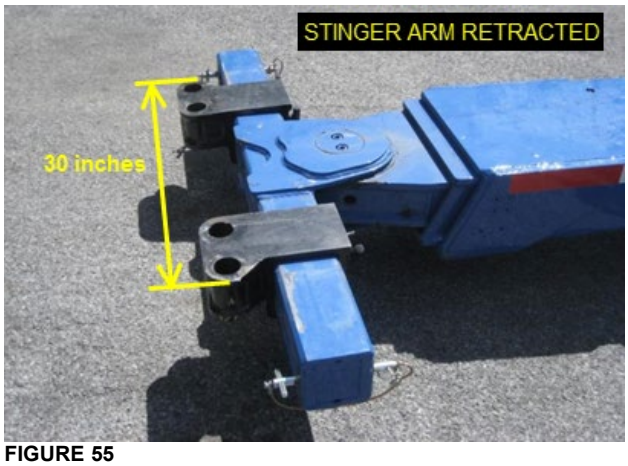


FIGURE 55

5. Deploy the tow truck stinger arm. Place the fork holders under the engine cradle transverse beam as shown on Figure 56. Lift the tow bar until the fork holders come into contact with the cradle transverse beam.

   ***Lifting from the engine cradle is the least preferred option and should be done only if lifting from under the side members shown on*** Figure 53 ***cannot be achieved***

**CAUTION**

Remember, lifting the rear end from the side members located under the engine cradle or by the engine cradle itself may cause structural damage.

**CAUTION**

Use caution when lifting from the engine cradle transverse beam. Maintain the vehicle in that situation during the shortest period of time.




FIGURE 56

6. Raise the tag axle to prevent it from hanging unsupported.

7. On X-Series commuter vehicles only, the tag axle air valve lever is located in the front service compartment. Move it forward as shown on Figure 57.

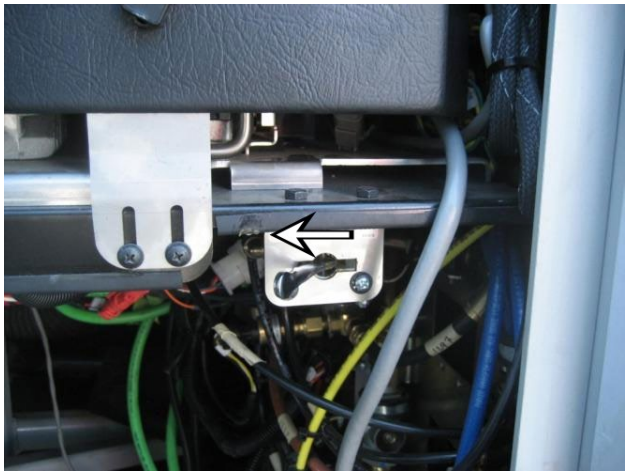

**FIGURE 57:LOCATION OF COMMUTER TAG AXLE AIR VALVE**

8. Lift the rear end of the vehicle high enough to allow installation of tow cans or blocks underneath the drive axle wheels (Figure 58).
9. With precautions, lower the rear of the vehicle.



**FIGURE 58: TOW CAN**

### 3.1.3 SECOND LIFT

1. Perform the first lift as instructed in paragraph 3.2 if not already done.
2. Retract the tow truck stinger arm.
3. Pre-adjust spacing between the axle fork holders to **43 inches**.




**FIGURE 59**

4. Install either long or short axle forks into fork holders.

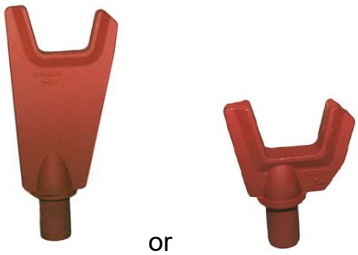

**TALL** or **REGULAR**

5. Deploy the tow truck stinger arm. Place the axle forks under the rear tow eyes if equipped or under the side members (Figure 60).

   Place the forks in a transversal position i.e. perpendicularly to the side members (Figure 61).

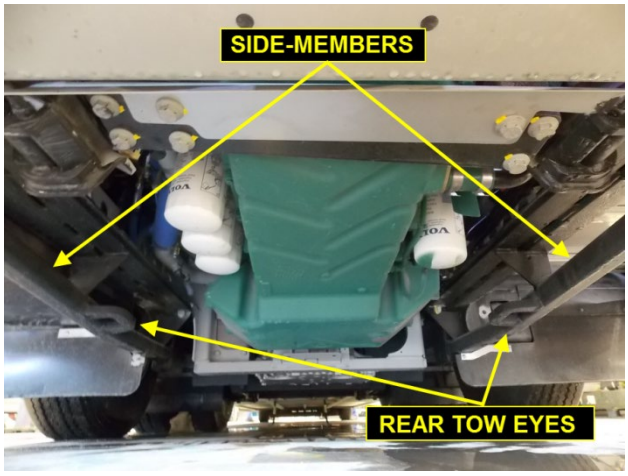


**FIGURE 60:** REAR TOW EYES ON SIDE MEMBERS LOCATED UNDER ENGINE CRADLE SUPPORT RAILS

6. Lift the tow bar until the axle forks grab the side members (Figure 61).

   If equipped with rear tow eyes, lift the tow bar until the axle forks fit snuggly into the side-members tow eyes.

   ***Avoid lifting at the side-members further toward the rear of the vehicle (close to the bumper)***

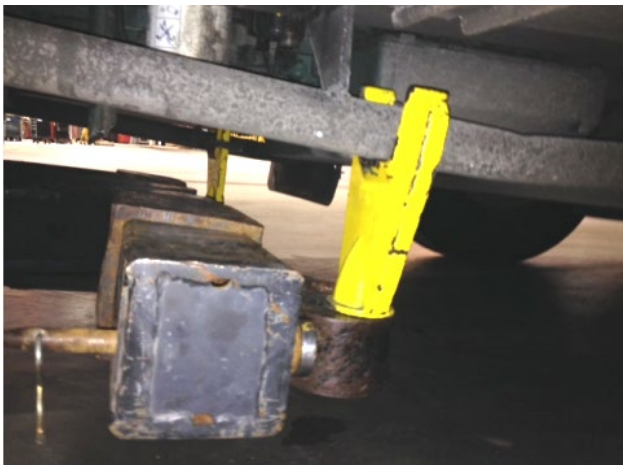

**FIGURE 61 :** PROPER LOCATION WHEN LIFTING THE SIDE MEMBERS

7. Place the fork's shorter finger outboard for better clearance (see Figure 62).




**FIGURE 62 :** PROPER LOCATION WHEN LIFTING THE SIDE MEMBERS – VEHICLE EQUIPPED WITH REAR TOW EYES

8. Raise the rear of the vehicle.
9. Install a jack stand under the stinger arm for support and safety purposes and then lower the stinger arm so it rests on the jack stand (Figure 63). The tow cans or blocks can be removed from under the drive axle wheels.



**FIGURE 63**

10. Install the choke chains. Tie the two choke chains together to secure the side members to the tow bar (Figure 64 and Figure 65). Take up any slack that may remain and maintain proper tension on chains.



**FIGURE 64**

11. Shorten the stinger arm to the safest minimum distance between the vehicle and the tow truck to allow the towed vehicle to be as close as possible to the truck yet allowing enough room for the vehicle to avoid collision with the tow truck during turns.

    **Stinger to the rear bumper: Between 59″ and 63″**



**FIGURE 65**

12. Attach the two tow truck safety chains from the vehicle engine cradle cross-member to the truck's tow eyes (Figure 66).
13. Raise the stinger arm and remove the support jack stand.
14. Lower the vehicle. The drive axle tires should be 5″ to 6″ above the ground before the short distance tow can proceed.



**FIGURE 66**

### 3.2 VOLVO *I-SHIFT* TRANSMISSION *TOWING MODE*

The procedure will activate "*tow mode"* on the transmission and will allow the vehicle to be towed flat on all wheels without having to remove the driveshaft.

| **CAUTION** |
|---|
| Check vehicle **VIN** before starting. Earlier vehicles do not have the proper software. |

**This special procedure applies to:**

| Model | VIN   |
|---|---|
| All X Series Vehicles<br>Model Year : 2014 - | *With I-shift gearbox*<br>From 2PCG33497**E**C73**5459** up to Current Vehicles |
| All H Series Vehicles<br>Model Year : 2013 - | *With I-shift gearbox*<br>From 2PCH33499**D**C71**2364** up to Current Vehicles |

| **CAUTION** |
|---|
| **Forward towing only!** Reverse towing (backing-up) is not allowed with this procedure or damage to the gearbox will occur. |

| **CAUTION** |
|---|
| This procedure should be used in emergency only.<br>This procedure does not have any visual indicator, therefore, make sure all steps of the procedure are fulfilled, or transmission damage may occur. |

Towing gear **3 HR** will be engaged if conditions below are fulfilled in the following sequence:

- **A.** *Ignition key must be in the "**ON**" position*
- **B.** *Engine not running*
- **C.** *Adequate **air pressure to the gearbox**/ Vehicle must have **electrical power***
- **D.** *Shift pad must be in **neutral***
- **E.** *Vehicle must be towed FORWARD only*

## PARTS / WASTE DISPOSAL

Discard according to applicable environmental regulations (Municipal/State[Prov.]/ Federal)

*Access all our Service Bulletins on http://techpub.prevostcar.com/en/*
*Or scan the QR-Code with your smart phone*
*.*

**Are you a vehicle owner?**
*E-mail us at **technicalpublications_prev@volvo.com** and type "ADD" in the subject to receive warranty bulletins applicable to your vehicle(s) by e-mail.*

PREVOST

# MAINTENANCE INFORMATION

**MI23-03**

| | | |
|---|---|---|
| DATE : | May 2023 | SECTION : 18 BODY |
| SUBJECT : | **DASHBOARD COVERS REMOVAL PROCEDURE** | |

First Release 05-31-2023

## APPLICATION

| Model | VIN  |
|---|---|
| H3-45 coaches<br>Model Year: 2024 - … | From 2PCH3349X***R***C72***1453*** |
| H3-45 VIP motorhomes<br>Model Year: 2023 - … | From 2PCVS3499***P***C72***1348*** |

## DESCRIPTION

Perform the following procedure to remove the dashboard covers. Reinstallation is similar to removal but in reverse order.

## Table of contents


SAFETY PRECAUTIONS....2
PART 1 - INSTRUMENT PANEL COVER REMOVAL....3
PART 2 - DASHBOARD COVER REMOVAL....5
PART 3 - RIGHT SIDE OF THE DASHBOARD – ACCESS PANEL REMOVAL....7
PART 4 - RIGHT SIDE OF DASHBOARD REMOVAL....9

## SAFETY PRECAUTIONS

- Eye protection should always be worn when working in a shop.
- Rules for Personal Protection Equipment should always be respected. Wear your PPE including but not limited to the following:

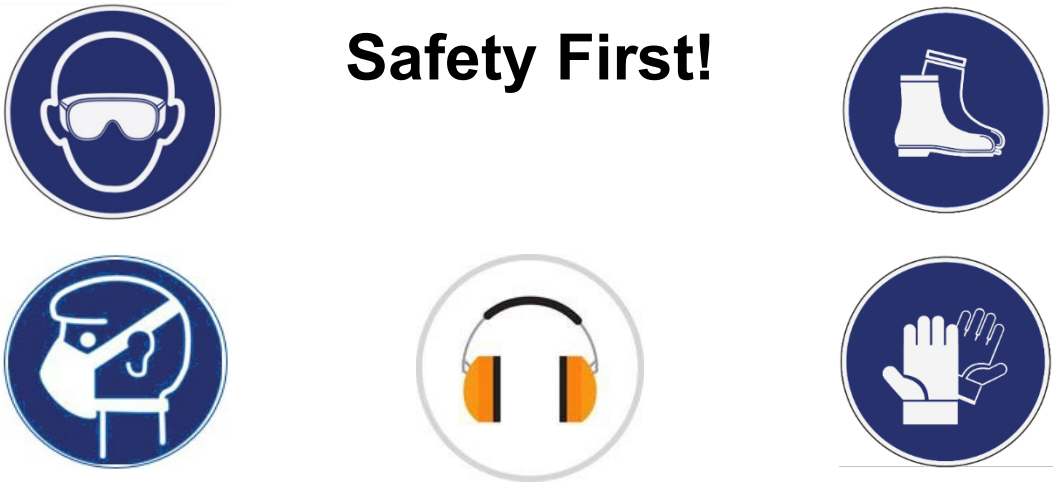


**DANGER**

Park vehicle safely, apply parking brake, stop the engine. Prior to working on the vehicle, set the ignition switch to the OFF position and trip the main circuit breakers equipped with a trip button. On Commuter type vehicles, set the battery master switch (master cut-out) to the OFF position.

Lockout & Tag out (LOTO) must be performed during set-up, maintenance or repair activities. Refer to your local procedure for detailed information regarding the control of hazardous energy.

# PART 1 - INSTRUMENT PANEL COVER REMOVAL

1. From underneath the instrument panel cover, unscrew two (2) socket hex screws.

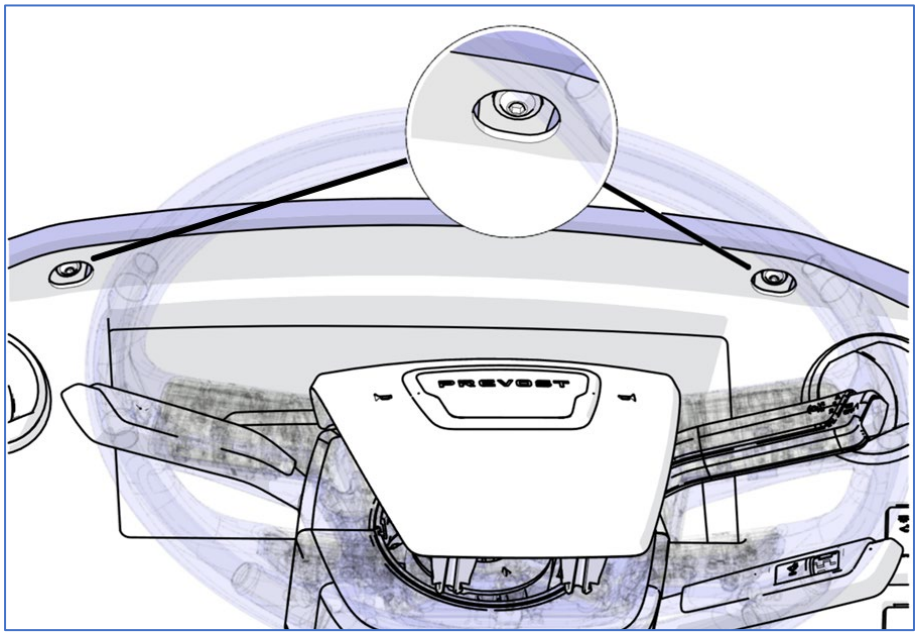


FIGURE 1

2. Look at the following image to understand how the instrument panel cover is held in place with flexible tabs close to the windshield.

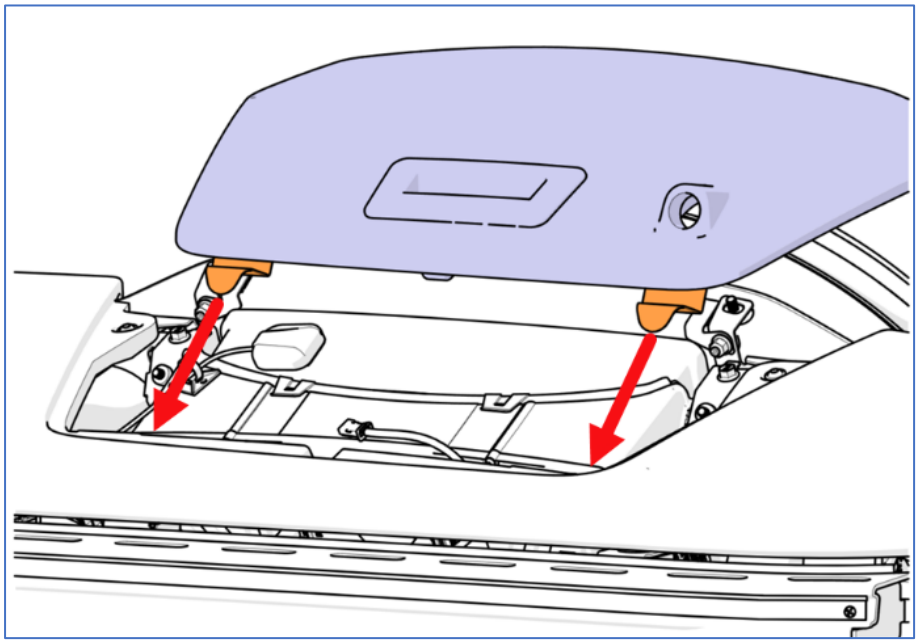

FIGURE 2

3. Lift the edge of the instrument panel cover with a light force then pull the cover toward you.

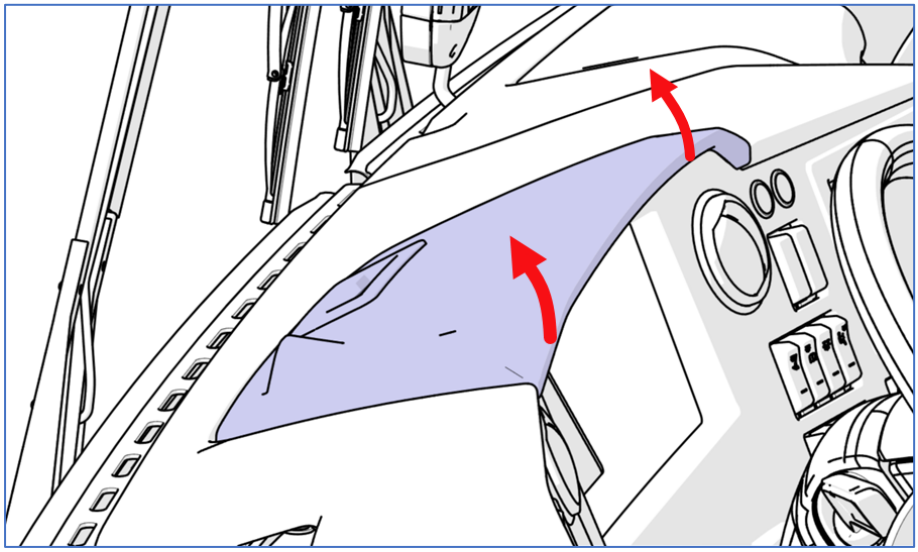

FIGURE 3

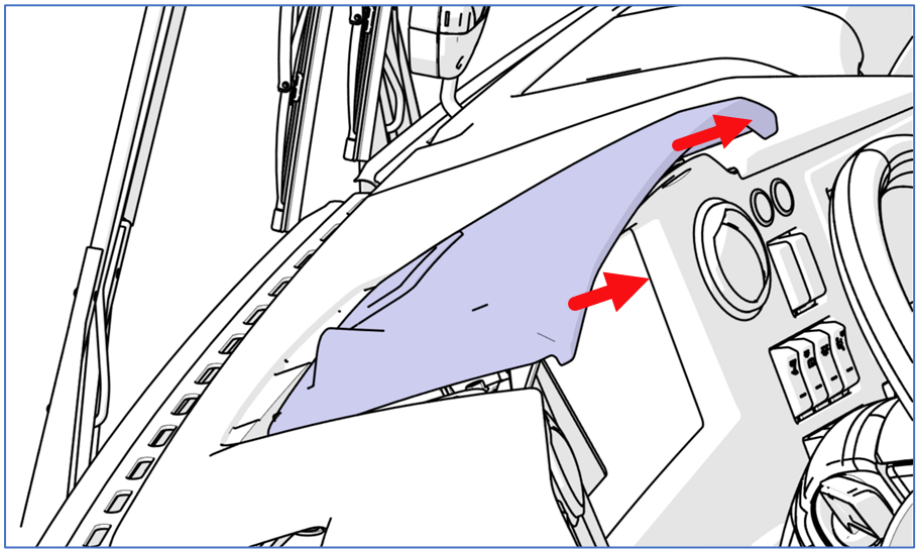

FIGURE 4

## PART 2 - DASHBOARD COVER REMOVAL

1. Remove the three (3) screws shown on the image below.

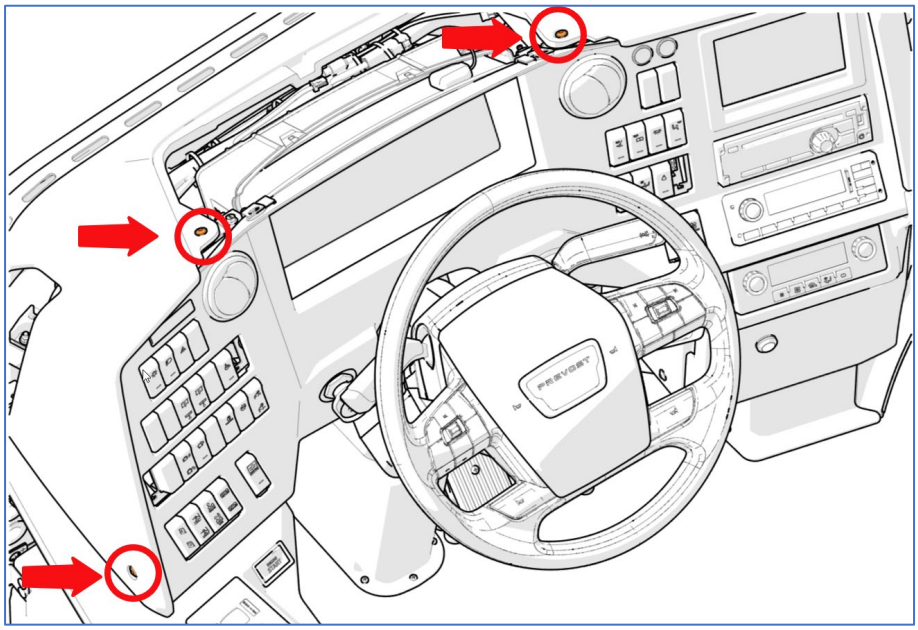

FIGURE 5

2. Unsnap the dashboard cover at the five (5) points identified on the image below.

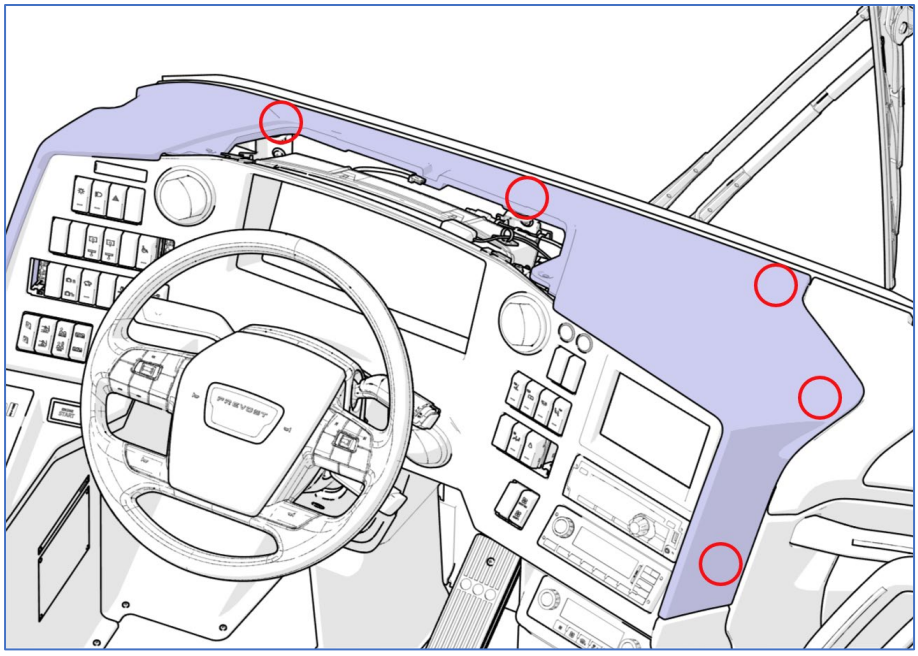

FIGURE 6

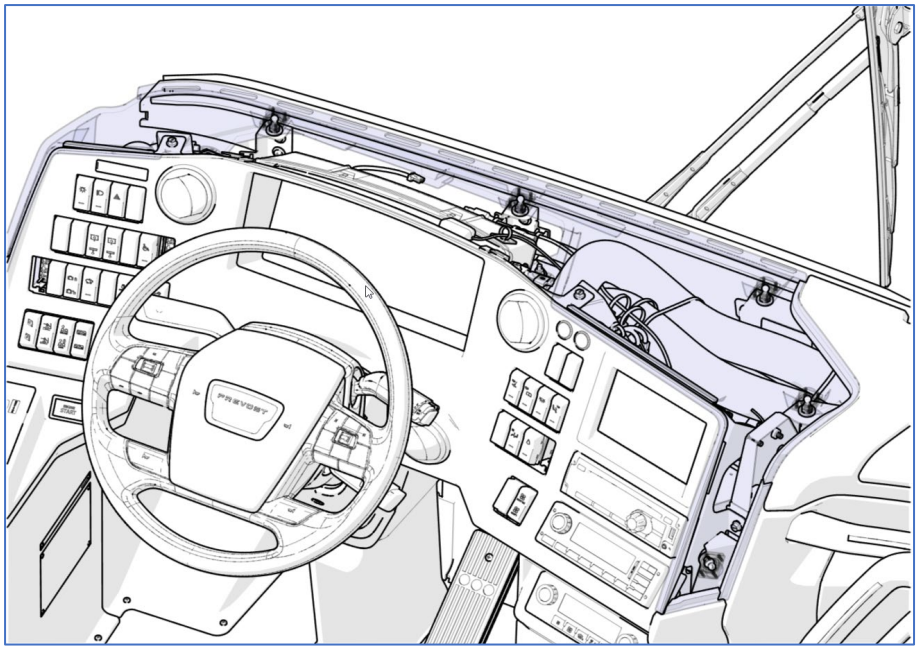

FIGURE 7

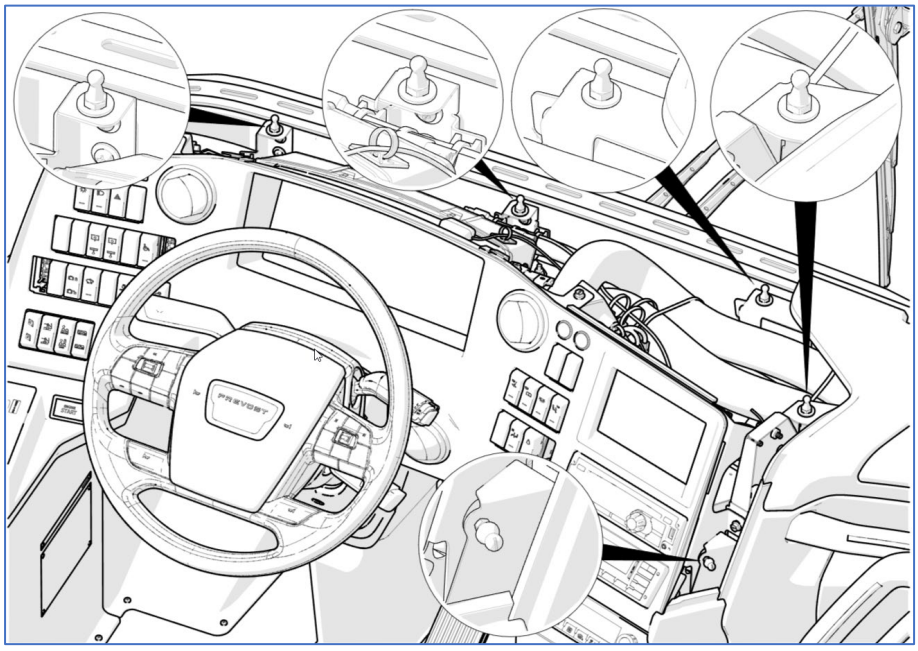

FIGURE 8

# PART 3 - RIGHT SIDE OF THE DASHBOARD – ACCESS PANEL REMOVAL

1. The panel on the right side of the dashboard is secured with fasteners as seen on the images below.

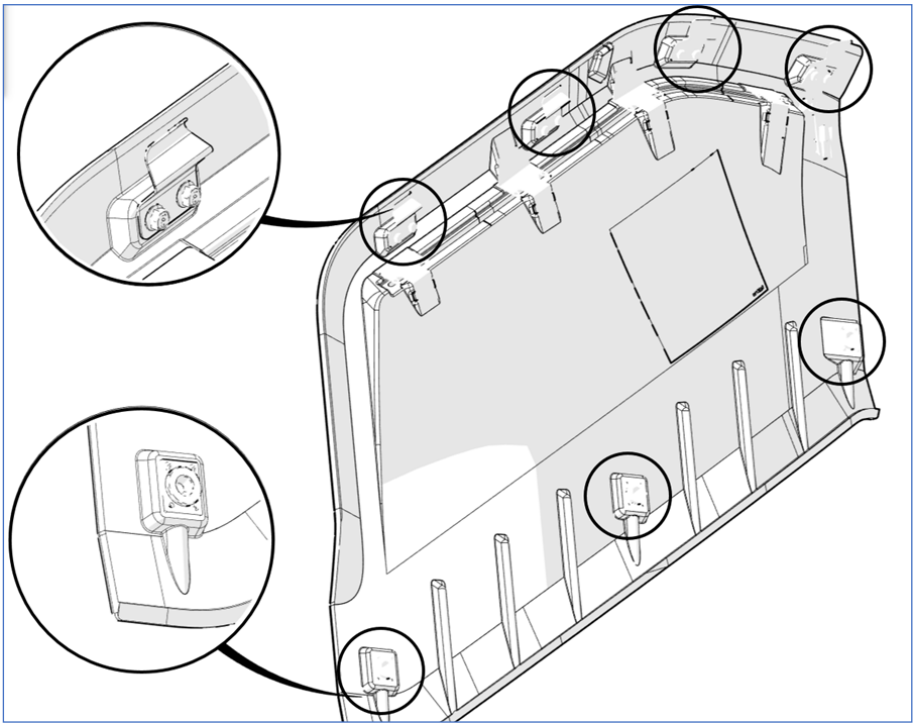

FIGURE 9: ATTACHMENT POINTS AT THE BACK OF THE PANEL

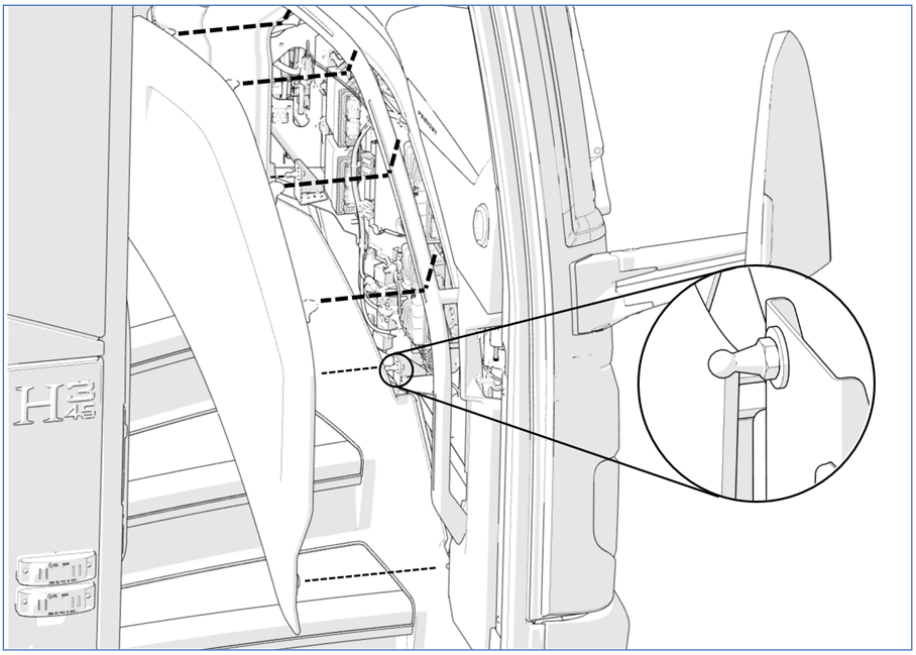

FIGURE 10

2. To remove the panel, pull (unsnap) the bottom of the panel in three (3) places by pulling toward you and then pull the panel down to disengage the top.

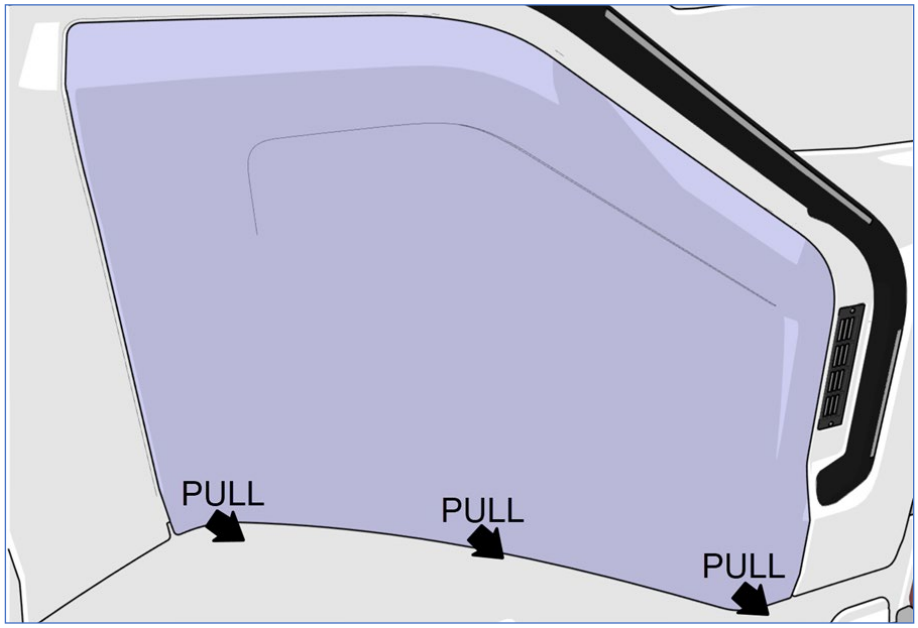


FIGURE 11

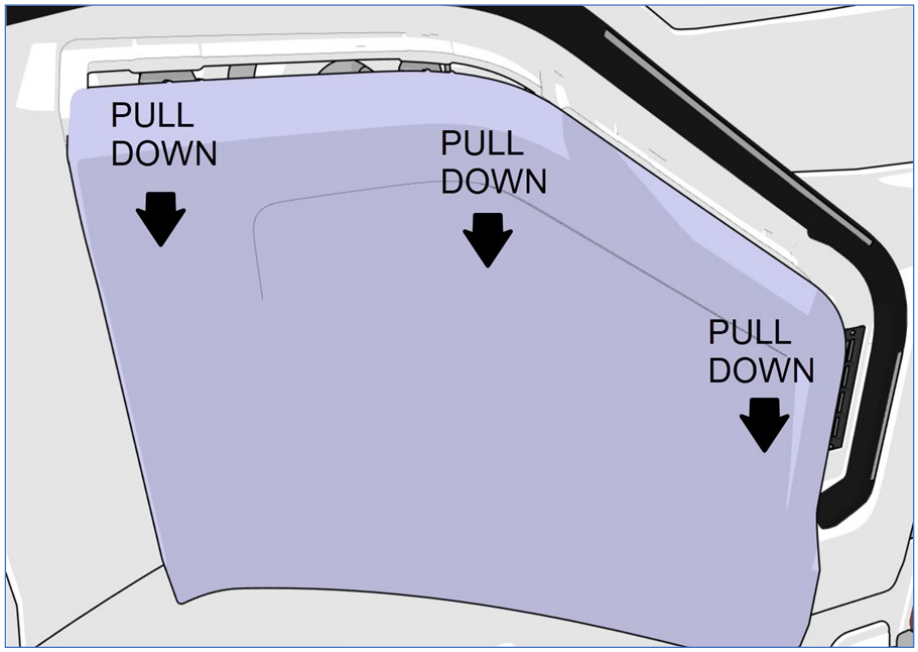


FIGURE 12

# PART 4 - RIGHT SIDE OF DASHBOARD REMOVAL

1. Perform Part 1, 2 & 3.
2. Remove the three (3) screws shown on the image below.

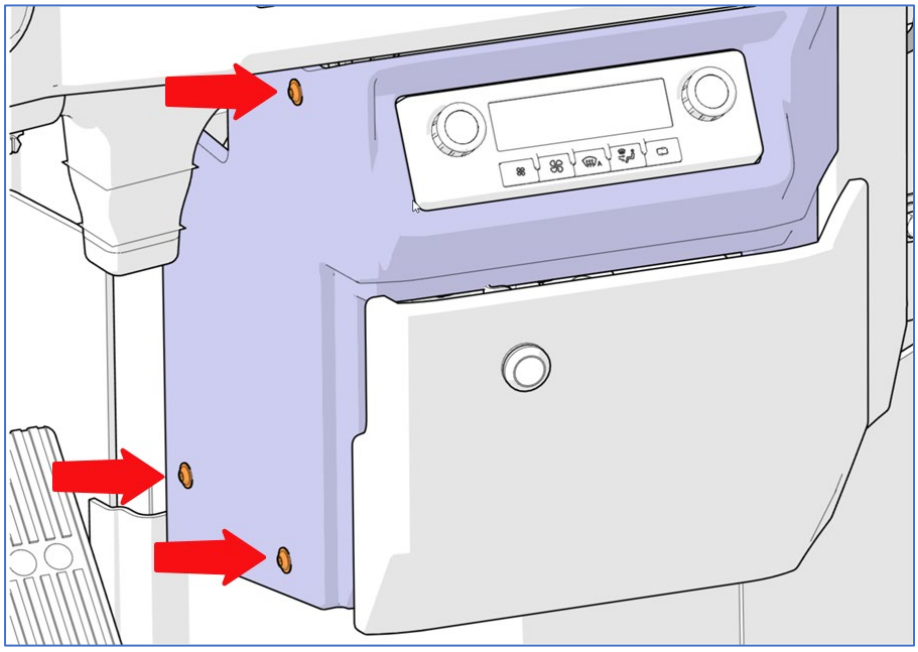

FIGURE 13

3. Remove the screw shown on the image below.

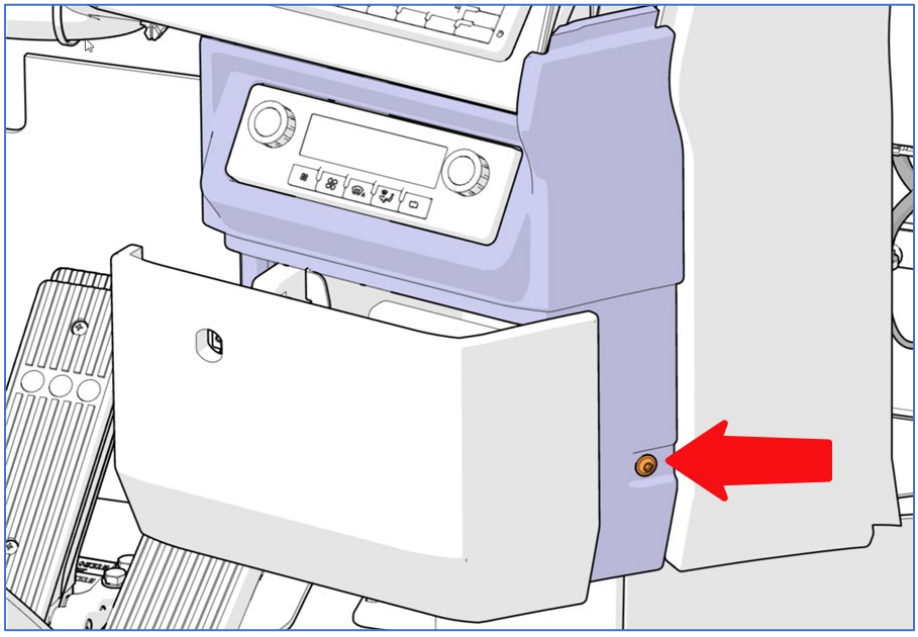

FIGURE 14

4. Open the utility compartment.

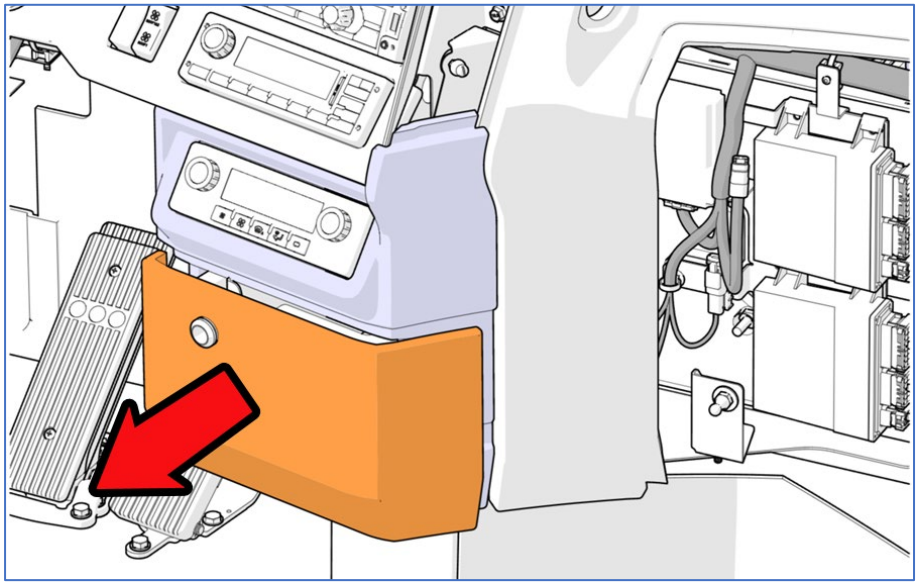

FIGURE 15

3. Unsnap the trim at the attachment point identified on the images below.

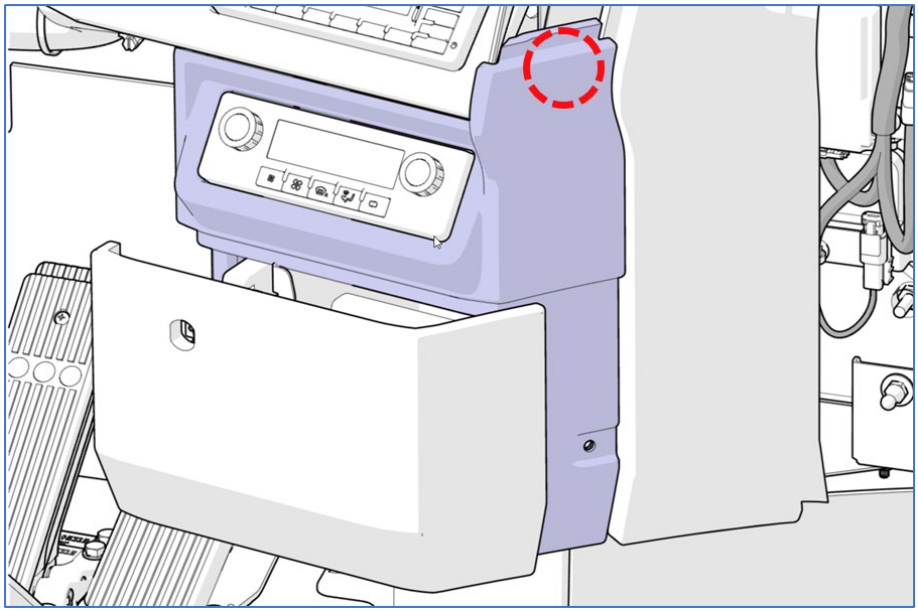

FIGURE 16



FIGURE 17

5. Pull the trim to uncover the circled area shown on the image below.

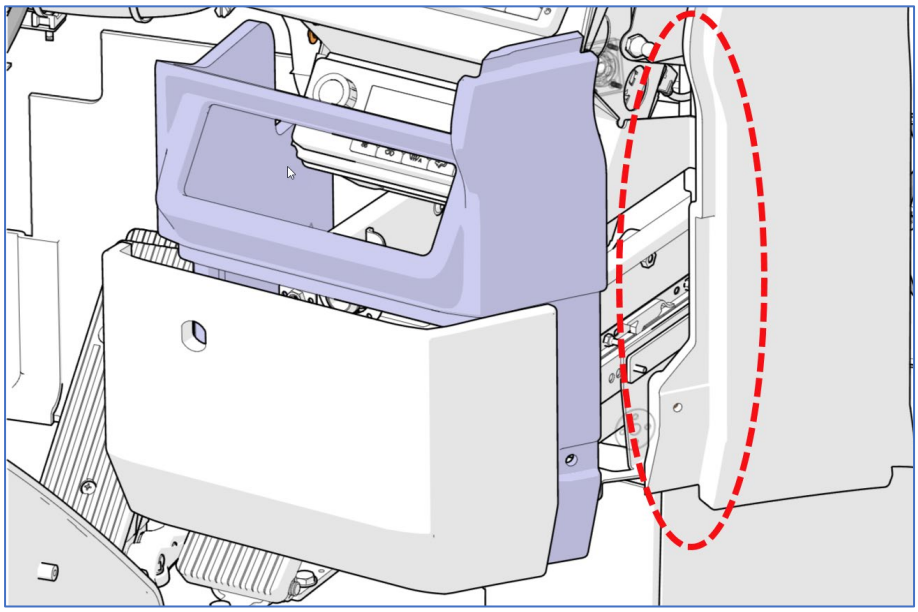

FIGURE 18

6. Disconnect the hose shown on the image below.

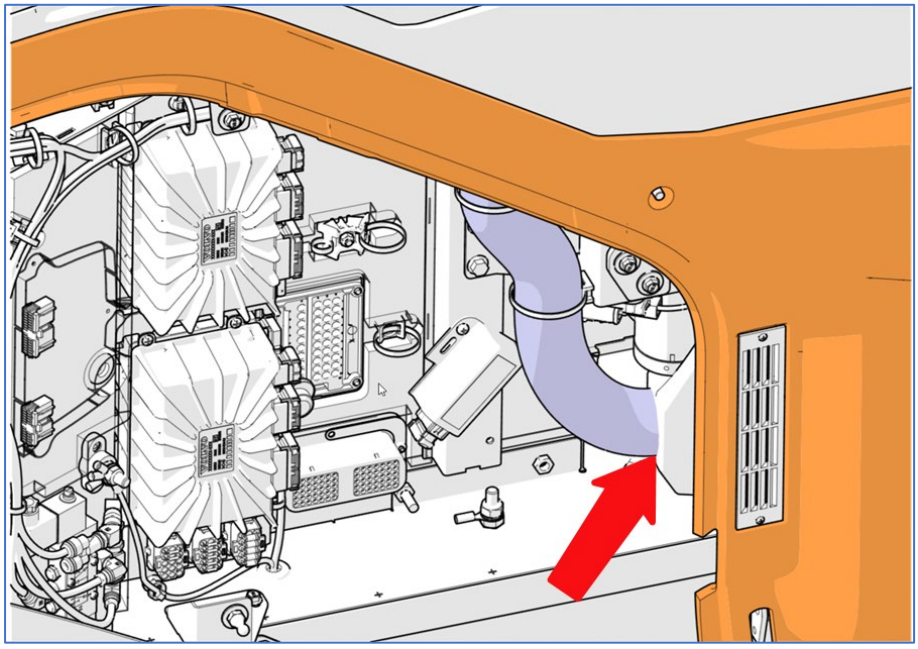

FIGURE 19

7. Remove the handrail. To do so, remove the three (3) cap screws shown on the image below.

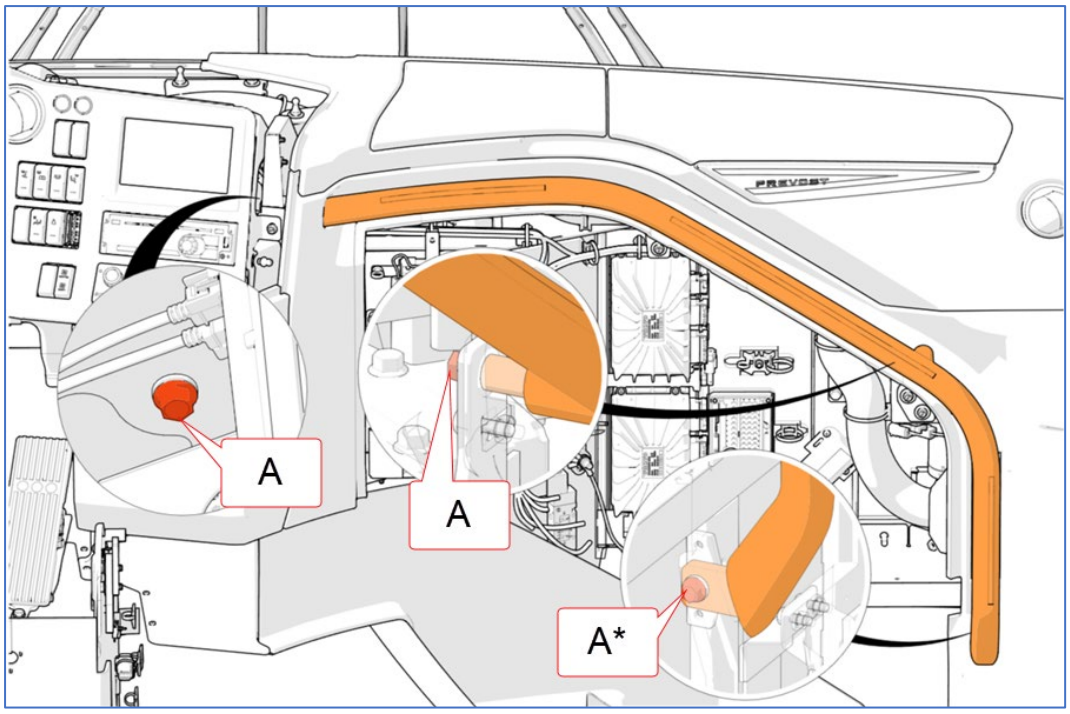


FIGURE 20

***A= cap screw + washer TORQUE 14 lb-ft***

***A*= cap screw + washer + square plate TORQUE 14 lb-ft***

8. Remove the panel shown on the image below. To do so, perform the following steps.

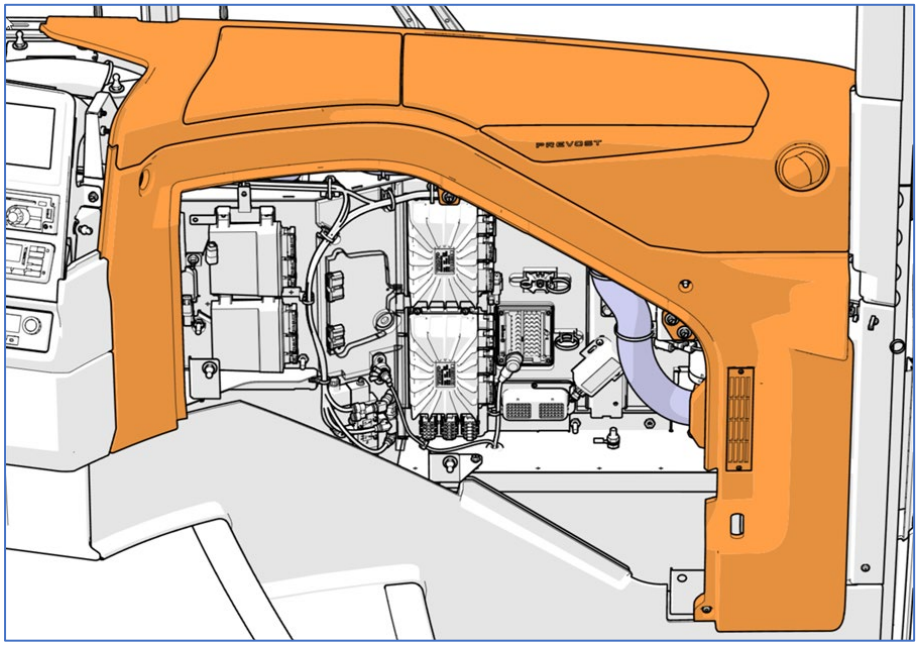

FIGURE 21

9. Remove the four (4) fasteners shown on the image below.

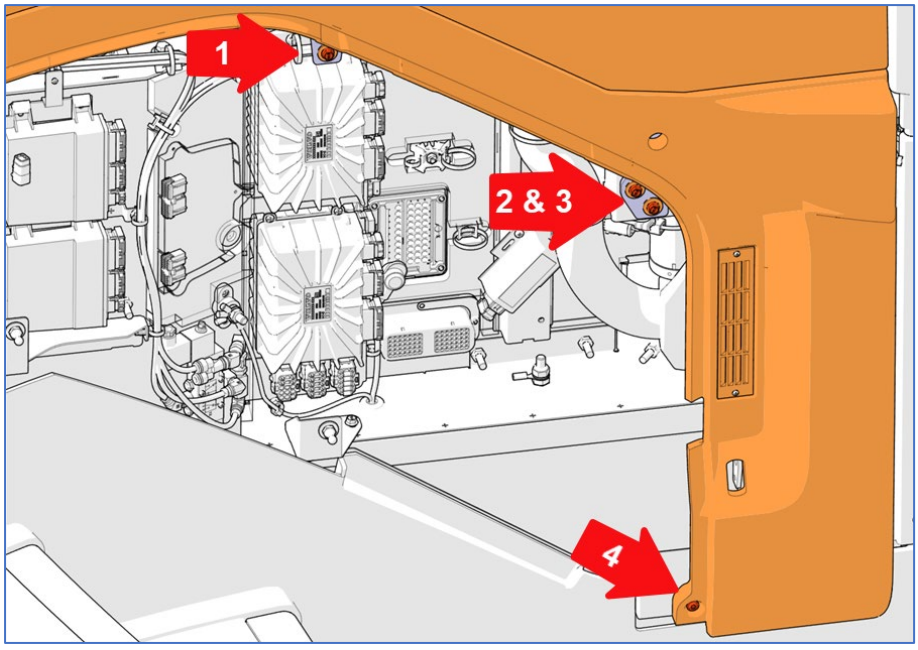


FIGURE 22

10. To remove the panel, first, remove the screw shown on the image below. ***NOTE: The panel is shown "ghosted" on the image to allow localization of the screw.***

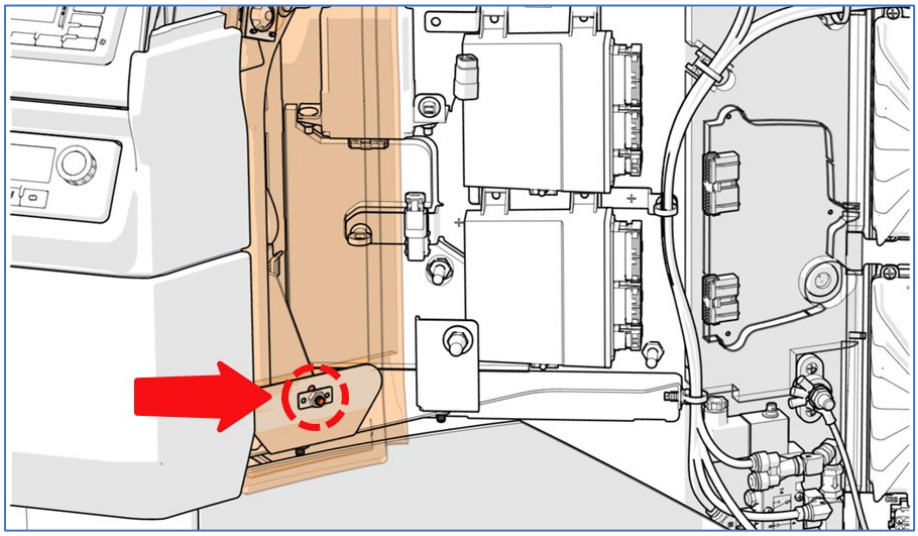

FIGURE 23

11. To remove the panel, first, remove the two (2) screws identified on the images below.

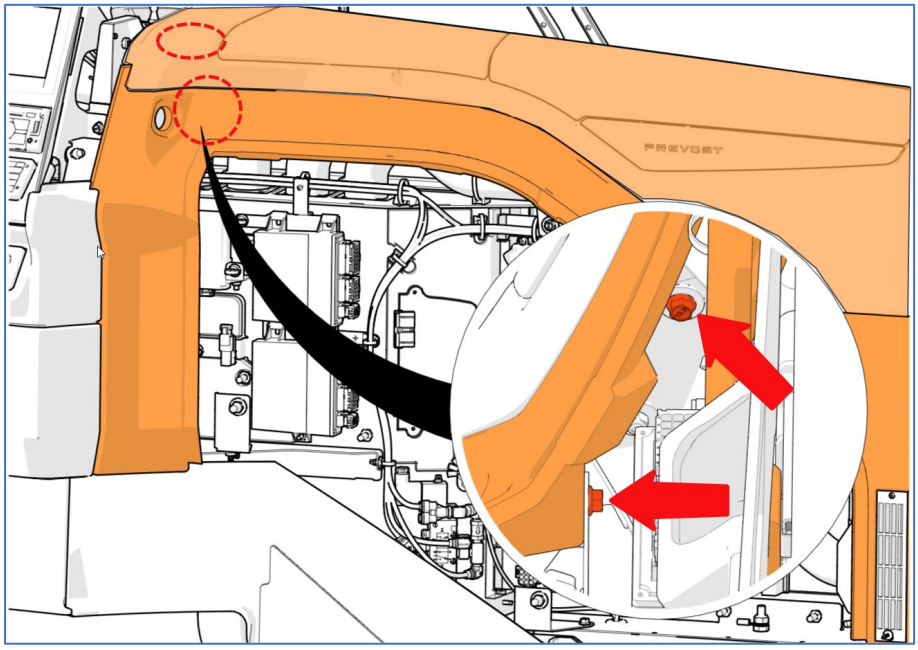

FIGURE 24

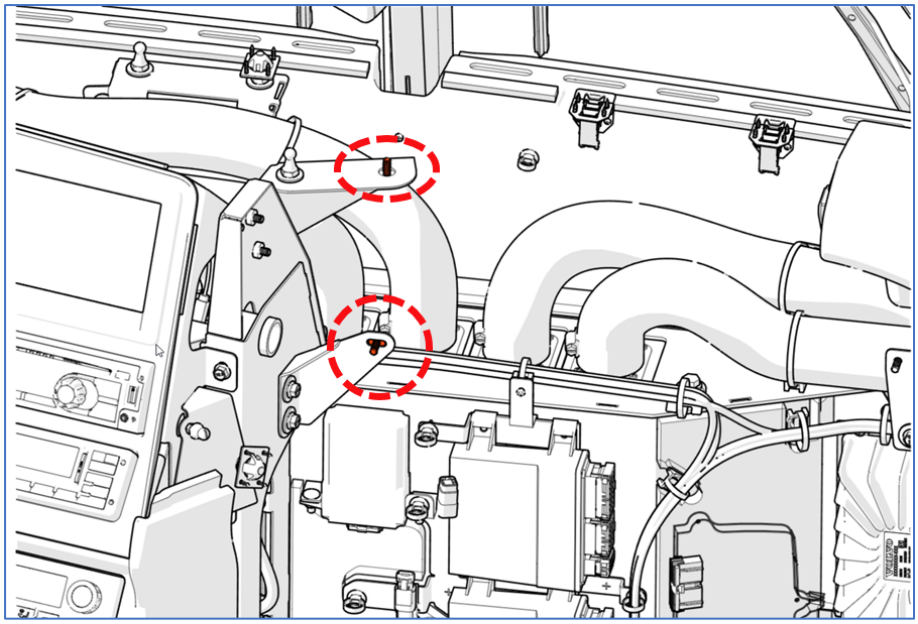

FIGURE 25: WITH PANEL GHOSTED TO HELP LOCATE THE POSITION OF THE SCREWS

12. To remove the panel, pull (unsnap) at the six (6) locations identified on the image below.

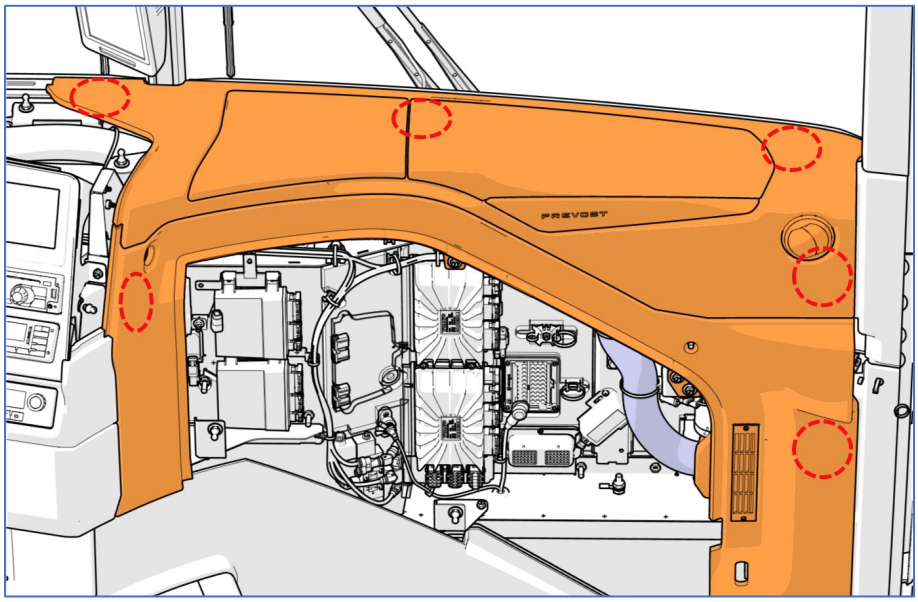


FIGURE 26

13. Once unsnap, pull with a light force to detach the panel.
14. Disconnect the register hose and the daylight sensor connector from the R.H. side of the panel.

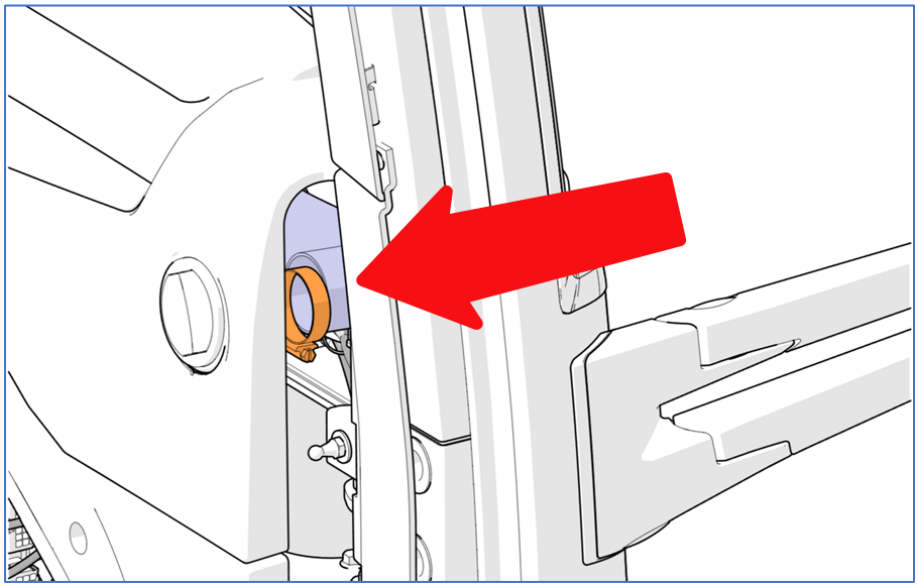

FIGURE 27

*Access all our Service Bulletins on http://techpub.prevostcar.com/en/*
*Or scan the QR-Code with your smart phone*
.

**Are you a Vehicle owner?**
*E-mail us at **technicalpublications_prev@volvo.com** and type "ADD" in the subject to receive warranty bulletins applicable to your vehicle(s) by e-mail.*

## CONTENTS

**SECTION CHANGE LOG** ..... **4**

**1 TORQUE TABLES** ..... **5**

**2 VEHICLE EXTERIOR** ..... **7**

**3 VEHICLE JACKING POINTS** ..... **11**

3.1 HYDRAULIC JACK ..... 11

**4 TOWING THE VEHICLE** ..... **11**

**5 VEHICLE STRUCTURE** ..... **11**

**6 VEHICLE EXTERIOR MAINTENANCE** ..... **11**

6.1 CORROSION PREVENTION ..... 11
6.2 PREVENTIVE MAINTENANCE SCHEDULE ..... 13
6.3 RUST INHIBITOR APPLICATION ..... 14

**7 COMMON FIBERGLASS REPAIR PROCEDURE** ..... **19**

7.1 REPAIR USING FIBERGLASS CLOTH ..... 19
7.2 REPAIR USING FIBERGLASS PASTE ..... 19
7.3 TYPICAL FIBERGLASS REPAIR PROCEDURE ..... 20

**8 COMMON PAINTING PROCEDURE** ..... **21**

8.1 NEW PAINT CARE ..... 21
8.2 PAINT TOUCHUP ..... 21
8.3 PAINTING ..... 22
*8.3.1 Safety* ..... *22*
*8.3.2 Surface Preparation and Paint Application* ..... *23*

**9 X3-45 COACHES EXTERIOR FINISHING AND BODY REPAIR** ..... **24**

9.1 ZONE 1 ..... 24
*9.1.1 Front Bumper* ..... *26*
*9.1.2 Headlights* ..... *26*
*9.1.3 Rear View Mirrors (RAMCO)* ..... *26*
*9.1.4 Optional Rear View Mirrors (ROSCO)* ..... *28*
*9.1.5 Windshield Wipers* ..... *30*
*9.1.6 Windshield* ..... *30*
*9.1.7 Regular Entrance Door (Coaches)* ..... *34*
*9.1.8 Commuter Type Entrance Door* ..... *42*
*9.1.9 Front Electrical & Service Compartment Door Body Panel and Window* ..... *46*
*9.1.10 Front Cap* ..... *52*
9.2 ZONE 2 ..... 53
*9.2.1 Side Windows* ..... *53*
*9.2.2 Emergency Exit Windows* ..... *53*
*9.2.3 Roof Escape Hatch* ..... *55*
9.3 ZONE 3 ..... 58
*9.3.1 Rear Cap* ..... *58*
*9.3.2 Engine Compartment Door* ..... *58*

*9.3.3 Rear Bumper ..... 59*
*9.3.4 Exhaust Aftertreatment System Access Door ..... 59*
9.4 ZONE 4 ..... 60
*9.4.1 Rear Fender ..... 60*
*9.4.2 Engine R. H. Side Access Door Adjustment ..... 60*
*9.4.3 Engine Radiator Door ..... 66*
9.5 ZONE 5 ..... 68
*9.5.1 Baggage Compartment Doors (Aluminum) ..... 68*
*9.5.2 Wheelchair Lift Cassette Compartment Door ..... 71*
*9.5.3 Wheelchair Lift access door installation ..... 73*
*9.5.4 Baggage Compartment Floor ..... 76*
*9.5.5 Evaporator Compartment Door ..... 80*
*9.5.6 Condenser Compartment Door ..... 82*
*9.5.7 Fuel Filler Door ..... 83*
9.6 ZONE 6 ..... 84
*9.6.1 Front Fender ..... 84*
9.7 ZONE 7 ..... 85
*9.7.1 X3 Smooth Side Panel Replacement Procedure ..... 85*
*9.7.2 Side Crest ..... 93*
9.8 BODY PANEL AND WINDOW SPACING ..... 94
9.9 PASSENGER SEATS ..... 95
*9.9.1 Rotating Seats ..... 95*
*9.9.2 Removing Fixed Seats ..... 95*
*9.9.3 Upholstery Maintenance ..... 96*
9.10 TARABUS FLOOR COVERING REPAIR OR REPLACEMENT ..... 97
*9.10.1 Front Steps Replacement Procedure ..... 99*
*9.10.2 Welding Of Joint Between White Safety Strip And "Tarabus" Floor Covering ..... 103*
*9.10.3 Repair Of A Welded Joint ..... 104*

**10 X3-45 VIP EXTERIOR FINISHING AND BODY REPAIR ..... 106**

*10.1.1 Front Bumper ..... 108*
*10.1.2 Headlights ..... 108*
*10.1.3 Rear View Mirrors ..... 108*
*10.1.4 Windshield Wipers ..... 110*
*10.1.5 Windshield ..... 110*
*10.1.6 Entrance Door ..... 114*
*10.1.7 Front Electrical & Service Compartment Door ..... 114*
*10.1.8 Upper Lateral Window ..... 114*
*10.1.9 Front Cap ..... 115*
10.2 ZONE 2 ..... 116
*10.2.1 Upper Side Panel ..... 116*
*10.2.2 Fixed Windows ..... 116*
*10.2.3 Electric Awning Windows ..... 117*
*10.2.4 Electric Sliding Windows ..... 120*
10.3 ZONE 3 ..... 123
*10.3.1 Rear Cap ..... 124*
*10.3.2 Engine Compartment Doors ..... 124*
*10.3.3 Rear Bumper ..... 125*
10.4 ZONE 4 ..... 126
*10.4.1 Rear Fender ..... 126*
*10.4.2 Engine R. H. Side Access Door ..... 126*
*10.4.3 Engine Radiator Door ..... 132*

10.5 ZONE 5 ..... 134
*10.5.1 Pantograph Baggage Compartment Doors (Aluminum)* ..... *134*
*10.5.2 Hinged Baggage Compartment Doors (Aluminum)* ..... *137*
*10.5.3 Condenser Compartment Door* ..... *139*
*10.5.4 Evaporator Compartment Door (Aluminum)* ..... *140*
*10.5.5 Fuel Filler Door* ..... *142*
10.6 ZONE 6 ..... 143
*10.6.1 Front Fender* ..... *143*
10.7 ZONE 7 ..... 144
*10.7.1 Side Panel for Vehicles Not Fitted With Slide-Out* ..... *144*
*10.7.2 Side Panel for Vehicles Fitted With Slide-Out* ..... *145*
*10.7.3 Side Crest* ..... *145*
10.8 ZONE 8 ..... 146
*10.8.1 Slide-Out Exterior Finishing Panels & Windows* ..... *146*
10.9 ZONE 9 ..... 147
*10.9.1 Slide-Out Exterior Finishing Panels & Windows* ..... *147*
10.10 BODY PANEL AND WINDOW SPACING FOR X3-45 VIP NOT FITTED WITH SLIDE-OUT ..... 148
10.11 BODY PANEL AND WINDOW SPACING FOR X3-45 VIP WITH FRONT AND REAR SLIDE-OUT ..... 149
10.12 BODY PANEL AND WINDOW SPACING FOR X3-45 VIP FITTED WITH FRONT SLIDE-OUT ..... 150

**11 SPECIFICATIONS ..... 151**

## SECTION CHANGE LOG

| | DESCRIPTION | DATE |
|---|---|---|
| 1 | Update – new opening mechanism for emergency exit windows (Rollover) | Jan. 2025 |
| 2 | | |
| 3 | | |
| 4 | | |
| 5 | | |
| 6 | | |

## 1 TORQUE TABLES

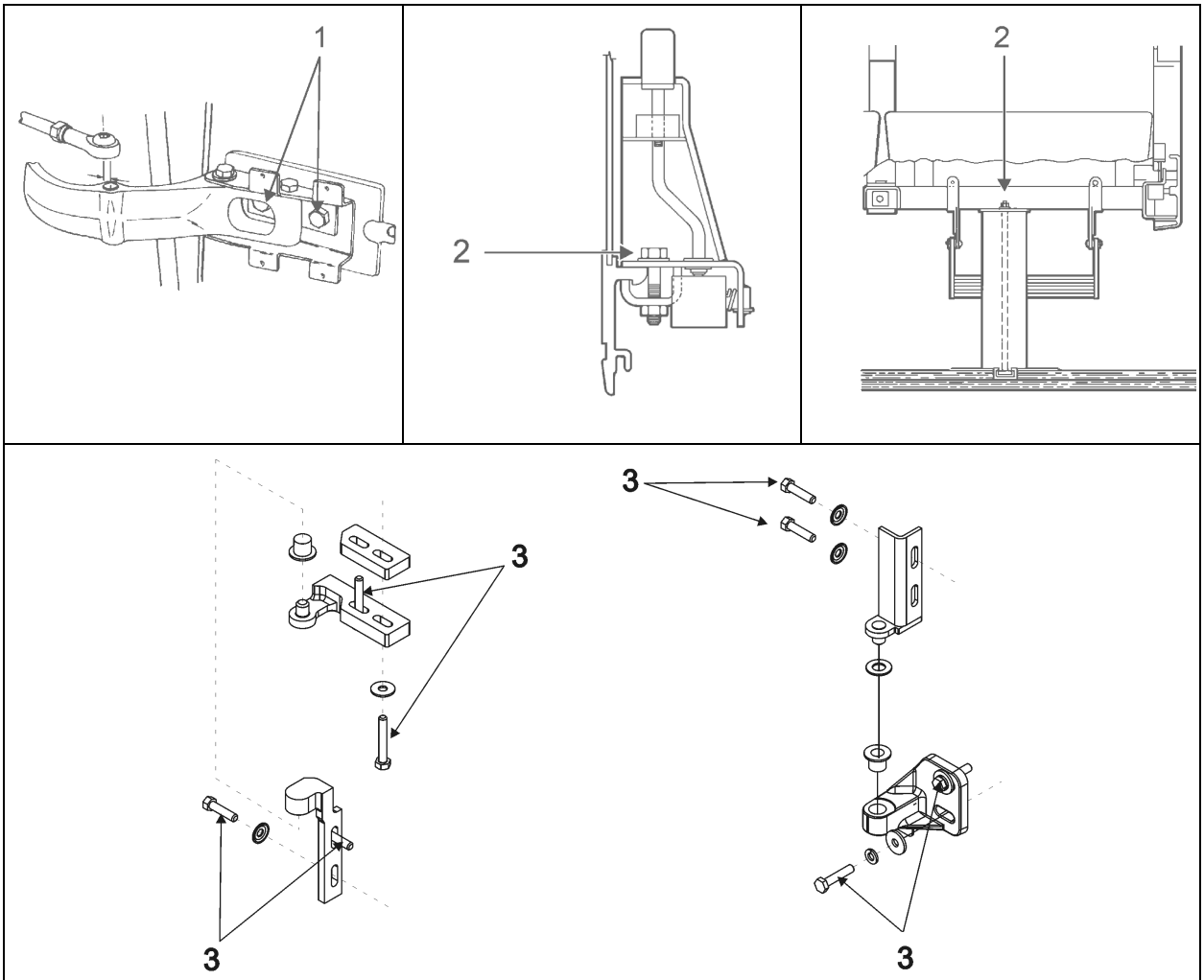


| BODY | | |
|---|---|---|
| No | DESCRIPTION | TORQUE |
| 1 | Entrance door horizontal adjusting bolts | 55-65 lb-ft (75-88 Nm) |
| 2 | Passenger seat mounting nuts (to sidewall and pedestal) | 27 lb-ft (37 Nm) |
| 3 | Radiator door hinges bolts | 68 lb-in (8 Nm) |

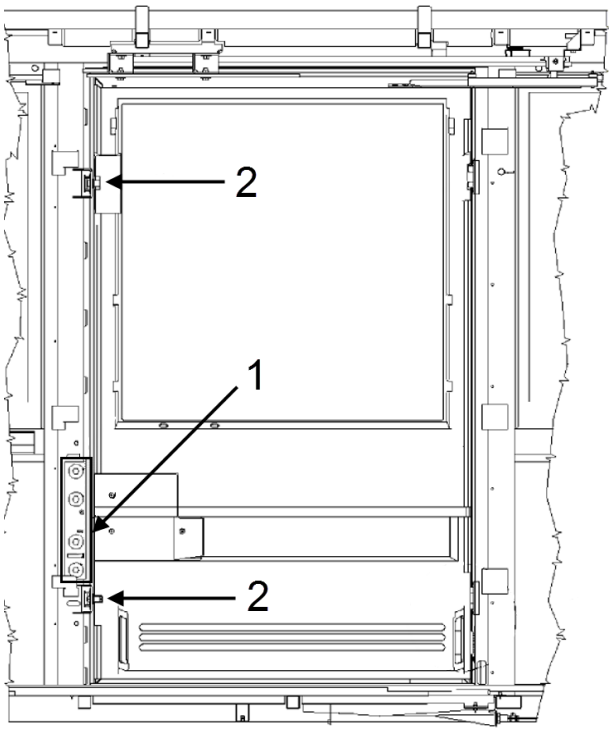


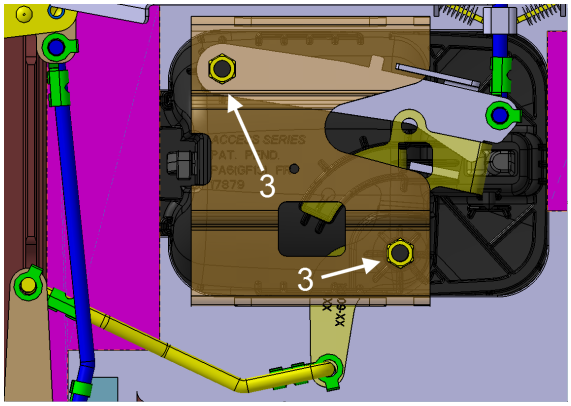


**WHEELCHAIR LIFT DOOR**

| No | DESCRIPTION | TORQUE |
|---|---|---|
| 1 | Wheelchair lift door – Center hinge bolts | 31-38 lb-ft (42-52 Nm) |
| 2 | Wheelchair lift door - striker pin adjustment bolts | 54-66 lb-ft (73-89 Nm) |
| 3 | Wheelchair lift door - opening mechanism nuts | 2.5-3.5 lb-ft (3.39-4.75 Nm) |

## 2 VEHICLE EXTERIOR

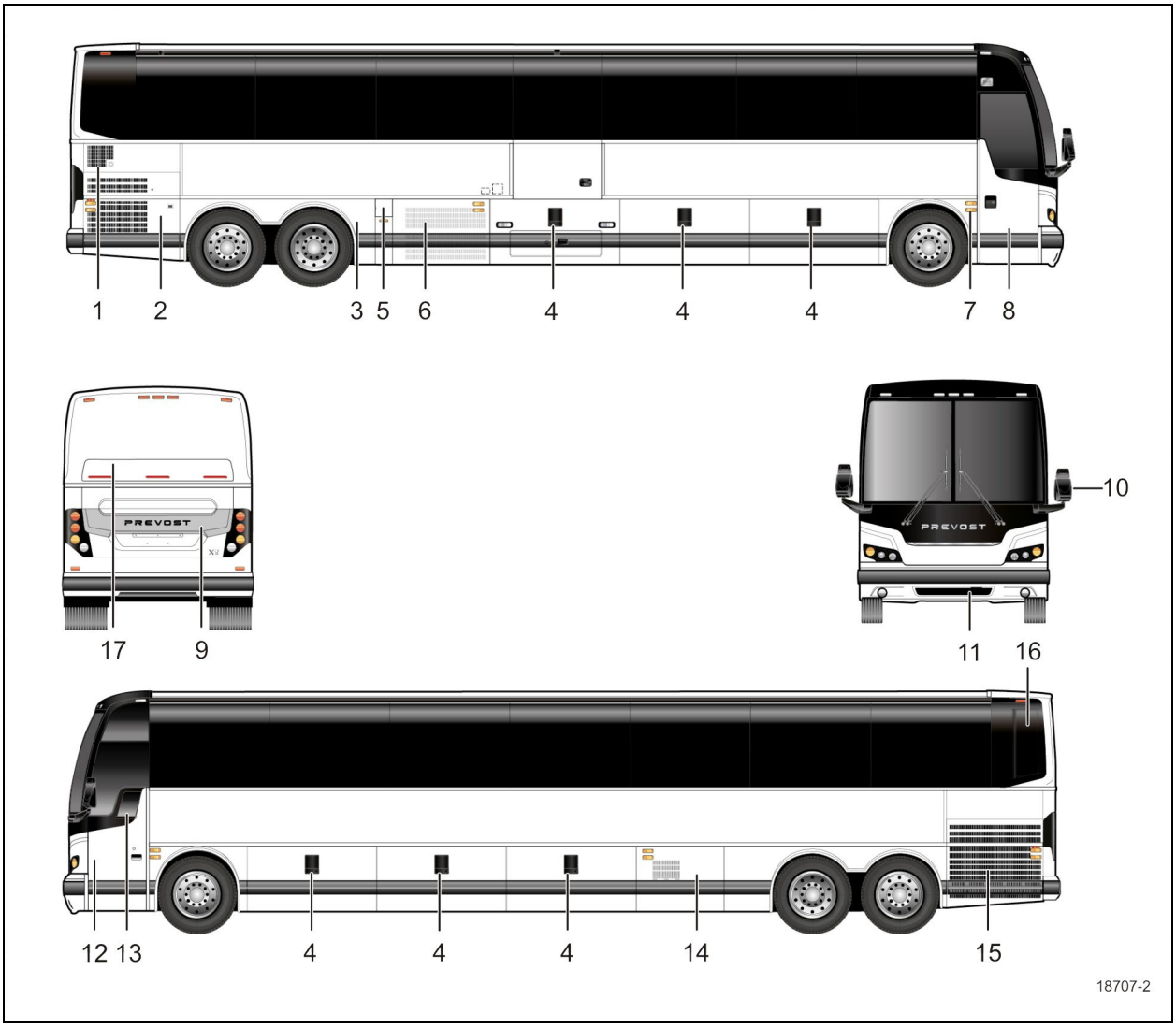


FIGURE 1: X3 COACHES EXTERIOR VIEW

1. Engine air intake
2. Engine compartment R.H. side door
3. Hinged rear fender
4. Baggage compartment
5. Fuel filler door
6. Condenser or baggage compartment
7. Entrance door switch
8. Entrance door
9. Engine compartment rear door
10. Rear-view mirror
11. Reclining bumper
12. Front electrical and service compartment
13. Driver's power window
14. Evaporator or baggage compartment
15. Radiator door
16. Catalytic Converter access door
17. Slide-Out (Optional)
18. Exhaust Aftertreatment System access door

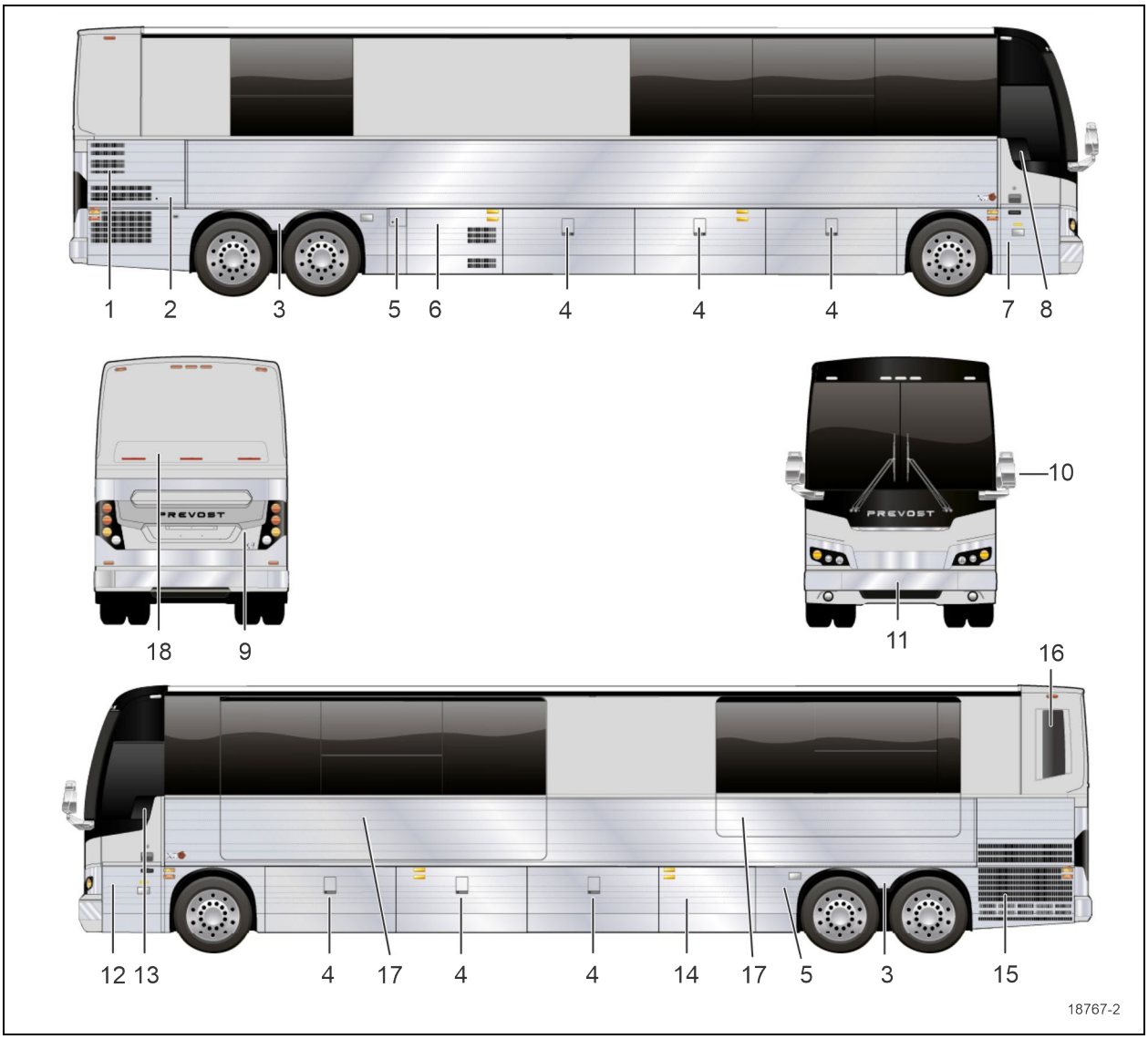


FIGURE 2: X3-45 VIP MOTORHOME EXTERIOR VIEW (TYPICAL)

1. Engine air intake
2. Engine compartment R.H. side door
3. Hinged rear fender
4. Baggage compartment
5. Fuel filler door
6. Condenser or baggage compartment
7. Entrance door
8. Entrance door power window
9. Engine compartment rear door
10. Rear-view mirror
11. Reclining bumper
12. Front electrical and service compartment
13. Driver's power window
14. Evaporator or baggage compartment
15. Radiator door
16. Catalytic Converter access door
17. Slide-Out (Optional)
18. Exhaust Aftertreatment System access door

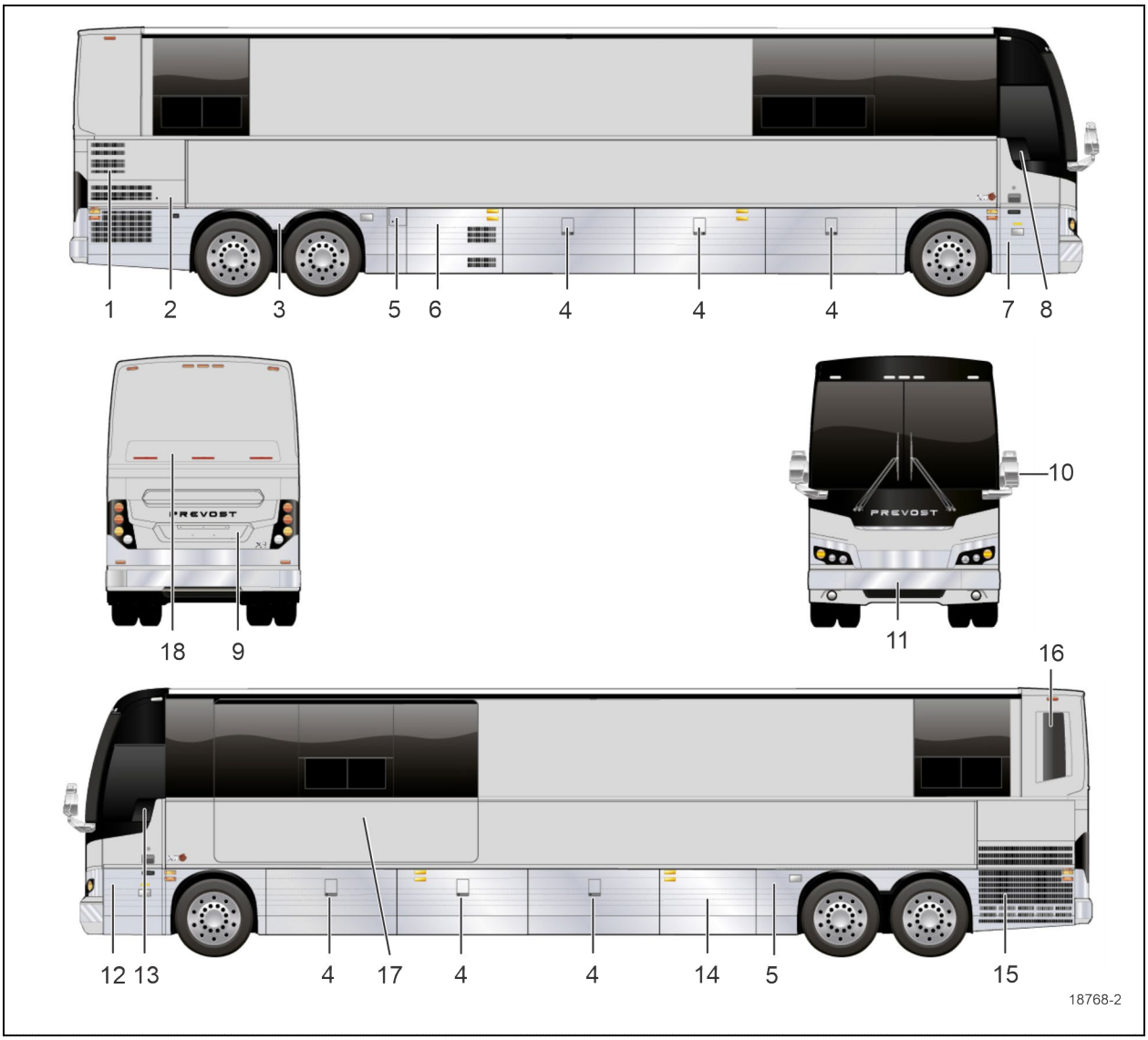


FIGURE 3: X3-45 VIP COMMERCIAL USE VEHICLE EXTERIOR VIEW (FRONT SLIDE-OUT)

1. Engine air intake
2. Engine compartment R.H. side door
3. Hinged rear fender
4. Baggage compartment
5. Fuel filler door
6. Condenser compartment
7. Entrance door
8. Entrance door power window
9. Engine compartment rear door
10. Rear-view mirror
11. Front reclining bumper
12. Front electrical and service compartment
13. Driver's power window
14. Evaporator compartment
15. Radiator door
16. Catalytic Converter access door
17. Front Slide-Out (Optional)
18. Exhaust Aftertreatment System access door

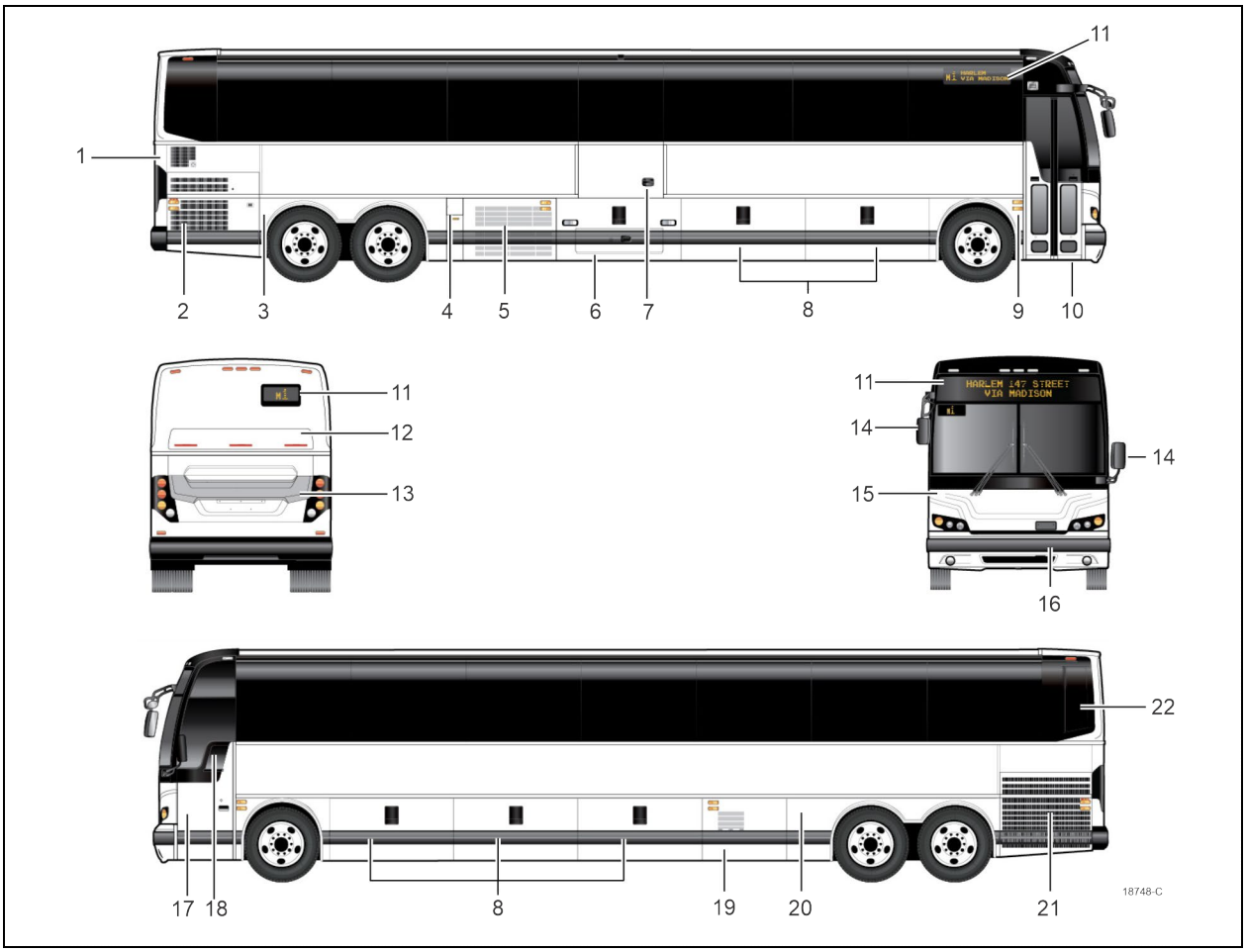


FIGURE 4: X3-45 COMMUTER EXTERIOR VIEW (TYPICAL)

1. Engine air intake
2. Engine compartment curbside door
3. Hinged rear fenders
4. Fuel filler neck & DEF filler neck door
5. Condenser compartment
6. Lift mechanism access door
7. Wheelchair access door
8. Baggage compartment
9. Entrance door control switch
10. Commuter type entrance door
11. Electronic destination sign or route number
12. Exhaust aftertreatment system access door
13. Engine compartment rear door
14. Rear-view mirrors
15. Transmission retarder off indicator light
16. Front towing air supply connectors access door and electrical receptacle.
17. Front electrical and service compartment
18. Driver's power window
19. Evaporator compartment
20. Coolant heater & air dryer compartment
21. Radiator door
22. SCR converter access door

## 3 VEHICLE JACKING POINTS

For detailed instructions, refer to Maintenance information MI18-18, available on the technical publications USB flash drive and website.

### 3.1 HYDRAULIC JACK

To raise: turn release valve clockwise. Insert handle in socket and raise vehicle by pumping.

To lower: remove handle and turn the release valve slowly counterclockwise.

Always keep ram and extension screw retracted when jack is not in use.

Service: Check oil level when jack fails to raise to full height. Lower ram completely with release valve open and jack in upright position, remove filler plug and refill to level of filler hole with hydraulic jack oil. Never use brake fluid.

**DANGER**

Jack is intended for lifting only. Do not get under the vehicle or load for any reason unless it is properly supported with safety stands and securely blocked.

**DANGER**

Do not overload jack above rated capacity. Prevent "side loading", make sure load is centered on ram. Do not push or tilt load off jack.

## 4 TOWING THE VEHICLE

For detailed instructions, refer to Maintenance information MI18-18, available on the technical publications USB flash drive and website.

## 5 VEHICLE STRUCTURE

The body of the X Series vehicles is an integral structure made of 14, 16 and 18 gauge welded and braced high tensile steel and stainless steel members. All stainless exterior panels are glued to anti-corrosion coated members. The complete structure is protected against corrosion prior to assembly. The front and rear caps are made of molded fiberglass. The main roof is made of high tensile aluminum panels riveted to the roof structure. The floor is made of 2 layers of ½" (13 mm) thick plywood separated by a 1/8" (3 mm) insulation to reduce power train and road noises.

**Welding**

Since welding is a procedure that may be carried out either as specific instructions from Prevost or by an independent decision of the owner, the following information pertaining to welding should be read before beginning any welding procedure. The prohibitions and requirements outlined below must be followed during welding procedure:

1. Welding must be done only by a qualified and experienced person.
2. Adequate ground contacts and shields must be positioned as required to protect components from damage due to heat, contact by weld splatter, arcing, or other potentially damaging events associated with welding.
3. The following precautions are to be taken to protect the electronic control components. Refer to section 00, paragraph 3: “PRECAUTIONS TO BE OBSERVED BEFORE WELDING” in this manual.
4. Always wear the appropriate safety equipment.
5. Weld in clean and well-ventilated area, and always have an appropriate fire extinguisher within your reach.

## 6 VEHICLE EXTERIOR MAINTENANCE

Regular washing to remove dust and dirt is recommended. See *"Owner's Manual"* for more details on washing and cleaning your vehicle.

### 6.1 CORROSION PREVENTION

Preventive maintenance is a key factor in avoiding corrosion and must be considered as part of the regular service intervals. The entire underside of the vehicle is sprayed with a heavy application of asphalt base undercoating.

The operating environment the vehicle is subjected to will largely influence the amount of dirt and corrosion that will accumulate over a given period. Corrosion is one of the most costly factors of part failure and shortened part life. It is, however, an item that can be controlled when it is conscientiously looked after and the proper steps are taken in a timely manner.

Certain areas of the coach are more vulnerable to corrosion than others, and it is these areas that should be addressed. For example, the rear baggage compartment bulkhead in the rear wheelhousing area contains many key components and should be examined regularly for corrosion. Other areas include the front wheelhousing area and the engine compartment.

Road splash will affect undercarriage, condenser coil and engine compartment. These areas must be thoroughly cleaned to remove dirt accumulations from flanges, channels and ledges. These places accumulate dirt and salt and hold it in direct contact with steel and aluminum surfaces. Use an understructure high pressure spray as part of a regular wash. Damaged undercoating or paint should be promptly repaired before corrosion can start.

Frequency of wash periods depends on operating conditions. During periods of exposure to salt, daily washing as described above is recommended. If underbody parts show evidence of rust or corrosion, treat as follows:

1. Remove dirt, grease and oil by solvent washing.
2. Remove corrosion as well as all loose coating by cleaning with a wire brush or sandblasting.

**CAUTION**

Sandblasting can be used for cleaning bulkheads, brackets and other structural members. It should not be used for exterior side paneling. Extreme care should be taken not to sandblast excessively.

3. Apply correct primer, paint and undercoating after removing all corrosion to prevent further damage.

## 6.2 PREVENTIVE MAINTENANCE SCHEDULE

*NOTE*

*TECTYL 185 GW rust inhibitor may have been applied on your vehicle underbody as an option, if this is the case, follow this procedure thoroughly. For future application of product, refer to paragraph 3.3 in this section.*

| DESCRIPTION | INTERVALS | | MAINTENANCE | CORRECTIVE ACTION | REFERENCE |
|---|---|---|---|---|---|
| | MONTHS | KM MILES | | | |
| BODY, EXTERNAL WINDOW FRAME | 6 | 40 000<br>25 000 | VISUALLY INSPECT SEALING BEADS CONDITION | REPAIR OR REPLACE SEALING BEADS IF NECESSARY | |
| VEHICLE UNDERBODY | 12 | 100 000<br>60 000 | USE A LOW PRESSURE SPRAY TO CLEAN UNDER-STRUCTURE AND VISUALLY INSPECT FOR CALCIUM DEPOSIT, CORROSION OR ANY DIRT ACCUMULATED ONTO EXPOSED SURFACES. VISUALLY INSPECT SEALING BEADS CONDITION.<br><br>VISUALLY INSPECT IF UNDERFLOOR IS PEALING. VISUALLY INSPECT WHEELHOUSING COATING.<br><br>MAKE SURE DISCHARGE TUBES ARE FREE FROM OBSTRUCTIONS | APPLY UNDERCOATING LOCALLY AS NECESSARY.<br><br>APPLY UNDERCOATING LOCALLY AS NECESSARY<br><br>REMOVE ANY OBSTRUCTION OR REPLACE DEFECTIVE TUBE | |
| SUSPENSION AND UNDER-STRUCTURE | 12 | 100 000<br>60 000 | VERIFY THE CONDITION OF ALL SUSPENSION AND UNDERSTRUCTURE FASTENERS AND CLAMPS | TIGHTEN OR REPLACE DEFECTIVE OR MISSING FASTENERS | |
| FLOOR COVERING | 3 | 20 000<br>12 500 | VISUALLY INSPECT IF FLOOR COVERING IS SHOWING SIGNS OF DETERIORATION SUCH AS CUTS, BURNS, ETC. ALSO, VISUALLY INSPECT SEALANT ALONGSIDE TRACKS. INSPECT WALL PANELS FROM BOTTOM TO WINDOWS | REPAIR OR REPLACE DEFECTIVE COVERING. MAKE SURE PROPER SEALANT IS USED. | |
| FLOOR CLEANING | | | CLEAN FLOOR COVERING AS NECESSARY | | |

**WARNING**

Failure to follow this preventive maintenance schedule will result in warranty void.

## 6.3 RUST INHIBITOR APPLICATION

Material: Tectyl 185 GW R1KG21

Safety Rules: Use safety glasses
Supplied air hood
Solvent-resistant rubber gloves

| | |
|---|---|
| 1.0 Wash both wheelhousing mechanical parts before masking. | A water-hose nozzle is recommended. Water may be hot to reduce washing time especially during winter. If parts are soiled with oil, clean using R1KG21. Avoid rubber parts. |
| 2.0 Dry all water sprayed parts. Surface temperature and dew point must be respected before applying rust inhibitor. | Air pressure system may be used, refer to annex 1 for surface temperature and dew point. |
| 3.0 **Front wheelhousing**<br>a) Mask all rubber joints. Braking system must also be protected (refer to arrows). Commercial aluminum foil may be used for masking. | 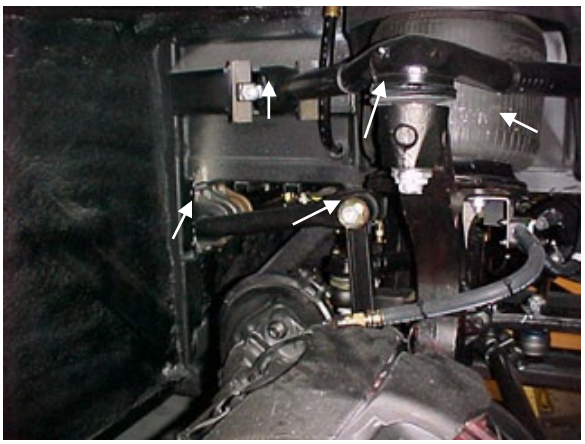 |
| 3.1 **Front wheelhousing**<br>Front view |  |

3.2 **Front wheelhousing**

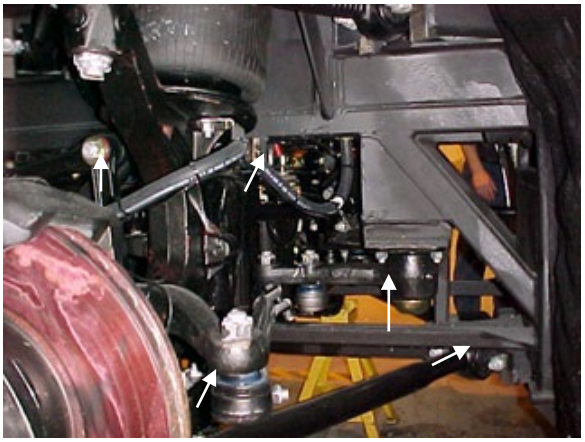

3.3 **Front wheelhousing**

(Entire braking system)

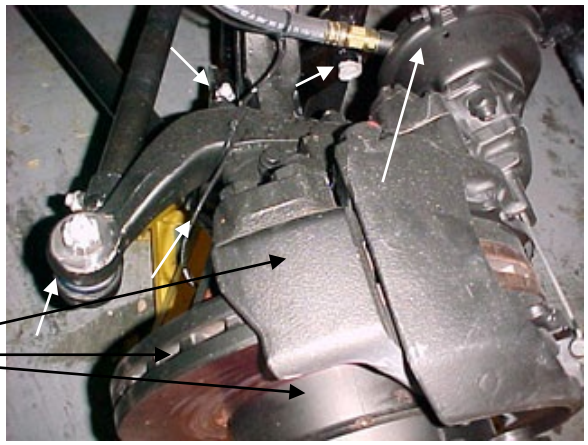

4.0 **Rear wheelhousing**

a) Mask all rubber joints. Braking system must also be protected (refer to arrows). Commercial aluminum foil may be used for masking

(Entire braking system)

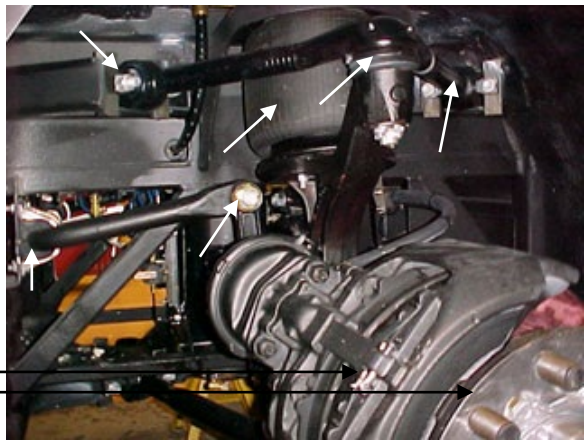

| | |
|---|---|
| 4.1 **Rear wheelhousing**<br><br>(Entire braking system) | 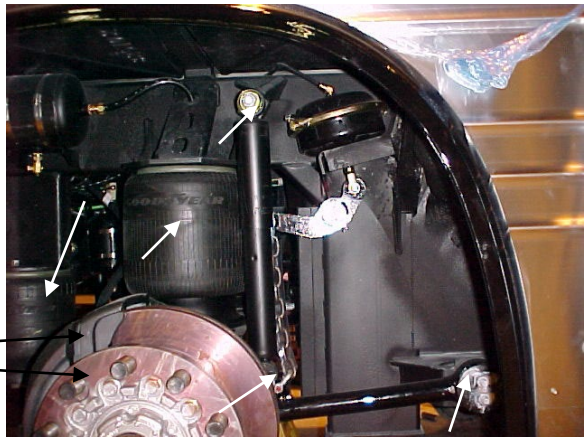 |
| 4.2 **Rear wheelhousing**<br><br>(Entire braking system) | 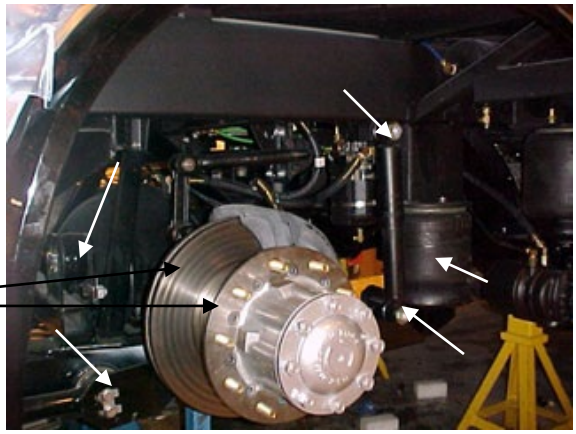 |
| 4.3 **Rear wheelhousing** | 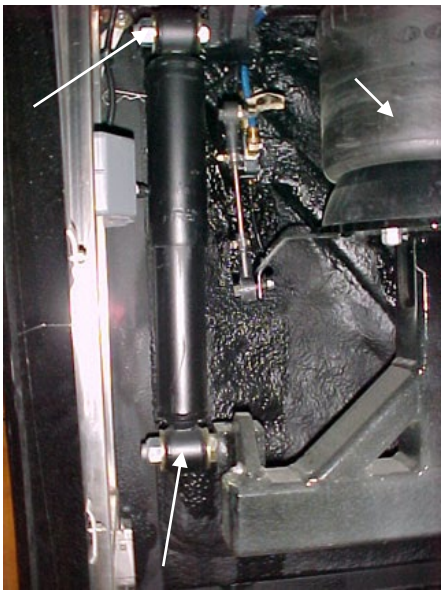 |
| 5.0 Close off wheelhousing using masking paper. | Prevent rust inhibitor from coming in contact with paint. To close off wheelhousing, a polythene sheet may be used. |
| 6.0 Apply TECTYL 185 GW black rust inhibitor onto wheelhousing mechanical parts. | A spray gun and pumping system are required to apply the rust inhibitor. If the application is done inside a paint room, select high speed ventilation. **Minimum required** |

| | |
|---|---|
| | **thickness is 10 mils wet or 5 mils dry**. |
| 7.0 Remove all masking material 30 minutes after application. | |

**ANNEX 1**

1. Check and confirm that dew point and surface temperature are in accordance with the following criteria, *Use the following table to determine dew point*.:

   Surface temperature > 10°C

   Surface temperature > or = to dew point + 3°C

2. Check and confirm that TECTYL temperature is between 10°C and 35°C.

## DEW POINT

| | Relative Humidity (%) | | | | | | | | | |
|---|---|---|---|---|---|---|---|---|---|---|
| | 10 | 20 | 30 | 40 | 50 | 60 | 70 | 80 | 90 | 100 |
| Temp (c) | | | | | | | | | | |
| 0 | --- | -16 | -11 | -8 | -5 | -3 | -1 | 0 | 1 | 3 |
| 1 | --- | -15 | -10 | -7 | -5 | -3 | -1 | 1 | 2 | 4 |
| 2 | --- | -14 | -10 | -6 | -4 | -1 | 0 | 2 | 3 | 5 |
| 3 | --- | -13 | -9 | -5 | -3 | -1 | 1 | 2 | 4 | 6 |
| 4 | --- | -13 | -8 | -5 | -2 | 0 | 2 | 4 | 5 | 7 |
| 5 | --- | -11 | -7 | -4 | -1 | 1 | 3 | 5 | 6 | 8 |
| 6 | --- | -11 | -8 | -3 | 0 | 2 | 4 | 6 | 7 | 9 |
| 7 | -18 | -10 | -6 | -2 | 0 | 2 | 5 | 6 | 8 | 10 |
| 8 | -17 | -9 | -5 | -1 | 1 | 4 | 6 | 7 | 9 | 11 |
| 9 | -16 | -9 | -4 | -1 | 2 | 4 | 6 | 9 | 10 | 12 |
| 10 | -16 | -8 | -3 | 0 | 3 | 5 | 7 | 10 | 11 | 13 |
| 11 | -15 | -7 | -3 | 1 | 4 | 6 | 9 | 10 | 12 | 14 |
| 12 | -14 | -6 | -1 | 2 | 5 | 7 | 10 | 11 | 13 | 15 |
| 13 | -14 | -6 | -1 | 2 | 6 | 8 | 10 | 12 | 14 | 16 |
| 14 | -13 | -5 | 0 | 4 | 6 | 9 | 11 | 14 | 15 | 17 |
| 15 | -12 | -4 | 1 | 4 | 7 | 10 | 12 | 14 | 16 | 18 |
| 16 | -11 | -4 | 1 | 5 | 9 | 11 | 13 | 15 | 17 | 19 |
| 17 | -10 | -3 | 2 | 6 | 9 | 12 | 14 | 16 | 18 | 20 |
| 18 | -10 | -2 | 3 | 7 | 10 | 13 | 15 | 17 | 19 | 21 |
| 19 | -9 | -1 | 4 | 8 | 11 | 14 | 16 | 18 | 20 | 22 |
| 20 | -9 | 0 | | 5 | 9 | 12 | 15 | 17 | 19 | 21 23 |
| 21 | -8 | 0 | | 5 | 10 | 13 | 16 | 18 | 20 | 22 24 |
| 22 | -7 | 1 | | 6 | 11 | 14 | 16 | 19 | 21 | 23 25 |
| 23 | -6 | 2 | | 7 | 11 | 15 | 17 | 20 | 22 | 24 26 |
| 24 | -6 | 2 | | 8 | 12 | 16 | 19 | 21 | 23 | 25 27 |
| 25 | -5 | 3 | | 9 | 13 | 16 | 20 | 22 | 24 | 26 28 |
| 26 | -4 | 4 | | 10 | 14 | 17 | 20 | 23 | 25 | 27 29 |
| 27 | -4 | 5 | | 11 | 15 | 19 | 21 | 24 | 26 | 28 30 |
| 28 | -3 | 6 | | 11 | 16 | 19 | 22 | 25 | 27 | 29 31 |
| 29 | -2 | 6 | | 12 | 17 | 20 | 23 | 26 | 28 | 30 32 |
| 30 | -1 | 7 | | 13 | 17 | 21 | 24 | 27 | 29 | 31 33 |
| 31 | -1 | 8 | | 14 | 19 | 22 | 25 | 27 | 30 | 32 34 |
| 32 | 0 | 9 | | 15 | 20 | 23 | 26 | 29 | 31 | 33 35 |

## 7 COMMON FIBERGLASS REPAIR PROCEDURE

All repairs to fiberglass parts consist of filling the damaged area with fiberglass cloth and resin or strand fiberglass and resin. The repair is allowed to harden, and then finishing operations may be performed. Use of the various materials is determined by the type of repair to be made. Large holes, torn sections and separate joints require the adhesive qualities of the resin and the reinforcing qualities of the fiberglass. Small dents, scratches or pits can be repaired using resin and strand fiberglass and filler mixed into paste. Instructions for either mix are explained under their respective headings in this section. For best results when making repairs, temperature should be between 70 and 75 °F (21-24 °C). Some people experience a skin reaction to resins. In such cases, wipe resin off with denatured alcohol or a good thinner. Use of protective hand cream is recommended.



**WARNING**

Always wear a respirator and goggles when grinding or sanding.

Extreme care must be taken if the sander is electrically operated, as dust from some resins is combustible when subjected to sparks or open flames. The proper tool for sanding resin is a low speed, air driven disc sander with a water attachment or a dry sander having a vacuum bag. Either will eliminate flying glass and resin dust.

The following additional tools and materials will assist in making repairs: hacksaw blade, assorted files, emery paper or cloth (150 or finer), scissors or tin snips, wax paper or cellophane sheets, a 3" (75 mm) paint roller, paint brush, putty knife, acetone and one or more heat lamps.

### 7.1 REPAIR USING FIBERGLASS CLOTH

Where necessary, sand paint away around damaged area and scrape away undercoating, if any, and wipe clean with solvent. Grind or file the damaged area to form a "V" at the broken or cracked portion. Sides of "V" should have a shallow pitch for maximum bonding area.

*NOTE*

*Roughening the surface improves adhesion of resin.*

If part is warped from original shape, use clamping equipment to straighten the surface. Preheat area to be repaired with one or two heat lamps placed 18 to 24 inches (450-610 mm) from repair.

**CAUTION**

Temperature should not exceed 140 °F (60 °C) during 30 minutes in order to avoid distortion.

Cut fiberglass cloth with scissors or tin snips, 1 to 3 inches (25-75 mm) larger than area to be repaired. Build area to desired height.

Mix resin and hardener following instructions on their containers. Saturate layers of fiberglass with mixture and place laminates over damaged area. Smooth out wrinkles and make sure general contour of area is maintained. Bubbles and wrinkles can be eliminated with a roller.

**CAUTION**

The pot life of the mix is approximately 15 minutes. Any accidental contamination to the skin, clothing, tools, etc. must be removed within this period. Use acetone to remove uncured resin.

Heat resin material again by placing heat lamps 18 to 24 inches (450-610 mm) from repaired area. Allow 12 to 15 minutes for repair to cure. After repair is cured, grind, file or sand to contour. Files other than body files may be more suitable. Featheredge and finish sanding.

If small pits or irregularities appear after making repair, correct by using a liberal amount of chopped strand or filler mixed with resin to form a paste. Refer to heading *"Repair using Fiberglass Paste"* in this section.

### 7.2 REPAIR USING FIBERGLASS PASTE

Fiberglass paste is used for repairing small dents, scratches, and pits. Paste is made by mixing resin, hardener and fiberglass strand or

filler to the consistency of putty. Where it may be necessary, sand paint away around damaged area. On underside of coach, scrape away undercoating from damaged area, and wipe clean with solvent.

Preheat the area to be repaired using heat lamps. Mix desired quantities of resin and hardener according to manufacturer's instructions. Add powdered fiberglass strand into mixture to thicken it into a putty state.

| *NOTE* |
| --- |
| *If repair is made on a vertical surface, adding powdered filler material to mixture will reduce tendency of hot resin to flow or run.* |

Apply the material with a putty knife or similar object, building material up to the desired contour. For deep filling and on vertical surfaces, several layers of material may be used.

A hacksaw blade, held flat to adjacent contour and then moved in a sawing action across the repair when the resin is in a gel state, will remove excess resin from repair. Finish repair with the same procedure as when using fiberglass cloth.

## 7.3 TYPICAL FIBERGLASS REPAIR PROCEDURE

Remove all loose particles or damaged material using a power sander or rasp. Clean area, overlapping hole approximately 1" to 1-½" (25-40 mm) all around. Remove all dirt, grease and paint from area to ensure good bonding surface. Feather the cleaned area all around (Figure 5).

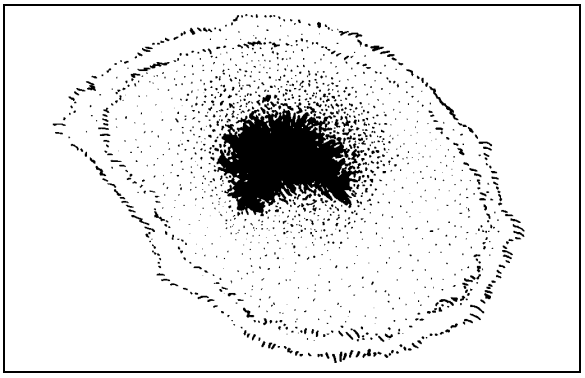

FIGURE 5: FIBERGLASS REPAIR 18089

Cut a piece of fiberglass mat slightly larger than area being repaired. Impregnate mat with general purpose polyester resin catalyzed normally. Use a clean paint brush to apply the polyester resin. Apply impregnated mat over hole and press onto surface with brush to obtain good adherence. Another coat of general purpose polyester resin can be applied at this time (Figure 6).

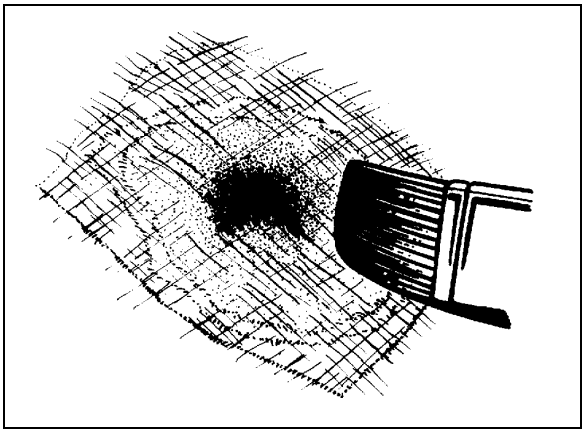

FIGURE 6: FIBERGLASS REPAIR 18090

| *NOTE* |
| --- |
| *Remove all air between surfaces being joined. Allow area to harden and sand surface to remove any wax.* |

Apply another mat, followed by a cloth patch, and another mat. All layers must be thoroughly impregnated with polyester resin, brushed well and free of air. Apply more layers of mat and cloth as required until the desired strength and thickness is obtained, minimum two 1-½ oz (43 g) mats and one 9 oz (255 g) cloth (Figure 7).

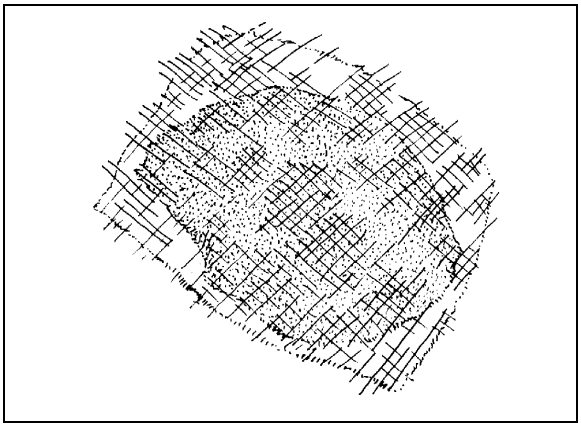

FIGURE 7: FIBERGLASS REPAIR 18091

Allow area to harden and contour the area with coarse sandpaper #100 (Figure 8).

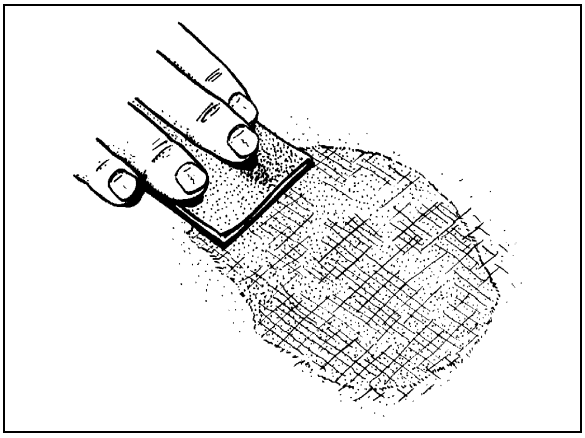

FIGURE 8: FIBERGLASS REPAIR 18092

Cover the area with a layer of resin putty and allow drying for approximately 15 to 20 minutes (Figure 9).

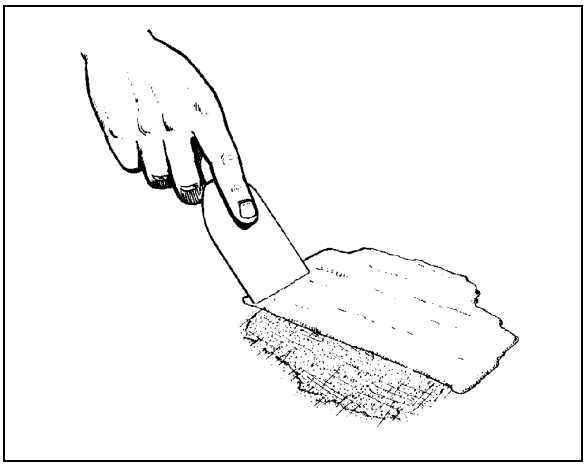

FIGURE 9: FIBERGLASS REPAIR 18093

Smooth off surface with coarse sandpaper #100 to desired shape. Further smooth surface with fine sandpaper #120 until repaired surface matches surrounding area paneling. Prime and paint the area to match surrounding paintwork.

## 8 COMMON PAINTING PROCEDURE

### 8.1 NEW PAINT CARE

Our paint supplier recommends that you follow these simple precautions the first months of your new vehicle's life.

**CAUTION**

Apply these recommendations after repainting vehicle.

**During the first 30 days:**

- Do not use a commercial bus wash. Stiff brushes or sponges could mar the finish and damage the surface. Wash the vehicle by hand only and with cool water and a very mild bus wash solution. Be careful to use only a soft cloth or sponge;
- Wash vehicle in the shade, never in direct sunlight;
- Do not "dry wipe" vehicle –always use clean water. Dry wiping could scratch the finish;
- Avoid extreme heat and cold. Park vehicle in the shade whenever possible;
- Do not park under trees which drop sap or near factories with heavy smoke fallout. Tree sap and industrial fallout may mar or spot a freshly painted surface;
- Trees are also likely to attract birds. Bird droppings are highly acidic and will damage a freshly painted surface. Bird droppings, tree sap and industrial fallout should be washed off as soon as possible;
- Do not spill oil, gasoline, antifreeze, transmission fluid or windshield solvent on new finish. IMMEDIATELY rinse off any such spill with clean water, DO NOT WIPE;
- Do not drive on gravel roads. Paint finish easily chips during the first 30 days;
- Do not scrape ice or snow from the surface. A snow scraper can act like a paint scraper if the finish is new. Brush off loose material with a soft snow brush.

**During the first 90 days:**

- Do not wax or polish the vehicle. This will allow the finish to dry and harden completely.

### 8.2 PAINT TOUCHUP

When paint touchup or partial repainting is necessary, refer to the vehicle's paint scheme for color codes and paint brand.

Prevost recommends using the original paint brand to ease color matching.

In the event you sand through to the gelcoat surface you should prime the area with Standox “Non Stop Fill Primer (ST-11000)”.

If you sand through to metal surface, first prime with Standox “Etch Primer (ST-11858)” then with Standox “Non Stop Fill Primer (ST-11000)”.

**CAUTION**

Be sure to heed all paint manufacturer’s recommendations, especially concerning paint dilution and application.

## 8.3 PAINTING

The standard paint used on the exterior of the vehicle is Standox Basislack. It is a high gloss polyurethane enamel finish designed for exposure to extreme conditions. Other types of paint may be called for as options by owner but are not dealt with in this section.

### 8.3.1 Safety

Care should be exercised in storing, handling, mixing, and applying paint and chemicals listed in this manual. The topcoat, primer, solvent, catalysts, accelerators, and cleaners are highly volatile and/or toxic if not properly used. Observe all safety instructions marked on the different packaging, as well as the following:

1. Do not smoke in the paint room or in adjacent area exposed to residue fumes.
2. Wear respirators approved by the governing safety and health regulations.
3. Maintain adequate ventilation at all times.
4. Dispose of any leftover paint mix properly.
5. Wear rubber gloves, rubber apron, and face shield during all phases of paint and chemical handling

### 8.3.2 Surface Preparation and Paint Application

| | Aluminum and / or Stainless Steel | Fiberglass | Comments |
|---|---|---|---|
| **Surface Preparation** | Sand using P-150 grit sandpaper. It is recommended to sandblast rivets and panel edges with OLIMAG 35-70 blast media. | Sand using P-180 or P-240 sandpaper. | Do not use paint remover over aluminum or fiberglass. |
| **Cleaning** | STANDOX silicone remover ST-16203 | | |
| **Priming** | STANDOX Reactive Etch Primer ST-13908<br>* Wait 30 minutes then apply STANDOX HS primer ST-15161 | STANDOX Non-Stop Füllprimer ST-11000 (68-2973) | Refer to product Technical Data sheet for proper mixing |
| **Basecoat** | Refer to paint scheme or coach record for proper color code and paint brand.<br>We recommend using the same paint brand to ease color matching. | | Refer to product Technical Data sheet for proper mixing |
| **Clearcoat** | Axalta Imron Clear 8430 S<br>Allow 16 hours for drying | | Refer to product Technical Data sheet for proper mixing |

| *NOTE* |
|---|
| *Product listing above is based on factory applied products. Local VOC (Volatile Organic Compound) regulations may vary, consult your paint supplier and use a VOC compliant product that matches the factory recommendations if required to do so.* |

## 9 X3-45 COACHES EXTERIOR FINISHING AND BODY REPAIR

The following procedures cover repair, installation and replacement for various doors, panels and windows. The paragraph divides the vehicle into zones to facilitate the search; each zone is then sub-divided into components.

Refer to the appropriate zone and component for complete procedure.

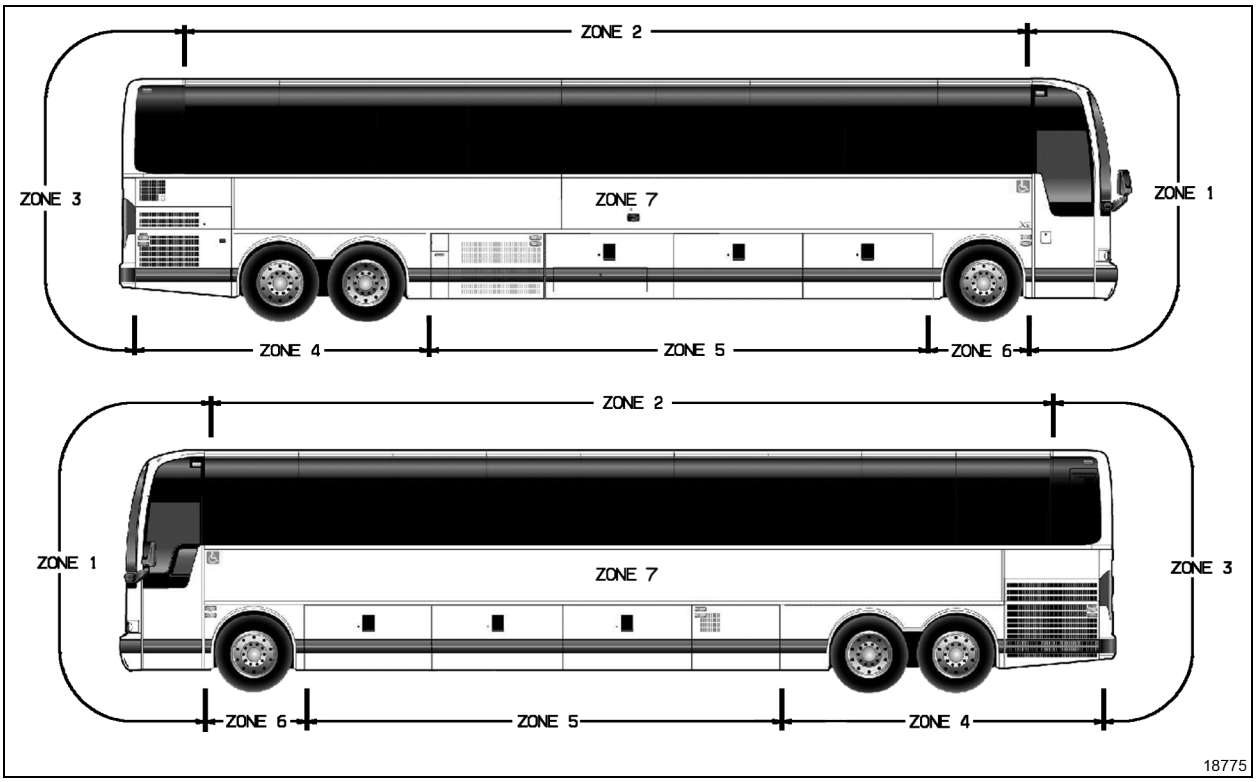


FIGURE 10: X3 COACHES ZONING

### 9.1 ZONE 1

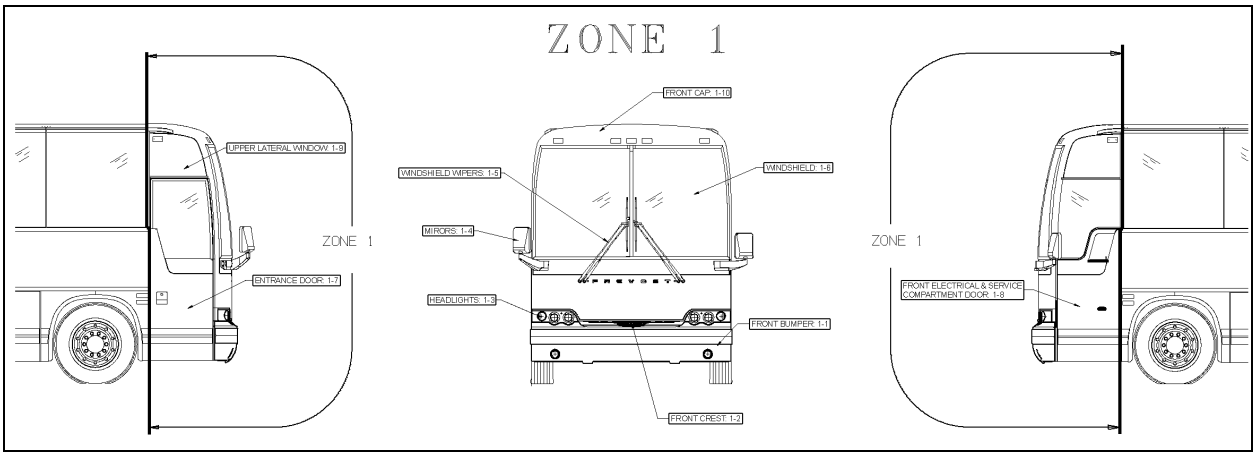


FIGURE 11: ZONE 1 **18624**

### 9.1.1 Front Bumper

The front bumper is hinged to give access to the spare wheel and tire compartment. Pull the handle located in the front service compartment to open the spare wheel and tire compartment. Bumper must first be tilted down before its removal. Two people are required to remove and install the front bumper. Safely support the bumper and remove the two bolts on each bumper side to separate the bumper from the spare wheel compartment door. To install bumper, reverse the removal procedure.

*NOTE*

*On Commuter type vehicles, the front bumper is hinged to give access to the steering gear and to facilitate removal and installation. To remove the bumper,* ***unscrew the top retaining bolts, located on each side next to the headlights,*** *and tilt down the bumper.*

**WARNING**

Front bumper is heavy. Use proper lifting equipment to support the bumper during the removal and installation operations to avoid personal injury.

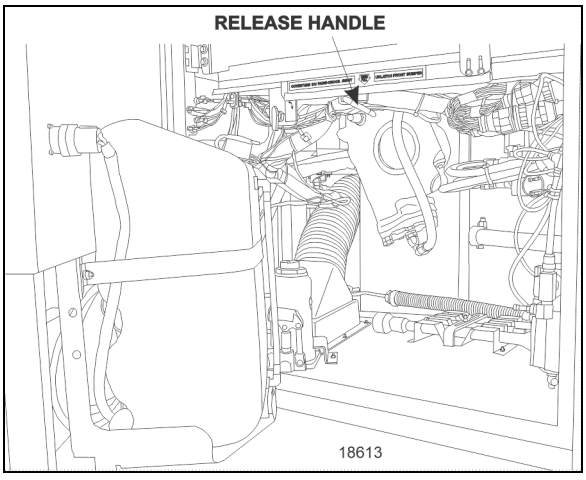


FIGURE 12: FRONT BUMPER RELEASE HANDLE **18613**

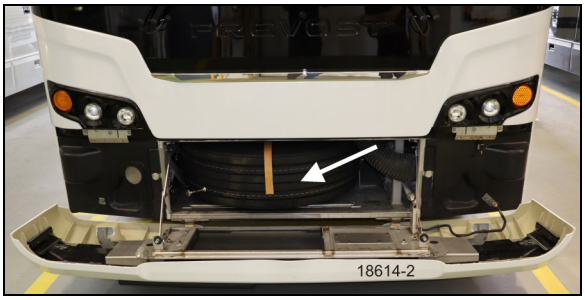


FIGURE 13: FRONT BUMPER AND SPARE TIRE

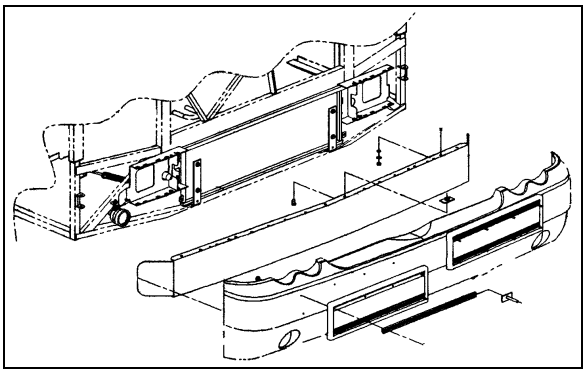

FIGURE 14: FRONT BUMPER REMOVAL **18565**

### 9.1.2 Headlights

Refer to Paragraph Headlights, included in Section 06: Electrical of the Maintenance Manual for complete information on headlights.

### 9.1.3 Rear View Mirrors (RAMCO)

Your vehicle is equipped with two exterior mirrors.

The mirrors may be equipped with an optional electric heating system which serves to minimize ice and condensation on the mirror glass in extreme weather conditions. Integral thermostats are installed in both mirrors to avoid continuous heating. Use the appropriate switch on the dashboard to activate the defroster system on both mirrors simultaneously. The mirrors can easily be adjusted by using the remote controls located on the L.H. side control panel. The mirrors have easy to replace glass in case of breakage. Remote control motors can also be replaced.

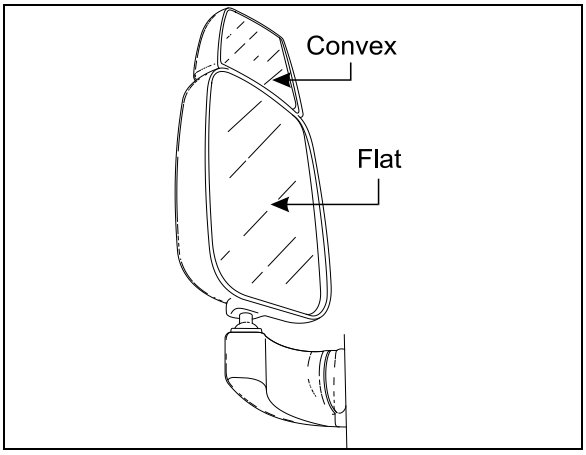

FIGURE 15: REAR VIEW MIRROR (RAMCO) 18398A

- **Adjustment**

At the base of the mirror arm, loosen the mounting bolt to swing arm in or out.
To pivot the mirror head, loosen the setscrews on each side of the ball stub at the base of the mirror head to facilitate the adjustment.

- **Disassembly**

At end of mirror arm, loosen the setscrews to relieve tension on the ball stem. Remove the ball stem from the arm.
Remove the four screws fastening the mirror arm base to the coach.

- **Assembly**

Mount the mirror arm base to the coach. Insert the ball stem into the mirror arm and tighten the socket setscrews.

*NOTE*

*Position the ball cup halves so the joint between them lies on the centerline of the arm. Ensure that the setscrews are not on the joint between the cup halves.*

- **Replacement of Mirror Glass**

Remove the broken glass.

Position new glass in mirror head and press to lock the Velcro in place.

- **Heated / Remote Controlled Rear View Mirrors**

Heated/remote controlled external rear view mirrors may be provided to prevent the mirrors from frosting up in cold weather.

The remote controlled external rear view mirrors attach to support arms using a pivot collar secured by setscrews. Loosening the setscrews allows the whole head assembly to turn on the support arm for initial adjustment. A mounting bolt and washer hold the arm support to the mounting bracket. The arm support can be moved to position the mirror head into or away from the coach body.

The mirror heat switch is located to the left of the driver on the dashboard. This switch must be activated before the mirror heating element will energize. Once energized, the mirror heating element is kept at a sustained temperature (between 60-80°F) by a thermostat. Refer to wiring diagram annexed in the technical publication box.

**⚠ CAUTION**

Do not attach stick-on type convex mirror accessories to the heated mirror glass. This could impede uniform heat distribution on the mirror surface which could break the mirror.

- **Mirror Control**

The remote control pointer knob(s) for the mirror(s) is (are) mounted on the L.H. side control panel. The harness to the mirror head runs through the arm support. The remote motor is mounted to the mirror head behind the mirror glass.

Turn pointer knob to the left for mirror head adjustments and to the right for convex mirror adjustment, then push down on either of the button's (4) sides to adjust the selected mirror viewing angle.

- **Disassembly**

At end of mirror arm, loosen the setscrews to relieve tension on the ball stud. Remove the ball stud. Remove the ball stud from the arm and gently pull the harness out until the connector is exposed.

Remove the four screws fastening the mirror arm base to the coach. Slide the harness free of the mirror arm base.

- **Assembly**

Attach a stiff wire (snake) to the end of the harness and insert the wire through the mirror arm base and arm, gently pull the harness through the arm and disconnect the "snake".
Connect the mirror head harness. Insert the harness connector back into the mirror arm.
Insert the ball stud into the mirror arm and tighten the socket setscrews.

| *NOTE* |
| --- |
| *Position the ball cup halves so the joint between them lies on the centerline of the arm. Ensure that the setscrews are not on the joint between the cup halves.* |

- **Convex & Flat Mirror Removal**

The mirror glass assembly is mounted to the control mechanism or to mirror base with Velcro strips. Remove the mirror glass by gently pulling the lens to release the Velcro. Disconnect the heater grid at the two connectors.
Connect the connectors of the new mirror's grid to the harness. Install the lens by positioning the lens in the mirror frame and pressing to lock the Velcro in place.

### 9.1.4 Optional Rear View Mirrors (ROSCO)

Commuter type vehicles may be equipped with two Rosco exterior mirrors.

The mirrors can easily be adjusted by using the remote controls located on the L.H. side control panel. The mirrors have easy to replace glass in case of breakage. Remote control motors can also be replaced.

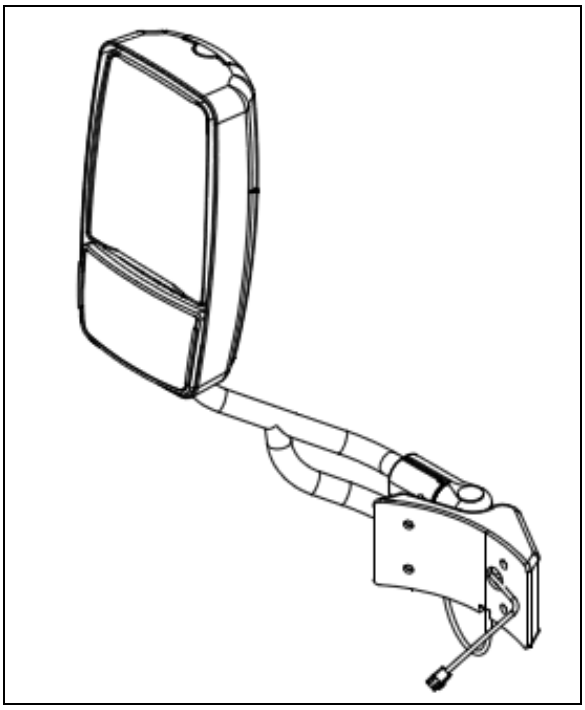

FIGURE 25: REAR VIEW MIRROR (ROSCO) 18398B

- **Adjustment**

At the base of the mirror arm, loosen the mounting bolt to swing arm in or out.

To pivot the mirror head, loosen the setscrews on each side of the ball stub at the base of the mirror head to facilitate the adjustment.

- **Disassembly**

At end of mirror arm, loosen the setscrews to relieve tension on the ball stem. Remove the ball stem from the arm.

Remove the four screws fastening the mirror arm base to the coach.

- **Assembly**

Mount the mirror arm base to the coach. Insert the ball stem into the mirror arm and tighten the socket setscrews.

| *NOTE* |
| --- |
| *Position the ball cup halves so the joint between them lies on the centerline of the arm. Ensure that the setscrews are not on the joint between the cup halves.* |

- **Remote Controlled Rear View Mirrors**

The remote controlled external rear view mirrors attach to support arms using a pivot collar secured by setscrews. Loosening the setscrews allows the whole head assembly to turn on the support arm for initial adjustment. A mounting bolt and washer hold the arm support to the mounting bracket. The arm support can be moved to position the mirror head into or away from the coach body.

- **Mirror Control**

The remote control pointer knob(s) for the mirrors is (are) mounted on the L.H. side control panel. The harness to the mirror head runs through the arm support. The remote motor is mounted to the mirror head behind the mirror glass.
**Choose the side to be adjusted by pressing the "L" (left) or "R" (right) button on the control pad. The flat mirror is then adjusted by pressing the "upper" button and the convex mirror by pressing the "lower" button. The selected mirror can now be adjusted left to right or up and down by using the arrow keys on the control pad. The R/H side round mirror is non-adjustable.**

| *NOTE* |
| --- |
| *The mirrors heater function (HTR button and LED indicator) is optional and not connected on this vehicle.* |

- **Disassembly**

At end of mirror arm, loosen the setscrews to relieve tension on the ball stud. Remove the ball stud. Remove the ball stud from the arm and gently pull the harness out until the connector is exposed.

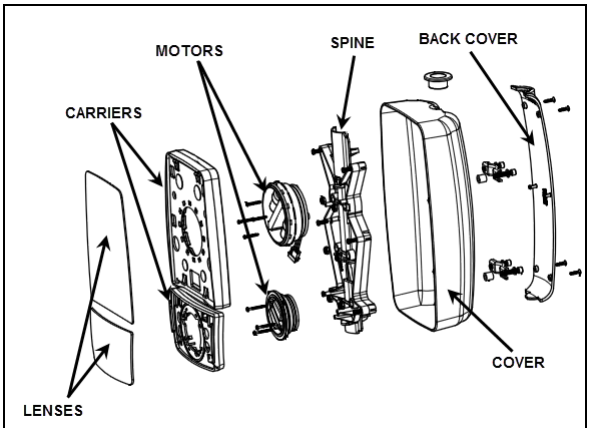

FIGURE 16: R/H OUTSIDE REAR-VIEW MIRROR 18694

Remove the four screws fastening the mirror arm base to the coach. Slide the harness free of the mirror arm base.

- **Assembly**

Attach a stiff wire (snake) to the end of the harness and insert the wire through the mirror arm base and arm, gently pull the harness through the arm and disconnect the "snake".

Connect the mirror head harness. Insert the harness connector back into the mirror arm.
Insert the ball stud into the mirror arm and tighten the socket setscrews.

| *NOTE* |
| --- |
| *Position the ball cup halves so the joint between them lies on the centerline of the arm. Ensure that the setscrews are not on the joint between the cup halves.* |

- **Glass removal and installation**

Using a non-metallic flat wedge, insert the edge under the over-hang tab covering the mirror glass.

Raise the wedge to spread the over-hang tab. By continuing to raise the wedge, the glass will begin to pop out.

Do not force the glass further than half an inch outward. A secondary adhesive holds the glass. This adhesive is used to cushion the glass and dampen vibration. It is soft and can be cut fairly easily.

Slide a straight edge, such as a ruler, behind the glass and make a slicing motion back and forth. The mirror glass will come free.

Remove the glass after the adhesive has been cut. Some adhesive will remain on the mirror

carrier. These adhesive spots are soft and pressure sensitive. They will adhere again when the glass is reinserted.

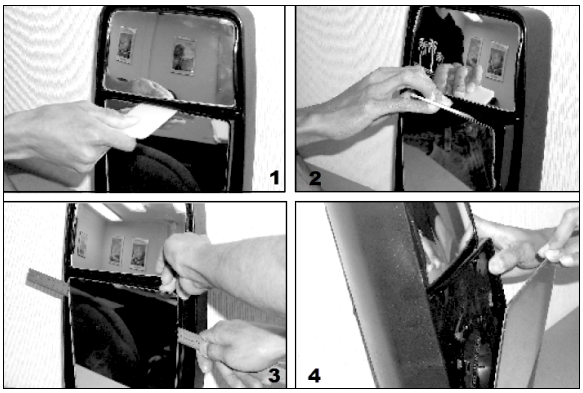


**FIGURE 17: REAR VIEW MIRROR GLASS REMOVAL**

To re-insert the glass, slide one side under the over-hang tab and spread the opposite over-hang tab with the wedge until the mirror glass is permitted to snap or drop in place.

### 9.1.5 Windshield Wipers

Refer to Paragraph “Windshield Wipers and Washers”, included in Section 23: Accessories of the Maintenance Manual for complete information on windshield wipers.

### 9.1.6 Windshield

The windshield is single-glazed AS-1 laminated safety glass. Each windshield is secured to a flange around the front structure opening by a one-piece black rubber extruded gasket

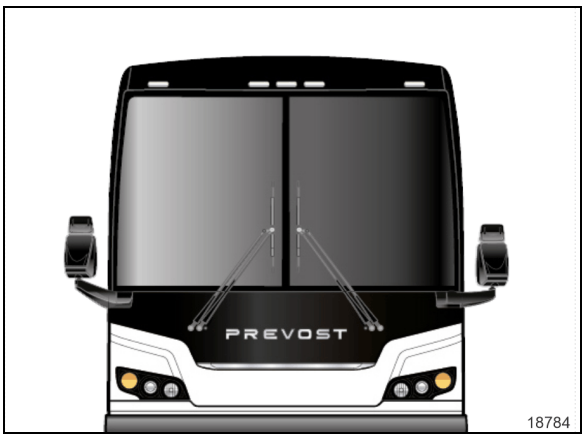


FIGURE 18: WINDSHIELD

A low profile gasket with a single locking strip is now used on our vehicles.

Proper installation of the windshield ensures watertightness. Since glass varies in fit depending on the supplier, we recommend installing a replacement windshield obtained from Prevost Parts to ensure proper fit.

| *NOTE* |
| --- |
| *For more information on windshield removal or installation, a webinar is available from Prevost.* |

#### *9.1.6.1 Hydrophobic Treatment on Side Windows*

The new low profile window gasket creates an airflow that is closer to the vehicle. This reduces air drag but window soiling of the side windows becomes more likely.

A specific water repelling treatment is factory applied to the driver's and entrance door windows to counter this effect and prevent window soiling.

We suggest renewing the water repelling treatment each year or more frequently depending on operating conditions.

If you notice increased soiling on the driver's and entrance door windows after several months of operation, the water repelling treatment can be renewed by making an appointment with your nearest Prevost Service Center.

The Hydrophobic compound is specially formulated for Prevost and can only be applied by Prevost technicians in Prevost service centers.

#### *9.1.6.2 Removal*

| **WARNING** |
| --- |
| Removal and installation must be performed by more than one person. Wear protective gloves when handling the windshield. |

1. Remove the wiper arms of the affected windshield.
2. To ease damaged windshield removal, remove the rubber locking strips from the rubber extrusion.
3. From inside of vehicle, push against the top L.H. side corner of windshield for the removal of a R.H. side windshield. If the L.H. side windshield had to be removed, you would have to push against the top R.H. side corner.

| NOTE |
| --- |
| *We are referring to the L.H. and R.H. side as viewed from the inside of the vehicle.* |

4. At the same time, another person gradually lifts the rubber lip from the vehicle exterior using a plastic spatula from top to bottom.
5. Remove the entire damaged windshield and broken glass if applicable.
6. Clean the rubber extrusion channel with Standox anti-silicone. Refer to heading *"Windshield Installation"* in this section for instructions on how to reinstall windshield.

| NOTE |
| --- |
| *If the rubber extrusion is damaged, remove and discard it, then clean the windshield opening with Standox anti-silicone. Refer to heading "Installation of Rubber Extrusion and Windshield" in this section for complete instructions.* |

### *9.1.6.3 Windshield Installation*

This procedure is provided as a general guideline to install a new windshield with a new gasket on a clean structure. The method may vary depending on material aging and condition.

1. Spray rubber extrusion with soapy water to ease windshield insertion.
2. Slide windshield into rubber extrusion groove starting with the bottom curved side edge. Using a plastic spatula, move the rubber extrusion lip aside to gradually insert the windshield into the groove.

| NOTE |
| --- |
| *Spray soapy water on a regular basis to ease windshield insertion.* |

4. Using the same type of plastic spatula, repeat the same operation from inside of vehicle, gradually inserting the windshield into the groove.

| NOTE |
| --- |
| *Make sure windshield bottom edge is well inserted into the rubber extrusion groove before proceeding with the sides.* |

5. Then, working from both sides of windshield bottom to top, gradually move the rubber extrusion lip aside to insert the windshield into the groove. Use also soapy water on the inside of vehicle to insert the windshield into the rubber gasket groove.

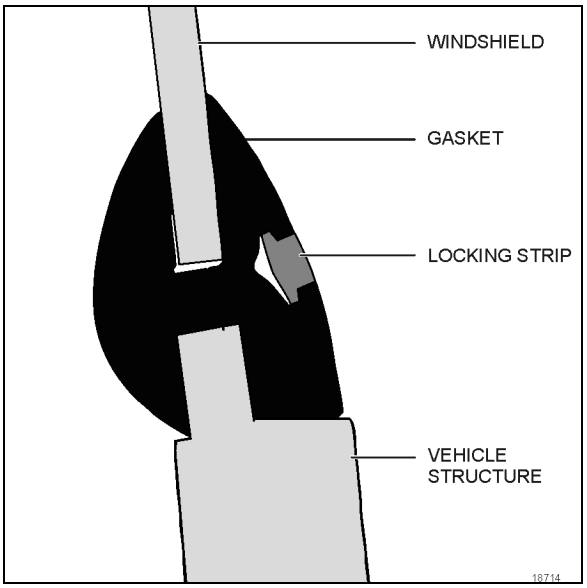


FIGURE 19: WINDSHIELD INSTALLATION SIDE VIEW

6. Insert the top curved corner then finish with the top of windshield.
9. Spray locking strip and rubber extrusion groove generously with soapy water.

| NOTE |
| --- |
| *Locking strips retract with time. Install ends of locking strips as tight as possible in the V-channel.* |

10. Using insertion tool 680755, insert the strip into the rubber extrusion groove. Gradually insert strip making sure to leave a 2 inch excess length at the extremity.

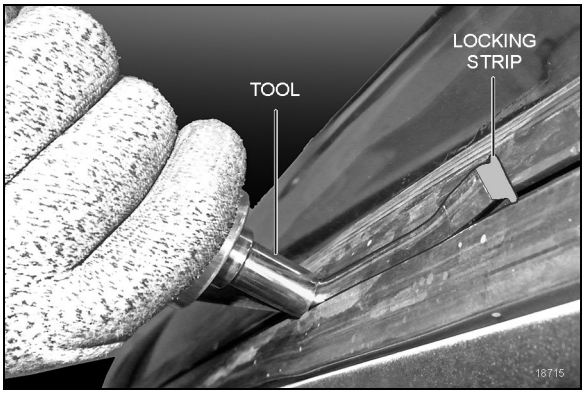


11. IMPORTANT: Every 6 inches or so, slide backwards to compress the strip due to its tendency to contract during drying process.

12. When strip insertion is almost complete, cut end at a 45° angle leaving ¼" of excess length to prevent contraction over time then insert strip into groove.
13. Reinstall windshield wiper and destination sign if applicable.

### *9.1.6.4 Installation of Rubber Extrusion and Windshield*

**CAUTION**

The black rubber extrusion securing the windshield in the opening fits correctly in only one position. Find the correct position of the rubber extrusion now, and make reference marks with a china marker to avoid searching for the correct position later in the procedure.

1. Clean the windshield opening sealing surfaces with anti-silicone and let dry.
2. Apply a 1/8" bead of black Simson adhesive #684685 to all four corner of the gasket in the groove outside corner as illustrated in Figure 20. Do this *before* placing gasket on vehicle structure to control quality and continuity of bead. This method helps achieve a watertight installation.
3. Place gasket on vehicle and secure the upper sections with tape
4. Wait for Simson adhesive to bond Install windshield as per paragraph 9.1.6.3: *"Windshield Installation"*

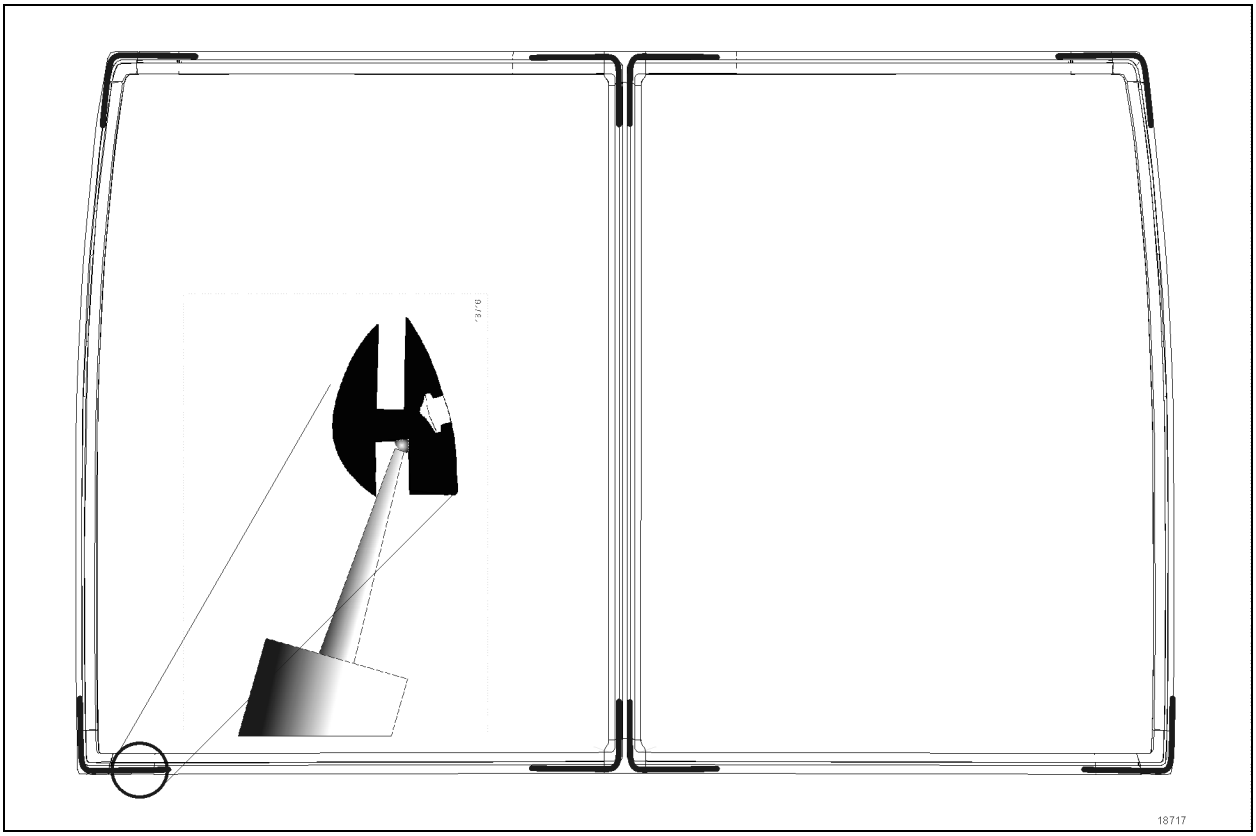


FIGURE 20: APPLICATION OF BLACK ADHESIVE

### 9.1.7 Regular Entrance Door (Coaches)

An air operated “sedan type” entrance door, with an air door cylinder and damper assembly are installed under the right hand dash. The opening and closing door speed cycle is adjustable by a damper mounted in parallel with the door cylinder on the door hinge. Door activation is controlled by a panel (Figure 21), located near the defroster and wiper motors. The accessory air reservoir supplies air to this system.

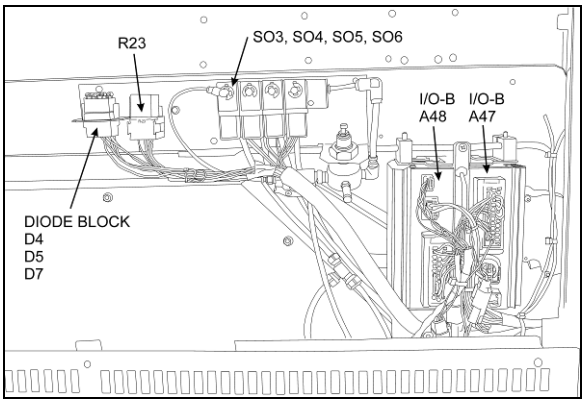


FIGURE 21: ENTRANCE DOOR & WIPER CONTROL PANEL 06619

The door is held in the closed position during coach operation by a two air cylinder locking mechanisms (Figure 23). Air cylinders with return spring in the cylinder body are used. Air cylinders are controlled by an electrically operated solenoid valve energized by a rocker switch located under the right hand dashboard.

To open the door, initial movement of the rocker switch energizes the air lock solenoid valve, venting the door locking cylinders. The return locking spring pulls the door lock away from the latch, unlocking the door. Door movement starts only when pressure in the central air door lock is below 10 psi. The “air cylinder open solenoid valve” opens and allows air to flow to the door cylinder, “the air cylinder close solenoid valve” exhausts air from the rod side of the cylinder.

To close the door, initial movement of the switch energizes the “air cylinder close solenoid valve” and air flows to the cylinder by its rod side port. The “air cylinder open solenoid valve” exhausts air from cylinder. When the reed switch signals the door as closed, the air lock solenoid valve is de-energized and loads the door lock cylinders. The cylinder moves the door lock in a position which engages a latch on the entrance door, holding the door positively closed.

Emergency exit valve, which opens the air valve circuit should be used only in emergencies, or when the door control system does not function properly.

Refer to the air system schematic diagram annexed at the end of section 12, “Brakes” and to page 22 of the wiring diagram.

- **Operation**

The air-operated door is controlled from inside the coach by two push-button switches located on the R.H. dashboard.

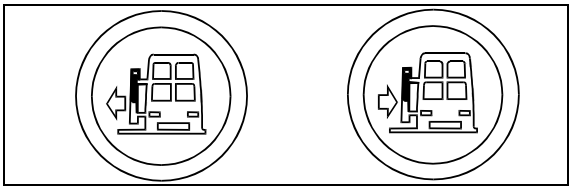

FIGURE 22: ENTRANCE DOOR OPERATING BUTTONS 06464

Opening and closing of the door from outside the coach is accomplished by a momentary toggle switch located under the front R.H. side marker light (Figure 24).

To close the door, the switch must be pushed towards the rear of the coach and held in position until the door has completed its movement.

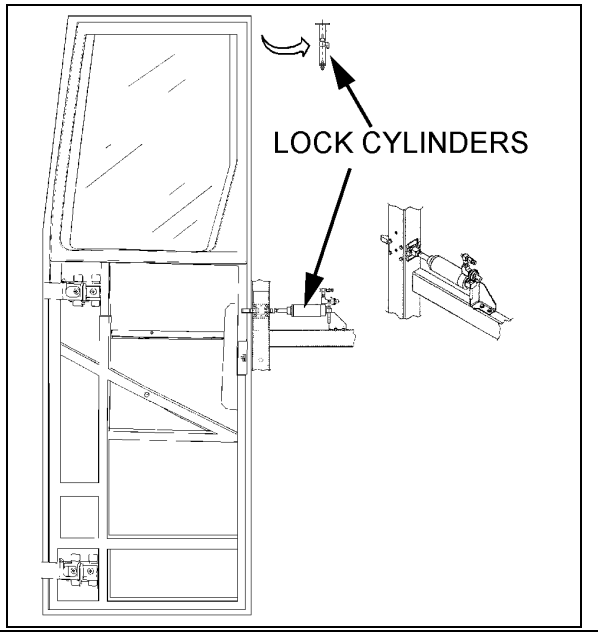

FIGURE 23: COACH ENTRANCE DOOR **18642**

To open the door, the switch must be pushed towards the front of the coach and held in position. When the door reaches the fully opened position, the system will keep pressure in the cylinder locking the door in that position. The door can be stopped in any position by releasing the switch. The door is not locked in position when not fully opened or closed.

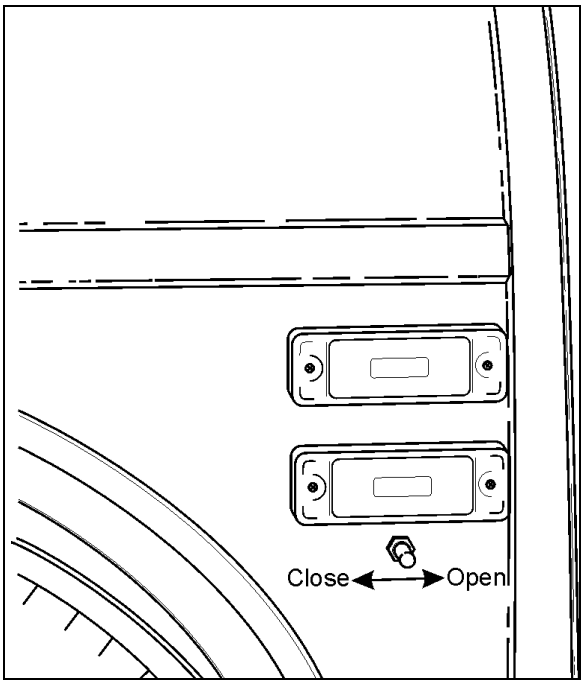


FIGURE 24: ENTRANCE DOOR CONTROL SWITCH **18599**

If the door has been locked with the key, a lever on the door can be moved to unlock.

- **Emergency Exit Valves**

From inside the vehicle, an emergency exit valve located near the door on the dash panel, releases the pressure from the lock cylinder. From the exterior, an emergency exit valve located in the front service compartment, also releases the air from the lock cylinder.

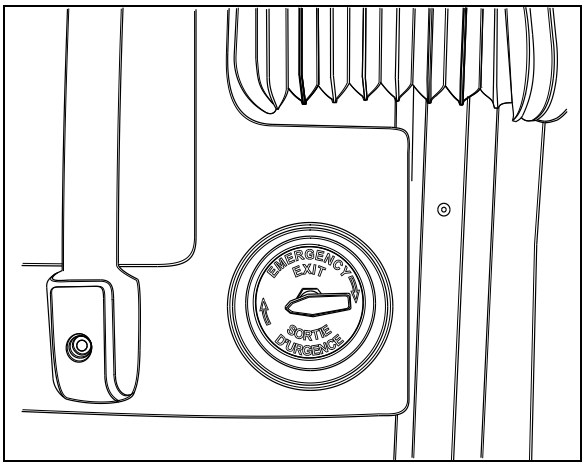


FIGURE 25: INTERIOR UNLATCH AIR VALVE **18330**

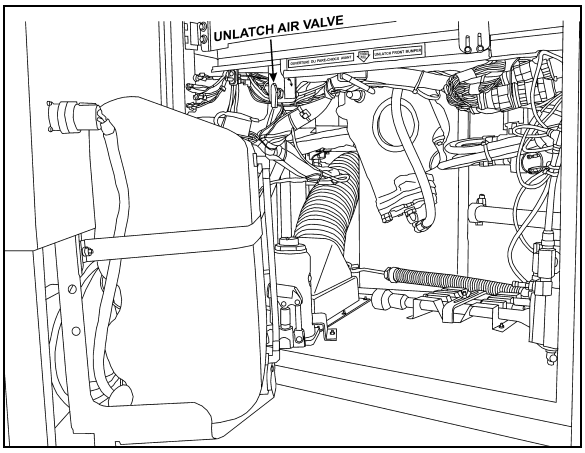


FIGURE 26: EXTERIOR UNLATCH AIR VALVE **12209**

Without Air and/or Without Electricity

If the air pressure drops while the coach has or hasn't any electricity, the spring loaded cylinders will unlatch the door. In such a case, unlock the door by moving the lever on the door or by using the key, then open the door manually.

With Air but Without Electricity

From inside the vehicle, turn the emergency exit valve to the "UNLOCK" position. Move the lever. From the exterior, turn the emergency exit valve to the "UNLOCK" position. Open the door. Close it, lock with the key and reset the outside emergency exit valve to the "NORMAL" position.

- **Door Cycle Speed Adjustment**

To do any adjustment, remove the two panels located next to the door hinge, as well as the door's upper hinge control.

**CAUTION**

It is important to make sure that damper does not reach end of stroke when door is completely closed or opened. The door cylinder must stop the door on opening. Screw or unscrew rod end to adjust if necessary.

To adjust opening and closing cycle speed on damper (Figure 27):

1. Remove the damper from the vehicle and hold it vertically with the lower eye or pin attachment in a vice. Use clamp plates to prevent damage.
2. Fully close the damper while turning the dust cap or piston rod slowly CCW until it is felt that the cams of the adjusting nut engage in the recesses of the foot valve assembly (Figure 27).

*NOTE*

*In* Figure 27*, if there is an indentation (B) in the dust cap (C) and the cover shows two holes (A), the damper is fitted with a bump rubber (D). If so, fully extend the damper and insert a round bar or screwdriver through the holes. Push the bump rubber down and remove. Remove the split plastic collar (E) (if fitted) from the piston rod.*

3. The damper may have already been adjusted. Therefore check whether the damper is adjusted or not by keeping it closed and gently turning further CCW, counting at the same time the half-turns until a stop is felt. Stop turning and do not force.
4. While keeping the damper closed, make two CW half-turns. In case of prior adjustment, add the number of half-turns previously counted. The total range is about five half-turns. Pull the damper out vertically without turning for at least 3/8" (1cm) to disengage the adjusting mechanism. The dust cap or piston rod may now be turned freely.
5. The damper can now be refitted in the vehicle.

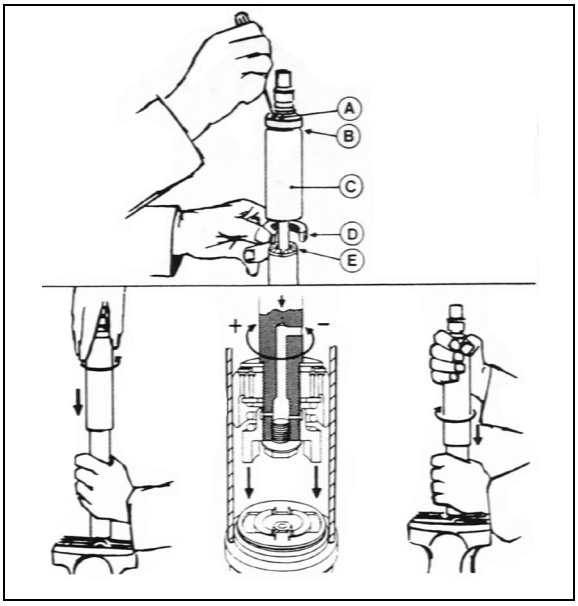


FIGURE 27: DAMPER 18643

*NOTE*

*Where a bump rubber was installed, refit same inside the dust cap and by fully closing the damper, the rubber will seat again at top of the dust cap. Refit the split plastic collar E (*Figure 27*).*

6. Reinstall panels and entrance door hinge cover.

- **Horizontal And Vertical Adjustment**

Before attempting to correct any door operating problem by adjusting any part of the air cylinder assembly, first perform the following mechanical checks and procedure.

Check around the perimeter of the door for binding. If any binding is found, adjust as follows:

1. Remove the screws and the plastic molding covering each of the hinges.

*NOTE*

*Ask an assistant to help you to perform the following adjustments.*

2. Remove the Allen button head screw and the washer retaining the rod end with bearing to the upper hinge. See Figure 28.
3. Support the door with a wooden block and a hydraulic jack.

4. Loosen the horizontal bolts retaining the door to the hinges. Adjust the door horizontally and vertically with the jack. Tighten the bolts.

**TORQUE: 55-65 lb-ft (75-88 Nm)**

Remove the jack and the wooden block.

**CAUTION**

Make sure the front side door does not interfere with the exterior panel.

5. Pull and fasten the rod end to the hinge with the washer and the button screw.
6. Screw the plastic moldings covering the hinges.

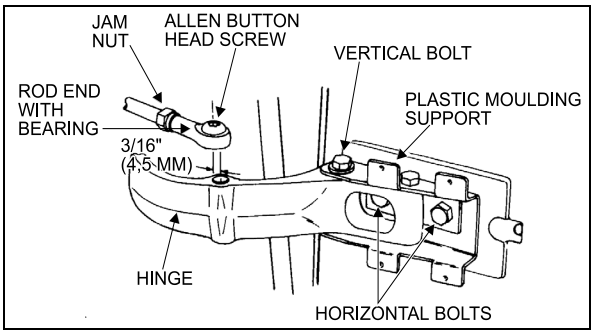


FIGURE 28: UPPER DOOR HINGE 18058

### *Seal Compression Adjustment*

1. Turn the emergency exit valve to the "UNLOCK" position and close the door.
2. From the outside of vehicle, insert a straight edge in the gap along the door outside perimeter. Measure the distance between the door frame and the door outside surface at the door four corners (refer to Figure 29).

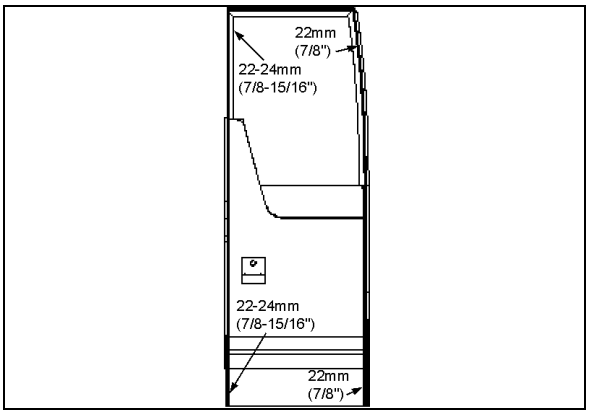


FIGURE 29: SEAL COMPRESSION ADJUSTMENT 18632

*NOTE*

*The front measurements are the most important. If required, ask an assistant to help you to perform the following adjustments.*

3. If required loosen the bolts retaining the door to the hinges. Adjust the bolts to obtain the proper seal compression.

### *Door Seal Replacement*

1. Inspect the seal; if cracked or torn, it must be replaced:
2. Remove the old seal and with a sharp edge knife, scrape tape left on the fiberglass door surface.
3. Sand the surface of the door where a new seal will be applied with 240 grit sandpaper.
4. Clean the surface with alcohol or anti-silicone.

**WARNING**

Wear rubber gloves and do not smoke when cleaning.

5. Peel off protective paper from the seal. Position the seal flush with the top, sides and lower edges of the door.
6. Progress slowly all around the door.
7. Cut the seal and glue both ends with LOCTITE 414 glue.
8. To assure bonding, press a small conical roller on top of the new seal all around 3 times.

- **Troubleshooting**

| SYMPTOMS | PROBABLE CAUSES | REMEDY |
|---|---|---|
| DOOR WILL NOT OPEN FROM EXTERIOR SWITCH. | Manual door locks engaged. | Release manual door locks. |
| | Upper and lower solenoid locks do not disengage. | Check voltage at solenoid locks when door is open. If the voltage is 24 volts then replace solenoid #641217. Else, check circuit power. |
| | Relay module do not receive current. | Reset breaker "ON" or check batteries power supply. |
| | Opening solenoid door does not receive current. | Check voltage at opening solenoid door. If the voltage is 24 volts then replace it. Else replace control relay. |
| | Switch malfunction. | Replace switch. |
| DOOR WILL NOT CLOSE FROM EXTERIOR SWITCH. | Switch malfunction. | Replace switch. |
| | Solenoid failure. | Check voltage at solenoid. If the voltage is 24 volts then replace solenoid. Else replace control relay. |
| DOOR WILL NOT OPEN FROM INTERIOR SWITCH. | Manual door locks engaged. | Release manual door locks (open position) from vehicle exterior. |
| | Upper and lower solenoid locks do not disengage. | Check voltage at solenoid locks when door is open. If the voltage is 24 volts then replace solenoid #641217. Else, check circuit power and replace control relay. |
| | Module relay does not receive electric current. | Reset breaker "ON" or check batteries power supply. |
| | Door opening solenoid does not receive current. | Check voltage at door opening solenoid. If the voltage is 24 volts then replace it. Else replace control relay. |
| | Switch malfunction. | Replace switch. |
| | Upper lock stays engaged | Lubricate upper lock assembly. Check wear and replace parts if necessary. |
| DOOR WILL NOT CLOSE FROM INTERIOR SWITCH. | Switch malfunction. | Replace switch. |
| | Door closing solenoid does not receive electric current. | Check voltage at door closing solenoid. If the voltage is 24 volts then replace it. Else replace control relay. |
| DOOR WILL NOT OPEN AFTER DRAINING AIR FROM SYSTEM BY EMERGENCY VALVE(S). | Manual door locks engaged. | Release manual door locks (open position) from vehicle exterior. |
| | Damper cylinder blocks the door. | Adjust or replace damper cylinder. |
| | The upper lock blocks the door. | Adjust upper lock. Lubricate upper latch bolt. Adjust upper latch height. |
| DOOR LOCKS STAY ENGAGED WHEN DOOR IS OPEN. | Power supply is cut at solenoid. | Place switch in open position. |
| | Lock solenoid does not disengage. | Check voltage at solenoid lock when door is OPEN. If the voltage is 24 volts then replace solenoid #641217. Else, check circuit power and replace control relay. |
| | | |

| SYMPTOMS | PROBABLE CAUSES | REMEDY |
|---|---|---|
| DOOR LOCKS DO NOT LOCK WHEN DOOR IS CLOSED. | Emergency valve is open. | Close emergency valve. |
| | Lock solenoid stays electrified. | Check latch bolt ground on door frame. If needed clean locks for better contact. Check ground circuit. |
| | Lock solenoid works in reverse. | Reverse air hoses at solenoid locks. |
| | Relay does not function. | Replace relay. |

- **Lubrication**

| Part | Lubricant | Frequency |
|---|---|---|
| ▪ Latches<br>▪ Upper door catch<br>▪ Door cylinder rod end with bearing grease fitting | *Low temperature grease* | Every six months |
| ▪ Door locking mechanism | *White grease* | Every six months |
| ▪ Key hole<br>▪ Damper pins<br>▪ Hinges | *Low viscosity oil* | Every six months |

- **Entrance Door Body Panel and Window**

***Window***

For the removal of entrance door window, you will need:

Pneumatic hammer tool (Zip Gun);
Razor sharp window scraper;
"Olfa" knife;
Face shield.

- Open entrance door.
- Mark the position of the entrance door window for future reference.
- Remove interior finishing panel.
- From inside of vehicle, cut Sika bead around window perimeter using a "Zip gun" while another person hold the window from the outside.

| *NOTE* |
|---|
| *Wear ear plugs during this operation.* |

- Then, move outside of vehicle and cut Sika bead to free window while somebody else hold the window from the inside.
- Carefully remove window from frame, ask for help if needed.
- Using a razor sharp window scraper, remove Sika bead and double-face self-adhesive tape residue from window frame.
- Clean window using window cleaner.
- Apply Sika Aktivator around window perimeter.
- Clean door frame using anti-silicone.
- Using a scratch pad "Scotch Brite", scratch the perimeter of the window frame where the adhesive will be applied.
- Clean door frame again using anti-silicone.
- Apply some Sika 206 G+P onto door frame.
- Apply Sika 255 onto door frame structure.

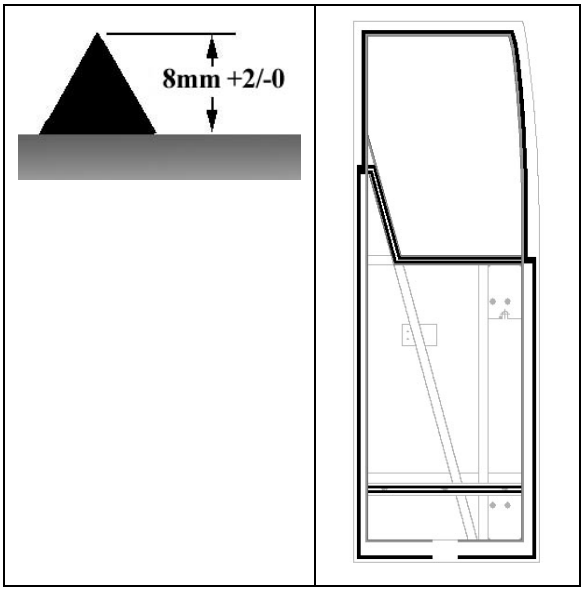


- Apply Sika 255 at junction of frame and window.

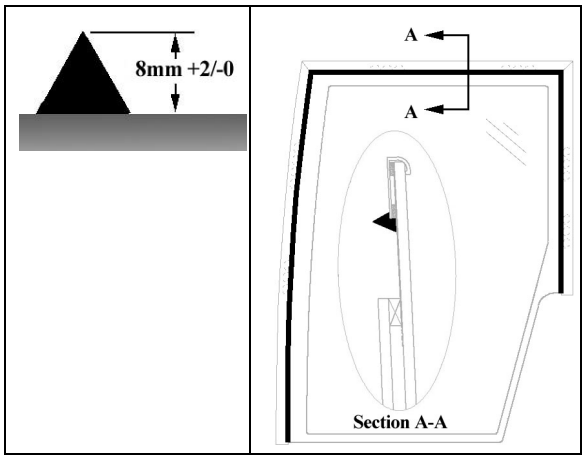


- Install and center window onto door frame. Using your hands, compress window.
- Discard waste according to applicable environmental regulations, use dangerous waste containers.
- Apply masking tape before applying Sika glue to protect paint and adjacent surfaces during surface treatment

### *Body Panel*

For the removal of entrance door body panel, you will need:

Pneumatic hammer tool (Zip Gun);
Razor sharp window scraper;

- Open entrance door.
- Remove interior finishing panels to access rub rail fixing bolts, then remove rub rail.
- Remove door lock and interior lighting.
- Using the "**Zip Gun**", cut Sika bead located ¼ inch (7-8 mm) from each body panel edge.

| *NOTE* |
| --- |
| *Wear ear plugs during this operation.* |

- Separate body panel from door.
- Using a razor sharp window scraper, remove from door frame Sika bead and double-face self adhesive tape residue.
- Using a scratch pad "Scotch Brite", scratch the perimeter of the door frame where the adhesive will be applied.
- Clean door frame again using anti-silicone.
- Apply some Sika 206 G+P onto door frame.

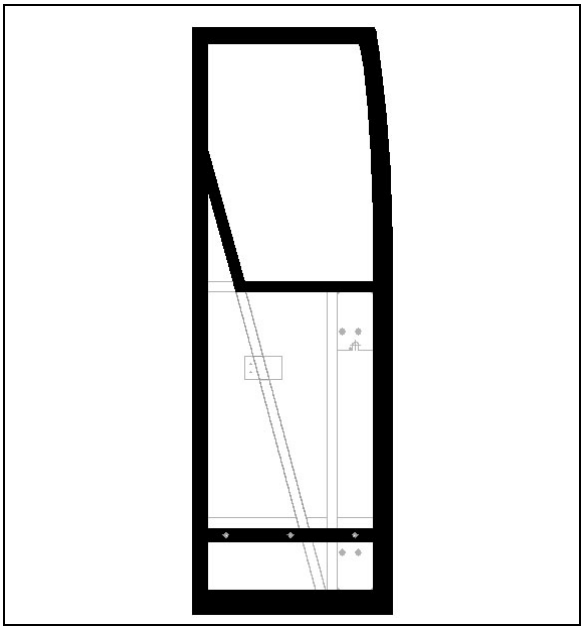

- Using a scratch pad "Scotch Brite", scratch the perimeter of the body panel where the adhesive will be applied.
- Clean body panel using anti-silicone.
- Apply some Sika 206 G+P onto body panel.

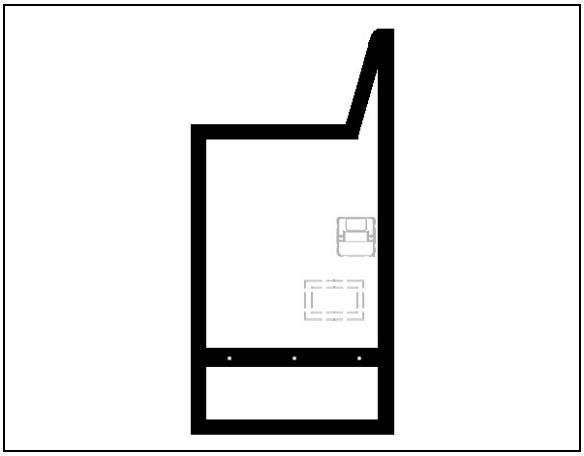

- Apply 1/8 x1/4 double face self-adhesive tape onto door frame.

| *NOTE* |
| --- |
| *Leave some space at the bottom (50mm) for water dripping* |

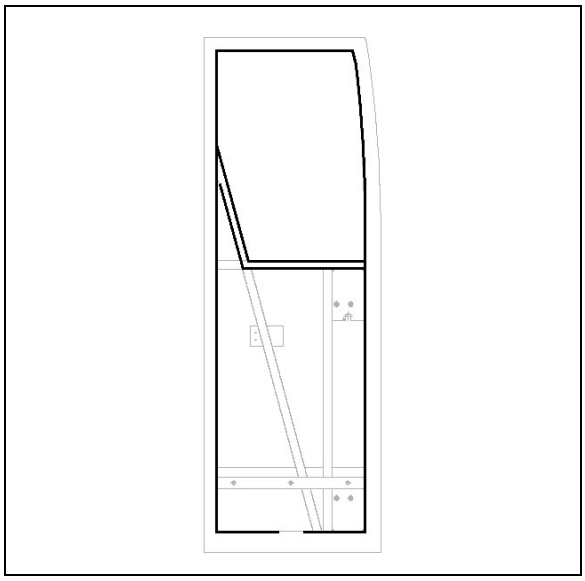

- Apply Sika 255 onto door frame structure.

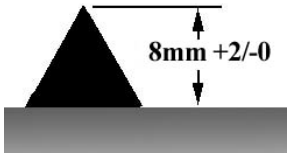


*Note: Leave some space at the bottom (50mm) for water dripping.*

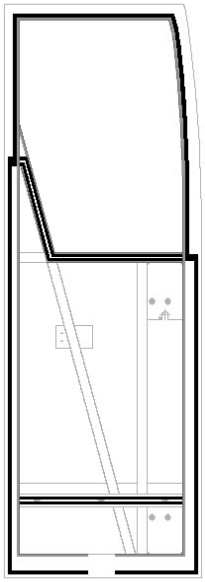

- Install and center fiber glass body panel onto door frame leaving an excess of 3mm all around the frame.

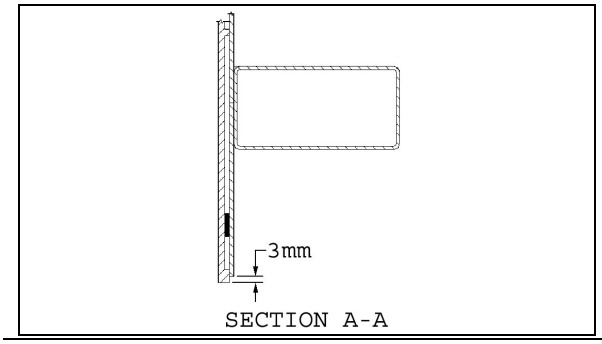


- Line-up body panel with window. There must be a gap of 4±2mm between window and body panel.

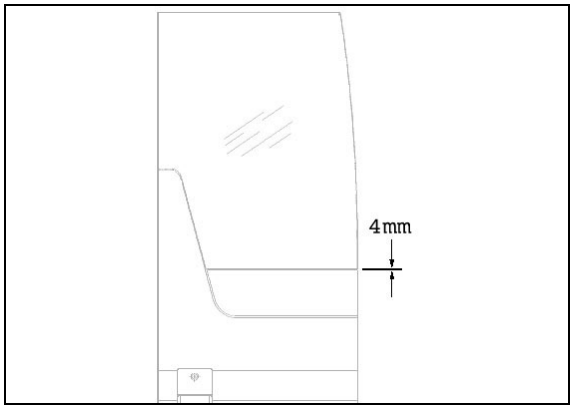


- Apply some masking tape **1mm** from window edge and body panel.
- Fill the gap between window and body panel with Sika 255.
- Smooth down the joint with a plastic scraper then remove masking tape.
- Wet Sika joint using water to accelerate the curing process and put the finishing touch with your finger.

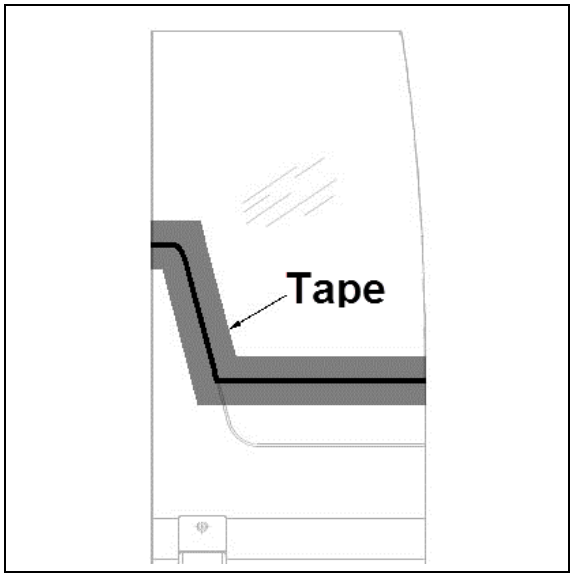


- Discard waste according to applicable environmental regulations, use dangerous waste containers.

### 9.1.8 Commuter Type Entrance Door

An air operated entrance door, with an air door cylinder and damper assembly installed under the right hand dash for the R.H. door panel opening. Another air door cylinder is installed behind the wall to the right of the first curb-side passengers' seat for the L.H. door panel opening. The opening and closing door speed cycle is adjustable by a damper mounted in parallel with the R.H. door panel cylinder on the door hinge. Door activation is controlled by a panel (Figure 30), located near the defroster and wiper motors. The accessory air reservoir supplies air to this system.

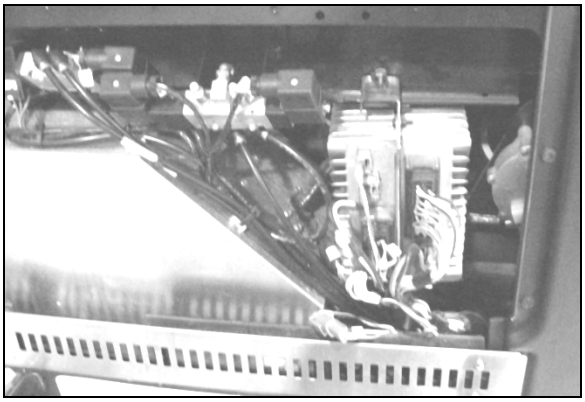

FIGURE 30: ENTRANCE DOOR & WIPER CONTROL PANEL
06619

The door is held in the closed position during coach operation by a two air cylinder locking mechanisms (Figure 31).

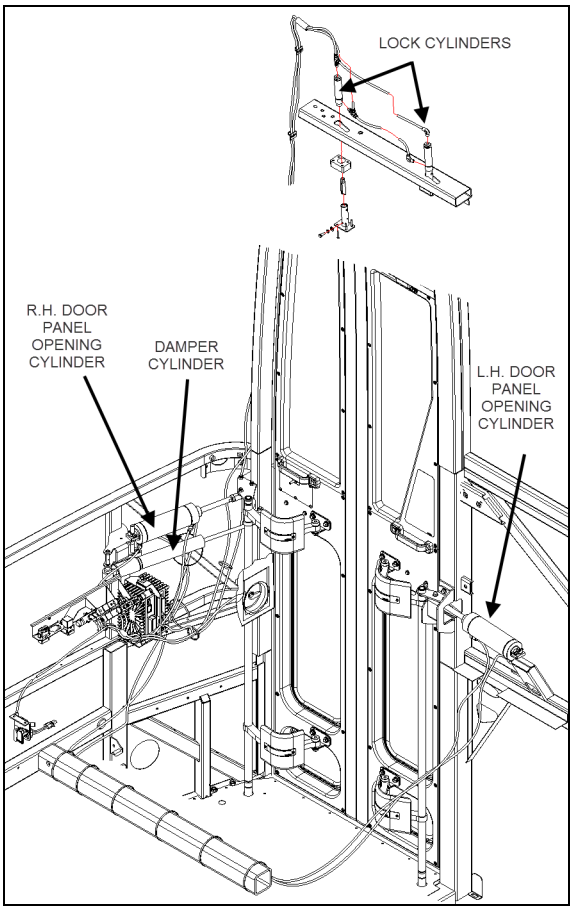


FIGURE 31: ENTRANCE DOOR - VIEW FROM INSIDE

Air cylinders with return spring in the cylinder body are used. Air cylinders are controlled by an electrically operated solenoid valve energized by a multiplex module located under the right hand dashboard.

To open the door, initial action from multiplex module output energizes the air lock solenoid valve, venting the door locking cylinders. The return locking spring pulls the door lock away from the latch, unlocking the door. Door movement starts only when pressure in the central air door lock is below 10 psi. The "air cylinder open solenoid valve" opens and allows air to flow to the door cylinders, "the air cylinder close solenoid valve" exhausts air from the rod side of the cylinders.

To close the door, initial movement of the switch energizes the "air cylinder close solenoid valve" and air flows to the cylinders by their rod side ports. The "air cylinder open solenoid valve" exhausts air from cylinders. When the sensor signals the door as closed, the air lock solenoid valve is de-energized and loads the door lock

cylinders. The cylinder moves the door lock in a position which engages a latch on the entrance door, holding the door positively closed.

Emergency exit valve, which opens the air valve circuit should be used only in emergencies, or when the door control system does not function properly.

Refer to the air system schematic diagram and to page 29.1 of the wiring diagram.

- **Operation**

Lock or unlock the entrance door from outside the vehicle by turning the key in the door lock (counterclockwise to lock, clockwise to unlock). The entrance door can be unlocked from the inside using the small lever located on the door.

The air-operated door is controlled from inside the coach by two push-button switches located on the R.H. dashboard.

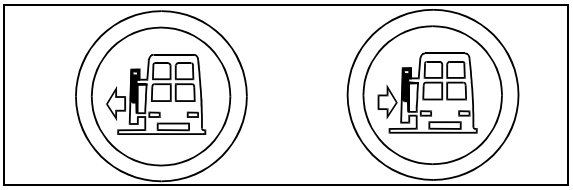

FIGURE 32: ENTRANCE DOOR OPERATING BUTTONS 06464

From the inside, open the door by pressing the door opening switch (L.H. button) on the R.H. dashboard panel. The door will open to full open position within 5 seconds.

Close by pressing and holding the door closing switch (R.H. button) on the dashboard. If the closing switch is released before the door is fully closed, the door will stop in that position.

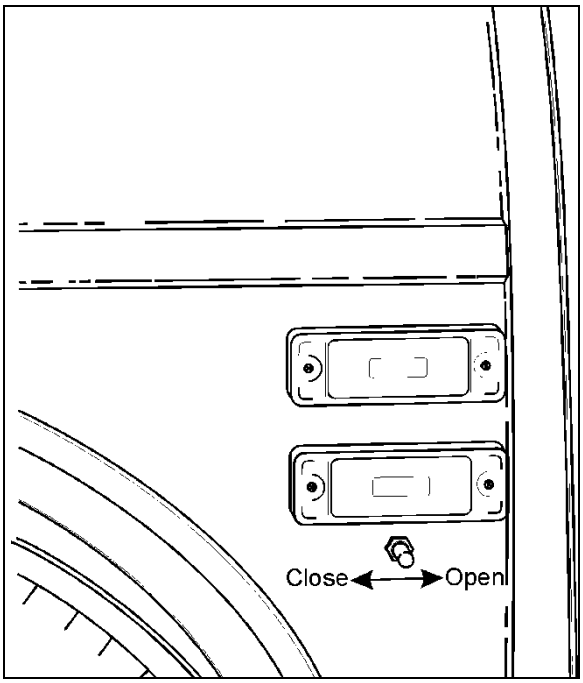


FIGURE 33: ENTRANCE DOOR CONTROL SWITCH 18599

Opening and closing of the door from outside the coach is accomplished by a momentary toggle switch located under the front R.H. side marker light (Figure 33).

To close the door, the switch must be pushed towards the rear of the coach and held in position until the door has completed its movement. The door can be closed to any position by releasing the switch (or button, if inside) when the desired position is attained. However, the door is not locked in any position other than fully closed. The door can then be closed further by pushing or pulling on the door.

To open the door, the switch must be pushed towards the front of the coach and held in position. When the door reaches the fully opened position, the system will keep pressure in the cylinder locking the door in that position.

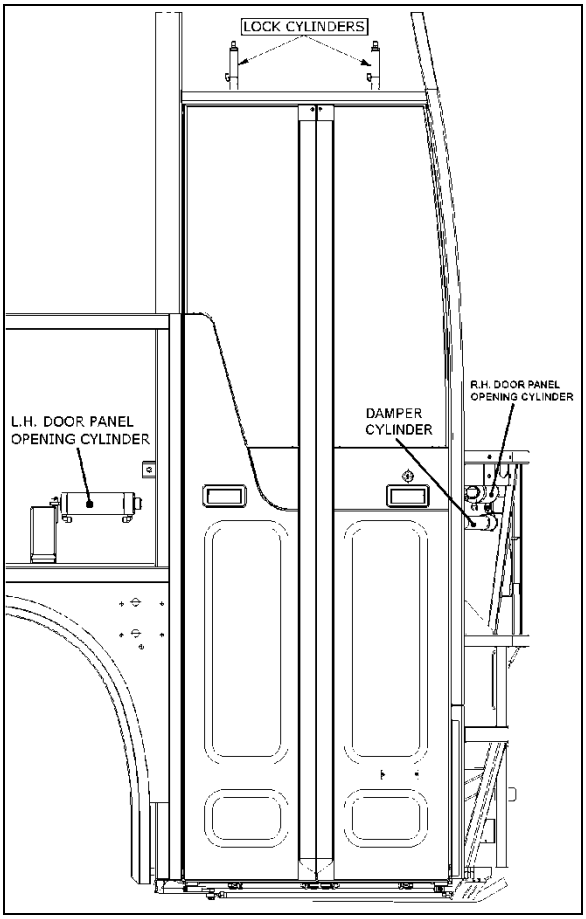


FIGURE 34: ENTRANCE DOOR - VIEW FROM OUTSIDE

- **Emergency Exit Valves**

From inside the vehicle, an emergency exit valve located on the dashboard R.H. side near the entrance door, releases the pressure from the lock cylinders. From the exterior, an emergency exit valve located in the front service compartment, also releases the air from the lock cylinders.

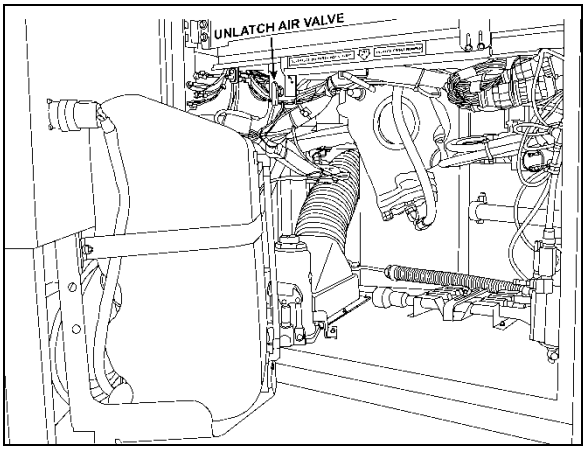


FIGURE 35: EXTERIOR UNLATCH AIR VALVE **12209**

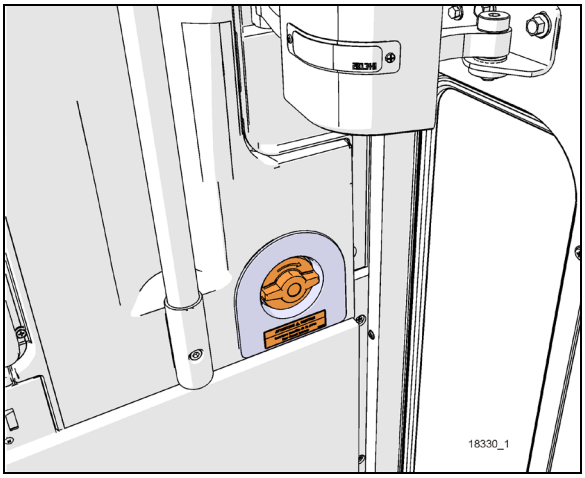


FIGURE 36: INTERIOR UNLATCH AIR VALVE **18330**

Without Air and/or Without Electricity

If the air pressure drops while the coach has or hasn't any electricity, the spring loaded cylinders will unlatch the door. In such a case, unlock the door by moving the lever on the door or by using the key, then open the door manually.

With Air but Without Electricity

From inside the vehicle, turn the emergency exit valve to the "UNLOCK" position. Move the lever. From the exterior, turn the emergency exit valve to the "UNLOCK" position. Open the door. Close it, lock with the key and reset the outside emergency exit valve to the "NORMAL" position.

- **Door Cycle Speed Adjustment**

To do any adjustment, remove the panels located next to the R.H door panel hinges.

**CAUTION**

It is important to make sure that damper does not reach end of stroke when entrance door is completely closed or opened. The door cylinders must stop the door on opening. Screw or unscrew rod end to adjust if necessary.

To adjust opening and closing cycle speed on damper (Figure 37):

7. Remove the damper from the vehicle and hold it vertically with the lower eye or pin attachment in a vice. Use clamp plates to prevent damage.

8. Fully close the damper while turning the dust cap or piston rod slowly CCW until it is felt that the cams of the adjusting nut engage in the recesses of the foot valve assembly (Figure 37).

| NOTE |
| --- |
| *In figure 23, if there is an indentation (B) in the dust cap (C) and the cover shows two holes (A), the damper is fitted with a bump rubber (D). If so, fully extend the damper and insert a round bar or screwdriver through the holes. Push the bump rubber down and remove. Remove the split plastic collar (E) (if fitted) from the piston rod.* |

9. The damper may have already been adjusted. Therefore check whether the damper is adjusted or not by keeping it closed and gently turning further CCW, counting at the same time the half-turns until a stop is felt. Stop turning and do not force.
10. While keeping the damper closed, make two CW half-turns. In case of prior adjustment, add the number of half-turns previously counted. The total range is about five half-turns. Pull the damper out vertically without turning for at least 3/8" (1cm) to disengage the adjusting mechanism. The dust cap or piston rod may now be turned freely.
11. The damper can now be refitted in the vehicle.

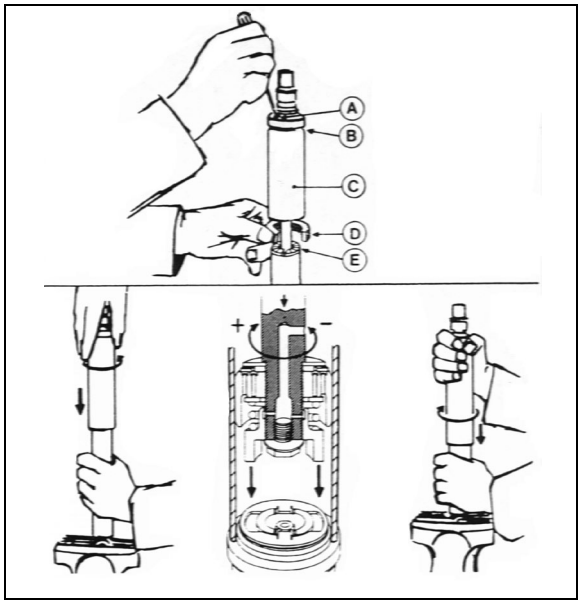


FIGURE 37: DAMPER 18643

| NOTE |
| --- |
| *Where a bump rubber was installed, refit same inside the dust cap and by fully closing the damper, the rubber will seat again at top of the dust cap. Refit the split plastic collar E (*Figure 37*).* |

12. Reinstall panels and R.H. entrance door panel hinge cover.

- **Entrance Door Panel Adjustments**

Before attempting to correct any entrance door operating problem by adjusting any part of the air cylinder assembly, first perform the following mechanical checks and procedure.

Check around the perimeter of the door for binding. If any binding is found, adjust as follows:

- Horizontal and vertical adjustment

7. Support the door panel with a wooden block and a hydraulic jack.
8. Unfasten the bolts fixing the door panel plates. See figure 24

| NOTE |
| --- |
| *Ask an assistant to help you to perform the following adjustments.* |

9. Adjust the door horizontally and vertically with the jack. Tighten the bolts. Remove the jack and the wooden block.

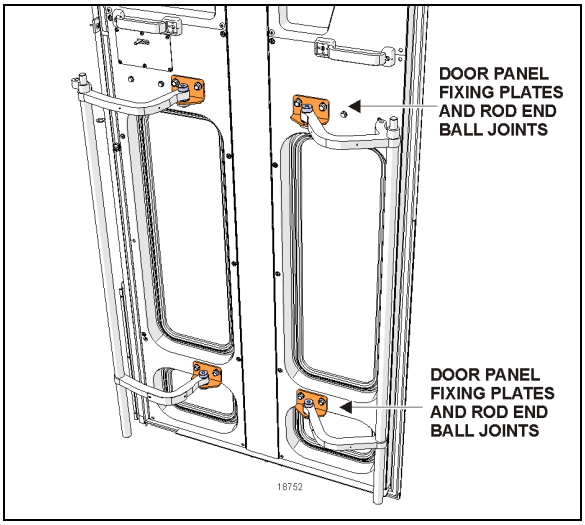


FIGURE 38: DOOR PANEL ADJUSTMENTS

- Depth adjustment

1. Support the door panel with a wooden block and a hydraulic jack.
2. Unfasten and then disconnect rod ends from door panel fixing plates. Screw or unscrew rod end in order to adjust door panel depth.
3. Tighten the bolts. Remove the jack and the wooden block

### 9.1.9 Front Electrical & Service Compartment Door Body Panel and Window

#### *Door Body Panel*

For the removal of front electrical & service compartment door body panel, you will need:

Pneumatic hammer tool (Zip Gun);

Razor sharp window scraper;

- Open service door.
- Remove interior finishing panels to access rub rail fixing bolts, then remove rub rail.
- Remove windshield washer reservoir, door lock and power window connector.
- Using the "**Zip Gun**", cut Sika bead located ¼ inch (7-8 mm) from each body panel edge.

| *NOTE* |
| --- |
| *Wear ear plugs during this operation.* |

- Separate body panel from door.
- Using a razor sharp window scraper, remove from door frame Sika bead and double-face self-adhesive tape residue.
- Clean door frame using anti-silicone.
- Using a scratch pad "Scotch Brite", scratch the perimeter of the door frame where the adhesive will be applied.
- Clean door frame again using anti-silicone.
- Apply some Sika 206 G+P onto door frame.

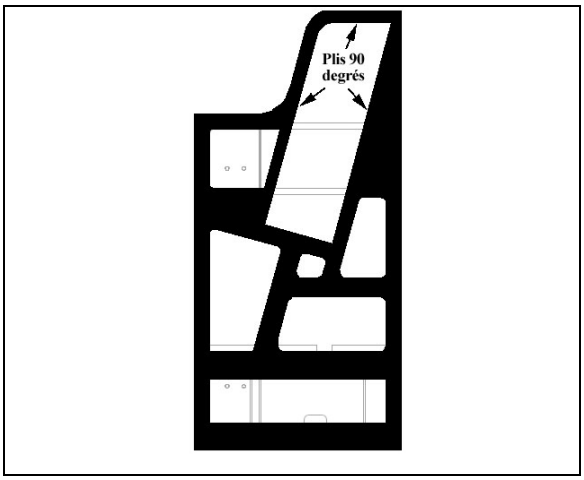


- Prepare new body panel using a scratch pad "Scotch Brite".
- Use a tack cloth to remove any dust or residue from the body panel surface.
- Clean body panel using anti-silicone.
- Apply some Sika 206 G+P onto body panel.

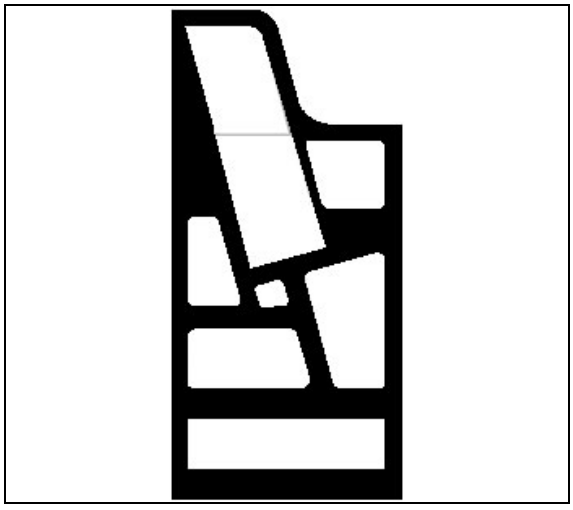

➢ Apply an even coat of Sika 255 onto the door frame.

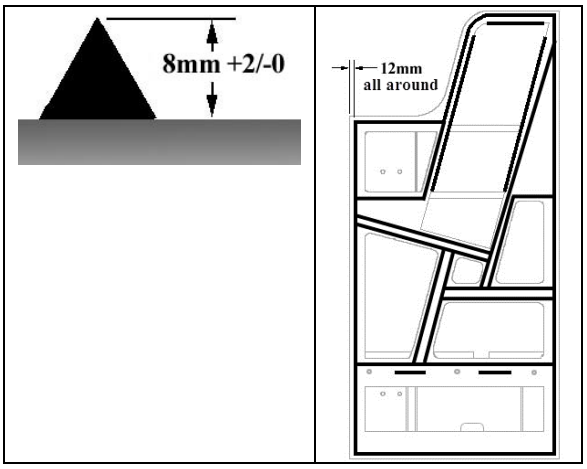


- Position body panel onto door frame and compress with your hands. Use a ruler.

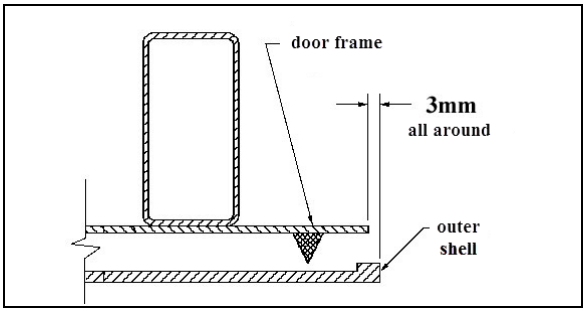


- Check body panel flatness using a 2-foot ruler (must be within 2mm).

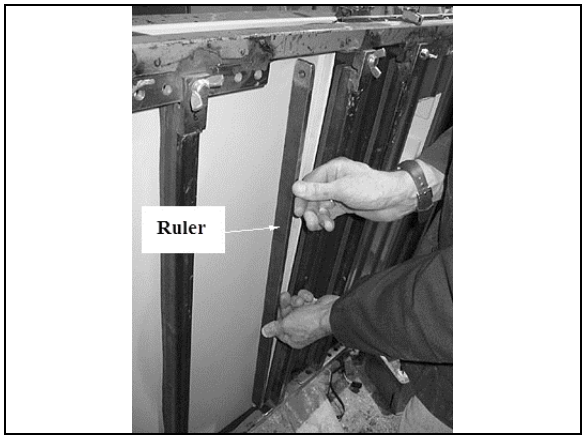


- Check proper power window sliding inside window frame.
- If applicable, remove excess of Sika adhesive all around door frame using Sika 208.
- From the inside of the door, apply some Sika 221 between door body panel and frame and on welding spots as per figure.

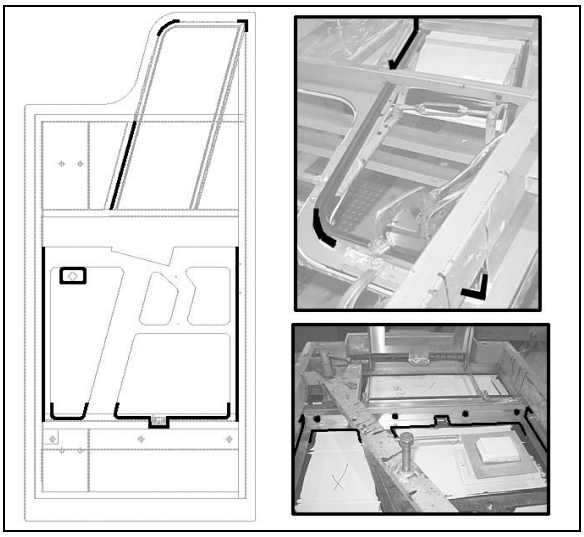

- Apply some #680066 glue inside fiber glass groove and fix power window wiper.

| *NOTE* |
|---|
| *Anti-friction side must be on glass side.* |

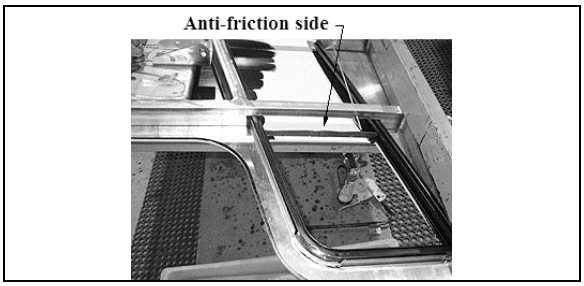


- From inside the door, apply some Sika 252 at the corners of window wiper.

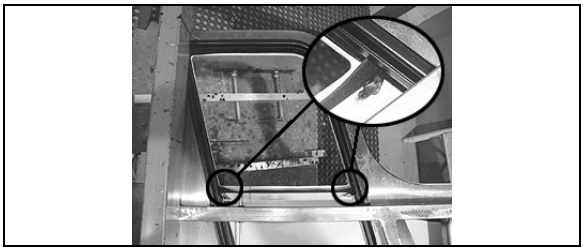

- Apply some #680066 glue inside finishing panel groove and fix power window wiper.

| *NOTE* |
|---|
| *Anti-friction side must be on glass side.* |

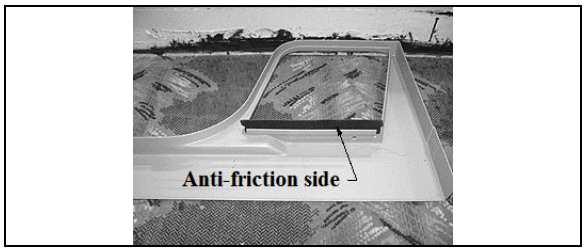


- Discard waste according to applicable environmental regulations, use dangerous waste containers.

### *Electrical Power Window*

- Insert 2 seals in the window frame.
- Apply some #680066 glue at the intersection of the 2 seals and also sparingly in order to fix the seal to the window frame.

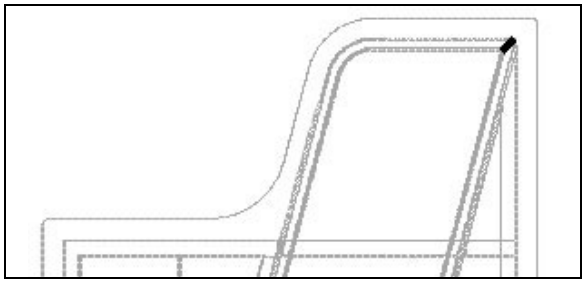

- Clean window using window cleaner.
- Insert window into frame.
- Secure window pane to raising mechanism.

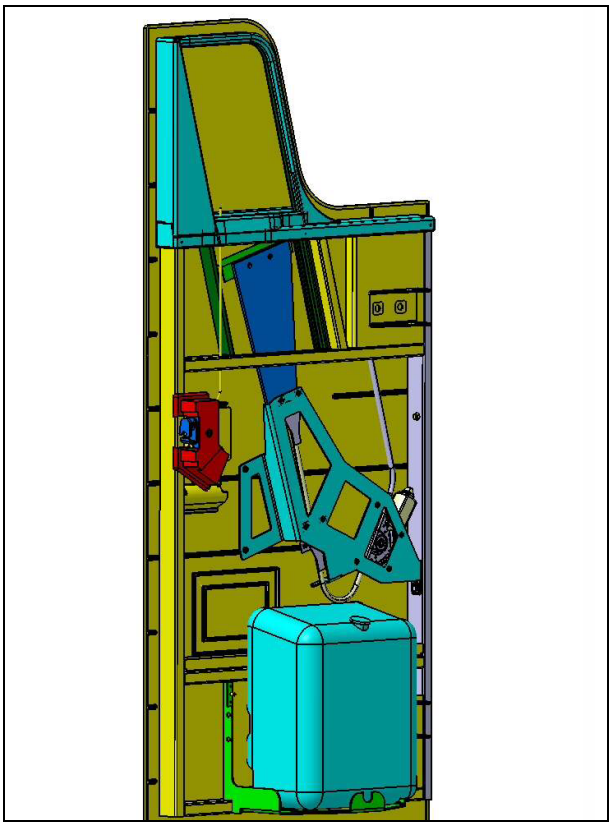

- Adjust window travel (6±3mm above window wiper).

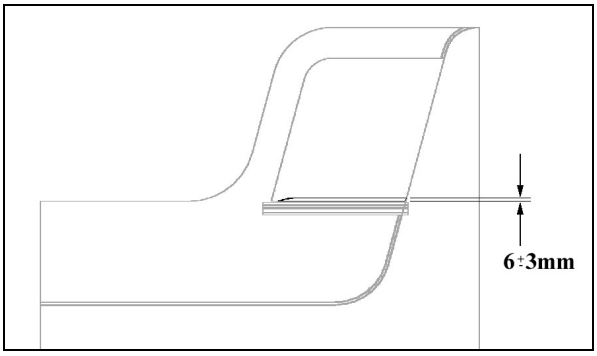


### *Driver's Window Gutter*

- Dry fit the gutter on the vehicle. If required, straighten up gutter using a hammer and a wooden block.




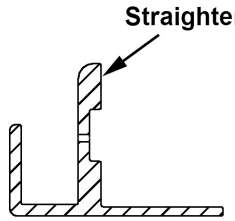


- Apply anti-silicone inside right angle.

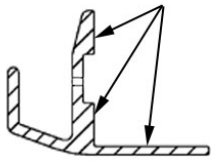


- Apply Sika 205 inside right angle.




- Apply 1/16 x1/4 double face self-adhesive tape onto gutter.

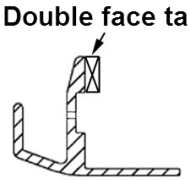


- Peel the back from double face self-adhesive tape.
- Apply Sika 252 inside right angle.

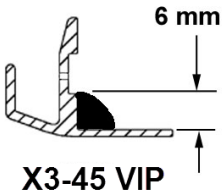


- If applicable, remove plastic film at the bottom of driver's window.
- Remove excess of Sika underneath driver's window.
- Clean bottom of driver's window using window cleaner.
- Apply Sika Aktivator at the bottom of driver's window.
- Install gutter under driver's window then compress in order to fix double face self-adhesive tape.
- Install 3 clamps and allow curing for 4 hours.

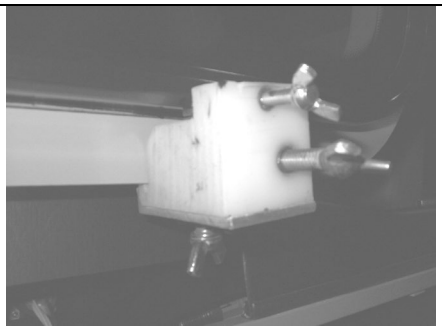

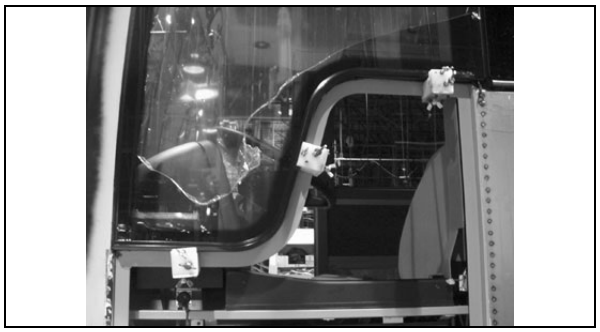

- **Upper Lateral Window**

For the removal of driver's window or upper lateral window, you will need:

Pneumatic hammer tool (Zip Gun);
Razor sharp window scraper;
"Olfa" knife;
Face shield.

- In the case of driver's window only, open front service compartment door.
- Mark the position of the driver's window for future reference.
- From inside of vehicle, cut Sika bead around window perimeter using a "Zip gun" while another person hold the window from the outside.

| *NOTE* |
| --- |
| *Wear ear plugs during this operation.* |

- Then, move outside of vehicle and cut Sika bead to free window while somebody else hold the window from the inside.
- Carefully remove window from frame, ask for help if needed.
- Using a razor sharp window scraper, remove from window frame Sika bead and double-face self adhesive tape residue.
- First of all, check Sika 205 cleaner expiration date.
- Before applying Sika cleaner, fold "Chix" cloth twice for proper width.
- Apply an even coat onto the inside of window frame and allow drying for 2 minutes (maximum 2 hours).
- Discard waste according to applicable environmental regulations, use dangerous waste containers.
- Apply masking tape before applying Sika glue to protect paint and adjacent window during surface treatment.

For gluing of upper lateral window, refer to procedure **SAV00632**.

- **Glued Molding Installation**

➢ Clean window gluing area using window cleaner.

➢ Apply Sika Aktivator onto gluing area making sure to avoid Sika adhesive if it is not cured yet.

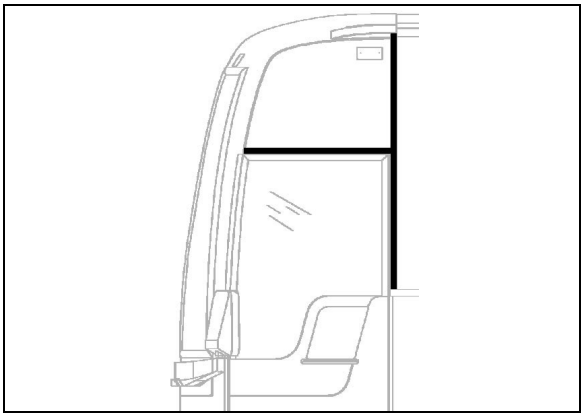

➢ Apply anti-silicone onto molding.

➢ Apply Sika 205.

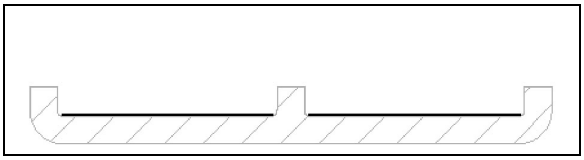

➢ Clean gutter using anti-silicone.

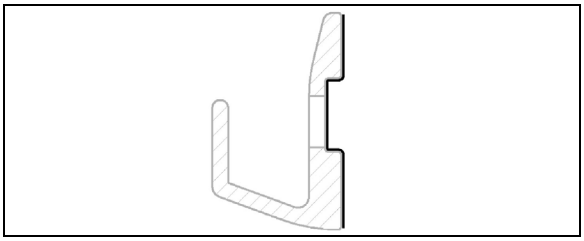

➢ To seal screw holes, remove screw, apply Sika 205 inside the hole then apply Sika 252.



- Apply a double-face self adhesive tape 1/8 by ¼ inch inside the molding onto the whole length.

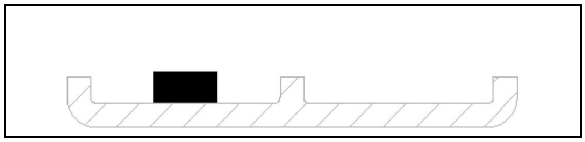

- Apply a double-face self adhesive tape 1/32 by ¼ inch onto the whole length of the gutter.

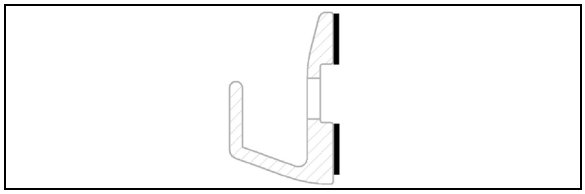

- Apply Sika 252 inside the moldings onto the whole length.

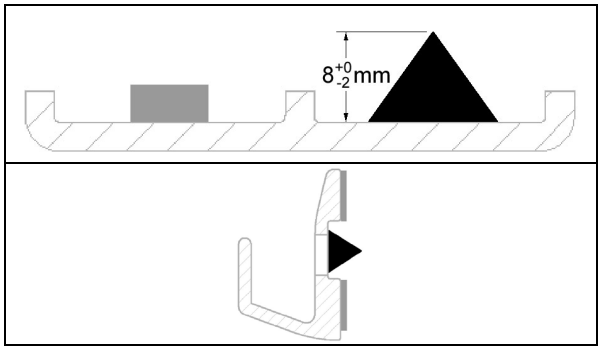


- Position and fix vertical molding. Lean vertical molding against lateral molding. Make sure vertical molding lines up with structural tubing.

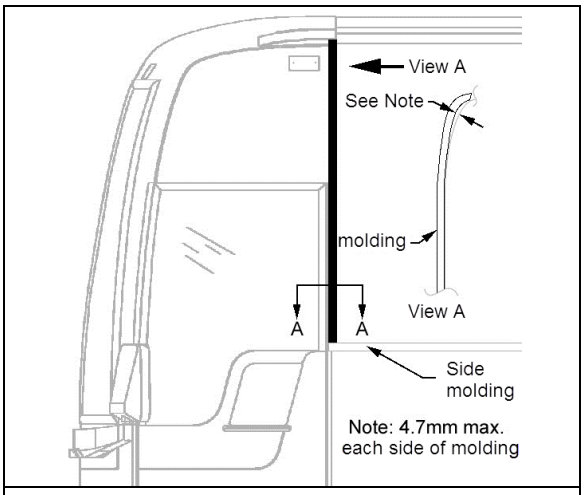


**SECTION VIEW A-A**

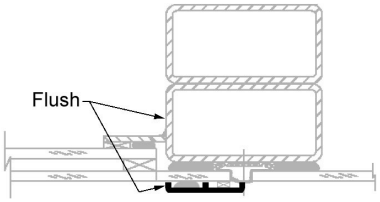


- Position and fix horizontal molding (gutter). Lean gutter against vertical molding. Position gutter just above Sika finishing joint.

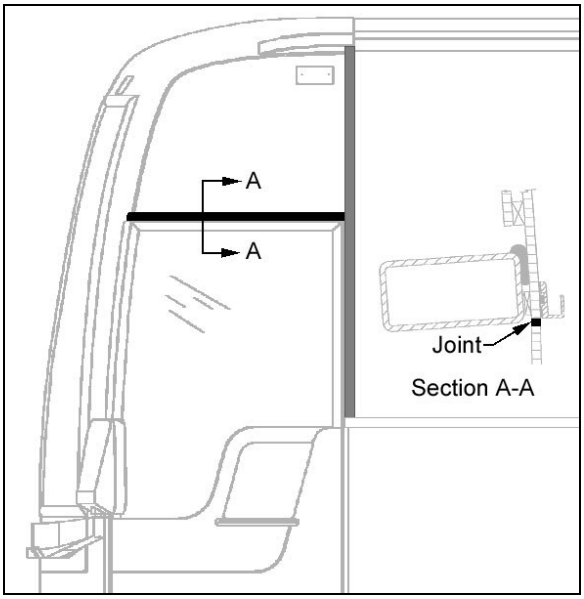

- Apply masking tape on each side of vertical molding. Apply Sika 252 to fill the gap between molding and windows.
- Smooth down the joint with finger.
- If required, clean surfaces using Sika 208.



### 9.1.10 Front Cap

The fiberglass front cap does not need any maintenance except painting as needed. It is held in place with adhesive. If ever it has to be replaced, make an appointment at a Prevost service center near you. For minor damages, refer to paragraph 7 “COMMON FIBERGLASS REPAIR PROCEDURE” and paragraph 8 “COMMON PAINTING PROCEDURE”.

## 9.2 ZONE 2

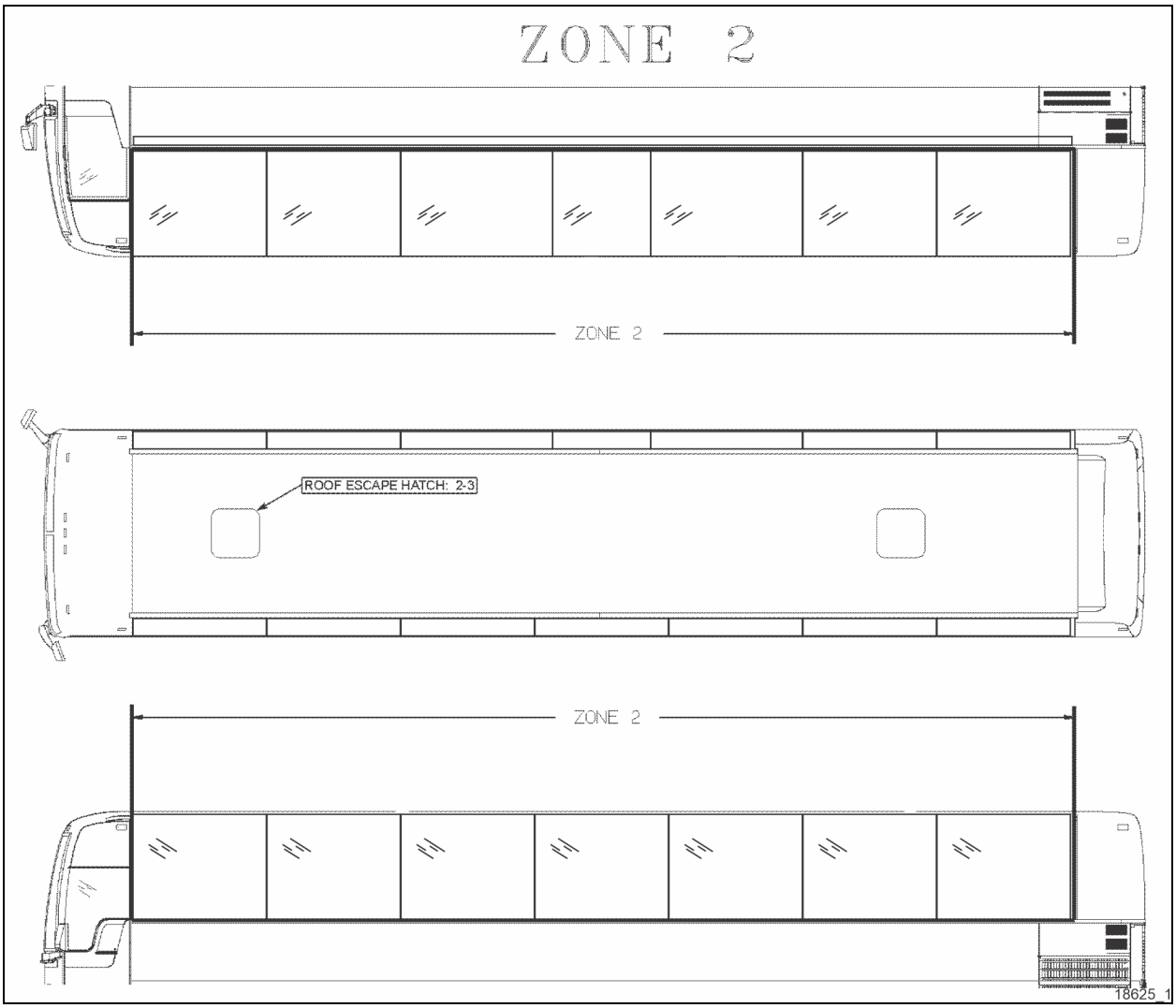


FIGURE 39: ZONE 2

### 9.2.1 Side Windows

Seven passenger side windows are installed on each side on X3-45. For vehicles equipped with wheelchair lift system, only six side windows are installed on the curbside. They are made, single or double-glazed, heat absorbing AS-3 glass. Windows are mounted in painted aluminum extrusions, which hold the glass in place from the top rail of the coach. The extrusion also serves as a hinge to allow the window to swing open when needed.

The single-glazed windows are made of tinted tempered safety glass, while the double-glazed windows are made of tinted tempered safety glass outside and clear tempered glass inside.

### 9.2.2 Emergency Exit Windows

Most of the windows of the X3-45 serve as emergency exits. The emergency exit windows arrangement is slightly different on a vehicle equipped with a wheelchair lift system (Figure 40).

Except for the top window edge, the three glass edges are unprotected. The workers must be

extra careful when manipulating or installing such windows.

In addition, when it becomes necessary to lay down the unprotected edges of the glass window, never use a steel or concrete floor as support. It is recommended to use a wooden support, or even better, a padded surface.

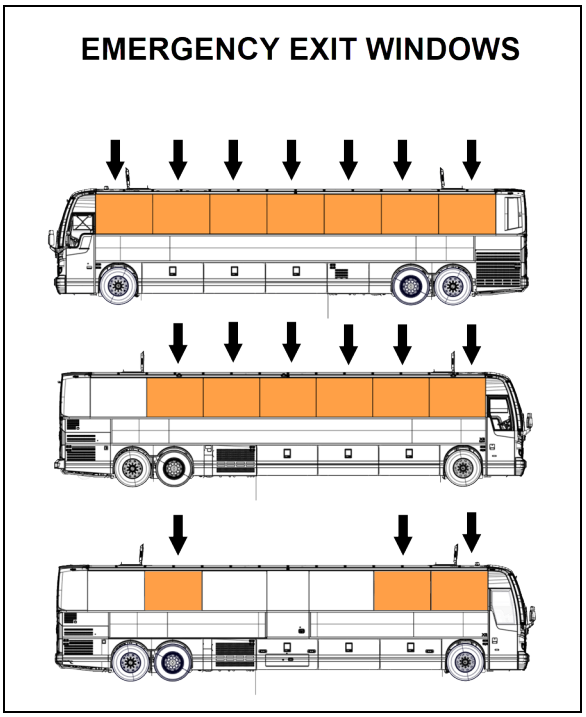


FIGURE 40: X3-45 EMERGENCY EXIT WINDOWS 18615

An emergency exit window can be opened by sliding the red button on the release bar to disengage the safety latches, and then by pushing out the window frame (Figure 41).

Emergency operating instruction decals are affixed under each emergency exit window. To close the window, pull back the window and push down the release bar.

- **Emergency Exit Release Bar**

The emergency exit release bar system is generally maintenance free. It has been designed to answer the twenty pound resistance criteria for opening the emergency window. If this handle should be replaced:

1. Remove the screws and bolts securing it to the emergency exit window;
2. Install a new release bar, reverse the procedure.

| *NOTE* |
|---|
| *Check the legal requirement of twenty pound maximum resistance to be sure to comply with FMVSS No 217.* |

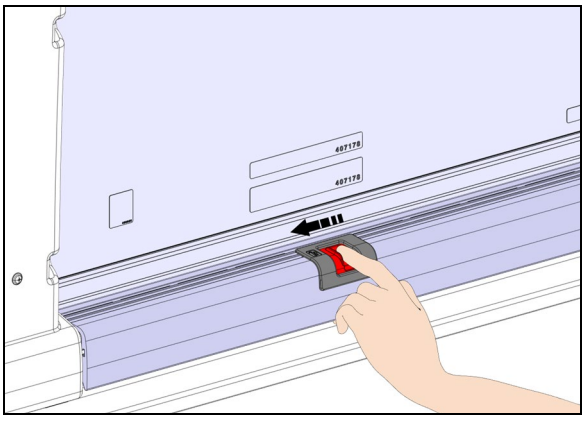

FIGURE 41: EMERGENCY EXIT WINDOW 18391

- **Emergency Exit Window Adjustment**

Emergency exit windows should be checked periodically for easy opening and closing. Sliding the red button on the release bar should disengage both locks on the window simultaneously. The tension required to release the window should not exceed twenty pounds (9 kg) of force.

The release bar mechanism itself has been designed such as no adjustments are necessary.

If too much effort is required to disengage the locks when sliding the button or if the window doesn't close tightly or rattles, check for interference by foreign objects or nearby parts into mechanism, such as the microswitch, rubber seal, wires, etc. Correct situation immediately.

| *NOTE* |
|---|
| *Tangs on the lock must be in a horizontal position.* |

- **Emergency Exit Window Replacement**

| *NOTE* |
|---|
| Window is heavy and fragile. Use suction cup handles and help from teammates.<br><br>Prepare a soft material surface to receive the removed window. |

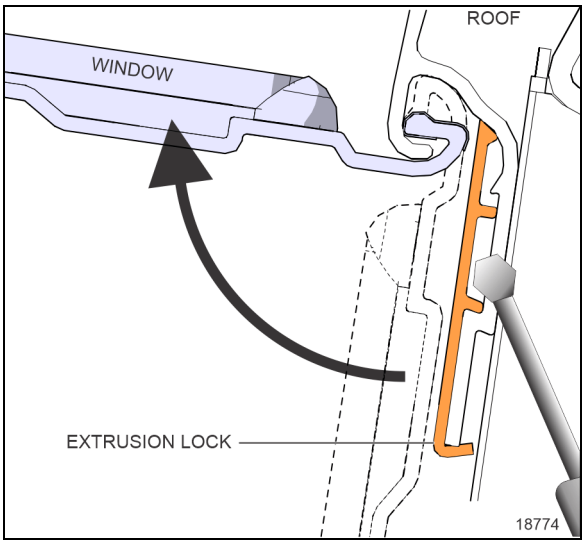

FIGURE 42: EMERGENCY EXIT WINDOW REMOVAL

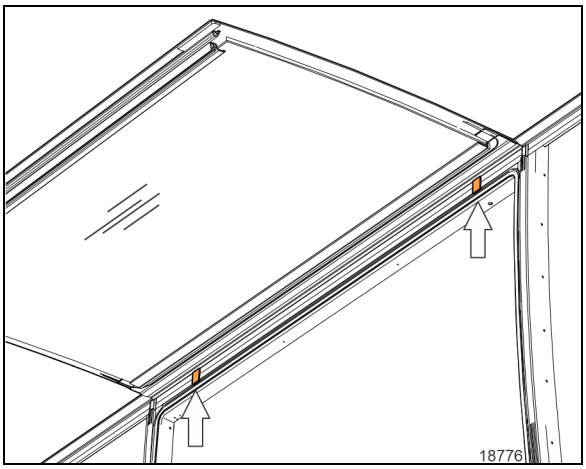

FIGURE 43: EXTRUSION LOCK LOCATION

1. Slide the red button to tilt up the release bar.
2. Partly lift the window and support it so it stays open.
3. Remove the two extrusion locks with a flat screwdriver.
4. With the help of teammates, slowly rotate the window outward ninety degrees (90°). At this angle the window can be released by slightly pushing the window inward.

**WARNING**

Ask teammates to support the window else it may fall out.

5. The window is free and can be unhooked.

Reverse the procedure to install a new emergency exit window.

### 9.2.3 Roof Escape Hatch

The vehicle can be equipped with one or two escape hatches. The escape hatch is designed to provide years of reliable service with a minimum of maintenance. All components are rust proof, and moving parts are Teflon coated to eliminate need for lubrication. Should water infiltrate the vehicle from the escape hatch, refer to the heading "Sealing" in this paragraph for procedures on how to seal this area.

**CAUTION**

Use of lubricants, paints, or other coatings such as graffiti deterring sprays is not recommended.

Suggested maintenance includes periodic inspection of fasteners for evidence of loosening due to tampering, and regular cleaning with mild soap and water.

Although there are other cleaning solutions available, some contain solvents and other chemicals that can attack the high strength materials used in the production of the escape hatch.

**CAUTION**

Ensure that cleaning solutions are compatible with the materials used on the escape hatch.

Graffiti removing cleaners often contain acetone, ether, lacquer thinner or other solvents known to destroy the high strength properties of many plastics. Use of these cleaners must be avoided. Graffiti-resisting coatings often leave a sticky residue that interferes with smooth up/down movement of the hatch mechanism. Some of these coatings also contain solvents that will reduce the strength of certain components.

**CAUTION**

Use of these coatings is at considerable risk and should be avoided.

- **Repair**

All components used in the production of the escape hatch are available as service parts, except for one hinge that represents a possible hazard when improperly reattached to a hidden tapping plate, itself often damaged whenever the hinge is damaged. The tapping plate is permanently laminated between the inner and outer cover assemblies, and it cannot be inspected or replaced. It is therefore necessary to replace the entire assembly following damage to the hinge. See Figure 43.

**CAUTION**

Hinge assembly is critical and hinge should never be removed from cover assembly. Fasteners used in this assembly are special and have critical torque requirements and tamper-resistant heads to discourage tampering.

- **Sealing**

1. Open and tilt up the escape hatch cover.
2. Join the 2 ends of the rubber seal.

**CAUTION**

Seal joint should be toward rear of vehicle.

3. Apply rubber adhesive CA-40 (Prevost # 681285) in the gap between the seal ends.
4. Apply Sikaflex 221 sealant (Prevost # 680532) along the outline of the escape hatch on the roof of vehicle.

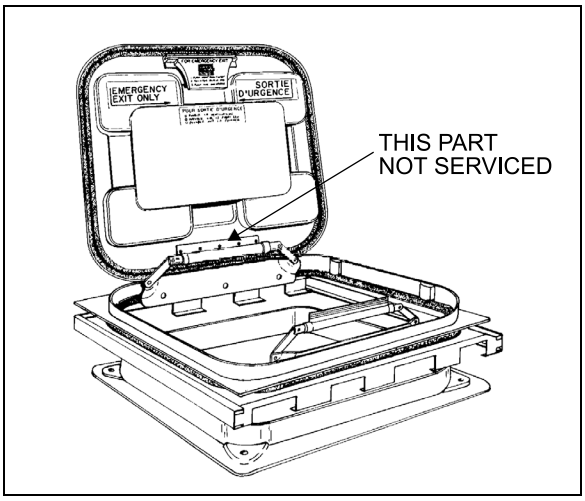


FIGURE 44: ESCAPE HATCH 18104

- **Escape Hatch Panel Assembly**

The frame of the escape hatch is riveted to the roof of the vehicle. The escape hatch panel assembly can be replaced as a unit and a new panel assembly installed in the existing frame. To remove the panel assembly, remove the 4 bolts fastening the 2 hinges to the escape hatch frame and retain the 4 flat washers. Reinstall the panel assembly by fastening the 2 hinges with the 4 bolts and flat washers removed earlier.

**CAUTION**

When installing, roof escape hatch's hinge must be toward the front of vehicle, to prevent the hatch from being ripped out if accidentally opened while vehicle is running.

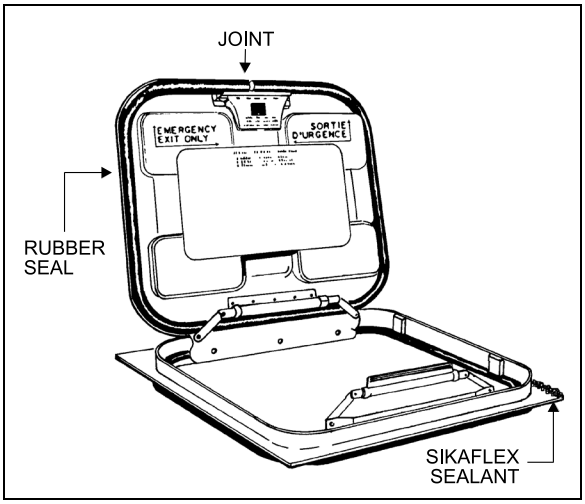


FIGURE 45: ESCAPE HATCH 18105

- **Escape Hatch Frame**

When necessary, the escape hatch frame can be removed and replaced in the following way:

1. Support the frame from inside the vehicle.
2. Remove rivets.
3. Cut the rubber seal with a sharp edge knife and remove the hatch frame.
4. On vehicle top, using the knife, remove as much as possible the remaining rubber seal.
5. Drill holes (if needed) in the new metal frame.
6. Clean both vehicle top and new hatch frame with SIKA 205.
7. Apply rubber adhesive SIKA 221 under the hatch frame surface.

8. Install the frame in place and fix it with rivets.
9. Remove excess adhesive and clean all around.

## 9.3 ZONE 3

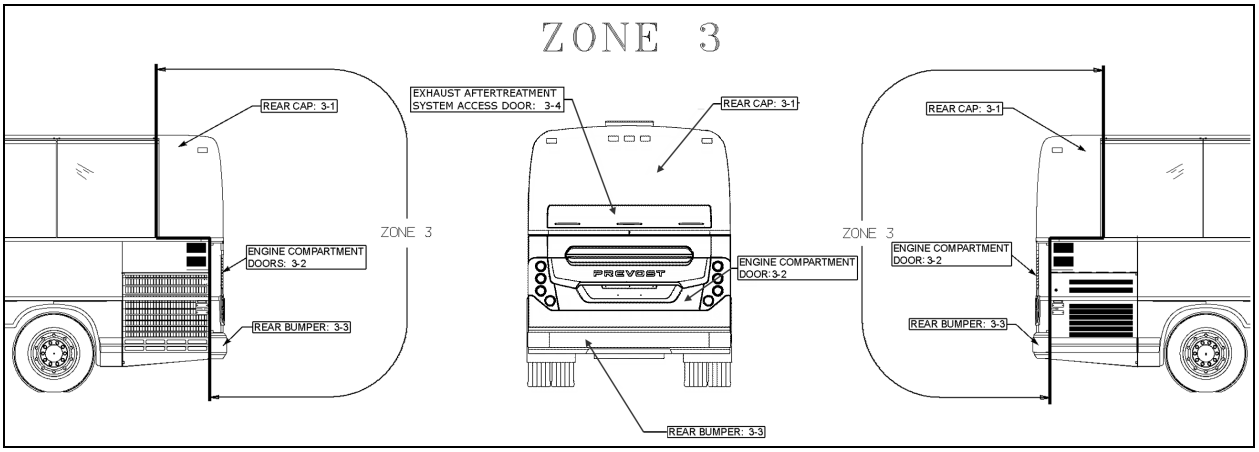


FIGURE 46: ZONE 3 18626

### 9.3.1 Rear Cap

The fiberglass rear cap does not need any maintenance except painting as needed. It is held in place with adhesive. If ever it has to be replaced, take an appointment at a Prevost service center near you. For minor damages, refer to Paragraph 4 "Common Fiberglass Repair Procedure" and Paragraph 5 "Common Painting Procedure".

### 9.3.2 Engine Compartment Door

The engine compartment door may be adjusted for proper fit by untightening support bolts:

| *NOTE* |
| --- |
| *Consult the "BODY PANEL AND WINDOW SPACING DIAGRAM" for proper door gaps adjustment. (*Figure 86*)* |

1. To adjust the door VERTICAL position, loosen the bolts (4 on each side) holding the door supporting arm and gas springs bracket to the *vehicle structure* (Figure 46).
2. To adjust the door LATERAL position, loosen the bolts (3 on each side) holding the door supporting arm and gas springs bracket to the *door* (Figure 46).
3. Adjust the door FORE & AFT position by screwing/unscrewing the rubber door stops on each side of the door opening (Figure 46).
4. Check that the door swings freely and close properly. *It may be necessary to adjust the door latch to get proper fit and operation*.

To adjust the latch mechanism and the striker pin:

1. Open the door to access the striker pin.
2. *Slightly* loosen the striker pin.
3. Using a hammer, adjust the striker pin to center it in the door latch mechanism.
4. Tighten the striker pin.
5. Check door fit and operation.

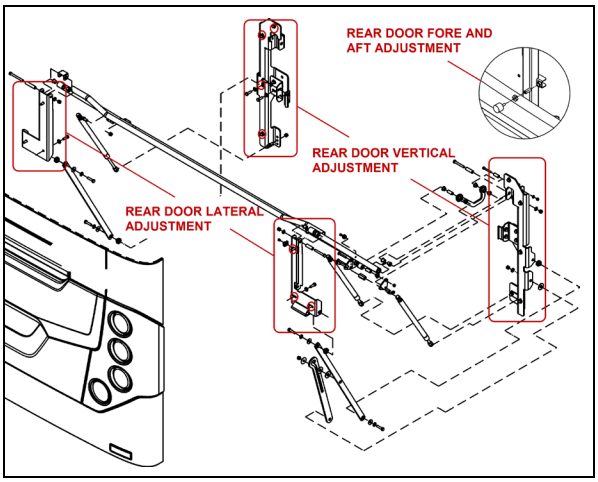


**FIGURE 47: ENGINE COMPARTMENT DOOR** 18633_1

### 9.3.3 Rear Bumper

Remove three bolts on each side holding bumper to vehicle and remove bumper.

To install bumper, reverse the procedure.

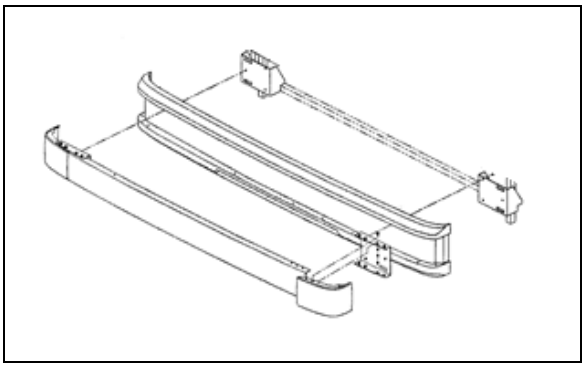

FIGURE 48: REAR BUMPER 18634

### 9.3.4 Exhaust Aftertreatment System Access Door

1. Open exhaust aftertreatment system access door.
2. Loosen the screws holding the panel to hinge assembly.
3. Adjust the door position according to distance required between exterior finishing parts.
4. Tighten the nuts.
5. Check that the door swings freely and closes properly.

## 9.4 ZONE 4

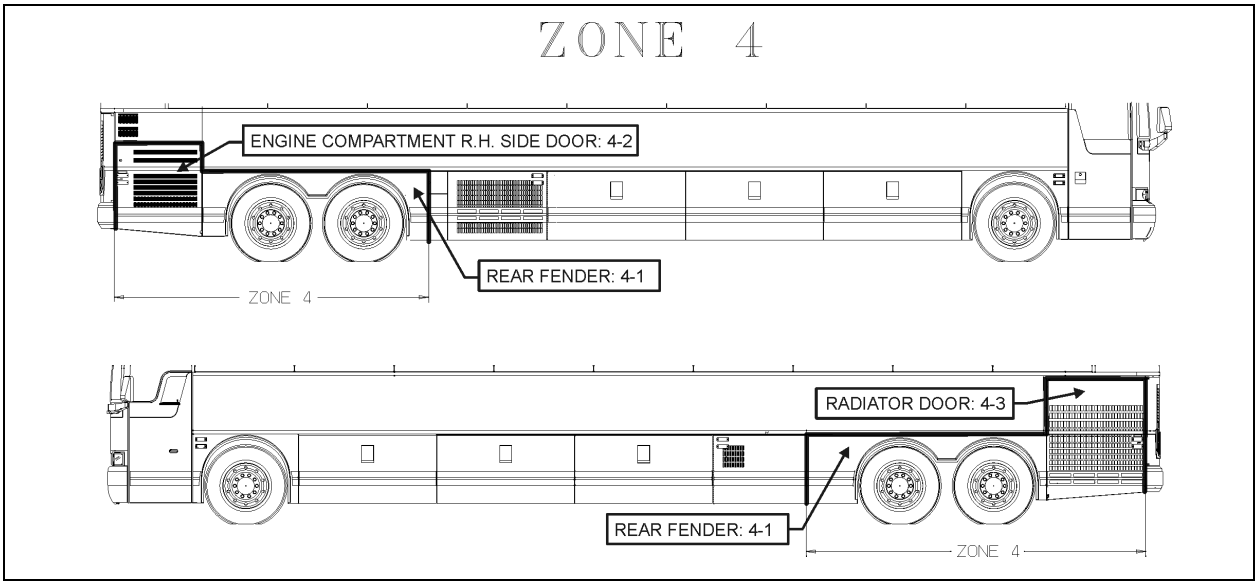


FIGURE 49: ZONE 4 18627

### 9.4.1 Rear Fender

Rear fenders are hinged for maintenance on brakes and suspension. Each rear fender panel has two mechanical spring loaded holding devices fixing it to the vehicle's structure. Push the spring type rod sideways to disengage the lock.

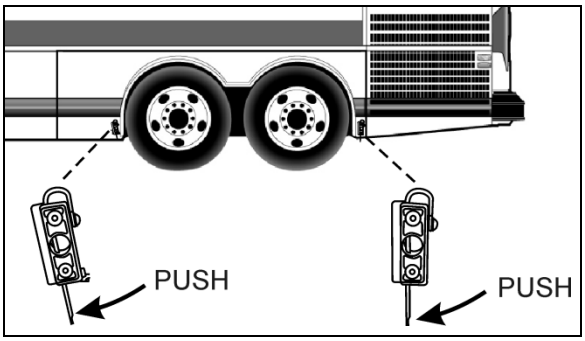


FIGURE 50: LEFT REAR FENDER

| *NOTE* |
| --- |
| *Commuter type vehicles may be equipped with a secondary lock. Pull the handle to disengage the lock.* |

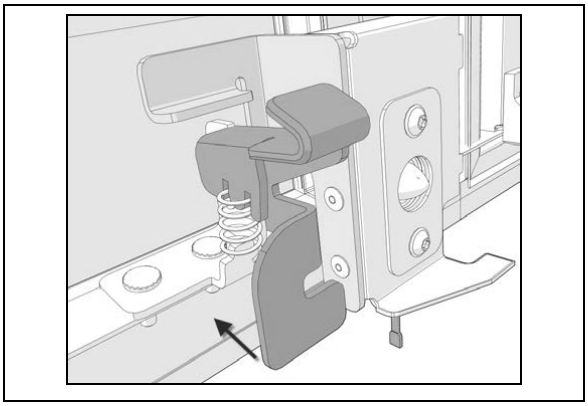

### 9.4.2 Engine R. H. Side Access Door Adjustment

Engine R. H. side access door may be adjusted for proper fit. To do so, follow the steps below:

1. To adjust the position, the door must be free to move without any restriction. For this reason, remove pin E and strike plate C (Figure 50).

   Temporarily secure the secondary lock in the depressed position with a cable tie so it does not interfere with adjustments. Remove cable tie once completed.

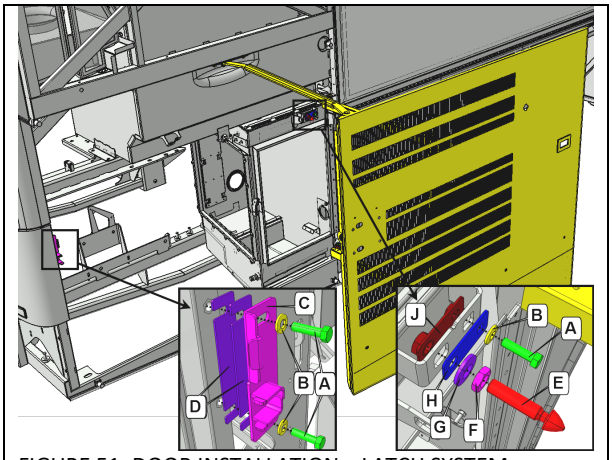


FIGURE 51: DOOR INSTALLATION – LATCH SYSTEM

A - BOLT
B - BELLEVILLE WASHER
C - STRIKE PLATE
D - SPACER
E - PIN
F – LOCK NUT
G - BELLEVILLE WASHER
H - PLATE

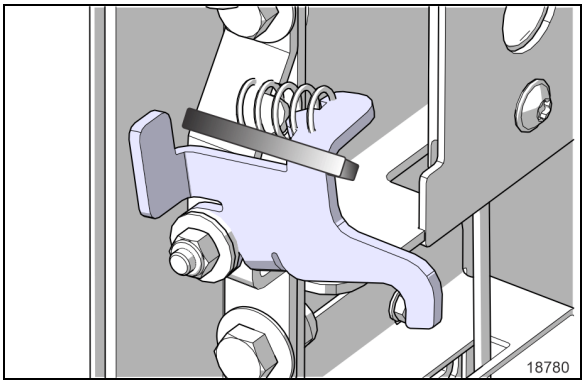


FIGURE 52: USE A CABLE TIE TO KEEP SECONDARY LOCK DEPRESSED DURING ADJUSTMENT

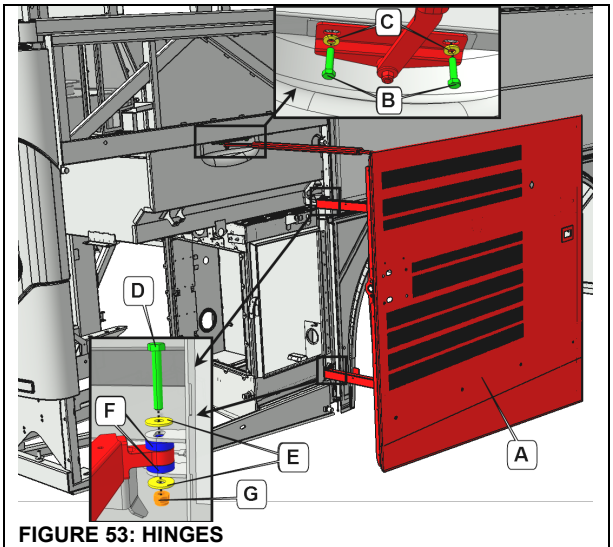


**FIGURE 53: HINGES**

A – ENGINE R.H. SIDE ACCESS DOOR
B - BOLT
C - BELLEVILLE WASHER
D - BOLT
E - WASHER
F –SPACER
G - NUT

## Vertical adjustment

2. Make sure bolts A are tight (**FIGURE 53**).

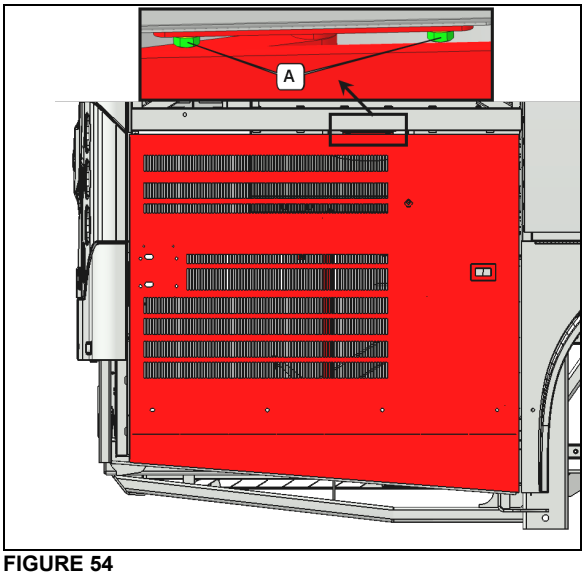


**FIGURE 54**

3. Compare the lower edge of the door level with the lower edge of the rear fender. The door should be flush with the fender (FIGURE 54).

   ***Tolerance is ± 3/32" (± 2mm)***

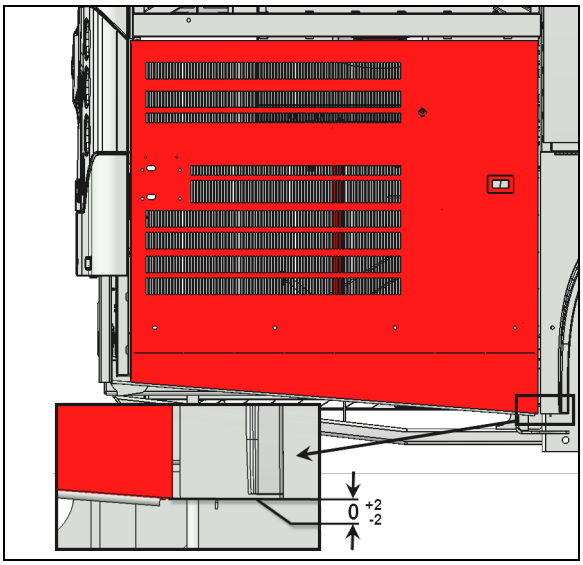


FIGURE 55

4. If the vertical position is out of tolerance, release the locking plate (Figure 56) and rotate the door using the adjustment provided on the inner side of the door, at the attachment points between the arm and the door (**FIGURE 55**).
   Tighten the locking plate nut to 14 lb-ft (19 Nm) to preserve adjustment.

   ***Perform the adjustment with the lower adjustment point preferably.***

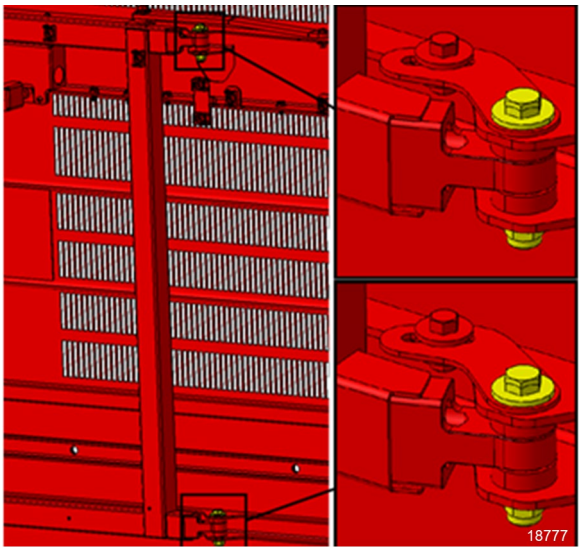


**FIGURE 56**

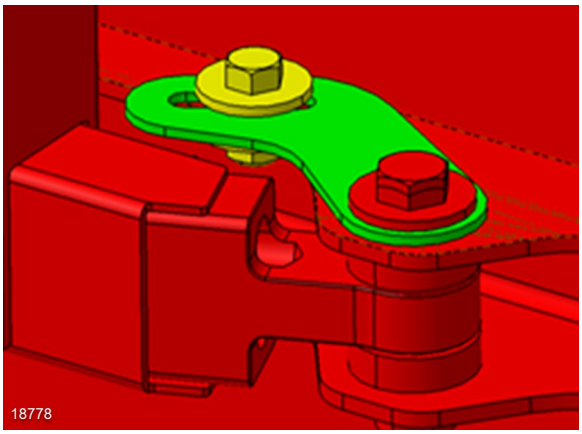


FIGURE 57: LOCKING PLATE

## Longitudinal adjustment

5. Check the gap between the door and the adjacent panel at the level of the upper attachment point of the arm on the door. The gap should be ¼" (6 mm) (FIGURE 57).

   ***Gap 1/4" (6 mm)***

   ***Tolerance is ± 3/64" (± 1mm)***

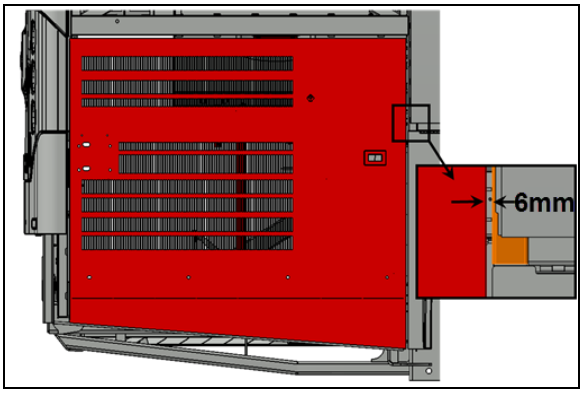


FIGURE 58

6. If the longitudinal position is out of tolerance, adjust using the adjustment provided on the inner side of the door, at the upper attachment point of the arm on the door (FIGURE 58).

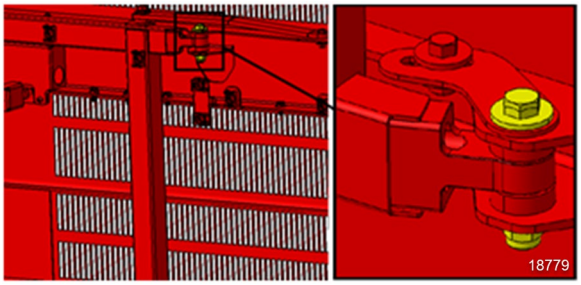


FIGURE 59

7. Check the gap between the door and the adjacent panel at the level of the lower attachment point of the arm on the door. The gap should be ¼" (6 mm) (FIGURE 59).

   Gap 1/4" (6 mm)

   Tolerance is ± 3/64" (± 1mm)

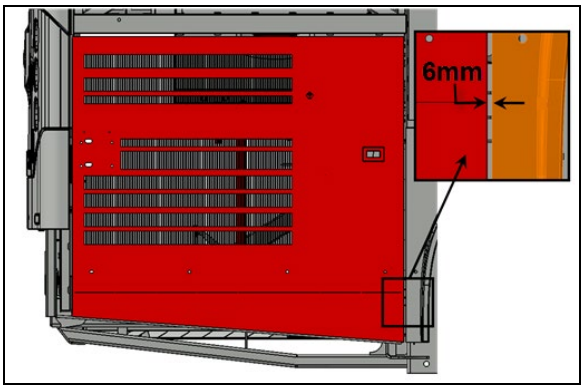


FIGURE 60

8. If the longitudinal position is out of tolerance, adjust using the adjustment provided on the lower attachment point of the arm on the vehicle chassis (FIGURE 60).

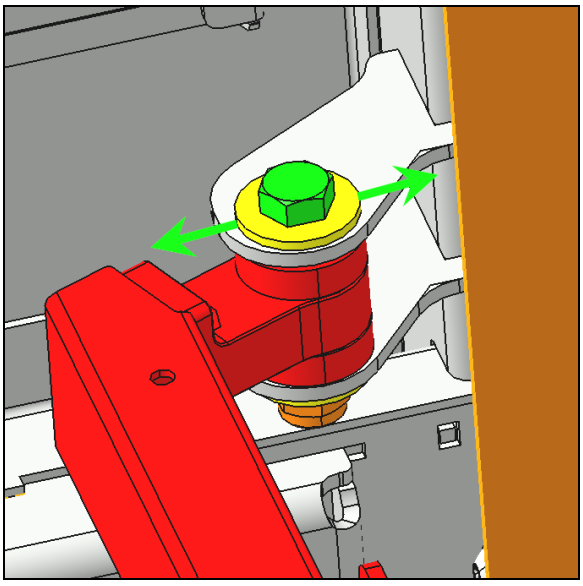

FIGURE 61

## Latch installation

9. Install strike plate C and pin E centered in the available adjustment position provided by respective slotted holes (FIGURE 61). The components should be snug but not tight so that they can move when the door will be closed later on in this procedure.

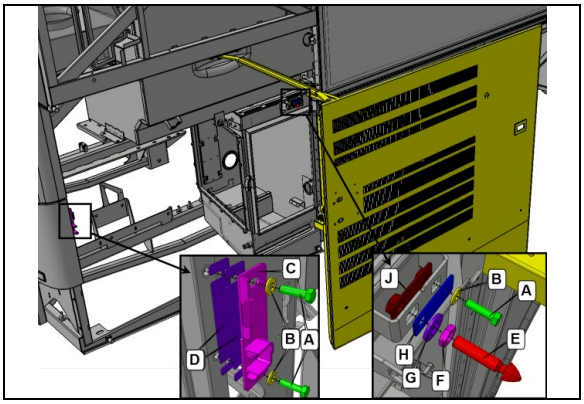


FIGURE 62

10. Check that the two items identified with arrows are snug but not tight (FIGURE 62).

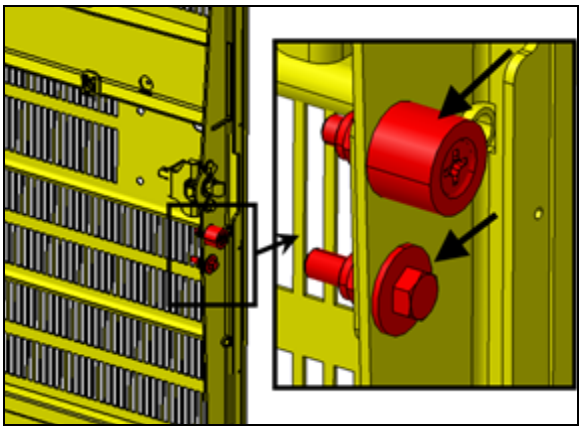

FIGURE 63

11. Before adjusting the pin, make sure that it doesn't exceed more than 2" (50mm) at the first closing of the door (FIGURE 63). Damage to the door can result if this condition is not respected.

***Not more than 2" (50mm)***

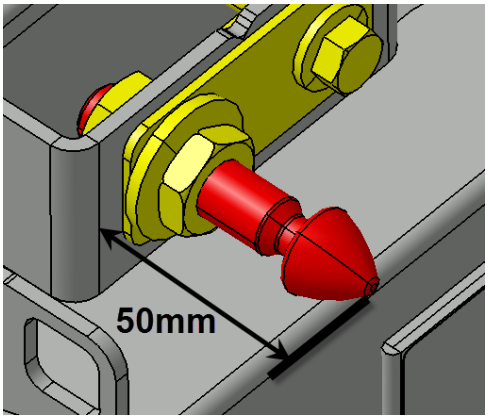


FIGURE 64

12. Close the door gently.

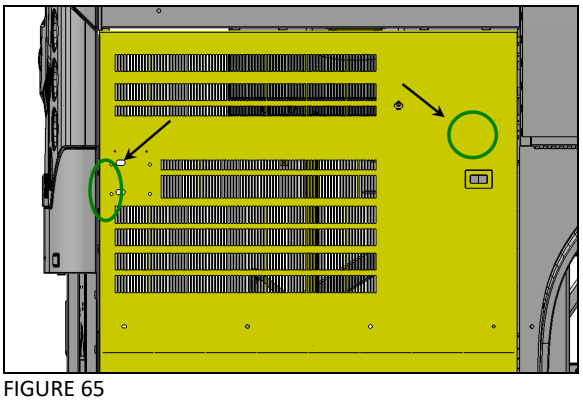

FIGURE 65

13. Open the door and perform a final tightening to the items indicated with arrows (FIGURE 65).

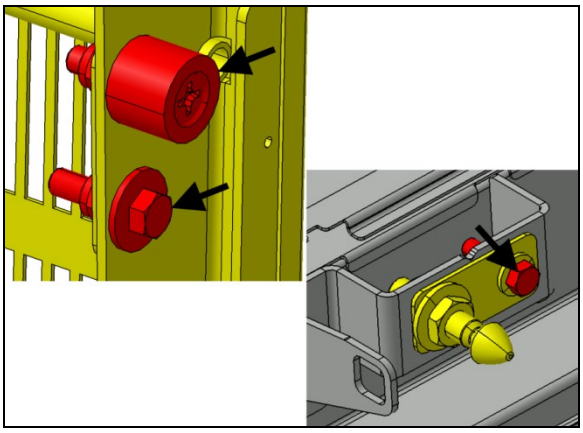

FIGURE 66

**Transversal adjustment**

14. Once closed, the door surface must be even with the adjacent steel panel.

***Tolerance is 3/64" (1mm)***



FIGURE 67: USE A RULER (SHOWN IN BLACK) TO CHECK THAT SURFACES ARE EVEN

15. Use the pin to adjust the door so it is even with the adjacent panel. Screw or unscrew the pin as required and then apply final tightening to the jam nut (FIGURE 67).

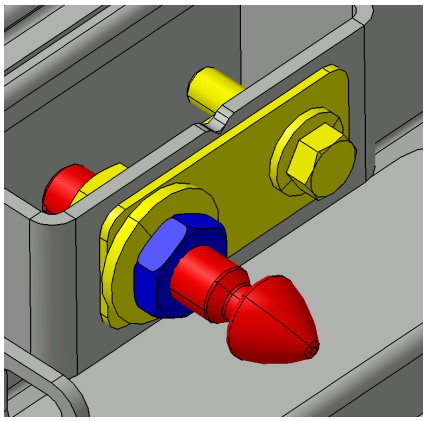

FIGURE 68

16. The R.H. side engine access door must exceed the engine compartment by 5/32" (4mm).

    ***Tolerance is ±3/64" (±1mm)***

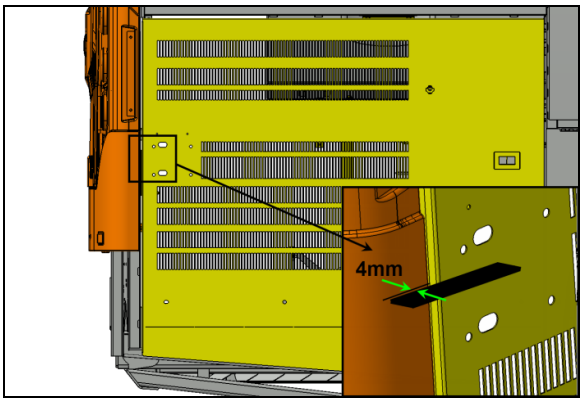


FIGURE 69

17. Perform the transversal adjustment by moving the strike plate using the slotted holes (FIGURE 69).

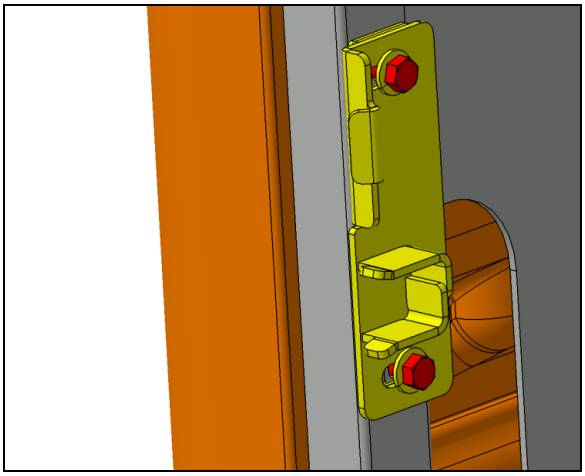

FIGURE 70

18. The latch bolt must engage not less than 13/32" (10mm) behind the strike plate.

    ***13/32" (10mm) min***

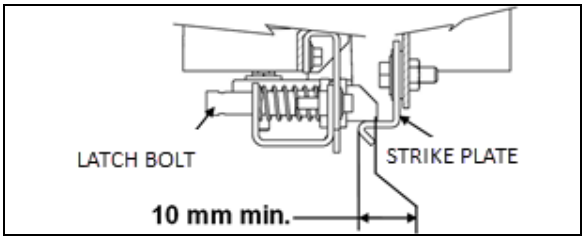


FIGURE 71

19. Screw in or out the two upper stoppers so that the upper part of the door exceeds the horizontal member by 5/32" to 3/16" (4mm to 5mm) (see FIGURE 71 & FIGURE 72).

20. Adjust the lower stopper in order to have the lower part of the door even with the fender.

    ***Tolerance is ± 3/64" (± 1mm)***

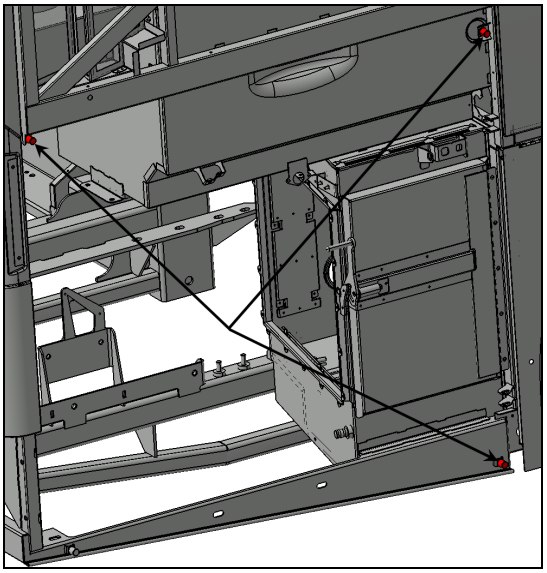

FIGURE 72

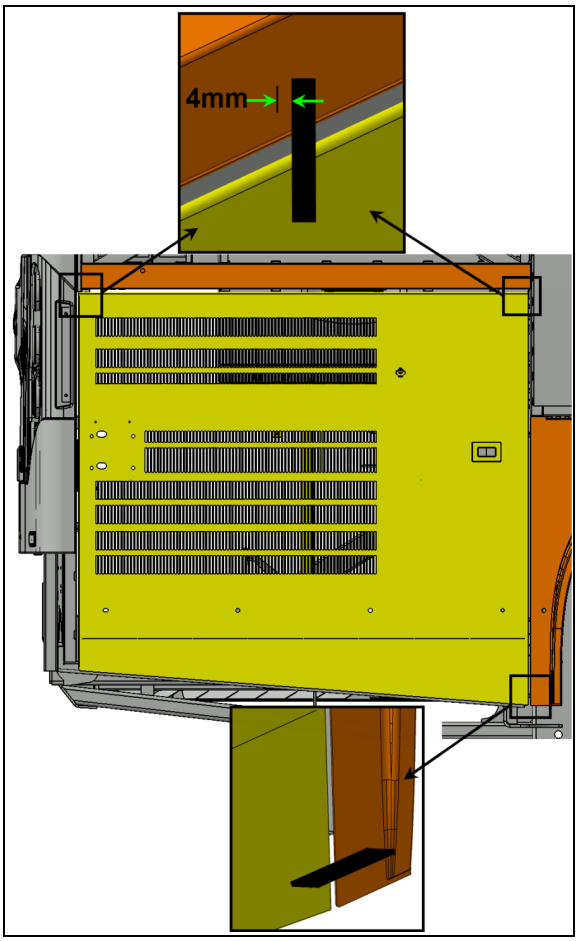


FIGURE 73

### 9.4.3 Engine Radiator Door

Radiator door may be adjusted for proper fit by untightening hinge bolts:

1. Loosen the bolts, (“A” & “C”, Figure 74) holding the hinge to the vehicle structure to shift the door "LEFT or RIGHT".
2. Loosening the bolts (“B” and “D”, Figure 74) allows the door to be shifted "UP or DOWN".

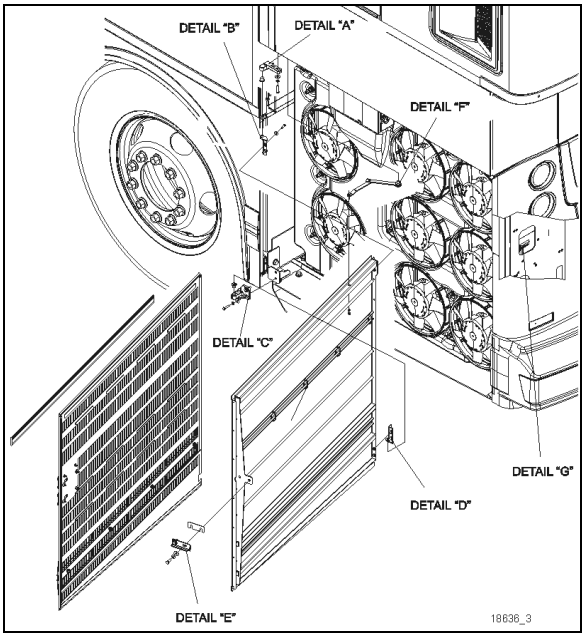


FIGURE 74: RADIATOR DOOR

3. Adjust the door position depending on the gap needed between exterior finishing panels.
4. Tighten the bolts

   **Torque : 68 lb-in (8 Nm)**
5. Check that the door swings freely and closes properly. It may be necessary to adjust the door latch tab to get proper fit and operation.

To adjust the latch mechanism (“E” and “G”, Figure 74) and the striker pin:

1. Open the door and slightly loosen the latch tab (“E”, Figure 74).
2. Place shims between tab and door frame to increase tab engagement length in the latch.
3. Move tab left or right to increase engagement depth in the latch.
4. Check door fit and operation.

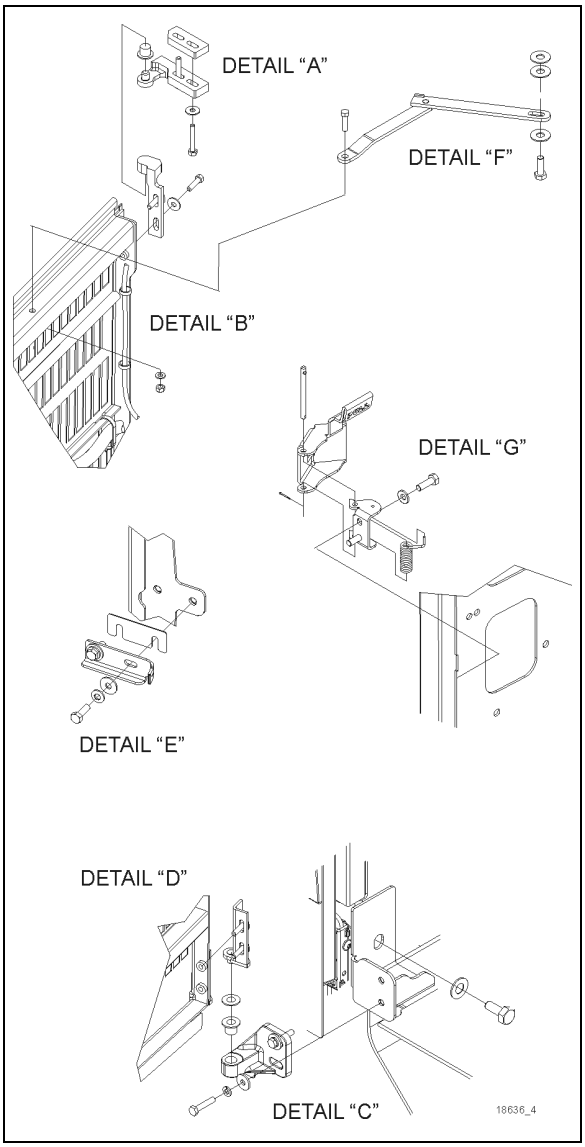


FIGURE 75: RADIATOR DOOR DETAILS

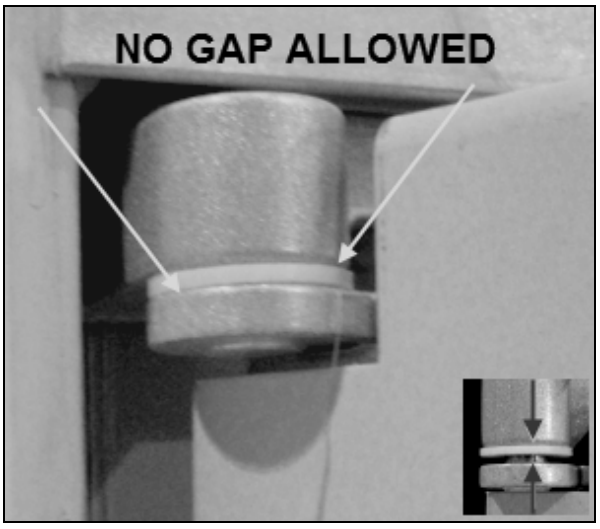


| *NOTE* |
| --- |
| *The striker pin must engage at least 13/32” (10mm). Add spacers between the latch and the vehicle body to adjust the engagement.* |

| *NOTE* |
| --- |
| *There should be no gap between the washer and the hinge upper and lower halves.* |

## 9.5 ZONE 5

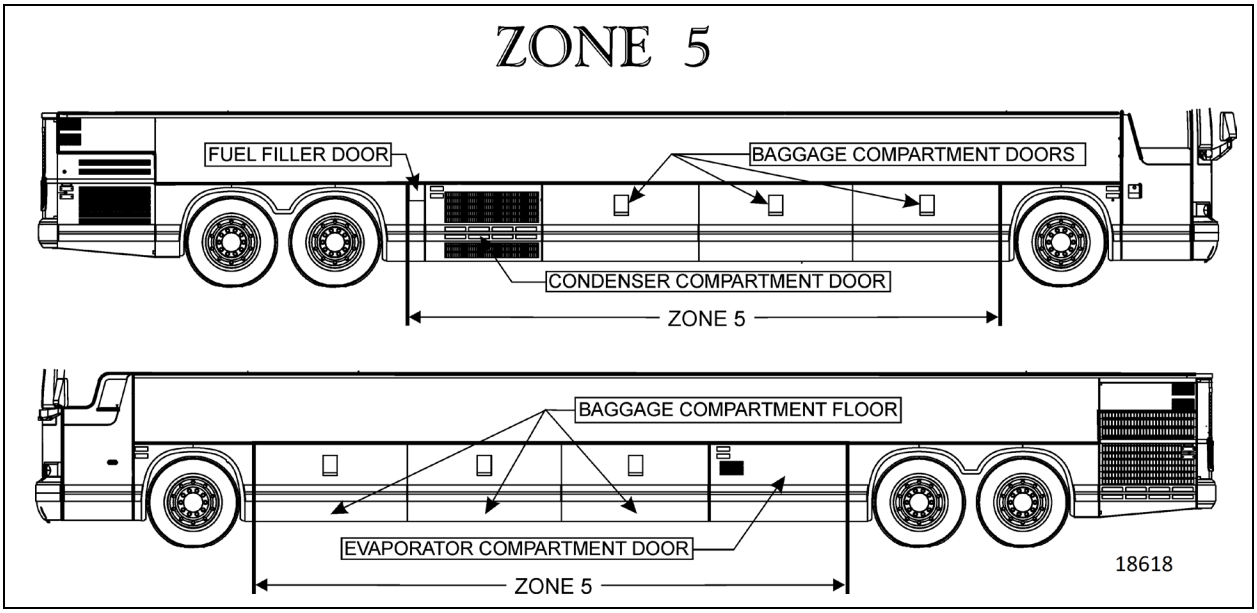


FIGURE 76: ZONE 5

### 9.5.1 Baggage Compartment Doors (Aluminum)

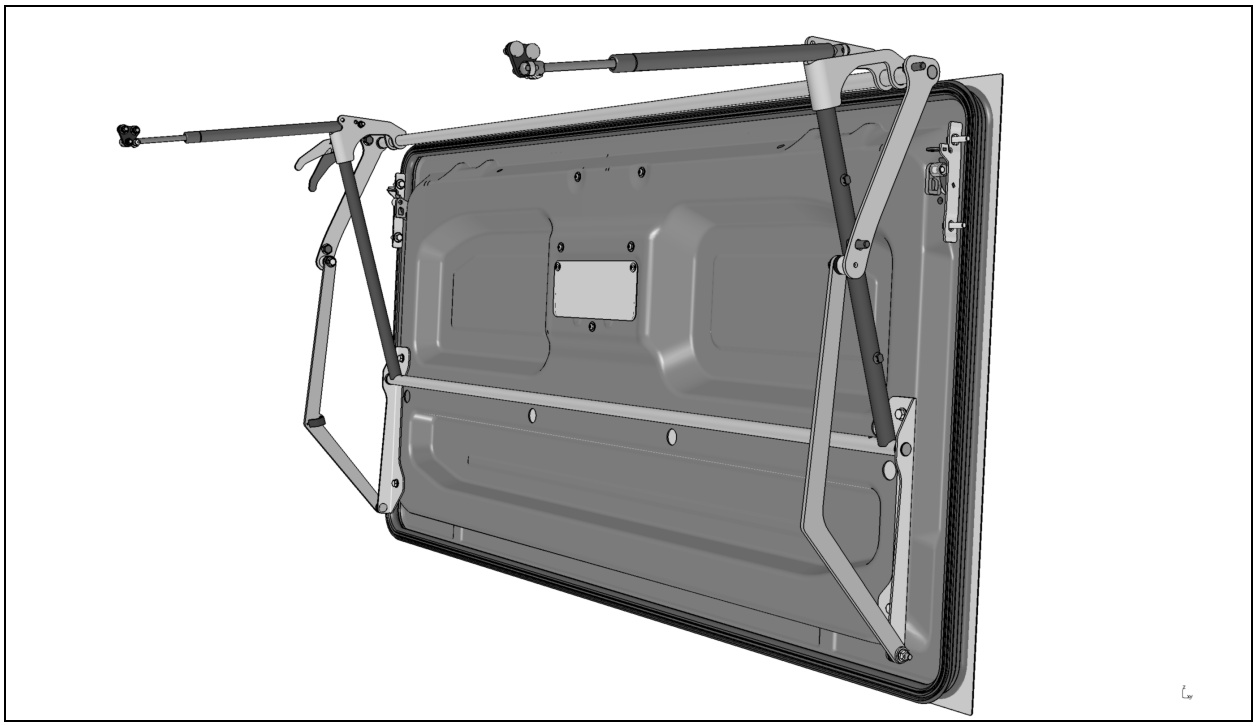

For the removal and installation of a baggage compartment door body panel, you will need:

A drill with drill bits;

Pneumatic hammer tool (Zip Gun);

Razor sharp window scraper or putty knife;

- Open damaged compartment door and unfasten rub rail fixing bolts. Remove rub rail.
- Unfasten bolts and disconnect cable if necessary in order to remove door from vehicle.
- Preferably install the door onto a work surface where it can be solidly fixed.

- **Door Panel replacement**
  - Refer to SAV10054-67.

- **Baggage Compartment Door Adjustment**

1. Adjust door to get a 6mm gap at the top.

2. All adjustments are to be made with door closed, unless specified.

| *NOTE* |
| --- |
| *Vertical adjustment is achieved by moving the door along the mounting plate slots.* |

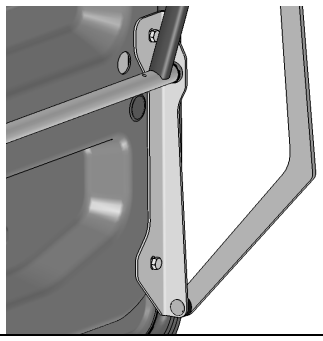

3. Center door in the opening using the retaining rings.

| *NOTE* |
| --- |
| *Lateral adjustment is made by adding/ removing retaining rings in these locations.* |

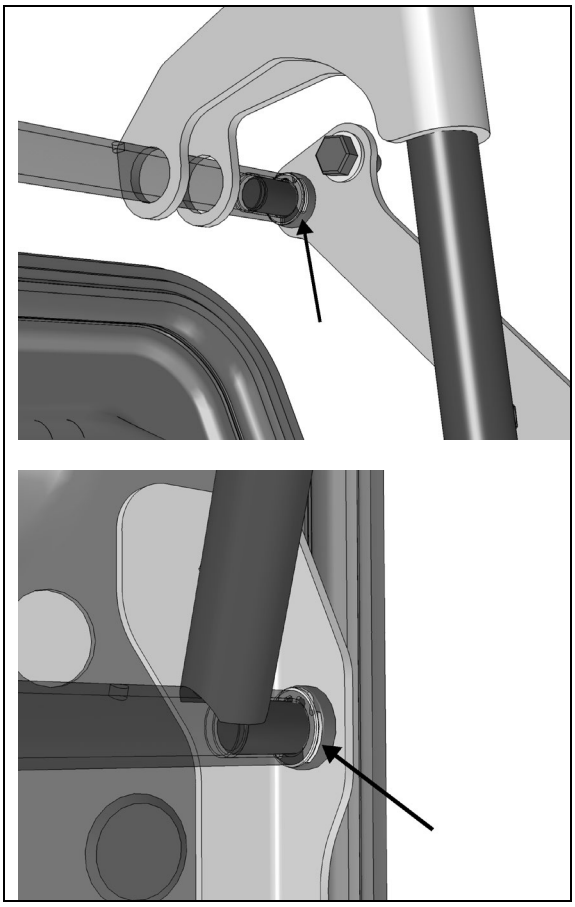

4. Adjust door position and evenness with reference to adjacent panels and doors.

| *NOTE* |
| --- |
| *Adjustment is made by moving IN or OUT the lock plates. Adjust one corner at a time.* |

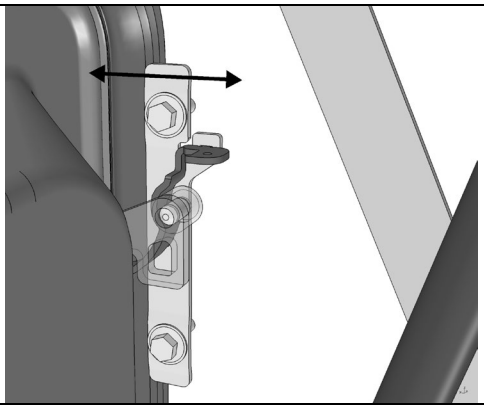

5. Check handle adjustment. Handle must remain tight against its plastic housing.

| *NOTE* |
| --- |
| *Adjustment is made by moving UP or DOWN the lock plates.* |



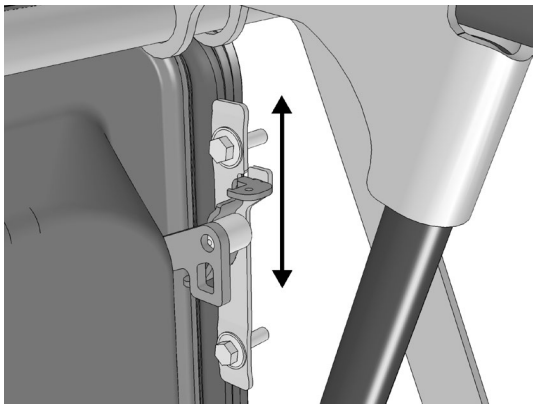

6. Open baggage compartment door and adjust using the cylinder mounting block.

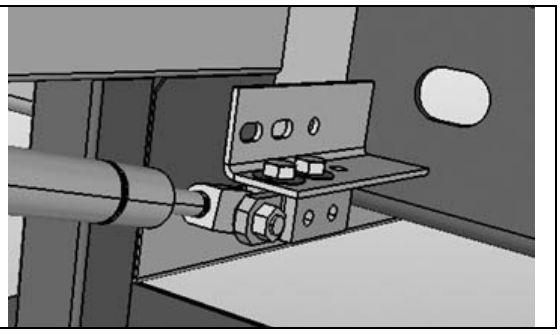

7. Door should be adjusted in reference to neighboring doors.
8. Target is to have 5 ½” (140mm) from bus body panel to door panel and +/- 2mm vertically between doors.

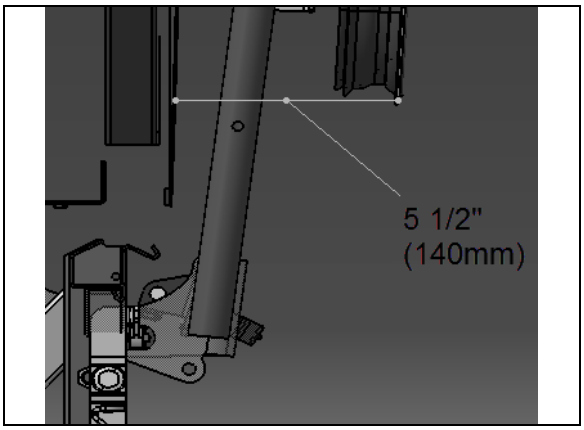


9. Tighten cylinder block fixing screws.
10. Door bottom edge compression can be adjusted by moving in or out the pantograph arms at this location.

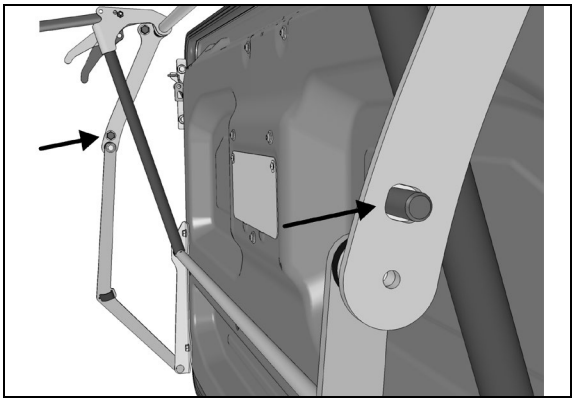

### 9.5.2 Wheelchair Lift Cassette Compartment Door

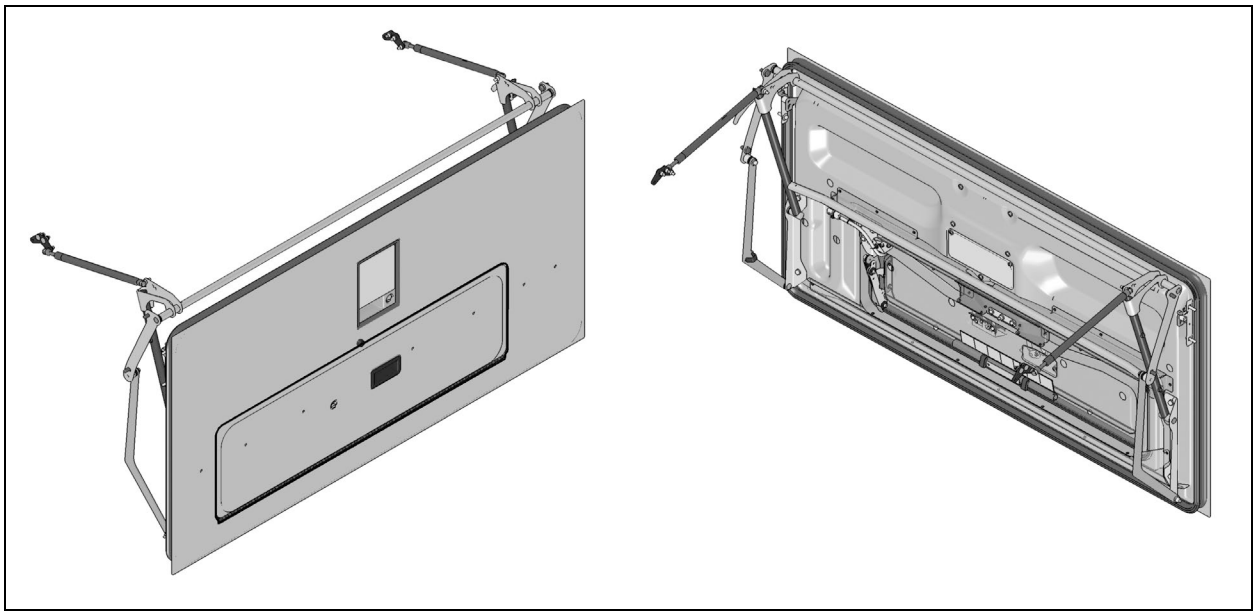

For the removal and installation of a wheelchair lift (WCL) cassette compartment door body panel, you will need:

A drill with drill bits;

Pneumatic hammer tool (Zip Gun);

Razor sharp window scraper or putty knife;

- Open damaged compartment door and unfasten rub rail fixing bolts. Remove rub rail.
- Unfasten bolts and disconnect cable if necessary in order to remove door from vehicle.
- Preferably install the door onto a work surface where it can be solidly fixed.

- **Door Panel replacement**
  - Refer to SAV10054-67.
- **Compartment Door Adjustment**
  - Refer to baggage compartment door procedure.
- **WCL Cassette Door Adjustment**

The small door has a piano hinge on its lower edge.

1. Install only two of the mounting screws, at each end to adjust the door.

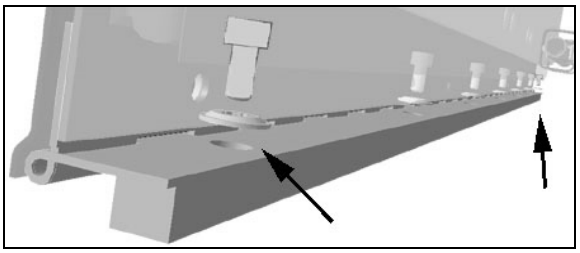

2. Close door and adjust in opening. A 1mm maximum difference between left and right measured gap is accepted.
3. Door should close flush with the larger door panel. Maximum flatness deviation within 1mm.
4. Install the remaining screws and seal with liquid Teflon #680098.

- **WCL Cassette Door latch adjustment**

To allow adjustment of the latch mechanism, lightly tighten the retaining hardware on receptacle and striker support (arrows).

1. Place centering tool G34148_500 in the receptacle cavity.

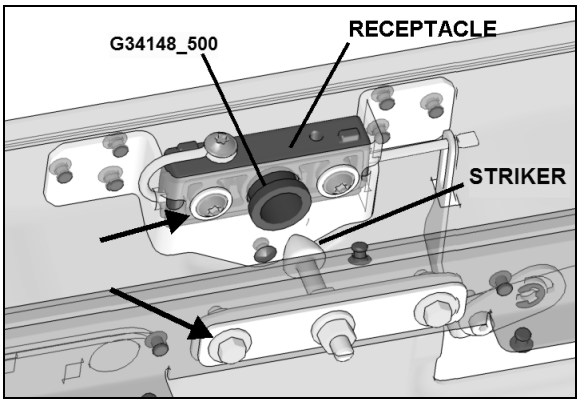


2. Close the door to center the latch mechanism.
3. Tighten screws
4. Check that the door swings freely and closes properly without interference or excessive force

### 9.5.3 Wheelchair Lift access door installation

**CAUTION**

Install the sliding door onto a suitable lifting device that will allow proper lifting and positioning.

1. Lift and move the sliding door near the opening.
2. Push the door into the opening making sure the positioning lugs are properly inserted into their housing then pivot the main hinge and secure the door using 4 bolts. Do not fully tighten the bolts yet.
3. Remove the lifting device from the sliding door.

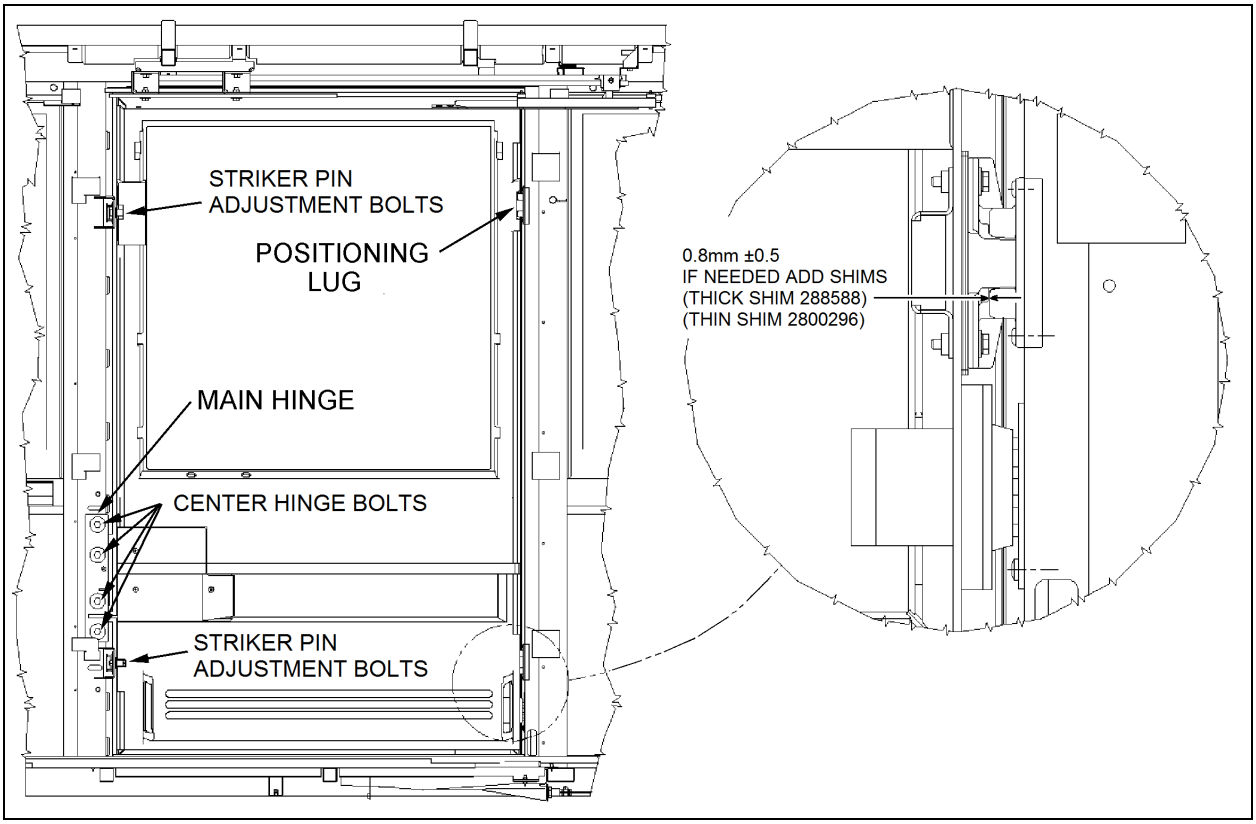


FIGURE 77: WCL SLIDING DOOR INSTALLATION 18739

Adjustment:

1. Adjust sliding door height with reference to the side panels and windows.
2. Slide the top rail into the upper arm then bolt the rail to the structure. Do not fully tighten (Refer to Figure 77).

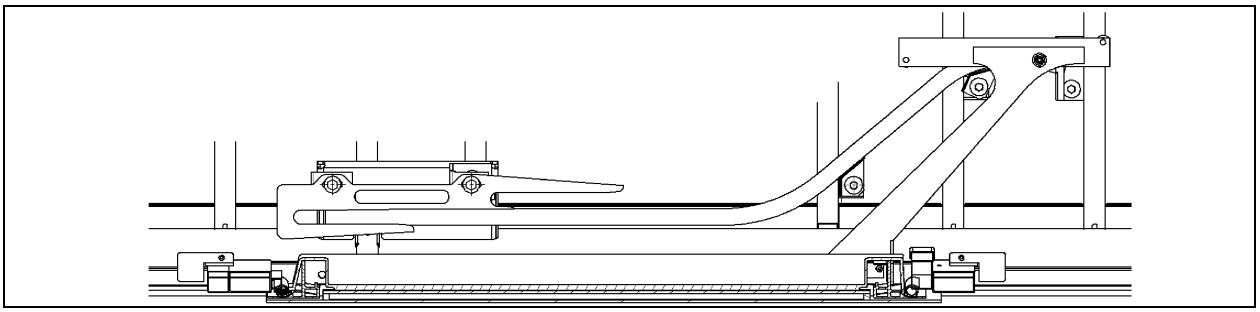

FIGURE 78: WCL UPPER ARM AND RAIL

3. Pull the door in or push from the outside to adjust the door with reference to the vehicle outside surface.
4. - Unfasten the upper arm bolt located on the door side.
   - Position the top rail at 3mm from the ceiling bracket.
   - Force the upper arm down then tighten the upper arm fixing bolt.
   - Pull the upper rail towards the inside in order to remove the play between the roller and the upper rail then tighten the rail fixing bolt at the back.
   - Push the lower rail towards the outside in order to remove the play between the roller and the lower rail then tighten the rail fixing bolt at the back.

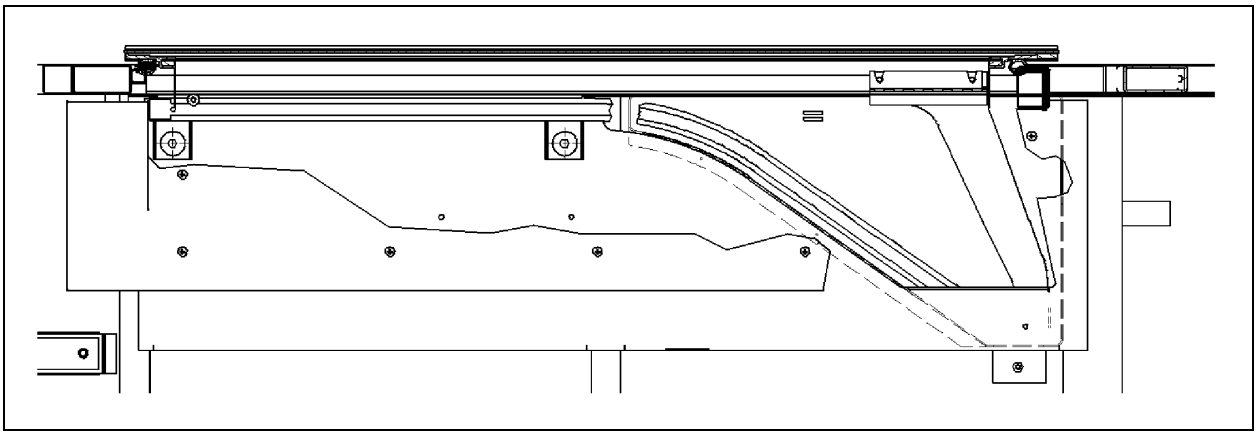

FIGURE 79: WCL LOWER RAIL INSTALLATION

5. Adjust the gap between the positioning lugs and their housing, required gap: 0.5 – 1.5mm. Add shims underneath the lugs to get the proper adjustment.
6. Take away the plays from the upper arm assembly by lifting the main hinge using a crowbar. Tighten the main hinge bolts

**TORQUE: 31-38 lb-ft (42-52 Nm)**

| *NOTE* |
| --- |
| *Do not exert too much force to lift the door.* |

7. Open WCL sliding door completely.

8. - Pull the upper rail towards the inside in order to remove the play between the roller and rail then bolt the rail at front and center. Add some shims if necessary between the rail and the structure before tightening the bolts.
   - Push the lower rail towards the outside of the vehicle in order to remove the play between the roller and rail then bolt the rail at front and center. Make sure the rollers stay in contact with the support when starting to close the door.
9. Adjust the distance between the bottom of the guide and the roller when the door is completely open. Required distance: 2 – 3mm. Make sure the roller stay in contact with the guide.
10. Install and adjust striker pins.

**TORQUE: 54-66 lb-ft (73-89 Nm)**

| *NOTE* |
| --- |
| *Make sure that a 2mm gap exists between the door structure and the striker.* |

11. Adjust latches releasing, the two latches must open simultaneously.

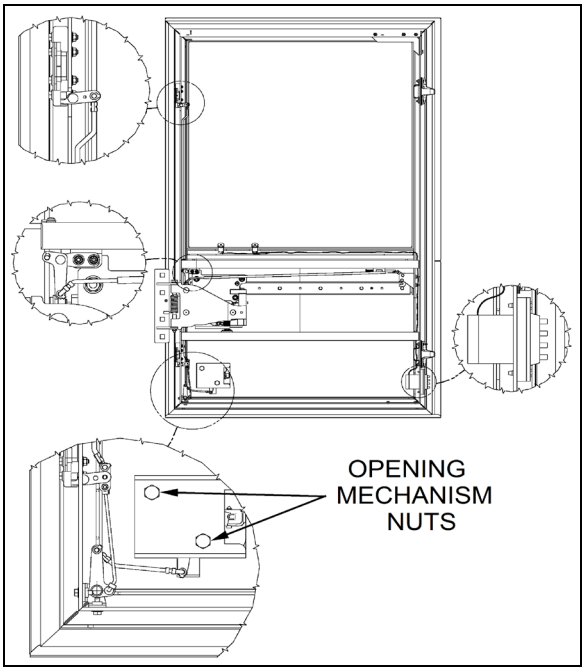


FIGURE 80: WCL SLIDING DOOR OPENING MECHANISM 18740

### 9.5.4 Baggage Compartment Floor

- **Repair of Mantex Urethane Covering**

***Minor Repair***

Use “Dupont IMRON” paint. Apply using a paint brush or roller depending on gravity.

Paint Code: #J4099U

***Major Repair (Hole)***

Chamfer the whole perimeter of the damaged area. If applicable, remove loose covering. Remove dust and particles.

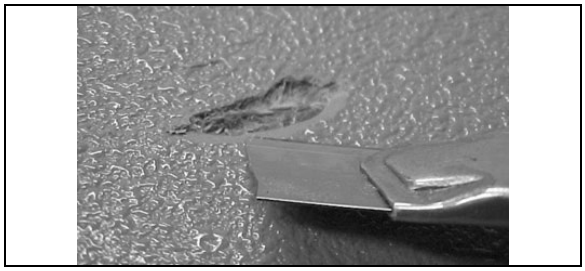

Cover and protect damaged area surroundings.

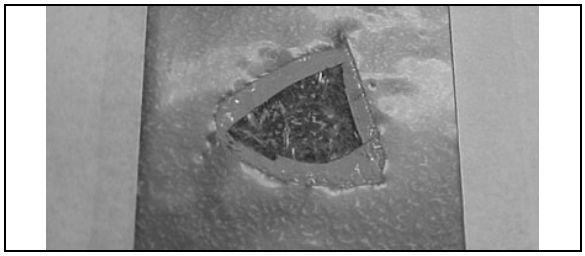

Using a plastic spatula, apply some Sika 221 grey onto the damaged area.

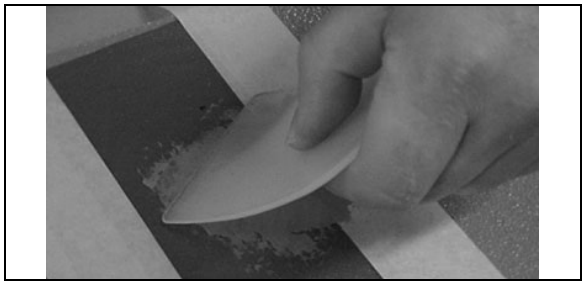

Remove masking tape and protection around damaged area.

Spray pure water onto Sika. Use a floor sample to create some texture onto the adhesive.

If possible spray some more water onto the adhesive to accelerate curing.

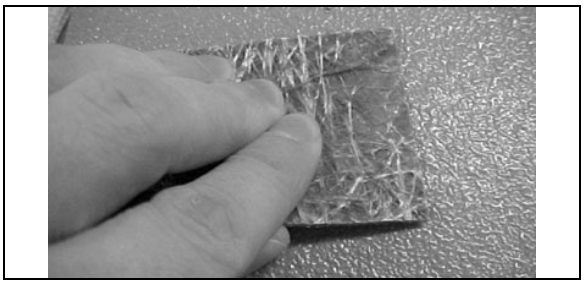

Allow drying for at least **2 hours** then repaint as per paragraph: Minor Repair.

- **Baggage Compartment Floor Installation**

Preparation and Installation

Clean baggage compartment support structure using anti-silicone.

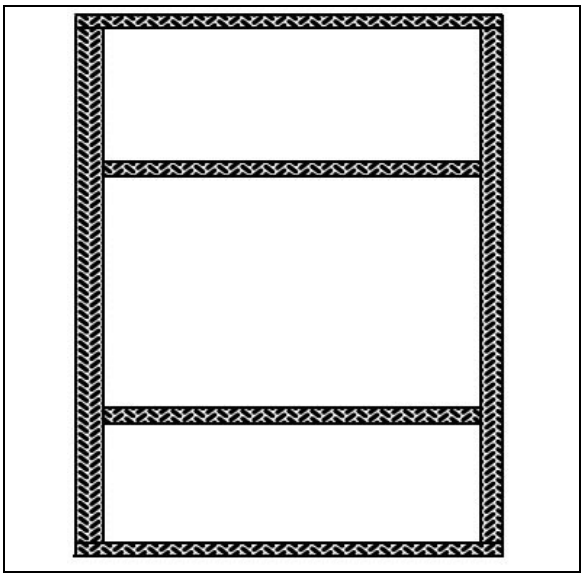

Glue spacers (790392) about 16-inch apart.

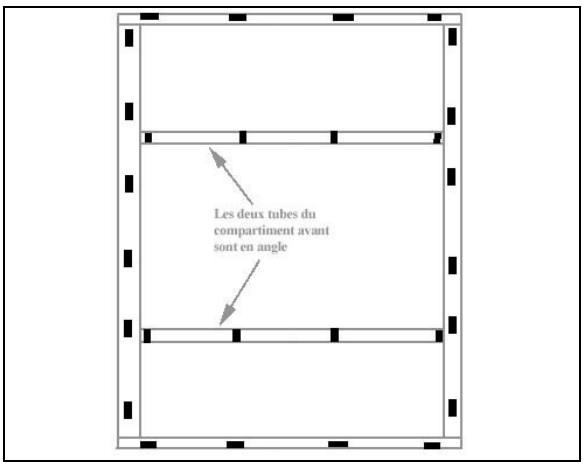


Rear baggage compartment without WCL.

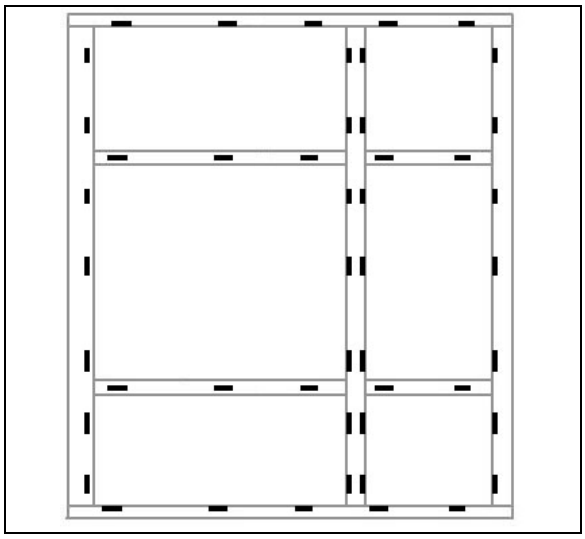

Rear baggage compartment equipped with WCL

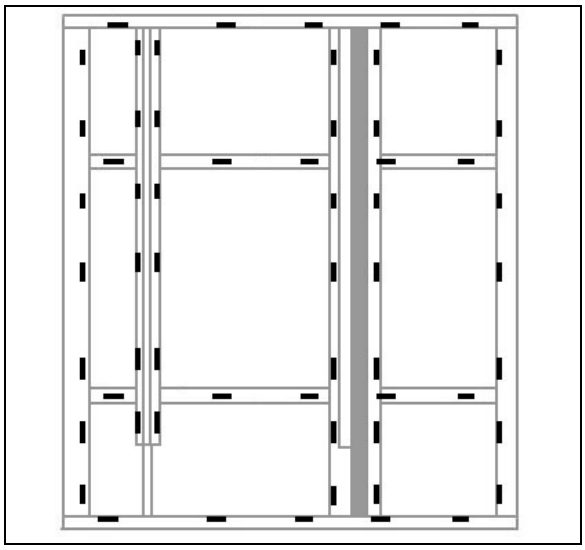

Prepare baggage compartment Mantex floor. Clean panel underside and edges.

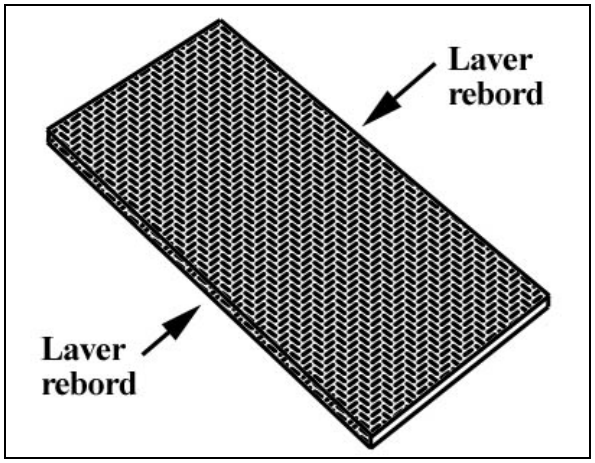


Using a triangular nozzle, apply “Simson” glue (685126) onto support structure.

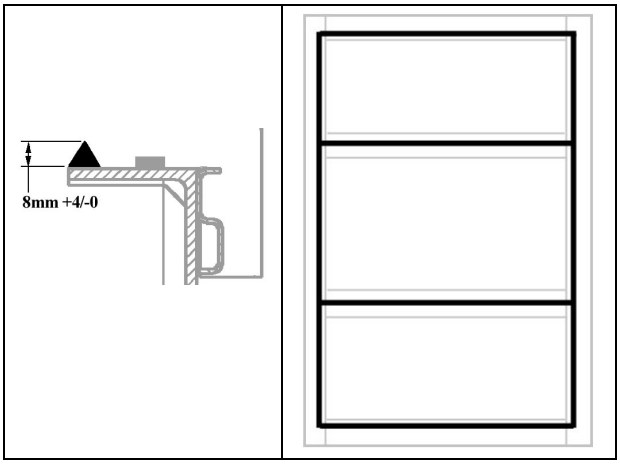


Rear baggage compartment without WCL.

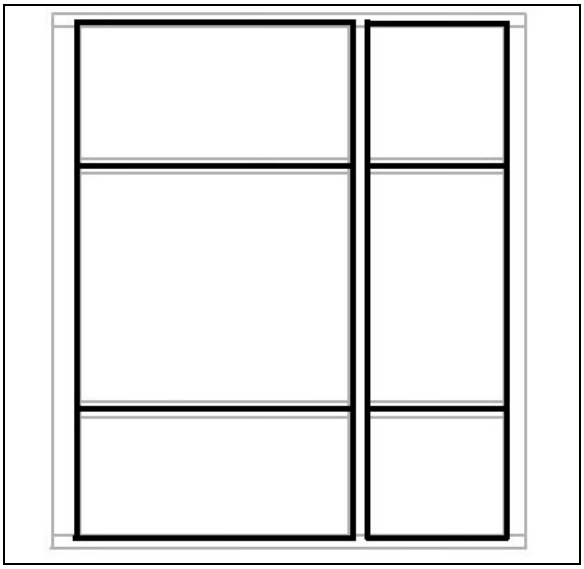

Rear baggage compartment equipped with WCL

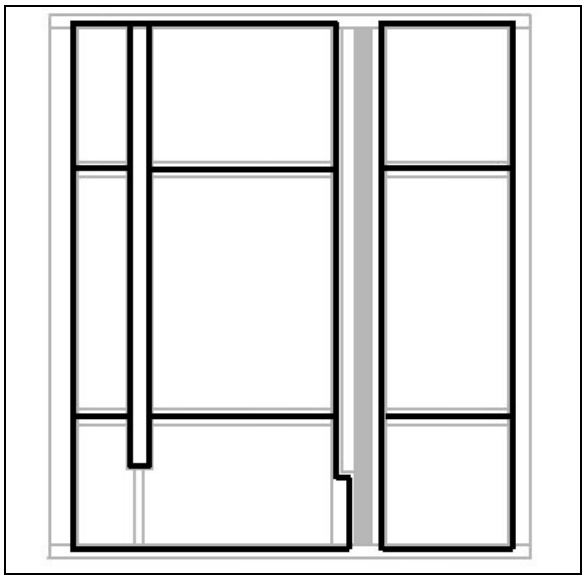

Carefully install panel onto support structure.

Evenly distribute and install conforming weights (6 to 8) (80 to 100 lbs **total**) onto panel for at least **4 hours**. Make sure panel does not move.

### *Finishing Joints*

In the case of lateral finishing joint, apply some masking tape ¼“ from panel edge and ¼” above panel.

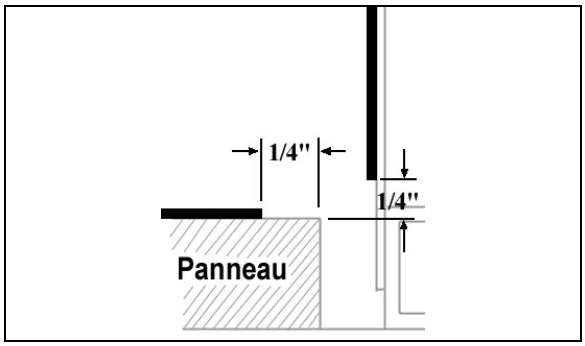


In the case of front finishing joint, apply some masking tape on each side of joint.

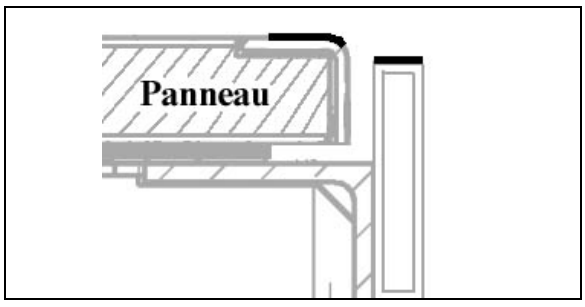


Clean with anti-silicone the area where the Simson glue will be applied.

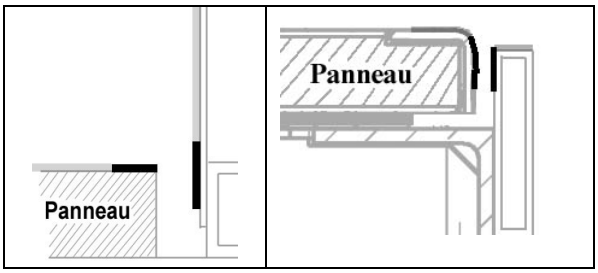


Apply some Simson glue to fill the gap.

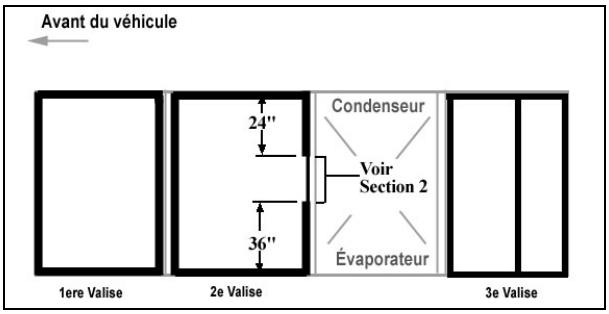


Front finishing joint

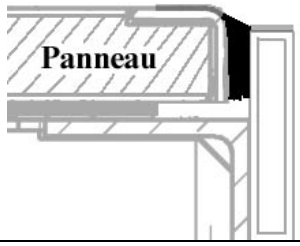


Section 2
Flat joint in front of fuel tank access panel

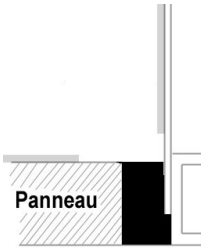


Use plastic spatula #682838 to perform radius

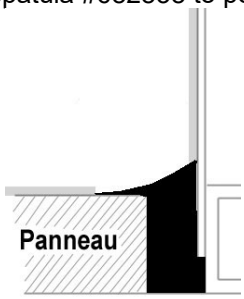


Rear baggage compartment equipped with WCL

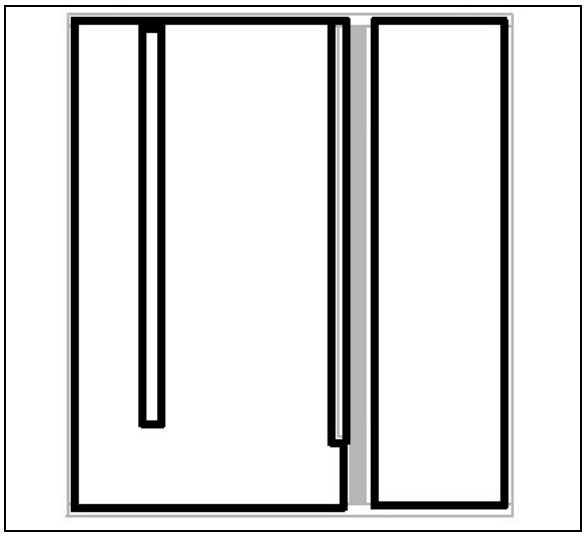

Rear baggage compartment without WCL.

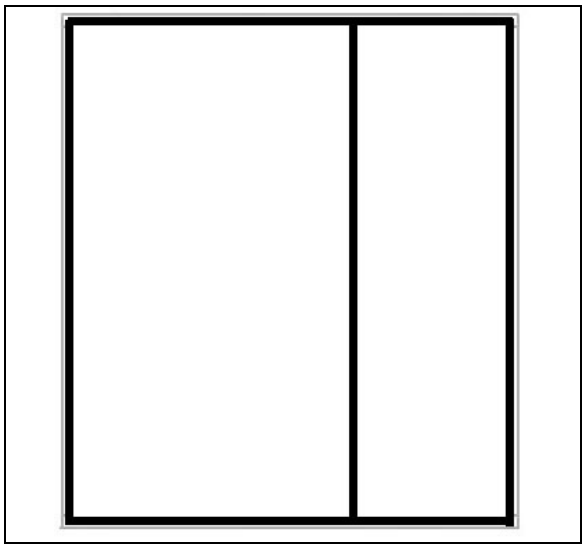

Remove masking tape.

Smooth down joints using soapy water.

### 9.5.5 Evaporator Compartment Door

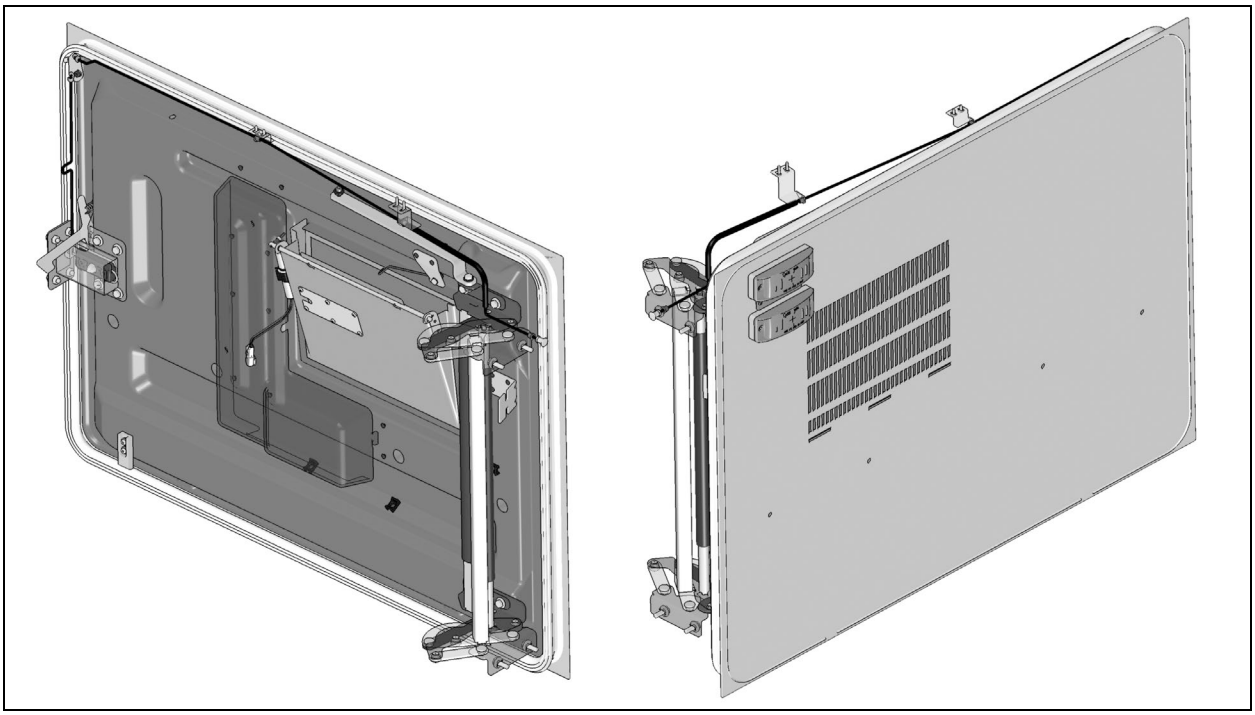

FIGURE 81: EVAPORATOR DOOR (ALUMINUM)

For the adjustment of an evaporator door, you will need:

- Centering tool G34148_500

- **Door adjustment**

1. Open the evaporator door.
2. Loosen the screws fixing the hinge to hinge attachment or hinge to door assembly. Loosening the screws allows the evaporator door assembly to be shifted "LEFT or RIGHT" and "UP or DOWN" or “IN and OUT”.
3. Adjust evaporator door assembly position at the hinge.
4. Door exterior panel on hinge side should be positioned at 29mm +/- 2mm measured from bus frame out.

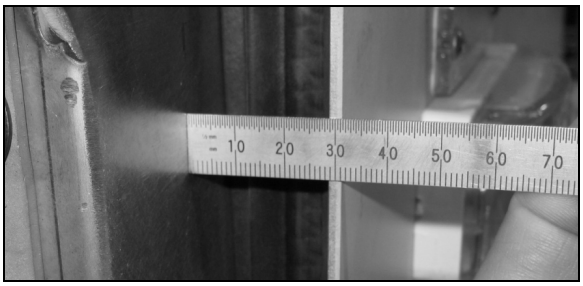


5. Respect the required gap between exterior finishing panels.
6. Tighten the hinge screws.
7. To allow adjustment of the latch mechanism, lightly tighten the retaining hardware on receptacle and receptacle support to frame.
8. Place centering tool G34148_500 in the receptacle cavity.

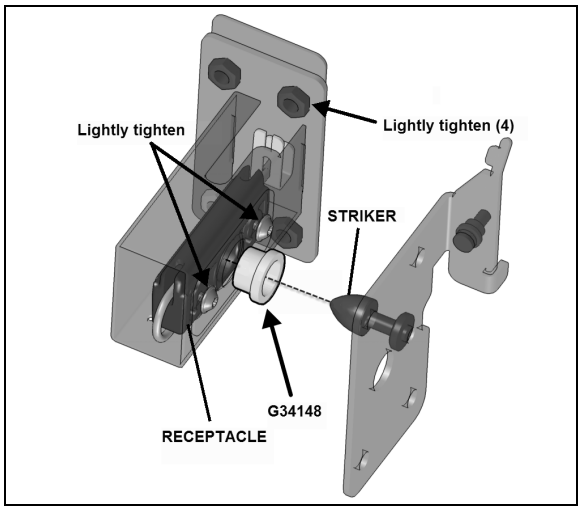


9. Close door to center the latch assembly.
10. Tighten the Receptacle screws only.
11. .Door exterior panel on latch side should be positioned at 8mm +1mm from frame. Make the adjustments by moving the receptacle support.

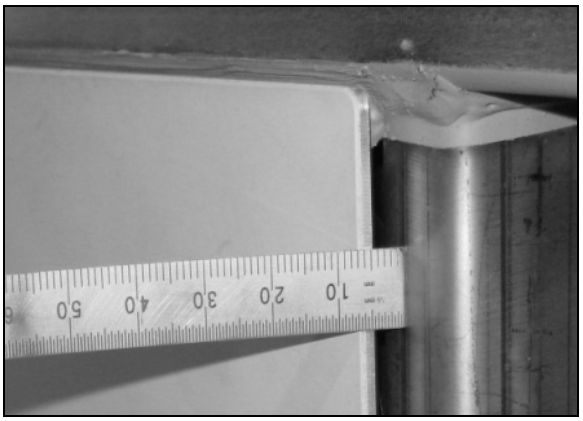

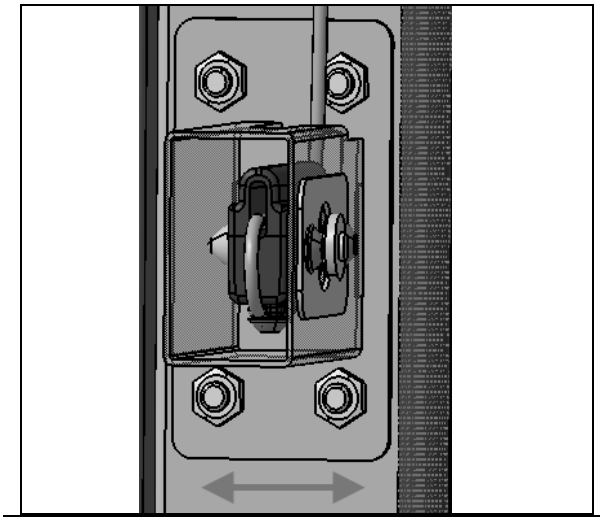

12. Make sure that backing plate is parallel to structure before tightening hardware
13. Make sure that skid bar only touches slightly bus structure at bottom. The door should not move up when closing.

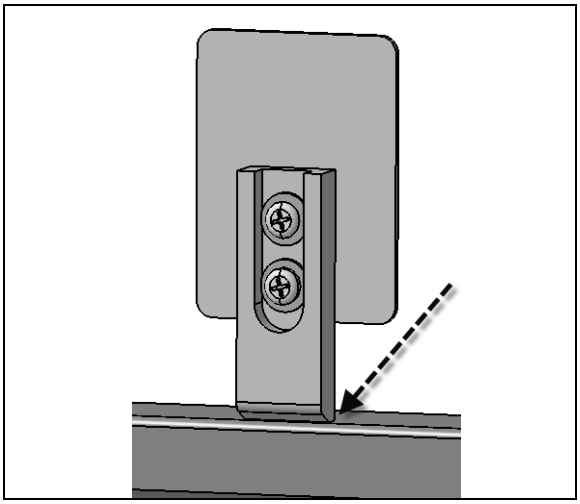

14. Check that the door swings freely and closes properly.

- **Door release in the event of a latch failure.**

If the door release mechanism is damaged or ceases to function for any reason, the door can be released by removing these screws on the fore wall of the fender side



### 9.5.6 Condenser Compartment Door

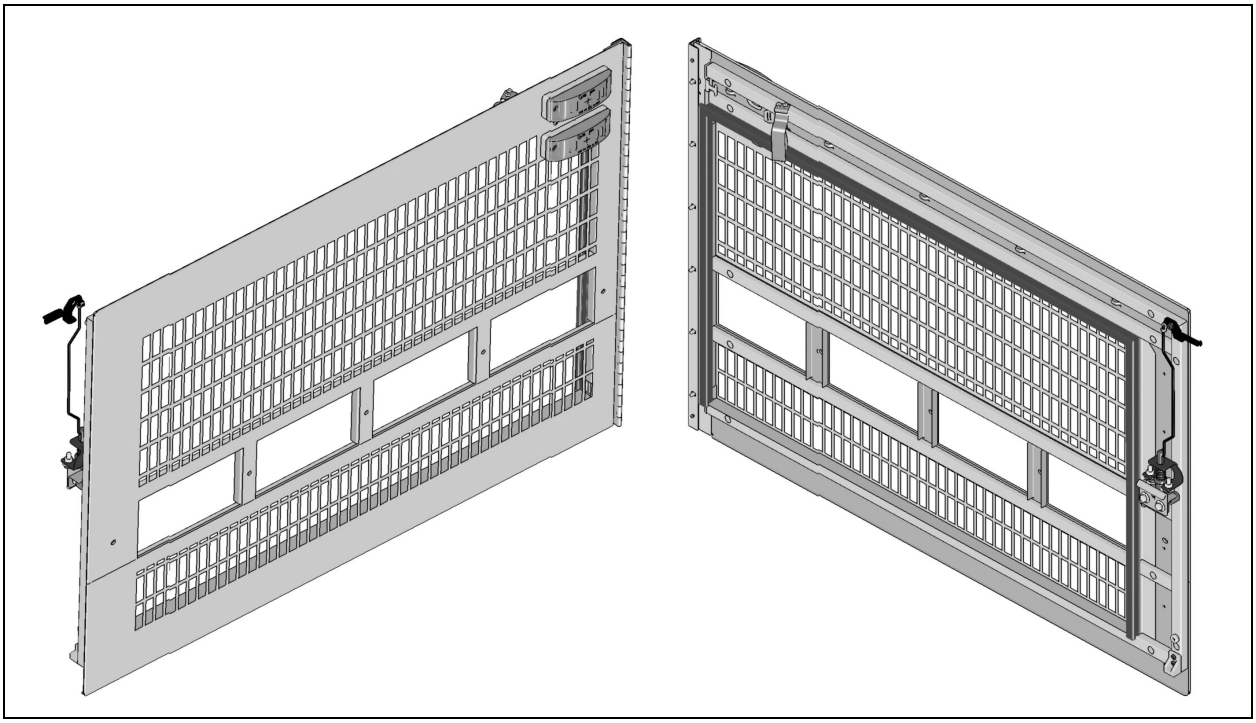

FIGURE 82: CONDENSER DOOR

1. Open the condenser door.

2. Loosen the screws fixing the hinge to hinge attachment or hinge to door assembly. Loosening the screws allows the condenser door assembly to be shifted "LEFT or RIGHT" and "UP or DOWN" or “IN and OUT”.
3. Adjust condenser door assembly position at the hinge.
4. Respect the required gap between exterior finishing panels.
5. Tighten the screws.
6. Check that the door swings freely and closes properly. It may be necessary to adjust the door latch to get proper fit and operation.

### 9.5.7 Fuel Filler Door

1. Open the fuel filler door.
2. Loosen the screws holding the panel to hinge assembly.
3. Adjust the fuel filler door position according to distance required between exterior finishing panels.
4. Tighten the nuts.
5. Check that the door swings freely and closes properly.

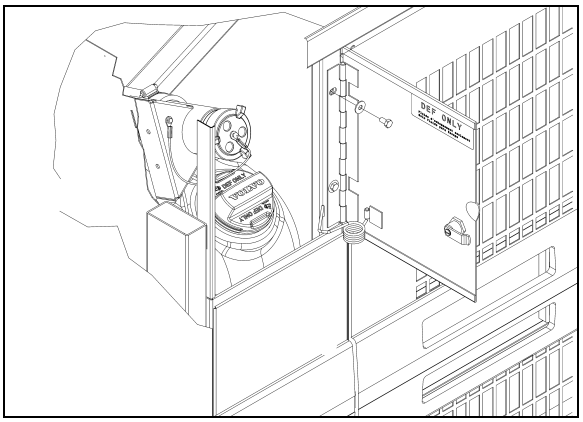


FIGURE 83: FUEL FILLER DOOR 03046

## 9.6 ZONE 6

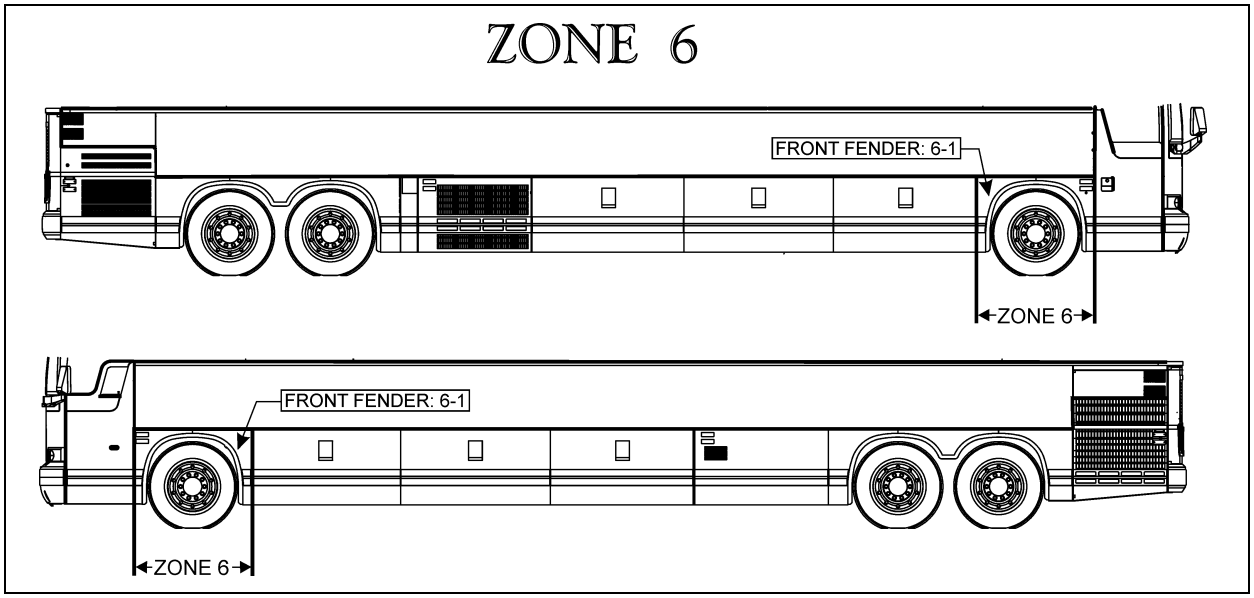


FIGURE 84: ZONE 6 **18629**

### 9.6.1 Front Fender

Front fender may be removed using the following procedure:

Remove the nuts on the inside of the fender. Remove the fender from the vehicle. To reinstall, reverse the procedure.

## 9.7 ZONE 7

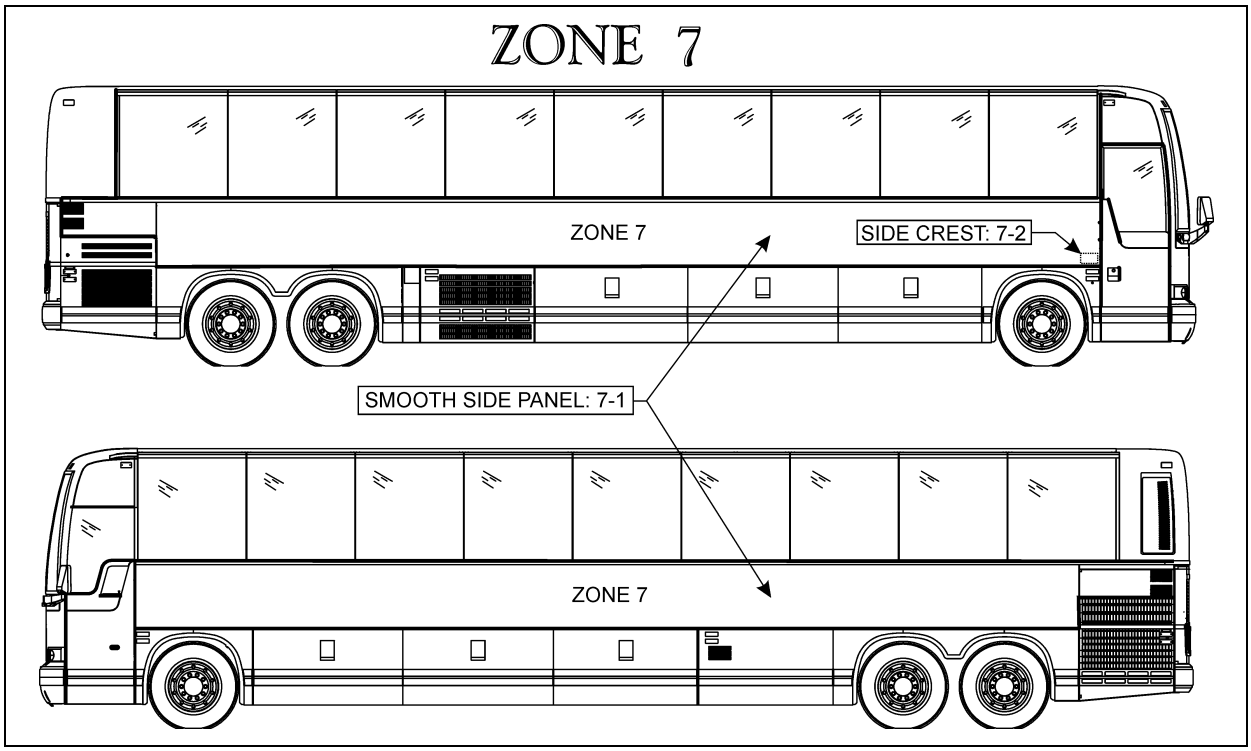


FIGURE 85: ZONE 7 **18630**

### 9.7.1 X3 Smooth Side Panel Replacement Procedure

**Material:**

| | | | | | |
|---|---|---|---|---|---|
| Anti-silicone (682989) | √ | Scotchbrite gray (680226) | √ | Sika 221 gray | √ |
| CHIX cloth (682384) | √ | Sika 205 1liter (683097) | √ | Sika 252 black | √ |
| Blue cloth (682383) | √ | | | | |

**Equipment:**

| | | | |
|---|---|---|---|
| Glue gun | √ | | |
| Pencil | √ | | |

| SECTION 1 SMOOTH SIDE PANEL REMOVAL | | | |
|---|---|---|---|
| 1.00 | **REMOVAL** | | |
| | A) | Remove finishing molding. Insert a screwdriver into snap-on finishing molding joint. Bend finishing molding enough to be able to fix a pair of locking pliers. Using the pair of locking pliers, pull the stainless steel molding and at the same time gradually cut Sika bead with a sharp knife. | Be careful not to damage the adjacent surfaces. |

| | | | |
|---|---|---|---|
| | B) | Using a hammer and punch, drive out rivet shanks from top and bottom and from front and rear finishing molding supports. Use a #11 titanium drill bit to remove rivet heads. | |
| | C) | Grind tig weld spots at each end of side panel. | |
| | D) | Safely support or temporary fix side panel. | **Warning: Panel weights over 200 pounds** |
| | E) | Insert a flat screwdriver between the side panel and the vehicle chassis, in the top left and right corners. Make sure to separate side panel from structure. | Be careful not to damage the adjacent surfaces. |
| | F) | Use the c-clamp to separate the side panel from the back structural panel and at the same time gradually cut Sika bead with a sharp knife. | Ideally, the hoist or chain block must be fastened to the floor while pulling from a 45º angle so as not to damage the vehicle structure |
| | G) | Remove as much glue as possible from the structure using a putty knife or pneumatic knife without damaging 206 G+P primer. | Never heat SikaFlex adhesive to remove. |
| | H) | Check panel horizontal supports for straightness using a straight edge. Take measurements with a ruler. | Tolerance : 1mm towards the outside and 1.5mm towards the inside. |

| **SECTION 2 PREPARATION OF SURFACES** | | | |
|---|---|---|---|
| 2.00 | **VEHICLE SURFACE PREPARATION** | | |
| | A) | Clean using "anti-silicone" until all clothes come clean.<br>See SAV00001 section A. | 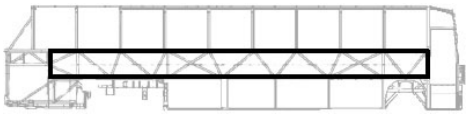 |
| | B) | Use the belt sander (grit coarse)<br>Use a new paper on each vehicle side. | |
| | C) | Clean using "anti-silicone" until all clothes come clean.<br>See SAV00001 section A. | |
| | D) | Apply – Sika 205<br>See SAV00001 section C. | |
| 2.05 | **SIDE PANEL PREPARATION** | | |
| | A) | Clean using “anti-silicone” until all clothes come clean. See SAV00001 section A. | 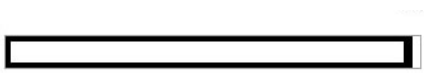 |
| | B) | Use the belt sander (grit coarse)<br>Use a new paper on each vehicle side panel. | |
| | C) | Clean using “anti-silicone” until all clothes come clean. See SAV00001 section A. | |
| | D) | Apply – Sika 205<br>See SAV00001 section C. | |

# SAV00001 Section A Alcohol or Anti-silicone

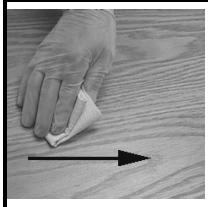

*1.* **Apply**

**CHIX cloth**

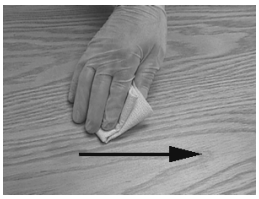

*2.* **Dry immediately**

**Blue cloth**

*3.* **Allow to dry**

| | |
|---|---|
| **Mandatory** | **Minimum time : Wait for product to evaporate** |
| | **After 2 hours: Start cleaning operation again** |
| **Before applying any other product** | If surface seems dusty, greasy or with finger marks, start cleaning operation again. |

# Section B Sika 205

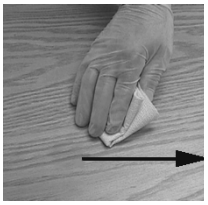

*1.* **Apply**

**CHIX cloth**

*2.* **Allow drying**

| | | | |
|---|---|---|---|
| **Mandatory** | **Minimum time** | **- For a smooth surface (aluminum, stainless, steel, fiber glass (gelcoat side), etc.):** | **2 minutes** |
| | | **- Pour a porous surface (fiber glass (non gelcoat side), etc.)** | **10 minutes** |
| | **After 2 hours : Reactivate surface with Sika 205** | | |
| **Before applying any other product** | If surface seems dusty, greasy or with finger marks, start operation again. | | |

## SECTION 3 SIDE PANEL INSTALLATION

| | | | |
|---|---|---|---|
| 3.00 | A) | Using a pencil, mark the double-face self-adhesive tape position onto vehicle side. | 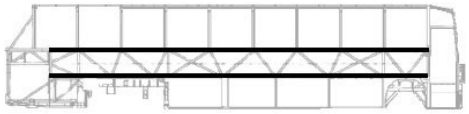 |
| | B) | Apply 1/8 X ½"double-face tape as per marking. | |
| | C) | Compress tape | 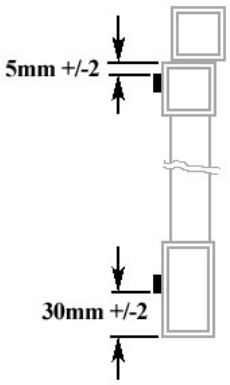 |
| | D) | Remove protective film from double-face self-adhesive tape center section. | 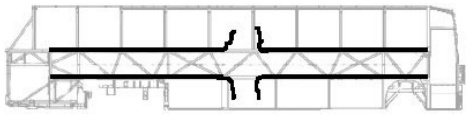 |
| 3.05 | Install 1/8 X ½" foam tape onto middle reinforcement then compress. | | 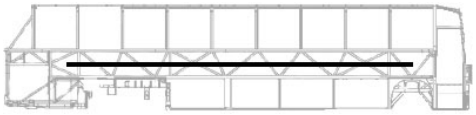 |
| 3.10 | Apply Sika 252<br>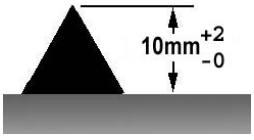<br>– Onto vehicle surface<br>– Cut nozzle as per template<br>– Use the guide for the application<br>Bead must be continuous for the whole perimeter. | | 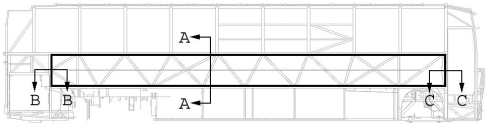<br>Section A-A \| Section B-B \| Section C-C<br>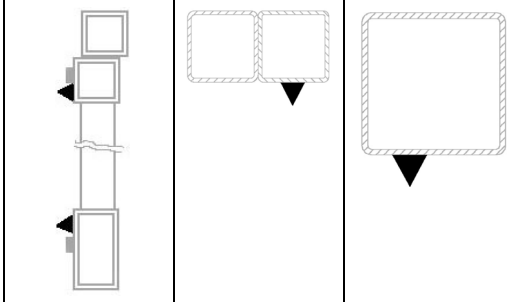 |
| 3.15 | A) | Install side panel onto support jig. | 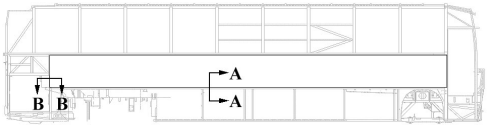 |

| | | | | |
|---|---|---|---|---|
| | B) | Position side panel in front of vehicle structure | **Section A-A**<br>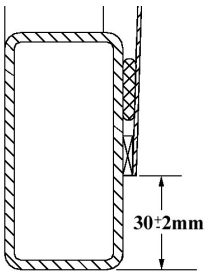 | **Section B-B**<br>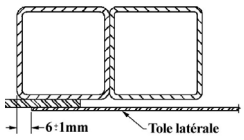 |
| | C) | Perform final adjustment to make sure that side panel is true and square | – 30 mm. ± 2 with reference to bottom tubing<br>– 6 mm ± 1 with reference to vertical tubing | |
| | D) | Sand rear of side panel 2" wide | 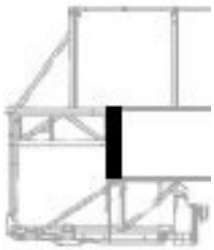 | |
| | E) | Perform tig spot welding (1” apart) | Quantity of "tig spot": 30 minimum. | |
| 3.20 | A) | Install pulling equipment at the other end of side panel | | |
| | B) | Make a final adjustment in height | | |
| | C) | Sand front of side panel 2" wide |  | |
| | D) | Pull side panel so that panel moves 1/8” | Make sure the equipment pulls along the whole width of side panel | |
| | E) | Perform tig spot welding | Quantity of "tig spot": 30 minimum. | |
| 3.30 | Remove pulling equipment | | | |
| 3.40 | A) | Remove protective film from double-face self-adhesive tape. | | |

| | | | |
|---|---|---|---|
| | B) | Compress top and bottom section of side panel |  |
| 3.50 | A) | Cut excess of side panel. Make sure that cut is parallel with tubing. |  |
| | B) | Grind side panel end to line up with door tubing. | |
| 3.60 | To seal each panel end, apply masking tape on each side of side panel joint. Use a caulking nozzle and grey Sikaflex 221 adhesive to fill the cavity between the panel and vehicle structure.<br>Clean using Sika 205. Allow 5 minutes minimum for drying.<br>Wear surgical gloves and smooth down the joint with your finger. | | |

| SECTION 4 ENGINE AIR INTAKE PANEL INSTALLATION | | |
|---|---|---|
| 4.00 | Make sure that sealing of structure has been performed properly |  |
| 4.05 | Prepare vehicle surface as for side panel. | Refer to step # 2.00 |
| 4.10 | Prepare air intake panel as for side panel | Refer to step # 2.05 |

| | | |
|---|---|---|
| 4.15 | Install foam tape 1/8" X ¼" onto structure, as shown in picture | 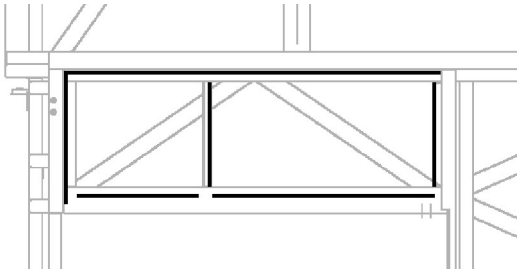 |
| 4.20 | Install foam tape 1/16" X ¼ onto air intake panel pleat |  |
| 4.25 | Apply a bead of 252 onto structure as per picture<br>Important: Make sure bead is continuous<br>Triangular bead: 10mm x 8mm | 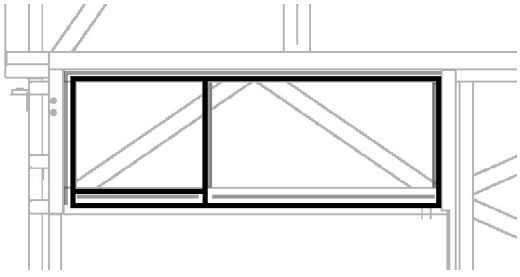 |
| 4.30 | Install panel onto structure | Use a jig to make sure that panel is lined up with engine door tubing. |
| 4.40 | Use a brush to compress Sika bead | |

| | | | |
|---|---|---|---|
| 5.00 * | | **Finition Joint** |  |
| | A) | Install a protective tape onto the tubing above welding | 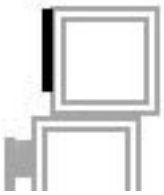 |
| | B) | Apply Sika 205<br>Use a plastic spatula inside a Chix cloth to ensure that Sika 205 reaches as far as the corner.<br>See SAV00001 section C. |  |
| | C) | Apply Sika 252 black at the junction of both tubing.<br>Smooth down the joint |  |
| | D) | Remove protective tape | |

### 9.7.2 Side Crest

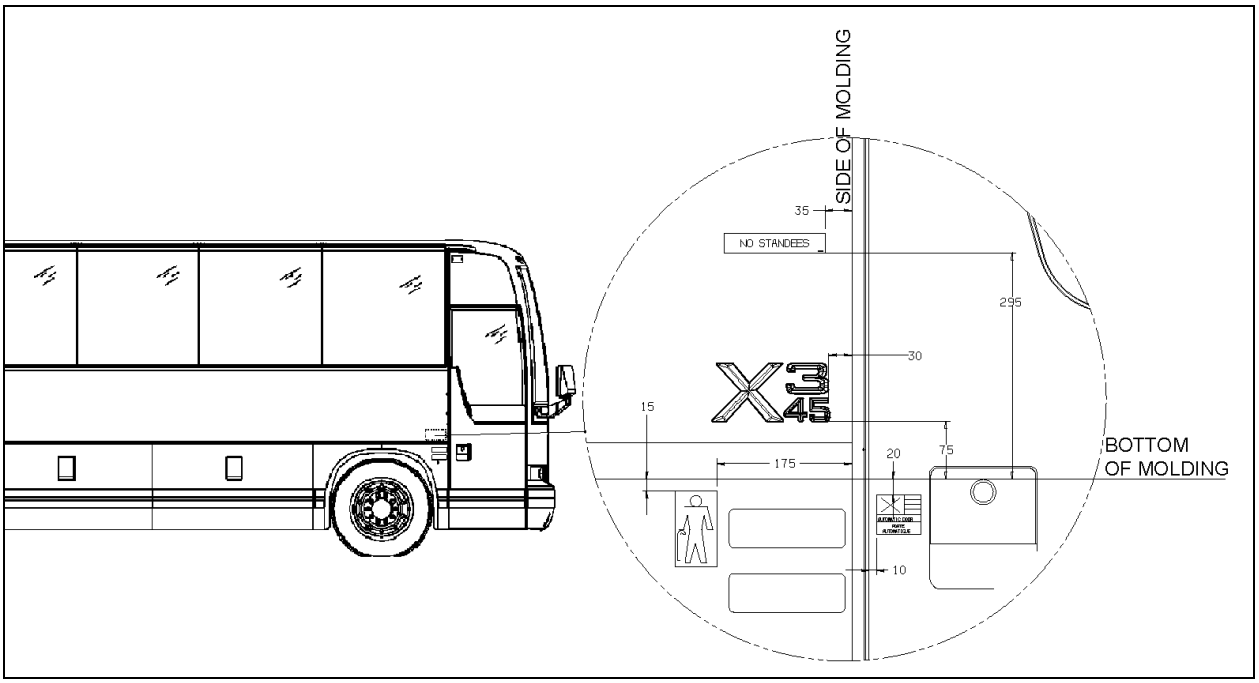


FIGURE 86: SIDE CREST POSITIONING **18639**

- Clean vehicle surface using anti-silicone where the side crest and stickers will be applied.
- Using hands apply and compress side crest.
- Apply required stickers.

## 9.8 BODY PANEL AND WINDOW SPACING

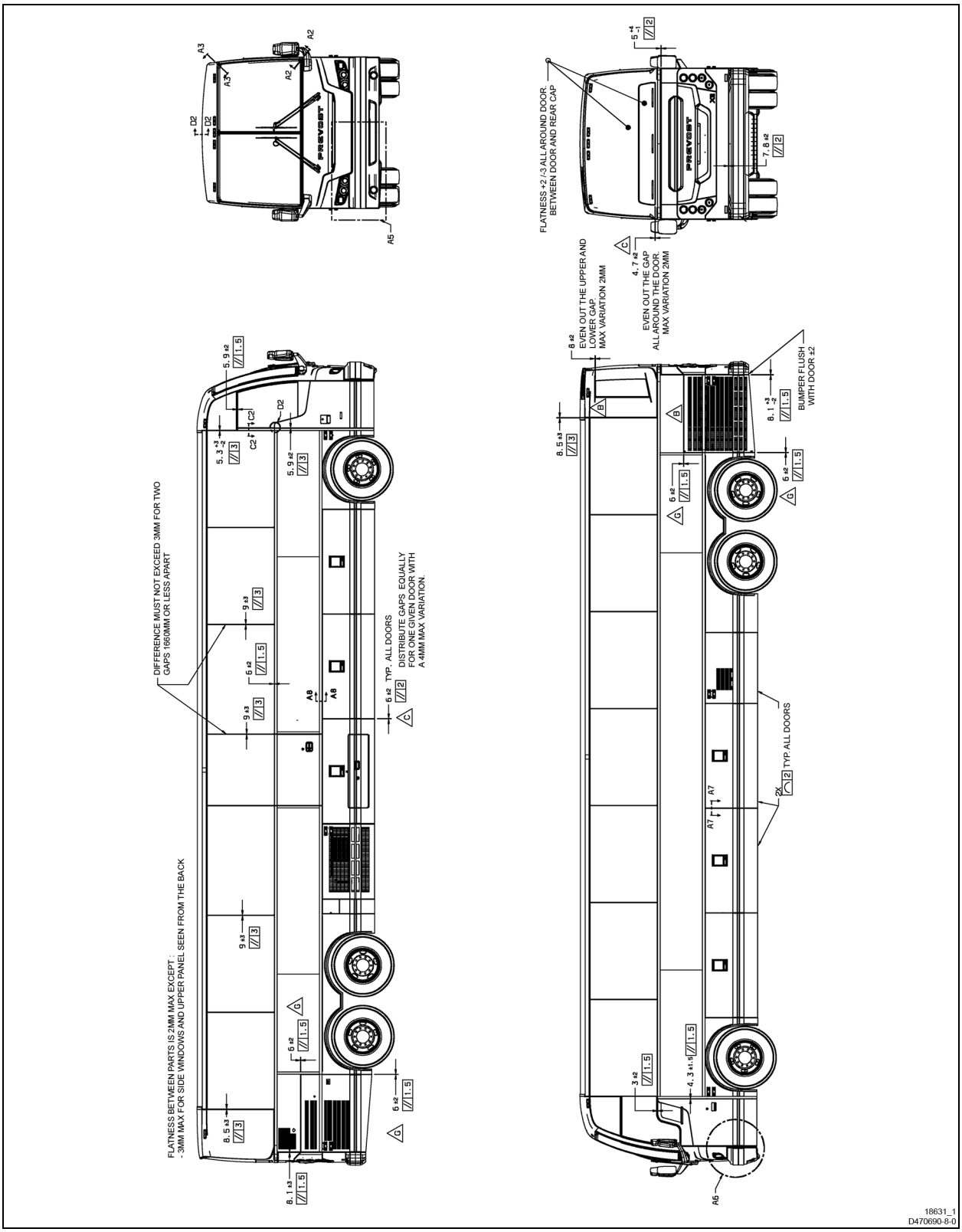


FIGURE 87: BODY PANEL AND WINDOW SPACING

## 9.9 PASSENGER SEATS

The vehicle can be equipped with different seat models and installed in a variety of seating arrangements:

1. For coaches, standard seating arrangement includes two card tables, which can be folded and removed, and pivoting seats ahead of each card table. Each pair of seats is built on a welded steel frame fastened to the side wall and on a track-mounted pedestal.
2. The *"V.I.P."* seat model is an optional seat. *"V.I.P."* seats are mounted on one row of paired seats built on a common frame on one side of the vehicle, and a row of single seats on the other side of the vehicle with an off-center aisle. Each *"V.I.P."* seat has its own set of armrests.

Each seat has an easily removable bottom cushion. Upholstery is clipped on the cushion frame for cleaning or replacement. To remove the fabric, simply unclip from the frame. The standard seats have three armrests. The aisle and center armrests can be folded up and down manually, while the window armrest is fixed.

### 9.9.1 Rotating Seats

1. Loosen completely the threaded-stud knob under the seat on the aisle side (Figure 87).

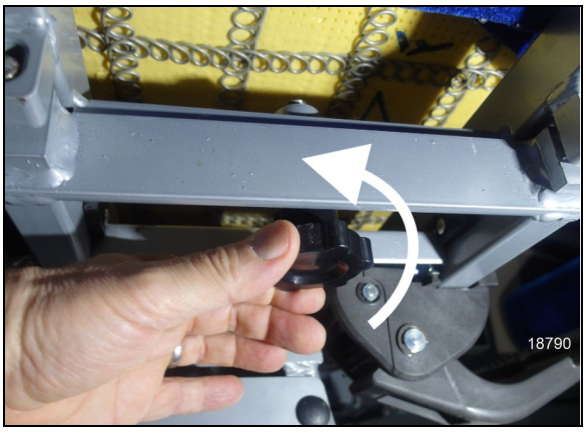


FIGURE 88: LOOSEN THE KNOB

2. Pull the seat toward the aisle to unlock the rotation (Figure 88).




FIGURE 89: PULL TO UNLOCK THE ROTATION

3. Rotate the seats until it stops (Figure 89, A) and push back toward the window to lock rotation (Figure 89, B).




FIGURE 90: FINAL POSITION

4. Fasten the threaded-stud knob under the seat on the aisle side.

### 9.9.2 Removing Fixed Seats

| *NOTE* |
| --- |
| *Seats on one row are not interchangeable with seats of the other row.* |

To remove fixed seats, proceed as follows:

1. Remove 1 nut holding each seat bottom cushion from under the front part of the seat frame.
2. Lift front part of cushions and remove cushions.

3. Remove 4 finishing screws holding plastic cover between side wall and seat frame.
4. Remove 2 cap screws, nuts, and washers holding seat frame to side wall and retain the 2 holding brackets. See Figure 90.
5. Remove 2 nuts and washers holding seat frame to pedestal rods. See Figure 91.

| *NOTE* |
|---|
| *Bottom end of rod is coated with Loctite and threaded in a steel block which slides in the floor track. Removal of rod is possible if loosened from block. Otherwise, slide rod and block assembly to the front end of track after removing all seats located in front.* |

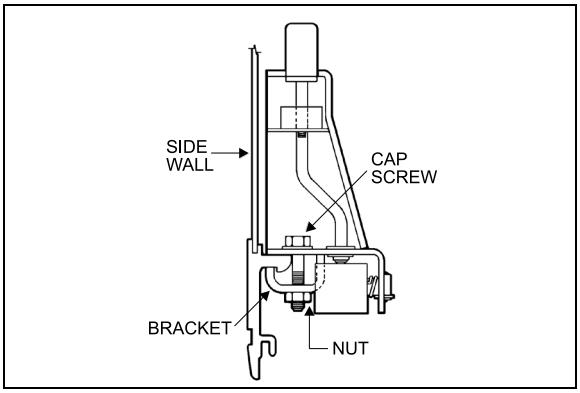


FIGURE 91: ARMREST 18106

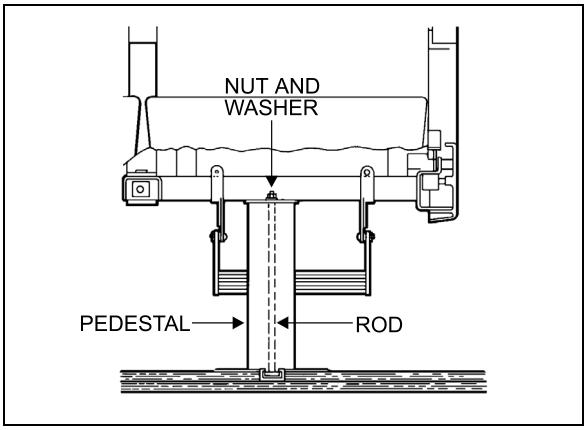


FIGURE 92: SEAT PEDESTAL ASSEMBLY 18107

6. Remove seat assembly.
7. Reverse the above procedure to install seat assembly. Tighten mounting nuts.

**TORQUE: 27 lb-ft (37 Nm)**

| *NOTE* |
|---|
| *On newer vehicles, the rod consists of a carriage bolt inserted in a square plate sliding in the floor track. Removal is possible only by the front or rear end of track.* |

### 9.9.3 Upholstery Maintenance

Coach seats are lightweight, with foam-padded backs and cushions. For both appearance and durability, best results are obtained if upholstery is cleaned at regular intervals before dirt, dust and grit have been ground into the fabric. Seat fabric is made of 50% wool, 33% cotton, 9% nylon, and 8% acrylic.

- **Routine Cleaning**

All that is required to remove the dirt is a gentle beating with the hand or the back of a brush. This will bring the dirt to the surface where it is easily removed with a vacuum or brush in the direction of the pile which can easily be recognized by running a hand lightly over the pile. If the fabric becomes excessively dirty, particles of grit will cause gradual wear, reducing the life span of the fabric.

- **Dry Cleaning**

If covers are to be removed for cleaning, dry cleaning is recommended since washing might cause some shrinkage, preventing the covers from being reapplied to the seats without damage. Other than spot cleaning the covers while they are in place, dry cleaning is not recommended, since the resulting fumes could be hazardous in the confines of the coach and the solvent could be detrimental to the foam padding of the seats.

- **Cleaning With Covers in Place**

The most effective and economical method to clean the fabric seat covers is by washing with either an approved foam upholstery cleaner or with a mild household detergent.

Thoroughly vacuum the upholstery. Remove any spots or stains before the seats are washed to avoid a cleaning ring.

Dilute household detergent or liquid foam cleaner according to directions on the container. Pour a small quantity into a flat pan and work into a thick foam with a sponge or brush.

Apply only the foam to the fabric with a sponge or brush. Clean a small area of the fabric at a time with the foam. DO NOT SOAK. Rub

vigorously. Sponge the suds from the fabric with a clean sponge or cloth moistened with water. Rinse the sponge or cloth often and change the water when it becomes dirty.

Allow the upholstery to dry completely before the coach goes back into service. To speed up drying, excess moisture can be blown off the fabric with compressed air.

**CAUTION**

Oil in the air line will soil the fabric. Blow the line clear and test air discharge against a plain white piece of paper. It is also effective to press the edge of a flat hardwood stick down on the cushion and slowly draw it across the fabric.

Even very soiled areas can be returned to their original appearance by a thorough cleaning, but a regular schedule of cleaning that keeps the upholstery reasonably clean at all times will greatly enhance the life span of upholstery.

## 9.10 TARABUS FLOOR COVERING REPAIR OR REPLACEMENT

On X3-45 coaches equipped with “Tarabus” covering, it is possible to replace or repair this covering. The purpose of this paragraph is to explain the steps to be followed to ensure the best results and adherence.

**MATERIAL**

| Part No | Description | Qty |
|---|---|---|
| 680028 | Adhesive, Tarabus Floor Covering (White) | A/R |
| 684655 | Adhesive, Contact (3M) | 3.8L |
| 684654 | Adhesive, Contact (3M) | 18.9L |
| 680532 | Sikaflex 221 Gray | A/R |

*NOTE*

*Material can be obtained through regular channels.*

1. Remove number of passenger seats required to perform repair.
2. Cut and remove damaged section of floor covering.

*NOTE*

*It would be preferable to cut under two rows of seats so that repair is not as noticeable.*

3. Clean plywood using a scraper.

*NOTE*

*Make sure that no staples are sticking out beyond surface. Adjacent plywood sheets must be leveled.*

4. Fill up holes and imperfections using MAPI PRP 110 then sand.
5. Remove dirt and adhesive residue.

**⚠ CAUTION**

Do not leave floor covering folded down except temporarily during installation.

6. Apply floor covering adhesive (680028) onto plywood using a serrated spreader with 1/8-inch serration. If required, apply contact adhesive (3M) (684655 or 684654) onto aluminum molding and also onto section of floor covering, which will be in contact with molding (refer to Figure 92).

*NOTE*

*Allow adhesive to dry (3 to 5 minutes).*

7. Compress floor covering using a roller so as to remove any trapped air bubble.
8. Apply Sikaflex 221 gray sealant (680532) alongside passenger seat fixing tracks (refer to Figure 93).

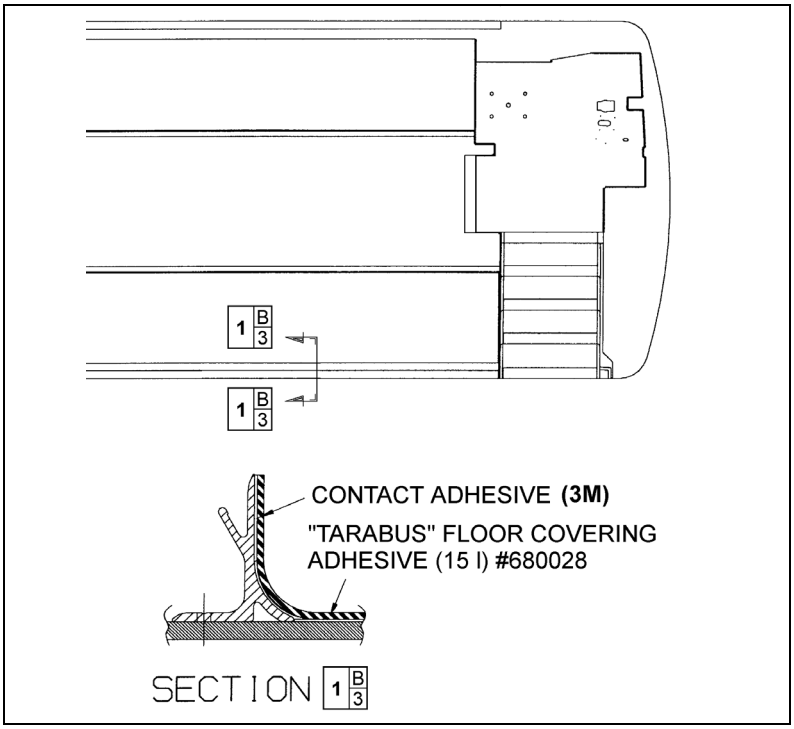


FIGURE 93: TARABUS FLOOR COVERING ADHESIVE APPLICATION 18640

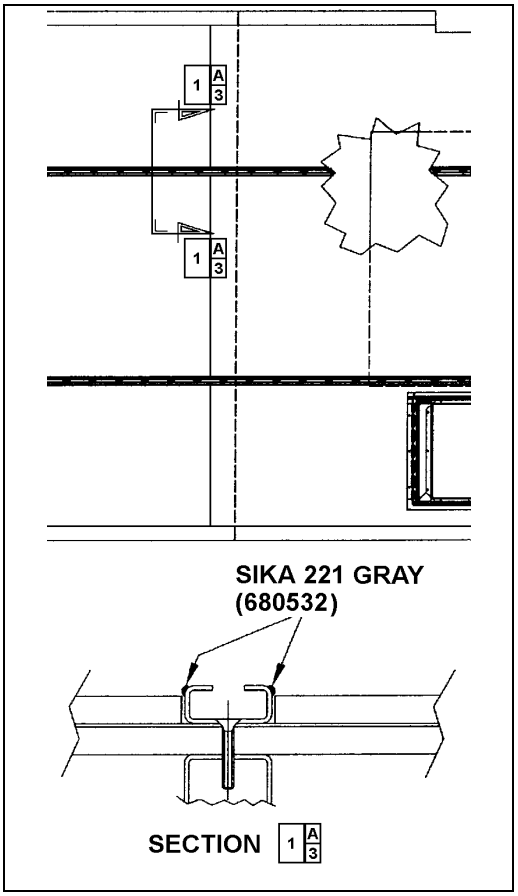


FIGURE 94: APPLICATION OF SIKA 221 GRAY 18641

### 9.10.1 Front Steps Replacement Procedure

**MATERIAL**

| Part No | Description | Qty |
|---|---|---|
| 682989 | Anti-silicone | A/R |
| 683097 | Sika 205 (1 liter) | A/R |
| 685101 | Sika Remover 208 | A/R |
| 683916 | Sika 215 (1 liter) | A/R |

1. Cut and remove damaged step(s).
2. Remove dirt and adhesive residue.

| *NOTE* |
|---|
| *In wintertime, condensation and cold temperature may greatly influence bonding parameters. Working area must be at a temperature sufficient to prevent reaching condensation point. Mechanically preheat working area (heat lamp or heat gun) or wait until vehicle reaches room temperature.* |

**PREPARATION OF "TARABUS" FLOOR COVERING**

1. Sand under step using "Scotchbrite".
2. Clean using anti-silicone (refer to Section A).

## Section A Alcohol or Anti-silicone

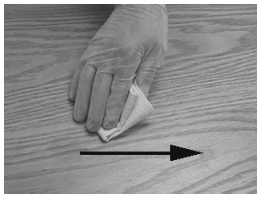

***1.*** **Apply**

**CHIX cloth**

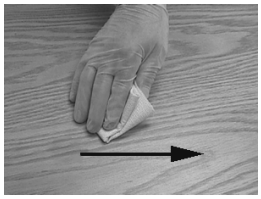

***2.*** **Dry immediately**

**Blue cloth**

| | | |
|---|---|---|
| ***3.*** **Allow drying** | | |
| **Mandatory** | | **Minimum time : Wait for product to evaporate** |
| | | **After 2 hours: Start cleaning operation again** |
| **Before applying any other product** | | If surface seems dusty, greasy or with finger marks, start cleaning operation again. |

3. Apply Sika Primer 215 (refer to Section D).

## Section D Sika Primer 215

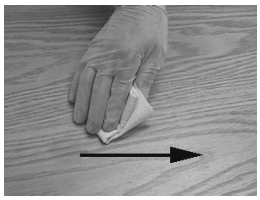

***1.*** **Shake bottle to mix product**

***2.*** **Apply a thin layer**

**CHIX cloth**

| | | |
|---|---|---|
| ***3.*** **Allow drying** | | |
| **Mandatory** | **215** | **Minimum time : 20 minutes** |
| | | **After 2 hours : Remove dust using damp cloth (pure water)** |
| **Before applying any other product** | | If surface seems dusty, dust using damp cloth. |
| | | If surface seems greasy or with finger marks, reactivate with Aktivator. |

**PREPARATION OF FIBERGLASS**

1. Clean using anti-silicone (refer to Section A).
2. Apply Sika 205 (refer to Section B).

# Section B Sika 205

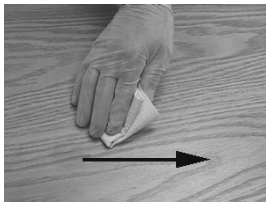

***1.*** **Apply**

**CHIX cloth**

***2.*** **Allow drying**

| | | | |
|---|---|---|---|
| **Mandatory** | **Minimum time** | **- For a smooth surface (aluminum, stainless, steel, fiberglass (gelcoat side), etc.):** | **2 minutes** |
| | | **- For a porous surface (fiberglass (non gelcoat side), etc.)** | **10 minutes** |
| | **After 2 hours : Reactivate surface with Sika 205** | | |
| **Before applying any other product** | | If surface seems dusty, greasy or with finger marks, start operation again. | |

**FRONT STEPS GLUING**

1. Use step nosing to measure and cut necessary length of white safety strip.
2. Use a screw to check depth of countersinking in step nosing. Screw top must not stick out beyond the aluminum surface. Countersink if needed.

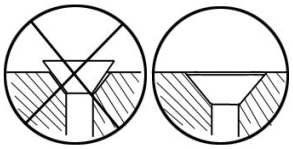

3. Apply some Sika 252 onto the step; make sure to cover the whole surface of the step. Use a serrated spreader with 1/8-inch serration to spread Sika.
4. Apply a bead of Sika 221 onto the perimeter of the step.
5. Install step and press with hands. If Sika overflows, clean with Sika 208. Repeat previous stages for each step if applicable.
6. Remove protective film from double-coated self-adhesive tape located underneath step nosing, position step nosing then press. Drill and fix using screws.

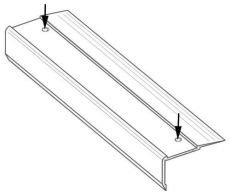

7. Clean top of step nosing using Sika 205 (refer to Section B).

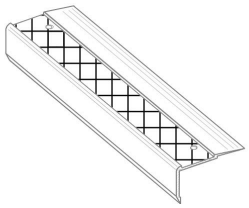

8. Apply some Sika 221 onto white safety strip, spread with a spatula to cover the whole surface.

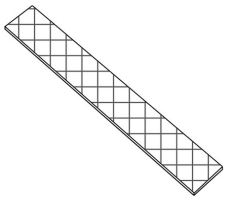

9. Position white safety strip then press using hands. If Sika overflows, clean with Sika 208.

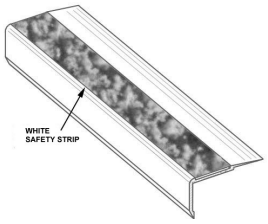


10. Temporarily fix white safety strip with a piece of duct tape, leaving 1 to 2 inches free at each end.

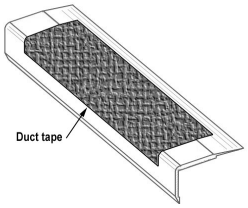


11. Apply some masking tape onto the step perimeter, clean using Sika 205 (refer to Section B) then apply a bead of Sika 252 black. Smooth out the joints then remove masking tape.
12. Install weights onto the steps. Minimum waiting time: 2 hours.

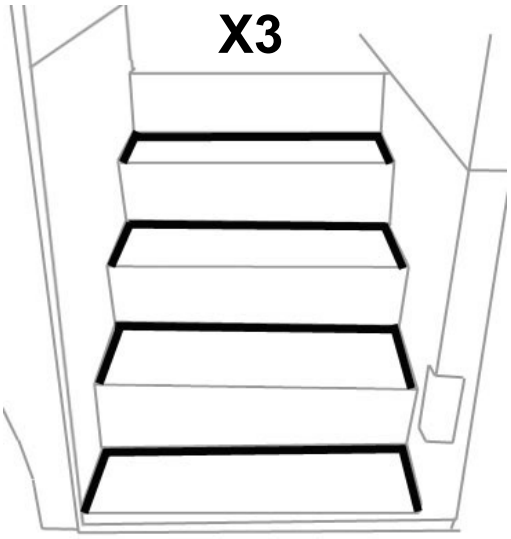

### 9.10.2 Welding Of Joint Between White Safety Strip And “Tarabus” Floor Covering

1. Pre-heat welding torch;

   Set welding torch to position #4.5 (temperature of 500 °C),

   Heating time: 5 minutes.

2. Before welding, visually ensure that a 1 to 1.5 mm gap exists between white safety strip and “Tarabus” floor covering. Use a knife if this is not the case.

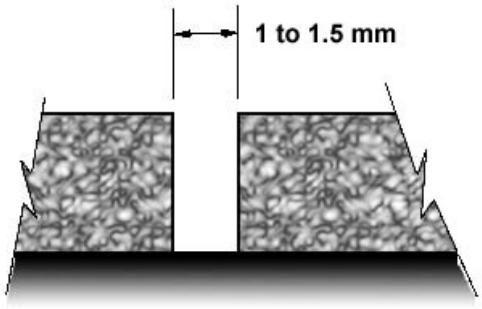


| *NOTE* |
| --- |
| There should be no excess of adhesive on top of surfaces, clean if required using “All-Sol”. |

3. Chamfer the joint.

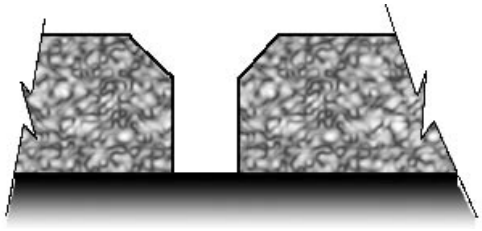

| *NOTE* |
| --- |
| The chamfer width must always be less than the filler bead diameter (between 2.5 and 3 mm). |

4. Use chamfer knife. **Be careful not to overcut or to cut to the side to prevent damaging “Tarabus” covering.**



5. Add (about 6 inches) some length to the required length of filler bead to make the joint then cut.

6. Take position with welding torch. The proper position is with a slight slope to the rear.



7. Once the welding torch is ready, insert the filler bead into the nozzle and immediately start welding. Move in a regular manner while pressing slightly with torch.



8. The heel of the fast nozzle must not lean against “Tarabus” covering (always parallel to the surface).

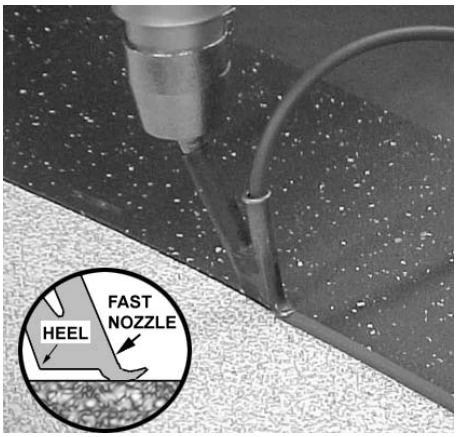


9. Allow cooling down of filler bead (about 5 minutes).

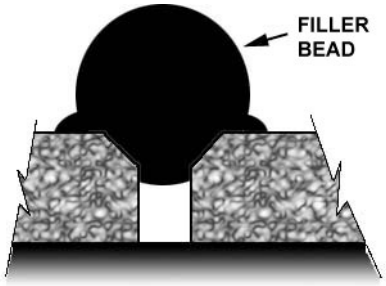


10. Shave filler bead to make it level to the floor. Use supplied knife designed for that purpose.

| *NOTE* |
| --- |
| *To facilitate the cut, you can spray some soapy water onto the joint.* |

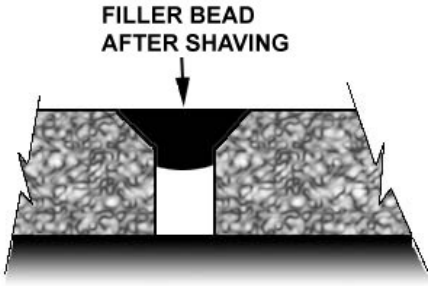


| **CAUTION** |
| --- |
| The procedure for turning the torch off must absolutely be followed. If this step is not taken, the element may burn. |

11. Set temperature potentiometer to “0” position. Fan will evacuate residual heat. Leave the torch in operation as it is for 3 minutes.
12. Perform adhesion test using the tip of a flat screwdriver; apply a slight pressure on the joint.

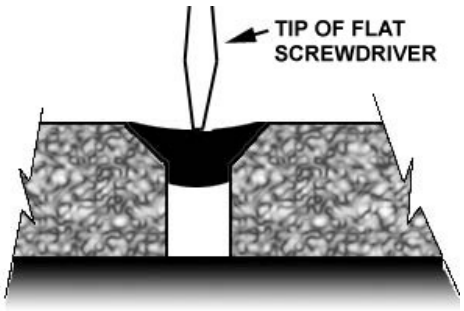


13. If welding was not performed properly, there will a loss of adhesion on one side. If this is the case, repair the joint.

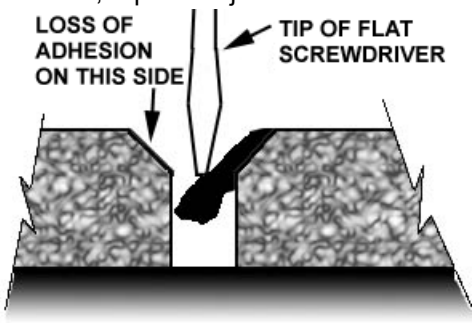


### 9.10.3 Repair Of A Welded Joint

| *NOTE* |
| --- |
| *In wintertime, condensation and cold temperature may greatly influence bonding parameters. Working area must be at a temperature sufficient to prevent reaching condensation point. Mechanically preheat working area (heat lamp or heat gun) or wait until vehicle reaches room temperature.* |

1. Using a knife, remove portion of joint to be repaired.

| *NOTE* |
| --- |
| *Loss of adhesion may be local. If this is the case, repair may also be local.* |

2. Chamfer the joint again as indicated in paragraph 6.10.2, Section: Welding Of Joint Between White Safety Strip And “Tarabus” Floor Covering.
3. Re-weld the joint as indicated in paragraphs 6, 7 and 8. Use your thumb to hold the filler bead end.

**WARNING**

Nozzle is hot.



4. Always add an extra inch of filler bead at the beginning and at the end of repair.
5. Perform steps indicated in paragraphs 9, 10 and 11.

## 10 X3-45 VIP EXTERIOR FINISHING AND BODY REPAIR

The following procedures cover repair, installation and replacement of various doors, panels and windows pertaining to X3-45 VIP. The paragraph divides the vehicle into zones to facilitate the search; each zone is then sub-divided into components.

Refer to the appropriate zone and component for the complete procedure.

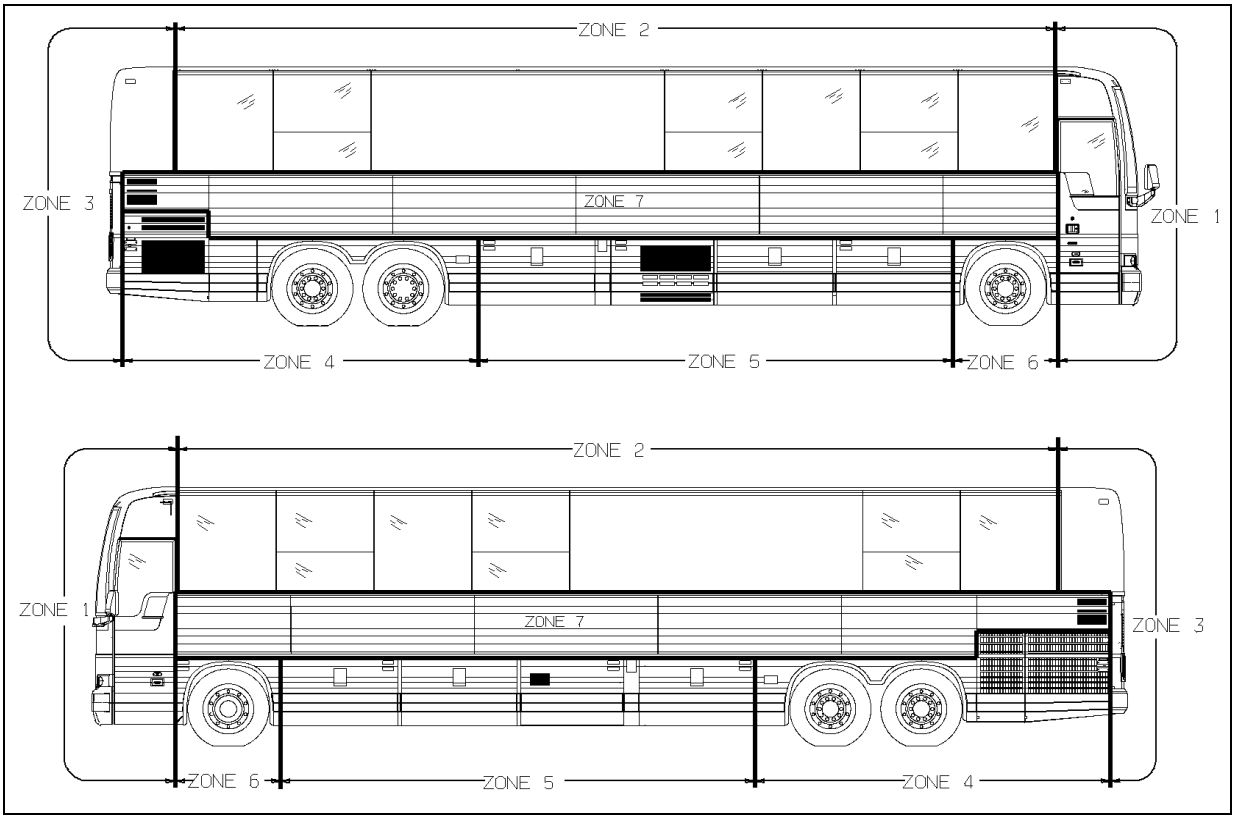


FIGURE 95: X3-45 VIP ZONES

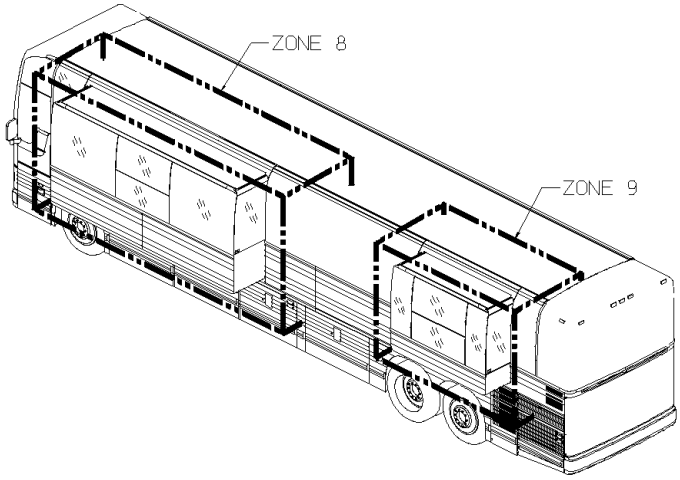


ZONE 10: BODY PANEL & WINDOW SPACING FOR W5 MTH NOT FITTED WITH SLIDE-OUT
ZONE 11: BODY PANEL & WINDOW SPACING FOR W5 MTH FITTED WITH SLIDE-OUT

FIGURE 96: X3-45 VIP WITH SLIDE-OUTS

## 10.1 ZONE 1

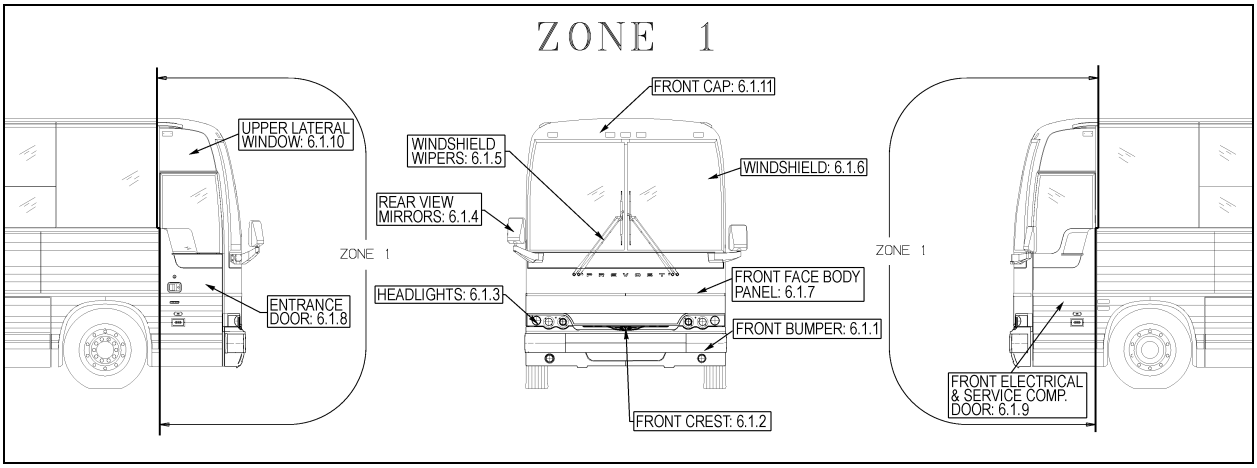


FIGURE 97: ZONE 1

### 10.1.1 Front Bumper

The front bumper can be tilted downward to give access to the bumper compartment. Pull the release handle located inside front service compartment to unlock. Tilt down the entire bumper assembly to access the compartment. Push the bumper back up firmly in place to lock in position.

Two people are required to remove and install the front bumper. Safely support the bumper and remove the two bolts on each bumper side to separate the bumper from the spare wheel compartment door. To install bumper, reverse the removal procedure.

**WARNING**

Front bumper is heavy. Use proper lifting equipment to support the bumper during the removal and installation operations to avoid personal injury.

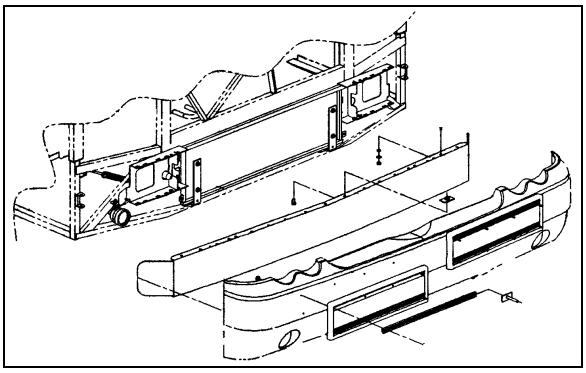

FIGURE 98: FRONT BUMPER REMOVAL

**WARNING**

The compartment behind the bumper is not designed for storage. Never store loose objects in this compartment since they can interfere with the steering linkage mechanism.

Use care when opening or closing the reclining bumper compartment to prevent personal injury.

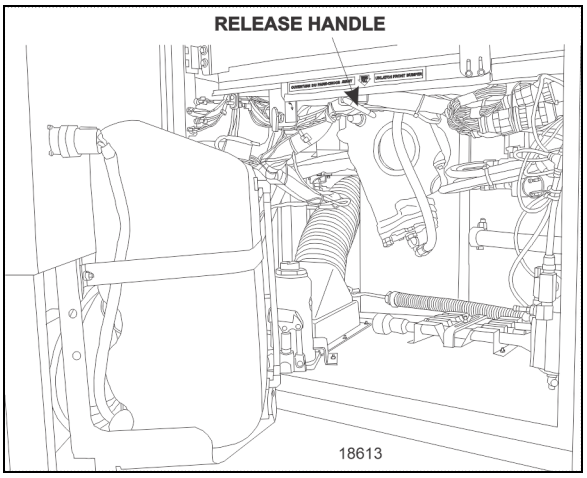


FIGURE 99: FRONT BUMPER RELEASE HANDLE

For gluing of front bumper panel refer to procedure **SAV00198** .

### 10.1.2 Headlights

Refer to Paragraph Headlights, included in Section 06: Electrical of the Maintenance Manual for complete information on headlights.

### 10.1.3 Rear View Mirrors

Your vehicle is equipped with two exterior mirrors.

The mirrors may be equipped with an optional electric heating system which serves to minimize ice and condensation on the mirror glass in extreme weather conditions. Integral thermostats are installed in both mirrors to avoid continuous heating. Use the appropriate switch on the dashboard to activate the defroster system on both mirrors simultaneously. The mirrors can easily be adjusted by using the remote controls located on the L.H. side control panel. The mirrors have easy to replace glass in case of breakage. Remote control motors can also be replaced.

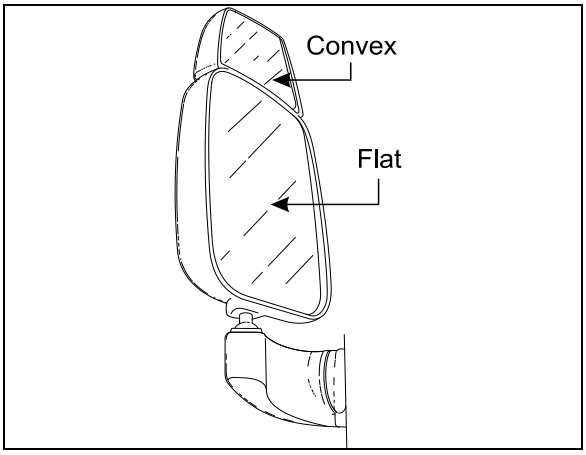


FIGURE 100: REAR VIEW MIRROR (RAMCO) 18398A

❖ **Adjustment**

At the base of the mirror arm, loosen the mounting bolt to swing arm in or out.

To pivot the mirror head, loosen the setscrews on each side of the ball stub at the base of the mirror head to facilitate the adjustment.

❖ **Disassembly**

At end of mirror arm, loosen the setscrews to relieve tension on the ball stem. Remove the ball stem from the arm.

Remove the four screws fastening the mirror arm base to the coach.

❖ **Assembly**

Mount the mirror arm base to the coach. Insert the ball stem into the mirror arm and tighten the socket setscrews.

*NOTE*

*Position the ball cup halves so the joint between them lies on the centerline of the arm. Ensure that the setscrews are not on the joint between the cup halves.*

❖ **Replacement of Mirror Glass**

Remove the broken glass.

Position new glass in mirror head and press to lock the Velcro in place.

❖ **Heated / Remote Controlled Rear View Mirrors**

Heated/remote controlled external rear view mirrors may be provided to prevent the mirrors from frosting up in cold weather.

The remote controlled external rear view mirrors attach to support arms using a pivot collar secured by setscrews. Loosening the setscrews allows the whole head assembly to turn on the support arm for initial adjustment. A mounting bolt and washer hold the arm support to the mounting bracket. The arm support can be moved to position the mirror head into or away from the coach body.

The mirror heat switch is located to the left of the driver on the dashboard. This switch must be activated before the mirror heating element will energize. Once energized, the mirror heating element is kept at a sustained temperature (between 60-80°F) by a thermostat. Refer to wiring diagram annexed in the technical publication box.

**CAUTION**

Do not attach stick-on type convex mirror accessories to the heated mirror glass. This could impede uniform heat distribution on the mirror surface which could break the mirror.

- Mirror Control

The remote control pointer knob(s) for the mirrors is (are) mounted on the L.H. side control panel. The harness to the mirror head runs through the arm support. The remote motor is mounted to the mirror head behind the mirror glass.

Turn pointer knob to the left for mirror head adjustments and to the right for convex mirror adjustment, then push down on either of the button's (4) sides to adjust the selected mirror viewing angle.

- Disassembly

At end of mirror arm, loosen the setscrews to relieve tension on the ball stud. Remove the ball stud. Remove the ball stud from the arm and gently pull the harness out until the connector is exposed.

Remove the four screws fastening the mirror arm base to the coach. Slide the harness free of the mirror arm base.

- Assembly

Attach a stiff wire (snake) to the end of the harness and insert the wire through the mirror

arm base and arm, gently pull the harness through the arm and disconnect the "snake".
Connect the mirror head harness. Insert the harness connector back into the mirror arm.
Insert the ball stud into the mirror arm and tighten the socket setscrews.

| NOTE |
| --- |
| *Position the ball cup halves so the joint between them lies on the centerline of the arm. Ensure that the setscrews are not on the joint between the cup halves.* |

- Convex & Flat Mirror Removal

The mirror glass assembly is mounted to the control mechanism or to mirror base with Velcro strips. Remove the mirror glass by gently pulling the lens to release the Velcro. Disconnect the heater grid at the two connectors.

Connect the connectors of the new mirror's grid to the harness. Install the lens by positioning the lens in the mirror frame and pressing to lock the Velcro in place.

### 10.1.4 Windshield Wipers

Refer to Paragraph 23.7 Windshield Wipers and Washers, included in Section 23: Accessories of the Maintenance Manual for complete information on windshield wipers.

### 10.1.5 Windshield

The windshield is single-glazed AS-1 laminated safety glass. Each windshield is secured to a flange around the front structure opening by a one-piece black rubber extruded gasket

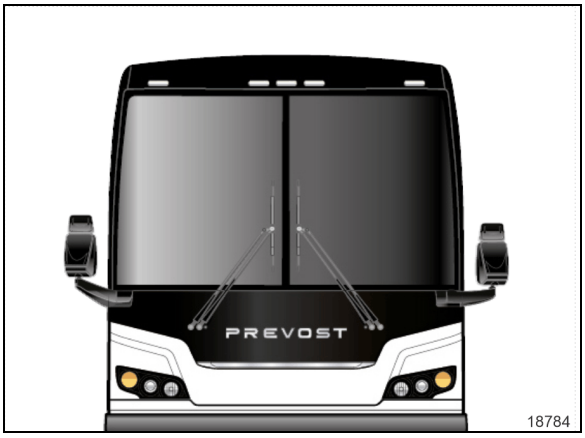


FIGURE 101: WINDSHIELD

A low profile gasket with a single locking strip is now used on our vehicles.

Proper installation of the windshield ensures watertightness. Since glass varies in fit depending on the supplier, we recommend installing a replacement windshield obtained from Prevost Parts to ensure proper fit.

| NOTE |
| --- |
| *For more information on windshield removal or installation, a webinar is available from Prevost.* |

#### *10.1.5.1 Hydrophobic Treatment on Side Windows*

The new low profile window gasket creates an airflow that is closer to the vehicle. This reduces air drag but window soiling of the side windows becomes more likely.

A specific water repelling treatment is factory applied to the driver's and entrance door windows to counter this effect and prevent window soiling.

We suggest renewing the water repelling treatment each year or more frequently depending on operating conditions.

If you notice increased soiling on the driver's and entrance door windows after several months of operation, the water repelling treatment can be renewed by making an appointment with your nearest Prevost Service Center.

The Hydrophobic compound is specially formulated for Prevost and can only be applied by Prevost technicians in Prevost service centers.

#### *10.1.5.2 Removal*

**WARNING**

Removal and installation must be performed by more than one person. Wear protective gloves when handling the windshield.

7. Remove the wiper arms of the affected windshield.
8. To ease damaged windshield removal, remove the rubber locking strips from the rubber extrusion.
9. From inside of vehicle, push against the top L.H. side corner of windshield for the removal of a R.H. side windshield. If the L.H. side windshield had to be removed, you

would have to push against the top R.H. side corner.

| NOTE |
| --- |
| *We are referring to the L.H. and R.H. side as viewed from the inside of the vehicle.* |

10. At the same time, another person gradually lifts the rubber lip from the vehicle exterior using a plastic spatula from top to bottom.
11. Remove the entire damaged windshield and broken glass if applicable.
12. Clean the rubber extrusion channel with Standox anti-silicone. Refer to heading *"Windshield Installation"* in this section for instructions on how to reinstall windshield.

| NOTE |
| --- |
| *If the rubber extrusion is damaged, remove and discard it, then clean the windshield opening with Standox anti-silicone. Refer to heading "Installation of Rubber Extrusion and Windshield" in this section for complete instructions.* |

### *10.1.5.3 Windshield Installation*

This procedure is provided as a general guideline to install a new windshield with a new gasket on a clean structure. The method may vary depending on material aging and condition.

3. Spray rubber extrusion with soapy water to ease windshield insertion.
4. Slide windshield into rubber extrusion groove starting with the bottom curved side edge. Using a plastic spatula, move the rubber extrusion lip aside to gradually insert the windshield into the groove.

| NOTE |
| --- |
| *Spray soapy water on a regular basis to ease windshield insertion.* |

7. Using the same type of plastic spatula, repeat the same operation from inside of vehicle, gradually inserting the windshield into the groove.

| NOTE |
| --- |
| *Make sure windshield bottom edge is well inserted into the rubber extrusion groove before proceeding with the sides.* |

8. Then, working from both sides of windshield bottom to top, gradually move the rubber extrusion lip aside to insert the windshield into the groove. Use also soapy water on the inside of vehicle to insert the windshield into the rubber gasket groove.

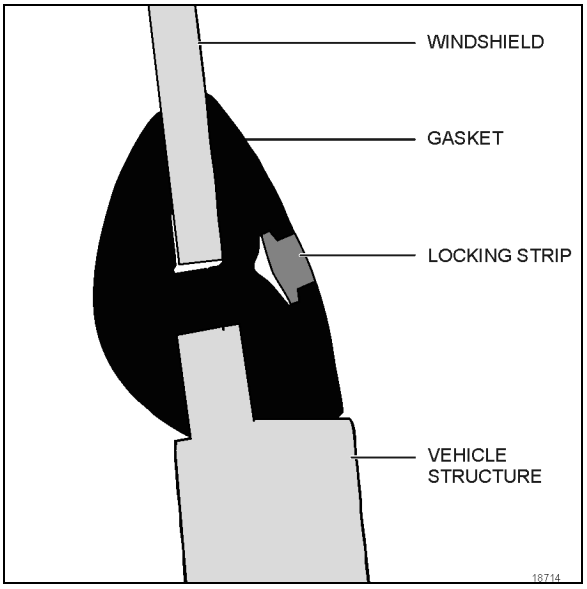


FIGURE 102: WINDSHIELD INSTALLATION SIDE VIEW

9. Insert the top curved corner then finish with the top of windshield.
14. Spray locking strip and rubber extrusion groove generously with soapy water.

| NOTE |
| --- |
| *Locking strips retract with time. Install ends of locking strips as tight as possible in the V-channel.* |

15. Using insertion tool 680755, insert the strip into the rubber extrusion groove. Gradually insert strip making sure to leave a 2 inch excess length at the extremity.

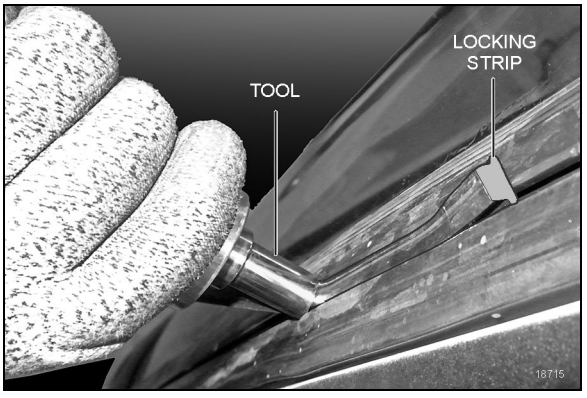

16. IMPORTANT: Every 6 inches or so, slide backwards to compress the strip due to its tendency to contract during drying process.
17. When strip insertion is almost complete, cut end at a 45° angle leaving ¼" of excess length to prevent contraction over time then insert strip into groove.
18. Reinstall windshield wiper and destination sign if applicable.

### *10.1.5.4 Installation of Rubber Extrusion and Windshield*

**CAUTION**

The black rubber extrusion securing the windshield in the opening fits correctly in only one position. Find the correct position of the rubber extrusion now, and make reference marks with a china marker to avoid searching for the correct position later in the procedure.

5. Clean the windshield opening sealing surfaces with anti-silicone and let dry.
6. Apply a 1/8" bead of black Simson adhesive #684685 to all four corner of the gasket in the groove outside corner as illustrated in Figure 20. Do this *before* placing gasket on vehicle structure to control quality and continuity of bead. This method helps achieve a watertight installation.
7. Place gasket on vehicle and secure the upper sections with tape
8. Wait for Simson adhesive to bond Install windshield as per paragraph 9.1.6.3: *"Windshield Installation"*

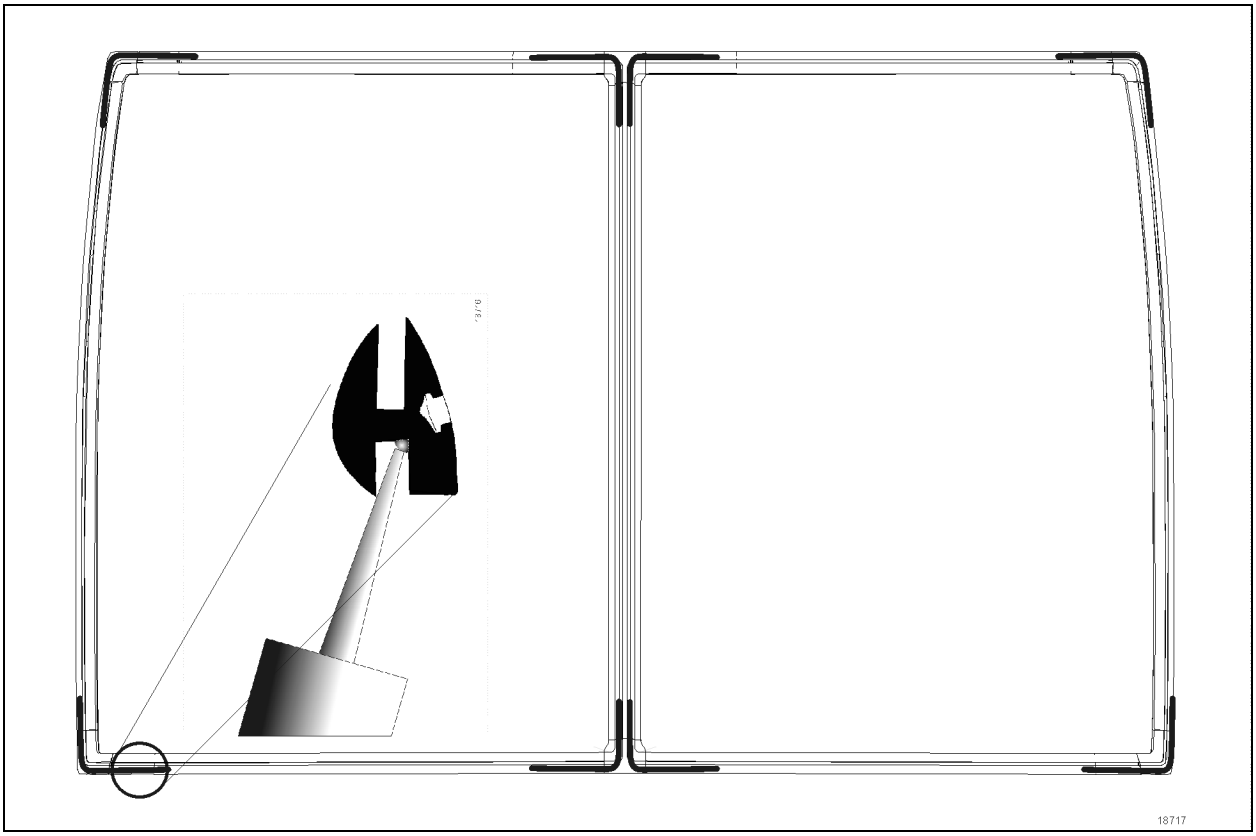


FIGURE 103: APPLICATION OF BLACK ADHESIVE

### 10.1.6 Entrance Door

For the removal of entrance door body panel, you will need:

Pneumatic hammer tool (Zip Gun);
Razor sharp window scraper;

- Before removing body panel, you can to ease repair uninstall entrance door from vehicle. If applicable, remove reflector, keyless system keyboard and cornering light.
- You must also remove horizontal finishing molding located underneath the window. This molding is glued and will have to be replaced because it will be damaged at removal.
- Remove interior finishing panel to access rub rail fixing bolts, then remove rub rail.
- Using the "**Zip Gun**", cut Sika bead located ¼ inch (7-8 mm) from each body panel edge and around cornering light.
- Separate body panel from door.
- Remove from door surface Sika bead and double-face self-adhesive tape residue using a razor sharp window scraper.
- Use a Chix cloth and anti-silicone to remove any dust or residue.

For assembly, gluing or finishing joints of entrance door, refer to procedure **SAV280020** .

For gluing of entrance door horizontal finishing molding, refer to procedure **SAV00213** .

For the installation of entrance door, refer to procedure **SAV280022**.

### 10.1.7 Front Electrical & Service Compartment Door

For the removal of front electrical & service door body panel, you will need:

Pneumatic hammer tool (Zip Gun);
Razor sharp window scraper;

- Before removing body panel, you can to ease repair uninstall front electrical & service door from vehicle. If applicable, remove reflector and cornering light.
- You must also remove horizontal finishing molding located underneath the window. This molding is glued and will have to be replaced because it will be damaged at removal.
- Remove interior finishing panel to access rub rail fixing bolts, then remove rub rail.
- Using the "**Zip Gun**", cut Sika bead located ¼ inch (7-8 mm) from each body panel edge and around cornering light.
- Separate body panel from door.
- Remove from door surface Sika bead and double-face self-adhesive tape residue using a razor sharp window scraper.
- Use a Chix cloth and anti-silicone to remove any dust or residue.

For assembly, gluing or finishing joints of front electrical & service compartment door, refer to procedure **SAV280021**.

For gluing of driver's window, refer to procedure **SAV290013**.

For gluing of front electrical & service compartment door horizontal finishing molding, refer to procedure **SAV00213**.

For the installation of front electrical & service compartment door, refer to procedure **SAV280022**.

### 10.1.8 Upper Lateral Window

For the removal of driver's window or upper lateral window, you will need:

Pneumatic hammer tool (Zip Gun);
Razor sharp window scraper;
"Olfa" knife;
Face shield.

- In the case of driver's window only, open front service compartment door.
- Mark the position of the driver's window for future reference.
- From inside of vehicle, cut Sika bead around window perimeter using a "Zip gun" while another person hold the window from the outside.

| *NOTE* |
| --- |
| *Wear ear plugs during this operation.* |

- Then, move outside of vehicle and cut Sika bead to free window while somebody else hold the window from the inside.
- Carefully remove window from frame, ask for help if needed.
- Using a razor sharp window scraper, remove from window frame Sika bead and double-face self-adhesive tape residue.
- First of all, check Sika 205 cleaner expiration date.
- Before applying Sika cleaner, fold “Chix” cloth twice for proper width.
- Apply an even coat onto the inside of window frame and allow drying for 2 minutes (maximum 2 hours).
- Discard waste according to applicable environmental regulations, use dangerous waste containers.
- Apply masking tape before applying Sika glue to protect paint and adjacent window during surface treatment.

For gluing of upper lateral window, refer to procedure **SAV290016**.

### 10.1.9 Front Cap

The fiberglass front cap does not need any maintenance except painting as needed. It is held in place with adhesive. If ever it has to be replaced, make an appointment at a Prevost service center near you. For minor damages, refer to paragraph 4 "Common Fiberglass Repair procedure" and paragraph 5 "Common Painting Procedure".

## 10.2 ZONE 2

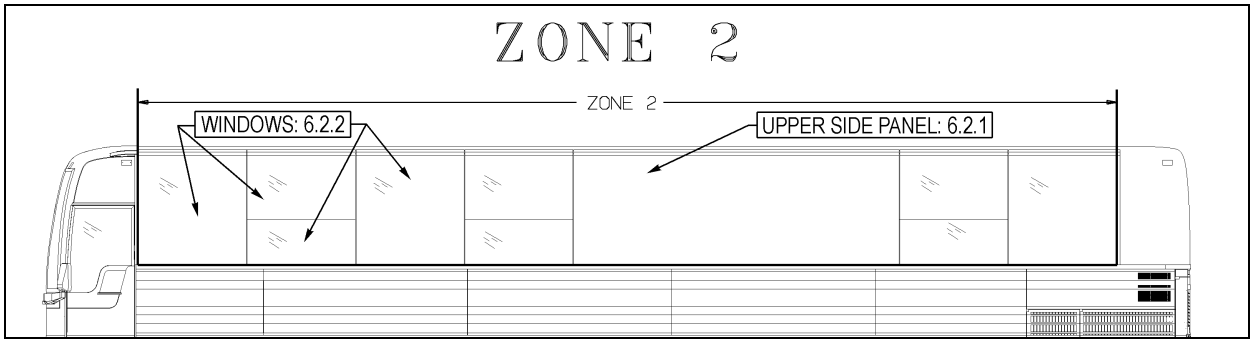


FIGURE 104: ZONE 2

### 10.2.1 Upper Side Panel

For structure preparation, refer to procedure **SAV00035**.

For installation of upper side panel neoprene foam tapes, refer to procedure **SAV00036**.

For installation of upper side panel, refer to procedure **SAV00041**.

### 10.2.2 Fixed Windows

Depending on the method chosen for fixed side window removal or installation, you may need:

* Drill equipped with a sharp pointed rod into which a small hole was drilled;
* Razor sharp window scraper;
* Braided windshield wire and a pair of handles;
* Gloves, goggles or face shield.

**Fixed Window Removal**

**1st Method**

| *NOTE* |
| --- |
| *This method is used only in the case of a regular fixed side window. For the fixed upper portion of awning or sliding windows, you must use method number 2.* |

- Apply a sticky plastic film onto all of window outside surface for safety reason.
- Using a drill equipped with the special sharp pointed rod, drill through the window seal into one of the bottom corners, from a 30º angle with reference to the vehicle.
- This procedure requires accuracy and it is possible not to succeed on the first attempt. From the inside of vehicle, a second person ensures the rod passes through.
- Remove the rod; thread the wire into the small hole. Reinsert the rod and the wire into the hole far enough so that the person inside the vehicle can pull the rod using a pair of pliers.
- Attach the wire ends to the specially designed handles.
- Pull in turn from the inside and the outside of vehicle to gradually cut the Sika bead on the window perimeter.
- When you reach top corner, detach wire from the outside handle, secure it to a fish wire or rod and thread it underneath the aluminum molding behind the rivets.
- Detach wire from fish wire and continue cutting using the handle.
- Cut Sika bead until you come back to starting point, then you can remove the window by carefully pushing it out from the inside of vehicle.

**2nd Method**

- Apply a sticky plastic film onto all of window outside surface.
- To limit as much damage as possible, remove any interior molding in the way. Install a plastic film on the window interior surface and secure using masking tape onto all of window perimeter.

| *NOTE* |
| --- |
| *Do not stretch plastic film and leave enough play to be able to push window out without tearing the plastic film.* |

- Using a ball peen hammer, hit one of the window bottom corners from the **outside**.
- Carefully push window out and lift it up sufficiently to separate it from the aluminum molding.
- Attach the windshield wire to a fish wire and thread it underneath the aluminum molding behind the rivets.
- Detach wire from fish wire and continue cutting using the handle.
- Make a notch at each window top corner to make sure you pass underneath the remaining pieces of glass.
- Remove the aluminum molding and clean up the frame using the window scraper.

For gluing of lateral fixed window behind driver, refer to procedure **SAV00046**.

For gluing of lateral fixed half-window, refer to procedure **SAV00045**.

For the installation of awning or sliding window, refer to procedure **SAV00038**.

For gluing of lateral fixed window, refer to various procedures: **SAV00037** for gluing vertical and bottom rubber seals; **SAV00043** for the installation of lateral fixed window and **SAV00044** for making the Simson joint around fixed windows.

### 10.2.3 Electric Awning Windows

The electric awning windows are connected directly on the batteries 24 V DC terminal block. As a result, they can be operated regardless of the state open or close of the master switch.

**Window Removal**

Replacement awning window does not include a new motor. If in working order, transfer the motor of the replaced window to the replacement window. If not, the motor can be bought separately. When replacing the window, keep the components in working order as spare parts.

1. Push the vertical latch handle downwards to release the track and then open the window using the horizontal latch handle.
2. Take out the screw at the lower end of the track to let free the swiveling arm roller.
3. Unplug connectors. Dismount the gas spring from the window.
4. Loosen the set screws #5 (Figure 104) (rotate the arm to get to the second set screw) and disengage the swiveling arm from the motor shaft extension.
5. Push the glass window out ninety degrees (90°).

| ⚠ **CAUTION** |
| --- |
| The window may fall out. |

6. The window is free and can be unhooked.
7. Reverse procedure to install a new one.

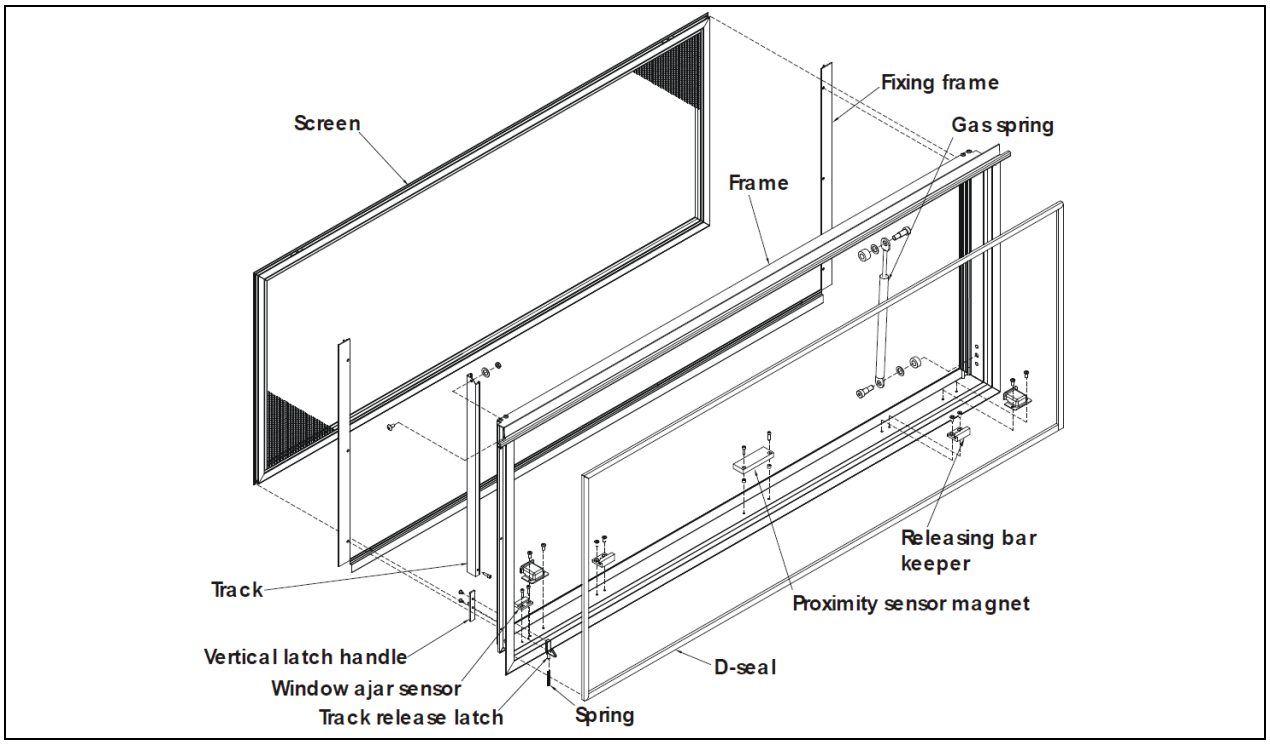


FIGURE 105: ELECTRIC AWNING WINDOW EXPLODED VIEW (FRAME) 18586

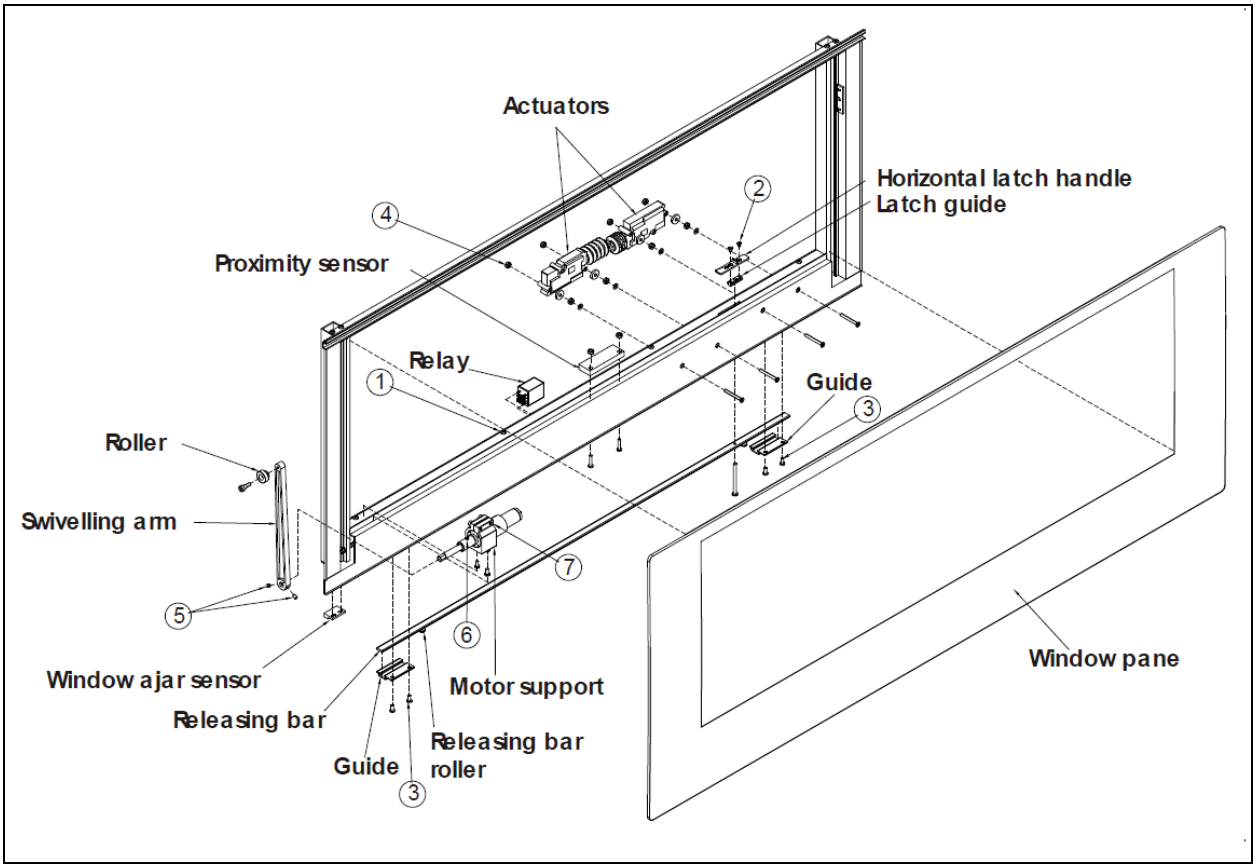


FIGURE 106: ELECTRIC AWNING WINDOW EXPLODED VIEW (SASH) 18583

**Actuator Replacement**

1. Push the vertical latch handle downwards to release the track and then unlatch the window using the horizontal latch handle.
2. Remove actuator access cover by taking out screws #1 (8x).
3. Take out screws #2 (2x) and remove horizontal latch handle and guide.
4. Take out the guide screws #3 (4x) and remove releasing bar.
5. Unplug connectors from defective actuator, unscrew nuts #4 (2x) and remove the actuator.
6. Reverse operations for reinstallation.

**Motor Replacement**

1. Push the vertical latch handle downwards to release the track and then unlatch the window using the horizontal latch handle
2. Take out the screw at the lower end of the track to let free the swiveling arm roller.
3. Remove actuator access cover by taking out screws #1 (8x).
4. Loosen the set screws #5 (rotate the arm to get to the second set screw) and disengage the swiveling arm from the motor shaft extension.
5. Unplug motor connector and dismount motor and support assembly.
6. The shaft extension is glued to the motor shaft. It has to be heated to break the binding to permit removal. Loosen set screw #6 and remove the shaft extension. Also loosen screw #7 and remove motor from the support.

Reverse operations for reinstallation.

| ELECTRIC AWNING WINDOW – CONVERTER CHECKLIST | |
|---|---|
| Check the electrical circuit & proximity sensor | A: The latching system will not operate without power.<br>Is there electrical power to the latching circuit? The horizontal latch handle, on the sill sash will be seen to move if there is power on this circuit, or it can be checked with an electrical tester. If there is no power to this circuit when the window is closed and either rocker switch are switched "ON", there is a problem with the electrical system.<br>B: The Proximity Sensor on the sash may not be switching power to the latching circuit if the magnet is not getting close enough to the switch OR the Proximity Sensor may be broken (or stuck in one position).<br>Is the proximity sensor switching when the window is closed? |
| Check the release force required to operate the horizontal latch handle | A: If the pull force required to move the latch is more than 20lbs the window will not latch properly. Average pull force during testing by manufacturer is 12lbs -15lbs.<br>What is the force required to release the handle? Check using a force gauge (same test done by manufacturer). |
| Check Installation | A: If the window is too tightly installed OR if the sequence for tightening the clamping frame screws Is incorrect the window may not close properly.<br>Was the window installed correctly?<br>Was the correct sequence (see below) used when tightening the clamping frame screws?<br>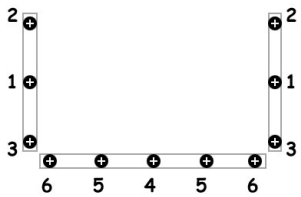<br><br>B: Removing the shipping blocks before the window is installed can create major problems. |

| | |
|---|---|
| | Were the shipping blocks in place during installation?<br><br>C: Failure to remove the shipping blocks after installation can create interference between sash and frame.<br><br>Have the shipping blocks been removed after installation?<br><br>D: The window is misaligned or not installed squarely.<br><br>Is there interference with any coach parts?<br><br>Is there proper clearance between the bottom of the outer glass and the belt-line trim / seal? |
| Check for missing parts or misaligned parts | A: The frame and sash are misaligned.<br><br>Is there any interference between the sash and frame?<br><br>Is there clearance between the sash and the rocker switch covers?<br><br>B: Releasing bar guides are missing.<br><br>Check that the releasing bar guides are installed. There should be 4 installed on H windows, and 3 installed on X3-45 VIP windows. |

### 10.2.4 Electric Sliding Windows

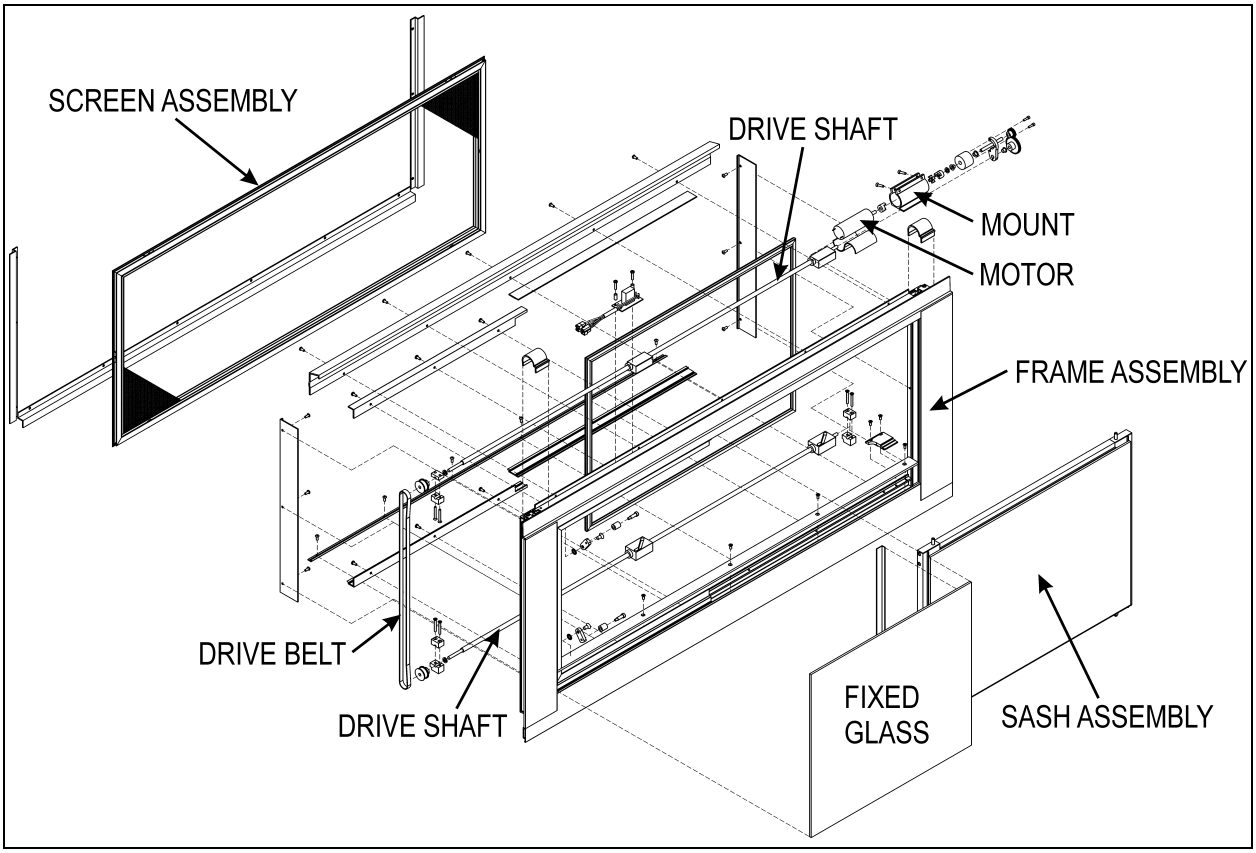


FIGURE 107: ELECTRIC SLIDING WINDOW EXPLODED VIEW

**Sash Removal**

1. Remove the Screen Assembly
2. Pull down on both release latches simultaneously and rotate the sash inwards approximately 10 degrees.(Figure 107)



FIGURE 108: REMOVING THE SASH

3. Lift the sash up and out to disengage the bottom of the sash from the window frame. (Figure 108)



FIGURE 109: DISENGAGING THE BOTTOM OF THE SASH

**Installation**

1. Align the leading edge of the slot on the lower cam follower block with the sash stop. Use the power toggle switch to obtain the correct alignment. (Figure 109)

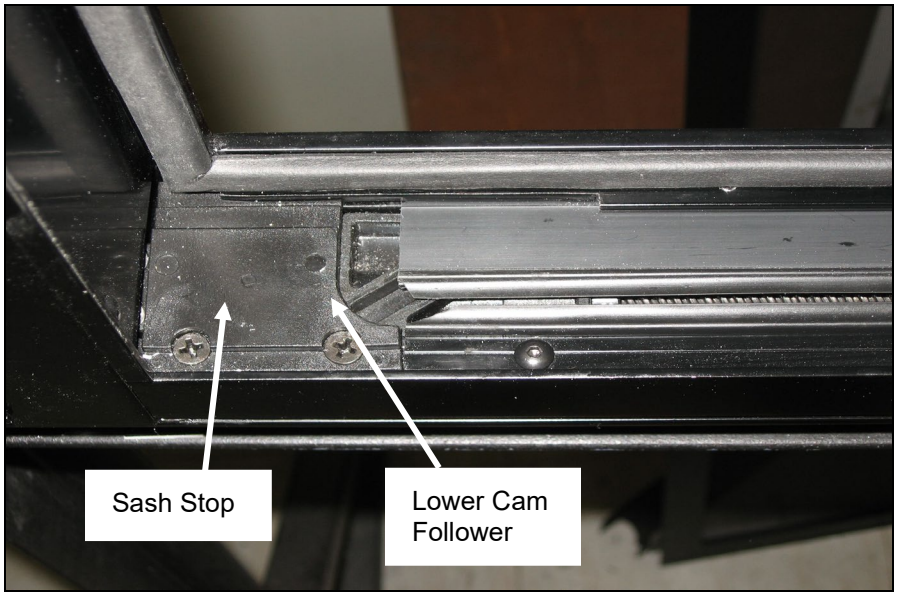


FIGURE 110: PROPER ALIGNMENT

2. Position the left hand lower corner of the sash over the front cam follower block (Figure 110)

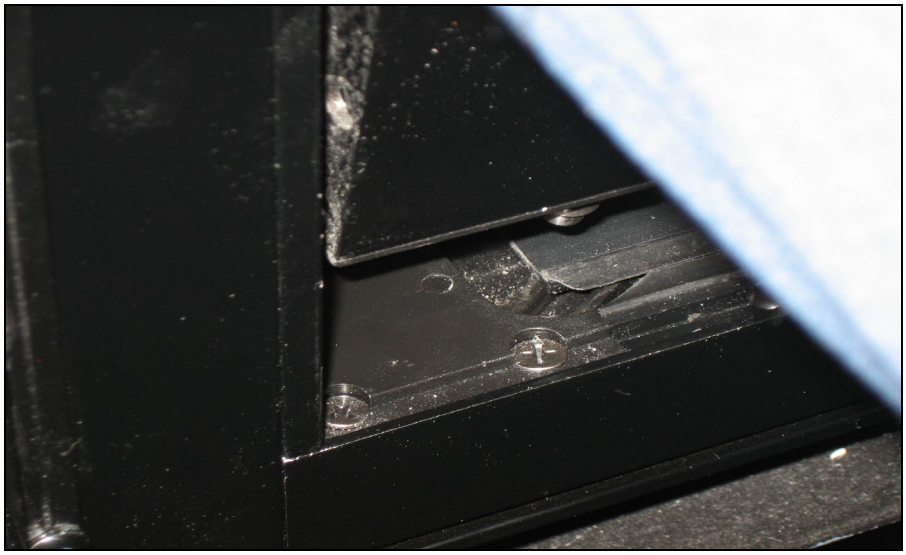

FIGURE 111: POSITIONING THE LOWER LEFT CORNER OF THE SASH

3. Engage the sash pin with the leading edge of the slot of the cam follower block. Do the same at the rear of the sash.
4. Pull down on the release latches and rotate the sash inwards until it is parallel with the window frame.
5. Release the latches to engage the latch pins with the upper cam follower blocks.

6. Confirm that both latches are in the closed (latched) position. The upper edge of the latch opening must be aligned with upper edge of the sash opening (Figure 111)

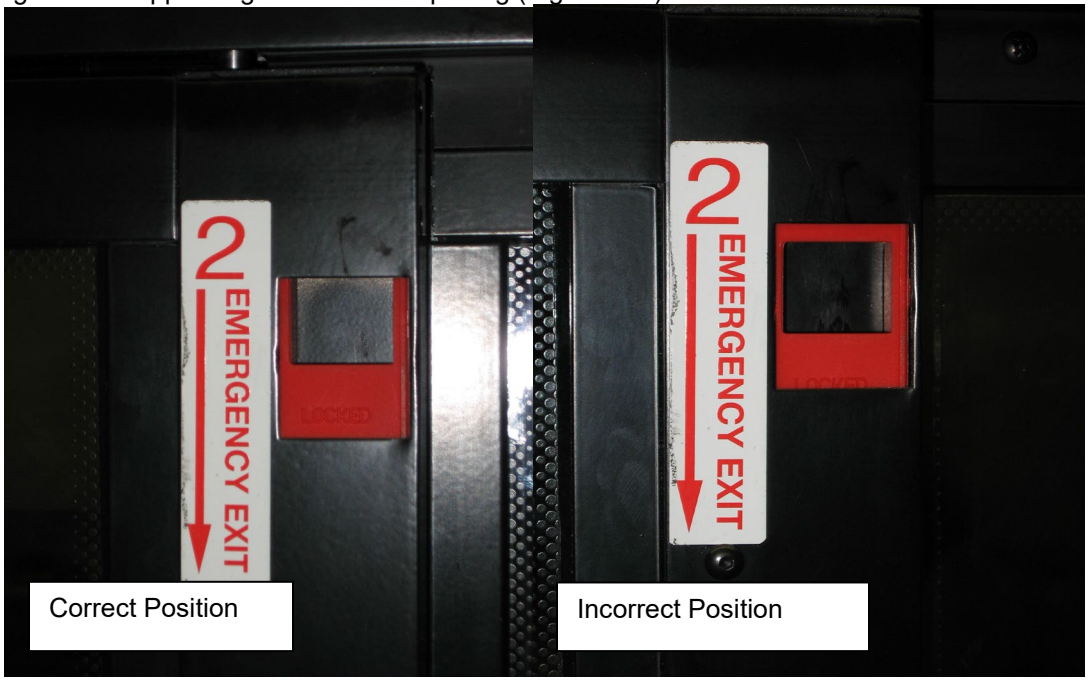


FIGURE 112: RELEASE LATCH PROPER POSITION

7. * Failure to confirm this step may lead to the sash becoming disengaged with the frame and could result in personal injury.
8. Operate the window to confirm that it opens and closes properly.
9. Install the screen assembly.

## 10.3 ZONE 3

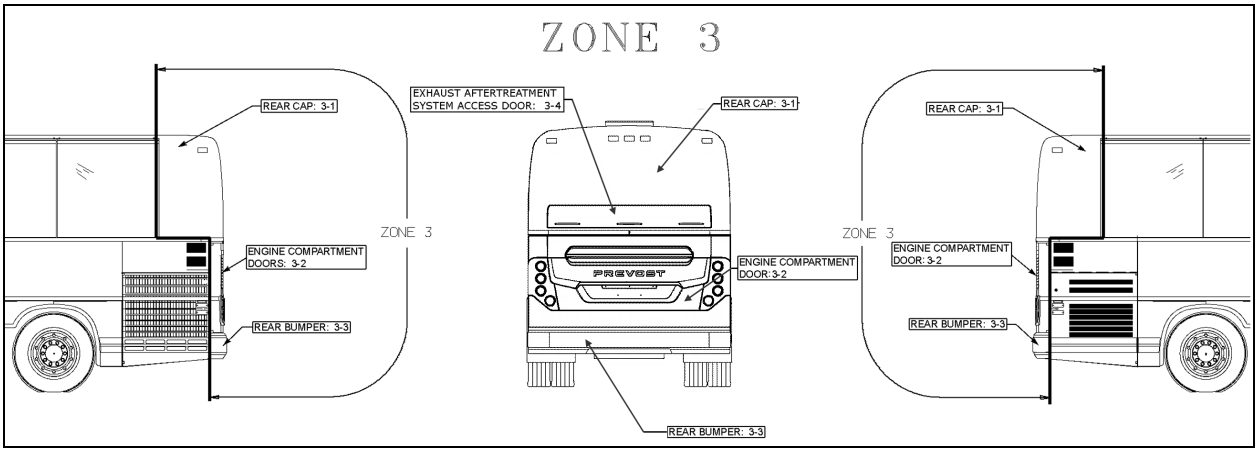


FIGURE 113: ZONE 3

### 10.3.1 Rear Cap

The fiberglass rear cap does not need any maintenance except painting as needed. It is held in place with adhesive. If ever it has to be replaced, make an appointment at a Prevost service center near you.

For minor damages, refer to Paragraph 4 "Common Fiberglass Repair Procedure" and Paragraph 5 "Common Painting Procedure".

### 10.3.2 Engine Compartment Doors

❖ **Engine Compartment Doors Adjustment**

The engine compartment door may be adjusted for proper fit by untightening support bolts:

| *NOTE* |
| --- |
| *Consult the "BODY PANEL AND WINDOW SPACING DIAGRAM" for proper door gaps adjustment. (*Figure 86*)* |

1. To adjust the door VERTICAL position, loosen the bolts (4 on each side) holding the door supporting arm and gas springs bracket to the *vehicle structure* (Figure 113).
2. To adjust the door LATERAL position, loosen the bolts (3 on each side) holding the door supporting arm and gas springs bracket to the *door* (Figure 113).
3. Adjust the door FORE & AFT position by screwing/unscrewing the rubber door stops on each side of the door opening (Figure 113).
4. Check that the door swings freely and close properly. *It may be necessary to adjust the door latch to get proper fit and operation*.

To adjust the latch mechanism and the striker pin:

1. Open the door to access the striker pin.
2. *Slightly* loosen the striker pin.
3. Using a hammer, adjust the striker pin to center it in the door latch mechanism.
4. Tighten the striker pin.
5. Check door fit and operation.

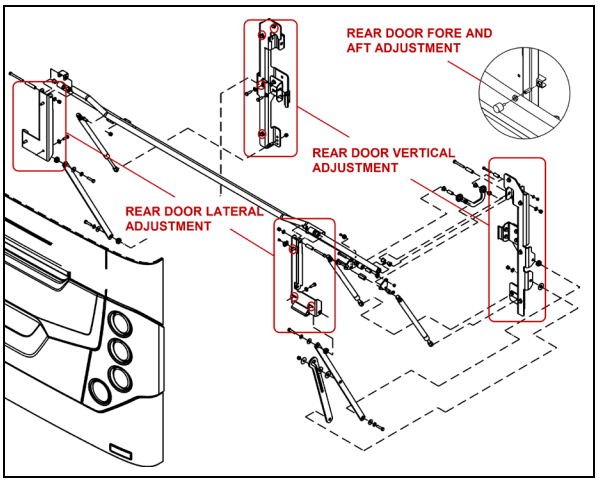


FIGURE 114: ENGINE COMPARTMENT DOOR18633_1

❖ **Engine Compartment Door Body Panel Removal**

For the removal of engine compartment door body panel, you will need:

Pneumatic hammer tool (Zip Gun);
Razor sharp window scraper;
A pair of locking pliers;
Isopropyl alcohol.

- Remove damaged engine compartment door from vehicle.
- Install the damaged door onto an appropriate support.
- Wearing gloves, goggles and ear plugs, pry loose body panel using a “Zip gun” or lever starting from the edge opposite the curved side.
- Use the “Zip gun” to detach completely the stainless steel body panel from door frame.

**CAUTION**

Do not damage painted surface.

- Use a second person equipped with a pair of locking pliers to pull the body panel as you cut the Sika bead.

**WARNING**

Be very careful when pulling the body panel, somebody could get hurt if the body panel suddenly detach from the door surface without notice.

- Using the window scraper, remove any Sika bead or self-adhesive tape residue left on the fiber glass surface.

For gluing of engine compartment doors molding, refer to procedure **SAV00211**.

For engine compartment door body panel installation, refer to procedure **SAV280032**.

### 10.3.3 Rear Bumper

Remove three bolts on each side holding bumper to vehicle and remove bumper.

To install bumper, reverse the procedure.

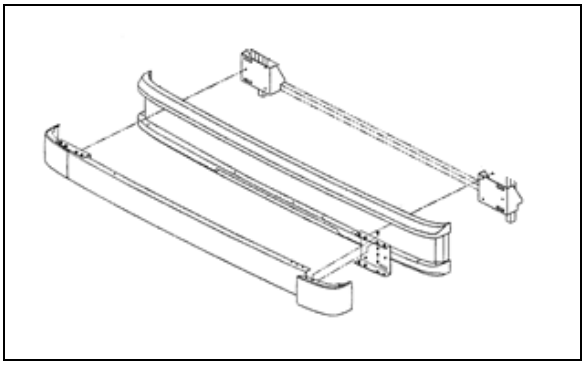

FIGURE 115: REAR BUMPER

## 10.4 ZONE 4

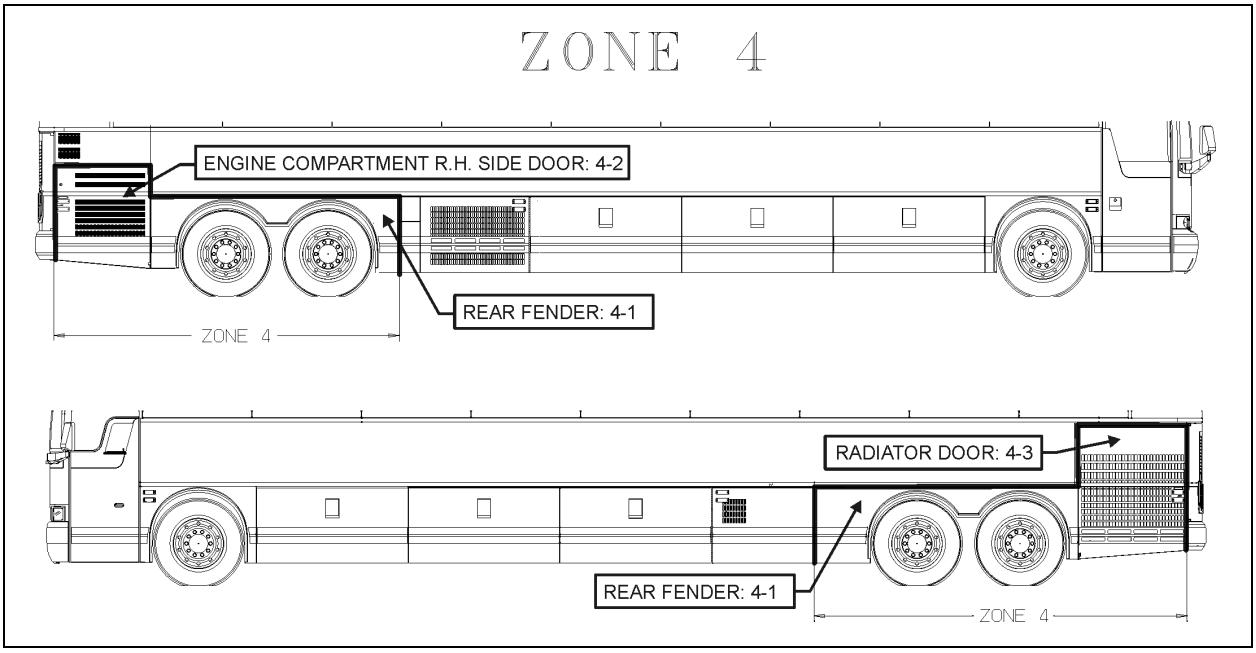


FIGURE 116: ZONE 4

### 10.4.1 Rear Fender

On X3-45 VIP vehicles, rear fenders are hinged for maintenance on brakes and suspension. Each rear fender panel has two mechanical spring loaded holding devices fixing it to the vehicle's structure. Push the spring type rod sideways to disengage the lock.

For the installation of rear fender body panel, refer to procedure **SAV470046**.

### 10.4.2 Engine R. H. Side Access Door

Engine R. H. side access door may be adjusted for proper fit. To do so, follow the steps below:

21. To adjust the position, the door must be free to move without any restriction. For this reason, remove pin E and strike plate C (Figure 50).

    Temporarily secure the secondary lock in the depressed position with a cable tie so it does not interfere with adjustments. Remove cable tie once completed.

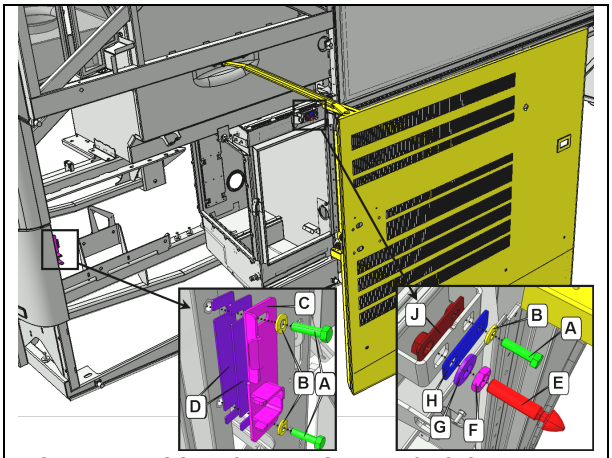


FIGURE 117: DOOR INSTALLATION – LATCH SYSTEM

A - BOLT
B - BELLEVILLE WASHER
C - STRIKE PLATE
D - SPACER
E - PIN
F – LOCK NUT
G - BELLEVILLE WASHER
H - PLATE

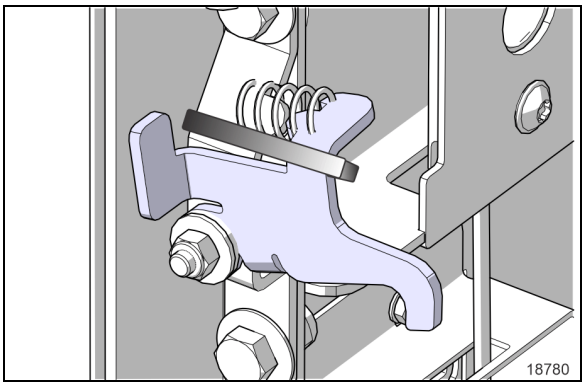


FIGURE 118: USE A CABLE TIE TO KEEP SECONDARY LOCK DEPRESSED DURING ADJUSTMENT

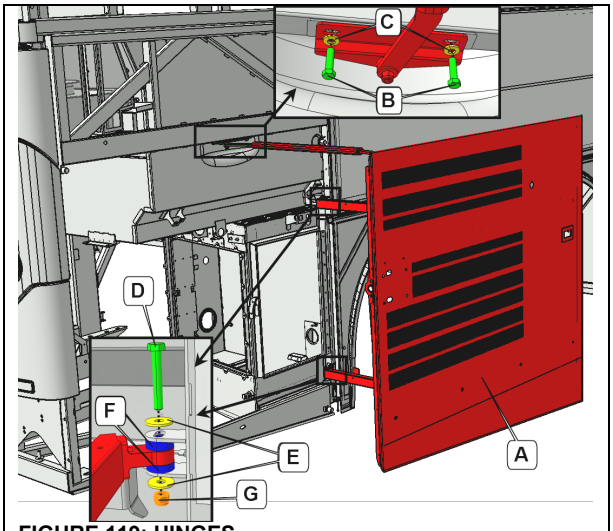


**FIGURE 119: HINGES**

A – ENGINE R.H. SIDE ACCESS DOOR
B - BOLT
C - BELLEVILLE WASHER
D - BOLT
E - WASHER
F –SPACER
G - NUT

## Vertical adjustment

22. Make sure bolts A are tight (**FIGURE 53**).

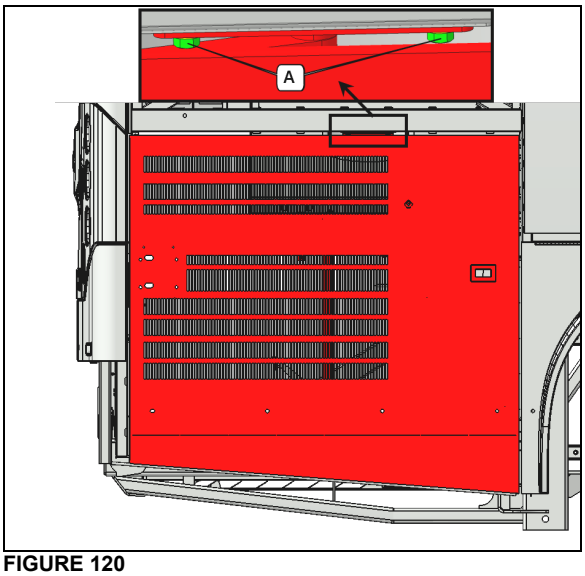


**FIGURE 120**

23. Compare the lower edge of the door level with the lower edge of the rear fender. The door should be flush with the fender (FIGURE 54).

***Tolerance is ± 3/32" (± 2mm)***

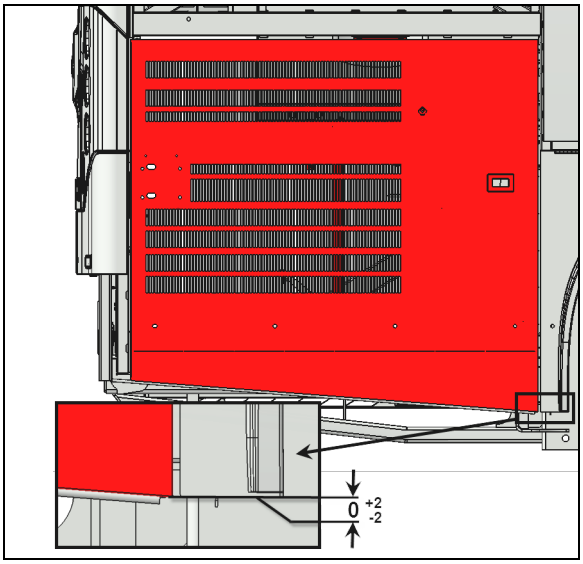


FIGURE 121

24. If the vertical position is out of tolerance, release the locking plate (Figure 56) and rotate the door using the adjustment provided on the inner side of the door, at the attachment points between the arm and the door (**FIGURE 55**).
Tighten the locking plate nut to 14 lb-ft (19 Nm) to preserve adjustment.

***Perform the adjustment with the lower adjustment point preferably.***

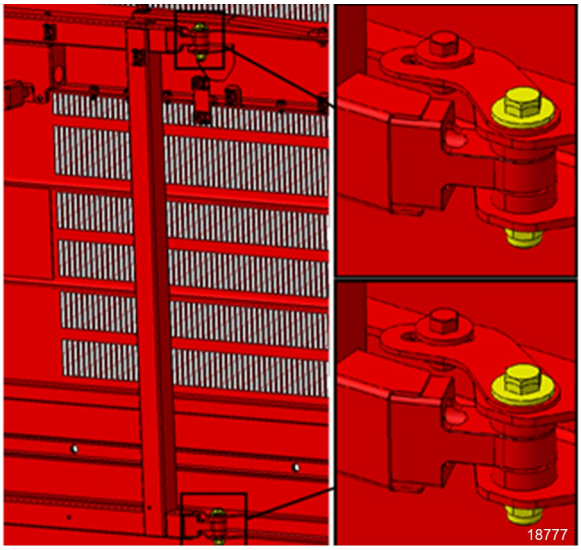


**FIGURE 122**

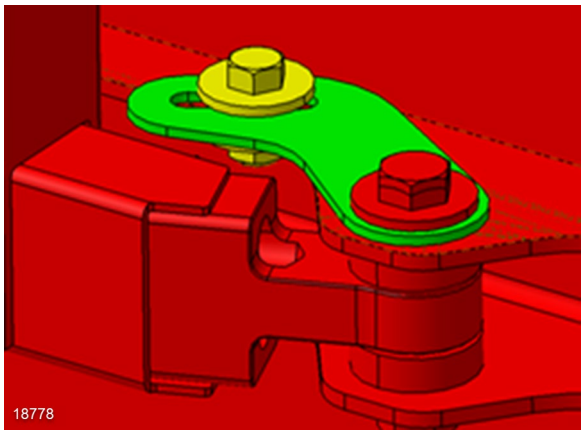


FIGURE 123: LOCKING PLATE

**Longitudinal adjustment**

25. Check the gap between the door and the adjacent panel at the level of the upper attachment point of the arm on the door. The gap should be ¼" (6 mm) (FIGURE 57).

    ***Gap 1/4" (6 mm)***

    ***Tolerance is ± 3/64" (± 1mm)***

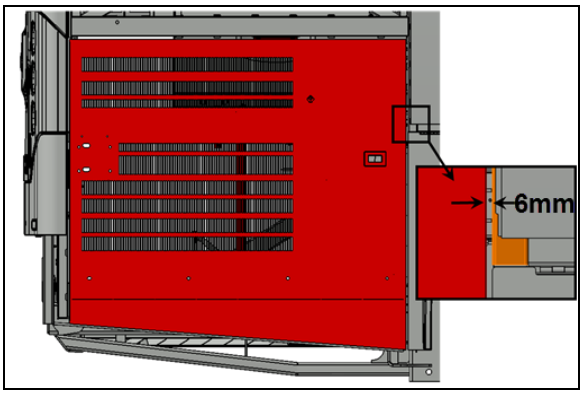


FIGURE 124

26. If the longitudinal position is out of tolerance, adjust using the adjustment provided on the inner side of the door, at the upper attachment point of the arm on the door (FIGURE 58).

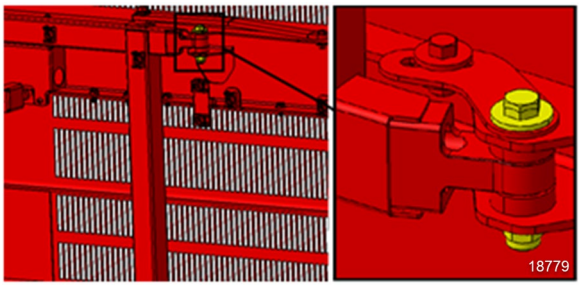


FIGURE 125

27. Check the gap between the door and the adjacent panel at the level of the lower attachment point of the arm on the door. The gap should be ¼" (6 mm) (FIGURE 59).

    Gap 1/4" (6 mm)

    Tolerance is ± 3/64" (± 1mm)

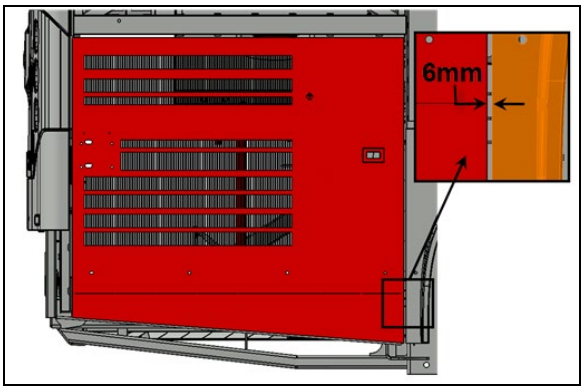


FIGURE 126

28. If the longitudinal position is out of tolerance, adjust using the adjustment provided on the

lower attachment point of the arm on the vehicle chassis (FIGURE 60).

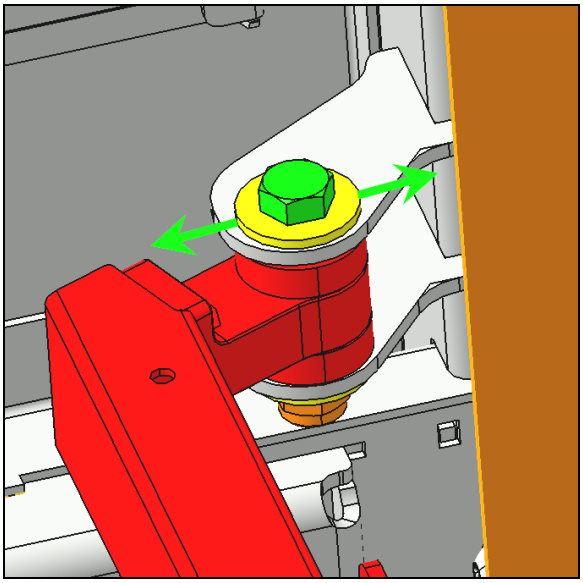

FIGURE 127

**Latch installation**

1. Install strike plate C and pin E centered in the available adjustment position provided by respective slotted holes (FIGURE 127). The components should be snug but not tight so that they can move when the door will be closed later on in this procedure.

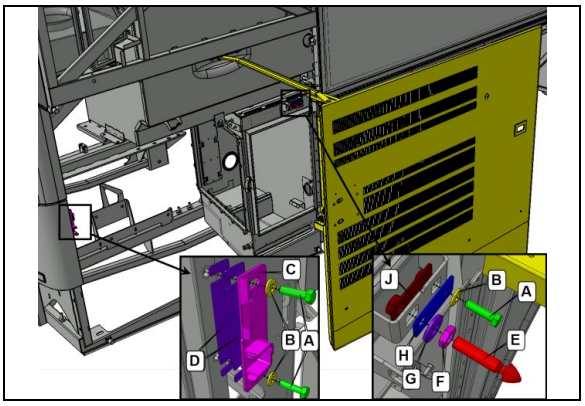


FIGURE 128

2. Check that the two items identified with arrows are snug but not tight (FIGURE 128).

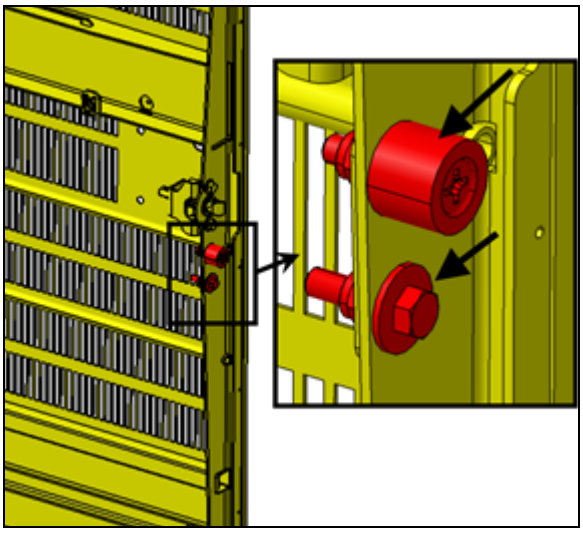

FIGURE 129

3. Before adjusting the pin, make sure that it doesn't exceed more than 2" (50mm) at the first closing of the door (FIGURE 129). Damage to the door can result if this condition is not respected.

   ***Not more than 2" (50mm)***

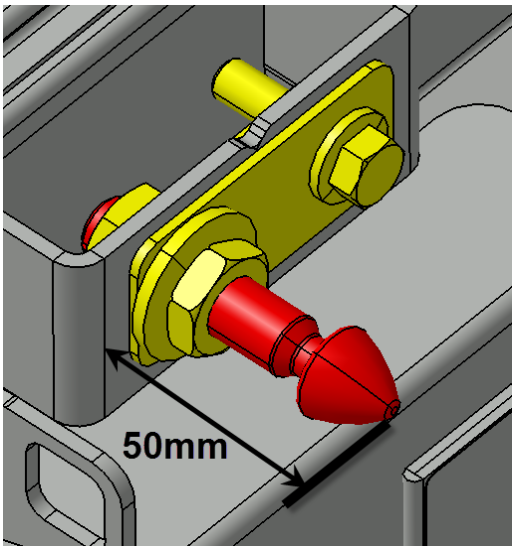


FIGURE 130

4. Close the door gently.

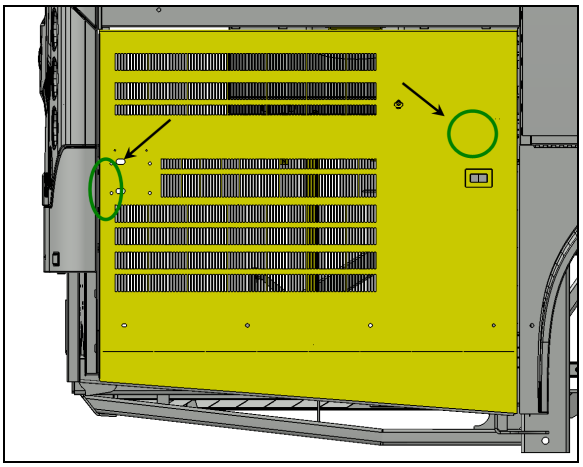

FIGURE 131

5. Open the door and perform a final tightening to the items indicated with arrows (FIGURE 131).

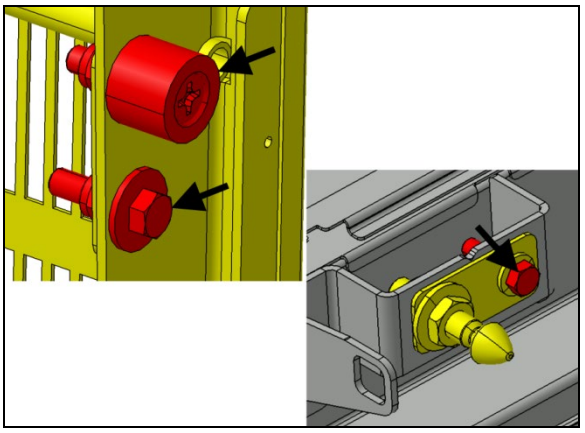

FIGURE 132

**Transversal adjustment**

6. Once closed, the door surface must be even with the adjacent steel panel.

   ***Tolerance is 3/64" (1mm)***

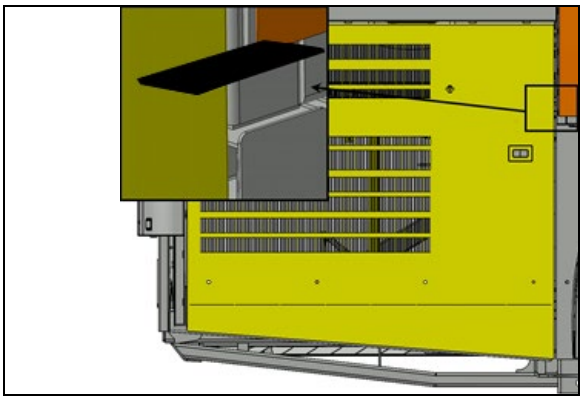

FIGURE 133: USE A RULER (SHOWN IN BLACK) TO CHECK THAT SURFACES ARE EVEN

7. Use the pin to adjust the door so it is even with the adjacent steel sheet. Screw or unscrew the pin as required and then apply final tightening to the jam nut (FIGURE 133).

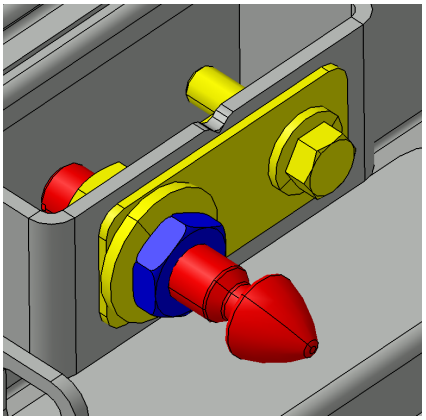

FIGURE 134

8. The R.H. side engine access door must exceed the engine compartment by 5/32" (4mm).

   ***Tolerance is ±3/64" (±1mm)***

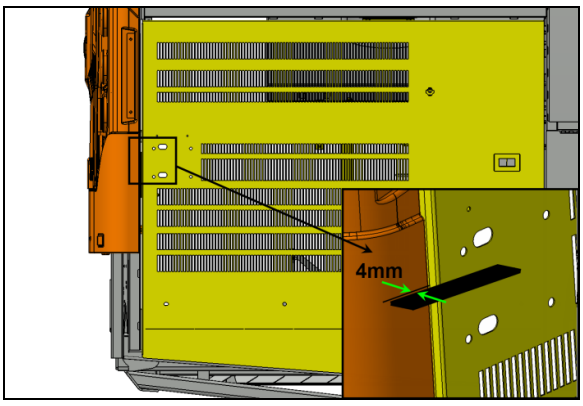


FIGURE 135

14. Perform the transversal adjustment by moving the strike plate using the slotted holes (FIGURE 135).

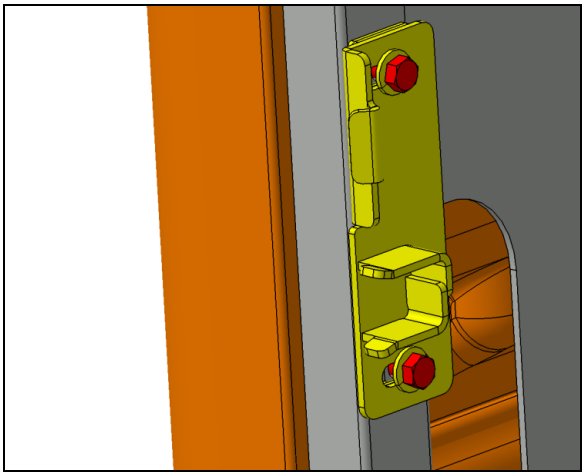

FIGURE 136

9. The latch bolt must engage not less than 13/32” (10mm) behind the strike plate.

***13/32” (10mm) min***

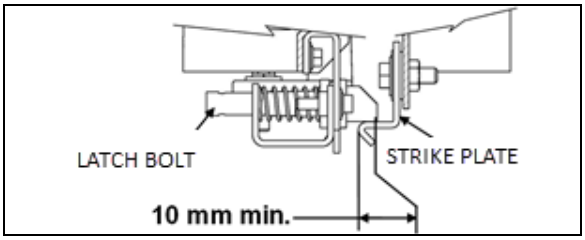


FIGURE 137

10. Screw in or out the two upper stoppers so that the upper part of the door exceeds the horizontal member by 5/32" to 3/16" (4mm to 5mm) (see FIGURE 137 & FIGURE 138).

11. Adjust the lower stopper in order to have the lower part of the door even with the fender.

***Tolerance is ± 3/64" (± 1mm)***

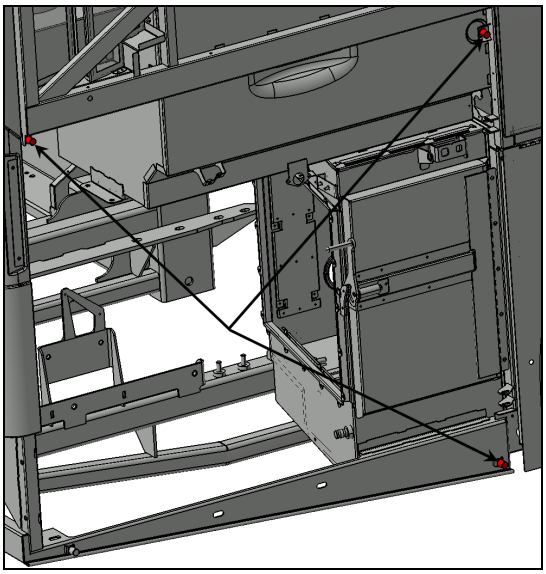

FIGURE 138

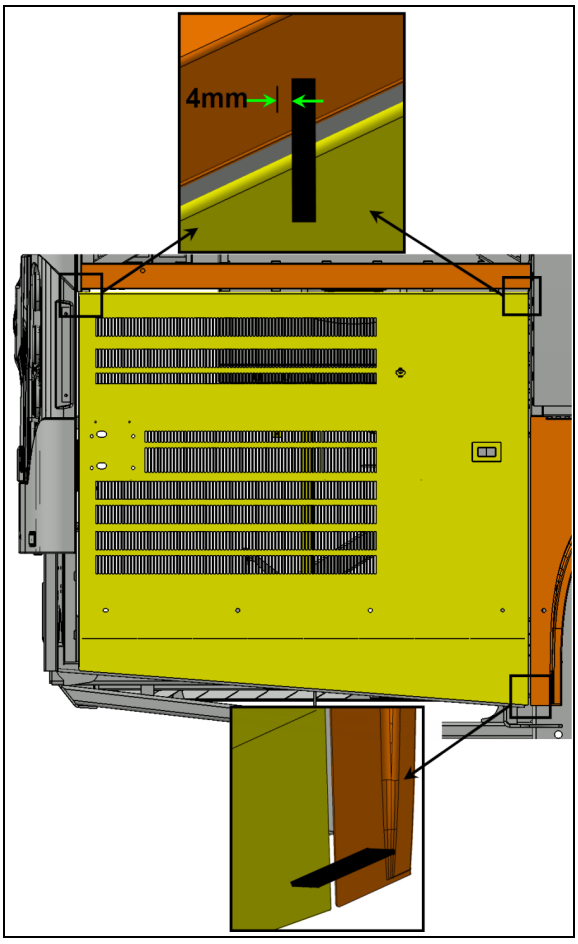


FIGURE 139

### 10.4.3 Engine Radiator Door

Radiator door may be adjusted for proper fit by untightening hinge bolts:

6. Loosen the bolts, (details “A” & “C”, Figure 139) holding the hinge to the vehicle structure to shift the door "LEFT or RIGHT".
7. Loosening the bolts (details “B” and “D”, Figure 139) allows the door to be shifted "UP or DOWN".

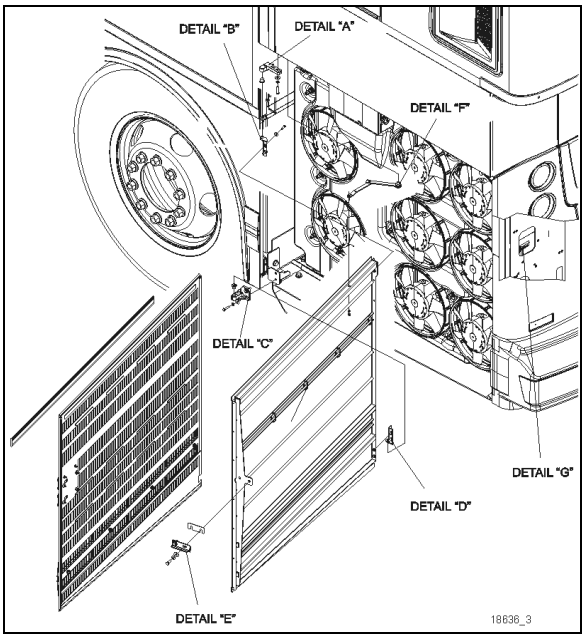


FIGURE 140: RADIATOR DOOR

8. Adjust the door position depending on the gap needed between exterior finishing panels.
9. Tighten the bolts.
10. Check that the door swings freely and closes properly. It may be necessary to adjust the door latch tab to get proper fit and operation.

To adjust the latch mechanism (details “E” and “G”, Figure 140) and the striker pin:

5. Open the door and slightly loosen the latch tab (detail “E”, Figure 140).
6. Place shims between tab and door frame to increase tab engagement length in the latch.
7. Move tab left or right to increase engagement depth in the latch.
8. Check door fit and operation.

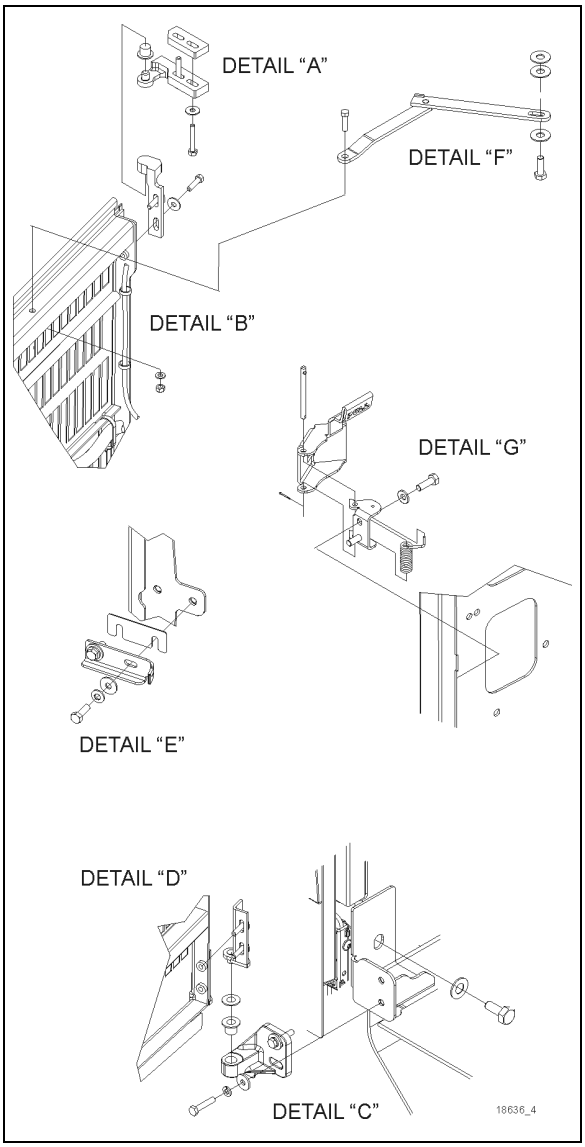


FIGURE 141: RADIATOR DOOR DETAILS

| *NOTE* |
| --- |
| *The striker pin must engage at least 13/32” (10mm). Add spacers between the latch and the vehicle body to adjust the engagement.* |

| *NOTE* |
| --- |
| *There should be no gap between the washer and the hinge upper and lower halves.* |

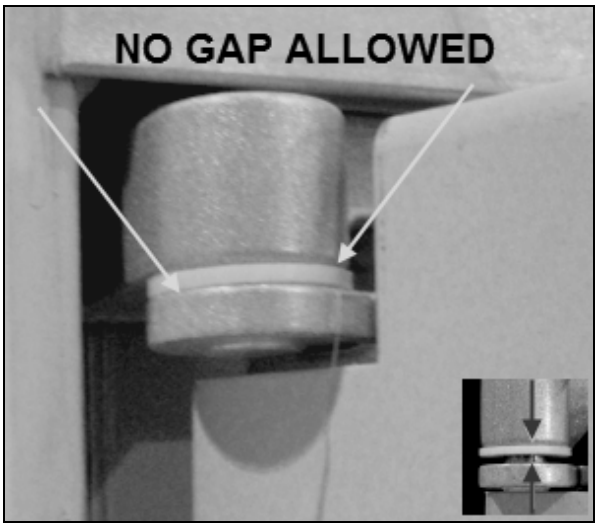
NO GAP ALLOWED

## 10.5 ZONE 5

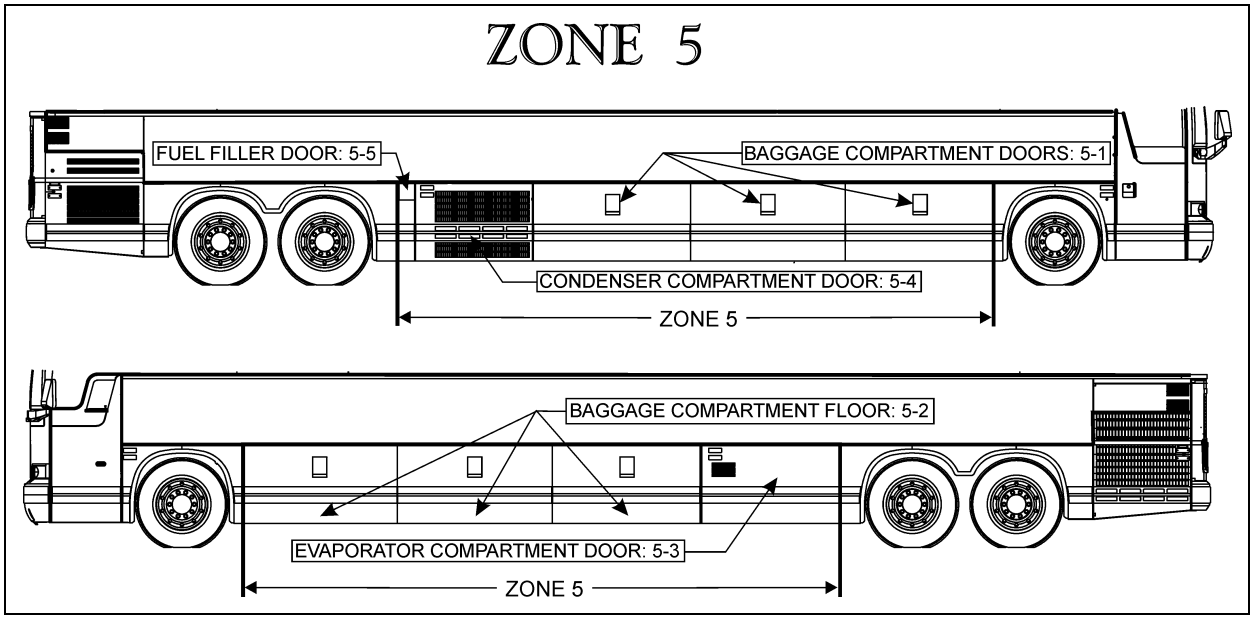


FIGURE 142: ZONE 5

### 10.5.1 Pantograph Baggage Compartment Doors (Aluminum)

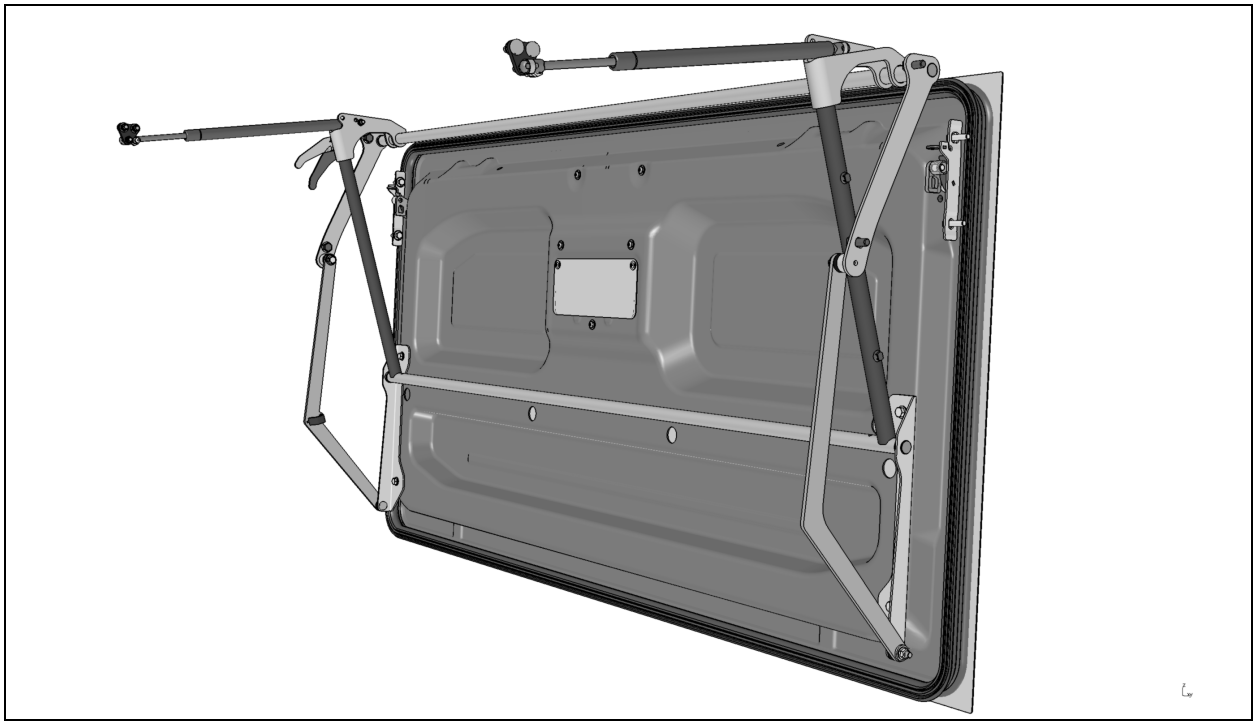

For the removal and installation of a baggage compartment door body panel, you will need:

- A drill with drill bits;
- Pneumatic hammer tool (Zip Gun);
- Razor sharp window scraper or putty knife;

➢ Open damaged compartment door and unfasten rub rail fixing bolts. Remove rub rail.

➢ Unfasten bolts and disconnect cable if necessary in order to remove door from vehicle.

➢ Preferably install the door onto a work surface where it can be solidly fixed.

- **Door Panel replacement**

➢ Refer to SAV10054-67.

- **Baggage Compartment Door Adjustment**

11. Adjust door to get a 6mm gap at the top.

12. All adjustments are to be made with door closed, unless specified.

13. Center door in the opening using the retaining rings.

*NOTE*

*Lateral adjustment is made by adding/ removing retaining rings in these locations.*

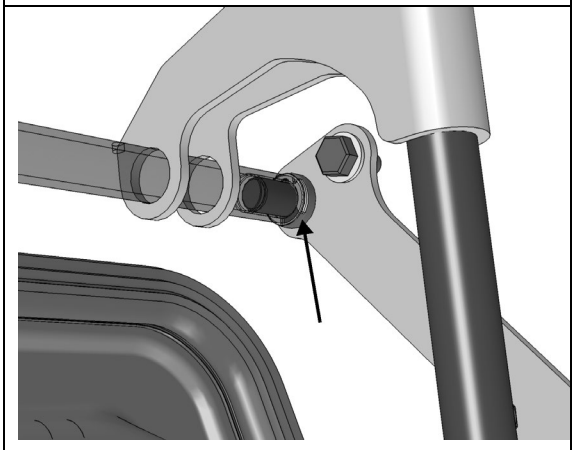

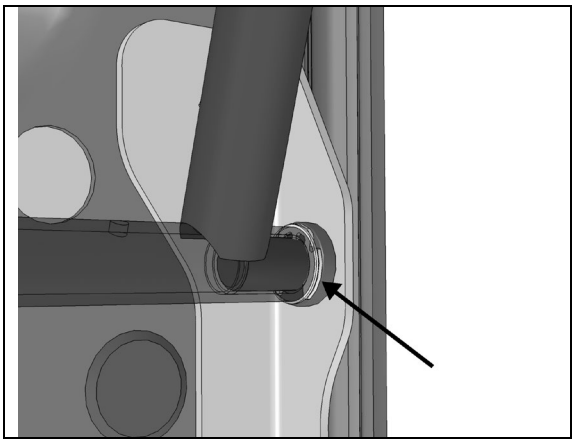

14. Adjust door position and evenness with reference to adjacent panels and doors.

*NOTE*

*Vertical adjustment is achieved by moving the door along the mounting plates slots.*

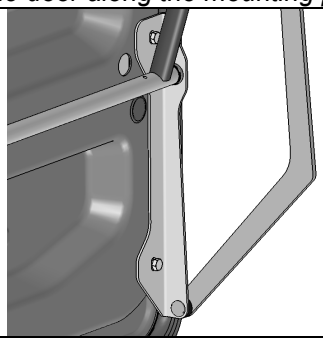

*NOTE*

*Adjustment is made by moving IN or OUT the lock plates. Adjust one corner at a time.*

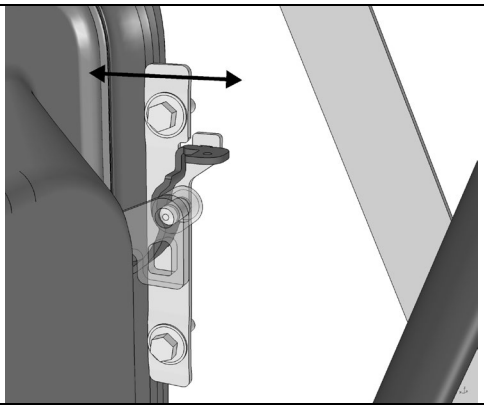

15. Check handle adjustment. Handle must remain tight against its plastic housing.

*NOTE*

*Adjustment is made by moving UP or DOWN the lock plates.*



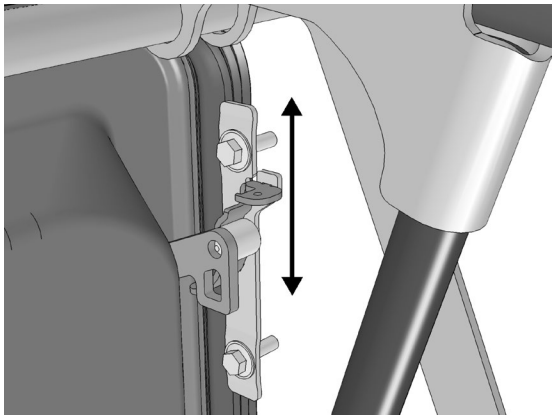

16. Open baggage compartment door and adjust using the cylinder mounting block.

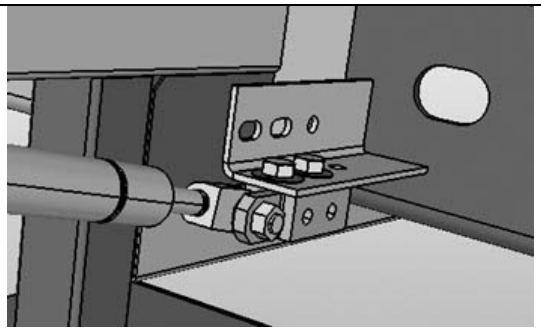

17. Door should be adjusted in reference to neighboring doors.
18. Target is to have 5 ½” (140mm) from bus body panel to door panel and +/- 2mm vertically between doors.

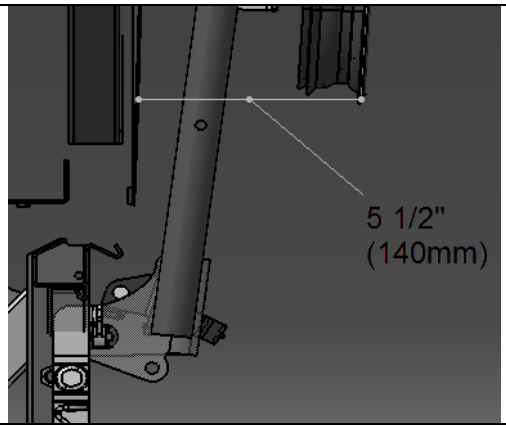


19. Tighten cylinder block fixing screws.
20. Door bottom edge compression can be adjusted by moving in or out the pantograph arms at this location.

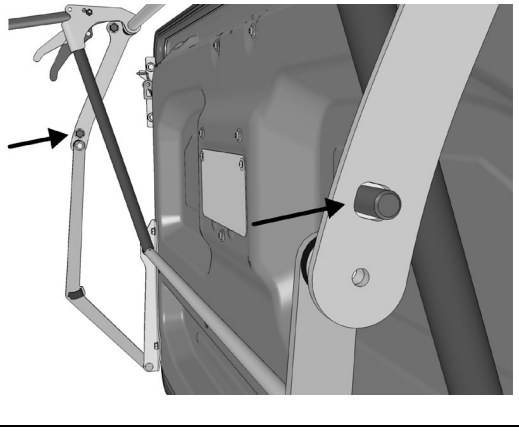

### 10.5.2 Hinged Baggage Compartment Doors (Aluminum)

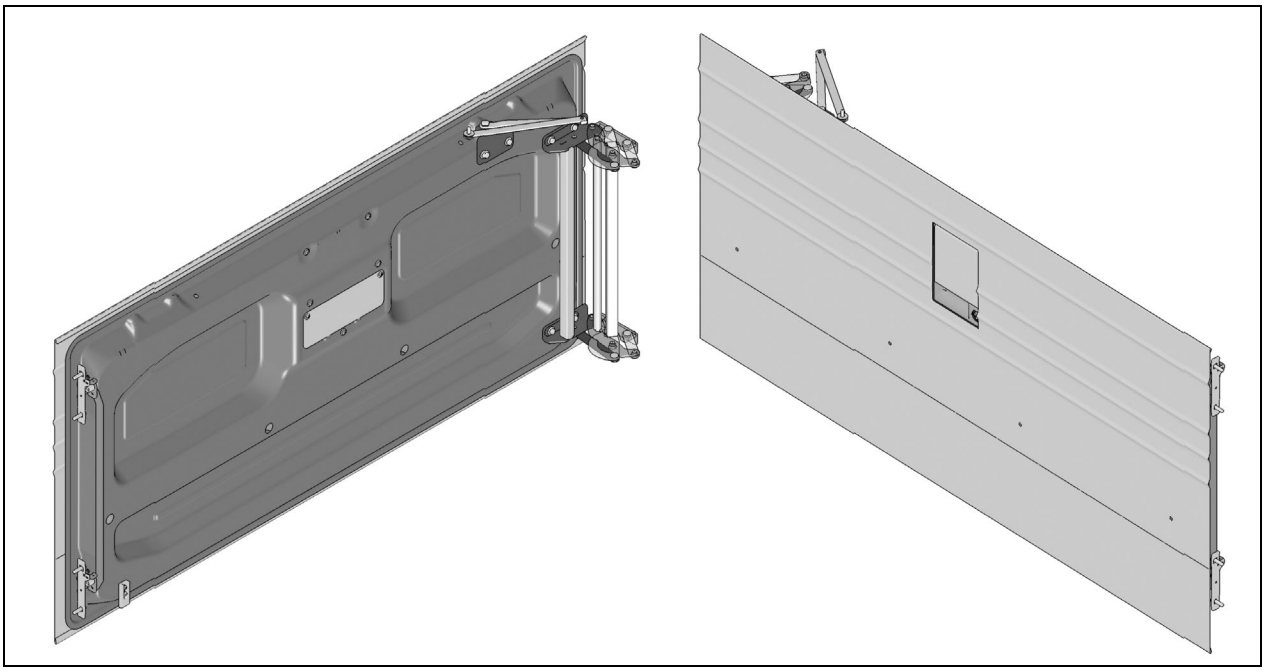

- **Door Adjustment**

1. Open the door.
2. Loosen the screws fixing the hinge to door assembly. Loosening the screws allows the door assembly to be shifted "LEFT or RIGHT" and "UP or DOWN".

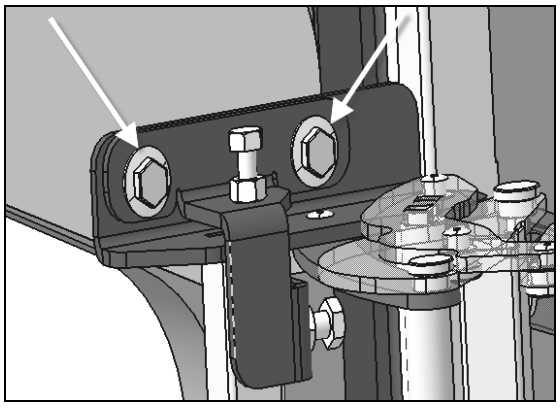

3. Using the top adjusting screws, adjust door to get a 6mm gap at the top.

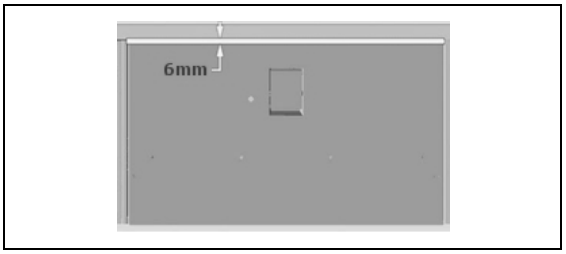


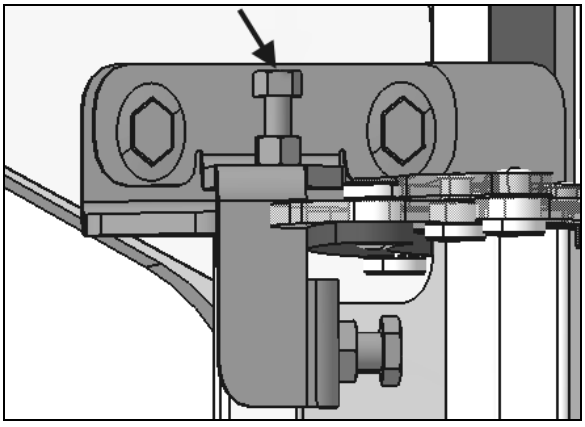

4. Using the 2 side adjusting screws (top and bottom), adjust door to get a 6mm to 8mm lateral gap (gap must be equal on both side).

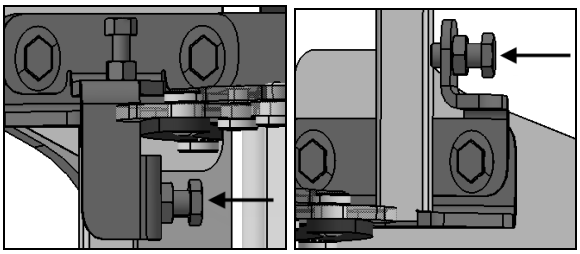

5. To adjust door depth, loosen the screws fixing the hinge to frame assembly and slide the hinge horizontally to move the door in or out. Depth should be calculated at 29mm +/- 2mm measured from bus frame out **or** 5mm +1mm if measurement is taken from small square tube on frame.



6. Tighten the hinge screws.

7. Make final adjustment of door position and evenness with reference to adjacent panels and doors as required.

8. Checks handle adjustment. Handle must remain tight against its plastic housing.

| *NOTE* |
| --- |
| *Adjustment is made by moving UP or DOWN the lock plates.* |



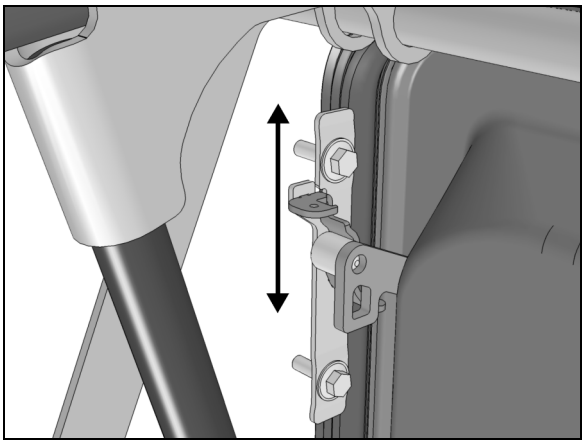

9. Make sure that skid bar only touches slightly bus structure at bottom. The door should not move up when closing.

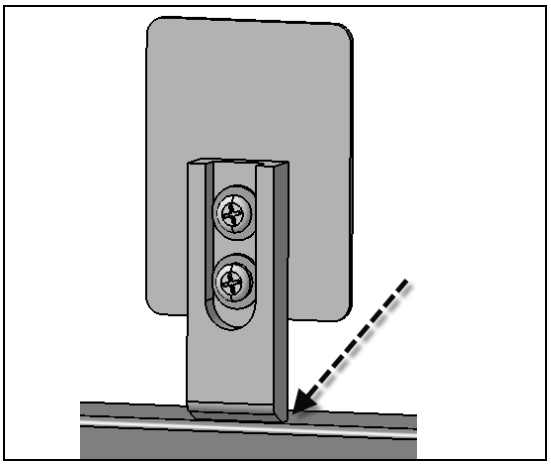

### 10.5.3 Condenser Compartment Door

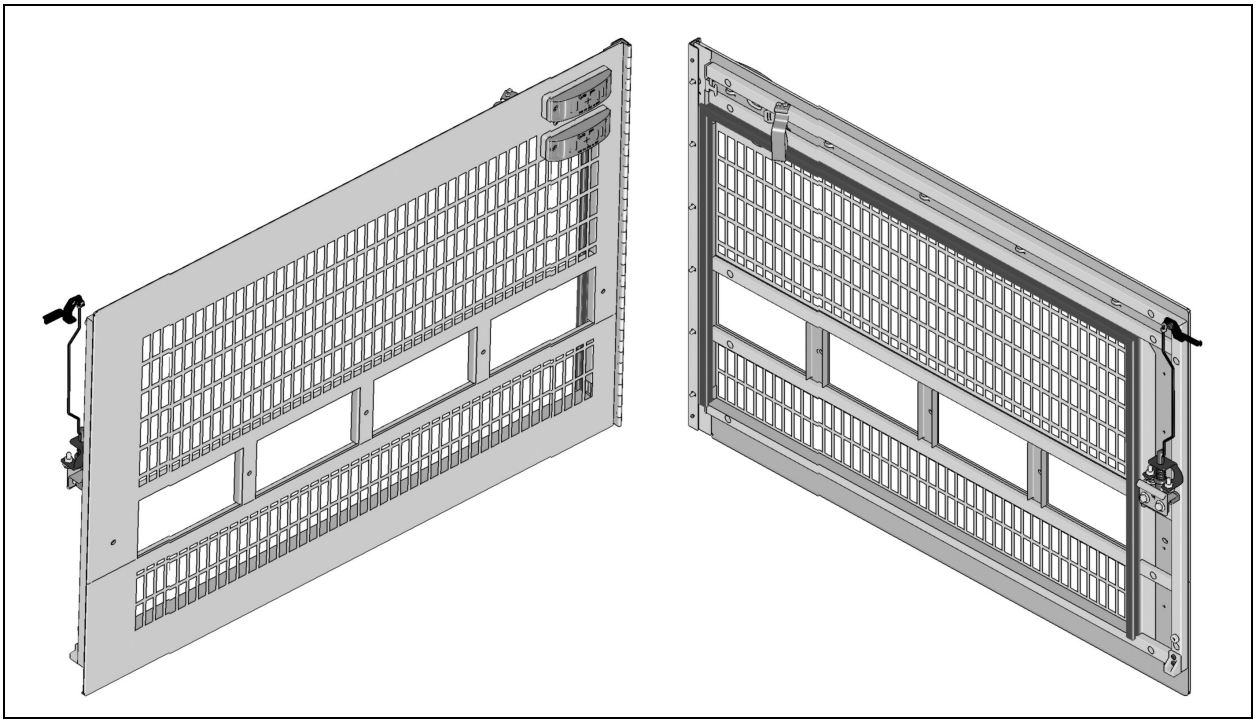

FIGURE 143: CONDENSER DOOR

- **Door Adjustment**

1. Open the condenser door.
2. Loosen the screws fixing the hinge to hinge attachment or hinge to door assembly. Loosening the screws allows the condenser door assembly to be shifted "LEFT or RIGHT" and "UP or DOWN" or “IN and OUT”.
3. Adjust condenser door assembly position at the hinge.
4. Respect the required gap between exterior finishing panels.
5. Tighten the screws.
6. Check that the door swings freely and closes properly. It may be necessary to adjust the door latch to get proper fit and operation.

### 10.5.4 Evaporator Compartment Door (Aluminum)

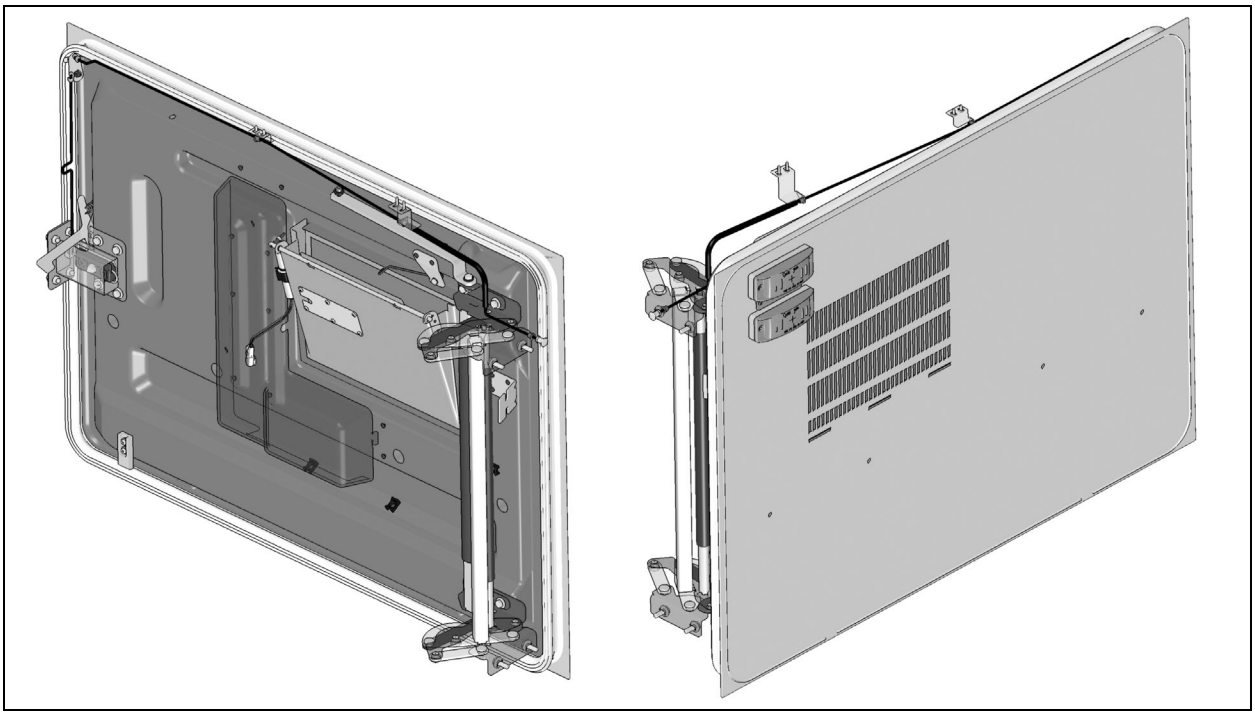

FIGURE 144: EVAPORATOR DOOR (ALUMINUM)

For the adjustment of an evaporator door, you will need:

- Centering tool G34148_500

- **Door Adjustment**

1. Open the evaporator door.
2. Loosen the screws fixing the hinge to hinge attachment or hinge to door assembly. Loosening the screws allows the evaporator door assembly to be shifted "LEFT or RIGHT" and "UP or DOWN" or “IN and OUT”.
3. Adjust evaporator door assembly position at the hinge.
4. Door exterior panel on hinge side should be positioned at 29mm +/- 2mm measured from bus frame out.

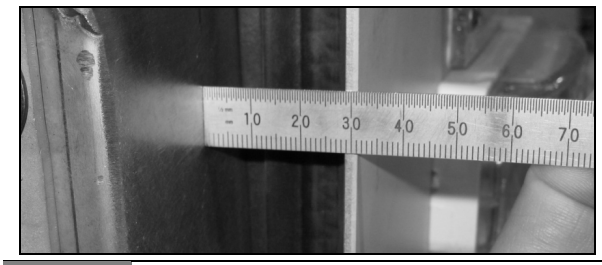


5. Respect the required gap between exterior finishing panels.
6. Tighten the hinge screws.
7. To allow adjustment of the latch mechanism, lightly tighten the retaining hardware on receptacle and receptacle support to frame.
8. Place centering tool G34148_500 in the receptacle cavity.

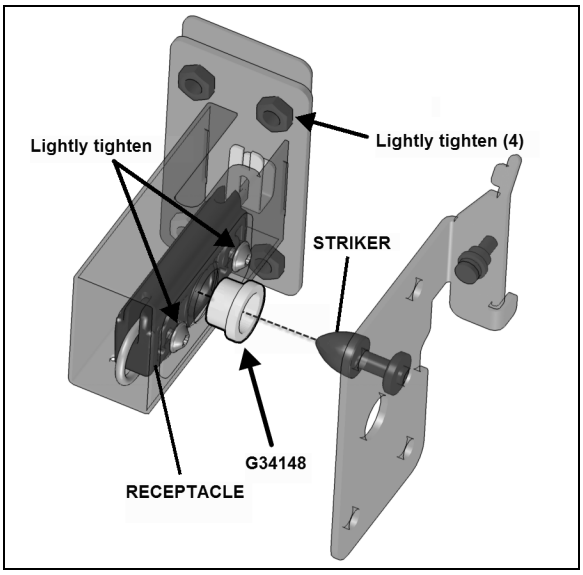


9. Close door to center the latch assembly.

10. Tighten the receptacle screws only.

11. .Door exterior panel on latch side should be positioned at 8mm +1mm from frame. Make the adjustments by moving the receptacle support.

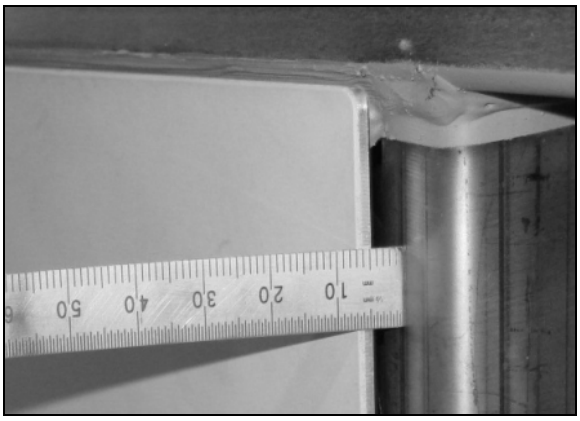

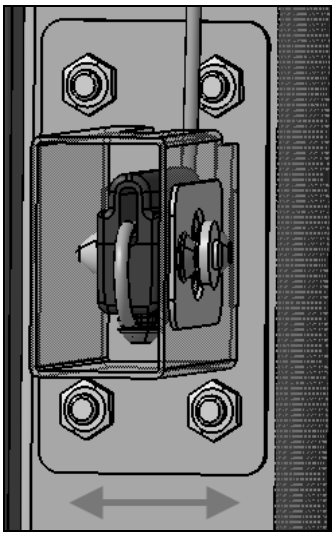

12. Make sure that backing plate is parallel to structure before tightening the retainer support hardware

13. Make sure that skid bar only touches slightly bus structure at bottom. The door should not move up when closing.

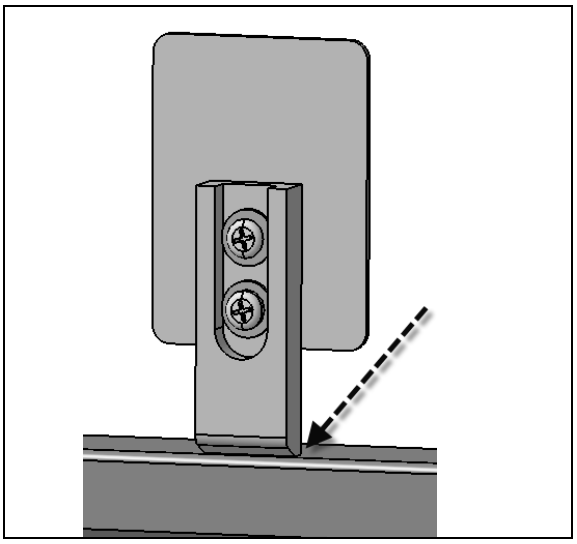

14. Check that the door swings freely and closes properly.

- **Door release in the event of a latch failure.**

If the door release mechanism is damaged or ceases to function for any reason, the door can be released by removing these screws on the fore wall of the rear fender side



### 10.5.5 Fuel Filler Door

- Open the fuel filler door.
- Loosen the screws holding the panel to hinge assembly.
- Adjust the fuel filler door position according to distance required between exterior finishing panels.
- Tighten the nuts.
- Check that the door swings freely and closes properly.

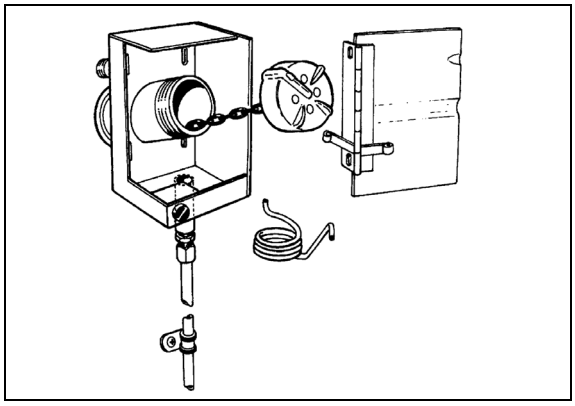

FIGURE 145: FUEL FILLER DOOR 03046

## 10.6 ZONE 6

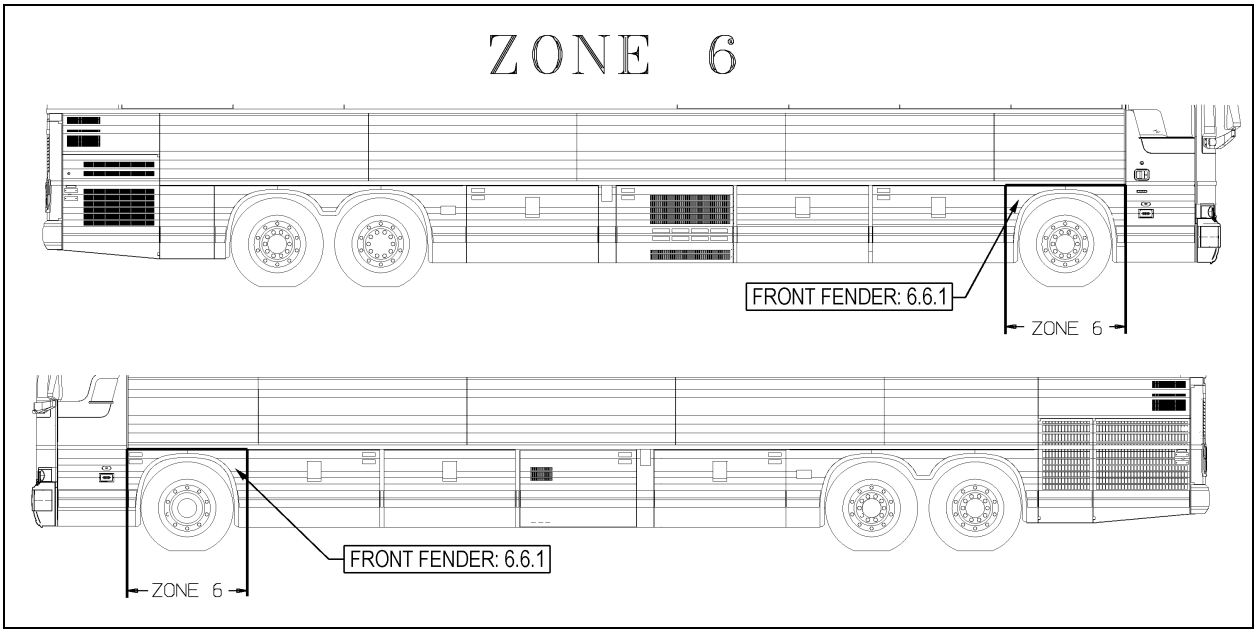


FIGURE 146: ZONE 6

### 10.6.1 Front Fender

Front fender may be removed using the following procedure:

Remove the nuts on the inside of the fender. Remove the fender from the vehicle. To reinstall, reverse the procedure.

For the installation of front fender body panel, refer to procedure **SAV470024**.

## 10.7 ZONE 7

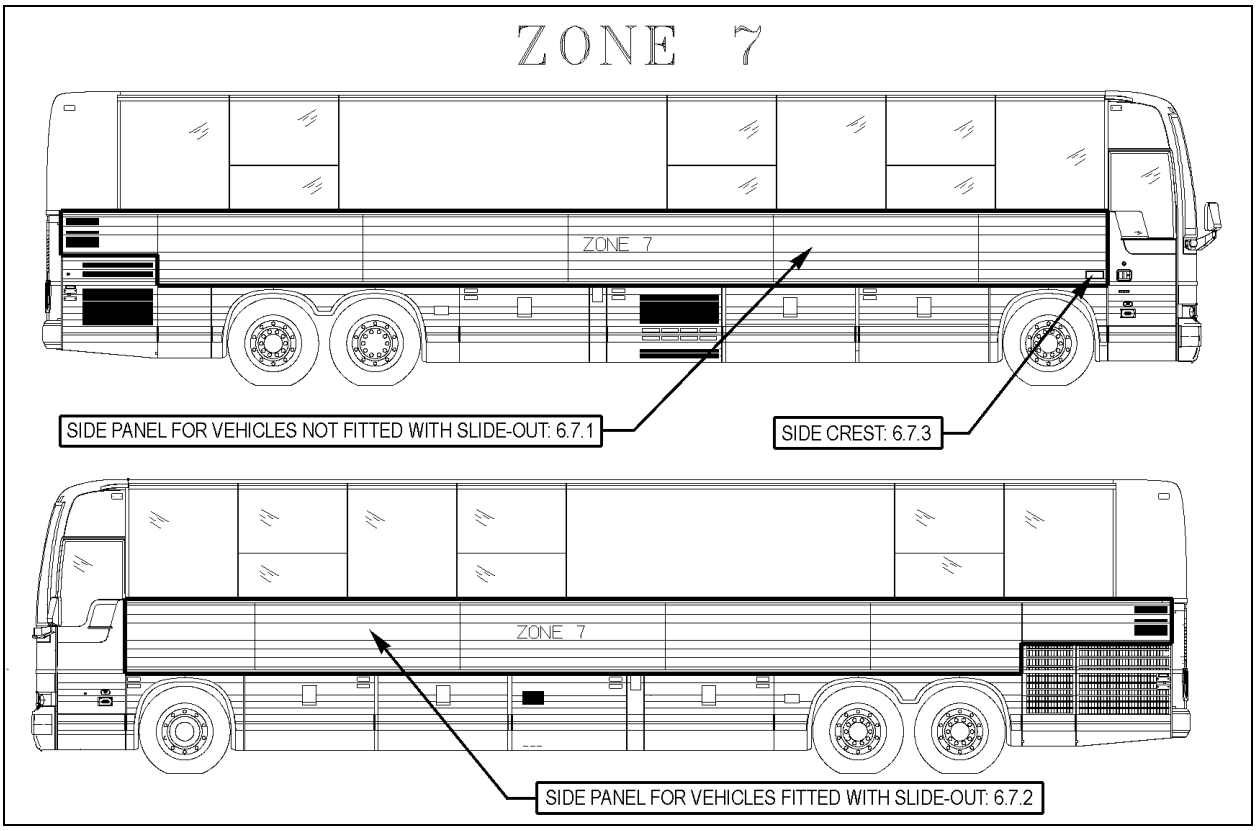


FIGURE 147: ZONE 7

### 10.7.1 Side Panel for Vehicles Not Fitted With Slide-Out

❖ **Removal**

| | |
|---|---|
| Remove top and bottom finishing moldings. Insert a screwdriver into snap-on finishing molding joint. Bend finishing molding enough to be able to fix a pair of locking pliers. Using the pair of locking pliers, pull the stainless steel molding and at the same time gradually cut Sika bead with a sharp knife. | Be careful not to damage the adjacent surfaces<br>You need to remove the finishing molding support and rivets in the case of engine air intake panel. |
| Insert a flat screwdriver between the side panel and the vehicle chassis, in the top left and right corners. | |
| Use the c-clamp to peel the side panel from the back structural panel as far as the middle and at the same time gradually cut Sika bead with a sharp knife. Do the same for the other corner. | Ideally, the hoist or chain block must be fastened to the floor while pulling from a 45° angle so as not to damage the vehicle structure |
| Remove as much glue as possible from the structure using a putty knife or pneumatic knife without damaging 206 G+P primer. | Never heat SikaFlex adhesive to remove. |

| | |
|---|---|
| Check panel horizontal supports for straightness using a straight edge. Take measurements with a ruler. | Tolerance: 1mm towards the outside and 1.5mm towards the inside. |

For the structure preparation before the installation of a ridged side panel, refer to procedure **SAV00027**.

For gluing of ridged side panels, refer to procedure **SAV00028**.

For sealing the side panels' upper portion, refer to procedure **SAV00030**.

For gluing of horizontal finishing molding, refer to procedure **SAV00208**.

### 10.7.2 Side Panel for Vehicles Fitted With Slide-Out

❖ **Removal**

Refer to paragraph 7.7.1 for procedure.

**CAUTION**

Because most junction panels are only riveted and not spot welded, be careful when removing a side panel not to damage adjacent panels.

For the slide-out junction panel preparation before the installation of a ridged side panel, refer to procedure **SAV00031**.

For gluing of ridged side panels on vehicles fitted with slide-out, refer to procedure **SAV00029**.

### 10.7.3 Side Crest

- Clean vehicle surface using anti-silicone where the side crest and stickers will be applied.
- Using hands apply and compress side crest.
- Apply required stickers.

## 10.8 ZONE 8

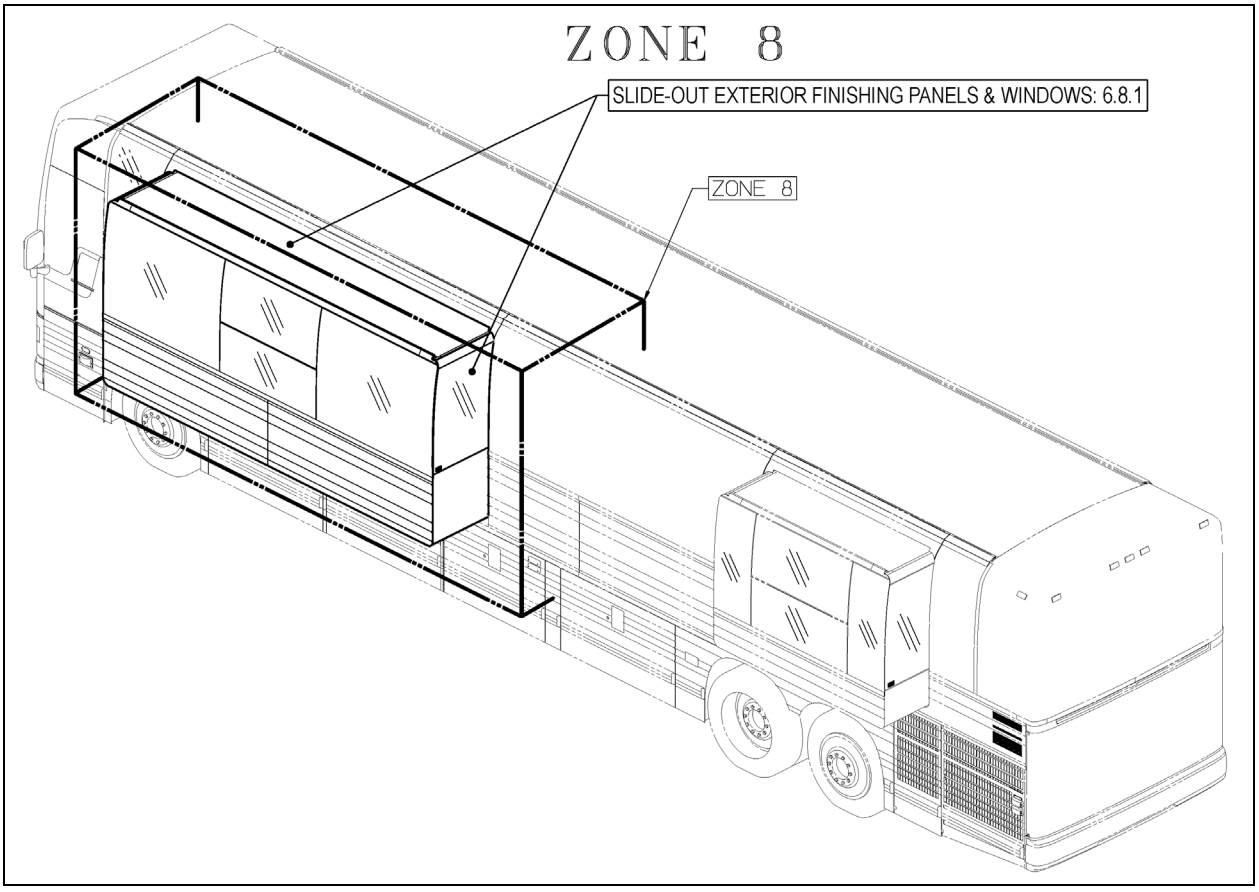


FIGURE 148: ZONE 8

### 10.8.1 Slide-Out Exterior Finishing Panels & Windows

For maintenance and procedures, refer to paragraphs on the vehicle's finishing panels and windows.

Methods, procedures, tools, cleaning products, adhesives and other products are the same as those used for the vehicle body.

## 10.9 ZONE 9

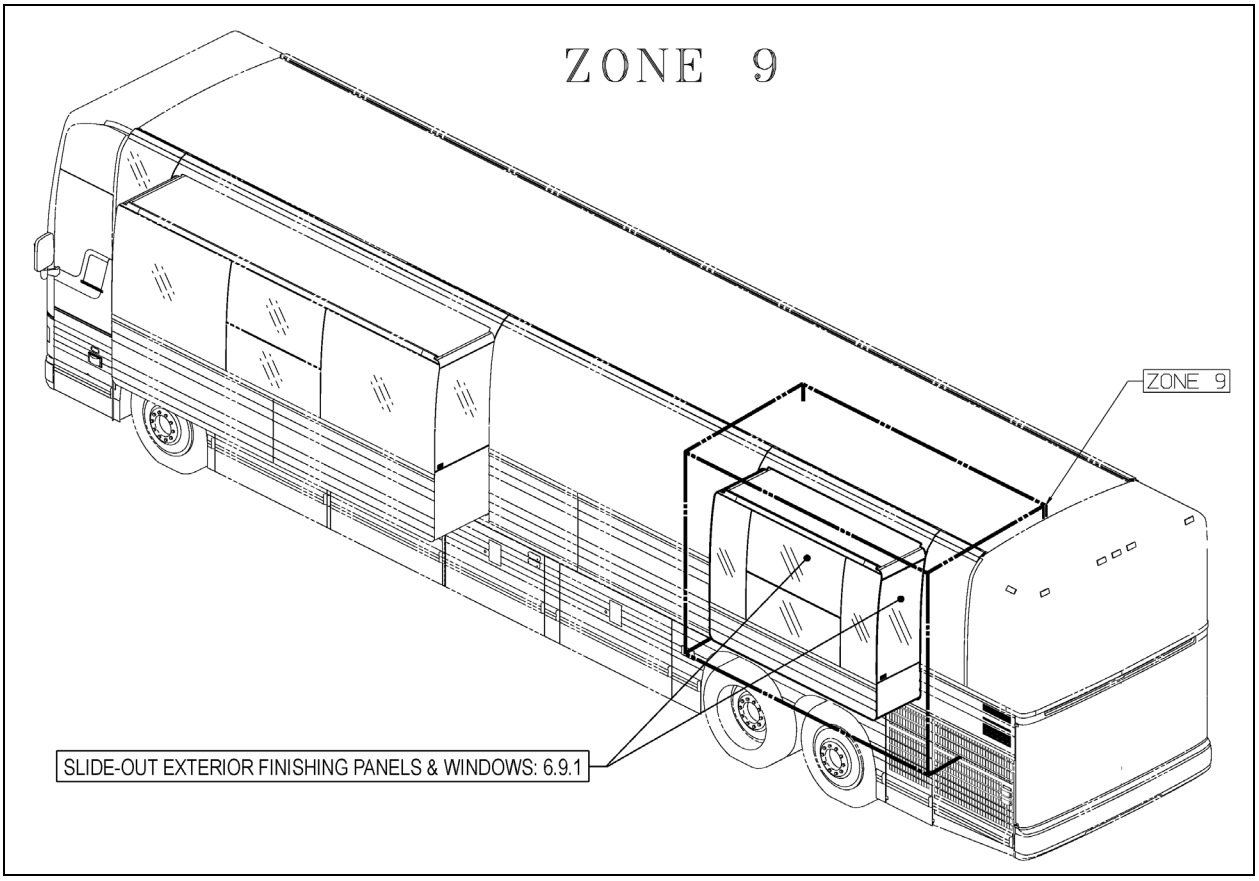


FIGURE 149: ZONE 9

### 10.9.1 Slide-Out Exterior Finishing Panels & Windows

For maintenance and procedures, refer to paragraphs on the vehicle's finishing panels and windows.

Methods, procedures, tools, cleaning products, adhesives and other products are the same as those used for the vehicle body.

## 10.10 BODY PANEL AND WINDOW SPACING FOR X3-45 VIP NOT FITTED WITH SLIDE-OUT

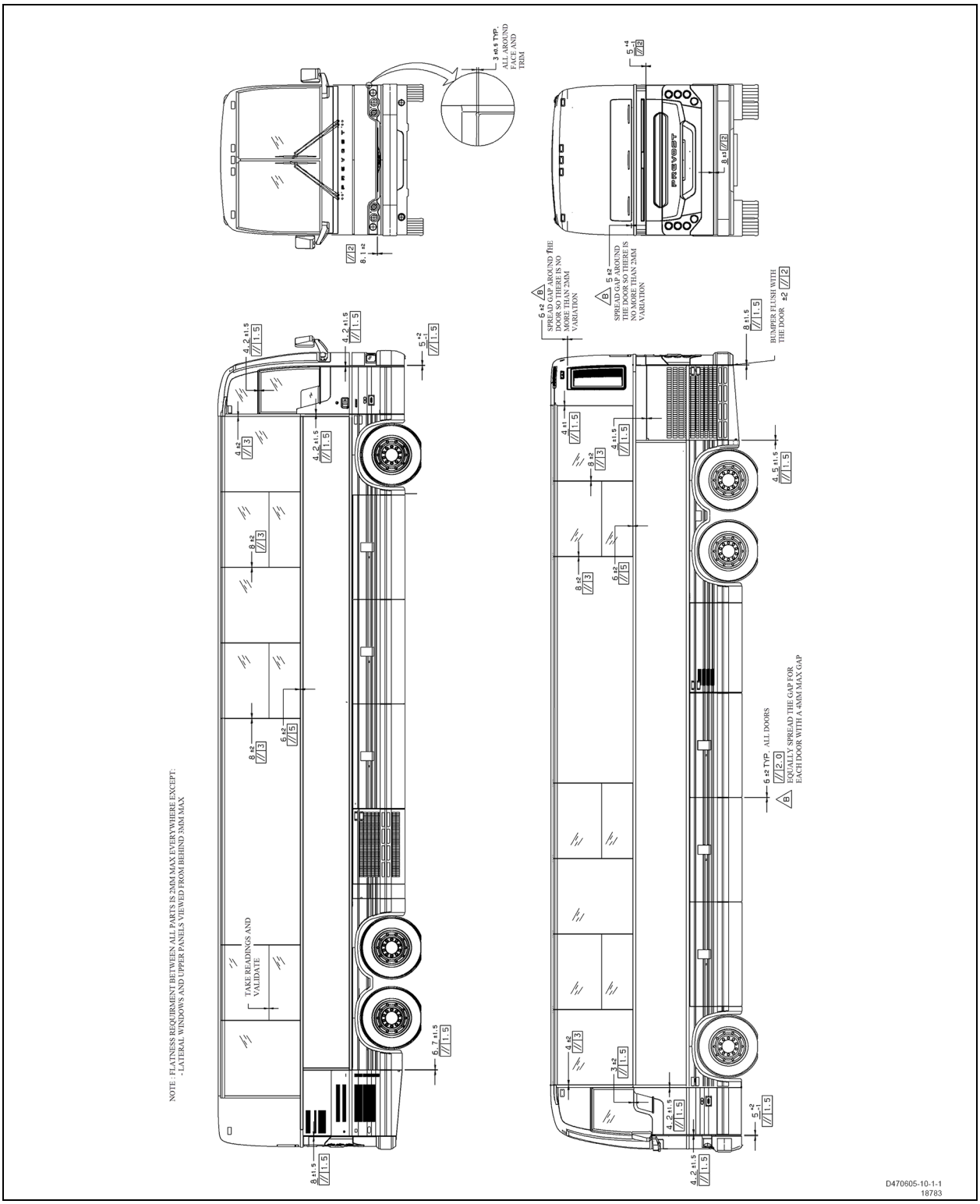


FIGURE 150: BODY PANEL & WINDOW SPACING FOR X3-45 VIP NOT FITTED WITH SLIDE-OUT

## 10.11 BODY PANEL AND WINDOW SPACING FOR X3-45 VIP WITH FRONT AND REAR SLIDE-OUT

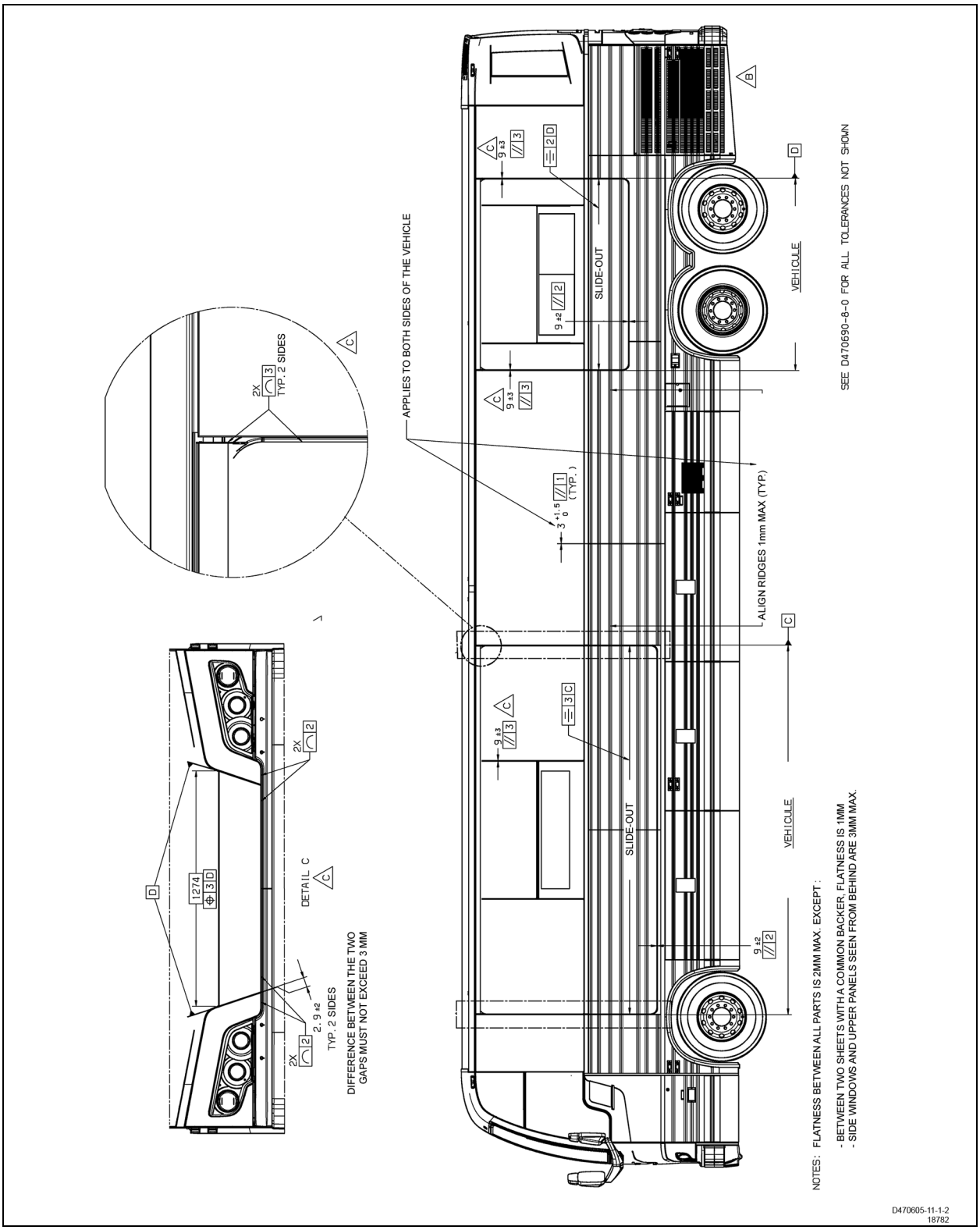


FIGURE 151: BODY PANEL & WINDOW SPACING FOR X3-45 VIP WITH SLIDE-OUT, FRONT AND REAR

## 10.12 BODY PANEL AND WINDOW SPACING FOR X3-45 VIP FITTED WITH FRONT SLIDE-OUT

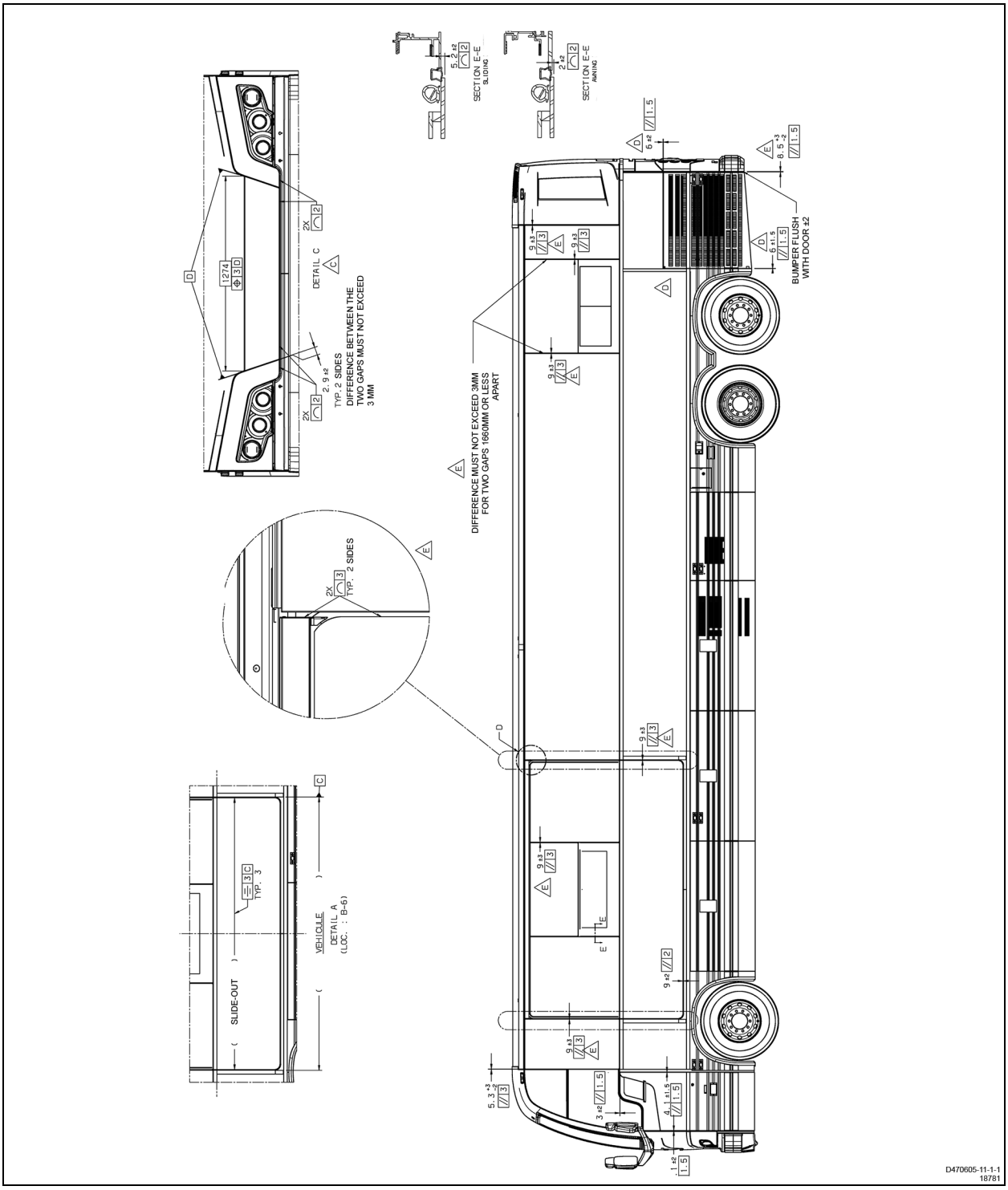


FIGURE 152: BODY PANEL & WINDOW SPACING FOR X3-45 VIP WITH SLIDE-OUT, FRONT

## 11 SPECIFICATIONS

**Door cylinder**

| | |
|---|---|
| Manufacturer | Bimba |
| Type | Pneumatic |
| I.D. | 1½" ( mm) |
| Stroke | 8" ( mm) |
| Prevost number | 780595 |

**Damper**

| | |
|---|---|
| Manufacturer | Koni |
| Prevost number | 780565 |

**Lock cylinder (upper)**

| | |
|---|---|
| Manufacturer | Bimba |
| Type | Air, single action, 1/8 NPT, hexagonal rod |
| I.D. | 7/8" (22 mm) |
| Stroke | 1" (25 mm) |
| Prevost number | 641392 |

**Lock cylinder (central)**

| | |
|---|---|
| Manufacturer | Bimba |
| Type | Air, single action, ¼ NPT |
| I.D. | 1¾" (45 mm) |
| Stroke | 1" (25 mm) |
| Prevost number | 641209 |

**Manifold solenoid**

| | |
|---|---|
| Manufacturer | Norgren |
| Type | 4 ports, 1/8 NPT |
| Voltage | 24 VDC |
| Power consumption | 6 watts |
| Maximum pressure | 150 psi (1035 kPa) |
| Prevost number | 641448 |

**Solenoid valve (Latching valve)**

| | |
|---|---|
| Manufacturer | Humphrey |
| Model | 310 |
| Operating range | 0 to 125 psi (0 to 860 kPa) |
| Voltage | 24 VDC |
| Voltage tolerance | +10%, -15% of rated voltage |
| Power consumption | 4 watts |
| Leak rate (max allowed) | 0.245 in3/min @ 100 psi (4cc/min @ 690 kPa) |
| Type of operation | Direct solenoid |
| Lubrication | Not required (factory pre-lubed) |
| Filtration | 40 micron recommended |
| Prevost number | 641412 |

PREVOST

# MAINTENANCE INFORMATION

**MI15-18**

| | | |
|---|---|---|
| DATE : | MAY 2015 | SECTION : 18 - Body |
| SUBJECT : | **STRUCTURE INSPECTION FOR CORROSION - HOW TO PREVENT CORROSION** | |

| *IMPORTANT NOTICE* |
|---|
| *This maintenance is recommended by Prevost to increase your vehicle's performance. Note that no reimbursement will be awarded for carrying out this maintenance.* |

## APPLICATION

| Model | VIN |
|---|---|
| All Prevost models |  |

## DESCRIPTION

This procedure was made in order to support Prevost customers who are worried about their vehicle structure behavior due to corrosion.

Five year old vehicles and older should be subjected to a thorough structural inspection; especially if clear signs of moderate or deep corrosion are visible. The inspection can be conducted as described in the following procedure.

In this procedure, you will find information about:

**1) The important areas that should be inspected**

**2) When a structural inspection should be carried out**

**3) How to perform the inspection**

**4) What can be done to optimize corrosion protection during your vehicle's life**

| STRUCTURE INSPECTION – CORROSION | |
|---|---|
| **DESCRIPTION** | **INTERVAL** |
| Perform structural inspection for corrosion as described in this document | **Normal duty cycle vehicles and normal environment operation**<br>Every 5 years starting from the 5th year in service |
| | **Severe duty cycle vehicles and harsh environment operation**<br>Every 2 years starting from the 5th year in service |
| | Whenever a *visual inspection* discloses that corrosion seems to have caused damages to the structure such as perforation, flaking, separation of metal layers, loss of material, etc. |

**CAUTION**

**Reject member, chassis component, axle, etc. if:**

Cracked, broken, separated by corrosion or corroded to a depth as to weaken member so as to affect the safety and structural integrity of the vehicle.

**DANGER**

Park vehicle safely, apply parking brake, stop engine. Prior to working on the vehicle, set the ignition switch to the OFF position and trip the main circuit breakers equipped with a trip button. On Commuter type vehicles, set the battery master switch (master cut-out) to the OFF position.

## THE IMPORTANT AREAS THAT SHOULD BE INSPECTED

**Front & rear sub-frames, drive axle cradle and tag axle** (FIGURE 1) on Prevost structures are made of high strength steel. Although the structure on a Prevost vehicle receives a beneficial corrosion preventive compound application at the end of the manufacturing process, after many years of service with exposure to harsh environments (winter, frequent rains, road salt, stone projection, sand accumulation, etc.), the carbon steel can be subject to severe corrosion. The use of high strength steel remains a requirement to withstand peak loads.

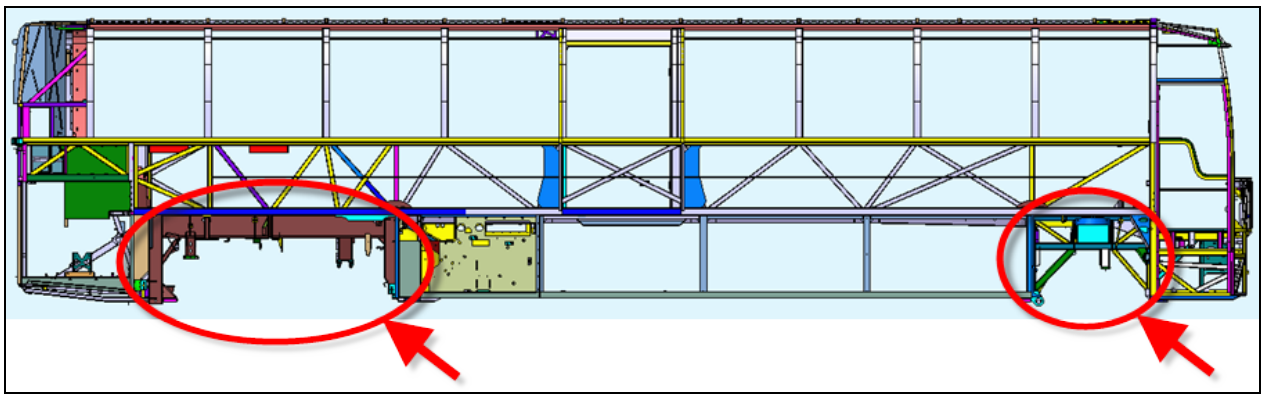

**FIGURE 1 – CRITICAL AREAS: FRONT SUB-FRAME, REAR SUB-FRAME, DRIVE AXLE CRADLE AND TAG AXLE**

## WHEN SHOULD A STRUCTURE INSPECTION BE CARRIED OUT?

Vehicles operating in harsh environments without an appropriate corrosion protection compound applied to the front and rear sub-frames, drive axle cradle and tag axle could be subject to corrosion. If parts of the tag axle or front and rear sub-frames structures present metal flaking, separation of metal layers, loss of material, perforation, etc. then they should be inspected in order to confirm that the minimum wall thickness remains (FIGURE 2 to FIGURE 5).



**FIGURE 2: METAL FLAKING. ACCUMULATED SAND AS SHOWN ON THE IMAGE SHOULD NOT BE LEFT IN PLACE**



**FIGURE 3: METAL FLAKING AND ACCUMULATED SAND**



**FIGURE 4: METAL FLAKING ON TAG AXLE - ACCUMULATED MATTER WILL RETAIN WATER THUS CREATING CONDITIONS PROMOTING ADDITIONAL CORROSION**



**FIGURE 5: HEAVILY CORRODED COACH WITH BROKEN TAG AXLE. THIS IMAGE SHOWS THE SPINDLE MOUNTING PLATE SEPARATED FROM THE REST OF THE TAG AXLE**

## STRUCTURE INSPECTION PROCEDURE

The thickness of main carbon steel parts on rear & front sub-frames, drive axle cradle and tag axle beam must be **at least 1/8 inch (0.125") (3mm)**. There are two options to properly monitor the wall thicknesses:

1- Using an ultrasonic wall thickness gauge.

2- Drilling holes and measuring wall thickness.

### 1- Structural Inspection Procedure Using Ultrasonic Wall Thickness Gauge

The ultrasonic wall thickness gauge has to be used on bare metal. The surface where the gauge will be put on has to be cleaned of rust, paint or other material. If the thickness is more than 1/8 inch (3mm), repaint the cleaned surface to prevent corrosion from occurring on this spot.

Use a grinder or another tool to remove rust or paint on the spot to check. The gauge has to be placed on the center of the cleaned spot. The gauge has to be perpendicular to the surface to get an accurate measure.

Inspection using ultrasonic wall thickness gauge is recommended over drilling holes because it minimize risk of altering the vehicle structure.



FIGURE 6: CLEANED SPOT ON STRUCTURAL MEMBER

### 2- Structural Inspection Procedure Using Drilled Holes

Drill a ¼ inch (6 mm) diameter hole in the most corroded wall of the part being checked. Use a caliper to measure the thickness of the drilled metal. Wall thickness should be at least 1/8 inch (0.125") (3mm). Drilled hole must then be welded (filled with metal) and repainted after measurement to prevent water infiltration and corrosion from occurring around the hole.

Clean/remove flaking rust on frame. Drill hole in the most corroded wall. The hole must be welded after to prevent corrosion and water infiltration. Filled hole must be painted to prevent corrosion.

**CAUTION**

Holes and welding can increase the risk of crack initiation. **Ultrasonic wall thickness gauge method is recommended.**



FIGURE 7: HOLE DRILLED IN STRUCTURAL MEMBER

## CORROSION PROTECTION ON OLD AND CORRODED FRAME

To maximize corrosion resistance on older frame exposed to harsh environment:

1) Clean rust on frame. If available, use sand blasting.

2) Apply a zinc-rich primer on cleaned surfaces.

3) Cover carbon steel parts with corrosion preventive compound Tectyl 185GW.

**CAUTION**

Avoid primer, paint, and corrosion preventive compounds on pneumatic valves and rubber bushings.



**FIGURE 8: CLEAN RUST**

## PROTECTION TO PREVENT CORROSION

Tectyl 185GW should be used to prevent corrosion propagation on frame.

1) Clean rust and dirt on the frame.
2) Apply Tectyl following the manufacturer's recommendation.
3) Apply Tectyl every year or as needed.

**CAUTION**

Avoid primer, paint, and corrosion preventive compounds on pneumatic valves and rubber bushings.



**FIGURE 9: TECTYL 185GW BLACK APPLICATION**

For more details on Tectyl 185GW, see QC Lubricants web site:

http://www.qclubricants.com/TECTYL185GWBlack.htm

**Tectyl 185GW Black**

**QC Lubricants carries Tectyl 185GW Black in pails and drums.**




TECTYL® 185GW Black is a solvent cutback, thixotropic corrosion preventive compound. The dry film is semi-firm and has a semi-gloss appearance. TECTYL® 185GW Black provides outstanding protection in marine, tropical, and industrial environments, and is widely used for transportation equipment. TECTYL® 185GW Black possesses dielectric strength of 800 volts per dry mil of coating. TECTYL® 185GW Black provides galvanic corrosion protection and can be applied on battery terminals for insulating purposes.

## PARTS / WASTE DISPOSAL

| |
|---|
| Discard according to applicable environmental regulations (Municipal/State[Prov.]/ Federal) |

*Access all our Service Bulletins on https://secureus5.volvo.com/technicalpublications/en/pub.asp*
*Or scan the QR-Code with your smart phone.*

*E-mail us at **technicalpublications_prev@volvo.com** and type "ADD" in the subject to receive our warranty bulletins by e-mail.*

# MAINTENANCE INFORMATION

**MI15-41**

| | |
|---|---|
| DATE : AUGUST 2015 | SECTION : 18 - Body |
| SUBJECT : | CRACKING OF POLYCARBONATE TAILLIGHTS CAUSED BY INAPPROPRIATE CLEANING PRODUCTS |

## APPLICATION

| Model | VIN |
|---|---|
| ALL MODELS | |

## DESCRIPTION

Prevost would like to remind its customers that only **cleaning products designed for external washing of vehicles** should be used for exterior vehicle wash and in particular, for the washing of polycarbonate taillights.

## POLYCARBONATE CRACKING

Degreasers designed to clean motors **must not be used** to clean the engine compartment door. These products are not compatible with polycarbonate. They cause cracking of the polycarbonate taillights housing and cracking of the bosses in which the mounting threaded rods are inserted (figures 2 & 3).

## CLEANING PRODUCT COMPATIBLE WITH POLYCARBONATE

Cleaning products designed for external washing of vehicles shall be used to clean your vehicle. Prevost suggests a high PH cleaner compatible with polycarbonate. See the description of the product in the following table

| Part No | Description | Qty |
|---|---|---|
| 686037 | EXTERIOR CLEANER (BODY) | 1 gallon / 4 liters |
| 686036 | EXTERIOR CLEANER (BODY) | 5.28 gallons / 20 liters |
| 685841 | EXTERIOR CLEANER (BODY) | 55 gallons / 210 liters |

| **NOTE** |
|---|
| *Material can be obtained through regular channels.* |

## High PH cleaning product compatible with polycarbonate - product sheet

# Traffic film remover

Will not make plastics crack

Perfect for trucks, cars, trains, buses and machinery. Safe for all types of plastics including polycarbonate. Designed for automatic or pressure washing.

### ADVANTAGES

- Easily removes traffic film, insects and grease.
- Safe for car and truck paint.
- Safe for use on metal, rubber, chrome, glass and plastic surfaces.
- Does not leave any deposit.
- Concentrated.
- Eco-friendly.
- Easy to rinse.
- Dries evenly.

### DIRECTIONS

Pressure washing :
1. Use product accordingly to dilution ratio.
2. Spray evenly on vehicle surface starting by the bottom.
3. Rinse thoroughly with cold or lukewarm water.

### MORE DETAILS

Do not wash in direct sunlight. Do not allow product to dry on surface.

### DILUTION RATIO

| DIRT | RATIO |
|---|---|
| Mild | 1 oz / 20 oz 50 ml / L |
| Average | 1 oz / 10 oz 100 ml / L |
| Strong | 1 oz / 6.67 oz 150 ml / L |



### PRECAUTIONS

Avoid all contact with eyes.
Avoid all contact with skin.
Wash hands with soap and water after handling.

### FIRST AID

- Skin: Wash contaminated skin with soap and water.
- Eyes: Flush immediately with running water for at least 15 minutes, occasionally lifting the upper and lower eyelids. Seek medical help.
- Ingestion: Do not induce vomiting. If the person is conscious, have them drink several glasses of water or milk. Seek medical help.

### PHYSICAL ATTIBUTE

| | |
|---|---|
| PHYSICAL STATE: | Liquid |
| APPEARANCE: | Clear |
| COLOR: | Transparent |
| SCENT: | Chemical |
| PH: | 13.1 |
| DENSITY (25°C): | 1.1 |

### SECURITY

| | |
|---|---|
| HEALTH | 1 |
| FLAMMABILITY | 0 |
| REACTIVITY | 0 |
| PERSONAL ROTECTION | B |

| | |
|---|---|
| 0 = | NEGLIGIBLE |
| 1 = | LOW |
| 2 = | MODERATE |
| 3 = | HIGHT |
| 4 = | EXTREME |

**FIGURE 1: PRODUCT SHEET**

## IMAGES SHOWING THE CRACKING ISSUE

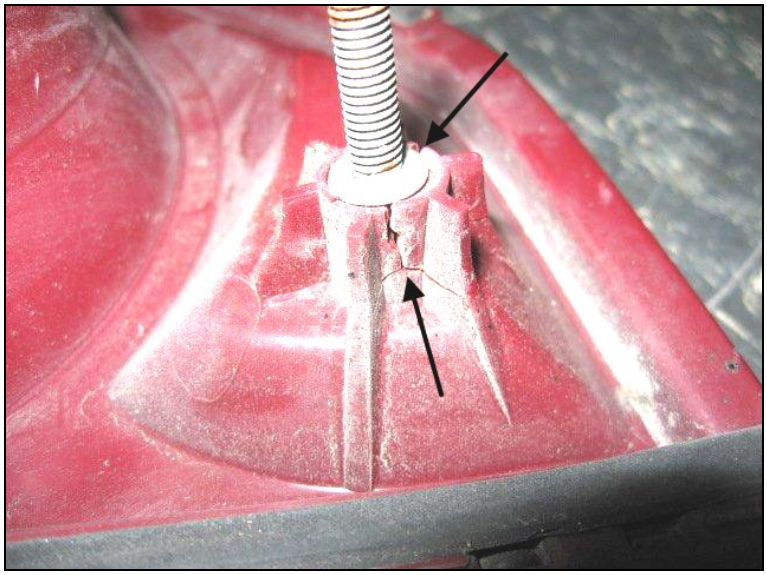

**FIGURE 2: Cracks at the boss and ribs due to the use of engine degreaser**

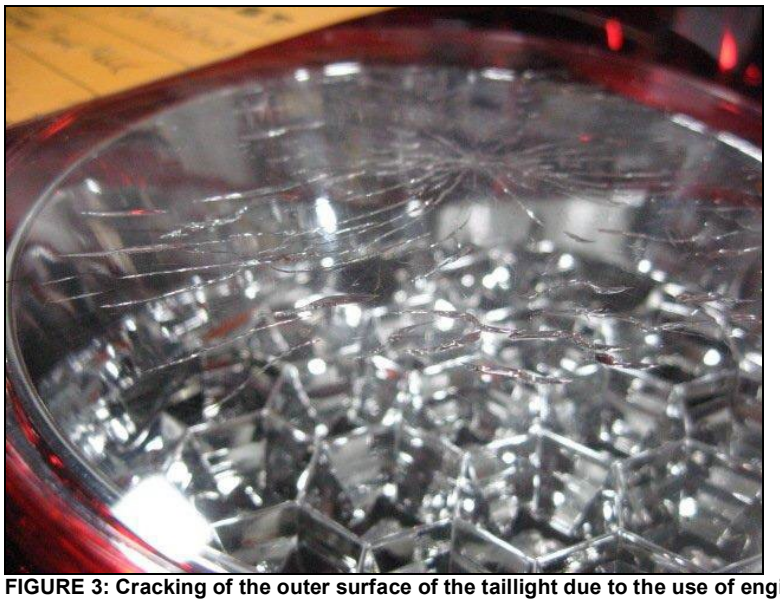

**FIGURE 3: Cracking of the outer surface of the taillight due to the use of engine degreaser**

*Access all our Service Bulletins on [https://secureus5.volvo.com/technicalpublications/en/pub.asp](https://secureus5.volvo.com/technicalpublications/en/pub.asp)*
*Or scan the QR-Code with your smart phone.*

*E-mail us at **technicalpublications_prev@volvo.com** and type "ADD" in the subject to receive our warranty bulletins by e-mail.*

# MAINTENANCE INFORMATION

**MI18-18B**

| | | |
|---|---|---|
| DATE : | June 2018 | SECTION : 18 BODY |
| SUBJECT : | **GENERAL HOISTING AND TOWING PROCEDURES** | |

Revision: B Updated 2.1 to show rubber chocks, secure front and rear. 2020-06-29

## APPLICATION

All Prevost vehicles models
Model Year : 2014 - Current

## DESCRIPTION

This maintenance information is for towing and hoisting Prevost vehicles.

Tower experience, local rules and regulations apply in conjunction with the procedures outlined in this document.

Images are for representation purpose only, actual vehicles may differ.

## Table of contents


**1. HOISTING AND TOWING POINTS ..... 2**

1.1 JACK STANDS ..... 3
1.2 AXLE HOISTING POINTS ..... 4
1.3 USING WHEELS AS LIFTING POINTS ..... 6
1.4 OPTIONAL CHASSIS HOISTING POINTS ..... 7

**2. TOWING ..... 9**

2.1 PREPARATION BEFORE TOWING ..... 9
*2.1.1 Engine compartment emergency air-fill valve ..... 10*
*2.1.2 X Series optional front air supply connections ..... 10*
*2.1.3 Drive Axle Flange Shaft Removal ..... 11*
*2.1.4 After Towing ..... 13*
2.2 TOWING FROM THE FRONT ..... 13
*2.2.1 First Lift ..... 14*
*2.2.2 Second Lift- Front Tow Eye Pads as Lifting Point for Towing ..... 15*
*2.2.3 Second Lift- Using I-Beam Front Axle as Lifting Point for Towing ..... 18*
2.3 X-SERIES RECOVERY USING OPTIONAL REAR TOW EYES ..... 22

**3. EMERGENCY TOWING ..... 23**

3.1 REAR TOW USING NON-APPROVED LIFTING POINTS - *EMERGENCY ONLY* ..... 23
*3.1.1 PRECAUTIONS ..... 23*
*3.1.2 FIRST LIFT ..... 24*
*3.1.3 SECOND LIFT ..... 25*
3.2 VOLVO *I-SHIFT* TRANSMISSION *TOWING MODE* ..... 29

## 1. HOISTING AND TOWING POINTS

As much as possible, use the wheels as the preferred lifting points. If lifting by the wheels is not possible or appropriate, there are several hoisting and towing points under the vehicle.

Lifting should be performed without passengers and no luggage remaining in the vehicle.

Use these points exclusively for hoisting and towing operations (Figure 1, Figure 2).

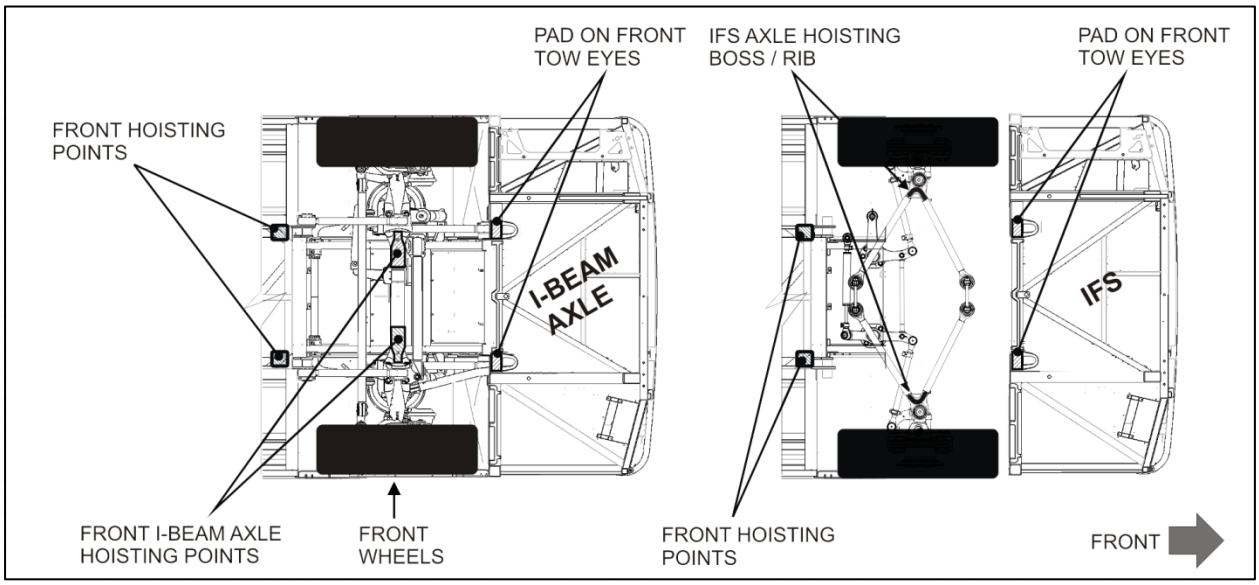


**FIGURE 1 *FRONT* HOISTING AND LIFTING POINTS DIAGRAM**

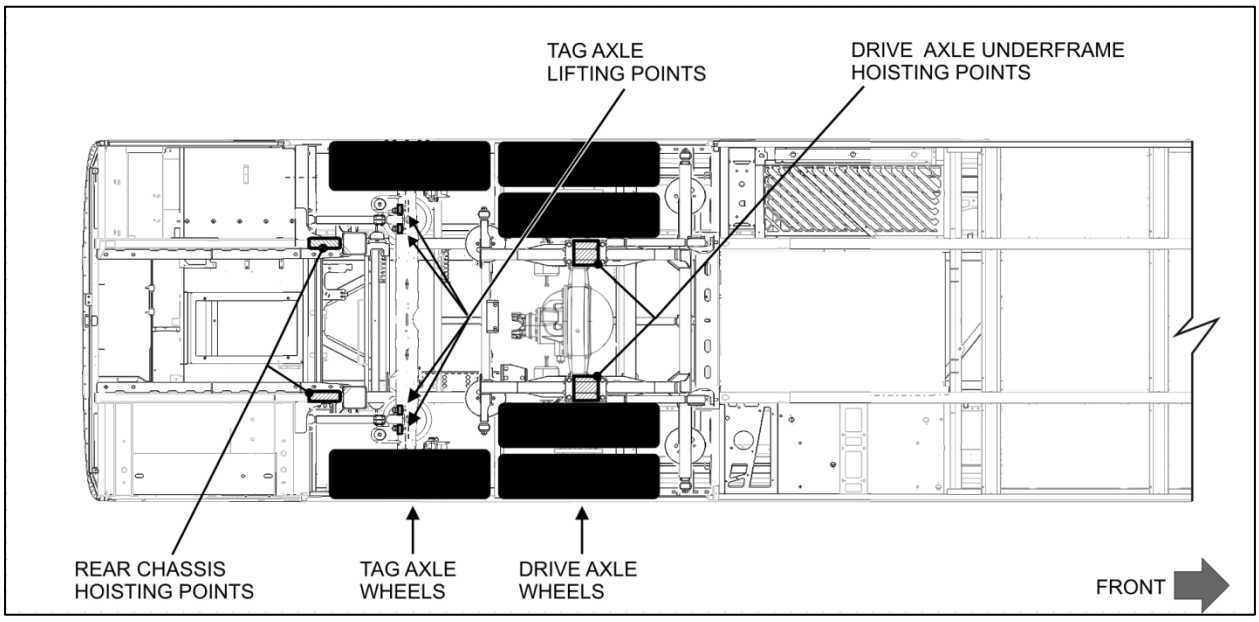


**FIGURE 2 *REAR* HOISTING AND LIFTING POINTS DIAGRAM**

The vehicle is provided with four standard chassis hoisting points. When axles or wheels are serviced, use the chassis hoisting points.

When using the chassis hoisting points to support the vehicle, **the tag axle must be unloaded at all times**. To prevent damage to the suspension, **always support the drive and front axles using jack stands** when using chassis hoisting points.

| CHASSIS HOISTING POINTS |
| --- |
| 2 hoisting points located aft of the tag axle (Figure3) |
| 2 hoisting points or optional hoisting pads with receptacles located aft of the front axle (Figure4) |



**FIGURE 3 : CHASSIS HOISTING POINTS - AFT OF TAG AXLE (BOTH SIDES)**

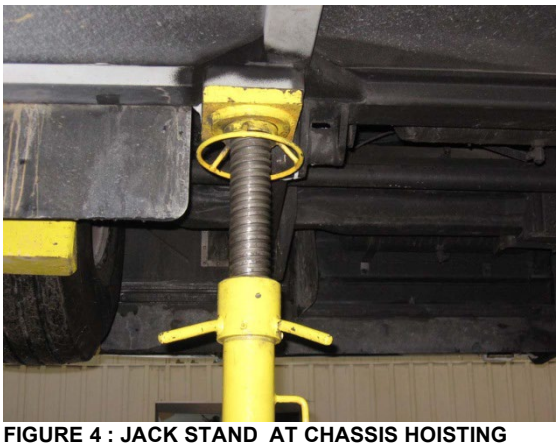

**FIGURE 4 : JACK STAND AT CHASSIS HOISTING POINT - AFT OF FRONT AXLE (BOTH SIDES)**

## 1.1 JACK STANDS

As a general recommendation, the minimum safe working load (SWL) for any jack stand should be 10 US tons (20 000 lb; 9072 kg). Figure5, Figure6 and Figure7 show general examples of this type of jack stand.

The vehicle can be supported at the chassis hoisting points (refer to HOISTING AND LIFTING POINTS diagram). Use a jack stand of 10 US tons (20 000 lb; 9072 kg) capacity at each of the four standard chassis hoisting points.

| ⚠ WARNING |
| --- |
| Hydraulic jacks are intended for lifting only. Do not get under the vehicle while using hydraulic jacks unless it is properly supported with safety jack stands. |



FIGURE 5 : 20 000 LB (10 US TON) CAPACITY JACK STAND



FIGURE 6 : 16500 LBF CAPACITY



FIGURE 7 : 40 000 LB (20 US TON) CAPACITY JACK STAND

## 1.2 AXLE HOISTING POINTS

| AXLE HOISTING POINTS |
|---|
| 2 front axle hoisting points (Figure8, Figure9, Figure10) |
| 2 drive axle sub frame hoisting points (Figure11) |
| 2 hoisting points under the tag axle (tag axle must be unloaded) (Figure12) |

**To ensure stability, always use the two hoisting points under a specific axle simultaneously**.

| **WARNING** |
|---|
| Two hoisting points are located under the tag axle. Using the tag axle as rear hoisting points for the vehicle should be avoided. When possible, use the drive axle as hoisting point. |

The vehicle can be lifted from the front axle and the drive axle sub frame using lifting equipment of appropriate capacity.

| APPROXIMATE WEIGHT PER AXLE | |
|---|---|
| **COACHES** | **MOTORHOMES / SPECIALTY VEHICLES** |
| Front axle: 12,000 lb. (5 443 kg)<br>Drive axle: 26,500 lb. (12 020 kg) | Contact the owner of the vehicle. The Gross Axle Weight Rating (GAWR) for the front and rear axle should not be exceeded.<br>GAWR values for a particular vehicle appear on the vehicle's certification plate installed on the driver's left-hand console. |

| **WARNING** |
|---|
| The suspension must be in the normal ride position before hoisting. |

| **WARNING** |
|---|
| To prevent damage to suspension components, always unload the tag axle before hoisting the vehicle. |

## FRONT AXLE HOISTING POINTS

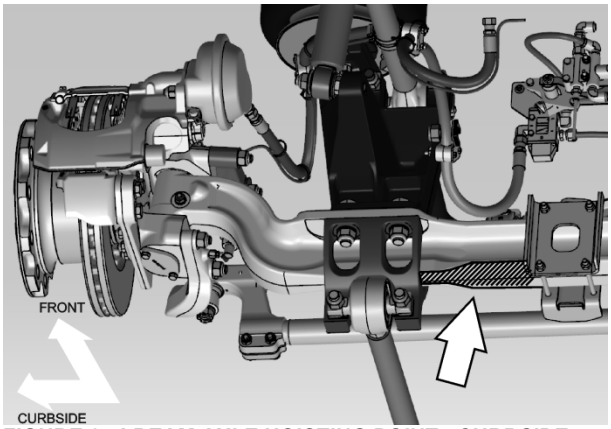


FIGURE 8 : I-BEAM AXLE HOISTING POINT - CURBSIDE

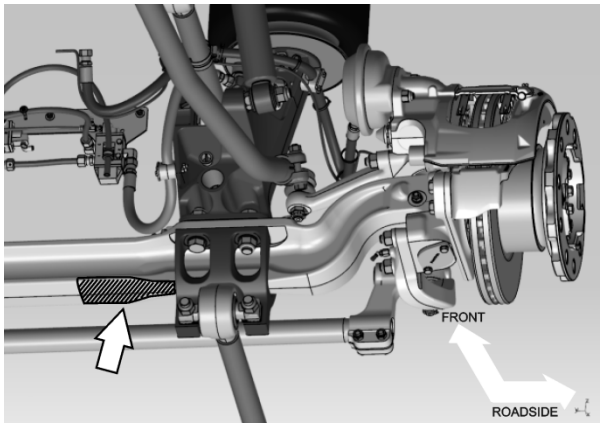


FIGURE 9 : I-BEAM AXLE HOISTING POINT – ROAD SIDE

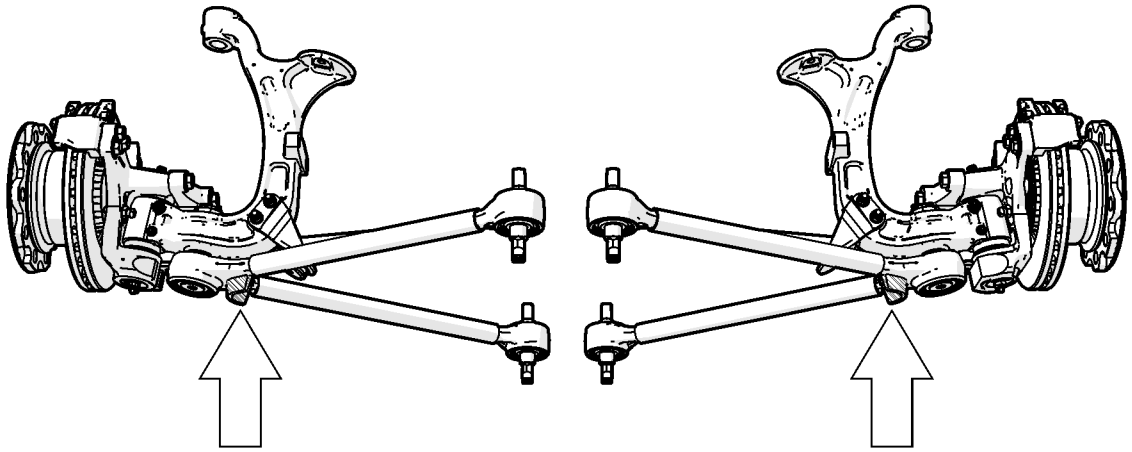

FIGURE 10 : INDEPENDENT FRONT SUSPENSION (IFS) HOISTING POINTS.

**DRIVE AXLE SUB FRAME HOISTING POINTS**

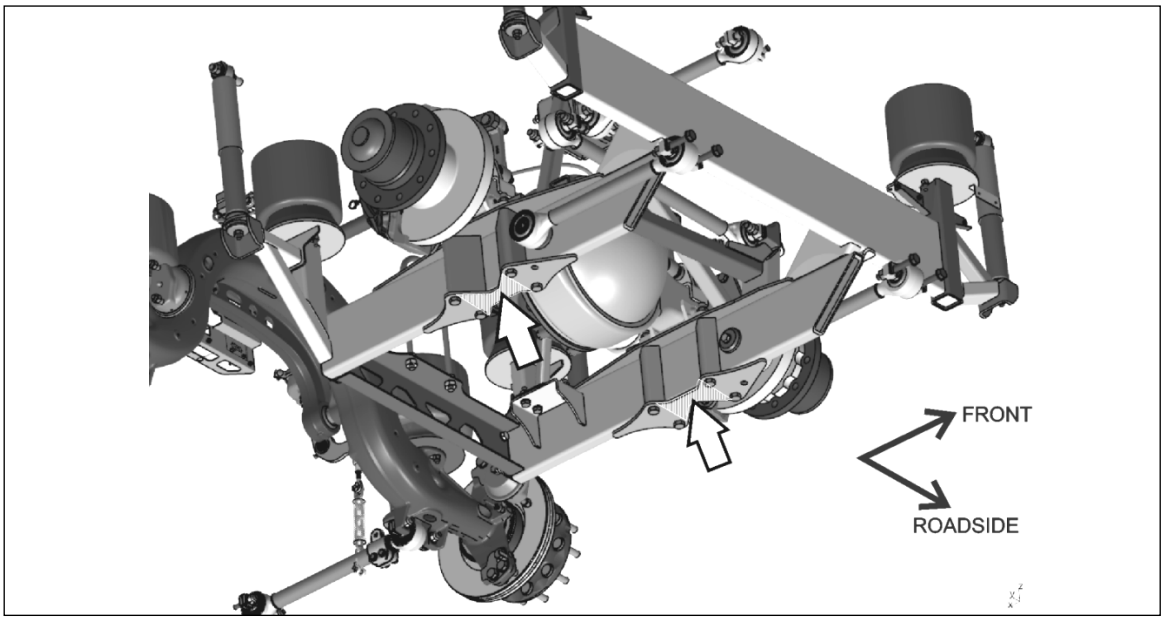


**FIGURE 11 : DRIVE AXLE SUB FRAME HOISTING POINTS.**

**TAG AXLE HOISTING POINTS**

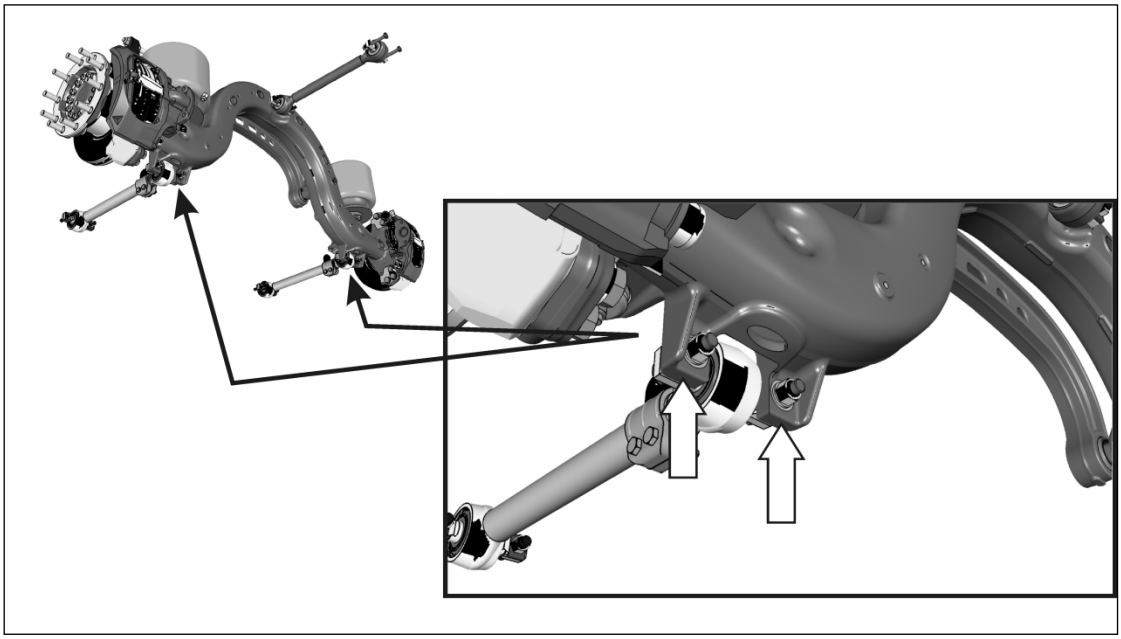

**FIGURE 12 : TAG AXLE HOISTING POINTS (USE ONLY TO SUPPORT THE TAG AXLE)**

## 1.3 USING WHEELS AS LIFTING POINTS

Use the front and drive axle wheels to lift the vehicle when using mobile column lifts. When doing so, the tag axle must be unloaded at all time.

Avoid using the tag axle wheels as the only lifting point for the rear of the vehicle. However, if the rear of the vehicle has to be lifted using the tag axle wheels, the tag axle must be unloaded at all times.

## 1.4 X-SERIES COMMUTER OPTIONAL CHASSIS HOISTING POINTS

On certain vehicles, lifting pads and rear emergency recovery toe eyes may be added on the chassis. When axles or wheels are serviced, use the chassis hoisting points.

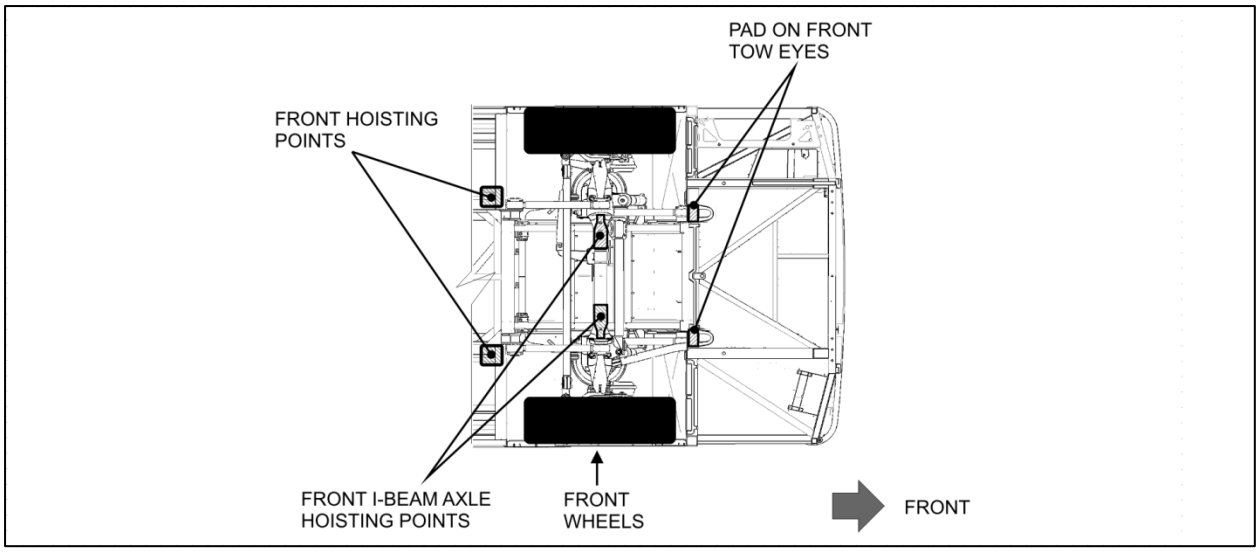


**FIGURE 13 : OPTIONAL FRONT CHASSIS HOISTING POINTS**

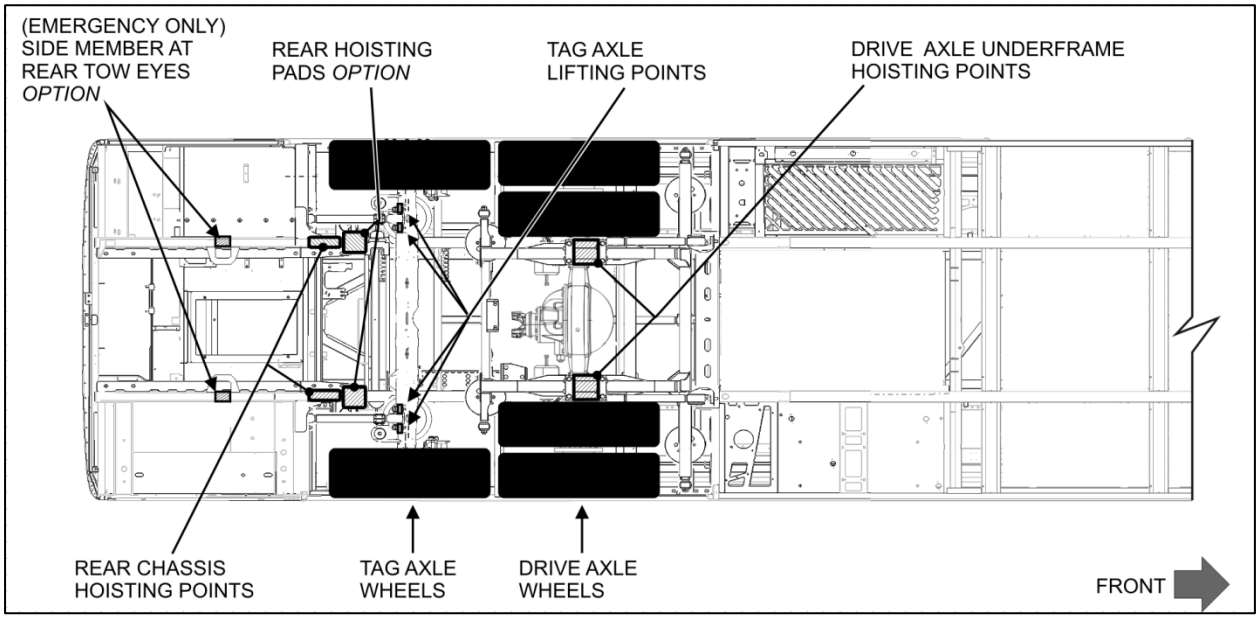


**FIGURE 14 : X-SERIES OPTIONAL REAR CHASSIS HOISTING POINTS**

When using the chassis hoisting points to support the vehicle, the tag axle must be unloaded at all times. To prevent damage to the suspension, always support the drive and front axles using jack stands when using chassis hoisting points.

| X-SERIES OPTIONAL CHASSIS HOISTING POINTS |
|---|
| 2 optional hoisting pads with receptacles located aft of the front axle (Figure16) |
| 2 optional hoisting pads with receptacles located aft of the tag axle (Figure15) |



**FIGURE 15 : OPTIONAL CHASSIS HOISTING RECEPTACLES - AFT OF TAG AXLE**



**FIGURE 16 : OPTIONAL CHASSIS HOISTING RECEPTACLES - AFT OF FRONT AXLE**



**FIGURE 17 : JACK STAND AT CHASSIS HOISTING RECEPTACLE - AFT OF FRONT AXLE, ROAD SIDE**



**FIGURE 18 : JACK STAND AT CHASSIS HOISTING RECEPTACLE - AFT OF FRONT AXLE, CURB SIDE**



**FIGURE 19 : JACK STAND AT CHASSIS HOISTING RECEPTACLE – AFT OF TAG AXLE, ROAD SIDE**



**FIGURE 20 : JACK STAND AT CHASSIS HOISTING RECEPTACLE – AFT OF TAG AXLE, CURB SIDE**

## 2. TOWING

Towing from the front is the recommended method. Prevost does not recommend towing from the rear using unapproved hoisting points as the vehicle may sustain structural damage.

Observe normal precautions including, but not limited to list below:

- Make sure the parking brake or the emergency brake is released at time of towing.
- Do not allow passengers to ride on board.
- Tow the vehicle at a safe speed.
- Accelerate and decelerate slowly and cautiously.
- Avoid sharp turns where possible.

**WARNING**

Do not carry passengers while the vehicle is being towed.

**CAUTION**

Avoid towing the vehicle from the rear using hoisting points that are not approved as this will cause structural damage. In case of damage to the drive train components use a low-bed semi-trailer.

**WARNING**

Engage the parking brake to prevent the vehicle from moving before you begin maintenance or service procedures that require you to be under the vehicle. Serious personal injury can result.

**CAUTION**

Lift the vehicle at the minimal height required for the vehicle to trail the tow truck.

### 2.1 PREPARATION BEFORE TOWING

**WARNING**

Prior to hoisting, park the vehicle on a level surface and apply parking brake.

Chock the *front and rear* wheels to prevent the vehicle from moving at time of releasing the parking brake during the towing preparation.

On the L.H. dashboard panel, turn on the hazard warning flashers. Preferably, use a towing light bar.



**FIGURE 21 CHOCK THE FRONT AND REAR WHEELS**

Place the front wheels in a straight-ahead position and keep the steering wheel from turning. To do so, slide the driver's seat close to the steering wheel. Wrap the safety belt around and through the steering wheel and then fasten safety belts.

This will ensure the vehicle rolls in straight direction to be stopped by the tow truck in case of mechanical failure of the lifting equipment.



**FIGURE 22**

### 2.1.1 Engine compartment emergency air-fill valve

Use the emergency fill valve to supply air to the system when the engine cannot be operated. This valve is located in the engine compartment (Figure23) and supplies air for all systems (brakes, suspension and accessories).

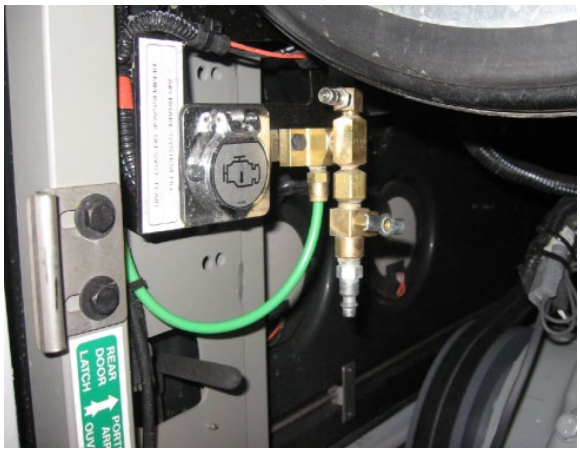


**FIGURE 23 : ENGINE COMPARTMENT EMERGENCY AIR-FILL VALVE**

> **CAUTION**
>
> Do not tow the vehicle without external air pressure applied to the emergency fill valve if the engine does not operate. Without brake system air pressure, the emergency spring brakes may apply automatically. If failure prevents releasing the parking brakes with air pressure, disengage the parking brakes mechanically.

### 2.1.2 X Series Optional Front Air Supply Connections

Operate the engine when towing to maintain brake system air pressure. If the engine cannot be operated, connect external air pressure lines from the tow truck.

**"Brake" quick connect fitting**

Flip down the access door located on the front bumper, connect an auxiliary air supply from the tow truck to the quick connect fitting identified BRAKE in order to supply air for operation of the vehicle **service brake** from the tow truck (Figure24, Figure25).

**"Air supply" quick connect fitting**

While the vehicle is being towed, connect an auxiliary air supply from the tow truck to the quick connect fitting identified AIR SUPPLY to supply air for all systems (brakes, suspension, accessories) through the air dryer (Figure24, Figure25).




FIGURE 24

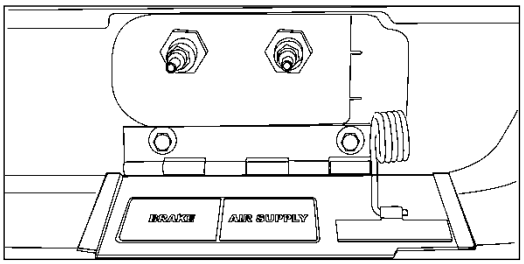


**FIGURE 25 : FRONT TOWING AIR SUPPLY ACCESS PANEL QUICK CONNECT FITTINGS**

### 2.1.3 Drive Axle Flange Shaft Removal

1. Apply the parking brake.
2. Remove the stud nuts and the washers (with Meritor drive axle) or cap screws (with ZF drive axle) from the flange shaft.

   **NOTE: there is oil behind the flange shaft which comes out during disassembly**

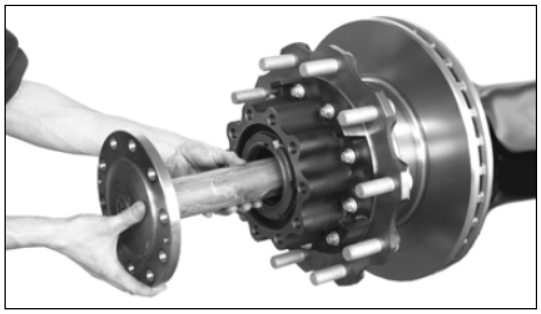

**FIGURE 26 : ZF A-132 AXLE**

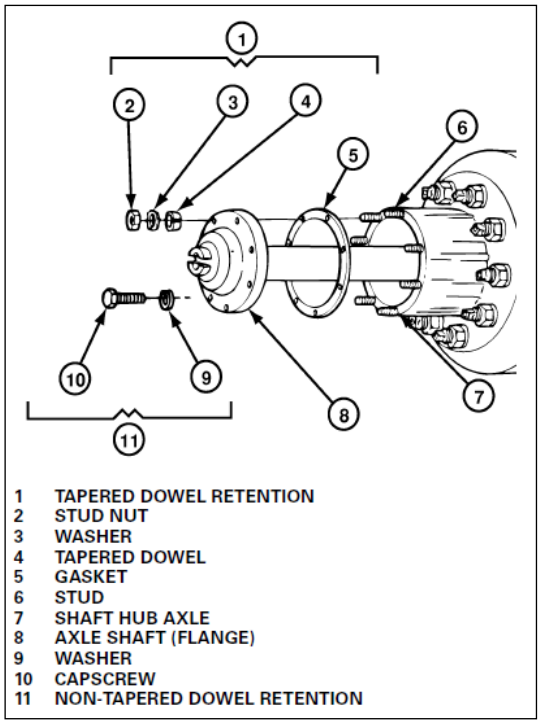


1 TAPERED DOWEL RETENTION
2 STUD NUT
3 WASHER
4 TAPERED DOWEL
5 GASKET
6 STUD
7 SHAFT HUB AXLE
8 AXLE SHAFT (FLANGE)
9 WASHER
10 CAPSCREW
11 NON-TAPERED DOWEL RETENTION

**FIGURE 27: MERITOR RC23-165 AXLE**

## CAUTION

Do not use a chisel or wedge to loosen the axle flange shaft and tapered dowels. Using a chisel or edge can result in damage to the axle shaft, the gasket and seal, and/or the axle hub.

3. Meritor axle: Loosen the tapered dowels in the flange of the axle shaft using the following methods.
   a) Do not strike the round driving lugs on the flange of an axle shaft. Pieces can break off and cause serious personal injury. A 1.5-inch (38.1 mm) diameter brass hammer can be used as a drift.
   b) Hold a 1.5-inch (38.1 mm) diameter brass drift against the center of the axle shaft flange, **inside the round driving lugs.**
   c) Hit the end of the drift with a large hammer (5 to 6 lbs.') to loosen the axle shaft and tapered dowels from the hub.
4. Identify each axle shaft that is removed from the axle assembly so they can be installed in the same location after transporting or repair is completed. (Example: Match mark a mating axle shaft and hub).

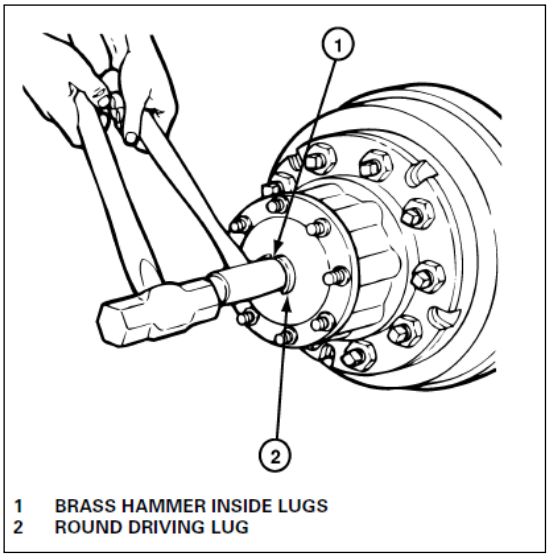


1 BRASS HAMMER INSIDE LUGS
2 ROUND DRIVING LUG

**FIGURE 28: MERITOR RC23-165 AXLE**

5. Remove the tapered dowels (if used), gasket or O-ring and the axle shaft from the axle assembly. Use a container to recover the oil.
6. Remove opposite flange shaft similarly.
7. Install a temporary cover over the open end of each hub where an axle shaft was removed. This will prevent dirt from entering the bearing cavity and loss of lubricant.

### 2.1.4 After Towing

1. Remove the covers from the hubs.
2. Install the gasket or O-ring, and axle shaft into the axle housing and carrier in the same location it was removed from. The gasket and flange of the axle shaft must be flat against the hub. Rotate the axle shaft and/or the driveline as necessary to align the splines and the holes in the flange with the studs or holes in the hub.
3. **Meritor axle only:** Install the dowels over each stud and into the tapered holes of the flange.
4. Install the washers and stud nuts or cap screws.

| MERITOR RC23-165 AXLE | ZF A-132 AXLE |
|---|---|
| Determine the size of the fasteners and tighten the nuts to the corresponding torque value shown below.<br>• 9/16-18 plain nuts: **110 - 165 lbf-ft** (149-224 Nm)<br>• 5/8-18 plain nuts: **150 - 230 lbf-ft** (203-312 Nm) | Tightening torque M18x1.5 G10.9 screw<br>**325 lbf-ft** (440 Nm) |

5. Mount opposite flange shaft similarly.
6. Inspect the lubricant level in the axles and hubs where the axle shafts were removed. Add the correct type and amount of lubricant if necessary.

**CAUTION**

Make sure axle shafts or driveshaft are installed correctly after towing. Tighten axle shaft and driveshaft nuts to the correct torque settings. Do not invert shafts.

## 2.2 TOWING FROM THE FRONT

The towed vehicle must be lifted from the front with front wheels off the ground. The tow truck must be equipped with the proper lifting equipment i.e. tow bar, axle forks and holders to reach under the ***front axle*** or the ***front tow eye pads***. No other lifting points are recommended for towing.

Lifting and towing from any other point is not authorized as it may cause structural damage. **To prevent overloading the drive axle, do not unload or raise the tag axle when towing the vehicle**.

To prevent damage to the vehicle, use the ***front tow eye pads*** fixed to the vehicle chassis between the front axle and the front bumper. Only use a solid link tow bar and safety chains to tow the vehicle.

1. Block the wheels to prevent the vehicle from moving.
2. Perform the PREPARATION BEFORE TOWING. Refer to paragraph 2.1.
3. Disconnect both drive axle shafts to prevent damage to the transmission. Plug axle tubes to prevent oil loss. Refer to 2.1.3 DRIVE AXLE FLANGE SHAFT REMOVAL.

## CAUTION

The axle shafts must be disconnected to avoid serious damage to the Allison transmission. Lubrication is inadequate when towing.

To prevent damage to the drive train components, disconnect drive axle shafts before towing. Do not attempt to push or pull start a vehicle equipped with an automatic transmission.

**Failure to disconnect the propeller shaft, remove the drive axle shafts or lift the drive wheels off the ground before towing can cause serious transmission damage and void the warranty.**

### 2.2.1 First Lift

To allow lifting equipment fitted with axle forks to reach under the front axle or tow eyes, it is necessary to perform a first lift of the front of the vehicle using the tow eye pads as lifting points. This first lift will allow tow cans or blocks to be placed underneath front tires.

1. Retract the tow truck stinger arm.
2. On the first lift, position the tow bar fork holders under the front tow eye pads (Figure 30 and Figure 31) to lift the vehicle in order to place the front wheels firmly on the tow cans or blocks.

*Center to center measurement between tow eyes= 37 inches (*Figure 29*)*

***Note: No axle forks are needed for this first lift***




**FIGURE 29**

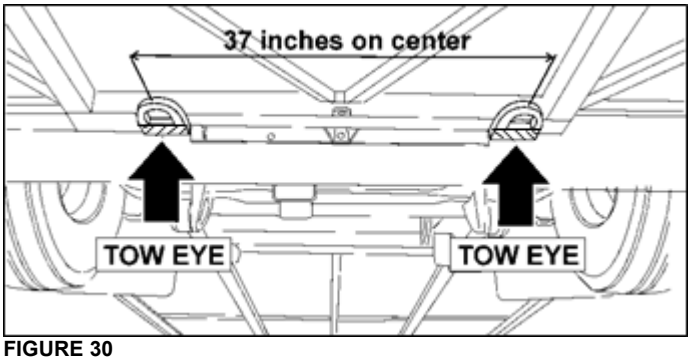


**FIGURE 30**



**FIGURE 31:** TOW EYE

3. Deploy the tow truck stinger arm, placing the axle fork holders under the tow eye pads (Figure 32).

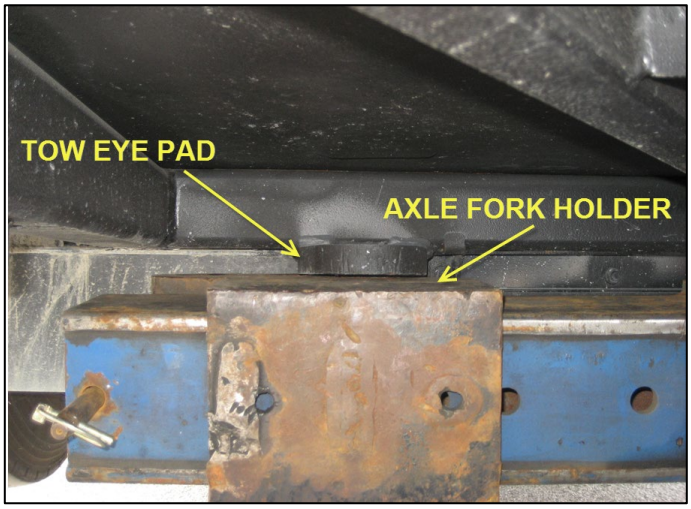


**FIGURE 32**

4. Lift the front end of the vehicle high enough to allow installation of tow cans or blocks. Place the tow cans or blocks perfectly centered underneath each front wheel (Figure 33).
5. With precaution, lower the front of the vehicle



**FIGURE 33**

### 2.2.2 Second Lift- Front Tow Eye Pads as Lifting Point for Towing

The tow eye pads are fixed to the vehicle chassis, fore of the front axle will be used as front end lifting points for towing.

1. Perform the first lift as instructed in paragraph 2.2.1 if not already done.

2. Place the axle forks on the tow bar fork holders (Figure 34).

**Use 3" to 4 ½" mouth axle forks preferably**



**REGULAR**

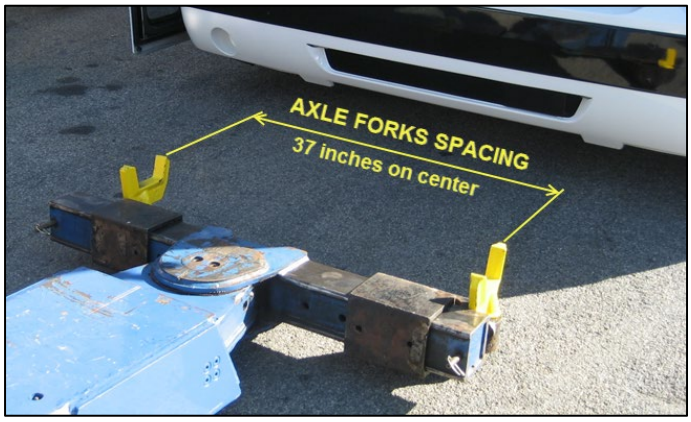


**FIGURE 34**

***Pre-adjust spacing between axle forks to = 37 inches***

3. Lower the tow bar and position under the front tow eye pads.

4. Adjust fork holder's position and hand guide the forks into each front tow eye. (Figure 35)

5. Lift the tow bar until the axle forks fit snugly into the front tow eyes (Figure 35).

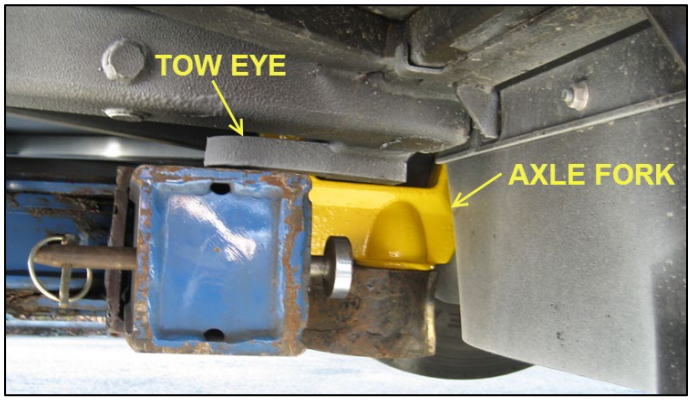


**FIGURE 35**

6. Raise the front of the vehicle.

7. Install a jack stand under the stinger arm for support and safety purposes and then lower the stinger arm so it rests on the jack stand (Figure 36). The tow cans or blocks can be removed from under the front axle wheels.

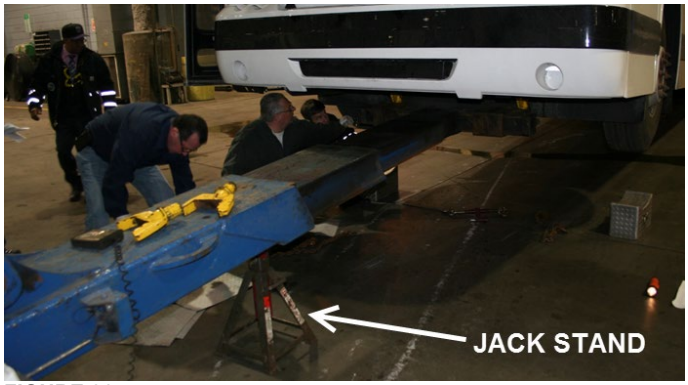


**FIGURE 36**

8. Tie the two choke chains together to secure the tow eyes to the tow bar attachment (Figure 38).

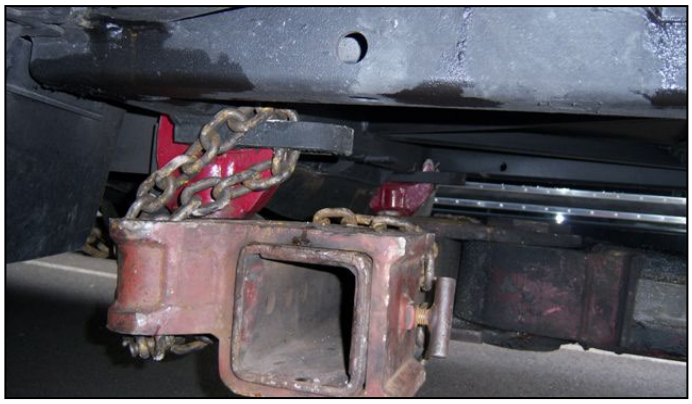

**FIGURE 37**

9. Attach the two tow truck safety chains from each of the two front lower radius rods (Figure 38) of the vehicle to the truck's tow eyes (Figure 38).



**FIGURE 38**

10. Confirm air is supplied to the vehicle. See 2.1 PREPARATION BEFORE TOWING



**FIGURE 39**

11. Raise the stinger arm and remove the support jack stand.
12. Lower the vehicle. The front tires should be 7″ to 8″ above the ground before the tow can proceed.
13. Use bungee cords to support the safety chains (Figure 40).



**FIGURE 40**

14. If required, use the appropriate jig to assure that the highest point on the vehicle **does not exceed** the maximum allowable height for towing (Figure 41).
15. Make sure the **parking brake** is released before moving the vehicle.
16. Observe safety precautions when towing.



**FIGURE 41**

***Avoid sharp turns where possible as safety chains may rub and damage the front bumper (***Figure 42***)***



**FIGURE 42**

### 2.2.3 Second Lift- Using I-Beam Front Axle as Lifting Point for Towing

This method uses the I-beam axle as lifting points for towing (Figure8 and Figure9).

1. Perform the first lift as instructed in paragraph 2.2.1 if not already done.

2. Install regular axle forks onto tow bar fork holders.



TALL REGULAR

***Pre-adjust spacing between axle forks***

Minimum spacing: 25 inches

Maximum spacing: 33 inches

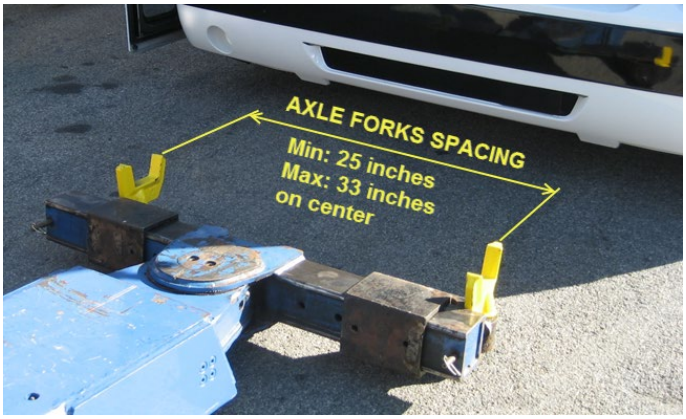


**FIGURE 43**

3. Lower the stinger arm to position the axle forks under the front axle hoisting points (Figure8 and Figure9).

4. Lift the tow bar until the axle forks grab the front axle I-beam at the hoisting points (Figure 44).

5. Raise the front of the vehicle.

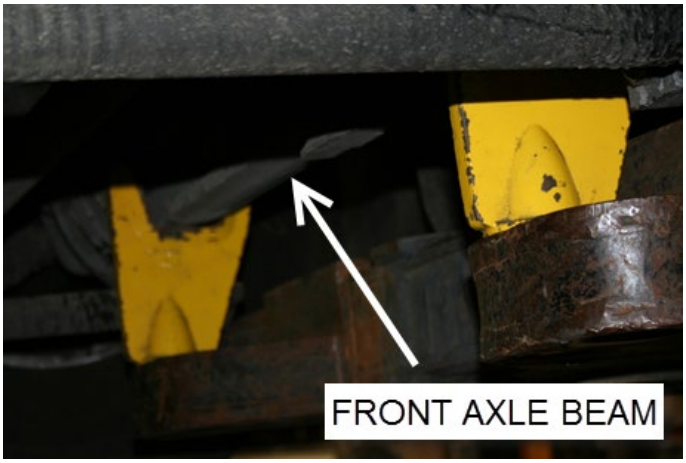


**FIGURE 44**




**FIGURE 45**

6. Install a jack stand under the stinger arm for support and safety purposes and then lower the stinger arm so it rests on the jack stand (Figure 47). The tow cans or blocks can be removed from under the front axle wheels.
7. Tie the two choke chains together to secure the front axle to the tow bar. Take up any slack that may remain and maintain proper tension on chains.

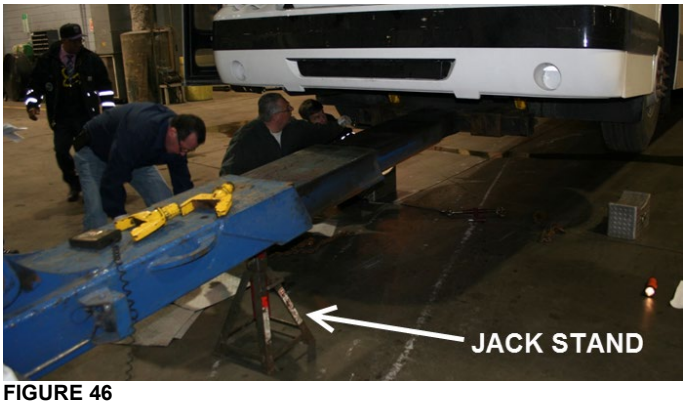

**FIGURE 46**

8. Attach the two tow truck safety chains from each of the two front tow eyes of the vehicle to the truck's tow eyes (Figure 47 and Figure 48).
9. Confirm air is supplied to the vehicle. See 2.1 PREPARATION BEFORE TOWING.


**FIGURE 47**

10. Raise the tow bar in order to remove the jack stand from under the stinger arm.
11. Lower the vehicle. The front tire should be about 7″ to 8″ above the ground before the tow can proceed.


**FIGURE 48**

12. Use bungee cords to support the safety chains (Figure 49).



**FIGURE 49**

13. Make sure that the **parking brake** is released before moving the vehicle.
14. Observe safety precautions when towing.




**FIGURE 50**

***Avoid sharp turns where possible as safety chains may rub and damage the front bumper (***Figure 51***)***



**FIGURE 51**

**CAUTION**

Make sure a safe distance is kept between the front of the vehicle and the tow truck. This space ensures that vehicle does not suffer damages when being towed.

**CAUTION**

Make sure axle shafts or driveshaft are installed correctly after towing. Tighten axle shaft and driveshaft nuts to the correct torque settings. Do not invert shafts.

**DANGER**

Do not carry passengers while the vehicle is being towed.

## 2.3 X-SERIES RECOVERY USING OPTIONAL REAR TOW EYES

Optional rear tow eyes allow recovery of a vehicle that is no longer on a drivable surface. Chains can be looped around or hooked to these rear tow eyes.

**CAUTION**

This recovery method should be used only for a short distance with all vehicle wheels on the ground

After the vehicle has been brought back on a drivable surface, it should be lifted and towed from the front, with front wheels off the ground.

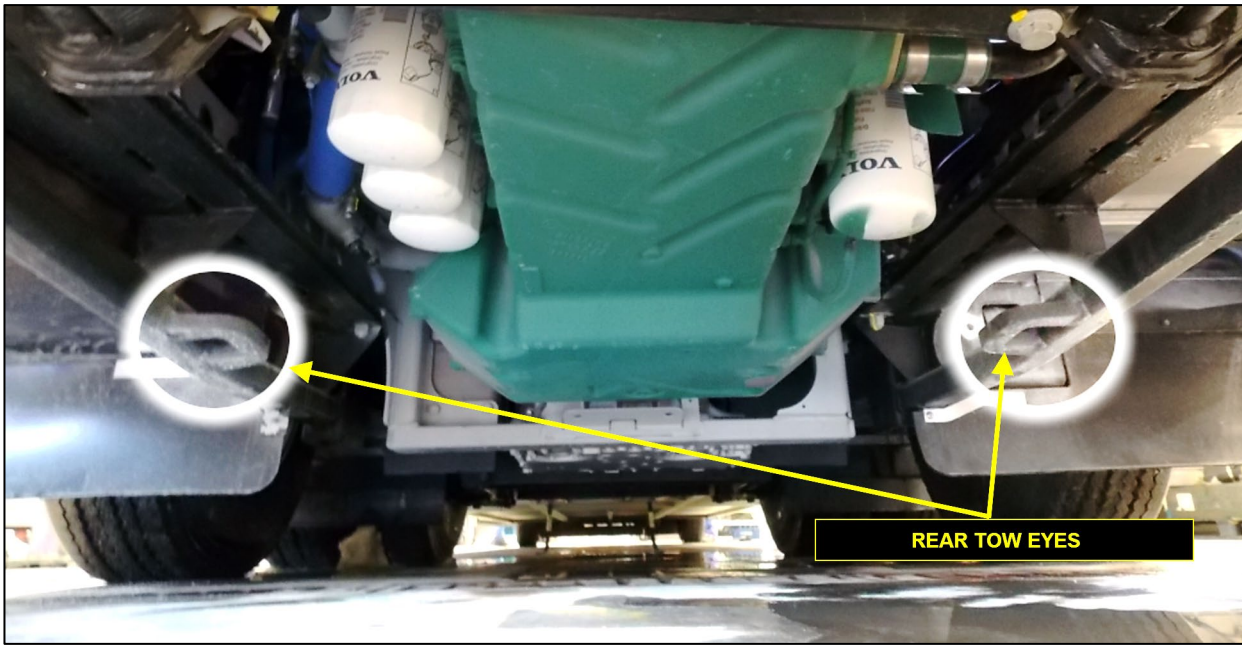


**FIGURE 52 :** OPTIONAL REAR TOW EYES ON SIDE MEMBERS UNDER ENGINE CRADLE SUPPORT RAILS

## 3. EMERGENCY TOWING

If the vehicle must be moved and standard towing procedures cannot be used, follow the alternate towing procedures below.

### 3.1 REAR TOW USING NON-APPROVED LIFTING POINTS - *EMERGENCY ONLY*

> **CAUTION**
>
> The vehicle should **NOT** be lifted and towed from the rear in normal situations.
>
> In an emergency, however, it can be moved from the rear over a very short distance such as in a parking lot or to place the vehicle back on pavement.
>
> Lifting the rear end from the engine cradle or from the side members located under the engine cradle support rails should be avoided. Doing so may cause structural damage (see image further in this document).

#### 3.1.1 PRECAUTIONS

**In an emergency or if the vehicle has to be moved over a short distance, the side members may be used as lifting point. Try to lift from the strongest location along the side members which is near the rear sub-frame vertical member (**Figure 53**).**

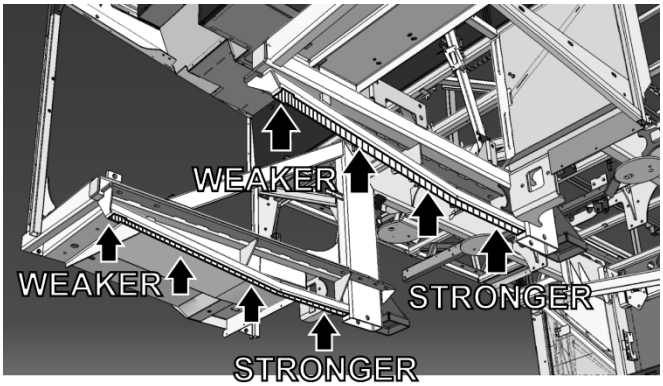


**FIGURE 53**: UNAPPROVED LIFTING POINTS FOR REAR END TOWING – SIDE MEMBERS LOCATED UNDER THE ENGINE CRADLE SUPPORT RAILS

Lift with precautions as the vehicle may sustain structural damage at the vertical structure shown on the image at right (Figure 54).

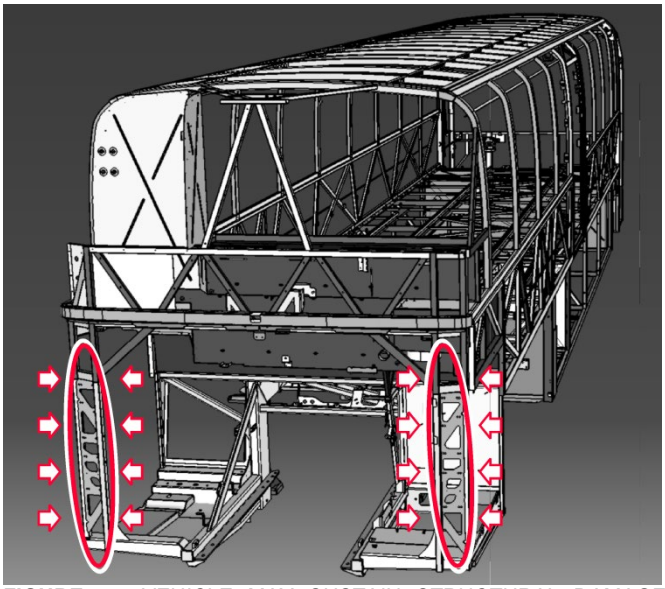

**FIGURE 54**: VEHICLE MAY SUSTAIN STRUCTURAL DAMAGE WHERE INDICATED WITH ARROWS DURING TOWING FROM THE REAR

**DANGER**

Do not carry passengers while the vehicle is being towed.

### 3.1.2 FIRST LIFT

A first lift of the vehicle is required. This first lift will allow tow cans or blocks to be placed underneath the drive axle tires.

1. Prepare the vehicle for towing as instructed in paragraphs 2.1 and 2.1.1
2. If not already done, chock the front wheels.
3. Retract the tow truck stinger arm (Figure 55).
4. Pre-adjust spacing between the axle fork holders. The spacing between the most distant edges of the folk holders should be **30 inches** (Figure 55).

   ***No axle forks will be used for this first lift***



TALL REGULAR

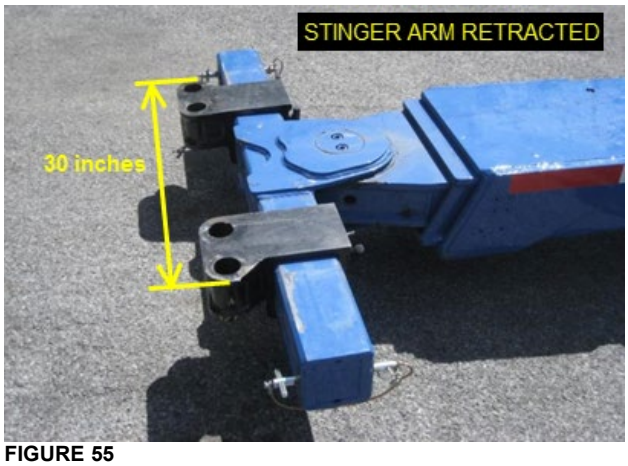


FIGURE 55

5. Deploy the tow truck stinger arm. Place the fork holders under the engine cradle transverse beam as shown on Figure 56. Lift the tow bar until the fork holders come into contact with the cradle transverse beam.

   ***Lifting from the engine cradle is the least preferred option and should be done only if lifting from under the side members shown on*** Figure 53 ***cannot be achieved***

**CAUTION**

Remember, lifting the rear end from the side members located under the engine cradle or by the engine cradle itself may cause structural damage.

**CAUTION**

Use caution when lifting from the engine cradle transverse beam. Maintain the vehicle in that situation during the shortest period of time.




FIGURE 56

6. Raise the tag axle to prevent it from hanging unsupported.

7. On X-Series commuter vehicles only, the tag axle air valve lever is located in the front service compartment. Move it forward as shown on Figure 57.

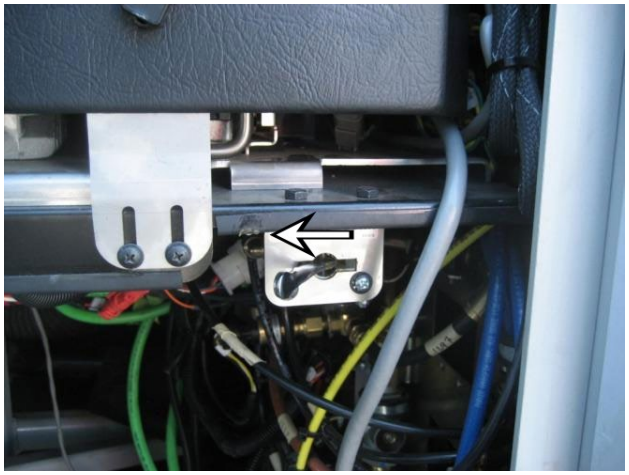

**FIGURE 57:LOCATION OF COMMUTER TAG AXLE AIR VALVE**

8. Lift the rear end of the vehicle high enough to allow installation of tow cans or blocks underneath the drive axle wheels (Figure 58).
9. With precautions, lower the rear of the vehicle.



**FIGURE 58: TOW CAN**

### 3.1.3 SECOND LIFT

1. Perform the first lift as instructed in paragraph 3.2 if not already done.
2. Retract the tow truck stinger arm.
3. Pre-adjust spacing between the axle fork holders to **43 inches**.




**FIGURE 59**

4. Install either long or short axle forks into fork holders.

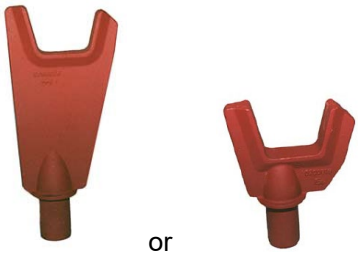

**TALL** or **REGULAR**

5. Deploy the tow truck stinger arm. Place the axle forks under the rear tow eyes if equipped or under the side members (Figure 60).

   Place the forks in a transversal position i.e. perpendicularly to the side members (Figure 61).

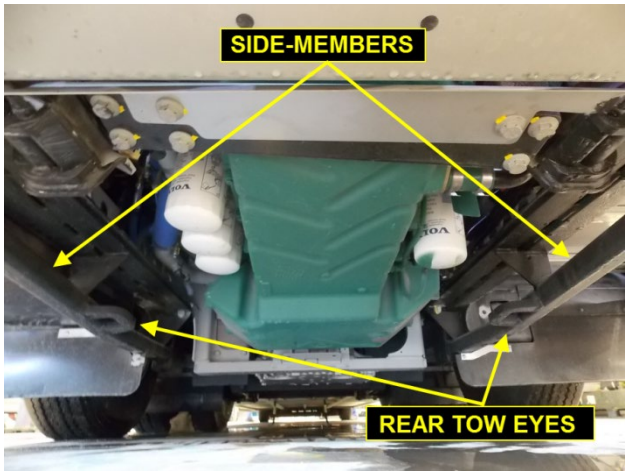


**FIGURE 60:** REAR TOW EYES ON SIDE MEMBERS LOCATED UNDER ENGINE CRADLE SUPPORT RAILS

6. Lift the tow bar until the axle forks grab the side members (Figure 61).

   If equipped with rear tow eyes, lift the tow bar until the axle forks fit snuggly into the side-members tow eyes.

   ***Avoid lifting at the side-members further toward the rear of the vehicle (close to the bumper)***

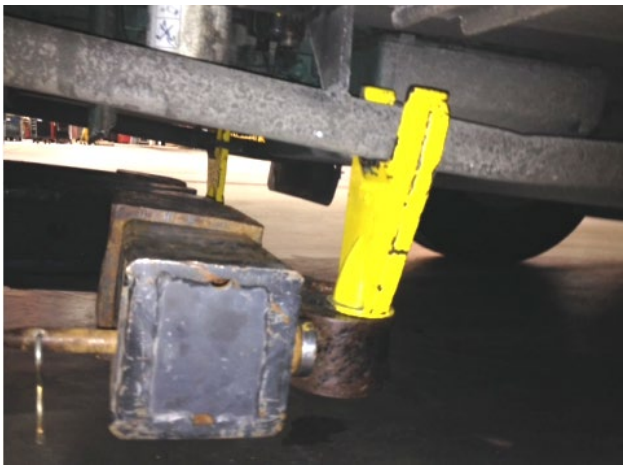

**FIGURE 61 :** PROPER LOCATION WHEN LIFTING THE SIDE MEMBERS

7. Place the fork's shorter finger outboard for better clearance (see Figure 62).




**FIGURE 62 :** PROPER LOCATION WHEN LIFTING THE SIDE MEMBERS – VEHICLE EQUIPPED WITH REAR TOW EYES

8. Raise the rear of the vehicle.
9. Install a jack stand under the stinger arm for support and safety purposes and then lower the stinger arm so it rests on the jack stand (Figure 63). The tow cans or blocks can be removed from under the drive axle wheels.



**FIGURE 63**

10. Install the choke chains. Tie the two choke chains together to secure the side members to the tow bar (Figure 64 and Figure 65). Take up any slack that may remain and maintain proper tension on chains.



**FIGURE 64**

11. Shorten the stinger arm to the safest minimum distance between the vehicle and the tow truck to allow the towed vehicle to be as close as possible to the truck yet allowing enough room for the vehicle to avoid collision with the tow truck during turns.

    **Stinger to the rear bumper: Between 59″ and 63″**



**FIGURE 65**

12. Attach the two tow truck safety chains from the vehicle engine cradle cross-member to the truck's tow eyes (Figure 66).
13. Raise the stinger arm and remove the support jack stand.
14. Lower the vehicle. The drive axle tires should be 5″ to 6″ above the ground before the short distance tow can proceed.



**FIGURE 66**

### 3.2 VOLVO *I-SHIFT* TRANSMISSION *TOWING MODE*

The procedure will activate "*tow mode"* on the transmission and will allow the vehicle to be towed flat on all wheels without having to remove the driveshaft.

| **CAUTION** |
|---|
| Check vehicle **VIN** before starting. Earlier vehicles do not have the proper software. |

**This special procedure applies to:**

| Model | VIN   |
|---|---|
| All X Series Vehicles<br>Model Year : 2014 - | *With I-shift gearbox*<br>From 2PCG33497**E**C73**5459** up to Current Vehicles |
| All H Series Vehicles<br>Model Year : 2013 - | *With I-shift gearbox*<br>From 2PCH33499**D**C71**2364** up to Current Vehicles |

| **CAUTION** |
|---|
| **Forward towing only!** Reverse towing (backing-up) is not allowed with this procedure or damage to the gearbox will occur. |

| **CAUTION** |
|---|
| This procedure should be used in emergency only.<br>This procedure does not have any visual indicator, therefore, make sure all steps of the procedure are fulfilled, or transmission damage may occur. |

Towing gear **3 HR** will be engaged if conditions below are fulfilled in the following sequence:

- **A.** *Ignition key must be in the "**ON**" position*
- **B.** *Engine not running*
- **C.** *Adequate **air pressure to the gearbox**/ Vehicle must have **electrical power***
- **D.** *Shift pad must be in **neutral***
- **E.** *Vehicle must be towed FORWARD only*

## PARTS / WASTE DISPOSAL

Discard according to applicable environmental regulations (Municipal/State[Prov.]/ Federal)

*Access all our Service Bulletins on http://techpub.prevostcar.com/en/*
*Or scan the QR-Code with your smart phone*
*.*

**Are you a vehicle owner?**
*E-mail us at **technicalpublications_prev@volvo.com** and type "ADD" in the subject to receive warranty bulletins applicable to your vehicle(s) by e-mail.*

PREVOST

# MAINTENANCE INFORMATION

**MI23-03**

| | | |
|---|---|---|
| DATE : | May 2023 | SECTION : 18 BODY |
| SUBJECT : | **DASHBOARD COVERS REMOVAL PROCEDURE** | |

First Release 05-31-2023

## APPLICATION

| Model | VIN  |
|---|---|
| H3-45 coaches<br>Model Year: 2024 - … | From 2PCH3349X***R***C72***1453*** |
| H3-45 VIP motorhomes<br>Model Year: 2023 - … | From 2PCVS3499***P***C72***1348*** |

## DESCRIPTION

Perform the following procedure to remove the dashboard covers. Reinstallation is similar to removal but in reverse order.

## Table of contents


SAFETY PRECAUTIONS....2
PART 1 - INSTRUMENT PANEL COVER REMOVAL....3
PART 2 - DASHBOARD COVER REMOVAL....5
PART 3 - RIGHT SIDE OF THE DASHBOARD – ACCESS PANEL REMOVAL....7
PART 4 - RIGHT SIDE OF DASHBOARD REMOVAL....9

## SAFETY PRECAUTIONS

- Eye protection should always be worn when working in a shop.
- Rules for Personal Protection Equipment should always be respected. Wear your PPE including but not limited to the following:

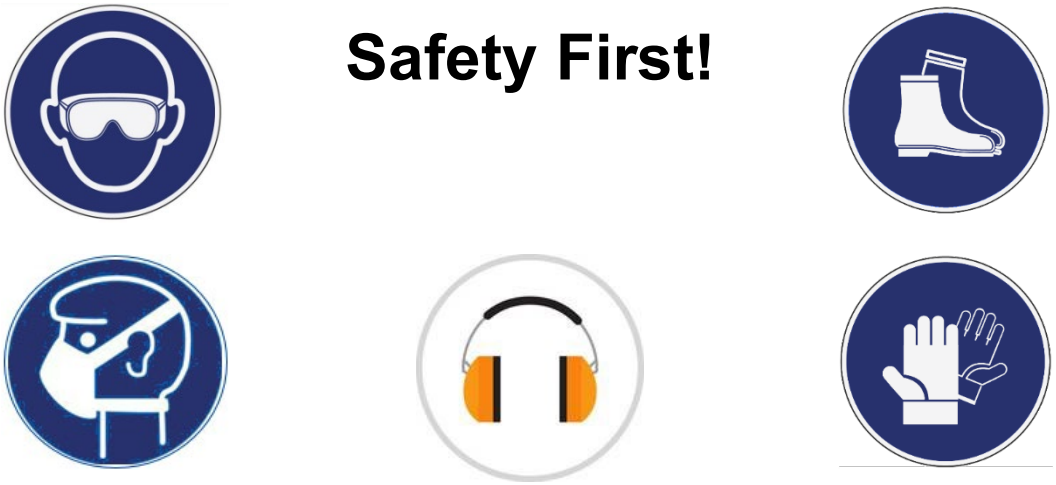


**DANGER**

Park vehicle safely, apply parking brake, stop the engine. Prior to working on the vehicle, set the ignition switch to the OFF position and trip the main circuit breakers equipped with a trip button. On Commuter type vehicles, set the battery master switch (master cut-out) to the OFF position.

Lockout & Tag out (LOTO) must be performed during set-up, maintenance or repair activities. Refer to your local procedure for detailed information regarding the control of hazardous energy.

# PART 1 - INSTRUMENT PANEL COVER REMOVAL

1. From underneath the instrument panel cover, unscrew two (2) socket hex screws.

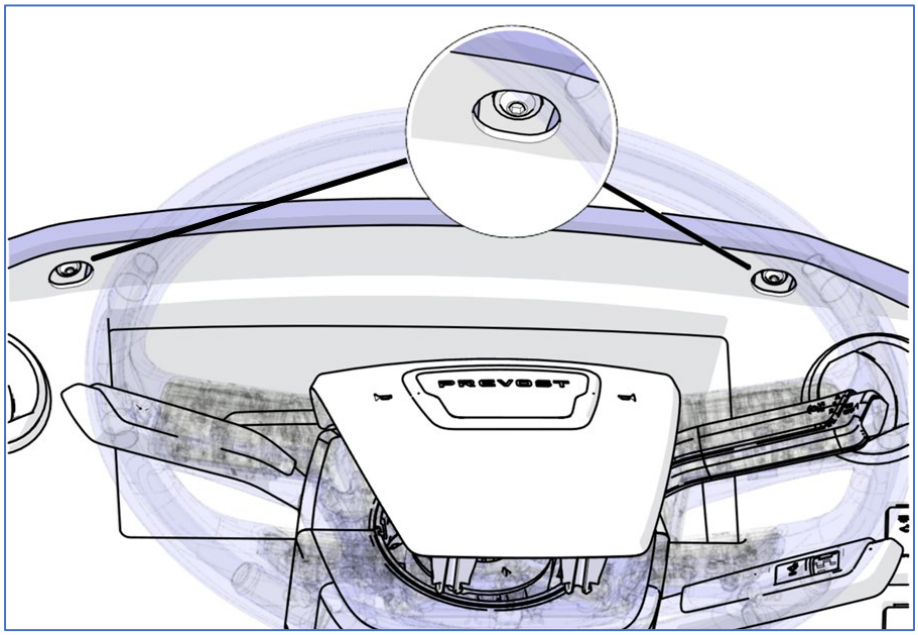


FIGURE 1

2. Look at the following image to understand how the instrument panel cover is held in place with flexible tabs close to the windshield.

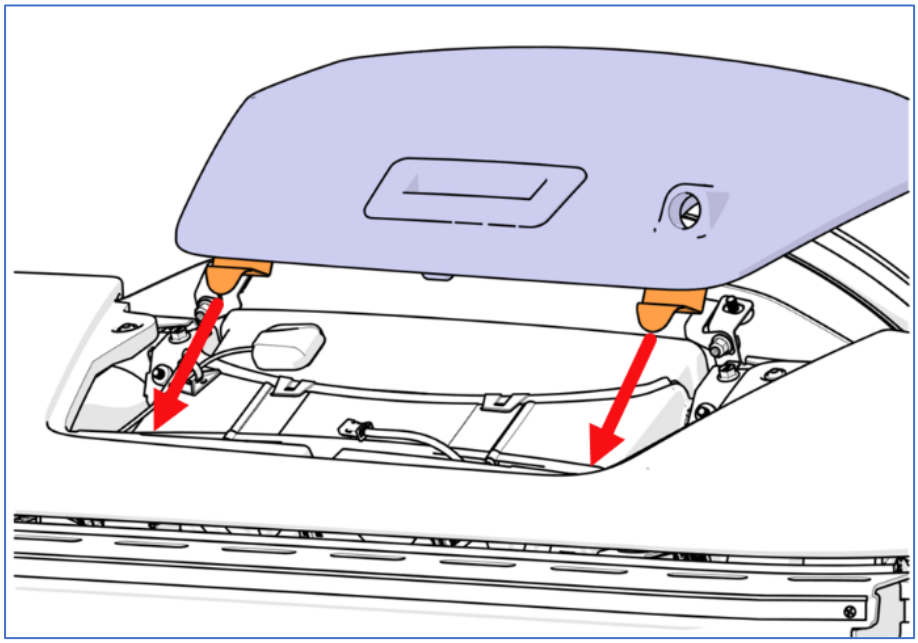

FIGURE 2

3. Lift the edge of the instrument panel cover with a light force then pull the cover toward you.

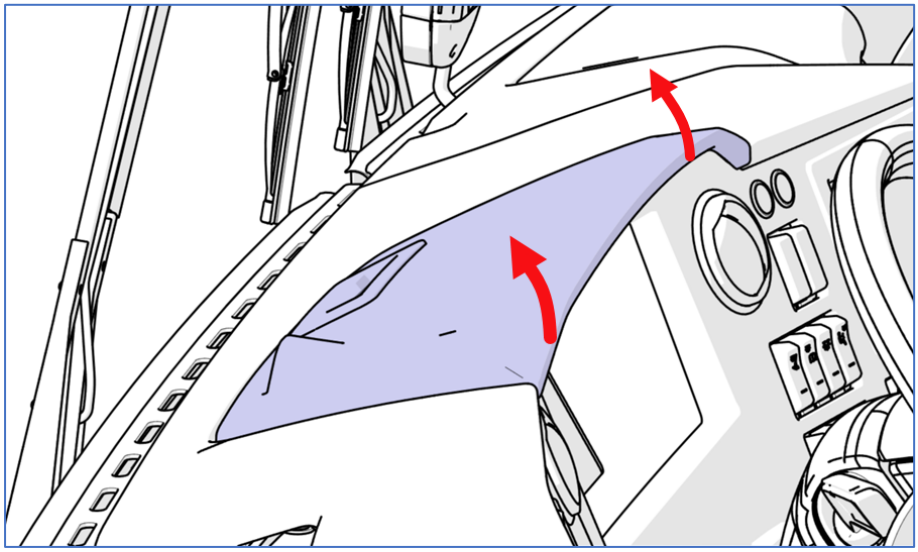

FIGURE 3

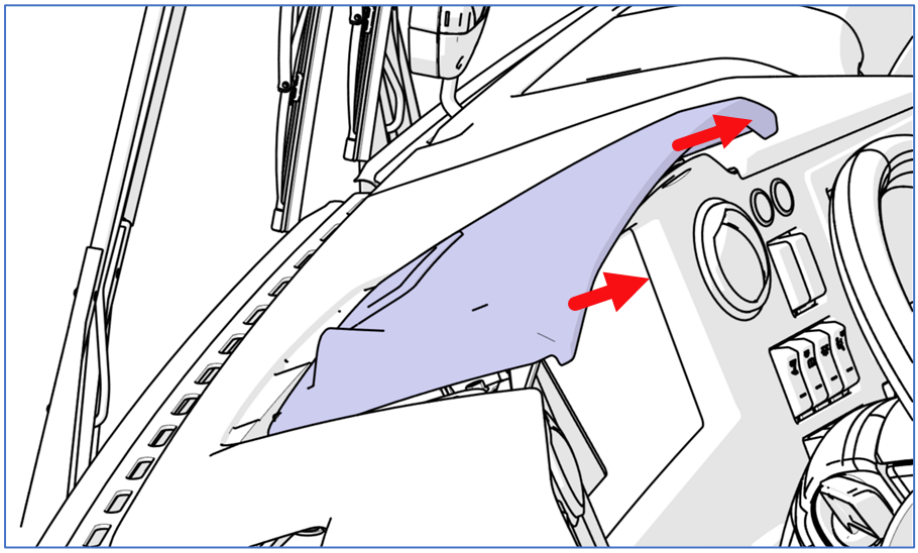

FIGURE 4

## PART 2 - DASHBOARD COVER REMOVAL

1. Remove the three (3) screws shown on the image below.

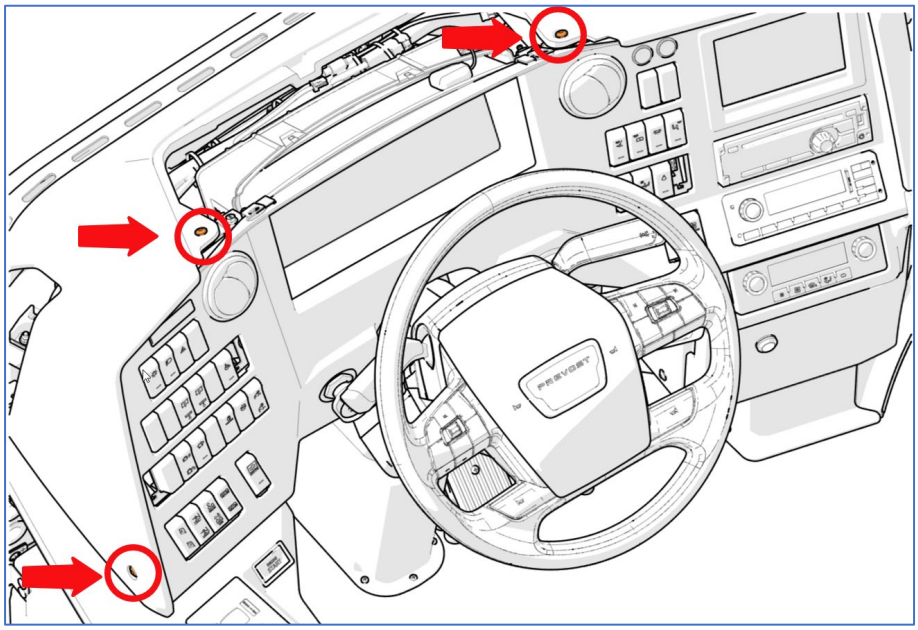

FIGURE 5

2. Unsnap the dashboard cover at the five (5) points identified on the image below.

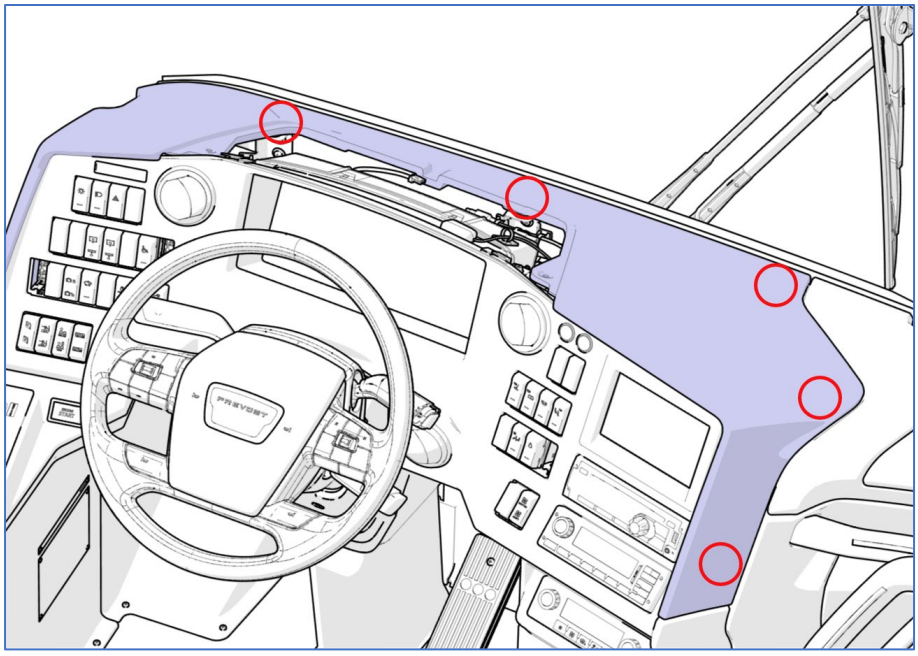

FIGURE 6

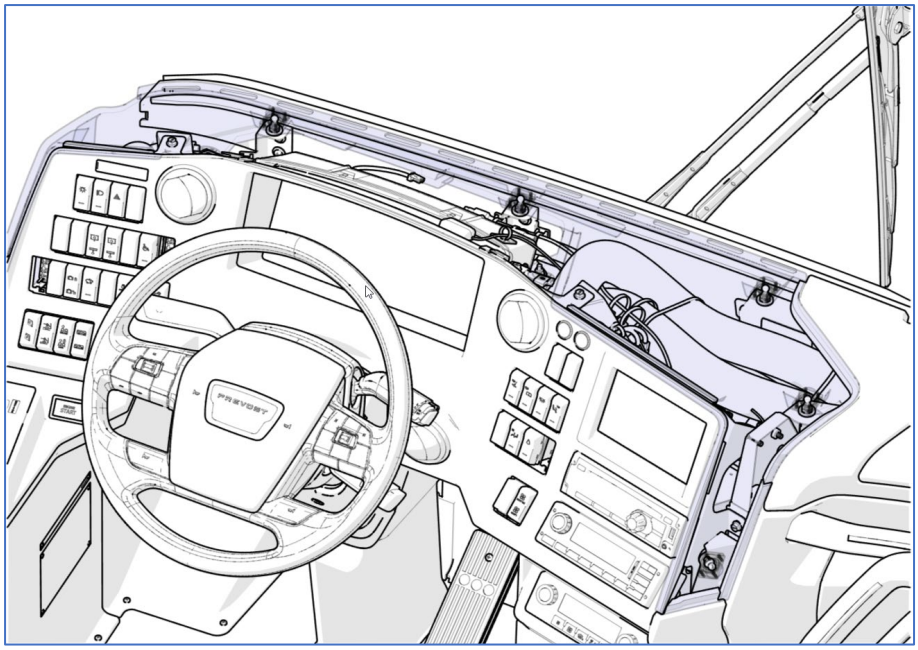

FIGURE 7

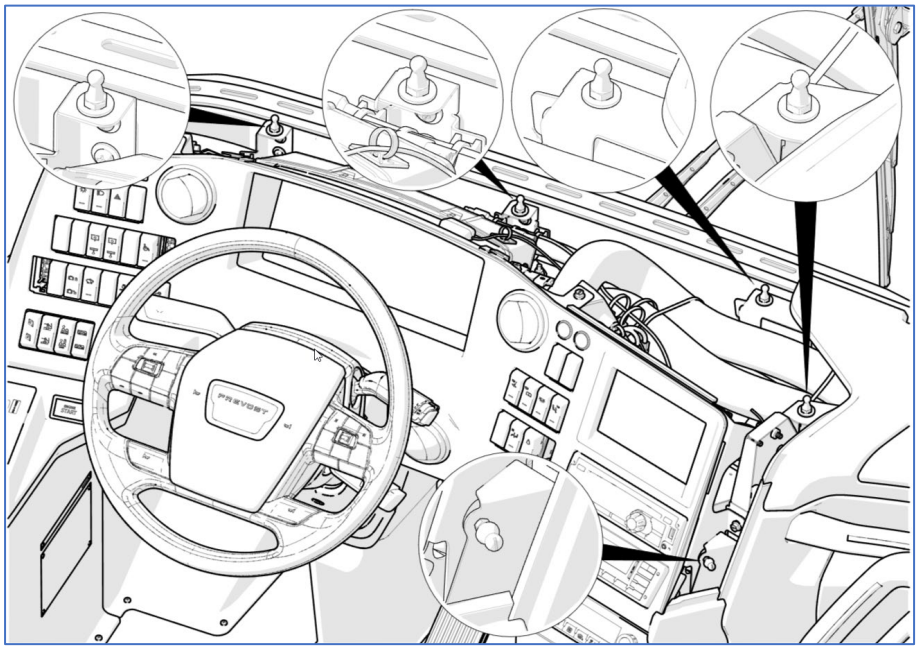

FIGURE 8

# PART 3 - RIGHT SIDE OF THE DASHBOARD – ACCESS PANEL REMOVAL

1. The panel on the right side of the dashboard is secured with fasteners as seen on the images below.

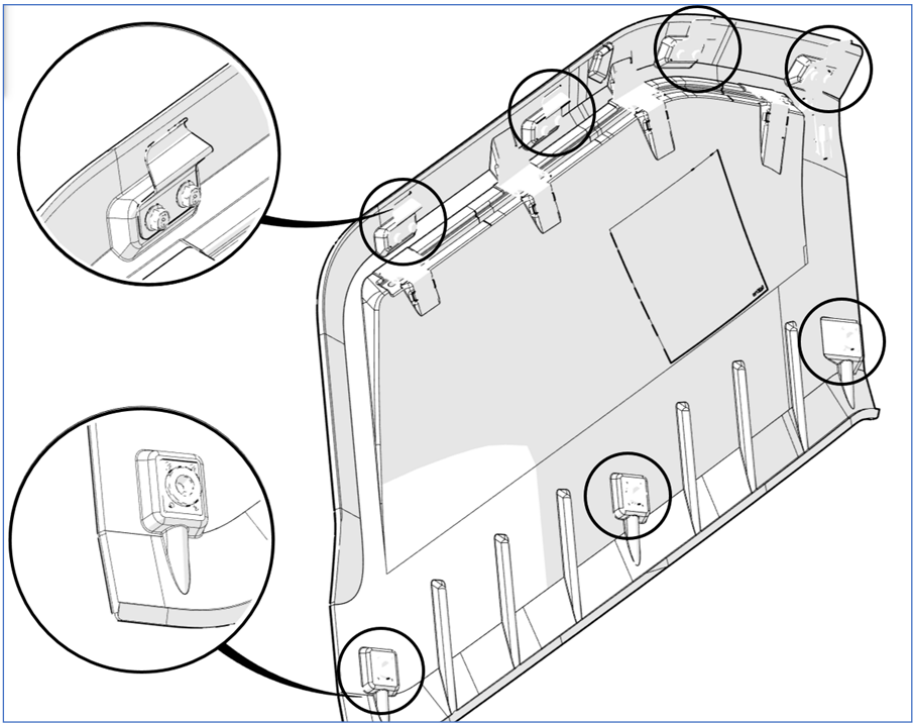

FIGURE 9: ATTACHMENT POINTS AT THE BACK OF THE PANEL

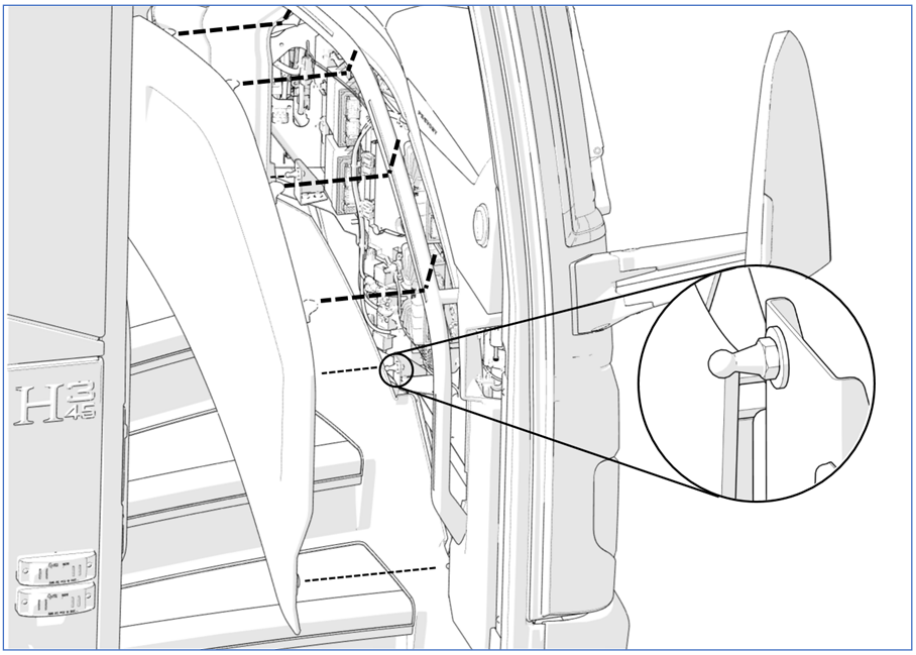

FIGURE 10

2. To remove the panel, pull (unsnap) the bottom of the panel in three (3) places by pulling toward you and then pull the panel down to disengage the top.

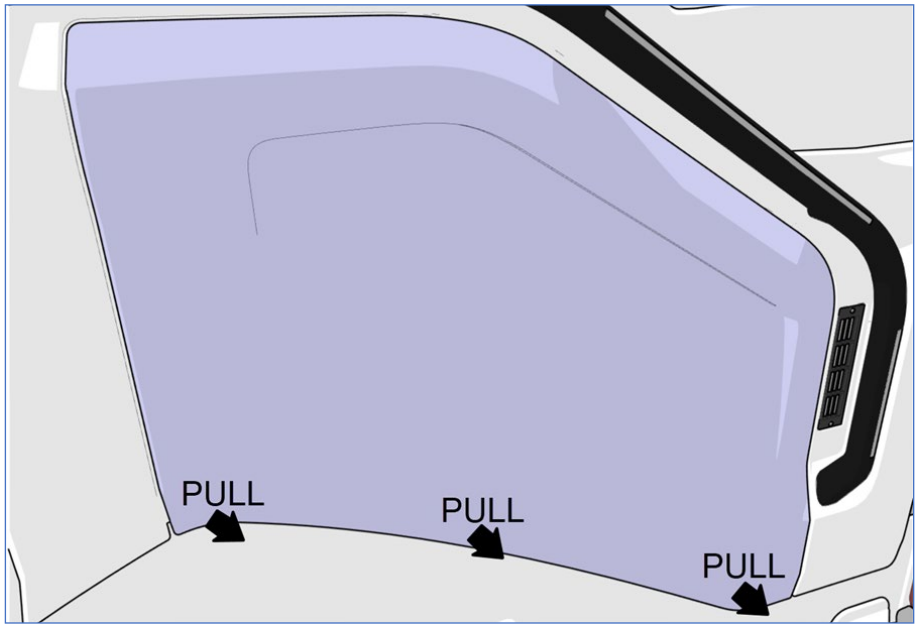


FIGURE 11

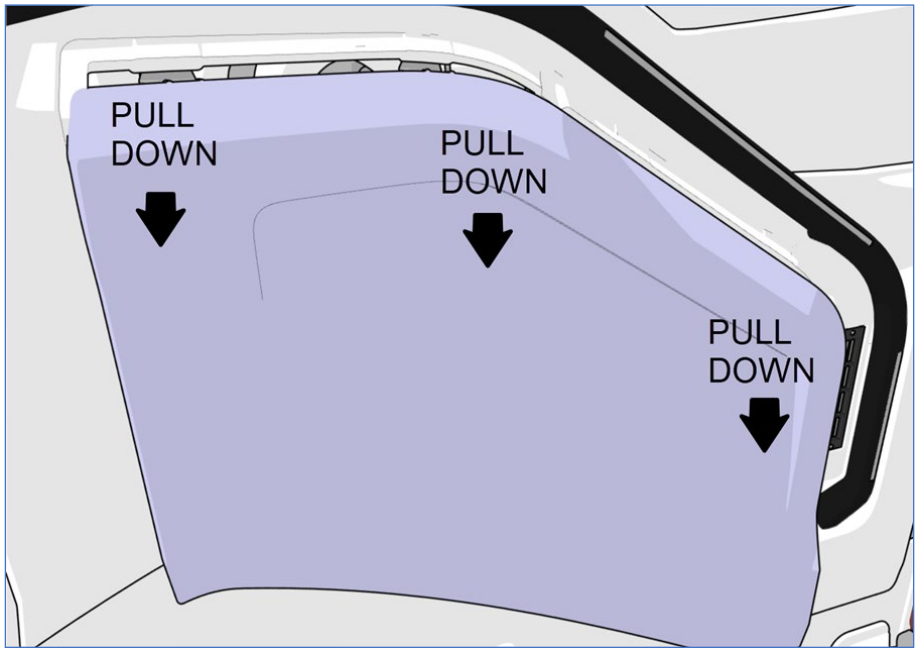


FIGURE 12

# PART 4 - RIGHT SIDE OF DASHBOARD REMOVAL

1. Perform Part 1, 2 & 3.
2. Remove the three (3) screws shown on the image below.

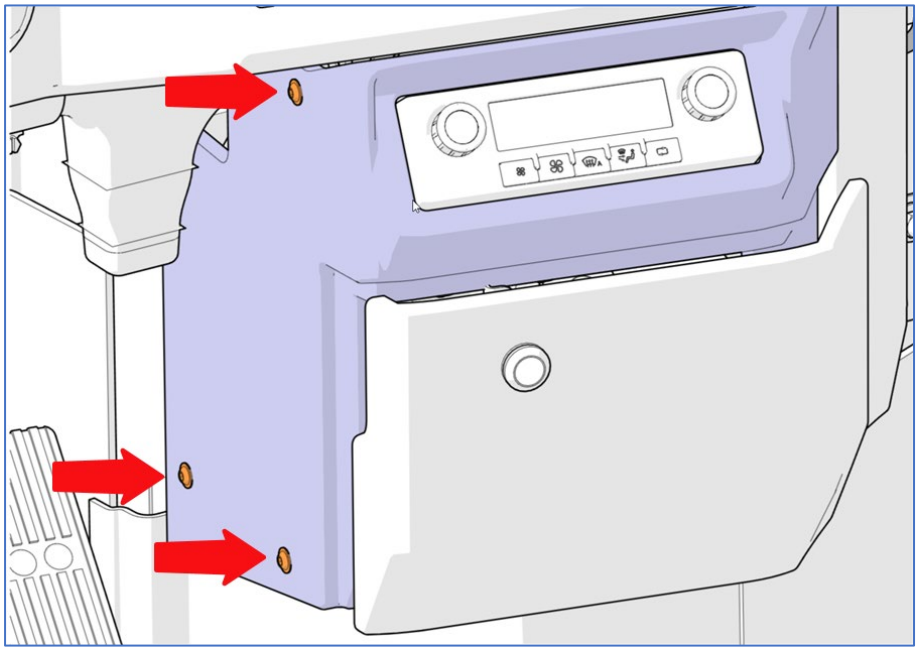

FIGURE 13

3. Remove the screw shown on the image below.

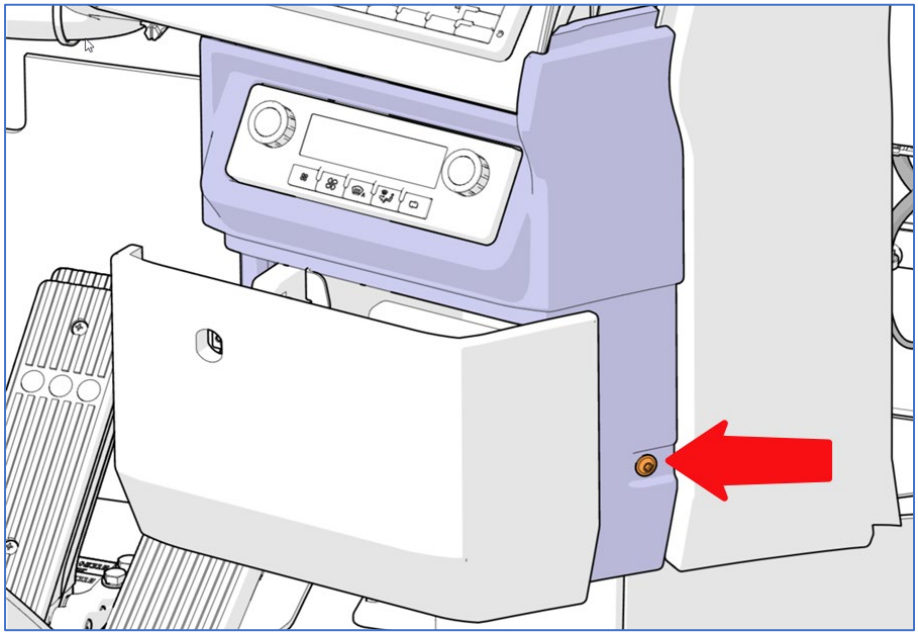

FIGURE 14

4. Open the utility compartment.

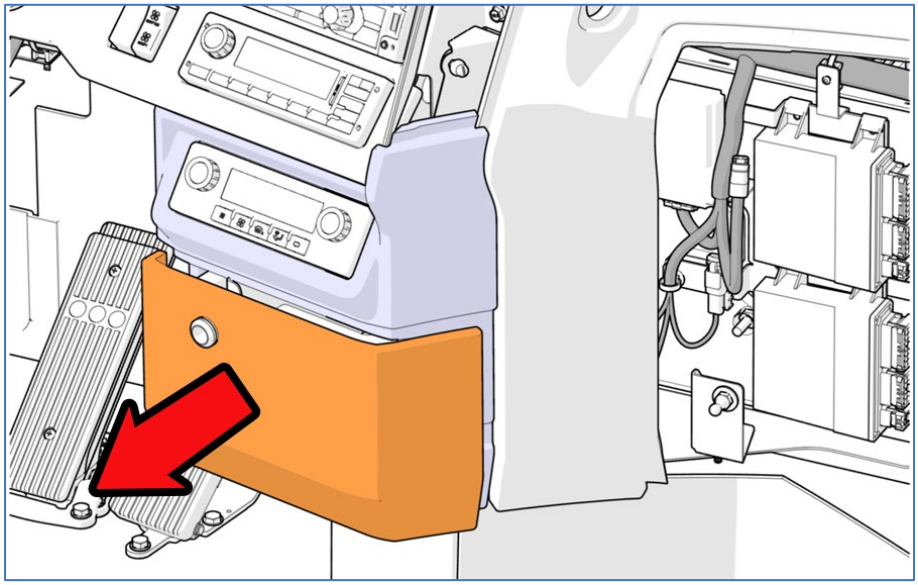

FIGURE 15

3. Unsnap the trim at the attachment point identified on the images below.

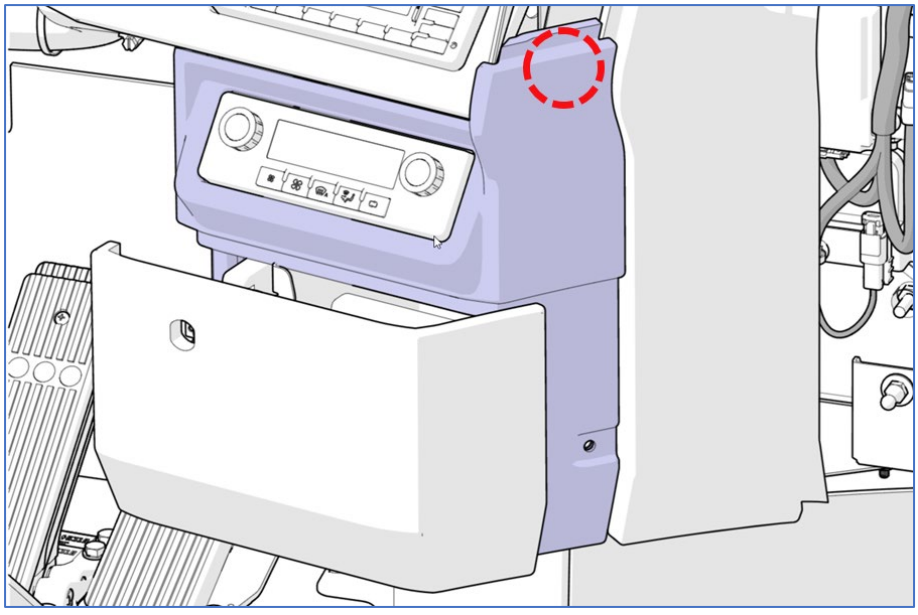

FIGURE 16



FIGURE 17

5. Pull the trim to uncover the circled area shown on the image below.

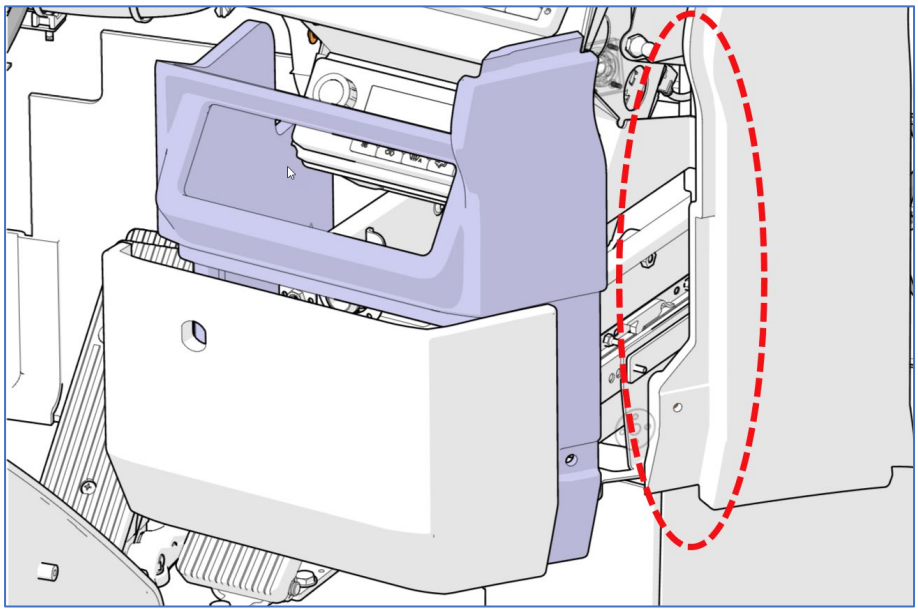

FIGURE 18

6. Disconnect the hose shown on the image below.

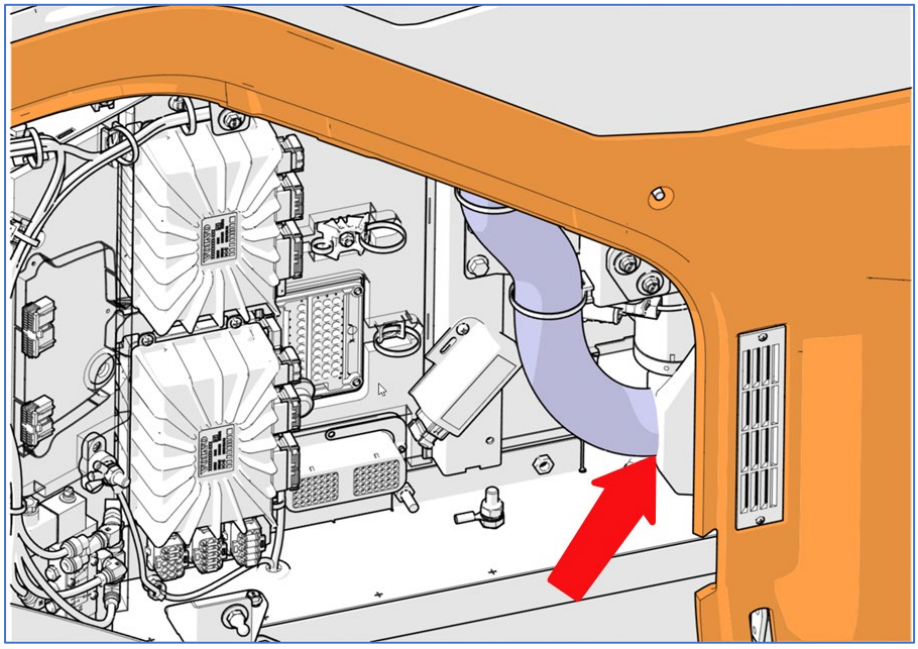

FIGURE 19

7. Remove the handrail. To do so, remove the three (3) cap screws shown on the image below.

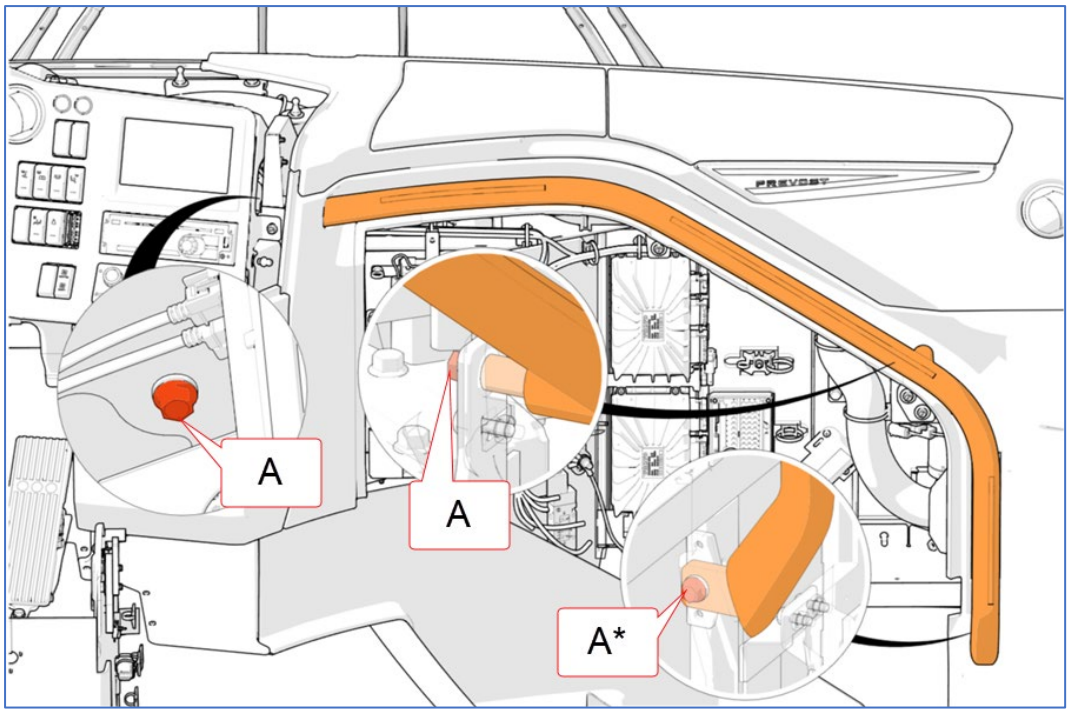


FIGURE 20

***A= cap screw + washer TORQUE 14 lb-ft***

***A*= cap screw + washer + square plate TORQUE 14 lb-ft***

8. Remove the panel shown on the image below. To do so, perform the following steps.

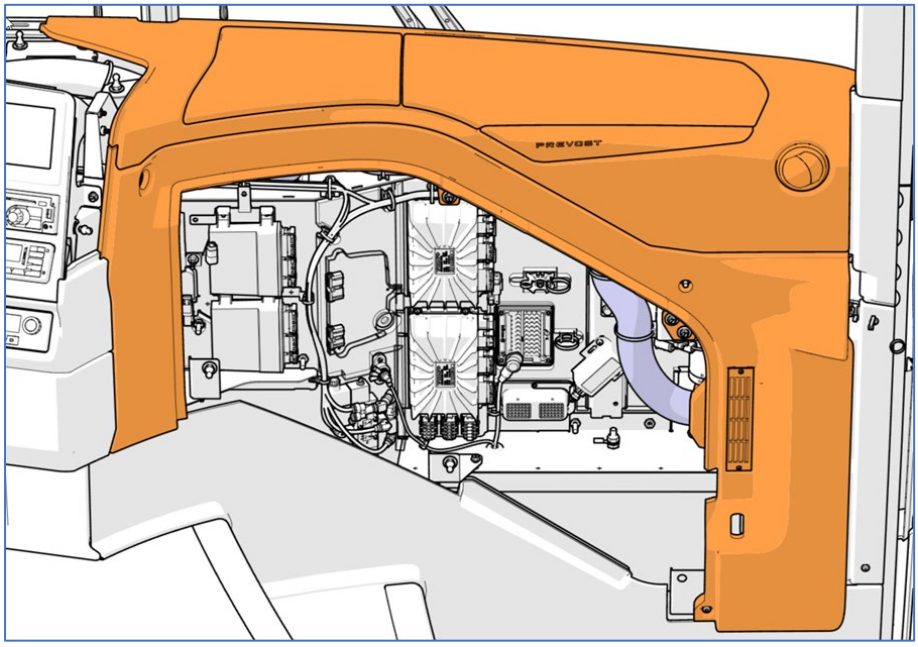

FIGURE 21

9. Remove the four (4) fasteners shown on the image below.

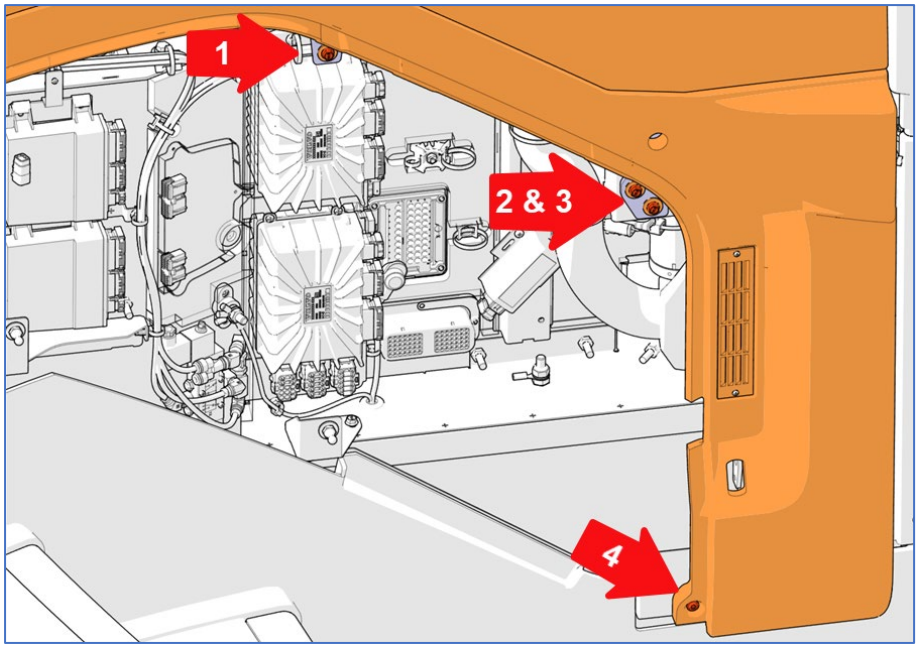


FIGURE 22

10. To remove the panel, first, remove the screw shown on the image below. ***NOTE: The panel is shown "ghosted" on the image to allow localization of the screw.***

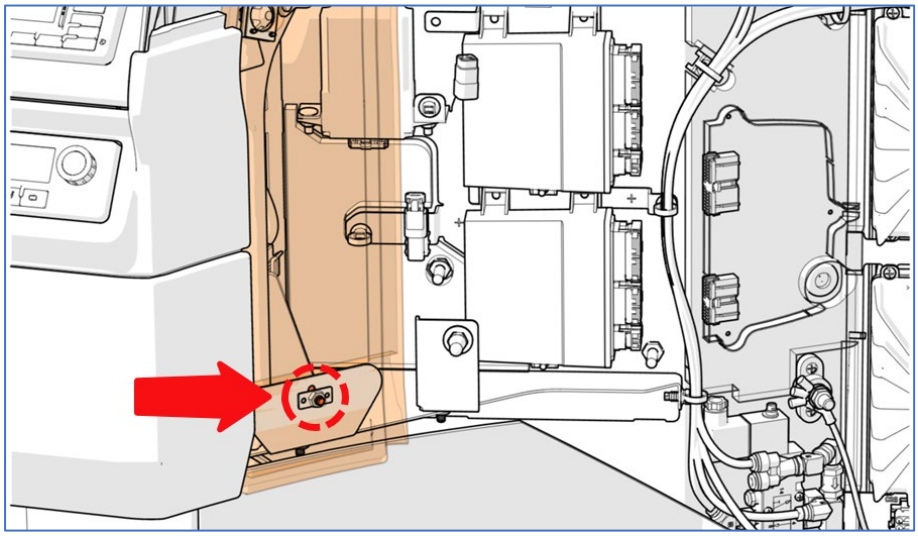

FIGURE 23

11. To remove the panel, first, remove the two (2) screws identified on the images below.

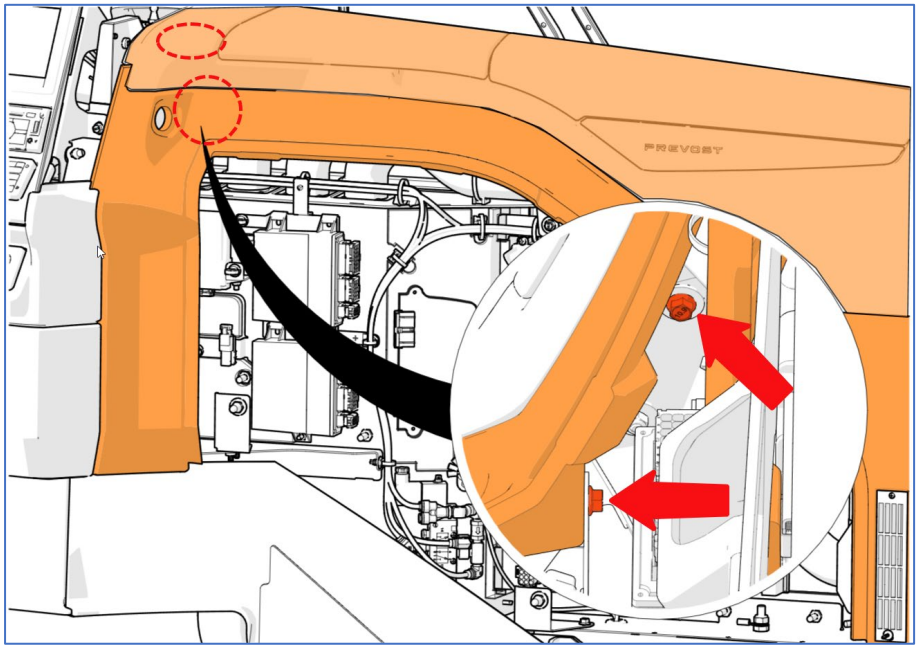

FIGURE 24

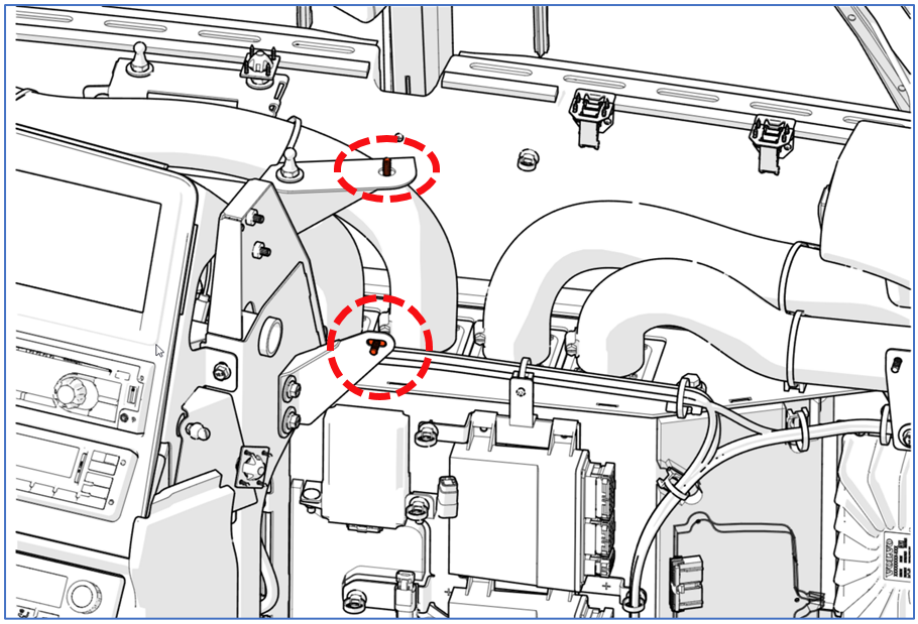

FIGURE 25: WITH PANEL GHOSTED TO HELP LOCATE THE POSITION OF THE SCREWS

12. To remove the panel, pull (unsnap) at the six (6) locations identified on the image below.

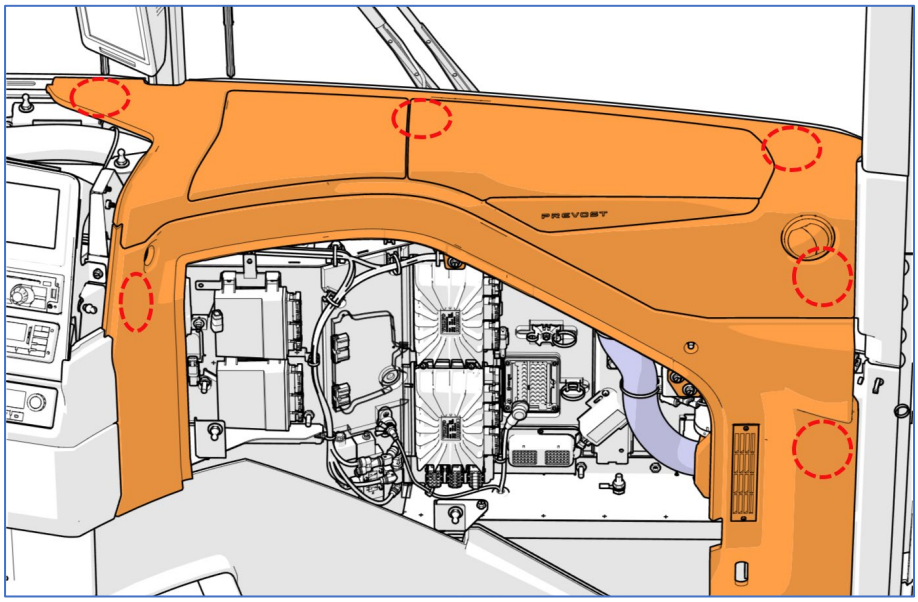


FIGURE 26

13. Once unsnap, pull with a light force to detach the panel.
14. Disconnect the register hose and the daylight sensor connector from the R.H. side of the panel.

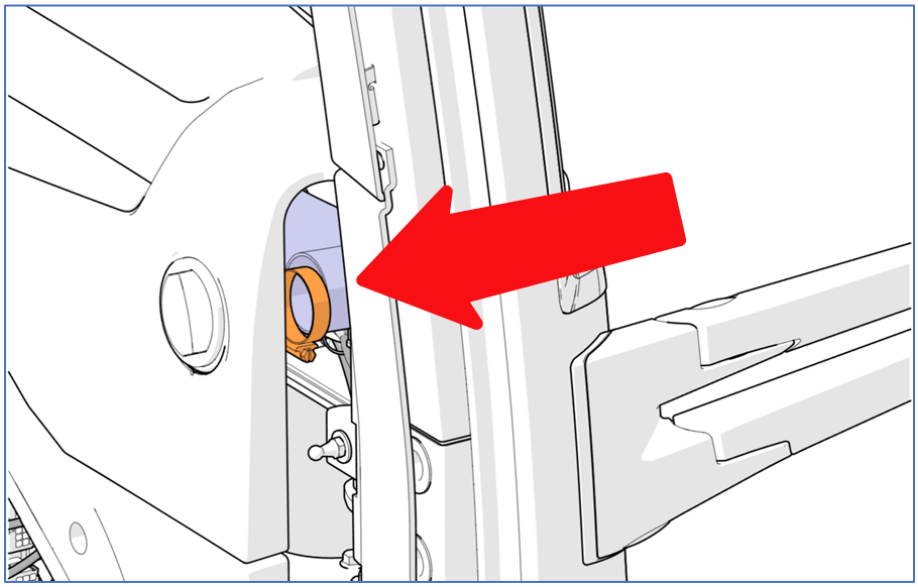

FIGURE 27

*Access all our Service Bulletins on http://techpub.prevostcar.com/en/*
*Or scan the QR-Code with your smart phone*
.

**Are you a Vehicle owner?**
*E-mail us at **technicalpublications_prev@volvo.com** and type "ADD" in the subject to receive warranty bulletins applicable to your vehicle(s) by e-mail.*

## CONTENTS

**1. TORQUE TABLES ..... 5**

1.1 HIGH-CAPACITY COMPRESSOR (BIG HVAC SYSTEM) ..... 5
1.2 HIGH/LOW PRESSURE SERVICE AND RECEIVER TANK VALVES ..... 6
1.3 IDLERS & TENSIONERS ..... 6
1.4 SMALL A/C SYSTEM X3-45 VIP ..... 7
1.5 PREHEATER ..... 8

**2. HVAC SYSTEM OVERVIEW ..... 9**

2.1 BIG HVAC SYSTEM – H3 SERIES ..... 10
*2.1.1 Overhead Compartment A/C Unit – H3 Coach ..... 13*
2.2 BIG HVAC SYSTEM – X3 SERIES ..... 14
2.3 BIG HVAC SYSTEM – EVAPORATOR COMPARTMENT H3 SERIES & X3 SERIES ..... 16
2.4 SMALL HVAC SYSTEM ..... 17
2.5 AUXILIARY AIR UNIT – H3-45 VIP ..... 23
2.6 DRIVER UNIT – H3 SERIES ..... 24

**3. HVAC SYSTEM BASIC MAINTENANCE ..... 26**

3.1 COIL CLEANING ..... 26
*3.1.1 Driver unit ..... 26*
*3.1.2 Passenger unit ..... 26*
3.2 DRIVER UNIT AIR FILTER ..... 27
*3.2.1 X3 series ..... 27*
*3.2.2 H3 series ..... 27*
3.3 PASSENGER UNIT AIR FILTER – H3 SERIES ..... 28
3.4 PASSENGER UNIT AIR FILTER – X3 SERIES ..... 28
3.5 OVERHEAD COMPARTMENT FAN AIR FILTER ..... 29
3.6 COMPRESSOR BELTS ..... 29
*3.6.1 Belt Replacement – Big System ..... 29*
*3.6.2 Belt Tension Adjustment – Big System ..... 30*
*3.6.3 Belt Tension Adjustment – Small Hvac System H-Series ..... 31*
*3.6.4 Belt Tension - Small Hvac System X-Series ..... 31*
3.7 TORCH BRAZING ..... 31
3.8 SOLDERING ..... 31

**4. HVAC SYSTEM COMPONENTS ..... 32**

4.1 COMPRESSOR – BIG A/C SYSTEM ..... 32
*4.1.1 Suction and Discharge Hose Connection ..... 32*
*4.1.2 Electro-Magnetic Clutch ..... 32*
*4.1.3 Maintenance - Shaft Seal Oil Collecting Tube Drain ..... 32*
*4.1.4 Maintenance - Oil Color & Level Check ..... 33*
*4.1.5 Maintenance - Compressor Oil Change ..... 34*
*4.1.6 Troubleshooting Guide ..... 35*
4.2 COMPRESSOR – SMALL HVAC SYSTEM ..... 36
*4.2.1 Sanden SD7 Compressor Oil Charging ..... 36*
*4.2.2 Compressor Replacement - Oil Amount (compressor swap, no flushing) ..... 37*
*4.2.3 Removal - When the Compressor Is Operational ..... 37*
*4.2.4 Removal - When the Compressor Is Inoperable ..... 38*
4.3 BRUSHLESS EVAPORATOR MOTOR ..... 38
*4.3.1 Removal ..... 38*
*4.3.2 Installation ..... 39*

4.4 CONDENSER (BIG A/C) ....40
*4.4.1 Condenser Fan Control* ....40
*4.4.2 Condenser Fan Removal* ....41
4.5 CONDENSER (SMALL A/C) ....41
4.6 RECEIVER TANK ....42
4.7 FILTER-DRYER ....43
*4.7.1 Replacement Of The Filter-Dryer After Pumping Down* ....43
4.8 MOISTURE INDICATOR ....43
4.9 SHUT-OFF VALVE WITH SERVICE PORT ....45
4.10 LIQUID REFRIGERANT SOLENOID VALVE ....45
*4.10.1 Typical Malfunctions* ....45
*4.10.2 Electrical Bypass/On Demand Opening Of Liquid Refrigerant Solenoid Valves* ....46
*4.10.3 Coil Replacement* ....46
*4.10.4 Valve Disassembly* ....46
*4.10.5 Valve Reassembly* ....46
4.11 THERMOSTATIC EXPANSION VALVE ....47
*4.11.1 Big System* ....47
*4.11.2 Superheat Adjustment* ....48
*4.11.3 Maintenance* ....49
*4.11.4 Driver unit* ....49
4.12 HOT WATER PNEUMATIC VALVE ....50
*4.12.1 Valve Troubleshooting* ....51
4.13 HOT WATER CIRCULATING PUMP ....51
*4.13.1 Big HVAC System* ....51
*4.13.2 Small HVAC System* ....52
*4.13.3 Removal* ....52
*4.13.4 Installation* ....52

**5. HVAC SYSTEM TESTING AND TROUBLESHOOTING ....53**

5.1 ON DEMAND DISPLAY OF A/C SYSTEM HIGH AND LOW SIDE PRESSURE ....53
5.2 ON DEMAND ACTIVATION OF HOT WATER CIRCULATING PUMP ....53
5.3 TEMPERATURE SENSORS ....53
5.4 TEST MODE FOR SWITCHES AND SENSORS ....54
5.5 TEST MODE FOR ELECTRIC MOTORS ....55
5.6 MODES OF OPERATION ....55
5.7 HVAC ELECTRICAL SYSTEM TROUBLESHOOTING ....56
*5.7.1 Air Conditioning* ....58
*5.7.2 Expansion Valve* ....60
5.8 TEMPERATURES & PRESSURES CHART ....61
5.9 LEAK TESTING ....61

**6. BIG HVAC SYSTEM ....61**

6.1 AIR CIRCULATION IN DRIVER'S AREA ....62
6.2 AIR CIRCULATION IN PASSENGER'S AREA ....63
6.3 HVAC SYSTEM OPERATION ....64
*6.3.1 Control Unit* ....64
*6.3.2 Overhead Compartment Unit* ....65
6.4 HEATING ....65
*6.4.1 Driver unit Hot Water Pneumatic Valve* ....65
*6.4.2 Passenger unit Hot Water Pneumatic Valve* ....65
*6.4.3 Draining Heating System* ....65
*6.4.4 Filling Heating System* ....68
*6.4.5 Bleeding Heating System* ....69

6.5 COOLING ..... 69
*6.5.1 Refrigeration Cycle ..... 69*
*6.5.2 Refrigerant ..... 69*
*6.5.3 Refrigerant System Clean-Out After Compressor Failure ..... 71*
*6.5.4 Pumping Down ..... 72*
*6.5.5 Adding Vapor State Refrigerant ..... 74*
*6.5.6 Charging System ..... 75*
6.6 LIQUID REFRIGERANT RECOVERY ..... 76
6.7 EVACUATING SYSTEM ..... 76

**7. SMALL HVAC SYSTEM ..... 77**

7.1 SYSTEM CONFIGURATION H-SERIES ..... 77
7.2 SYSTEM CONFIGURATION X3 SERIES ..... 77
7.3 AIR CIRCULATION ..... 77
*7.3.1 Auxiliary Unit ..... 78*
7.4 SYSTEM OPERATION ..... 78
*7.4.1 Driver unit ..... 78*
*7.4.2 Auxiliary Unit - H3 Vip Vehicles Only ..... 78*
7.5 REFRIGERANT RECOVERY ..... 78
7.6 EVACUATING SYSTEM PRIOR ADDITION OF REFRIGERANT (DRIVER'S OR AUXILIARY SYSTEM) ..... 78
7.7 OIL ADDITION ..... 79
7.8 COMPRESSOR OIL CONTAMINATION ..... 79
7.9 OIL RETURN OPERATION ..... 79

**8. AUXILIARY PREHEATING SYSTEM (OPTION) ..... 79**

8.1 PREHEATER FUEL FILTER ..... 80
8.2 OPERATION ..... 80
8.3 PREHEATING SYSTEM TIMER ..... 80
*8.3.1 Preheater Timer Instructions ..... 80*
8.4 PREHEATER TROUBLESHOOTING ..... 80
*8.4.1 Displaying Faults On The Timer ..... 80*
*8.4.2 Heater Control Box Software Lock ..... 80*
*8.4.3 Unlocking The Control Box And Deleting The Fault Memory ..... 81*
8.5 PREHEATER MAINTENANCE ..... 81

**9. ENVIROCARE IONS AIR SANITIZER (OPTIONAL) ..... 81**

**10. SPECIFICATIONS ..... 83**

## SECTION CHANGE LOG

| | DESCRIPTION | DATE |
|---|---|---|
| | | |
| | | |
| | | |
| | | |
| | | |
| | | |

## 1. TORQUE TABLES

### 1.1 HIGH-CAPACITY COMPRESSOR (BIG HVAC SYSTEM)

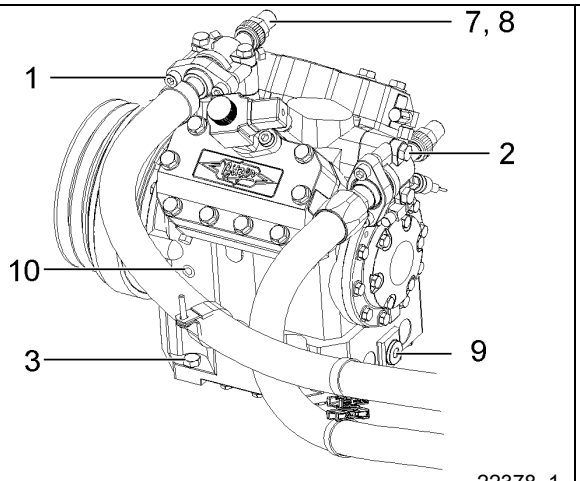

22378_1

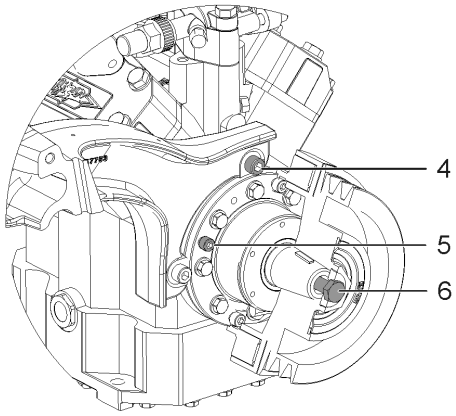

22379

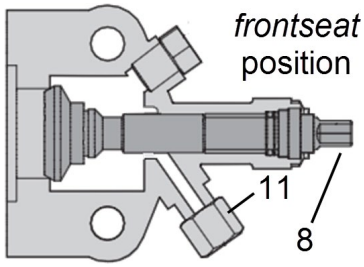

22406

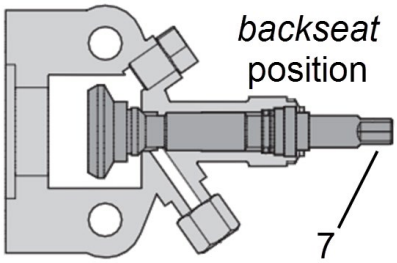

22407

| HIGH CAPACITY COMPRESSOR (BIG HVAC SYSTEM) | | |
|---|---|---|
| No | DESCRIPTION | TORQUE |
| 1 | Compressor flange connection screws | 31-35 lb-ft (42-47 Nm) |
| 2 | Compressor discharge & suction port screws | 38-42 lb-ft (52-57 Nm) |
| 3 | Compressor mounting bolts | 82 lb-ft (111 Nm) |
| 4 | Support arm to compressor screws | 38-42 lb-ft (52-57 Nm) |
| 5 | Clutch to compressor screws | 20-24 lb-ft (27-33 Nm) |
| 6 | Clutch pulley to compressor shaft screw | 58-62 lb-ft (79-84 Nm) |
| 7 | Compressor shut-off valve *backseat* position | 12 lb-ft (16 Nm) max |
| 8 | Compressor shut-off valve *frontseat* position | 21 lb-ft (28 Nm) max |
| 9 | Magnetic drain plug | 37-52 lb-ft (50-71 Nm) |
| 10 | Oil fill hole plug | 15-17 lb-ft (20-23 Nm) |
| 11 | Service port 7/16-20 UNF | 7.5 lb-ft (10 Nm) max |

## 1.2 HIGH/LOW PRESSURE SERVICE AND RECEIVER TANK VALVES

| 1-HIGH PRESSURE SERVICE VALVE | 2-LOW PRESSURE SERVICE VALVE | 3-RECEIVER TANK VALVE |
|---|---|---|
| 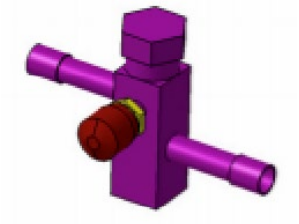 | 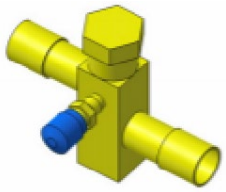 | 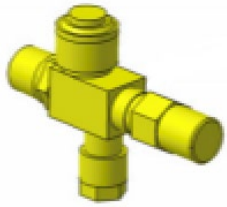 |

| SERVICE AND RECEIVER TANK VALVE | | |
|---|---|---|
| No | DESCRIPTION | TORQUE |
| 1 | High pressure service valve (both positions) | 43 lb-ft (58 Nm) |
| 2 | Low pressure service valve (both positions) | 21 lb-ft (28 Nm) |
| 3 | Receiver tank valve (both positions) | 21 lb-ft (28 Nm) |

## 1.3 IDLERS & TENSIONERS

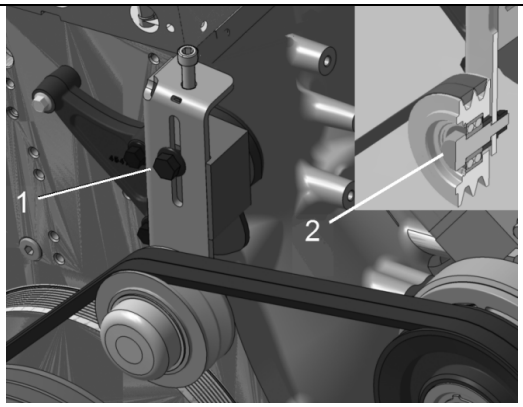


12238

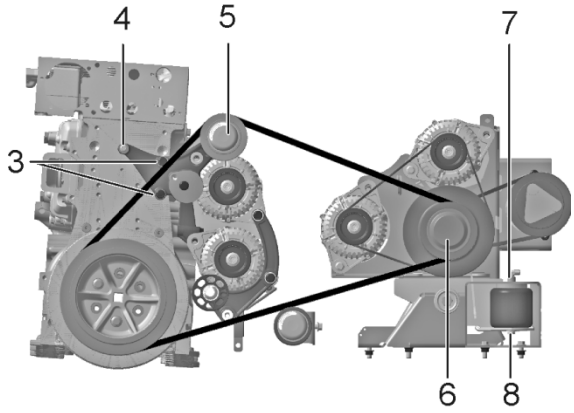


22382_1

| IDLERS & TENSIONERS | | |
|---|---|---|
| No | DESCRIPTION | TORQUE |
| 1 | Big A/C tensioner lock bolt | 43 lb-ft (58 Nm) |
| 2 | Big A/C tensioner idler shaft bolt (M12 shoulder bolt) | 31.5-38.5 lb-ft (43-52 Nm) |
| | Big A/C tensioner idler shaft bolt (M12 x 1.75 std bolt) | 59 lb-ft (80 Nm) |
| 3 | Idler support bolt | 21 lb-ft (28 Nm) |
| 4 | Idler support bolts | 43 lb-ft (58 Nm) |
| 5 | Small A/C idler shaft bolt | 135-165 lb-ft (183-224 Nm) |
| 6 | Small A/C / alternator transfer pulley shaft nut | 135-165 lb-ft (183-224 Nm) |
| 7 | Air spring connection fitting nut | 15-20 lb-ft (20-27 Nm) |
| 8 | Air spring mounting screw | 15-20 lb-ft (20-27 Nm) |

## 1.4 SMALL A/C SYSTEM X3-45 VIP

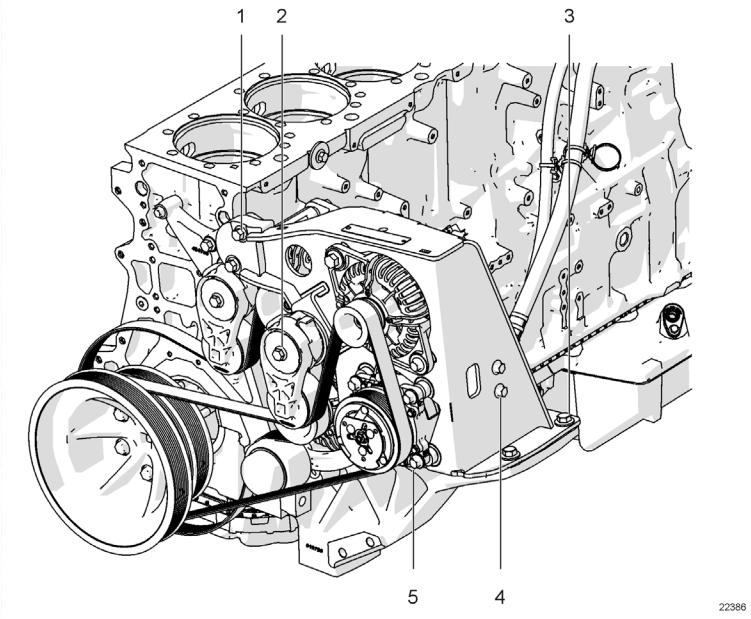


**SMALL A/C SYSTEM X3-45 VIP**

| No | DESCRIPTION | TORQUE |
|---|---|---|
| 1 | Upper mounting screws | 48 lb-ft (65 Nm) |
| 2 | Belt Tensioner | 48 lb-ft (65 Nm) |
| 3 | Lower mounting screws | 82 lb-ft (111 Nm) |
| 4 | Compressor mounting fore bracket screws | 35 lb-ft (47 Nm) |
| 5 | Compressor mounting screws | 35 lb-ft (47 Nm) |

## 1.5 PREHEATER

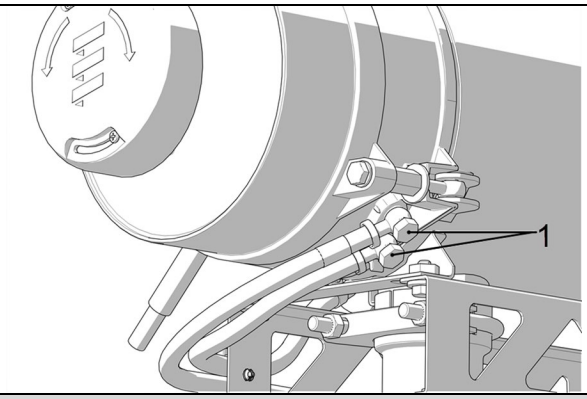


**Preheater**

| No | DESCRIPTION | TORQUE |
|---|---|---|
| 1 | Banjo bolts (2) | 96-116 lb-in (11-13 Nm) |

## 2. HVAC SYSTEM OVERVIEW

The vehicle interior is pressurized by its Heating Ventilation and Air Conditioning (HVAC) system. Two HVAC systems are available: Small HVAC System and Big HVAC System.

| | |
|---|---|
| Small HVAC System | • Driver unit only<br>• Driver unit with auxiliary system (H3 VIP only) |
| Big HVAC System | • Driver unit and passengers' unit with optional overhead compartment A/C system |

If the vehicle is equipped with a Big HVAC System; air flow and controls divide the vehicle in two areas: driver's area and passengers' area. Each section has its own fresh air, returning air and discharge air ducting. Each section has its own evaporator coil and heater core but both sections share the same condenser

The exhaust is mainly done through the lavatory ventilator and through normal air-tightness losses.

| *NOTE* |
|---|
| ***Air conditioning***<br>*Air conditioning is the artificial treatment of air to render the living conditions of persons more comfortable and healthful. Complete air conditioning involves adjustment and control of following operations performed on the air supply :*<br>*Heating or cooling; Dehumidification; Ventilation; Filtering;* |

## 2.1 BIG HVAC SYSTEM – H3 SERIES

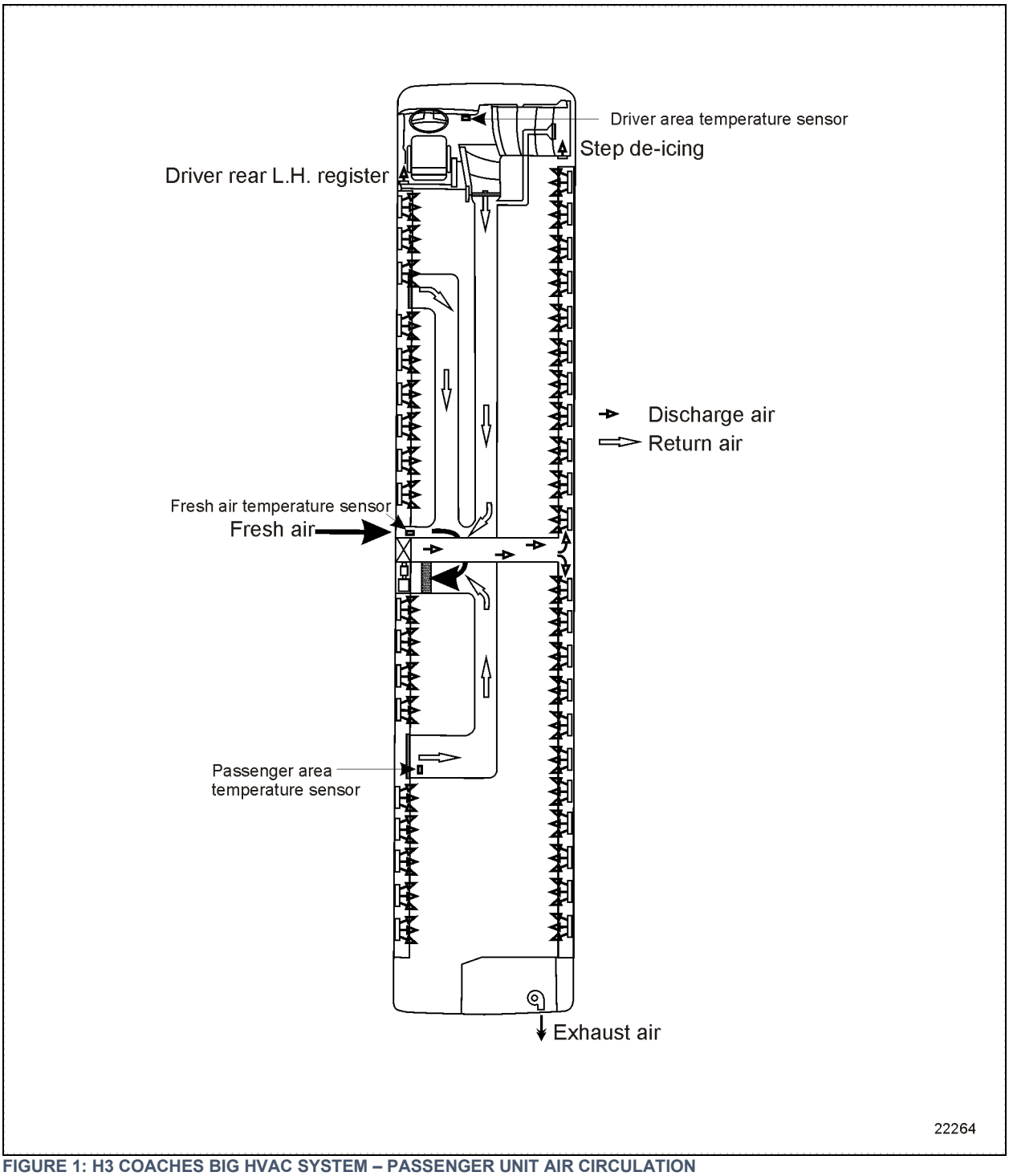


**FIGURE 1: H3 COACHES BIG HVAC SYSTEM – PASSENGER UNIT AIR CIRCULATION**

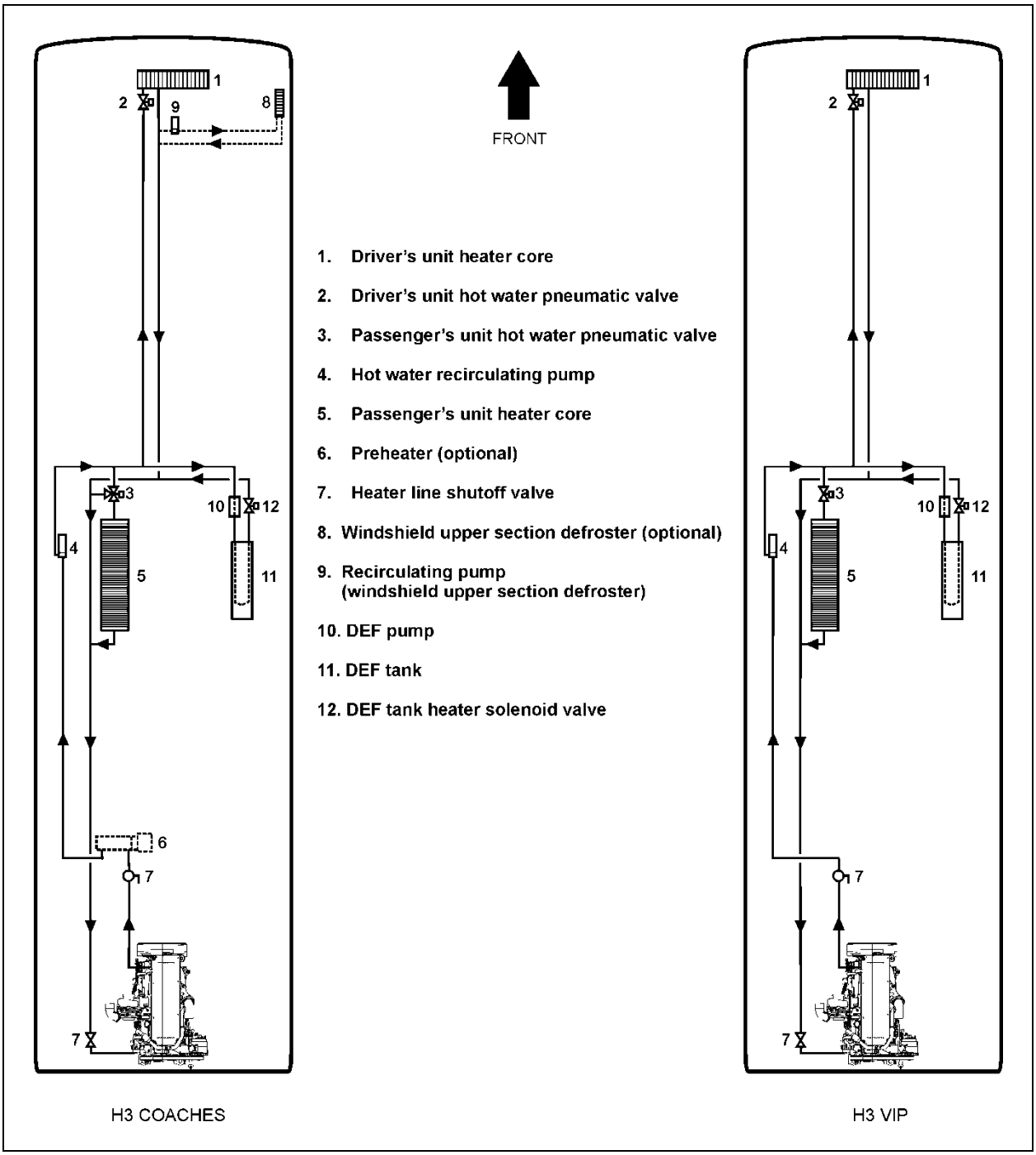


**FIGURE 2: H3 SERIES BIG HVAC SYSTEM – HEATING CIRCUIT** 22262

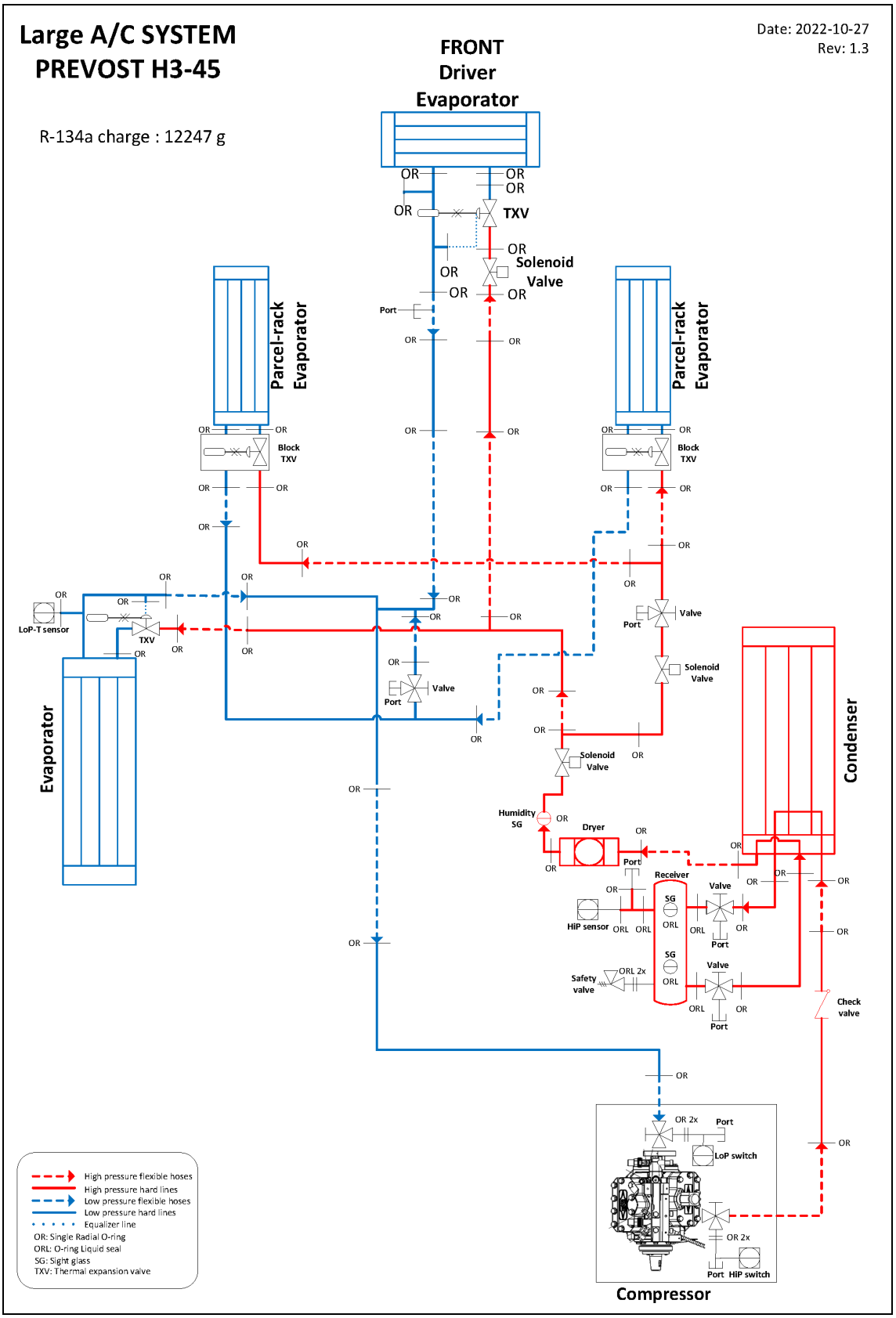


FIGURE 3: H3 SERIES BIG SYSTEM – REFRIGERANT CIRCUIT WITH OVERHEAD COMPARTMENT EVAPORATOR

### 2.1.1 Overhead Compartment A/C Unit – H3 Coach

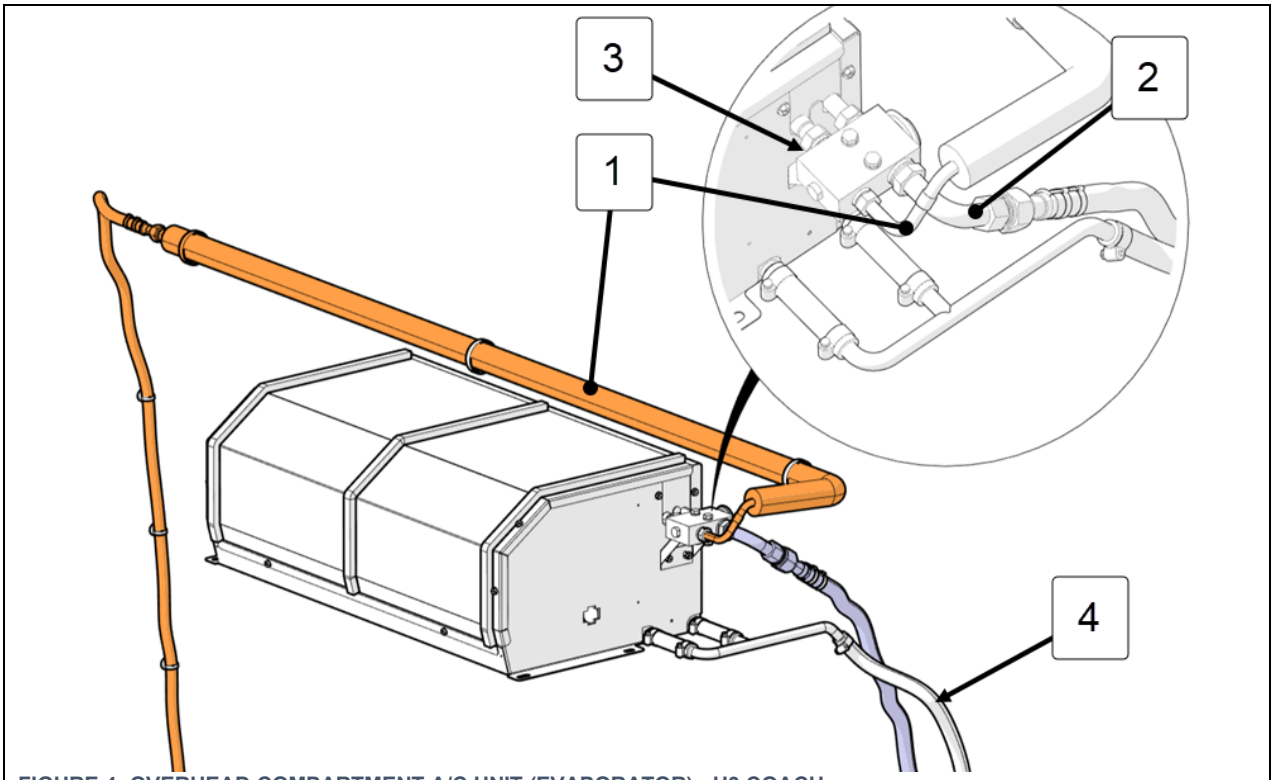


FIGURE 4: OVERHEAD COMPARTMENT A/C UNIT (EVAPORATOR) - H3 COACH

1 – refrigerant inlet – from condenser to evaporator core
2 – outlet – to compressor
3 – thermostatic expansion valve block type
4 – drain tube

## 2.2 BIG HVAC SYSTEM – X3 SERIES

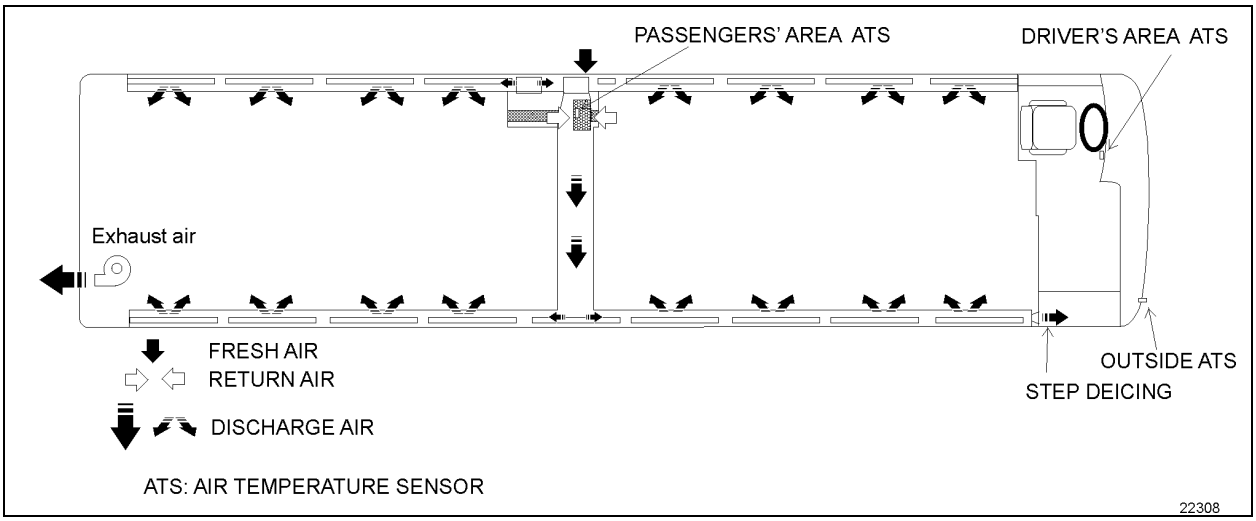


**FIGURE 5: X3 COACHES BIG HVAC SYSTEM - PASSENGER UNIT AIR CIRCULATION**

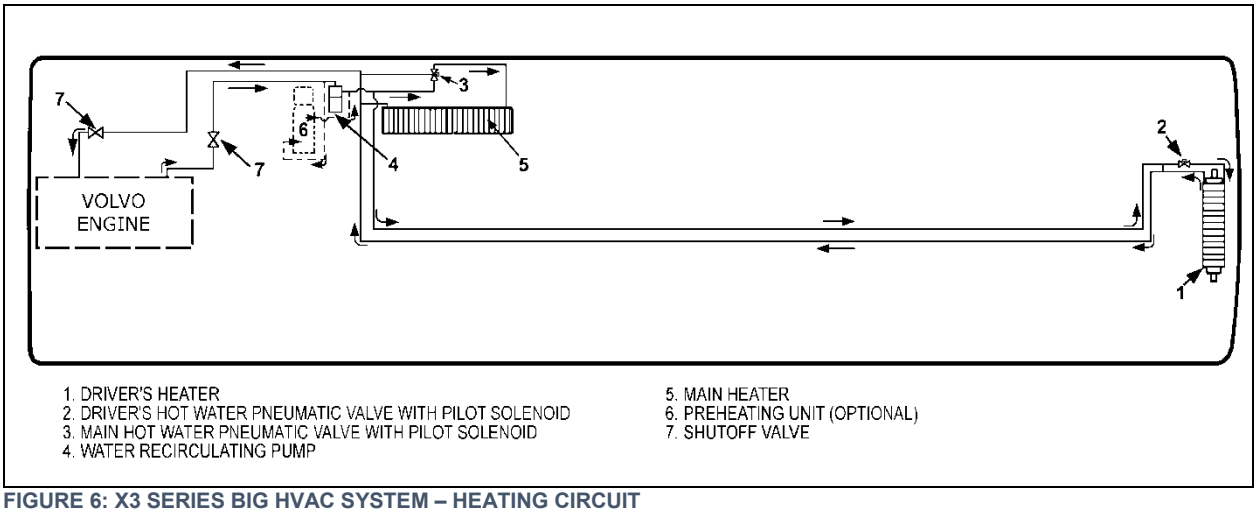


**FIGURE 6: X3 SERIES BIG HVAC SYSTEM – HEATING CIRCUIT**

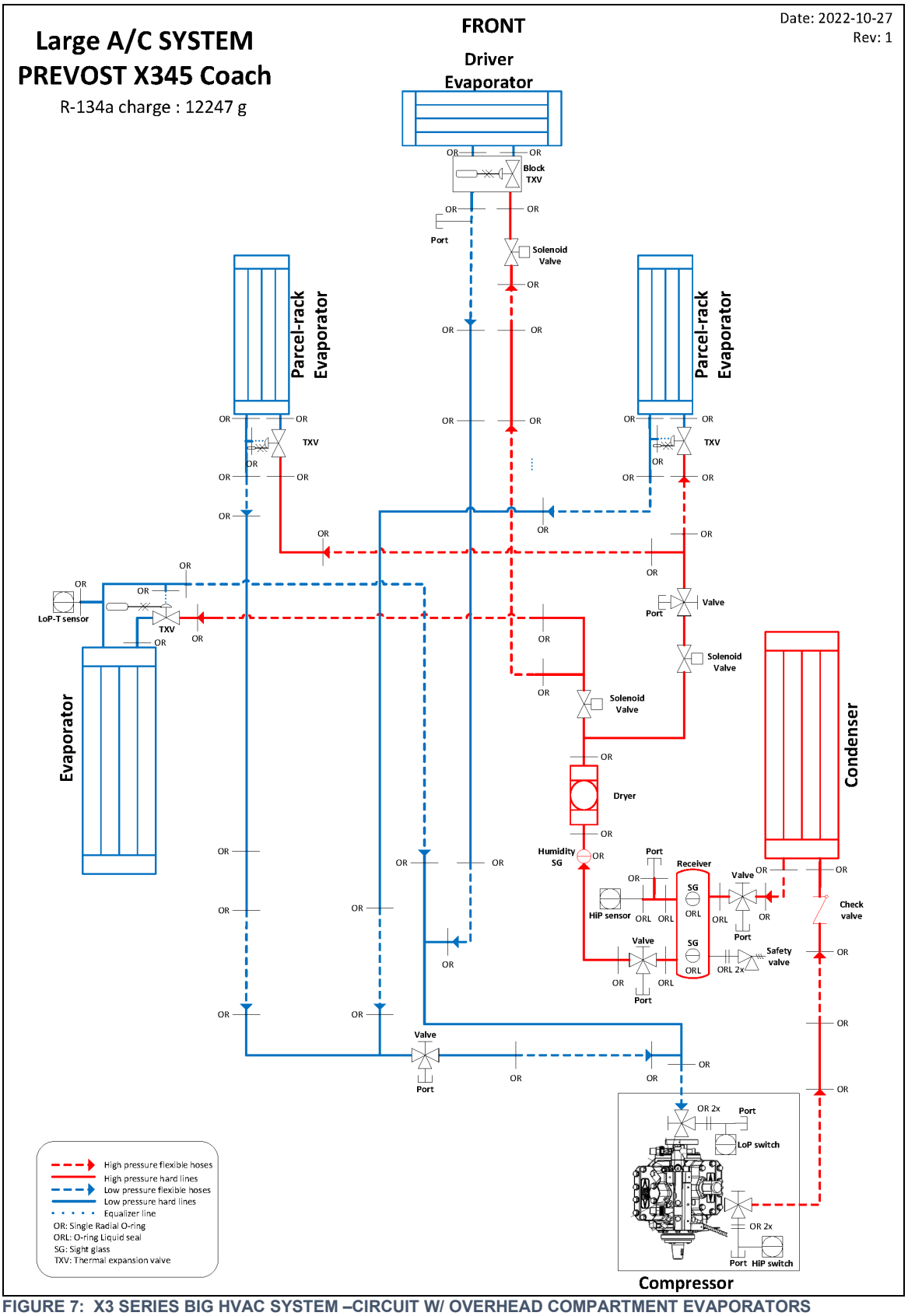


FIGURE 7: X3 SERIES BIG HVAC SYSTEM –CIRCUIT W/ OVERHEAD COMPARTMENT EVAPORATORS

## 2.3 BIG HVAC SYSTEM – EVAPORATOR COMPARTMENT H3 SERIES & X3 SERIES

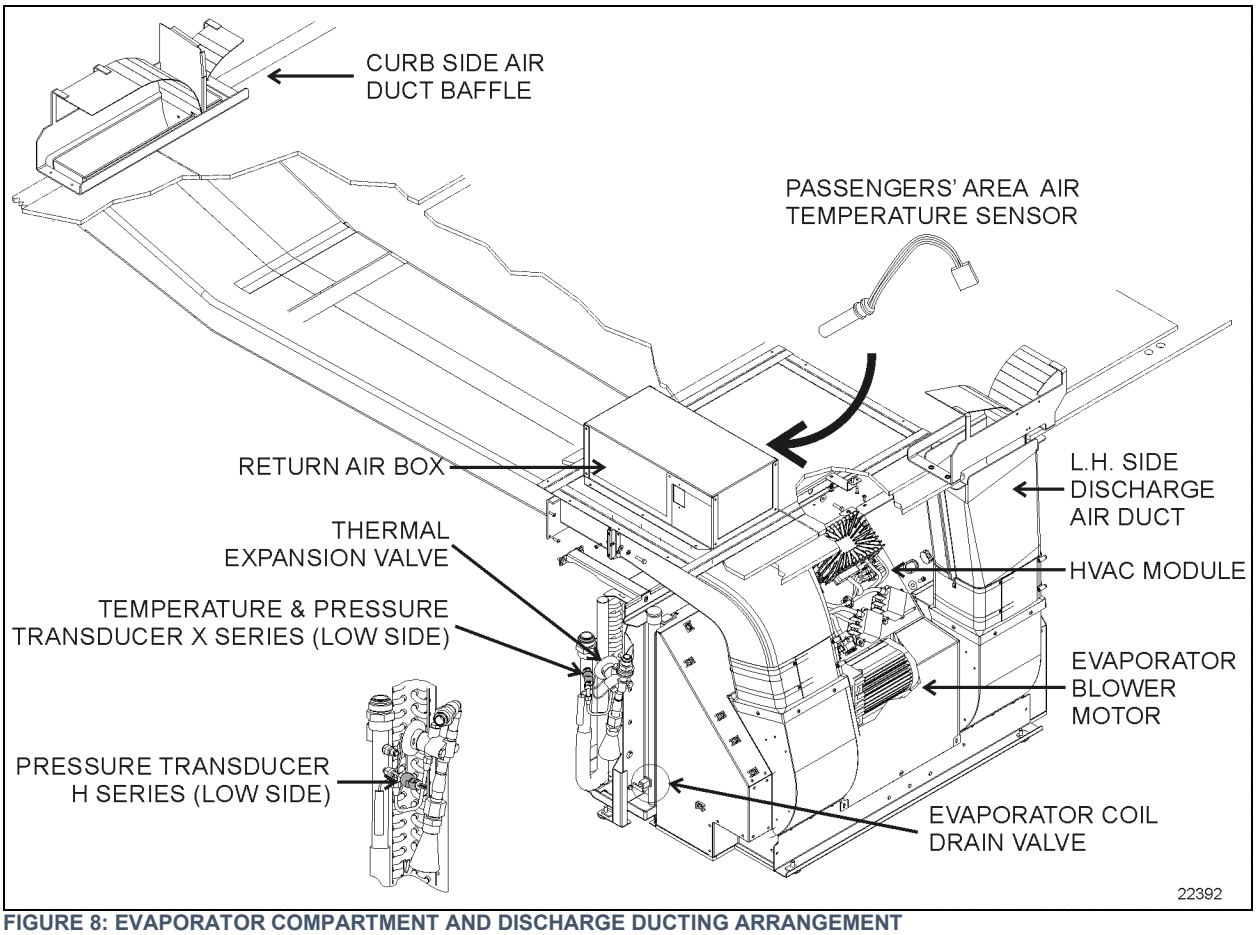


**FIGURE 8: EVAPORATOR COMPARTMENT AND DISCHARGE DUCTING ARRANGEMENT**

## 2.4 SMALL HVAC SYSTEM

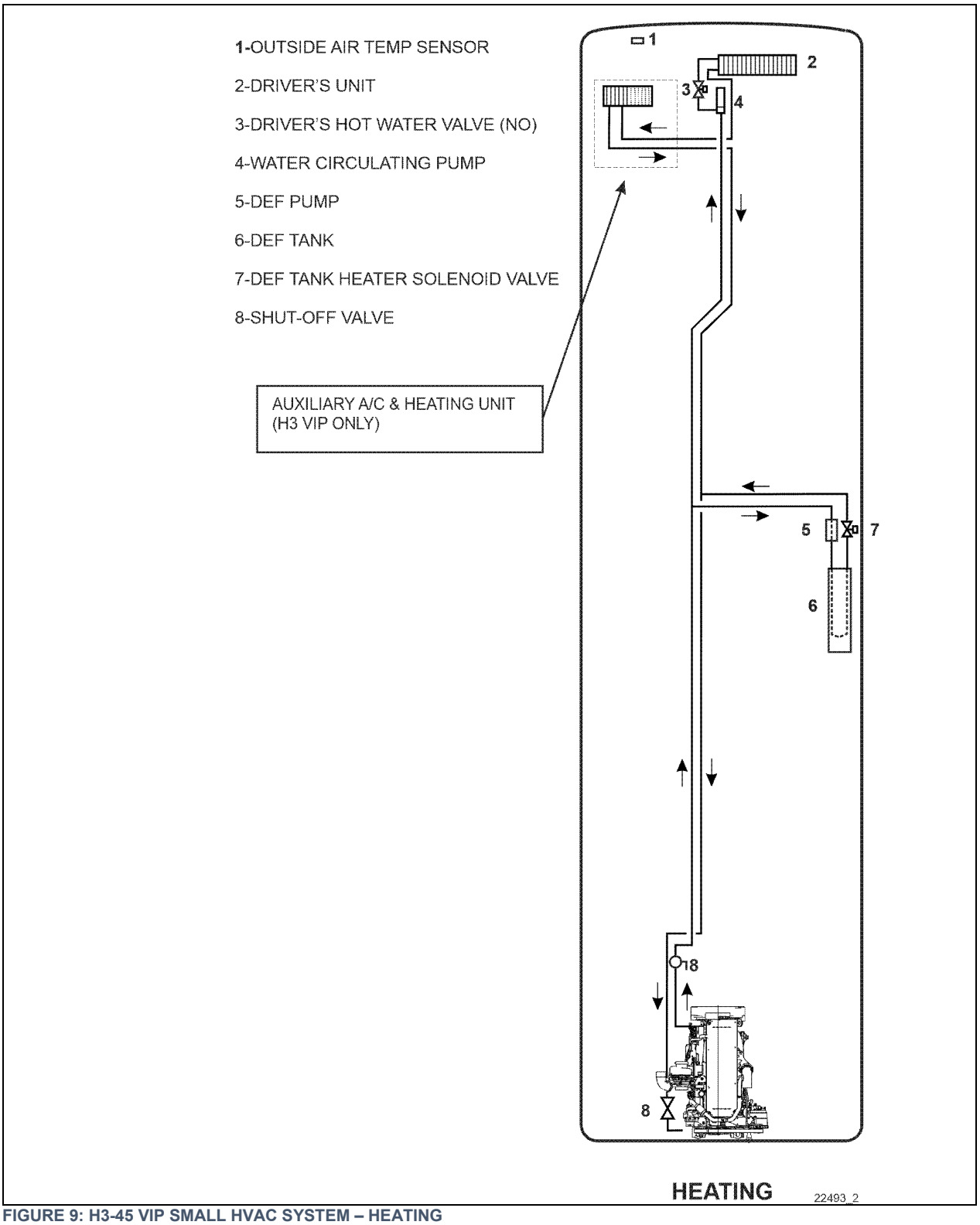


**FIGURE 9: H3-45 VIP SMALL HVAC SYSTEM – HEATING**

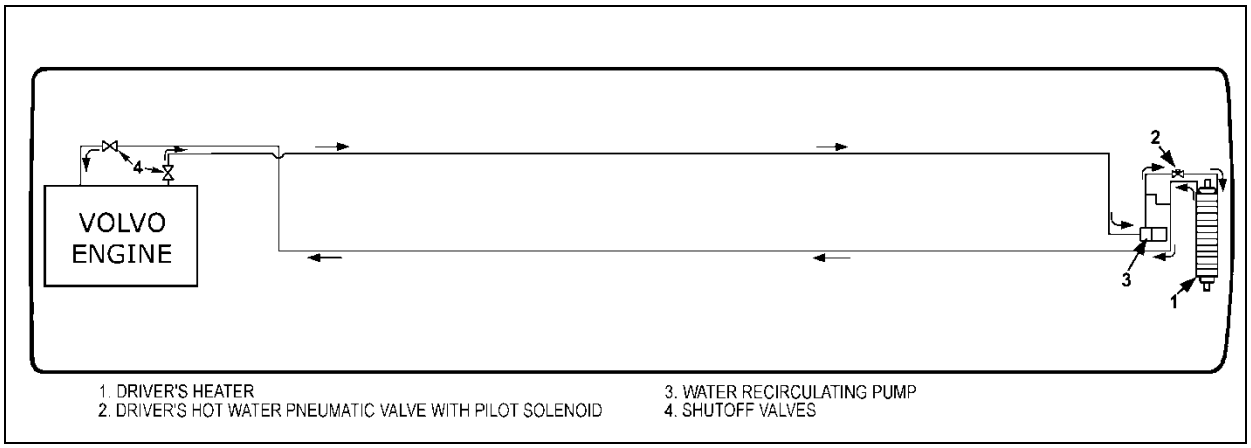


**FIGURE 10: X3 SERIES SMALL HVAC SYSTEM - HEATING CIRCUIT**

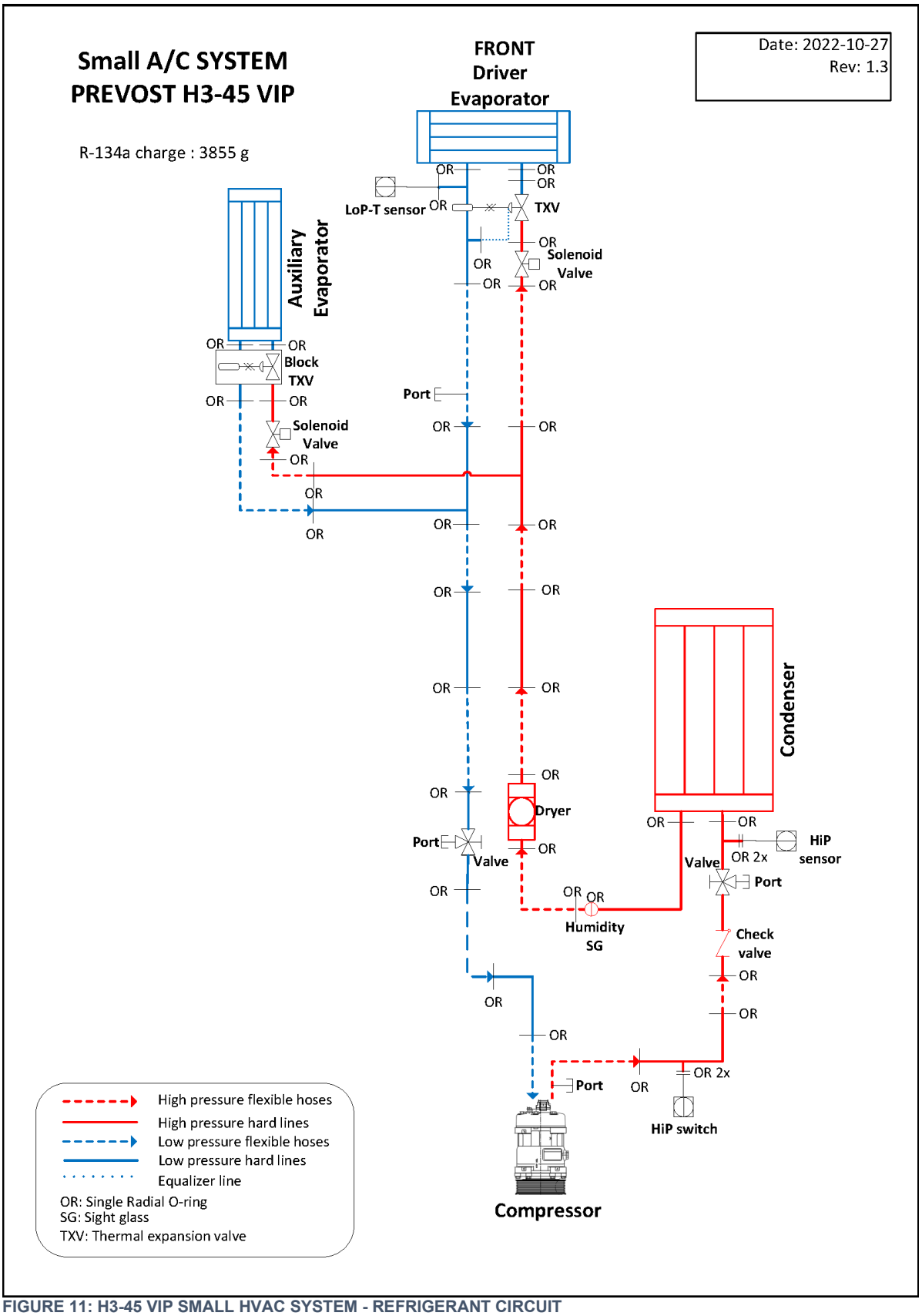


FIGURE 11: H3-45 VIP SMALL HVAC SYSTEM - REFRIGERANT CIRCUIT

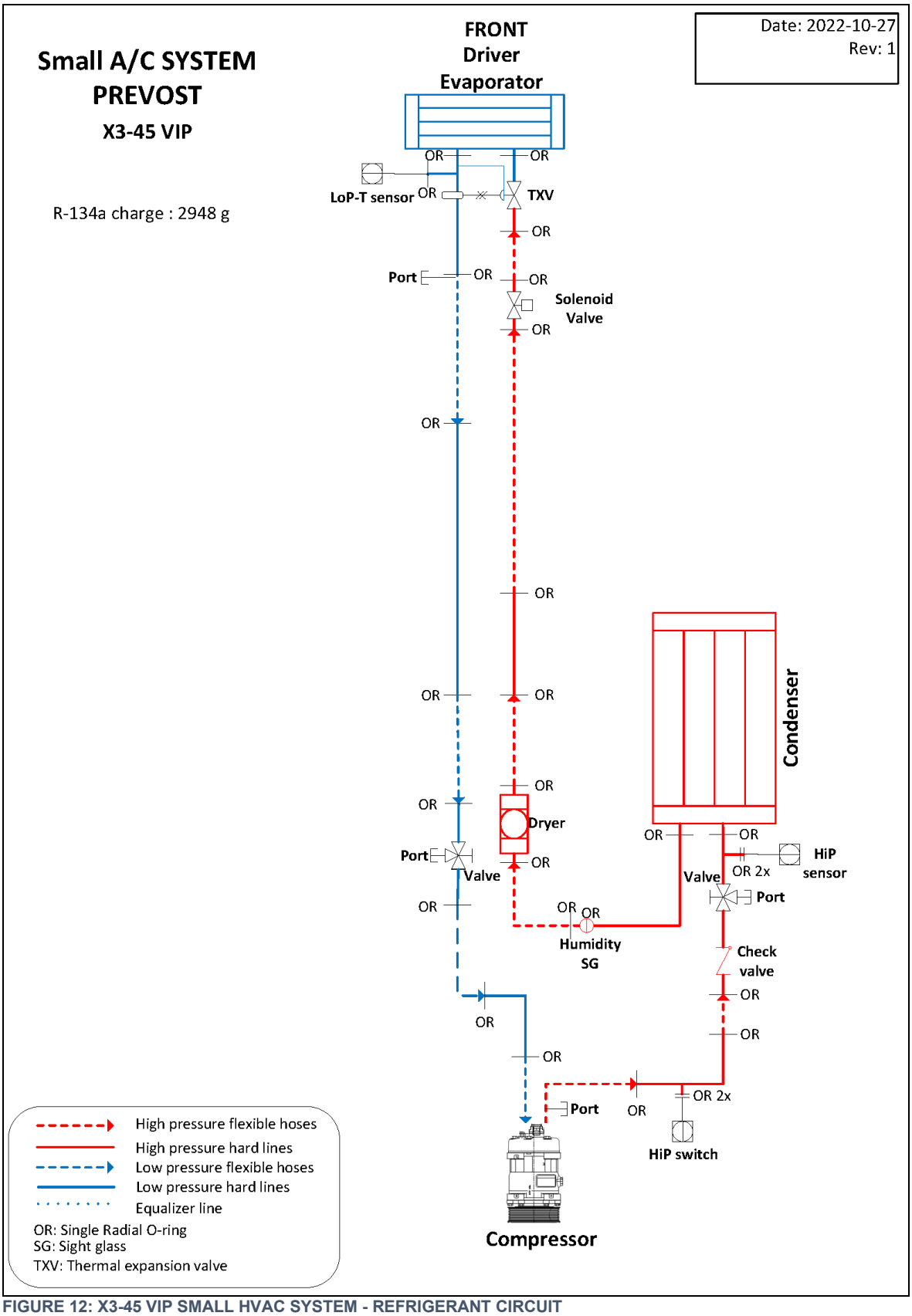


FIGURE 12: X3-45 VIP SMALL HVAC SYSTEM - REFRIGERANT CIRCUIT

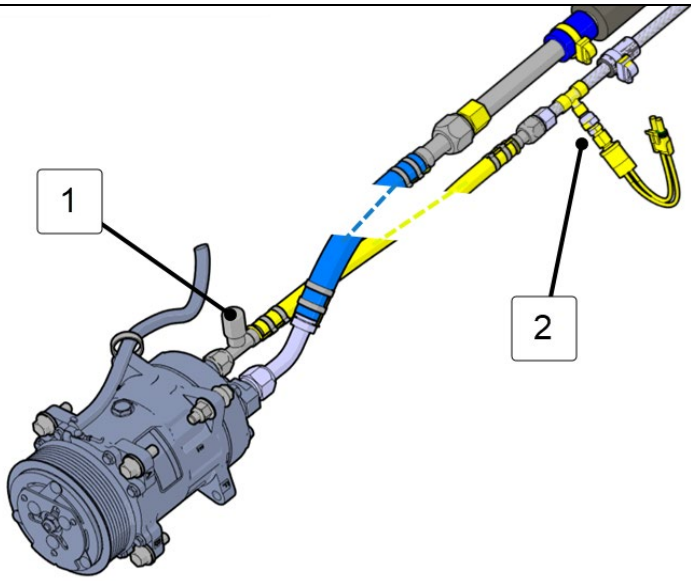


FIGURE 13: SMALL HVAC SYSTEM - H3 & X3 SERIES COMPRESSOR

1 – service port
2 – high pressure switch

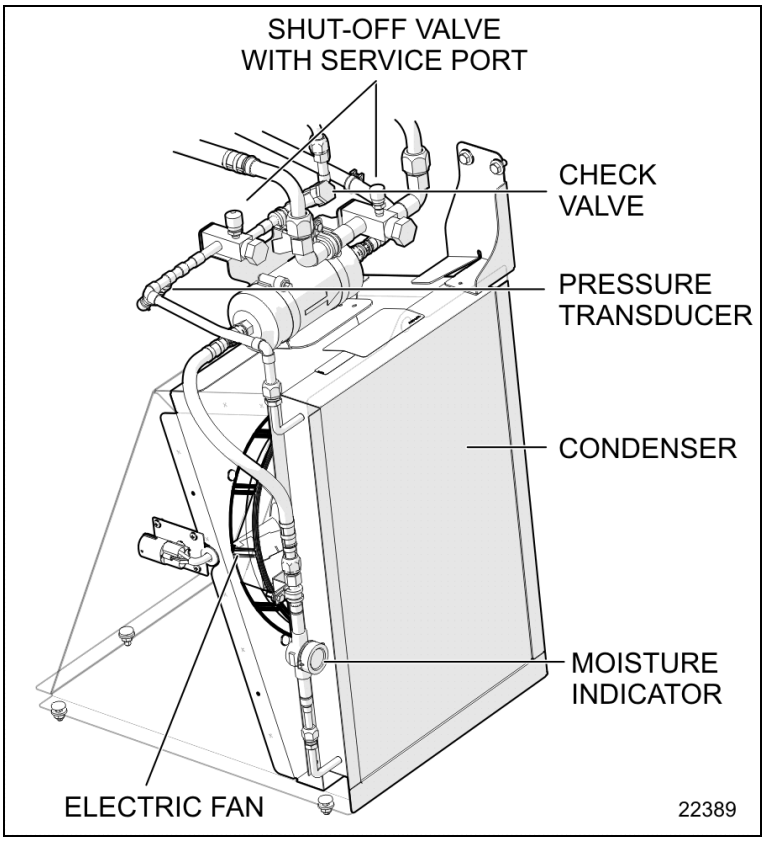


FIGURE 14: X3-45 VIP CONDENSER ARRANGEMENT

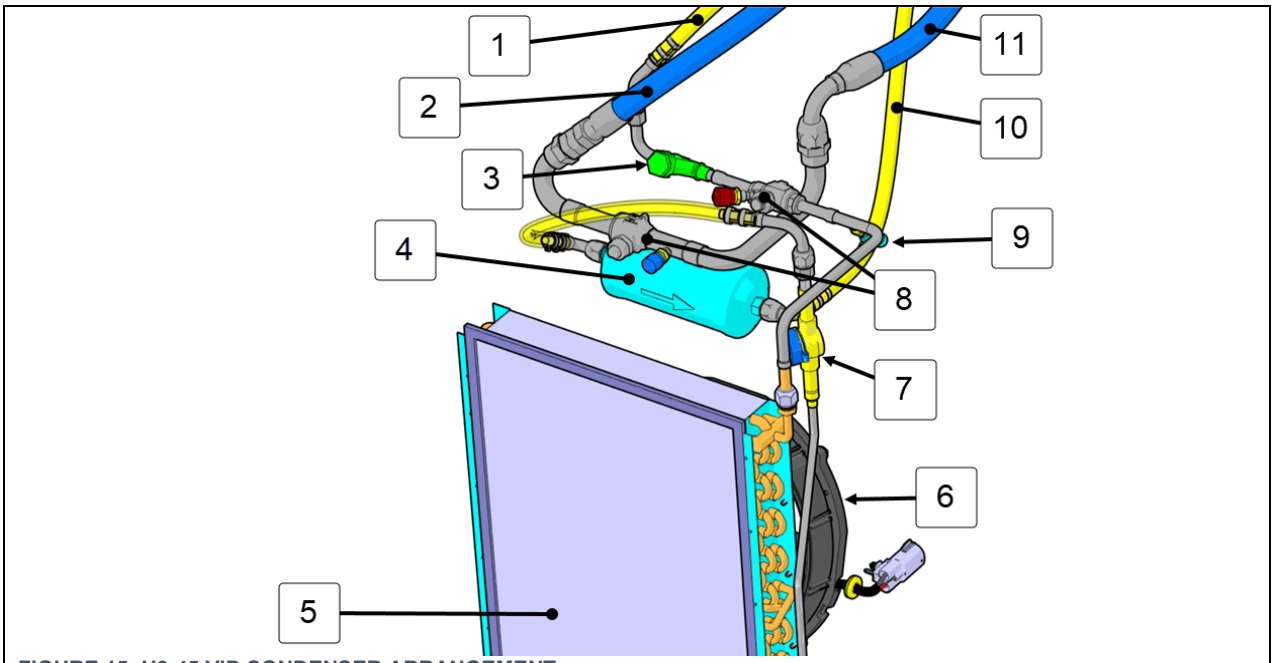


FIGURE 15: H3-45 VIP CONDENSER ARRANGEMENT

1 – from compressor
2 – to compressor
3 – check valve
4 – filter-dryer
5 – condenser core
6 – electric fan
7 – moisture indicator sight glass
8 – shut-off valve & service port
9 – high pressure sensor
10 – to driver unit & auxiliary aux unit
11 – from driver unit & auxiliary aux unit

## 2.5 AUXILIARY AIR UNIT – H3-45 VIP

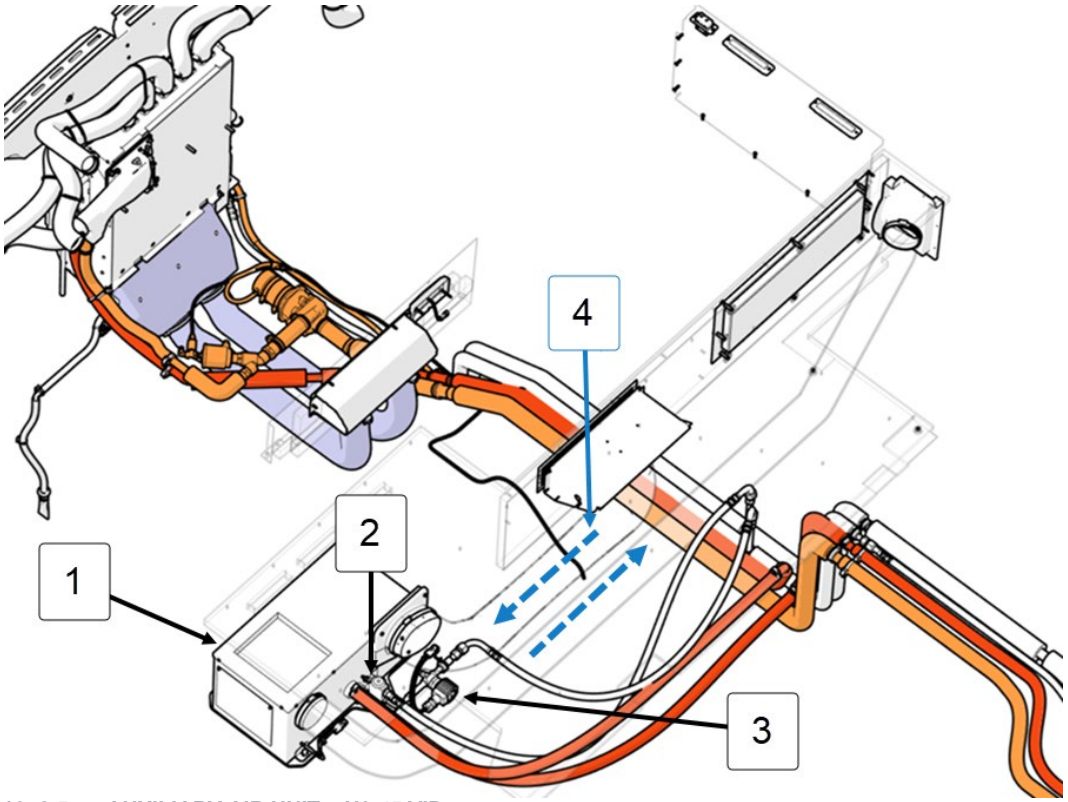


**FIGURE 16: 2.5 AUXILIARY AIR UNIT – H3-45 VIP**

1 – auxiliary air mixing box – heating and cooling
2 – expansion valve
3 – refrigerant solenoid valve
4 –return air

## 2.6 DRIVER UNIT – H3 SERIES

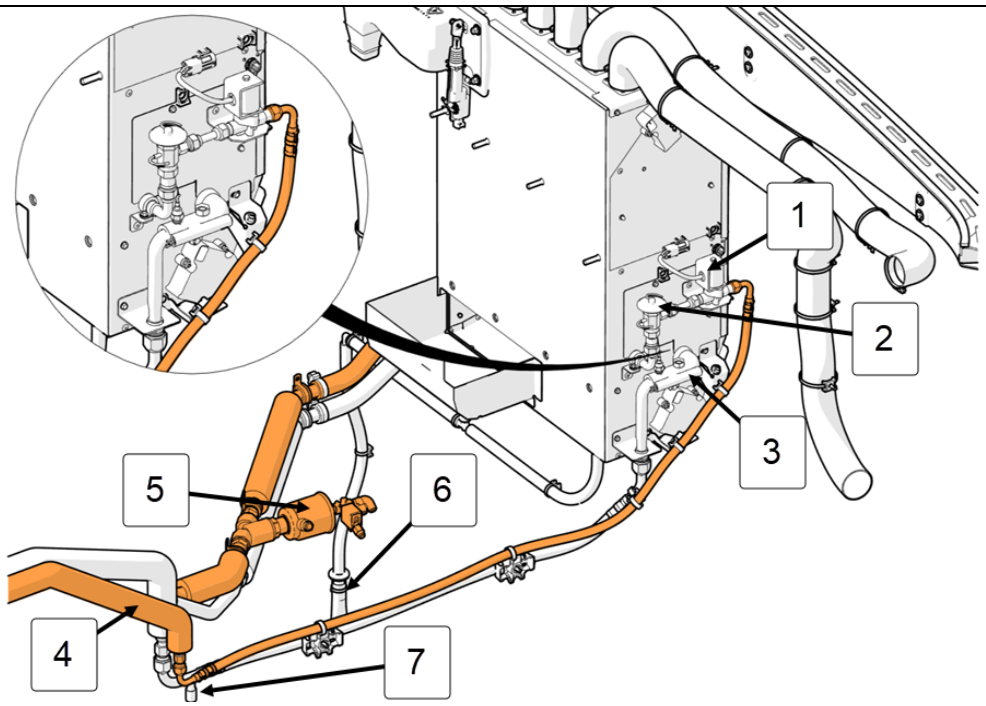


FIGURE 17: DRIVER UNIT - H3-45 COACH

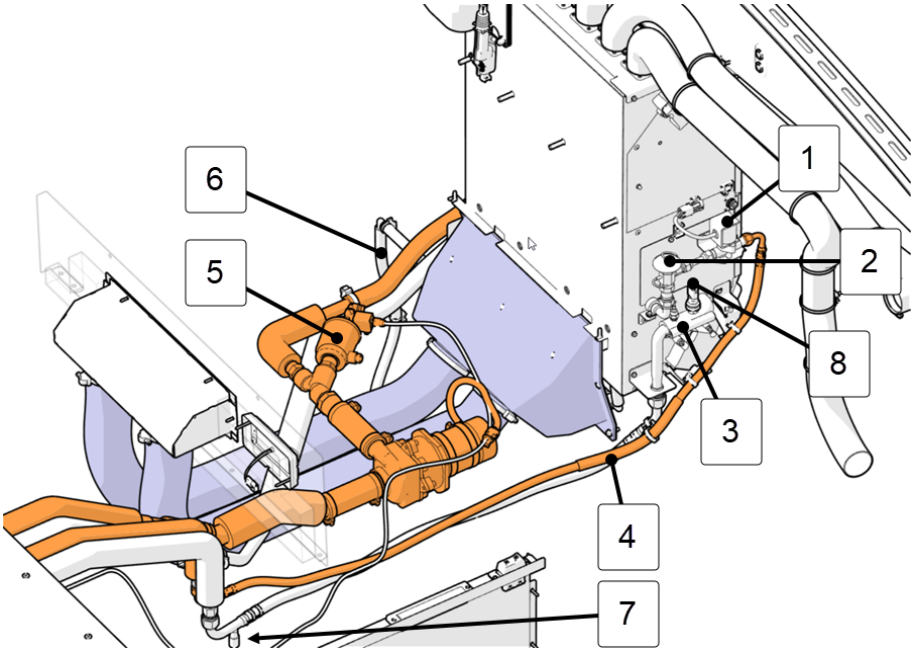


FIGURE 18: DRIVER UNIT - H3-45 VIP

| | |
|---|---|
| 1 - refrigerant solenoid valve | 5 – hot water pneumatic valve (solenoid controlled) |
| 2 – expansion valve | 6 – driver unit drain |
| 3 – remote bulb | 7 – vacuum/service port |
| 4 – refrigerant line (to evaporator core) | 8 – Temp sensor – low pressure side |

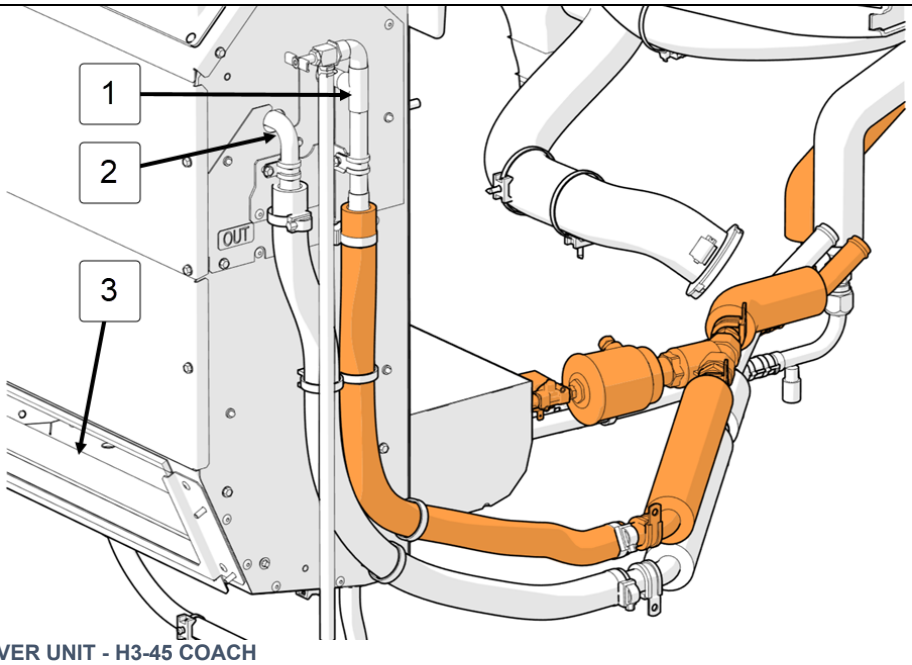


FIGURE 19: DRIVER UNIT - H3-45 COACH

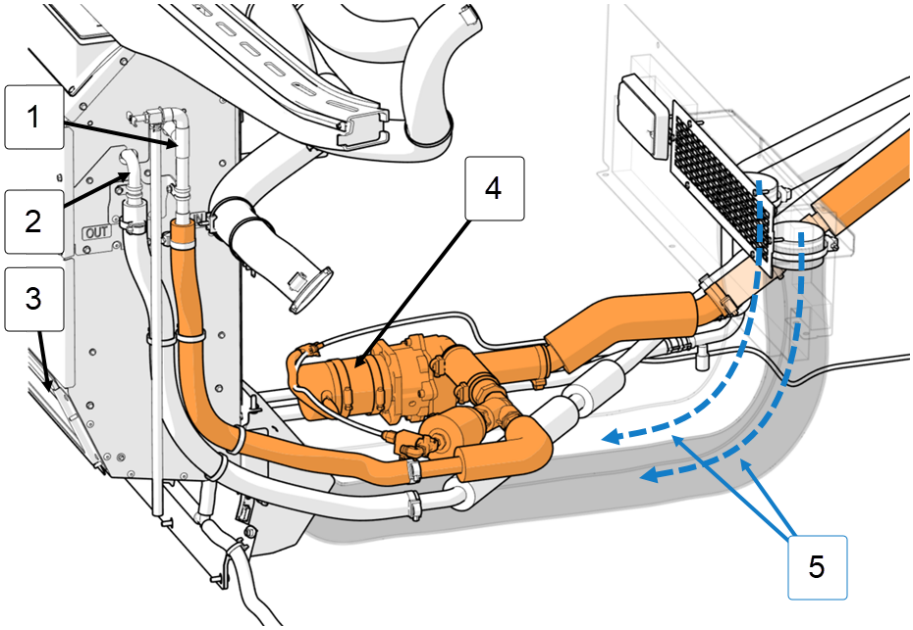


FIGURE 20: DRIVER UNIT - H3-45 VIP

1 – hot water inlet (to heater core)
2 – hot water outlet
3 – fresh air intake
4 – hot water pump
5 – return air

## 3. HVAC SYSTEM BASIC MAINTENANCE

Basic maintenance required on the passenger's and driver units consists in cleaning their respective coils and cleaning or replacing air filters.

However, periodic inspection for broken drains, hoses and charging of system should be done.

**MAINTENANCE**

Squeeze rubber discharge tubes located underneath the appropriate compartment to eliminate the accumulated water and dirt every three months.

### 3.1 COIL CLEANING

Check the external surface of the coils at regular intervals for dirt or any foreign matter.

#### 3.1.1 Driver unit

**MAINTENANCE**

**Once a year**, gain access to the driver unit, remove the coil access panel and clean the **driver unit** evaporator and heater cores with low pressure air jet, taking care not to damage fins. Clean the bottom of the defrost plenum.

For the optional windshield upper section defogger/defroster, remove the bottom access panel, remove the six bolts fixing the blower motor assembly. Use low air pressure to clean the coil.

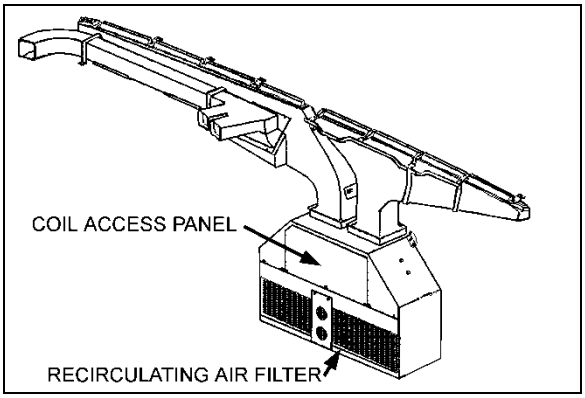


FIGURE 21: DRIVER UNIT CORE ACCESS – X3 SERIES
22171

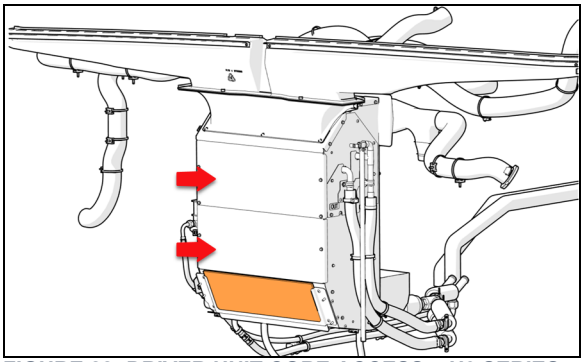

FIGURE 22: DRIVER UNIT CORE ACCESS – H3 SERIES

#### 3.1.2 Passenger unit

**MAINTENANCE**

With the air filters previously removed, clean the **passenger unit** evaporator and heater coils with low air pressure or a stream low-pressure water **once a year**. Do not use a pressure washer as this will damage the fins. Remove the air filter and brush the evaporator coil from behind.

**Once a year**, clean the condenser with low-pressure air jet or a stream of low-pressure water, taking care not to damage fins (Figure 24).

**CAUTION**

Direct the pressure straight through the coil to prevent bending of fins and do not use extremely high pressure. Do not use hot water, steam or caustic soap.

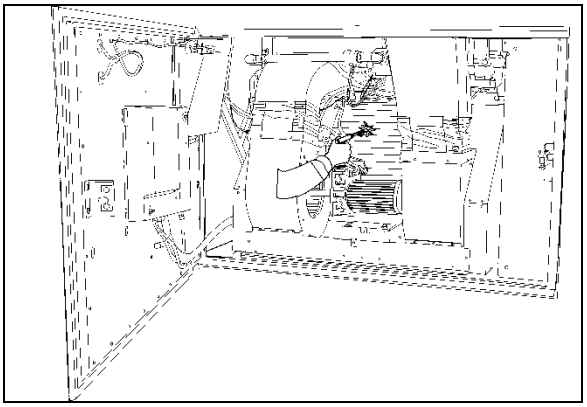

FIGURE 23: EVAPORATOR COIL CLEANING WITH LOW-PRESSURE AIR JET
22373

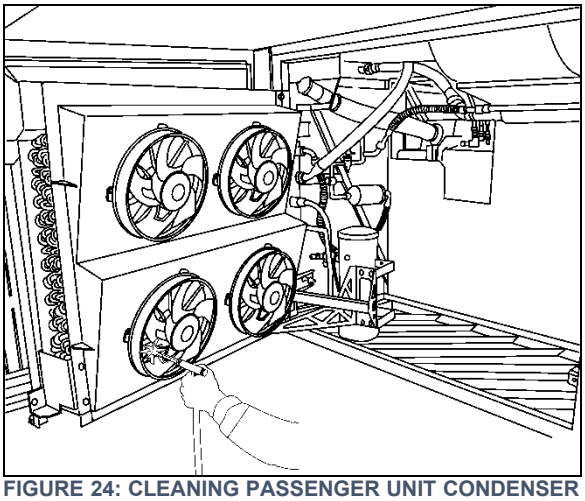

FIGURE 24: CLEANING PASSENGER UNIT CONDENSER COIL WITH LOW-PRESSURE AIR JET 22362

## 3.2 DRIVER UNIT AIR FILTER

For maximum air conditioning and heating system efficiency, air filters should be inspected, cleaned, or replaced as required in maintenance schedule to ensure proper ventilation of the evaporator and heating cores. To clean filters, remove lint using a nylon brush, back flush with water, then allow to dry.

The driver HVAC unit is in the R.H. console panel.

**MAINTENANCE**

**Driver unit air filters**

Clean or replace recirculating air filter at the intervals specified by the Lubrication And Servicing Schedule in Section 24: LUBRICATION & SERVICING.

*NOTE*

*If the windshield is continuously fogged, check that :*

*The driver unit fresh air filter is not clogged;*

*The fresh air damper (flapper door) is open, i.e. the recirculation button on the HVAC control unit is not engaged.*

### 3.2.1 X3 series

To gain access to the A/C filters, unscrew the grille located at the top entrance step (Figure 25). Unscrew the plastic cover and slide out the recirculating air filter (**FIGURE 26**). Doing so will give you access to the fresh air filter (see item 18, Figure 91).

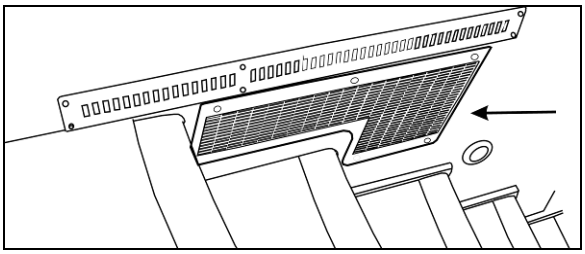

FIGURE 25: R.H CONSOLE AIR FILTER ACCESS GRILL (COACHES) 18505

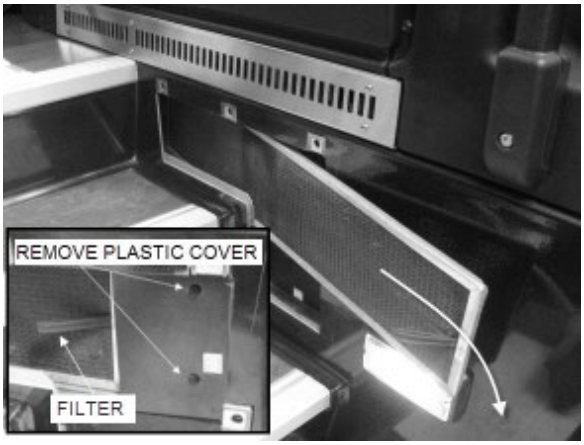


FIGURE 26: REMOVING DRIVER'S SECTION AIR FILTERS

### 3.2.2 H3 series

The driver HVAC unit fresh air filter is in the wiper drive compartment.

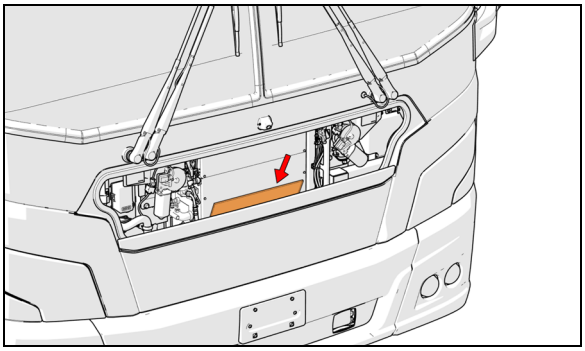

FIGURE 27: DRIVER HVAC SYSTEM FRESH AIR FILTER

Two recirculating air filters are located under the central utility compartment.

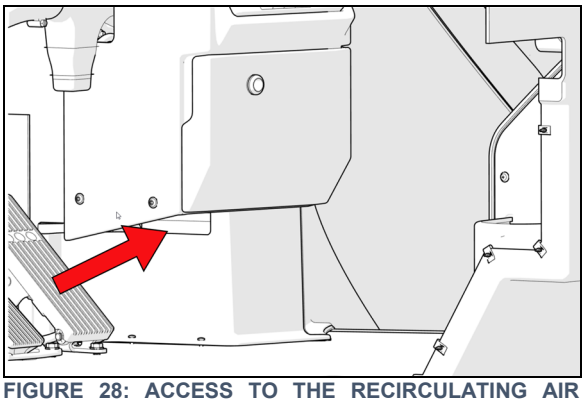

FIGURE 28: ACCESS TO THE RECIRCULATING AIR FILTERS

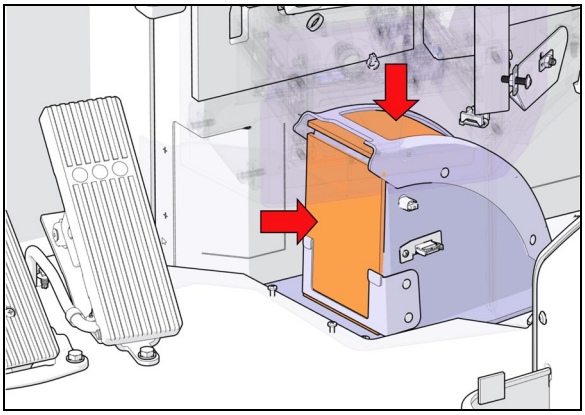

FIGURE 29: TWO RECIRCULATING AIR FILTERS LOCATED UNDER THE CENTRAL UTILITY COMPARTMENT

### 3.3 PASSENGER UNIT AIR FILTER – H3 SERIES

The passenger unit 2-part air filter is located in the evaporator compartment. To access the filter, locate the access panel in the baggage compartment at the left of the evaporator compartment. Open panels by turning the three screws of either panel ¼ of a turn (Figure 31), unsnap both fasteners on top of filter, and slide out filter (Figure 32).

**MAINTENANCE**

**Passenger unit air filter**

Clean or replace filter at the intervals specified by the Lubrication And Servicing Schedule in Section 24: LUBRICATION & SERVICING.

To clean filter, back flush with water or soapy water, then dry with air.

**CAUTION**

Be sure not to reverse filter upon installation.

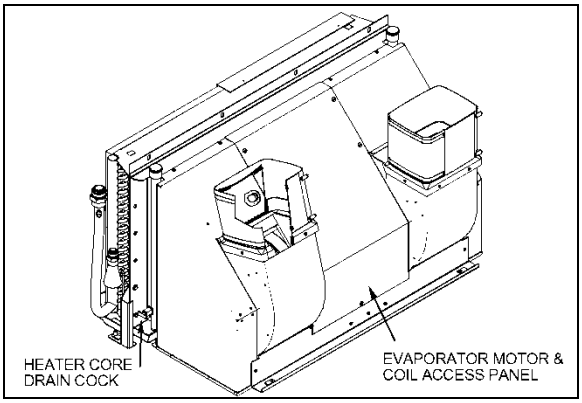


FIGURE 30: PASSENGER UNIT EVAPORATOR COIL 22332

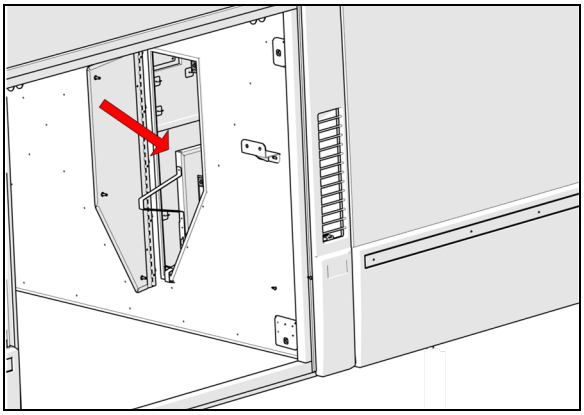

FIGURE 31: PASSENGER UNIT 2–PART AIR FILTER ACCESS PANEL H-SERIES

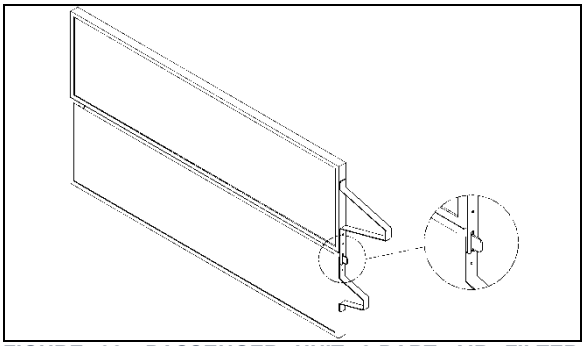

FIGURE 32: PASSENGER UNIT 2-PART AIR FILTER H3 SERIES

### 3.4 PASSENGER UNIT AIR FILTER – X3 SERIES

The cabin or passengers' section air filter is located in the evaporator compartment above the evaporator coil and fans (Figure 33).

## MAINTENANCE

**Passenger unit air filter**

Clean or replace filter at the intervals specified by the Lubrication And Servicing Schedule in Section 24: LUBRICATION & SERVICING.

To clean filter, back flush with water or soapy water, then dry with air

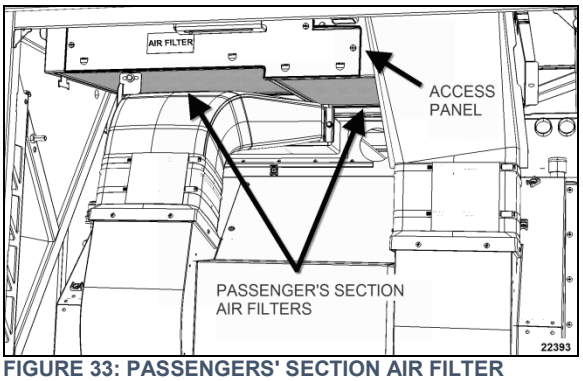


FIGURE 33: PASSENGERS' SECTION AIR FILTER

## CAUTION

Be sure not to reverse filter upon installation.

### 3.5 OVERHEAD COMPARTMENT FAN AIR FILTER

Air conditioning evaporator coils may be installed in both overhead compartment air systems. Only the air filters are serviceable. The air filters are accessible from inside the overhead compartments (Figure 34).

## MAINTENANCE

At the intervals specified by the Lubrication And Servicing Schedule in Section 24: LUBRICATION & SERVICING, slide out the filters, then back flush with water, dry with air and reinstall.

For air conditioning unit, ball valves are added on supply and return lines in the condenser compartment. They have service port to evacuate the A/C overhead compartment circuit. When work has to be done on an evaporator coil unit, it will be easier to remove it and repair it on a bench.

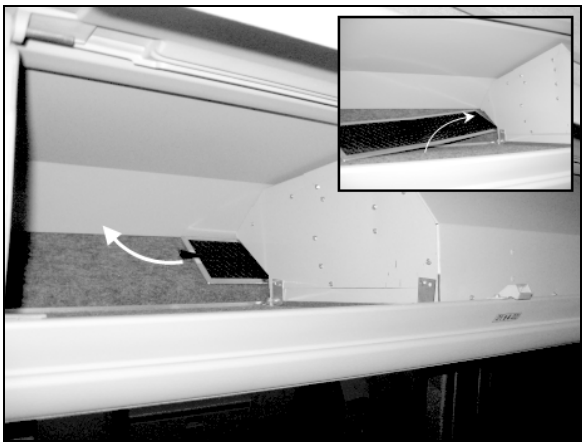

FIGURE 34: OVERHEAD COMPARTMENT FAN AIR FILTER (X3 SERIES) 22201

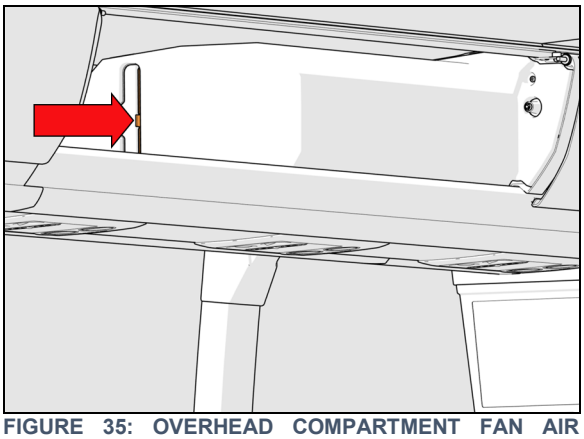

FIGURE 35: OVERHEAD COMPARTMENT FAN AIR FILTER (H3 SERIES)

### 3.6 COMPRESSOR BELTS

#### 3.6.1 Belt Replacement – Big System

## DANGER

Set the main battery disconnect switch to the OFF position. For greater safety, set the engine rear starter selector switch in engine compartment to the OFF position.

1. Open engine compartment rear door and locate A/C compressor drive belt tensioner. Loosen tensioner screw to release belt tension.
2. For vehicles equipped with a 3rd alternator, belt tensioning is also applied through air bellows (Figure 37). Turn the belt tensioner two-way control valve counterclockwise to release bellows pressure (Figure 39).

3. Remove the radiator fan drive belt (refer to Section 05 COOLING).
4. Slip the old compressor belts off and the new ones on.

*NOTE*

*Both belts must always be replaced simultaneously to ensure an equal distribution of load on each of them.*

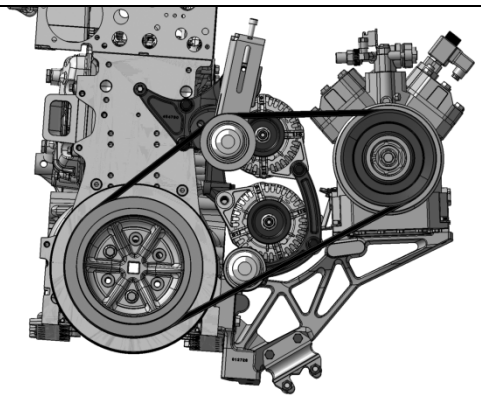

Twin BX71 belt proper tension
New: 90-100 lbs
Used: 75-85 lbs
Belt tension Tool:7770002

**FIGURE 36: STANDARD BELT LAYOUT WITH BIG HVAC SYSTEM**

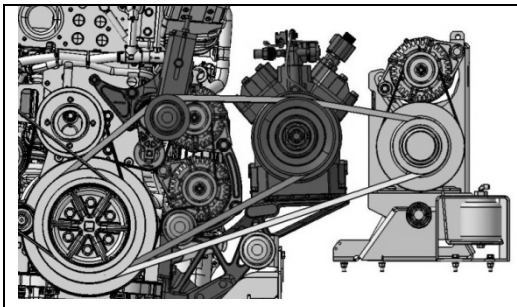

Single 5VX740 belt proper tension
New: 150-160 lbs
Used: 120-130 lbs
Belt tension Tool:7770002
Single 5VX940 belt to 3rd alternator proper tension
Automatic with pneumatic bellows

**FIGURE 37: H3 SERIES BELT LAYOUT W/ 3RD ALT.**

*NOTE*

*Belts specifications may vary. For proper belt selection, always consult your vehicle Coach Final Record.*

## MAINTENANCE

**A/C compressor drive belt**

Clean belt tension, inspect for cracks or frayed material at the intervals specified by the Lubrication And Servicing Schedule in Section 24: LUBRICATION & SERVICING.

3.6.2 Belt Tension Adjustment – Big System

On the mechanical tensioner (Figure 38), slightly slack lock bolt (A). Adjust tension by turning adjustment screw (B). Tighten the lock bolt (A) to preserve adjustment.

**TORQUE: 43 lb-ft (58 Nm)**

Should the idler bearing need to be serviced, tighten shoulder bolt (C) at reassembly.

**TORQUE: 31.5-38.5 lb-ft (43-52 Nm)**
(M12 shoulder bolt)

**TORQUE: 59 lb-ft (80 Nm)**
(M12 x 1.75 std bolt)

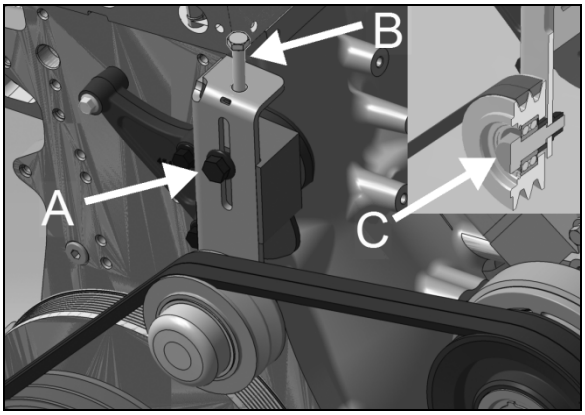


22381

**FIGURE 38: TENSIONER ON BIG A/C**

For H3 series vehicles equipped with a 3rd alternator, (Figure 37) belt tensioning is also applied through air bellows which is adjusted by an air pressure regulating valve pressure (Figure 39). The correct pressure of 45 psi is set at the factory. Periodically verify the pressure at the regulating valve using a pressure gauge and correct if required.

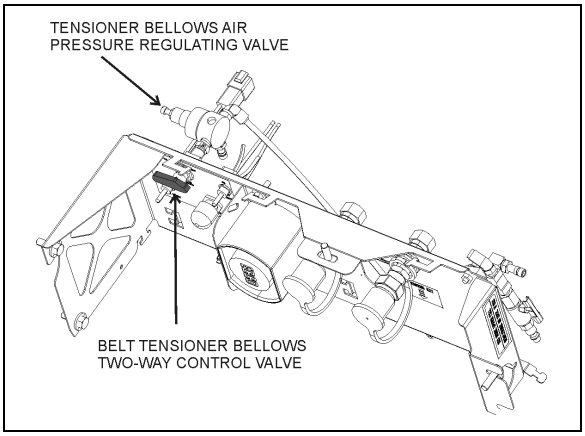


**FIGURE 39: BELT TENSIONER CONTROL VALVE - H3 SERIES** 12219

### 3.6.3 Belt Tension Adjustment – Small Hvac System H-Series

Belt tensioning is applied through air bellows which are adjusted by an air pressure regulating valve (Figure 39). The correct pressure of 45 psi.is set at the factory. Periodically verify the pressure at the regulating valve using a pressure gauge and correct if necessary.

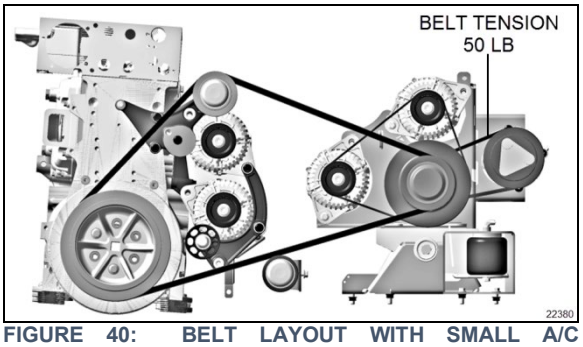


**FIGURE 40: BELT LAYOUT WITH SMALL A/C COMPRESSOR H-SERIES**

### 3.6.4 Belt Tension - Small Hvac System X-Series

Belt tension is achieved by an automatic belt tensioner. No adjustment is required.

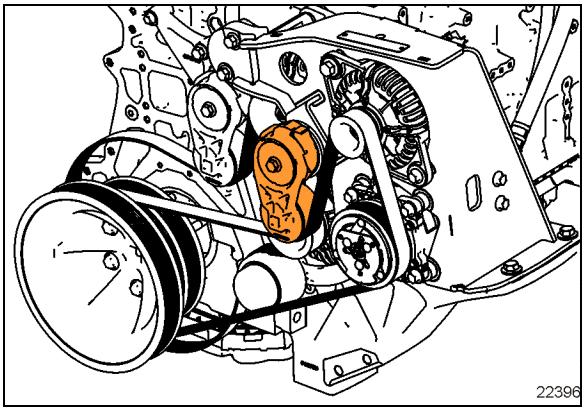


**FIGURE 41: BELT LAYOUT WITH SMALL A/C COMPRESSOR X-SERIES**

## 3.7 TORCH BRAZING

Use electrode containing 35% silver.

***NOTE***

*A 3.5% silver low temperature brazing electrode can be used on low side pressure and liquid high side.*

**CAUTION**

When using heat near a valve, wrap with water saturated rag to prevent overheating of vital parts.

**DANGER**

Before welding any part of refrigeration system, make sure the area is well ventilated.

## 3.8 SOLDERING

Before soldering any part of the system, make sure the area is well ventilated. Use (stay clean) flux sparingly and apply solder (95-5 round wire 1/8 inch [3,1 mm]). After completing repairs, test for leaks.

When using heat at or near a valve, wrap with a rag saturated of water to prevent overheating of vital parts.

## 4. HVAC SYSTEM COMPONENTS

### 4.1 COMPRESSOR – BIG A/C SYSTEM

The big system is equipped with a **Bitzer 4-cylinder model 4NFCY** compressor. Refer to paragraph 0 “Specifications” at the end of this section.

For complete information on Bitzer A/C compressor maintenance, installation, torque chart, approved oils, refer to the following Bitzer manuals found on your Technical Publications USB flash drive and on the Prevost Technical Publications web site.

- ***Bitzer kw-540-1 Maintenance Instruction***
- ***Bitzer kb-540-3 Operating Instructions***
- ***Bitzer kw-541-2 Exchanging Shaft Seal***
- ***Bitzer kw-555-3 Tightening Torques***
- ***Bitzer kt-100-3 Capacity Control (unloader)***
- ***Bitzer ke-540-7 Spare Parts List***
- ***Bitzer kt-510-5 Tech Info oils***

#### 4.1.1 Suction and Discharge Hose Connection

1. Before connecting suction and discharge refrigerant hoses to the compressor, apply POE compressor oil on new gaskets, **do not dip in oil**.
2. Tighten hose flange by hand in 2 sequences.
3. Apply a final torque on cap screws.

**TORQUE: 31-35 lb-ft (42-47 Nm)**

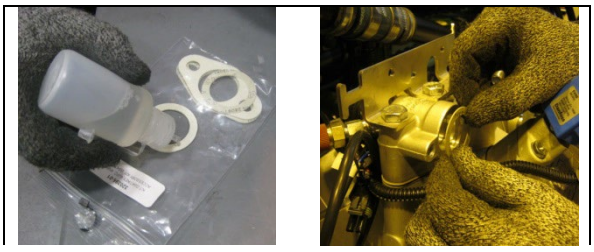

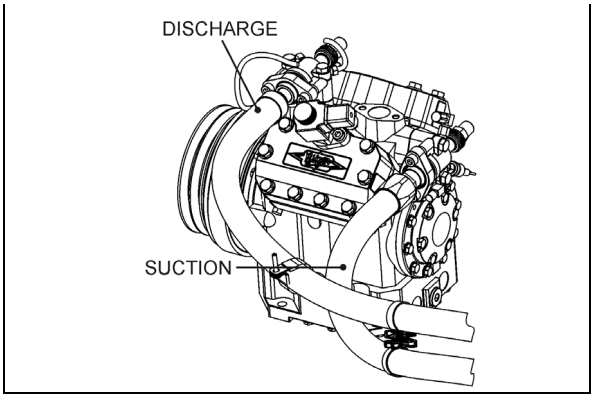


**FIGURE 42: SUCTION AND DISCHARGE HOSE**

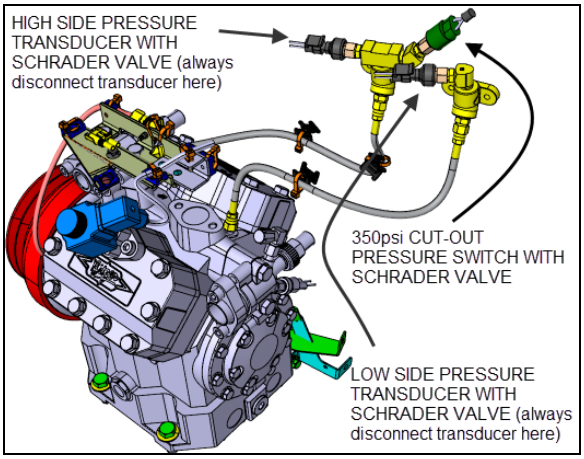


**FIGURE 43: BITZER COMPRESSOR**

#### 4.1.2 Electro-Magnetic Clutch

For the Lang KK73.1 electro-magnetic clutch **removal & installation procedure**, refer to Maintenance Information **MI18-37**.

For Lang KK73.1 electro-magnetic clutch service manual or bearing replacement procedure, refer to the following manuals found on your Technical Publications USB flash drive and on the Prevost Technical Publications site.

- ***Lang clutch KK73.1 bearing replacement***
- ***Lang operating instr_KK73 1_2***
- ***Lang Service manual_KK73.1_2***
- ***Bitzer Maintenance Instruction kw-540-1***

#### 4.1.3 Maintenance - Shaft Seal Oil Collecting Tube Drain

The shaft seal oil tube collects oil seeping through the felt shaft seal. Remove the tube plug and drain the oil into a container for disposal.

Replace the cap on the tube and replace the tube into the clip bracket.

**MAINTENANCE**

Empty the shaft seal oil collecting tube at the intervals specified by the Lubrication And Servicing Schedule in Section 24: LUBRICATION & SERVICING.

During the 250 hour run-in period of the shaft seal, an increased oil seep rate may occur.

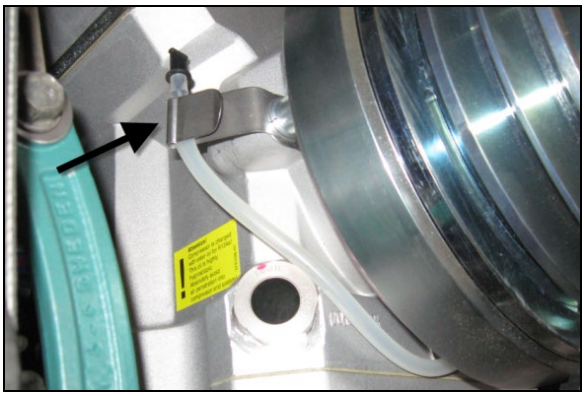

FIGURE 44: SHAFT SEAL OIL COLLECTING TUBE

4.1.4 Maintenance - Oil Color & Level Check

Check the oil color and the oil level, top up as needed. Change the oil if it has darkened (see oil evaluation criteria below).

**MAINTENANCE**

**A/C compressor oil color & level check**

Check compressor oil color and level at the intervals specified by the Lubrication And Servicing Schedule in Section 24: LUBRICATION & SERVICING.

1. Run the compressor for at least 15 minutes, the time required so that the oil gets clear, unclouded and stabilized (without bubbles).
2. Check the oil level **during operation**. The proper level is:
   - R.H. sight glass: between ½ and ¾ of sight glass height (Figure 45).
   - L.H. sight glass: the full sight glass height (Figure 46).

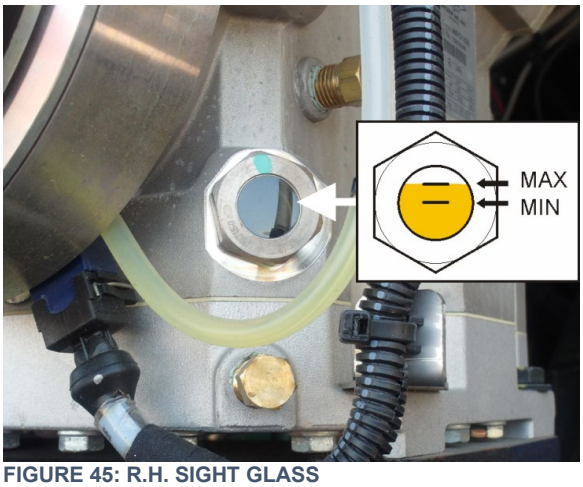


FIGURE 45: R.H. SIGHT GLASS

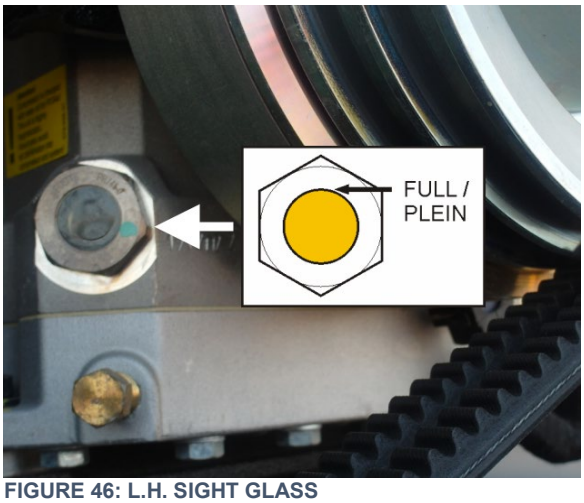


FIGURE 46: L.H. SIGHT GLASS

*The oil level is expected to remain the same over time except if there is a loss of refrigerant. Adding oil must be done by taking the same precautions as when changing oil in order not to introduce the moisture content of the ambient air in the air-conditioning system.*

3. Check for discoloration of the oil. It should be clear and light in color. Darkened, cloudy and contaminated oil **must be changed**. **Diagnose the problem**. See the following images to help you evaluate the state of the compressor oil.

*Tip: use the reflection of light on the threads to help you determine the color of the oil.*

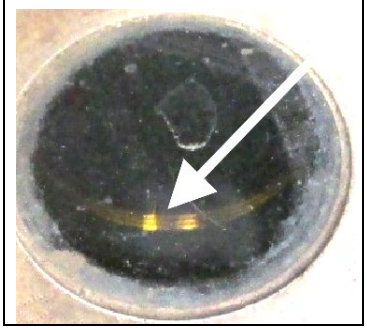

| OIL EVALUATION CRITERIA | | | |
|---|---|---|---|
| Normal | Shows deterioration<br>Should be changed soon | Must be changed at once | Heavily deteriorated<br>compressor has suffered damage due to this oil |
|  |  | 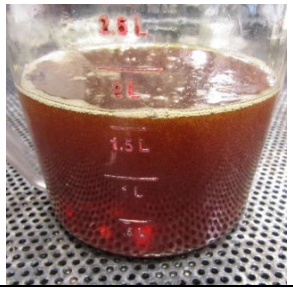 |  |

4.1.5 Maintenance - Compressor Oil Change

Impurities from the system components or operation outside the application ranges can lead to deposits in the lubrication oil and darken its color. Change the oil in this case. At the same time, clean the oil filter and magnetic plug as well. Determine and eliminate the cause for operation outside the application ranges.

**MAINTENANCE**

**Compressor oil change**

Change the oil, clean the compressor oil filter and the magnetic plug at the intervals specified by the Lubrication And Servicing Schedule in Section 24: LUBRICATION & SERVICING.

Oil Type: Polyolester ISO68.

- Bitzer BSE55 (POE)
- Castrol Icematic SW 68
- Mobil EAL Arctic 68
- Shell S4 FR-F 68, Clavus R68

- Check the oil level first, according to *"Maintenance - Oil Color &* Level Check*"*.

- Connect the refrigerant recovery station to the service connections of the shut-off valves.
- Isolate the compressor from the system. To do so, frontseat the compressor shutoff valves.
- Extract the refrigerant using the recovery station until ambient pressure is reached. Take note of the quantity removed.
- Remove the magnetic drain plug.

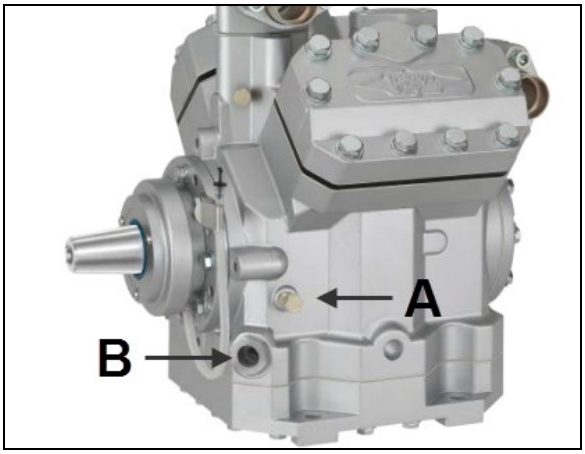


FIGURE 47: OIL FILL PLUG (A) AND SIGHT GLASS (B)

- Drain the oil into a container. Measure the quantity of oil removed.
- Extract and clean the oil filter/strainer. Reinstall once done.

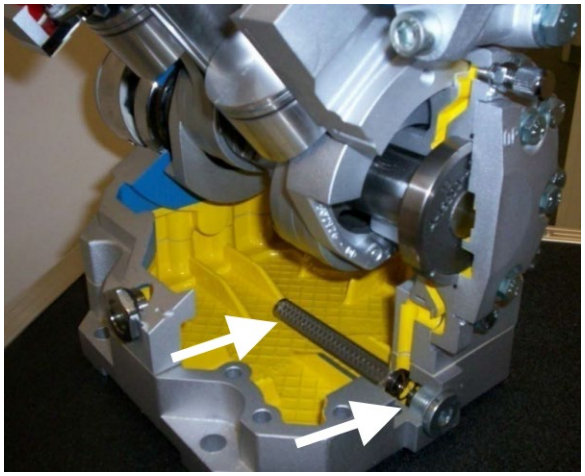

FIGURE 48: CUTAWAY VIEW SHOWING OIL FILTER/STRAINER AND MAGNETIC DRAIN PLUG

- Clean the magnetic drain plug and reinstall.
- Through the oil filling port, add the same amount of fresh oil. More oil should be added if the oil level was too low when checked at the beginning.
- Evacuate the compressor to 500 microns.
- Charge the system with new refrigerant. Charge with the same quantity as recovered previously.

### 4.1.6 Troubleshooting Guide

A preliminary check may be made by simply feeling the cylinder heads with the unit in operation at ambient temperatures of 35°F (2°C) and over. The cylinder heads are internally divided into suction and discharge areas. The upper central section of the cylinder is the suction side and it should be relatively cool to the touch, as opposed to the hot discharge area which is the lower perimeter area of the cylinder head. If a valve plate or head gasket is blown, or a compressor unloader is stuck open, partially compressed refrigerant vapor will be circulated between the suction and discharge sides of the head. The affected cylinder head will then have a relatively even temperature across its surface and be neither as hot as the normal discharge temperature nor as cool as the normal suction temperature.

**Blown Head Gaskets**

Symptom:

- Loss of unit capacity at low temperature.
- Even cylinder head temperature.

Cause:

- Improperly torqued cylinder head bolts.
- Improperly positioned gasket at assembly.
- Warped cylinder head.
- Severe liquid refrigerant floodback.

**Blown Valve Plate Gaskets**

Symptom:

- Loss of unit capacity at medium and low temperatures.
- Very hot cylinder head surface.
- Higher than normal suction pressure.

Cause:

- Improperly torqued cylinder head bolts.
- Severe liquid refrigerant floodback.

- Oil slugging caused by an overcharge of oil or flood starts.
- Discharge valves not seated properly (liquid drainback during shutdown).

**Broken Suction Valves**

Symptom:

- Loss of unit capacity at all temperatures.
- Compressor unable to pull extremely low vacuum with suction shutoff valve frontseated.

Cause:

- Repeated liquid refrigerant floodback.
- Flooded starts.
- Overcharge of oil.
- Discharge valves not seated properly (liquid drainback during shutdown).
- Expansion valve not controlling properly.

**Unloader Valve Stuck Open**

Symptom:

- Loss of unit capacity at all temperatures.
- Higher than normal suction pressure.
- Even cylinder head temperature.

Cause:

- Unloader body stem bent.
- Foreign material binding unloader piston or plunger.

## 4.2 COMPRESSOR – SMALL HVAC SYSTEM

You will find complete information about the compressor by consulting the Sanden manual: ***Sanden SD Compressor Service Guide***, found on the Prevost technical Publications site.




### 4.2.1 Sanden SD7 Compressor Oil Charging

Compressor lubrication occurs as the oil which circulates with the refrigerant passes through the compressor crankcase during operation. Excess oil can act as an insulator limiting heat transfer in the evaporator and condenser, while too little oil can negatively affect durability.

Use the following procedure after a major oil loss due to leakage of refrigerant from hose connection, condenser, or evaporator.

Prerequisite condition: The HVAC system is already charged with refrigerant.

1. Set up the vehicle as follows:

   a. Doors open.

   b. Maximum fan speed and full A/C request.

   c. Ambient temp: at least 75°F (24°C).
2. Run the engine at precisely 1000 rpm for 10-15 minutes. In this condition, the compressor will run at 2500 rpm.
3. While maintaining engine speed, turn off A/C system and immediately turn off the engine.
4. Recover refrigerant from the HVAC system.
5. Remove compressor from vehicle.
6. Remove the oil plug and drain as much oil as possible into a suitable container.

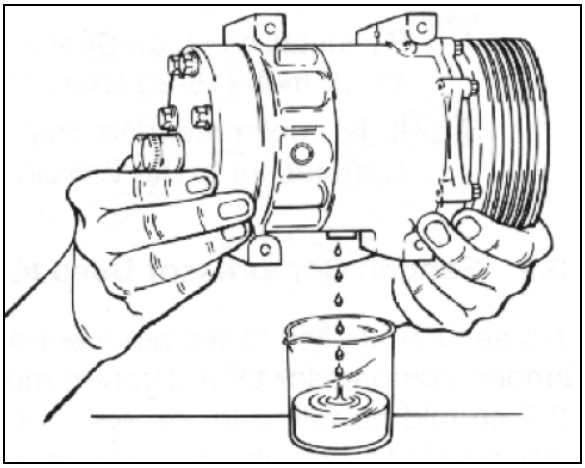

FIGURE 49

7. Drain oil from the suction and discharge ports into the container while turning the shaft clockwise only with a socket wrench on the armature retaining nut.

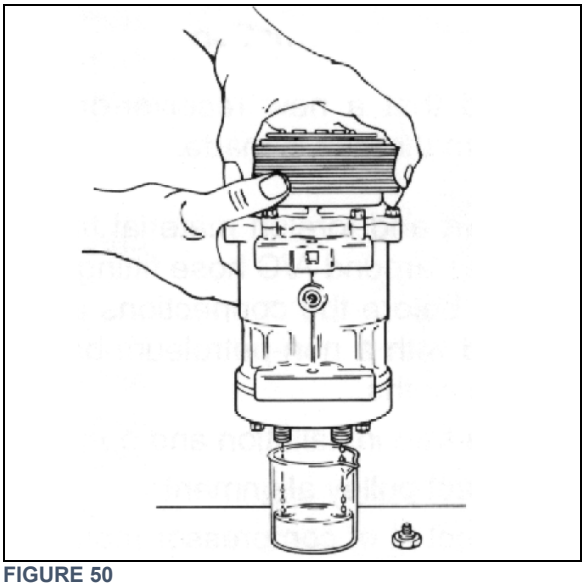

FIGURE 50

8. Measure and record the volume of the oil drained from the compressor.
9. Approximately 15 ml (0.5 fl. oz.) will remain in the compressor as a film coating the internal surfaces.
10. The desired amount of oil in the compressor after running for 10-15 minutes the compressor at 2500 rpm is 58 ml (2.0 fl. oz.).
11. Add PAG oil as necessary to the container and pour back into the compressor (Figure 51) according to the following formula:

**58ml – (oil drained + 15ml) = oil to add**

If the amount of oil in the compressor is too much, remove oil from the container according to the following formula:

**(oil drained + 15ml) – 58ml = oil to remove**

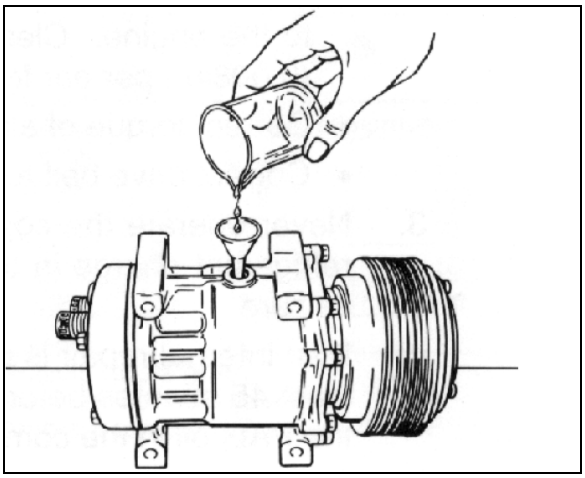

FIGURE 51

12. Reinstall oil plug. Seal and O-ring must be clean and not damaged. Torque to 11-15 ft-lb (15-20 N-m).
13. Reinstall the compressor.

#### 4.2.2 Compressor Replacement - Oil Amount (compressor swap, no flushing)

It's critical for successful compressor replacement that the new compressor is installed in a clean system with a correct oil charge. Contamination remaining in the system will be pulled into the new compressor and lodge under the valves and in bearings causing quick failure of the new compressor. Also, it's important to maintain the original oil charge amount when replacing the compressor.

1. Remove the failed compressor.
2. Install the new compressor.
3. Charge the system with refrigerant.
4. Determine if the quantity of oil present in the system is in excess or if oil should be added. To do so, perform **4.2.1 Sanden SD7 Compressor Oil Charging**.

#### 4.2.3 Removal - When the Compressor Is Operational

Perform the "OIL RETURN OPERATION" (refer to paragraph 7.9).

| *NOTE* |
| --- |
| *Belts specifications may vary. For proper belt selection, always consult your vehicle Coach Final Record.* |

4.2.4 Removal - When the Compressor Is Inoperable

- Perform the “Refrigerant Recovery” operation (paragraph 7.5).
- Remove any tension on the belts

Slacken bolts fixing small compressor.
(FIGURE 52 and Figure 53)

- Remove the compressor.
- Reinstall following system clean-out recommendations (Paragraph 7.6)

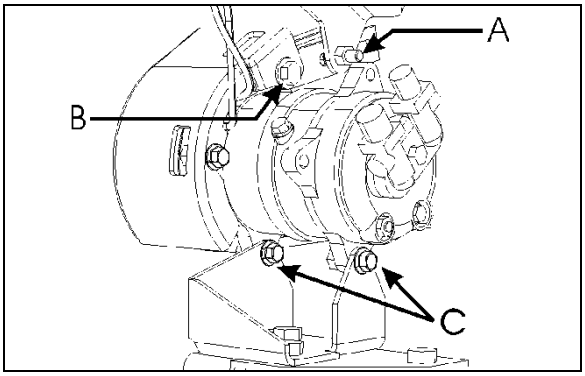


FIGURE 52: COMPRESSOR MOUNTING H-SERIES

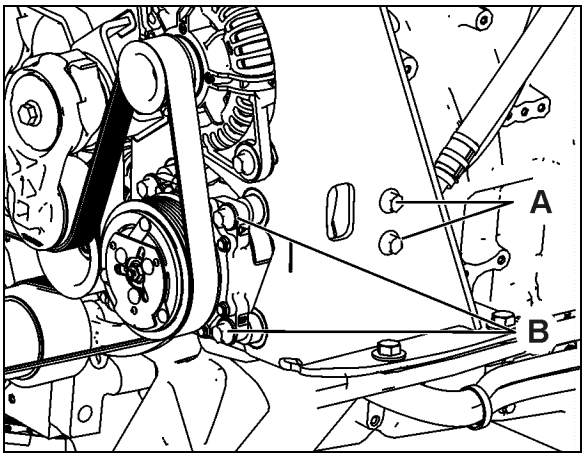


FIGURE 53: COMPRESSOR MOUNTING X-SERIES

4.3 BRUSHLESS EVAPORATOR MOTOR

The brushless evaporator motor is installed in the evaporator compartment (Figure 54). It is a 27.5 volt, 2HP (1,5 kW) motor which activates a double blower fan unit.

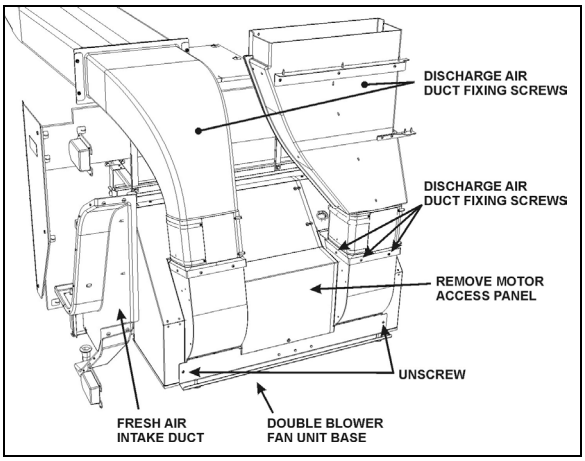


FIGURE 54: H3 SERIES EVAPORATOR COMPARTMENT

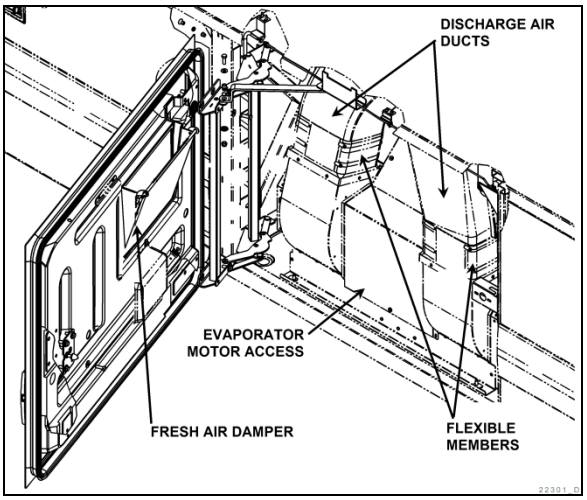


FIGURE 55: X3 SERIES EVAPORATOR COMPARTMENT

4.3.1 Removal

- Set the battery master switch to the OFF position and trip circuit breaker CB3 (CB6 on X3 VIP).
- Open the evaporator compartment door.
- On the HVAC module. Disconnect circuit 90H1 from evaporator relay R12.
- Identify the discharge ducts inside compartment and remove the Phillips head screws fixing the air duct to blower fan unit.
- Remove the motor access panel.
- Disconnect electrical motor speed control wire (white wire, circuit 2F), power cable and ground cable from motor terminals.
- From under the vehicle, remove the eight bolts fixing the double blower fan unit base.

Remove the complete unit from the evaporator compartment (Figure 56).

**CAUTION**

Never support evaporator motor assembly by its output shafts while moving it. Always use double blower fan unit base.

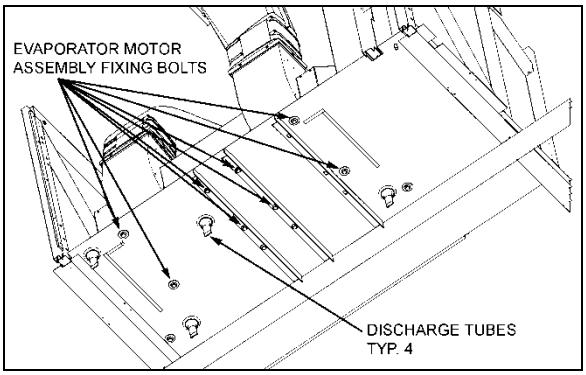


**FIGURE 56: EVAPORATOR MOTOR BOLTS** 22315

- Install the complete unit on a work bench, unfasten the fan square head set screws, the Phillips head screws retaining cages to base and slide out the assemblies from the evaporator motor output shaft.
- Remove motor from double blower fan unit base.

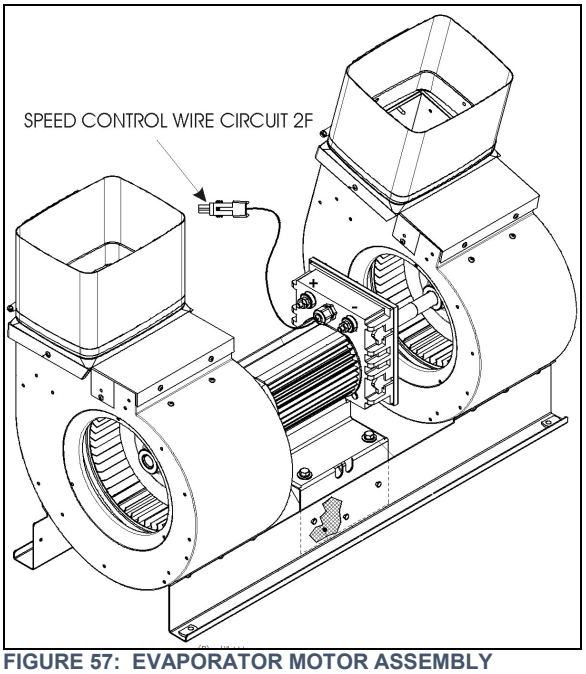


**FIGURE 57: EVAPORATOR MOTOR ASSEMBLY**

4.3.2 Installation

To reinstall the evaporator motor, reverse "Evaporator Motor Removal" procedure.

## 4.4 CONDENSER (BIG A/C)

The big A/C system condenser coil is hinge mounted on the R.H. side of the vehicle on the condenser compartment door. Since condenser's purpose is to dissipate heat from the hot refrigerant, it is important to keep the cooling coils and fins clean. A clogged coil will cause high discharge pressure and insufficient cooling.

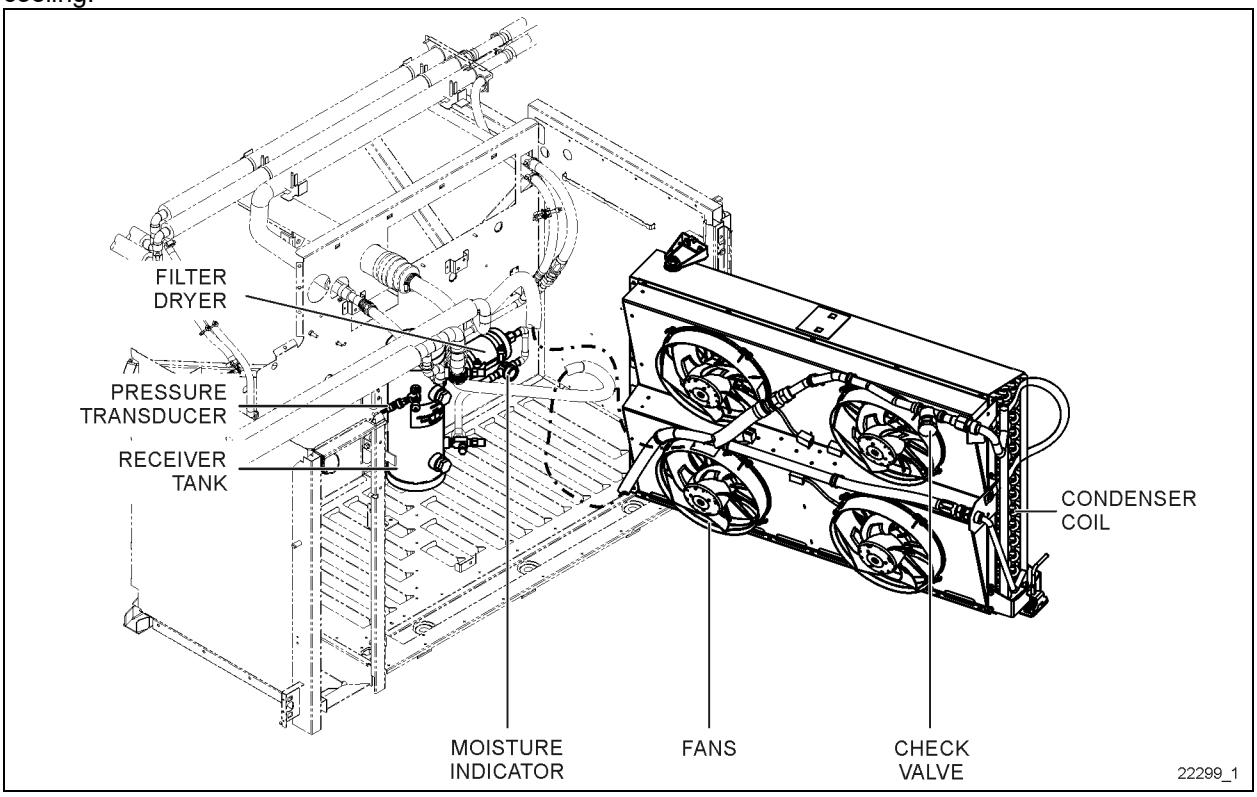


**FIGURE 58: BIG A/C CONDENSER**

### 4.4.1 Condenser Fan Control

Four brushless motors fan are installed in condenser compartment on R.H. side of vehicle in order to ventilate the condenser coil. The fans pull outside air through the condenser coil and discharge it through an opening at bottom of compartment.

Fan speed is controlled by the multiplex program and varies according to high side pressure. A Pulse Width Modulation (PWM) signal is used to control fan speed.

You will notice fan speed ramp up to full speed between 100 psi and 200 psi, and a ramp down from 200 psi to 100 psi. Below 100psi, the fans are not running. Refer to Figure 59 below.

| *NOTE* |
| --- |
| During normal conditions, fan function according to the following specifications:<br>Full speed: 6200cfm, 37A at 28 VDC<br>Fan motor speed: 2950 rpm at full speed |

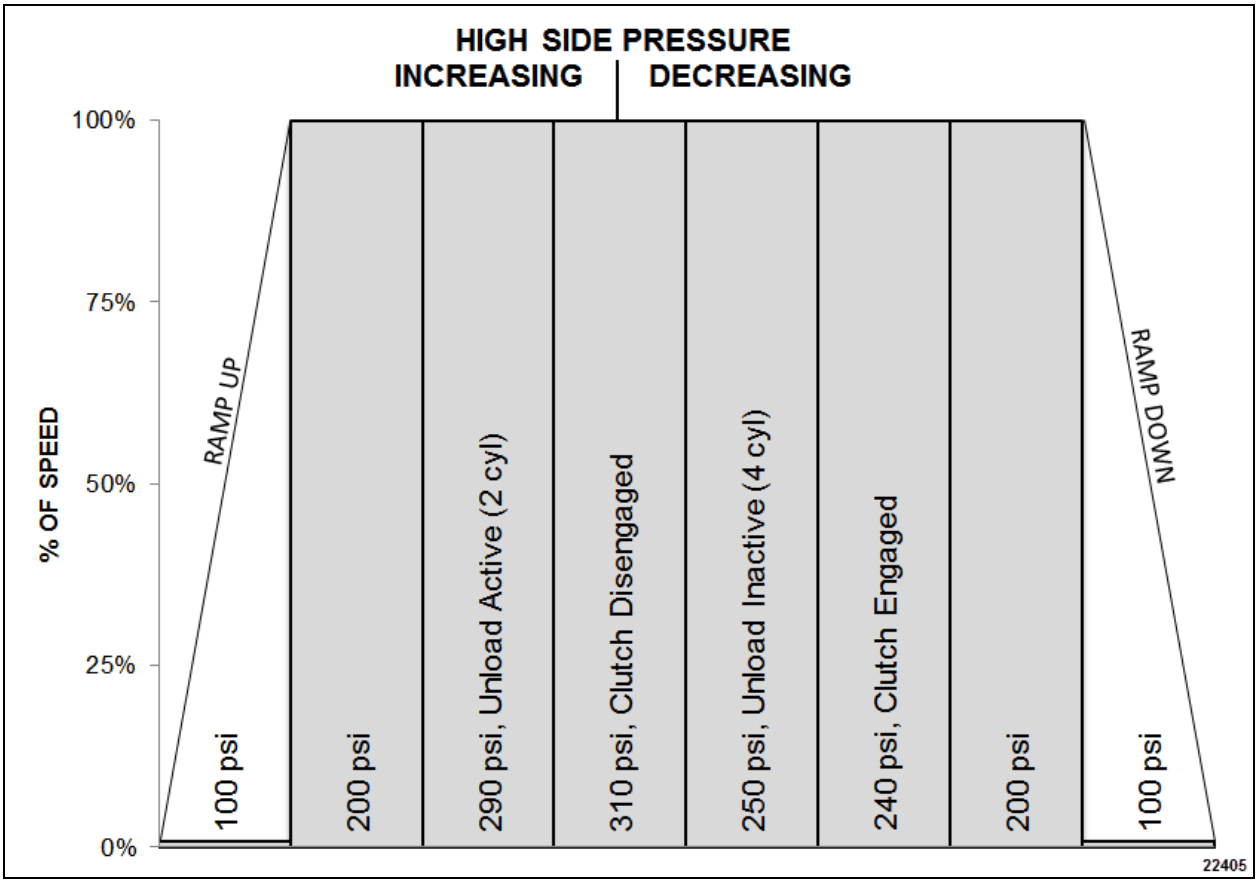


FIGURE 59: CONDENSER FAN SPEED AND COMPRESSOR EVENTS IN RELATION WITH HIGH SIDE PRESSURE

### 4.4.2 Condenser Fan Removal

1. Set the battery master switch to the OFF position.
2. Unplug the fan harness connector (Figure 60).
3. Remove the four hexagonal head cap screws retaining the fan assembly to the shroud.
4. Remove the motor.

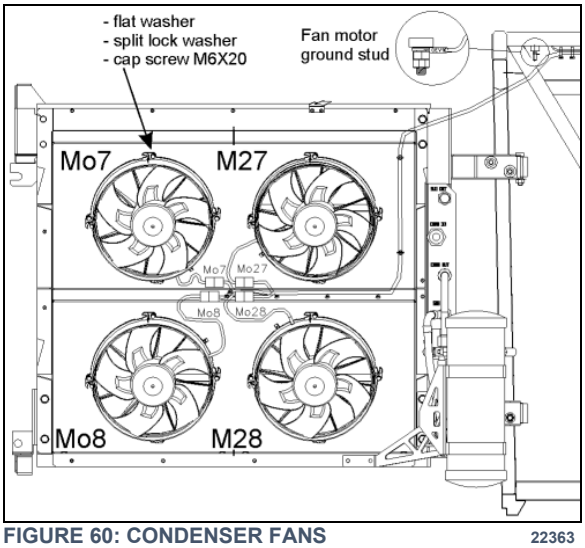


FIGURE 60: CONDENSER FANS

## 4.5 CONDENSER (SMALL A/C)

On H3-series vehicles, the condenser is installed over the radiator and benefits from the existing airflow in this location.

On X3-series vehicles the condenser is installed in the 4th baggage compartment and has its own MUX controlled electrical fan.

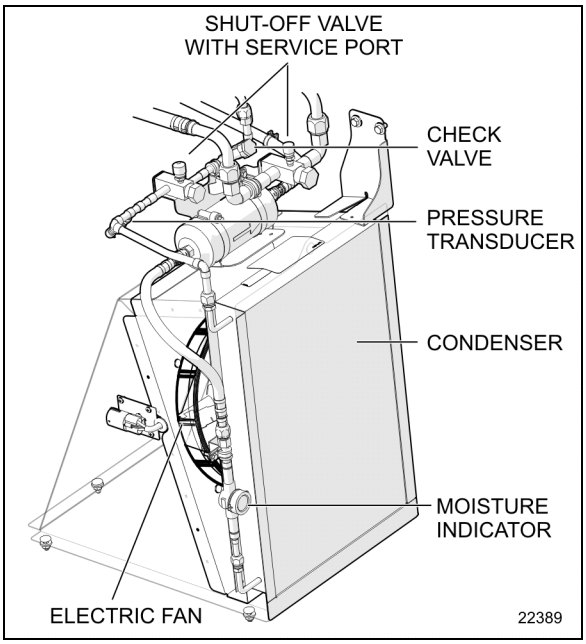


**FIGURE 61 X3 SERIES SMALL A/C CONDENSER ASSEMBLY.**

## 4.6 RECEIVER TANK

The receiver tank is located in the condenser compartment (Figure 62). The function of the receiver tank is to store the liquid refrigerant. During normal operation, the level of the refrigerant should be approximately at the mid-point of the lower sight glass.

**MAINTENANCE**

Check refrigerant level and add if necessary, at the intervals specified by the Lubrication And Servicing Schedule in Section 24: LUBRICATION & SERVICING.

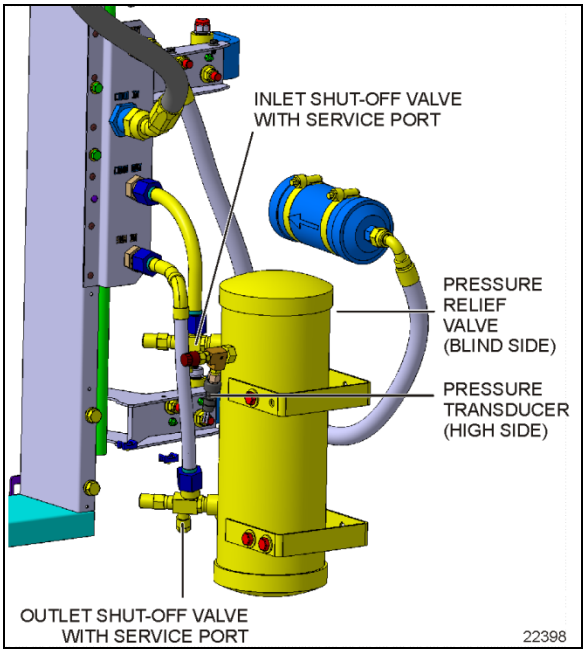


**FIGURE 62: RECEIVER TANK (H3 SERIES)**

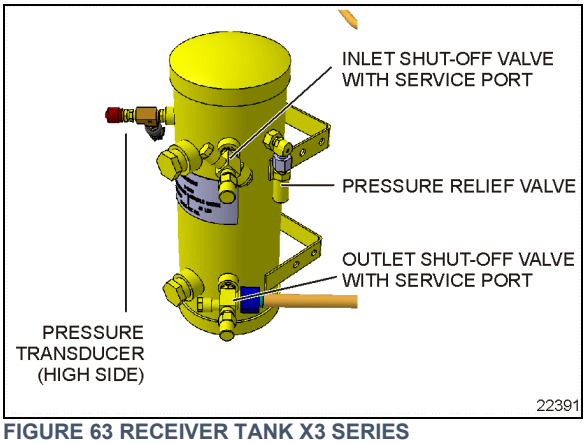


**FIGURE 63 RECEIVER TANK X3 SERIES**

In case of extreme pressure there will be a rise in the liquid receiver tank. A pressure relief valve will break at 450 psi and relieve the receiver tank pressure.

The receiver tank incorporates an inlet valve on the inlet side (upper section) which allows the tank to be isolated or serviced. An outlet valve on the outlet side (lower section) permits complete isolation from the rest of the system.

During **normal operation**, inlet and outlet shutoff valves are in backseated position (stem out).

When connecting a gauge to the service port, make sure the shut-off valve is in backseated

position because the service port is not fitted with a Schrader valve.

## 4.7 FILTER-DRYER

A filter-dryer, also located in the condenser compartment, is installed on the liquid refrigerant line after the receiver tank. It is used to absorb moisture and foreign matter from refrigerant before it reaches the expansion valves.

**The filter-dryer should be replaced after a severe system failure, after a prolonged exposure and most important, when the moisture indicator sight glass turns to pink.**

### 4.7.1 Replacement Of The Filter-Dryer After Pumping Down

The filter-dryer is of the disposable type. When replacement is required, remove and discard the complete unit and replace with a new unit of the same type according to this procedure:

1. Perform the pumping down procedure to isolate refrigerant in the receiver tank.
2. Disconnect C24 to isolate the section of the system located between the receiver tank outlet shutoff valve and the passengers unit liquid solenoid valve.
3. Change the filter-dryer.

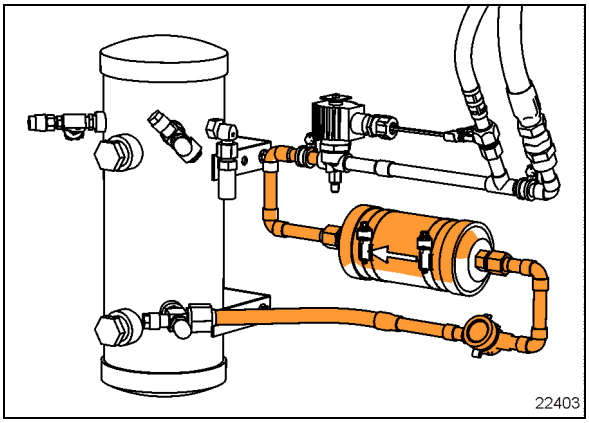


**FIGURE 64: ISOLATED SECTION X3 SERIES**

4. Once the filter-dryer has been replaced, it is necessary to evacuate the opened section of the refrigerant circuit. Evacuate the isolated section of the system using a vacuum pump connected to the service port of the receiver outlet shutoff valve.
5. Evacuate the section of the refrigerant piping as needed and in accordance with best practices, using a micron gauge to monitor the depth of vacuum. Evacuate to a system pressure less than 1000 microns.
6. Turn off the vacuum pump.
7. Backseat the outlet shutoff valve and then disconnect the vacuum pump hose.

**CAUTION**

Do not use carbon tetrachloride or similar solvents to clean parts. Do not use steam gun. Use mineral spirits or naphtha. All parts should be thoroughly cleaned. Use a stiff brush to wash dirt from grooves, holes, etc.

**DANGER**

Cleaning products are flammable and may explode under certain conditions. Always handle in a well ventilated area.

## 4.8 MOISTURE INDICATOR

The moisture sensitive element consists of a color changing ring which is reversible from pink to blue and vice versa as the moisture content in the refrigerant changes.




- PINK: high levels of moisture detected.
- PURPLE (caution): low levels of moisture detected.
- BLUE: dry, optimal operating conditions.

Since temperature changes affect the solubility, color change will also vary with the refrigerant temperature. The above table shows the color change for R-134a at various moisture levels and liquid line refrigerant temperatures.

**MAINTENANCE**

Check refrigerant moisture indicator at the intervals specified by the Lubrication And Servicing Schedule in Section 24: LUBRICATION & SERVICING.

Replace filter-dryer unit according to moisture indicator

| COLOR INDICATOR | | | |
|---|---|---|---|
| TEMPERATURE | BLUE (ppm) | LIGHT VIOLET (ppm) | PINK (ppm) |
| 75°F (24°C) | 20 | 35 | 130 |
| 100°F (38°C) | 35 | 55 | 160 |
| 125°F (52°C) | 60 | 65 | 190 |
| p.p.m.= parts per million (moisture content) | | | |

A moisture level of less than 15 p.p.m. for R-134a indicated in the blue color range of the above table is generally considered dry and safe. A color indication of light blue to light violet indicates the caution range of moisture level. For positive protection, the drying of the system should be continued until the color of the element turns to deep blue.

The liquid refrigerant is readily visible through the center opening of the moisture element where the presence of bubbles or flash gas indicates an insufficient system charge, low head pressure, insufficient liquid sub cooling or some form of restriction in the liquid line.

Moisture is one of the main causes of chemical instability or contamination in air-conditioning systems. If moisture is present, it can corrode the valves, condenser and evaporator coils, compressor and other components causing a malfunction and eventual failure of the system. Uncontrolled moisture in the system can result in very expensive multiple component replacements if not corrected at an early stage. The moisture indicator permits an early detection of moisture in the system and when corrected by a desiccant charge, system contamination is greatly minimized.

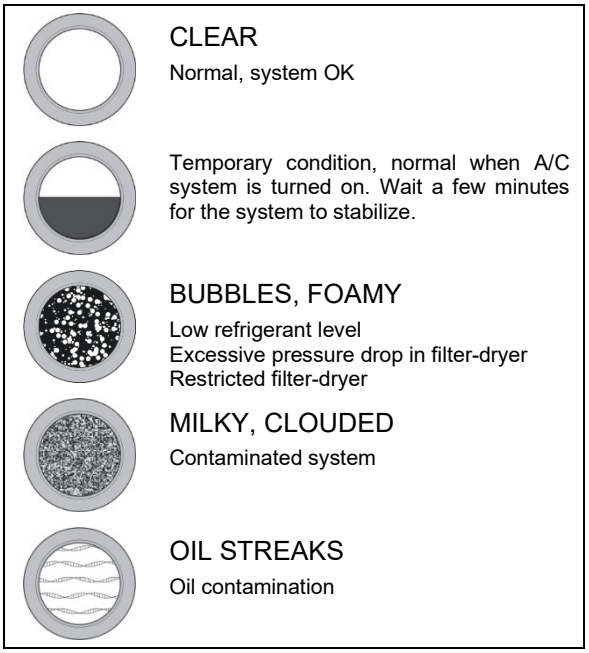


**FIGURE 65: CONDITIONS THAT MAY BE OBSERVED IN THE MOISTURE INDICATOR SIGHT GLASS**

## 4.9 SHUT-OFF VALVE WITH SERVICE PORT

This shutoff valve (FIGURE 66) is located in the condenser compartment. It is used to isolate one section of the refrigerant circuit. The service port is equipped with a Schrader valve.

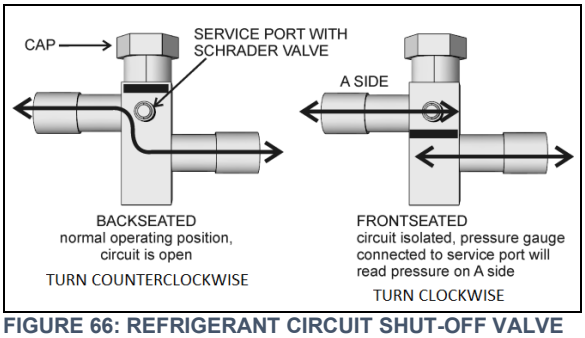


FIGURE 66: REFRIGERANT CIRCUIT SHUT-OFF VALVE

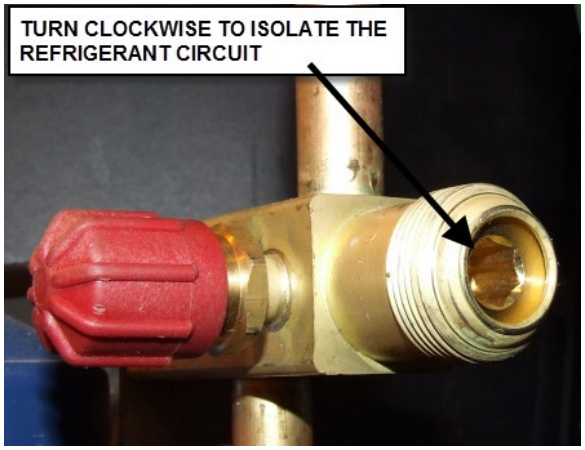


FIGURE 67: REFRIGERANT CIRCUIT SHUT-OFF VALVE

## 4.10 LIQUID REFRIGERANT SOLENOID VALVE

The flow of liquid refrigerant to the driver unit evaporator, passengers' unit evaporator (main evaporator) and overhead compartments evaporator is controlled by one NC (normally closed) solenoid valve on each circuit, for a total of three solenoid valves.

The driver unit solenoid valve is located on the ceiling of the spare wheel compartment (FIGURE 68) and is accessible through the reclining bumper.

Two identical NC (normally closed) refrigerant solenoid valves are found in the condenser compartment (FIGURE 69). One is used to control flow of refrigerant to the overhead compartments evaporator while the other is used to control flow to the driver's and passenger's main evaporators.

On H3 VIP, one identical refrigerant solenoid valve is used on the small HVAC system auxiliary unit.

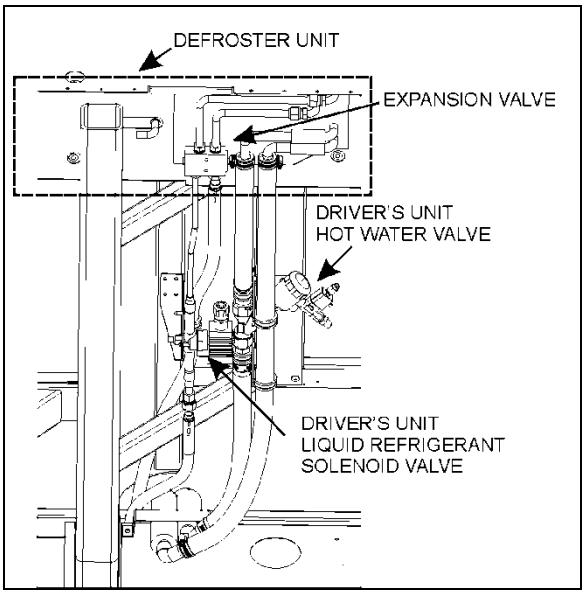


FIGURE 68: DRIVER UNIT LIQUID SOLENOID VALVE

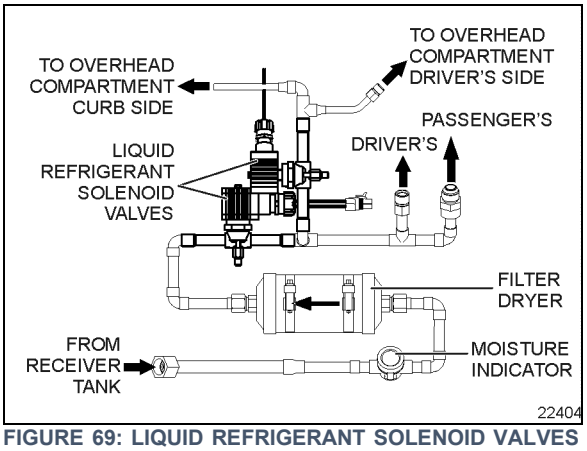


FIGURE 69: LIQUID REFRIGERANT SOLENOID VALVES IN CONDENSER COMPARTMENT (X-SERIES)

### 4.10.1 Typical Malfunctions

Faulty control circuit: Check the electric system by energizing the solenoid with 24-V DC. A metallic clicking noise indicates that the solenoid is operating. Absence of clicking indicates a loss of power or a defective solenoid. Check for open breaker, open-circuited or grounded coil, broken lead wires.

Burned-out coil: Check for open-circuited coil. Replace coil if necessary.

Low voltage: Check voltage across the coil leads. Voltage must be at least 85% of nameplate rating.

Excessive leakage: Disassemble valve and clean all parts. Replace worn or damaged parts with a complete repair kit for best results.

There are only three main possible malfunctions:

1. Coil burnout.
2. Failure to open.
3. Failure to close.

Each is discussed in *Sporlan Parker Hannifin Solenoid Valve Installation and Servicing* bulletin included on your Technical Publications USB flash drive.

4.10.2 Electrical Bypass/On Demand Opening Of Liquid Refrigerant Solenoid Valves

To ease purging, pumping down and refilling of refrigerant, it is possible to open the liquid solenoid valves (normally closed NC). To do so, uncap and connect plug and socket housings of connector **C24 together for the passengers' unit and overhead compartment units liquid solenoid valves** (located on the HVAC module in evaporator compartment) or **C44 for the driver unit liquid solenoid valve** (located on the ceiling of the spare wheel compartment). During normal use, both plug and socket housings of connector C24 or C44 are to be kept unplugged and capped.

**CAUTION**

Connectors C24 & C44 must be disconnected and their caps reinstalled after this procedure. Leaving them connected will keep the driver's, passengers and overhead compartment liquid solenoid valves open, and result in battery draining if the bus remains unused for several days.

4.10.3 Coil Replacement

1. Unplug coil connector.
2. Take out the retaining screw at the top of the coil housing. The entire coil assembly can then be lifted off the enclosing tube.
3. Place the new coil on the enclosing tube. Lay data identification plate in place.
4. Insert the coil retaining screw, rotate coil housing to proper position and tighten screw securely.
5. Plug coil connector.

4.10.4 Valve Disassembly

1. Because of possible damage to valve components due to the high temperature of soldering and brazing, it is necessary to completely disassemble the **A & B series** valves before any heat is applied to the valve body. For **E series** (extended copper connections), braze into the line without disassembly because the valve contains extended connections. Use caution by placing a wet cloth or chill block on the extensions at the body to prevent excessive overheating.
2. Remove the coil as stated previously.
3. Pump down the system as stated in this section.
4. Remove the enclosing tube and locknut, all internal parts, and manual lift stem assembly.

*NOTE*

*The previous procedure must be followed before brazing solder-type bodies into the line.*

**CAUTION**

Be careful not to damage the machined faces while the valve is apart.

4.10.5 Valve Reassembly

1. Place the seat disc into the valve body with the smaller diameter end facing up.
2. Place the enclosing tube gasket onto the valve body above the threads.
3. Hold the plunger with one hand so that the pointed end is resting in the pilot port of the disk. Make sure the small spring is in place on the top of the plunger.
4. With the other hand, place the enclosing tube over the plunger, making sure the enclosing tube gasket is in position.
5. Put back the enclosing tube locknut and tighten. Do not over tighten.

**TORQUE: 20-40 lb-ft (27-54 Nm)**

6. Put back manual lift stem. Tighten lift stem assembly and seal cap.

**TORQUE: 11 lb-ft (15 Nm)**

7. Place the coil assembly.

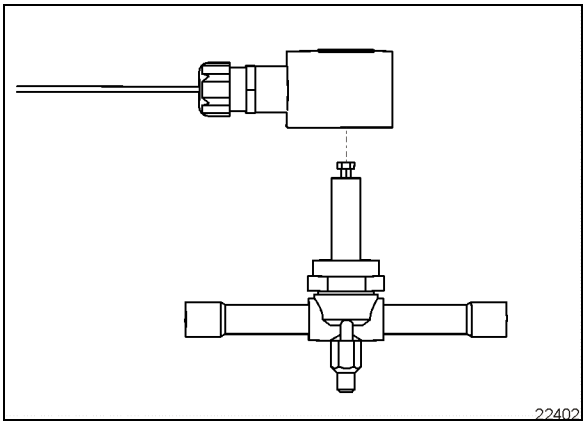


FIGURE 70: TYPICAL REFRIGERANT SOLENOID VALVE

**CAUTION**

**The filter-dryer must be replaced after a severe system failure or if a line in the system has been opened over a prolonged period of time. The line will then have to be properly evacuated.**

**Best practice would be to replace the filter-dryer each time a line is opened.**

**CAUTION**

Be careful not to damage the machined faces while the valve is apart.

## 4.11 THERMOSTATIC EXPANSION VALVE

### 4.11.1 Big System

The expansion valve for the main system is a thermo-sensitive valve with a remote control bulb head attached to the evaporator outlet line and is accessible by the evaporator filter access door. The valve regulates the flow of refrigerant liquid into the evaporator coils and is controlled by the suction gas temperature leaving the evaporator. The bulb head senses the refrigerant gas temperature as it leaves the evaporator. High temperature will cause expansion and pressure on the power head and spring. Such action causes the assembly valve to open, allowing a flow of refrigerant liquid into the evaporator.

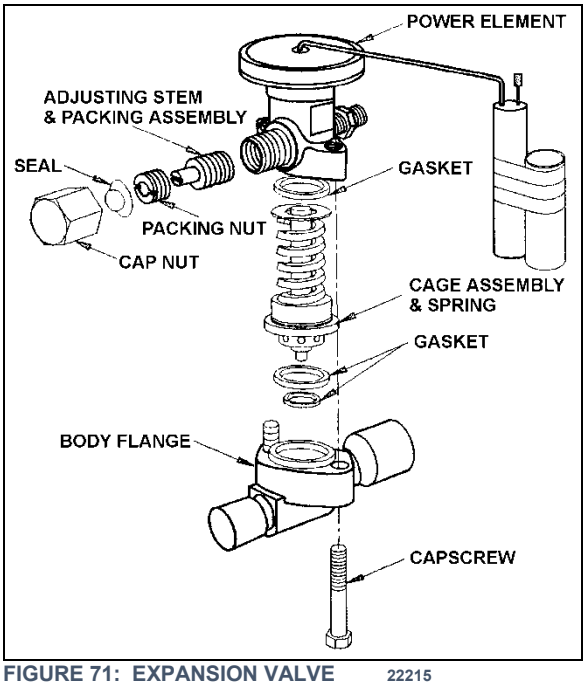


FIGURE 71: EXPANSION VALVE 22215

The remote bulb and power assembly is a closed system. The pressure within the remote bulb and power assembly corresponds to the saturation pressure of the refrigerant temperature leaving the evaporator and moves the valve pin in the opening direction. Opposed to this force, on the underside of the diaphragm and acting in the closing direction, is the force exerted by the superheat spring. As the temperature of the refrigerant gas at the evaporator outlet increases above the saturation temperature corresponding to the evaporator pressure, it becomes superheated. The pressure thus generated in the remote bulb and power assembly surpasses the combined pressures of the evaporator pressure and the superheat spring, causing the valve pin to move in the opening direction.

Conversely, as the temperature of the **refrigerant** gas leaving the evaporator decreases, the pressure in the remote bulb and power assembly also decreases and the combined evaporator and spring pressures cause the valve pin to move in the closing position.

As the operating superheat is raised, the evaporator capacity decreases, since more of the evaporator surface is required to produce the superheat necessary to open the valve. It is obvious, then, that it is most important to adjust the operating superheat correctly and that a minimum change in superheat to move the valve

pin to full open position, is of vital importance because it provides savings in both initial evaporator cost of operation.

Accurate and sensitive control of the refrigerant liquid flowing to the evaporator is necessary to provide maximum evaporator capacity under load conditions. The spring is adjusted to give 12 to 16° F (-11.1 to -8.8 ° C) of superheat at the evaporator outlet.

This ensures that the refrigerant leaving the evaporator is in a completely gaseous state when drawn into the suction side of the compressor. Liquid would damage the compressor valve, piston and heads if allowed to return in the suction line.

A vapor is said to be superheated when its temperature is higher than the saturation temperature corresponding to its pressure. The amount of the superheat is, of course, the temperature increase above the saturation temperature at the existing pressure.

As the refrigerant moves along in the evaporator, the liquid boils off into a vapor and the amount of liquid decreases until all the liquid has evaporated due to the absorption of a quantity of heat from the surrounding atmosphere equal to the latent heat of vaporization of the refrigerant. The gas continues along in the evaporator and remains at the same pressure. However, its temperature increases due to the continued absorption of heat from the surrounding atmosphere. The degree to which the gas refrigerant is superheated is related to the amount of refrigerant being fed to the evaporator and the load to which the evaporator is exposed.

### 4.11.2 Superheat Adjustment

Expansion valves are factory preset for optimum superheat settings. This setting should be modified only if absolutely necessary. The readjustment should be at the lowest expected evaporating temperature.

1. Operate coach for at least one-half hour at fast idle with temperature control set at 82°F (27,7°C), Then set temperature to minimum to keep the compressor on 4 cylinders.

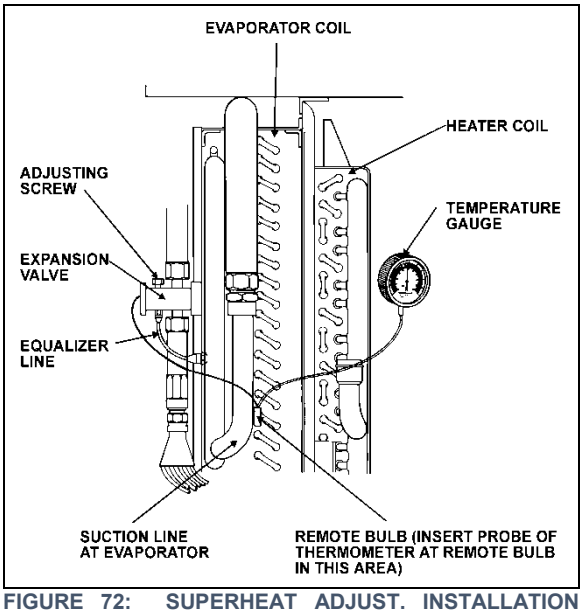


**FIGURE 72: SUPERHEAT ADJUST. INSTALLATION** 22046

2. In the DID “Gages” Menu note the indicated “LoS” (Low side) pressure.
3. Use a remote reading thermometer or thermocouple / multimeter to measure temperature at the evaporator outlet line near the existing remote bulb (Figure 72).
4. Apply thermostatic tape around the bulb and evaporator outlet line to get a true reading of the line temperature.
5. Block condenser if necessary to keep pressure over 150 psi.
6. Check approximately 5 readings of pressure at 2-minute intervals and convert to temperature using the vapor-pressure table. Likewise check the temperature reading at the remote bulb at the same 2-minute intervals and record the low and high swing readings of the needle (Figure 73).

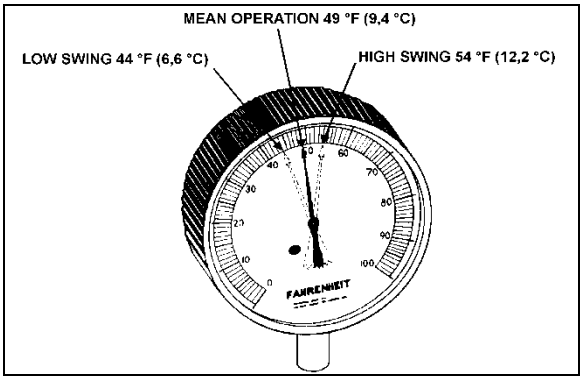


**FIGURE 73: HIGH & LOW SWING TEMPERATURE AT REMOTE BULB** 22047

Example of readings taken:

| | |
|---|---|
| A/C pressure gauge at compressor suction converted to temperature with chart | 40°F |
| Temperature on remote bulb | Low swing 44°F |
| | High swing 54°F |
| Average of low and high swing | 49°F |
| **Formula for superheat**<br>T° at bulb – T° suction = T° superheat<br>49°F – 40°F = 9°F | |

*NOTE*

*The low swing of the superheat should be a minimum of 4°F (2,2°C) higher at the remote bulb and have an average of 12 to 16°F (4 to 6°C) higher range at the bulb than the fitting at the expansion valve.*

*NOTE*

*The thermal expansion valve has a MOP (maximum operating pressure) of 55 psi. At this setting, the valve is completely opened.*

*If the temperature at the bulb is greater than 50°F, do not try to adjust superheat as the valve is almost completely opened.*

*NOTE*

*To reduce the superheat, increase refrigerant flow by turning adjusting screw counterclockwise on expansion valve. To increase superheat, flow of refrigerant is reduced by turning adjustment screw of clockwise.*

7. Regulate suction pressure to temperature reading according to temperature chart or to the R-134a temperature scale on the pressure gauge.

***Example:*** Suction pressure 30 psi (207 kPa) converted to 32°F (0°C) on chart. If temperature reading is 40°F (4,4°C), subtract 32°F (0°C) and the result will be 8°F (4,4°C) of superheat.

**CAUTION**

Before proceeding with the expansion valve adjustment, check for restriction on suction side for plugged filter-dryer and partially open valves. These conditions will give a high superheat.

4.11.3 Maintenance

1. Pump down the system as previously indicated in this section.
2. Disconnect the external equalizer line from the underside of the power head, and unclamp the remote control bulb from the evaporator coil outlet line.
3. Remove the two cap screws holding the power assembly to the valve body flange. Lift off the power assembly and remove the cage assembly.
4. When reassembling, replace with the new gaskets in proper location. Make sure the two lugs on the cage assembly fit into grooves provided in the power assembly. Do not force the valves together. The cage must fit properly before tightening the body flange. Tighten bolts evenly.
5. Check for leaks.

**Safety Instructions**

1. Make sure the valve is installed with the flow arrow on the valve body corresponding to the flow direction through the piping system.
2. Before opening any system, make sure the pressure in the system is brought to and remains at the atmospheric pressure. Failure to comply may result in system damage and/or personal injury.

4.11.4 Driver unit

The function and operation of the driver unit expansion valve are similar to the big system, but no superheat adjustment is required (**FIGURE 68**).

## 4.12 HOT WATER PNEUMATIC VALVE

No maintenance is needed unless a malfunction occurs. Refer to Prevost parts manual for available service kits. Valve is normally closed.

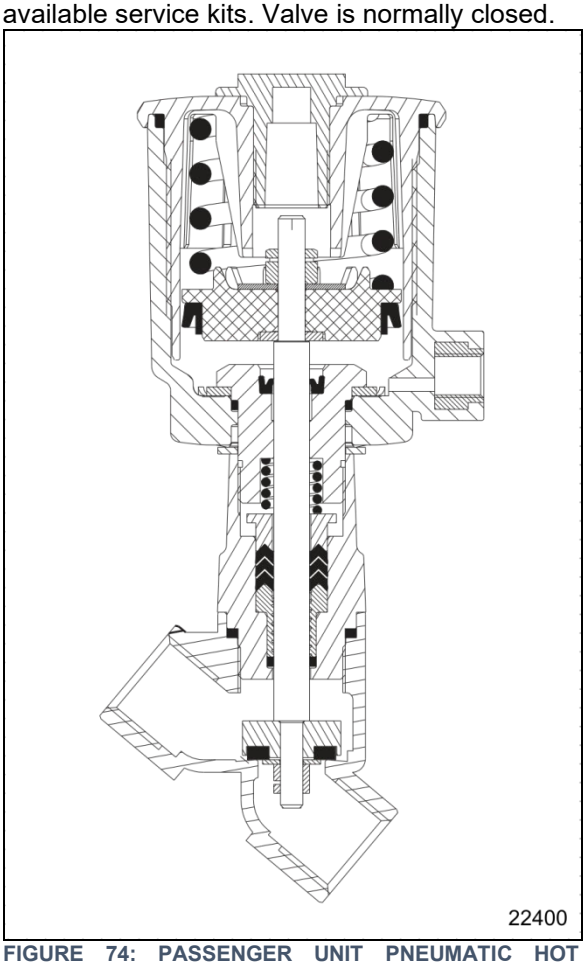


**FIGURE 74: PASSENGER UNIT PNEUMATIC HOT WATER VALVE – TYPICAL CUT-OUT VIEW**

### 4.12.1 Valve Troubleshooting

| PROBLEM | PROCEDURE |
|---|---|
| Valve fails to close | 1. Check electrical supply with a voltmeter. It should agree with nameplate rating.<br>2. Check pressure at pilot solenoid valve inlet. It must be at least equal to the minimum pressure stamped on the nameplate. It should not go below minimum while valve is operating. |
| Valve fails to open | 1. Check that the closure member assembly, and that main actuator and cylinder springs are free to travel.<br>2. Check that there is no restriction to the air escaping from the actuator casing.<br>3. Make sure that pilot solenoid valve operates properly. |

## 4.13 HOT WATER CIRCULATING PUMP

### 4.13.1 Big HVAC System

The vehicle is provided with a seal-less/brushless water circulating pump which is located in:

- H3 Series - evaporator compartment
- X3 Series - coolant preheater compartment (Figure 76)
- Additional circulating pump in the first curbside baggage compartment with optional upper windshield defrost unit

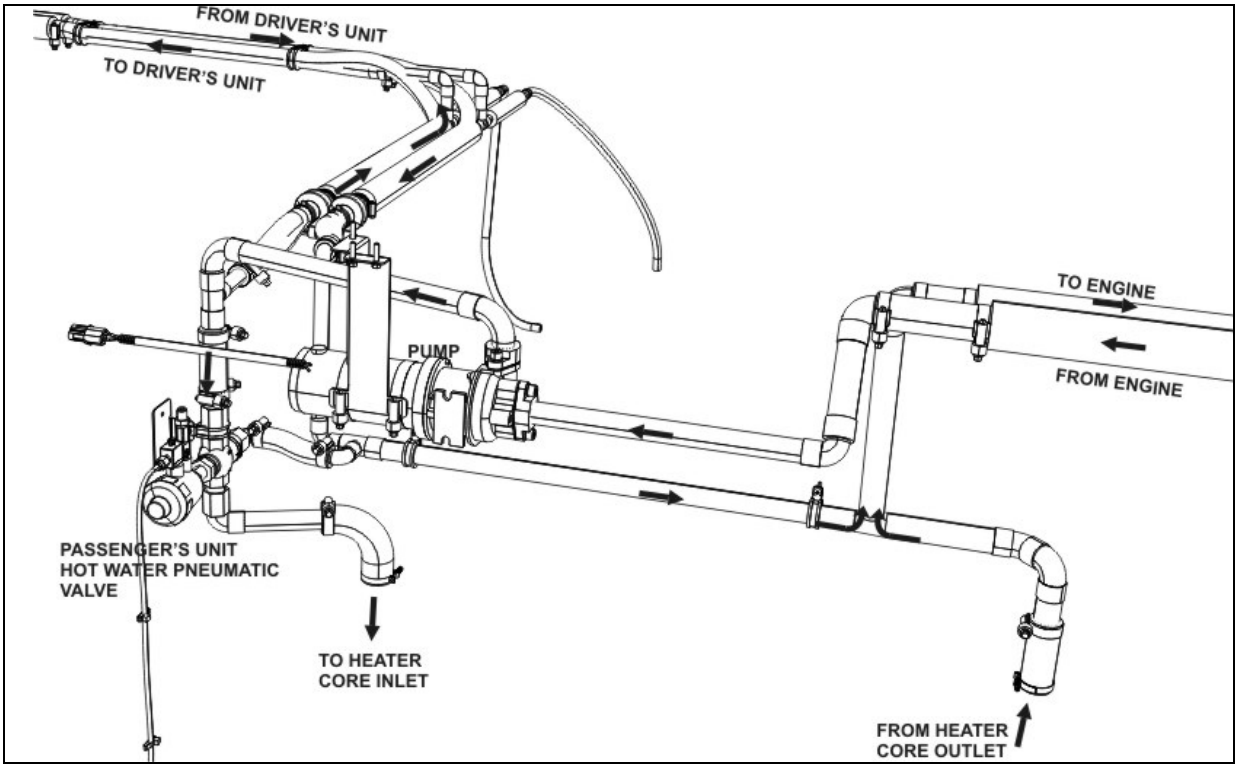


**FIGURE 75: HOT WATER CIRCULATING PUMP INSTALLATION (H3 SERIES BIG HVAC SYSTEM)**

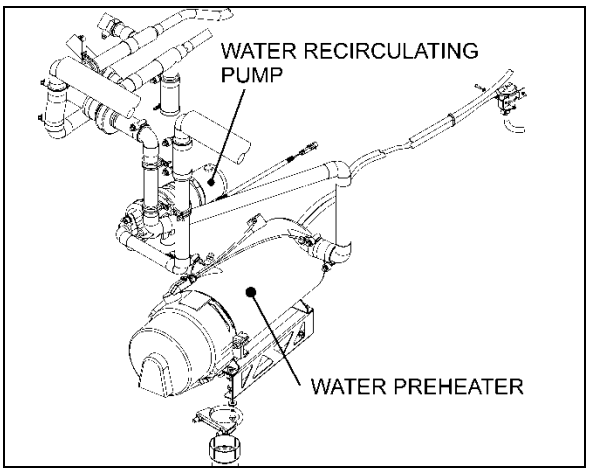


**FIGURE 76: PUMP LOCATION – X3 SERIES (BIG A/C)** 22331

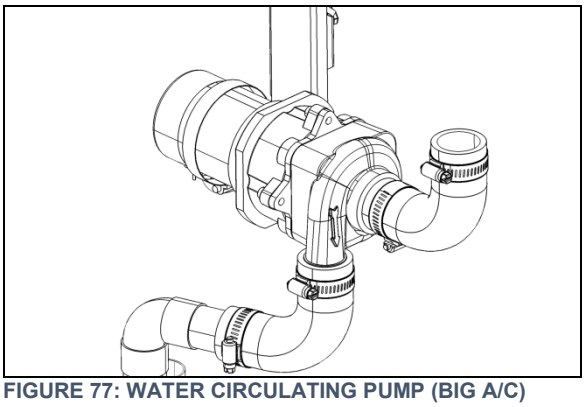

**FIGURE 77: WATER CIRCULATING PUMP (BIG A/C)**

4.13.2 Small HVAC System

Water circulating pump which is located on the ceiling of the spare wheel compartment (Figure 78)

The water circulating pump consists of a centrifugal pump and an electric motor which are mounted in a compact assembly.

The seal-less/brushless pump requires no periodic maintenance. The pump motor is not repairable but can be separated from the impeller housing. In case of pump impeller failure, refer to Ametek 18 GPM Seal-Less ECDC Water Circulating Pump manual for repair. Inspection of the pump, to determine if the pump is working properly, should be made while the pump is in operation.

If there is evidence that the pump is not operating as per specifications, the unit must be disassembled for repair (impeller assembly only).

*NOTE*

For complete information on seal-less water circulating pump, refer to Ametek 18 GPM Seal-Less ECDC Water Circulating Pump manual. Take note that the motor described in this manual is different from the one installed on your circulating pump which is not repairable.

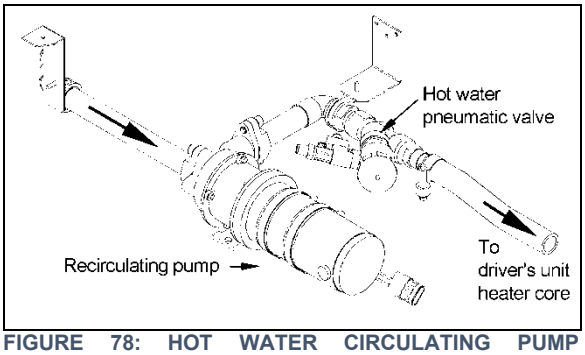


**FIGURE 78: HOT WATER CIRCULATING PUMP INSTALLATION (SMALL HVAC SYSTEM)** 22292

4.13.3 Removal

1. Stop engine and allow engine coolant to cool.
2. Close shutoff valves on the heater line. Refer to Figure 92 ou Figure 93 in this section to gain access to the heater line shutoff valve.
3. Disconnect the electrical wiring from the motor.

**WARNING**

Before proceeding with the following steps, check that coolant has cooled down.

4. Disconnect water lines from the pump at the fittings.
5. Remove the two clamps holding the pump motor to its mounting bracket. Remove the pump with the motor as an assembly.

4.13.4 Installation

1. Connect water lines to the pump. Position the pump and motor assembly on the mounting bracket. Position the mounting

clamps over the motor and secure with mounting bolts.

2. Connect electrical wiring to the pump motor.
3. Open both shutoff valves.
4. Fill the cooling system as previously instructed in this section under 6.4.4 Filling Heating System and then bleed the system as previously instructed in this section.

## 5. HVAC SYSTEM TESTING AND TROUBLESHOOTING

Before undertaking any troubleshooting on the HVAC system, study the appropriate wiring diagrams to get a complete understanding of the HVAC components circuitry, read and understand section 06: ELECTRICAL of this manual under "Troubleshooting And Testing The Multiplex Vehicles" and "Test Mode For Switches And Sensors". The information included in these paragraphs is necessary for troubleshooting the HVAC system on Multiplex vehicles.

### 5.1 ON DEMAND DISPLAY OF A/C SYSTEM HIGH AND LOW SIDE PRESSURE

Refrigerant pressures can be displayed in the Driver Information Display (DID) by selecting “Gauges” menu and pressing the down arrow to the fifth displayed screen.

**A/C Compressor Pressure**

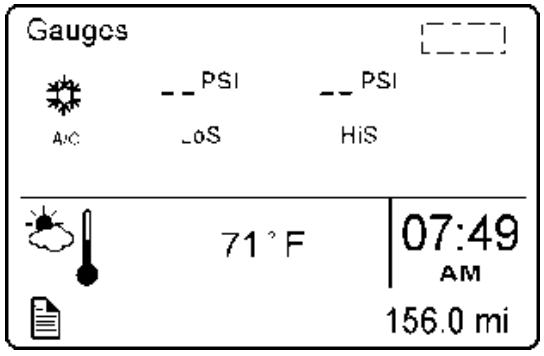


Displays the A/C system’s suction pressure value (LoS=low side) and discharge pressure value (HiS=high side).

*NOTE*

*When starting the A/C compressor, allow enough time before checking pressures in order to give the system a chance to build its pressure. During the first 3 seconds after startup, the compressor is active on 4 cylinders and the A/C valve is open regardless of the pressure readings.*

### 5.2 ON DEMAND ACTIVATION OF HOT WATER CIRCULATING PUMP

In Diagnostics/Vehicle Test mode on the DID, the heating system circulating pump can be turned on manually by selecting ACTIVATE HVAC PUMP command. This feature allows verification of the circulating pump when inside a garage. This is also useful when working on the heating system to remove air pockets trapped in the system.

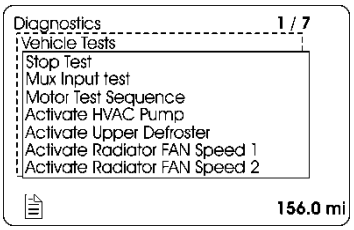


In normal operation, the heating system circulating pump operates only when the ambient temperature is 50°F or lower.

### 5.3 TEMPERATURE SENSORS

The following table can be used for troubleshooting the following temperature sensors:

1) Driver area temperature sensor (SE21);
2) Passenger area temperature sensor (SE25);
3) Outside air temperature sensor (SE20).

**NOTE**

*The driver’s area air temperature sensor is located below the dashboard, just ahead of the driver's right knee.*

*NOTE*

*VIP vehicles equipped with Small HVAC System have two air temperature sensors; the driver’s area temperature sensor (same place as coaches) and the exterior temperature sensor located behind the reclining bumper.*

The table values are for unloaded, disconnected temperature sensor (thermistor) probed at the temperature sensor connector pins.

If the temperature sensor resistance value is measured at the multiplex module inputs, the measured value includes a parallel 33 kohms resistor.

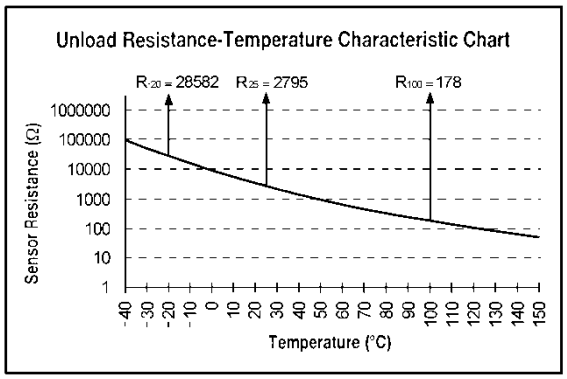


| TEMPERATURE SENSOR | | |
|---|---|---|
| **Temp °C** | **Temp °F** | **Resistance Ohms (temperature sensor disconnected)** |
| -40 | -40 | 100865 |
| -35 | -31 | 72437 |
| -30 | -22 | 52594 |
| -25 | -13 | 38583 |
| -20 | -4 | 28582 |
| -15 | 5 | 21371 |
| -10 | 14 | 16120 |
| -5 | 23 | 12261 |
| 0 | 32 | 9399 |
| 5 | 41 | 7263 |
| 10 | 50 | 5658 |
| 15 | 59 | 4441 |
| 20 | 68 | 3511 |
| 25 | 77 | 2795 |
| 30 | 86 | 2240 |
| 35 | 95 | 1806 |
| 40 | 104 | 1465 |
| 45 | 113 | 1195 |
| 50 | 122 | 980 |
| 55 | 131 | 808 |
| 60 | 140 | 670 |
| 65 | 149 | 559 |
| 70 | 158 | 468 |
| 75 | 167 | 394 |
| 80 | 176 | 333 |
| 85 | 185 | 283 |
| 90 | 194 | 241 |
| 95 | 203 | 207 |
| 100 | 212 | 178 |
| 105 | 221 | 153 |
| 110 | 230 | 133 |
| 115 | 239 | 115 |
| 120 | 248 | 100 |
| 125 | 257 | 88 |
| 130 | 266 | 77 |
| 135 | 275 | 68 |
| 140 | 284 | 60 |
| 145 | 293 | 53 |
| 150 | 302 | 47 |

## 5.4 TEST MODE FOR SWITCHES AND SENSORS

When in switch/sensor test mode (see Section 06: ELECTRICAL for complete information), the A/C compressor HI and LO pressure values are displayed one after the other instead of the outside temperature in the telltale panel LCD

display. This feature can be used when the vehicle is traveling to check the A/C compressor pressure values.

In test mode, with the parking brake applied and the passenger set point set to a value higher than 64°F (18°C), the hot water circulating pump is not set to OFF as it would normally do when the outside temperature gets above 50°F (10°C). This feature allows verification of the pump when inside a garage. This is also useful when working on the heating system to remove air pockets trapped in the system.

When performing an A/C cooling test and having the water pump shut off in switch/sensor test mode is required, just set the passenger set point temperature to the minimum 64°F (18°C) to shut off the pump.

## 5.5 TEST MODE FOR ELECTRIC MOTORS

The test mode allows testing the motors and electric contactors without the need to have the engine running.

Use this test mode for testing of the condenser fans, evaporator fans, overhead compartment fans, A/C compressor clutch activation, A/C compressor unloader activation, driver unit hot water solenoid valve and refrigerant solenoid valve, passengers' unit hot water solenoid valve and refrigerant solenoid valve, water circulating pump. Refer to Section 06: ELECTRICAL under "TEST MODE FOR ELECTRICAL MOTORS" for complete information.

## 5.6 MODES OF OPERATION

| | |
|---|---|
| COOLING DEMAND<br>Conditions for engaging the 2nd speed on the evaporator motor | - The 2nd speed engages if the passengers' area temperature is 1 degree above the set point and it revert to speed 1 if the temperature gets equal or below the set point. |
| HEATING DEMAND<br>Conditions for hot water circulating pump activation | - The pump turns ON if the outside temperature is equal or less than 50°F (10°C), when heating is more likely to be needed<br>Note: To test pump operation, it is possible to keep it active even if the outside temperature is above 50°F (10°C). See paragraph 5.2 ON DEMAND ACTIVATION OF HOT WATER CIRCULATING PUMP. |
| The compressor unloader operation is based on pressure and on the difference between the passengers' area temperature and set point. | **Right compressor cylinders**<br>- Stop if: The passengers' area decreasing temperature becomes less than 0.4°F above the set point (68°F) or if compressor discharge pressure is above 290 psi, or if compressor suction pressure is below 23 psi.<br>- Restart if: The Passengers' area temperature is 1.3°F or more above the set point and compressor discharge pressure is less than 250 psi and compressor suction pressure is above 32 psi. |
| A/C compressor deactivation pressure | - 310 psi<br>- In case of high pressure, the high pressure transducer connected to the multiplex module deactivates the compressor<br>- There is also a 350 psi pressure switch that acts to stop the compressor in the instance that the multiplex module fails. |
| Compressor turns on automatically if (2 required conditions) | outside temperature is above 32°F<br>and<br>return air temperature in passengers' area is 61°F or above (∆T=7° with set point) |

## 5.7 HVAC ELECTRICAL SYSTEM TROUBLESHOOTING

Always check DID for electrical faults before performing repairs. Address any modules not responding and take corrective action. This should be the first step in troubleshooting.

| Problem/Symptom | Probable Causes | Actions |
|---|---|---|
| No temperature control in the passenger area<br><br>Passenger temperature display indicates two dashes "--" | Problem with the temperature sensor located in the passenger's area return air duct or the sensor wiring | 1. Instruct the driver to manually control the temperature by playing with the passenger set point. Set above 22°C (72°F) to heat and below 22° C (72°F) to cool |
| Defroster fan not functioning | Module AE47 is not powered or is faulty<br><br>Module A24 is not powered or is faulty<br><br>Module A30 is not powered or is faulty (H3 VIP & X3 VIP only) | 2. Check the Diagnostics menu of the Driver Information Display (DID). Select Fault Diagnostics and Electrical System. The message "No Response ModA47 (or ModA24), Active" indicates a power problem on the module. (A CAN network problem would show the same message but doesn't produce these symptoms).<br>3. Check / reset circuit breaker CB1(CB3 on X3 VIP)<br>4. Check fuse F16<br>5. Probe gray connector on module to see if it is powered. |
| HVAC condenser fans not functioning | Circuit breaker CB7 (CB5 on X3 VIP) tripped<br><br>Seized bearing<br><br>Bad wiring<br><br>Module A54 is not powered or is faulty | 1. Check / reset circuit breaker CB7(CB5 on X3 VIP)<br>2. Check/reset CB15, CB16, CB17, CB18 on HVAC control module<br>3. Check / replace condenser power relay R10 (probe R10 coil power circuit 67A, should be 24 volts).<br>4. Check the Diagnostics menu of Driver Information Display (DID). Select Fault Diagnostics and Electrical System. The message "No Response ModA54, Active" indicates a power problem on the module. (A CAN network problem would show the same message but doesn't produce this symptom).<br>5. Check fuse F67<br><br>Check CB5 except: X3 VIP check CB7 |

| Problem/Symptom | Probable Causes | Actions |
|---|---|---|
| HVAC condenser fans not functioning in speed 1 | Module A49 (A54 on H3 VIP & X3 VIP) is not powered or is faulty | 1. Check the Diagnostics menu of Driver Information Display (DID). Select Fault Diagnostics and Electrical System. The message “No Response ModA49, Active” indicates a power problem on the module. (A CAN network problem would show the same message but doesn't produce this symptom).<br>2. Check / reset circuit breaker CB5 except: X3 VIP check CB7<br>3. Check fuse F65 except :<br>H3 VIP check F67+F68<br>X3 VIP check F67<br>4. Probe gray connector on module to see if it is powered. |
| HVAC condenser fans not functioning in speed 2 | Circuit breaker CB7 (CB5 on X3 VIP) tripped<br>Seized bearing<br>Bad wiring | 1. Check / reset circuit breaker CB7<br>2. See *HVAC condenser fans not functioning* & *HVAC condenser fans not functioning in speed 1* above. |
| Defroster fan is functioning but no heat or cooling available in the driver’s area | Module A46 is not powered or is faulty<br>Bad wiring | 1. Check the Diagnostics menu of Driver Information Display (DID). Select Fault Diagnostics and Electrical System. The message “No Response ModA46, Active” indicates a power problem on the module. (A CAN network problem would show the same message but doesn't produce these symptoms).<br>2. Check / reset circuit breaker CB1(CB7 on X3 VIP)<br>3. Check fuse F12V & F13 except X3 VIP<br>4. X3 VIP check fuse F65<br>5. Probe gray connector on module to see if it is powered. |
| The A/C compressor clutch does not engage | Module A52 is not powered or is faulty | 1. Check the Diagnostics menu of Driver Information Display (DID). Select Fault Diagnostics and Electrical System. The message “No Response ModA52, Active” indicates a power problem on the module. (A CAN network problem would show the same message but doesn't produce this symptom).<br>2. Check / reset circuit breaker CB5<br>3. Check fuse F65<br>4. Probe gray connector on module to see if it is powered. |

| Problem/Symptom | Probable Causes | Actions |
|---|---|---|
| Evaporator fan not functioning | Circuit breaker CB3 (CB6 on X3 VIP) tripped<br><br>Module A54 is not powered or is faulty | 1. Check / reset circuit breaker CB3 (CB6 on X3 VIP)<br>2. Check the Diagnostics menu of Driver Information Display (DID). Select Fault Diagnostics and Electrical System. The message “No Response ModA54, Active” indicates a power problem on the module. (A CAN network problem would show the same message but doesn't produce this symptom).<br>3. Check / reset circuit breaker CB5 except: X3 VIP check CB7<br>4. Check fuse F67<br>5. Probe gray connector on module to see if it is powered.<br>6. Check / replace condenser power relay R12 (probe R12 coil power circuit 67, should be 24 volts). |

5.7.1 Air Conditioning

| TROUBLE | CAUSE |
|---|---|
| Low suction pressure and frosting at dryer outlet. | Clogged filter. |
| Low Oil Level. | Check for oil leaks and for leaking oil seal. Do not attempt to check oil level unless system has been stabilized at least 20 minutes. See oil level verification. |
| Excessively cold suction line<br>And<br>High superheat | Loss of contact between the expansion valve bulb and the suction line or sticking of the expansion valve.<br><br>Improper insulation.<br><br>Check for corrosion and clean, repair or replace the valve. |
| Noisy or knocking compressor. | Check for broken internal parts. Overhaul if required. |
| Compressor vibrates excessively. | Check and tighten compressor mounting bolts and belt tension. |
| Low refrigerant level | Check for refrigerant leaks and add refrigerant as required. |
| Suction pressure rises fast after shutdown. | Check compressor valve for breakage or damage. |
| Insufficient air flow. | Dirty or iced evaporator. Dirty air filter. Blowers inactive. Clogged ducts. |
| No flow of refrigerant through expansion valve. | Filter-dryer is clogged. Remote bulb has lost charge or expansion valve is defective. |
| Expansion valve hisses. Bubbles in moisture and liquid indicator. | Gas in liquid line. Add refrigerant. |
| Loss of capacity<br><br>Superheat too high. | Clogged filter. Obstructed or defective expansion valve.<br>Reset superheat adjustment. Check for clogged |

| TROUBLE | CAUSE |
|---|---|
| | external equalizer line, or filter-dryer. |
| Reduced air flow:<br>a. Dirty or clogged air filter;<br>b. Evaporator motor inoperative; or<br>c. Plugged return air ducts. | Dirty or iced evaporator coil. Clean air filter screen. Check return ducts for obstructions. Check blower motor. |
| Frequent starting and stopping on low pressure control switch. | Lack of refrigerant. Check for leaks. Recharge. |
| Compressor intermittently starts and stops. | Intermittent contact in electrical control circuit. Compressor valves not in operating position. |
| Non-condensable in the refrigeration system. | Leak on system, system in vacuum in low temp. Specific symptom, pressure in system will not correspond to ambient temperature on shutdown. Only non-condensable will cause this. (Example: Pressure of idle R-134a system in 80°F (26.6°C) room should be 86.4 psi (595.7 kPa). See temperature chart in this section.)<br><br>An evaporator just does a proper cooling job without sufficient air. Shortage of air can be caused by the following:<br>o Dirty filters; or<br>o Dirty coils. |
| Testing condenser pressure.<br>*NOTE: R-134A pressure varies according to temperature.*<br><br>Example, for an exterior temperature of 100°F.<br>Exterior temperature (100°F) + 30°F = 130°F.<br>Take note: 30°F is added to ambient temperature by definition.<br>Refer to paragraph "5.8 Temperature & Pressure".<br>Note the corresponding pressure for a temperature of 130°F, 199.8 psi.<br>Read the condenser pressure, example 171.9 psi.<br>171.9 psi & 199.8 psi, the pressure in the condenser is inferior to the pressure corresponding to the exterior temperature, in this case the condenser pressure may be too low. Check for refrigerant leaks and add refrigerant if necessary. If the pressure corresponding to the condenser temperature is superior to the pressure corresponding to the exterior temperature, then the air cooled condenser pressure may be too high. Most frequent causes are:<br><br>Reduced air quantity. This may be due to:<br>* Non-condensable in system;<br>* Dirt on the coil;<br>* Restricted air inlet or outlet;<br>* Dirty fan blades;<br>* Incorrect rotation of fan;<br>* Fan speed too low;<br>* Fan motor going out on overload; or<br>* Prevailing winds.<br>* Too much refrigerant in system. Remove refrigerant if necessary. | |

5.7.2 Expansion Valve

| PROBABLE CAUSE | PROBABLE REMEDY |
|---|---|
| **LOW SUCTION PRESSURE-HIGH SUPERHEAT** | |
| EXPANSION VALVE LIMITING FLOW: | |
| Gas in liquid line due to pressure drop in the line or insufficient refrigerant charge. | Locate cause of line flash and correct by use of any of the following methods. Add R-134a. Replace filter-dryer. |
| Superheat adjustment too high. | Adjust superheat as outlined under "Superheat Adjustment". |
| Power assembly failure or partial loss of charge. | Replace expansion valve. |
| Air filter screen clogged. | Clean or replace air filter screen. |
| Plugged / kinked / chaffed lines. | Clean, repair or replace lines. |
| **LOW SUCTION PRESSURE-LOW SUPERHEAT** | |
| Uneven or inadequate evaporator loading due to poor air distribution or liquid flow. | Balance evaporator load distribution by providing correct air or liquid distribution. |
| **HIGH SUCTION PRESSURE-HIGH SUPERHEAT** | |
| Internally leaking compressor | Locate leak. Repair/ replace. |
| **HIGH SUCTION PRESSURE-LOW SUPERHEAT (DEFECTIVE UNLOADER)** | |
| Valve superheat setting too low. | Adjust superheat as outlined under "Superheat Adjustment". |
| Compressor discharge valves leaking. | Replace or repair discharge valve. |
| Incorrect superheat adjustment. | Superheat adjustment 12 to 16°F. |
| **FLUCTUATING DISCHARGE PRESSURE** | |
| Insufficient charge. | Add R-134a to system. |
| | |
| **HIGH DISCHARGE PRESSURE** | |
| Air or non-condensable gases in condenser. | Purge and recharge system. |
| Overcharge or refrigerant. | Recover to proper charge. |
| Condenser dirty. | Clean condenser. |

## 5.8 TEMPERATURES & PRESSURES CHART

| R134a VAPOR-PRESSURE | | | |
|---|---|---|---|
| TEMPERATURE | | PRESSURE | |
| °F | °C | psi | kPa |
| -100 | -73.3 | 27.8 | 191.7 |
| -90 | -67.8 | 26.9 | 185.5 |
| -80 | -62.2 | 25.6 | 176.5 |
| -70 | -56.7 | 23.8 | 164.1 |
| -60 | -51.1 | 21.5 | 148.2 |
| -50 | -45.6 | 18.5 | 127.6 |
| -40 | -40.0 | 14.7 | 101.4 |
| -30 | -34.4 | 9.8 | 67.6 |
| -20 | -29 | 3.8 | 26.2 |
| -10 | -23 | 1.8 | 12.4 |
| 0 | -18 | 6.3 | 43.4 |
| 10 | -12 | 11.6 | 80 |
| 20 | -7 | 18.0 | 124.1 |
| 30 | -1 | 25.6 | 176.5 |
| 40 | 4 | 34.5 | 237.9 |
| 50 | 10 | 44.9 | 309.6 |
| 60 | 16 | 56.9 | 392.3 |
| 70 | 21.1 | 70.7 | 487.5 |
| 80 | 27 | 86.4 | 595.7 |
| 90 | 32.2 | 104.2 | 718.5 |
| 100 | 38 | 124.3 | 857.0 |
| 110 | 43.3 | 146.8 | 1012.2 |
| 120 | 49 | 171.9 | 1185.3 |
| 130 | 54.4 | 199.8 | 1377.6 |
| 140 | 60 | 230.5 | 1589.3 |
| 150 | 65.6 | 264.4 | 1823.0 |
| 160 | 71 | 301.5 | 2078.8 |
| 170 | 76.7 | 342.0 | 2358.1 |
| 180 | 82.2 | 385.9 | 2660.8 |
| 190 | 87.8 | 433.6 | 2989.7 |
| 200 | 93.3 | 485.0 | 3344.1 |
| 210 | 98.9 | 540.3 | 3725.4 |

## 5.9 LEAK TESTING

Some methods such as nitrogen pressure and soap, and electronic sniffer can be used for leak testing. However, the most common method used is a "Halide" torch consisting of an acetylene tank, a burner and a suction test hose. Proceed as follows:



**DANGER**

Do not inhale fumes from leak detector.

The flow of acetylene to the burner causes a depression in the test line. Any gas refrigerant present will be drawn through the hose and into the burner where it decomposes into free acids.

These acids come in contact with the hot copper reaction plate in the burner, causing color reaction in the flame. A small concentration is indicated by a green tint and a large concentration by an intense blue. Do not confuse this change in color with the change caused by shutting off the air supply through the hose by holding the end too close to an object.

The procedure for testing is:

1. Adjust flame so that the top of the cone is approximately level or within one-half inch above the plate.
2. Probe end of suction test tube around all joints, valves, etc. When a leak has been found at a soldered joint, this specific section of the system must be pumped down. Do not solder as pressure will force hot solder out. If the system is empty, it is more economical to put in just enough R-134a to produce about 15 psi (103 kPa). The pressure can be raised to about 150 psi (1034 kPa) with dry nitrogen.

*NOTE*

*This gas is put into the suction and discharge shutoff valves at the compressor. The receiver valves must be opened. If no leaks are found, recover this mixture, evacuate the system and fill with refrigerant.*

## 6. BIG HVAC SYSTEM

The passenger unit evaporator fan, located in the evaporator compartment on the L.H. side of vehicle is protected by circuit breaker CB3 (CB6 on X3 VIP), 90 amp with manual-reset mounted

in the main power compartment/junction panel (Figure 80 & Figure 81).

The passenger unit condenser coil mounted on the opposite side of the evaporator is ventilated by four brushless axial fans. The fan motors are protected by circuit breaker CB7 (CB5 on X3 VIP), 70 amp with manual-reset mounted in the main power compartment/junction panel.

Furthermore, the following relays, diodes and multiplex module are located in the evaporator compartment. They are mounted on top of the fan housing.

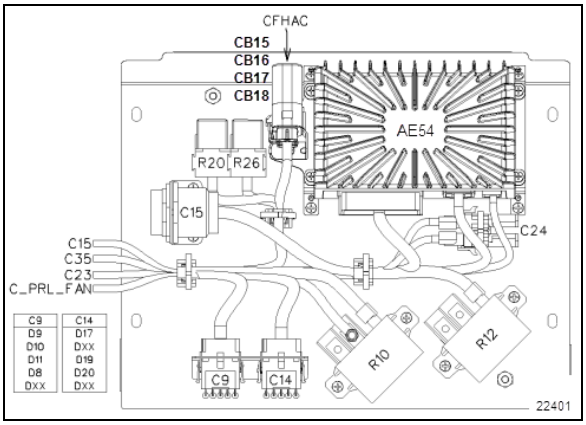


**FIGURE 79: HVAC MODULE**

| A/C Junction Box | |
|---|---|
| Multiplex Module | |
| AE54 | I/O-B |
| Relays | |
| R10 | Condenser fan power |
| R12 | Evaporator fan power |
| R20 | Water circulating pump relay |
| R26 | Water Preheater Relay |
| Diodes | |
| D8 | Overhead compartment Liq. Sol. Valve |
| D9 | Water circulating pump |
| D10 | Water circulating pump |
| D11 | Pass. Liq. Sol. Valve |
| D17 | 3rd Baggage Compartment Lights |
| D19 | 2nd Baggage Compartment Lights |
| D20 | 1st Baggage Compartment Lights |
| Relevant Breakers | |
| CB15 | 15A, Condenser fan up-fore |
| CB16 | 15A Condenser fan down-fore |
| CB17 | 15A Condenser fan up-aft |
| CB18 | 15A Condenser fan down-aft |

| Multiplex Module (evaporator compartment) | |
|---|---|
| A54 | I/O-B |
| **Relays (evaporator compartment)** | |
| R10 | 24V Condenser fans |
| R12 | 24V Evaporator fan |
| R20 | Water pump |
| R26 | Pre-heating |

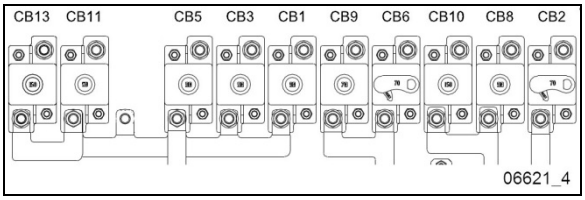


**FIGURE 80: X3 SERIES REAR ELECTRICAL JUNCTION PANEL WITH CIRCUIT BREAKERS**

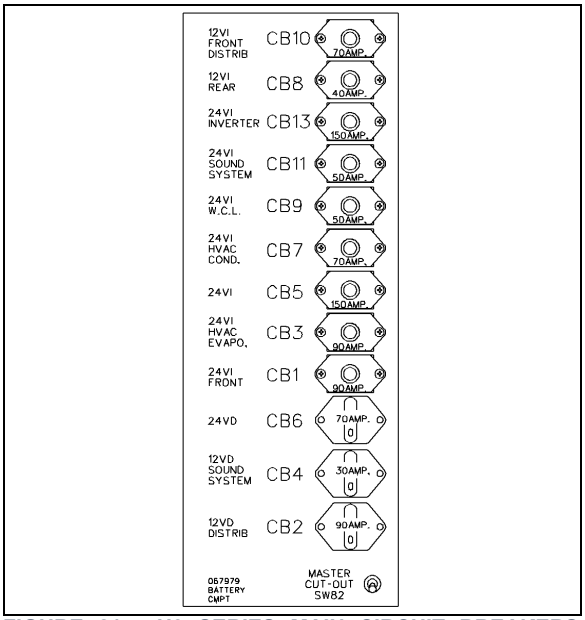


**FIGURE 81: H3 SERIES MAIN CIRCUIT BREAKERS 06582A**

## 6.1 AIR CIRCULATION IN DRIVER'S AREA

Fresh air is taken from behind the R.H. side headlights assembly (H3 series) or from a plenum underneath the front service compartment (X3 Series) and enters the mixing box through a ON/OFF damper. Return air is taken through the right console into the mixing box (Figure 89). Mixed air goes through cooling and heating coils, fans and discharge ducts.

Both right and left discharge ducts defrost one half of the windshield. The driver can also divert

some air flow to the console, from which he can direct air to his knees and/or upper body with adjustable HVAC air registers and to his feet with the appropriate button (see FIGURE 82 and Owner's or Operator's manual).

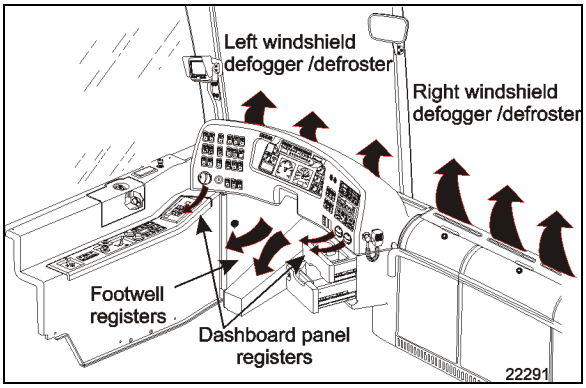


**FIGURE 82: DRIVER UNIT AIR CIRCULATION**

An additional air is located in the stepwell for step de-icing (Figure 1 & Figure 5). This air flow is supplied by the passengers' air ducting system.

X3 coaches are also equipped with a defogger/defroster system in the upper windshield section. Similar system is optional on H3 coaches.

## 6.2 AIR CIRCULATION IN PASSENGER'S AREA

Fresh air enters from the left side of vehicle through a damper located:

- H3 Series - Inside the air intake duct at the left of the evaporator compartment.
- X3 Series - On the evaporator compartment door (Figure 83).

The damper can be fully opened for normal operation or partially closed for extreme weather or highly polluted areas. The recirculation REC button is located on the HVAC control unit. Press down the button to partially close the fresh air damper (refer to the Owner's or Operator's Manual for more details).

### MAINTENANCE

**Passenger's area fresh air intake filter (X3 Series only)**

Clean or replace filter at the intervals specified by the Lubrication And Servicing Schedule in Section 24: LUBRICATION & SERVICING.

To clean filter, back flush with water or soapy water, then dry with air.

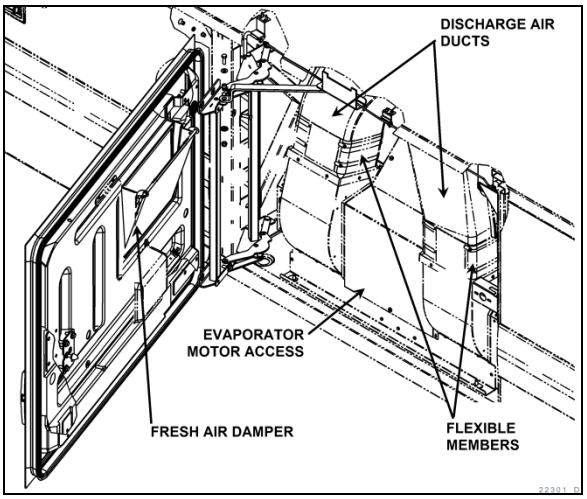


**FIGURE 83: X3 SERIES PASSENGERS' AREA FRESH AIR DAMPER**

*NOTE*

*Opening the entrance door also partially closes the fresh air damper.*

Return air is drawn through:

- H3 coaches - the first entrance step, last entrance step riser and from the lower section of the floor ducts in two locations: one in the rear section of vehicle and the other in the front section of vehicle on the L.H. side (Figure 1).
- X3 coaches - Return air is drawn from inside the vehicle through the register duct located on L.H. side of vehicle (Figure 5).

A double blower fan unit, which is activated by the evaporator motor, draws mixed air through an air filter, cooling and heating coils, then forces this air in the ventilation ducts (upper section) along the walls, and finally exhausts it at the bottom of the windows.

The coaches are equipped with an overhead compartment ventilation system equipped with adjustable registers in the passenger's overhead console to control air flow. Return air is drawn just below the middle side windows through an air filter into the overhead compartment fan; discharge air is fed to the rotating registers through the ventilation duct (Figure 84).

The lavatory ventilator found on coaches acts as the main exhaust for the whole vehicle, eliminates odors, and finally heats or cools the lavatory with the vehicle's ambient air.

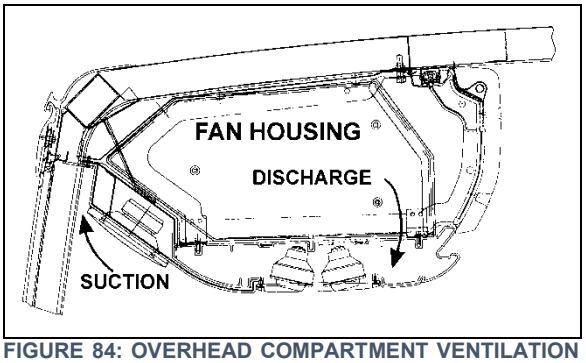


**FIGURE 84: OVERHEAD COMPARTMENT VENTILATION SYSTEM** 22211

## 6.3 HVAC SYSTEM OPERATION

To operate the HVAC system when the vehicle is stationary, engine should run at fast idle. During operation of the HVAC system, windows should be kept closed and door not left open longer than necessary. In order to prevent battery discharge, the HVAC system will not operate if the battery voltage drops below 24 volts.

The vehicle is divided into two areas:

- Driver's area (driver's HVAC unit).
- Passengers' area (passengers' HVAC unit).

The A/C compressor starts automatically when the two following conditions are satisfied:

1. The outside temperature is above 32°F (0°C).
2. The passengers' area temperature is within 7° (4°C) of the set point or higher (if set point is 68°F for example, return air temperature must be above 61°F, at this moment, enough heat is available from the engine to warm up the area while the air conditioning will remove moisture in air and prevent fogging up of the windows).

| *NOTE* |
| --- |
| *Upon starting, if the outside temperature is above 32°F (0°C) and then drops below 32°F (0°C), the compressor will keep running up to a temperature of 15°F (-9°C) to prevent fogging up of the windows.* |

| *NOTE* |
| --- |
| *To perform a test of the driver's section windshield defroster, it is possible to run the system without running the engine.* |

### 6.3.1 Control Unit

The temperature control in the driver's area is provided directly by the DRIVER control on the L.H. side of the HVAC control unit.

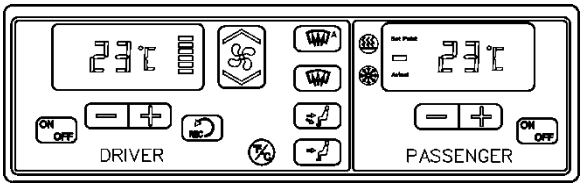


**FIGURE 85: CONTROL UNIT - BIG HVAC SYST** 22276

The driver unit piping is paralleled with the passenger unit piping. Both units use the same refrigerant and coolant, and are linked to the same condenser and compressor, even if they are individually controlled. It requires engagement of the A/C compressor magnetic clutch; consequently, the driver unit cannot be operated alone in the air conditioning mode.

| *NOTE* |
| --- |
| *The driver's HVAC unit turns on automatically at starting of the engine when the multiplex system receives an "engine running" signal.* |

The PASSENGER control on the R.H side of the HVAC control unit enables the selection of the temperature in the passenger's section.

Temperature control is provided in conjunction with a thermistor sensor located inside return duct, on L.H. side of vehicle (Figure 1, Figure 5).

The flow of hot water to the passenger unit heater core is controlled by the solenoid pilot pneumatic hot water valve which varies the cycling rate depending on selected temperature. A red LED indicator, located on the HVAC control unit, illuminates when the heating mode is one. A green LED indicator illuminates when compressor clutch is in operation.

| *NOTE* |
| --- |
| *It is not uncommon for both the red Heat LED and the green AC LED to be illuminated at the same time. This indicates that the temperature control is requesting heat and the HVAC control is calling for compressor operation for dehumidification.* |

### 6.3.2 Overhead Compartment Unit

Optional A/C evaporator coils may be added to both overhead compartment air systems. This air conditioning unit permits a wider temperature range in the passenger's area.

## 6.4 HEATING

The schematic of FIGURE 2 shows the big HVAC system heating arrangement.

On coaches, in addition to the normal heating provided by the engine, an optional preheating system (104,000 Btu/hr) may have been installed above the rear wheelhousing on the L.H. side.

### 6.4.1 Driver unit Hot Water Pneumatic Valve

The flow of hot water to the driver unit heater core is controlled by a normally-open (NO) pneumatic valve like. The valve, located at the ceiling of the spare wheel compartment (Figure 86), is designed so that the pilot solenoid valve, which is part of the assembly, opens and closes a port which directs air pressure to the actuator casing, thereby opening or closing the valve.

When the vehicle is operating without electrical supply to the pilot solenoid valve, no air pressure is admitted to the actuator casing, the cylinder spring pushes up against the cylinder, thereby keeping the water valve open.

**Air pressure at port + 24-V signal at coil = valve closed**

The driver unit hot water valve requires a minimum amount of maintenance. The valve should be free of dirt sediment that might interfere with its operation. No other maintenance is needed unless a malfunction occurs.

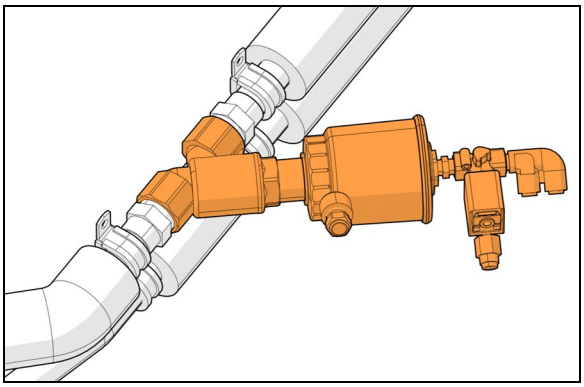

FIGURE 86: DRIVER UNIT HOT WATER PNEUMATIC VALVE ASSEMBLY

### 6.4.2 Passenger unit Hot Water Pneumatic Valve

The flow of hot water to the vehicle's big heater core is controlled by a normally-open NO 3-way pneumatic water valve assembly (Figure 87). The valve, located in the evaporator compartment, is designed so that the pilot solenoid valve, which is part of the assembly, opens and closes a port which directs air pressure to the actuator casing, thereby opening or closing the valve.

When the vehicle is operating without electrical power to the pilot solenoid valve, no air pressure is admitted to the actuator casing, the cylinder spring pushes up against the cylinder, thereby keeping the water valve open.

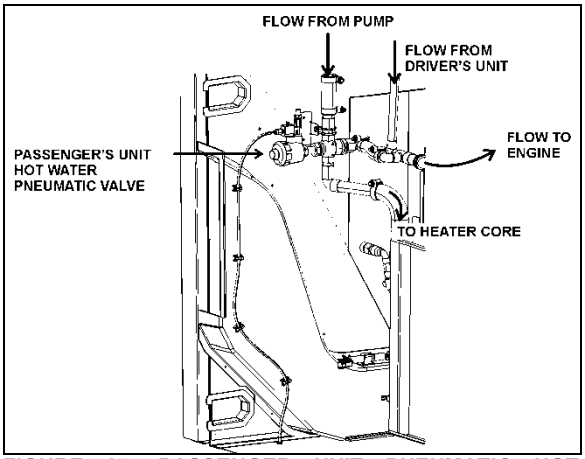


FIGURE 87: PASSENGER UNIT PNEUMATIC HOT WATER VALVE ASSEMBLY 22240

### 6.4.3 Draining Heating System

To drain the entire system, refer to SECTION 05 COOLING SYSTEM. If only the driver unit heater core or passenger unit heater core must be drained, refer to the following instructions.

Draining Driver unit Heater Core

1. Stop engine and allow engine coolant to cool.
2. Locate the normally open hot water pneumatic valve on the ceiling of the spare wheel compartment (Figure 86), disconnect its wiring connector, and then connect a 24-volt external power source, using jumper cables, to close valve.
3. Close the hot water lines shutoff valves located next the engine on street side (see Figure 92 or Figure 93).

**WARNING**

Before proceeding with the following steps, check that coolant has cooled down.

3. Loosen hose clamp, install an appropriate container to recover coolant, and disconnect silicone hose from hot water pneumatic valve.
4. From inside of vehicle, remove the two finishing panels in front of unit. Remove the three screws fixing the unit front panel. Open the purge valve located inside the driver unit (Figure 89). If present, open the manual vent located inside the HVAC unit, on the driver's side (Figure 88) to ensure an efficient draining.

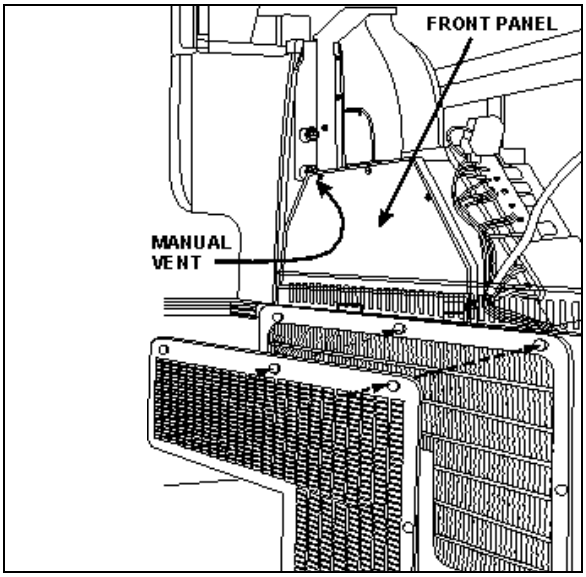


FIGURE 88: DRIVER'S HVAC/DEFROST UNIT

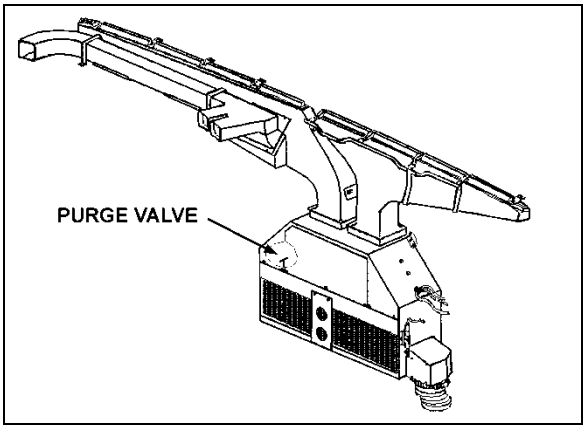


FIGURE 89: DRIVER UNIT AIR MIXING BOX 22171PV

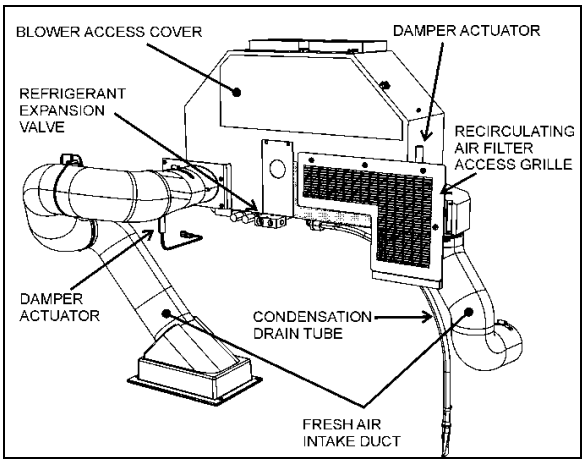


FIGURE 90: DRIVER'S HVAC UNIT

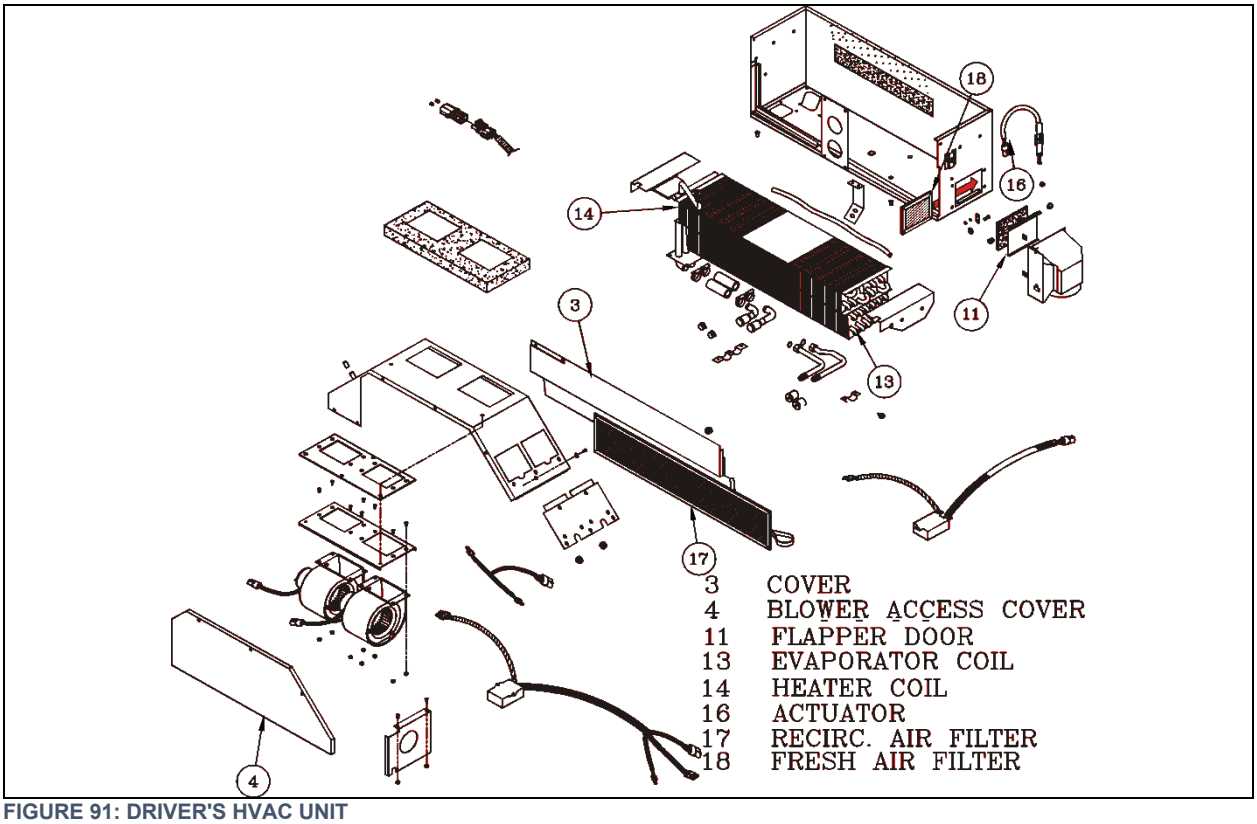


FIGURE 91: DRIVER'S HVAC UNIT

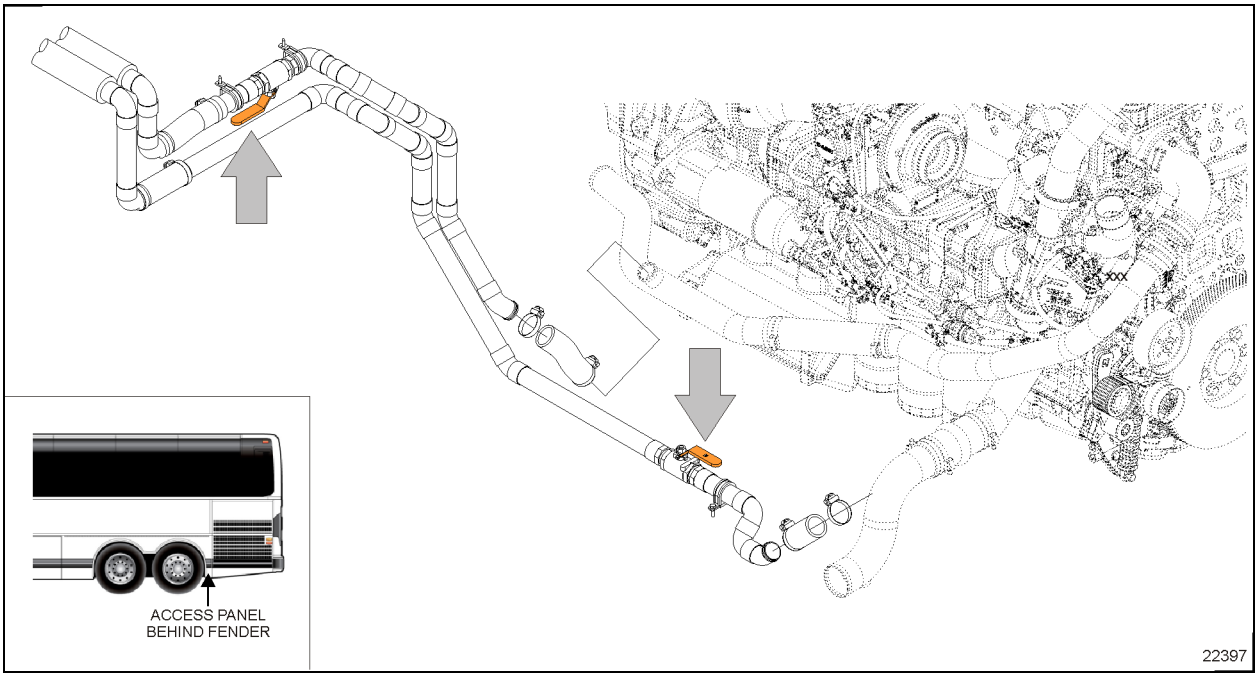


FIGURE 92 X3 SERIES HEATER LINE SHUT-OFF VALVES- (ALLISON TRANS. PIPING ARRANGEMENT SHOWN)

Draining Passenger unit Heater Core

1. Stop engine and allow engine coolant to cool.
2. Close both heater line shutoff valves (Figure 92 or Figure 93). One is located in the engine compartment, lower road side, near the radiator while the other one is located behind the L.H. hinged rear fender near the preheater.
3. Open the evaporator compartment door.

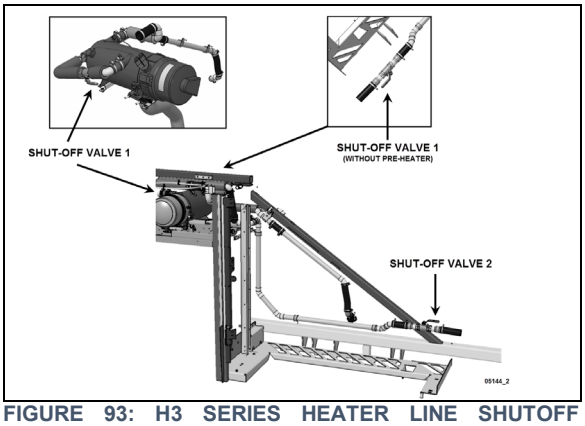


**FIGURE 93: H3 SERIES HEATER LINE SHUTOFF VALVES** 05144

**WARNING**

Before proceeding with the following step, check that coolant has cooled down.

4. Open drain cock in bottom of heater core (Figure 94) you can unfasten a hose connection on top of heater core in order to allow air to enter while draining. The main heater core drain cock is located in the evaporator compartment. To access the valve, open baggage compartment door located in front of the evaporator compartment (L.H. side). Open the evaporator compartment access panel.

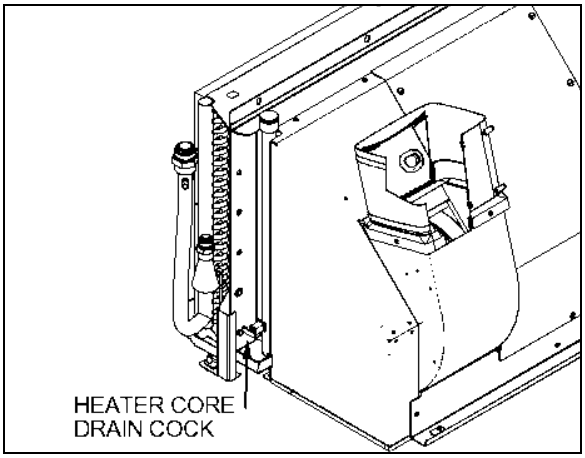


**FIGURE 94: HEATER CORE DRAIN COCK LOCATION**

6.4.4 Filling Heating System

1. Ensure that the driver unit heater core purge valve and the passenger unit heater core drain cock are closed.
2. Open the surge tank filler cap and slowly fill the tank to top of sight glass.
3. After initial filling, the hot water shutoff valves should be open and the water circulating pump should be energized to assist in circulating coolant through the heating system. To perform this operation, start the engine, switch on the HVAC control unit, both driver and passenger sections, and set temperature to their maximum positions in order to request the heating mode in each of these sections.
4. When coolant level drops below the surge tank sight glass, slowly fill the tank to top of the sight glass.
5. If vehicle is equipped with a windshield upper section defroster, open front baggage compartment R.H. side door. Locate circulating pump on top of front wheelhousing, momentarily pinch the hose located between the circulating pump suction and the defroster outlet connector to ensure windshield upper section defroster complete filling.
6. Once the level has been stabilized, replace cap

### 6.4.5 Bleeding Heating System

Whenever the heating system has been drained and refilled, or the system has run low on coolant and coolant has been added, it is necessary to bleed air from heating system. Locate the purge valve illustrated in Figure 89 & Figure 94, and open them momentarily until no air escapes from the lines. If present, open the manual vent located inside the HVAC unit, on the driver's side (Figure 88).

| *NOTE* |
| --- |
| *In test mode (see paragraph 5.4 TEST MODE FOR SWITCHES AND SENSORS), with the parking brake applied and the passenger set point set to a value higher than 64°F (18°C), the hot water circulating pump is not set to OFF as it would normally do when the outside temperature gets above 50°F (10°C). This feature is useful when working on the heating system to remove air pockets trapped in the system.* |

## 6.5 COOLING

The big system is equipped with 4-cylinder 4NFCY Bitzer compressor with an air conditioning capacity of 7½ tons. The receiver tank and filter-dryer are mounted inside the condenser compartment.

The schematics of FIGURE 3 and FIGURE 7 show the big HVAC system's cooling function arrangement.

### 6.5.1 Refrigeration Cycle

Refrigeration may be defined as the transfer of heat from a place where it is not wanted to a place where it is unobjectionable. The air conditioning system used is the "closed" type using R134a refrigerant.

1. The refrigerant flowing to the compressor is compressed to high pressure and reaches a temperature higher than the surrounding air. It is passed through the air-cooled fins and tubes of the condenser causing the hot, high pressure gas to be condensed into a liquid form.
2. The liquid refrigerant leaves the condenser then, flows to the receiver tank.
3. **H3 Series only:** The liquid refrigerant leaves the receiver tank and then flows back to the condenser for sub-cooling and return to the receiver tank.
4. The liquid refrigerant leaves the receiver tank and passes through a filter-dryer where moisture, acids and dirt are removed and then through a moisture indicator which indicates if any moisture is present in the system.
5. By its own pressure, the liquid refrigerant flows through a thermal expansion valve where the pressure drop causes the refrigerant to vaporize in a vapor-liquid state at a low temperature pressure.
6. The cold low pressure refrigerant passes through the passenger's and driver unit evaporator coils which absorb heat from the air passing over the fins and tubes, and changes into gas. In this form, the refrigerant is drawn into the compressor to repeat the air conditioning cycle.
7. The success of the air-conditioning system depends on retaining the conditioned air within the vehicle. All windows and intake vents should be closed. An opening of approximately 8 $in^2$ (5162 $mm^2$) could easily neutralize the total capacity of the system.
8. Other causes of inadequate cooling are di Series only:rty coils or filter. Dirt acts as insulation and is also serves as a restriction to the air flow.
9. The refrigeration load is not constant and varies. It is also affected by outside temperature, relative humidity, passenger load, compressor speed, the number of stops, etc. The compressor will load depending on operating conditions.

### 6.5.2 Refrigerant

The A/C system of this vehicle has been designed to use R134a refrigerant as a medium. Regardless of the brand, only R134a must be used in this system. The chemical name for this refrigerant is 1,1,1,2-Tetrafluoroethane.

| ⚠ **WARNING** |
| --- |
| Refrigerant in itself is nonflammable, but if it comes in contact with an open flame, it will decompose. |

Procurement

Refrigerant is shipped and stored in metal cylinders. It is serviced in 30 and 100 pound cylinders.

Approximately 24 lbs are needed in the Big HVAC system plus an additional 2 lbs will be needed for the overhead compartment A/C system if equipped.

For vehicles equipped with the Small HVAC System, approximately 4 lbs of refrigerant are needed.

***Refrigerant charge (Approximate)***

| | |
|---|---|
| *Big A/C system:* | *24 lbs* |
| *Small A/C system:* | *4 lbs* |
| *Overhead comp. A/C system:* | *2 lbs* |

It will be impossible to draw the entire refrigerant out of the cylinder. However, the use of warm water or heating blanket when charging the system will assure the extraction of a maximum amount of refrigerant from the cylinder.

Precautions in Handling Refrigerant

1. Do not leave refrigerant cylinder uncapped.
2. Do not subject cylinder to high temperatures, do not weld or steam clean near system or cylinder.
3. Do not fill cylinder to more than 80% liquid full to allow for refrigerant expansion.
4. Do not discharge vapor into an area where a flame is exposed.
5. Do not expose the eyes to liquid refrigerant.

All refrigerant cylinders are shipped with a heavy metal screw cap. The purpose of the cap is to protect the valve and safety plug from damage. It is a good practice to replace the cap after each use of the cylinder for the same reason. If the cylinder is exposed to the sun's radiant heat pressure increase resulting may cause release of the safety plug or the cylinder may burst.

For the same reason, the refrigerant cylinder should never be subjected to excessive temperature when charging a system. The refrigerant cylinder should be heated for charging purposes by placing it in 125°F (52°C) water. Never heat above 125°F (52°C) or use a blowtorch, radiator, or stove to heat the cylinder.

Welding or steam cleaning on or near any refrigerant line or components of the A/C system could build up dangerous and damaging pressures in the system.

If a small cylinder is ever filled from a large one, never fill the cylinder completely. Space should always be allowed above the liquid for expansion. Weighing cylinders before and during the transfer will determine the fullness of the cylinders.



**WARNING**

One of the most important precautions when handling refrigerant consists in protecting the eyes. Any liquid refrigerant which may accidentally escape is approximately -40°F (-40°C). If refrigerant comes in contact with the eyes, serious injury could result. Always wear goggles to protect the eyes when opening refrigerant connections.

Treatment in Case of Injury

If liquid refrigerant comes in contact with the skin, treat the injury as if the skin was frost-bitten or frozen. If liquid refrigerant comes in contact with the eyes, consult an eye specialist or doctor immediately. Give the following first aid treatment:

1. Do not rub the eyes. Splash eyes with cold water to gradually bring the temperature above the freezing point.
2. Apply drops of sterile mineral oil (obtainable at any drugstore) in the eyes to reduce the possibility of infection. The mineral oil will also help in absorbing the refrigerant.

Precautions in Handling Refrigerant Lines

1. All metal tubing lines should be free of kinks, because of the resulting restrictions on the flow of refrigerant. A single kink can greatly reduce the refrigeration capacity of the entire system.
2. The flexible hose lines should never be allowed to come within a distance of 2-½" (6,3 cm) from the exhaust manifold.
3. Use only sealed lines from parts stock.
4. When disconnecting any fitting in the refrigeration system, the system must first

be discharged of all refrigerant. However, proceed very cautiously, regardless of gauge readings. If there happens to be liquid refrigerant in the line, disconnect fittings very slowly, keeping face and hands away so that no injury can occur. If pressure is noticed when fitting is loosened, allow it to bleed off very slowly.



**WARNING**

Always wear safety goggles and gloves when opening refrigerant lines.

5. In the event that any line is opened to the atmosphere, it should be immediately capped to prevent entrance of moisture and dirt.
6. The use of the proper wrenches when making connections on O-ring fittings is important. The use of improper wrenches may damage the connection. The opposing fitting should always be backed up with a wrench to prevent distortion of connection lines or components. When connecting the flexible hose connections, it is important that the swaged fitting and the flare nut, as well as the coupling to which it is attached, be held at the same time using three different wrenches to prevent turning the fitting and damaging the ground seat.
7. The O-rings and seats must be in perfect condition. The slightest burr or piece of dirt may cause a leak.
8. **O-rings and gaskets should be coated with refrigeration oil** and installed on the line before the line is inserted into the fitting to prevent damaging the O-ring. If leaks are encountered at the couplings or connectors, no attempt should be made to correct the leaks by tightening the connections beyond the recommended torque. The O-rings are designed to seal at the specified torque and overtightening the connection does not result in a satisfactory and permanently sealed connection. The connection must be disassembled and the cause of the leak (damaged O-ring, defective lines, etc.) corrected. Use new O-ring.

### 6.5.3 Refrigerant System Clean-Out After Compressor Failure

Although the vast majority of reciprocating refrigerant compressors manufactured today are extremely reliable, a small percentage do fail. These failures usually result in minor or extensive system contamination depending on the severity of the failure. When an open type compressor becomes damaged internally, this provokes small particles of bearings, steel, brass, copper, and aluminum and, in severe cases, carbonized oil, which could contaminate the system. To prevent repeated failures, the problem which caused the failure should be corrected, and depending upon the severity of the failure, the system should be thoroughly cleaned out using one of the cleanout procedures mentioned.

Determining Severity of Failure

The severity of compressor failure can be categorized as minor or major. A failure is considered minor when the contamination is limited to the compressor with little or no system contamination. A major failure, or burnout, results in extensive system contamination as well as compressor damage. Extensive system contamination can be determined by withdrawing a small sample of compressor oil and checking its color, odor and acidity. A Virginia Chemical "TKO" one step acid test kit is one of several compressor oil test kits that may be used. A high acid content would indicate a major failure or burnout. A small amount of refrigerant gas may be discharged. A characteristic burned odor would also indicate severe system contamination.

Clean-out after Minor Compressor Failure

1. Be sure to correct the problem which caused the failure.
2. Change liquid line filter-dryer.
3. Run the unit for 2 hours on high speed cool only.
4. Check compressor oil level to ensure compressor is not overcharged with oil. Sometimes a significant amount of oil is pumped out of the compressor to other parts of the system when a compressor fails. This oil will return to the replacement compressor when it is started, causing an overcharge of oil in the sump of the replacement compressor. In this case, it is

important that the oil level be adjusted to the proper level.

5. Withdraw a sample of the compressor oil and check its color, odor, and acidity, using instructions supplied above. If the oil is contaminated, change the oil and filter-dryer, and repeat the procedure until the system is clean.

Clean-out After Major Compressor Failure

1. Reclaim the refrigerant into a refrigerant bottle through a filter-dryer to filter out contaminants.
2. Remove the failed compressor and repair it if possible.
3. Install new or repaired compressor.
4. Change the filter-dryer using prescribed method.
5. Circulate clean R-134a with the reclaimer to clean out many of the contaminants collected in the coil valves, TXV (Thermal Expansion Valve), solenoid valves, check valves, and any other mechanical component that may have collected contaminants.
6. Evacuate and charge the system normally.
7. Run the unit for 8 hours and monitor the pressure drop across the filter-dryer. Also check the liquid line dryer for signs of restriction. If the pressure drop across the filter-dryer exceeds 12 to 14 psig (82,75 to 96,5 kPa) with a 40°F (5°C) evaporator coil temperature, stop the unit and change the liquid line and suction line filter-dryer. After 4 or 5 hours of operation, stop the unit and replace the filter-dryer.
8. After 8 hours of operation, stop the unit and remove a sample of the compressor oil and check its color, odor, and acidity, using instructions supplied above. If the oil is contaminated, replace the oil and repeat step 7. If the oil is not contaminated, change the filter-dryer again and replace the moisture-liquid indicator.
9. After approximately 7 days of operation, recheck the compressor oil for cleanliness and acidity.

### 6.5.4 Pumping Down

This procedure is intended to reduce refrigerant loss, on the big system only, by isolating it in the compressor and the receiver tank, as well as in their connecting line, in order to carry out repairs on other sections of the air-conditioning system (lines and components).

*NOTE*

*Once this pull down procedure has been properly done, any component from the outlet hose on the receiver tank, the filter-dryer, the liquid solenoid valves, the evaporators, the expansion valves, and all lines associated with them can be serviced,* ***then properly evacuated****.*

*It must be noted that there is STILL refrigerant under pressure in the compressor, the discharge lines, condenser, and receiver tank and that these items cannot be serviced. To service these items, it is required to recover the refrigerant using a recovery unit.*

**CAUTION**

The filter-dryer should be changed each time a line in the system is opened.

*NOTE*

*Before attempting any repair between compressor and receiver tank, use a recovery unit to remove refrigerant from the system.*

**WARNING**

To prevent any injury, when air conditioning system must be opened, refer to previous paragraph “Precautions In Handling Refrigerant” to prevent any injury.

*NOTE*

*For this procedure to be done properly, it is assumed the proper amount of refrigerant is in the refrigeration system. If there is any doubt, use a recovery unit to recover and weight the amount of refrigerant in the system.*

*NOTE*

*On vehicles equipped with small HVAC system, refer to “Sanden SD Compressor Service Manual ".*

Procedure

1. Energize driver unit and passengers' unit (main HVAC system) section liquid solenoid valve. To do so, connect male and female connector housings of C24 together for the passengers' area (found on the HVAC module in evaporator compartment) and C44 for the driver's area (located on the ceiling of the spare wheel compartment). During normal use, both male and female housings of connector C24 and C44 are kept unplugged.

**CAUTION**

Connectors C24 & C44 must be disconnected and their caps reinstalled after this procedure. Leaving them connected will keep the driver's, passengers and overhead compartment liquid solenoid valves open, and result in battery draining if the vehicle remains unused for several days.

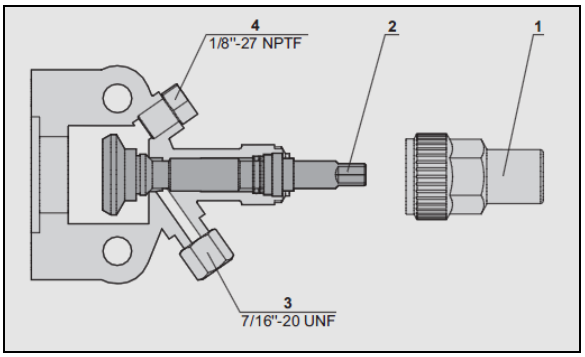


**FIGURE 95: COMPRESSOR SHUT-OFF VALVE BACKSEATED POSITION (NORMAL OPERATING POSITION)**

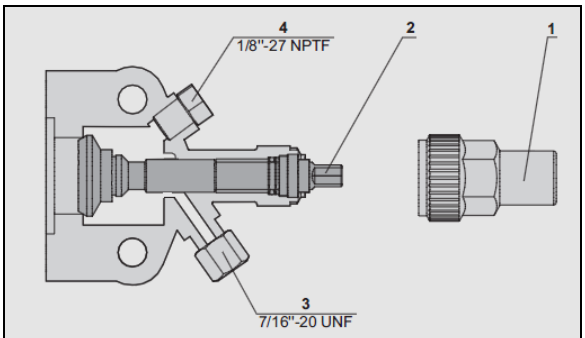


**FIGURE 96: COMPRESSOR SHUT-OFF VALVE IN FRONT SEATED POSITION**

2. Run the system for 10 minutes and then shut it off.
3. Close (frontseat) the receiver tank outlet shutoff valve by turning the stem clockwise (Figure 62 and Figure 96).

   **MAX TORQUE: 21 lb-ft (28 Nm)**

4. Backseat the compressor suction shutoff valve (FIGURE 95).

   **MAX TORQUE: 12 lb-ft (16 Nm)**

5. Install an appropriate pressure gauge set on the service port and then turn the shutoff valve forward ¼ turn more or less until a visual check of the suction pressure is possible.
6. Disconnect the low pressure transducer. The multiplex system will establish a default value of 34 psig and this will allow pulling down the A/C compressor to 0 psig. **Note: the low pressure transducer must be reconnected after the pumping down operation is complete.**
7. Run the A/C compressor until suction pressure is pulled down to 0 psig.
8. Disconnect the compressor clutch to stop the compressor from pulling the system into a vacuum. Vacuum is not required. The pressure will probably slowly increase on the suction side. When it reaches 10 psig, reconnect the clutch and repeat the pull down to pull down this residual pressure. This process might need to be repeated a couple of times until the suction pressure drops and remains to 0 psig.
9. Stop the compressor.
10. Close (frontseat) the suction shutoff valve on the compressor (Figure 96).

    **MAX TORQUE: 21 lb-ft (28 Nm)**

11. At this point, C24 can be disconnected to isolate the section of the system located between the receiver tank outlet shutoff valve and the passengers' unit liquid solenoid valve. Doing so would be useful to perform replacement of the filter-dryer for example.

*NOTE*

*During this operation, care must be taken not to fill the receiver tank over the upper sight glass. If so, stop process immediately. Always allow refrigerant piping and units to warm up to the ambient air temperature before opening system or sweating will take place inside the lines.*

### 6.5.5 Adding Vapor State Refrigerant

Addition of vapor state refrigerant is carried-out to compensate for hose permeation and shaft seal losses over a long period and is done from the suction side while compressor is in operation. A typical sign of refrigerant low charge would be A/C lower performance experienced by the user.

Perform the usual leak inspection and correct any leaks before adding refrigerant.

Verification

Perform the following verifications:

1- A vehicle stopped for more than 4 hours should show the lower receiver tank sight glass full at room temperature or with some level if ambient temperature is high. This method is less accurate when ambient temperature gets high.

2- With the AC on for at least 10 minutes, the moisture indicator sight glass (FIGURE 97) should be clear, not milky, without bubbles in the stream of refrigerant. Bubbles in the moisture indicator sight glass are sign of refrigerant low charge. The filter-dryer nearby should be near constant temperature, less than 5°F differential between inlet and outlet. A partially blocked filter will make some flash gas and give a "milky" sight glass.

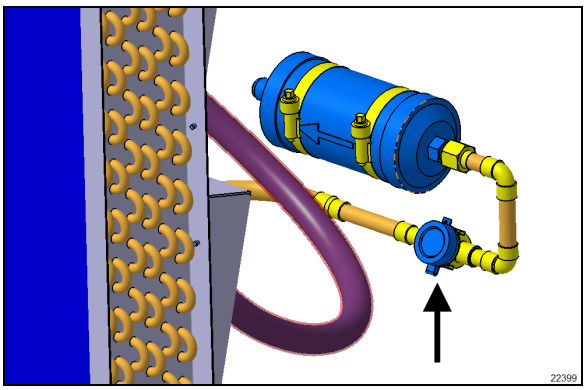


FIGURE 97: MOISTURE INDICATOR SIGHT GLASS

3- At fast idle, the high side pressure should be near the following calculation: add 30° F to the ambient temperature in Fahrenheit. In the refrigerant chart (see paragraph 5.8), find this temperature and the corresponding saturation pressure and add 10 psi for the pressure drop between compressor and condenser.

**Calculation example:**

**At 70°F outside, add 30°F. In the chart (paragraph** 5.8 **), find the pressure value for a temperature of 100°F. For 134a refrigerant gas, you will find a value of 124 psi. Add 10 psi to this value for the compressor to condenser line, this result gives 134 psi. So a high side pressure value between 129 to 139 psi should be OK.**

Refrigerant addition

*NOTE*

*Use a bottle that is more than half full.*

*Always charge the system with the cylinder upright and the valve on top to avoid drawing liquid out of the cylinder.*

1. Install a heated refrigerant bottle at the back of the vehicle, on a scale, straight up.

   Refer to section "Precautions in Handling Refrigerant" for the proper heating method.

2. Connect the yellow hose of your manifold gage set to the red (vapor) valve on the bottle. Connect the blue valve of the gage set on the suction shutoff valve service port of the compressor. Connect the red valve of the gage set to the discharge shutoff valve service port. Hoses should be purged of air at installation (evacuated).

**WARNING**

Secure manifold gage hoses so they will not be damaged by engine belts and pulley.

3. Midseat the compressor suction and discharge shutoff valves.
4. In order to speed up the charging, unplug the unloader to keep all compressor cylinders active.
5. Let the door and hatches open and maybe open side windows to prevent cooling down the coach too rapidly. Preferably, the interior would be hot, at least over 68°F.

**WARNING**

If discharge pressure is above 100 psig, the condenser fans will be running. Keep hands clear of fans

6. Start engine.
7. Switch to fast idle for faster fill and battery protection.
8. Open the blue gage valve. The suction pressure should go up meaning the compressor is sucking from the tank also. If there is almost no pressure rise, the tank is too low or too cold.
9. Check the moisture indicator sight glass and the discharge pressure to meet the criteria described above.
10. When the sight glass gets clear, you can add some reserve, up to 2 pounds, as long as the high pressure does not move up.
11. When finished, close gage valves and bottle valve.
12. Before stopping the engine, check the compressor oil level and note it in the repair book as well as the amount of refrigerant added.
13. Shut down engine and backseat suction and discharge shutoff valves (FIGURE 95).

    **MAX TORQUE: 12 lb-ft (16 Nm)**
14. Remove gages and replace caps.
15. Perform a road test for final verification.

### 6.5.6 Charging System

When a system has been opened or if there are any questions about the air or moisture in the system, evacuate the system. **Charging of an evacuated system** may be accomplished by forcing liquid R-134a directly into the receiver tank. This may be accomplished by placing the refrigerant cylinder upside down on a scale with the valves at the bottom. This ensures that only liquid will enter the **receiver tank**.

When charging an empty system, weigh the amount of refrigerant put into the system. This will eliminate any possibility of overfilling.

A Big HVAC System nominal charge requires 24 pounds. If the vehicle is equipped with the overhead compartment A/C system, a full charge requires an additional 2 lbs.

After charging the system, it may be necessary to add refrigerant. Vapor state refrigerant addition will be done from the suction side of the compressor while the compressor is in operation.

1. Using connector C24 and C44, energize and open the liquid solenoid valves (driver unit, passengers' unit and overhead compartment units). To do so, uncap and connect male and female connector housings of C24 together for the passengers' area (located on the HVAC module in evaporator compartment) or C44 for the driver's area (located on the ceiling of the spare wheel compartment).
2. Backseat (stem out) the two compressor shutoff valves (FIGURE 95).

   **MAX TORQUE: 12 lb-ft (16 Nm)**
3. Install A/C pressure gauges at the compressor shutoff valves service ports (item 4, FIGURE 95).
4. Midseat the two compressor shutoff valves.
5. Ensure that the two receiver service valves are in backseated position (stem out).
6. Remove the cover cap from the service port on the receiver inlet service valve (Figure 62).
7. Attach an evacuated charging hose (purged from air and moisture) to the R-134a tank.
8. Connect the evacuated charging hose to the service port on the receiver tank inlet shutoff valve.
9. Open the R-134a tank valve. The refrigerant supply tank should be kept warm to allow more refrigerant to be transferred into the system. Use a heating blanket for this matter.
10. Midseat the receiver inlet shutoff valve. The R-134a will now enter the system.
11. The proper charge of R-134a is 24 lbs, to this, add 2 lbs for overhead compartments A/C system. When the scale indicates this amount of charge, backseat the receiver valve and close the R-134a tank valve.
12. Disconnect the charging hose. Replace the cover caps.
13. Disconnect C24 & C44.
14. The system is now ready for operation.

**CAUTION**

The evacuation of the system must be made by authorized and qualified personnel only. Refer to local laws for R-134a recuperation.

## 6.6 LIQUID REFRIGERANT RECOVERY

Liquid recovery is performed the same way as standard vapor recovery except that liquid recovery will be done by connecting to the high side of the system. Recovering liquid is ideal for recovering large amounts of refrigerant.

1. Energize driver unit and passengers' unit (main HVAC system) section liquid solenoid valve. To do so, connect male and female connector housings of C24 together for the passengers' area (located on the HVAC module in evaporator compartment) and C44 for the driver's area (located on the ceiling of the spare wheel compartment). During normal use, both male and female housings of connector C24 or C44 are kept unplugged.
2. Backseat (normal operating position) the compressor suction and discharge shutoff valves.

   **MAX TORQUE: 12 lb-ft (16 Nm)**
3. Connect manifold gauges on the service port and then turn the compressor shutoff valves forward just enough to enable a visual check of the suction and discharge pressure.
4. Make sure the receiver outlet shutoff valve is in backseated position (normal operating position). Connect the recovery unit hose to the receiver outlet shutoff valve service port (FIGURE 98).




**FIGURE 98: RECOVERY UNIT CONNECTED TO RECEIVER SERVICE PORT**

5. Perform the recovery of the refrigerant as prescribed by the recovery unit manufacturer.

## 6.7 EVACUATING SYSTEM

When A/C system has been opened or if there are any questions about the air or moisture in the system, evacuate the system.

Backseat (stem out) both compressor shutoff valves. Evacuate the entire system including compressor using a **vacuum pump** connected to the high and low pressure sides.

A steady vacuum (i.e. pressure does not rise within two hours) less than 0.02 psi (1.5 mbar) must be maintained once the vacuum pump is turned off.

**CAUTION**

The evacuation of the system must be made by authorized and qualified personnel only. Refer to local laws for R-134a recuperation.

1. Make sure both receiver tank shutoff valves are is the normal backseated position (stem turned out).
2. Clean the area around the compressor shutoff valves.
3. Remove the blue and red caps from the service ports on suction and discharge shutoff valves. Connect two hoses to the vacuum pump.
4. Mid seat the compressor suction and discharge shutoff valves.
5. Using connector C24 and C44, energize and open the liquid solenoid valves (driver unit, passengers' unit and overhead compartment units). To do so, uncap and connect male and female connector housings of C24 together for the passengers' area (located on the HVAC module in evaporator compartment) or C44 for the driver's area (located on the ceiling of the spare wheel compartment).
6. Start the vacuum pump.
7. The pressure will drop to approximately 29 in-HG gauge vacuum.
8. Evacuate to a system pressure of 500 micron.

9. Shut down the vacuum pump. Validate that the vacuum holds. If the pressure rises, it indicates a leak.
10. Backseat the compressor shutoff valves by turning “out” all the way.
11. Remove the hoses.
12. Reinstall the red and blue caps at the suction and discharge shutoff valves service ports.
13. Disconnect C24 & C44.

## 7. SMALL HVAC SYSTEM

The small HVAC system is found only on motorhomes and has a much lower heating and air cooling capacity than the big system because it is designed to provide air conditioning to the driver’s area only.

### 7.1 SYSTEM CONFIGURATION H-SERIES

On H3-series vehicles, the compressor is installed away from the engine and uses a pneumatic belt tensioner.

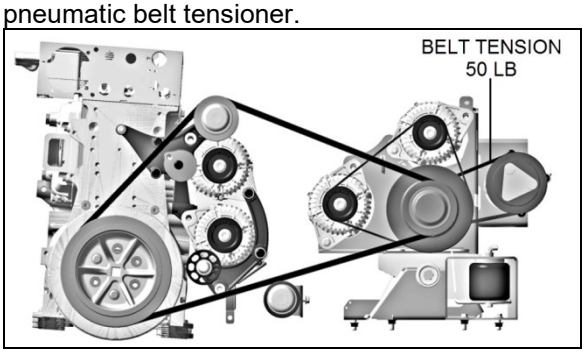


FIGURE 99: BELT LAYOUT WITH SMALL A/C COMPRESSOR h3-45 VIP 22380

In this configuration, the condenser is installed over the radiator and benefits from the existing airflow in this location. All the associated service ports and service valves are close to the compressor.

### 7.2 SYSTEM CONFIGURATION X3 SERIES

On X-series vehicles, the compressor is installed on a support attached to the big A/C pedestal on the engine and uses an automatic belt tensioner.

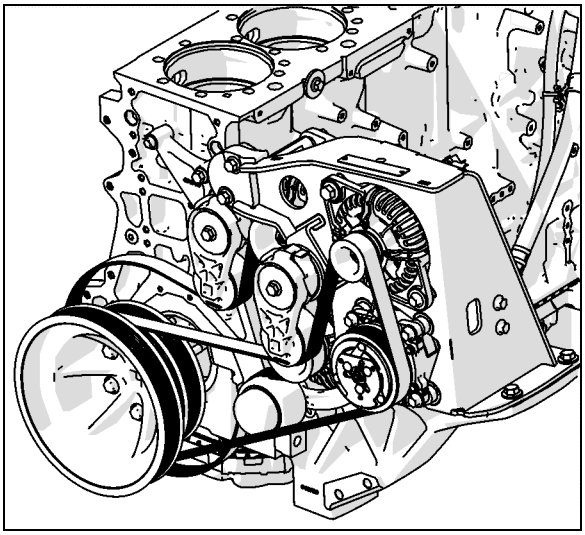

FIGURE 100 X3 SERIES SMALL A/C COMPRESSOR

In this configuration, the condenser is located in the 4th luggage compartment it has its own electric fan to provide the required cooling. All the associated service ports and service valves are on top of the condenser frame.

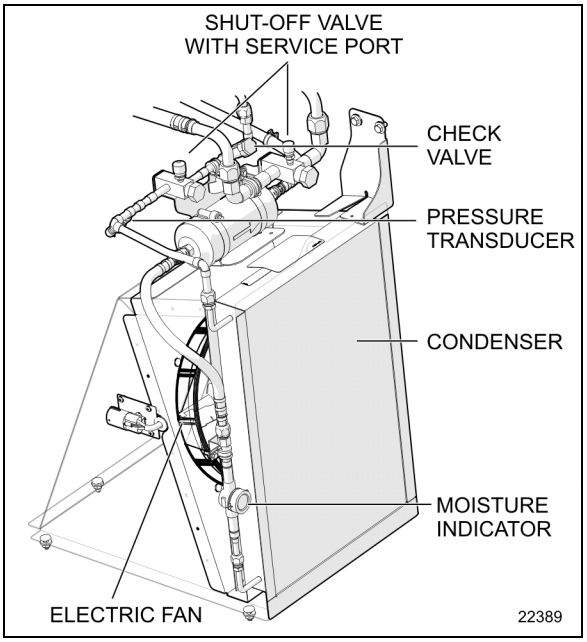


FIGURE 101: CONDENSER CONFIGURATION X3-45 VIP

### 7.3 AIR CIRCULATION

Fresh air is taken from behind the R.H. side headlights assembly (H3 series) or from a plenum underneath the front service compartment (X3 Series) and enters the mixing box through a damper. Return air is taken through the right console into the mixing box.

Mixed air goes through cooling and heating coils, fans and discharge ducts.

Both right and left discharge ducts defrost one half of the windshield. The driver can also divert his air flow to the dashboard, from which he can direct vent to his upper body with adjustable HVAC register and to his feet with the appropriate button (see FIGURE 102 and Owner's manual).

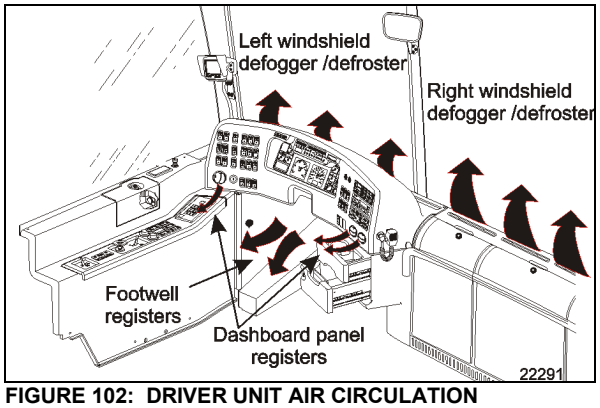


**FIGURE 102: DRIVER UNIT AIR CIRCULATION**

7.3.1 Auxiliary Unit

H3 VIP vehicles equipped with the small HVAC system are equipped with an auxiliary system that provides five additional registers. Three are located behind the driver's seat and the other two are located near the entrance door, at bottom of first lateral window. The auxiliary unit comes with cooling and heating coils, fan and discharge ducts.

## 7.4 SYSTEM OPERATION

### 7.4.1 Driver unit

The small HVAC system driver unit is similar to the big HVAC system driver unit, except that the circulating pump is located on the ceiling of the spare wheel compartment).

On H3 VIP series vehicles, an auxiliary unit is added in series on the return line of the small system, it increases the whole system heating capacity and gives the driver more options.

The temperature control in the driver's area is provided directly by the HVAC control unit mounted on the dashboard R.H. side.

| *NOTE* |
| --- |
| *X3 Series - The driver's area air temperature sensor is located behind the grill of the R.H. side console.* |

| *NOTE* |
| --- |
| *X3 Series - The outside air temperature sensor is located near the RH headlight.* |

### 7.4.2 Auxiliary Unit - H3 Vip Vehicles Only

The temperature control is provided by the small system HVAC control unit. The R.H. portion of the HVAC control unit enables to actuate the auxiliary unit and to regulate the fan speed.

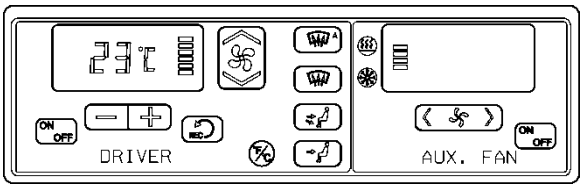


**FIGURE 103: CONTROL UNIT - SMALL HVAC SYST.** 22286

## 7.5 REFRIGERANT RECOVERY

The release of refrigerant into the atmosphere must be avoided. Whenever refrigerant is to be released from the air-conditioning system, a refrigerant recovery unit must be used to recover the refrigerant. This refrigerant can then be recycled and reused, which is both environmentally safe and economical.

For complete system recovery, any of the High and Low service ports can be used. Energize liquid solenoid valve and measure the quantity of oil recovered. For the compressor only, use the service valve port and close the valves. The service valves open permits full flow of refrigerant to service port. Service valve closed permits flow of refrigerant from compressor to service port.

## 7.6 EVACUATING SYSTEM PRIOR ADDITION OF REFRIGERANT (DRIVER'S OR AUXILIARY SYSTEM)

When a system has been opened for repairs, change the filter-dryer and evacuate the system. Use the high-pressure service port and low-pressure port. It would be good practice to open the solenoid valve.

1. Connect two hoses equipped with a micron gauge between the high-pressure service port, the low-pressure service port and the vacuum pump.
2. With the unit service valves open and the vacuum pump valves open, start the pump and draw the manifold and hoses into a very deep vacuum (700 microns).
3. Close manifold valve
4. Shut down the vacuum pump.
5. Check to insure that vacuum holds. (If the pressure continues to rise, it indicates a leak or moisture in the system).
6. Charge the system with the proper amount of refrigerant through the service port near the check valve using recommended charging procedures.
7. Remove the hoses.

### 7.7 OIL ADDITION

The chart below shows the approximate amount of oil to be added to the system when replacing a component.

| Component replaced | Typical amount of oil |
|---|---|
| Evaporator | 50 ml (1.7 ozs) |
| Condenser | 30 ml (1.0 ozs) |
| Filter-Dryer | 10 ml (0.3 ozs) |

The amount of oil recovered with the refrigerant recovery should be added at the same time.

### 7.8 COMPRESSOR OIL CONTAMINATION

Unlike engine oil, no cleaning agent is added to the compressor oil. Even if the compressor is run for a long time, the oil never becomes turbid as long as there is nothing wrong with the compressor or its method of use. Inspect the extracted oil for any of the following conditions:

- Dirt in the oil.
- Change to a varnish color.
- Presence of foreign substance, metal shavings, etc. in the oil. When the oil extracted from the compressor is as described above, replace the oil as follows:

1. Clean the interior of the system with approved method.
2. Replace the filter-dryer.
3. Supply with new oil as specified in small compressor service manual.

### 7.9 OIL RETURN OPERATION

There is a close affinity between oil and refrigerant. During normal operation, part of the oil recirculates with the refrigerant in the system. Therefore, when checking the amount of oil in the system or replacing any system component, the compressor must be run in advance to ensure return. This procedure is as follows:

- If the amount of refrigerant in the system has decreased, charge to the proper amount.
- Start the engine and select fast idle.
- Set the fan speed to full air/full A/C and let run for 20 minutes.

## 8. AUXILIARY PREHEATING SYSTEM (OPTION)

The Auxiliary Preheating System is used for preheating and maintaining the heat of water-cooled engines by the means of an independent water heater using the same diesel fuel as the engine.

The preheater operates independently from the vehicle engine. It is connected to the cooling and heating circuits, the fuel system and the electrical system of the vehicle.

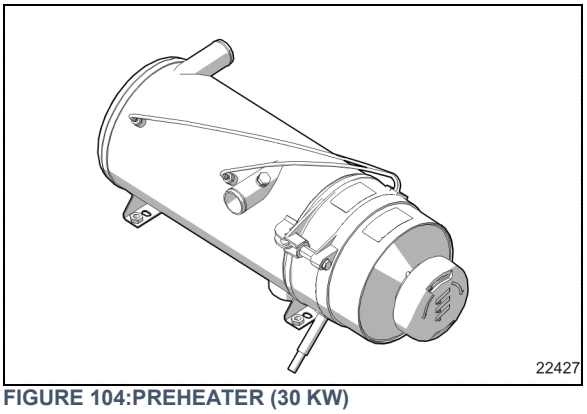


**FIGURE 104:PREHEATER (30 KW)**

The heater can be used to pre-heat the engine coolant in cold weather to ease engine start-up and to provide heat faster in the cabin.

It can also be used with engine running to maintain coolant heat and maintain the set temperature inside vehicle.

The heater "On" symbol appears on the timer when the preheater is switched on.

Refer to the Eberspacher Hydronic LII Troubleshooting and Repair manual under *2 Function* for cutaway views, control diagrams and a detailed description of the function of the heater unit.

## 8.1 PREHEATER FUEL FILTER

The preheater fuel filter is located beside the preheater.

**MAINTENANCE**

Replace preheater fuel filter every 50,000 miles (80 000 km) or once a year, whichever comes first.

## 8.2 OPERATION

Switch on the preheater. The heater "On" symbol appears on the timer display. A component test is performed (3sec.), then the water pump is started and the nozzle preheater is switched on for a maximum of 15 min. 60 sec after, the preheater motor starts, driving the fan and fuel pump.

After approximately 10 seconds, the ignition circuit is switched on and the fuel solenoid valve opens, injecting fuel. The ignition creates a high voltage spark, igniting the fuel air mixture.

The flame monitor recognizes the flame and switches off the spark generator. Combustion continues by itself. At this moment, the preheater is working and producing heat.

If the preheater is switched off, the solenoid valve interrupts fuel supply, combustion stops and the heater "on" indicator disappears.

Combustion air fan still blows air, cleaning the combustion chamber of any fumes and cooling down the combustion chamber. Coolant circulation continues for 3 minutes, protecting the preheater against overheating.

The control thermostat will switch off the preheater when coolant reaches 172°F (78°C) and will turn it on at 163°F (73°C).

When the preheater is switched off by the thermostat, the heater indicator and coolant pump remain on although there is no combustion in the preheater. Combustion air fan blows air for 3 minutes and then turns off.

## 8.3 PREHEATING SYSTEM TIMER

The timer, located on L.H. lateral console is used to program the starting and stopping time of the preheating system. The heater "on" indicator appears when the system is functional.

### 8.3.1 Preheater Timer Instructions

Basic instructions are provided in the Prevost operator's manual. For more details, refer to the 7 day timer operating instructions, found on your Technical Publications USB flash drive, and on the Technical Publications Website.

## 8.4 PREHEATER TROUBLESHOOTING

Fault codes can be displayed through the preheater timer which can display up to 5 fault codes.

### 8.4.1 Displaying Faults On The Timer

Condition: The heater is switched off.

• Press button –>; the heater is switched on.

• Press button and keep it depressed, then press P button within 2 seconds.

The display is as follows:

AF = current fault

3 digit number = fault code

flashes.

• Press button once or several times, fault memory positions F1 – F5 are displayed.

### 8.4.2 Heater Control Box Software Lock

The heater's control box can become locked if certain conditions are encountered.

• Overheating

If the heater overheats 3x in succession – fault code 012, is displayed as AF 015 –> the control box is locked.

• Flame in after-run

If the fault “flame in after-run” is signaled 3x in succession –fault code 058, is displayed as AF 016 –> the control box is locked.

• Too many attempted starts

If the heater carries out ten failed start attempts in succession – fault code 052, is displayed as AF 050 –> the control box is locked.

Consult the complete list of fault codes in the Eberspacher Hydronic LII Troubleshooting and Repair manual under *4 Troubleshooting* / *Fault code table*.

8.4.3 Unlocking The Control Box And Deleting The Fault Memory

**CAUTION**

Unlocking the control box erases useful troubleshooting information at the same time.

To unlock:

•On the timer located on the console left of the driver, press button

The display is as follows: the current fault, e.g. AF 015.

• Press button and keep it depressed, then press button within 2 seconds.

The module timer is now in the “Enquire fault memory” program.

• Switch off ignition (terminal 15).

• Simultaneously press buttons and , in addition, switch on the ignition (terminal 15) and wait until the following appears in the display after ignition “ON”:

Display " - - - -" flashes, heater symbol does not flash.

• Switch the heater off and on –>; the control box is unlocked, the heater restarts.

After switching the heater off and on and renewed query of the fault memory, the following appears in the display, confirming fault memory is reset:

Display "AF 00" flashes, heater symbol does not flash

8.5 PREHEATER MAINTENANCE

Before the cold season, a trial run should be carried out for the heater.

Check air intake and exhaust to make sure there is free air/exhaust flow and no obstruction.

If thick, persistent smoke develops, unusual burning noises or a clear fuel smell occurs or if electric / electronic parts overheat, the heater must be switched off and put out of service by removing the fuse. Refer to vehicle schematic.

The unit should not be started up again until it has been checked by qualified staff.

Check the main components of the heater for proper operation and adjustment.

Consult the Eberspacher Hydronic LII Troubleshooting and Repair manual .

*NOTE*

If there are no preheater faults, the preheater will go through a normal start cycle and regulate based on thermostat setting.

*NOTE*

Switch on the preheating system for about 10 minutes about once a month, even during the warm season.

**CAUTION**

To avoid running down the batteries, do not turn on the preheating system for more than one hour before starting the engine.

**WARNING**

The preheating system uses the same fuel as the engine. Do not operate in a building or while refueling. Operate only in a well-ventilated area.

## 9. ENVIROCARE IONS AIR SANITIZER (OPTIONAL)

Some vehicles may be equipped with the Prevost Envirocare ions air sanitizer, a dual ionizer system that uses positive and negative ions to pull apart airborne pollutants, thereby reducing the pollutants in the air.

The system is composed of five pairs of modules installed at different locations in the vehicle A/C system ducts.

A first pair of module is located inside the driver's AC blower housing.

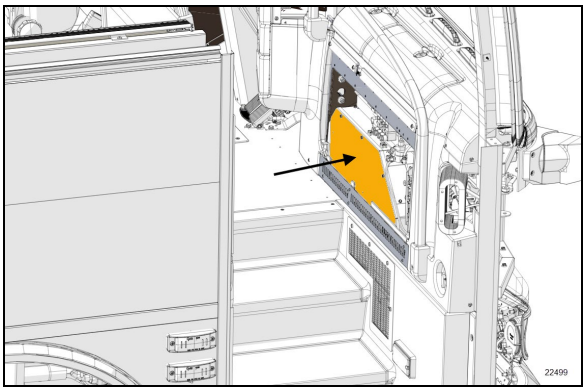


FIGURE 105:REMOVE FRONT A/C COVER TO ACCESS MODULES

Two pairs of modules are installed the main system ducts (one pair on each side at floor level). These modules can be accessed by removing the duct covers in the evaporator and condenser compartments.

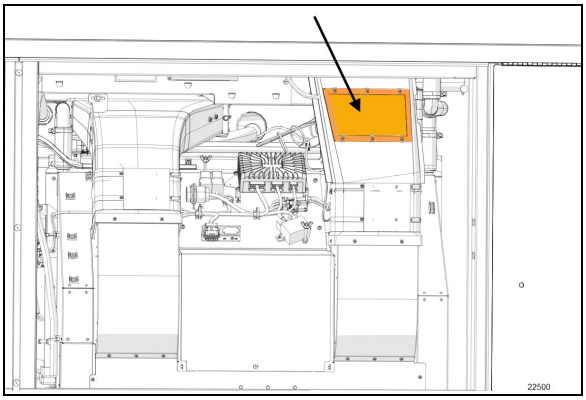


FIGURE 106:MODULES ACCESS COVER IN THE EVAPORATOR COMPARTMENT

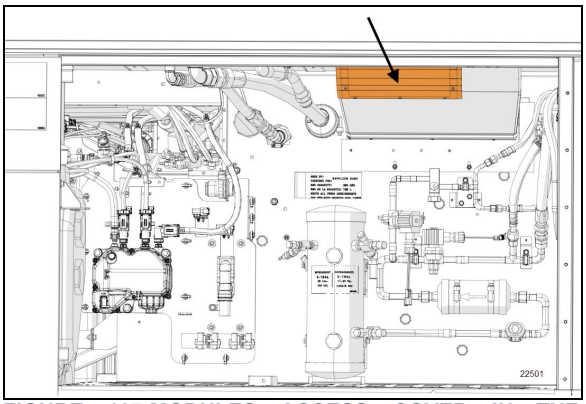


FIGURE 107:MODULES ACCESS COVER IN THE CONDENSER COMPARTMENT

The last two pairs are located under the parcel rack below the parcel rack blowers housing (center of vehicle, one pair on each side). Remove the corresponding overhead console to access.

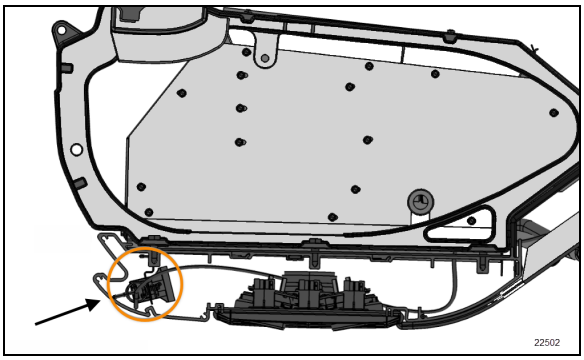


FIGURE 108:MODULES UNDER PARCEL RACK BLOWER HOUSING

## MAINTENANCE

The Envirocare modules performance will start to decrease after 9000 hours of running time.

At this point, it is recommended to replace all 10 modules to maintain optimum system efficiency.

## 10. SPECIFICATIONS

**Passenger unit evaporator motor**

Make..... AMETEK ROTRON
Type .....BRUSHLESS DC MICROPROCESSOR CONTROLED
Voltage ..... 27.6 V DC
Current draw ..... 68 amps
Horsepower..... 2
Revolution ..... 1400 & 1700 rpm
Insulation.....Class F

**Passenger unit condenser fan motors**

Make.....EBMPAST
Type .....12” AXIAL BRUSHLESS
Voltage ..... 24 V DC
Qty..... 4

**Driver unit evaporator motors**

Make.....MCC
Voltage ..... 24 V DC
Quantity..... 1

**Driver unit evaporator air filter**

Make.....MCC
TYPE.....Washable recirculating air 6-¼" x 28"
Make.....MCC
TYPE..... Washable fresh air 3-5/8" X 5-1/4"

**Refrigerant**

Type ..... R-134a
Quantity (big HVAC system) ..... 24 lbs
Quantity (big HVAC system with optional overhead compartment A/C system) ..... 26 lbs
Quantity (small HVAC system) ..... 4 lbs

**Compressor (Big HVAC system)**

Make.....Bitzer
Displacement ..... 41 CFM
Model, R-134a..... 4NFCY
No. of cylinders ..... 4
Cylinder volume .....39 $in^3$ (647 $cm^3$)
Operating speed.....500 to 3500 rpm
Oil capacity.....2.8 quarts (2,6 liters)

Weight ..... 74 lbs (33 kg)
Oil type ..... Polyolester ISO68

**Magnetic clutch**
Make..... Lang
Type ..... KK73.1
Voltage ..... 24 V DC

**A/C Compressor (Small HVAC system)**
Make..... Sanden
Model..... SD7
Approved oil ..... PAG

**Condenser Fan (Small HVAC system)**
Diameter ..... 12 in (30.5 cm)
Power..... 850W
Voltage (nominal) ..... 24 Volts
Voltage (operating range) ..... 16-32 Volts
Maximum speed ..... 4760 rpm
Sealing..... SAE J1455 IP67 / IP69K
Operating temperature range ..... -40 to 138°F (-40 to 59°C)

**Receiver tank (with sight glasses)**
Make..... Westermeyer
Maximum pressure..... 450 psig

**Filter-dryer assembly**
Make..... Emerson-Alco

**Moisture indicator**
Make..... Emerson-Alco

**Liquid refrigerant solenoid valve**
Make..... Sporlan Parker Hannifin
Type ..... Normally closed with manual bypass
Voltage ..... 24 V DC

**Passengers' unit hot water pneumatic valve**
Make..... BURKERT
Type ..... Normally open
Voltage ..... 24 V DC
Pressure range..... 0 to 230 psi
Max. temperature ..... 356°F

**Driver unit hot water pneumatic valve**
Make..... Asco
Type ..... Normally open

Voltage ..... 24 V DC

**Hot water circulating pump**

Make..... AMETEK
Flow..... 15 gpm
Inlet/outlet OD ..... 3/8”

**Main expansion valve**

Make..... Emerson-Alco

**Preheating system**

Make..... Eberspächer
Type ..... Hydronic L-II
Model..... Hydronic L30
Capacity ..... 30 kW
Heating medium ..... Coolant
Rated voltage ..... 24 V DC
Operating voltage..... 20-30 V DC
Electric power consumption (without coolant recirc. pump)..... 105 watts
Fuel consumption..... 3.65 liters/hr (0.96 US gallons/hr)
Weight ..... Approx 18kg (40 lb)
Dimensions (L x H x W) ..... 600mm x 222mm x 230mm (23.62 in x 8.74in x 9.05in)

# MAINTENANCE INFORMATION

**MI18-37**

| DATE : Month Year | SECTION : 00 GENERAL |
|---|---|
| SUBJECT : | **LANG KK73.1 ELECTROMAGNETIC CLUTCH REMOVAL & INSTALLATION - BITZER A/C COMPRESSOR** |

## APPLICATION

| Model |  |
|---|---|
| Prevost coaches, from year model 2014, with the Bitzer air conditioning compressor | |

## DESCRIPTION

In this Maintenance Information, you will find instructions and important details necessary to perform the removal or installation of the Lang KK73.1 electromagnetic clutch, which equips the Bitzer (model 4NFCY) air conditioning compressor.

Note: If not equipped with a Lang KK73.1 electromagnetic clutch, your Bitzer a/c compressor is equipped with a Linnig LA16 clutch. If this is the case, you will find the installation instructions on the document Linnig LA16 Electromagnetic Clutch_142.254 available on the Prevost Technical Publications site, under SUPPLIER PUBLICATIONS.

## CONTENT

**PROCEDURE** 3

**LANG KK73 CLUTCH IDENTIFICATION** 3

**CLUTCH SECTION VIEW** 4

**REMOVING THE ROTOR** 5

**REMOVING THE BELTS** 5
**M12 MOUNTING SCREW REMOVAL** 5
**EXTRACTOR TOOL** 5
**PULLING OFF THE ROTOR** 6
**REMOVING THE COIL** 6

**MOUNTING THE CLUTCH ON THE COMPRESSOR** 7

**PREPARATION** 7
**INSTALLING THE COIL** 7
**PROPER WOODRUFF KEY POSITION** 8
**SLIPING THE ROTOR** 8
**FASTENING THE ROTOR** 9

**REINSTALLING THE BELTS** 10

**TROUBLESHOOTING, POSSIBLE DEFECTS, ELIMINATION** 11

**SUPPLEMENT** 13

**HOW TO INSTALL A NEW "CLIP-ON" UNLOADER COIL** 13

# PROCEDURE

**DANGER**

Park vehicle safely, apply parking brake, stop the engine. Prior to working on the vehicle, set the ignition switch to the OFF position and trip the main circuit breakers equipped with a trip button. On Commuter type vehicles, set the battery master switch (master cut-out) to the OFF position.

## LANG KK73 CLUTCH IDENTIFICATION

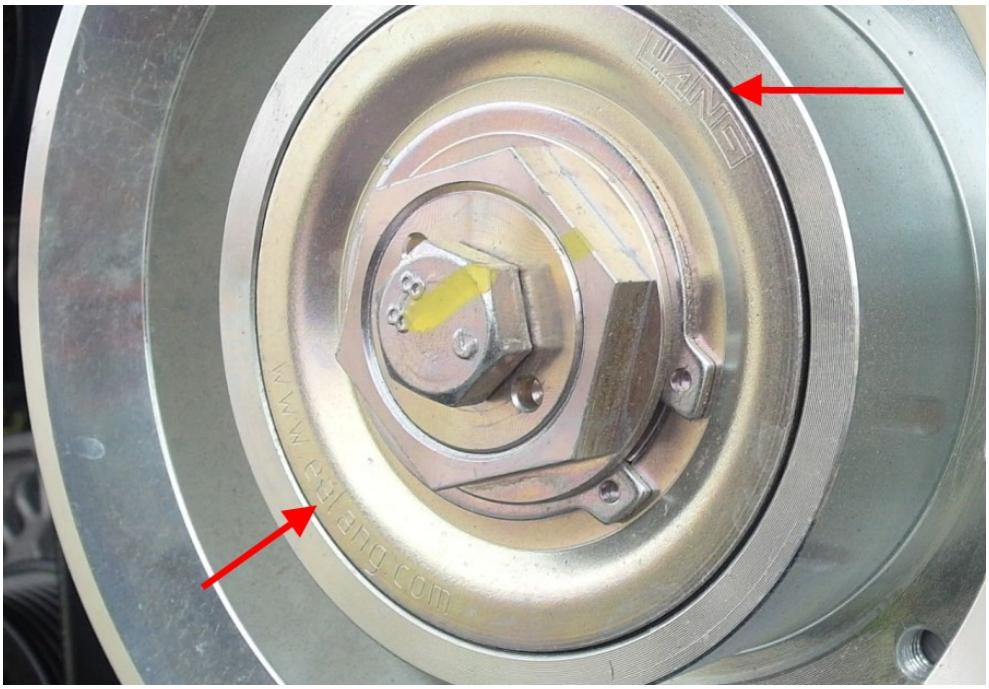


Figure 1: "LANG" & "WWW.EALANG.COM" ENGRAVED ON THE HUB

# CLUTCH SECTION VIEW

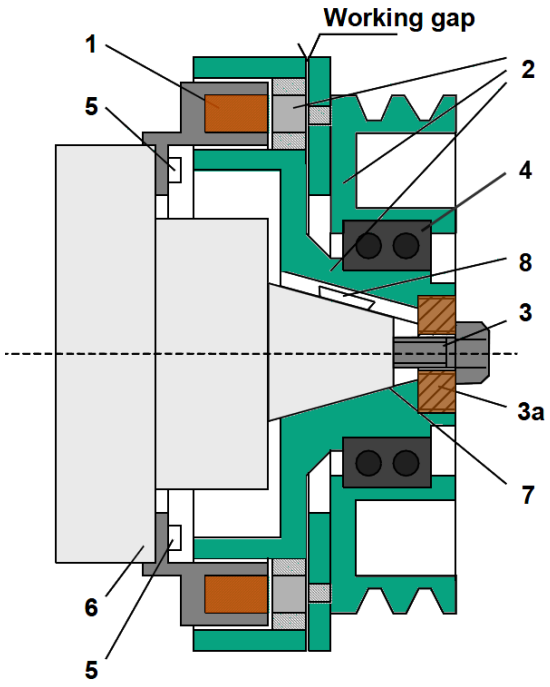


Figure 2: CLUTCH SECTION VIEW

1 - coil
2 - rotor
3 - M12 mounting screw
3a - straining washer
4 - bearing
5 - M8 screw (4x)
6 - flange
7 - shaft end
8 - woodruff key

COLOR CODE

rotor assembly

compressor body

Working gap must be: 0.024 in to 0.035 in
0.60 mm to 0.90 mm

# REMOVING THE ROTOR

## REMOVING THE BELTS

1) Remove the two drive belts.

to

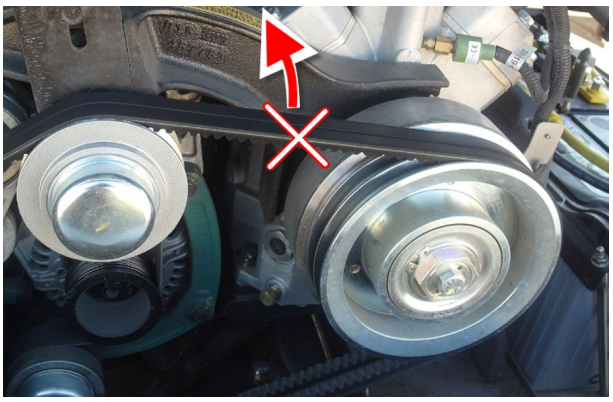

## M12 MOUNTING SCREW REMOVAL

2) While holding the hexagonal part of the rotor with a wrench, loosen and remove the M12 mounting screw (3, Figure 2).



## EXTRACTOR TOOL

3) Screw extractor tool #680888 in the straining washer (3a, Figure 2).

***Do not use a standard M16 screws unless the tip of it has been rounded off, failing to do so may damage the shaft end bore or threads where the M12 screw is fastened***



**EXTRACTOR TOOL # 680888**

## PULLING OFF THE ROTOR

4) Pull off the rotor with the extractor tool. Due to the back pressure, the rotor detaches from the shaft end (7, Figure 2) of the compressor.

**DO NOT USE AN IMPACT WRENCH**

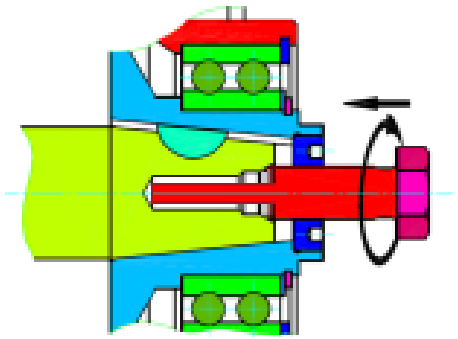

PULL OFF THE ROTOR

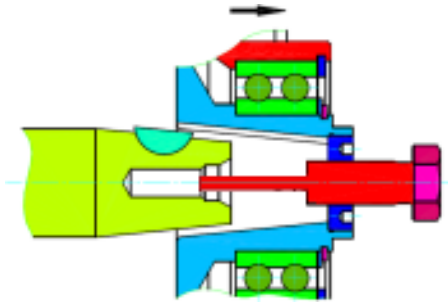

TAKE OFF THE ROTOR

## REMOVING THE COIL

5) Loosen the coil M8 fastening screws (5, Figure 2) and pull the coil off the.



# MOUNTING THE CLUTCH ON THE COMPRESSOR

## PREPARATION

1) The flange and the shaft end must be free from dirt.

2) Apply high temperature approved assembly grease on the shaft end for easy dismounting of the clutch.

***Use of Molykote G-rapid-plus or Molykote P 40 is recommended***

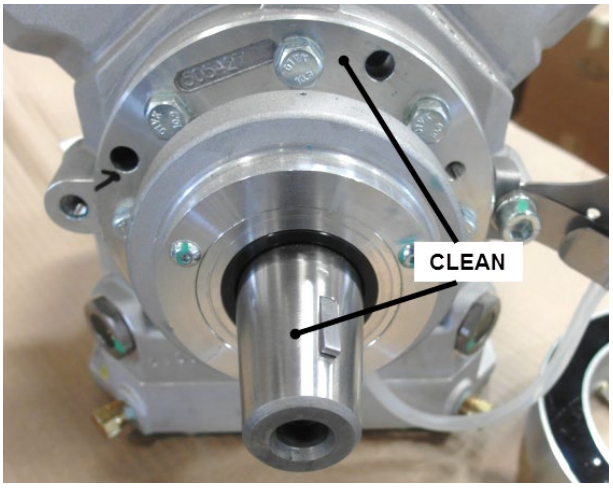


## INSTALLING THE COIL

3) Reinstall the coil. Slip the coil on the compressor flange. The cable connector must be positioned on the right side as shown on the image.

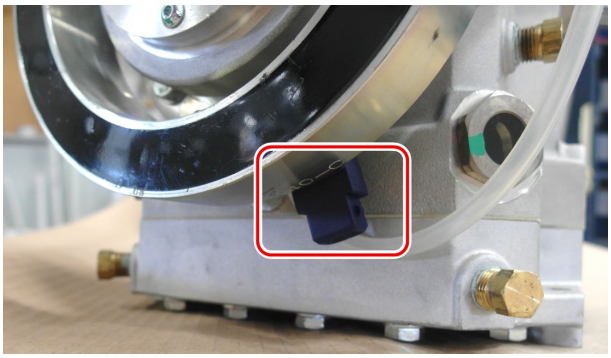

**PROPER CABLE CONNECTOR POSITION**

4) Fasten the four M8 screws by hand to the compressor and then apply final torque.

***Coil mounting screws: 22 lbf-ft (30 N-m). Use blue Loctite 243.***

***Caution:*** *Pay attention to the precise seat of the coil. A non-observance may cause the destruction of the clutch components during operation.*



## PROPER WOODRUFF KEY POSITION

5) To avoid damaging the rotor bore, make sure that the woodruff key is positioned as shown on the image at right, otherwise, it could move when the rotor is inserted on the shaft end.

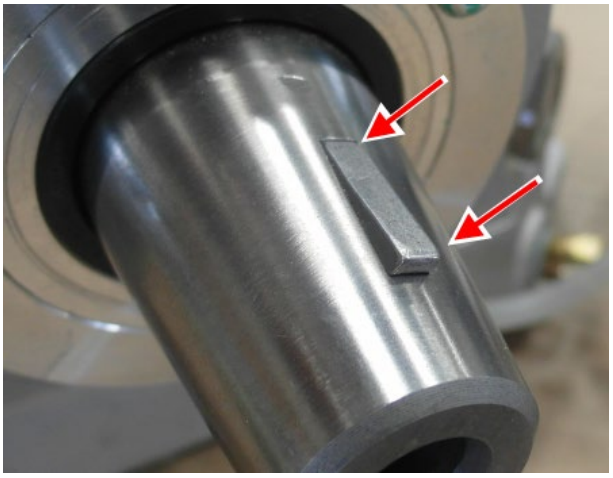

## SLIPPING THE ROTOR

6) Carefully mount the rotor on the shaft end by hand.

*Never use a hammer for pressing the rotor on.*

*To avoid damaging the bore of the rotor, feel the engagement of the key in the keyway and slip the rotor on the shaft end of the compressor till reaching the stop.*



## FASTENING THE ROTOR



7) Fasten the rotor to the shaft end by using the M12 screw and holding-up with a wrench on the hexagonal part of the rotor.

*Rotor mounting screw: 60 lbf-ft (81 Nm)*

*Use blue Loctite 243.*

*Turn rotor by hand and pay attention to the free run and the generation of noises. In case of rubbing, grinding or similar noises, dismount the rotor and check installation.*

8) Once properly tighten, apply a torque seal mark.

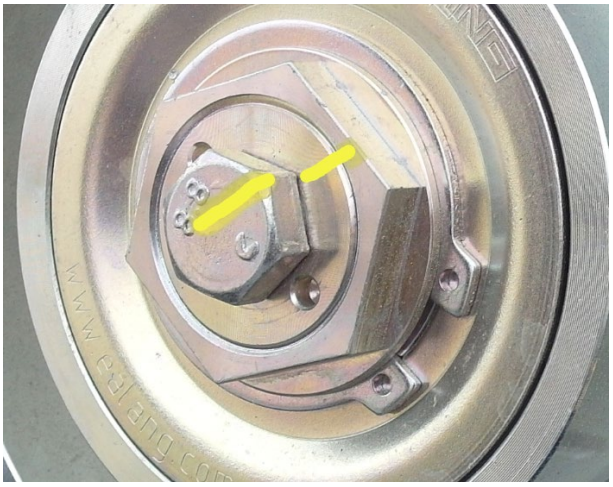

*During cleaning or other work on the compressor, the clutch must be covered to prevent the penetration of greasy liquids, grease or dirt particles in the working gap (see figure 2) of the clutch. No high pressure cleaning.*

***Working gap must be: 0.024 in - 0.035 in***
***0.60 mm - 0.90 mm***

# REINSTALLING THE BELTS

1. Reinstall the drive belts.

   ***A belt strand tension gage is needed***

   *On vehicles <u>not equipped</u> with an auxiliary alternator (i.e. 2 identical belts), belt tension should be within this range:*

   *90-100 lbs <u>new</u> belts (mean of 2 belt values)*
   *75-85 lbs <u>used</u> belts (mean of 2 belt values)*

   *On vehicles equipped with an auxiliary alternator (i.e. 2 different belts), belt tension should be within this range:*

   *A belt strand tension gage is needed*
   *150-160 lbs <u>new</u> belts (mean of 2 belt values)*
   *120-130 lbs <u>used</u> belts (mean of 2 belt values)*

   Apply loctite on bolt (**B**) and hand tighten. Adjust belt tension using bolt (**A**). Use the jam nut to prevent rotation of bolt (**A**). When proper tension is achieved, tighten bolt (**B**) to **43 lbf-ft**. (58 N-m).

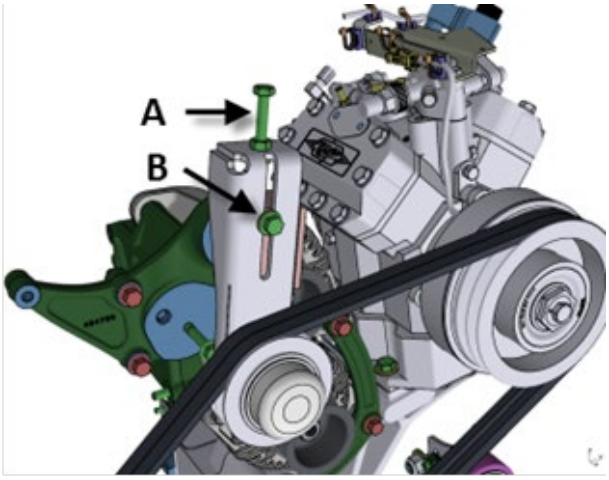

# TROUBLESHOOTING, POSSIBLE DEFECTS, ELIMINATION

| PROBLEM | CAUSE | SOLUTION |
|---|---|---|
| Clutch does not close any more, no current stream | Intermittent contact in the plug | Check plug |
| | Contact corroded | Clean contact |
| | Connection cable defect | Repair cable, replace coil |
| Clutch does not close in spite of current stream | Insufficient voltage supply | Check supply voltage |
| | Impurities in the working gap (foreign matters) | Disassemble clutch, remove foreign matters and assemble it again |
| Clutch slips when switched on (causes the destruction of the clutch by premature wear), | Insufficient voltage supply | Check power supply |
| | Friction surface polluted by small quantities of greasy/oily substances | Disassemble clutch, clean friction surfaces with alcohol and assemble it again. |
| | Heat penetration in the clutch by slipping V-belts thus grease penetration in the bearing or overheating of the clutch | Disassemble clutch. Clean friction surfaces or replace already damaged components. After reassembly of the clutch, tension V-belts correctly |
| | Incorrect distance between coil and rotor (coil not in line with the rotor), thus the switchable torque is reduced | Disassemble clutch, check cone for cleanness. Check the seat of the feather key, check the seat of the coil. |
| | Clutch worn, working gap too big (app. 1,2 mm), friction partner blue | Replace clutch or component |
| Clutch does not open immediately when switched off, this will cause a premature wear of the clutch), shrieking noise | Voltage supply not completely interrupted | Check circuit element for switching the coil ON/OFF and replace it if necessary |
| Clutch does not open any more, voltage supply is in order | Clutch worn and friction partners welded to each other on the friction surface | Replace clutch |
| Permanent grinding noise | Coil not correctly centered or not firmly screwed down | Check coil, screw it down, or replace it if damaged. Check clutch for consequential damages, eventually disassemble clutch, check bearing and friction surfaces, replace eventually damaged components. |
| | Compressor bearings defect, causes friction between coil and rotor. | Replace bearings. Check coil function. Replace it if damaged. If clutch slips, replace whole clutch due to friction damage. |

| | | |
|---|---|---|
| | Friction surface polluted by greasy or oily substances | Disassemble the clutch, replace bearing, if necessary, clean friction surfaces with alcohol and assemble them again. |
| | Blockade of the compressor. Clutch slips, both components blue due to friction heating. | Clutch destroyed, replace it. |
| Untrue run of the pulley, loud running noise. | Bearing damaged due to wear or incorrect seat of the feather key. | Check whether feather key and groove are flushing. If not, change clutch as the components will be permanently damaged, or disassemble the clutch and replace bearing. |

# SUPPLEMENT

## HOW TO INSTALL A NEW "CLIP-ON" UNLOADER COIL

1. Loosen the screw securing the connector to the coil and then unplug the connector (**A**). Keep the screw and the connector rubber gasket for later use.
2. Unscrew the aluminum cap and discard.
3. Remove the plastic capture nut and discard.
4. Remove the coil and discard
5. **Keep the O-ring** on the stem.

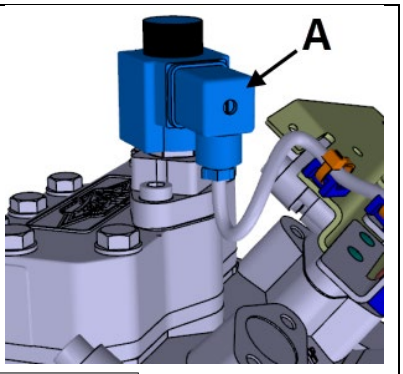


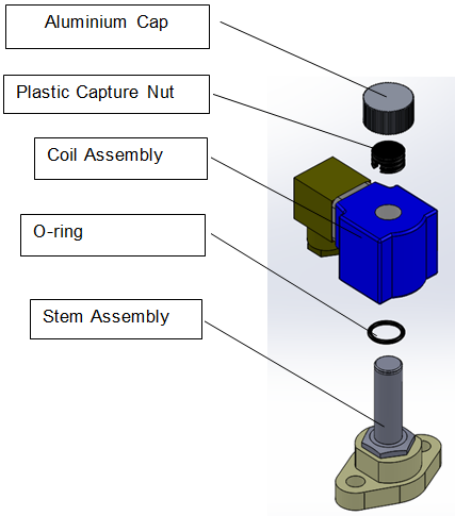


6. Install the new clip-on coil on the stem.
7. Slide the coil over the stem assembly with the O-ring at the base of the stem.

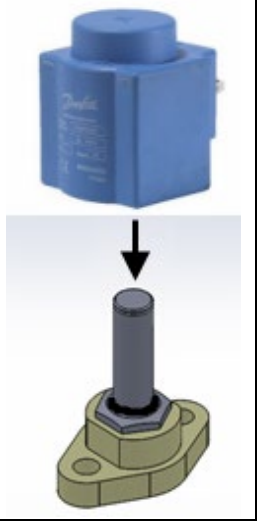

# PARTS / WASTE DISPOSAL

Discard according to applicable environmental regulations (Municipal/State[Prov.]/ Federal)

*Access all our Service Bulletins on http://techpub.prevostcar.com/en/*
*Or scan the QR-Code with your smart phone*
.

**Are you a vehicle owner?**
*E-mail us at **technicalpublications_prev@volvo.com** and type "ADD" in the subject to receive warranty bulletins applicable to your vehicle(s) by e-mail.*

# CONTENTS

SECTION CHANGE LOG....3

**1. TORQUE TABLES....4**

**2. AUDIO AND VIDEO SYSTEM DESCRIPTION....6**

2.1 TROUBLESHOOTING....9
2.2 HOW TO RECEIVE SERVICE FOR YOUR REI AUDIO AND VIDEO PRODUCTS....9
2.3 DASHBOARD RADIO....10
*2.3.1 Removal/Installation....10*
2.4 VSS-05 SOUND SELECTOR....10
*2.4.1 Removal/Installation....10*
2.5 400W DSP POWER AMPLIFIER....11
2.6 SPEAKERS....11
2.7 BOOM-TYPE MICROPHONE....11
*2.7.1 Removal....11*
*2.7.2 Installation....12*
2.8 HANDHELD PRIORITY MICROPHONE....12
2.9 WIRELESS MICROPHONE....12
2.10 DRIVER'S SPEAKERS....13
2.11 MONITOR REMOVAL....13
2.12 SCENIC VIEWING SYSTEM....13
2.13 ROOF ANTENNA INSTALLATION....13

**3. BACK-UP CAMERA AND MONITOR....14**

**4. HUB ODOMETER....16**

4.1 DESCRIPTION....16
*4.1.1 REMOVAL....16*
*4.1.2 INSTALLATION....17*
4.2 OPERATION....17

**5. ELECTRONIC DESTINATION SIGN (OPTIONAL)....17**

*5.1.1 DESCRIPTION....17*

**6. WINDSHIELD SUNSHADES....17**

6.1 END OF STROKE ADJUSTMENT....17
6.2 END OF STROKE ADJUSTMENT ON MOTORIZED SUNSHADES WITH CANTILEVER ARMS....18

**7. PASSENGER SUNSHADES....18**

7.1 PRELOAD ADJUSTMENT....19

**8. LAVATORY....19**

8.1 DESCRIPTION....19
8.2 MAINTENANCE....19
8.3 VENTILATION FAN....19
*8.3.1 Maintenance....20*
*8.3.2 Removal and Installation....20*
8.4 DOOR LOCK....20
8.5 LAVATORY LIGHT WITH MOTION SENSOR....20
*8.5.1 Removal and Installation....20*
*8.5.2 Dip Switch Settings....21*

8.6 EMERGENCY BUZZER ..... 21
8.7 FRESH WATER TANK ..... 21
*8.7.1 Fresh Water Tank Heater (Optional)* ..... *21*
*8.7.2 Fresh Water Tank Draining* ..... *21*
*8.7.3 Fresh Water Tank Filling* ..... *21*
8.8 LIQUID SOAP DISPENSER ..... 22
8.9 FLUSH PUSH-BUTTON ..... 23
*8.9.1 Pneumatic Timer Removal and Installation* ..... *23*
*8.9.2 Timer Adjustment* ..... *23*
8.10 FLUSH PUMP ..... 23
*8.10.1 Flush Pump Pressure Adjustment* ..... *23*
8.11 SUMP TANK ..... 23
*8.11.1 Sump Tank Draining* ..... *23*
*8.11.2 Sump Tank Filling* ..... *24*
8.12 CLEANING CABINET ..... 24

**9. AIR HORN VALVE ..... 24**

9.1 AIR HORN VALVE MAINTENANCE ..... 24

**10. WINDSHIELD WIPERS ..... 25**

10.1 WIPER ECU MODULE A21 DIAGNOSTIC GUIDE H3 SERIES ..... 25

**11. AUTOMATIC FIRE SUPPRESSION SYSTEM (AFSS) (OPTIONAL) ..... 29**

11.1 STARTING THE VEHICLE AFTER TRIGGERING OF A FIRE ALARM ..... 29
11.2 PERIODIC MAINTENANCE ..... 29

**12. TIRE PRESSURE MONITORING SYSTEM (TPMS SENSATA) ..... 30**

12.1 TMPS DIAGNOSTIC TROUBLESHOOTING CODES – SENSATA SYSTEM ..... 30

**13. ELECTRIC BRAKE CONTROL SYSTEM FOR TRAILER ..... 31**

13.1 A40 CONNECTOR ..... 31
13.2 7-BLADE RV/TRAILER CONNECTOR ..... 32
13.3 VECT ..... 33

**14. WHEELCHAIR LIFT CASSETTE INSTALLATION ..... 33**

**15. WHEELCHAIR LIFT CASSETTE DISMOUNTING ..... 35**

SECTION CHANGE LOG

| | DESCRIPTION | DATE |
|---|---|---|
| 1 | Headlight cleaning system removed | Oct. 2023 |
| 2 | Addition of Wiper ECU Module A21 – Diagnostic Guide | Jan. 2024 |
| 3 | Addition of TMPS diagnostic troubleshooting codes table | Jan. 2024 |
| 4 | | |
| 5 | | |
| 6 | | |

## 1. TORQUE TABLES

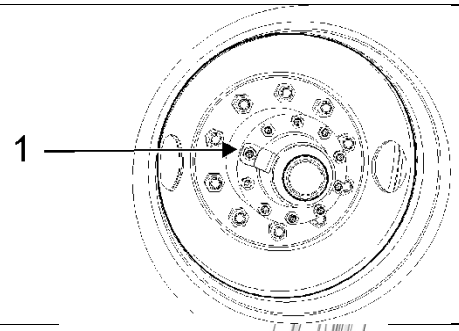


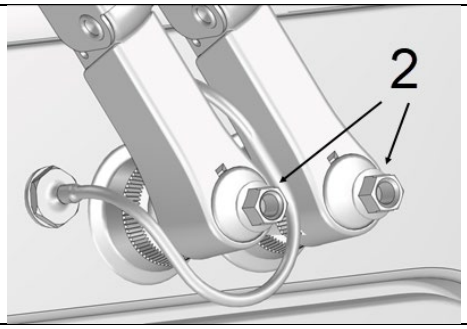


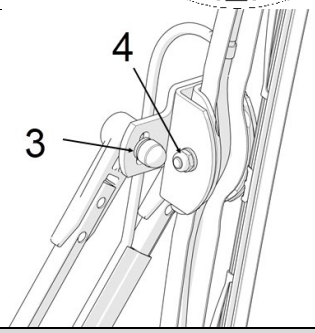


| MISCELLANEOUS | | |
|---|---|---|
| No | DESCRIPTION | TORQUE |
| 1 | Hub odometer mounting bolts | 110-165 lb-ft (149-224 Nm) |
| 2 | Wiper arm mounting nut | 26-33 lb-ft (35-45 Nm) |
| 3 | Wiper blade adjustment nut | 71-88 lb-in (8-10 Nm) |
| 4 | Wiper blade mounting nut | 71-88 lb-in (8-10 Nm) |

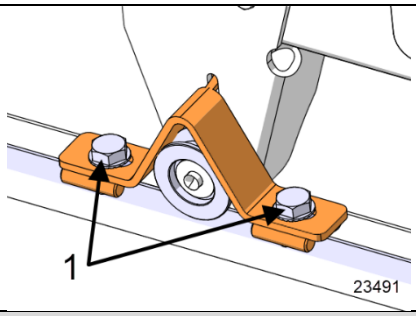


| WHEELCHAIR LIFT CASSETTE INSTALLATION | | |
|---|---|---|
| No | DESCRIPTION | TORQUE |
| 1 | WCL CASSETTE ANCHOR BOLTS | 55-65 lb-ft (75-88 Nm) |

## 2. AUDIO AND VIDEO SYSTEM DESCRIPTION

The rack mounted components are gathered on the audio-video panel which is located in the first driver's side overhead compartment (Figure 1). In addition to the 400 watts power amplifier, an E-HDMI (automotive grade) switch provides options for systems such as TV, DVD, customer provided media player, scenic view and back-up cameras, GPS navigation system and wireless microphones. Options for AM/FM radio, satellite radio, karaoke, and other's entertainments systems may also be featured.

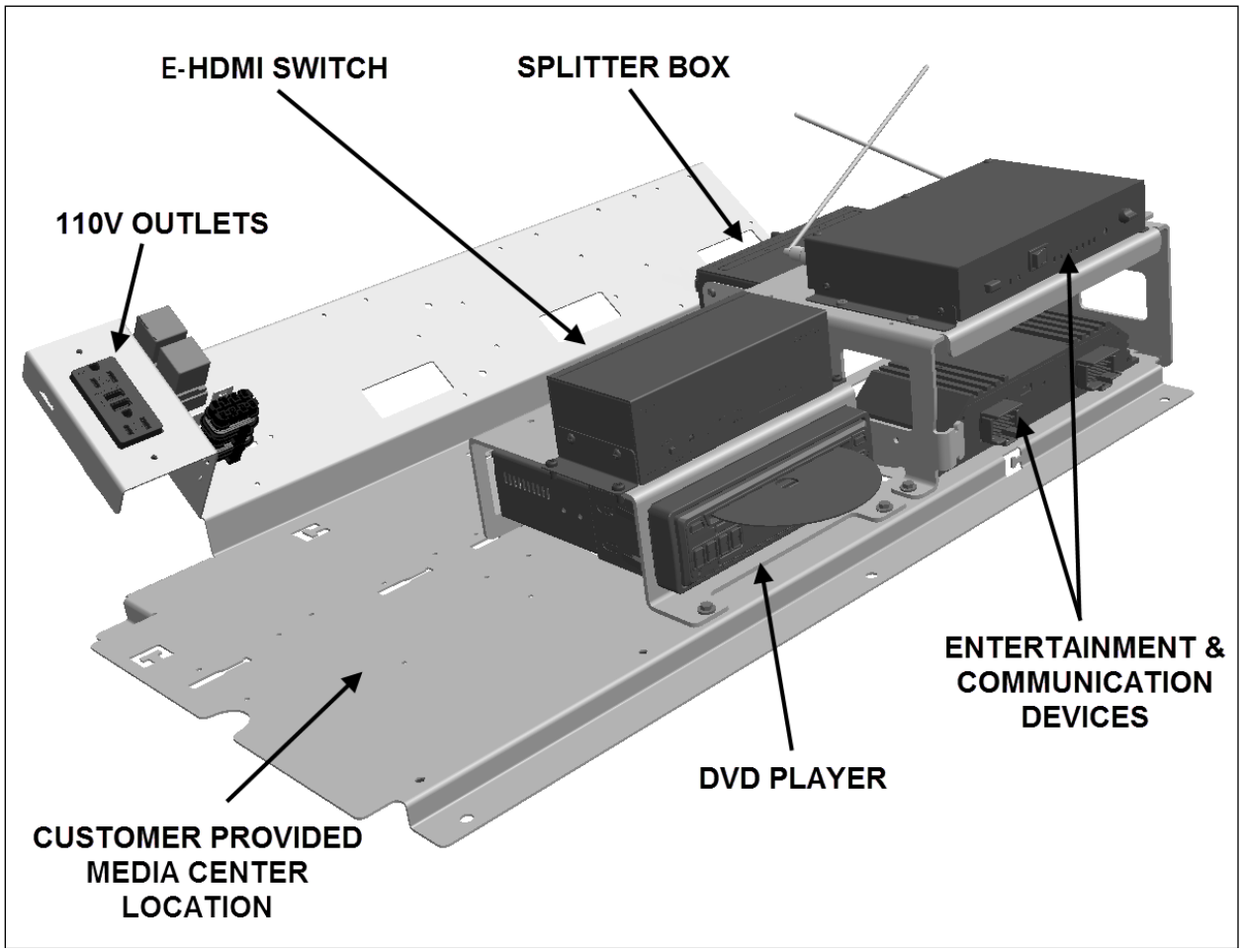


FIGURE 1: AUDIO-VIDEO PANEL IN OVERHEAD COMPARTMENT

A splitter box is also mounted on the audio/video panel and provides connection for four LCD screens. On some vehicles, a second splitter box mounted in the first curbside overhead compartment will allow the use of a total of six LCD screens.

Each passenger's overhead console mounted to the underside of the overhead compartments contains a 20-watt coaxial 10cm speaker. Powered by the amplifier, the speakers (24 in H3-41 or 28 in H3-45) are wired in stereo and arranged in a delta configuration.

A microphone outlet mounted in the driver's area is also provided as standard equipment.

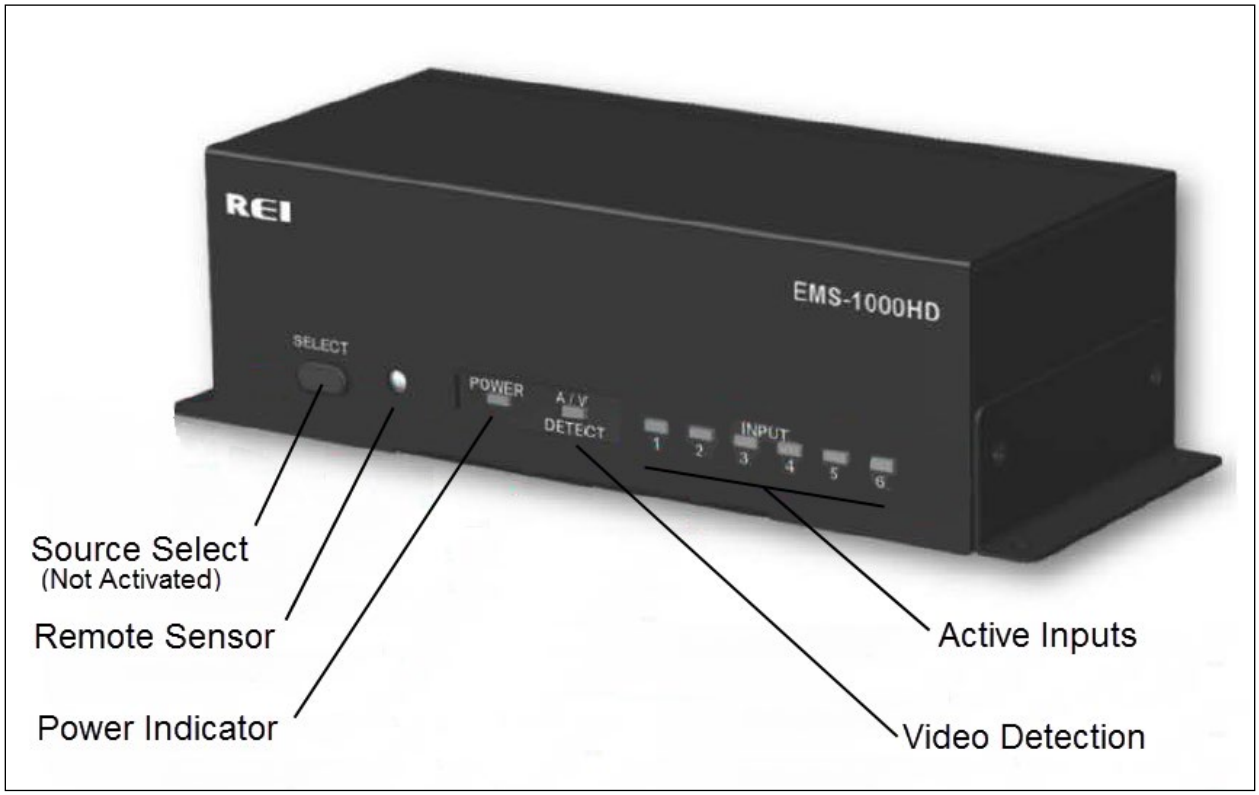


FIGURE 2: AUDIO-VIDEO CONTROLS AND INDICATORS ON THE FRONT FACE OF THE E-HDMI SWITCH

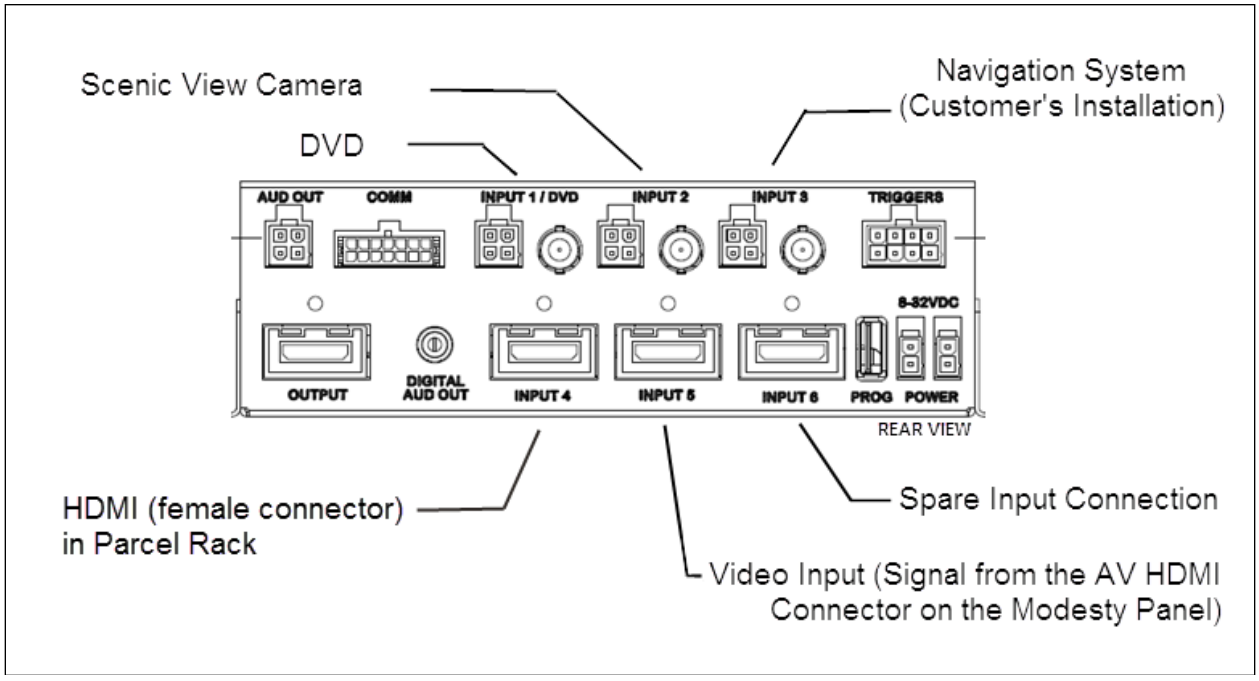


FIGURE 3: AUDIO-VIDEO CONNECTIONS AT THE BACK OF THE E-HDMI SWITCH

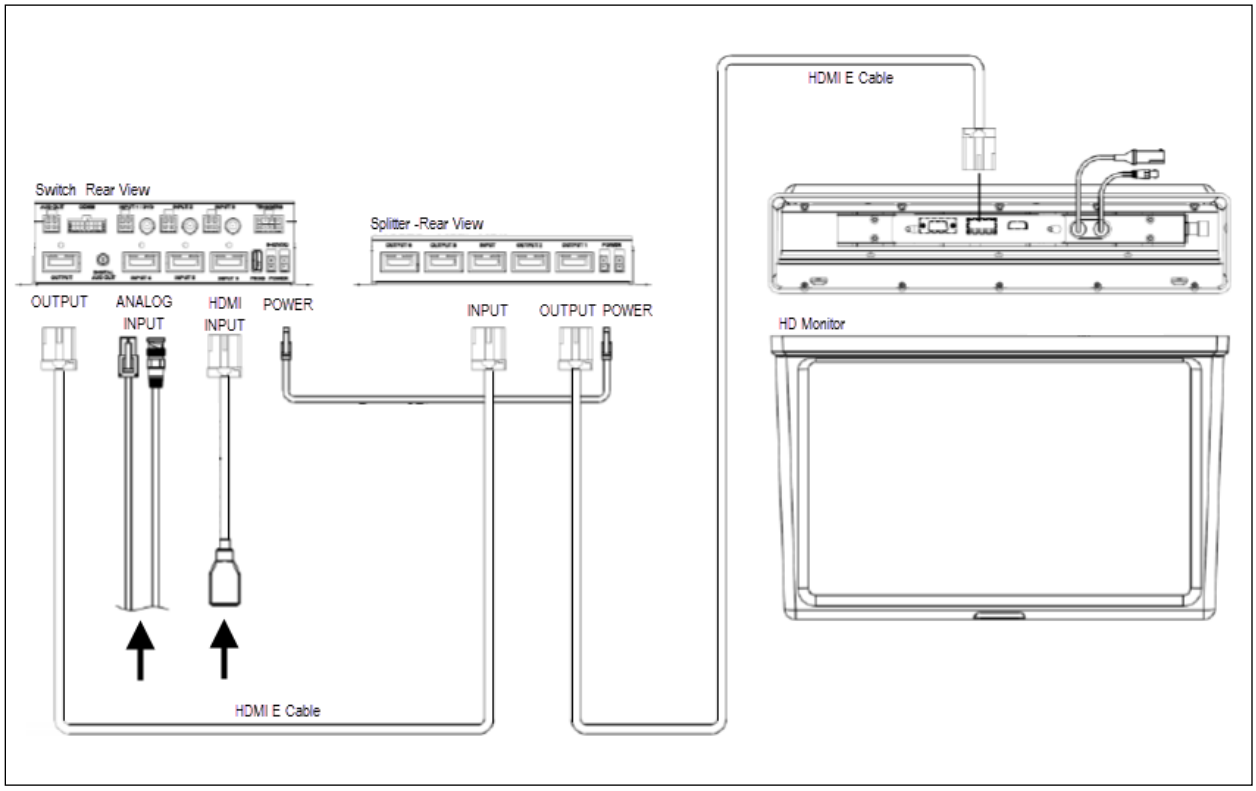


FIGURE 4: TYPICAL AUDIO-VIDEO CONNECTIONS USING FOUR OUTPUT SPLITTER BOX

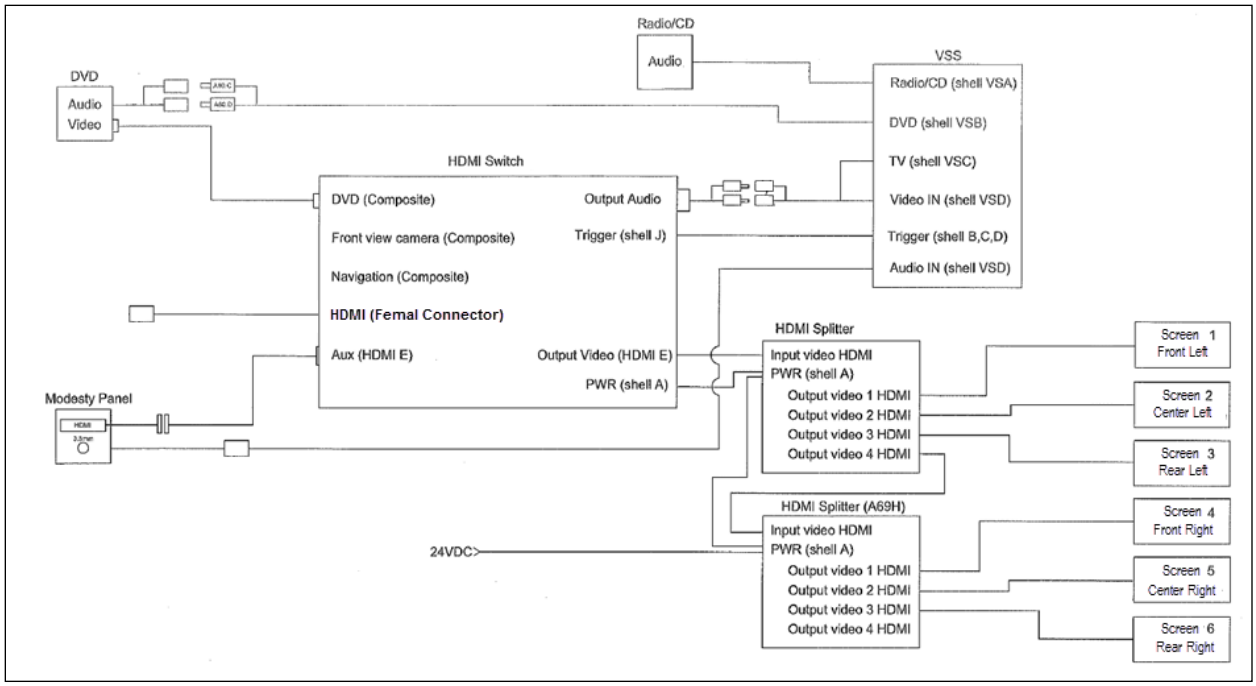


FIGURE 5: AUDIO-VIDEO CONNECTIONS USING TWO SPLITTER BOXES TO ALLOW THE USE OF SIX LCD MONITORS

## 2.1 TROUBLESHOOTING

| Symptom | Possible Causes / Solutions |
|---|---|
| No picture, no sound | Check for proper voltage supply and correct cable connections. Ensure that the desired input is selected. |
| No picture | Check whether AV cable is properly connected.<br>Check whether HDMI cables are properly connected.<br>Verify that HDMI source is connected to “INPUT” connector and devices to “OUTPUT”.<br>Verify power connection and voltage. |
| No sound | Check for proper cable connections. Verify that the source volume level is properly set. |
| Remote control not working | Check that remote control is pointed toward device sensor. Verify remote batteries. |

## 2.2 HOW TO RECEIVE SERVICE FOR YOUR REI AUDIO AND VIDEO PRODUCTS

For assistance in obtaining service for REI products call toll free 877-726-4617 (Continental United States and Canada) between the hours of 7:00 A.M. - 5:00 P.M. CST Monday thru Friday (excluding Holidays).

Prior to calling REI, please have the part number, serial number, VIN number and detailed description of the problem ready to provide to the REI service representative. After providing information to REI, customers will be issued a return authorization number. When the REI service representative provides the return authorization number, they will also give instructions for returning the item. Any discrepancies in following this procedure may cause delays in the process.

**24/7** Tech Support

**CALL 1-877-726-4617**

E-Mail to technicalsupport@radioeng.com

REI Authorized Repair Facilities

REI
6534 L Street
Omaha, Nebraska 68117

REI
1376 Bennett Drive, Unit 126
Longwood, Florida 32750

REI products that may be installed in your coach:

MONITOR, COLOR BACK-UP CAMERA
MONITOR, LCD 15.6”
MONITOR, CENTRAL LCD 15.6”
MONITOR, FLIP 19”
MONITOR, 16:9 CENTRAL LCD 19”
INDIVIDUAL ENTERTAINMENT SYSTEM
AMPLIFIER, 8-CHANNEL
DVD PLAYER
DVD REMOTE CONTROL
CAMERA, COLOR BACK-UP
CAMERA, COLOR PANORAMIC
MICROPHONE, 10” CB TYPE
MICROPHONE, WIRELESS
RECEIVER, WIRELESS MIC 16-CHANNEL
ENHANCED MEDIA SWITCH (E-HDMI)
E-HDMI SPLITTER BOX

## 2.3 DASHBOARD RADIO




FIGURE 6: DASHBOARD RADIO

| *NOTE* |
| --- |
| *Before attempting to solve an electrical problem on the sound system, refer to the wiring diagrams.* |

Refer to your vehicle Operator’s manual for the radio operating instructions.

### 2.3.1 Removal/Installation

To remove the radio from its location, proceed as follows:

1. Place the ignition switch in the ‘’OFF’’ position.
2. Remove the dashboard cover.
3. Unplug the connectors from the radio and unfasten back plate securing nuts/screws.
4. On the front side of the unit, insert the removal tool #20584494 in the holes found each side in order to separate the unit from the support.
5. From behind, push the unit through the front dashboard panel.
6. Installation of a new unit is the same as removal but in reverse order.

## 2.4 VSS-05 SOUND SELECTOR




FIGURE 7: VSS-05 SOUND SELECTOR

### 2.4.1 Removal/Installation

To remove the Sound Selector from its location, proceed as follows:

4. Place the ignition switch in the ‘’OFF’’ position.
5. Remove the dashboard cover.
6. Unplug the connectors from the VSS and unfasten back plate securing nuts/screws.
7. On the front side of the unit, insert the removal tool #20584494 in the holes found each side in order to separate the unit from the support.
8. From behind, push the unit through the front dashboard panel.
9. Installation of a new unit is the same as removal but in reverse order.

The operating instructions are included in the Operator’s Manual.

## 2.5 400W DSP POWER AMPLIFIER

This 400-watt, 8 channels digital amplifier brings an added dimension to your stereo equipment and increases the total output of the system.

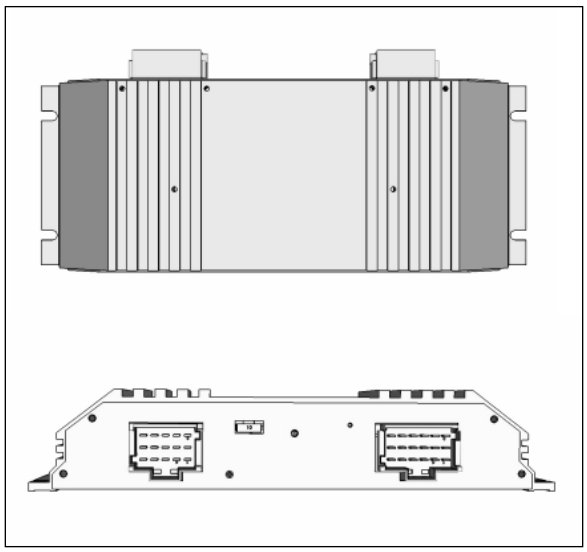

FIGURE 8:MULTICHANNEL 400W POWER AMPLIFIER

CONNECTOR 9-966140-2 PINOUT

| Terminal | Function | Terminal | Function |
|---|---|---|---|
| 1 | R-DOOR (-) | 9 | L-DASH (-) |
| 2 | R-DASH (+) | 10 | GROUND |
| 3 | R-DASH (-) | 11 | GROUND |
| 4 | R-DOOR (+) | 12 | GROUND |
| 5 | L-DOOR (+) | 13 | +24V |
| 6 | L-DOOR (-) | 14 | +24V |
| 7 | REMOTE | 15 | +24V |
| 8 | L-DASH (+) | 16 | |




CONNECTOR 9-966140-1 PINOUT

| Terminal | Function | Terminal | Function |
|---|---|---|---|
| 1 | R-BUNK (-) | 10 | INPUT-RR (+) |
| 2 | WOOFER (1) (-) | 11 | INPUT-RR (-) |
| 3 | WOOFER (1) (+) | 12 | |
| 4 | R-BUNK (+) | 13 | INPUT-LR (-) |
| 5 | L-BUNK (-) | 14 | INPUT-LR (+) |
| 6 | L-BUNK (+) | 15 | INPUT-LF (+) |
| 7 | | 16 | INPUT-RF (+) |
| 8 | WOOFER (2) (-) | 17 | INPUT-RF (-) |
| 9 | WOOFER (2) (+) | 18 | INPUT-LF (-) |

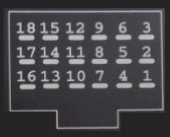


FIGURE 9: AMPLIFIER CONNECTORS PINOUT

## 2.6 SPEAKERS

Each passenger's overhead console mounted to the underside of the overhead compartments contains a 20-watt coaxial 10cm speaker. The speakers (24 in H3-41 or 28 in H3-45) in the passenger's section, wired in stereo and arranged in a delta configuration are powered by the amplifier.

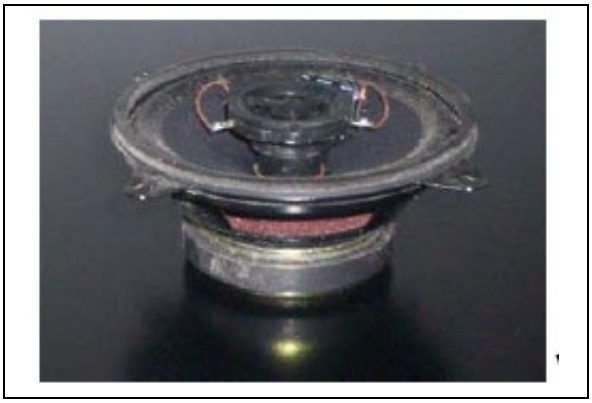

FIGURE 10: 10CM COAXIAL SPEAKER

The vehicle may be equipped with two additional Hi-Fi speakers in the driver's area, mounted one on each side. This arrangement provides the driver with clear stereo sound. Controls for the driver's audio are performed through the dashboard radio.

Two specially designed subwoofers are fixed under a passenger seat with anti-vibration supports.

## 2.7 BOOM-TYPE MICROPHONE

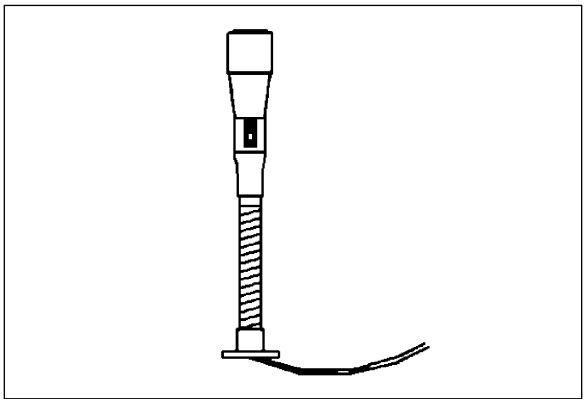

FIGURE 11: BOOM-TYPE MICROPHONE 23083

### 2.7.1 Removal

1. Place the ignition switch in the ''OFF'' position.
2. Remove the mounting screws at mounting flange.

3. Disconnect wiring.

### 2.7.2 Installation

1. Reconnect wiring.
2. Align mounting flange with holes and install screws.
3. Remove spacer block mounting screws.
4. Insert spacer block and install mounting screws.
5. Place the battery master switch in the ''ON'' position.

## 2.8 HANDHELD PRIORITY MICROPHONE

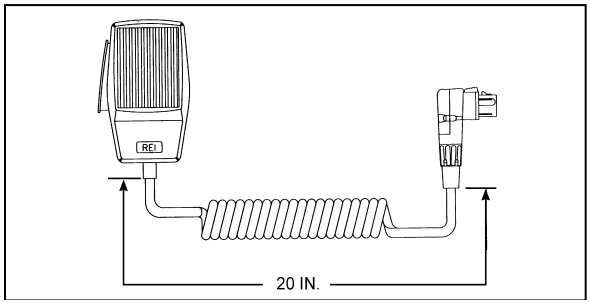


FIGURE 12: HANDHELD PRIORITY MICROPHONE 23216

## 2.9 WIRELESS MICROPHONE

The wireless microphone, receiver and charging cradle are custom designed units that allow for wireless communication from anywhere on the coach. The unit consists of a receiver mounted in the parcel area directly behind the driver, and a rechargeable hand-held microphone and charging unit. Instructions for proper use of the microphone are included in the *''REI Operating Manual''* which is provided in the technical publications box delivered with the vehicle.

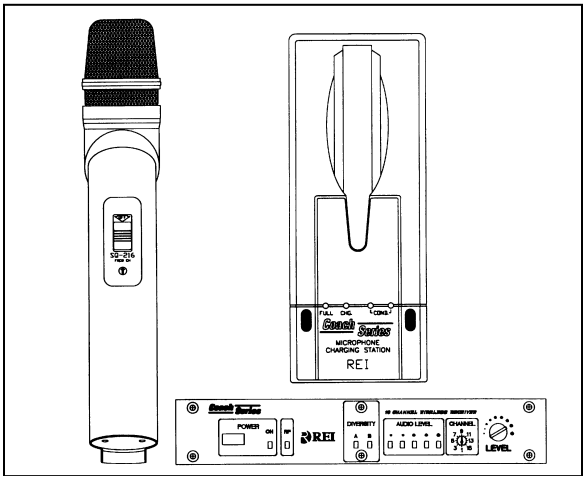


FIGURE 13: WIRELESS MICROPHONE

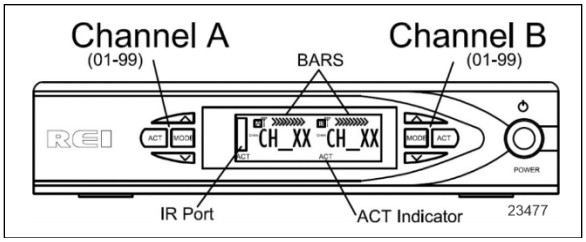


FIGURE 14: WIRELESS MIC RECEIVER

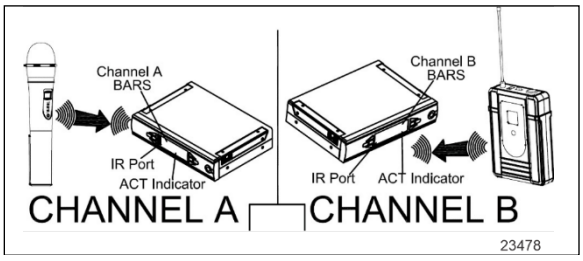


FIGURE 15: MIC DEVICES

Handheld mic always airs to channel A and belt pack mic always pairs to channel B.

To pair microphone to receiver:

- Press ACT button for appropriate channel. ACT indicator on receiver display will blink to show the receiver is searching for the device to be paired.
- Turn device on and face the IR ports towards the display on the receiver.
- When device has paired, there will be bars across the top edge of the receiver display for the appropriate channel.

## 2.10 DRIVER'S SPEAKERS

The driver's speakers are mounted one on each side. This arrangement provides the driver with clear stereo sound. Controls for the driver's audio allow selection between the radio and the auxiliary audio (independent of the passenger's speakers) or muting the speakers.

## 2.11 MONITOR REMOVAL

1. Place the ignition switch in the ''OFF'' position.
2. Unfasten the retaining screw located on the monitor R.H. side.
3. Slide the monitor to the right to release it from the mounting bracket.

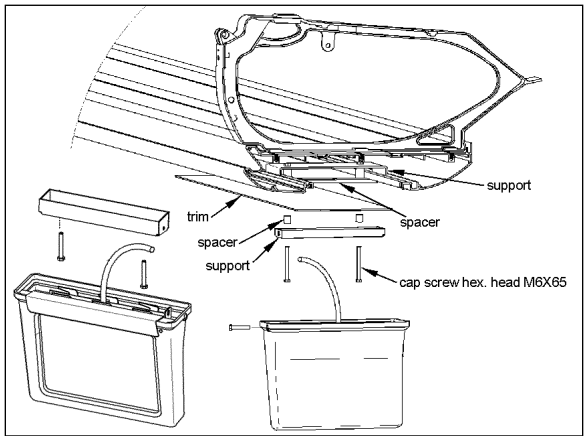


FIGURE 16: MONITOR MOUNTING 23221

## 2.12 SCENIC VIEWING SYSTEM

The scenic viewing system enables the passengers to view the road ahead of the vehicle. This system is composed of a camera, a dashboard mounted ON/OFF switch and the video switcher located on the audio-video panel

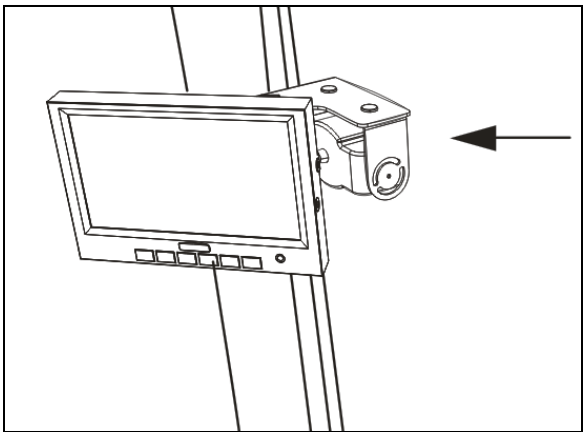

FIGURE 17: SCENIC VIEW CAMERA

## 2.13 ROOF ANTENNA INSTALLATION

1. Find the desire location and drill a hole according to specification.
2. To remove dirt and grease, wash hole edge with alcohol.
3. If so equipped, remove foam padding ring from antenna to free the metal surface (foam can produce air bulbs in new rubber seal).
4. With SIKA 205, wash the vehicle hole edge and the antenna base surface, wait at least two (2) minutes for chemical evaporation.
5. Apply new seal SIKA 221 on both, vehicle hole edge and antenna base.
6. Fix the antenna in place.
7. Remove excess seal and complete a finishing joint all around the antenna base.

## 3. BACK-UP CAMERA AND MONITOR

An optional back-up camera is available which provides the driver with visual assistance when backing-up. The camera is automatically activated when the transmission is put in reverse gear and the ignition switch is "ON".

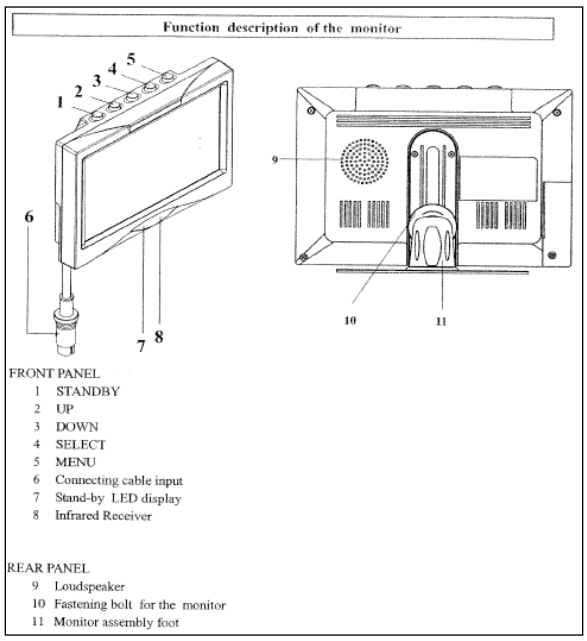


**BUTTON DESCRIPTION**

**1) STANDBY** On/Off switch

**2) UP** This key has 3 functions

- Increase of the volume during normal operation;
- Modification of the setting within a function e.g. contrast (after calling up the menu);
- By pressing this key when putting in the reverse gear, the distance markings move upwards;

**3) DOWN** This key has 3 functions

- Decrease of the volume during normal operation;
- Modification of the setting within a function e.g. contrast (after calling up the menu);
- By pressing this key when putting in the reverse gear, the distance markings move downwards;

**4) SELECT** This key has 3 functions

- Selection of the video sources (CA1→ CA2 → AV → CA1). Press less than 1.5 seconds;
- Selection of the functions e.g. picture setting (after calling up the menu);
- Deleting and calling OSD letters of title & time (press longer than 1.5 seconds) during normal operation;

**5) MENU** This key has 2 functions

- Activation of the dimmer function (press less than 1.5 seconds) during normal operation;
- Calling up the menu (press longer than 1.5 seconds, four menus can be called up). Press the key once again to call up the individual menus;
  a) PICTURE= Functions for the image setting;
  b) USER= Selection of the system function;
  c) TIME= Setting time and date;
  d) INSTALL= Setting the camera function (e.g. mirror function);

**6) BUSH FOR THE MONITOR CABLE OF THE CONNECTION BOX**

**7) STANDBY DISPLAY**

**8) INFRARED RECEIVER**

**MONITOR MENU DISPLAY**

The monitor (RV59 HD) is equipped with an On-Screen Display (OSD) function which displays date, camera, channel, mirror mode and distance markings. These functions can be selected on MENU. To calling up the menu, press longer than 1.5 seconds. Four menus can be called up. Press the key once again to call up the individual menus.

For calling up the menu PICTURE press the key **MENU** longer than 1.5 seconds. The menu PICTURE appears.

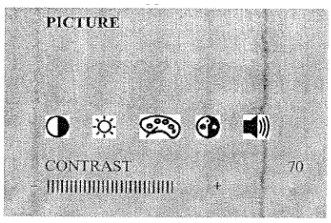


Select the function (e.g. contrast) by pressing the key **SELECT** repeatedly. The setting within the function can be modified with the keys **UP** and **DOWN**.

For calling up the menu USER press the key **MENU** once again. The menu USER appears. Select the function (e.g. SELECTION) by pressing the key **SELECT** repeatedly as necessary. The setting within the function can be modified with the keys **UP** and **DOWN**.

| **USER** | SETTINGS |
|---|---|
| LANGUE ENG | ENGLISH/GERMAN (ENG/DEUT) |
| SCREEN WIDE | NOR 4:3, picture format 4:3<br>WIDE, picture format 16:9<br>FULL, picture format 16:9 middle enlarge |
| TITLE ON | TITLE: CAMERA TITLE DISPLAY ON/OFF |
| TIME ON | TIME: TIME DISPLAY ON/OFF |

For calling up the menu TIME press the key **MENU** once again. The menu TIME appears. Select the function (e.g. DATE) by pressing the key **SELECT** repeatedly as necessary. The setting within the function can be modified with the keys **UP** and **DOWN**.

| **TIME** | OPERATION |
|---|---|
| TIME 08:25 | Hour-Month adjustable by UP BUTTON |
| DATE MAY01 | Minute/Date adjustable by DOWN BUTTON |
| YEAR 2005 | Year adjustable by UP/DOWN BUTTON |

For calling up the menu INSTALL press the key **MENU** once again. The menu TIME appears. Select the function (e.g. SELECTION) by pressing the key **SELECT** repeatedly as necessary. The setting within the function can be modified with the keys **UP** and **DOWN**.

| **INSTALL** | POSSIBLE SETTINGS: |
|---|---|
| REAR CAM1 | Selection of priority camera (CAM1 or CAM2) which is triggered by rear gear. |
| CAM1 MIR | Selection of real picture or mirrored picture for camera 1. |
| CAM2 NOR | Selection of real picture or mirrored picture for camera 2. |
| NOTE 1<br>The distance mark will appear on the picture of camera which set as MIR (mirrored). | |
| NOTE 2<br>Engaging the reverse gear, only distance mark will appear on the mirrored camera picture without any OSD. At the moment, no keys are available except UP/DOWN key for moving distance bar. | |

**BACK-UP CAMERA MODULE (Power box)**

The connection line consists of 6 branch lines as below:

| | |
|---|---|
| RED | Voltage supply 12-volt to 24-volt (max. 32-volt) |
| BLACK/BROWN | Earth cable |
| WHITE | Control wire for switching on the dimmer function (night operation) |
| YELLOW | Control wire for switching on the side camera. The connection is to be made at the INDICATOR |
| ORANGE | Control wire for switching on the reversing camera. The connection is to be made at the reversing light |

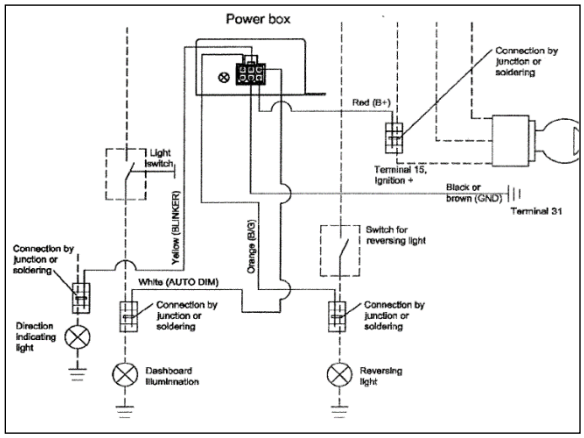


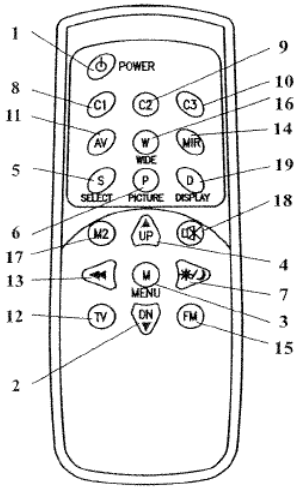


| No | Key | Description |
|---|---|---|
| 1 | STANDBY | On/Off switch |
| 2 | DOWN▼ | This key has 3 functions.<br>– Decrease of the volume during normal operation.<br>– Modification of the setting within a function e. g. brightness (after calling up the menu).<br>– By pressing this key when putting in the reverse gear the distance markings move downwards. |
| 3 | MENU | Calling up the menu on the screen. Three menus can be called up :<br>a: PICTURE = Functions for the image setting<br>b: USER = Selection of the system function<br>c: TIME = Setting time and date<br>d: INSTALL = Setting the camera function (e.g. mirror function) |
| 4 | UP ▲ | This key has 3 functions.<br>– Increase the volume during normal operation<br>– Modification of the settings within a function e. g. contrast (after calling up the menu)<br>– By pressing this key when putting in the reverse gear the distance markings move upwards. |
| 5 | SELECT | This key has 2 functions<br>Selection of the video sources (CA1→CA2→AV)<br>Selection of the functions e.g. picture setting (after calling up the menu) |
| 6 | PICTURER | Calls up the functions CONTRAST, BRIGHTNESS etc. directly for the picture setting. Carry out the setting with the key UP or DOWN. |
| 7 | DIMMER | Regulates the brightness to night operation temporarily |
| 8 | C1 | Selection of the camera 1 |
| 9 | C2 | Selection of the camera 2 |
| 10 | C3 | Selection of the camera 3 (camera input 3 is not available)) |
| 11 | AV | Selection of the video input (RCA) |
| 12 | TV | Not available |
| 13 | SEARCH | Not available |
| 14 | MIRROR | Reversing left and right of picture temporarily |
| 15 | FM | Not available |
| 16 | WIDE | Setting of the screen format<br>NOR/NOR: 4:3, picture format 4:3<br>WIDE/WEIT, picture format 16:9<br>FULL/BREIT, picture format 16:9 middle enlarged |
| 17 | MONITOR2 | Not available |
| 18 | MUTE | Switches off the tone temporarily |
| 19 | DISPLAY | This key has 2 functions<br>– Deleting or calling OSD letters of Tile & Time temporarily<br>– Leaving the menu |

# 4. HUB ODOMETER

## 4.1 DESCRIPTION

An optional wheel hub odometer (Figure 18) may have been installed on the R.H. side of the drive axle. It indicates the total distance in miles or kilometers covered by the coach since it has left the factory, including road testing.

### 4.1.1 REMOVAL

To remove the unit, remove the two lock nuts and washers securing it to the wheel hub, and pull the unit off the studs.

### 4.1.2 INSTALLATION

Place the hub odometer unit over the wheel hub studs. Replace the lock washers and nuts. Torque stud nuts.

**TORQUE:** 110-165 lb-ft (149-224 Nm)

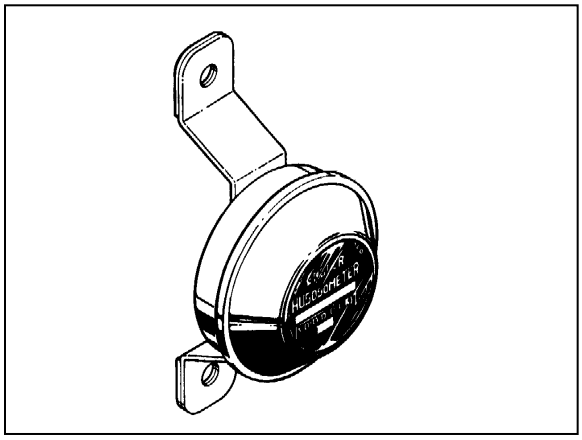

FIGURE 18: HUBODOMETER 23027

### 4.2 OPERATION

The hub odometer is calibrated for a specific wheel size (diameter). Wheel rotation causes a mechanism inside the hub odometer to record distance after a predetermined number of rotations. The unit should be serviced at a competent speedometer repair facility.

| *NOTE* |
| --- |
| *Do not use paint, solvent or thinner on hub odometer face or on plastic hubcaps. Do not weld on hub odometer.* |

## 5. ELECTRONIC DESTINATION SIGN (OPTIONAL)

### 5.1.1 DESCRIPTION

The destination sign is located at upper front of the vehicle.

To change the destination, depress the selecting switches until the desired destination appears in the LCD display.

| *NOTE* |
| --- |
| *LCD display may be located at the back of the destination sign (series 600) or on the vehicle modesty panel (430 series). Refer to the corresponding supplier's operating manual for more information regarding operation and maintenance of the destination sign.* |

| *NOTE* |
| --- |
| *A data file must be loaded into the destination sign control unit before operating the system on the road. Insert the supplied USB key in the display USB port to automatically start the process.* |




FIGURE 19: DESTINATION SIGN LCD DISPLAY (SERIES 600 SHOWN) 23123-1

## 6. WINDSHIELD SUNSHADES

Two electrically operated sunshades are installed in the driver's area at the top of the windshields.

Control buttons are located on the steering wheel and the dashboard to operate sunshades individually. Refer to Operator's Manual: "Controls and Instruments" chapter for more information.

| **CAUTION** |
| --- |
| *Pulling down manually on the sunshade may damage the mechanism.* |

### 6.1 END OF STROKE ADJUSTMENT

The sunshades end positions are factory pre-adjusted. If an adjustment is required, proceed as follows:

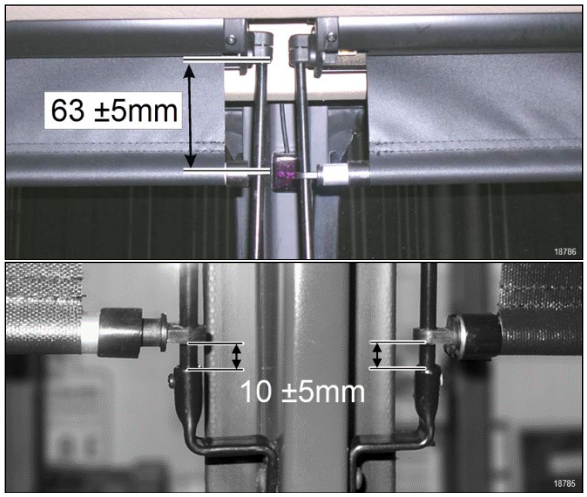


FIGURE 20: FACTORY ADJUSTMENT OF UPPER AND LOWER END POSITION

1. Place the ignition key to the ON position.
2. Move sunshade to within 10mm of the upper or lower end position.
3. On the sunshade roller end, there are two end of course setting buttons.
4. *White* button is for setting the *upper* end of course, *black* button is for *lower* end of course.

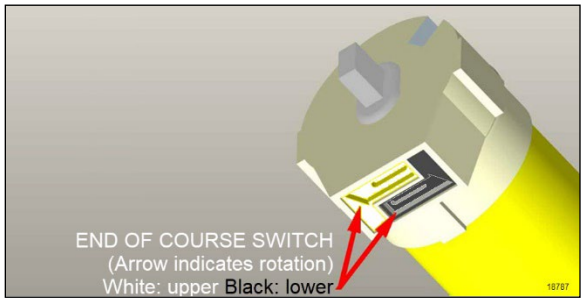


FIGURE 21: END OF COURSE SETTING SWITCHES

5. Insert a small screwdriver and depress the corresponding button. Release when you hear a click.
6. Use the sunshade dash button to adjust to the desired position by small pulses. The dash buttons provide a finer control than the steering wheel button.

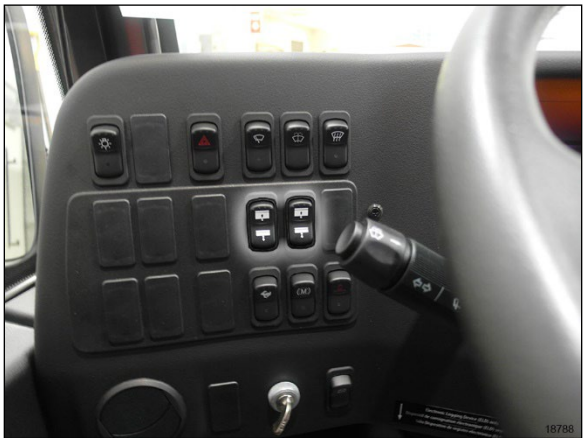

FIGURE 22: DASH SUNSHADE CONTROL BUTTONS

7. When satisfied with the position, depress the end of course button on the sunshade. With a screwdriver. Release when you hear a click (Figure 21)
8. Press twice on the control button to move the sunshade to the other end of stroke position.
9. Proceed to fine adjustment of the other position by repeating steps above.

### 6.2 END OF STROKE ADJUSTMENT ON MOTORIZED SUNSHADES WITH CANTILEVER ARMS

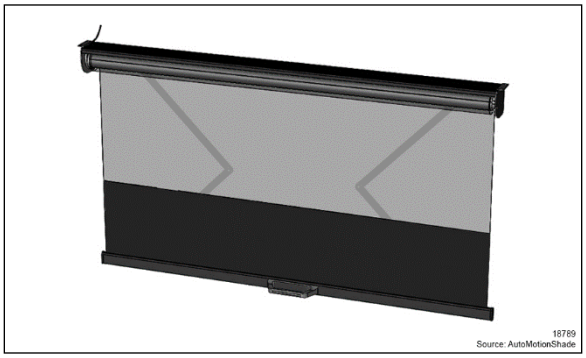

FIGURE 23: MOTORIZED SCISSOR TYPE SUNSHADE

Refer to AutoMotionShade quick reference guide provided on Prevost Technical Publications web site to adjust the motor limits.

## 7. PASSENGER SUNSHADES

Manually operated passenger sunshades are factory installed on some vehicles. The sun-shades are pulled down and can be locked in the window side moldings at half or full close position.

To release, simply disengage the sunshade from the moldings and release. Spring tension will pull back the sunshade to the full open position.

Correct spring tension is set at the factory and should not need further adjustment.

However, if for any reason a sunshade has to be removed from the vehicle, preloading of the recoil mechanism will be required before re-installation to ensure that the sunshade returns to the full open position when released.

**CAUTION**

*A special tool is required to remove the sunshade from the window support. Failure to use the special tool will result in permanent damage to the sunshade and/or window support.*

*The special tool can be ordered from your Prevost part center under part # 685594*

### 7.1 PRELOAD ADJUSTMENT

Using the chart below, preload the sunshade mechanism before installing the sunshade in the window support.

*NOTE*

*When installed, lower the sunshade 6po (15cm) and release. The sunshade should retract freely to the full open position. Re-adjust preload as needed.*

| Sunshade Type | Req. Preload |
|---|---|
| Std Sunshade | 10 turns |
| Rear Sunshade | 10 turns |
| Small Rear Sunshade | 8 turns |
| Large WCL Sunshade | 12 turns |
| Small Trapezoidal Sunshade | 8 turns |

## 8. LAVATORY

### 8.1 DESCRIPTION

The lavatory is located in the rear R.H. corner of the coach. It is equipped with a chemical flush toilet, bathroom tissue dispenser, washbasin, towel dispenser, waste container, mirror and a cleaning cabinet. A liquid soap dispenser and moist towel dispenser are optional.

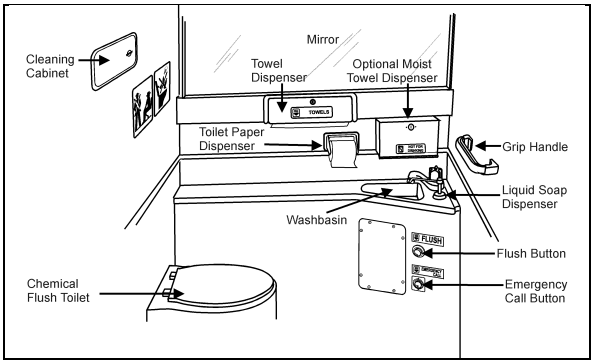


FIGURE 24: LAVATORY

Locking the lavatory door from the inside will illuminate a fluorescent light in the lavatory and two outside signs to indicate occupation. One sign is located on the outer wall of the lavatory and another sign is located over the windshield. An indicator light on the dashboard will illuminate to inform the driver when the lavatory is occupied. A night-light is permanently lit in the lavatory when the ignition switch is in the ON position.

### 8.2 MAINTENANCE

The servicing procedure for the lavatory is described in the *"Operator's Manual"* included in the technical publications box delivered with the vehicle.

### 8.3 VENTILATION FAN

The lavatory ventilation fan, mounted in engine compartment over the oil reserve tank (Figure 25), serves two purposes. It exhausts objectionable odors and provides a constant air circulation in the lavatory compartment by heating or cooling the lavatory with the vehicle ambient air. Air flows in the lavatory compartment through a vent grill located in the upper section of the lavatory door and exhausts through a grill located next to the toilet.

| *NOTE* |
| --- |
| *This fan runs constantly when the ignition switch located on the dashboard is in the "ON" position.* |

### 8.3.1 Maintenance

The frequency of preventive maintenance should be determined according to vehicle mileage and operating conditions. However, it is recommended to check this item every 50,000 miles (80 000 km) or once a year, whichever comes first.

Remove fan and motor assembly. Check for fan housing wheel and motor free operation. When defective motor occurs, new motor must be installed.

### 8.3.2 Removal and Installation

1. With the engine compartment rear door opened, remove hose clamp securing duct to ventilation fan inlet, and disconnect duct.
2. Disconnect the ventilation motor wiring connector.
3. Remove the two bolts retaining the ventilation fan housing support to the square tubing. Remove the ventilation fan assembly from its location.
4. The unit can now be disassembled and motor replaced.
5. Reverse previous steps to reinstall ventilation fan assembly on vehicle.

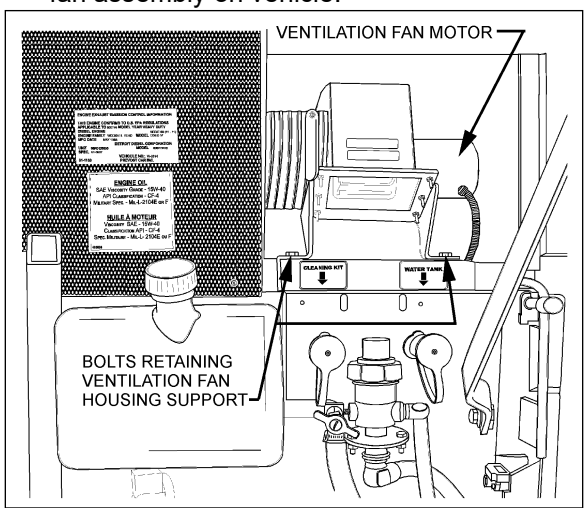


FIGURE 25: VENTILATION FAN INSTALLATION

## 8.4 DOOR LOCK

Lavatory door lock has inside and outside handles, as well as an inside latch to lock door from inside the compartment. If the lock fails to release, the door can be opened from the outside using a special key which is supplied to the driver. Lock assembly can be removed from the door, and then readily disassembled and parts replaced, if necessary. A thin coat of lubricant on all moving parts will ensure trouble-free operation.

## 8.5 LAVATORY LIGHT WITH MOTION SENSOR

The lavatory light, when dimmed, serves as a night-light and is illuminated as soon as the ignition switch is set to the “ON” position. A motion sensor will activate full light intensity whenever motion is detected in the lavatory compartment. The motion sensor will dim the light after a delay of 8 seconds when no additional motion is detected.

| *NOTE* |
| --- |
| *The lavatory light motion sensor has a warm-up period of approximately 2 minutes after the ignition switch is set to the “ON”. During that warm-up period, the motion sensor will not detect motion and will not activate the lavatory light to full intensity.* |

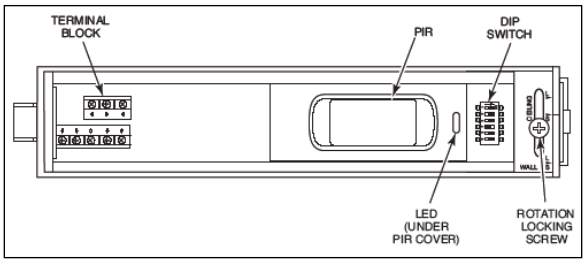


FIGURE 26: LAVATORY LIGHT MOTION SENSOR

### 8.5.1 Removal and Installation

1. Open the sensor housing by pressing on the latch with a screwdriver. The latch is located on the side of the sensor nearest the lens. Pull the cover up away from the sensor’s base.

2. Loosen rotation locking screw two (2) turns (do not remove). Then, remove PCB assembly from the back plate of the sensor.
3. Insert the wiring into one of the wire channels on the sensor's back plate.
4. Securely affix the sensor's back plate to the wall using #6X3/4'' screws.
5. Reinstall the PCB assembly and then, tighten rotation locking screw.

8.5.2 Dip Switch Settings

Adjust DIP switches as follows:
1=off 2=off 3=off
4=on 5=off 6=off

## 8.6 EMERGENCY BUZZER

The lavatory emergency buzzer is mounted on the alarm junction box in the front service compartment and sounds when the emergency call push-button switch in the lavatory compartment is activated. For specific wiring information, refer to wiring diagrams. To remove the emergency call push-button switch, proceed as follows:

1. Remove both Phillips-head screws retaining pushbutton switch plate to wall.
2. Remove steel plate located on L.H. side of pushbutton switch.
3. Remove switch through this opening, taking care to disconnect electric wires.

## 8.7 FRESH WATER TANK

The fresh water tank located at rear of lavatory wall (over cleaning cabinet), supplies water to the washbasin by gravity. Two tubes are connected in the upper section of tank (Figure 29). One serves as overflow as well as vent tube and runs along the wall to the underside of the lavatory close to the engine air filter housing, while the other tube is connected to the fresh water fill valve which is mounted besides the engine oil reserve tank.

A third tube connected in the lower section of fresh water tank is provided with a T-connector and allows fresh water to flow to the washbasin faucet and to the low temperature water safety valve for automatic or manual draining. An access panel, located at rear of last R.H. side row of seats and secured in place using 6 Phillips-head screws, allow access to the cleaning cabinet and fresh water tank tubing, fresh water tank heater and different wiring connectors.

8.7.1 Fresh Water Tank Heater (Optional)

75 watts, 110 volts AC immersion-type water heater may have been installed in the bottom of the fresh water tank. The heated portion of element must be immersed at all times to ensure proper heater life. The 110-120 volts in-station connector mounted on the engine compartment rear door provides the water heater power source.

8.7.2 Fresh Water Tank Draining

The fresh water tank can be drained by simply opening the fresh water drain cock (Figure 29). Don't forget to close cock when draining is done.

**CAUTION**

*If fresh water tank heater is inoperative or not installed on your vehicle, water should be drained from reservoir under cold weather conditions since it might freeze and damage both reservoir and connecting links.*

8.7.3 Fresh Water Tank Filling

Plug the fresh water supply hose to the fresh water tank fill connection (Figure 29); fill the tank until the overflow tube leaks, signaling that tank is full.

**WARNING**

*Never put antifreeze in fresh water tank; antifreeze is toxic.*

**WARNING**

*If tank has not been drained for an extended period of time, draining and filling operations must be repeated three (3) times in order to clean tank and eliminate contaminated water.*

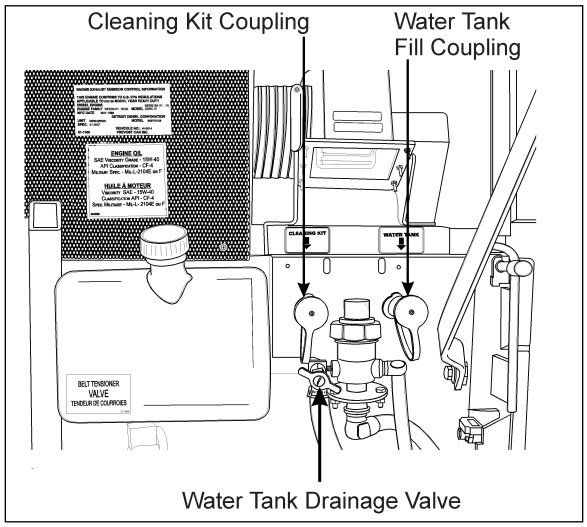


FIGURE 27: FRESH WATER TANK SERVICE VALVES

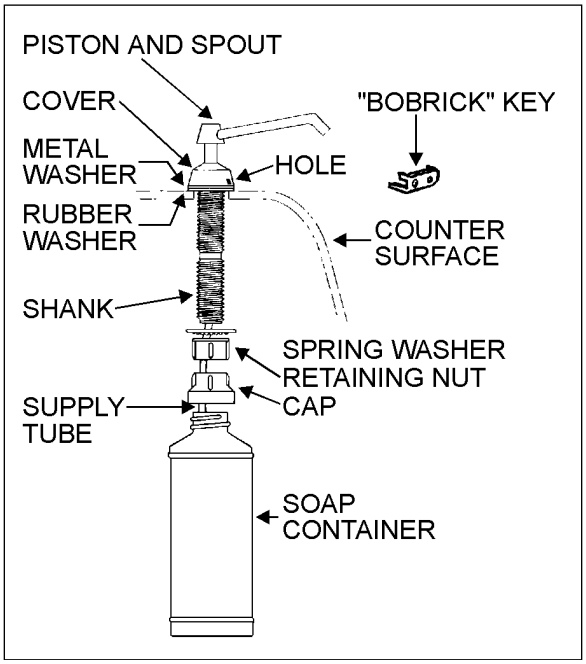


FIGURE 28: LIQUID SOAP DISPENSER 23039

## 8.8 LIQUID SOAP DISPENSER

A liquid soap dispenser may have been installed as optional equipment. To refill dispenser, proceed as follows:

1. Turn cover slightly clockwise until it stops.
2. Insert projection at end of *"BOBRICK"* key into rectangular hole in cover (Figure 28). Push straight in. While holding *"BOBRICK"* key in, turn cover counterclockwise about 1/8 turn.

**CAUTION**

*Do not use "BOBRICK" key to turn cover.*

3. Lift out piston and spout, cover and supply tube.
4. Fill dispenser with soap. This model can dispense vegetable oil soaps, synthetic detergents, and lotion soaps.

**CAUTION**

*Never use abrasive cleaners.*

5. Replace supply tube, piston, and spout mechanism reversing the steps above.
6. Secure the cover by turning clockwise until lock snaps into position.

*NOTE*

*The dispenser requires priming when extremely viscous lotion soaps are used. Remove piston and spout, cover and supply tube assembly. Pump water into assembly, then replace into dispenser.*

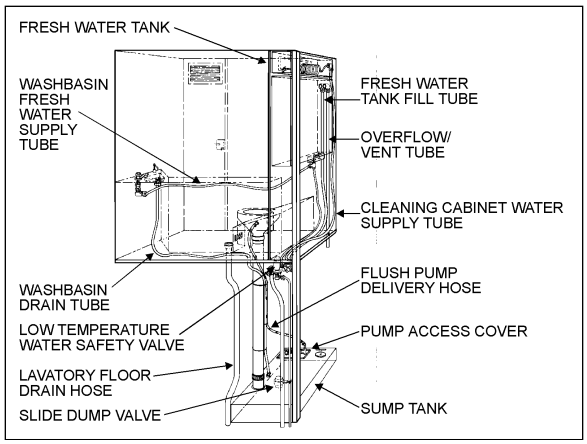


FIGURE 29: FUNCTIONING OF LAVATORY 23038

## 8.9 FLUSH PUSH-BUTTON

The green flush push-button is located near the toilet. Press on push-button to actuate a pneumatic timer located on the other side of wall. This timer allows an electric current flow during a preset time to a pump into the sump tank.

### 8.9.1 Pneumatic Timer Removal and Installation

1. Unscrew and remove the flush push-button locking ring.
2. Remove steel plate located on L.H. side of pushbutton switch.
3. Remove pneumatic timer through this opening, taking care to disconnect electric wires.

| *NOTE* |
| --- |
| *Care must be taken to avoid losing the spacers installed on the mounting sleeve.* |

4. Reverse the above procedure to reinstall timer. Tighten lock nut:

### 8.9.2 Timer Adjustment

Timer can be adjusted from 0.2 second to 3 minutes by turning the time adjustment screw clockwise to increase time, and counterclockwise to decrease time. To gain access to the time adjustment screw, repeat steps 1, 2 and 3 in the previous paragraph.

## 8.10 FLUSH PUMP

The submersible-type flush pump is mounted inside an enclosure in the sump tank (Figure 30). The enclosure is provided with a screened side which, serves as a strainer to prevent solid matters from entering the pump.

The pump requires no periodic maintenance other than cleaning of the strainer side using a water jet introduced through the circular cap opening, once the sump tank is completely drained. The pump can run dry periodically without damage. However, for maximum seal life, the run dry periods should be kept to a minimum.

| **CAUTION** |
| --- |
| *If vehicle is stored for an extended period of time, make sure to clean the strainer as solid matter will tend to pack, and will necessitate replacement of strainer.* |

### 8.10.1 Flush Pump Pressure Adjustment

The flush pump is provided with a manually-adjustable control valve mounted on the flush pump enclosure cover and serves to limit the flush pump output pressure. To adjust, ask an assistant to activate the flush pushbutton and check the liquid projection while you manually adjust the control valve

## 8.11 SUMP TANK

### 8.11.1 Sump Tank Draining

To drain sump tank, unscrew cap a few turns then turn drain valve handle CCW. Flush tank and pump cage with clean water. Close drain valve by turning handle CW.

| **CAUTION** |
| --- |
| *The lavatory should be serviced by maintenance personnel after emergency draining.* |

*Lavatory tanks should be serviced only at suitably equipped stations.*

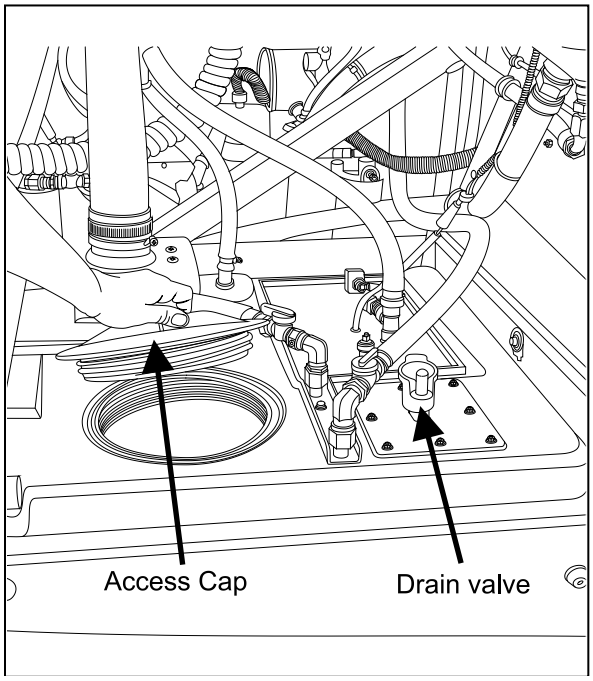


FIGURE 30: SUMP TANK 23294

8.11.2 Sump Tank Filling

Remove cap on sump tank. Fill Tank with 2 gallons (9 liters) of antifreeze and two gallons of water.

**CAUTION**

*Do not overfill sump tank.*

*NOTE*

*The antifreeze solution in the sump tank will be diluted by fresh water coming from the lavatory sink. Regular maintenance of the sump tank is required to prevent freezing.*

8.12 CLEANING CABINET

A coiled hose located in the cleaning cabinet above the toilet can be used during lavatory cleaning. To use, connect a fresh water supply to the "Hansen" quick-release coupling, identified as "Cleaning Kit", located besides the engine oil reserve tank (Figure 27). To prevent freezing during cold weather, drain the hose after every use. To drain the hose, uncoil and open the nozzle near the lavatory floor drain. Have an assistant push on the spring ball of the quick-release coupling to allow air into the system.

## 9. AIR HORN VALVE

The air horn valve is located in the front service compartment and the air horn valve button is on the steering wheel center.

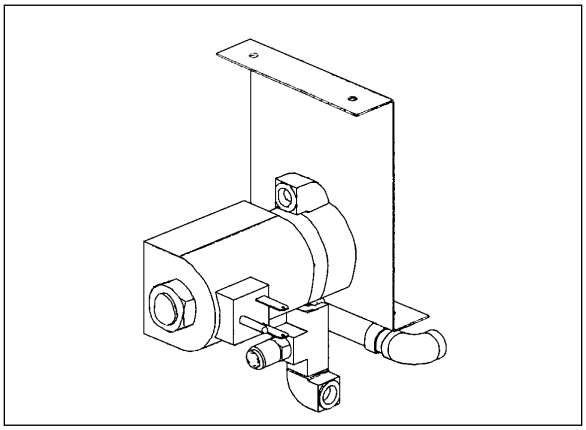

FIGURE 31: AIR HORN VALVE 23230

9.1 AIR HORN VALVE MAINTENANCE

When needed, the air horn valve can be serviced or replaced using the following procedure:

1. Unplug the cable connector;
2. Disconnect the air tubes;
3. Loosen the retaining bolts;
5. Service or replace the air horn valve;
6. Reinstall by reversing procedure.

## 10. WINDSHIELD WIPERS

Refer to Maintenance Information MI23-12 WIPER DRIVE MOTOR, LINKAGE AND PIVOT REPLACEMENT annexed after section 23B.

### 10.1 WIPER ECU MODULE A21 DIAGNOSTIC GUIDE H3 SERIES

**WIPER ECU MODULE A21 (WWS2) DIAGNOSTIC GUIDE H3 SERIES**

| Function in progress | No | Failure | Effects of failure on part/syst and driver | Fallback | Diagnostics |
|---|---|---|---|---|---|
| Wiper LOW (Normal), Intermittent and Single wipe | 1.1 | Wiper stalk-arm component failure (w/ error detection - Wiper Stalk Status =5, 6 or 7) occurs when the wiper is Active | No loss of operation - wiper Low mode is forced Active until key switch cycle | Force wiper Low | |
| | 1.2 | J1939 (D_BUS) between IC and MODULE A21 failure | No loss of operation - MODULE A21 shall detect J1939 (D_BUS) failure and then run on redundant functionality. Wiper Low shall be forced using ''I_Speed-Low'' digital input. | Uses redundant Digital Inputs. | |
| | 1.3 | FMI 3 or 4 is detected on digital input ‘'I_SpeedLow'' | No loss of operation - primary function on J1939 (D_BUS) | Continues to use primary J1939 (D_BUS) | MODULE A21 sends DM1, SPN 520711, No Lamp, FMI 12 |
| | 1.4 | MODULE A21 component failure (Inoperable) | No wiper operation | | |
| | 1.5 | Missing 24V Ignition input to MODULE A21 | No wiper operation - MODULE A21 does not wake up | | |
| | 1.6 | M1 motor error is detected: FMI3 -Voltage above normal or shorted high or FMI5-Current below normal or open circuit | No wiper Low operation – MODULE A21 will retry recovery at each second<br><br>*M2 motor remains operational | | MODULE A21 sends DM1, SPN 520711, Amber Lamp, FMI 3 or 5 failure mode detected |
| | 1.6.1 | M1 motor error is detected: FMI6-Current above normal or grounded circuit | No wiper Low operation – MODULE A21 will retry recovery at each second for a limited number of shorts. After more than 5 HW over currents trips, motor is disabled until the next ignition cycle.<br><br>*M2 motor remains operational. | | MODULE A21 sends DM1, SPN 520711, Amber Lamp, FMI4 or 6 depending of failure mode detected |
| | 1.7 | M2 motor error is detected: FMI3 -Voltage above normal or shorted high or FMI5-Current below normal or open circuit | No wiper Low operation – MODULE A21 will retry recovery at each second<br><br>*M1 motor remains operational | | MODULE A21 sends DM1, SPN 520711, Amber Lamp, FMI 3 or 5 failure mode detected |

| | | | | | |
|---|---|---|---|---|---|
| | 1.7.1 | M1 motor error is detected: FMI6-Current above normal or grounded circuit | No wiper Low operation – MODULE A21 will retry recovery at each second for a limited number of shorts. After more than 5 HW over currents trips, motor is disabled until the next ignition cycle.<br><br>*M1 motor remains operational | | MODULE A21 sends DM1, SPN 520711, Amber Lamp, FMI4 or 6 depending of failure mode detected |
| | 1.8 | 'I_M1HomeSensor'' signal failure (no low to high transition on the wiper status input for 5 seconds) | Synchronization between both motors shall be cancelled. Motor 1 shall be forced to wipe continuously on low speed. (Prevost specific) | Motor 1 shall wipe continuously on low speed. (Prevost specific) | MODULE A21 sends DM1, SPN 520713, Amber Lamp, FMI 12 |
| | 1.9 | 'I_M2HomeSensor'' signal failure (no low to high transition on the wiper status input for 5 seconds) | Synchronization between both motors shall be cancelled. Motor 2 shall force to wipe continuously on low speed. (Prevost specific) | Motor 2 shall wipe continuously on low speed. (Prevost specific) | MODULE A21 sends DM1, SPN 520713, Amber Lamp, FMI 12 |
| **Wiper HIGH** | 2.1 | Wiper stalk-arm component failure (with error detection -Wiper Stalk Status = 5,6 or 7) occurs when the wiper is Active | No loss of operation - wiper High (Fast) stays Active until key switch cycle | Continues wiper High | |
| | 2.2 | J1939 (D_BUS) between IC and MODULE A21 failure | No loss of operation - MODULE A21 shall detect J1939 failure then run on redundant functionality. Wiper High (Fast) shall be forced using ''I_SpeedHigh'' digital input. | Uses redundant Digital Inputs. | |
| | 2.3 | FMI 3 or 4 is detected on digital input ‘'I_SpeedHigh'' | No loss of operation - primary function on J1939 (D_BUS) | Continues to use primary J1939 (D_BUS) | MODULE A21 sends DM1, SPN 520711, No Lamp, FMI 12 |
| | 2.4 | MODULE A21 component failure (Inoperable) | No wiper operation | | |
| | 2.5 | Missing 24V Ignition input to MODULE A21 | No wiper operation - MODULE A21 does not wake up | | |
| | 2.6 | M1 motor error is detected:<br>FMI3 -Voltage above normal or shorted high or FMI5-Current below normal or open circuit | No wiper High operation – MODULE A21 will retry recovery at each second<br><br>*M2 motor remain operational | | MODULE A21 sends DM1, SPN 520711, Amber Lamp, FMI 3 or 5 failure mode detected |
| | 2.6.1 | M1 motor error is detected: FMI6-Current above normal or grounded circuit | No wiper Hi operation – MODULE A21 will retry recovery at each second for a limited number of shorts. After more than 5 HW over currents trips, motor is disabled until the next ignition cycle.<br><br>*M2 motor remains operational | | MODULE A21 sends DM1, SPN 520711, Amber Lamp, FMI4 or 6 depending of failure mode detected |
| | 2.7 | M2 motor error is detected:<br>FMI3 -Voltage above normal or shorted high or FMI5-Current below normal or open circuit | No wiper High operation – MODULE A21 will retry recovery at each second.<br><br>*M1 motor remain operational | | MODULE A21 sends DM1, SPN 520711, Amber Lamp, FMI 3 or 5 failure mode detected |

| | | | | | |
|---|---|---|---|---|---|
| | 2.7.1 | M2 motor error is detected: FMI6-Current above normal or grounded circuit | No wiper Hi operation – MODULE A21 will retry recovery at each second for a limited number of shorts. After more than 5 HW over currents trips, motor is disabled until the next ignition cycle.<br><br>*M2 motor remains operational | | MODULE A21 sends DM1, SPN 520711, Amber Lamp, FMI4 or 6 depending of failure mode detected |
| | 2.8 | 'I_M1HomeSensor'' signal failure (no low to high transition on the wiper status input) | Synchronization between both motors shall be cancelled. Motor 1 shall wipe continuously. (Prevost specific) | Motor 2 shall wipe continuously on high speed. (Prevost specific) | MODULE A21 sends DM1, SPN 520713, No Lamp, FMI 12 |
| | 2.9 | 'I_M2HomeSensor'' signal failure (no low to high transition on the wiper status input) | Synchronization between both motors shall be cancelled. Motor 2 shall wipe continuously. (Prevost specific) | Motor 2 shall wipe continuously on high speed. (Prevost specific) | MODULE A21 sends DM1, SPN 520713, No Lamp, FMI 12 |
| **Wiper Intermittent (Delay function)** | 3.1 | Wiper stalk-arm component failure (w/ error detection - Wiper Adjust Status = 4,5,6 or 7 ) occurs when the wiper intermittent is Active | No loss of Intermittent operation - wiper intermittent stays Active using actual delay until key switch cycle | Continues wiper Intermittent using actual delay until key switch cycle | |
| | 3.2 | J1939 (D_BUS) between IC and MODULE A21 failure | No loss of operation - MODULE A21 shall detect J1939 (D_BUS) failure and then run on redundant functionality. Since Wiper Low is forced by using ''I_SpeedLow'' digital input, information on delay is not required. | | |
| **Windshield Washer Wiping** | 4.1 | Wiper stalk-arm component failure (w/ error detection - Washing Status = 2 or 3) occurs when the wash is Active | Wash operates for 5 additional sec. before loss of wash operation | | |
| | 4.2 | J1939 (D_BUS) between IC and MODULE A21 failure when the wash wiping is Active | MODULE A21 shall detect J1939 (D_BUS) failure and then operating wash wiping for 5 additional sec. before loss of wash wiping operation | | |
| | 4.3 | MODULE A21 component failure (Inoperable) | No wash wiping operation | | |
| | 4.4 | Missing 24V Ignition input to MODULE A21 | No wash wiping operation - MODULE A21 does not wake up | | |
| **Wiper Off mode** | 5.1 | Wiper stalk-arm component failure (with error detection -Wiper Stalk Status = 5,6 or 7) signals received by the MODULE A21 when wipers not active | No loss of operation - MODULE A21 shall use redundant digital inputs in case driver wants to operate wipers. | Uses redundant Digital Inputs. | |
| | 5.2 | Wiper stalk-arm component failure (w/ error detection - Washing Status = 2 or 3) signals received by the MODULE A21 when wipers not active | No wash wiping operation available. | | |

| | | | | | |
|---|---|---|---|---|---|
| | 5.3 | M1 motor error is detected:<br>FMI5-Current below normal or open circuit<br>FMI6-Current above normal or grounded circuit | No wiper High operation - M1 motor output remains disabled until the next key ignition cycle.<br><br>*M2 motor remain available | | MODULE A21 sends DM1, SPN 520711, Amber Lamp,<br>FMI 5 or 6 depending of failure mode detected |
| | 5.4 | M2 motor error is detected:<br>FMI5-Current below normal or open circuit<br>FMI6-Current above normal or grounded circuit | No wiper High operation - M2 motor output remains disabled until the next key ignition cycle.<br><br>*M1 motor remain available | | MODULE A21 sends DM1, SPN 520711, Amber Lamp,<br>FMI 5 or 6 depending of failure mode detected |
| | 5.5 | Wiper motor 1 parked position (I_M1HomeSensor) signal failure.<br>FMI3-Voltage above normal or shorted high<br>FMI4-Voltage below normal or shorted low | Parked position cannot be determined. Wiper functions remain available for driver but without motors synchronization. (Prevost Specific) | Wiper functions remain available for driver but without motors synchronization. (Prevost Specific) | MODULE A21 sends DM1, SPN 520713,<br>No lamp<br>FMI 3 or 4 depending of failure mode |
| | 5.6 | Wiper motor 2 parked position (I_M1HomeSensor) signal failure.<br>FMI3-Voltage above normal or shorted high<br>FMI4-Voltage below normal or shorted low | Parked position cannot be determined. Wiper functions remain available for driver but without motors synchronization. (Prevost Specific) | Wiper functions remain available for driver but without motors synchronization. (Prevost Specific) | MODULE A21 sends DM1, SPN 520713,<br>No lamp<br>FMI 3 or 4 depending of failure mode |
| | 5.7 | FMI 3 or 4 is detected on digital input ‘'I_SpeedLow'' | No loss of operation - In case driver wants to operate wiper Low, primary function on J1939 (D_BUS) remain available | Use primary J1939 in case it's needed. | MODULE A21 sends DM1, SPN 520711,<br>No Lamp,<br>FMI 12 |
| | 5.8 | FMI 3 or 4 is detected on digital input ‘'I_SpeedHigh'' | No loss of operation - In case driver wants to operate wiper High, primary function on J1939 (D_BUS) remain available | Use primary J1939 in case it's needed. | MODULE A21 sends DM1, SPN 520711,<br>No Lamp,<br>FMI 12 |

# 11. AUTOMATIC FIRE SUPPRESSION SYSTEM (AFSS) (OPTIONAL)

This optional system is used to shut down the engine and to extinguish a fire in the engine compartment or in the vicinity of the preheating system if so equipped.

The system operation is fully automatic and does not require assistance from the operator, however if required, the system can be manually activated by the operator at any time.

Refer to Prevost Operator's Manual or Owner's Manual for system operation and operational sequence (fire).

If more information is needed on the system, please refer to Kidde Dual Spectrum "Operation & Maintenance Manual'', found on your Technical Publications USB flash drive.

**CAUTION**

*The AFSS extinguisher will not function as intended if oriented incorrectly. Refer to labels on the extinguisher bottle or the "Operation & Maintenance Manual''.*

## 11.1 STARTING THE VEHICLE AFTER TRIGGERING OF A FIRE ALARM

The vehicle may be started after a fire alarm without resetting the system. Refer to ignition switch sequence below. This will not reset the system, rather it will instruct the vehicle's multiplex system to ignore vehicle interface outputs from the protection panel. This feature is intended to be used only in emergency situations that require the vehicle to be restarted and moved a short distance prior to system reset. It should not be performed if the cause of the fire has not been clearly identified and corrected.

To start the vehicle, perform this ignition switch (key) sequence:

1. From the **ON** position;
2. Turn to **OFF**, return to **ON** and **START** vehicle within 2 seconds.

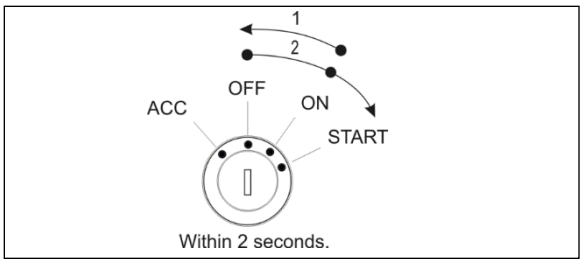


FIGURE 32: IGNITION SWITCH SEQUENCE

## 11.2 PERIODIC MAINTENANCE

**PRE-TRIP**

- Verify that the Protection Panel "SYSTEM OK" lamp is on solid green.

**EVERY 3000 MILES OR MONTHLY** (whichever comes first)

General

- Verify that neither the protected equipment nor the hazard has changed.
- Verify that no obvious physical damage or condition exists that might prevent system operation.

Protection Panel

- Verify that all warning lamps and the audible alarm are operational by pressing the "TEST/RESET" button.

Manual Activation Switch

- Verify that the tamper seal is intact and access to the switch is unobstructed.

Fire Detectors

- Optical
  - Verify that the status lamp on the detector face is on solid green.
  - Verify that nothing is blocking the detector's field of view.
  - Verify that the windows on the face of the detector are free of excess contamination (dirt, oil, grease, etc.) – if necessary, clean using a water soaked non-abrasive towel.
- Linear Thermal
  - Verify that there is no obvious physical damage and that the unit is free of

excess contamination (dirt, oil, grease, etc.) – if necessary, clean using a water soaked non-abrasive towel.

- Verify that mounting is secure and taught.

Electrical Harness

- Verify that electrical connectors and electrical wiring have no visible damage and all connectors are securely seated.

Extinguisher & Distribution System

- Verify that the extinguisher pressure gauge pointer is in the green arc at room temperature.
- Verify that distribution piping and nozzles are intact and unobstructed and that nozzle blow-off caps are in place.

**EVERY 18000 MILES OR SEMI-ANNUALLY** (whichever comes first)

- Perform a comprehensive fire system test using a Kidde Dual Spectrum System Test Set (Optical Test Kit P/N 420871-2).
- Service the extinguisher in accordance with KDS Document 160296, "KDS Pre-Engineered Fire Suppression System: Installation, Operation and Maintenance Manual".



**MAINTENANCE**

**EVERY SIX YEARS**

Have the fire extinguisher rebuilt by a qualified fire protection equipment company familiar with Kidde Dual Spectrum equipment and in accordance with KDS Document 160296, "KDS Pre-Engineered Fire Suppression System: Installation, Operation and Maintenance Manual". Rebuilt shall include actuator, O-ring seals and dry chemical replacement.



**MAINTENANCE**

**EVERY TWELVE YEARS**

Have the Extinguisher cylinder hydrostatically tested by a qualified fire protection equipment company familiar with Kidde Dual Spectrum equipment and in accordance with KDS Document 160296, "KDS Pre-Engineered Fire Suppression System: Installation, Operation and Maintenance Manual".

## 12. TIRE PRESSURE MONITORING SYSTEM (TPMS SENSATA)

The optional active tire pressure and temperature monitoring system is a sensing device designed to identify and display tire operating data and activate an alert or warning when pressure or temperature irregularities are detected.

For more information on the operation a of the system, refer to the Operator's Manual, chapters "Controls and Instruments" and "Safety Features and Equipment".

### 12.1 TMPS DIAGNOSTIC TROUBLESHOOTING CODES – SENSATA SYSTEM

TMPS diagnostic troubleshooting codes – sensata system

| SPN | FMI | DESC | WU |
|---|---|---|---|
| 168 | 3 | TPMS ECU High voltage | |
| 168 | 4 | TPMS ECU low voltage | |
| 171 | 9 | AMB_Engine timeout | |
| 241 | 10 | Placard Pressure setting error | |
| 639 | 9 | Can bus communication error | |
| 3509 | 18 | LH front axle wheel sensor battery low | 17 |
| 3510 | 18 | RH axle front wheel sensor battery low | 19 |
| 3511 | 18 | LH outer drive axle wheel sensor battery low | 26 |
| 3512 | 18 | LH inner drive axle wheel sensor battery low | 27 |
| 3513 | 18 | RH inner drive axle wheel sensor battery low | 29 |
| 3514 | 18 | RH outer drive axle wheel sensor battery low | 2A |
| 5126 | 18 | LH Tag axle axle wheel sensor battery Low | 37 |
| 5127 | 18 | RH tag axle wheel sensor battery low | 39 |
| 518001 | 9 | EEC1 message Time out | |
| 518002 | 9 | PropB_VehicleMode timeout | |
| 518003 | 9 | TCO1 message time out | |

| | | | |
|---|---|---|---|
| 518004 | 9 | TD message time out | |
| 518005 | 11 | eRX autoconfiguration error | |
| 519001 | 4 | eRX A supply short circuit front Antenna | |
| 519001 | 9 | eRX 18 missing Front Antenna | |
| 519002 | 4 | eRX B supply short circuit Rear LH Antenna | |
| 519002 | 9 | eRX 27 missing Rear LH Antenna | |
| 519003 | 4 | eRX C supply short circuit Rear RH Antenna | |
| 519003 | 9 | eRX 29 missing Rear RH antenna | |
| 520001 | 9 | LH front axle wheel sensor not responding | 17 |
| 520002 | 9 | RH axle front wheel sensor not responding | 19 |
| 520003 | 9 | LH outer drive axle wheel sensor not responding | 26 |
| 520004 | 9 | LH inner drive axle wheel sensor not responding | 27 |
| 520005 | 9 | RH inner drive axle wheel sensor not responding | 29 |
| 520006 | 9 | RH outer drive axle wheel sensor not responding | 2A |
| 520008 | 9 | LH tag axle wheel sensor not responding | 37 |
| 520009 | 9 | RH tag axle wheel sensor not responding | 39 |

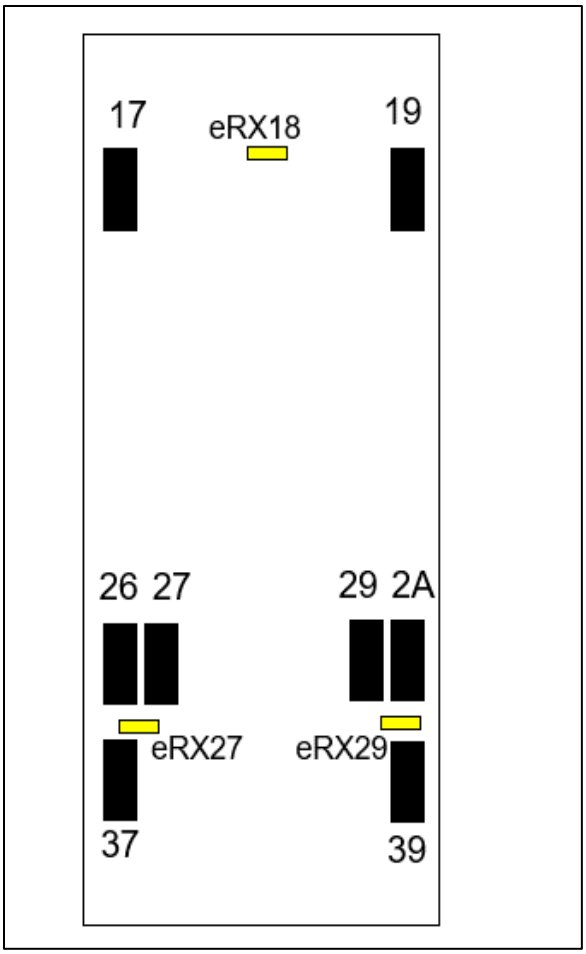


FIGURE 33: WHEEL SENSOR UNIT AND ERX ANTENNA

## 13. ELECTRIC BRAKE CONTROL SYSTEM FOR TRAILER

This optional feature is used to control the braking system of a trailer equipped with electric brakes. This system includes connector A40, a RV type trailer connector already installed on the trailer hitch, the VECT (Vehicle Electric Center Trailer) and the necessary harnesses.

On the vehicles equipped with this feature, the VECR fuses F117 & F119 are replaced by CB117 (20 Amp) & CB119 (30 Amp).

### 13.1 A40 CONNECTOR

A40 connector is located in the front electrical and service compartment (aka front junction box). This connector is used to connect a brake controller.

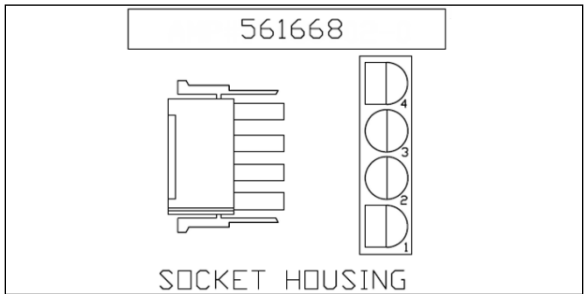


FIGURE 34: A40 CONNECTOR

Four circuits:

1) black 12V power (from ignition)
2) white ground
3) red input: 12V brake application signal from VECT (coach brake lights)
4) blue output: brake application signal to the trailer

## 13.2 7-BLADE RV/TRAILER CONNECTOR

Seven circuits:

1) white ground
2) blue output: brake application signal to the trailer
3) brown taillights
4) black 12V supply for trailer accessories
5) yellow left turn signal
6) green right turn signal
7) purple backup lights

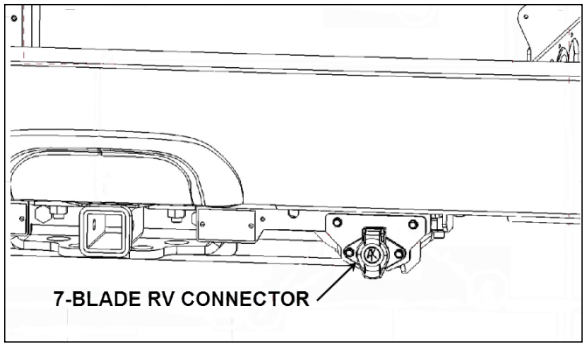


FIGURE 35: 7-BLADE TRAILER/RV CONNECTOR ON TRAILER HITCH

### 13.3 VECT

The VECT includes the following components:

Relays 51, 52, 53, 54 and 55

CB301, 20 Amp

Fuses (20A) 302, 303 and 304

Spare fuses: SP1-SP4

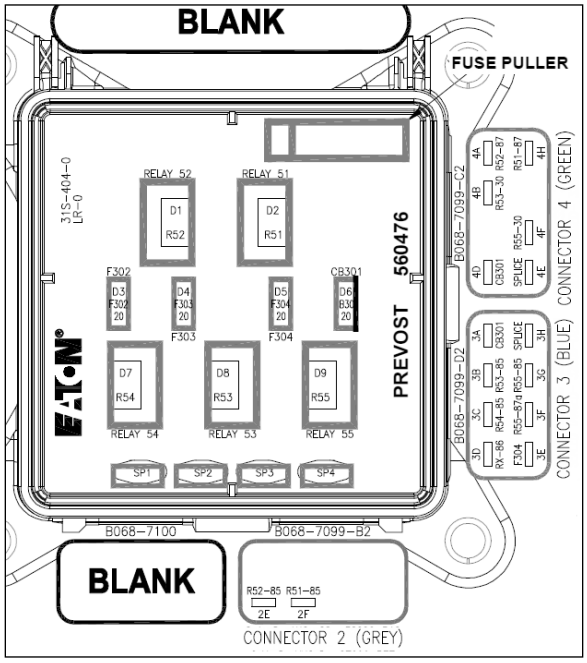


FIGURE 36: VECT

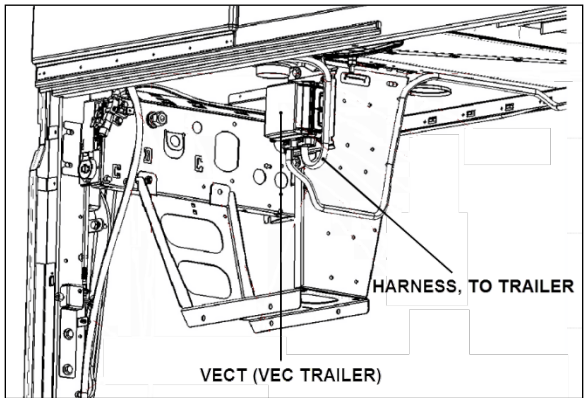


FIGURE 37: VECT (CURB SIDE) ON AIR FILTER BRACKET

## 14. WHEELCHAIR LIFT CASSETTE INSTALLATION

**WARNING**

For better stability, keep the platform at minimum height when moving.

**WARNING**

Never deploy the platform from enclosure while standing on the telescopic legs.

**WARNING**

Telescopic legs were designed to support and move the platform only, do not use as a work table.

**WARNING**

Before moving platform, make sure that floor is level and free of obstacles.

Install four lifting jacks on the wheelchair lift cassette.

**NOTE**

*There are two telescopic legs for each platform side. The proper side is indicated onto the telescopic leg.*

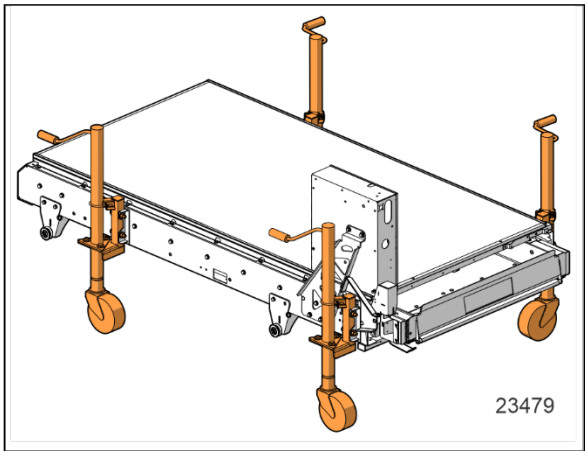


FIGURE 38: JACK INSTALLATION

Slide the cassette into the compartment to get the rear rollers backward the rail front stopper.

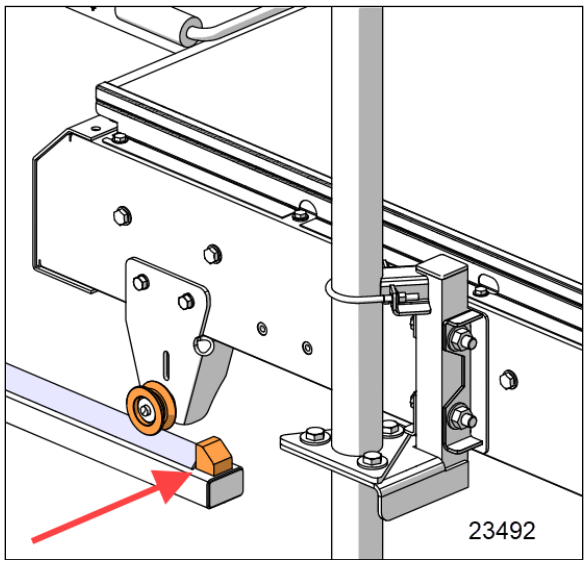


FIGURE 39: SLIDE CASSETTE OVER STOPPERS

Drop down the rear side of the cassette until it gets contact with the rail and make sure the back rollers are aligned with the V-rail.

Remove jacks (2) on the rear side.

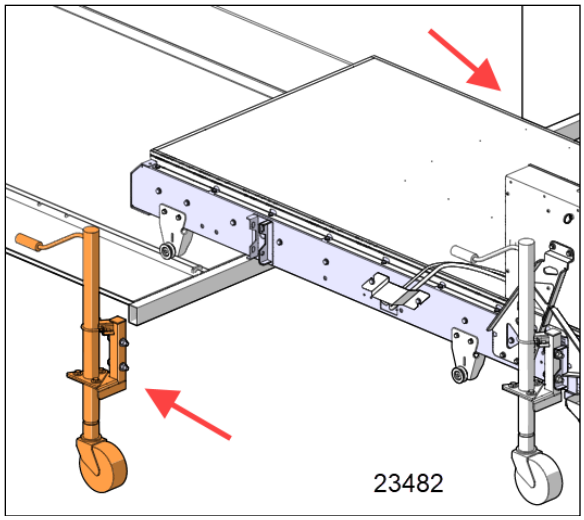


FIGURE 40: JACK REMOVAL ON REAR SIDE

Reinstall the fasteners on the dismounted jacks.

Keep sliding the cassette inside the compartment to get the front rollers backward of the stoppers.

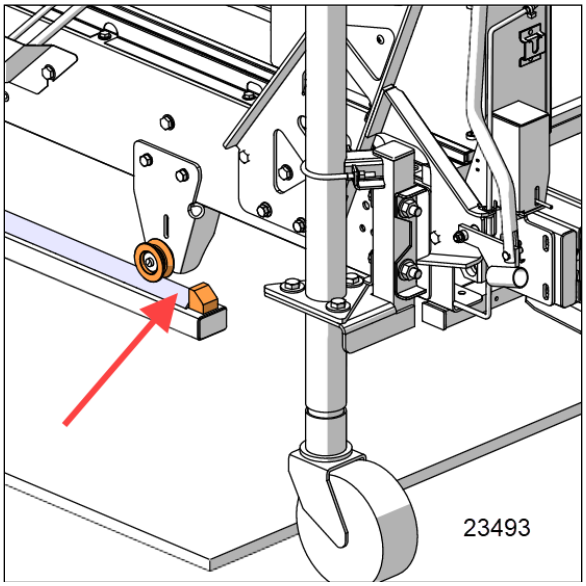


FIGURE 41: SLIDE THE CASSETTE INSIDE THE COMPARTMENT

Drop down the front side of the cassette until it gets contact with the rail and make sure the rollers are aligned with the V-rail.

Remove the jacks (2) on the front side of the cassette.

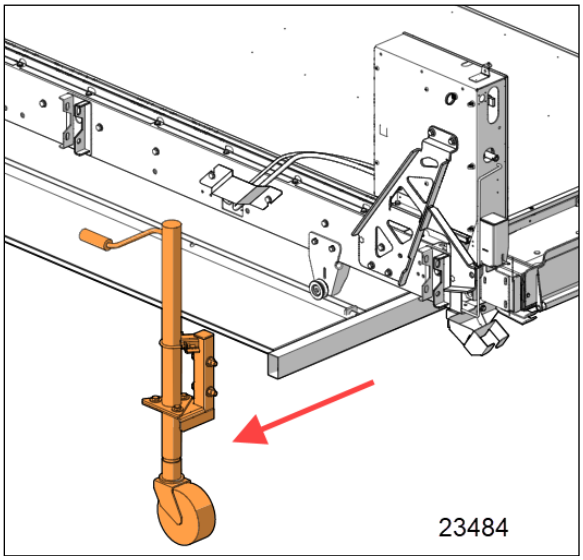


FIGURE 42: JACKS REMOVAL

Reinstall the fasteners on the dismounted jacks.

Install locks in four locations and tighten screws to a torque value of:

**55-65 lb-ft (75-88 Nm)**

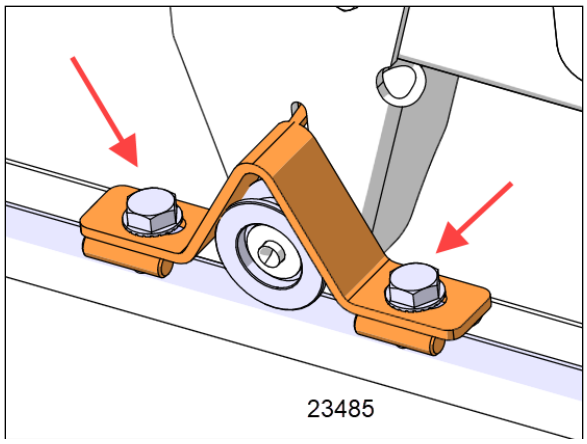


FIGURE 43: ANCHOR BOLTS INSTALLATION

Plug the electrical connectors and lock it with the connector cover.

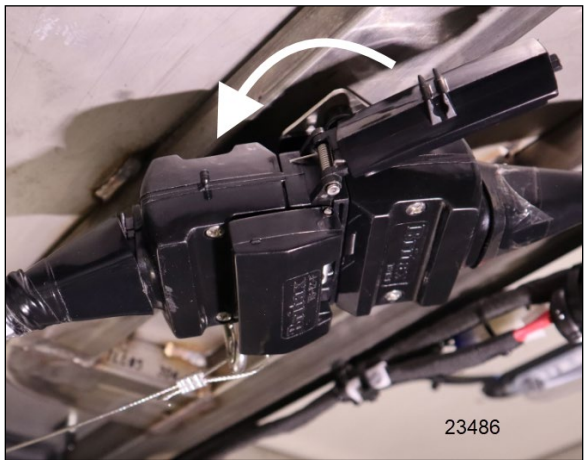


FIGURE 44: ELECTRICAL CONNECTION

Attach the protective wire.

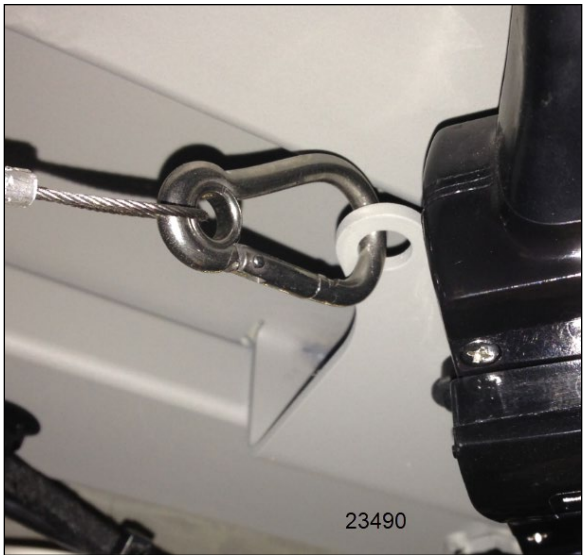


FIGURE 45: PROTECTIVE WIRE INSTALLATION

## 15. WHEELCHAIR LIFT CASSETTE DISMOUNTING

Detach the protective wire. Unlock the connectors. Unplug the electrical connectors.

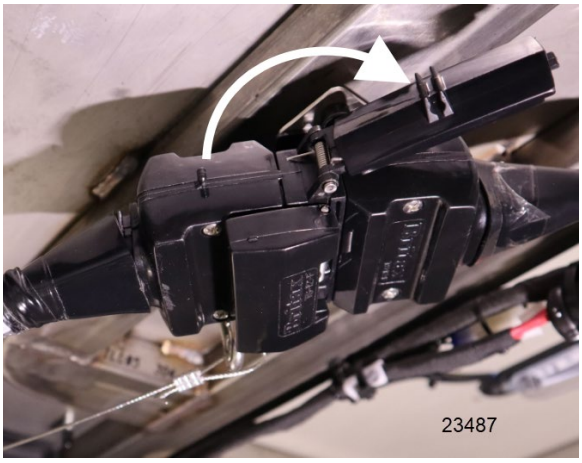


FIGURE 46: ELECTRICAL DISCONNECTION

Detach the protective wire.

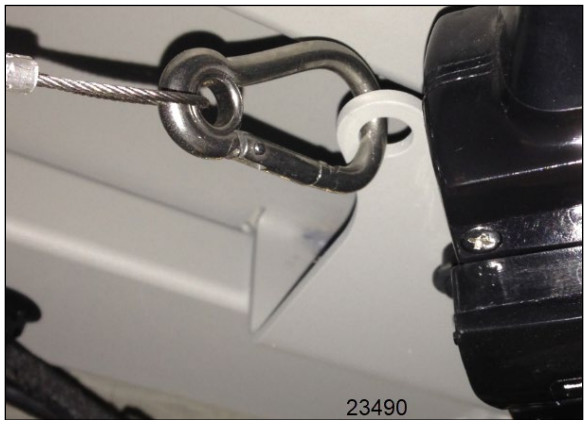


FIGURE 47: PROTECTIVE WIRE INSTALLATION

Remove locks in four locations and keep it with the removed cassette.

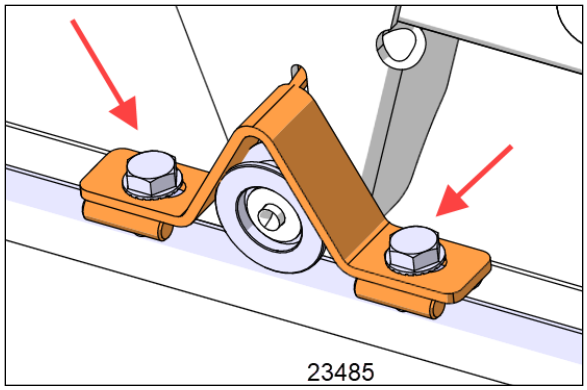


FIGURE 48: LOCKS REMOVAL

Slide out the cassette until the front rollers get the stoppers. Install jacks on the front side of the cassette. Lift up the front side of the cassette until the front rollers clear the front stoppers.

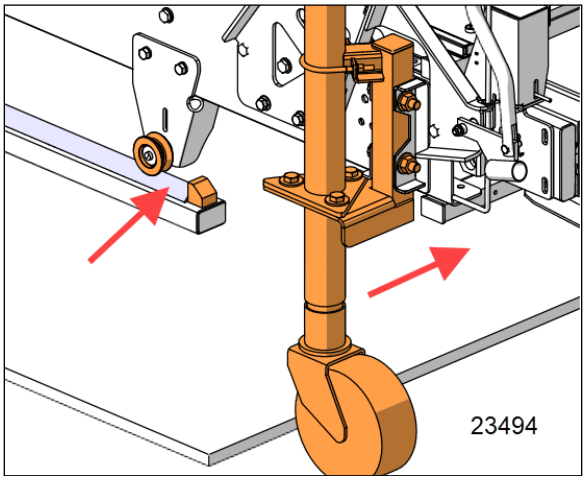


FIGURE 49: LIFT UP THE FRONT SIDE OF THE CASSETTE

Keep sliding out the cassette until the rear rollers get to stoppers. Install jacks on the rear side of the cassette. Lift up the rear side until the rear rollers clear the stoppers.

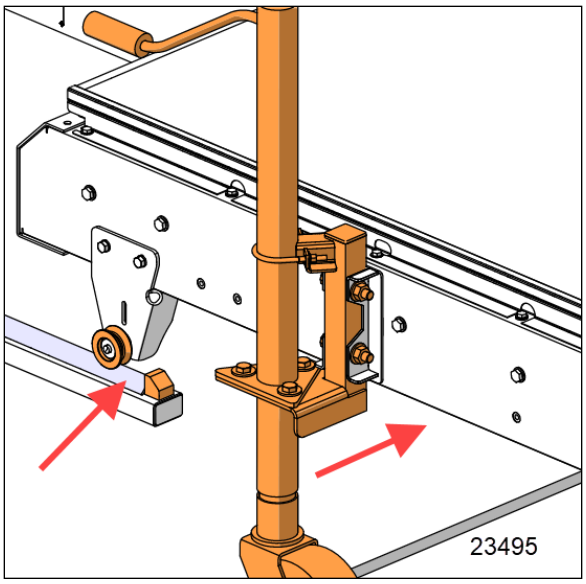


FIGURE 50: DROP THE REAR SIDE ON RAILS

Slide out completely the wheelchair lift cassette.

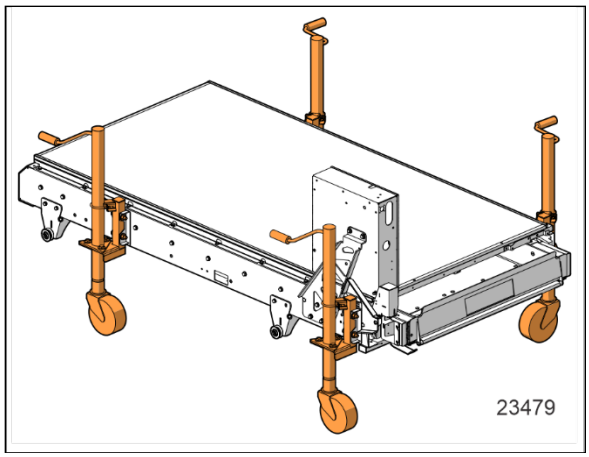


FIGURE 51: MOVE OUT THE CASSETTE

# MAINTENANCE INFORMATION

**MI23-12B**

| DATE : | April 2023 | SECTION : 06 ELECTRICAL |
|---|---|---|
| SUBJECT : | **WIPER DRIVE MOTOR, LINKAGE AND PIVOT REPLACEMENT** | |

Revision : B — Part 2 step 25, torque changed, was 22 lbs-ft becomes 29 lbs-ft — 05-24-2023

## APPLICATION

| Model | VIN  |
|---|---|
| H3-45 coaches<br>Model Year: 2024, … | From 2PCH3349X***R***C72***1453*** |
| H3-45 VIP motorhomes<br>Model Year: 2023, … | From 2PCVS3499***P***C72***1348*** |

# Table of contents

REQUIRED TOOLS ..... 3
SAFETY MEASURES ..... 4
PART 1 - DRIVE MOTOR REPLACEMENT ..... 5
Drive Motor Bracket Removal ..... 5
Linkage Disconnection from The Drive Motor Shaft ..... 9
Drive Motor Removal and Replacement ..... 9
Park Position Setting ..... 11
Linkage Connection to The Drive Motor Shaft ..... 12
Drive Motor Bracket Installation ..... 13
PART 2 - WIPER PIVOT AND LINKAGE REPLACEMENT ..... 15
Preparation ..... 15
Wiper Arm and Pivot Hardware Removal ..... 16
Wiper Pivot and Linkage Assembly Removal ..... 19
Damaged Components Replacement ..... 22
Pivot and Linkage Assembly Installation ..... 22
Park Position Setting ..... 23
Linkage Connection to The Drive Motor Shaft ..... 23
Drive Motor Bracket Installation ..... 23
Wiper Arm Installation ..... 24
PARTS / WASTE DISPOSAL ..... 26

## REQUIRED TOOLS

| | |
|---|---|
| RULER<br> | SMALL PRY BAR<br> |
| TORQUE WRENCH AND METRIC SOCKET SET<br> | RATCHET AND SOCKET SET – METRIC<br> |
| CAULKING GUN<br> | SMALL FLAT SCREWDRIVER<br> |
| MASKING TAPE<br> | WIPER ARM PULLER P/N G37807<br>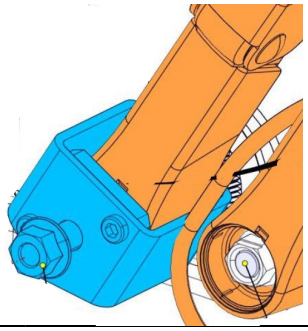 |
| CURB SIDE MOTOR TORQUE TOOL<br>P/N G37274<br>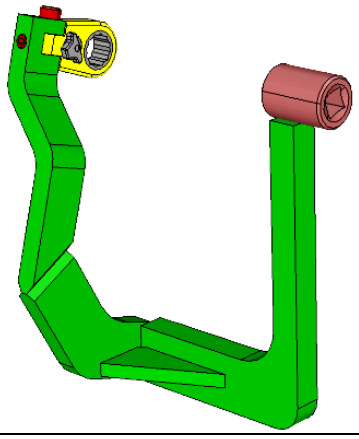 | STREET SIDE MOTOR TORQUE TOOL<br>P/N G37605<br>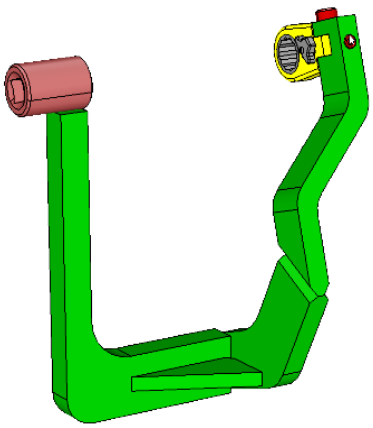 |

## SAFETY MEASURES

**DANGER**

The wiper linkage can cut your fingers. Cut off the power supply before working on this system.

### SAFETY PRECAUTIONS

- Eye protection should always be worn when working in a shop.
- Rules for Personal Protection Equipment should always be respected. Wear your PPE including but not limited to the following:



# PART 1 - DRIVE MOTOR REPLACEMENT

**DANGER**

Park vehicle safely, apply parking brake, stop engine. **Prior to working on the vehicle, set the ignition switch to the OFF position, set the battery master switch to the OFF position and trip the main circuit breakers equipped with a trip button**.

Lock out & Tag out (LOTO) must be performed during set-up, maintenance or repair activities. Refer to your local procedure for detailed information regarding the control of hazardous energy.

**DANGER**

The wiper linkage can cut your fingers. Cut off the power supply before working on this system.

## Drive Motor Bracket Removal

1. Open the wiper mechanism access hatch.

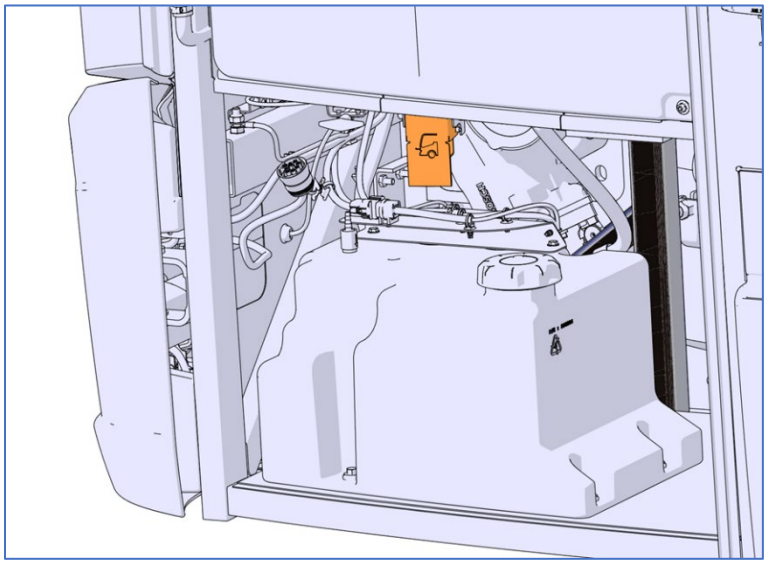

Figure 1

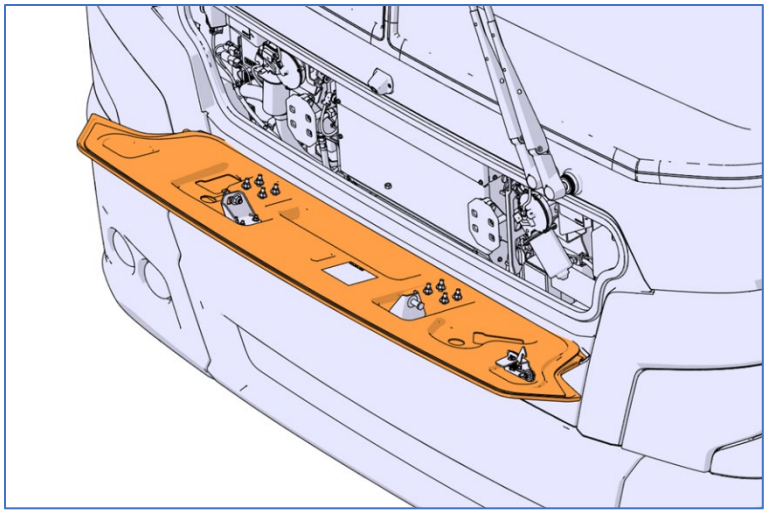

Figure 2

2. Cut the nylon tie securing the drive motor connector. Pry the yellow lock on the connector socket housing and then unplug the connector.

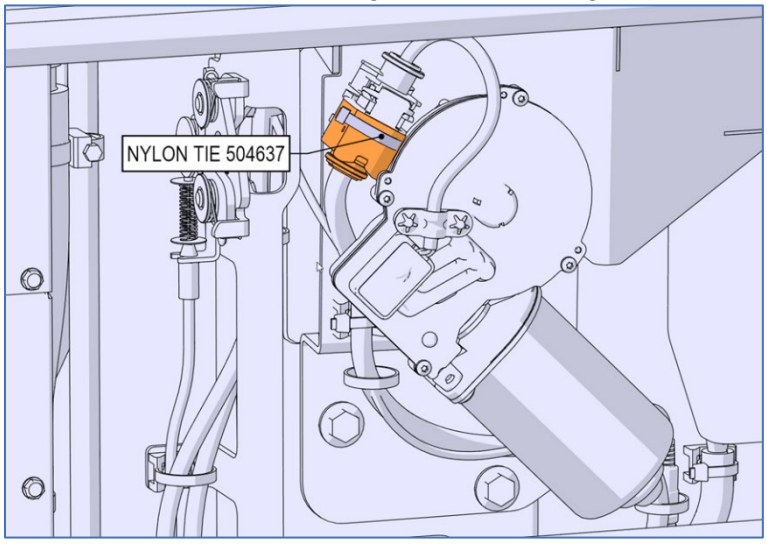


Figure 3: SREET SIDE DRIVE MOTOR SHOWN



Figure 4

3. Remove the four bolts that secure the drive motor bracket (use 13 mm socket).

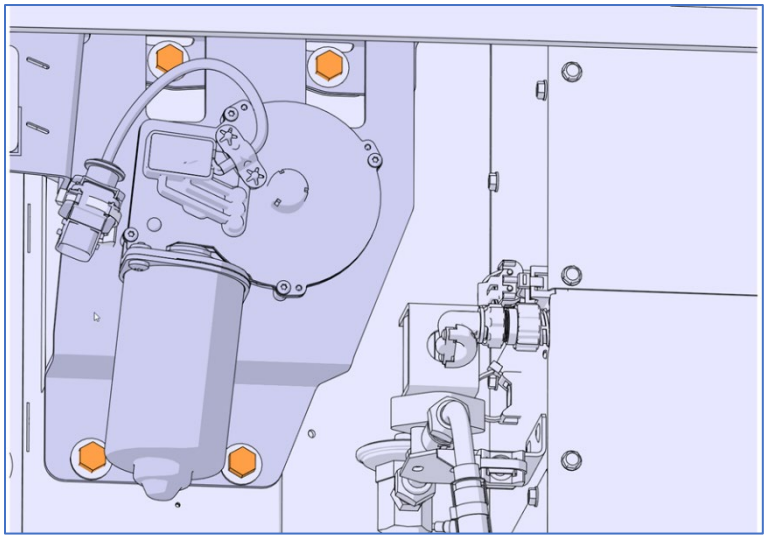

Figure 5: CURB SIDE DRIVE MOTOR

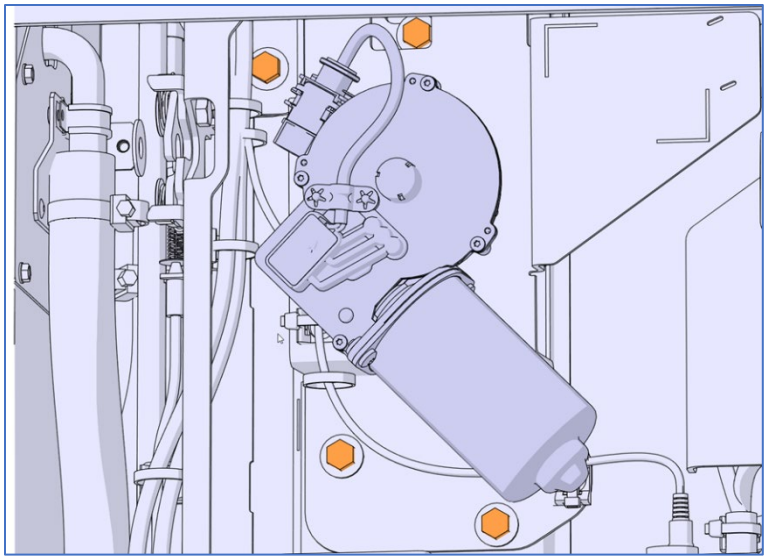

Figure 6 : STREET SIDE DRIVE MOTOR

4. At the back of the drive motor bracket, unscrew the drive motor shaft nut and remove the washer (use 17 mm socket).

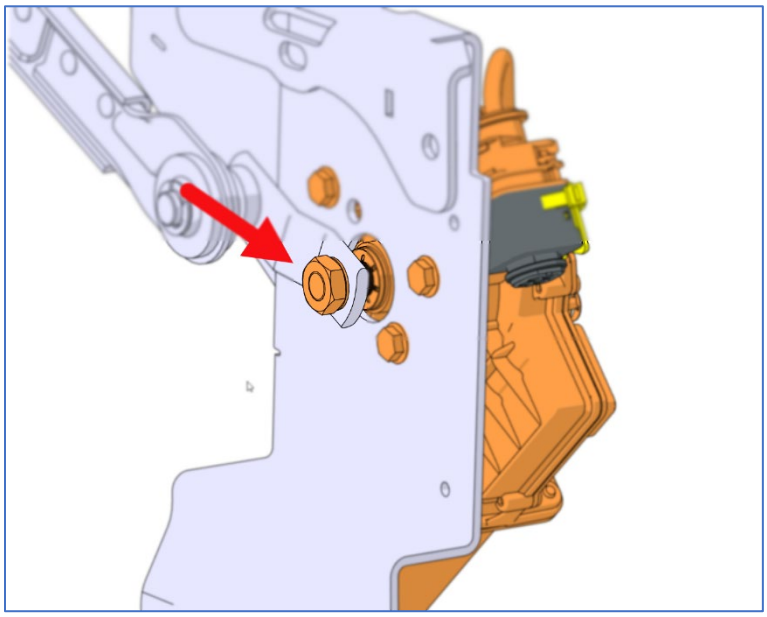

Figure 7

## Linkage Disconnection from The Drive Motor Shaft

5. Using a small pry bar, disconnect the linkage from the drive motor shaft.

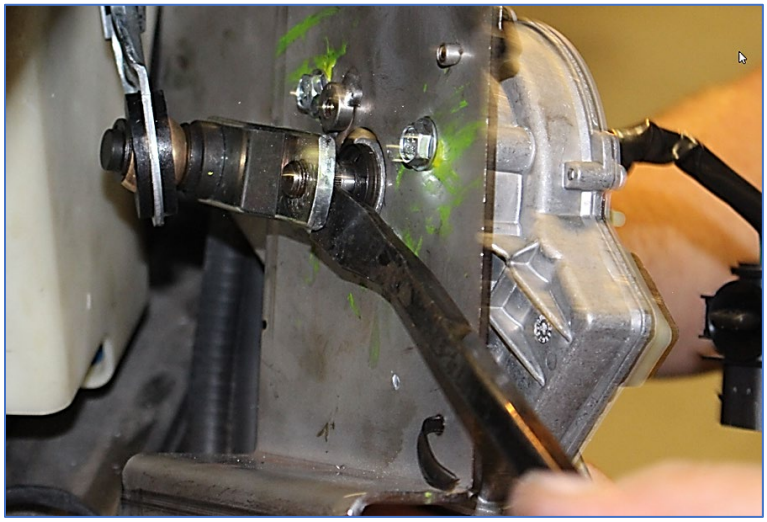

**Figure 8**

## Drive Motor Removal and Replacement

6. Dismount the drive motor from the bracket. To do so, unscrew the four mounting bolts.

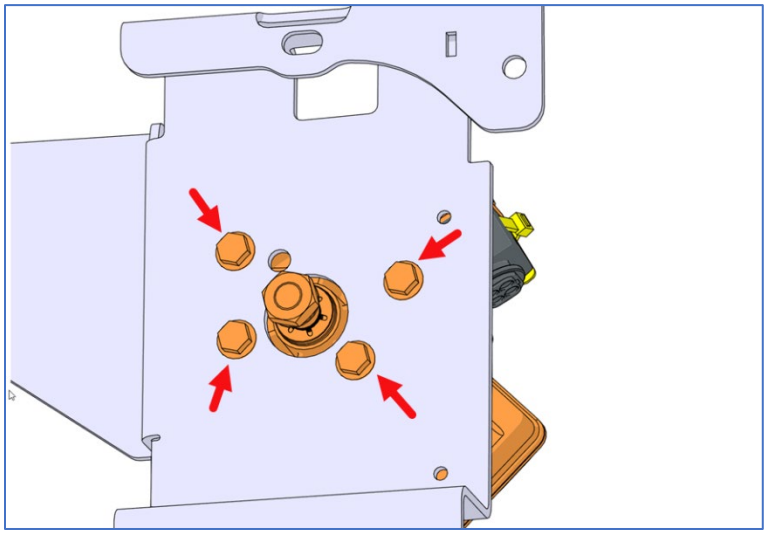

**Figure 9**

7. Install the new drive motor on the bracket oriented in relation with the bracket (8.5 Nm / 75 lb-in).

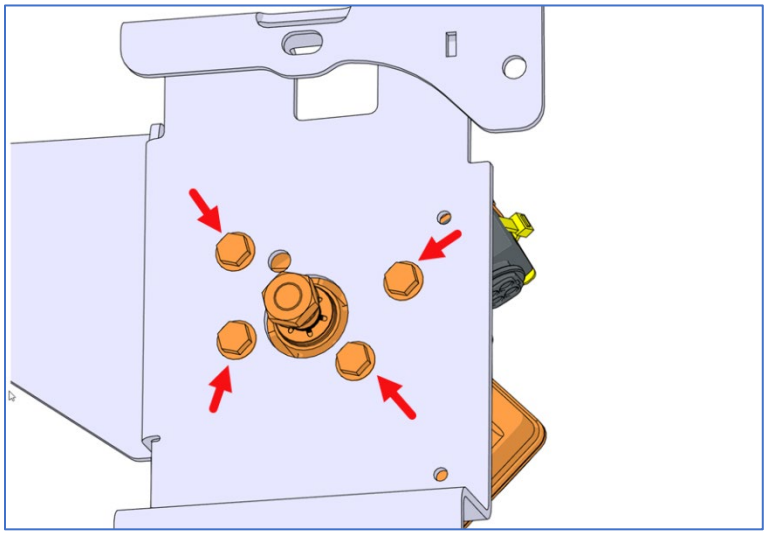

Figure 10

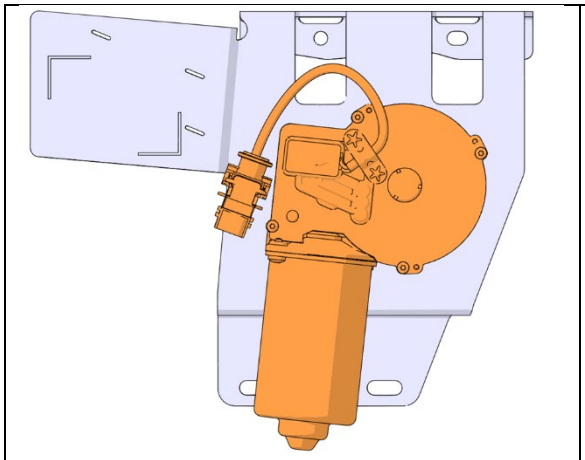

Figure 11: CURBSIDE

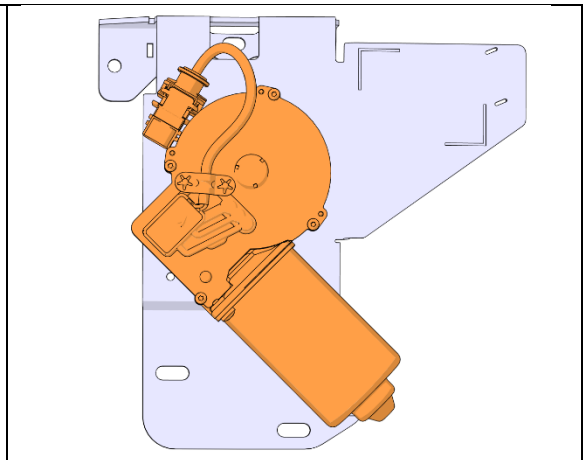

Figure 12: STREET SIDE

## Park Position Setting

NOTE: when setting the park position for the curb side drive motor, the street side drive motor connector must absolutely be connected.

8. **Momentarily**, plug the drive motor connector.

9. **Momentarily**, restore the power supply. Turn the wiper switch to ON then OFF so the new drive motor will be set to park position.

**DANGER**

The wiper linkage can cut your fingers. Cut off the power supply before working on this system.

10. Unplug the drive motor connector. Cut off the power supply.

11. Screw a M6-1.0x30 mm screw in the park position weldnut.

12. Connect the linkage to the drive motor shaft. **Make sure the link rests against the park position screw as shown.**

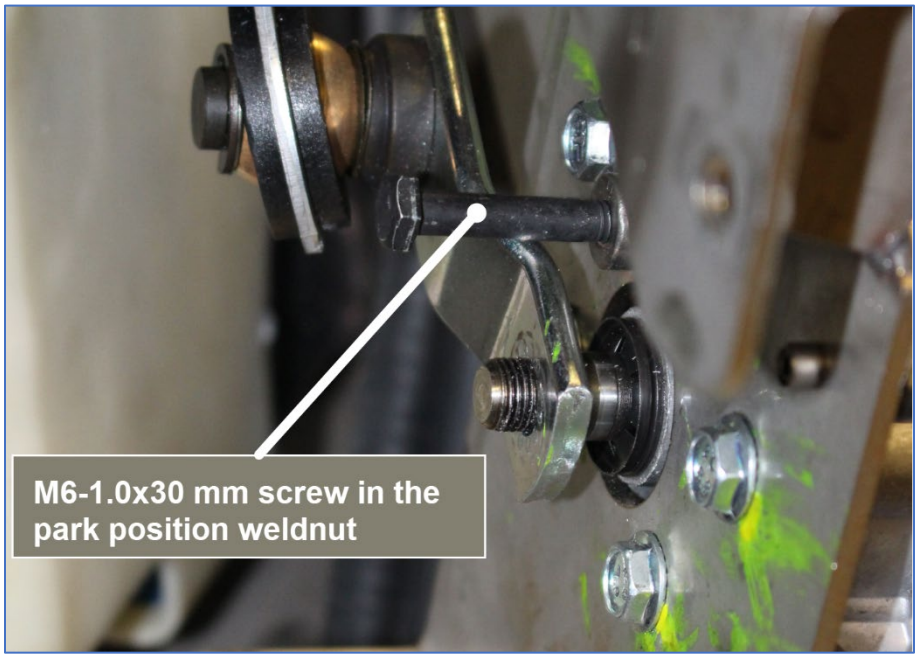


Figure 13

## Linkage Connection to The Drive Motor Shaft

13. Reinstall the washer then the shaft nut. Tighten to a torque of **35 Nm / 26 lb-ft**. Prescribed torque is mandatory. **Make sure the link rests against the park position screw during this operation**.

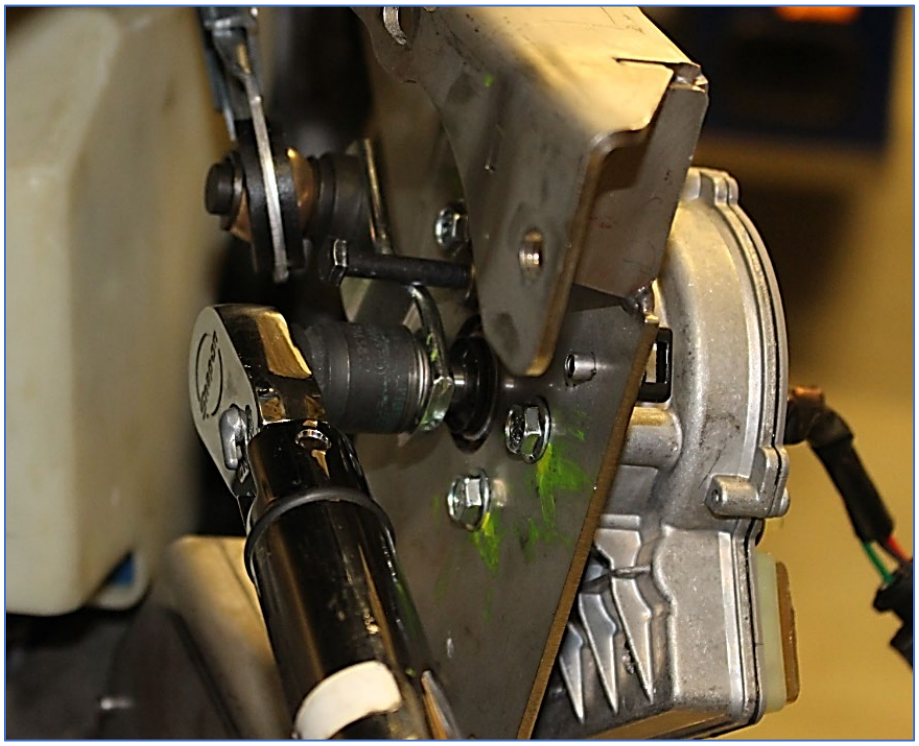

**Figure 14**

## Drive Motor Bracket Installation

14. Reinstall the drive motor bracket. Tighten bolts to **17 Nm** / **13 lb-ft**. Prescribed torque is mandatory.

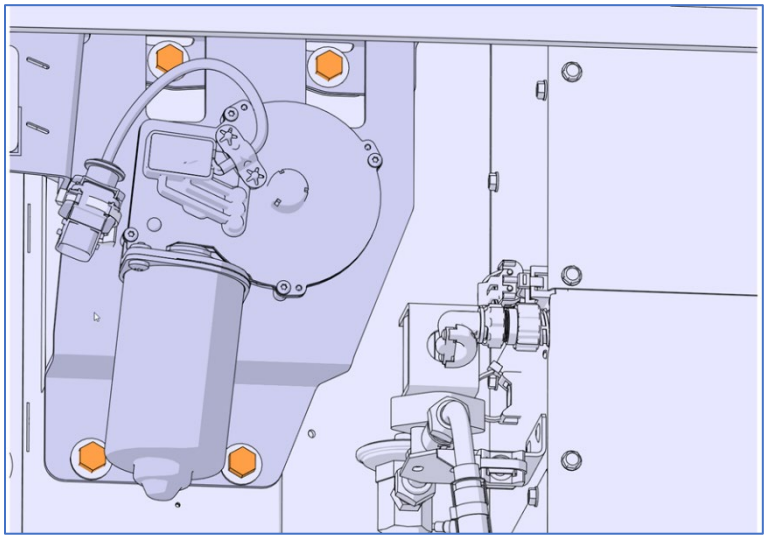

**Figure 15: CURBSIDE DRIVE MOTOR**

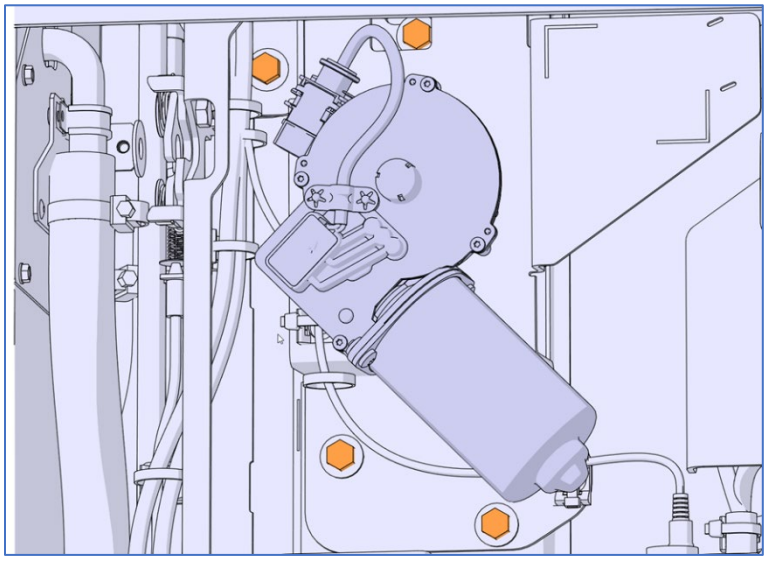

**Figure 16 : STREET SIDE DRIVE MOTOR**

15. Plug the drive motor connector and secure the connector using nylon tie p/n 504637.

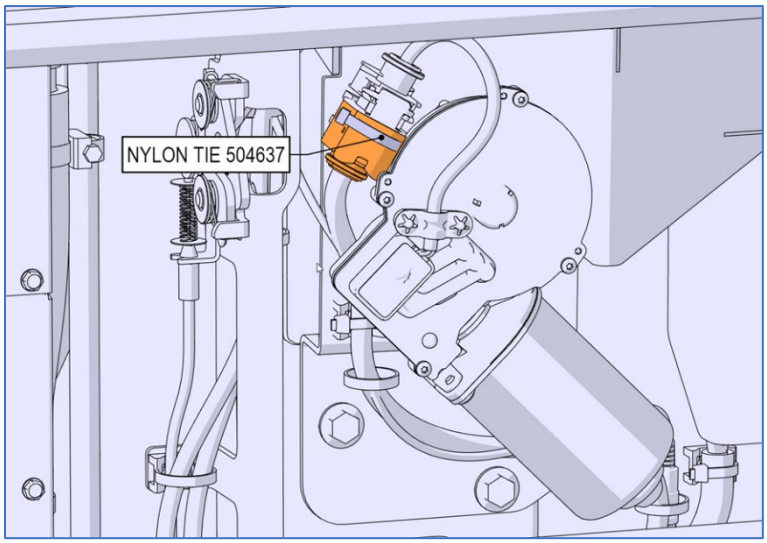


**Figure 17**

# PART 2 - WIPER PIVOT AND LINKAGE REPLACEMENT

**DANGER**

The wiper linkage can cut your fingers. Cut off the power supply before working on this system.

## Preparation

1. Make sure the wipers are in the park position as shown.

2. Mark wiper blades positions on the windshield.
*Use masking tape or a pencil or marker that makes temporary markings when used on glass.*

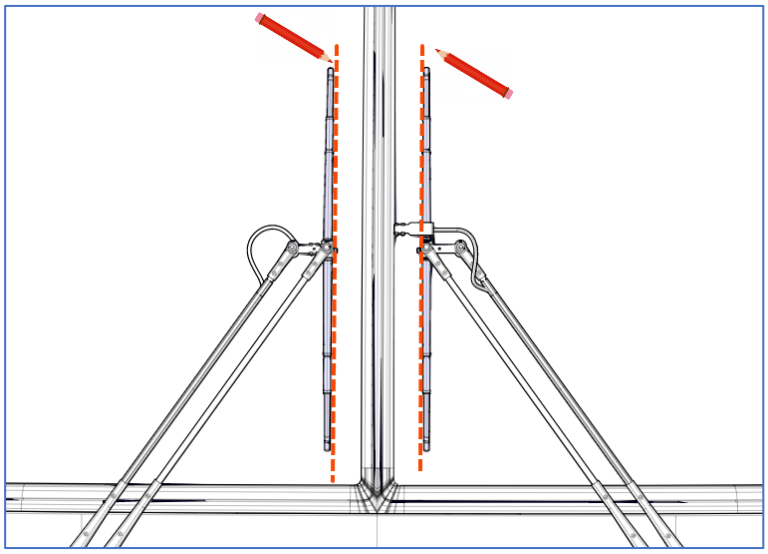

**Figure 18**

3. Perform *Drive Motor Bracket Removal* found in PART 1.

4. Perform *Linkage Disconnection from The Drive Motor Shaft* found in PART 1.

## Wiper Arm and Pivot Hardware Removal

5. Disconnect the windshield washer tube.

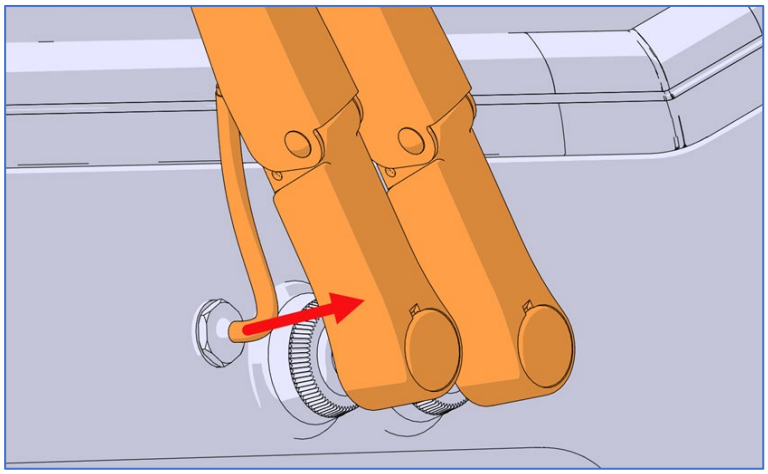

**Figure 19**

6. Remove the wiper arm nut caps.

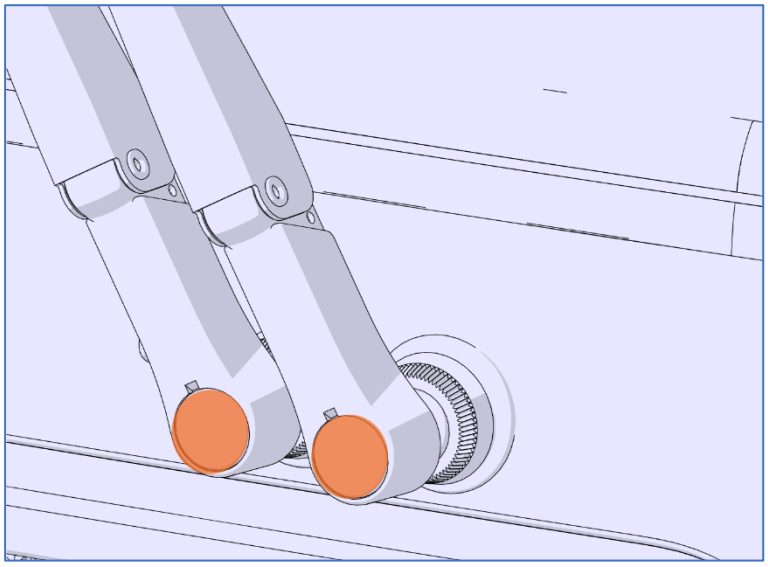

**Figure 20**

7. Unscrew the wiper arm nuts. Remove the wiper arms. Use of puller no. G37708 is recommended (use 15 mm socket).

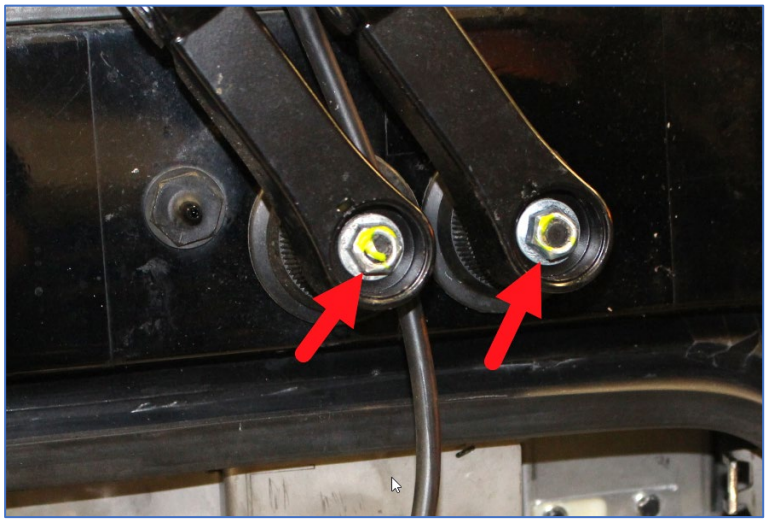

Figure 21

8. Remove the plastic nuts (item 1) and the rubber gaskets (item 2).

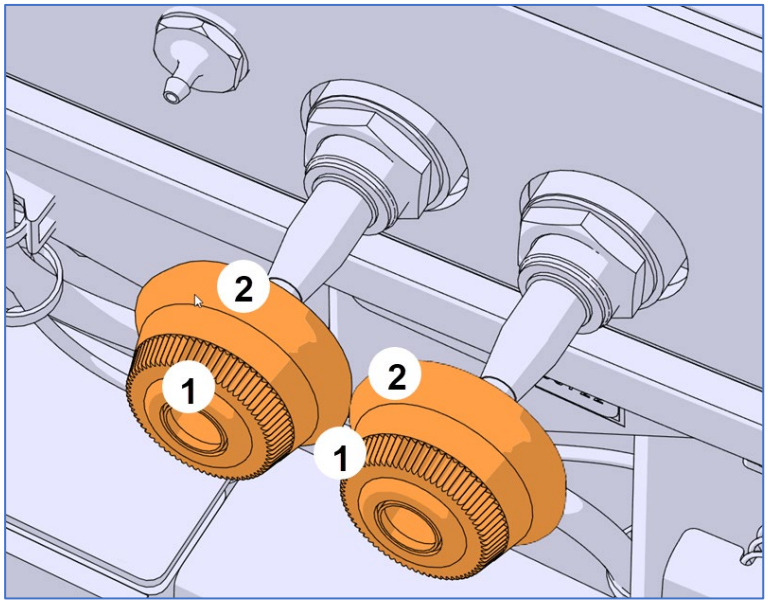


FIGURE 22

9. Remove the butyl sealant applied around the wiper pivots and the fiber panel.



Figure 23

10. Unscrew the two nuts shown on the image below (use 32 mm socket).

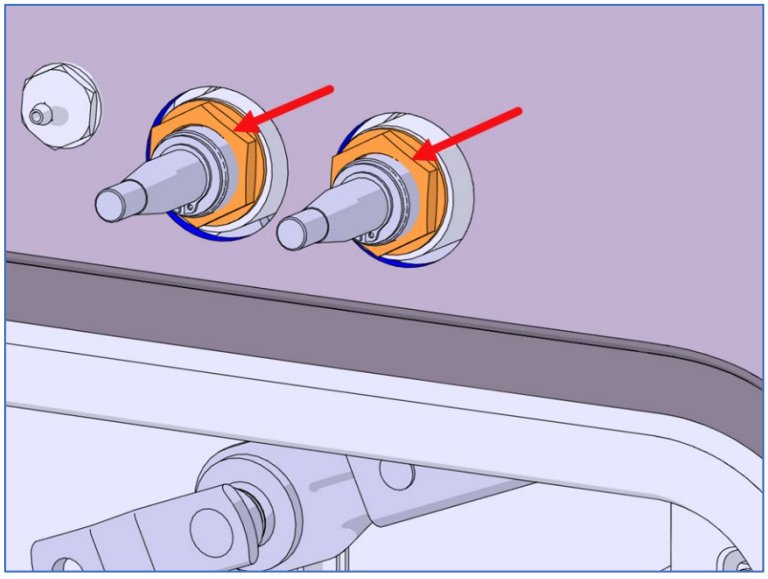

Figure 24

## Wiper Pivot and Linkage Assembly Removal

11. **Loosen** the four bolts identified on the image below.

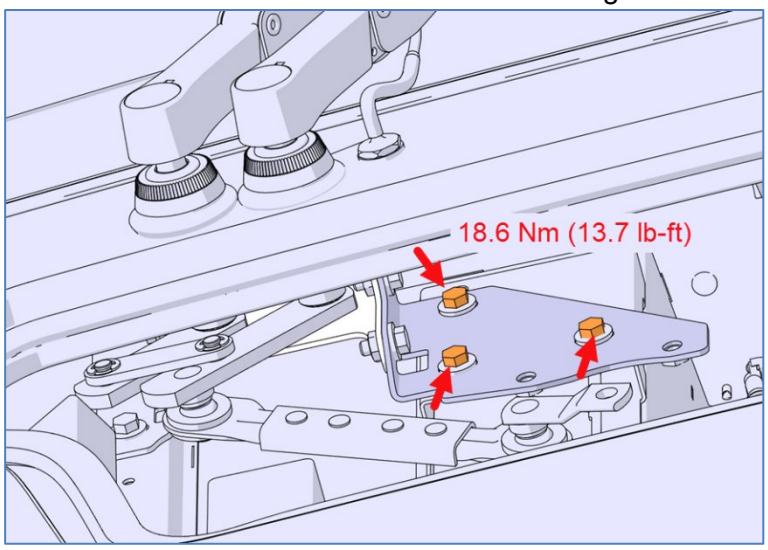


Figure 25: CURB SIDE

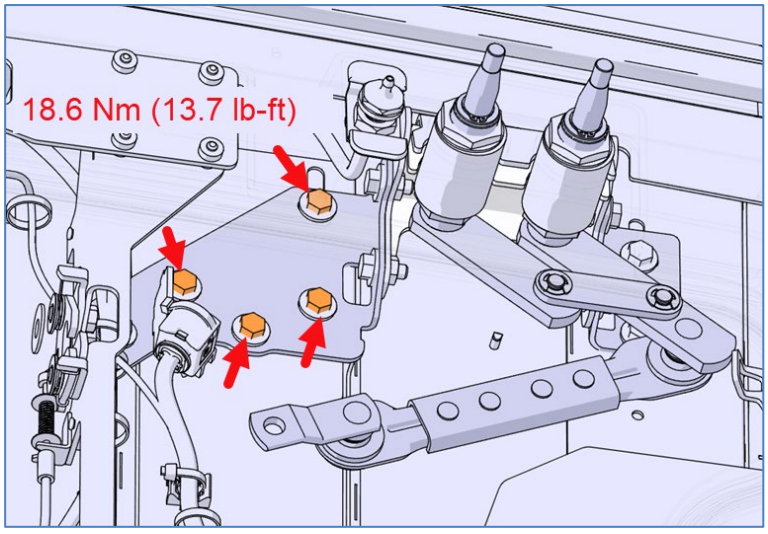


Figure 26 : STREET SIDE

12. Unscrew and remove the two bolts identified on the image below.

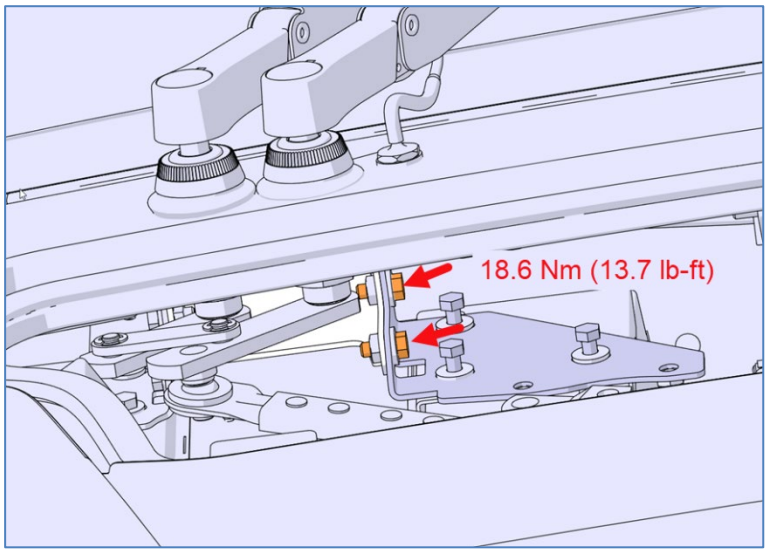


**Figure 27: CURBSIDE**

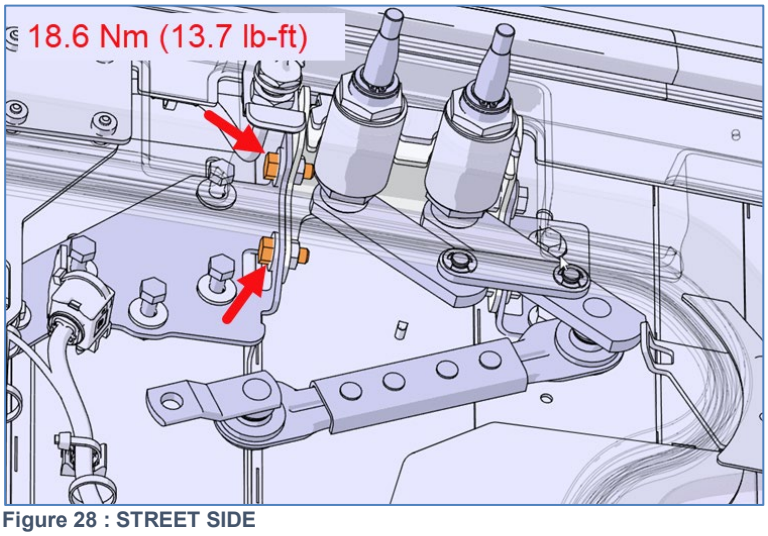


**Figure 28 : STREET SIDE**

13. Unscrew and remove the two bolts identified on the image below.

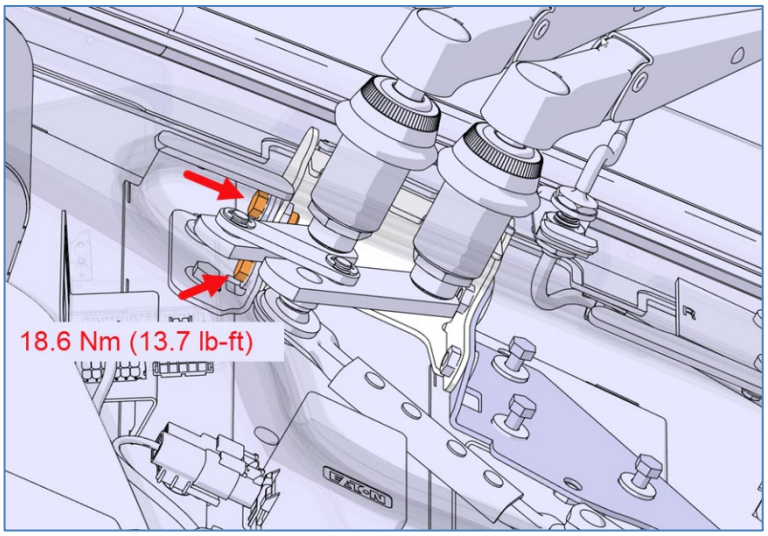


Figure 29: CURB SIDE

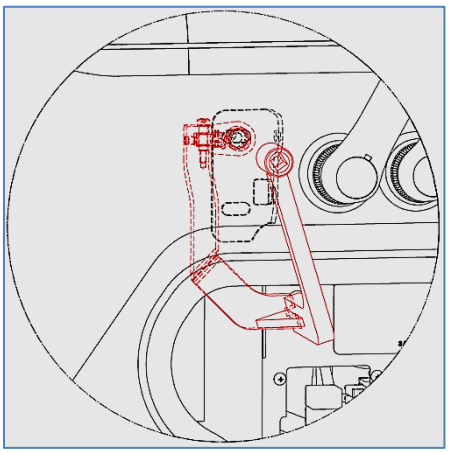

USE TORQUE TOOL G37274

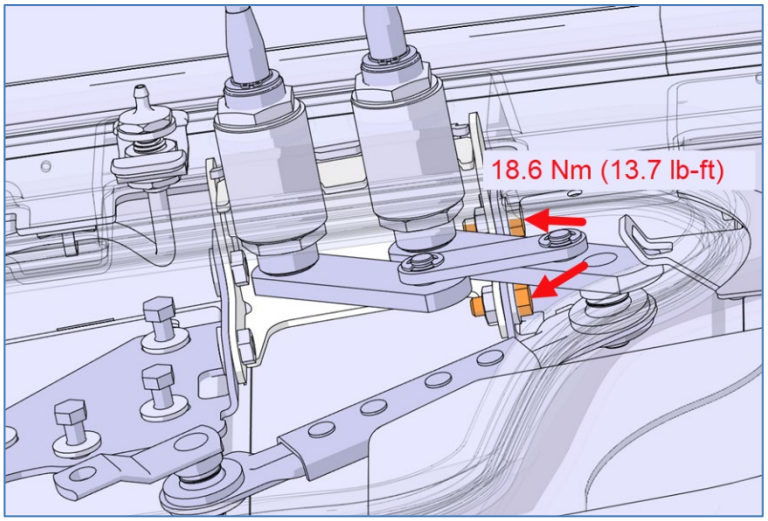


Figure 30 : STREET SIDE

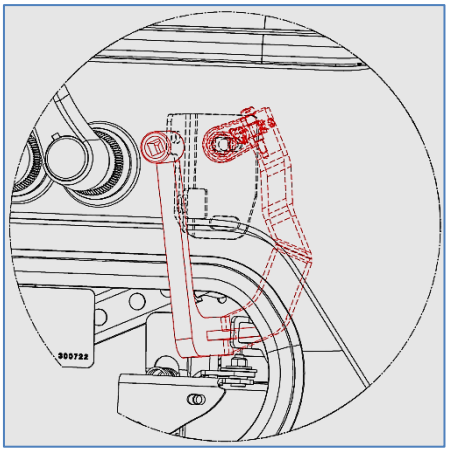

USE TORQUE TOOL G37274

14. Remove the pivot and linkage assembly.

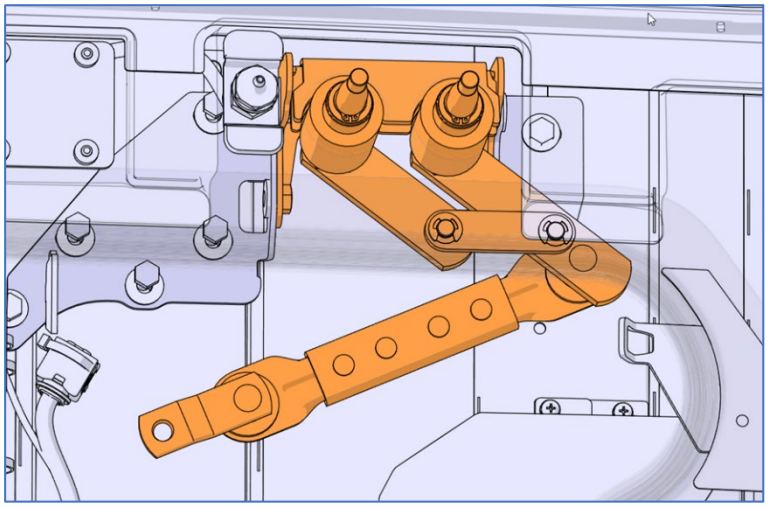

Figure 31

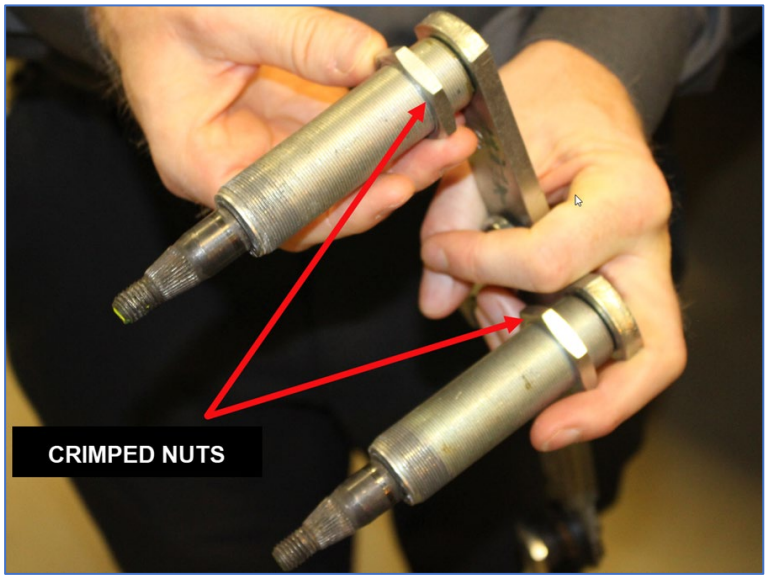


Figure 32

## Damaged Components Replacement

15. Replace the damaged components.

## Pivot and Linkage Assembly Installation

16. Reinstall the pivot and linkage assembly, reversing *Wiper Pivot and Linkage Assembly Removal* steps. Prescribed torque is mandatory. DO NOT install the wiper arms at this moment.

17. Tighten the pivot nuts.

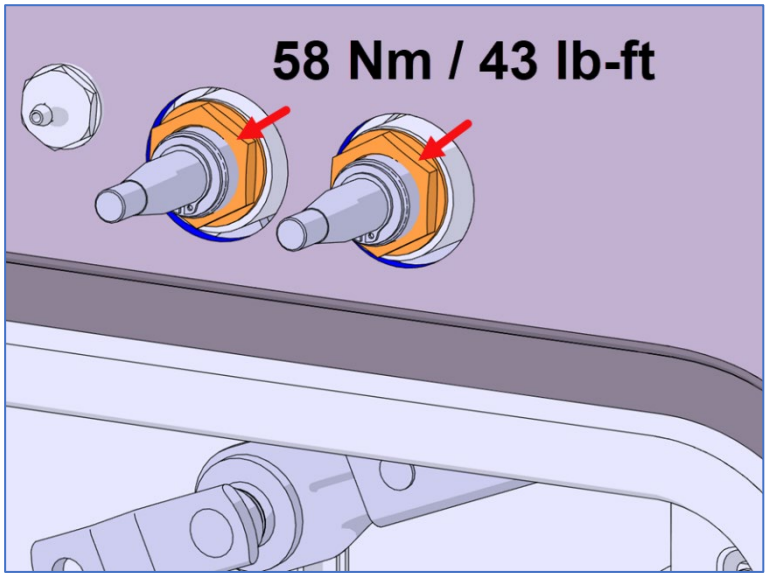


Figure 33

18. Apply butyl or Simson 70-03 sealant between the pivots and the fiber panel and smooth the joint. The sealant joint must be flush with surrounding surface.



Figure 34

## Park Position Setting

19. Perform *Park Position Setting* found in PART 1 DRIVE MOTOR REPLACEMENT.

## Linkage Connection to The Drive Motor Shaft

20. Perform *Linkage Connection to The Drive Motor Shaft* found in PART 1 DRIVE MOTOR REPLACEMENT.

## Drive Motor Bracket Installation

21. Perform *Drive Motor Bracket Installation* found in PART 1 DRIVE MOTOR REPLACEMENT.

## Wiper Arm Installation

22. Reinstall the rubber gaskets (item 2) and the plastic nuts (item 1).

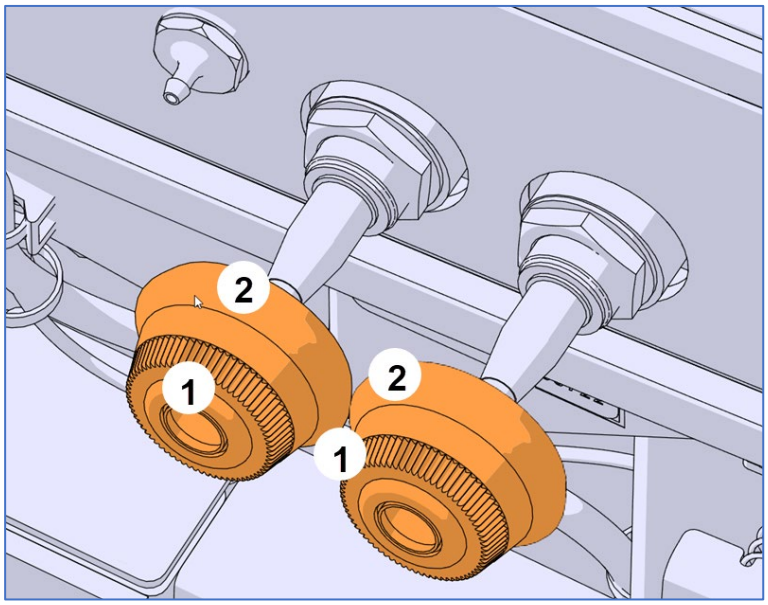


Figure 35

23. Reinstall the wiper arms, making sure the blades align with the marks made previously. Prescribed measurement is A=100 mm (4 in) from the wiper blade to the center of the windshield extrusion.

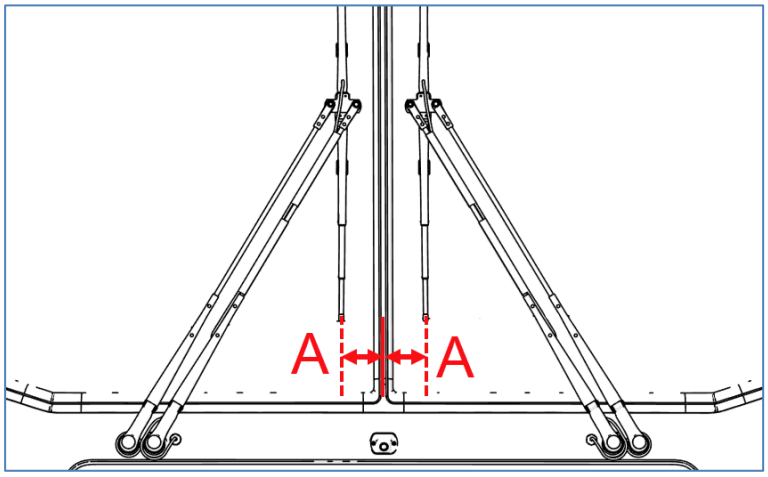


Figure 36

24. Tighten the wiper arms nut to 9 lb-ft. Pull the wiper arm and release. Make sure the blade returns at the proper position. Readjust if necessary.

25. Once proper position is achieved, tighten to 29 lb-ft.

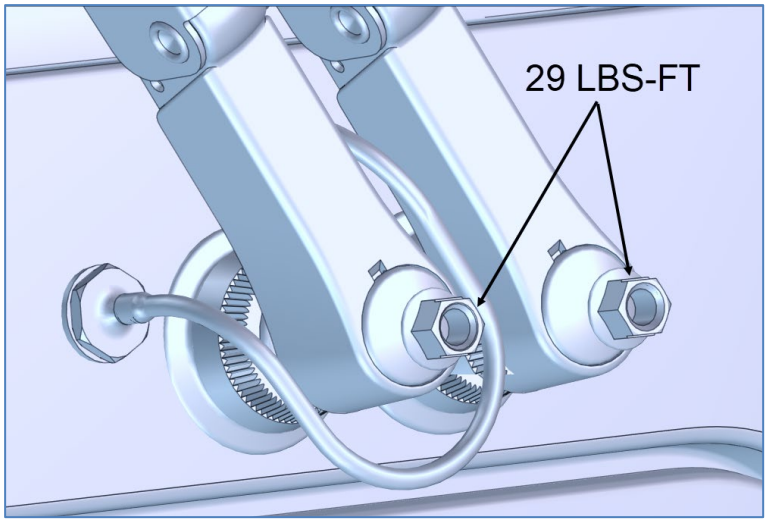


Figure 37

26. Reinstall the wiper arm nuts cap.

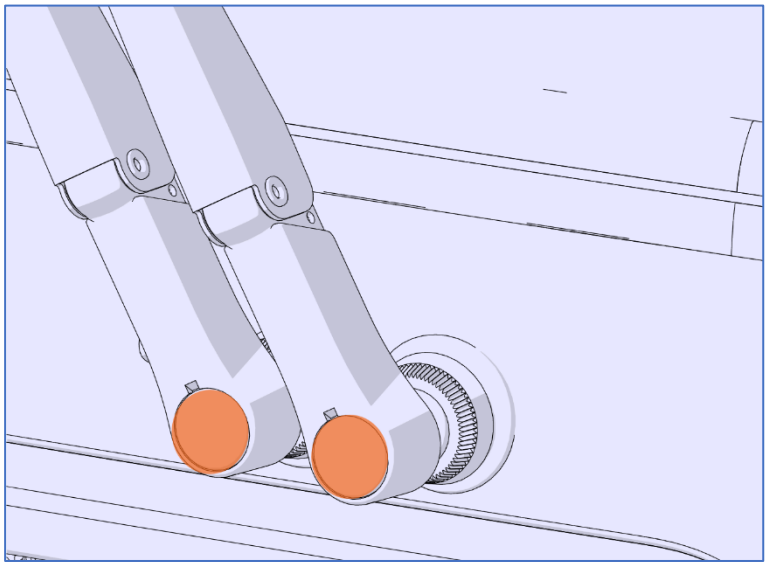

Figure 38

27. Connect the windshield washer tube.

# PARTS / WASTE DISPOSAL

Discard according to applicable environmental regulations (Municipal/State[Prov.]/ Federal)

*Access all our Service Bulletins on http://techpub.prevostcar.com/en/*
*Or scan the QR-Code with your smart phone*
.

**Are you a Vehicle owner?**
*E-mail us at **technicalpublications_prev@volvo.com** and type "ADD" in the subject to receive warranty bulletins applicable to your vehicle(s) by e-mail.*

# CONTENTS

SECTION CHANGE LOG ..... 3

**1. TORQUE TABLES ..... 4**

**2. DESCRIPTION OF AUDIO AND VIDEO SYSTEM INSTALLED ON X3-45 COACHES ..... 5**

2.1 HOW TO RECEIVE SERVICE FOR YOUR REI AUDIO AND VIDEO PRODUCTS ..... 8
2.2 DASHBOARD AM/FM RADIO ..... 9
2.3 VSS-05 SOUND SELECTOR ..... 9
2.4 VD-404 MOBILE DVD PLAYER ..... 9
2.5 MULTICHANNEL POWER AMPLIFIER VA400.8 ..... 10
2.6 SPEAKERS ..... 10
2.7 BOOM-TYPE MICROPHONE ..... 10
*2.7.1 Removal ..... 11*
*2.7.2 Installation ..... 11*
2.8 HANDHELD PRIORITY MICROPHONE ..... 11
2.9 WIRELESS MICROPHONE ..... 11
2.10 DRIVER'S SPEAKERS ..... 11
2.11 MONITOR REMOVAL ..... 12
2.12 SCENIC VIEWING SYSTEM ..... 12
2.13 ROOF ANTENNA INSTALLATION ..... 12

**3. BACK-UP CAMERA AND MONITOR ..... 13**

**4. HUB ODOMETER ..... 16**

4.1 OPERATION ..... 16
4.2 REMOVAL ..... 16
4.3 INSTALLATION ..... 16

**5. ELECTRONIC DESTINATION SIGN INSTALLED ON X3-45 COACHES (OPTIONAL) ..... 16**

**6. WINDSHIELD SUNSHADES ..... 16**

6.1 END OF STROKE ADJUSTMENT ..... 17
6.2 END OF STROKE ADJUSTMENT ON SCISSOR TYPE MOTORIZED SUNSHADES ..... 17

**7. PASSENGER SUNSHADES ..... 17**

7.1 PRELOAD ADJUSTMENT ..... 18

**8. LAVATORY INSTALLED ON X3-45 COACHES ..... 18**

8.1 LAVATORY VENTILATION FAN ..... 20
*8.1.1 Maintenance ..... 20*
*8.1.2 Removal and Installation ..... 20*
8.2 DOOR LOCK ..... 20
8.3 LAVATORY LIGHT & NIGHT-LIGHT ..... 21
8.4 EMERGENCY BUTTON ..... 21
8.5 FLUSH PUSH BUTTON ..... 21
*8.5.1 Flush push button removal and installation ..... 21*
8.6 FLUSH PUMP ..... 21
*8.6.1 Flush Pump Removal ..... 21*
8.7 SUMP TANK ..... 22
*8.7.1 Sump Tank Filling ..... 22*

*8.7.2 Sump Tank Draining ..... 23*

**9. HORN INSTALLATION ..... 23**

9.1 ELECTRIC OR AIR HORN MAINTENANCE ..... 23

**10. HEADLIGHT CLEANING SYSTEM ..... 24**

10.1 WASHER FLUID REFILLING ..... 24
10.2 WASHER NOZZLES ADJUSTMENT ..... 24

**11. WINDSHIELD WIPERS AND WASHERS ..... 25**

11.1 GENERAL DESCRIPTION ..... 25
11.2 WIPER ARM ..... 26
*11.2.1 Wiper Arms Positioning ..... 26*
11.3 WINDSHIELD WIPER MOTOR ..... 27
*11.3.1 Windshield Wiper Motor Replacement ..... 27*
11.4 TROUBLESHOOTING ..... 28

**12. TIRE PRESSURE MONITORING SYSTEM (TPMS) ..... 28**

**13. AUTOMATIC FIRE SUPPRESSION SYSTEM (AFSS) (OPTIONAL) ..... 28**

13.1 STARTING THE VEHICLE AFTER A FIRE ALARM ..... 28
13.2 PERIODIC MAINTENANCE ..... 29

**14. ELECTRIC BRAKE CONTROL SYSTEM FOR TRAILER ..... 30**

14.1 A40 CONNECTOR ..... 30
14.2 7-BLADE RV/TRAILER CONNECTOR ..... 30
14.3 VECT ..... 31

**15. WHEELCHAIR LIFT CASSETTE INSTALLATION ..... 31**

**16. WHEELCHAIR LIFT CASSETTE DISMOUNTING ..... 34**

SECTION CHANGE LOG

| | DESCRIPTION | DATE |
|---|---|---|
| 1 | | |
| 2 | | |
| 3 | | |
| 4 | | |
| 5 | | |
| 6 | | |

## 1. TORQUE TABLES

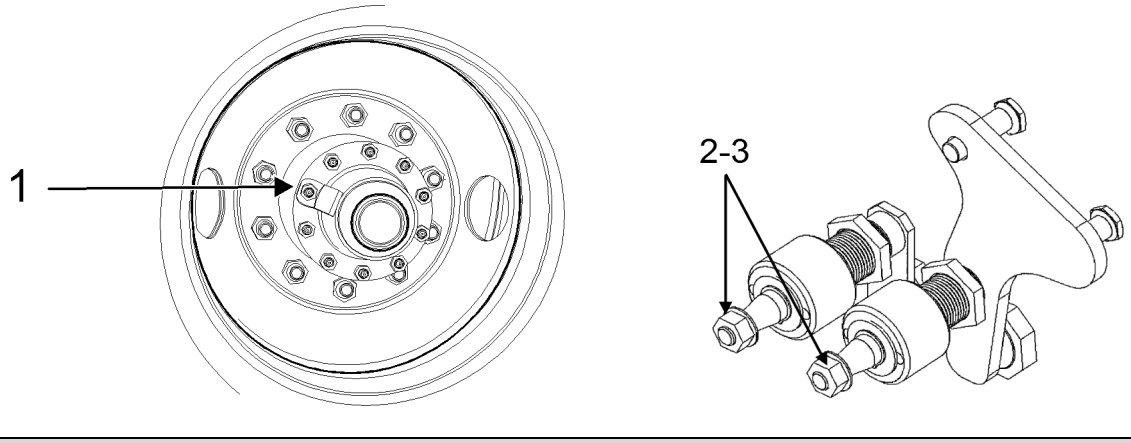


| MISCELLANEOUS | | |
|---|---|---|
| No | DESCRIPTION | TORQUE |
| 1 | Hubodometer mounting bolts | 110-165 lb-ft (149-224 Nm) |
| 2 | Wiper arm mounting bolts (first tightening) | 9 lb-ft (12 Nm) |
| 3 | Wiper arm mounting bolts (second tightening) | 22 lb-ft (30 Nm) |

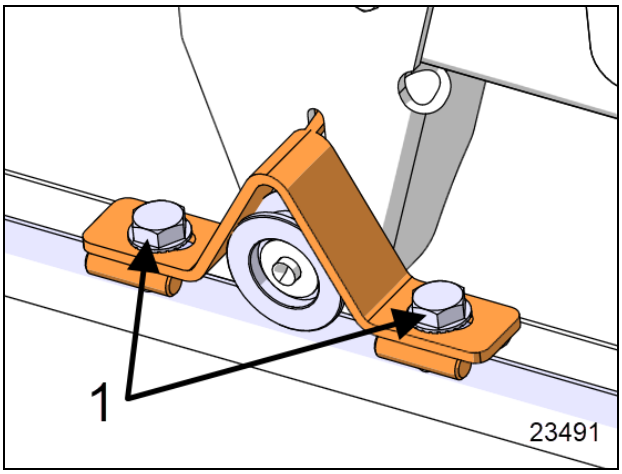


| WHEELCHAIR LIFT CASSETTE INSTALLATION | | |
|---|---|---|
| No | DESCRIPTION | TORQUE |
| 1 | WCL CASSETTE ANCHOR BOLTS | 55-65 lb-ft (75-88 Nm) |

## 2. DESCRIPTION OF AUDIO AND VIDEO SYSTEM INSTALLED ON X3-45 COACHES

The rack mounted components are gathered on the audio-video panel which is located in the first driver's side overhead compartment (Figure 1). In addition to the power amplifier, options for AM/FM radio, satellite radio, karaoke, wireless microphone, DVD, scenic view and back-up camera system and GPS Navigation System module may be featured.

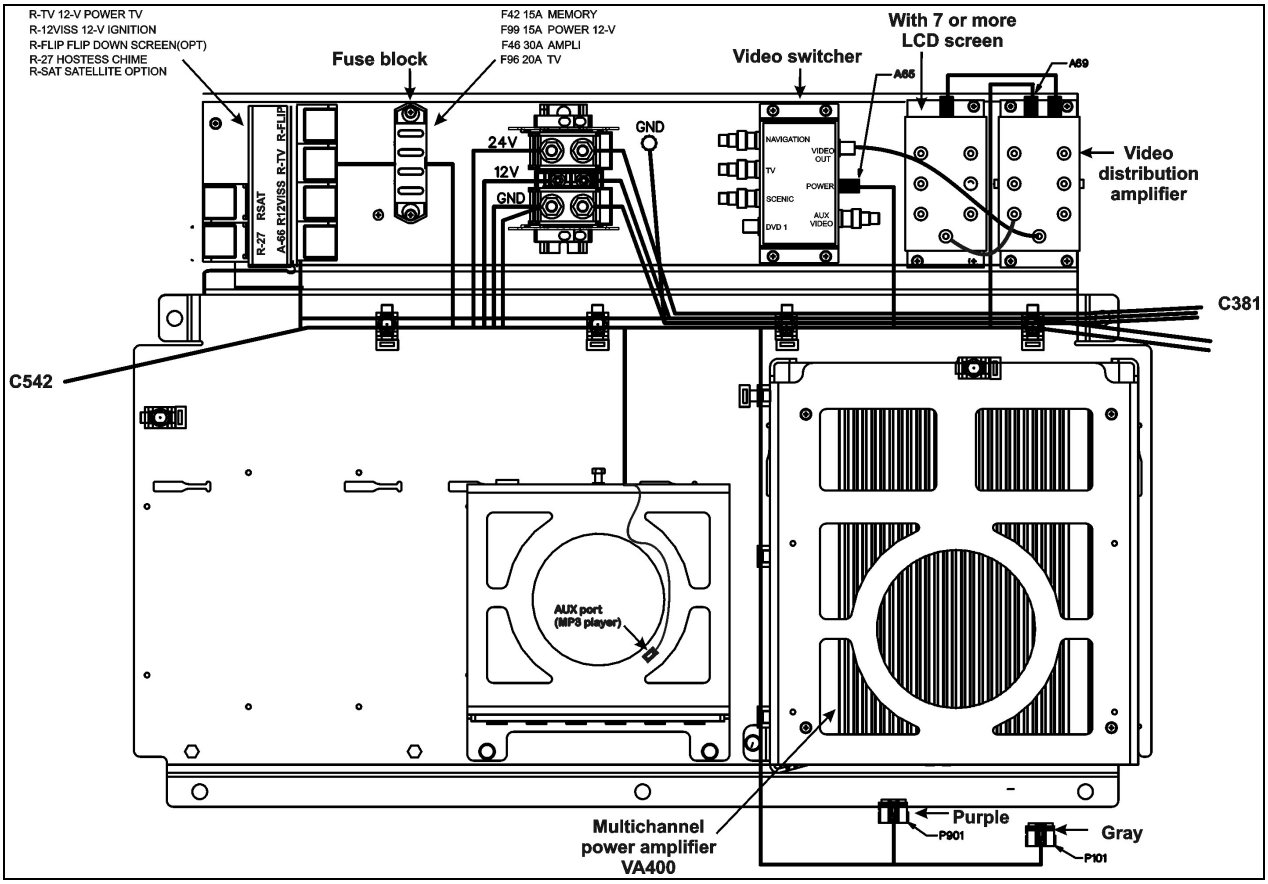


**FIGURE 1 : AUDIO-VIDEO PANEL**

Each service module mounted to the underside of the overhead compartments contains a 40-watt speaker. The speakers in the passenger section are wired in stereo and are powered by the amplifier. A microphone outlet mounted in the driver's area is provided as standard equipment.

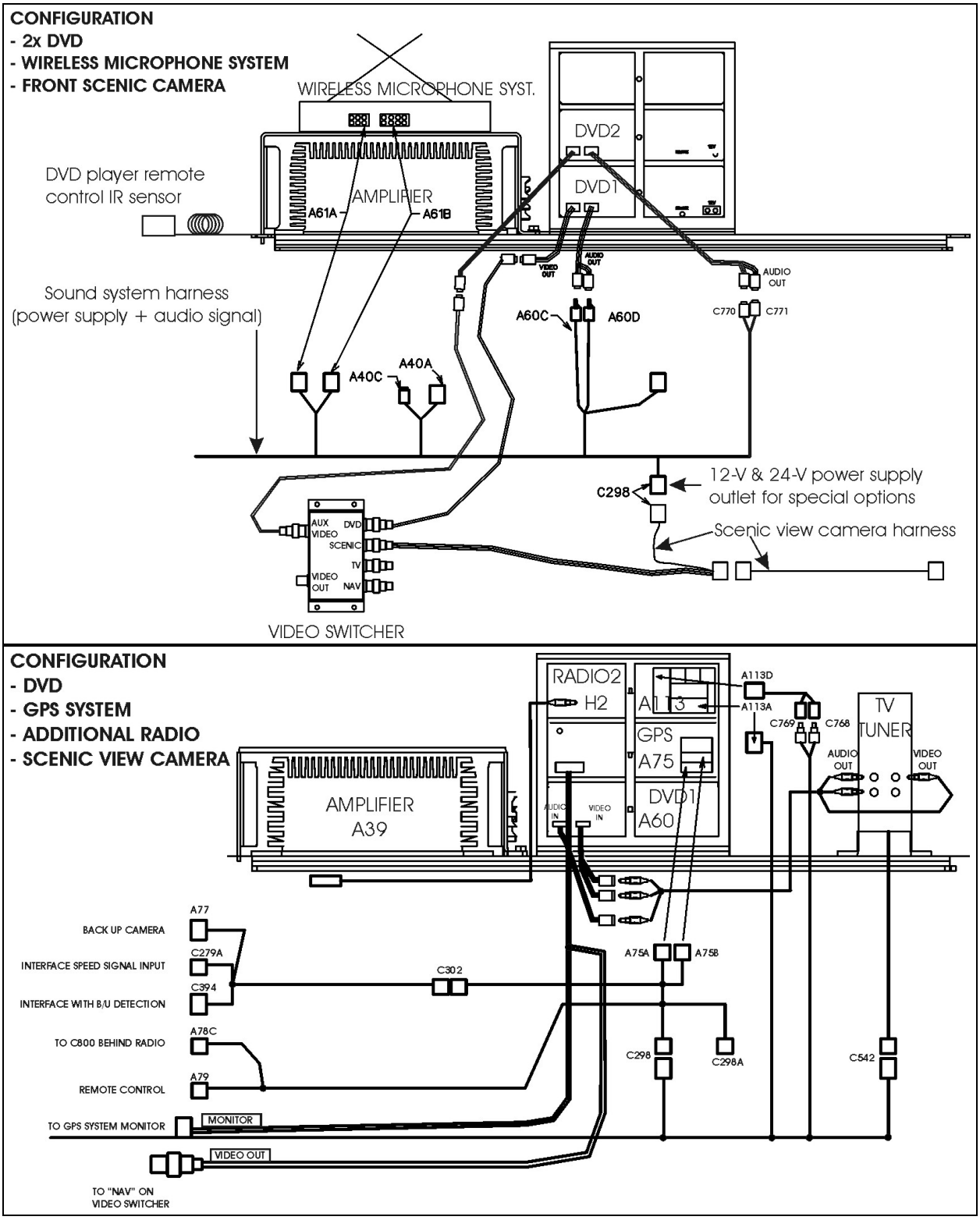


**FIGURE 2: AUDIO & VIDEO CONNECTIONS**

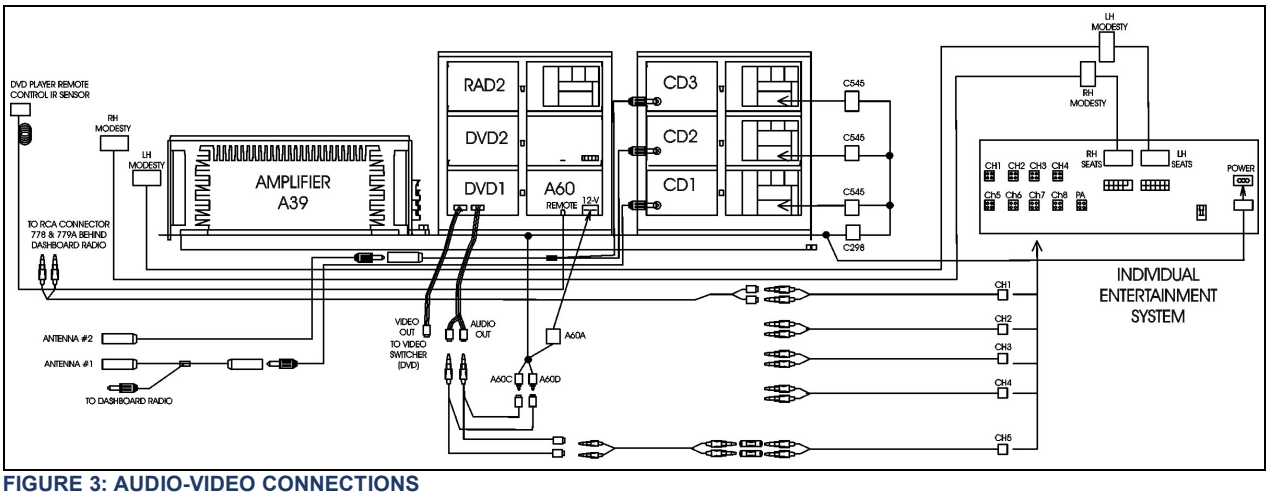


**FIGURE 3: AUDIO-VIDEO CONNECTIONS**

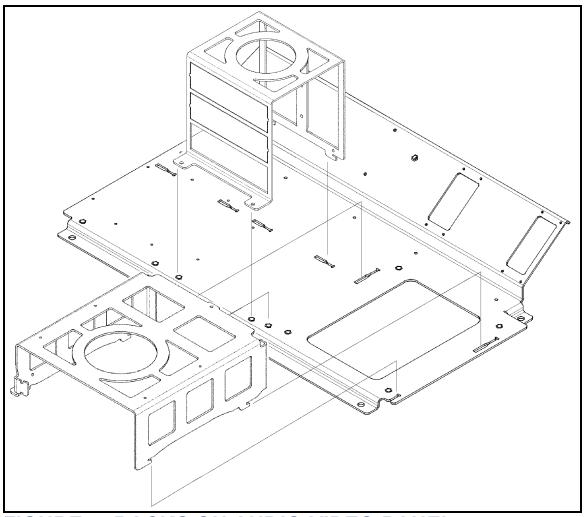

**FIGURE 4: RACKS ON AUDIO-VIDEO PANEL** 23059

## 2.1 HOW TO RECEIVE SERVICE FOR YOUR REI AUDIO AND VIDEO PRODUCTS

For assistance in obtaining service for REI products call toll free 877-726-4617 (Continental United States and Canada) between the hours of 7:00 A.M. - 5:00 P.M. CST Monday thru Friday (excluding Holidays).

Prior to calling REI, please have the part number, serial number, VIN number and detailed description of the problem ready to provide to the REI service representative. After providing information to REI, customers will be issued a return authorization number. When the REI service representative provides the return authorization number, they will also give instructions for returning the item. Any discrepancies in following this procedure may cause delays in the process.

**24/7** Tech Support

**CALL 1-877-726-4617**

E-Mail to technicalsupport@radioeng.com

**REI Authorized Repair Facilities**

REI
6534 L Street
Omaha, Nebraska 68117

REI
1376 Bennett Drive, Unit 126
Longwood, Florida 32750

REI products that may be installed in your coach:

MONITOR, LCD 10.4”
MONITOR, COLOR BACK-UP CAMERA
MONITOR, LCD 15.4”
MONITOR, CENTRAL LCD 15.4”
MONITOR, FLIP19”
MONITOR, 16:9 LCD 15.4”
MONITOR, 16:9 CENTRAL LCD 19”
INDIVIDUAL ENTERTAINMENT SYSTEM
AMPLIFIER, 8-CHANNEL
DVD PLAYER
DVD REMOTE CONTROL
CAMERA, COLOR BACK-UP
CAMERA, COLOR PANORAMIC
MICROPHONE, 10” CB TYPE
MICROPHONE, WIRELESS
RECEIVER, WIRELESS MIC 16-CHANNEL

## 2.2 DASHBOARD AM/FM RADIO




**FIGURE 5: DASHBOARD AM/FM RADIO**

| *NOTE* |
|---|
| *Before attempting to solve an electrical problem on the sound system, refer to the wiring diagrams.* |

Refer to your vehicle Operator Manual for radio operating instructions.

- Removal/Installation

To remove the radio from its location, proceed as follows:

- Place the ignition switch in the ''OFF'' position.
- Remove the dashboard cover.
- Disconnect the electrical cable connectors from radio and unfasten back plate securing nuts/screws.
- To separate the radio from its support, insert the removal tool #20584494 in the holes found each side of the radio front panel.
- Push the unit through the front dashboard panel.
- Install a new unit by reversing the procedure.

## 2.3 VSS-05 SOUND SELECTOR

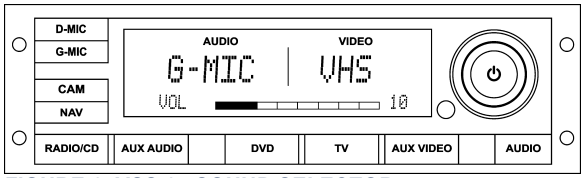


**FIGURE 6: VSS-05 SOUND SELECTOR**

- Removal/Installation

To remove the Sound Selector from its location, proceed as follows:

* Place the ignition switch in the ''OFF'' position.
* Remove the dashboard cover.
* Disconnect the electrical connectors from unit and unfasten back plate securing nut/screw.
* To separate the Sound Selector from its support, insert the removal tool #20584494 in the holes found each side of the unit front panel.
* Push the unit through the front dashboard panel.
* Install a new unit by reversing the procedure.

The operating instructions are included in your vehicle Operator's Manual.

## 2.4 VD-404 MOBILE DVD PLAYER




**FIGURE 7: VD-404 MOBILE DVD PLAYER**

The MOBILE DVD PLAYER is located in the first parcel compartment on the driver's side. Instructions for proper use of this unit are found on your technical publications USB flash drive.

Features:

- POWER

  Operating voltage: 12-volt DC

- COMPATIBILITY

  This DVD player can play the following disc formats:
  DVD, CD, VCD, DVCD, MP3, CD-R, CD-RW

- SYSTEM FUNCTIONS

  Video output system: system MULTI, NTSC or PAL switchable.
  1 L/R audio output
  1 L/R audio input
  1 AUX video output
  1 rear camera video input

3 video outputs with one dedicated self-switching rear view monitor

- ADDITIONAL VIDEO FEATURES

Multi-angle, multi-view, multi-audio function, multi-level forward and backward motion, play position memory, resume stop and repeat function.

## 2.5 MULTICHANNEL POWER AMPLIFIER VA400.8

This 400-watt, 6-channels brings an added dimension to your stereo equipment and increases the total output of the system.

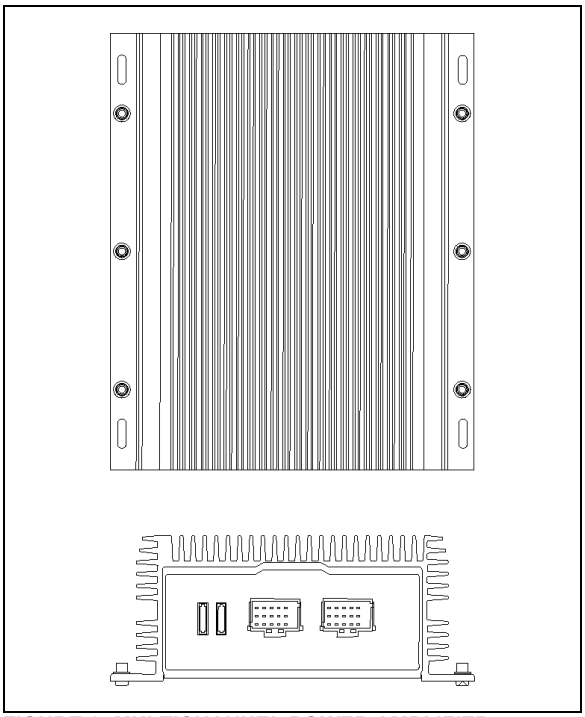

FIGURE 8: MULTICHANNEL POWER AMPLIFIER

For optimum sound quality, adjust the subwoofer crossover filter as shown on figure 9. This adjustment is necessary to balance the subwoofers volume in respect to the other speakers and also to cut high frequencies for a better sound quality.

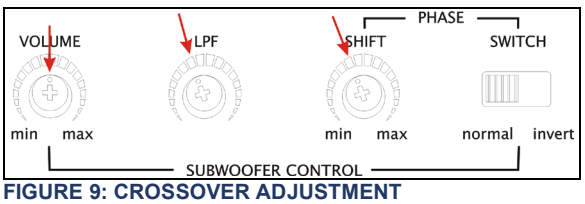


FIGURE 9: CROSSOVER ADJUSTMENT

## 2.6 SPEAKERS

Each passenger's overhead console mounted to the underside of the overhead compartments contains a 20-watt Dual cone or coaxial 10cm speaker. The speakers in the passenger's section, wired in stereo and arranged in a delta configuration are powered by the amplifier.



FIGURE 10: 10CM COAXIAL SPEAKER

The vehicle may be equipped with two additional Hi-Fi speakers in the driver's area, mounted one on each side. This arrangement provides the driver with a clear stereo sound. Controls for the driver's audio are performed through the dashboard AM/FM radio.

Two specially designed subwoofers may be fixed as an option under a passenger seat with anti-vibration supports.

## 2.7 BOOM-TYPE MICROPHONE

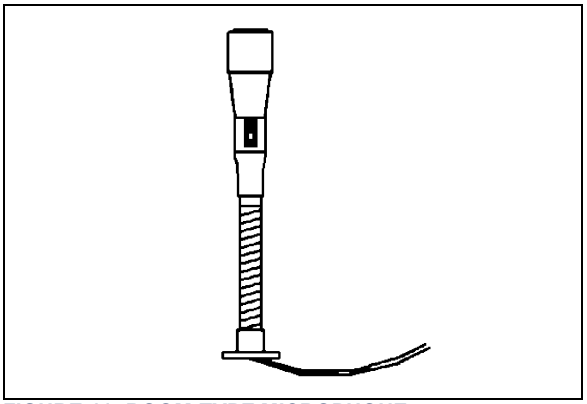

FIGURE 11: BOOM-TYPE MICROPHONE 23083

### 2.7.1 Removal

1. Place the ignition switch in the ‘‘OFF’’ position.
2. Remove the mounting screws at mounting flange.
3. Disconnect wiring.

### 2.7.2 Installation

1. Reconnect wiring.
2. Align mounting flange with holes and install screws.
3. Remove spacer block mounting screws.
4. Insert spacer block and install mounting screws.
5. Place the ignition switch in the ‘‘ON’’ position.

## 2.8 HANDHELD PRIORITY MICROPHONE

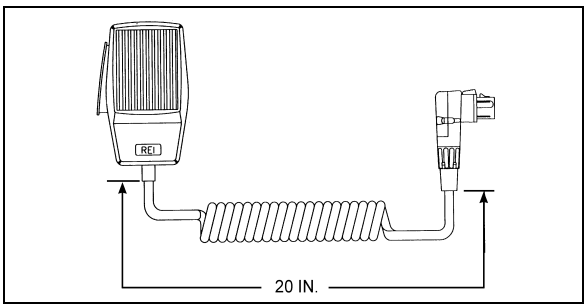


**FIGURE 12: HANDHELD PRIORITY MICROPHONE** 23216

## 2.9 WIRELESS MICROPHONE

The wireless microphone, receiver and charging cradle are custom designed units that allow for wireless communication from anywhere on the coach. The unit consists of a receiver mounted in the parcel area directly behind the driver, and a rechargeable hand-held microphone and charging unit. Instructions for proper use of the microphone are included in the *‘’REI Operating Manual’’* which is provided in the technical publications box delivered with the vehicle.

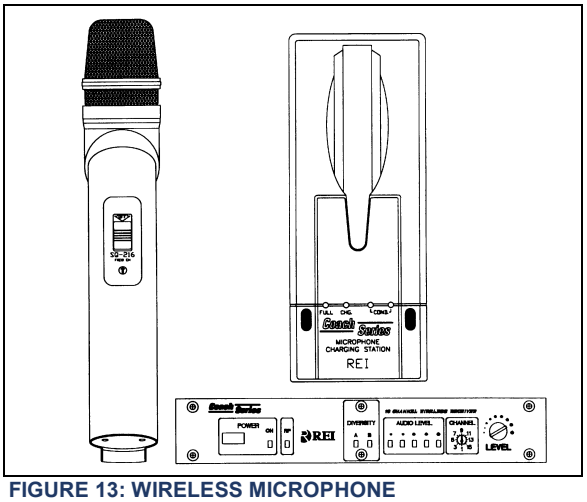


**FIGURE 13: WIRELESS MICROPHONE**

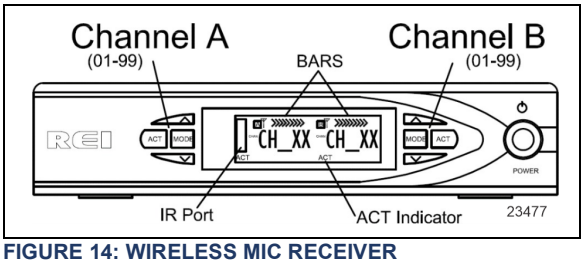


**FIGURE 14: WIRELESS MIC RECEIVER**

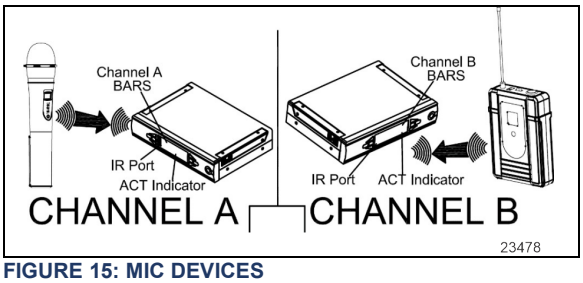


**FIGURE 15: MIC DEVICES**

Handheld mic always pairs to channel A and belt pack mic always pairs to channel B.

To pair microphone to receiver:

- Press ACT button for appropriate channel. ACT indicator on receiver display will blink to show the receiver is searching for the device to be paired.
- Turn device on and face the IR ports towards the display on the receiver.
- When device has paired, there will be bars across the top edge of the receiver display for the appropriate channel.

## 2.10 DRIVER’S SPEAKERS

The driver’s speakers are mounted one on each side. This arrangement provides the driver with

clear stereo sound. Controls for the driver's audio allow selection between the radio and the auxiliary audio (independent of the passenger's speakers) or muting the speakers.

## 2.11 MONITOR REMOVAL

1. Place the ignition switch in the ''OFF'' position.
2. Unfasten the retaining screw located on the monitor R.H. side.
3. Slide the monitor to the right to release it from the mounting bracket.

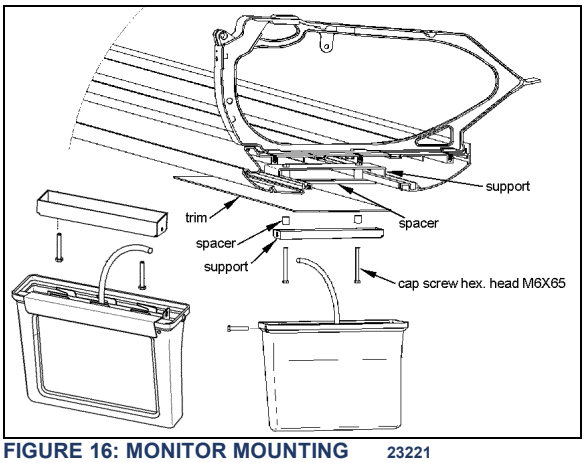


**FIGURE 16: MONITOR MOUNTING** 23221

## 2.12 SCENIC VIEWING SYSTEM

The scenic viewing system enables the passengers to view the road ahead of the vehicle. This system is composed of a camera, a dashboard mounted ON/OFF switch and the video switcher located on the audio-video panel (Figs. 1 & 17).

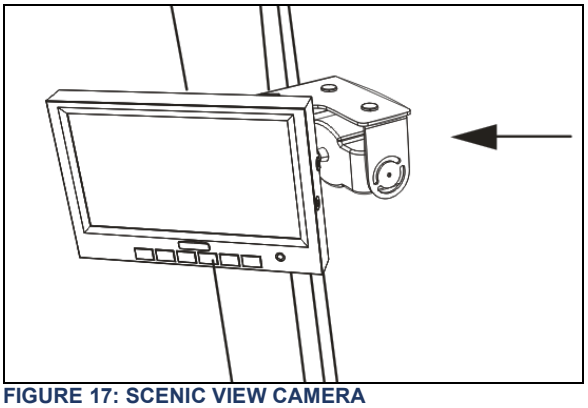

**FIGURE 17: SCENIC VIEW CAMERA**

## 2.13 ROOF ANTENNA INSTALLATION

1. Find the desired location and drill a hole according to specification.
2. To remove dirt and grease, wash edge of hole with alcohol.
3. If so equipped, remove foam padding ring from antenna to free the metal surface (foam can produce air bulbs in new rubber seal).
4. With SIKA 205, wash the opening edge and the antenna base surface, wait at least two (2) minutes for chemical evaporation.
5. Apply new seal SIKA 221 on both, vehicle hole edge and antenna base.
6. Fix the antenna in place.
7. Remove excess seal and complete a finishing joint all around the antenna base.

## 3. BACK-UP CAMERA AND MONITOR

An optional back-up camera is available which provides the driver with visual assistance when backing-up. The camera is automatically activated when the transmission is put in reverse gear and the ignition switch is "ON".

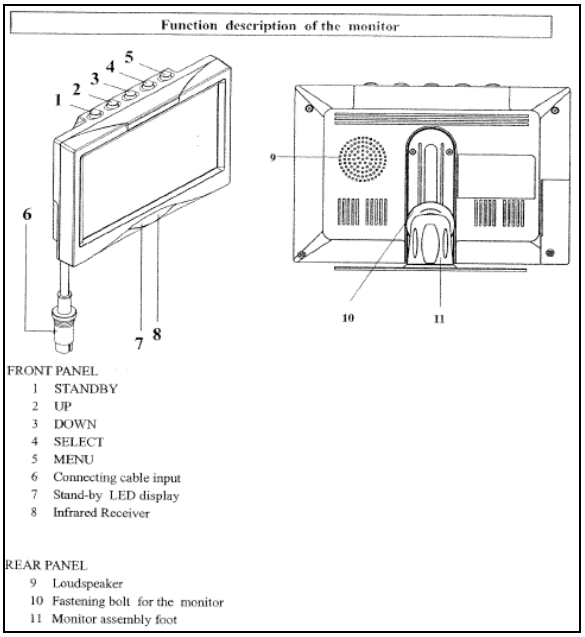


### BUTTON DESCRIPTION

**1) STANDBY:** On/Off switch

**2) UP:** This key has 3 functions

- Increase of the volume during normal operation;
- Modification of the setting within a function e.g. contrast (after calling up the menu);
- By pressing this key when putting in the reverse gear, the distance markings move upwards;

**3) DOWN:** This key has 3 functions

- Decrease of the volume during normal operation;
- Modification of the setting within a function e.g. contrast (after calling up the menu);
- By pressing this key when putting in the reverse gear, the distance markings move downwards;

**4) SELECT:** This key has 3 functions

- Selection of the video sources (CA1→ CA2 → AV → CA1). Press less than 1.5 seconds;
- Selection of the functions e.g. picture setting (after calling up the menu);
- Deleting and calling OSD letters of title & time (press longer than 1.5 seconds) during normal operation;

**5) MENU:** This key has 2 functions

- Activation of the dimmer function (press less than 1.5 seconds) during normal operation;
- Calling up the menu (press longer than 1.5 seconds, four menus can be called up). Press the key once again to call up the individual menus;
  a) PICTURE= Functions for the image setting;
  b) USER= Selection of the system function;
  c) TIME= Setting time and date;
  d) INSTALL= Setting the camera function (e.g. mirror function);

**6) BUSH FOR THE MONITOR CABLE OF THE CONNECTION BOX**

**7) STANDBY DISPLAY**

**8) INFRARED RECEIVER**

### MONITOR MENU DISPLAY

The monitor (RV59 HD) is equipped with an On-Screen Display (OSD) function which displays date, camera, channel, mirror mode and distance markings. These functions can be selected on MENU. To calling up the menu, press longer than 1.5 seconds. Four menus can be called up. Press the key once again to call up the individual menus.
For calling up the menu PICTURE press the key **MENU** longer than 1.5 seconds. The menu PICTURE appears.

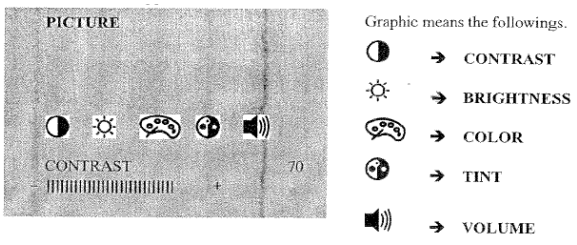

Select the function (e.g. contrast) by pressing the key **SELECT** repeatedly. The setting within the function can be modified with the keys **UP** and **DOWN**.

For calling up the menu USER press the key **MENU** once again. The menu USER appears. Select the function (e.g. SELECTION) by pressing the key **SELECT** repeatedly as necessary. The setting within the function can be modified with the keys **UP** and **DOWN**.

| **USER** | SETTINGS |
|---|---|
| LANGUE ENG | ENGLISH/GERMAN (ENG/DEUT) |
| SCREEN WIDE | NOR 4:3, picture format 4:3<br>WIDE, picture format 16:9<br>FULL, picture format 16:9<br>middle enlarge |
| TITLE ON | TITLE: CAMERA TITLE DISPLAY ON/OFF |
| TIME ON | TIME: TIME DISPLAY ON/OFF |

For calling up the menu TIME press the key **MENU** once again. The menu TIME appears. Select the function (e.g. DATE) by pressing the key **SELECT** repeatedly as necessary. The setting within the function can be modified with the keys **UP** and **DOWN**.

| **TIME** | OPERATION |
|---|---|
| TIME 08:25 | Hour-Month adjustable by UP BUTTON |
| DATE MAY01 | Minute/Date adjustable by DOWN BUTTON |
| YEAR 2005 | Year adjustable by UP/DOWN BUTTON |

For calling up the menu INSTALL press the key **MENU** once again. The menu TIME appears. Select the function (e.g. SELECTION) by pressing the key **SELECT** repeatedly as necessary. The setting within the function can be modified with the keys **UP** and **DOWN**.

| **INSTALL** | POSSIBLE SETTINGS: |
|---|---|
| REAR CAM1 | Selection of priority camera (CAM1 or CAM2) which is triggered by rear gear. |
| CAM1 MIR | Selection of real picture or mirrored picture for camera 1. |
| CAM2 NOR | Selection of real picture or mirrored picture for camera 2. |

NOTE 1

The distance mark will appear on the picture of camera which set as MIR (mirrored).

NOTE 2

Engaging the reverse gear, only distance mark will appear on the mirrored camera picture without any OSD. At the moment, no keys are available except UP/DOWN key for moving distance bar.

## BACK-UP CAMERA MODULE (Power box)

The connection line consists of 6 branch lines as below:

| | |
|---|---|
| RED | Voltage supply 12-volt to 24-volt (max. 32-volt) |
| BLACK/BROWN | Earth cable |
| WHITE | Control wire for switching on the dimmer function (night operation) |
| YELLOW | Control wire for switching on the side camera. The connection is to be made at the INDICATOR |
| ORANGE | Control wire for switching on the reversing camera. The connection is to be made at the reversing light |

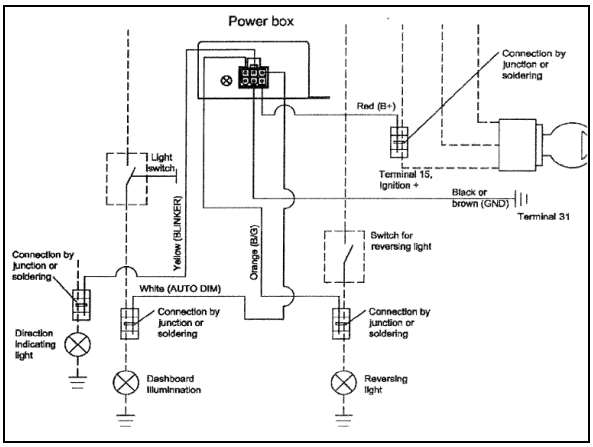

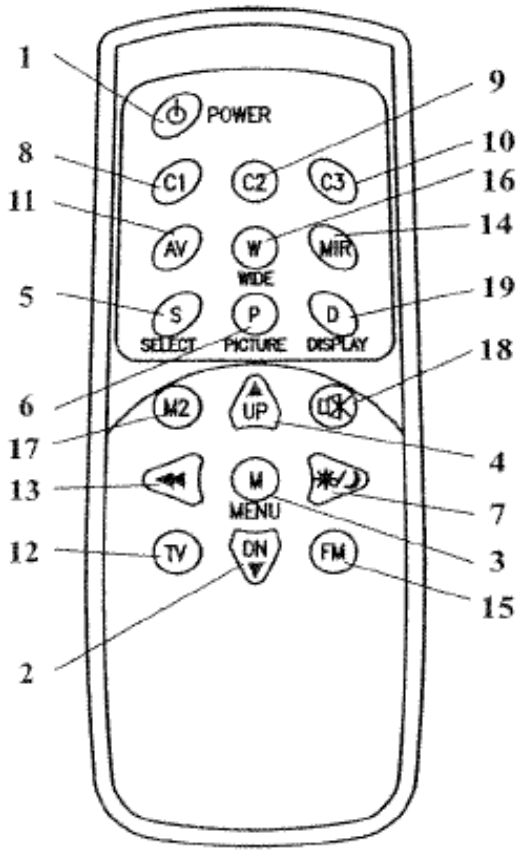


| No | Key | Description |
|---|---|---|
| 1 | STANDBY | On/Off switch |
| 2 | DOWN▼ | This key has 3 functions.<br>– Decrease of the volume during normal operation.<br>– Modification of the setting within a function e. g. brightness (after calling up the menu).<br>– By pressing this key when putting in the reverse gear the distance markings move downwards. |
| 3 | MENU | Calling up the menu on the screen. Three menus can be called up :<br>a: PICTURE = Functions for the image setting<br>b: USER = Selection of the system function<br>c: TIME = Setting time and date<br>d: INSTALL = Setting the camera function (e.g. mirror function) |
| –4 | UP ▲ | This key has 3 functions.<br>– Increase the volume during normal operation<br>– Modification of the settings within a function e. g. contrast (after calling up the menu)<br>– By pressing this key when putting in the reverse gear the distance markings move upwards. |
| 5 | SELECT | This key has 2 functions<br>Selection of the video sources (CA1→CA2→AV)<br>Selection of the functions e.g. picture setting (after calling up the menu) |
| 6 | PICTURER | Calls up the functions CONTRAST, BRIGHTNESS etc. directly for the picture setting. Carry out the setting with the key UP or DOWN. |
| 7 | DIMMER | Regulates the brightness to night operation temporarily |
| 8 | C1 | Selection of the camera 1 |
| 9 | C2 | Selection of the camera 2 |
| 10 | C3 | Selection of the camera 3 (camera input 3 is not available)) |
| 11 | AV | Selection of the video input (RCA) |
| 12 | TV | Not available |
| 13 | SEARCH | Not available |
| 14 | MIRROR | Reversing left and right of picture temporarily |
| 15 | FM | Not available |
| 16 | WIDE | Setting of the screen format<br>NOR/NOR: 4:3, picture format 4:3<br>WIDE/WEIT, picture format 16:9<br>FULL/BREIT, picture format 16:9 middle enlarged |
| 17 | MONITOR2 | Not available |
| 18 | MUTE | Switches off the tone temporarily |
| 19 | DISPLAY | This key has 2 functions<br>– Deleting or calling OSD letters of Tile & Time temporarily<br>– Leaving the menu |

## 4. HUB ODOMETER

An optional wheel hub odometer (Figure 18) may have been installed on the R.H. side of the drive axle. It indicates the total distance in miles or kilometers covered by the coach since it has left the factory, including road testing.

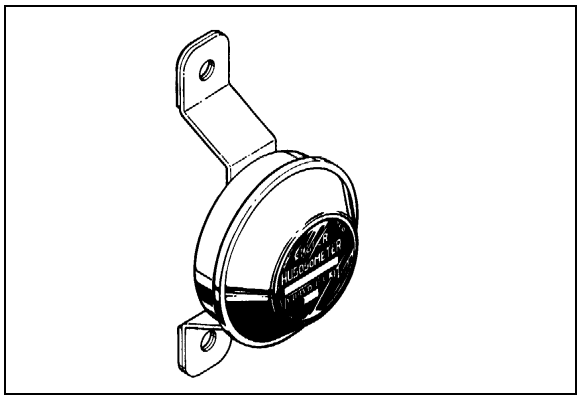

FIGURE 18: HUB ODOMETER 23024

### 4.1 OPERATION

The hub odometer is calibrated for a specific wheel size (diameter). Wheel rotation causes a mechanism inside the hub odometer to record distance after a predetermined number of rotations. The unit should be serviced at a competent speedometer repair facility.

| NOTE |
| --- |
| *Do not use paint, solvent or thinner on hub odometer face or on plastic hubcaps. Do not weld on hub odometer.* |

### 4.2 REMOVAL

To remove the unit, remove the two lock nuts and washers securing it to the wheel hub, and pull the unit off the studs.

### 4.3 INSTALLATION

Place the hub odometer unit over the wheel hub studs. Replace the lock washers and nuts. Torque stud nuts.

**TORQUE: 110-165 lb-ft (149-224 Nm)**

## 5. ELECTRONIC DESTINATION SIGN INSTALLED ON X3-45 COACHES (OPTIONAL)

The optional destination sign is located at upper front of the vehicle. To change the destination, depress the selecting switches until the desired destination appears in the LCD display.

| NOTE |
| --- |
| *LCD display may be located at the back of the destination sign (series 600) or on the vehicle modesty panel (430 series). Refer to the corresponding supplier's operating manual for more information regarding operation and maintenance of the destination sign.* |

| NOTE |
| --- |
| *A data file must be loaded into the destination sign control unit before operating the system on the road. Insert the supplied USB key in the display USB port to automatically start the process.* |




FIGURE 19: DESTINATION SIGN LCD DISPLAY (SERIES 600 SHOWN) 23123-1

## 6. WINDSHIELD SUNSHADES

Two electrically operated sunshades are installed in the driver's area at the top of the windshields.

Control buttons are located on the steering wheel and the dashboard to operate sunshades individually. Refer to Operator's Manual: "Controls and Instruments" chapter for more information.

| ⚠ CAUTION |
| --- |

*Pulling down manually on the sunshade may damage the mechanism.*

## 6.1 END OF STROKE ADJUSTMENT

The sunshades end positions are factory pre-adjusted. If an adjustment is required, proceed as follows:

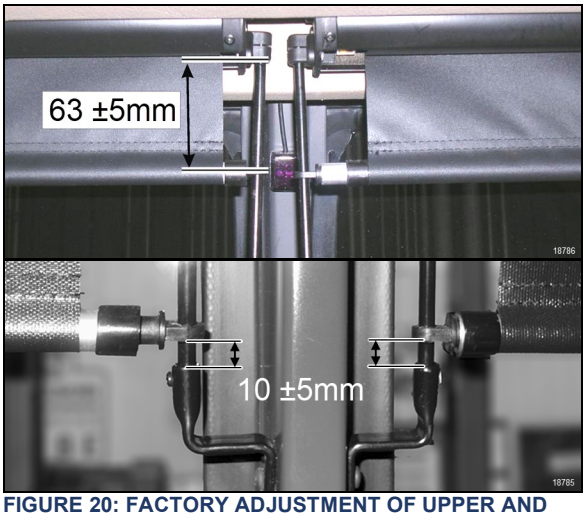


**FIGURE 20: FACTORY ADJUSTMENT OF UPPER AND LOWER END POSITION**

1. Place the ignition key to the ON position.
2. Move sunshade to within 10mm of the upper or lower end position.
3. On the sunshade roller end, there are two end of course setting buttons.
4. *White* button is for setting the *upper* end of course, *black* button is for *lower* end of course.

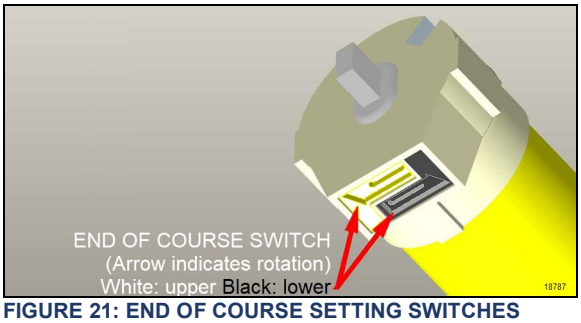


**FIGURE 21: END OF COURSE SETTING SWITCHES**

5. Insert a small screwdriver and depress the corresponding button. Release when you hear a click.
6. Use the sunshade dash button to adjust to the desired position by small pulses. The dash buttons provide a finer control than the steering wheel button.

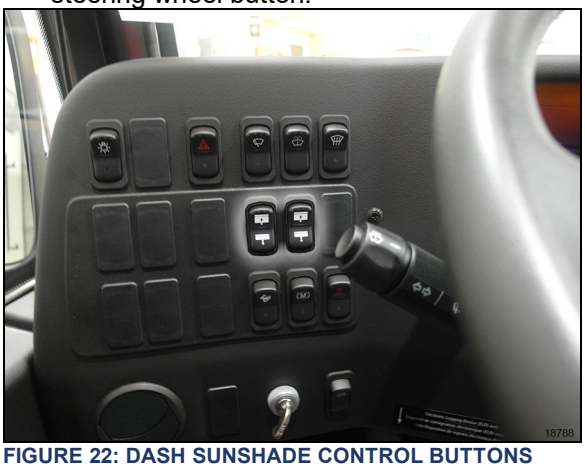


**FIGURE 22: DASH SUNSHADE CONTROL BUTTONS**

7. When satisfied with the position, depress the end of course button on the sunshade. With a screwdriver. Release when you hear a click (Figure 21)
8. Press twice on the steering wheel control button to move the sunshade to the other end of stroke position.
9. Proceed to fine adjustment of the other position by repeating steps above.

## 6.2 END OF STROKE ADJUSTMENT ON SCISSOR TYPE MOTORIZED SUNSHADES

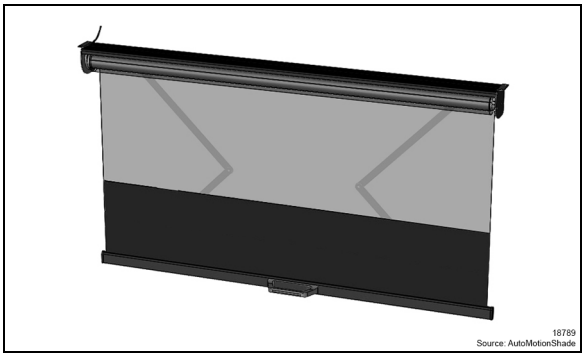


**FIGURE 23: MOTORIZED SCISSOR TYPE SUNSHADE**

Refer to AutoMotionShade quick reference guide provided on Prevost Technical Publications web site to adjust the motor limits.

# 7. PASSENGER SUNSHADES

Manually operated passenger sunshades are factory installed on some vehicles. The sunshades are pulled down and can be locked in the window side moldings at half or full close position.

To release, simply disengage the sunshade from the moldings and release. Spring tension will pull back the sunshade to the full open position.

Correct spring tension is set at the factory and should not need further adjustment.

However, if for any reason a sunshade has to be removed from the vehicle, preloading of the recoil mechanism will be required before re-installation to ensure that the sunshade returns to the full open position when released.

### 7.1 PRELOAD ADJUSTMENT

Using the chart below, preload the sunshade mechanism before installing the sunshade in the window support.

| *NOTE* |
| --- |
| *When installed, lower the sunshade 6po (15cm) and release. The sunshade should retract freely to the full open position. Re-adjust preload as needed.* |

| Sunshade Type | Req. Preload |
| --- | --- |
| Std Sunshade | 12 turns |
| Large WCL Sunshade | 12 turns |

## 8. LAVATORY INSTALLED ON X3-45 COACHES

The lavatory is located in the rear curb side corner of the coach. It is equipped with a chemical flush toilet, bathroom tissue dispenser, mirror and waste container access.

A movement detector will automatically illuminate a fluorescent light inside the lavatory and two outside occupied signs. One sign is located on the outer wall of the lavatory and another sign is located over the windshield. A telltale light on the dashboard will also illuminate to inform the driver when the lavatory is occupied.

If emergency assistance is required, the lavatory occupant can actuate a buzzer that will sound in driver's area. The buzzer push-button is located just below the toilet flush button.

The lavatory has its own ventilation system that operates only when ignition switch is in the "ON" position.

| *NOTE* |
| --- |
| This fan runs constantly when the ignition switch located on the dashboard is in the "ON" position. |

Also, a drain hole located on lavatory floor drain water splashed on the floor to the engine compartment R.H. side.

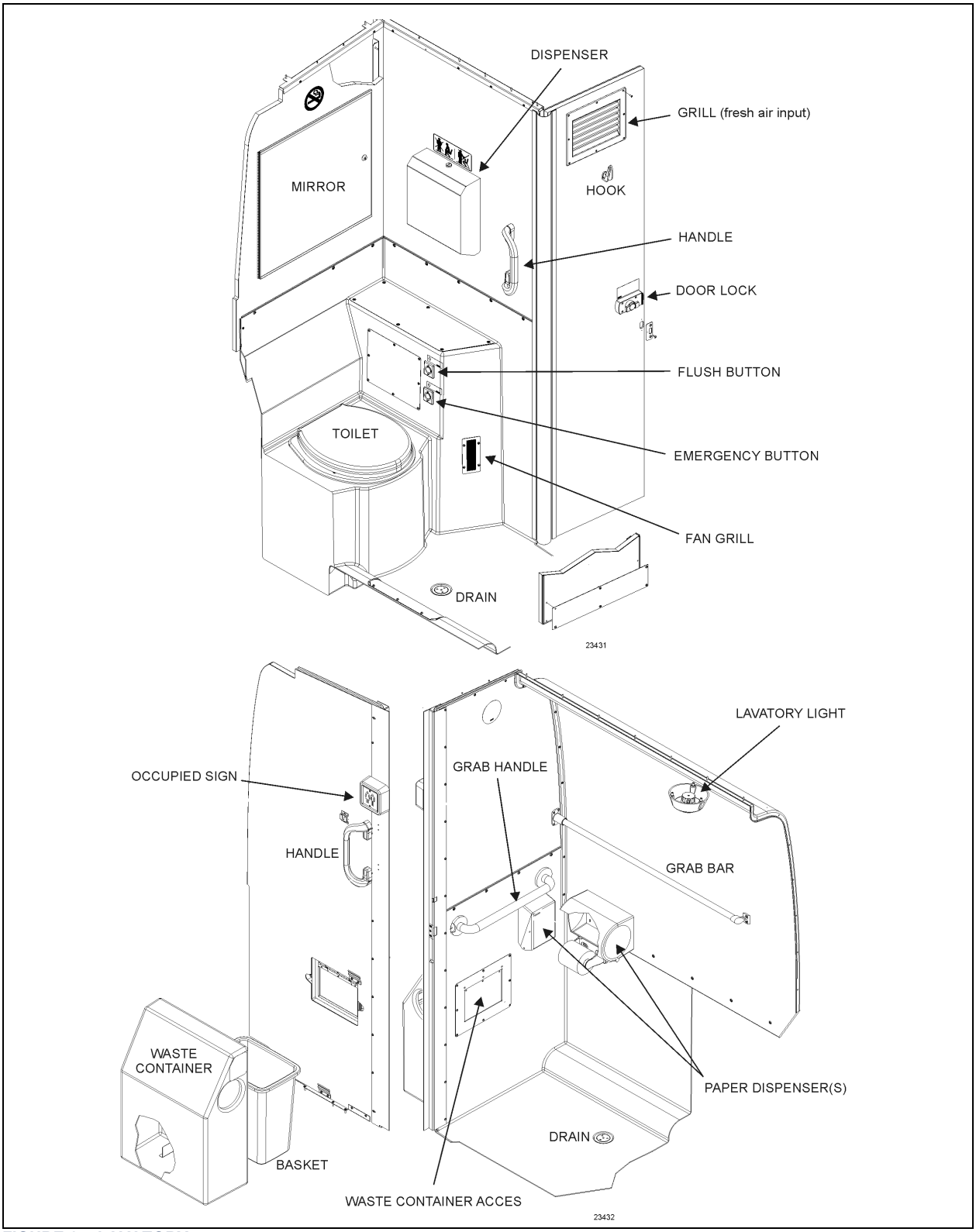


**FIGURE 24: LAVATORY**

## 8.1 LAVATORY VENTILATION FAN

The lavatory ventilation fan (Figure 25), mounted in engine compartment, serves two purposes. It exhausts objectionable odors and provides a constant air circulation in the lavatory compartment by heating or cooling the lavatory with the vehicle ambient air. Air flows in the lavatory compartment through a vent grill located on the lavatory door and exhausts through a grill located next to the toilet.

| *NOTE* |
| --- |
| *This fan runs constantly when the ignition switch located on the dashboard is in the "ON" position.* |

### 8.1.1 Maintenance

The frequency of preventive maintenance should be determined according to vehicle mileage and operating conditions. However, it is recommended to check this item every 50,000 miles (80 000 km) or once a year, whichever comes first.

Remove fan and motor assembly. Check for fan housing wheel and motor free operation. When defective motor occurs, new motor must be installed.

### 8.1.2 Removal and Installation

1. Open SRC access door *(refer to Section 2 of the Operator's Manual under Exhaust Aftertreatment System Access Door).*
2. Locate fan assembly and disconnect the fan wiring connector.
3. Remove the fan shroud mounting screws and remove the ventilation fan assembly from its location.
4. The unit can now be disassembled and the motor and components replaced as necessary.
5. Reverse previous steps to reinstall fan assembly on vehicle.

| *NOTE* |
| --- |
| *Make sure fan shroud seal is in good condition prior to installation, replace as necessary* |

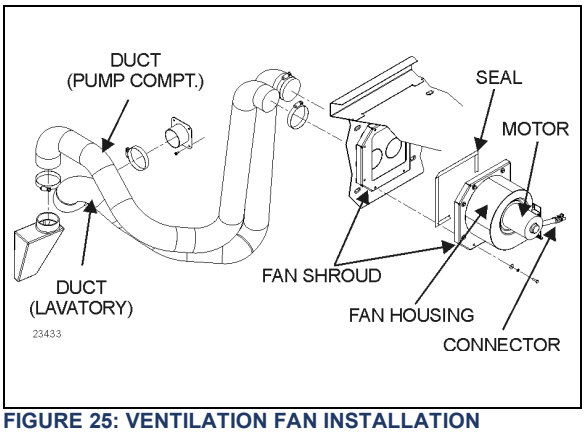


**FIGURE 25: VENTILATION FAN INSTALLATION**

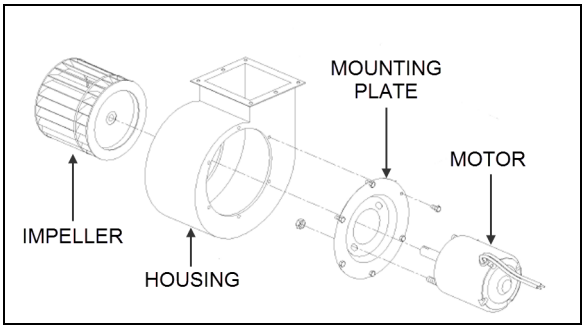


**FIGURE 26: FAN ASSEMBLY COMPONENTS**

## 8.2 DOOR LOCK

Lavatory door lock has inside and outside handles, as well as an inside latch to lock door from inside the compartment. If the lock fails to release, the door can be opened from the outside using a special key which is supplied to the driver. Lock assembly can be removed from the door; a thin coat of lubricant on all moving parts will ensure trouble-free operation.

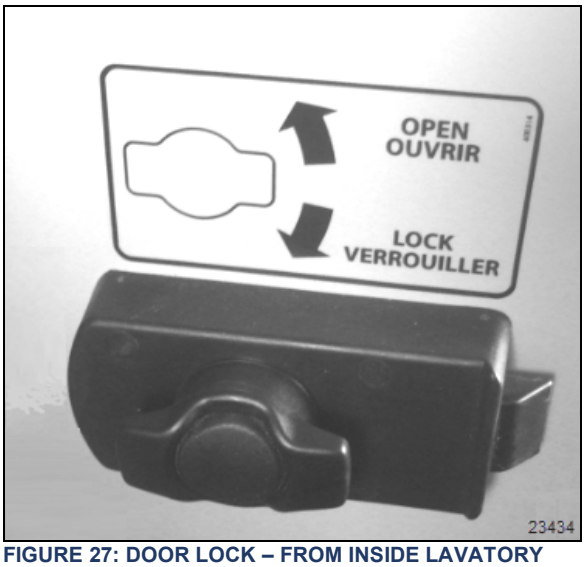


**FIGURE 27: DOOR LOCK – FROM INSIDE LAVATORY**

## 8.3 LAVATORY LIGHT & NIGHT-LIGHT

A lavatory LED light with built-in motion detector is installed on lavatory ceiling and will illuminate as soon as door (or occupant) movement is detected. At night, when the ignition switch is set to the ON position, the light will provide dimed illumination inside the lavatory. The light & movement detector can be serviced as a complete assembly by removing the mounting screws holding the unit to the celling.

## 8.4 EMERGENCY BUTTON

The lavatory emergency buzzer is mounted on the inner curb side wall of lavatory and sounds when the emergency call push-button switch in the lavatory compartment is activated. For specific wiring information, refer to wiring diagrams. To remove the emergency call push-button switch, proceed as follows:

1. Remove both Phillips-head screws retaining pushbutton switch plate to wall.
2. Remove stainless steel plate located on L.H. side of pushbutton switch.
3. Remove switch through this opening, taking care to disconnect electric wires.

## 8.5 FLUSH PUSH BUTTON

The flush push-button is mounted on the inner curb side wall of lavatory just over the emergency button. Press on push-button to actuate the pump located in the sump tank.

### 8.5.1 Flush push button removal and installation

1. Remove both Phillips-head screws retaining pushbutton switch plate to wall.
2. Remove stainless steel plate located on L.H. side of pushbutton switch.
3. Remove pneumatic timer through this opening, taking care to disconnect electric wires.
4. Reverse the above procedure to reinstall timer.

## 8.6 FLUSH PUMP

The submersible-type flush pump is mounted inside an enclosure in the sump tank. The enclosure is provided with a screened side which, serves as a strainer to prevent solid matters from entering the pump.

The pump requires no periodic maintenance other than cleaning of the strainer side using a water jet introduced through the circular cap opening, once the sump tank is completely drained. The pump can run dry periodically without damage. However, for maximum seal life, the run dry periods should be kept to a minimum.

**⚠ CAUTION**

If vehicle is stored for an extended period of time, make sure to clean the strainer as solid matter will tend to pack, and will necessitate replacement of strainer.

### 8.6.1 Flush Pump Removal

1. Drain tank.
2. Remove the toilet seat and cover.
3. Remove the toilet bowl flange.
4. Lift the toilet bowl, disconnect the water hose and remove the bowl & flap.
5. Remove the pump enclosure retaining screw and remove (lift-up) the complete assembly from the tank.

6. Remove the enclosure cover to access and remove the pump.

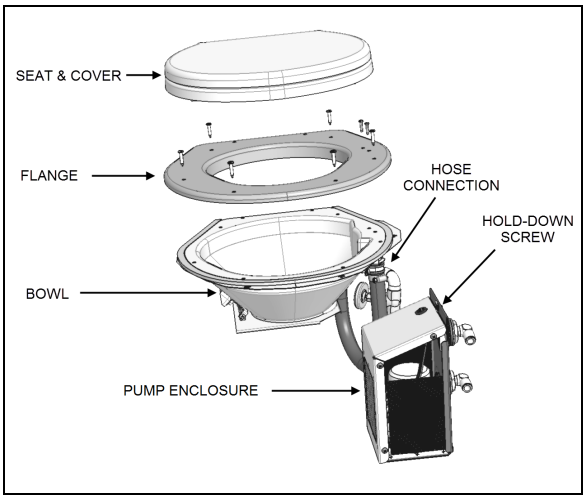


FIGURE 28: SUMP TANK PUMP ACCESS

## 8.7 SUMP TANK

### 8.7.1 Sump Tank Filling

Open the sump tank overflow valve (A) and connect a fresh water supply hose to the toilet sump tank fill connection (D). The sump tank is full when water starts flowing through the clear fill process overflow tube (start water level) (C). Close sump tank overflow valve (A) when the tank is full and drain fresh water fill tube using drain valve (B) to avoid ice damage during cold weather operation.

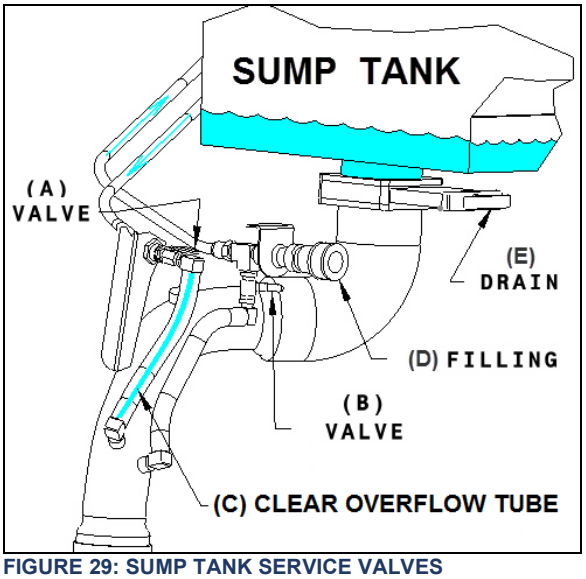


FIGURE 29: SUMP TANK SERVICE VALVES

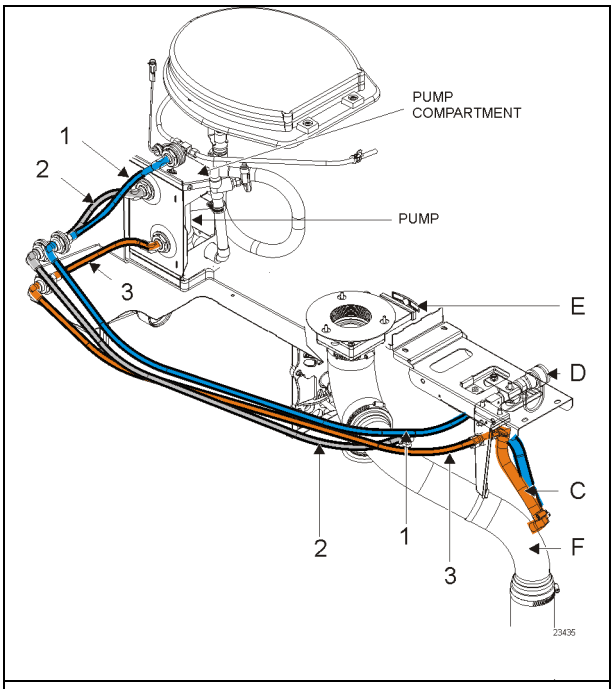


1 – fresh water sump tank filler tube

2 – sump tank overflow

3 – fill process overflow tube

C – clear fill overflow tube (“full” indicator)

D – sump tank fill connection

E – drain slide valve handle

F – drain pipe

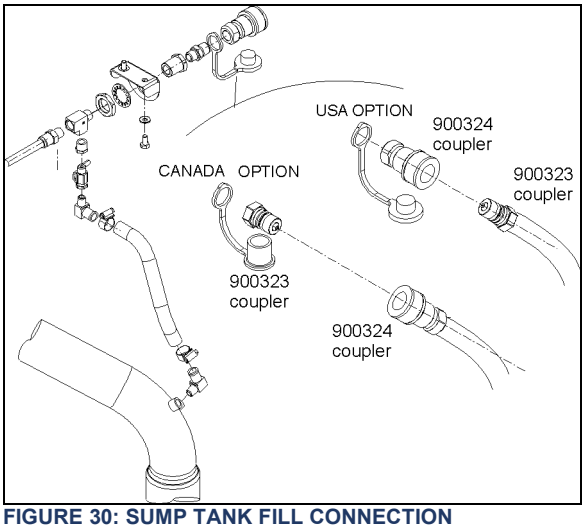


FIGURE 30: SUMP TANK FILL CONNECTION

8.7.2 Sump Tank Draining

When recirculating water in the toilet is soiled, drain sump tank. Pull the drain slide valve handle (E) and allow contents to drain. Remove the access cap and flush tank with clean water. To close, push the slide valve (E) back into closed position.

**CAUTION**

In cold weather, add 2 gallons (9 liters) of antifreeze (e.g.: ethylene glycol) in the toilet before filling sump tank.

**CAUTION**

Lavatory tank should be serviced only at suitably equipped stations.

*NOTE*

*It is unlawful to dump sump tank contents in any location other than those designated as such.*

When a full draining is required, clean sump tank by repeating the draining and filling operations while leaving the drain cock opened. Close cocks and pour a pack of commercial toilet deodorant (Prevost part #900329) in toilet before adding the antifreeze and starting final filling of sump tank.

**WARNING**

The toilet deodorant contains products that can be very irritating to skin. Use rubber gloves when handling and then clean toilet seat.

**WARNING**

Antifreeze must comply with the effective environmental act.

**CAUTION**

When cold weather is expected and there is no antifreeze in the tank, sump tank must be drained.

*NOTE*

*If there is no antifreeze solution in the tank, there is less risk of freezing if engine is operating due to the heat it produces.*

*NOTE*

*New coaches are delivered with the sump and fresh water tanks empty. Fill with water before putting the coach in service.*

## 9. HORN INSTALLATION

The electric and air horns are located in a plastic box under the front step well and are accessible from the front body understructure. Refer to Operator's or Owner's Manual for operation.

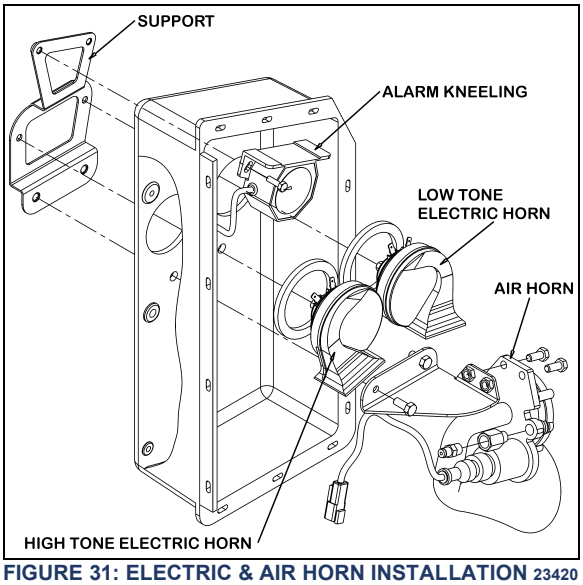


**FIGURE 31: ELECTRIC & AIR HORN INSTALLATION** 23420

9.1 ELECTRIC OR AIR HORN MAINTENANCE

When needed, the electric or air horn can be serviced or replaced using the following procedure:

1. Raise vehicle by the jacking points;
2. Unplug the cable connector;
3. Disconnect the air tube if applicable;
4. Loosen the retaining bolts;
5. Service or replace the defective horn;
6. Reinstall by reversing procedure.

## 10. HEADLIGHT CLEANING SYSTEM

*NOTE*

*When inspecting the headlights cleaning system, check the washer fluid hoses, fittings and connectors to be sure they are properly connected and seal with no restriction to the flow of washer fluid. Check that the washer nozzles are properly aimed.*

The headlights cleaning system is independent from the windshield washer system and has its own washer fluid reservoir located in the front electrical and service compartment. However, this system shares the same telltale light than the windshield washer low level sensor (refer to Operator's manual for operation). Each pressing of this switch produces 2 successive 0.7 seconds jets.

**CAUTION**

Do not operate the headlights washer while the washer fluid reservoir is empty. This may damage the washer fluid pump.

### 10.1 WASHER FLUID REFILLING

Open the filler neck cap and had regular windshield washer fluid as required. The tank has a capacity of 10 liters (2.6 US gallons). You may use water or windshield washer fluid as well but, during cold weather days, use windshield washer fluid suitable for freezing temperature only.

### 10.2 WASHER NOZZLES ADJUSTMENT

To avoid waste of washer fluid, assure the fluid jets are properly aimed. Adjust nozzles so they aim as described in figure 32. Align the jet adjustment tool #800377 with the reference line shown on the front view detail. As seen on the side view, position the end of the adjustment tool to a distance of ½" (high beam) and 1" (low beam) from the top of the headlight for proper aiming.

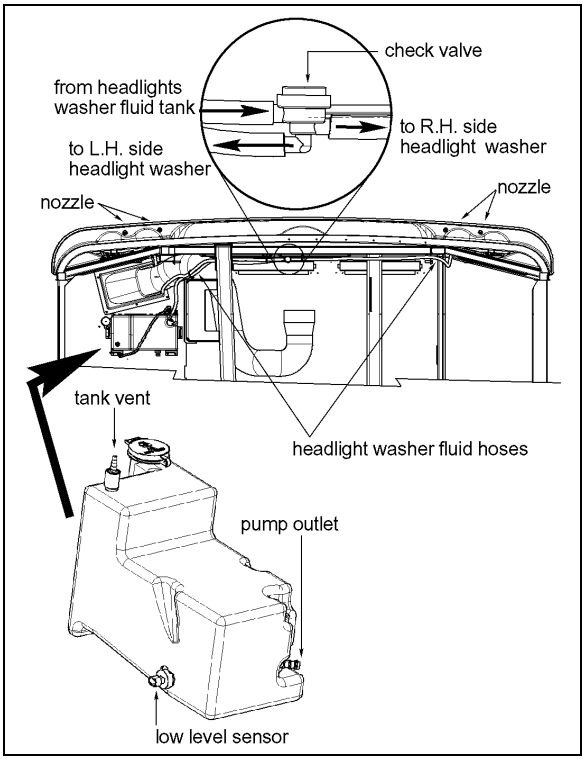


**FIGURE 32: HEADLIGHTS CLEANING SYSTEM** 23380

**CAUTION**

Because they are made of plastic, firmly tighten nozzle and bulkhead fittings by hand only.

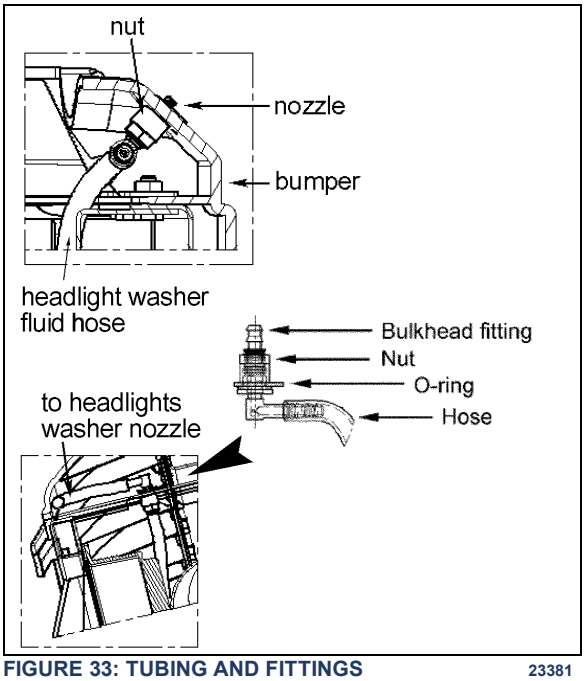


**FIGURE 33: TUBING AND FITTINGS** 23381

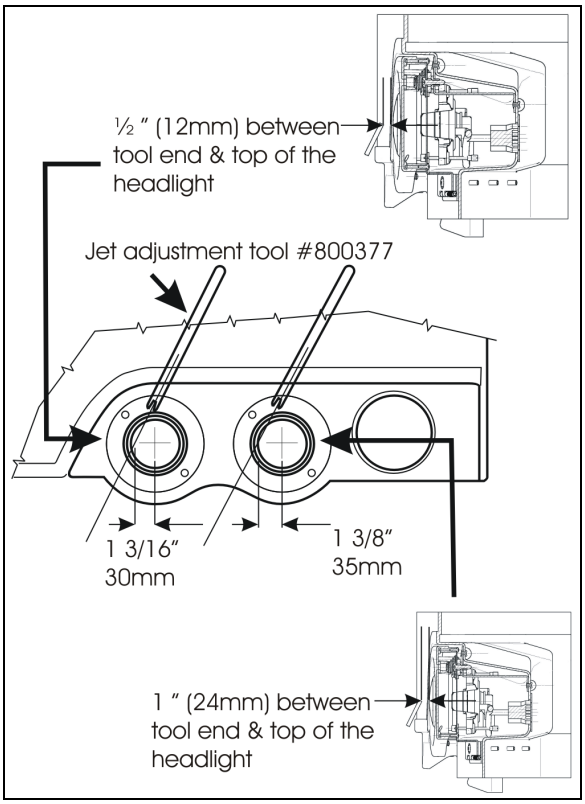


FIGURE 34: WASHER NOZZLES ADJUSTMENT 23382

## 11. WINDSHIELD WIPERS AND WASHERS

### 11.1 GENERAL DESCRIPTION

> *NOTE*
>
> *When installing a wiper motor, arm or blade, follow recommended procedures to prevent misalignment, binding or malfunction. Check the windshield washer liquid hoses, fittings and connectors to be sure they are properly connected and seal with no restriction to the flow of washer liquid. Check that wiper arms have the proper sweep position and the washer nozzles are aimed so that spray is within the proper wiper pattern.*

The windshield wipers are controlled by one electric wiper motor that is accessible for maintenance after removing the appropriate access panel beside the footwell (refer to Figure 37).

Turn the multifunction lever forward to activate windshield wipers (item 2, Figure 35). The first position operates the wipers at low speed and the second position operates the wipers at high speed. Turning the lever backwards will operate the wipers in the intermittent mode.

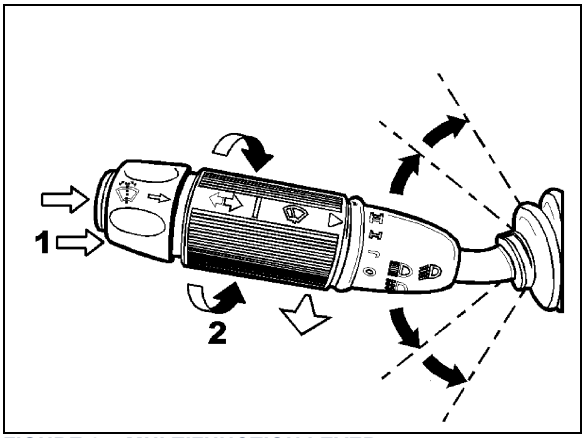


FIGURE 35: MULTIFUNCTION LEVER 23133

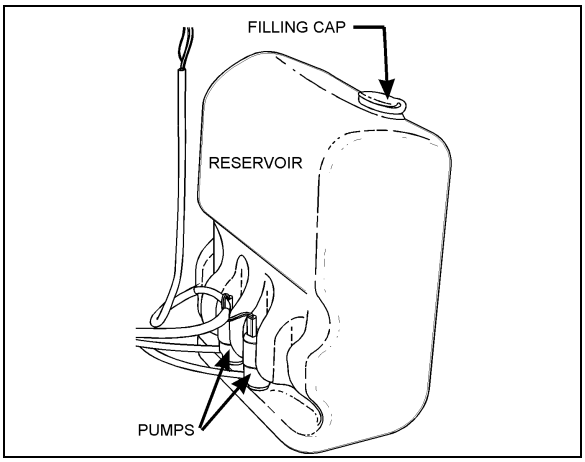


FIGURE 36: WINSHIELD WASHER RESERVOIR 23220

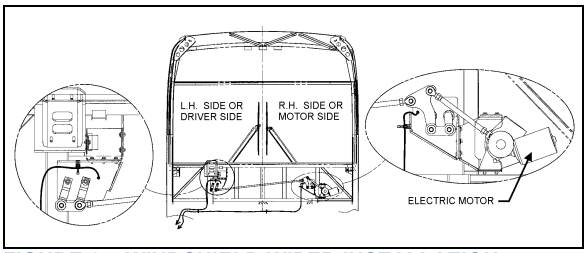


FIGURE 37: WINDSHIELD WIPER INSTALLATION 23287

The windshield washer pumps are electrically operated and are controlled by a washer control ring on the multifunction lever (item 1, Figure 35).

The windshield washer reservoir is located in the front service compartment (Figure 36). This unit pumps the washer liquid to the spray nozzles where it is dispersed across the windshield.

## 11.2 WIPER ARM

Check operation of the wipers for proper blade sweep and angle.

### 11.2.1 Wiper Arms Positioning

1. Reinstall the wiper arms and position as shown in figure 40. Before positioning the wipers at their final position, tighten the nuts at first.

**TORQUE 9 lb-ft (12 Nm)**

2. To find the final position of the wiper arms, lift then release the wiper arm so if falls back on the windshield.

> **CAUTION**
>
> Do not attempt to manually move the wiper arms to make wiper blade sweep adjustments as damage to the wiper linkage or motor may occur. If it is necessary to adjust the sweep of blades, remove the arms and make adjustment by positioning the arms using serration on the wiper arm pivot shafts.

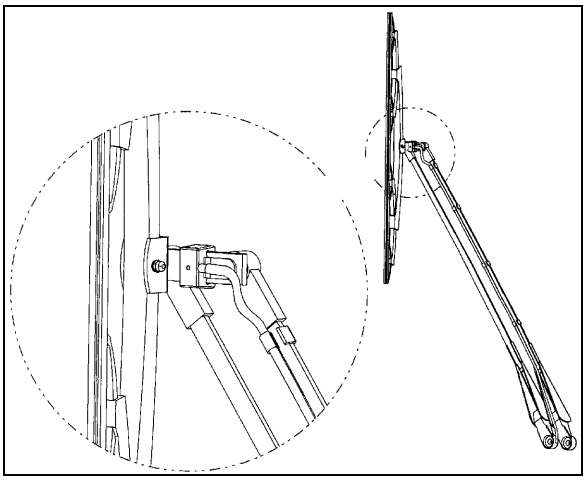

FIGURE 38: WINDSHIELD WIPER (MOTOR SIDE)

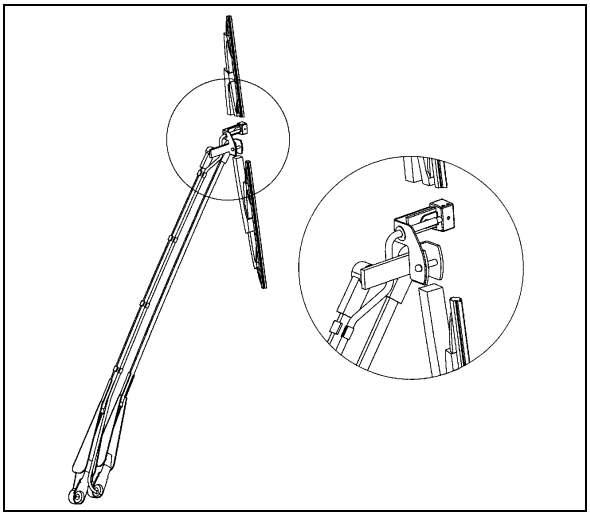

FIGURE 39: WINDSHIELD WIPER (DRIVER SIDE) 23328

3. When the final position is found, tighten wiper arm nuts. Wait 30 minutes and tighten again.

**TORQUE 22 lb-ft (30 Nm)**

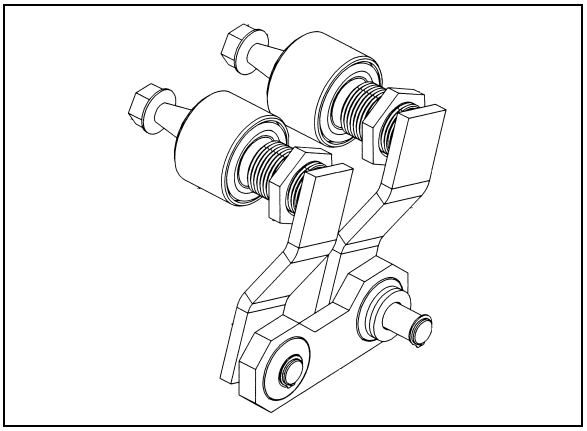

FIGURE 40: DRIVING MECHANISM (DRIVER SIDE) 23284

4. Lower the protective cover.
5. Connect the windshield washer tubing at the base of the wiper arm.
6. Check the adjustment on a wet windshield.

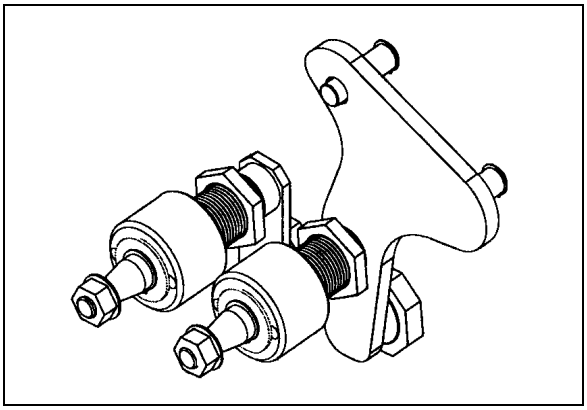

FIGURE 41: DRIVING MECHANISM (MOTOR SIDE) 23285

## 11.3 WINDSHIELD WIPER MOTOR

### 11.3.1 Windshield Wiper Motor Replacement

The windshield wiper motor is located at lower front of the vehicle, behind the defroster panel. Refer to Figure 37 for motor location.

**WARNING**

Park vehicle safely, apply parking brake, stop engine and set battery master switch to the ''OFF'' position prior to working on the vehicle.

1. Remove the Phillips-head screws retaining the defroster panels, and remove panels.
2. Disconnect wiring connector from the windshield wiper motor.
3. Loosen clamping screw retaining the lever at the end of the motor driving shaft.
4. Remove the three bolts holding the motor to the steel plate.
5. Remove the windshield wiper motor (Prevost #800328), reverse removal procedure to reinstall.

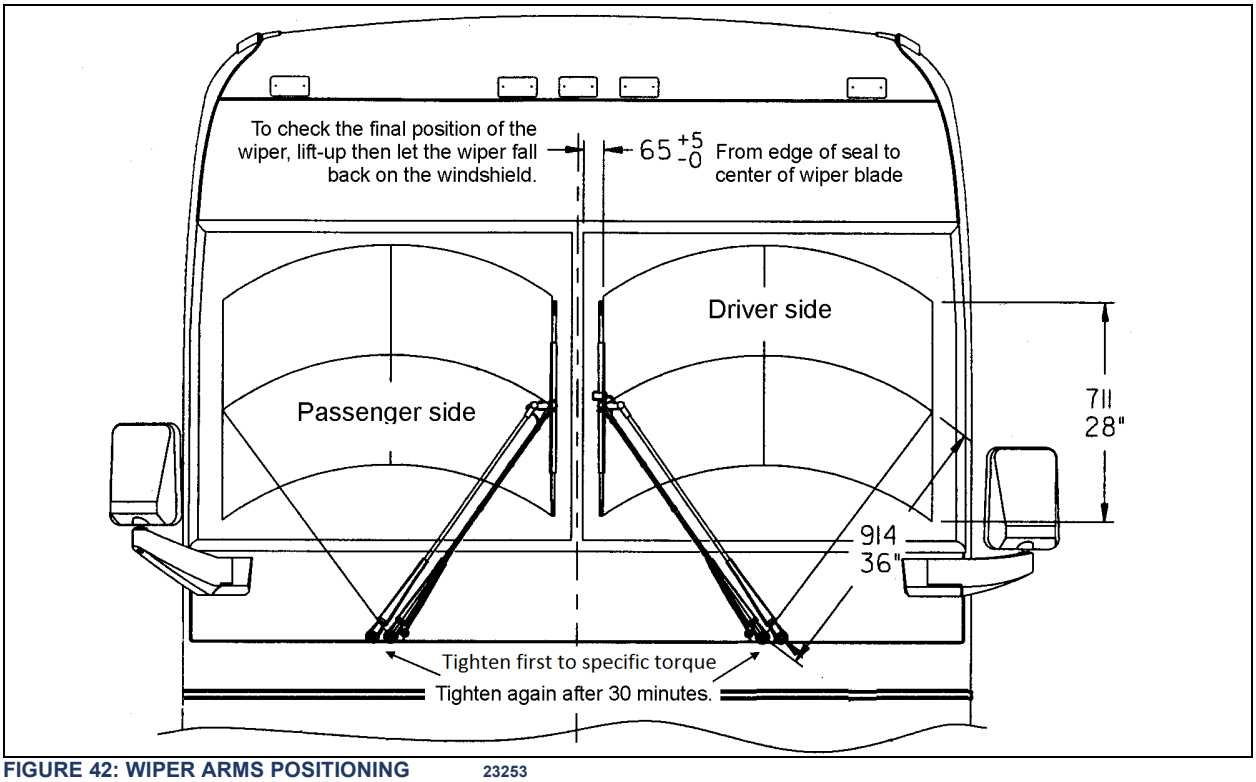


FIGURE 42: WIPER ARMS POSITIONING 23253

11.4 TROUBLESHOOTING

| SYMPTOM | PROBABLE CAUSE | REMEDY |
|---|---|---|
| FAIL TO SPRAY WASHER FLUID | A. Reservoir empty.<br>B. If below 32°F (0°C), improper washer fluid frozen.<br>C. Contamination in tubing or nozzles.<br>D. Tubing damage.<br>E. Tubing bent (kinked) or off one or more connections. | A. Add proper fluid.<br>B. Store coach or parts in heated area, then purge system with low-temperature solution.<br>C. Remove with compressed air, if severely clogged, replace items.<br>D. Replace section.<br>E. Realign tubing and/or refit. Trim end to ensure proper fit or replace. |
| INADEQUATE SPRAYING | A. Tubing failure. | A. Replace tubing. |
| SLOW OPERATION | A. Improper solution.<br>B. Jet stream improperly directed.<br>C. Check if valve is stuck in the open position. | A. Replace with proper type solution.<br>B. Reposition nozzles.<br>C. Remove, clean or replace. |

## 12. TIRE PRESSURE MONITORING SYSTEM (TPMS)

The optional active tire pressure and temperature monitoring system is a sensing device designed to identify and display tire operating data and activate an alert or warning when pressure or temperature irregularities are detected.

For more information on the operation and troubleshooting of the system, refer to Prevost X3-45 Coaches Operator's Manual, chapters "Controls and Instruments" and "Safety Features and Equipment" sections.

## 13. AUTOMATIC FIRE SUPPRESSION SYSTEM (AFSS) (OPTIONAL)

This optional system is used to shut down the engine and to extinguish a fire in the engine compartment or in the vicinity of the preheating system if so equipped.

The system operation is fully automatic and does not require assistance from the operator, however if required, the system can be manually activated by the operator at any time.

Refer to Prevost Operator's Manual for system operation and operational sequence (fire).

If more information is needed on the system, please refer to Kidde Dual Spectrum "Operation & Maintenance Manual, found on your Technical Publications USB flash drive.

**CAUTION**

*The AFSS extinguisher will not function as intended if oriented incorrectly. Refer to labels on the extinguisher bottle or the "Operation & Maintenance Manual".*

### 13.1 STARTING THE VEHICLE AFTER A FIRE ALARM

The vehicle may be started after a fire alarm without resetting the system. Refer to ignition switch sequence below. This will not reset the system, rather it will instruct the vehicle's multiplex system to ignore vehicle interface outputs from the Protection Panel. This feature is intended to be used only in emergency situations that require the vehicle to be restarted and moved a short distance prior to system reset. It should not be performed if the cause of the fire has not been clearly identified and corrected.

To start the vehicle, perform this ignition switch (key) sequence.

- From the **ON** position,
- Turn to **OFF**, return to **ON** *and* **START** vehicle within 2 seconds.

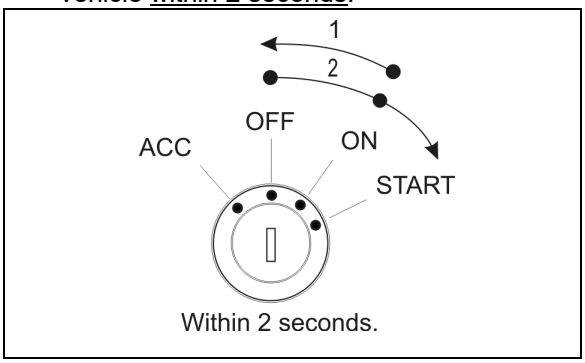


13.2 PERIODIC MAINTENANCE

**PRE-TRIP**

- Verify that the Protection Panel "SYSTEM OK" lamp is on solid green.

**EVERY 3000 MILES OR MONTHLY** (whichever comes first)

General

- Verify that neither the protected equipment nor the hazard has changed.
- Verify that no obvious physical damage or condition exists that might prevent system operation.

Protection Panel

- Verify that all warning lamps and the audible alarm are operational by pressing the "TEST/RESET" button.

Manual Activation Switch

- Verify that the tamper seal is intact and access to the switch is unobstructed.

Fire Detectors

- Optical
  - Verify that the status lamp on the detector face is on solid green.
  - Verify that nothing is blocking the detector's field of view.
  - Verify that the windows on the face of the detector are free of excess contamination (dirt, oil, grease, etc.) – if necessary, clean using a water soaked non-abrasive towel.
- Linear Thermal
  - Verify that there is no obvious physical damage and that the unit is free of excess contamination (dirt, oil, grease, etc) – if necessary, clean using a water soaked non-abrasive towel.
  - Verify that mounting is secure and taught.

Electrical Harness

- Verify that electrical connectors and electrical wiring have no visible damage and all connectors are securely seated.

Extinguisher & Distribution System

- Verify that the extinguisher pressure gauge pointer is in the green arc at room temperature.
- Verify that distribution piping and nozzles are intact and unobstructed and that nozzle blow-off caps are in place.

**EVERY 18000 MILES OR SEMI-ANNUALLY** (whichever comes first)

- Perform a comprehensive fire system test using a Kidde Dual Spectrum System Test Set (Optical Test Kit P/N 420871-2).
- Service the extinguisher in accordance with KDS Document 160296, "KDS Pre-Engineered Fire Suppression System: Installation, Operation and Maintenance Manual".



## MAINTENANCE

**EVERY SIX YEARS**

Have the fire extinguisher rebuilt by a qualified fire protection equipment company familiar with Kidde Dual Spectrum equipment and in accordance with KDS Document 160296, "KDS Pre-Engineered Fire Suppression System: Installation, Operation and Maintenance Manual". Rebuilt shall include actuator, O-ring seals and dry chemical replacement.

## MAINTENANCE

**EVERY TWELVE YEARS**

Have the Extinguisher cylinder hydrostatically tested by a qualified fire protection equipment company familiar with Kidde Dual Spectrum equipment and in accordance with KDS Document 160296, “KDS Pre-Engineered Fire Suppression System: Installation, Operation and Maintenance Manual”.

## 14. ELECTRIC BRAKE CONTROL SYSTEM FOR TRAILER

This optional feature is used to control the braking system of a trailer equipped with electric brakes. This system includes connector A40, a RV type trailer connector already installed on the trailer hitch, the VECT (Vehicle Electric Center Trailer) and the necessary harnesses.

On the vehicles equipped with this feature, the VECR fuses F117 & F119 are replaced by CB117 (20 Amp) & CB119 (30 Amp).

### 14.1 A40 CONNECTOR

A40 connector is located in the front electrical and service compartment (aka front junction box). This connector is used to connect a brake controller.

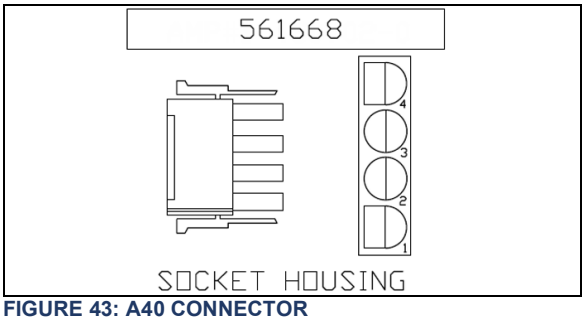


**FIGURE 43: A40 CONNECTOR**

Four circuits:

1) black 12V power (from ignition)
2) white ground
3) red input: 12V brake application signal from VECT (coach brake lights)
4) blue output: brake application signal to the trailer

### 14.2 7-BLADE RV/TRAILER CONNECTOR

Seven circuits:

1) white ground
2) blue output: brake application signal to the trailer
3) brown taillights
4) black 12V supply for trailer accessories
5) yellow left turn signal
6) green right turn signal
7) purple backup lights

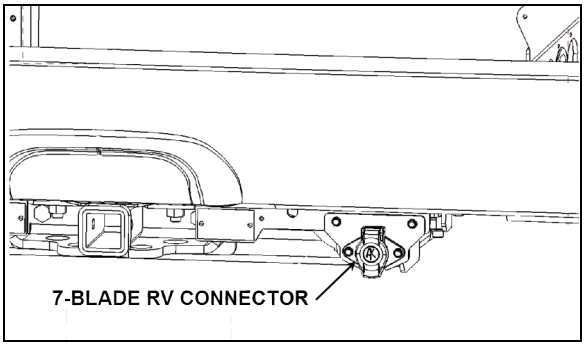


**FIGURE 44: 7-BLADE TRAILER/RV CONNECTOR ON TRAILER HITCH**

## 14.3 VECT

The VECT includes the following components:

Relay 51

Relay 52

Relay 53

Relay 54

Relay 55

CB301, 20 Amp

Fuse 302, 20 Amp

Fuse 303, 20 Amp

Fuse 304, 20 Amp

Spare fuses: SP1-SP4

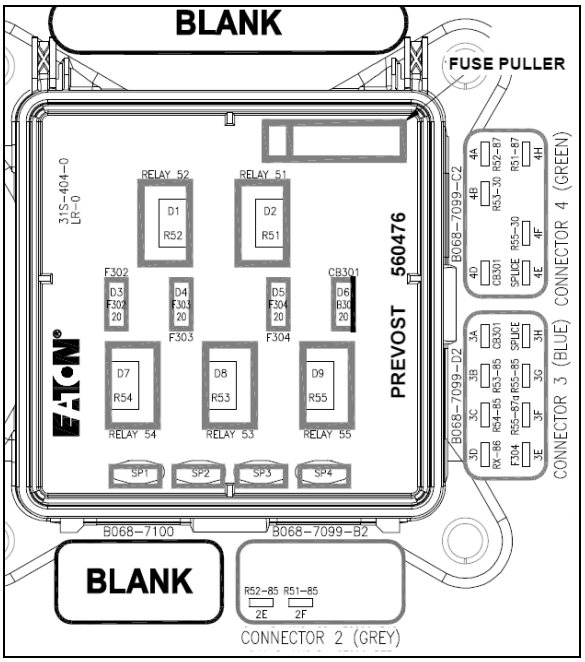


FIGURE 45: VECT

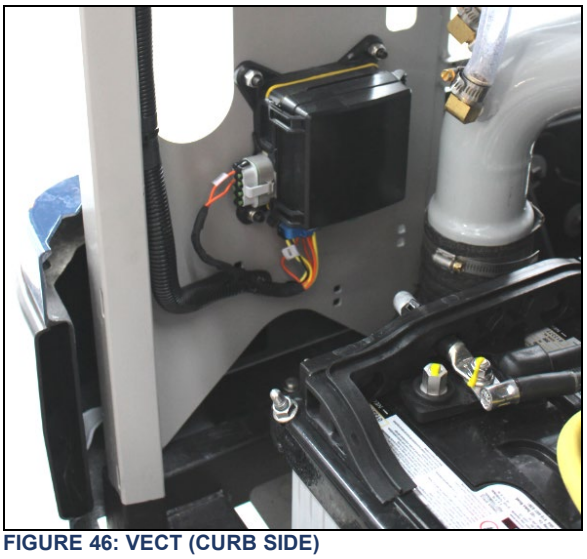

FIGURE 46: VECT (CURB SIDE)

## 15. WHEELCHAIR LIFT CASSETTE INSTALLATION

**WARNING**

For better stability, keep the platform at minimum height when moving.

**WARNING**

Never deploy the platform from enclosure while standing on the telescopic legs.

**WARNING**

Telescopic legs were designed to support and move the platform only, do not use as a work table.

**WARNING**

Before moving platform, make sure that floor is level and free of obstacles.

Install four lifting jacks on the wheelchair lift cassette.

| NOTE |
| --- |
| *There are two telescopic legs for each platform side. The proper side is indicated onto the telescopic leg.* |

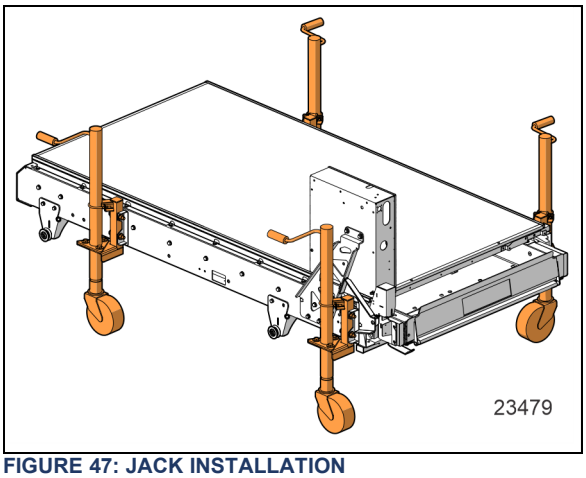


FIGURE 47: JACK INSTALLATION

Dismount partially the control box (4 screws) and tilt it slightly to allow the cassette to slide inside the compartment.

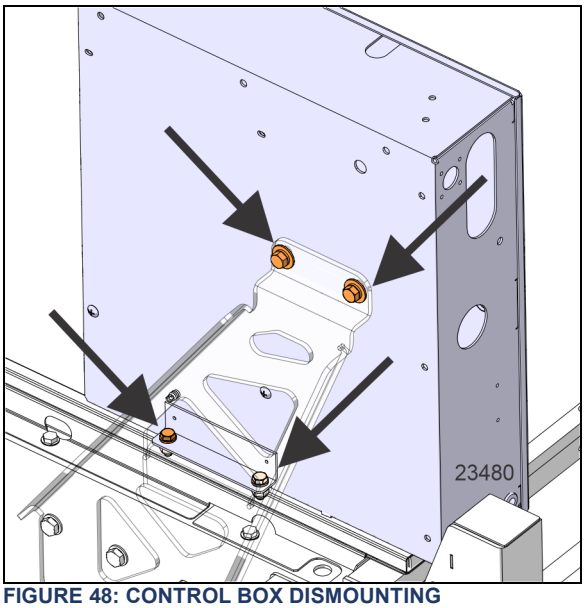


FIGURE 48: CONTROL BOX DISMOUNTING

Slide the cassette into the compartment to get the rear rollers backward the rail front stopper.

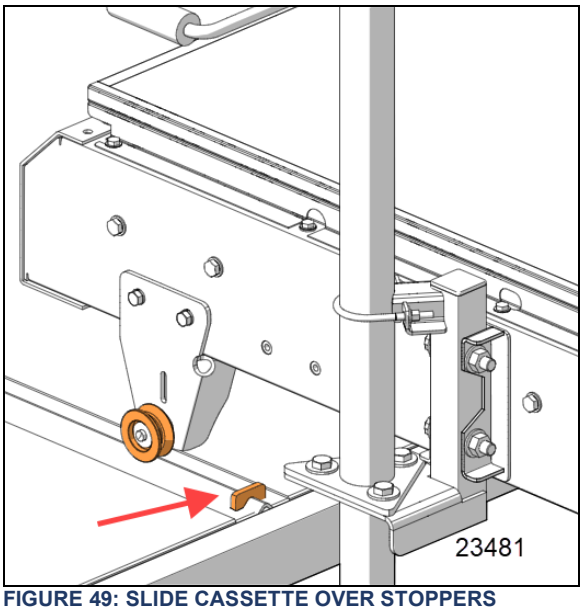


FIGURE 49: SLIDE CASSETTE OVER STOPPERS

Drop down the rear side of the cassette until it gets contact with the rail and make sure the back rollers are aligned with the V-rail.

Remove jacks (2) on the rear side.

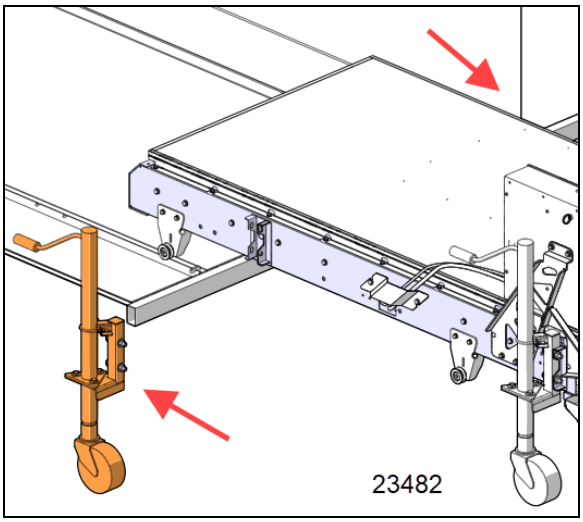


FIGURE 50: JACKS REMOVAL ON REAR SIDE

Install the fasteners on the dismounted jacks.

Slide the cassette inside the compartment to get the front rollers backward of the stoppers.

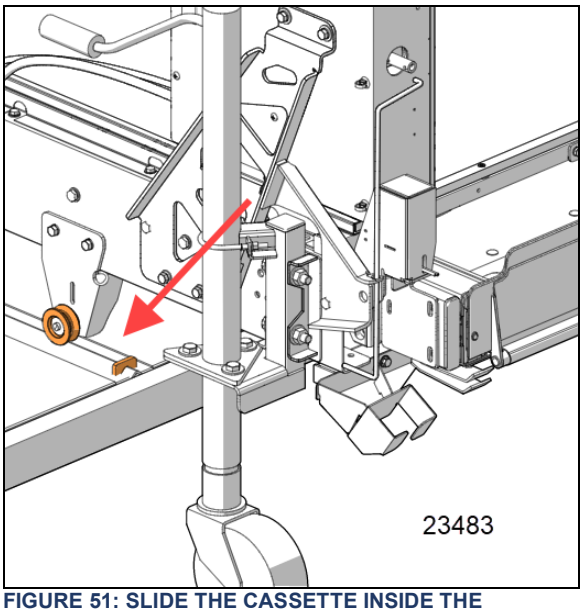


FIGURE 51: SLIDE THE CASSETTE INSIDE THE COMPARTMENT

Drop down the front side of the cassette until it gets contact with the rail and make sure the rollers are aligned with the V-rail.

Remove the jacks (2) on the front side of the cassette.

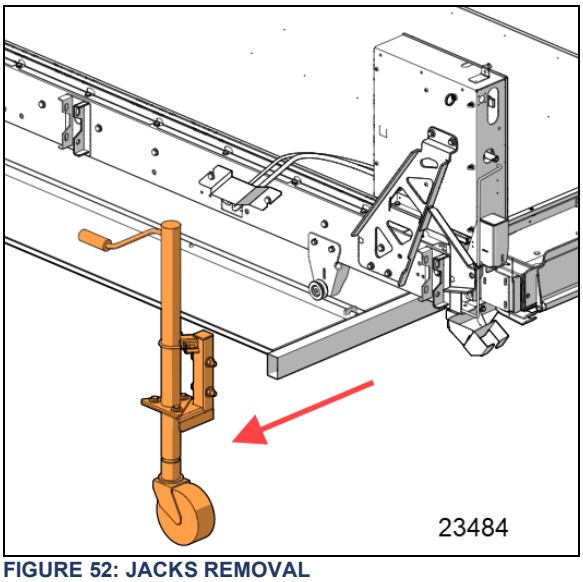


FIGURE 52: JACKS REMOVAL

Install the fasteners on the dismounted jacks.

Install locks in four locations and tighten screws to a torque value of:

**55-65 lb-ft (75-88 Nm)**

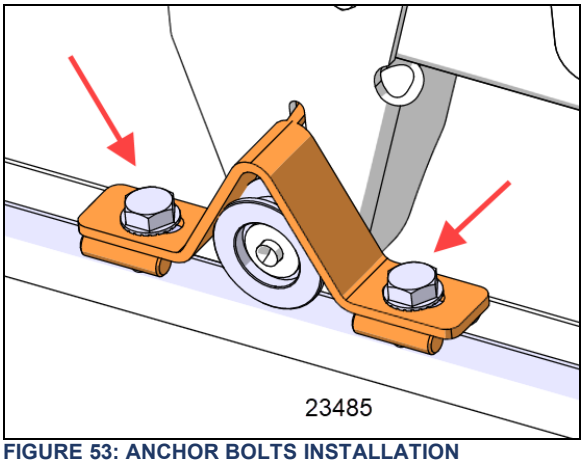


FIGURE 53: ANCHOR BOLTS INSTALLATION

Reinstall the control box with 4 screws.

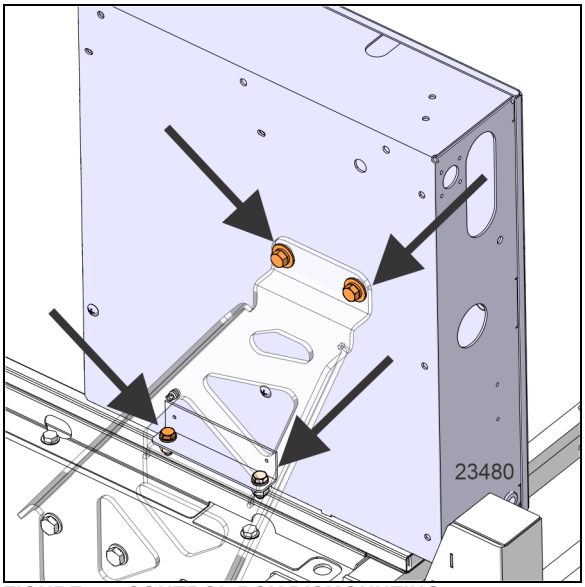


FIGURE 54: CONTROL BOX DISMOUNTING

**NOTE**

*HYDRAULIC MANUAL OVERRIDE LINKAGE*

*Due to interference with compartment door arm, when installing a WCL cassette built before 2020 on a X3 Series MY 2020 and later, the hydraulic manual override linkage must be replaced by hydraulic manual override linkage p/n* ***491693****.*

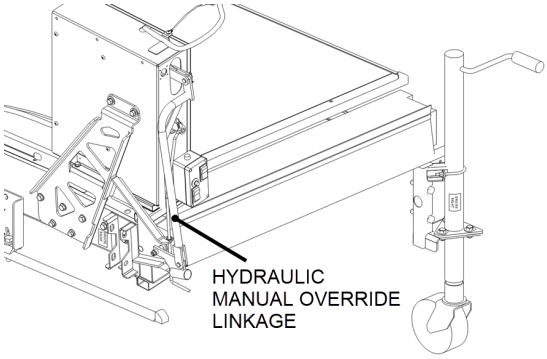


Plug the electrical connectors and lock it with the connector cover.

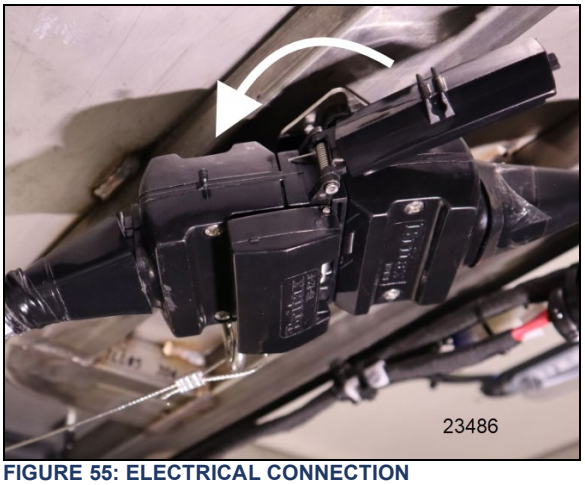


FIGURE 55: ELECTRICAL CONNECTION

Attach the protective wire.

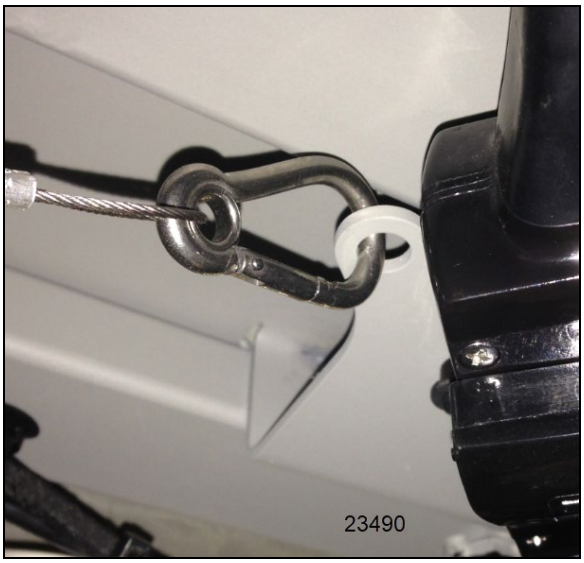


FIGURE 56: PROTECTIVE WIRE INSTALLATION

## 16. WHEELCHAIR LIFT CASSETTE DISMOUNTING

Detach the protective wire. Unlock the connectors. Unplug the electrical connectors.

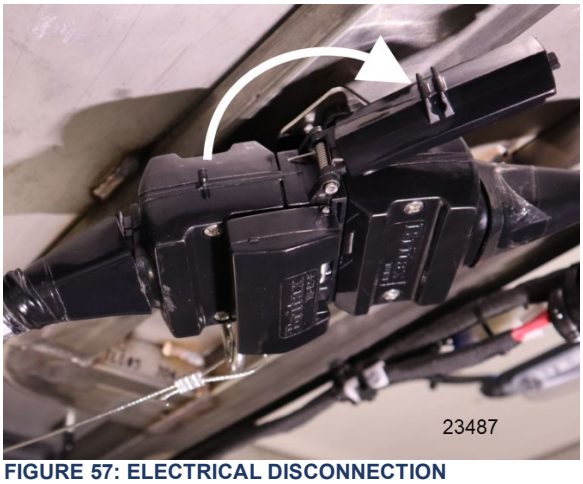


FIGURE 57: ELECTRICAL DISCONNECTION

Detach the protective wire.




FIGURE 58: PROTECTIVE WIRE INSTALLATION

Dismount partially the control box (4 screws) and tilt it slightly to allow the cassette to slide outside the compartment.

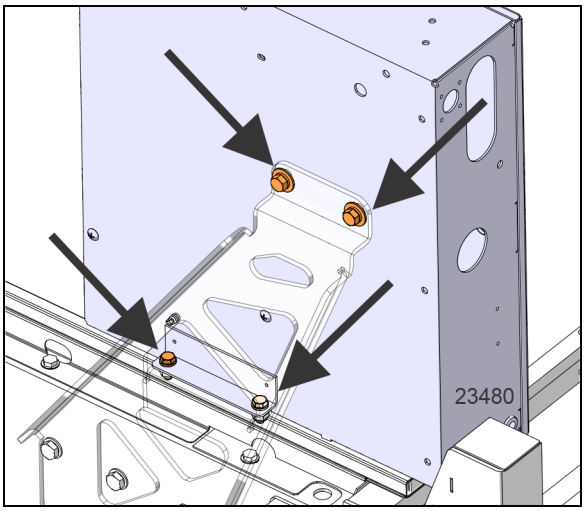


FIGURE 59: CONTROL BOX DISMOUNTING

Remove locks in four locations and keep it with the removed cassette.

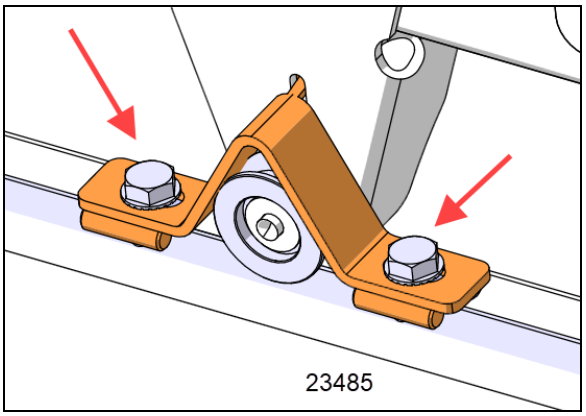


FIGURE 60: LOCKS REMOVAL

Slide out the cassette until the front rollers get the stoppers. Install jacks on the front side of the cassette. Lift up the front side of the cassette until the front rollers clear the front stoppers.

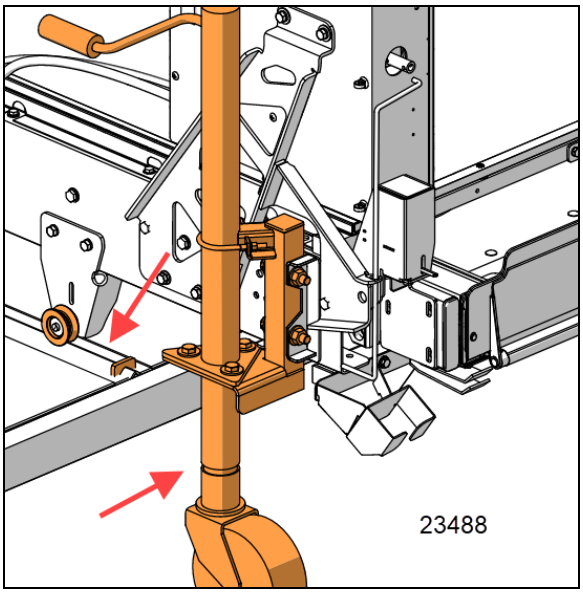


FIGURE 61: LIFT UP THE FRONT SIDE OF THE CASSETTE

Keep sliding out the cassette until the rear rollers get to stoppers. Install jacks on the rear side of the cassette. Lift up the rear side until the rear rollers clear the stoppers.

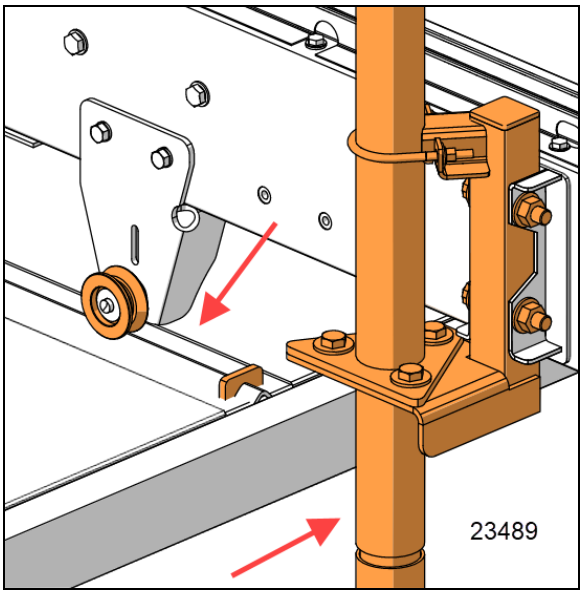


FIGURE 62: DROP THE REAR SIDE ON RAILS

Reinstall the control box with the screws (4).

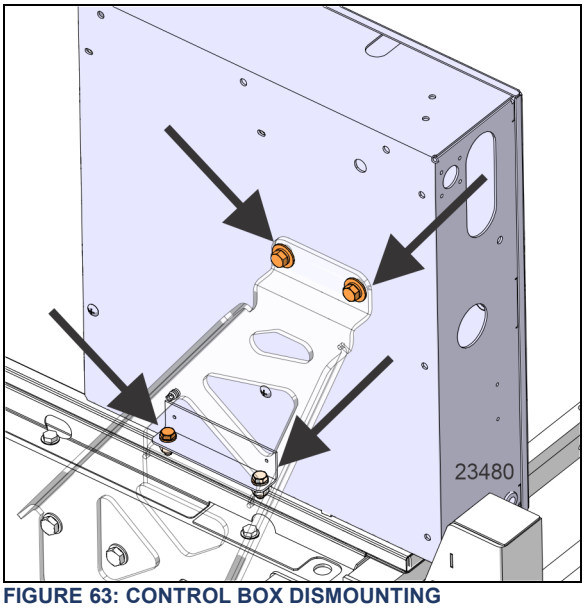


FIGURE 63: CONTROL BOX DISMOUNTING

Slide out completely the wheelchair lift cassette.

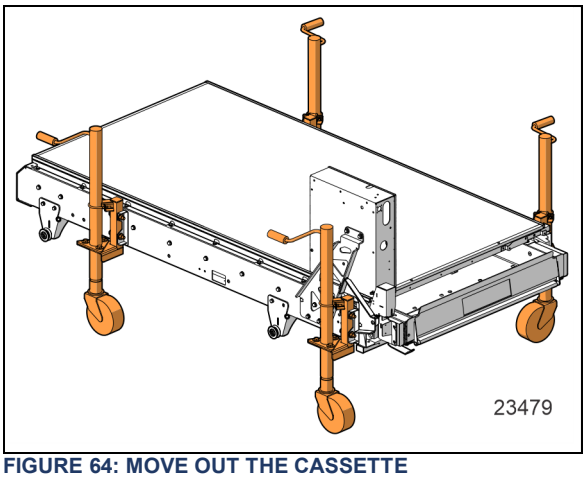


FIGURE 64: MOVE OUT THE CASSETTE

# MAINTENANCE INFORMATION

**MI23-12B**

| DATE : | April 2023 | SECTION : 06 ELECTRICAL |
|---|---|---|
| SUBJECT : | **WIPER DRIVE MOTOR, LINKAGE AND PIVOT REPLACEMENT** | |

Revision : B — Part 2 step 25, torque changed, was 22 lbs-ft becomes 29 lbs-ft — 05-24-2023

## APPLICATION

| Model | VIN  |
|---|---|
| H3-45 coaches<br>Model Year: 2024, … | From 2PCH3349X***R***C72***1453*** |
| H3-45 VIP motorhomes<br>Model Year: 2023, … | From 2PCVS3499***P***C72***1348*** |

# Table of contents

REQUIRED TOOLS ..... 3
SAFETY MEASURES ..... 4
PART 1 - DRIVE MOTOR REPLACEMENT ..... 5
Drive Motor Bracket Removal ..... 5
Linkage Disconnection from The Drive Motor Shaft ..... 9
Drive Motor Removal and Replacement ..... 9
Park Position Setting ..... 11
Linkage Connection to The Drive Motor Shaft ..... 12
Drive Motor Bracket Installation ..... 13
PART 2 - WIPER PIVOT AND LINKAGE REPLACEMENT ..... 15
Preparation ..... 15
Wiper Arm and Pivot Hardware Removal ..... 16
Wiper Pivot and Linkage Assembly Removal ..... 19
Damaged Components Replacement ..... 22
Pivot and Linkage Assembly Installation ..... 22
Park Position Setting ..... 23
Linkage Connection to The Drive Motor Shaft ..... 23
Drive Motor Bracket Installation ..... 23
Wiper Arm Installation ..... 24
PARTS / WASTE DISPOSAL ..... 26

# REQUIRED TOOLS

| | |
|---|---|
| RULER<br> | SMALL PRY BAR<br> |
| TORQUE WRENCH AND METRIC SOCKET SET<br> | RATCHET AND SOCKET SET – METRIC<br> |
| CAULKING GUN<br> | SMALL FLAT SCREWDRIVER<br> |
| MASKING TAPE<br> | WIPER ARM PULLER P/N G37807<br>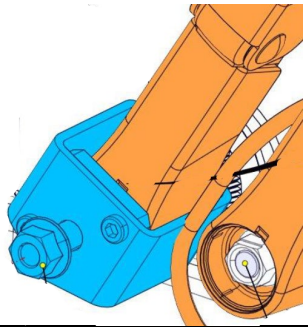 |
| CURB SIDE MOTOR TORQUE TOOL<br>P/N G37274<br>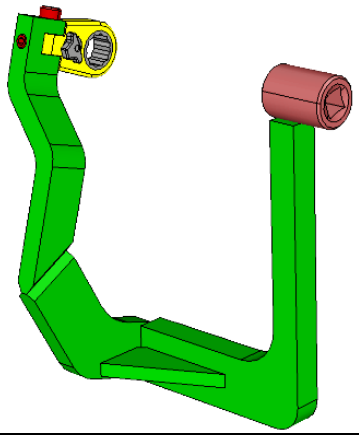 | STREET SIDE MOTOR TORQUE TOOL<br>P/N G37605<br>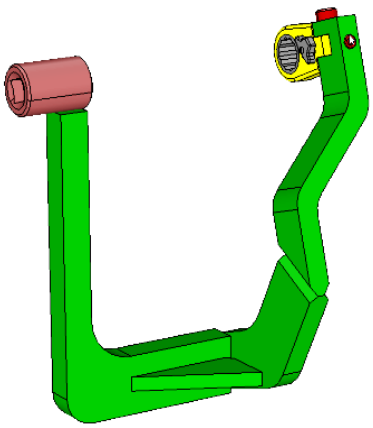 |

## SAFETY MEASURES

**DANGER**

The wiper linkage can cut your fingers. Cut off the power supply before working on this system.

### SAFETY PRECAUTIONS

- Eye protection should always be worn when working in a shop.
- Rules for Personal Protection Equipment should always be respected. Wear your PPE including but not limited to the following:



# PART 1 - DRIVE MOTOR REPLACEMENT

**DANGER**

Park vehicle safely, apply parking brake, stop engine. **Prior to working on the vehicle, set the ignition switch to the OFF position, set the battery master switch to the OFF position and trip the main circuit breakers equipped with a trip button**.

Lock out & Tag out (LOTO) must be performed during set-up, maintenance or repair activities. Refer to your local procedure for detailed information regarding the control of hazardous energy.

**DANGER**

The wiper linkage can cut your fingers. Cut off the power supply before working on this system.

## Drive Motor Bracket Removal

1. Open the wiper mechanism access hatch.

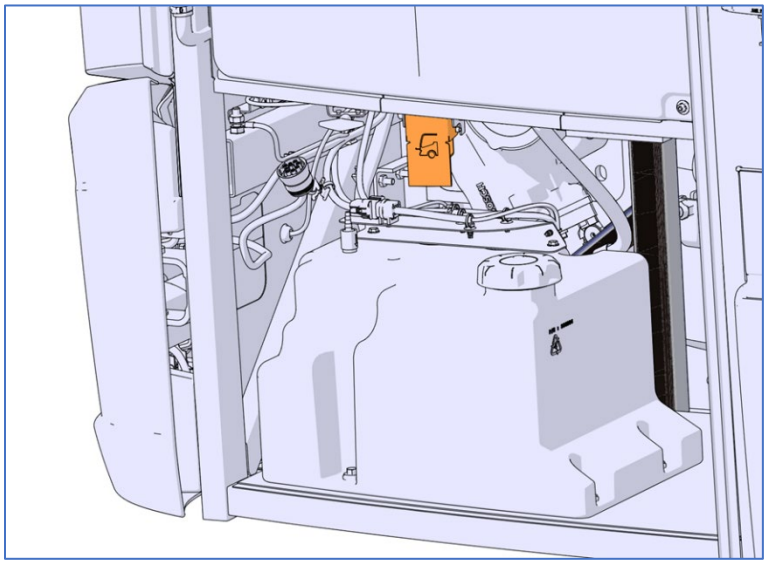

Figure 1

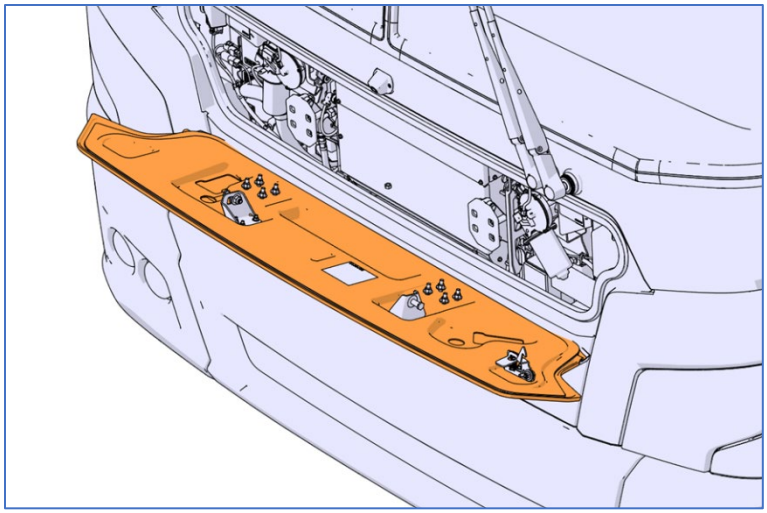

Figure 2

2. Cut the nylon tie securing the drive motor connector. Pry the yellow lock on the connector socket housing and then unplug the connector.

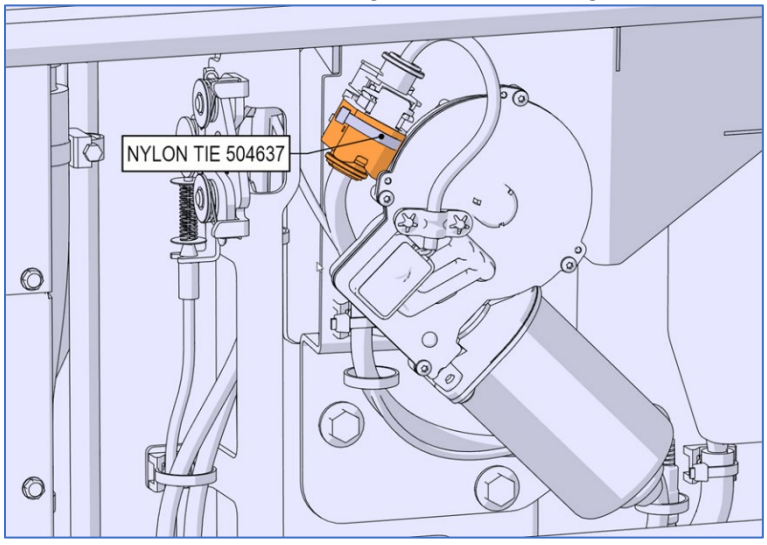


Figure 3: SREET SIDE DRIVE MOTOR SHOWN



Figure 4

3. Remove the four bolts that secure the drive motor bracket (use 13 mm socket).

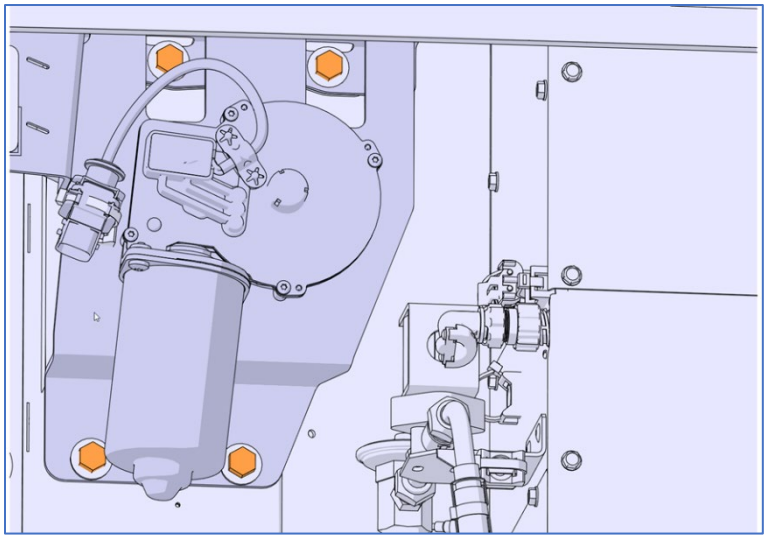

Figure 5: CURB SIDE DRIVE MOTOR

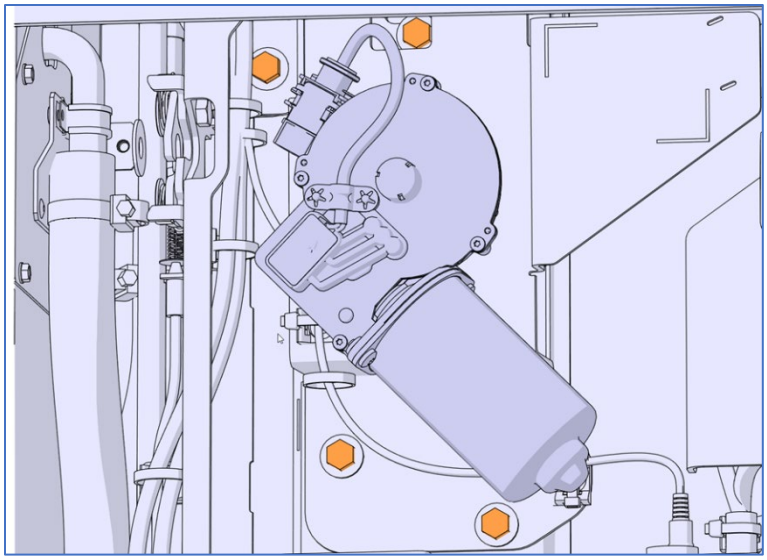

Figure 6 : STREET SIDE DRIVE MOTOR

4. At the back of the drive motor bracket, unscrew the drive motor shaft nut and remove the washer (use 17 mm socket).

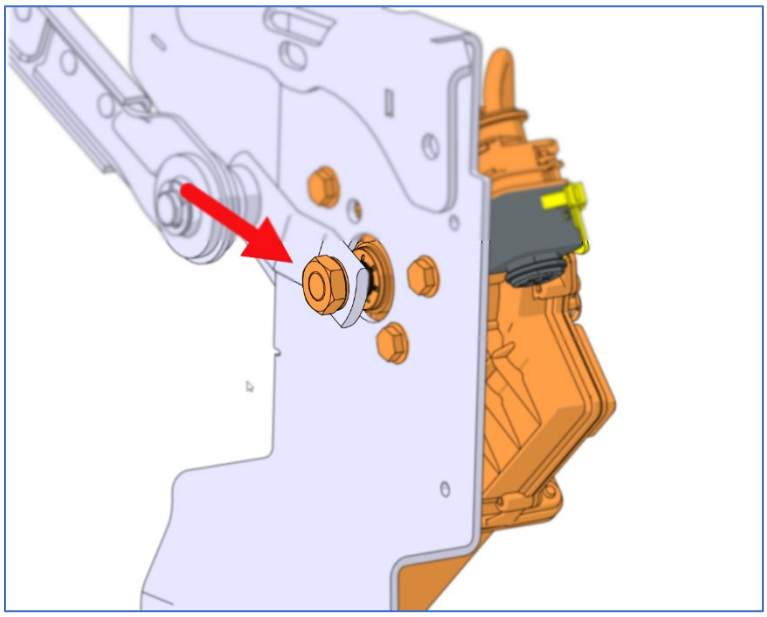

Figure 7

## Linkage Disconnection from The Drive Motor Shaft

5. Using a small pry bar, disconnect the linkage from the drive motor shaft.

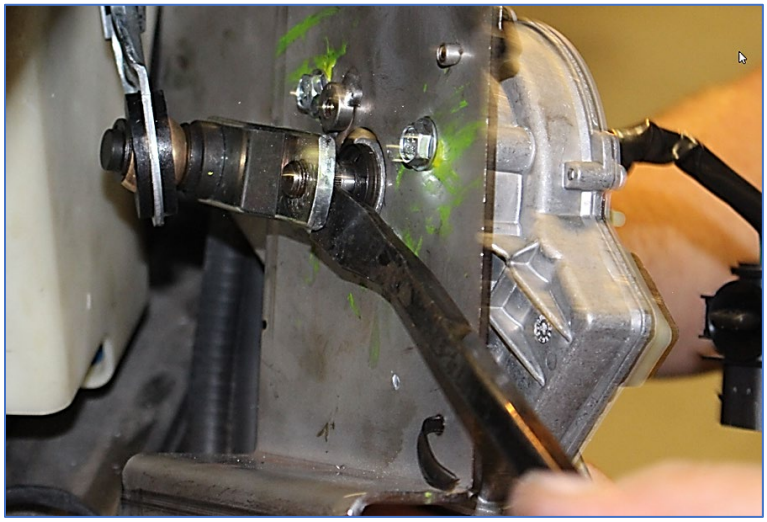

**Figure 8**

## Drive Motor Removal and Replacement

6. Dismount the drive motor from the bracket. To do so, unscrew the four mounting bolts.

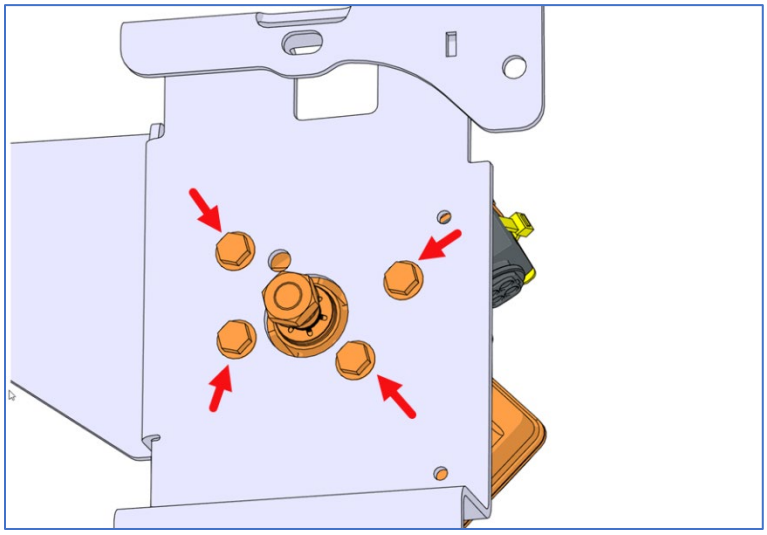

**Figure 9**

7. Install the new drive motor on the bracket oriented in relation with the bracket (8.5 Nm / 75 lb-in).

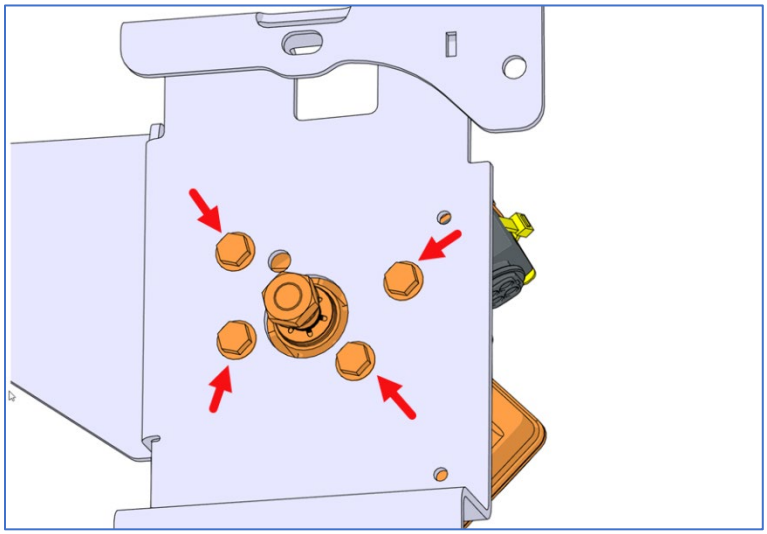

Figure 10

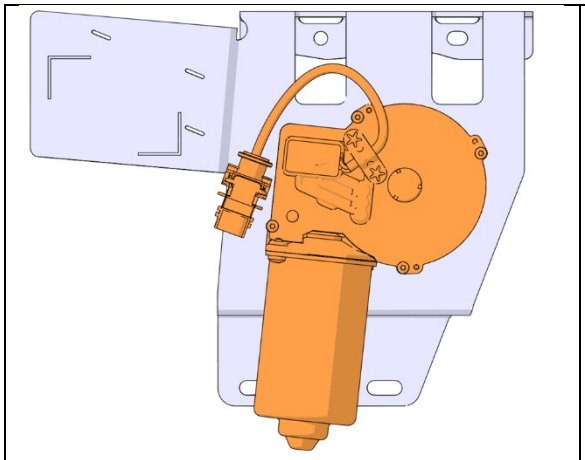

Figure 11: CURBSIDE

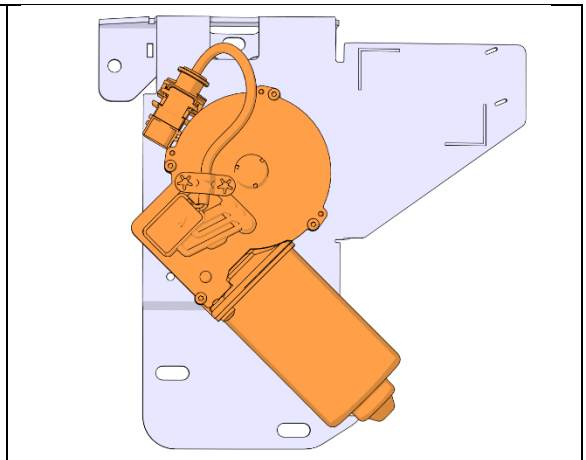

Figure 12: STREET SIDE

## Park Position Setting

NOTE: when setting the park position for the curb side drive motor, the street side drive motor connector must absolutely be connected.

8. **Momentarily**, plug the drive motor connector.

9. **Momentarily**, restore the power supply. Turn the wiper switch to ON then OFF so the new drive motor will be set to park position.

**DANGER**

The wiper linkage can cut your fingers. Cut off the power supply before working on this system.

10. Unplug the drive motor connector. Cut off the power supply.

11. Screw a M6-1.0x30 mm screw in the park position weldnut.

12. Connect the linkage to the drive motor shaft. **Make sure the link rests against the park position screw as shown.**

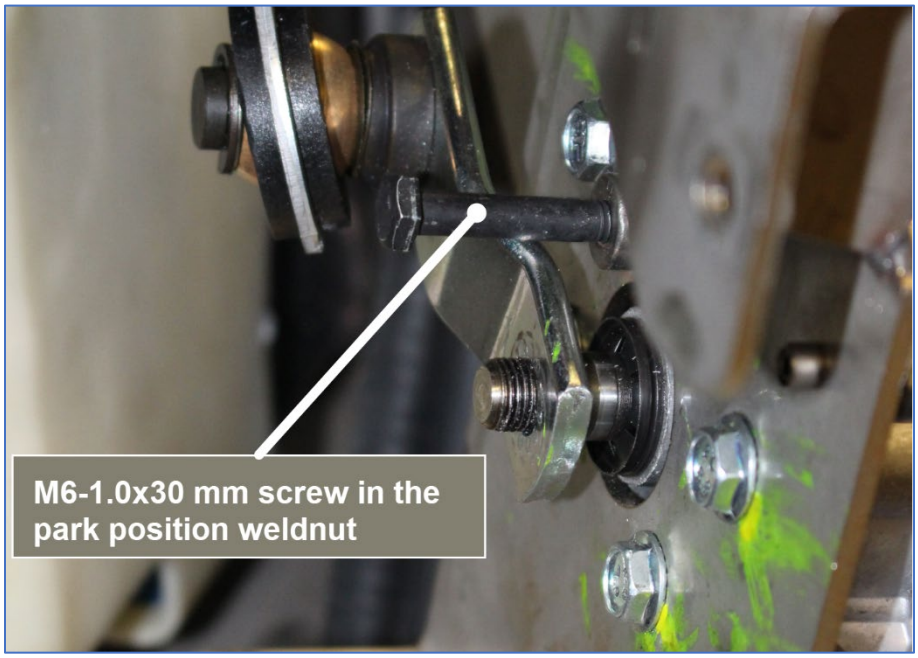


Figure 13

## Linkage Connection to The Drive Motor Shaft

13. Reinstall the washer then the shaft nut. Tighten to a torque of **35 Nm / 26 lb-ft**. Prescribed torque is mandatory. **Make sure the link rests against the park position screw during this operation**.

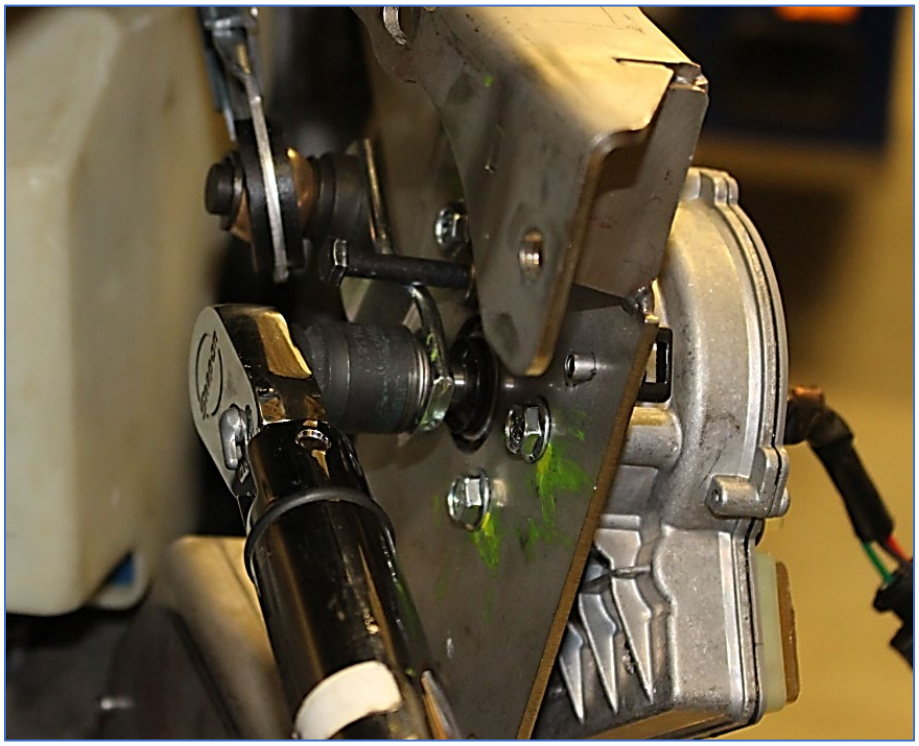

**Figure 14**

## Drive Motor Bracket Installation

14. Reinstall the drive motor bracket. Tighten bolts to **17 Nm** / **13 lb-ft**. Prescribed torque is mandatory.

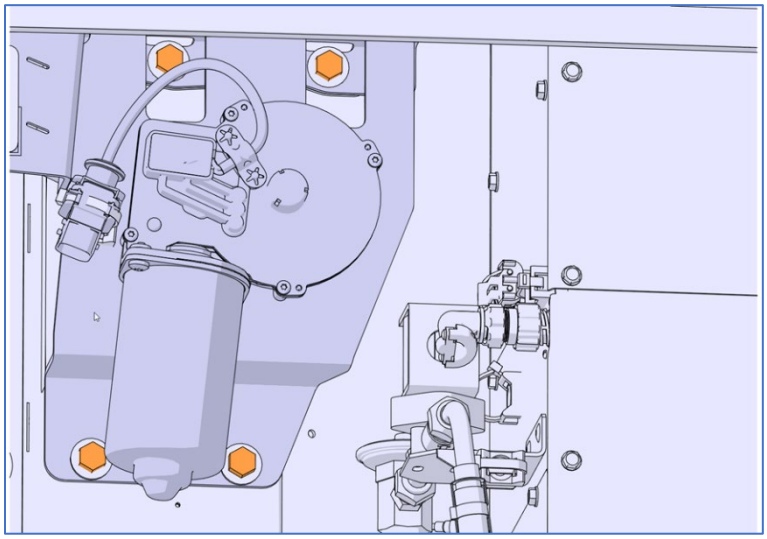

**Figure 15: CURBSIDE DRIVE MOTOR**

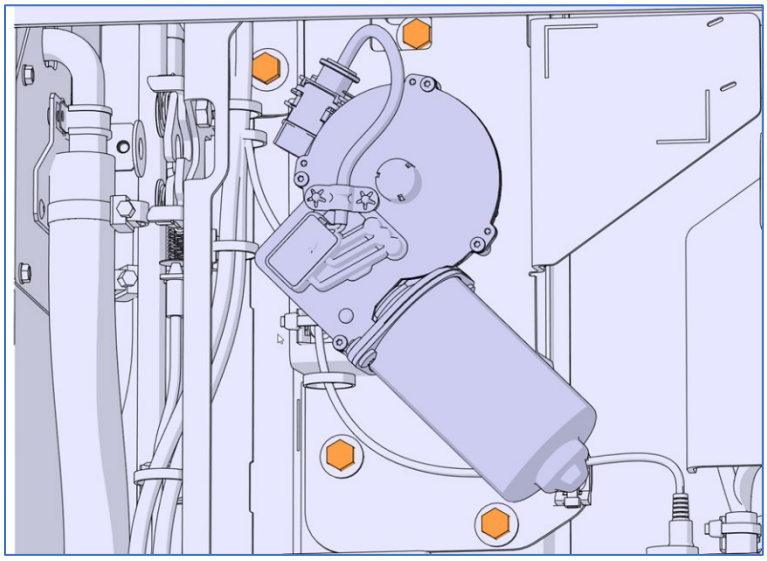

**Figure 16 : STREET SIDE DRIVE MOTOR**

15. Plug the drive motor connector and secure the connector using nylon tie p/n 504637.

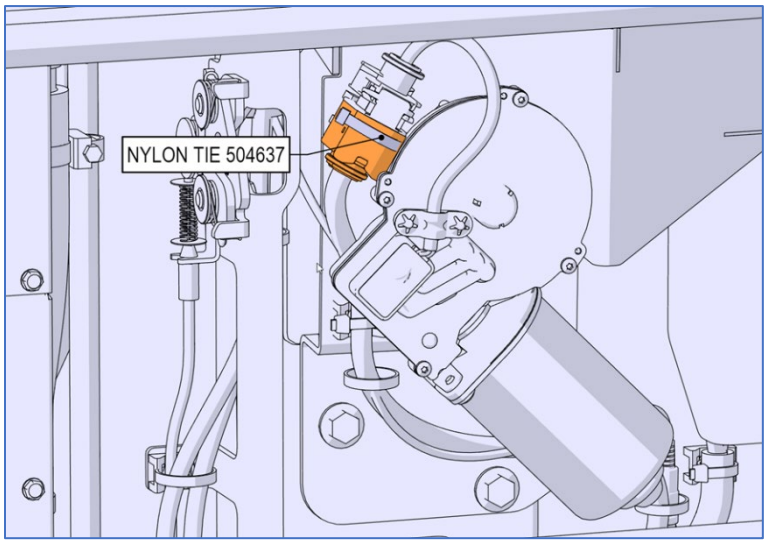


**Figure 17**

# PART 2 - WIPER PIVOT AND LINKAGE REPLACEMENT

**DANGER**

The wiper linkage can cut your fingers. Cut off the power supply before working on this system.

## Preparation

1. Make sure the wipers are in the park position as shown.

2. Mark wiper blades positions on the windshield.
*Use masking tape or a pencil or marker that makes temporary markings when used on glass.*

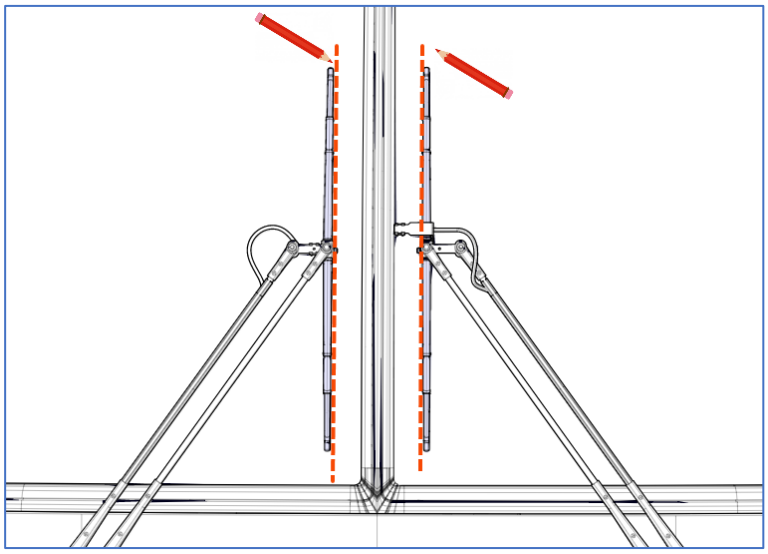

**Figure 18**

3. Perform *Drive Motor Bracket Removal* found in PART 1.

4. Perform *Linkage Disconnection from The Drive Motor Shaft* found in PART 1.

## Wiper Arm and Pivot Hardware Removal

5. Disconnect the windshield washer tube.

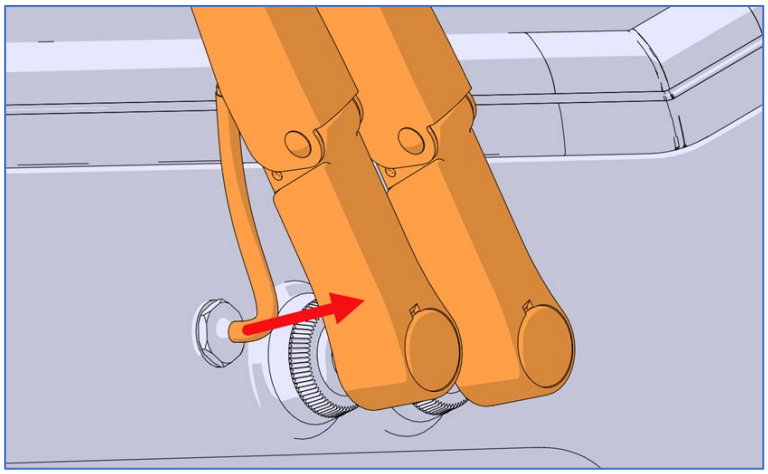

**Figure 19**

6. Remove the wiper arm nut caps.

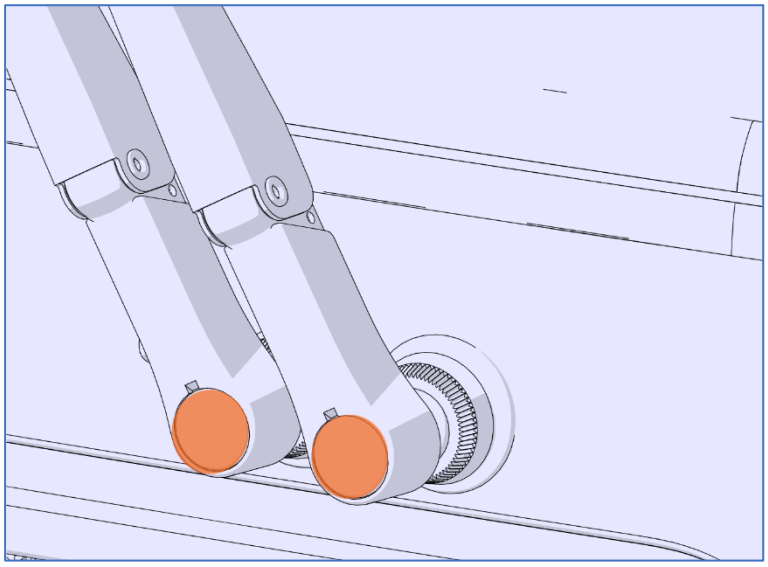

**Figure 20**

7. Unscrew the wiper arm nuts. Remove the wiper arms. Use of puller no. G37708 is recommended (use 15 mm socket).

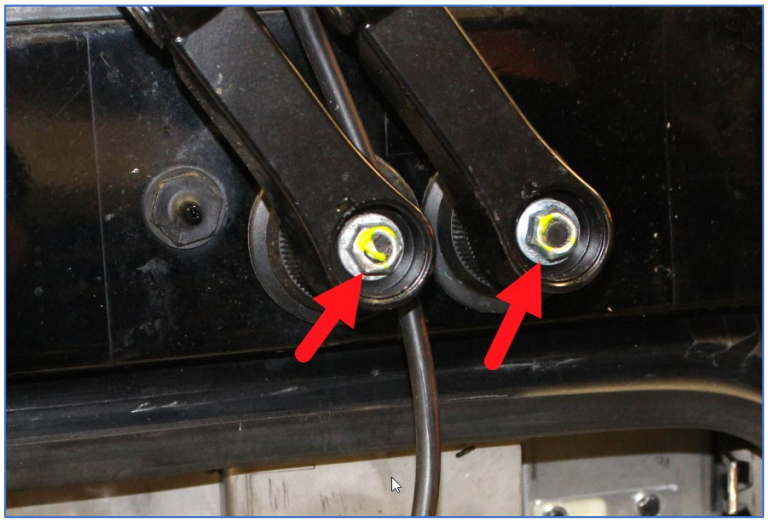

Figure 21

8. Remove the plastic nuts (item 1) and the rubber gaskets (item 2).

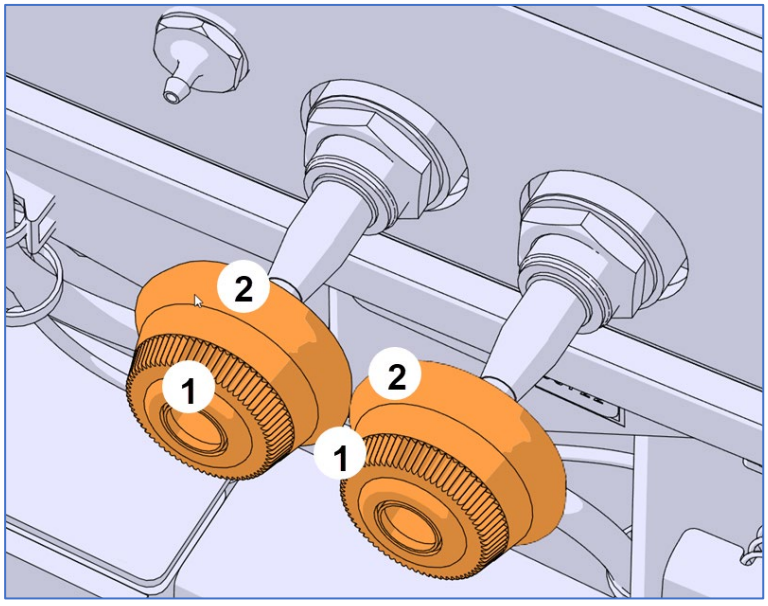


FIGURE 22

9. Remove the butyl sealant applied around the wiper pivots and the fiber panel.



Figure 23

10. Unscrew the two nuts shown on the image below (use 32 mm socket).

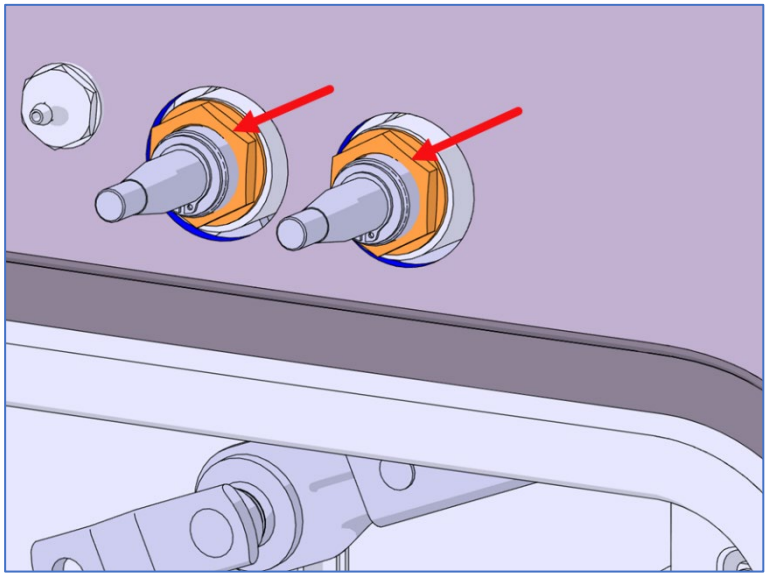

Figure 24

## Wiper Pivot and Linkage Assembly Removal

11. **Loosen** the four bolts identified on the image below.

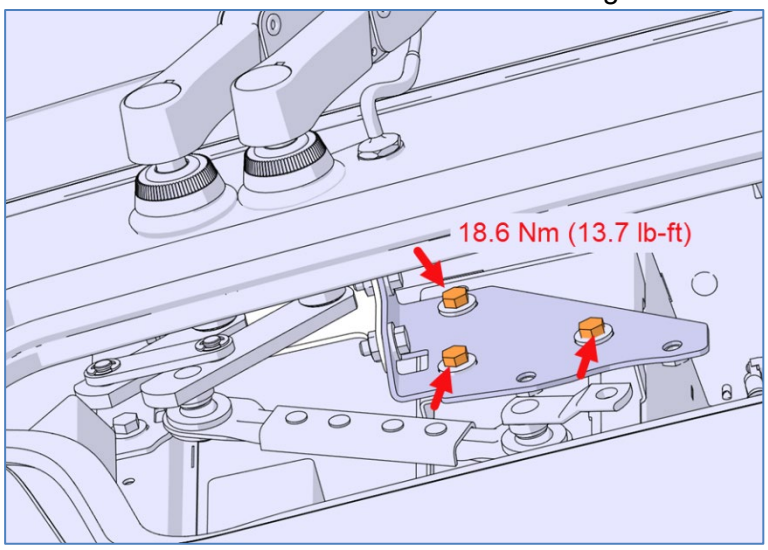


Figure 25: CURB SIDE

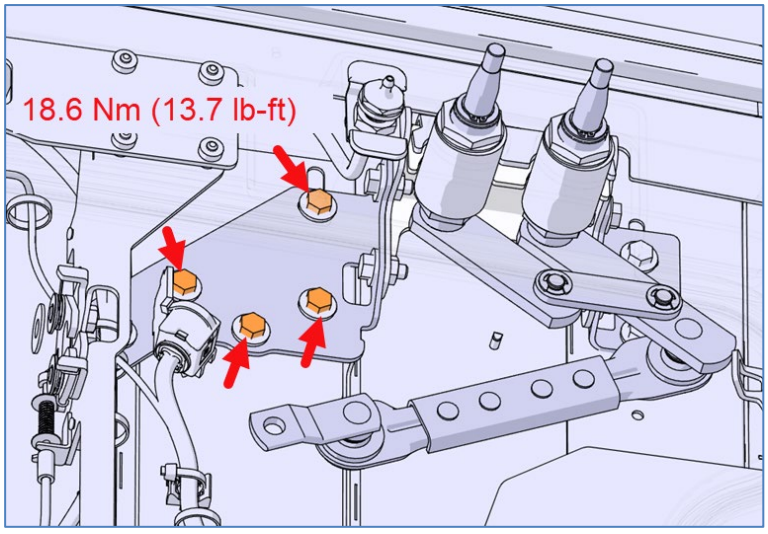


Figure 26 : STREET SIDE

12. Unscrew and remove the two bolts identified on the image below.

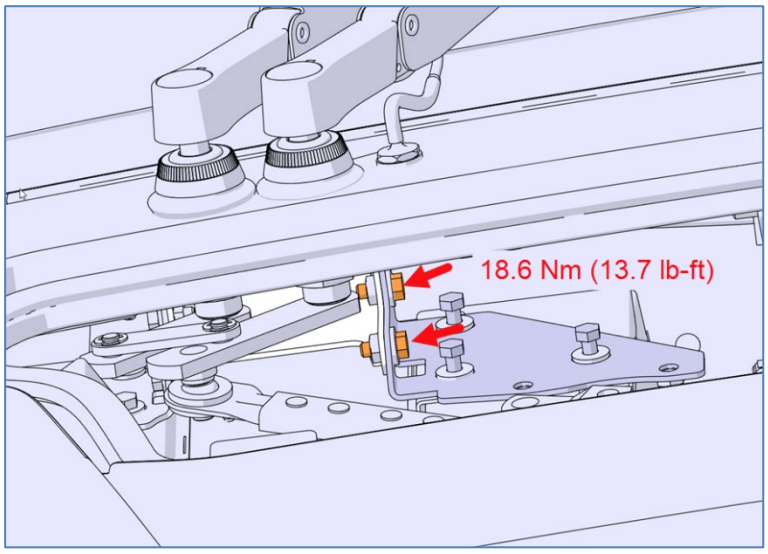


**Figure 27: CURBSIDE**

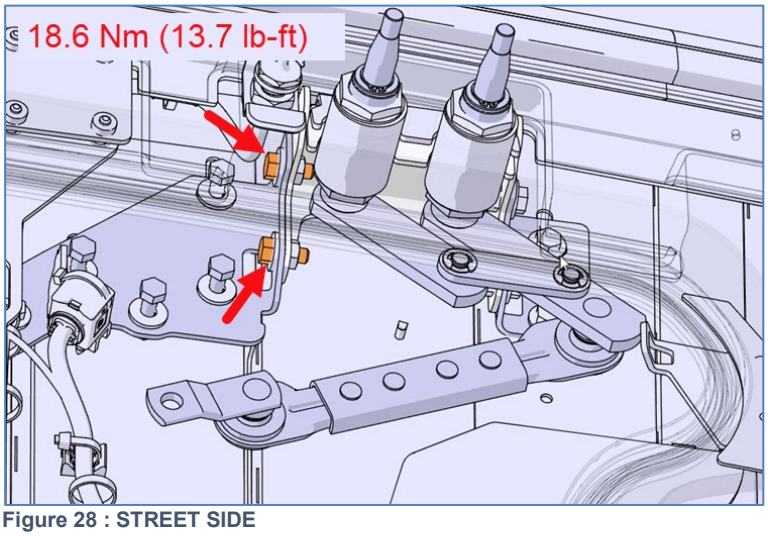


**Figure 28 : STREET SIDE**

13. Unscrew and remove the two bolts identified on the image below.

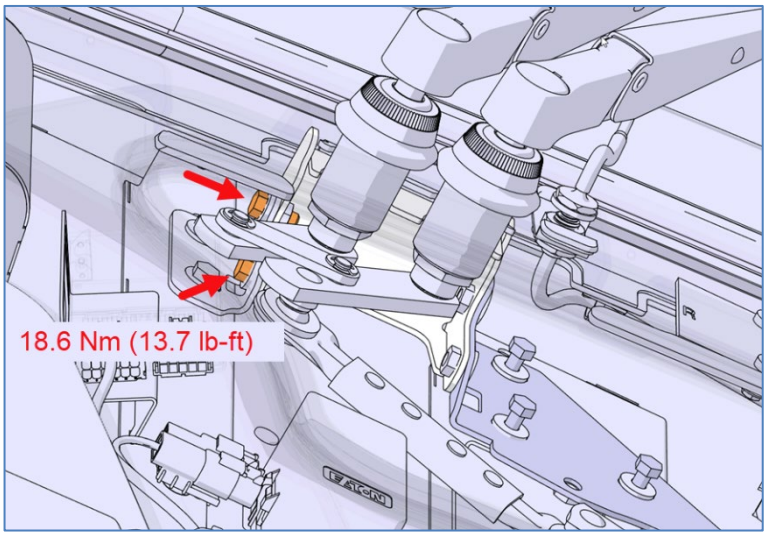


Figure 29: CURB SIDE

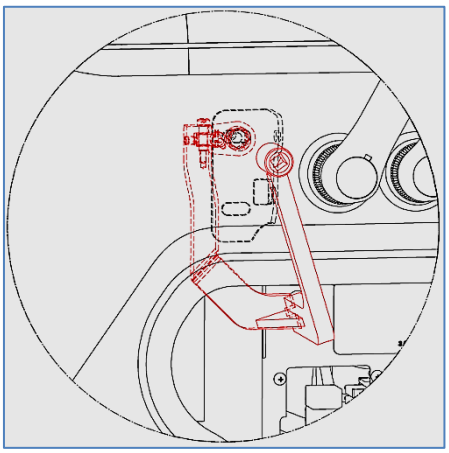

USE TORQUE TOOL G37274

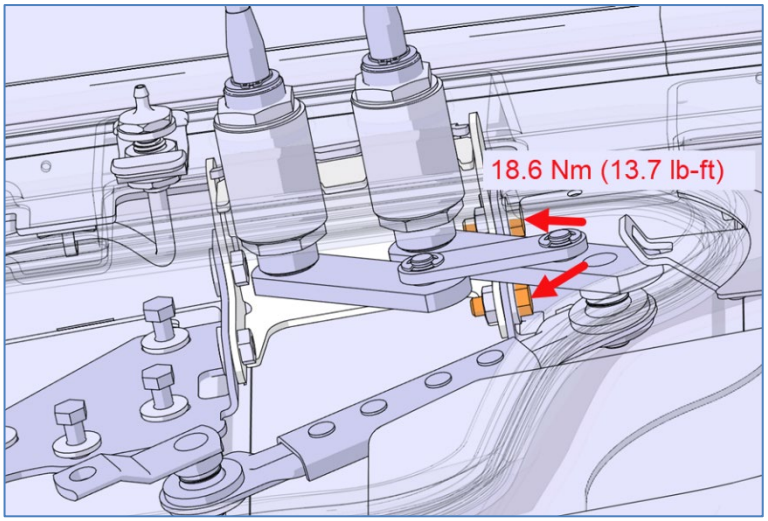


Figure 30 : STREET SIDE

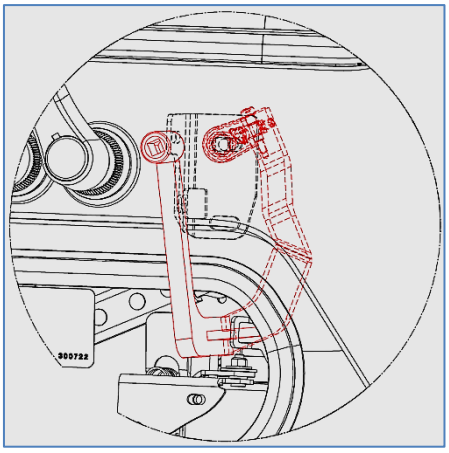

USE TORQUE TOOL G37274

14. Remove the pivot and linkage assembly.

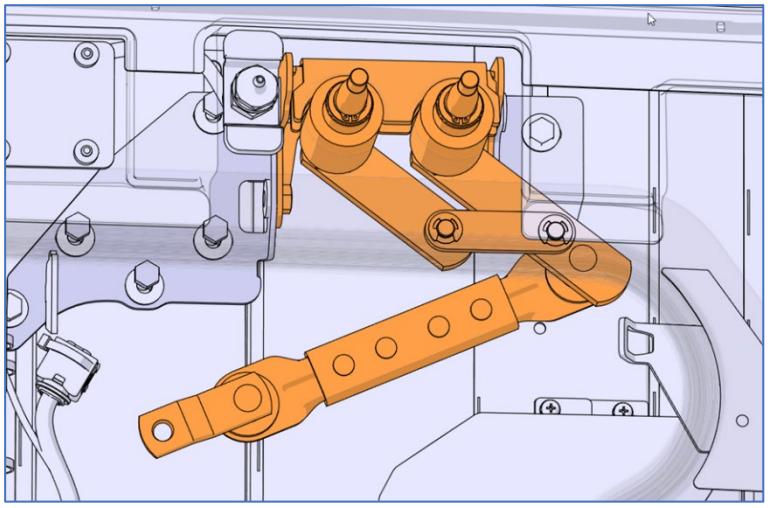

Figure 31

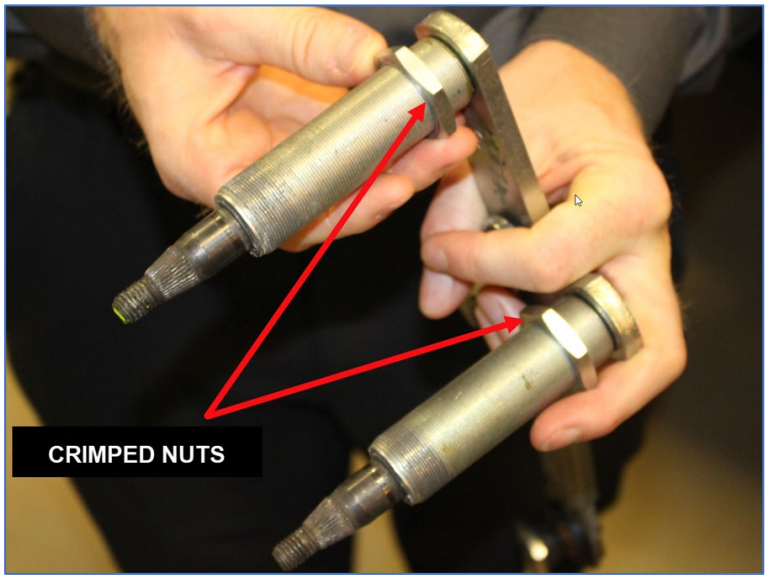


Figure 32

## Damaged Components Replacement

15. Replace the damaged components.

## Pivot and Linkage Assembly Installation

16. Reinstall the pivot and linkage assembly, reversing *Wiper Pivot and Linkage Assembly Removal* steps. Prescribed torque is mandatory. DO NOT install the wiper arms at this moment.

17. Tighten the pivot nuts.

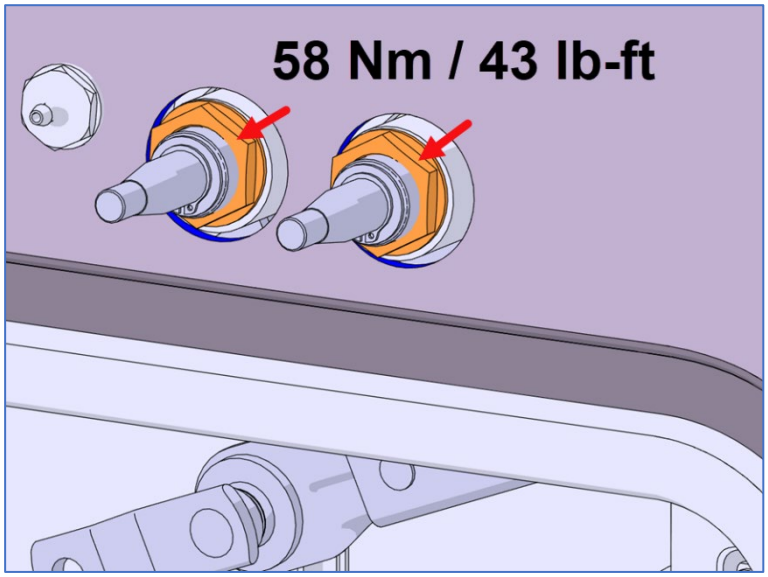


Figure 33

18. Apply butyl or Simson 70-03 sealant between the pivots and the fiber panel and smooth the joint. The sealant joint must be flush with surrounding surface.



Figure 34

## Park Position Setting

19. Perform *Park Position Setting* found in PART 1 DRIVE MOTOR REPLACEMENT.

## Linkage Connection to The Drive Motor Shaft

20. Perform *Linkage Connection to The Drive Motor Shaft* found in PART 1 DRIVE MOTOR REPLACEMENT.

## Drive Motor Bracket Installation

21. Perform *Drive Motor Bracket Installation* found in PART 1 DRIVE MOTOR REPLACEMENT.

## Wiper Arm Installation

22. Reinstall the rubber gaskets (item 2) and the plastic nuts (item 1).

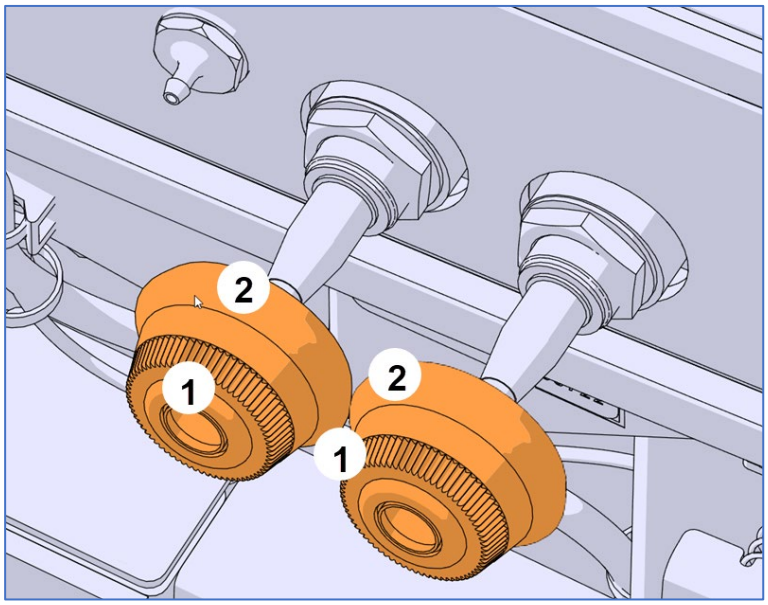


Figure 35

23. Reinstall the wiper arms, making sure the blades align with the marks made previously. Prescribed measurement is A=100 mm (4 in) from the wiper blade to the center of the windshield extrusion.

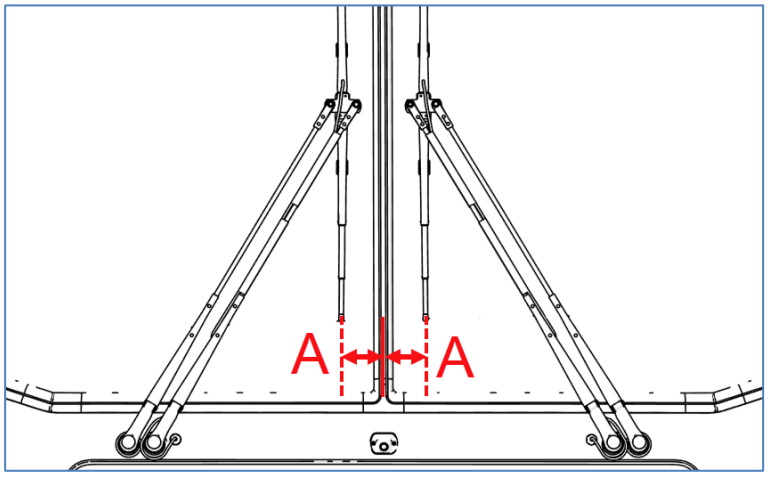


Figure 36

24. Tighten the wiper arms nut to 9 lb-ft. Pull the wiper arm and release. Make sure the blade returns at the proper position. Readjust if necessary.

25. Once proper position is achieved, tighten to 29 lb-ft.

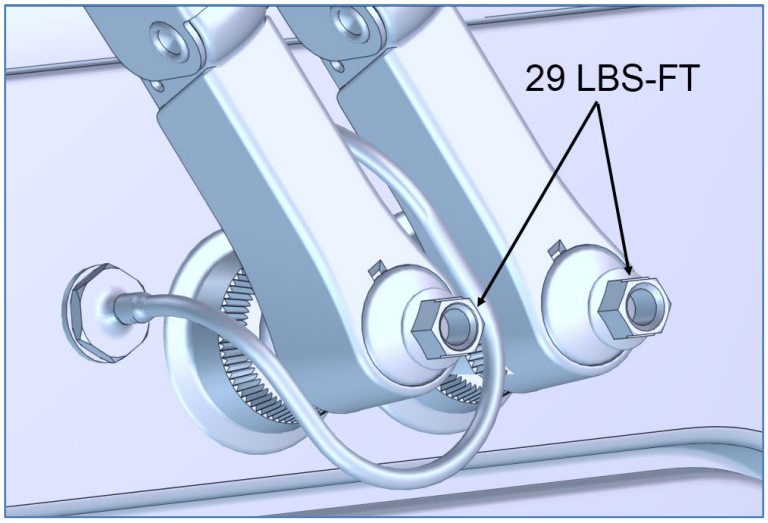


Figure 37

26. Reinstall the wiper arm nuts cap.

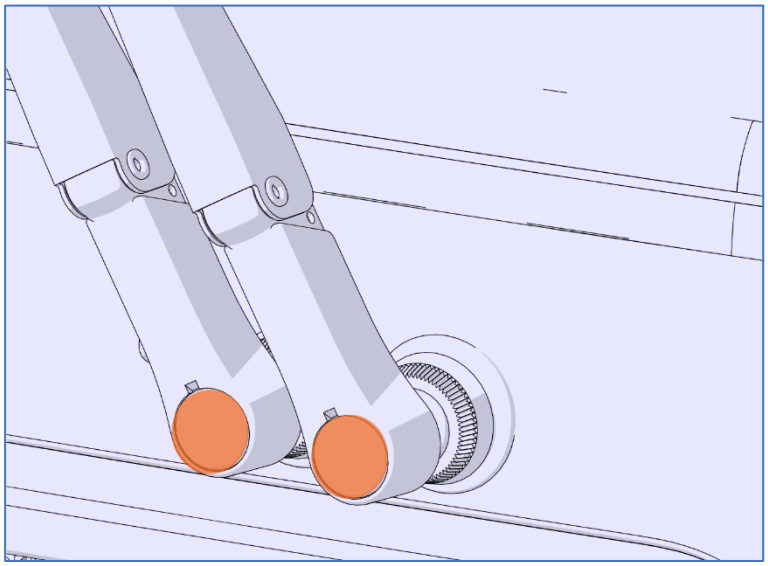

Figure 38

27. Connect the windshield washer tube.

# PARTS / WASTE DISPOSAL

Discard according to applicable environmental regulations (Municipal/State[Prov.]/ Federal)

*Access all our Service Bulletins on http://techpub.prevostcar.com/en/*
*Or scan the QR-Code with your smart phone*
.

**Are you a Vehicle owner?**
*E-mail us at **technicalpublications_prev@volvo.com** and type "ADD" in the subject to receive warranty bulletins applicable to your vehicle(s) by e-mail.*

## CONTENTS

**1 LUBRICATION ..... 2**

**2 FLEXIBLE HOSE MAINTENANCE ..... 2**

2.1 HOSE INSPECTION ..... 2

*2.1.1 Leaks ..... 2*

*2.1.2 Service life ..... 2*

**3 LUBRICATION AND SERVICING SCHEDULE - COACHES ..... 6**

3.1 COACHES LUBRICATION AND SERVICING SCHEDULE CHANGE LOG ..... 12

**4 SPECIALTY TOOLS REQUIRED FOR REGULAR MAINTENANCE OF THE VEHICLES ..... 13**

**5 LUBRICATION AND SERVICING SCHEDULE - MOTORHOMES ..... 15**

5.1 MOTORHOMES LUBRICATION AND SERVICING SCHEDULE CHANGE LOG ..... 18

**6 FLUIDS AND LUBRICANTS SPECIFICATIONS ..... 19**

6.1 FLUIDS AND LUBRICANTS SPECIFICATIONS CHANGE LOG ..... 21

## 1 LUBRICATION

The efficiency and life expectancy of mechanical equipment is largely dependent on proper lubrication and servicing. All mechanical components rely on a lubricating film between moving parts to reduce friction, prevent wear and oxidation. Proper lubrication also helps cool the parts and keep dirt particles away from mating surfaces. Efficient lubrication depends upon using the right type of lubricant, at specified intervals and by filling to correct capacities. Past experience shows that many service problems can be traced to an improper lubricant or to incorrect lubrication procedures.

A comprehensive maintenance and lubrication program is important to ensure the long service life this vehicle was designed for and to avoid costly repairs and associated downtime caused by premature part failure.

A lubrication schedule is included in this section to give the location of key service points on the vehicle as well as the lubricant specifications for each component to be serviced. Specific instructions on how to check and service different components are covered in their respective sections in this maintenance manual.

The recommended lubrication intervals are based on normal operating conditions and mileage accumulation.

Shorten the intervals if your vehicle operates in more severe conditions. Severe conditions include heavy towing, high vehicle weight or operation in mountainous areas. Some parts and equipment referred to in this section may not be installed on your vehicle.

Dispose of used lubricants and filters in an environmentally safe manner, according to federal and/or local recommendations.

## 2 FLEXIBLE HOSE MAINTENANCE

The performance of engine and equipment are greatly related to the ability of flexible hoses to supply lubricating oil, air, coolant, and fuel oil. Maintenance of hoses is an important step to ensure efficient, economical, and safe operation of the engine and related equipment.

### 2.1 HOSE INSPECTION

Check hoses daily as part of the pre-starting inspection. Examine hose for leaks, and check all fittings, clamps, and ties carefully. Ensure that hoses are not resting on or touching shafts, couplings, heated surfaces including exhaust manifolds, any sharp edges, or other obviously damaging areas. Since all machinery vibrate and move to a certain extent, clamps and ties can fatigue over time. To ensure proper support, inspect fasteners frequently and tighten or replace them as necessary.

**⚠ WARNING**

Personal injury and property damage may result from fire caused by leaking flammable fluids.

#### 2.1.1 Leaks

Hoses have a limited service life. Thoroughly inspect hoses annually. Look for surface damage or indications of twisted, worn, crimped, cracked or leaking lines. Replace damaged hoses immediately.

#### 2.1.2 Service life

The limited service life of a hose is determined by the temperature and pressure of the gas or fluid within it, the time in service, its installation, the ambient temperatures, amount of flexing, and the vibration it is subjected to. With this in mind, it is recommended that all hoses be thoroughly inspected at least every 12 months. Look for surface damage or indications of damaged, twisted, worn, crimped, brittle, cracked, or leaking lines. Hoses having a worn outer surface or hoses with a damaged metal reinforcement should be considered unfit for further service.

It is also recommended that all hoses in this vehicle be replaced during major overhaul and/or after a maximum of five service years. Quality of replacement hose assemblies should always be equal to or superior to those supplied by the Original Equipment Manufacturer.

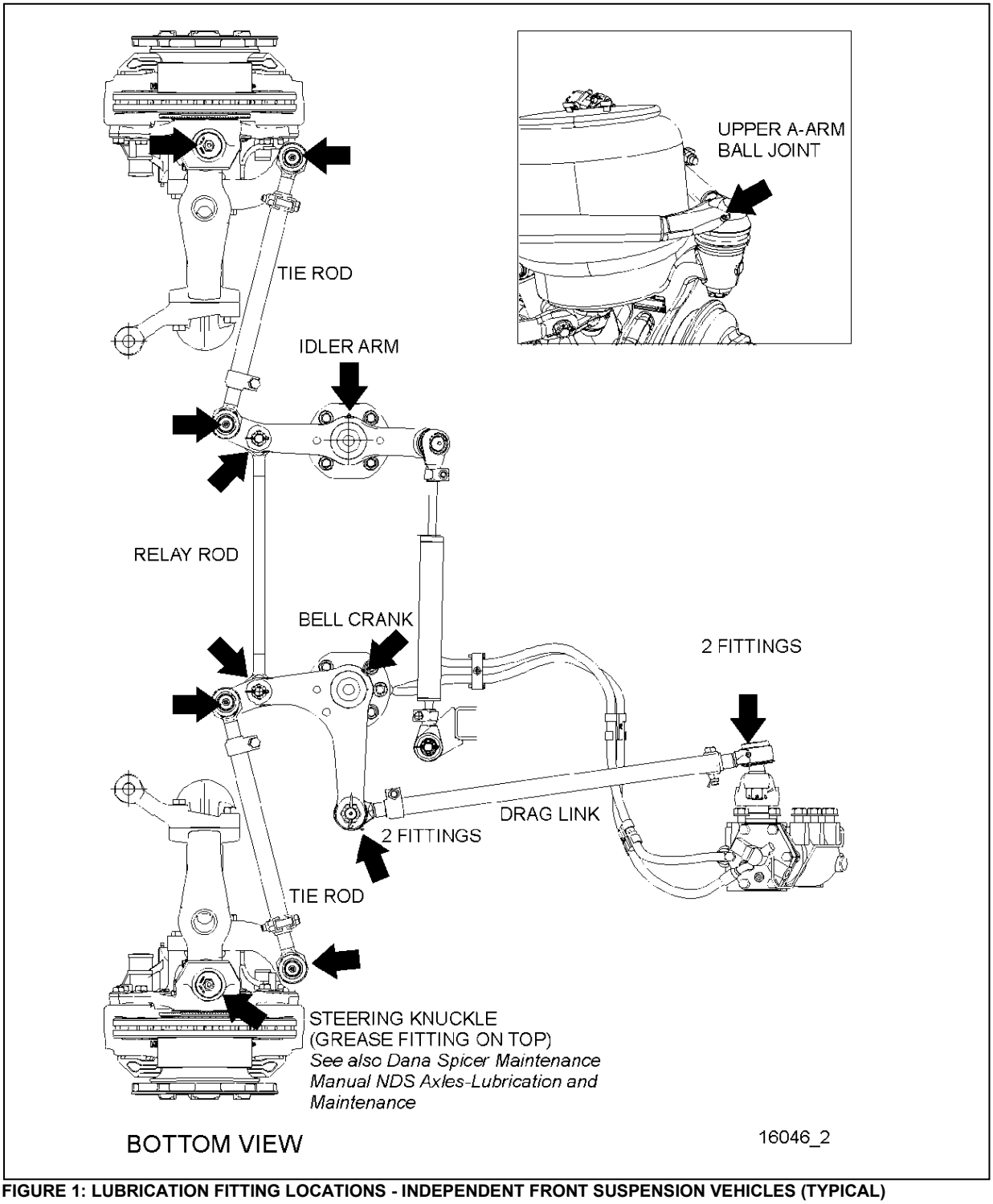


**FIGURE 1: LUBRICATION FITTING LOCATIONS - INDEPENDENT FRONT SUSPENSION VEHICLES (TYPICAL)**

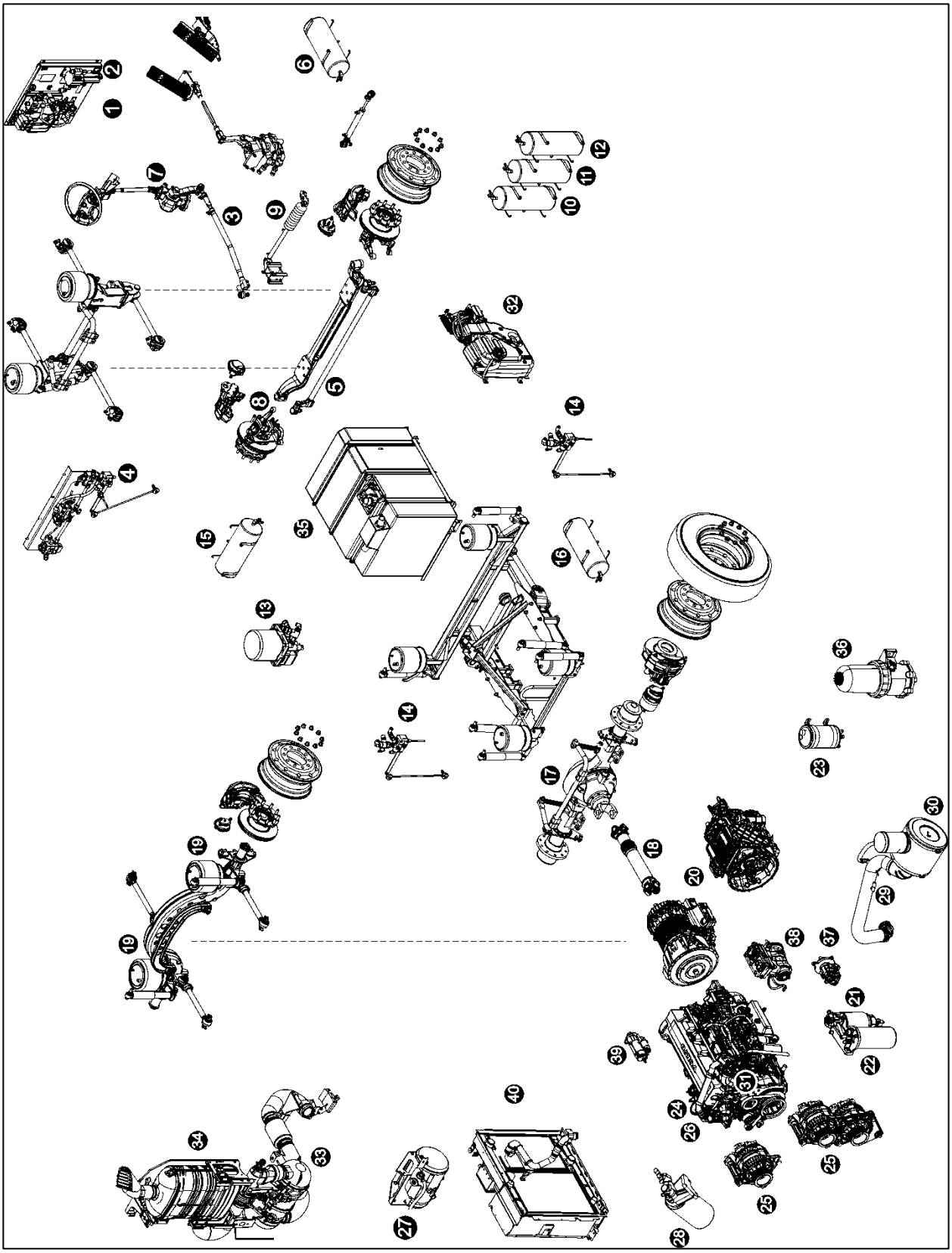

**FIGURE 2: LUBRICATION AND SERVICING POINTS (I-BEAM FRONT AXLE SHOWN) TYPICAL**

1 Accessories air tank drain cock
2 Accessories air filter
3 Steering drag link
4 Height control valve (front)
5 Steering tie rod
6 Accessories air tank
7 Steering column U-joints
8 Steering knuckle pins
9 Steering damper cylinder
10 Emergency / parking brake overrule tank
11 Secondary air tank
12 Kneeling air tank
13 Air dryer
14 Height control valve (rear)
15 Wet air tank
16 Primary air tank
17 Differential
18 Propeller shaft
19 Tag axle lever pivot
20 Transmission
21 Primary fuel filter
22 Secondary fuel filter
23 Power steering fluid tank
24 Engine oil filter
25 Alternators
26 Allison transmission oil dipstick
27 Engine coolant surge tank
28 Coolant filter & conditioner
29 Engine air filter restriction indicator
30 Engine air filter
31 Engine oil dipstick and filler tube
32 DEF tank
33 Diesel particulate filter
34 SCR catalytic converter
35 Diesel fuel tank
36 Davco Fuel Pro 382 fuel filter
37 Power steering pump
38 Air compressor
39 Starter
40 Cooling Assembly (Radiator & CAC)

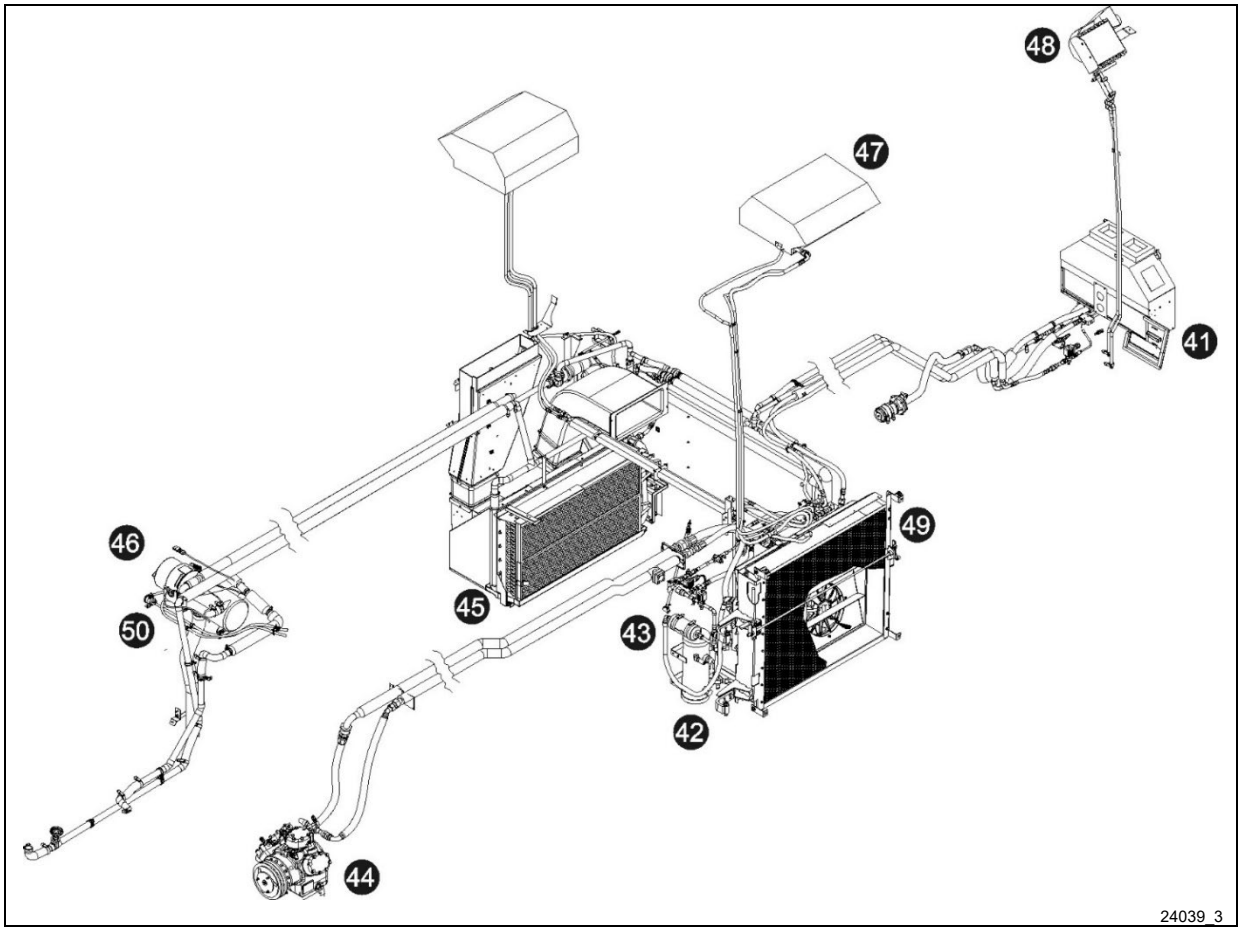


**FIGURE 3: LUBRICATION AND SERVICING POINTS – HVAC UNIT**

| | | | |
|---|---|---|---|
| 41 | HVAC air filter – driver's unit | 46 | Coolant preheater |
| 42 | A/C receiver tank | 47 | A/C system – passenger's overhead console |
| 43 | Refrigerant moisture indicator | 48 | Upper windshield defrost unit |
| 44 | A/C compressor | 49 | Condenser coil |
| 45 | HVAC air filter – passenger's unit | 50 | Preheater fuel filter |

## 3 LUBRICATION AND SERVICING SCHEDULE - COACHES

Following this service schedule is the most economical and easiest way to ensure your vehicle performs at its best, safest and longest. Also, unscheduled maintenance will be minimized since inspection should expose potential problems before they become major ones.

| *IMPORTANT NOTE* |
|---|
| *Refer to the manufacturer's documentation included in this maintenance manual for specific manufacturer's maintenance requirements.* |

## OPERATING CONDITION

Use the information that follows to determine the operating condition and usage applicable to your vehicle

| Heavy | Normal | Economy |
|---|---|---|
| Between 5 mpg and 6 mpg<br>Between 39 L/100 km and 50 L/100 km | Between 6 mpg and 7.5 mpg<br>Between 31 L/100 km and 39 L/100 km | Greater than 7.5 mpg<br>Less than 31 L/100 km |

## LUBRICATION AND SERVICING SCHEDULE

H3 Series coaches

X3 Series coaches

H3 VIP commercial use

X3 VIP commercial use

The maintenance procedures are found in their respective sections of the maintenance manual

A red stripe in the left margin of the schedule highlights the latest changes

**PROCEED TO MAINTENANCE OPERATION EVERY**

Proceed to maintenance operation at miles, km, months or hours whichever comes first

| | | | Item | Month | 6 250 mi / 10 000 km | 12 500 mi / 20 000 km | 31 250 mi / 50 000 km | 50 000 mi / 80 000 km | 100 000 mi / 160 000 km | 106 000 mi / 170 000 km | 125 000 mi / 200 000 km | 150 000 mi / 240 000 km | 185 000 mi / 300 000 km | 250 000 mi / 400 000 km | 300 000 mi / 500 000 km | 500 000 mi / 800 000 km | 600 000 mi / 960 000 km | Lubricant / Fluid [1] |
|---|---|---|---|---|---|---|---|---|---|---|---|---|---|---|---|---|---|---|
| **GENERAL** | | | | | | | | | | | | | | | | | | |
| 1 | Flexible hoses – thoroughly inspect all hoses, tighten the hose clamps to prescribed torque | | | 12 | | | | ● | | | | | | | | | | |
| **01 ENGINE** | | | | | | | | | | | | | | | | | | |
| 1 | extended drains B | Engine oil & filter – heavy operating condition, change every 40 000 mi / 65 000 km / 1 300 hours | 24 | | | | | | | | | | | | | | | B |
| 2 | | Engine oil & filter – economy & normal operating condition, change every 55 000 mi / 90 000 km / 1 600 hours | 24 | | | | | | | | | | | | | | | B |
| 3 | extended drains A | Engine oil & filter – heavy operating condition, change every 45 000 mi / 70 000 km / 1 400 hours | 24 | | | | | | | | | | | | | | | A |
| 4 | (factory filled) | Engine oil & filter – economy & normal operating condition, change every 60 000 mi / 95 000 km / 1 700 hours | 24 | | | | | | | | | | | | | | | A |
| 5 | Air cleaner – change filter element when indicated by restriction indicator or after a maximum of 2 years | | 29<br>30 | 24 | | | | | | | | | | | | | | |
| 6 | Drive belts (all) – check tension, inspect for cracks or frayed material, change belt that display obvious wear or defects | | | 6 | | | ● | | | | | | | | | | | ★ |
| 7 | Valve & injector clearance – initial adjustment (2 500 hrs. or →) | | | | | | | | | | | ● | | | | | | ★ |
| 8 | Valve & injector clearance – check & adjust (5 000 hrs. or →) | | | | | | | | | | | | | | ● | | | ★ |
| 9 | Drive belt tensioners & idlers (water pump, A/C compressor, alternators) – remove belts, check for noisy bearings, play, bushing play | | | 3 | | | | | | | | | | | | | | ★ |
| 10 | Drive belt tensioners & idlers (water pump, alternators) – change proactively | | | | | | | | | | | ● | | | | | | ★ |
| **03 FUEL** | | | | | | | | | | | | | | | | | | |
| 1 | Primary & secondary fuel filters – change at every engine oil change | | 21<br>22 | | | | | | | | | | | | | | | |
| 2 | Preheater fuel filter – change | | 50 | 12 | | | | ● | | | | | | | | | | |

★= Specialty tool required. You will find the SPECIALTY TOOLS REQUIRED FOR REGULAR MAINTENANCE table and the LUBRICANTS SPECIFICATIONS table following this Lubrication and Servicing Schedule.

[1] See paragraph 6.0 FLUIDS AND LUBRICANTS SPECIFICATIONS of this section for lubricant specifications.

# LUBRICATION AND SERVICING SCHEDULE

H3 Series coaches

X3 Series coaches

H3 VIP commercial use

X3 VIP commercial use

The maintenance procedures are found in their respective sections of the maintenance manual

A red stripe in the left margin of the schedule highlights the latest changes

| | | | Item | Month | PROCEED TO MAINTENANCE OPERATION EVERY<br>Proceed to maintenance operation at miles, km, months or hours whichever comes first<br>6 250 mi / 10 000 km | 12 500 mi / 20 000 km | 31 250 mi / 50 000 km | 50 000 mi / 80 000 km | 100 000 mi / 160 000 km | 106 000 mi / 170 000 km | 125 000 mi / 200 000 km | 150 000 mi / 240 000 km | 185 000 mi / 300 000 km | 250 000 mi / 400 000 km | 300 000 mi / 500 000 km | 500 000 mi / 800 000 km | 600 000 mi / 960 000 km | Lubricant / Fluid [1] |
|---|---|---|---|---|---|---|---|---|---|---|---|---|---|---|---|---|---|---|
| **04 EXHAUST AND AFTERTREATMENT SYSTEM** | | | | | | | | | | | | | | | | | | |
| 1 | Diffuser assembly, rain cap & drain tube – check proper functioning, clean | | 34 | 12 | | | | | | | | | | | | | | |
| 2 | DEF pump filter – change | heavy operating condition (5 500 hrs. or →) | 32 | | | | | | | | | | ● | | | | | |
| | | normal operating condition (7 000 hrs. or →) | | | | | | | | | | | | ● | | | | |
| | | economy operating condition (9 000 hrs. or →) | | | | | | | | | | | | | ● | | | |
| 3 | DEF tank – drain, clean with water, clean filler neck strain | heavy operating condition (5 500 hrs. or →) | 32 | | | | | | | | | | ● | | | | | |
| | | normal operating condition (7 000 hrs. or →) | | | | | | | | | | | | ● | | | | |
| | | economy operating condition (9 000 hrs. or →) | | | | | | | | | | | | | ● | | | |
| 4 | DPF filter – either clean or change filter cartridge | heavy operating condition, every 400 000 mi / 650 000 km (10 000 hrs.) | 33 | | | | | | | | | | | | | | | ★ |
| | | normal operating condition, every 480 000 mi / 772 000 km (12 000 hrs.) | | | | | | | | | | | | | | | | ★ |
| | | economy operating condition, every 600 000 mi / 965 000 km (15 000 hrs.) | | | | | | | | | | | | | | | | ★ |
| **05 COOLING** | | | | | | | | | | | | | | | | | | |
| 1 | Coolant filter housing shut-off valve – rotate the handle periodically to keep the spindle rotation smooth | | 28 | 6 | | | | | | | | | | | | | | |
| 2 | Coolant surge tank – test coolant solution | | 27 | 12 | | ● | | | | | | | | | | | | ★ |
| 3 | Radiator – inspect exterior core & clean with low pressure water jet if necessary | | 40 | | | | | | | ● | | | | | | | | |
| 4 | Coolant filter – change (Long-Life Filter without additives to be used with Extended Life Coolant) | | 28 | 12 | | | | | | | | ● | | | | | | |
| 5 | Coolant filter housing shut-off valve spindle – apply fresh grease | | 28 | 12 | | | | | | | | ● | | | | | | P |
| 6 | Cooling system – drain, flush & refill (Extended Life Coolant) every 750 000 mi [2] / 1 200 000 km [2] | | 27 | 96 | | | | | | | | | | | | | | E<br>★ |
| **06 ELECTRICAL** | | | | | | | | | | | | | | | | | | |
| 1 | Power cables inspection – Perform MI15-24 | | | 3 | | | | | | | | | | | | | | |
| 2 | Battery terminals – clean & coat terminals with Nyogel | | | 12 | | | | | | | | | | | | | | |
| 3 | Alternators – remove belts, check for noisy bearings, bearing play | | | 3 | | ● | | | | | | | | | | | | |
| **07 TRANSMISSION [3]** | | | | | | | | | | | | | | | | | | |
| 1 | **Allison** – change transmission fluid, Main & Lube filters (Refer to TABLE 1 in *Section 07: Transmission* for Main & Lube filter change intervals). **Conditions:** filled with TES389 approved fluid + Prognostics mode disabled | | 20 | | | | | | | | | | | | | | | M |
| 2 | **Allison** – change transmission fluid, Main & Lube filters (Refer to TABLE 2 in *Section 07: Transmission* for Main & Lube filter change intervals). | | 20 | | | | | | | | | | | | | | | L |

[2] Provided an engine coolant fluid analysis is done at 600 000 miles / 965 000 km with satisfactory results

[3] In the absence of a fluid analysis program, the fluid change interval listed in Table 1, Table 2 & Table 3 should be used. Change filters according to Table 1, Table 2 & Table 3 even if a fluid analysis shows that the fluid doesn't need to be changed.

# LUBRICATION AND SERVICING SCHEDULE

H3 Series coaches

X3 Series coaches

H3 VIP commercial use

X3 VIP commercial use

The maintenance procedures are found in their respective sections of the maintenance manual

A red stripe in the left margin of the schedule highlights the latest changes

| | | | Item | Month | 6 250 mi / 10 000 km | 12 500 mi / 20 000 km | 31 250 mi / 50 000 km | 50 000 mi / 80 000 km | 100 000 mi / 160 000 km | 106 000 mi / 170 000 km | 125 000 mi / 200 000 km | 150 000 mi / 240 000 km | 185 000 mi / 300 000 km | 250 000 mi / 400 000 km | 300 000 mi / 500 000 km | 500 000 mi / 800 000 km | 600 000 mi / 960 000 km | Lubricant / Fluid [1] |
|---|---|---|---|---|---|---|---|---|---|---|---|---|---|---|---|---|---|---|
| | **Conditions:** filled with TranSynd or TES295/TES668 synthetic fluid only (no mixture[4,5]) + Prognostics mode disabled | | | | | | | | | | | | | | | | | |
| 3 | **Allison** – change fluid & filters when indicated by TRANSMISSION SERVICE indicator or 60 months whichever occurs first. In addition, change filters with every fluid change. **Conditions:** filled with TranSynd or TES295/TES668 synthetic fluid only (no mixture[3,4]) + Prognostics mode enabled | | 20 | 60 | | | | | | | | | | | | | | L |
| 4 | **Allison** – change fluid & filters when indicated by TRANSMISSION SERVICE indicator or 24 months whichever occurs first. In addition, change filters with every fluid change. **Conditions:** transmission filled with TES389 approved fluid with Prognostics mode enabled | | 20 | 24 | | | | | | | | | | | | | | M |
| 5 | Transmission oil cooler, change unit if vehicle is equipped with transmission retarder | | | 24 | | | | | | | | | | | | | | |
| 6 | **Volvo I-Shift** extended drains[6] change fluid & filter | heavy & normal operating condition | 20 | 60 | | | | | | | | | | | | ● | | N |
| | | economy operating condition, every 525 000 mi / 844 000 km | 20 | 60 | | | | | | | | | | | | | | N |
| | **09 PROPELLER SHAFT** | | | | | | | | | | | | | | | | | |
| 1 | Perform Spicer's Driveshaft "Inspection Procedures" [7] | | 18 | | | | ● | | | | | | | | | | | |
| 2 | Grease one fitting on each universal joint | | 18 | 6 | | | | | ● | | | | | | | | | P |
| | **10 FRONT I-BEAM AXLE** | | | | | | | | | | | | | | | | | |
| 1 | Steering knuckle kingpins – grease two fittings per knuckle | | 8 | 6 | ● | | | | | | | | | | | | | P |
| 2 | Steering knuckle kingpins – inspect, check permissible slackness | | 8 | 6 | | | ● | | | | | | | | | | | |
| | **11 REAR AXLES** | | | | | | | | | | | | | | | | | |
| 1 | Meritor drive axle – check differential oil level, add if necessary, every 25 000 mi / 40 000 km | | 17 | 6 | | | | | | | | | | | | | | |
| 2 | Tag axle lever pivot (X3 Series only) – grease one fitting on each pivot | | 19 | 6 | ● | | | | | | | | | | | | | P |
| 3 | **Meritor** drive axle – change differential oil, clean breather | | 17 | 12 | | | | | ● | | | | | | | | | G |
| 4 | **Meritor** drive axle – change differential oil, clean breather (with full synthetic oil) | | 17 | 48 | | | | | | | | | | ● | | | | H |
| 5 | **ZF** Drive axle – check differential oil level, add if necessary at every engine oil change | | 17 | | | | | | | | | | | | | | | I |
| 6 | **ZF** Drive axle – change differential oil and breather | | 17 | 36 | | | | | | ● | | | | | | | | I |

[4] When the transmission contains a mixture of fluids (defined as the quantity of non-TranSynd or non-TES295/non-TES668 fluid remaining in the transmission after a fluid change combined with the quantity of TranSynd or TES295/TES668 required to fill the transmission to the proper level), perform the fluid and filter change according to the TES389 intervals.

[5] Extended TranSynd or TES295/TES668 fluid and filter change intervals are only allowed with Allison High-Capacity filters.

[6] For normal and heavy operating conditions using oil approved for extended drains.

[7] Refer to "Spicer Driveshafts Service Manual DSSM0100".

| | | | | | | | | | | | | | | | | | |
|---|---|---|---|---|---|---|---|---|---|---|---|---|---|---|---|---|---|
| **12 BRAKE & AIR SYSTEM** | | | | | | | | | | | | | | | | | |
| 1 | Check correct functioning of the adjuster, check smooth operation of caliper over its full range of movement, check the adjuster cap condition, check sealing elements, check caliper running clearance, check condition of the guide pin covers at every pad replacements or once a year whichever comes first | | 12 | | | | | | | | | | | | | | |
| 2 | ABS & Electronic Stability Control systems – check proper functioning | | 12 | | | | | | | | | | | | | | ★ |
| 3 | Air tanks – drain water from all tanks | | 6 | | ● | | | | | | | | | | | | |
| 4 | Brake pads & discs – check wear | | | | ● | | | | | | | | | | | | |
| 5 | Accessories air filter – change filter element | 2 | 24 | | | | | ● | | | | | | | | | |
| 6 | Air dryer – change cartridge | 13 | 24 | | | | | ● | | | | | | | | | |
| **13 WHEELS, HUBS & TIRES** | | | | | | | | | | | | | | | | | |
| 1 | Unitized hub bearing, front and tag axle – inspect, check end play | 8 | 12 | | | ● | | | | | | | | | | | ★ |
| 2 | Meritor drive axle bearing – check end play | 17 | 12 | | | | | ● | | | | | | | | | |
| 3 | ZF Drive axle – check compact bearing axial play | 17 | 12 | | | | | ● | | | | | | | | | ★ |
| 4 | ZF Drive axle – change grease in compact bearing | 17 | 72 | | | | | | | | | | | | ● | | J ★ |
| **14 STEERING** | | | | | | | | | | | | | | | | | |
| 1 | **I-beam**: Tie rod – perform "Tie Rod Inspection Procedure" (tube, ball joint, fine adjustment sleeve, corrosion) | 5 | 12 | | | | | | | | | | | | | | |
| 2 | **I-beam**: Steering damper cylinder – grease one fitting at rod end | 9 | 6 | ● | | | | | | | | | | | | | P |
| 3 | **ALL:** Drag link end ball joints – inspect for corrosion | 3 | 12 | | | | | | | | | | | | | | |
| 4 | **IFS** [8]: Steering knuckle (king) pins – grease fitting on top & bottom | | 6 | ● | | | | | | | | | | | | | P |
| 5 | **IFS**: Tie rod ends – grease fitting | | 6 | ● | | | | | | | | | | | | | P |
| 6 | **IFS**: Drag link ends – clean and grease two fittings at each end | | 6 | ● | | | | | | | | | | | | | P |
| 7 | **IFS**: Idler arm – grease fitting | | 6 | ● | | | | | | | | | | | | | P |
| 8 | **IFS**: Bell crank – grease fitting | | 6 | ● | | | | | | | | | | | | | P |
| 9 | **IFS**: Relay rod ends – grease one fitting at each end | | 6 | ● | | | | | | | | | | | | | P |
| 10 | **IFS**: Steering knuckle (king) pins – check play | 8 | 6 | | | ● | | | | | | | | | | | |
| 11 | **ALL**: Power steering reservoir filter element – change | 23 | 12 | | | | | | | | | | | | | | |
| 12 | **ALL**: Power steering fluid – check fluid condition (color) through visual inspection and change if required. Check level, add if necessary | 23 | 12 | | | | | ● | | | | | | | | | D |
| 13 | **ALL**: Steering system – check play | 7 | 12 | | | | | | | | | | ● | | | | |
| **16 SUSPENSION** | | | | | | | | | | | | | | | | | |
| 1 | IFS [7] upper a-arm ball joint – grease fittings | | 6 | ● | | | | | | | | | | | | | Q |
| **18 BODY** | | | | | | | | | | | | | | | | | |
| 1 | Structure inspection for corrosion – Perform MI15-18 every 5 years for normal duty vehicles and normal environment operation | | | | | | | | | | | | | | | | |
| 2 | Structure inspection for corrosion – Perform MI15-18, every 2 years starting from the 5th year in service for severe duty vehicles and harsh environment operation | | | | | | | | | | | | | | | | |
| **22 HEATING & AIR CONDITIONING** | | | | | | | | | | | | | | | | | |
| 1 | Evaporator compartment & driver's HVAC units – clean heater core with low air pressure | | 12 | | | | | | | | | | | | | | |
| 2 | Evaporator compartment & driver's HVAC units – clean evaporator core with low air pressure | | 12 | | | | | | | | | | | | | | |
| 3 | Condenser compartment & driver's HVAC units – clean condenser core with low air pressure | | 12 | | | | | | | | | | | | | | |
| 4 | A/C compressor – check oil level and color, add if necessary | 44 | 12 | | | | | | | | | | | | | | F |
| 5 | A/C compressor – change oil, clean oil filter and magnetic plug | 44 | 36 | | | | | | | | | | | | | | F ★ |
| 6 | A/C compressor – empty shaft seal oil collection tube | 44 | 1 | | | | | | | | | | | | | | |
| 7 | A/C receiver tank – check refrigerant level, add if necessary | 42 | 6 | ● | | | | | | | | | | | | | |

[8] IFS=Independent Front Suspension

| | | | | | | | | | | | | | | | | | | |
|---|---|---|---|---|---|---|---|---|---|---|---|---|---|---|---|---|---|---|
| 8 | Filter dryer unit – check refrigerant moisture indicator, change filter dryer unit according to moisture indicator | 43 | 6 | ● | | | | | | | | | | | | | | |
| 9 | Passenger's unit 2-part air filter – clean or change | 45 | 6 | | ● | | | | | | | | | | | | | |
| 10 | **X3 Series only**. Evaporator compartment door fresh air intake filter – clean or change | | 6 | | ● | | | | | | | | | | | | | |
| 11 | Parcel rack fans air filter – clean or change | 47 | 6 | | ● | | | | | | | | | | | | | |
| 12 | Driver's HVAC unit return air filter – clean or change | 41 | 6 | | ● | | | | | | | | | | | | | |
| **23 ACCESSORIES** | | | | | | | | | | | | | | | | | | |
| 1 | AFSS extinguisher tank – have the fire extinguisher rebuilt by a qualified fire protection equipment company familiar with the extinguisher used | | 72 | | | | | | | | | | | | | | | |
| 2 | AFSS extinguisher tank – have the fire extinguisher cylinder hydrostatically tested by a qualified fire protection equipment company | | 144 | | | | | | | | | | | | | | | |

## 3.1 COACHES LUBRICATION AND SERVICING SCHEDULE CHANGE LOG

| | CHANGE LOG - LUBRICATION AND SERVICING SCHEDULE | DATE |
|---|---|---|
| 1 | ADDED: 11 REAR AXLES – Lubrication intervals for ZF drive axle. 13 REAR AXLES – ZF drive axle compact bearing maintenance | Apr.26, 2016 |
| 2 | ADDED: 14 STEERING – Steering system play inspection | Aug.18, 2016 |
| 3 | REMOVED: 06 ELECTRICAL – HD10 Bosch alternators brushes inspection & replacement | Nov.10, 2016 |
| 4 | UPDATE: 01 ENGINE – Engine oil & filter change interval extended if using appropriate oil | Dec.15, 2016 |
| 5 | REMOVED: 05 COOLING – Coolant filter – change at every engine oil change (…with Fully Formulated Coolant) | Dec.15, 2016 |
| 6 | REMOVED: 05 COOLING – Cooling system – drain, flush & refill (fully formulated coolant) | Dec.15, 2016 |
| 7 | UPDATE: 01 ENGINE – Drive belt tensioners & idlers – check for noisy bearings, play, bushing play, was 300 000 mi, changed to 3 months | June 7, 2017 |
| 8 | ADDED: 01 ENGINE – Drive belt tensioners & idlers – change proactively | June 7, 2017 |
| 9 | UPDATE: 06 ELECTRICAL – HD10 Bosch alternators drive belt – inspection, was 12 months, changed to 3 months | June 7, 2017 |
| 10 | UPDATE: 14 STEERING – Power steering fluid drain, was 50 000 mi, changed to “check condition at 100 000 mi” | Nov.15, 2017 |
| 11 | UPDATE: 14 STEERING – Power steering reservoir filter element change, was 50 000 mi/12 months, changed to 12 months | Nov.15, 2017 |
| 12 | UPDATE: 22 HEATING & AIR CONDITIONING – change oil, clean oil filter – recommended servicing changed to a formal servicing | Nov.15, 2017 |
| 13 | REMOVED: 05 COOLING – Radiator fan gearbox oil check/drain & drive belt check | April 9, 2018 |
| 14 | ADDED: 05 COOLING – Coolant filter housing shut-off valve – rotate valve handle and grease spindle | April 9, 2018 |
| 15 | REMOVED: 07 TRANSMISSION – I-Shift transmission regular drains | April 9, 2018 |
| 16 | REMOVED: 14 STEERING – I-Beam: tie rod end ball joints – inspect for corrosion | June 5, 2019 |
| 17 | REMOVED: 14 STEERING – I-Beam: tie rod end– clean & grease one fitting at each end | June 5, 2019 |
| 18 | ADDED: 14 STEERING – Perform tie rod inspection procedure | June 5, 2019 |
| 18 | REMOVED: 14 STEERING – I-Beam: tie rod end– clean & grease one fitting at each end | June 5, 2019 |
| 19 | REMOVED: 01 ENGINE – Regular drains C | May 28, 2020 |
| 20 | ADDED: 06 ELECTRICAL – Alternators – remove belts, check for noisy bearings, bearing play | Sept 28, 2022 |
| 21 | ADDED: 01 ENGINE – New Economy operating condition | June 01,2023 |
| 22 | UPDATE: 04 EXHAUST AND AFTERTREATMENT SYSTEM – DEF pump filter – operating conditions added, and intervals increased | June 01,2023 |
| 23 | UPDATE: 04 EXHAUST AND AFTERTREATMENT SYSTEM – DEF tank – drain, clean… – operating conditions added, and intervals increased | June 01,2023 |
| 24 | REMOVED: 04 EXHAUST AND AFTERTREATMENT SYSTEM – Aftertreatment Hydrocarbon Injector (AHI) nozzle – change (4 500 hrs.) | June 01,2023 |
| 25 | UPDATE: 04 EXHAUST AND AFTERTREATMENT SYSTEM – DPF filter – either clean … – operating conditions added, and intervals increased | June 01,2023 |
| 26 | ADDED: 07 TRANSMISSION – Operating condition added for I-Shift | June 01,2023 |
| | | |
| | | |
| | | |
| | | |
| | | |
| | | |

## 4 SPECIALTY TOOLS REQUIRED FOR REGULAR MAINTENANCE OF THE VEHICLES

Use this list of specialty tools in conjunction with the LUBRICATION AND SERVICING SCHEDULE

| SPECIALTY TOOLS REQUIRED FOR REGULAR MAINTENANCE | | | | |
|---|---|---|---|---|
| | MAINTENANCE DESCRIPTION | TOOL # | SPECIALITY TOOL DESCRIPTION | PART # |
| 01 ENGINE | | | | |
| drive belts and idlers | | 1 | belt tensioner wrench | 010032 |
| valves & injectors | | 2 | engine cranking adapter | 88840317 |
| | | 3 | feeler gauge 2.45-2.55 | 88880052 |
| | | 4 | feeler gauge set | 85111377 |
| | | 5 | setting tool 3.20, 3.85 | 88800232 |
| 03 FUEL | | | | |
| Davco Fuel Pro system | | 6 | collar spanner wrench | 530224 |
| 04 EXHAUST AND AFTERTREATMENT SYSTEM | | | | |
| DPF filter – either clean or change | | 7 | DPF removal tool | 680790 |
| 05 COOLING | | | | |
| test coolant solution | | 8 | refractometer coolant/DEF | 88890105 |
| cooling system drain, flush & refill | | 9 | coolant extractor (optional) | 85112740 |
| | | 10 | tube with connector (optional) | 9996049 |
| 06 ELECTRICAL | | | | |
| | | 11 | none | |
| 07 TRANSMISSION | | | | |
| | | 12 | none | |
| 09 PROPELLER SHAFT | | | | |
| | | 13 | none | |
| 10 FRONT AXLE | | | | |
| | | 14 | none | |
| 11 REAR AXLE | | | | |
| | | 15 | none | |
| 12 BRAKE & AIR SYSTEM | | | | |
| ABS & Electronic Stability Control systems – check proper functioning | | 16 | ACOM diagnostic software available free of charge | Bendix website |
| 13 WHEEL, HUBS & TIRES | | | | |
| Hub bearing, front & tag axle – inspect | | 17 | dial indicator with magnetic base | * |

| | MAINTENANCE DESCRIPTION | TOOL # | SPECIALITY TOOL DESCRIPTION | PART # |
|---|---|---|---|---|
| ZF Drive Axle - check compact bearing axial play | | 18 | 14 mm hex drive socket | * |
| | | 19 | E20 Torx socket (external) | * |
| | | 20 | dial indicator with magnetic base | * |
| ZF Drive Axle - change grease in compact bearing | | 18 | 14 mm hex drive socket | * |
| | | 19 | E20 Torx socket (external) | * |
| | | 21 | spanner wrench 5870 401 146 | N67817-21 |
| | | 22 | lifting bracket 5870 281 043 | 19400451 |
| | | 23 | driver 5870 050 007 | 19400449 |
| | | 24 | handle 5870 260 004 | N67817-19 |
| | | 25 | driver 5870 051 053 | N67817-16 |
| | | 26 | seal installer 5870 651 085 | 19400265 |
| | | 27 | pry bar 5870 345 071 | N78017-20 |
| 14 STEERING | | | | |
| | | 28 | none | |
| 16 SUSPENSION | | | | |
| | | 29 | none | |
| 18 BODY | | | | |
| | | 30 | none | |
| 22 HEATING & AIR CONDITIONING | | | | |
| A/C compressor – change oil, clean oil filter | | 31 | Refrigerant recovery unit | |
| Lang electromagnetic clutch – removal tool | | 32 | Puller | 680888 |

*: Common tool. Contact your local tool supplier

## 5 LUBRICATION AND SERVICING SCHEDULE - MOTORHOMES

| LUBRICATION AND SERVICING SCHEDULE<br>H3-45 VIP & X3-45 VIP MOTORHOMES (Private Use)<br>A red stripe in the left margin of the schedule highlights the latest changes | ITEM | EVERY (months) | LUBRICANT / FLUID [9] |
|---|---|---|---|
| **GENERAL** | | | |
| All flexible hoses **–** inspect | | 12 | |
| **H3 VIP Series only**: Main power compartment fan air filter – inspect | | 12 | |
| **01 ENGINE** | | | |
| Engine oil and filters – change | 24 | 12 | A B |
| Air cleaner – change filter element | 30 | 24 | |
| Engine mounted alternators & house alternator(s) – change drive belts and intermediary drive belts | | 24 | |
| Drive belts (all) – check tension, inspect for cracks or frayed material, change belt that display obvious wear or defects | | 12 | |
| Drive belts (all) – change | | 24 | |
| Drive belt tensioners & idlers (water pump, A/C compressor, alternators) – remove belts, check for noisy bearings, play, bushing play | | 3 | |
| Valves and injectors – initial adjustment: after 2 500 hours or 36 months whichever occurs first | 24 | 36 | |
| Valves and injectors – check and adjust: every 5 000 hours or 72 months whichever occurs first | 24 | 72 | |
| **03 FUEL** | | | |
| Primary fuel filter & secondary fuel filter – change at every engine oil change | 21, 22 | | |
| **04 EXHAUST AND AFTERTREATMENT SYSTEM** | | | |
| DPF filter – either clean or change filter cartridge after 10 000 hours | 33 | | |
| DEF tank – drain and clean with water, clean filler neck strainer | 32 | 36 | |
| Diffuser assembly, rain cap & drain tube – check proper functioning, clean | 34 | 24 | |
| DEF pump – change filter element | 32 | 36 | |
| **05 COOLING** | | | |
| Coolant surge tank – test coolant solution | 27 | 12 | |
| Coolant filter housing shut-off valve – rotate the handle periodically to keep the spindle rotation smooth & free. Apply fresh grease on the spindle if needed | 28 | 12 | P |
| Coolant filter – change (Long-Life filter with Extended Life Coolant) | 28 | 12 | |
| Cooling system – drain, flush & refill (with Extended Life Coolant) | 27 | 96 | E |
| **06 ELECTRICAL** | | | |
| Alternators – remove belts, check for noisy bearings, bearing play | | 3 | |
| Battery terminals – clean and coat terminals | | 12 | |
| Power cables inspection – Perform MI15-24 | | 24 | |
| **07 TRANSMISSION [10]** | | | |
| Filled with TES389 approved fluid, with **Prognostics mode disabled** – see TABLE 1 in *Section 07: Transmission* for fluid and filter change | 20 | | M |

[9] See paragraph 6.0 of this section for lubricant specifications.
[10] In the absence of a fluid analysis program, the fluid change interval listed in Table 1, Table 1 & Table 3 should be used. Change filters according to Table 1, Table 2 & Table 3 even if a fluid analysis shows that the fluid doesn't need to be changed.

| LUBRICATION AND SERVICING SCHEDULE<br>H3-45 VIP & X3-45 VIP MOTORHOMES (Private Use)<br>A red stripe in the left margin of the schedule highlights the latest changes | ITEM | EVERY (months) | LUBRICANT / FLUID [9] |
|---|---|---|---|
| Filled with TranSynd or TES295/TES668 approved fluid only, no mixture[11], with **Prognostics mode disabled** – See TABLE 2 in *Section 07: Transmission* for fluid and filter change | 20 | | L |
| Filled with TranSynd or TES295/TES668 approved fluid only, no mixture with **Prognostics mode enabled** [12] - Change fluid & filters when indicated by TRANSMISSION SERVICE indicator or 60 months whichever occurs first. In addition, change filters with every fluid change. | 20 | 60 | L |
| Filled with TES389 approved fluid only, no mixture with **Prognostics mode enabled** – Change fluid & filters when indicated by TRANSMISSION SERVICE indicator or 24 months whichever occurs first. In addition, change filters with every fluid change. | 20 | 24 | M |
| **09 PROPELLER SHAFT** | | | |
| Universal joint – grease on fitting on each universal joint | 18 | 12 | P |
| **11 REAR AXLE** | | | |
| Drive axle – check differential oil level, add if necessary | 17 | 12 | |
| Drive axle – change differential oil, clean breathers | 17 | 12 | G |
| Tag axle lever pivot (X3 Series only) – grease one fitting on each pivot | 19 | 12 | P |
| Drive axle – change differential oil, clean breathers (with full synthetic oil) | 17 | 48 | H |
| **12 BRAKE & AIR** | | | |
| Air tanks – drain water from all tanks | | 12 | |
| Brake pads & discs – check wear | | 12 | |
| Check correct functioning of the adjuster, check smooth operation of caliper over its full range of movement, check the adjuster cap condition, check sealing elements, check caliper running clearance, check condition of the guide pin covers at every pad replacements or once a year whichever comes first | | 12 | |
| ABS & electronic stability control systems – check proper functioning | | 12 | |
| Air dryer – change cartridge | 13 | 24 | |
| Accessories air filter – change filter element | 2 | 48 | |
| **13 WHEELS, HUBS & TIRES** | | | |
| Unitized hub bearing, front and tag axle – inspect, check end play | 8 | 12 | |
| **14 STEERING** | | | |
| Steering knuckle (king) pins – check play | 8 | 12 | |
| Steering knuckle (king) pins – grease fitting on top & bottom | 8 | 12 | P |
| Tie rod ends – clean and grease one fitting at each end | | 12 | P |
| Drag link ends – clean and grease two fittings at each end | | 12 | P |
| Tie rod end & drag link end ball joints – inspect for corrosion | | 12 | |
| Power steering reservoir filter element – change | 23 | 24 | |
| Power steering fluid – check fluid condition (color) through visual inspection and change if required. Check level, add if necessary | 23 | 12 | D |
| Idler arm – grease fitting | | 12 | P |
| Bell crank – grease fitting | | 12 | P |
| Relay rod ends – grease one fitting at each end | | 12 | P |
| Steering system – check play | | 60 | |

[11] When the transmission contains a mixture of fluids (defined as the quantity of non-TranSynd/non-TES295/non-TES668 fluid remaining in the transmission after a fluid change combined with the quantity of TranSynd or TES295/TES668 required to fill the transmission to the proper level), perform the fluid and filter change according to the TES389 intervals.

[12] Extended TranSynd or TES295/TES668 fluid and filter change intervals are only allowed with Allison High-Capacity filters.

| LUBRICATION AND SERVICING SCHEDULE<br>H3-45 VIP & X3-45 VIP MOTORHOMES (Private Use)<br>A red stripe in the left margin of the schedule highlights the latest changes | ITEM | EVERY (months) | LUBRICANT / FLUID [9] |
|---|---|---|---|
| **16 SUSPENSION** | | | |
| Independent front suspension upper a-arm ball joint – grease fittings | | 12 | Q |
| **22 HEATING & AIR CONDITIONING** | | | |
| A/C compressor (Bitzer) – empty shaft seal oil collection tube. Perform a visual inspection of the tube every month during the first year of commissioning, drain if necessary. | 44 | 12 | |
| A/C compressor (Bitzer) – check oil level and color | 44 | 12 | |
| A/C compressor (Bitzer) – change oil, clean oil filter and magnetic plug | 44 | 36 | F |
| A/C receiver tank – check refrigerant level, add if required | 42 | 12 | |
| Refrigerant moisture indicator – check filter dryer unit, change according to moisture indicator | 43 | 12 | |
| HVAC/defroster air filters – clean all filter elements | 41, 45 | 12 | |

## 5.1 MOTORHOMES LUBRICATION AND SERVICING SCHEDULE CHANGE LOG

| | CHANGE LOG - LUBRICATION AND SERVICING SCHEDULE | DATE |
|---|---|---|
| 1 | ADDED: 04 EXHAUST & AFTERTREATMENT SYSTEM - Diffuser assembly, rain cap & drain tube – check proper functioning, clean | Sept.04, 2014 |
| 2 | UPDATE: 05 COOLING – Cooling system with extended life coolant, drain flush & refill, was 48 months, changed to 96 months | Jan.08, 2015 |
| 3 | ADDED: 06 ELECTRICAL – Power cables inspection | May 27, 2015 |
| 4 | ADDED: 04 EXHAUST AND AFTERTREATMENT SYSTEM – AHI nozzle replacement | Aug.12, 2015 |
| 5 | ADDED: 14 STEERING – Steering system play inspection | Aug.18, 2016 |
| 6 | UPDATE: 14 STEERING – Steering system play inspection, was 48 months, changed to 60 months | Sept.18, 2016 |
| 7 | REMOVED: 06 ELECTRICAL –HD10 Bosch alternators brushes inspection & replacement | Nov.10, 2016 |
| 8 | UPDATE: 14 STEERING – Power steering fluid drain, changed to “check condition” | Nov.15, 2017 |
| 9 | UPDATE: 14 STEERING – Power steering reservoir filter element change, was 12 months, changed to 24 months | Nov.15, 2017 |
| 10 | ADDED: 22 HEATING & AIR CONDITIONING – check oil level, change oil, clean oil filter and magnetic plug | Nov.15, 2017 |
| 11 | REMOVED: 05 COOLING – Radiator fan gearbox oil check/drain & drive belt check | April 9, 2018 |
| 12 | ADDED: 05 COOLING – Coolant filter housing shut-off valve – Rotate valve handle and grease spindle | April 9, 2018 |
| 13 | REMOVED: 01 ENGINE – Fluid/lubricant C | May 28, 2020 |
| 14 | UPDATE: 22 HEATING & AIR CONDITIONING – empty shaft seal oil collection tube, was 1 month, changed to 12 months | Feb 17, 2022 |
| 15 | ADDED: 06 ELECTRICAL – Alternators – remove belts, check for noisy bearings, bearing play | Sept 28, 2022 |
| 16 | ADDED: 01 ENGINE – Drive belt tensioners & idlers (water pump, A/C compressor, alternators) – remove belts, check for noisy bearings, play, bushing play | Sept 28, 2022 |
| 17 | REMOVED: 04 EXHAUST AND AFTERTREATMENT SYSTEM – Aftertreatment Hydrocarbon Injector (AHI) nozzle – change (4 500 hrs.) | June 01,2023 |
| 18 | UPDATE: 04 EXHAUST AND AFTERTREATMENT SYSTEM – DPF filter – either clean or change … , was 4 500 hours, changed to 10 000 hours | June 16, 2023 |
| 19 | UPDATE: 04 EXHAUST AND AFTERTREATMENT SYSTEM – DEF tank – drain, clean with water, clean…, was 12 months, changed to 36 months | June 16, 2023 |
| | | |
| | | |
| | | |
| | | |
| | | |
| | | |
| | | |

## 6 FLUIDS AND LUBRICANTS SPECIFICATIONS

| Coaches Schedule | FLUIDS & LUBRICANTS TABLE | | Motorhomes Schedule |
|---|---|---|---|
| **REF** | **SYSTEMS** | **DESCRIPTIONS / SPECIFICATIONS** | |
| A | Engine Oil | Extended drains A | Volvo Premium Motor Oil VDS-5 [13] (Engine D13 2020 (OBD20) and newer)<br>or<br>Volvo Premium Motor Oil VDS-4.5 |
| B | Engine Oil | Extended drains B | Other Volvo Approved VDS-5 [13] oils (Engine D13 2020 (OBD20) and newer)<br>or<br>Other Volvo Approved VDS-4.5 oils |
| C | Engine Oil | --- | --- |
| D | Power Steering fluid | Automatic Transmission Fluid (ATF), Dexron-IIIF, G, H or Dexron-VI<br>Refer to **Bosch List of lubricants TE-ML 09** for further details | |
| E | Engine Coolant | Extended Life Coolant (ELC) meeting Volvo specification VCS2B<br>50/50 concentrated antifreeze/water solution or 50/50 prediluted | |
| F | A/C Compressor Oil | Central HVAC system: Polyolester oil, HFC 134a compatible; Castrol SW-68 (POE) or equivalent<br>Small HVAC system: PAG oil | |
| G | Meritor drive axle | **Regular drains** | Refer to Meritor technical bulletin **TP-9539 Approved Rear Drive Axle Lubricants** |
| H | Meritor drive axle | **Extended drains with Full Synthetic** | Refer to Meritor technical bulletin **TP-9539 Approved Rear Drive Axle Lubricants** |
| I | ZF Drive Axle | Transmission oil, viscosity SAE 80W-90 among ZF **Lubricant Class 12M.**<br>Refer to ZF **List of lubricants TE-ML 12** for Class 12M approved lubricants. Take note that oil change intervals will differ when using other lubricant class | |

[13] VDS-5 oil is not backward compatible. Use only with 2020 (OBD20) engines & newer

## FLUIDS & LUBRICANTS TABLE

Coaches Schedule | Motorhomes Schedule

| REF | SYSTEMS | DESCRIPTIONS / SPECIFICATIONS | |
|---|---|---|---|
| J | ZF Drive Axle compact bearing (hub unit) | Lithium saponified, multipurpose grease, NLGI No.2 among ZF **Grease Class 12H**<br>Refer to ZF **List of lubricants TE-ML 12** for other approved lubricants. Take note that grease change intervals may differ when using other lubricant class | |
| K | --- | --- | |
| L | Allison Transmission Oil | **Extended drains** | Castrol TranSynd™ Synthetic Transmission Fluid for Allison<br>or TES295 or TES668 approved equivalent |
| M | Allison Transmission Oil | **Regular drains** | Schedule1 TES389 fluids or approved equivalent |
| N | Volvo I-Shift Transmission | **Extended drains** | - Volvo I-Shift Transmission Fluid 75W-80<br>- Mobil Delvac Synthetic Transmission Oil V30 75W-80 (Factory filled)<br>or other Volvo approved oils |
| O | --- | --- | |
| P | Multi Purpose Grease | Good quality lithium-based grease:<br>NLGI No.2 Grade is suitable for most temperatures<br>NLGI No.1 Grade is suitable for extremely low temperatures | |
| Q | Multi Purpose Grease | Molykote longterm 2/78 grease | |

## 6.1 FLUIDS AND LUBRICANTS SPECIFICATIONS CHANGE LOG

| | CHANGE LOG | DATE |
|---|---|---|
| 1 | Lubricant And Coolant Specifications Table – Dexron-VI removed from Ref I. Dexron-VI is no longer recommended for use in commercial on-highway transmission. Allison Service Tip #1099revS | Nov.11, 2015 |
| 2 | I-Shift transmission: Castrol Syntrans Grade SAE 75W-85 synthetic oil is no longer approved for extended drains interval | Nov 25 2015 |
| 3 | Added: Lubricants “I” & “J” for ZF drive axle | Apr 26 2016 |
| 4 | New engine oil specification VDS-4.5 (CK-4) introduced. New oil specification compatible with former D13 engine versions | Dec 15 2016 |
| 5 | Power steering fluid, Dexron VI added | Nov 15 2017 |
| 6 | Removed: reference to Castrol Syntrans Grade SAE 75W-85 synthetic oil for I-Shift transmission, regular drains | Apr 9 2017 |
| 7 | Removed: reference to Volvo Approved VDS-4 oils | May 28 2020 |
| 8 | New engine oil specification VDS-5 (API FA-4) introduced. New oil specification not compatible with former D13 engine versions | May 28 2020 |
| 9 | New engine oil in lubricant table, Volvo Premium Motor Oil VDS-5 | Nov 05 2020 |
| 10 | New Allison transmission oil TES668 introduced | Jan 21 2020 |
| 11 | New engine coolant Volvo specification VCS2B | Feb 01 2024 |

**1 LUBRICATION ..... 2**

**2 FLEXIBLE HOSE MAINTENANCE ..... 2**

*2.1.1 Hose Inspection ..... 2*
*2.1.2 Leaks ..... 2*
*2.1.3 Service life ..... 2*

**3 LUBRICATION AND SERVICING SCHEDULE • X3-45 COMMUTER ..... 5**

3.1 LUBRICATION AND SERVICING SCHEDULE CHANGE LOG • X3- 45 COMMUTER ..... 9

**4 SPECIALTY TOOLS REQUIRED FOR REGULAR MAINTENANCE OF THE VEHICLE • X3- 45 COMMUTER 10**

**5 FLUIDS AND LUBRICANTS SPECIFICATIONS • X3- 45 COMMUTER ..... 12**

5.1 FLUIDS AND LUBRICANTS SPECIFICATIONS CHANGE LOG • X3- 45 COMMUTER ..... 14

## 1 LUBRICATION

The efficiency and life expectancy of mechanical equipment is largely dependent on proper lubrication and servicing. All mechanical components rely on a lubricating film between moving parts to reduce friction, prevent wear and oxidation. Proper lubrication also helps cool the parts and keep dirt particles away from mating surfaces. Efficient lubrication depends upon using the right type of lubricant, at specified intervals and by filling to correct capacities. Past experience shows that many service problems can be traced to an improper lubricant or to incorrect lubrication procedures.

A comprehensive maintenance and lubrication program is important to ensure the long service life this vehicle was designed for and to avoid costly repairs and associated downtime caused by premature part failure.

A lubrication schedule is included in this section to give the location of key service points on the vehicle as well as the lubricant specifications for each component to be serviced. Specific instructions on how to check and service different components are covered in their respective sections in this maintenance manual.

The recommended lubrication intervals are based on normal operating conditions and mileage accumulation.

Shorten the intervals if your vehicle operates in more severe conditions. Severe conditions include heavy towing, high vehicle weight or operation in mountainous areas. Some parts and equipment referred to in this section may not be installed on your vehicle.

Dispose of used lubricants and filters in an environmentally safe manner, according to federal and/or local recommendations.

## 2 FLEXIBLE HOSE MAINTENANCE

The performance of engine and equipment are greatly related to the ability of flexible hoses to supply lubricating oil, air, coolant, and fuel oil. Maintenance of hoses is an important step to ensure efficient, economical, and safe operation of the engine and related equipment.

### 2.1.1 Hose Inspection

Check hoses daily as part of the pre-starting inspection. Examine hose for leaks, and check all fittings, clamps, and ties carefully. Ensure that hoses are not resting on or touching shafts, couplings, heated surfaces including exhaust manifolds, any sharp edges, or other obviously damaging areas. Since all machinery vibrate and move to a certain extent, clamps and ties can fatigue over time. To ensure proper support, inspect fasteners frequently and tighten or replace them as necessary.

**⚠ WARNING**

Personal injury and property damage may result from fire caused by leaking flammable fluids.

### 2.1.2 Leaks

Hoses have a limited service life. Thoroughly inspect hoses annually. Look for surface damage or indications of twisted, worn, crimped, cracked or leaking lines. Replace damaged hoses immediately.

### 2.1.3 Service life

The limited service life of a hose is determined by the temperature and pressure of the gas or fluid within it, the time in service, its installation, the ambient temperatures, amount of flexing, and the vibration it is subjected to. With this in mind, it is recommended that all hoses be thoroughly inspected at least every 500 operating hours or after 15,000 miles (24 000 km). Look for surface damage or indications of damaged, twisted, worn, crimped, brittle, cracked, or leaking lines. Hoses having a worn outer surface or hoses with a damaged metal reinforcement should be considered unfit for further service.

It is also recommended that all hoses in this vehicle be r**eplaced** during major overhaul and/or **after a maximum of five service years**. Quality of replacement hose assemblies should always be equal to or superior to those supplied by the Original Equipment Manufacturer.

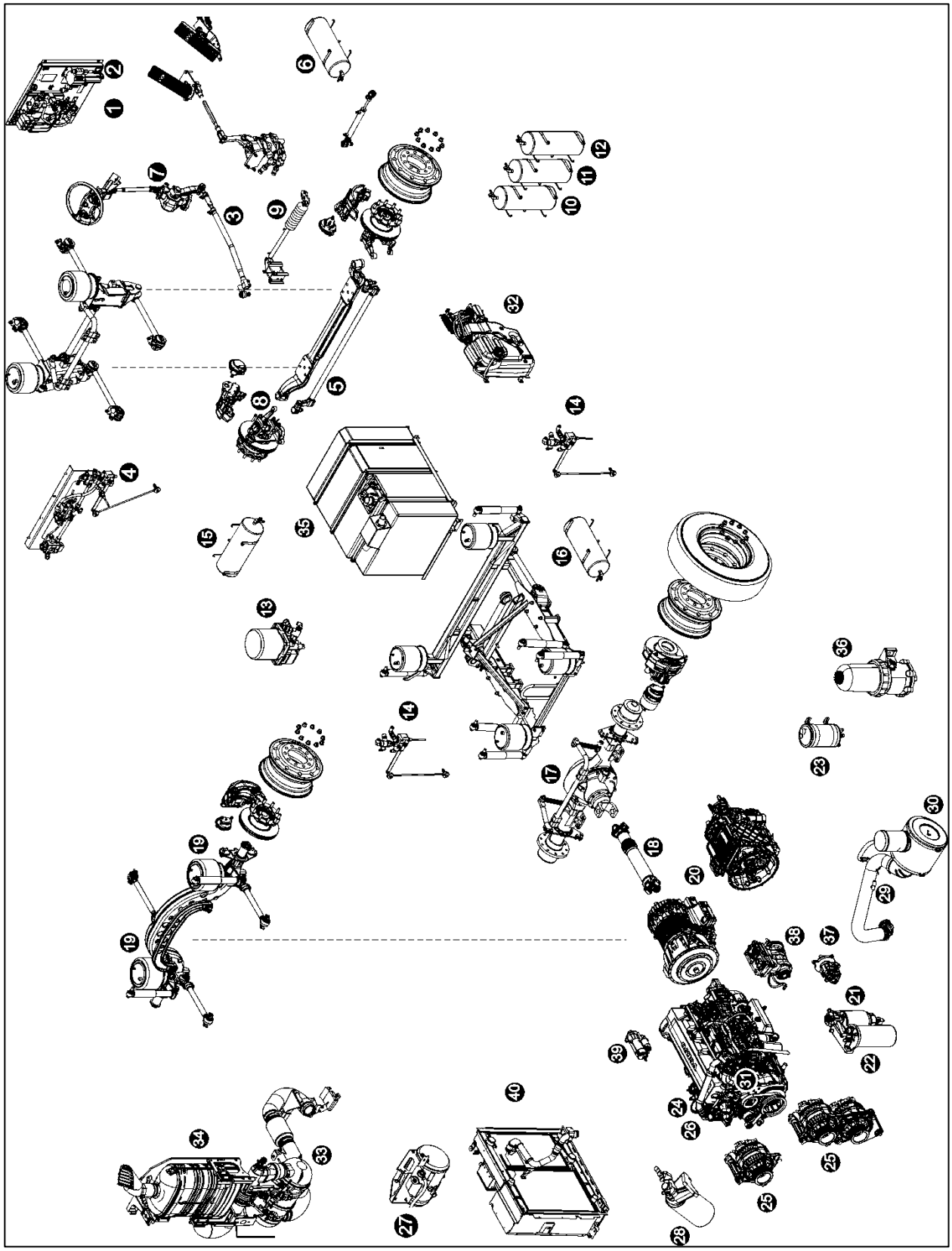

**FIGURE 1: LUBRICATION AND SERVICING POINTS (I-BEAM FRONT AXLE SHOWN) TYPICAL**

1 Accessories air tank drain cock
2 Accessories air filter
3 Steering drag link
4 Height control valve (front)
5 Steering tie rod
6 Accessories air tank
7 Steering column U-joints
8 Steering knuckle pins
9 Steering damper cylinder
10 Emergency / parking brake overrule tank
11 Secondary air tank
12 Kneeling air tank
13 Air dryer
14 Height control valve (rear)
15 Wet air tank
16 Primary air tank
17 Differential
18 Propeller shaft
19 Tag axle lever pivot
20 Transmission
21 Primary fuel filter
22 Secondary fuel filter
23 Power steering fluid tank
24 Engine oil filter
25 Alternators
26 Allison transmission oil dipstick
27 Engine coolant surge tank
28 Coolant filter & conditioner
29 Engine air filter restriction indicator
30 Engine air filter
31 Engine oil dipstick and filler tube
32 DEF tank
33 Diesel particulate filter
34 SCR catalytic converter
35 Diesel fuel tank
36 Davco Fuel Pro 382 fuel filter
37 Power steering pump
38 Air compressor
39 Starter
40 Cooling Assembly (Radiator & CAC)

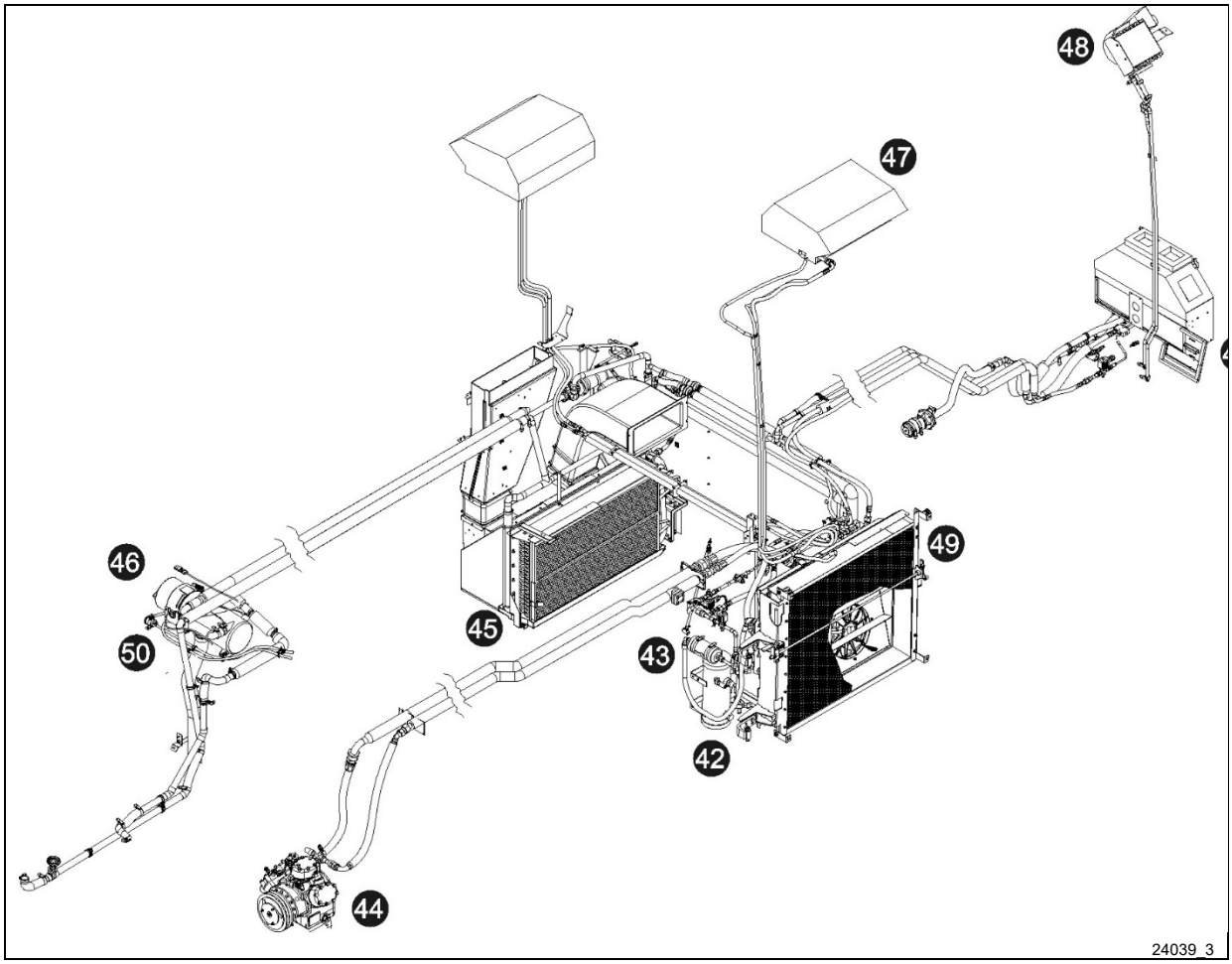


**FIGURE 2: LUBRICATION AND SERVICING POINTS – HVAC UNIT**

| | | | |
|---|---|---|---|
| 41 | HVAC air filter – driver's unit | 46 | Coolant preheater |
| 42 | A/C receiver tank | 47 | A/C system – passenger's overhead console |
| 43 | Refrigerant moisture indicator | 48 | Upper windshield defrost unit |
| 44 | A/C compressor | 49 | Condenser coil |
| 45 | HVAC air filter – passenger's unit | 50 | Preheater fuel filter |

## 3 LUBRICATION AND SERVICING SCHEDULE • X3-45 COMMUTER

Following this service schedule is the most economical and easiest way to ensure your vehicle performs at its best, safest and longest. Also, unscheduled maintenance will be minimized since inspection should expose potential problems before they become major ones.

| *IMPORTANT NOTE* |
|---|
| *Refer to the manufacturer's documentation included in this maintenance manual for specific manufacturer's maintenance requirements.* |

| OPERATING CONDITION | | |
|---|---|---|
| **Severe**<br>Less than 5 mpg<br>Greater than 50 L/100 km | **Heavy**<br>Between 5 mpg and 6 mpg<br>Between 39 km and 50 L/100 km | **Normal**<br>Greater than 6 mpg<br>Less than 39 L/100 km |

This schedule is based on the following Commuter typical duty:
12 hrs./day 365 days/year 12 mph

## LUBRICATION AND SERVICING SCHEDULE
## X3-45 Commuter

The maintenance procedures are found in their respective section of the maintenance manual

A red stripe in the left margin of the schedule highlights the latest changes

| | | | PROCEED TO MAINTENANCE OPERATIONS EVERY<br>Proceed to maintenance operations at miles, km, months or hours whichever comes first | | | | | | | | | | | | | |
|---|---|---|---|---|---|---|---|---|---|---|---|---|---|---|---|---|
| | | | Item | Month | 6 000 mi / 9 500 km | 12 000 mi / 19 500 km | 18 000 mi / 29 000 km | 24 000 mi / 38 500 km | 30 000 mi / 48 000 km | 50 000 mi / 80 000 km | 100 000 mi / 160 000 km | 150 000 mi / 240 000 km | 200 000 mi / 3220000 km | 250 000 mi / 400 000 km | 300 000 mi / 483 000 km | Lubricant / Fluid [1] |
| **GENERAL** | | | | | | | | | | | | | | | | |
| 1 | Flexible hoses – thoroughly inspect all hoses, tighten the hose clamps to prescribed torque | | | 12 | | | | | | ● | | | | | | |
| **01 ENGINE** | | | | | | | | | | | | | | | | |
| 1 | Extended drains | Engine oil & filter – change every 15 000 mi / 24 000 km | 24 | | | | | | | | | | | | | A |
| 2 | Drive belts (all) – visually inspect for cracks or frayed material, change belt that display obvious wear or defects | | | | ● | | | | | | | | | | | ★ |
| 3 | Drive belts (all) – change | | | 12 | | | | | | ● | | | | | | ★ |
| 4 | Automatic belt tensioners & idler pulleys – Remove belts, check for noisy bearings, play, bushing play. Perform "AUTOMATIC BELT TENSIONER AND IDLER PULLEYS INSPECTION" procedure | | | | | | | | | ● | | | | | | ★ |
| 5 | Air cleaner – change filter element when indicated by the filter restriction indicator or after a maximum of two years | | 29<br>30 | 24 | | | | | | | | | | | | |
| 6 | Valve & injector clearance [2] – initial adjustment (2500 hrs.) | | | 12 | | | | | | | | ● | | | | ★ |
| 7 | Valve & injector clearance [2] – check & adjust (5000 hrs.) | | | 24 | | | | | | | | | | | ● | ★ |
| **03 FUEL** | | | | | | | | | | | | | | | | |
| 1 | Primary & secondary fuel filters – change at every engine oil change | | 21<br>22 | | | | | | | | | | | | | |
| **04 EXHAUST AND AFTERTREATMENT SYSTEM** | | | | | | | | | | | | | | | | |
| 1 | Diffuser assembly, rain cap & drain tube – check proper functioning, clean | | 34 | | | | | ● | | | | | | | | |
| 2 | DEF tank – clean filler neck strainer (5000 hrs.) | | 32 | | | | | | | | | | | ● | | |
| 3 | DEF tank – drain & clean with water (5000 hrs.) | | 32 | | | | | | | | | | | ● | | |
| 4 | DEF pump filter element – replace (5000 hrs.) | | 32 | | | | | | | | | | | ● | | |
| 5 | Diesel Particulate Filter – either clean or replace (5000 hrs.) | | 33 | | | | | | | | | | | ● | | ★ |
| **05 COOLING** | | | | | | | | | | | | | | | | |

★= Specialty tools required. You will find the SPECIALTY TOOLS REQUIRED FOR REGULAR MAINTENANCE table and the LUBRICANTS SPECIFICATIONS table following this Lubrication and Servicing Schedule.

[1] See paragraph 5.0 FLUIDS AND LUBRICANTS SPECIFICATIONS of this section for lubricant specifications.

[2] Month interval based on normal duty cycle. On low mileage vehicles, use the mileage interval.

# LUBRICATION AND SERVICING SCHEDULE
## X3-45 Commuter

The maintenance procedures are found in their respective section of the maintenance manual

A red stripe in the left margin of the schedule highlights the latest changes

**PROCEED TO MAINTENANCE OPERATIONS EVERY**

Proceed to maintenance operations at miles, km, months or hours whichever comes first

| | | Item | Month | 6 000 mi / 9 500 km | 12 000 mi / 19 500 km | 18 000 mi / 29 000 km | 24 000 mi / 38 500 km | 30 000 mi / 48 000 km | 50 000 mi / 80 000 km | 100 000 mi / 160 000 km | 150 000 mi / 240 000 km | 200 000 mi / 3220000 km | 250 000 mi / 400 000 km | 300 000 mi / 483 000 km | Lubricant / Fluid [1] |
|---|---|---|---|---|---|---|---|---|---|---|---|---|---|---|---|
| 1 | Coolant filter housing shutoff valve – rotate the handle periodically to keep the spindle rotation smooth | 28 | | | ● | | | | | | | | | | |
| 2 | Coolant surge tank – test coolant solution | 27 | | | ● | | | | | | | | | | ★ |
| 3 | Radiator – inspect exterior core & clean with low-pressure water jet if necessary | 40 | | | | | | | ● | | | | | | |
| 4 | Coolant filter housing shutoff valve spindle – apply fresh grease | 28 | | | | | | | | | ● | | | | P |
| 5 | Coolant filter – change (Long-Life Filter without additives to be used with Extended Life Coolant) | 28 | 12 | | | | | | | | ● | | | | |
| 6 | Cooling system – drain, flush & refill (Extended Life Coolant) every 750 000 mi [3] / 1 200 000 km [3] | 27 | 96 | | | | | | | | | | | | E ★ |
| | **06 ELECTRICAL** | | | | | | | | | | | | | | |
| 1 | Power cables inspection – perform Maintenance Information MI15-24 | | | | | | | ● | | | | | | | |
| 2 | Battery terminals – clean & coat terminals with Nyogel | | | | | | | | ● | | | | | | |
| 3 | Alternators – remove belts, check for noisy bearings, bearing play | | | | ● | | | | | | | | | | |
| | **07 TRANSMISSION [4]** | | | | | | | | | | | | | | |
| 1 | Transmission fluid – change (6000 hrs) **Conditions:** Prognostic mode disabled + transmission filled with 100% TranSynd or TES295/TES668 synthetic fluid only (no mixture[5,6]) + using High-Capacity filters | 20 | 48 | | | | | | | | ● | | | | L |
| 2 | Transmission Main & Lube filters – change every 75 000 mi / 120 000 km or 36 months or 3000hrs whichever comes first. **Conditions:** same as above | 20 | 36 | | | | | | | | | | | | |
| | **09 PROPELLER SHAFT** | | | | | | | | | | | | | | |
| 1 | Perform Spicer's Driveshaft "Inspection Procedures" [7] | 18 | | | | ● | | | | | | | | | |
| 2 | Grease one fitting on each universal joint | 18 | 6 | | | | | ● | | | | | | | P |
| | **10 FRONT I-BEAM AXLE** | | | | | | | | | | | | | | |
| 1 | Steering knuckle kingpin – grease two fittings per knuckle | 8 | 6 | ● | | | | | | | | | | | P |
| 2 | Steering knuckle kingpin – inspect, check permissible slackness | 8 | 6 | | | | | ● | | | | | | | |
| | **11 REAR AXLES** | | | | | | | | | | | | | | |
| 1 | Tag axle lever pivot – grease one fitting on each pivot | 19 | | ● | | | | | | | | | | | P |
| 2 | ZF Drive axle – check differential oil level, add if necessary | 17 | | | | | | | ● | | | | | | I |
| 3 | ZF Drive axle – change differential oil & breather | 17 | | | | | | | | ● | | | | | I |
| | **12 BRAKE & AIR SYSTEM** | | | | | | | | | | | | | | |
| 1 | Check correct functioning of the adjuster, check smooth operation of caliper over its full range of movement, check sealing elements, check the adjuster cap condition, | | | | | | | | | | | | | | |

[3] Provided an engine coolant fluid analysis is done at 600 000 miles / 965 000 km with satisfactory results

[4] In the absence of a fluid analysis program, the fluid change interval listed in Table 1, Table 2 & Table 3 should be used. Change filters according to Table 1, Table 2 & Table 3 even if a fluid analysis shows that the fluid doesn't need to be changed.

[5] When the transmission contains a mixture of fluids (defined as the quantity of non-TranSynd or non-TES295/non-TES668 fluid remaining in the transmission after a fluid change combined with the quantity of TranSynd or TES295/TES668 required to fill the transmission to the proper level), perform the fluid and filter change according to the TES389 intervals.

[6] Extended TranSynd or TES295/TES668 fluid and filter change intervals are only allowed with Allison High-Capacity filters.

[7] Refer to "Spicer Driveshafts Service Manual DSSM0100".

# LUBRICATION AND SERVICING SCHEDULE
## X3-45 Commuter

The maintenance procedures are found in their respective section of the maintenance manual

A red stripe in the left margin of the schedule highlights the latest changes

**PROCEED TO MAINTENANCE OPERATIONS EVERY**

Proceed to maintenance operations at miles, km, months or hours whichever comes first

| | | Item | Month | 6 000 mi / 9 500 km | 12 000 mi / 19 500 km | 18 000 mi / 29 000 km | 24 000 mi / 38 500 km | 30 000 mi / 48 000 km | 50 000 mi / 80 000 km | 100 000 mi / 160 000 km | 150 000 mi / 240 000 km | 200 000 mi / 3220000 km | 250 000 mi / 400 000 km | 300 000 mi / 483 000 km | Lubricant / Fluid [1] |
|---|---|---|---|---|---|---|---|---|---|---|---|---|---|---|---|
| | check caliper running clearance, check condition of the guide pin covers at every pad replacements or once a year whichever comes first | | | | | | | | | | | | | | |
| 2 | Brake pads & discs – check wear | | | | ● | | | | | | | | | | |
| 3 | Air tanks – drain water from all tanks | | | | ● | | | | | | | | | | |
| 4 | Haldex Consep Condenser/Separator – inspect | | | | ● | | | | | | | | | | |
| 5 | ABS & Electronic Stability Control systems – check proper functioning | | | | | | | | ● | | | | | | ★ |
| 6 | Accessories air filter – change filter element | 2 | | | | | | | | ● | | | | | |
| 7 | Air dryer – change cartridge | 13 | | | | | | | | ● | | | | | |
| | **13 WHEELS, HUBS & TIRES** | | | | | | | | | | | | | | |
| 1 | Unitized hub bearing, front and tag axle – inspect, check end play | 8 | | | | | | ● | | | | | | | ★ |
| 2 | ZF Drive axle – check compact bearing axial play | 17 | | | | | | ● | | | | | | | ★ |
| 3 | ZF Drive axle – change grease in compact bearing | 17 | | | | | | | | | | | | ● | J ★ |
| | **14 STEERING** | | | | | | | | | | | | | | |
| 1 | Tie rod – perform “Tie Rod Inspection Procedure” (tube, ball joint, fine adjustment sleeve, corrosion) | 5 | | | | | | | ● | | | | | | |
| 2 | Steering damper cylinder – grease one fitting at rod end | 9 | | ● | | | | | | | | | | | P |
| 3 | Power steering fluid – check fluid condition (color) through visual inspection and change if required. Check level, add if necessary | 23 | | | | | | ● | | | | | | | D |
| 4 | Drag link end – inspect for corrosion | 3,5 | | | | | | | ● | | | | | | |
| 5 | Power steering reservoir filter element – change | 23 | | | | | | | ● | | | | | | |
| 6 | Steering system – check play | 7 | | | | | | | | ● | | | | | |
| | **16 SUSPENSION** | | | | | | | | | | | | | | |
| 1 | Air springs – inspect | | | ● | | | | | | | | | | | |
| | **18 BODY** | | | | | | | | | | | | | | |
| 1 | Front bumper and exterior compartment doors latch – grease fittings | | | | | | | | ● | | | | | | P |
| | **22 HEATING & AIR CONDITIONING** | | | | | | | | | | | | | | |
| 1 | Passengers HVAC unit disposable return air filters (2) – change | 45 | | ● | | | | | | | | | | | |
| 2 | Evaporator compartment door fresh air intake filter – clean or change | 45 | | ● | | | | | | | | | | | |
| 3 | Parcel rack fans air filter – clean or change | 47 | | ● | | | | | | | | | | | |
| 4 | Driver HVAC unit return air filter – clean or change | 41 | | ● | | | | | | | | | | | |
| 5 | A/C compressor – check oil level and color | 44 | | ● | | | | | | | | | | | F ★ |
| 6 | A/C compressor – empty shaft seal oil collection tube | 44 | | ● | | | | | | | | | | | |
| 7 | A/C receiver tank – check refrigerant level, add if necessary | 42 | | | ● | | | | | | | | | | |
| 8 | Filter dryer unit – check refrigerant moisture indicator, change filter dryer unit according to moisture indicator | 43 | | | | | | | ● | | | | | | |
| 9 | Evaporator compartment & driver’s HVAC units – clean heater core with low air pressure | | | | | | | | | ● | | | | | |
| 10 | Evaporator compartment & driver’s HVAC units – clean evaporator core with low air pressure | 44 | | | | | | | | ● | | | | | |

| LUBRICATION AND SERVICING SCHEDULE<br>X3-45 Commuter<br><br>The maintenance procedures are found in their respective section of the maintenance manual<br><br>A red stripe in the left margin of the schedule highlights the latest changes | | | PROCEED TO MAINTENANCE OPERATIONS EVERY<br>Proceed to maintenance operations at miles, km, months or hours whichever comes first | | | | | | | | | | | | |
|---|---|---|---|---|---|---|---|---|---|---|---|---|---|---|---|
| | Item | Month | 6 000 mi / 9 500 km | 12 000 mi / 19 500 km | 18 000 mi / 29 000 km | 24 000 mi / 38 500 km | 30 000 mi / 48 000 km | 50 000 mi / 80 000 km | 100 000 mi / 160 000 km | 150 000 mi / 240 000 km | 200 000 mi / 3220000 km | 250 000 mi / 400 000 km | 300 000 mi / 483 000 km | Lubricant / Fluid [1] |
| 11 | Condenser compartment & driver's HVAC units – clean condenser core with low air pressure | | | | | | | | ● | | | | | |
| 12 | A/C compressor – change oil, clean oil filter and magnetic plug | | | | | | | | | ● | | | | F ★ |
| | **23 ACCESSORIES** | | | | | | | | | | | | | |
| 1 | Kidde AFSS extinguisher tank – have the fire extinguisher rebuilt by a qualified fire protection equipment company familiar with the extinguisher used | | 72 | | | | | | | | | | | |
| 2 | Kidde AFSS extinguisher tank – have the fire extinguisher cylinder hydrostatically tested by a qualified fire protection equipment company | | 144 | | | | | | | | | | | |
| 3 | Amerex AFSS – Perform inspection and maintenance as described in Maintenance Information MI18-27 | | | | | | | | | | | | | |

## 3.1 LUBRICATION AND SERVICING SCHEDULE CHANGE LOG • X3- 45 COMMUTER

| | CHANGE LOG - LUBRICATION AND SERVICING SCHEDULE | DATE |
|---|---|---|
| 1 | REMOVED: 14 STEERING – Tie rod end – clean & grease one fitting at each end | June 5, 2019 |
| 2 | ADDED: 14 STEERING – Perform tie rod inspection procedure | June 5, 2019 |
| 3 | REMOVED: 01 ENGINE – Fluid/lubricant B | May 28, 2020 |
| 4 | REMOVED: 04 EXHAUST AND AFTERTREATMENT SYSTEM – Aftertreatment Hydrocarbon Injector (AHI) nozzle – change (4500 hrs.) | June 09, 2023 |
| 5 | UPDATE: 04 EXHAUST AND AFTERTREATMENT SYSTEM – DEF tank – clean filler neck strainer, was 2 000 hours/50 000 mi changed to 5 000 hours/250 000 mi | June 16, 2023 |
| 6 | UPDATE: 04 EXHAUST AND AFTERTREATMENT SYSTEM – DEF tank – drain & clean with water, was 4 500 hours/100 000 mi changed to 5 000 hours/250 000 mi | June 16, 2023 |
| 7 | UPDATE: 04 EXHAUST AND AFTERTREATMENT SYSTEM – DEF pump filter element – replace, was 4 500 hours/100 000 mi changed to 5 000 hours/250 000 mi | June 16, 2023 |
| 8 | UPDATE: 04 EXHAUST AND AFTERTREATMENT SYSTEM – Diesel Particulate Filter – either clean or replace, was 4 500 hours/250 000 mi changed to 5 000 hours/250 000 mi | June 16, 2023 |
| 9 | | |
| 10 | | |

## 4 SPECIALTY TOOLS REQUIRED FOR REGULAR MAINTENANCE OF THE VEHICLE • X3- 45 COMMUTER

Use this list of specialty tools in conjunction with the LUBRICATION AND SERVICING SCHEDULE

| SPECIALTY TOOLS REQUIRED FOR REGULAR MAINTENANCE | | | | |
|---|---|---|---|---|
| # | MAINTENANCE DESCRIPTION | TOOL # | SPECIALITY TOOLS DESCRIPTION | PART # |
| 01 ENGINE | | | | |
| 2,3,4 | drive belts and idlers | 1 | belt tensioner wrench | 010032 |
| 6, 7 | valves & injectors | 2 | engine cranking adapter | 88840317 |
| | | 3 | feeler gage 2.45-2.55 | 88880052 |
| | | 4 | feeler gage set | 85111377 |
| | | 5 | setting tool 3.20, 3.85 | 88800232 |
| 03 FUEL | | | | |
| 1 | Davco Fuel Pro 382 system | 6 | collar spanner wrench | 530224 |
| 04 EXHAUST AND AFTERTREATMENT SYSTEM | | | | |
| 6 | DPF filter – either clean or change | 7 | DPF removal tool | 680790 |
| 05 COOLING | | | | |
| 2 | test coolant solution | 8 | refractometer coolant/DEF | 88890105 |
| 6 | cooling system drain, flush & refill | 9 | coolant extractor (optional) | 85112740 |
| | | 10 | tube with connector (optional) | 9996049 |
| 06 ELECTRICAL | | | | |
| | | 11 | none | |
| 07 TRANSMISSION | | | | |
| | | 12 | none | |
| 09 PROPELLER SHAFT | | | | |
| | | 13 | none | |
| 10 FRONT AXLE | | | | |
| | | 14 | none | |
| 11 REAR AXLE | | | | |
| | | 15 | none | |
| 12 BRAKE & AIR SYSTEM | | | | |
| 5 | ABS & Electronic Stability Control systems – check proper functioning | 16 | ACOM diagnostic software available free of charge | Bendix website |
| 13 WHEEL, HUBS & TIRES | | | | |
| 1 | Hub bearing, front & tag axle – inspect | 17 | dial indicator with magnetic base | * |

| # | MAINTENANCE DESCRIPTION | TOOL # | SPECIALITY TOOLS DESCRIPTION | PART # |
|---|---|---|---|---|
| 2 | ZF Drive Axle - check compact bearing axial play | 18 | 14 mm hex drive socket | * |
| | | 19 | E20 Torx socket (external) | * |
| | | 20 | dial indicator with magnetic base | * |
| 3 | ZF Drive Axle - change grease in compact bearing | 18 | 14 mm hex drive socket | * |
| | | 19 | E20 Torx socket (external) | * |
| | | 21 | spanner wrench 5870 401 146 | N67817-21 |
| | | 22 | lifting bracket 5870 281 043 | 19400451 |
| | | 23 | driver 5870 050 007 | 19400449 |
| | | 24 | handle 5870 260 004 | N67817-19 |
| | | 25 | driver 5870 051 053 | N67817-16 |
| | | 26 | seal installer 5870 651 085 | 19400265 |
| | | 27 | pry bar 5870 345 071 | N78017-20 |
| 14 STEERING | | | | |
| | | 28 | none | |
| 16 SUSPENSION | | | | |
| | | 29 | none | |
| 18 BODY | | | | |
| | | 30 | none | |
| 22 HEATING & AIR CONDITIONING | | | | |
| 5 | A/C compressor – change oil, clean oil filter | 31 | Refrigerant recovery unit | |
| - | Lang electromagnetic clutch – removal tool | 32 | Puller | 680888 |

*: Common tools. Contact your local tool supplier

## 5 FLUIDS AND LUBRICANTS SPECIFICATIONS • X3- 45 COMMUTER

| Back to schedule | FLUIDS & LUBRICANTS TABLE | | |
|---|---|---|---|
| REF | SYSTEM | DESCRIPTIONS / SPECIFICATIONS | |
| A | Engine Oil | Extended drains | Filled with Volvo Approved VDS-4.5 oils - SAE Viscosity Grade: 10W-30<br>or<br>Filled with Volvo Approved VDS-5 [8] oils - SAE Viscosity Grade: 5W-30 |
| B | Engine Oil | --- | --- |
| C | --- | --- | --- |
| D | Power Steering fluid | Automatic Transmission Fluid (ATF), Dexron-IIIF, G, H or Dexron-VI<br>Refer to **Bosch List of lubricants TE-ML 09** for further details | |
| E | Engine Coolant | Extended Life Coolant (ELC) meeting Volvo specification VCS2B<br>50/50 concentrated antifreeze/water solution or 50/50 prediluted | |
| F | A/C Compressor Oil | Central HVAC system: Polyolester oil, HFC 134a compatible; Castrol SW-68 (POE) or equivalent | |
| G | --- | --- | |
| H | --- | --- | |
| I | ZF Drive Axle | Transmission oil, viscosity SAE 80W-90 among ZF **Lubricant Class 12M.**<br>Refer to ZF **List of lubricants TE-ML 12** for Class 12M approved lubricants. Take note that oil change interval will differ when using other lubricant class | |
| J | ZF Drive Axle compact bearing (hub unit) | Lithium saponified, multipurpose grease, NLGI No. 2 among ZF **Grease Class 12H**<br>Refer to ZF **List of lubricants TE-ML 12** for other approved lubricants. Take note that grease change intervals may differ when using other lubricant class | |
| K | --- | --- | |

[8] VDS-5 oil is not backward compatible. Use only on 2020 engines (OBD20)

| | | | |
|---|---|---|---|
| L | Allison Transmission Oil | **Extended drains** | Castrol TranSynd™ Synthetic Transmission Fluid for Allison or TES295 or TES668 approved equivalent |
| M | --- | --- | |
| N | --- | --- | |
| O | --- | --- | |
| P | Multi-Purpose Grease | Good quality lithium-based grease:<br>NLGI No. 2 Grade is suitable for most temperatures<br>NLGI No. 1 Grade is suitable for extremely low temperatures | |
| Q | --- | --- | |

## 5.1 FLUIDS AND LUBRICANTS SPECIFICATIONS CHANGE LOG • X3- 45 COMMUTER

| | CHANGE LOG – FLUIDS & LUBRICANTS | DATE |
|---|---|---|
| 1 | Removed: reference to Volvo Approved VDS-4 oils | May 28 2020 |
| 2 | New Engine oil specification VDS-5 (FA-4) introduced. New oil specification not compatible with former D13 engine versions | May 28 2020 |
| 3 | New Transmission oil specification TES668 introduced | Jan 21 2021 |
| 4 | New engine coolant Volvo specification VCS2B | Feb 01 2024 |
| 5 | | |
| 6 | | |
| 7 | | |
| 8 | | |
| 9 | | |
| 10 | | |
| | | |

## CONTENTS

**SECTION CHANGE LOG** ..... **4**

**1 TORQUE TABLES** ..... **5**

**2 OVERVIEW** ..... **8**

2.1 STANDARD PREVOST SLIDE-OUTS ..... 8
2.2 PREVOST FLUSH FLOOR SLIDE-OUT ..... 8
2.3 OPERATION ..... 8
2.4 SLIDE OUT CONTROL SYSTEM OVERVIEW ..... 10
2.5 REPLACEMENT PARTS ..... 10
2.6 MAXIMUM LOADS ..... 11

**3 LEVEL & TILT ADJUSTMENT** ..... **12**

3.1 HEIGHT ADJUSTMENT VALUE ..... 12
3.2 LATERAL ADJUSTMENT ..... 12
3.3 TILT ADJUSTMENT VALUES ..... 12
3.4 STOPPER SEQUENCE ..... 12
3.5 TILT ADJUSTMENT SEQUENCE ..... 12

**4 ROOM EXTENSION FOR MAINTENANCE** ..... **14**

**5 SLIDE-OUT MANUAL OVERRIDE PROCEDURES** ..... **16**

5.1 PRELIMINARY CONDITIONS FOR MANUAL OVERRIDE PROCEDURE ..... 16
*5.1.1 Manual retracting procedure – Front and rear slide-out* ..... *16*
*5.1.2 Manual extending procedure – Front and rear slide-out* ..... *17*

**6 SLIDE-OUT 2" INSIDE RETRACTION** ..... **18**

6.1 FLEXIBLE RAIL COVER ..... 20
*6.1.1 Maintenance* ..... *20*
*6.1.2 Removal* ..... *20*
6.2 INNER STOPPER ..... 20
*6.2.1 Maintenance* ..... *20*
*6.2.2 Adjustment* ..... *20*
6.3 "IN LIMIT" STOPPER ..... 21
*6.3.1 Maintenance* ..... *21*
*6.3.2 Removal* ..... *21*
*6.3.3 Adjustment* ..... *21*
6.4 EXTERIOR EXTRUSION ..... 22
*6.4.1 Maintenance* ..... *22*
6.5 INFLATABLE SEAL ASSEMBLY ..... 23
*6.5.1 Maintenance* ..... *23*
*6.5.2 Seal assembly replacement* ..... *23*
6.6 SECURITY PIN ..... 23
*6.6.1 MAINTENANCE* ..... *24*
*6.6.2 AIR CYLINDER REPLACEMENT* ..... *24*
6.7 RACK GEAR ..... 25
*6.7.1 MAINTENANCE* ..... *25*
*6.7.2 FRONT SLIDE-OUT RACK GEAR REPLACEMENT* ..... *25*
*6.7.3 REAR SLIDE-OUT RACK GEAR REPLACEMENT* ..... *25*

6.8 PINION GEAR ..... 26
*6.8.1 PINION GEAR DISENGAGEMENT ..... 26*
*6.8.2 RACK AND PINION GAP SETTING ..... 26*
*6.8.3 PINION GEAR SYNCHRONIZATION ..... 27*
*6.8.4 FRONT SLIDE-OUT PINION REPLACEMENT ..... 27*
*6.8.5 REAR SLIDE-OUT PINION REPLACEMENT ..... 28*
6.9 ELECTRIC MOTOR ..... 29
*6.9.1 MAINTENANCE ..... 29*
*6.9.2 REPLACEMENT ..... 29*
6.10 SPEED REDUCTION GEARBOX ..... 30
*6.10.1 MAINTENANCE ..... 30*
*6.10.2 GEARBOX REPLACEMENT ..... 30*
6.11 DRIVE SHAFT ..... 31
*6.11.1 MAINTENANCE ..... 31*
*6.11.2 REPLACEMENT ..... 31*
6.12 FLANGE BEARINGS ..... 31
6.13 LOCKING COLLAR ..... 31
*6.13.1 INSTALLATION ..... 31*
6.14 LINEAR BEARING AND RAIL ..... 32
*6.14.1 DUMMY RAIL ..... 32*
*6.14.2 BEARING CARRIAGE MAINTENANCE ..... 32*
*6.14.3 BEARING REPLACEMENT ..... 32*

**7 SLIDE-OUT PNEUMATIC SYSTEM ..... 34**

7.1 DESCRIPTION ..... 34
7.2 MAINTENANCE ..... 35

**8 SLIDE-OUT ELECTRICAL SYSTEM ..... 36**

8.1 ELECTRICAL INTERCONNECTION WITH PREVOST VEHICLE ..... 36
8.2 SLIDE-OUT FUSES ..... 36
*8.2.1 Multiplex fuses ..... 36*
8.3 PROBING VOLTAGE ON THE MULTIPLEX CIRCUITS ..... 37
8.4 MODULE REPLACEMENT ..... 37
8.5 SLIDE-OUT LIMIT SENSORS ..... 37
*8.5.1 Accessibility ..... 37*
*8.5.2 To adjust the "in limit" sensor: ..... 37*
*8.5.3 To adjust the "out limit" sensor: ..... 38*

**9 SLIDE-OUT EXTERIOR FINISHING PANELS & WINDOWS ..... 38**

**10 WELDING PRECAUTIONS ..... 38**

**11 FINISHING PRECAUTIONS FOR CONVERTERS ..... 38**

**12 PREVOST SLIDE-OUT WITH FLUSH FLOOR ..... 41**

12.1 MECHANISM OVERVIEW ..... 41
*12.1.1 Control system overview ..... 43*
12.2 INNER STOPPERS ..... 44
*12.2.1 Maintenance ..... 44*
*12.2.2 Adjustment ..... 45*
12.3 TILT AND LEVELING ..... 45
12.4 ROOM EXTENSION FOR MAINTENANCE ..... 45
12.5 SLIDE-OUT INSTALLATION ..... 47
12.6 LINEAR SENSOR ADJUSTMENT ..... 47

12.7 MANUAL EXTENSION OF THE SLIDE-OUT ..... 47
*12.7.1 Manual extension on failure of only one motor ..... 47*
12.8 MOBILE FLOOR HAND CRANK PROCEDURE ..... 48
12.9 FLOOR LIFT COMPONENT MAINTENANCE ..... 49
12.10 INFLATABLE SEAL ..... 49
12.11 FINISHING PRECAUTIONS FOR CONVERTERS ..... 49

**13 CONVERSION CHECKLIST ..... 50**

**14 TROUBLESHOOTING ..... 51**

14.1 ERROR CONDITION OR MISSING OPERATION CONDITION ..... 51
14.2 SLIDE-OUT FAULT MESSAGE ON DID ..... 57

## SECTION CHANGE LOG

| | DESCRIPTION | DATE |
|---|---|---|
| 1 | | |
| 2 | | |
| 3 | | |
| 4 | | |
| 5 | | |
| 6 | | |

## 1 TORQUE TABLES

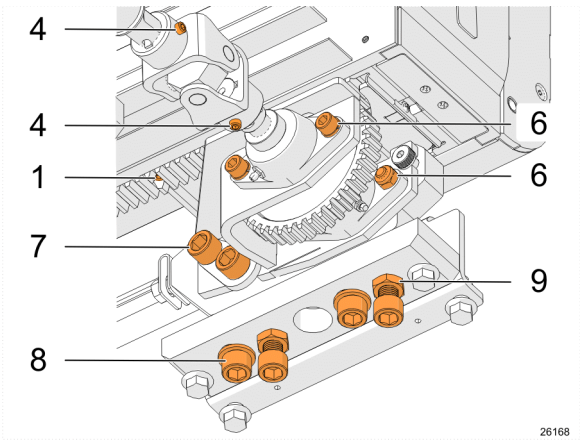


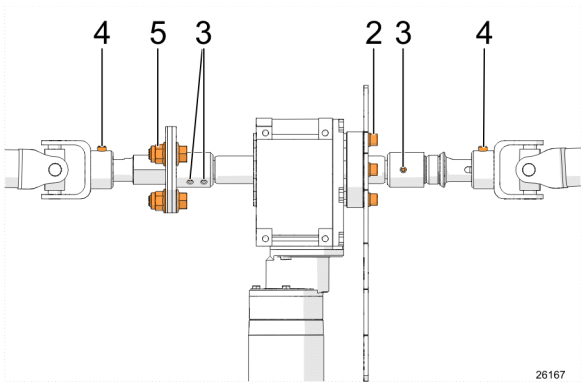


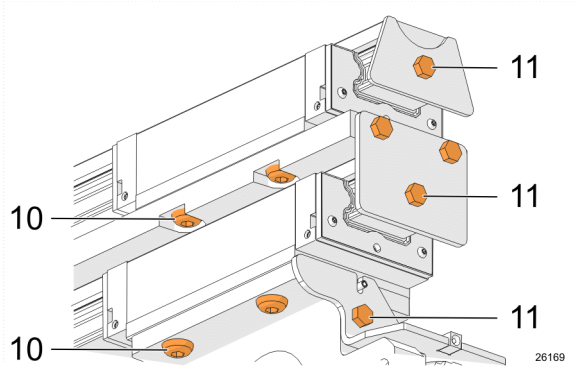


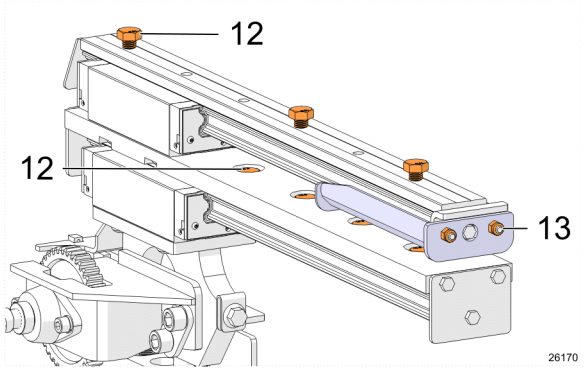


**STANDARD PREVOST SLIDE-OUT (Front left shown)**

| No | DESCRIPTION (quantity for one slide-out) | TORQUE |
|---|---|---|
| 1 | Rack gear mounting screws | 1.9-2.1 lb-ft (2.58-2.85 Nm) *max* |
| 2 | Drive motor/gearbox assembly mounting bolts (4) | 16-20 lb-ft (22-27 Nm) |
| 3 | Shaft extension set screw (6) | 7 lb-ft (10 Nm) |
| 4 | Drive shaft yoke set screws (8) | 27 lb-ft (37 Nm) |
| 5 | Adjustable flange screws (3) | 59 lb-ft (80 Nm) |
| 6 | Flange bearing mounting screws | 48 lb-ft (65 Nm) |
| 7 | Pinion gear support mounting screws (4) | 198 lb-ft (268 Nm) |
| 8 | Tilting and leveling support retaining screws (4) | 55-65 lb-ft (75-88 Nm) |
| 9 | Tilting and leveling support leveling screw jam nut (4) | 43-53 lb-ft (58-72 Nm) |
| 10 | Linear bearing mounting screws (16) | 59 lb-ft (80 Nm) |
| 11 | Rail end screw (16) | 17 lb-ft (23 Nm) |
| 12 | Rail mounting screw (18) | 130 lb-ft (176 Nm) |
| 13 | Removable stopper nuts (4) | 94 lb-ft (128 Nm) |

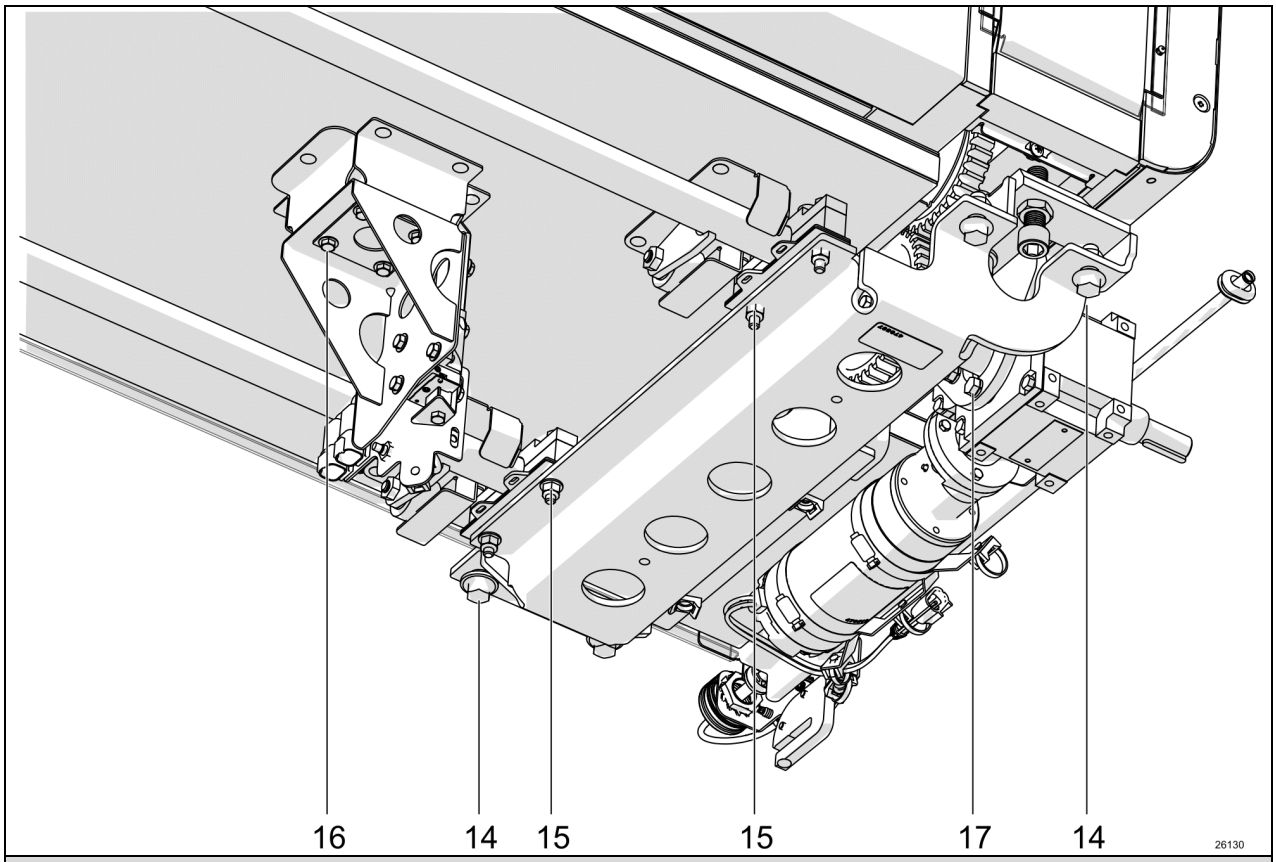


**PREVOST SLIDE-OUT WITH FLUSH FLOOR (Front right)**

| No | DESCRIPTION | TORQUE |
|---|---|---|
| 14 | Stacked bearing assembly mounting bolts (8) | 59 lb-ft (80 Nm) |
| 15 | Floor lift shaft bearing clamp screws(16) | 13.7 lb-ft (18.6 Nm) |
| 16 | Floor to linear bearing bracket screws (8) | 7 lb-ft (10 Nm) |
| 17 | Drive motor/gearbox assembly mounting bolts (8) | 16-20 lb-ft (22-27 Nm) |

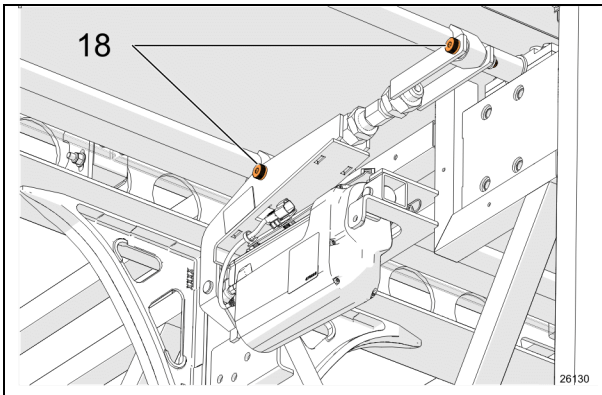


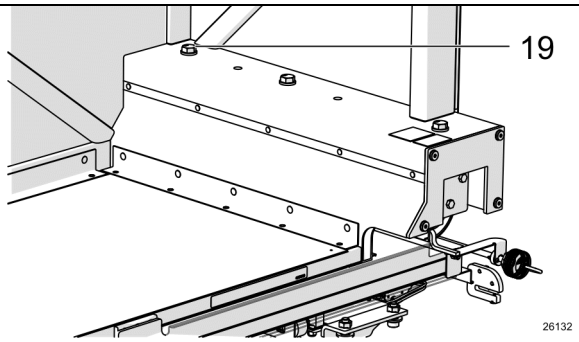


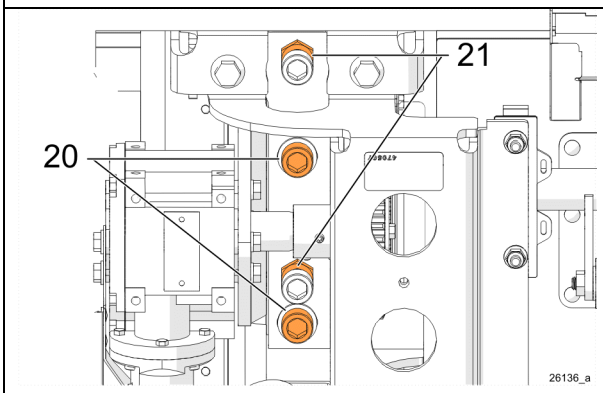


**PREVOST SLIDE-OUT WITH FLUSH FLOOR (Front right)**

| No | DESCRIPTION | TORQUE |
|---|---|---|
| 18 | Transfer arm to lift shaft screws (2) | 35 lb-ft (47 Nm) |
| 19 | Slide-out room to rail mounting bolts (6) | 130 lb-ft (176 Nm) |
| 20 | Tilting and leveling support retaining screws (4) | 55-65 lb-ft (75-88 Nm) |
| 21 | Tilting and leveling support leveling screw jam nut (4) | 43-53 lb-ft (58-72 Nm) |

## 2 OVERVIEW

H3-45 VIP vehicles can accommodate up to four (4) Prevost slide-outs units.

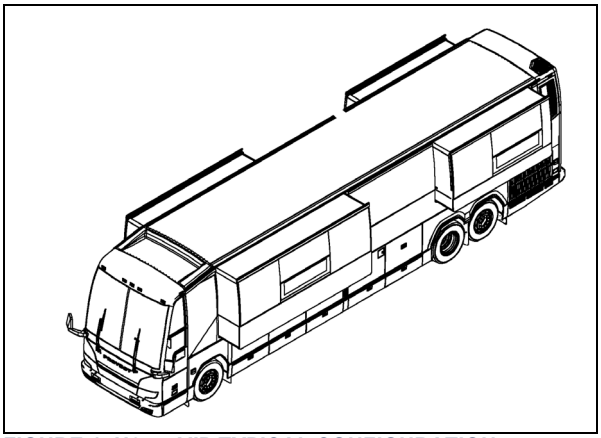

FIGURE 1: H3-45 VIP TYPICAL CONFIGURATION

### 2.1 STANDARD PREVOST SLIDE-OUTS

Slide-outs in the front left, rear left and rear right position all share operation, design features and maintenance requirements.
Rear right slide-out is shallower than the other slide-outs. Maintenance can be performed by moving the slide-out inwards. Refer to SLIDE-OUT 2" INSIDE RETRACTION.

### 2.2 PREVOST FLUSH FLOOR SLIDE-OUT

Exclusive to the H3-45 VIP in the front right (curb side) position you will find a Prevost designed slide-out with a mobile floor providing a flush floor surface when deployed. This subject is covered separately in paragraph 12.

### 2.3 OPERATION

Room operation is on a "first in, first served" basis due to the high current demand and safety requirements. Only one slide-out unit may be operated at a time.

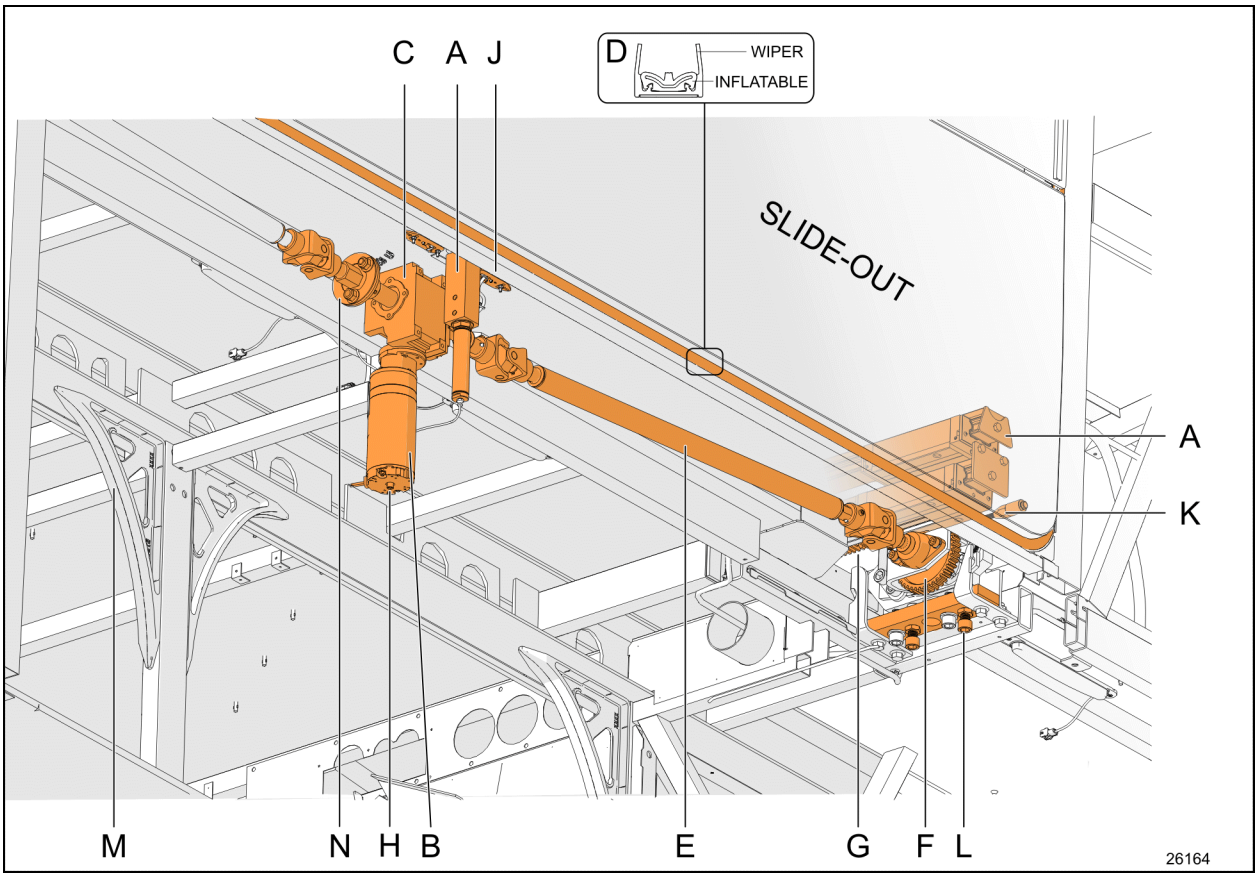


FIGURE 2: TYPICAL SLIDE-OUT MECHANISM OVERVIEW (FRONT LEFT SYSTEM SHOWN)

SLIDE-OUT MECHANISM OVERVIEW

Refer to Figure 2. Each slide-out is moved in and out on stacked linear bearings, (**A**). Power comes from one electrical motor (**B**). It is either oriented vertically or horizontally. The motor drives a right angle speed reducing gearbox (**C**).

Water tightness of the slide-out is ensured by a wiper seal and an inflatable seal (**D**).

The gearbox is coupled to drive shafts (**E**) and two pinion gears (**F**). An adjustable flange (**N**) allows pinion gear synchronization. Rack gears (**G**) transform pinion gear rotation into horizontal motion.

Manual extension or retraction is possible by the motor shaft extension (**H**). Closely follow instructions provided further in this manual to perform this procedure.

To limit rail extension, the system includes two proximity sensors (**J**) and in case of proximity sensor failure, two factory adjusted rail stoppers (one per rail) (**K**). An additional inner stopper along the top edge of the slide-out limits room extension. Refer to Figure 25 and Figure 26.

Slide-out room tilt and leveling adjustment is carried-out by the adjustment plate and screws (**L**).

Structural integrity of the vehicle platform is ensured with stainless steel casting corner reinforcements (**M**) in the luggage bays.

A security pin (**N**) locks the slide-out in the retracted or “in” position for road travel.

A flexible rail cover (Figure 22) protects the linear bearing assembly from the elements. As the room moves out, it is pulled under the linear bearing and rack gear assembly. It is pushed back and curls up over the assembly as the room moves in.

For more information on the various mechanical components, refer to paragraph 0, MAIN COMPONENTS.

## 2.4 SLIDE OUT CONTROL SYSTEM OVERVIEW

Slide out operation is controlled electrically and pneumatically. The control panel is located in the first road side luggage bay, fixed to the ceiling (Figure 50). It controls all slide-outs installed on the vehicle.

The control panel includes multiplex modules, power relays and pneumatic control valves. Logic control and operation is achieved by using the same Volvo multiplex modules found on the vehicle chassis.

A Control Pad provides the input command for extension and retraction of the slide-out room. One control pad per room is provided from factory. Final location and type of control may vary from one vehicle to another depending on interior layout and vehicle converter.

Troubleshooting is performed through the DID. For more information on slide-out control systems, refer to paragraphs 7 SLIDE-OUT PNEUMATIC SYSTEM and 8 SLIDE-OUT ELECTRICAL SYSTEM.

For more information on troubleshooting, refer to paragraph 14 TROUBLESHOOTING.

## 2.5 REPLACEMENT PARTS

Refer to the Prevost parts manual for the latest information to order replacement parts.

## 2.6 MAXIMUM LOADS

| *NOTE* |
| --- |
| Maximum load includes occupant weight and equipment added by the converters in the slide-out |

**Front slide-outs:**
Maximum load with vehicle at stand still (retracted or extended) **1500 lb**

Maximum load with vehicle or slide-out moving **1200 lb**[1]

**Rear slide-outs:**
Maximum load with vehicle at stand still (retracted or extended) **1500 lb**

Maximum load with vehicle or slide-out moving **1000 lb**[1]

| **WARNING** |
| --- |
| Overloading may damage the seal, interfere with slide-out operation and may cause the system to malfunction.<br>Do not exceed 1/4" deflection. (Figure 3) |

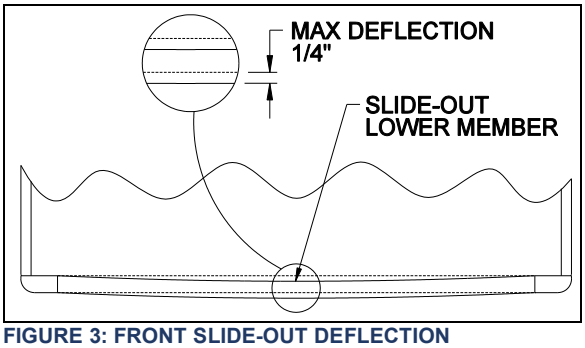


**FIGURE 3: FRONT SLIDE-OUT DEFLECTION**

[1] Value is for an equally distributed load to prevent seal damage by excessive deflection.

## 3 LEVEL & TILT ADJUSTMENT

Tilt and leveling adjustment is carried-out by the adjustment plate and screws located under each linear bearing assembly. (Figure 4).

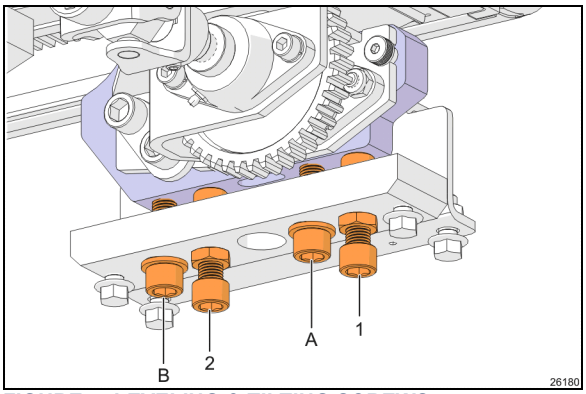


FIGURE 4: LEVELING & TILTING SCREWS

**A & B TORQUE: 55-65 lb-ft (75-88 Nm)**

**1 & 2 NUT TORQUE:43-53 lb-ft (58-72 Nm)**

### 3.1 HEIGHT ADJUSTMENT VALUE

The desired height level is 13/16” (21mm) from the bottom (Figure 5)

**WARNING**

A height under 17mm may damage the seal

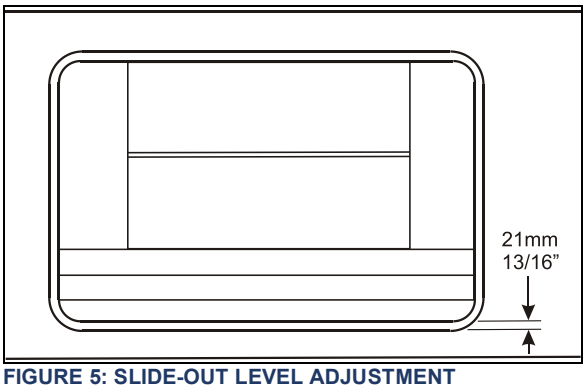


FIGURE 5: SLIDE-OUT LEVEL ADJUSTMENT

When proper level is reached (Figure 5) retaining screws A & B maintain the support seated on the leveling screws.

### 3.2 LATERAL ADJUSTMENT

The desired gap on each side is 13/16” (21mm) (Figure 5)

**WARNING**

A gap under 17mm may damage the seal

### 3.3 TILT ADJUSTMENT VALUES

The desired tilt adjustment is one where the top of the slide-out is slightly more recessed (inside) than the bottom. (Figure 6)

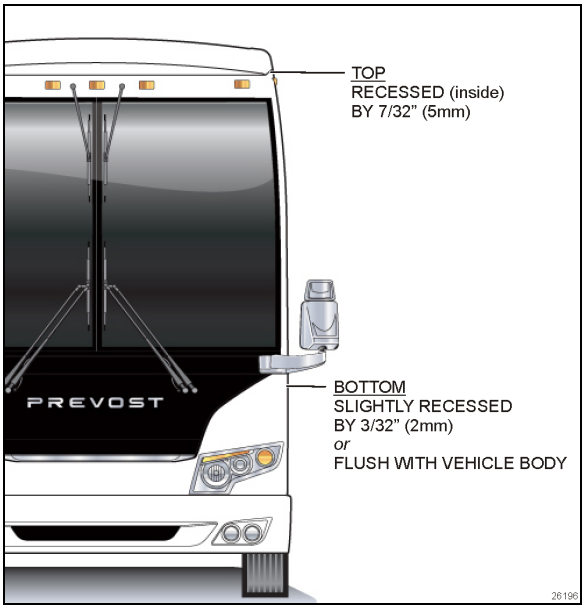


FIGURE 6: TILT ADJUSTMENT VALUES

Tilt adjustment is done by changing the linear bearing support inclination using leveling screws 1 & 2 to adjust the angle (Figure 4).

### 3.4 STOPPER SEQUENCE

When retracting, the upper "in limit" stoppers should touch the vehicle structure first, followed by the lower "in limit" stoppers.

### 3.5 TILT ADJUSTMENT SEQUENCE

Before proceeding with the level and tilt adjustment, check the following conditions:

- The slide-out is retracted;
- The 2 lower “in limit” stoppers are perfectly adjusted, that means that the lower edge of the slide-out outer panel is flush or slightly in by 2mm (3/32”) with the vehicle body when retracted;(Figure 6)
- The 2 upper “in limit” stoppers are removed from the slide-out (see paragraph 6.3).

**WARNING**

Leveling and tilting adjustment must be performed with a retracted (fully in) slide-out.

**WARNING**

Never unscrew completely retaining screw A and B (Figure 4) or the slide-out may tip inside.

1. With the lower edge of the slide-out outer panel flush with the vehicle body, adjust the slide-out level. (Figure 5) The distance between the top of the horizontal member under the slide-out and the slide-out under panel must be 21mm (13/16" approximately).

**To raise the linear bearing support plate,** turn levelling screw 1 & 2 clockwise. Slightly and gradually, loosen the retaining screws A & B as the support plate elevates, but keep the retaining screws tight.

**To lower the linear bearing support plate,** turn screw 1 & 2 counter clockwise. As the support plate goes down, maintain the retaining screw A & B tight.

2. Tighten retaining screws A & B (Figure 4)

   **TORQUE: 55-65 lb-ft (75-88 Nm**)

3. Ensure that leveling screw 1 & 2, are firmly leaning on the support plate and then firmly tighten the jam nuts.

   **TORQUE: 43-53 lb-ft (58-72 Nm)**

4. Verify that the tilt is still properly adjusted (7/32").

## 4 ROOM EXTENSION FOR MAINTENANCE

It is possible to extend the room further out for maintenance operations.

> **CAUTION**
>
> Prepare a scissor lift or a set of jack stands to support the slide-out room while it is extended for maintenance.

From the inside of the vehicle, remove any capping or trims hiding linear bearings at the bottom of the slide-out on both sides.

Then remove the room extrusion end caps. (Figure 7)

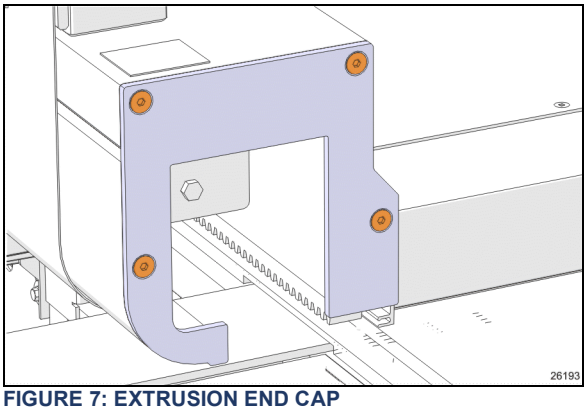


FIGURE 7: EXTRUSION END CAP

Once the room is fully extended, remove the screw and tab holding the flexible plastic rail cover in place. (Figure 8) *Perform this on both sides*.

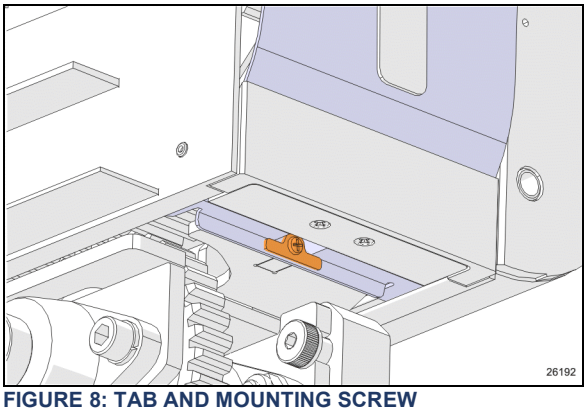


FIGURE 8: TAB AND MOUNTING SCREW

Remove the upper inner stopper (Figure 9).

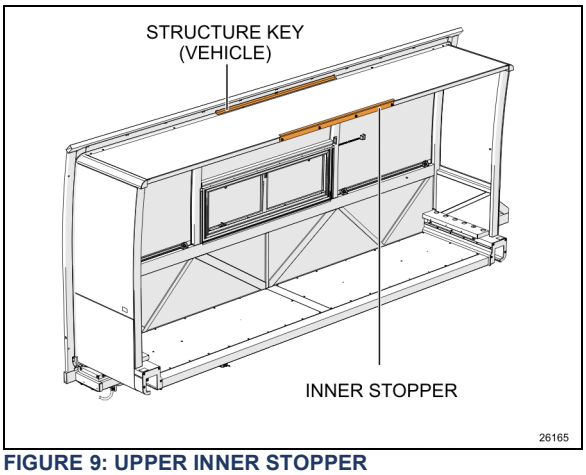


FIGURE 9: UPPER INNER STOPPER

Remove the two nuts holding the extension stopper (perform both sides). (Figure 10)

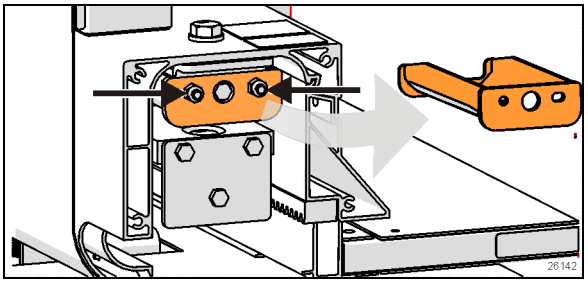


FIGURE 10 EXTENSION STOPPER REMOVAL

The room can now be extended further.

Do not remove any additional stoppers. Heed the safety warning below.

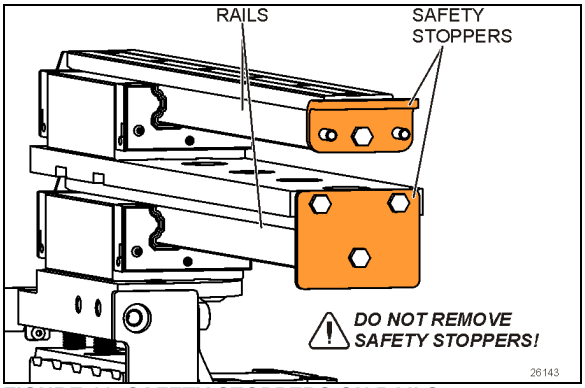


FIGURE 11: SAFETY STOPPERS ON RAILS

**DANGER**

Safety stoppers are bolted to the rail ends. (Figure 71 )

Never remove these stoppers.

These prevent the room from sliding out of the bearings.

Without these stoppers, the room could slide completely out of the bearings, therefore posing a risk of serious injury or death and significant damage to the vehicle's components

Deflate the seal by using the relieving shut-off valve located on the pneumatic component panel. Confirm by the pressure gage.

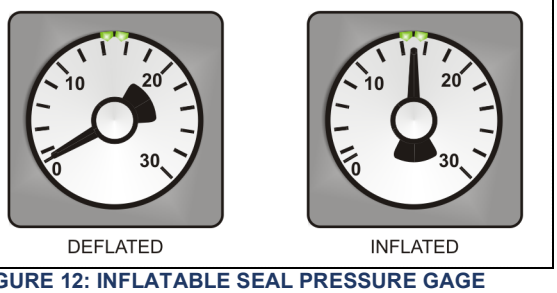


**FIGURE 12: INFLATABLE SEAL PRESSURE GAGE**

**CAUTION**

Failure to deflate the seal may result in seal damage. Refer to Paragraph 6.5 "SEAL" for further details

Prepare the supports under the room.

Using a cordless drill with a 10 mm hexagonal socket, drive the motor extension to further extend the slide-out room until the gears leave the rack gear.

Finish by pushing out the room by hand. A minimum of two persons are required.

Raise the supports in place

## 5 SLIDE-OUT MANUAL OVERRIDE PROCEDURES

**CAUTION**

Never use an impact wrench to manually operate the slide-out. Doing so would damage the various mechanical components of the slide-out.

In case of power retracting system failure, it is possible to use the manual override procedure to retract or extend the slide-out.

The manual override procedures consist in rotating the slide-out motor shaft extension using a cordless power drill with a 10 mm hexagonal socket.

Follow all instructions carefully to avoid damaging the inflatable seal or the retraction mechanism.

### 5.1 PRELIMINARY CONDITIONS FOR MANUAL OVERRIDE PROCEDURE

Before using the slide-out manual override procedures, make sure that the problem cannot be solved by one of the following simple checks:

- Check the fuses. See paragraph 8.2.
- Make sure the parking brake is applied and that transmission is in the "NEUTRAL" position.

*NOTE*

*The slide-out control system inhibits transmission range selection to prevent the vehicle from moving if the slide-out is not in its full "IN" position.*

- Make sure the voltage is high enough by running the engine at fast idle or having a battery charger connected.

**CAUTION**

Before extending or retracting the slide-out, always open a window to avoid movement restriction and to prevent the motor from stopping in overcurrent because of a vacuum or pressure build up inside the vehicle.

#### 5.1.1 Manual retracting procedure – Front and rear slide-out

1. Turn the ignition switch to the "OFF" position, and remove the ignition key for more safety.
2. Deflate the seal by using the relieving shut-off valve located on the pneumatic component panel (Item 1, Figure 49).
3. Turn the handle clockwise to deflate the seal. Make sure the pressure indicator reading is "0 psi".

**CAUTION**

The pressure in the inflatable seal must be completely relieved to prevent any damage to the seal.

*NOTE*

*When air pressure is relieved using the shut-off valve, the normal extending and retracting operation cycle is disabled, for that reason the slide-out cannot be moved using the control pad.*

4. To move the slide-out, use a cordless power drill with a 10 mm hexagonal socket. on the shaft extension of the slide-out motor.
5. Rotate the slide-out motor shaft extension with the power drill until the slide-out comes to its closed position. (Figure 13)

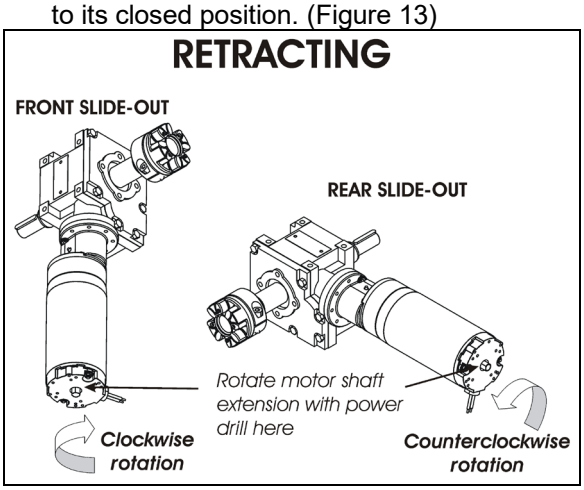


**FIGURE 13: SLIDE-OUT MOTOR ROTATION**

6. Once the slide-out room is lined up to its closed position, remove the tool from the motor.

**CAUTION**

Slow down the closing speed as the slide-out approaches its closed position. As soon as the “in limit” stoppers come in contact with their bearing surface, stop immediately the power drill rotating movement. Not doing so could overload the drive mechanism and cause damage to the reduction gearbox.

4. Finally, the inflatable seal can be re-inflated by turning the shut-off valve handle counterclockwise. Check the pressure gage on the inflatable seal regulator to see if the pressure increases to 15 psi ± 5 psi (Figure 14). Needle should be pointing between the two small green marks on the dial.

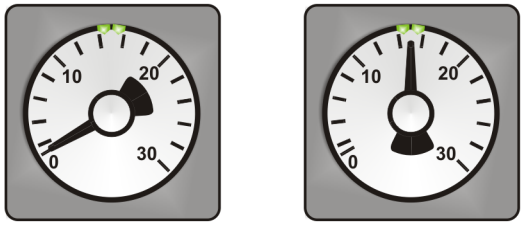


**FIGURE 14: INFLATABLE SEAL PRESSURE GAGE**

5.1.2 Manual extending procedure – Front and rear slide-out

1. Apply parking brake to disengage the security pin from the receptacle.
2. Turn the ignition switch to the "OFF" position, and remove the ignition key for more safety.
3. Deflate the seal by using the relieving shut-off valve located on the pneumatic component panel (Figure 49, Item 1). Turn the handle clockwise to deflate the seal. Make sure the pressure indicator reading is "0 psi".

**CAUTION**

The pressure in the seal must be completely relieved to prevent any damage to the seal.

*NOTE*

*The slide-out cannot be moved with the control pad when seal air pressure is relieved.*

4. To move the slide-out, use a cordless power drill with a 10 mm hexagonal socket on the shaft extension of the slide-out motor.
5. Rotate the slide-out motor shaft extension with the power drill until the slide-out comes to its opened position.
6. Once the slide-out is lined up to its opened position, remove the tool from the motor.

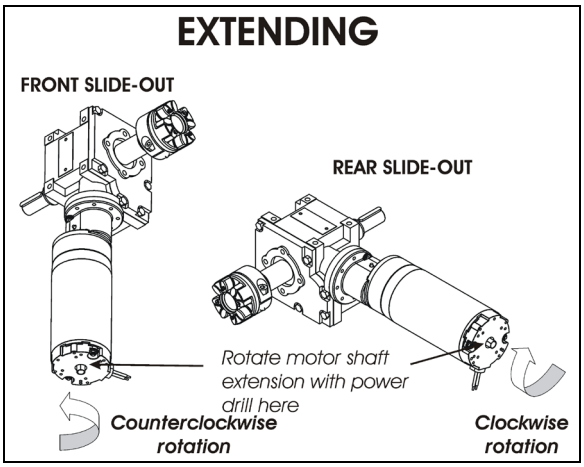


**FIGURE 15: SLIDE-OUT MOTOR ROTATION**

*NOTE*

*The **front slide-out motor** is located inside the 2nd baggage compartment while the **rear slide-out motor** is accessible from inside the vehicle, under the bed structure.*

**CAUTION**

Slow down on the closing speed as the slide-out approaches its extended position. As soon as the “out limit” stoppers come in contact with their bearing surface, stop immediately the power drill rotating movement. Not doing so could overload the drive mechanism and cause damage to the reduction gearbox.

7. Finally, the inflatable seal can be re-inflated by turning the shut-off valve handle counterclockwise. Check the pressure gage on the inflatable seal regulator to see if the pressure is increasing to 15 psi ± 5 psi (Figure 14).

## 6 SLIDE-OUT 2" INSIDE RETRACTION

Use this procedure to change a damage seal or for maintenance of the rear right slide-out.

**CAUTION**

Do not retract slide-out room too far in. Retract just past the wiper seal. (Figure 21)

**CAUTION**

*Avoid using the slide-out control pad to move the slide-out inwards.* The limits are not recognized over the closed position. The slide-out will not stop and damage may occur.

1. Fully deflate the air seal by turning the shut-off valve clockwise (Item 1, Figure 49). Make sure the pressure indicator is at "0 psi".
2. Turn the ignition to the off position. Using the manual override procedure (Paragraph 5), extend the slide-out a few inches so the exterior extrusion screws located on the top of the slide-out are accessible from outside (Figure 30).
3. Some items need to be removed to provide clearance for the pinion. (Figure 16, top image)

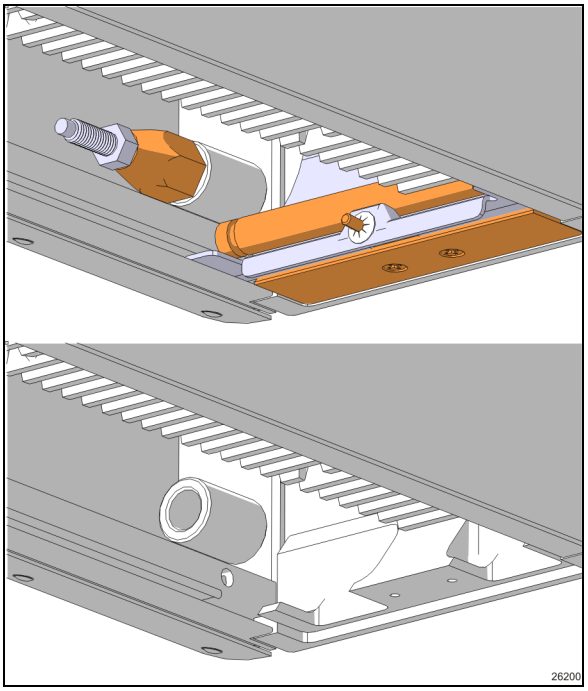


FIGURE 16: REMOVAL FOR PINION CLEARANCE.

4. Remove the two countersunk screws holding protective plate to reveal the notched flexible cover guide
5. Remove the flexible rail cover, refer to 6.1.2
6. Mark and remove the in limit stoppers, refer to 6.3.2. Once the procedure is completed, they should be returned in their original location to preserve room adjustment.

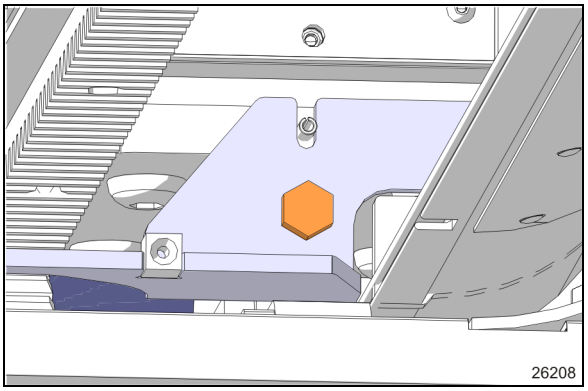


FIGURE 17: FLEX COVER ANCHOR PLATE

7. Remove the flexible cover anchor plate to provide clearance moving in. (Figure 17).
8. Using a knife, cut the sealant between the Top extrusion and the roof. (Figure 19, Figure 30)
9. Remove the top exterior extrusion screws and the two end caps (Figure 19)

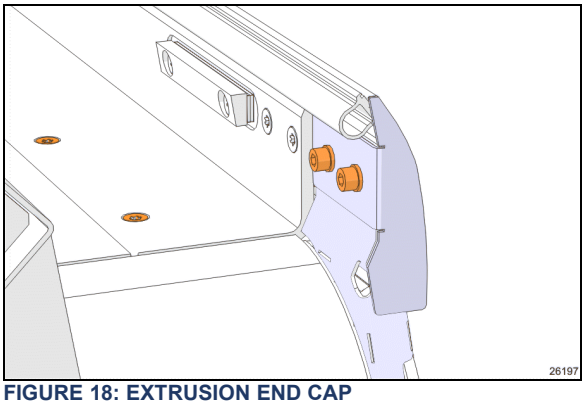


FIGURE 18: EXTRUSION END CAP

10. Carefully remove the top extrusion

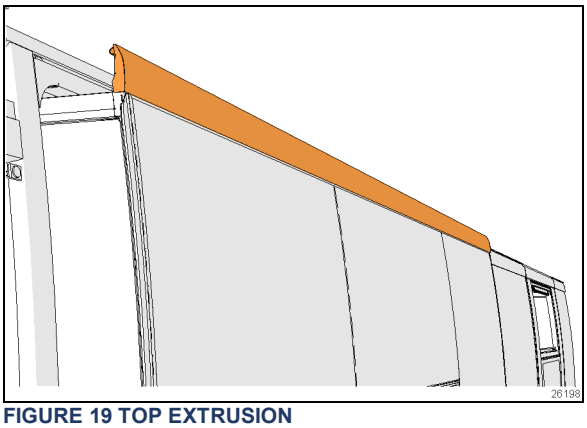


FIGURE 19 TOP EXTRUSION

11. Optionally you may disengage the pinion, see PINION GEAR DISENGAGEMENT.

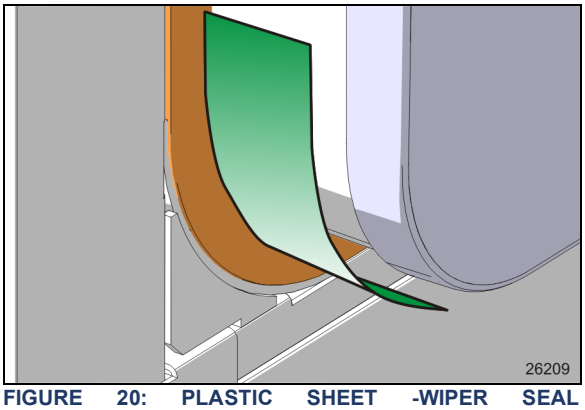


FIGURE 20: PLASTIC SHEET -WIPER SEAL PROTECTION

12. Protect the wiper seal by inserting a polypropylene plastic sheet between the room and the wiper seal. Do this on both bottom corners (Figure 20). This will distribute the compression of the wiper seal on a wider zone and prevent the room exterior panel corner from binding or pulling on the wiper seal.
13. Using the manual override procedure paragraph 5, move the slide-out 2" inside the vehicle just so the seal becomes accessible from the outside (Figure 21).

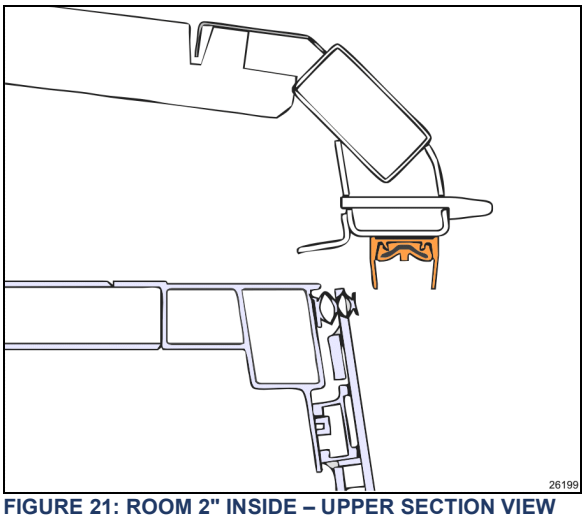


FIGURE 21: ROOM 2" INSIDE – UPPER SECTION VIEW

14. Once completed, use the manual override procedure to extend the slide-out and reinstall the exterior extrusion. Apply appropriate sealant on the exterior extrusion screws and between the extrusion, the roof and the edges to prevent water infiltration (Figure 30).
15. Re install all removed components.
16. Using the manual override procedure, retract the slide-out to its closed position.
17. Finally, the seal can be re-inflated by turning the shut-off valve handle counterclockwise. Check the pressure gage on the inflatable seal regulator to see if the pressure is increasing to 15 psi ± 5 psi.

MAIN COMPONENTS

## 6.1 FLEXIBLE RAIL COVER

A flexible rail cover (Figure 22) protects the linear bearing assembly from water, dust and debris. As the room moves out, it is pulled under the linear bearing and rack gear assembly. It is pushed back and curls up over the assembly or slide up in the wall as the room moves in.

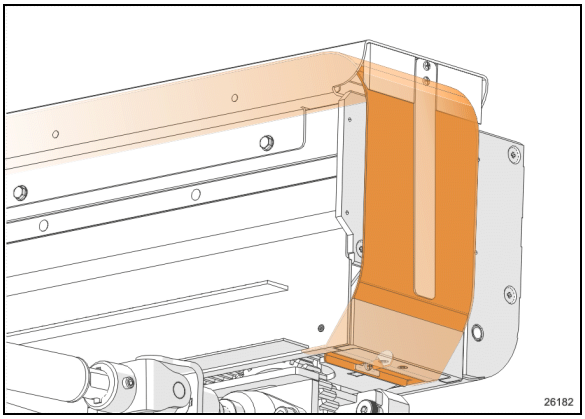


**FIGURE 22: FLEXIBLE RAIL COVER (FRONT LEFT S/O SHOWN)**

### 6.1.1 Maintenance

Regular visual inspection of the rail cover will ensure the rail and bearing system is protected from debris and dust intrusion.

If it is damaged or cracked, it must be replaced. The flexible cover is fixed by a tab and mounting screw. (Figure 23)

### 6.1.2 Removal

Deflate inflatable seal completely by turning the relief shut-off valve handle clockwise (see Figure 49, Item 1)
Push down wiper seal with a soft pry tool taking care not to damage the inflatable seal.
Unscrew the retaining screw (Figure 23)

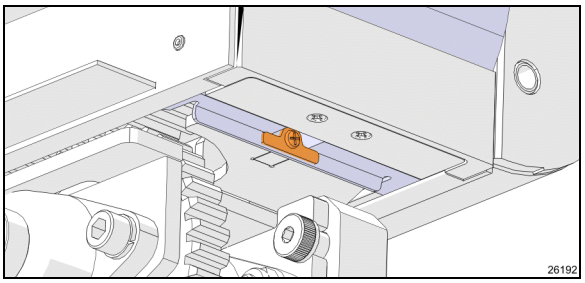


**FIGURE 23: TAB AND RETAINING SCREW**

Pull flexible cover towards the inside of the vehicle. Slip the cover out of the extrusion at the notch in extrusion bottom (Figure 24)

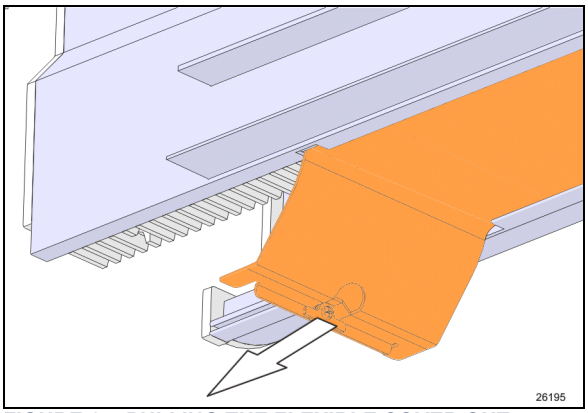


**FIGURE 24: PULLING THE FLEXIBLE COVER OUT.**

## 6.2 INNER STOPPER

The slide-outs are equipped with one inner stopper on the top horizontal member of the slide-out (Figure 26). The upper inner stoppers are used to provide a support to align the slide-out with the vehicle structure.

Note that when the “out limit” sensors are properly adjusted, the slide-out extension stops before the stoppers reach the structure keys (Figure 26 & Figure 25).

### 6.2.1 Maintenance

Check that the inner stopper screws are tight and that no damage or deformation has occurred.

### 6.2.2 Adjustment

1. Adjust the upper structure key and the inner stoppers according to Figure 27 with the seal deflated. When inflating, the seal presses the roof structure upward slightly and at that moment, the upper inner stopper comes into contact with the upper structure key.

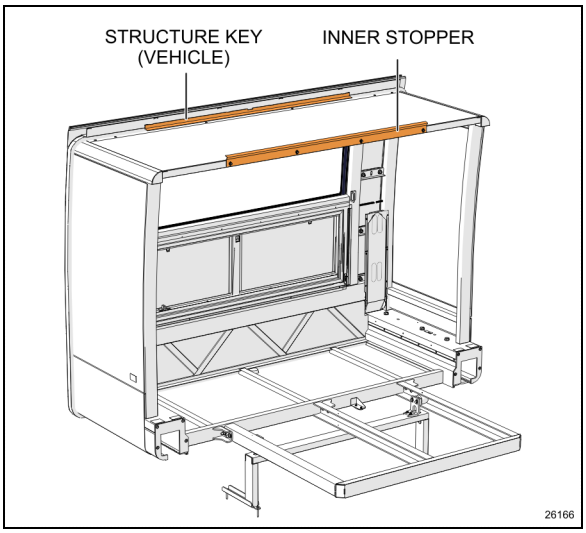


FIGURE 25: REAR LEFT SLIDE-OUT

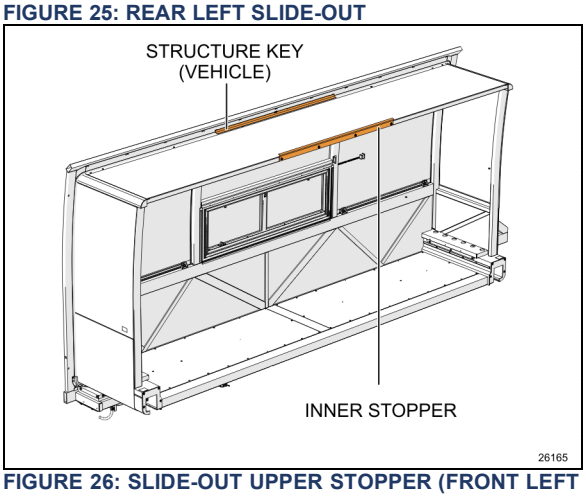


FIGURE 26: SLIDE-OUT UPPER STOPPER (FRONT LEFT SHOWN)

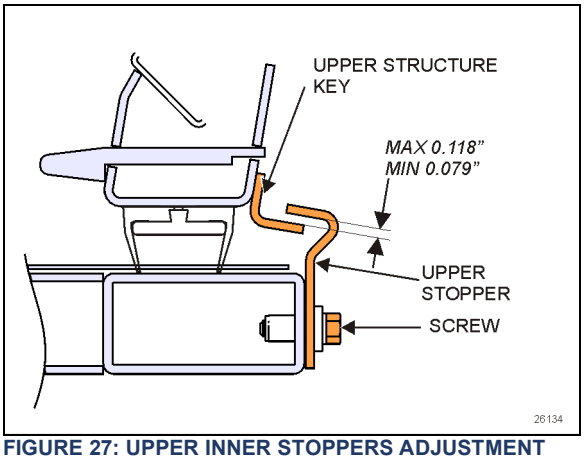


FIGURE 27: UPPER INNER STOPPERS ADJUSTMENT

## 6.3 "IN LIMIT" STOPPER

Each slide-out has four "in limit" stoppers. Two "in limit" stoppers are mounted under the slide-out, next to the rail (Figure 28) and two other "in limit" stoppers are mounted on the exterior extrusion at the top of the slide-out (Figure 29). These stoppers are used to adjust the outer face of the slide-out flush with the vehicle body when retracted.

### 6.3.1 Maintenance

Check that the "in limit" stoppers are clean and that there is no foreign matter accumulated between the stopper and their bearing surface. Check that the screws locking the stoppers in proper position are tight.

### 6.3.2 Removal

If removal of the lower in limit stoppers is required for maintenance, only unscrew the body. (Figure 28)
Leave the stem and jam nut in position to preserve adjustment. Adjustment may differ in fore and aft. We recommend marking the stoppers and returning them to their original position.
At reassembly, **Tighten to 7 lb-ft (10 Nm).** (Aluminum threads)

### 6.3.3 Adjustment

| *NOTE* |
| --- |
| *To properly adjust the "in limit" stoppers, the slide-out system must be turned off to prevent the "in limit" sensors from stopping the slide-out movement before having the "in limit" stoppers contacting their bearing surface.* |

1. Extend the slide-out partially.
2. Set the ignition switch to the OFF position.
3. Unscrew the flexible cover retaining screw (Figure 23)
4. Slide the flexible cover fully towards the outside to gain access to the stopper.
5. To adjust the lower "in limit" stoppers, loosen the jam nut, then rotate the stem CW or CCW to move it back or forward depending on the required adjustment. **Tighten to 7 lb-ft (10 Nm).**
6. To adjust the upper "in limit" stoppers, add or remove shims as required between the stopper and the extrusion.

7. Using the manual override procedure (paragraph 5), move the slide-out to its full "in" position.
8. With the stoppers contacting their bearing surface, check the outer face of the slide-out using a straight edge. Confirm it is flush with the vehicle body. Readjust the stoppers if required
9. Readjust the “in limit” sensor.

| *NOTE* |
| --- |
| *To make sure that the lower “in limit” stoppers are contacting their bearing surface when the slide-out is closed, put white paint on the “in limit” stopper before and check if the surfaces are marked with paint.* |

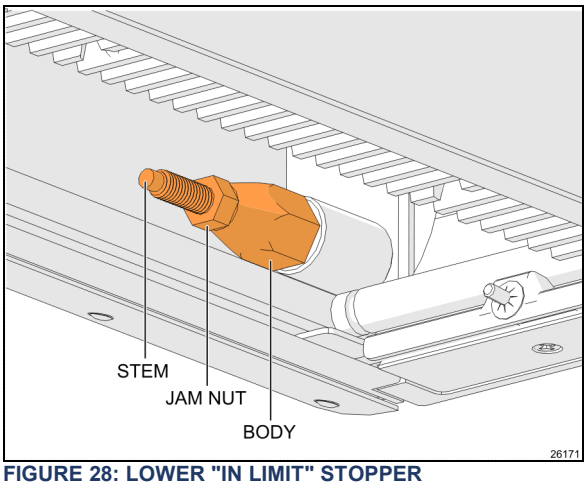


**FIGURE 28: LOWER "IN LIMIT" STOPPER**

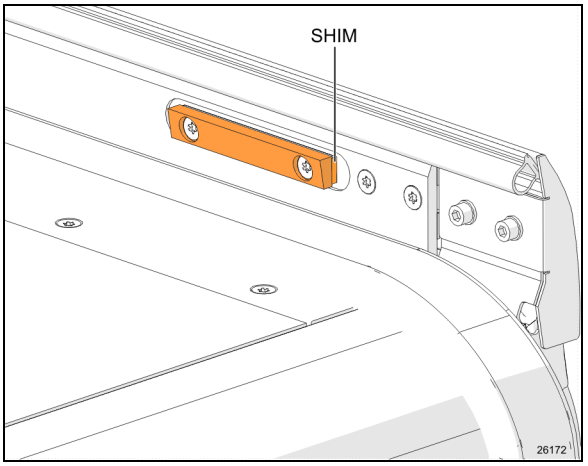


**FIGURE 29: UPPER "IN LIMIT" STOPPER**

## 6.4 EXTERIOR EXTRUSION

The exterior extrusion provides a support for the upper in limit stoppers and the upper guide pocket.

The upper guide pocket is reversible, mark orientation before disassembly.

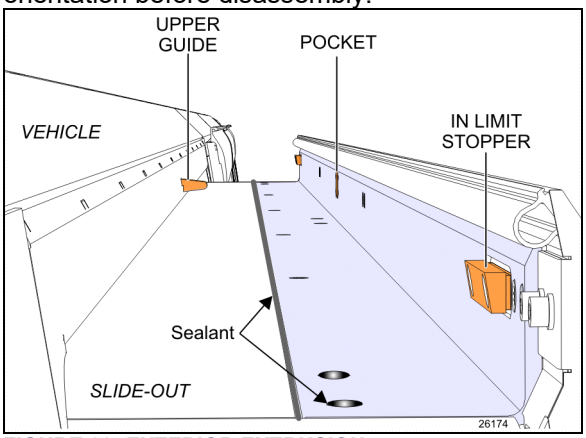


**FIGURE 30: EXTERIOR EXTRUSION**

### 6.4.1 Maintenance

Inspect the exterior extrusion for any deformation or deterioration. Check that the screws are tight. Inspect sealant condition on screw heads and between the extrusion and the structure, and also at both ends of the extrusion. If needed, clean old sealant and replace with Sika 221 sealant or equivalent product.

Also inspect the condition of the upper guide and pocket to make sure they are clean and free of debris.

## 6.5 INFLATABLE SEAL ASSEMBLY

An inflatable seal is used to prevent any type of infiltration that may occur between the vehicle body and the slide-out itself.

It is composed of an inflatable seal which is used as the *primary* sealing measure for both the retracted and extended slide-out position. There is also a wiper seal acting as a *secondary* sealing measure used to wipe water out and to ensure sealing during slide-out movement.

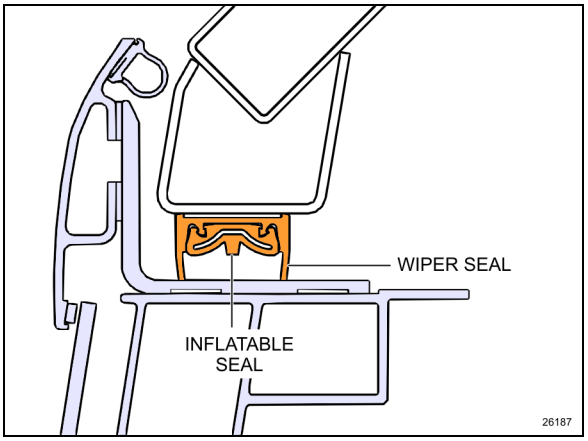


**FIGURE 31: INFLATABLE SEAL ASSEMBLY**

Seal is deflated automatically each time the slide-out is moved. The deflating valve solenoid is activated before and during slide-out movement. The deflating solenoid is deactivated upon reaching the retracted or extended position. Then the inflating solenoid is activated to re-inflate the seal.

**CAUTION**

Make sure the inflatable seal is deflated when manually moving the slide-out during service maintenance. Deflate inflatable seals completely by turning the relief shut-off valve handle clockwise (see Figure 49, Item 1).

**CAUTION**

Check before using any cleaning or adhesive product on seal, panel or glass to prevent alteration or damage.

### 6.5.1 Maintenance

The inflatable seal pressure must be set to 15 psi ± 5 psi with the pressure regulator. It is recommended to check the inflatable seal pressure once a month to ensure sealing efficiency and prevent any infiltration from outside. Check both seals for air leaks or cracks. Check the sealant between the inflatable seal and the exterior panels and glasses. Add sealant if necessary.

### 6.5.2 Seal assembly replacement

*NOTE*

*Refer to MI19-27 for detailed instructions on inflatable seal assembly replacement*

## 6.6 SECURITY PIN

During normal ride, the slide-out cannot extend by itself because the 740:1 ratio speed reduction worm gear type gearbox system is not reversible, the output shafts are self-locking. The security pin purpose is to lock the slide-out in retracted position if an accident occurs. It is built to withstand any resulting lateral acceleration of the slide-out.

The system consists of a stainless steel pin connected to a single action/spring return pneumatic cylinder (Figure 32). The pin engages in the slide-out receptacle with releasing of the parking brake. A knocking sound may be heard at this moment. An O-ring is located at the base of the pin housing to reduce knocking when the pin retracts. The lower hole on the pin housing permits water to drain. The upper hole allows inserting a small screwdriver to prevent pin rotation on air cylinder removal.

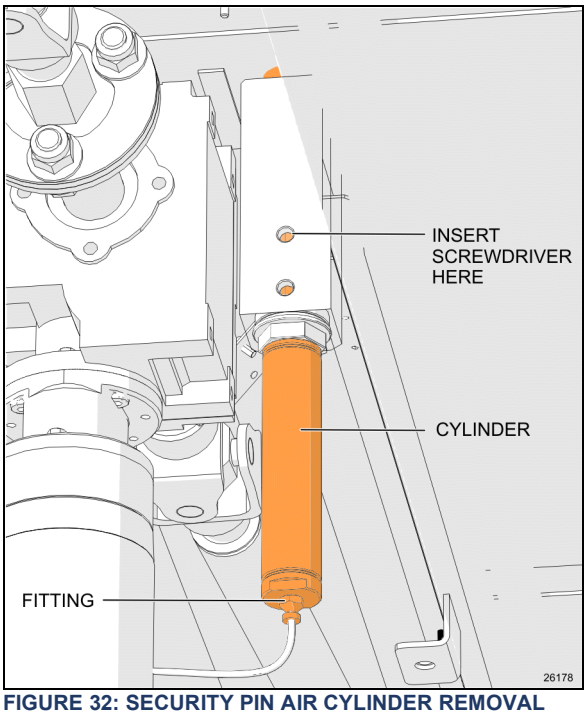


**FIGURE 32: SECURITY PIN AIR CYLINDER REMOVAL**

### 6.6.1 MAINTENANCE

Inspect air cylinder and fitting for air leaks. Periodically, check that the pin retracts and engages in the receptacle as it should when the parking brake is applied or released.

To extend the slide-out, it must be at full “IN” position with the engine running. If the pin produces excessive knocking when it engages on parking brake release, reduce air cylinder speed by adjusting the air flow regulator on the pneumatic control panel (Figure 49, item 5).

### 6.6.2 AIR CYLINDER REPLACEMENT

1. Ensure the parking brake is applied.
2. Disconnect the fitting from the cylinder base. (Figure 32).
3. Using a wrench at its lower end, unscrew the air cylinder from the pin housing.
4. Insert a small screwdriver through pin and housing to prevent pin rotation. Unscrew the cylinder rod from the pin.
5. Transfer the fitting on the new cylinder. Apply Teflon paste on threads.
6. Cylinder installation is like removal but in reverse order.

## 6.7 RACK GEAR

Slide-out movement is made by a system of racks and pinions. There are two racks on each slide-out.

### 6.7.1 MAINTENANCE

Once a year, check the rack gears for broken or worn tooth, especially the front slide-out racks. Also, check the rack fastening hole teeth that are weaker and might break (Figure 33). Replace the racks if excessive wear is present. Clean racks from sand or other debris. Check that the racks are properly secured. Check the backlash between the gear and the rack. Excessive backlash indicates rack wear.

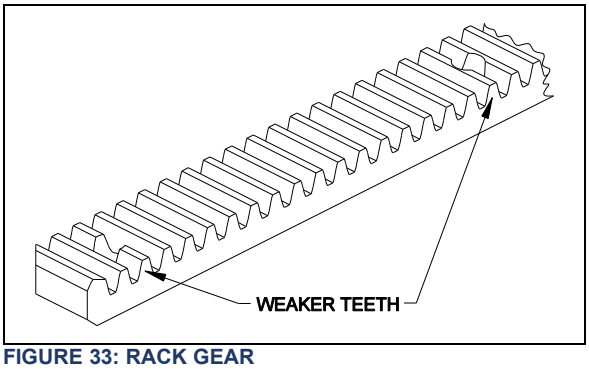


**FIGURE 33: RACK GEAR**

### 6.7.2 FRONT SLIDE-OUT RACK GEAR REPLACEMENT

1. Remove the slide-out from the vehicle (removal must be performed according to MI18-31).
2. From under the slide-out, unscrew all the rack screws and remove the rack.
3. Install a new rack and tighten the screws. Use Loctite™ 242 or equivalent product on threads.

   **TORQUE: 1.9-2.1 lb-ft (2.58-2.85 Nm) MAX**

4. Reinstall the front slide-out inside the vehicle.

### 6.7.3 REAR SLIDE-OUT RACK GEAR REPLACEMENT

1. Using the slide-out control pad, extend the slide-out about one foot.
2. If using the manual override procedure, paragraph 11, do not forget to deflate the inflatable seal completely
3. From outside, unscrew and remove only the first two screws of the rack to be changed.
4. Using the manual override procedure (paragraph 5) only, retract the slide-out to its fully closed position.
5. Rotate the pinion assembly away from the rack as described in 6.8.1
6. From under the slide-out, unscrew all the rack screws and remove the rack.
7. Install a new rack between the slide out structural rack seat and the pinion and tighten the screws. Use Loctite™ 242 or equivalent product.

   **TORQUE: 1.9-2.1 lb-ft (2.58-2.85 Nm)**

8. Rotate the pinion assembly back in place. As described in 6.8.1
9. Using the slide-out manual override procedure only, extend the slide-out about one foot.
10. Tighten the two remaining screws. Use Loctite™ 242 or equivalent product.

    **TORQUE: 1.9-2.1 lb-ft (2.58-2.85 Nm) MAX**

11. Using the slide-out control pad key or the manual override procedure, retract the slide-out to its fully closed position.
12. Re-inflate the air seal and confirm pressure is 15 psi ± 5 psi on the pressure gage. (Item 7, Figure 49)

## 6.8 PINION GEAR

A pinion gear is located on each side of the slide-out. It is used to move the slide out inward and outward.

The gear is mounted on a keyed shaft supported by two flange bearings. (Figure 34).

The *pinion assembly* (Figure 34) includes flange bearings, shaft, pinion and a mounting bracket. The bracket rotates around a socket head shoulder screw.

This screw serves as a locating pin only and does not provide clamping.

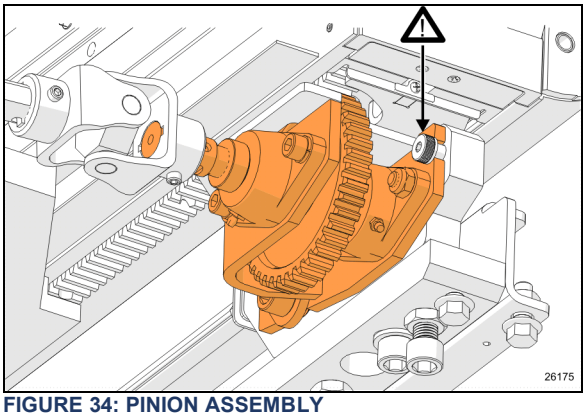


FIGURE 34: PINION ASSEMBLY

**CAUTION**

In normal maintenance the socket head shoulder screw should not be tampered with or removed.

If it is removed by error, apply thread locker and hand tighten.

### 6.8.1 PINION GEAR DISENGAGEMENT

Pinion disengagement can be achieved by rotating the pinion assembly.

The pinion assembly rotates around a socket head shoulder screw. (Figure 34) This screw serves as a locating pin only.

1. Remove upper screw as shown in Figure 35

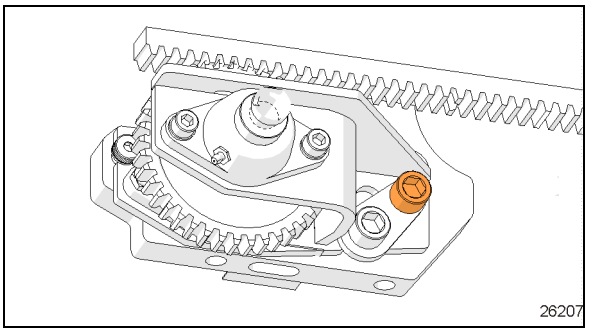


FIGURE 35: REMOVE UPPER SCREW

2. Slightly unscrew the lower screw to remove tension on tab. (Figure 36)

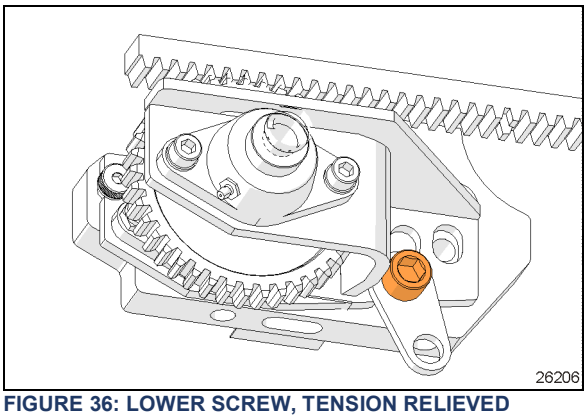


FIGURE 36: LOWER SCREW, TENSION RELIEVED

3. Rotate pinion assembly down. (Figure 37)

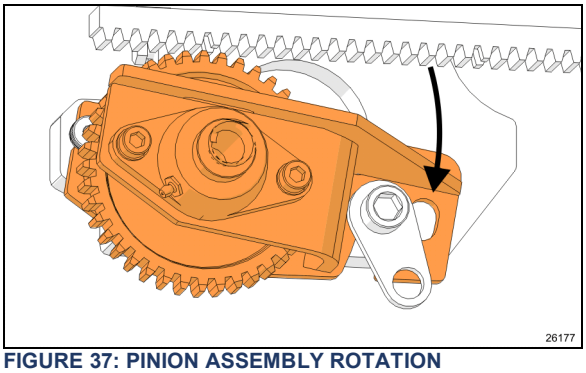


FIGURE 37: PINION ASSEMBLY ROTATION

4. Reverse steps to return the pinion assembly in position.
5. Tighten upper and lower screws to:

   **198 lb-ft (268 Nm)**

### 6.8.2 RACK AND PINION GAP SETTING

Disengage pinion and place tool G36772 between the pinion gear and rack to set the gap. Push pinion gear to the bottom of the rack gear. Tighten pinion assembly in place.

Tighten screw to: **198 lb-ft (268 Nm)**.

Move the room to free the tool. Proceed to other side.

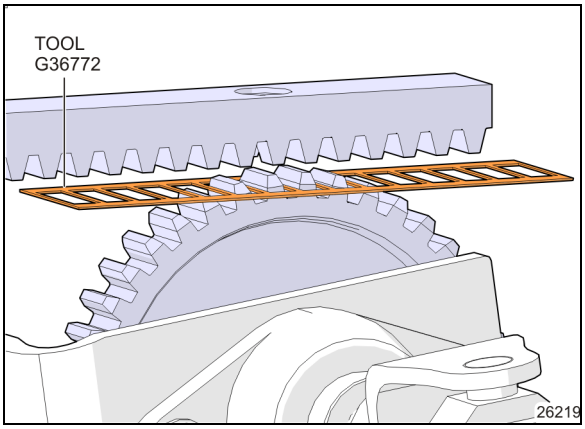


FIGURE 38: TOOL G36772

### 6.8.3 PINION GEAR SYNCHRONIZATION

To synchronize the pinion gears, use the adjustable flange.

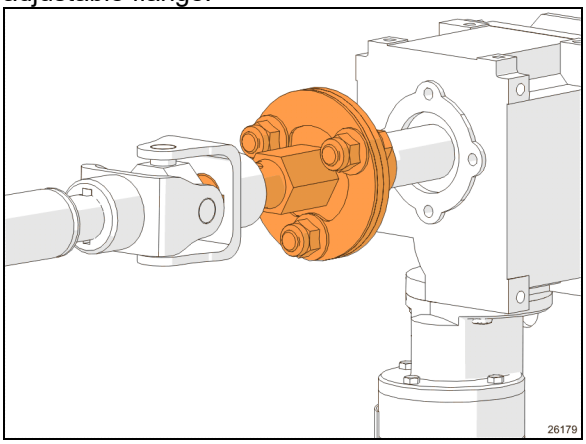


FIGURE 39: ADJUSTABLE FLANGE

1. Loosen flange screws. This disconnects the right angle gearbox and allows rotating the driveshaft leading to the pinion.
2. Rotate until pinion gears are synchronized.
3. The flange mating surfaces should be clean and dry to have proper friction.
4. Tighten screws to **59 lb-ft (80 Nm)**

### 6.8.4 FRONT SLIDE-OUT PINION REPLACEMENT

1. Unscrew all set screws on the drive shaft yokes (item 4 in TORQUE TABLES). Slide drive shaft towards gearbox to disengage the yoke from the pinion shaft (item 1 in Figure 40).
2. Disengage the pinion assembly. See 6.8.1.
3. Completely remove the pinion assembly. Place on a workbench.

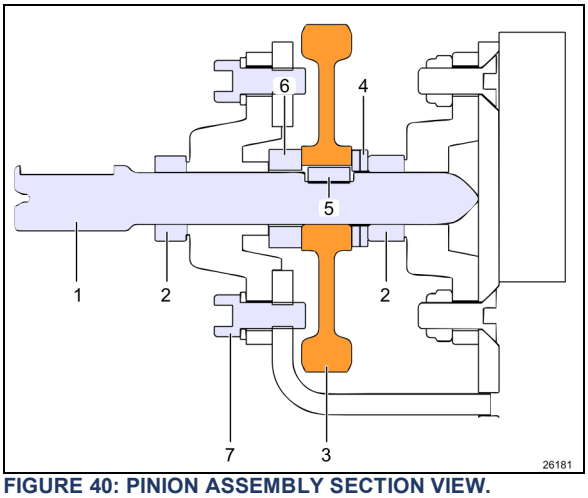


FIGURE 40: PINION ASSEMBLY SECTION VIEW.

1) Pinion shaft
2) Locking collars (2)
3) Pinion gear
4) Thrust washers (2)
5) Pinion key
6) Thrust bushing
7) Mounting screw, top pillow block bearing

4. Release both locking collars (2) by backing out the set screws and turning the collar.
5. Unscrew and remove the top pillow block mounting screws (7). Keep hardware.
6. Pull shaft (1) out
7. Remove old pinion gear (3). If key is damaged, replace with new.
8. On shaft (1), install thrust bushing (6), key (5), new pinion (3) and thrust washers (4).
9. Push shaft through bottom locking collar (2) and bottom pillow bearing until the shaft end contacts the bottom mounting plate.
10. Maintain shaft in contact with plate and lock bottom collar (2).
11. Using a drift and hammer, tension the eccentric locking collar (2) by means of one or two strong blows. There is a cavity on the collar made for that purpose.
12. Apply blue loctite 243 threadlocker to set screws and hand tighten.
13. Re-install the top pillow block hardware **Tighten to 48 lb-ft (65 Nm)**
14. Re-install pinion assembly.

15. On the pinion assembly, tighten upper and lower screws (Figure 35, Figure 36) to: **198 lb-ft (268 Nm)**
16. Slide driveshaft back in place

    Tighten drive shaft yokes set screws to **27 lb-ft (37 Nm)**

### 6.8.5 REAR SLIDE-OUT PINION REPLACEMENT

The procedure is similar to the front slide-out shaft pinion replacement.
Gain access to the mechanism from inside the vehicle under the bed structure or from the outside by removing the right (curb side) fender and protective covers.

## 6.9 ELECTRIC MOTOR

The power is supplied by a 24V, 1/3 HP electric motor coupled with a speed reduction gearbox.

Opposite to the gearbox, the motor is equipped with a 10 mm hexagonal shaft extension allowing slide-out movement without the control pad.

This shaft extension is used to move the slide-out at low speed during the inner stoppers adjustment, the tilt adjustment or the 2" inside retraction.

See paragraph 5 for the manual override procedures.

**⚠ CAUTION**

When moving the slide-out with a cordless power drill as described in the manual override procedure, be careful as the slide-out approaches the open or closed position, in order not to overload the mechanism.

### 6.9.1 MAINTENANCE

Inspect the electrical connections and water seal condition. Check that the mounting bolts are tight (Figure 42).

### 6.9.2 REPLACEMENT

1. The slide-out must be retracted half way in.

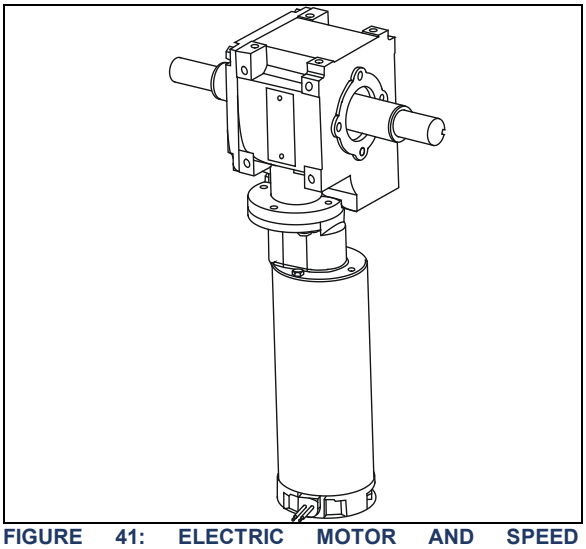

**FIGURE 41: ELECTRIC MOTOR AND SPEED REDUCTION GEARBOX**

2. Unplug the electric cable connector.
3. Remove the motor from the gearbox.
4. Fasten the new motor to the gearbox using screws.
5. Re-connect the electric cable connector.

## 6.10 SPEED REDUCTION GEARBOX

The speed reduction gearbox used is a helical worm gear type. This gearbox has a 2-stage 740:1 ratio and the output shafts are self-locking. Keys on output shafts are glued into keyseats.

### 6.10.1 MAINTENANCE

Inspect the gearbox to check if there is any leakage or backlash in the box. Replace the gearbox if excessive wear is present. Check that all bolts are tight.

The gearbox is lubricated for life and the oil should not have to be changed.

### 6.10.2 GEARBOX REPLACEMENT

1. The slide-out must be retracted half way in.
2. Disengage the drive shafts
3. Remove the 4 cap screws securing the drive motor/gearbox assembly and dismount the assembly.
4. Remove the gearbox from the motor and install the new one.
5. Reinstall the drive motor/gearbox assembly on the vehicle mounting bracket. Tighten mounting bolts in a crisscross pattern.

**TORQUE: 16-20 lb-ft (22-27 Nm)**

> **CAUTION**
>
> To prevent damaging threads, use your fingers to drive the bolts into the aluminum gearbox housing mounting holes.

6. Reinstall the drive shafts.

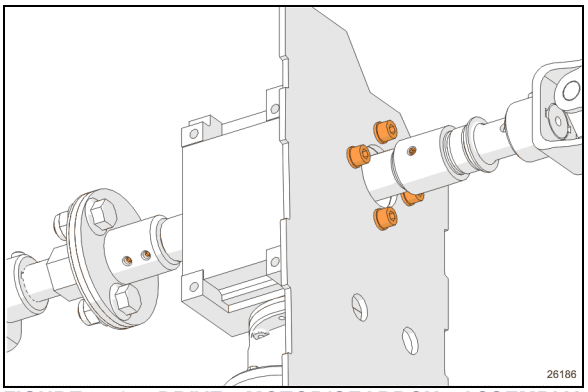


**FIGURE 42: DRIVE MOTOR/GEARBOX ASSEMBLY MOUNTING BOLTS**

## 6.11 DRIVE SHAFT

A driveshaft transmits the rotation from the gearbox to the pinion.

### 6.11.1 MAINTENANCE

Due to the low speed and low duty cycle of slide-out operation, the drive shafts do not require any maintenance or additional greasing. In

### 6.11.2 REPLACEMENT

1. The slide-out must be retracted.
2. Disengage the yokes by unscrewing the set screws and sliding out of the pinion and gearbox shafts.
3. Install the new drive shaft.
4. Tighten the yoke set screws to

   **27 lb-ft (37 Nm)**

## 6.12 FLANGE BEARINGS

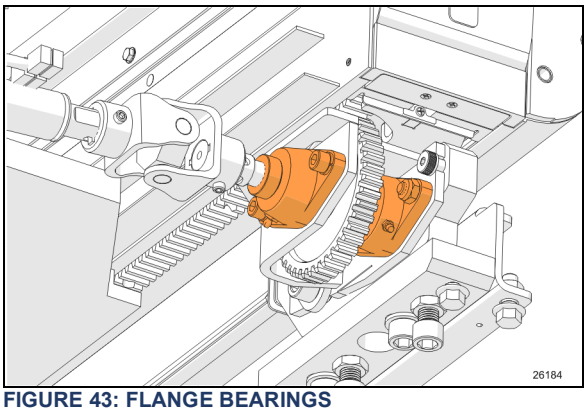


**FIGURE 43: FLANGE BEARINGS**

The flange bearings are pre-lubricated and no subsequent lubrication is required due to the very low extending and retracting speed of the slide-out system.

## 6.13 LOCKING COLLAR

The locking collar secures the shaft and the flange bearing together using friction. Once locked, it prevents axial translation and rotation of the shaft in the flange bearing bore.

### 6.13.1 INSTALLATION

Slide the locking collar along the shaft up to the flange bearing. Turn the locking collar clockwise while maintaining it pressed against the bearing.

Using a drift and hammer, tension the eccentric locking collar by means of one or two strong blows. There is a cavity on the collar made for that purpose.

Apply Loctite 243 blue thread locker and tighten the set screw to **4.4 lb-ft (6 Nm)**.

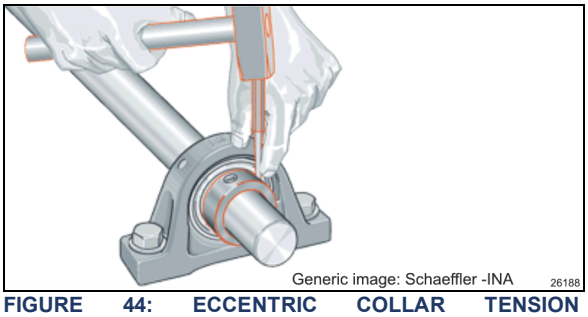


**FIGURE 44: ECCENTRIC COLLAR TENSION APPLICATION**

To remove the collar, loosen the set screw and strike with a drift and hammer in the opposite direction.

## 6.14 LINEAR BEARING AND RAIL

Rail and linear bearing system provide precise frictionless linear movement together with high load carrying capacity and high stiffness. This standardized equipment is fully interchangeable.

To prevent corrosion, an electrolytic black film treatment is performed to the rail. Do not strike the rail with metal tools, this could damage the treatment.

A flexible rail cover (Figure 22) protects the linear bearing assembly from water, dust and debris.

### 6.14.1 DUMMY RAIL

The bearing carriages are sold with a dummy rail. It prevents damage to the rolling element set if the carriage is removed from the main rail.

Additional dummy rails are useful for carriage replacement.

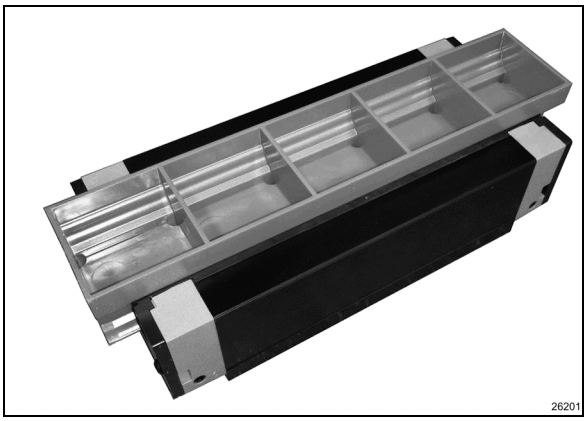


**FIGURE 45: BEARING CARRIAGE AND DUMMY RAIL**

### 6.14.2 BEARING CARRIAGE MAINTENANCE

Make every effort not to allow dust and foreign objects to enter inside the linear bearing.
Regularly inspect and clean the flexible rail cover to make sure it is in good condition.

The linear bearings are pre-lubricated and no subsequent lubrication is required.

### 6.14.3 BEARING REPLACEMENT

| *NOTE* |
| --- |
| Before starting procedure, we recommend having at least one dummy rail in hand. |

The procedure allows replacement of the bearings with minimal impact on the adjusted position of the slide-out room. Perform the procedure on one side at a time.

1. Extend the room for maintenance. See paragraph 3
2. Remove the top rail screws (3) on one side.

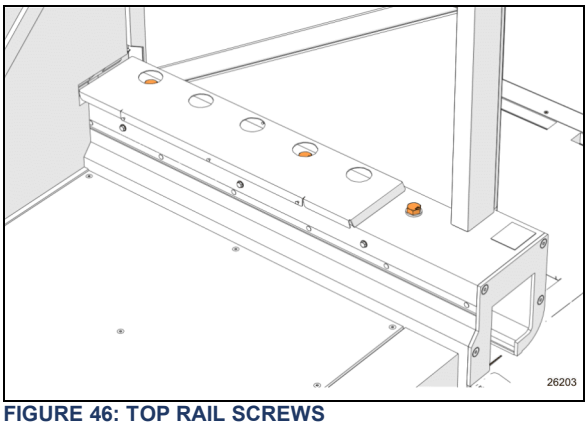


**FIGURE 46: TOP RAIL SCREWS**

3. On the same side, remove retaining screws A & B, (Figure 4).
4. Remove the lower carriage mounting screws. (Figure 47)

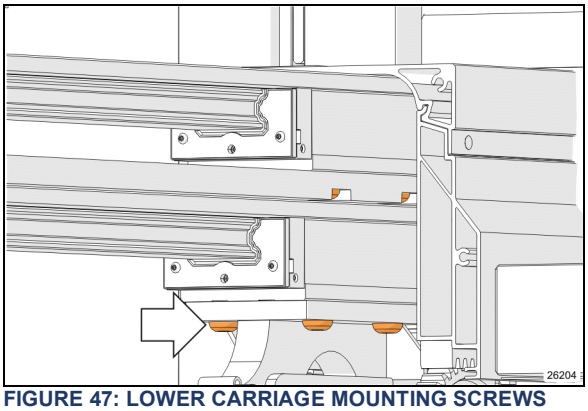


**FIGURE 47: LOWER CARRIAGE MOUNTING SCREWS**

5. Pull out bearing and rail sub-assembly. Place on a work table.
6. Turn the assembly upside down to access and remove the bearing mounting screws (Figure 48).

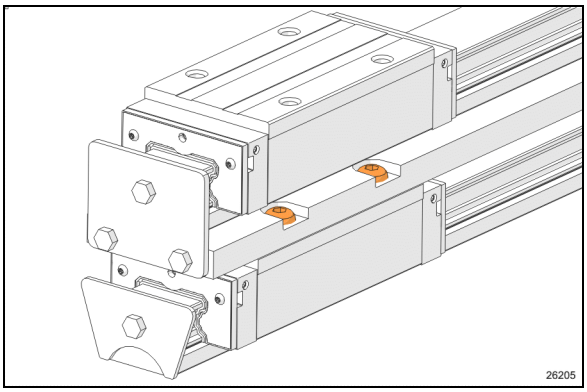


FIGURE 48: BEARING CARRIAGE MOUNTING SCREWS

7. Remove rail end plates.
8. Place the dummy rail at the end of the rail.
9. Dismount one of the two linear bearing carriages onto the dummy rail. Proceed similarly for second carriage.

**WARNING**

Always push the bearing carriage directly from the slide-out rail onto the dummy rail.

Leave dummy rail in the carriage until ready to reassemble.

10. Slip new carriages onto the slide-out rail.
11. Tighten the mounting bolts in a crisscross pattern.

    **TORQUE: 59 lb-ft (80 Nm)**

12. Reinstall end plates

    **TORQUE: 17 lb-ft (23 Nm)**

13. Re install the lower carriage mounting screws. (Figure 47).

    **TORQUE: 59 lb-ft (80 Nm)**

14. Re-install retaining screws A & B, (Figure 4).

    **TORQUE: 55-65 lb-ft (75-88 Nm)**

15. Proceed to bearing assembly on the remaining side and re-start procedure.

## 7 SLIDE-OUT PNEUMATIC SYSTEM

The slide-out is controlled by a pneumatic and electrical system. The pneumatic system consists of electrically controlled valves that operate slide-out components and control safety operations.

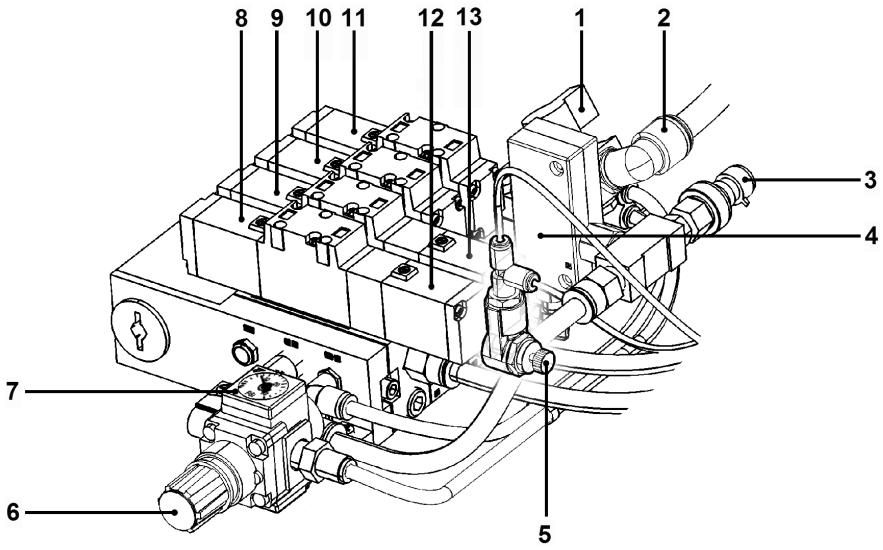


1. RELIEF SHUT-OFF VALVE AND HANDLE
2. AIR SUPPLY
3. PRESSURE TRANSDUCER
4. VACUUM GENERATOR
5. SECURITY PIN FLOW REGULATOR
6. AIR SEAL PRESSURE REGULATOR
7. PRESSURE INDICATOR
8. REAR SLIDE-OUT SEAL DEFLATION
9. FRONT SLIDE-OUT SEAL DEFLATION
10. SECURITY PIN VALVE
11. VACUUM VALVE
12. REAR SLIDE-OUT SEAL INFLATION
13. FRONT SLIDE-OUT SEAL INFLATION

**FIGURE 49: PNEUMATIC COMPONENT PANEL**

### 7.1 DESCRIPTION

#### AIR PRESSURE INLET VALVE

The slide-out air supply comes from the accessory tank.

The supply line for the pneumatic component panel (Item 2, Figure 49) is connected to the air pressure inlet valve on the pneumatic panel in the front service compartment.

#### INFLATABLE SEAL VALVE

Seal inflation and deflation is done using a 5-port 2-position manifold valve with two solenoids. One solenoid is used for inflating of the seal and the other for deflating of the seal. When one of the solenoids is activated (seal deflating valve for example), the valve will keep its state even if the solenoid is deactivated. The inflating valve solenoid is activated to re-inflate the seal when the slide-out reaches its inner or outer limit. The inflatable seal pressure is set to 15 psi ± 5 psi. In full “IN” or full “OUT” position, this pressure is continuously applied to the seal as long as the accessory air tank (which supplies the slide-out) is not empty.

#### VACUUM GENERATOR

A vacuum generator using Venturi principle is controlled by a 5-port 2-position manifold valve and is used to evacuate the air faster from the seal and to ensure that the seal surface does not stay in contact with the slide-out.

The vacuum generator valve is activated simultaneously with seal deflating valve solenoid for 10 seconds. A pressure transducer will detect a seal, vacuum valve or generator failure if -5 psig is not reached after the 10 seconds delay. In that situation, an error code will be stored in the DID. In normal operating condition, -5 psig is a necessary condition to consider the seal as deflated.

| *NOTE* |
| --- |
| *When air pressure is relieved using the shut-off valve, the normal extending and retracting operation cycle is disabled. This is due to the pressure transducer reading 0 psig and that is higher than -5 psig (vacuum). For that reason the slide-out cannot be moved with the control pad.* |

## 7.2 MAINTENANCE

### COMPRESSED AIR LINE

Inspect all compressed air line tubing for cuts, swelling, kinks or other damage or deterioration. Inspect the pneumatic fittings and components for any leak.

The slide-out air supply comes from the accessory air tank. For maintenance information, refer to Section 12, “Brake and air system”.

### INFLATABLE SEAL CIRCUIT

The efficiency of the seal could be affected by impurities, such as white powder in the pneumatic control valve. It is recommended to inspect the inflatable seal control components once a year to prevent malfunction. In this case, remove the seal valves and clean the interior valve components using a compressed air nozzle. Do the same thing with the vacuum generators.

The inflatable seal pressure must be set to 15 psi ± 5 psi. It is recommended to check the inflatable seal pressure once a month to ensure sealing efficiency and prevent any infiltration from outside. The needle on the pressure gage should indicate between the two small green arrows on the dial (Figure 14).

## 8 SLIDE-OUT ELECTRICAL SYSTEM

**DANGER**

Never modify the slide-out electrical wiring. Any modifications may cause an unexpected slide-out action and could result in personal injuries.

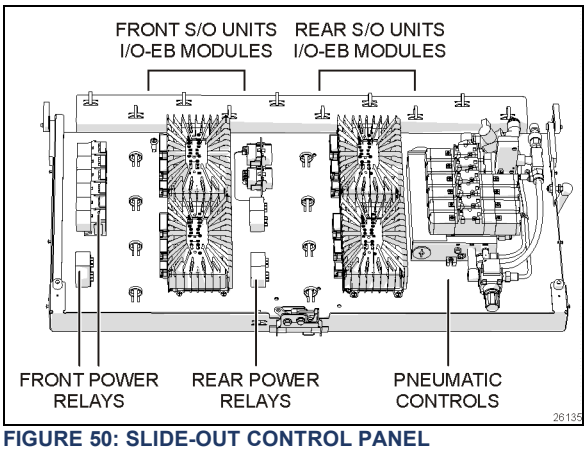


**FIGURE 50: SLIDE-OUT CONTROL PANEL**

The multiplexed slide-out electrical system is mainly composed of the MCM module, the VEC module and one I/O-EB module per installed slide-out.

For standard Prevost slide-outs, each I/O-EB module has two power relays assigned.

For Prevost slide-outs with flush floor, the I/O-EB module has six power relays assigned.

I/O-EB modules analyze the input signal conditions and activate outputs like pneumatic valves, retraction and extension sequence, etc. The power relays are used to supply power coming from the I/O-EB module to the electric motor and to change polarity to reverse motor rotation.

I/O-EB modules input signals are:

- Control pad switch IN;
- Control pad switch OUT;

Also, the following input signals are required for a safe operation of the slide-out:

- Pressure transducer;
- Parking brake;
- “in limit” sensor;
- “out limit” sensor;

I/O-EB modules output signals are:

- Control pad green indicator light;
- Power relay current reversing;
- Seal valve inflating solenoid;
- Seal valve deflating solenoid;
- Vacuum generator valve solenoid;
- Security pin valve solenoid;
- Electric motor, output 16 amps; one per motor

**DANGER**

Before working on the slide-out electrical system, turn the ignition key to the “OFF” position.

### 8.1 ELECTRICAL INTERCONNECTION WITH PREVOST VEHICLE

The slide-out power supply comes from the 24-volt circuit breaker in the rear electrical compartment. The other interconnections are located on the pneumatic panel and the electrical panel in the front service compartment. All the interconnections are shown on the electrical diagrams of your vehicle.

A blinking green light on the control pad means that an error condition or a missing operation condition is present on a slide-out.

### 8.2 SLIDE-OUT FUSES

The main fuse for the slide-out electrical system is F136. It is located in the rear electrical compartment

#### 8.2.1 Multiplex fuses

The multiplex module outputs are protected in current by an internal “soft-fuse”. Each output is programmed to specific maximum amperage. When an output is shorted, the current gets above the limit and the soft-fuse intervenes to

turn the output OFF. The output stays OFF until the "soft-fuse" is reset.

Turn the ignition key to the OFF position and turn to the ON position again. This resets all "soft-fuses".

**CAUTION**

Never put grease, Cortec VCI-238 or other product on the multiplex modules connector terminals.

### 8.3 PROBING VOLTAGE ON THE MULTIPLEX CIRCUITS

Multiplex modules are supplied by 24 volts.

Inactive Multiplex output = Residual voltage of 18% to 33% of supply voltage.
Inactive Multiplex input = Residual voltage of 50% of supply voltage.

*NOTE*

*For a 24V module: an active voltage would be 24V or 0V but not in between. If you measure the intermediate tensions (ex. 12V, 4V, or 8V) this must be interpreted as if the input or the output is inactive.*

### 8.4 MODULE REPLACEMENT

I/O-EB modules can be replaced and reprogrammed without having to connect a computer to the vehicle.

Refer to Section 06 under heading “MULTIPLEX MODULES REPLACEMENT” for the detailed procedure.

### 8.5 SLIDE-OUT LIMIT SENSORS

Two Hall-Effect sensors are used on each slide-out to define end limit positions. The "in limit" and "out limit" sensors detect two pairs of permanent magnets fixed on the slide-out underbody.

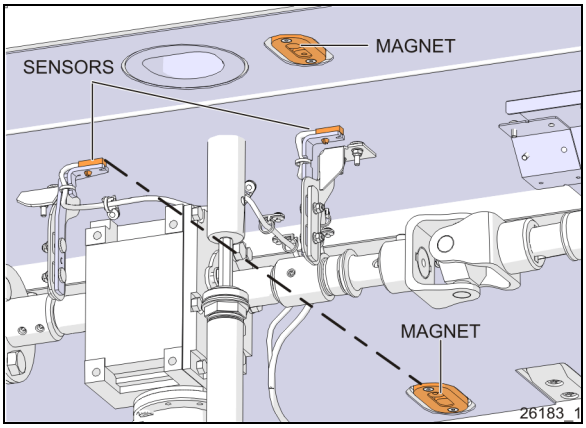


**FIGURE 51: SENSORS & MAGNETS (FRONT S/O SHOWN)**

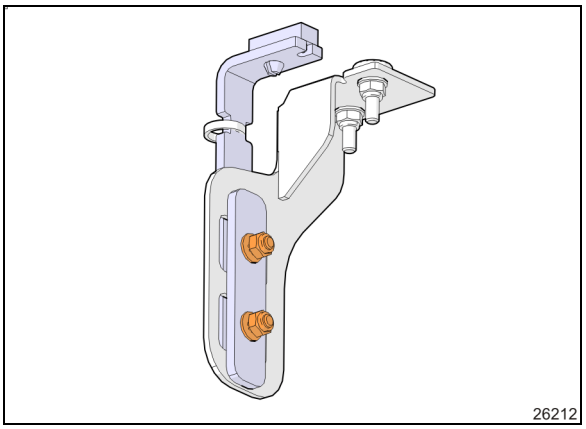


**FIGURE 52: SENSOR BRACKET (FRONT)**

#### 8.5.1 Accessibility

The front slide-out sensors can be reached from the baggage compartment (Figure 51). The rear slide-out sensors are accessible from inside of the vehicle, under the bed structure.

#### 8.5.2 To adjust the "in limit" sensor:

Before adjusting the “in limit” sensor, ensure that the “in limit” stoppers are perfectly adjusted (see paragraph 6.3.3).

1. Retract the slide-out to its full “IN” position with the “in limit” stoppers in contact with their bearing surface.
2. Loosen the “in limit” sensor mounting bracket screws and move back the sensor completely (toward the inside of the vehicle).

3. Bring slowly the sensor toward the outside of the vehicle until the LED turns on. When it does, move it 0.079" (2mm) further in the same direction. Adjust vertically to 7mm from magnet support face (Figure 53). Tighten the mounting bracket screws.

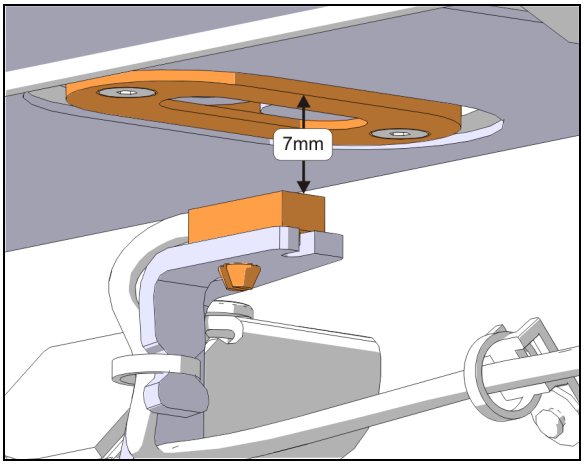


FIGURE 53: SENSOR VERTICAL ADJUSTMENT

4. Check if the "in limit" sensor is properly adjusted. At the moment when the slide-out stops during normal retraction, the "in limit" stoppers must contact their bearing surface. Put white grease on the "in limit" stopper beforehand to visually confirm the system stops the motion before hitting the surface. There should be a grease mark on the surface.

8.5.3 To adjust the "out limit" sensor:

Before adjusting the "out limit" sensor, ensure that the inner stoppers are perfectly adjusted (see paragraph 3).

1. The slide-out is slightly tilted except when it is in its full "IN" or "OUT" position. Extend the slide-out near its full "OUT" position. When the slide-out straightens up and is perpendicular with the vehicle body, stop the slide-out.
2. Loosen the "out limit" sensor mounting bracket screws and move back the sensor completely (toward the inside of the vehicle).
3. Bring slowly the sensor toward the outside of the vehicle until the LED turns on. When it does, move it 0.079" (2mm) further in the same direction. Adjust vertically to 7mm from magnet support face (Figure 53). Tighten the mounting bracket screws.

*NOTE*

*When the "out limit" sensor is properly adjusted, the slide-out extension stops before the side inner stoppers reach the vehicle structure.*

## 9 SLIDE-OUT EXTERIOR FINISHING PANELS & WINDOWS

*NOTE*

*The removal and installation procedures are all based on standard service methods described in section 18: BODY. Refer to this manual for procedures, tools, cleaner, adhesives and other product needed.*

## 10 WELDING PRECAUTIONS

**CAUTION**

Prior to arc welding on the vehicle, refer to the Welding Precautions Procedure Prior To Welding" in section 00 GENERAL of this manual to avoid serious damage to the vehicle components.

## 11 FINISHING PRECAUTIONS FOR CONVERTERS

No drilling is allowed in the zones identified by Figure 54, Figure 55 and Figure 56. This applies on both sides of the slide-out room.

This precaution is to avoid drilling through the flexible rail cover (Figure 22) which slides inside the slide out wall or rail housing when the slide-out is closed

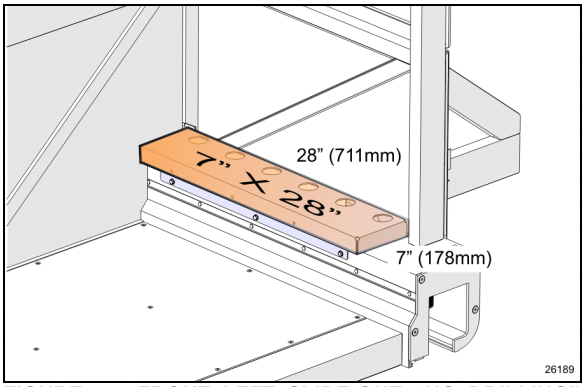


FIGURE 54: FRONT LEFT SLIDE-OUT "NO DRILLING" ZONE

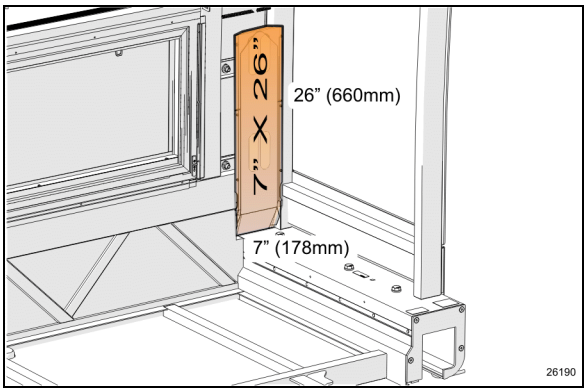


**FIGURE 55: REAR LEFT SLIDE-OUT “NO DRILLING ZONE”**

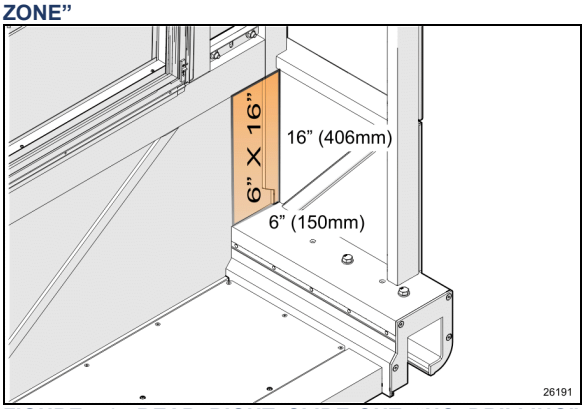


**FIGURE 56: REAR RIGHT SLIDE-OUT “NO DRILLING” ZONE**

## CAUTION

Never remove the structural reinforcement angle brackets inside the baggage compartments. Doing so could lead to termination of the warranty coverage concerning the structural integrity.

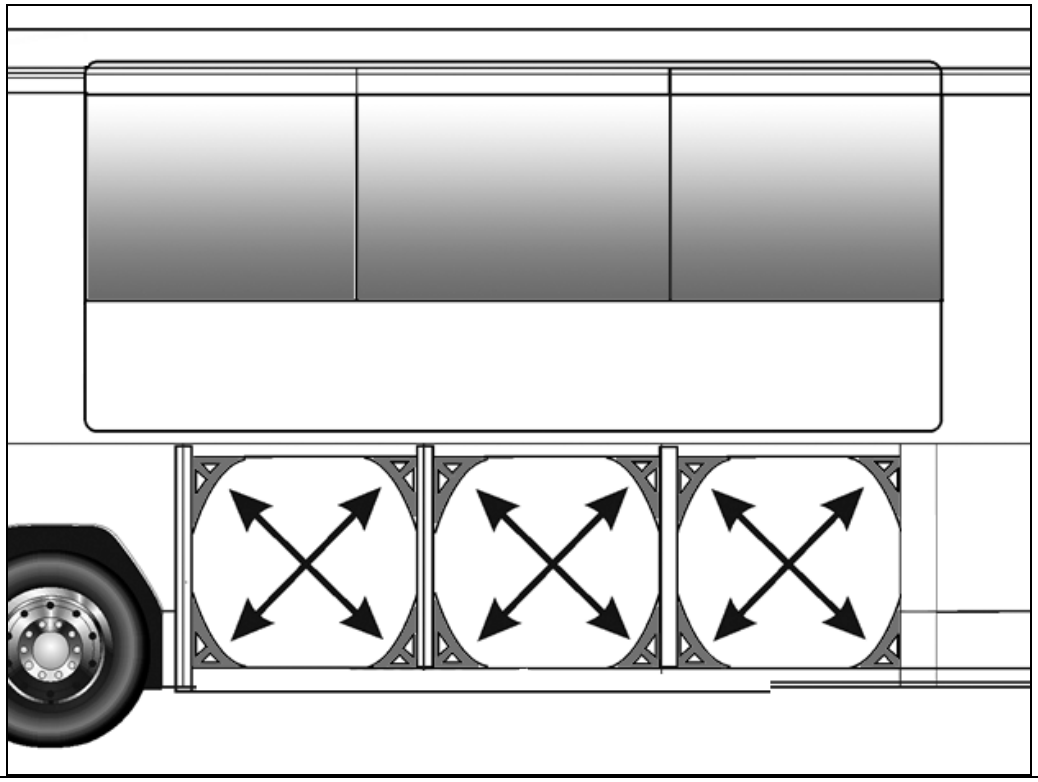

## 12 PREVOST SLIDE-OUT WITH FLUSH FLOOR

A flush floor slide-out is available in the front right position on H3-45 VIP vehicles. The double rail compact slide mechanism provides improved aisle width when retracted. It features a mobile floor providing a continuous, flush floor surface when extended. There are no security pins required in this slide-out configuration.

Synchronization of the two extension motors is realized through the MUX program. The associated MUX program uses PID (Proportional, Integral, Derivative.) control to achieve precise and fail-safe operation of the slide-out.

**CAUTION**

Manual operation of the Prevost slide-out with flush floor differs significantly from standard Prevost slide-outs and should not be attempted unless you are familiar with the procedure.

### 12.1 MECHANISM OVERVIEW

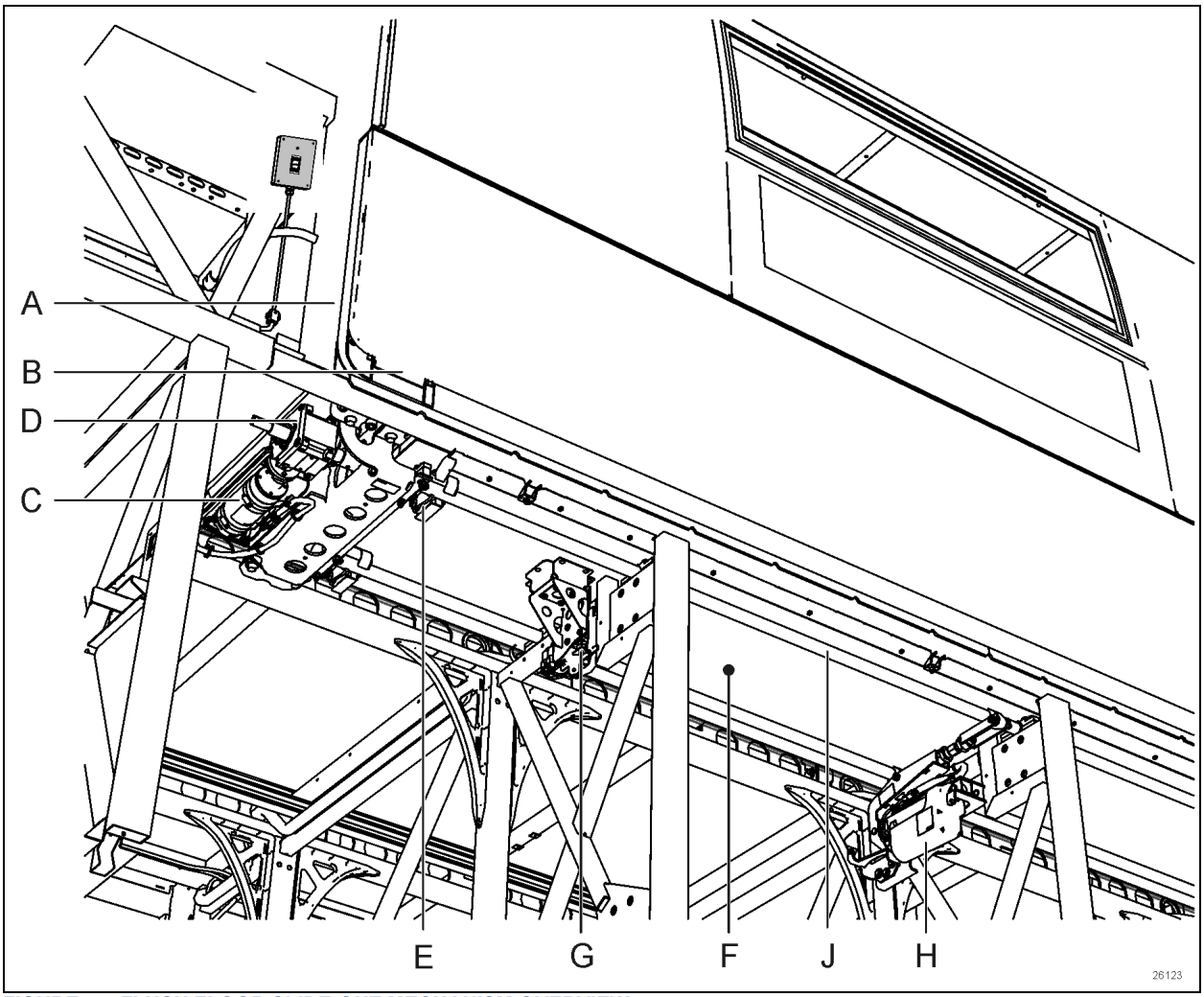


**FIGURE 57: FLUSH FLOOR SLIDE-OUT MECHANISM OVERVIEW**

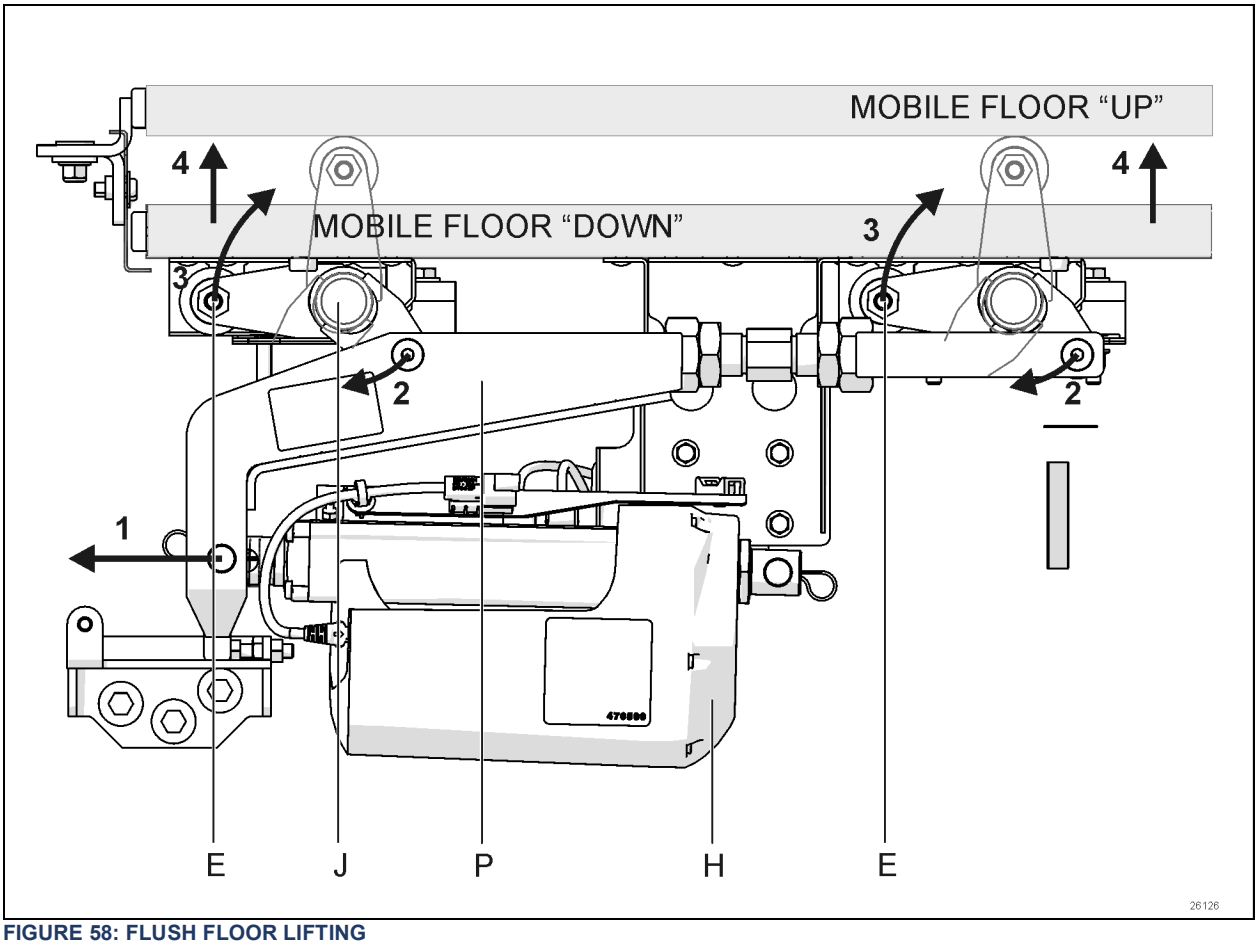


FIGURE 58: FLUSH FLOOR LIFTING

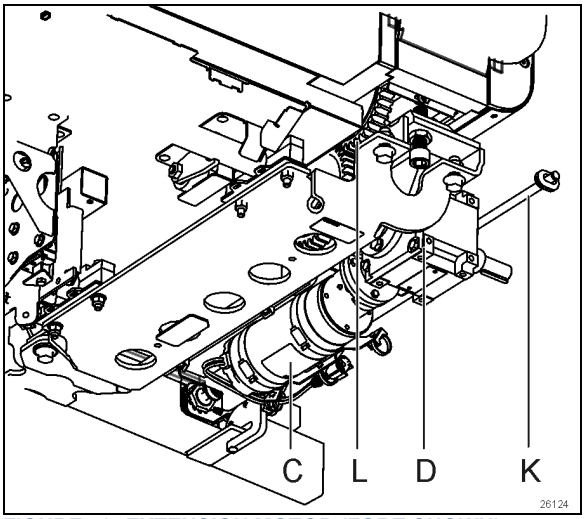


FIGURE 59: EXTENSION MOTOR (FORE SHOWN)

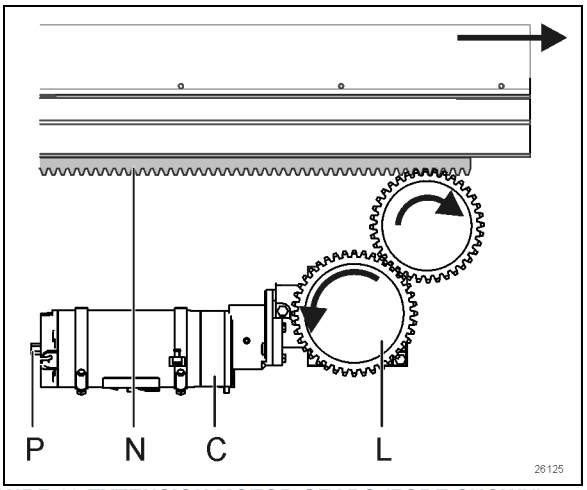


FIGURE 60 EXTENSION MOTOR GEARS (FORE SHOWN)

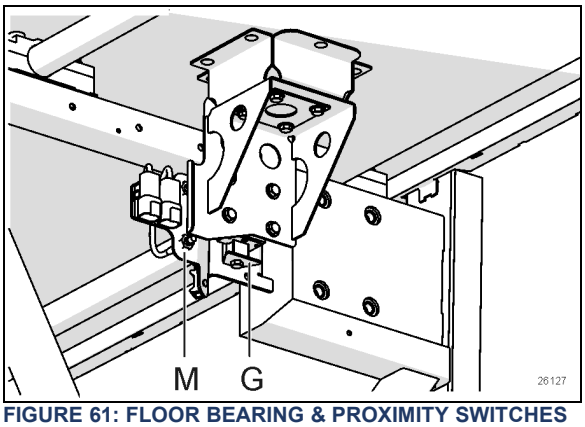


FIGURE 61: FLOOR BEARING & PROXIMITY SWITCHES

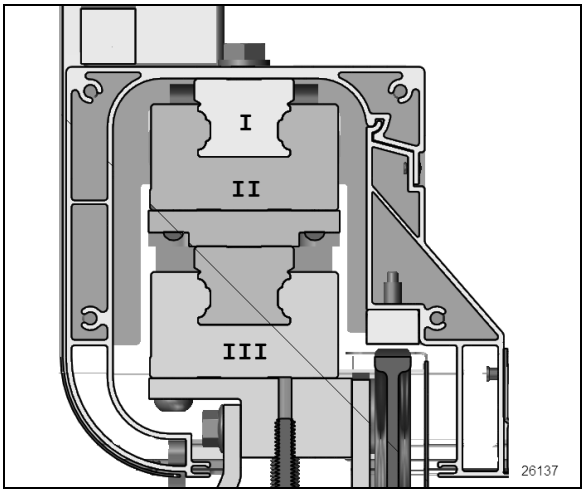


FIGURE 62 LINEAR BEARINGS

Refer to images Figure 57 to Figure 62 above for the following descriptions.

The slide-out room is moved in and out on a pair of stacked linear bearings (Figure 62, Items `I` and `III`). Power comes from two synchronized electrical motor (**C**) oriented horizontally under each linear bearing assembly. The motor drives a right angle speed reducing gearbox (**D**).

The electric motor and gearbox used are the same 24V, 1/3 HP motors with speed reduction gearbox as the standard Prevost slide-outs.

As the room reaches its fully extended position, the mobile floor (**F**) is lifted in position on a pair of vertical linear bearings (**G**). Once the mobile floor is in place, the room retracts slightly to secure and fit the floor in position.

Water tightness of the slide-out is ensured by a wiper seal and an inflatable seal (**A**).

Extension bearings and rail assemblies are stacked in pairs (Figure 62). The slide-out room structure is attached to the top rail (`I`). The top bearing is attached to the bottom rail (`II`). The bottom bearing is attached to the vehicle structure (`III`).

Each motor (**C**) is coupled to pinion gears (**L**) connected to a rack gear (**N**) linked to the slide-out room structure to provide extension and retraction motion. Manual extension or retraction is possible by driving both motor shafts (**H**) simultaneously but with extra care as room extension is not synchronized left and right in the case of a double motor failure.. Closely follow instructions provided further in this manual to perform this procedure.

On the floor lifting mechanism, the electric linear actuator (**H**) is attached to a transfer arm (**P**) linked to two floor lift shafts (**J**) having eccentric rollers (**E**).

When the linear actuator extends (Figure 58, **1**), the transfer arm rotates the floor lift shaft links inward (**2**), rotating at the same time the eccentric rollers upward (**3**), effectively lifting the mobile floor (**4**) The vertical movement of the floor is guided by a pair of vertical linear bearings (**G**).

Note: If the mobile floor fails to reach its final position, manual operation is possible. Closely follow instructions provided further in this manual to perform this procedure.

Structural integrity of the vehicle platform is ensured with stainless steel casting corner reinforcements in the luggage bays.

### 12.1.1 Control system overview

Extension and retraction of the slide-out room is performed using the Control Pad (**N**). Final location of the control pad may vary from one vehicle to another depending on interior layout and vehicle converter. Logic control and operation is achieved by using Volvo multiplex modules. Troubleshooting is performed through the DID.

The flip-down control panel is typically located in the first road side luggage bay, attached to the ceiling.

The position of the room is provided by two absolute position sensors (**K**), one on each side of the room. On the mobile floor system, four proximity switches (**M**), (two aft, two fore) are used to provide the system with "upper" and "lower" floor positions.

Current draw of the linear actuator and extension motors is continuously monitored and several conditions are managed proactively by the MUX program to ensure improved reliability of the slide-out system. Refer to "Troubleshooting" for details. End of travel physical stoppers will increase the current draw when they are hit and provide the ultimate end of course signal for the program.

| *NOTE* |
| --- |
| During room extension, if one side "binds", this condition will be detected by the PID control algorithm in the program. The faster motor may stop to wait for the slower overloaded motor to limit side to side offset. This could be noticeable by slower or irregular room movement.<br>It may be a sign of an underlying problem detected by the program and should be investigated. |

## 12.2 INNER STOPPERS

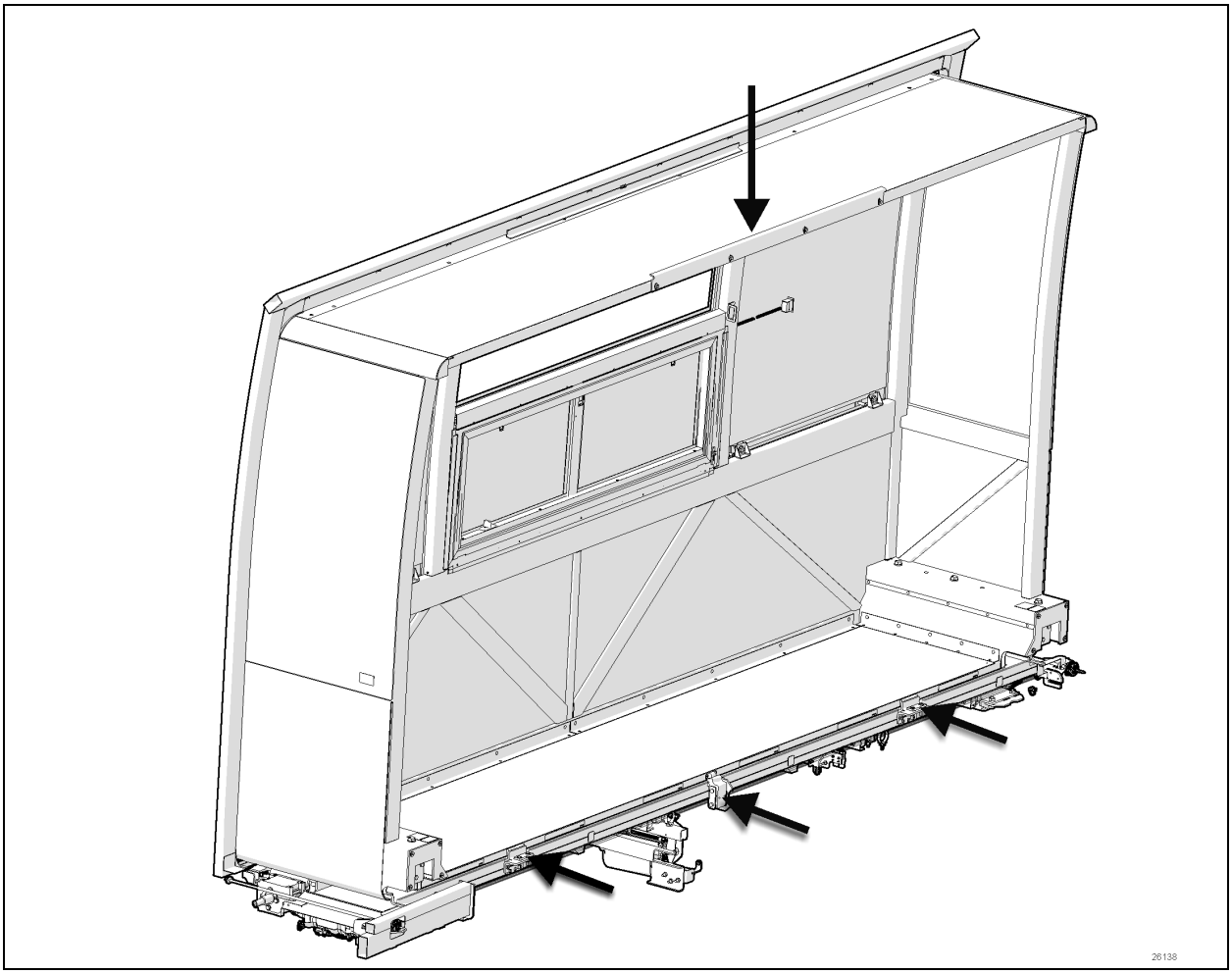


**FIGURE 63: PHYSICAL STOPPERS**

The front right slide-out is equipped with four inner stoppers. One is located on the top horizontal member of the slide-out, and three stoppers for the slide-out floor (Figure 63).

### 12.2.1 Maintenance

Check that the stopper screws are tight and that no deformation can be visible.

### 12.2.2 Adjustment

Adjust the upper structure key and the upper inner stoppers according to figure below with the seal deflated. When inflating, the seal presses the roof structure upward and at that moment, the upper inner stopper comes into contact with the upper structure key

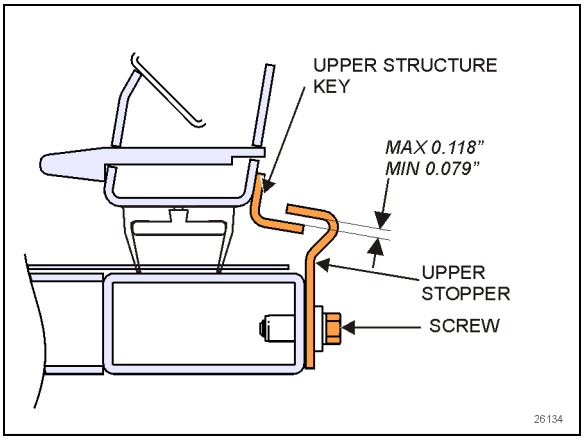


**FIGURE 64: UPPER INNER STOPPERS ADJUSTMENT**

## 12.3 TILT AND LEVELING

Tilt and leveling adjustment is carried-out by the adjustment plate and screws located under each linear bearing assembly. Aft adjustment screws are accessible by the luggage bay.

Screws "A" adjust level and tilt. Screws "B" are used to lock the adjustment.

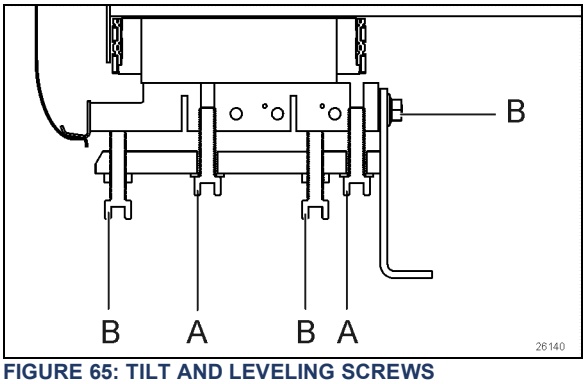


**FIGURE 65: TILT AND LEVELING SCREWS**

Adjustment screws on the fore rail assembly can be reached by an access hatch in the vehicle's side wall (Figure 66). Remove the front curbside fender to access the hatch.

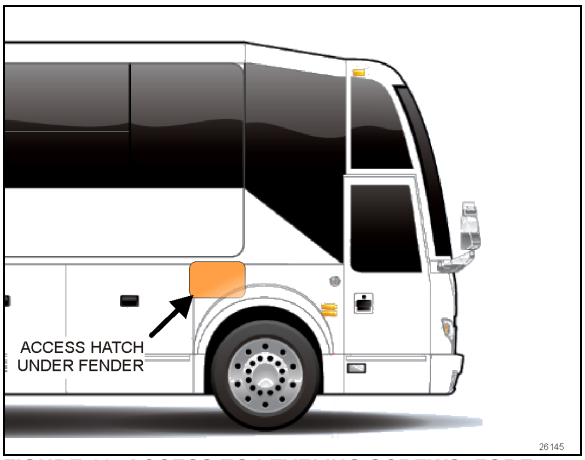


**FIGURE 66: ACCESS TO LEVELING SCREWS, FORE**

## 12.4 ROOM EXTENSION FOR MAINTENANCE

It is possible to extend the room ten inches (10in.) further out for maintenance operations, like inflatable seal replacement.

> **CAUTION**
>
> Prepare a scissor lift or a set of jack stands to support the slide-out room while it is extended for maintenance.

From the inside of the vehicle, remove any capping or trims hiding linear bearings at the bottom of the slide-out on both sides.

Then remove the room extrusion end caps. (Figure 67)

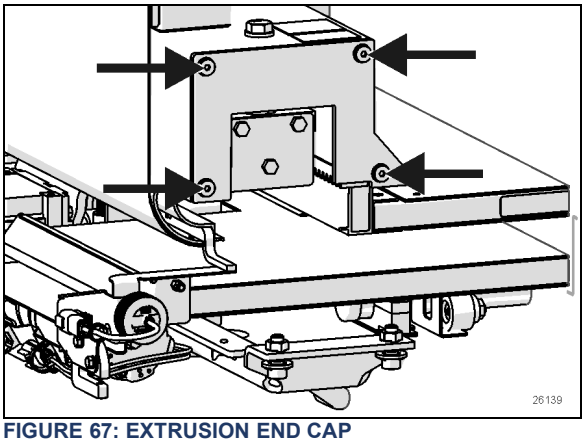


**FIGURE 67: EXTRUSION END CAP**

Once the room is fully extended, remove the screw holding the flexible plastic rail cover in place. You will notice a notch in the plastic cover's inner end, indicating the screw position. (Figure 68) *Perform this on both sides*.

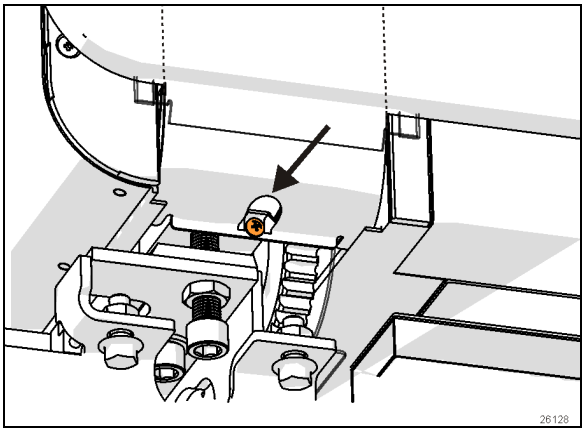


**FIGURE 68: FLEXIBLE RAIL COVER**

From the baggage compartment, remove the screw holding the fork connected to the position ring of the sensor. *Perform this on both sides*. (Figure 69) Pull the sensor ring assemblies back inboard.

**CAUTION**

Be sure to release both position sensors or they may be damaged on room extension.

Remove the upper inner stopper (Figure 63).

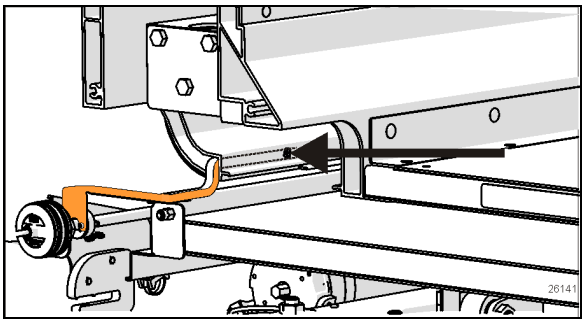


**FIGURE 69: POSITION RING PUSH-PULL TAB REMOVAL.**

Remove the two nuts holding the extension stopper (perform both sides). (Figure 70)

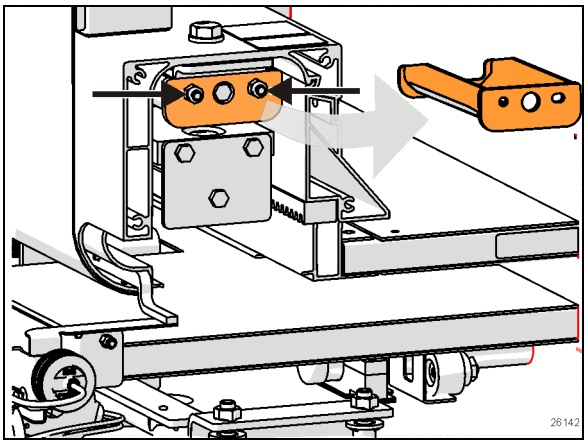


**FIGURE 70 STOPPER MOUNTING NUTS**

The room can now be extended further.

Do not remove any additional stoppers. Heed the safety warning below.

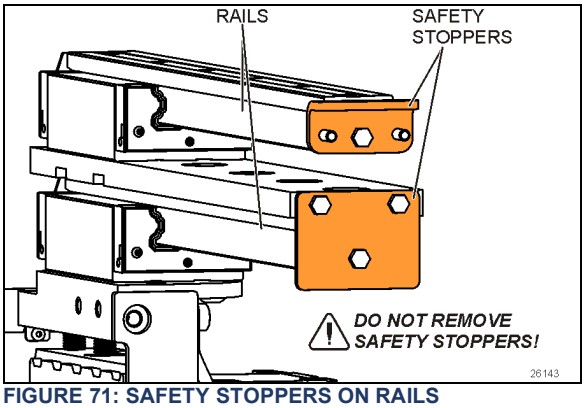


**FIGURE 71: SAFETY STOPPERS ON RAILS**

**DANGER**

Safety stoppers are bolted to the rail ends. (Figure 71 )

Never remove these stoppers.

These prevent the room from sliding out of the bearings.

Without these stoppers, the room could slide completely out of the bearings, therefore posing a risk of death and significant damage to the vehicle's components

Deflate the seal by using the relieving shut-off valve located on the pneumatic component panel. Confirm by the pressure gage.

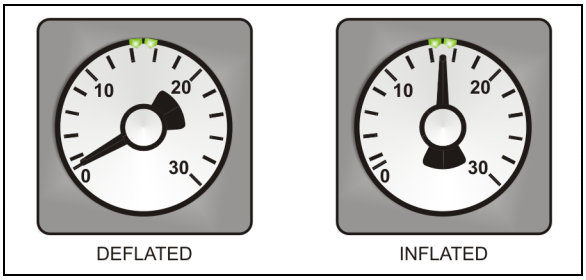


**FIGURE 72: INFLATABLE SEAL PRESSURE GAGE**

**CAUTION**

Failure to deflate the seal may result in seal damage. Refer to Paragraph 6.5 "SEAL" for further details

Using two cordless drills with 10 mm hexagonal socket and drive both extension motors *simultaneously* to further extend the slide-out room until the gears leave the rack gear.

**CAUTION**

Extra care should be taken to ensure the room extends evenly on each side. Stay within one inch (1") side to side to avoid stressing the components.

Finish by pushing out the room by hand. A minimum of two persons are required

SLIDE-OUT REMOVAL
Removal must be performed according to MI18-31.

12.5 SLIDE-OUT INSTALLATION

Installation must be performed according to the Slide-Out Installation Procedure. Ask your Prevost service representative.

12.6 LINEAR SENSOR ADJUSTMENT

The linear sensors are factory adjusted to give the same absolute position signal. They should not be tampered with. If they become out of adjustment, contact your Prevost service representative.

12.7 MANUAL EXTENSION OF THE SLIDE-OUT

Manual extension or retraction of the slide-out is possible by driving the extension motors simultaneously by the shaft extension "**P**", **(**Figure 60 EXTENSION MOTOR GEARS (FORE SHOWN).

To move the slide-out, use a cordless power drill with a 10 mm hexagonal socket on the shaft extension of the slide-out motor. Refer to decal near motor to know if rotation is CW or CCW. Make sure seal is deflated.

Make sure the mobile floor is fully down on room retraction or extension.

**CAUTION**

Extra care should be taken to ensure the room extends evenly on each side. Stay within an inch (1") side to side to avoid stressing the components.

**WARNING**

Keep hands and feet away from slide-out moving parts. Make sure there are no objects or persons around the slide-out.

The fore motor can be reached by the access panel located on the riser portion of the step behind the navigator's seat.

12.7.1 Manual extension on failure of only one motor

Two persons are required for this procedure.

If only one of the two motors is defective, unplug the defective motor and drive it with a cordless power drill while having a second person depress the control pad button.

The slide-out MUX program will synchronize the remaining motor to follow the hand driven side.

**WARNING**

Keep hands and feet away from slide-out moving parts. Make sure there are no objects or persons around the slide-out.

## 12.8 MOBILE FLOOR HAND CRANK PROCEDURE

The *floor lifting* mechanism of the slide-out can be manually operated in the event of a power failure. You will need a 6mm (1/4") Allen key to operate the actuator (Figure 73).

**⚠ CAUTION**

Do not use an electric drill or other similar tool to operate mobile floor linear actuator. Permanent damage to the unit may result.

As a safety measure, unplug the unit before attempting to hand crank the unit.

*NOTE*

*If the actuator is operated by hand, it must only be operated by hand, otherwise there is a potential risk of overloading and hereby damaging the actuator.*

Hand Crank Torque: 6-8 Nm.
Hand Crank Max Speed:. 65 rpm

The actuator is located under the floor in the second right baggage compartment.

After removing the cover (4 screws), locate the hand crank 6 mm hexagonal socket on the actuator (arrow below)

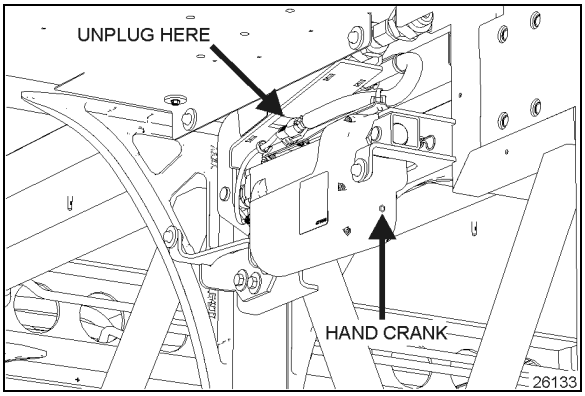


**FIGURE 73: MOBILE FLOOR HAND CRANK HEX SOCKET LOCATION**

The cover over the Allen Key socket must be unscrewed before the 6mm Allen Key can be inserted and the Hand Crank operated.

**⚠ WARNING**

**Make sure there are no objects or persons on the or around the floor while hand cranking**.

Slowly operate the actuator at the indicated speed and torque.

## 12.9 FLOOR LIFT COMPONENT MAINTENANCE

No greasing is required on the floor lift shaft bushings or rollers for the complete life of the slide-out.

## 12.10 INFLATABLE SEAL

Refer to Paragraph 6.5 "SEAL"

## 12.11 FINISHING PRECAUTIONS FOR CONVERTERS

Observe these precautions when designing the finishing wall inside the slide-out room.

No drilling is allowed in the zone identified by Figure 74. This applies to fore and aft sides of the outer wall.

Area is 7” wide x 26” high and starts from the unfinished floor up to the bottom of the transverse horizontal tubing and 7 inches in from the inside of the room corner tubing.

This precaution is to avoid drilling through the flexible rail cover which slides up inside the wall when the slide-out is closed.

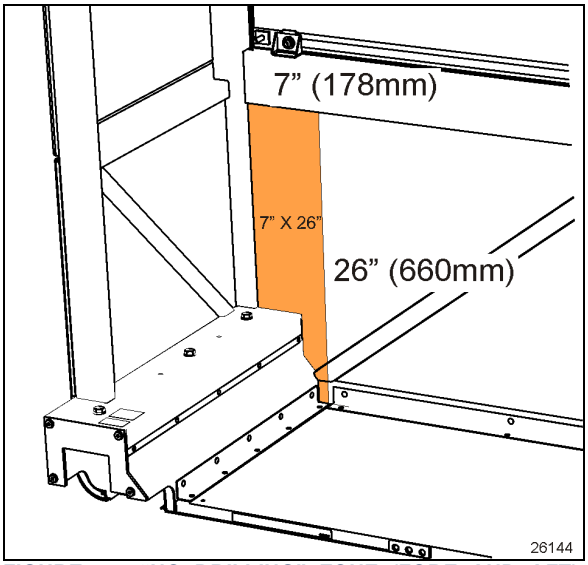


**FIGURE 74: “NO DRILLING” ZONE (FORE AND AFT)**

## 13 CONVERSION CHECKLIST

The converter should check these points before closing the walls covering the roof reinforcing rod and the pinions:

1. Check that the front slide-out exterior panels are parallel with the vehicle panels when retracted. If not, readjust the tilt.
2. Check that the slide-out is straight when completely extended, and that it leans against all inner stoppers.
3. Slide-out lower member deflection should be within 1/4". If not, redistribute the load.
4. Check slide-out operation. The slide-out should retract and extend smoothly without vibration.

Final check:

- Make sure the slide-out air pressure inlet valve is completely opened.
- Check the inflatable seal air pressure on the pressure regulator. The pressure should be 15 psi ± 5 psi.

## 14 TROUBLESHOOTING

### 14.1 ERROR CONDITION OR MISSING OPERATION CONDITION

When an error condition or a missing operation condition is detected on a slide-out being operated, the green indicator light will blink on the control pad.
Turning the ignition OFF and ON again, will stop the blinking and reset the fault. If the error condition or a missing operation condition is still present, the blinking will start again the next time that the slide-out is operated.
To initiate fault diagnostic, use the DID right after operating the slide-out without cycling the ignition switch.

| *NOTE* |
| --- |
| *The DID is the main tool for troubleshooting a multiplex vehicle. It is essential to have it in working condition.* |

**Fault diagnostic**

To get detailed information about the error condition or the missing operation condition, request a diagnostic using the dashboard Driver's Info Display (DID). Check if there are active errors in the slide-out electrical system. Highlight the DIAGNOSTICS menu and click Enter, highlight the VIEW ACTIVE FAULTS menu and click Enter, then highlight the ELECTRICAL SYSTEM menu and click Enter to request a diagnostic of the electrical system from the MCM.

Press the enter key. If applicable, the DID shows the device ID, the fault messages or fault codes recorded. When more than one fault is recorded, an arrow pointing down appears on the right of the display. Use the down arrow to see all the fault messages.

Once the problem is corrected, the DID will still shows the fault as being active. Leave VIEW ACTIVE FAULTS up to the main menu. Then return to DIAGNOSTICS, VIEW ACTIVE FAULTS, and then ELECTRICAL SYSTEM. The DID should not display any faults

TROUBLESHOOTING – OPERATING CONDITIONS, CONTROL & MECHANICAL COMPONENTS

| PROBLEM | CAUSE | CORRECTIVE ACTION |
|---|---|---|
| The slide-out functions normally but the handheld control green indicator light blinks | Something is defective and may eventually create an issue if not repaired. The problem may be:<br><br>A. Faulty limit sensor causing the slide-out to stop in overcurrent;<br><br>B. CAN network problem causing the transmission inhibit safety to be non-operational;<br><br>C. Vacuum pressure transducer disconnected or damaged (vacuum is applied for a fixed time of 7 seconds);<br><br>D. Seal inflating valve solenoid open circuit (the seal is not re-inflated and water can penetrate in the vehicle);<br><br>E. Security pin valve solenoid open circuit (the security pin is not extended while vehicle is riding). | Request a diagnostic from the DIAGNOSTIC menu using the DID. |
| FLUSH FLOOR S/O ONLY<br><br>Problem: The slide-out stops extending/retracting and the green indicator light flashes rapidly 3 times then one long flash (cycle repeats). | At least one of the mobile floor position switches is defective and the system requires operator's input to resume normal operation. The floor might also be out of level. | Depress the handheld control in the desired direction 3 times rapidly and hold it the fourth time until the slide out has reached the desired position. |
| FLUSH FLOOR S/O ONLY<br><br>Problem: Slide out does not extend/retract. | The slide out stopped moving due to an obstruction. | Clear the path of the S/O and /or mechanism and resume operation. |
| FLUSH FLOOR S/O ONLY<br><br>Problem: The slide-out does not extend / retract | At least one of the motors is defective. | Refer to manual override procedure |

| PROBLEM | CAUSE | CORRECTIVE ACTION |
|---|---|---|
| FLUSH FLOOR S/O ONLY<br><br>Problem: Motor stopping temporarily during extend/retract sequence. | The slide out motors goes out of synchronization. | Make sure that load is distributed evenly across the slide out. Check for wear/obstructions in the slide out mechanism. |
| The slide-out does not extend | A. The parking brake is not seen by the controller as being applied;<br><br>B. Not enough air pressure in the accessory air tank to permit proper operation of the vacuum generator;<br><br>C. Faulty vacuum generator, connection to the vacuum generator open, seal deflating valve solenoid open circuit;<br><br>D. I/O-B module output defective, regulated 5-volt supply to sensors shorted to ground, “out limit” sensor shorted to ground, connection to the motor negative relay solenoid open circuit; | A. Make sure the parking brake is applied. Confirm parking brake application with the parking brake light on the telltale panel.<br><br>B. Run the engine at fast idle a few minutes to increase air pressure in the accessory air tank and try again.<br><br>C. Turn the relieving shut-off valve handle clockwise to deflate the seal, disconnect the pressure transducer. Do not forget to reconnect the pressure transducer and to close the relieving shut-off valve. Failure to do so could damage the seal and lead to water infiltration;<br><br>D. Operate the slide-out with the manual override procedures. |
| The slide-out does not retract | A. Not enough air pressure in the accessory air tank to permit proper operation of the vacuum generator;<br><br>B. Faulty vacuum generator, connection to the vacuum generator open, seal deflating valve solenoid open circuit;<br><br>C. I/O-B module output defective, “in limit” sensor shorted to ground, connection to the motor positive relay solenoid open circuit; | A. Run the engine at fast idle a few minutes to increase air pressure in the accessory air tank and try again.<br><br>B. Turn the relieving shut-off valve handle clockwise to deflate the seal, disconnect the pressure transducer. CAUTION, do not forget to reconnect the pressure transducer and to close the relieving shut-off valve. Failure to do so could damage the seal and lead to water infiltration;<br><br>C. Operate the slide-out with the manual override procedures. |
| When extending, the slide-out stops after having extended by approximately 1 inch | A. The security pin valve solenoid circuit is shorted to (+) 24-volt and the security pin remains engaged; | A. Disconnect air supply from the security pin cylinder; |

| PROBLEM | CAUSE | CORRECTIVE ACTION |
|---|---|---|
| Transmission DRIVE range or REVERSE cannot be selected (the slide-out telltale light is illuminating). | A. Slide-out not in full "in" position;<br><br>B. Faulty “in limit” sensor. The slide-out is retracted but the controller doesn’t not see it as retracted. | A. Retract slide-out.<br><br>B. Confirm that all slide-outs are retracted. On the slide-out control panel, disconnect the 5 pins green connector on the I/O-B module to disable the transmission inhibit. CAUTION, this is a temporary measure, the vehicle must be serviced as soon as possible. |
| Slide-out does not retract or extend when depressing the control switch. | A. Electrical motor failure;<br><br>B. Speed reduction gearbox failure;<br><br>C. Security pin still engaged in receptacle; (Standard Prevost Slide-out) | A. Replace motor.<br><br>B. Inspect gearbox components, particularly: bronze wheel or first reduction stage output shaft. Replace damaged components.<br><br>C. Disengage pin and check if air cylinder is damaged. |
| Slide-out is not straight once retracted or during retracting or extending operation. | A. Broken rack tooth;<br><br>B. Faulty rack attachment;<br><br>C. Faulty shaft key at speed reduction gearbox; Pinion slipping,<br><br>D. Shaft breaking;<br><br>E. Flange bearing attachment loosen; | A. Replace rack.<br><br>B. Tighten mounting bolts, apply proper torque and use Loctite thread locker (replace rack if necessary).<br><br>C. Replace key or component having a damaged keyway.<br><br>D. Replace shaft.<br><br>E. Reposition shaft and tighten flange bearing mounting bolts. |
| Slide-out moves out slightly when vehicle is traveling. | A. Lower "in limit" stoppers are not leaning against the structure at the moment when the "in limit" sensor detects the magnet; | B. Adjust the sensor position in order to have contact of the stoppers against the structure at the time when the system stops the slide-out retraction. |
| Slide-out moves when vehicle is moving. | A. Inflatable seal not inflated | A. Check seal condition and seal air supply system. |
| Slide-out retracts or extends difficultly. | A. Foreign matters accumulated in the linear bearing; | A. Inspect the linear bearing end seals to see if they are in good condition. If not, replace the end seals and clean the inside of linear bearing. |
| Slide-out oscillates vertically when retracting or extending | a. Linear bearing balls hardened due to a too heavy load;<br><br>b. Linear bearing mounting bolts loosen; | c. If balls clearance is excessive, replace linear bearing.<br><br>d. Tighten mounting bolts. |

| PROBLEM | CAUSE | CORRECTIVE ACTION |
|---|---|---|
| Slide-out vibrating or noisy when extending or retracting | A. Worn-out anti-friction coating on wiper seal around slide-out;<br>B. Debris in protective flexible shield guides; | A. Replace wiper seal.<br>B. Inspect and remove debris. |
| Slide-out does not retract to its full "in" position | A. Interference between the exterior extrusion and the vehicle upper horizontal member above the slide-out; | A. Check for straightness of horizontal member and adjust the roof reinforcing rod.<br>B. Check for outer wiper seal lip straightness on the slide-out roof. |
| Bottom of slide-out not flush with vehicle body | a. Broken or misadjusted lower "in limit" stopper;<br>b. Lower "in limit" stoppers are not leaning against the structure at the moment when the "in limit" sensor detects the magnet; | a. Replace or adjust lower "in limit" stopper.<br>b. Adjust the sensor position in order to have contact of the stoppers against the structure when slide-out is stopped. |
| Top of slide-out not flush with vehicle body | A. Broken or misadjusted leveling or retaining screw;<br>B. Faulty upper “in limit" stopper; | A. Check and replace screw.<br>B. Replace upper “in limit" stopper. |
| Lower edge of slide-out not parallel with vehicle body opening | A. Faulty leveling and retaining screw (4 screws each side). | C. Inspect screw, replace and adjust slide-out level. |
| Water tightness problem | A. Inflatable seal and/or wiper seal damaged or unstuck;<br>B. Insufficient air pressure in the seal;<br>C. No air pressure in the slide-out pneumatic system;<br>D. Sealant missing;<br>E. Wiper seal draining hole clogged;<br>F. Faulty water recovery pan;<br>G. Faulty internal gutter; | A. Check both seals condition.<br>B. Check the pressure regulator, the relieving shut-off valve and the seal valve condition.<br>C. Check the slide-out air pressure inlet valve condition and the accessory air tank pressure.<br>D. Check the exterior extrusion screws, the windows and the exterior panels sealant condition.<br>E. Unclog draining hole.<br>F. Check the recovery pan.<br>G. Check internal gutter. |
| Knocking sound at end of travel when extending slide-out | A. Inner stoppers misadjusted; | A. Readjust the inner stoppers. |

| PROBLEM | CAUSE | CORRECTIVE ACTION |
|---|---|---|
| Knocking sound when parking brake is released | A. Security pin retracts too rapidly; | A. Adjust security pin air flow regulator. |
| Inflatable seal damaged or removed, or wiper seal unstuck from the structure. | A. Slide-out has been retracted or extended with the manual procedure with the inflatable seal not deflated;<br>B. Pressure transducer malfunction;<br>C. Seal valve malfunction;<br>D. Excessive load in the slide-out;<br>E. Slide-out not centered in the structure opening; | A. Always deflate the seal when manually retracting or extending the slide-out.<br>B. Check the pressure transducer condition, replace if necessary.<br>C. Check the seal valve condition.<br>D. Reduce load or distribute load evenly in order to respect the deflection criterion and slide-out load capacity.<br>E. Readjust the slide-out height and center horizontally in opening. |
| Friction at end of travel when in full OUT position or at beginning of retraction | A. Interference between upper structure key and upper inner stopper; | A. Readjust the upper inner stopper. |

## 14.2 SLIDE-OUT FAULT MESSAGE ON DID

| SID # | FAULT MESSAGE | TEXT | PROBABLE CAUSE | CORRECTIVE ACTION |
|---|---|---|---|---|
| 1 | Voltage Module AE58 | Value Too Low | Module AE58 sees a Voltage less than 22.0V on its power supply connector.<br>Breaker, fuse or wiring harness open. | Check/ reset circuit breaker F136.<br>Fix wiring harness |
| 2 | No Response Mod AE58 | Data Error | MCM module does not receive CAN communication from module AE58.<br>Connector J3 is disconnected or CAN wiring harness open, or module AE58 is defective. | Check connection AE58 J3<br>Fix CAN wiring harness<br>Replace module AE58 |
| 3 | Voltage Module AE59 | Value Too Low | Module AE59 sees a Voltage less than 22.0V on its power supply connector.<br>Breaker, fuse or wiring harness open. | Check/ reset circuit breaker F136.<br>Fix wiring harness |
| 4 | No Response Mod AE59 | Data Error | MCM module does not receive CAN communication from module AE59.<br>Connector J3 is disconnected or CAN wiring harness open or module AE59 is defective. | Check connection AE59 J3<br>Fix CAN wiring harness<br>Replace module |
| 5 | SldO Vacuum Sensor | Open Circuit | Pressure transducer disconnected.<br>Faulty pressure transducer.<br>Connection or wiring harness open. | Check/ replace vacuum transducer<br>Check/ reconnect the connector SESo1<br>Fix wiring harness |
| | | Shorted High | Pressure transducer is faulty<br>Wiring harness shorted to 12v or 24v | Check/ replace vacuum transducer<br>Fix wiring harness |
| 6 | SldO Seal Def Vac | Mechanical Fault | Does not reach vacuum level (-5 PSIG).<br>Slide-out seal damaged or air leak in the seal deflating pneumatic circuit.<br>Accessories tank near empty. | Check the seals and the pneumatic circuit.<br>Run engine at fast idle to recharge accessories tank. |
| 7 | SldO Motor/Limit se | Mechanical Or Electrical Fault | **Standard Prevost slide-outs**:<br>Slide-Out motor is activated for more than 7 seconds and the limit sensor from the departing end is still seen as active.<br>Either the motor is defective and the slide-out is not moving or the limit sensor from the departing end is broken active. | **Standard Prevost slide-outs**:<br>If the slide-Out is not moving, then check the motor and its wiring.<br>If the slide-out is moving, then check the limit sensor from the departing end, also check and clear any obstruction that might prevent the slide-out from moving. (If problem occurs when extending, check the in-limit sensor. If the problem occurred when retracting, then check the out-limit sensor). |

| SID # | FAULT MESSAGE | TEXT | PROBABLE CAUSE | CORRECTIVE ACTION |
|---|---|---|---|---|
| | | | **Prevost slide-out with flush floor:**<br>Slide-Out motor is activated for more than 2 seconds, motor current is abnormally low or slide-out hasn't moved | **Prevost slide-out with flush floor:**<br>Check and clear any obstructions in the direction of travel. Either the motor or its wiring is defective, check and replace components as required. |
| 8 | SldO Park Br Signal | Mechanical Or Electrical Fault | Parking brake is not applied.<br>Wire between parking brake switch and MCM is open. | Make sure the parking brake is applied and the parking brake telltale illuminates.<br>Check / replace parking brake switch.<br>Fix wiring harness. |
| | | Shorted High | Wire between parking brake switch and MCM is shorted to 12v or 24v. | Fix wiring harness. |
| 9[2] | SldO Mot SpeedA Ctr | Shorted High | Wiring harness shorted to 12v or 24v | Fix wiring harness |
| | | Current Above normal | Security pin or object stop the movement of a slide-out | Check / fix security pin functionality.<br>Check / remove any object around the slide-out. |
| 10[2] | SldO Mot SpeedB Ctr | Shorted High | Wiring harness shorted to 12v or 24v | Fix wiring harness |
| | | Current Above normal | Security pin or object stop the movement of a slide-out | Check / fix security pin functionality.<br>Check / remove any object around the slide-out. |
| 11 | SldO Remote Led | Shorted High | LED or wiring harness shorted to 12v or 24v | Fix LED or wiring harness |
| | | Shorted Low | Led or wiring harness shorted to ground | Fix LED or wiring harness |
| | | Open Circuit | LED is broken.<br>Bad connection on control pad.<br>Wiring harness is cut. | Check / fix remote LED or connection<br>Check /fix wiring harness |
| | | Current Above normal | Led or wiring harness shorted to 12v or 24v | Fix Led or wiring harness |
| 12 | SldO Seal Inf Sol | Shorted High | Solenoid or wiring harness shorted to 12v or 24v | Fix solenoid or wiring harness |
| | | Shorted Low | Solenoid or wiring harness shorted to ground | Fix solenoid or wiring harness |
| | | Open Circuit | Solenoid is broken or open.<br>Bad connection on solenoid or bloc valve.<br>Wiring harness is cut. | Check / fix solenoid or connection<br>Check /fix wiring harness |
| | | Current Above normal | Solenoid or wiring harness shorted to 12v or 24v | Fix solenoid or wiring harness |
| 13 | SldO Seal Def Sol | Shorted High | Solenoid or wiring harness shorted to 12v or 24v | Fix solenoid or wiring harness |
| | | Shorted Low | Solenoid or wiring harness shorted to ground | Fix solenoid or wiring harness |

[2] For SID items 9 & 10 (*SldO Mot SpeedX Ctr*) it should be noted that standard Prevost slide-outs are now only wired to ''*SpeedA Ctr output*''. ''*SpeedB Ctr output*'' can be used as a spare in the event output A fails. On Prevost slide-out with flush floor, the front motor is wired to ''*SpeedA Ctr output*''; rear motor is wired to ''*SpeedB Ctr output*''. Also note that Prevost slide-out with flush floor is not equipped with a security pin.

| SID # | FAULT MESSAGE | TEXT | PROBABLE CAUSE | CORRECTIVE ACTION |
|---|---|---|---|---|
| | | Open Circuit | Solenoid is broken or open.<br>Bad connection on solenoid or bloc valve.<br>Wiring harness is cut. | Check / fix solenoid or connection.<br><br>Check /fix wiring harness |
| | | Current Above normal | Solenoid or wiring harness shorted to 12v or 24v | Fix solenoid or wiring harness |
| 14 | SldO Vacc Gen Sol | Shorted High | Solenoid or wiring harness shorted to 12v or 24v | Fix solenoid or wiring harness |
| | | Shorted Low | Solenoid or wiring harness Shorted to ground | Fix solenoid or wiring harness |
| | | Open Circuit | Solenoid is broken or open.<br>Bad connection on solenoid or bloc valve.<br>Wiring harness is cut. | Check / fix solenoid or connection<br><br>Check / fix wiring harness |
| | | Current Above normal | Solenoid or wiring harness shorted to 12v or 24v | Fix Solenoid or wiring harness |
| 15[3] | SldO Mot Neg Rly | Shorted High | Relay coil or wiring harness shorted to 12v or 24v | Fix relay coil or wiring harness |
| | | Shorted Low | Relay coil or wiring harness shorted to ground | Fix relay coil or wiring harness |
| | | Open Circuit | Relay coil is broken or open.<br>Bad connection on relay.<br>Wiring harness is cut. | Check / fix relay coil or connection<br>Check / fix wiring harness |
| | | Current Above normal | Relay coil or wiring harness shorted to 12v or 24v | Fix relay coil or wiring harness |
| 16[3] | SldO Mot Pos Rly | Shorted High | Relay coil or wiring harness shorted to 12v or 24v | Fix relay coil or wiring harness |
| | | Shorted Low | Relay coil or wiring harness shorted to ground | Fix relay coil or wiring harness |
| | | Open Circuit | Relay coil is broken or open.<br>Bad connection on relay.<br>Wiring harness is cut. | Check / fix relay coil or connection<br>Check / fix wiring harness |
| | | Current Above normal | Relay coil or wiring harness shorted to 12v or 24v | Fix relay coil or wiring harness |
| 17 | SldO Open Sw | Shorted High | Switch or wiring harness shorted to 12v or 24v | Fix switch or wiring harness |
| 18 | SldO Close Sw | Shorted High | Switch or wiring harness shorted to 12v or 24v | Fix switch or wiring harness |
| 19 | SldO Limit In Se | Shorted High | Sensor or wiring harness shorted to 12v or 24v | Fix sensor or wiring harness |
| 20 | SldO Limit Out Se | Shorted High | Sensor or wiring harness shorted to 12v or 24v | Fix sensor or wiring harness |
| 21 | SldO Secu Pin Sol[4] | Shorted High | Solenoid or wiring harness shorted to 12v or 24v | Fix solenoid or wiring harness |
| | | Shorted Low | Solenoid or wiring Harness shorted to ground | Fix solenoid or wiring harness |
| | | Open Circuit | Solenoid is broken or open.<br>Bad connection on solenoid or bloc valve.<br>Wiring harness is cut. | Check / fix solenoid or connection.<br><br>Check / fix wiring harness |
| | | Current Above normal | Solenoid or wiring harness shorted to 12v or 24v | Fix solenoid or wiring harness |

[3] Items 15 & 16 (*SldO Mot XXX Rly*) apply to standard slide outs.
[4] Applies to standard Prevost slide-outs only.

| SID # | FAULT MESSAGE | TEXT | PROBABLE CAUSE | CORRECTIVE ACTION |
|---|---|---|---|---|
| 22 | SldO Limit In Out | Mechanical Or Electrical Fault | **Standard Prevost slide-out**:<br>In Limit and Out Limit are seen at the same time.<br>In Limit or Out Limit problem. | Check / replace in limit or out limit sensors<br>Fix wiring harness. |
| | | | **Prevost slide out with flush floor**:<br>Indicates that a sensor returns a value which is either out of range or impossible to reach during normal operation of the slide-out | Check adjustment and functionality of sensors. Refer to ''Slide-Out Sensor out of Range'' and / or ''Flush Floor Sensor Out of Range'' sections for additional information. |
| 23[5] | Limit Sensor 5 V supply | Shorted Low | 5v I/O-BE output is less than 2v.<br>Wiring harness is open or shorted to ground. | Check 5v output on I/O-BE / replace I/O-BE module.<br>Fix wiring harness. |
| 94 | SldO4 Fr Sensor Out Of R Front Slide-Out Sensor out of Range | Value Below or Above Normal | Sensor output outside of normal operating range | Check Fuse 104 and sensor wiring, repair as needed. |
| | | Mechanical Fault | Slide-out is retracted or extended too far. Bad sensor adjustment. | Make sure sensor and magnet mounting brackets are secured and haven't come loose. These are factory adjusted and normally don't require to be readjusted. In the event that a sensor would require to be readjusted, contact your Prevost service representative. |
| 95 | SldO4 Rr Sensor Out Of R Rear Slide-Out Sensor out of Range | Value Below or Above Normal | Sensor output outside of normal operating range | Check Fuse 104 and sensor wiring, repair as needed. |
| | | Mechanical Fault | Slide-out is retracted or extended too far. Bad sensor adjustment. | Make sure sensor and magnet mounting brackets are secured and haven't come loose. These are factory adjusted and normally don't require to be readjusted. In the event that a sensor would require to be readjusted, contact your Prevost service representative. |
| 96 | FFlr4 Fr Sensors Out Of R Front Flush Floor Sensor Out of Range | Shorted Low | Sensor Shorted to ground | Check Fuse 15 and sensor wiring, repair as needed. |
| | | Shorted High | Sensor shorted to 12V or 24V supply | |
| | | Value Below or Above Normal | Sensor's output outside of normal operating range | |
| | | Mechanical Fault | Bad sensor adjustment | Se_FF4_XXUp should be located above SeFF4_XXDn. Make sure the sensor head is adjusted 1.5mm (0.06'') away from the sliding bracket that activates it. |
| | | | | |

[5] Applies to standard Prevost slide-outs only

| SID # | FAULT MESSAGE | TEXT | PROBABLE CAUSE | CORRECTIVE ACTION |
|---|---|---|---|---|
| 97 | FFlr4 Rr Sensors Out Of R Rear Flush Floor Sensor Out of Range | Shorted Low | Sensor Shorted to ground | Check Fuse 15 and sensor wiring, repair as needed. |
| | | Shorted High | Sensor shorted to 12V or 24V supply | |
| | | Value Below or Above Normal | Sensor's output outside of normal operating range | Se_FF4_XXUp should be located above SeFF4_XXDn. Make sure the sensor head is adjusted 1.5mm (0.06'') away from the sliding bracket that activates it. |
| | | Mechanical Fault | Bad sensor adjustment | |
| 98 | Flush Floor 4 Out of Lvl Flush Floor Out of Level | Mechanical or Electrical Fault | Both sides of the flush floor (front and rear) don't (de)activate position sensors at the same time.<br><br>Floor position sensors are not triggered or deactivated at the same time. | Inspect flush floor area and remove any obstacle, resume operation.<br>Make sure that sensors are in the right order; Se_FF4_XXUp should be located above SeFF4_XXDn.<br><br>Also verify that the sensor heads are adjusted 1.5mm (0.06'') away from the sliding bracket that activates them. Check sensor(s) and corresponding wiring, repair/replace as required |
| 99 | SldO4 out of Sync Slide Out unsynchronized | Mechanical or Electrical Fault | One of the sides of the Flush floor slide-out is desynchronized more than 6mm (1/4'') in relation to the other side. | Clear any obstruction in the path of the slide-out, resume operation.<br>Make sure that mounting brackets for the sensors and magnets are still secure and undamaged. Note: These are factory adjusted and normally don't require to be readjusted. In the event that a sensor would require to be readjusted, contact your Prevost service representative.. |
| 100 | FFlr4 Mot Neg Rly | Shorted High | Relay coil or wiring harness shorted to 12v or 24v | Fix relay coil or wiring harness |
| | | Shorted Low | Relay coil or wiring harness shorted to ground | Fix relay coil or wiring harness |
| | | Open Circuit | Relay coil is broken or open.<br>Bad connection on relay.<br>Wiring harness is cut. | Check / fix relay coil or connection<br>Check / fix wiring harness |
| | | Current Above normal | Relay coil or wiring harness shorted to 12v or 24v | Fix relay coil or wiring harness |
| 101 | FFlr4 Mot Pos Rly | Shorted High | Relay coil or wiring harness shorted to 12v or 24v | Fix relay coil or wiring harness |
| | | Shorted Low | Relay coil or wiring harness shorted to ground | Fix relay coil or wiring harness |
| | | Open Circuit | Relay coil is broken or open.<br>Bad connection on relay.<br>Wiring harness is cut. | Check / fix relay coil or connection<br>Check / fix wiring harness |
| | | Current Above normal | Relay coil or wiring harness shorted to 12v or 24v | Fix relay coil or wiring harness |
| | | | | |

| SID # | FAULT MESSAGE | TEXT | PROBABLE CAUSE | CORRECTIVE ACTION |
|---|---|---|---|---|
| 102 | SldO4 Mot Neg Rly | Shorted High | Relay coil or wiring harness shorted to 12v or 24v | Fix relay coil or wiring harness |
| | | Shorted Low | Relay coil or wiring harness shorted to ground | Fix relay coil or wiring harness |
| | | Open Circuit | Relay coil is broken or open.<br>Bad connection on relay.<br>Wiring harness is cut. | Check / fix relay coil or connection<br>Check / fix wiring harness |
| | | Current Above normal | Relay coil or wiring harness shorted to 12v or 24v | Fix relay coil or wiring harness |
| 103 | SldO4 Mot Pos Rly | Shorted High | Relay coil or wiring harness shorted to 12v or 24v | Fix relay coil or wiring harness |
| | | Shorted Low | Relay coil or wiring harness shorted to ground | Fix relay coil or wiring harness |
| | | Open Circuit | Relay coil is broken or open.<br>Bad connection on relay.<br>Wiring harness is cut. | Check / fix relay coil or connection<br>Check / fix wiring harness |
| | | Current Above normal | Relay coil or wiring harness shorted to 12v or 24v | Fix relay coil or wiring harness |

# MAINTENANCE INFORMATION

**MI18-31A**

| | | |
|---|---|---|
| DATE : | July 2018 | SECTION : 26 SLIDE-OUT |
| SUBJECT : | **SLIDE OUT REMOVAL PROCEDURE** | |

Revision: A

2019-07-17

*IMPORTANT NOTICE*

*This modification is recommended by Prevost to increase your vehicle's performance. Note that no reimbursement will be awarded for carrying out this modification.*

## APPLICATION

| Model | VIN  |
|---|---|
| H3-45 VIP motorhomes<br>Model Year : 2019- | From 2PCV33496**K**C71**0295**. |
| X3-45 VIP motorhomes<br>Model Year : 2019- | From 2PCBS3490**K**C736**462** |
| X3-45 VIP commercial use<br>Model Year : 2019- | From 2PCCS3491**L**C73**6492** |

## DESCRIPTION

This procedure is for the removal of the Prevost slide-outs.

## MATERIAL

- Two straight 4x4 beams of sufficient length for the slide-out, wood or metal.
- Soft, clean material carpet or blanket.

## PROCEDURE

**DANGER**

Park vehicle safely, apply parking brake, stop engine. Prior to working on the vehicle, set the ignition switch to the OFF position and trip the main circuit breakers equipped with a trip button.

**PREPARATION**

## CAUTION

Prepare scissor lift tables with a combined *minimum* Safe Working Load (SWL) rating of **2000 lb (1 ton)** to support the slide-out room.

This SWL value takes into account the largest model of slide-out. It also includes any flooring and trim that may be installed. Slide out must be empty for the procedure.

## CAUTION

Two 4x4 beams will be placed transversally under the room (Figure 1). Beams should be cut to length to support the maximum width of the room while clearly avoiding the rounded corner trim, (⚠ in Figure 1).

Upon placement of the beams under the room, place the outer beam inside to avoid the room exterior finish panel (⚠ in Figure 1). Place the inner beam as far inside as possible.

Prepare clean, soft material to place on top of the beams to avoid damaging the underside of the room.

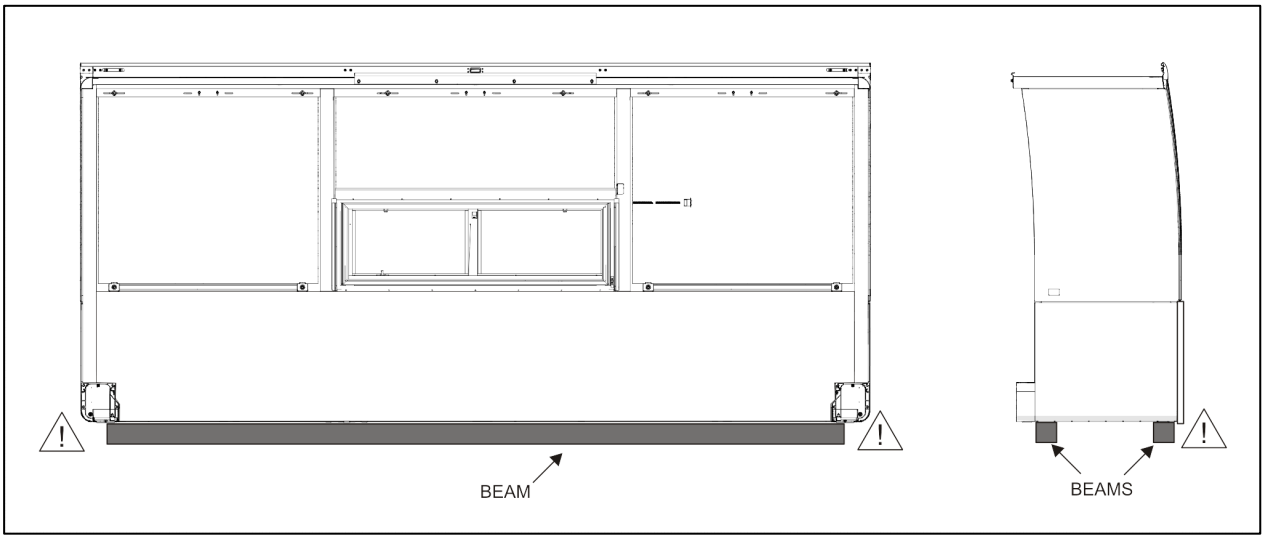


**FIGURE 1: BEAM PLACEMENT**

## ROOM PREPARATION

1. From the inside of the vehicle, remove any capping or trims hiding linear bearings at the bottom of the slide-out on both sides.
2. Then remove the room extrusion end caps. (Figure 2)

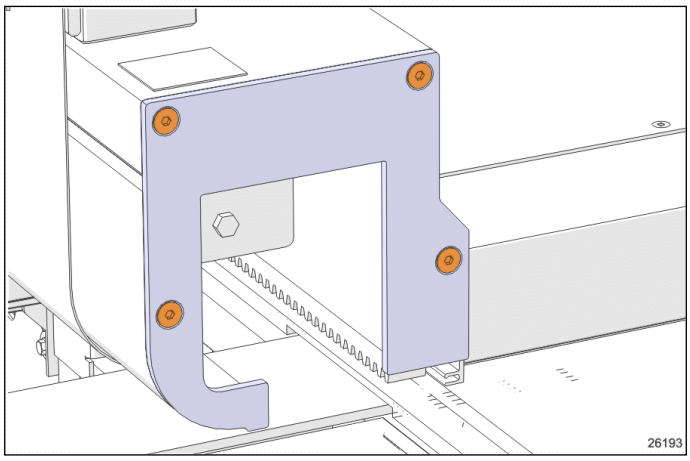


**FIGURE 2: EXTRUSION END CAP**

3. Once the room is fully extended, remove the screw and tab holding the flexible plastic rail cover in place. (Figure 3) *Perform this on both sides*.

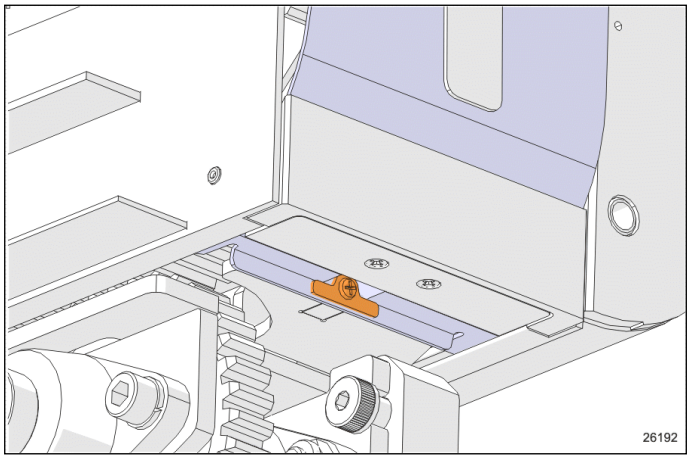


**FIGURE 3: TAB AND MOUNTING SCREW**

4. Remove the upper inner stopper (Figure 4).

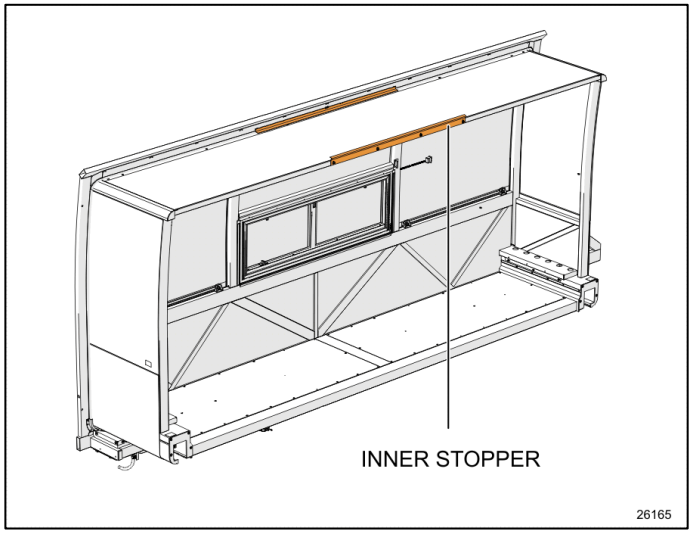


**FIGURE 4: UPPER INNER STOPPER**

5. Remove the two nuts holding the extension stopper (perform on both sides). (Figure 5)

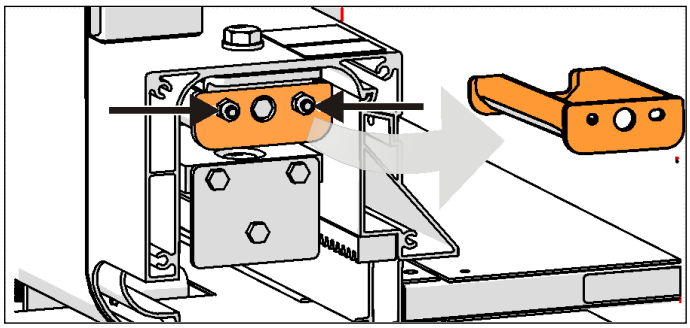

FIGURE 5 EXTENSION STOPPER REMOVAL

6. The room can now be extended further.

Do not remove any additional stoppers.
Heed the safety warning below.

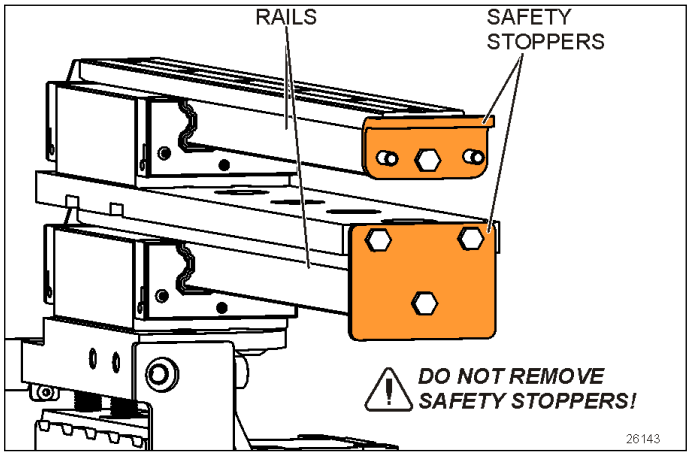


FIGURE 6: SAFETY STOPPERS ON RAILS

## DANGER

Safety stoppers are bolted to the rail ends. (Figure 6)

Never remove these stoppers.

These prevent the room from sliding out of the bearings.

Without these stoppers, the room could slide completely out of the bearings, therefore posing a risk of death and significant damage to the vehicle's components

7. Deflate the seal by using the relieving shut-off valve located on the pneumatic component panel. Confirm by the pressure gage

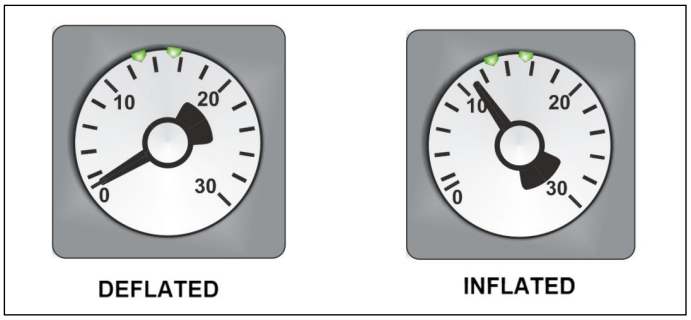


FIGURE 7: INFLATABLE SEAL PRESSURE GAGE

**ROOM REMOVAL**

> **CAUTION**
>
> Failure to deflate the seal may result in seal damage.

8. Place scissor lift tables level with 4x4 beams placed on top and ready to receive the room. Leave room for fork lift placement in the center.
9. Confirm proper placement of beams according to PREPARATION instructions.
10. Using a cordless drill with a 10 mm hexagonal socket, drive the motor extension to further extend the slide-out room until the gears leave the rack gear.
11. Finish by pushing out the room evenly on both sides by hand. A minimum of two persons are required
12. Support the slide-out room with the prepared scissor lift tables.

13. Remove the six bolts securing the rail to the slide-out structure.
14. At reassembly, tighten to **130lb-ft**

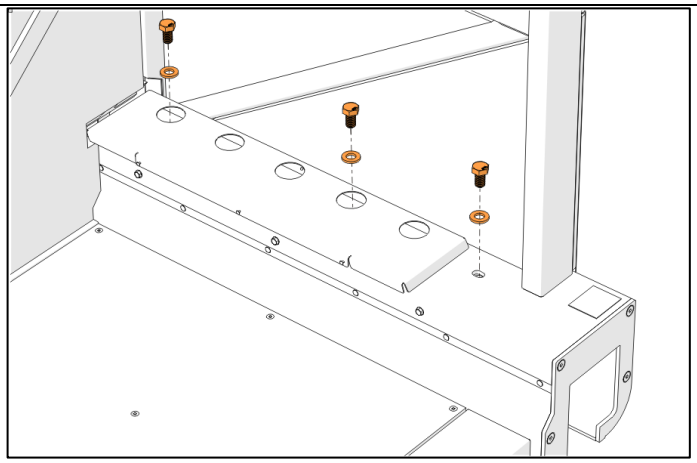

**FIGURE 8: RAIL BOLTS (6X)**

15. The rail housing interior dimensions provides enough clearance around the rail assembly to pull the room outwards. (Figure 9)

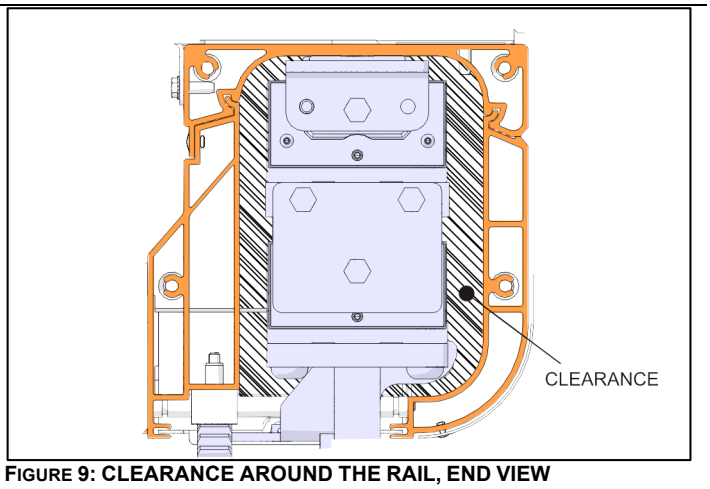


**FIGURE 9: CLEARANCE AROUND THE RAIL, END VIEW**

16. With a suitable fork lift placed in the center, raise the room just slightly by the beams.
17. Inspect to make sure the rails are released from the structure.
18. Slowly pull the room straight out while keeping level.(Figure 10)

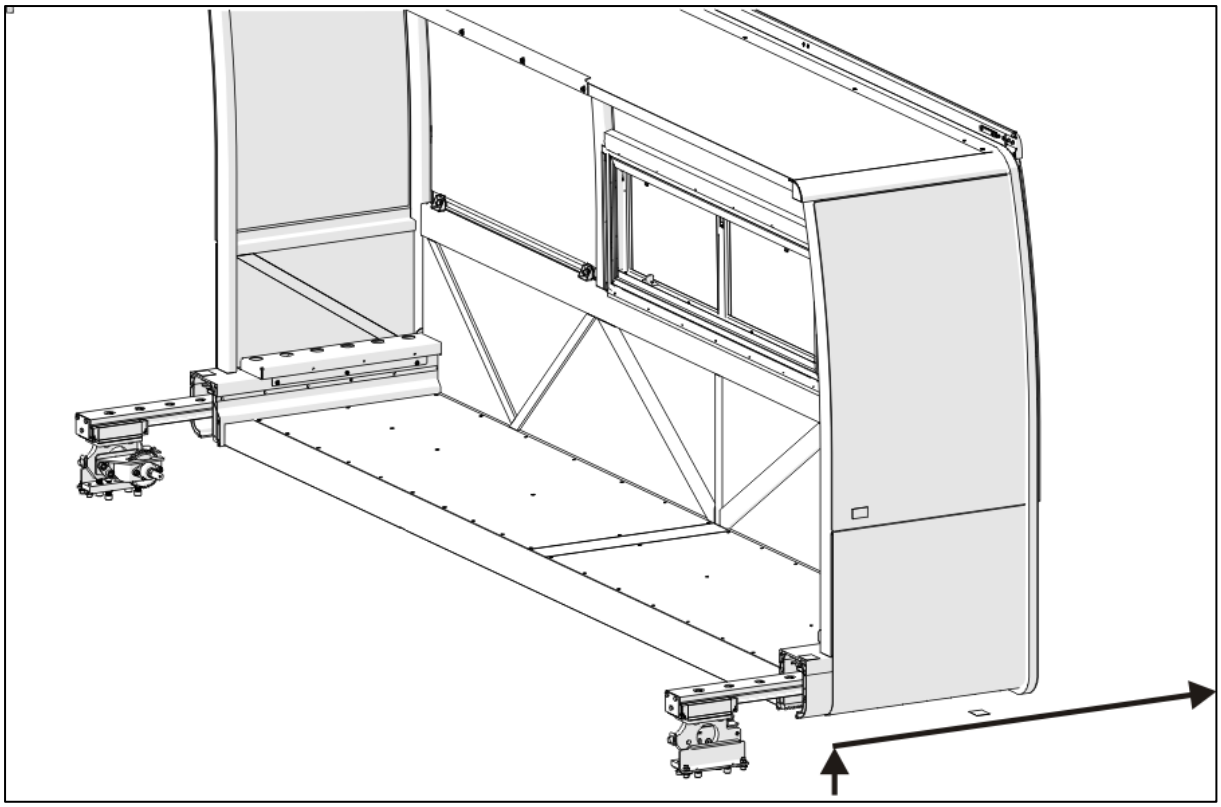

**FIGURE 10: LIFTING AND PULLING THE ROOM OUT**

19. Place room down on a level surface, on appropriate supports.

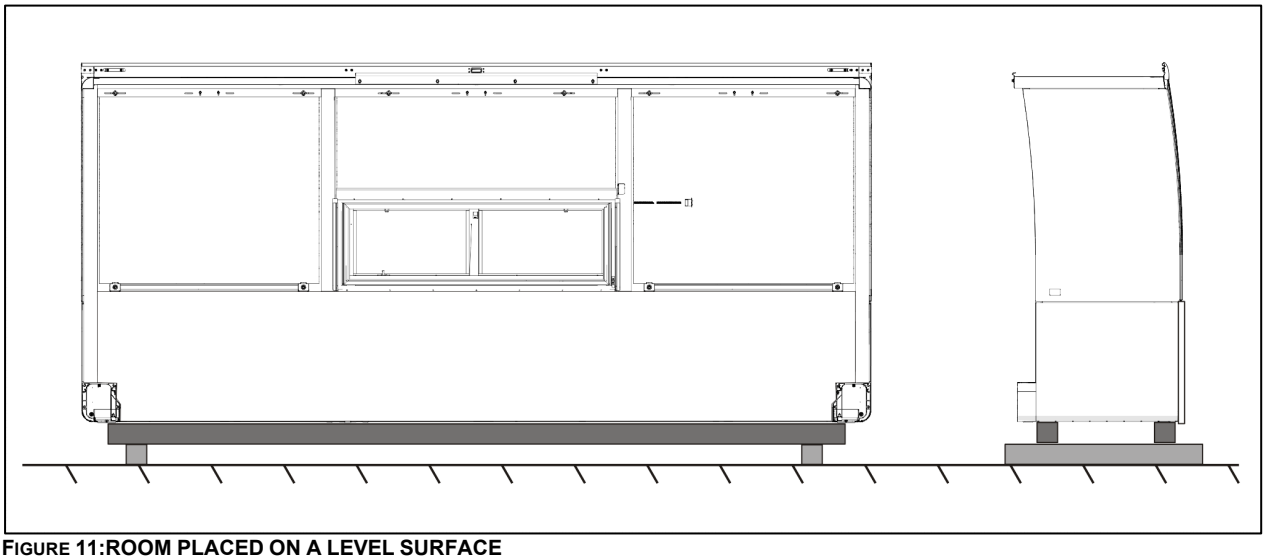

**FIGURE 11:ROOM PLACED ON A LEVEL SURFACE**

20. Installation is the reverse of removal

## PARTS / WASTE DISPOSAL

Discard according to applicable environmental regulations (Municipal/State[Prov.]/ Federal)

*Access all our Service Bulletins on http://techpub.prevostcar.com/en/*
*Or scan the QR-Code with your smart phone*
.

**Are you a Vehicle owner?**
*E-mail us at **technicalpublications_prev@volvo.com** and type "ADD" in the subject to receive warranty bulletins applicable to your vehicle(s) by e-mail.*



# MAINTENANCE INFORMATION MI19-27A

| | | |
|---|---|---|
| DATE : | July 2019 | SECTION : 26 SLIDE-OUT |
| SUBJECT : | TWO PART SLIDE-OUT SEAL INSTALLATION | |

Revision: A Roller tool # were G36374GA; G36373GA, are G36374;G36373 2019-08-22

## DESCRIPTION

Follow these instructions to perform the installation of *two-part slide-out seals* with clip-on inflatable seal. (Figure 1) This procedure should be performed by skilled technicians and may involve slide-out adjustments.

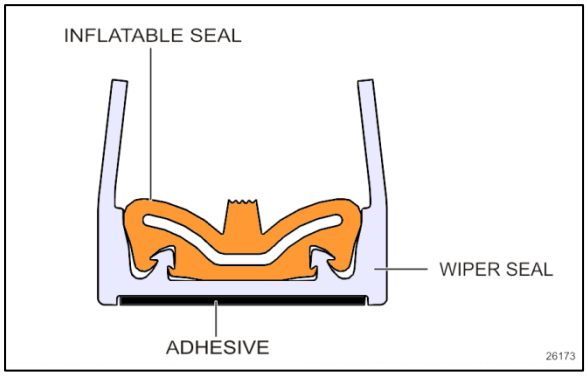


**FIGURE 1: TWO-PART SLIDE-OUT SEAL**

## MATERIAL

Required shop supplies:

| Part No. | Description | Qty |
|---|---|---|
| 680879 | P-80 Grip-It Quick-Drying Temporary Lubricant, 1litre | 1 |
| 682989 | Anti-silicone Standox, 4 liter | 1 |
| 683446 | Primer, Sika 206 G+P, 1 liter | 1 |
| 684685 | Sealant Simson #ISR 70-03 / 310ml Cartridge | 1 |
| 685332 | 3M Primer 94, 236ml | 1 |

| NOTE |
|---|
| Material can be obtained through regular channels. |

## TOOLS



FIGURE 2: HOLLOW PUNCH, ½" (LEATHER PUNCH)

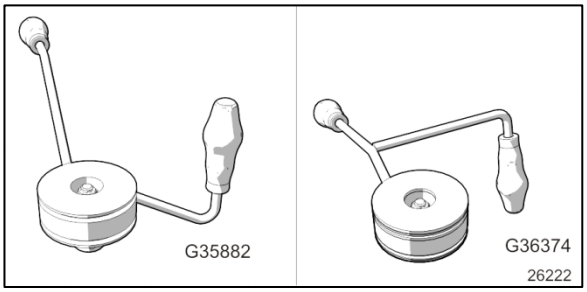


FIGURE 3: BASE WIPER SEAL ROLLER TOOLS

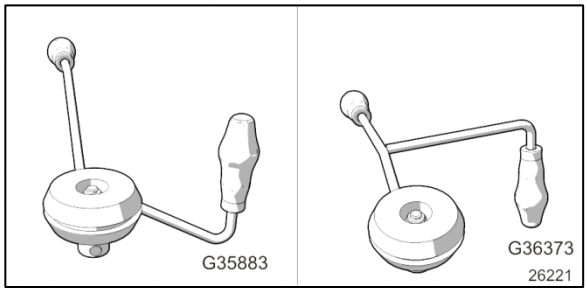


FIGURE 4: INFLATABLE SEAL ROLLER TOOLS

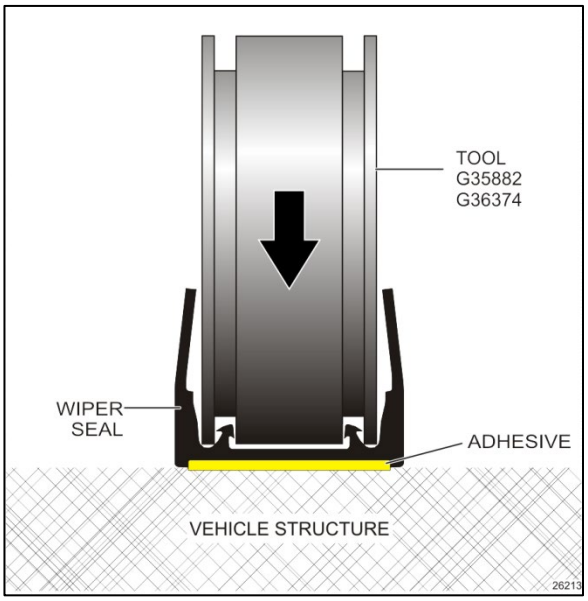


FIGURE 5: ROLLER TOOL (BASE WIPER SEAL)

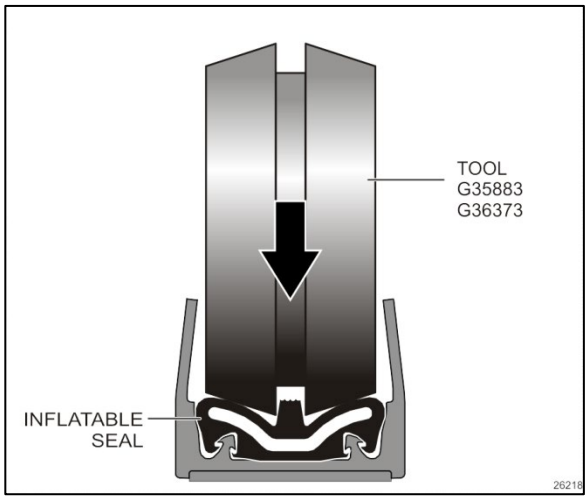


FIGURE 6: ROLLER TOOL (INFLATABLE SEAL)

| NOTE |
| --- |
| If the wiper seal does not have pre-cut holes, consult IS16080. The drain and air supply holes must be marked on the vehicle prior to installation and punched out in the base wiper seal after installation using a hollow punch. This will ensure proper draining of the seal and allow passage of the inflatable seal hose to the vehicle air supply. |

## OVERVIEW

Estimated labor: 4 hours

Allow time for Primer curing and inflatable joint settle-in time: up to 28 hours

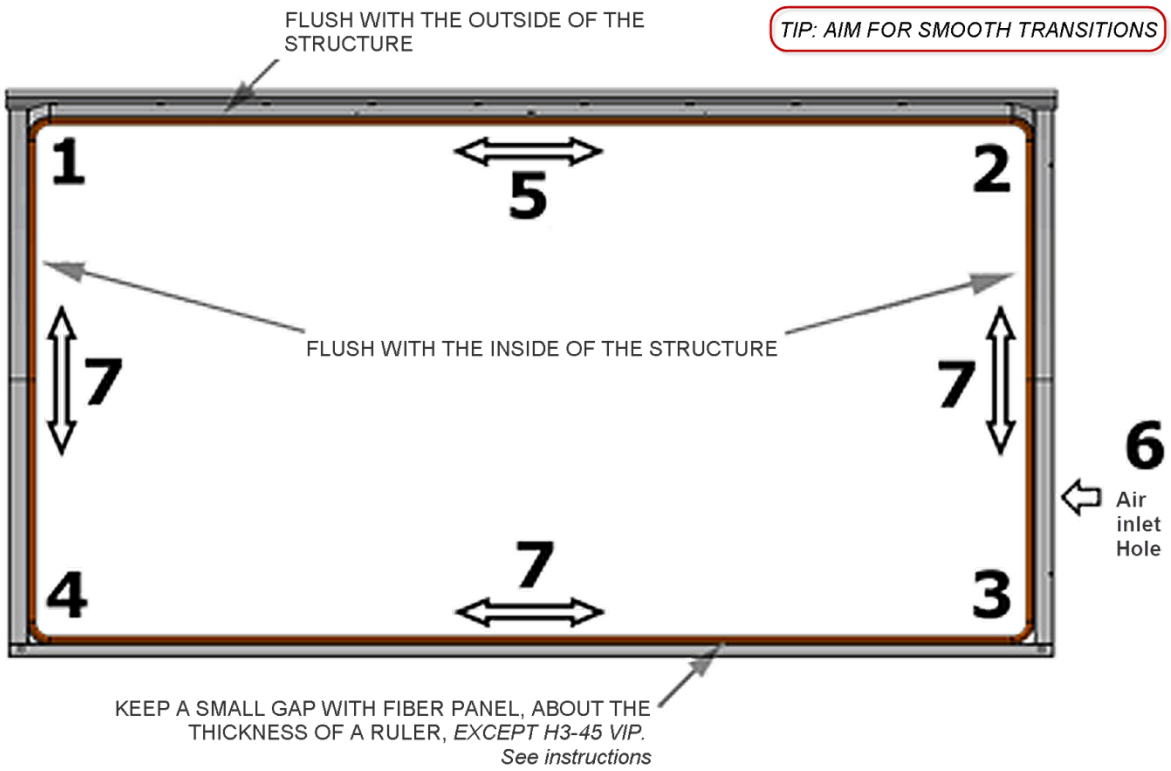


**FIGURE 7: SEAL INSTALLATION POSITION AND SEQUENCE OVERVIEW**

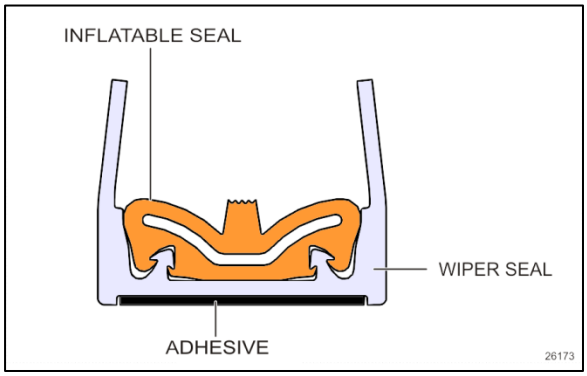


**FIGURE 8: TWO-PART SEAL ASSEMBLY**

## PROCEDURE

**DANGER**

Park vehicle safely, apply parking brake, stop engine. Prior to working on the vehicle, set the ignition switch to the OFF position and trip the main circuit breakers equipped with a trip button. On Commuter type vehicles, set the battery master switch (master cut-out) to the OFF position.

Lock out & Tag out (LOTO) must be performed during set-up, maintenance or repair activities. Refer to your local procedure for detailed information regarding the control of hazardous energy.

### PREPARATION

1. Inspect gaps all around the slide-out. Gaps must be between 17 and 27mm.
2. Adjust gaps to reach the values above. Refer to maintenance manual for procedure.

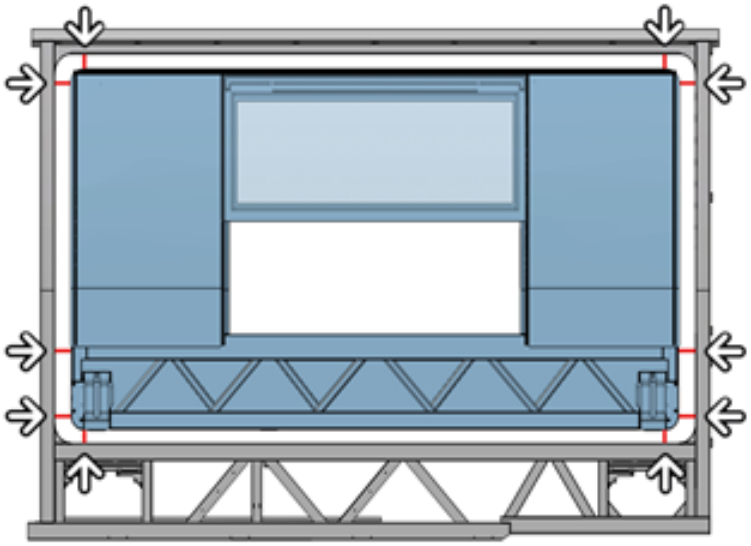

**FIGURE 9**

3. Retract the slide-out 2" inside the vehicle. Consult maintenance manual for procedure.

   *Heed the cautionary notes outlined in the manual before retracting.*
4. Remove the old slide-out seal.
5. Thoroughly clean the bonding surface receiving the seal adhesive with anti-silicone. Surface must be smooth, without any glue or paint residue.
6. Scuff the bonding surface with a very fine abrasive pad.
7. Clean the structure again with anti-silicone.
8. Mask the slide-out edge and vehicle opening all around to protect the vehicle finish.
9. Apply Sika 206 G+P. Apply all around the bonding surface. Minimum drying time: 4 hours.

10. Ensure Sika 206 is dry and clean.
11. Apply 3M Primer 94 at the 4 corners; *Apply with very light pressure* to avoid peeling or damaging the Sika 206 primer.

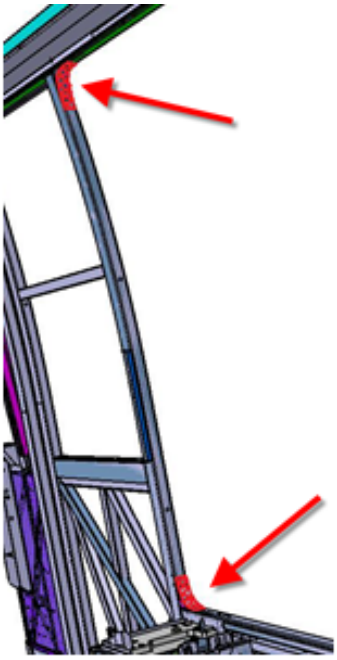

FIGURE 10



FIGURE 11

12. On the wiper seal corners locate the small rib identifying the corner mid-point. Make it more visible by marking the corners with a paint marker.

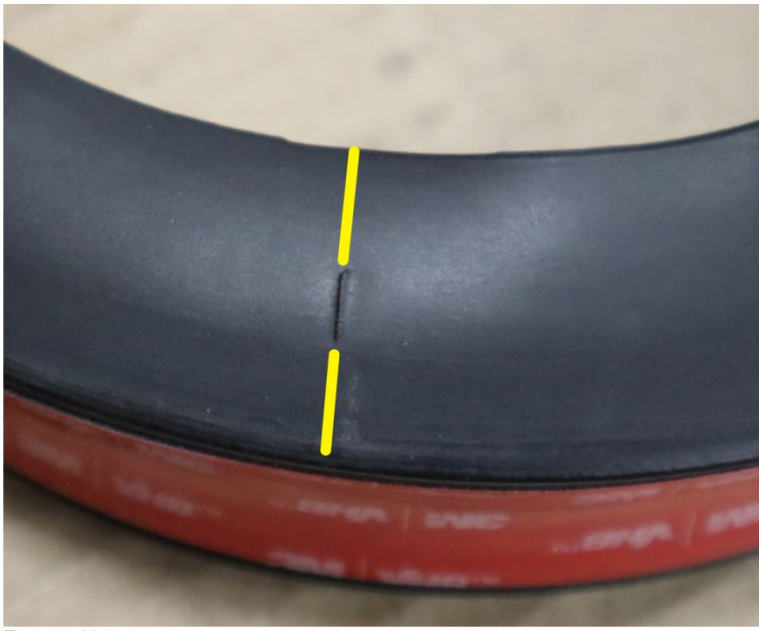

FIGURE 12

13. Also mark the midpoint of each corner on the structure.

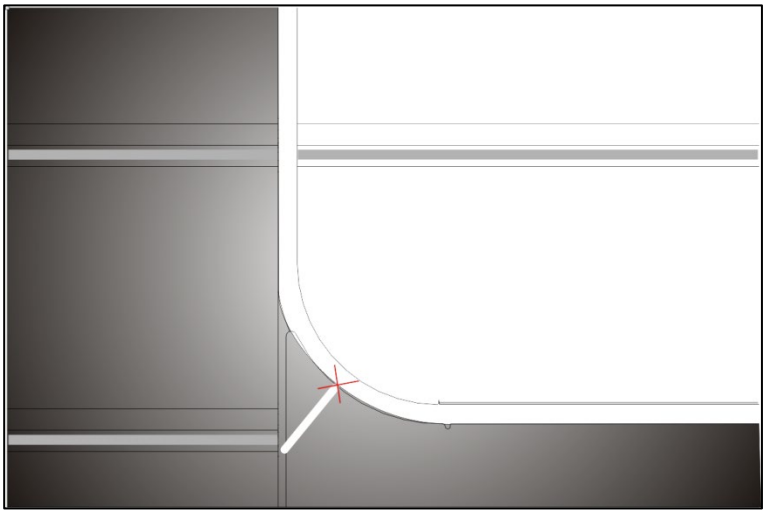

FIGURE 13: CORNER MID POINT

14. Mark the position of the drain holes in the structure.
15. Place the drain and air inlet holes aligned with the provision on the structure.

If there are no holes in the wiper seal, refer to IS-16080.

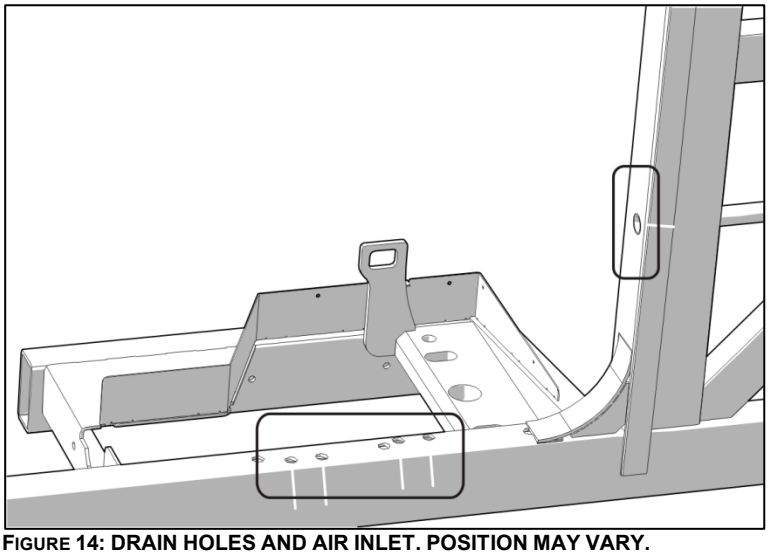

FIGURE 14: DRAIN HOLES AND AIR INLET. POSITION MAY VARY.

## BASE WIPER SEAL INSTALLATION Two people required from this point.

16. *One upper corner at a time*, remove the adhesive protecting film on approximately 8 inches.

**Warning:** Bonding occurs instantly!

17. Align the corner marks.
18. Place the seal corner as flush as possible to the *exterior side of the structure*. (Figure 6)



FIGURE 15



FIGURE 16

19. Support the upper part of the seal with masking tape.



FIGURE 17

20. Test fit to align air inlet holes with structure.
21. Remove the adhesive protecting film on approximately 8 inches.
22. Align air inlet holes in base and structure and bond base to structure.



FIGURE 18

23. Test fit the lower corners. Align the corner marks.

    **Note:** On H3-45 VIP vehicles, see Figure 18 for the bonding of the *lower section* of the seal.

24. Bond the lower corners.
25. Be sure to align the seal drain holes with the structure drain holes.
26. Progressively bond the remainder of the lower section.

27. ***H3-45 VIP* vehicles only.** Bond the lower part of the wiper seal flush to the inside of the tube round edge.

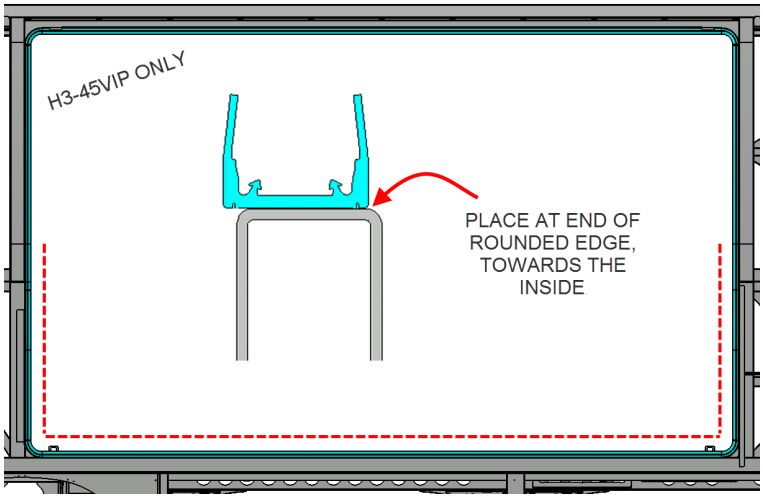


**FIGURE 19: SPECIAL INSTRUCTION FOR H3-45VIP ONLY**

28. Bond the upper section by starting at the middle. Evenly spread any excess or tension on both sides.

Make sure you are bonding flush to the exterior side of the structure. (Figure 6)



**FIGURE 20**

29. Test fit the remainder of the base wiper seal. Even out any slack or tension all around.
30. Visually inspect the corners marks and the air inlet hose to confirm everything is aligned.



FIGURE 21

31. Use roller tool all around.

32. Confirm that the drain holes in the structure are aligned with the openings in the seal base. If not, punch or cut-out the base using the marks.

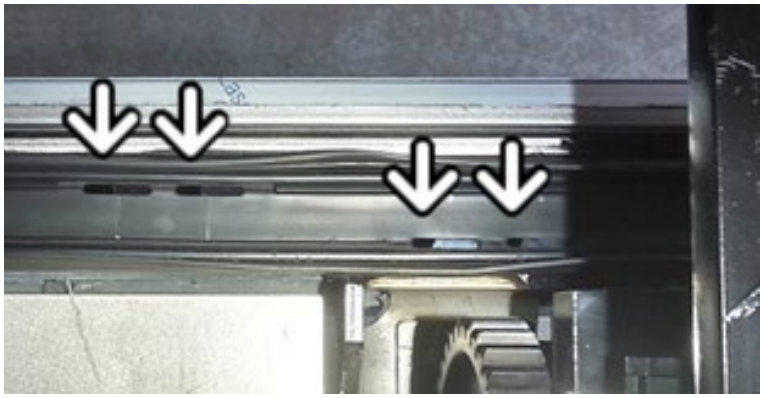

FIGURE 22

## Inflatable seal installation

33. Clean the base wiper seal to make sure it is free of debris.

34. Slip the inflation tube in the vehicle structure. Seal with #684685 Simpson ISR 70-03 sealer all round. (Figure 22)

35. Position the inflatable joint inside the base wiper. Even out any slack or tension all around.

    **Note:** *Support with tape in the upper section.*

36. Between the air inlet and the nearest corner, locally clip the seal on the base. (Arrows, Figure 22)

    **Note** *: Dry clip! (no lubricant)*

37. At the lower corner, insert seal in the bottom of the base, *without clipping*. (Figure 22)

    **Note:** *Follow this guideline for all corners; they will be clipped at the very end.*

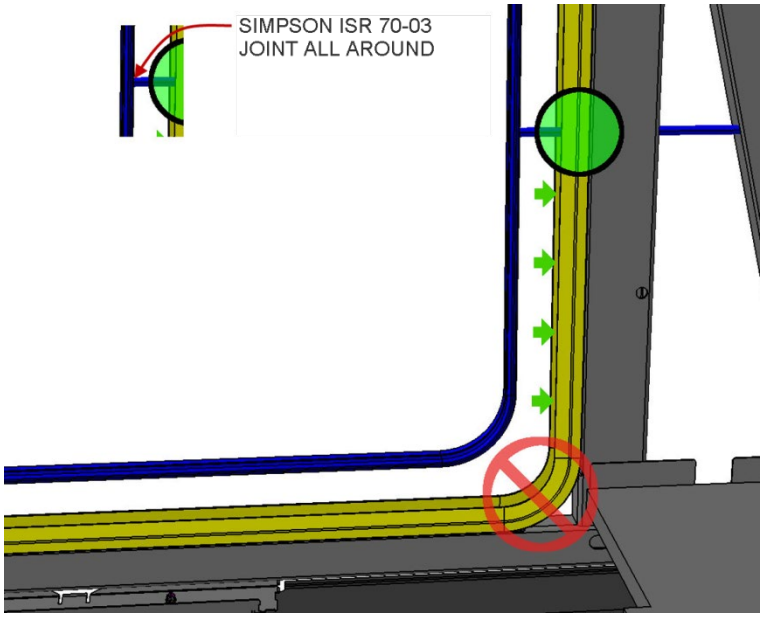


**FIGURE 23: AIR INLET**

38. Clip seal up to the corner tangent.

39. To avoid creases in the corner, stretch the seal as if it were too short in length compared with the base.

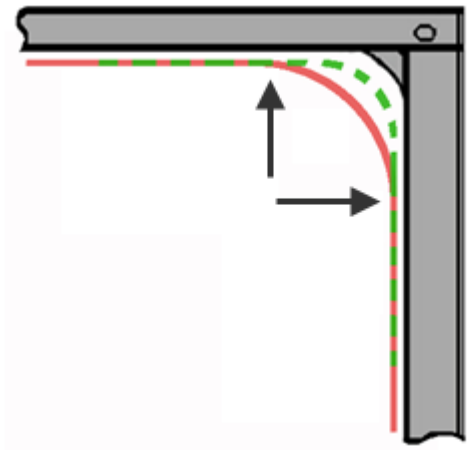

**FIGURE 24**

40. Spray a small amount of #680879 P80 lubricant in the base.

    **Caution:** P80 application is only allowed in the straight sections, stopping one foot from the corners.




**FIGURE 25**

41. Begin by locally clipping the seal, at each 24 in.

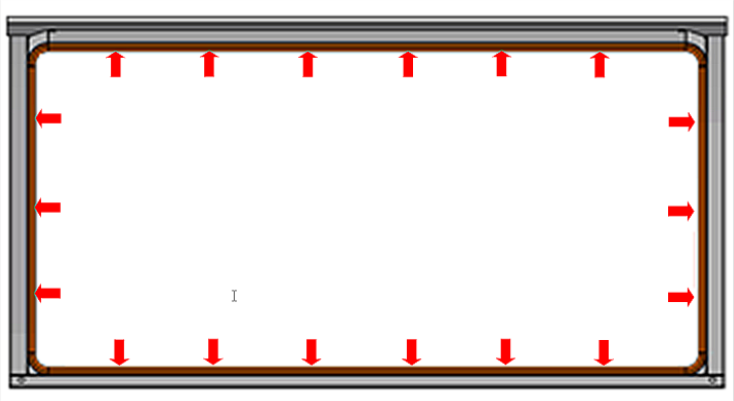

**FIGURE 26**

42. Insert the joint in the lower section.
43. Clip with the help of roller tool.

    **Important:** *Always start at the corner tangent (away from the corner) and roll towards the center.*

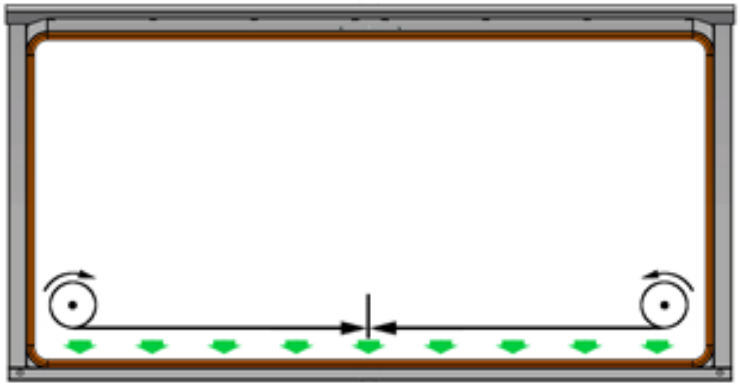

**FIGURE 27**

44. Repeat the same method on all remaining sides, skipping the corners.

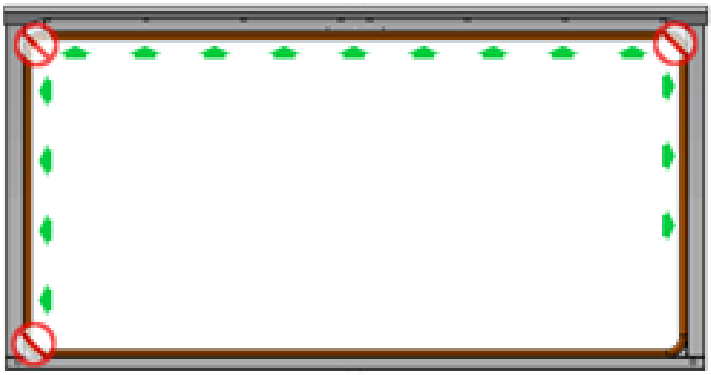

FIGURE 28

45. Clip the four corners

**Note**: *If the corner is too tight and needs a bit of slack, roll the sides from the outside towards the corner*.

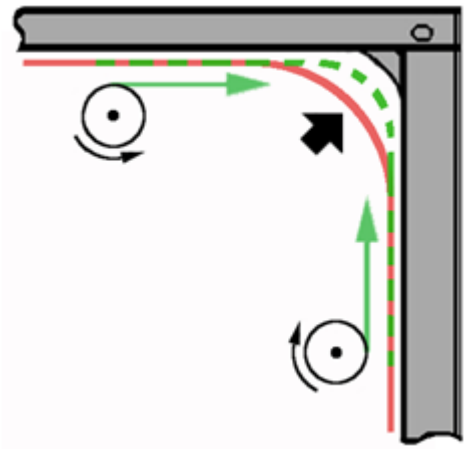

FIGURE 29

46. Confirm the seal is well clipped in the base by feeling with your fingers.

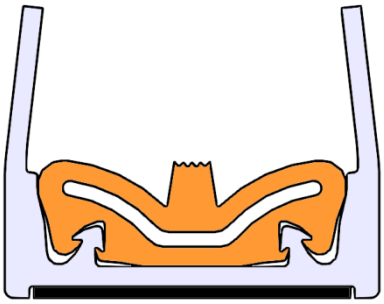


FIGURE 30

## Inflation test

47. On the slide-out control panel, confirm air pressure is set to 15 psi ± 5 psi.
48. If not, adjust the pressure.
49. Move the green pegs on each side of the needle to indicate the new pressure range.

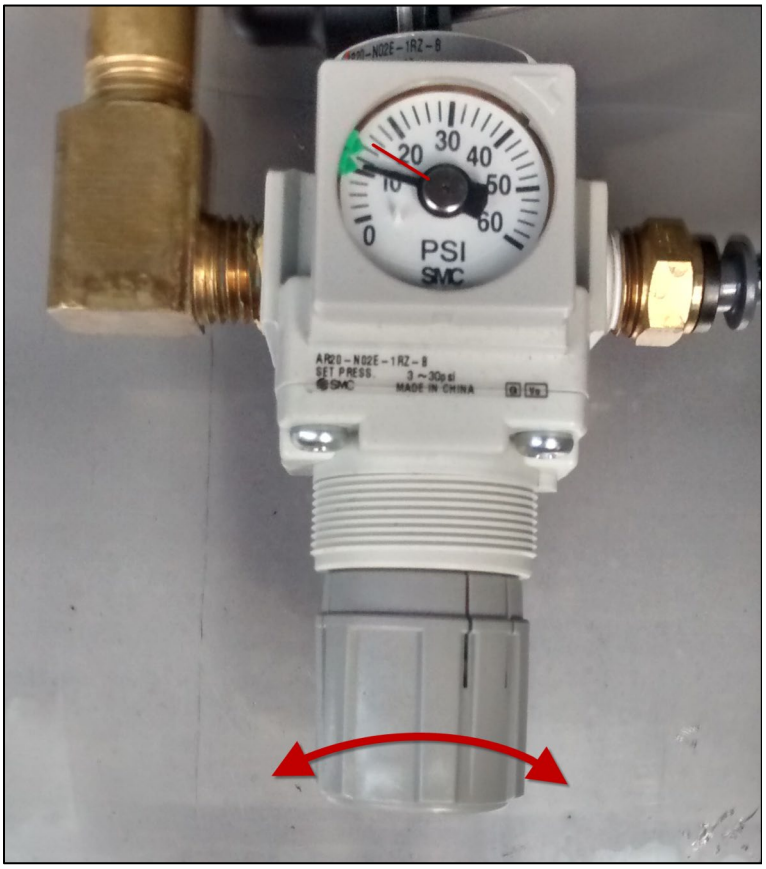


FIGURE 31: ADJUST TO 15 PSI ± 5 PSI

50. Connect the air inlet to the inflatable seal air supply, vehicle side.

    **Caution:** *The seal air supply tube is soft; do not squeeze it with the cable ties.*

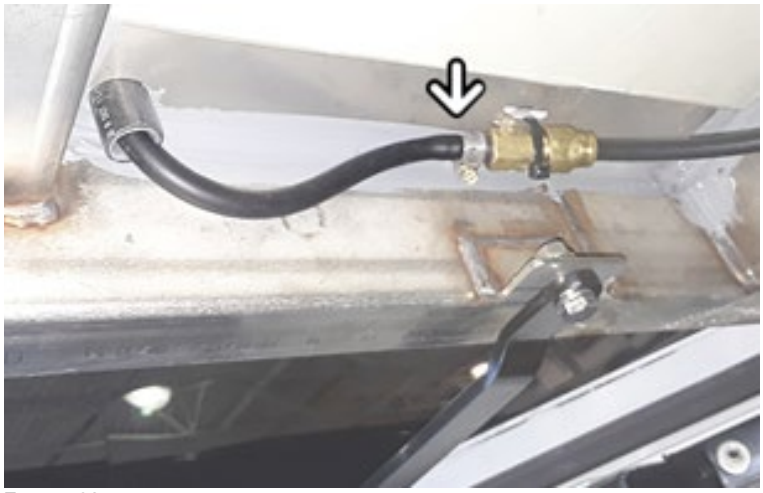

FIGURE 32

51. Extend the slide-out room.
52. Inflate the seal.
53. Confirm that the corners do not show any creases.

**IF THERE ARE CREASES:**

A. Return the room inward.

B. Unclip the inflatable seal from the corner plus along one or two feet on each side.

C. Clip the straight sections by rolling from the corner *towards the center*.

   Make sure you are stretching the corner; it should be flush with the top of the base wiper seal.

D. Clip corner in.

**IF CORNERS ARE FREE FROM CREASES:**

54. Inflate the seal. Leave inflated for a settle-in period of 24h.

    **Caution:** *Applied pressure should not exceed 15 psi ± 5 psi.*



FIGURE 33

**PARTS / WASTE DISPOSAL**

| |
|---|
| Discard according to applicable environmental regulations (Municipal/State[Prov.]/ Federal) |

Access all our Service Bulletins on http://techpub.prevostcar.com/en/

Or scan the QR-Code with your smart phone

**Are you a Vehicle owner?** E-mail us at ***technicalpublications_prev@volvo.com*** and type “ADD” in the subject to receive warranty bulletins applicable to your vehicle(s) by e-mail.

## CONTENTS

**SECTION CHANGE LOG** ..... **3**

**1 TORQUE TABLES** ..... **4**

**2 OVERVIEW** ..... **5**

2.1 STANDARD PREVOST SLIDE-OUTS ..... 5
2.2 OPERATION ..... 5
2.3 SLIDE-OUT MECHANISM OVERVIEW ..... 6
2.4 SLIDE OUT CONTROL SYSTEM OVERVIEW ..... 6
2.5 REPLACEMENT PARTS ..... 7
2.6 MAXIMUM LOADS ..... 8

**3 LEVEL & TILT ADJUSTMENT** ..... **9**

3.1 HEIGHT ADJUSTMENT VALUE ..... 9
3.2 LATERAL ADJUSTMENT ..... 9
3.3 TILT ADJUSTMENT VALUES ..... 9
3.4 STOPPER SEQUENCE ..... 9
3.5 TILT ADJUSTMENT SEQUENCE ..... 9

**4 ROOM EXTENSION FOR MAINTENANCE** ..... **11**

**5 SLIDE-OUT MANUAL OVERRIDE PROCEDURES** ..... **13**

5.1 PRELIMINARY CONDITIONS FOR MANUAL OVERRIDE PROCEDURE ..... 13
*5.1.1 Manual retracting procedure – Front and rear slide-out ..... 13*
*5.1.2 Manual extending procedure – Front and rear slide-out ..... 14*

**6 SLIDE-OUT 2" INSIDE RETRACTION** ..... **15**

**7 MAIN COMPONENTS** ..... **17**

7.1 FLEXIBLE RAIL COVER ..... 17
*7.1.1 Maintenance ..... 17*
*7.1.2 Removal ..... 17*
7.2 INNER STOPPER ..... 17
*7.2.1 Maintenance ..... 17*
*7.2.2 Adjustment ..... 17*
7.3 "IN LIMIT" STOPPER ..... 18
*7.3.1 Maintenance ..... 18*
*7.3.2 Removal ..... 18*
*7.3.3 Adjustment ..... 18*
7.4 EXTERIOR EXTRUSION ..... 19
*7.4.1 Maintenance ..... 19*
7.5 INFLATABLE SEAL ASSEMBLY ..... 20
*7.5.1 Maintenance ..... 20*
*7.5.2 Seal assembly replacement ..... 20*
7.6 SECURITY PIN ..... 20
*7.6.1 MAINTENANCE ..... 21*
*7.6.2 AIR CYLINDER REPLACEMENT ..... 21*
7.7 RACK GEAR ..... 22
*7.7.1 MAINTENANCE ..... 22*
*7.7.2 FRONT SLIDE-OUT RACK GEAR REPLACEMENT ..... 22*

*7.7.3 REAR SLIDE-OUT RACK GEAR REPLACEMENT ..... 22*
7.8 PINION GEAR ..... 23
*7.8.1 PINION GEAR DISENGAGEMENT ..... 23*
*7.8.2 RACK AND PINION GAP SETTING ..... 24*
*7.8.3 PINION GEAR SYNCHRONIZATION ..... 24*
*7.8.4 FRONT SLIDE-OUT PINION REPLACEMENT ..... 24*
*7.8.5 REAR SLIDE-OUT PINION REPLACEMENT ..... 25*
7.9 ELECTRIC MOTOR ..... 26
*7.9.1 MAINTENANCE ..... 26*
*7.9.2 REPLACEMENT ..... 26*
7.10 SPEED REDUCTION GEARBOX ..... 27
*7.10.1 MAINTENANCE ..... 27*
*7.10.2 GEARBOX REPLACEMENT ..... 27*
7.11 DRIVE SHAFT ..... 28
*7.11.1 MAINTENANCE ..... 28*
*7.11.2 REPLACEMENT ..... 28*
7.12 FLANGE BEARINGS ..... 28
7.13 LOCKING COLLAR ..... 28
*7.13.1 INSTALLATION ..... 28*
7.14 LINEAR BEARING AND RAIL ..... 29
*7.14.1 DUMMY RAIL ..... 29*
*7.14.2 BEARING CARRIAGE MAINTENANCE ..... 29*
*7.14.3 BEARING REPLACEMENT ..... 29*

**8 SLIDE-OUT PNEUMATIC SYSTEM ..... 31**

8.1 DESCRIPTION ..... 31
8.2 MAINTENANCE ..... 32

**9 SLIDE-OUT ELECTRICAL SYSTEM ..... 33**

9.1 ELECTRICAL INTERCONNECTION WITH PREVOST VEHICLE ..... 33
9.2 SLIDE-OUT FUSES ..... 33
*9.2.1 Multiplex fuses ..... 33*
9.3 PROBING VOLTAGE ON THE MULTIPLEX CIRCUITS ..... 34
9.4 MODULE REPLACEMENT ..... 34
9.5 SLIDE-OUT LIMIT SENSORS ..... 34
*9.5.1 Accessibility ..... 34*
*9.5.2 To adjust the "in limit" sensor: ..... 34*
*9.5.3 To adjust the "out limit" sensor: ..... 35*

**10 SLIDE-OUT EXTERIOR FINISHING PANELS & WINDOWS ..... 35**

**11 WELDING PRECAUTIONS ..... 35**

**12 FINISHING PRECAUTIONS FOR CONVERTERS ..... 35**

**13 CONVERSION CHECKLIST ..... 38**

**14 TROUBLESHOOTING ..... 39**

14.1 ERROR CONDITION OR MISSING OPERATION CONDITION ..... 39
14.2 TROUBLESHOOTING TABLE ..... 40
14.3 SLIDE-OUT FAULT MESSAGE ON DID ..... 44

## SECTION CHANGE LOG

| | DESCRIPTION | DATE |
|---|---|---|
| 1 | | |
| 2 | | |
| 3 | | |
| 4 | | |
| 5 | | |
| 6 | | |

## 1 TORQUE TABLES

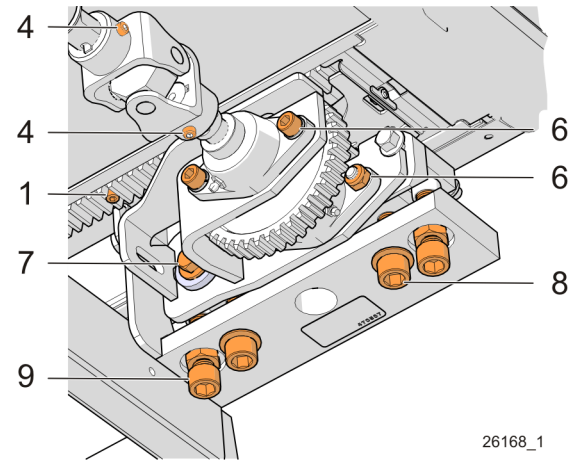


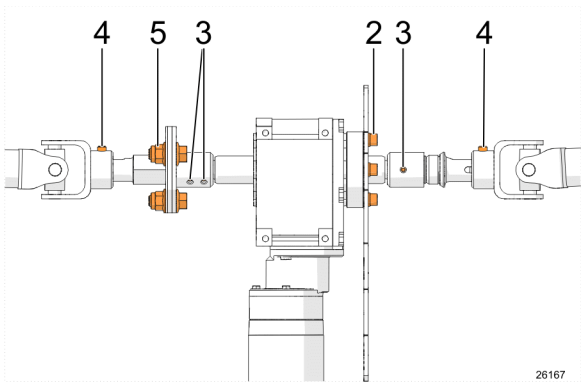


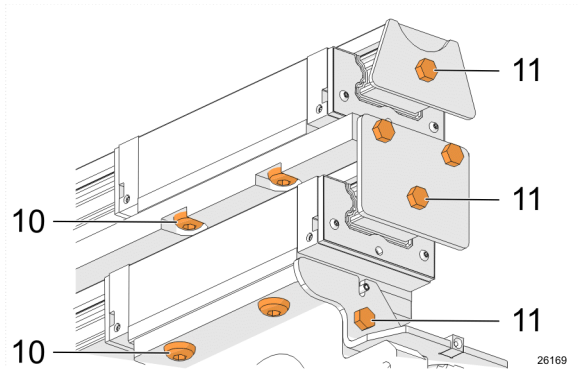


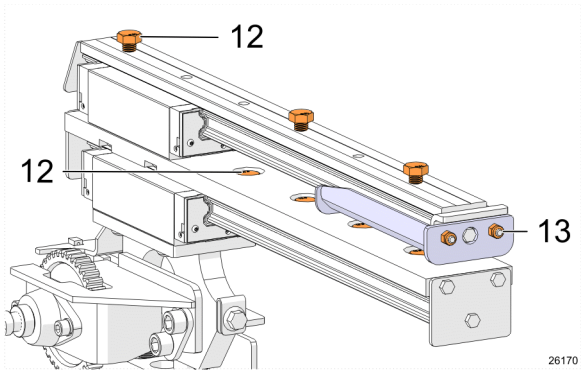


**STANDARD PREVOST SLIDE-OUT (Front left shown)**

| No | DESCRIPTION (quantity for one slide-out) | TORQUE |
|---|---|---|
| 1 | Rack gear mounting screws | 1.9-2.1 lb-ft (2.58-2.85 Nm) *max* |
| 2 | Drive motor/gearbox assembly mounting bolts (4) | 16-20 lb-ft (22-27 Nm) |
| 3 | Shaft extension set screw (6) | 7 lb-ft (10 Nm) |
| 4 | Drive shaft yoke set screws (8) | 27 lb-ft (37 Nm) |
| 5 | Adjustable flange screws (3) | 59 lb-ft (80 Nm) |
| 6 | Flange bearing mounting screws | 48 lb-ft (65 Nm) |
| 7 | Pinion gear support mounting screws (4) | 198 lb-ft (268 Nm) |
| 8 | Tilting and leveling support retaining screws (4) | 55-65 lb-ft (75-88 Nm) |
| 9 | Tilting and leveling support leveling screw jam nut (4) | 43-53 lb-ft (58-72 Nm) |
| 10 | Linear bearing mounting screws (16) | 59 lb-ft (80 Nm) |
| 11 | Rail end screw (16) | 17 lb-ft (23 Nm) |
| 12 | Rail mounting screw (18) | 130 lb-ft (176 Nm) |
| 13 | Removable stopper nuts (4) | 94 lb-ft (128 Nm) |

## 2 OVERVIEW

X3-45 VIP vehicles can accommodate up to two (2) Prevost slide-outs units.

### 2.1 STANDARD PREVOST SLIDE-OUTS

Slide-outs in the front left and rear left position share the same operation, design features and maintenance requirements.

Maintenance can be performed by moving the slide-out inwards. Refer to SLIDE-OUT 2" INSIDE RETRACTION.

Special tools are required for seal installation and setting the gap between rack and pinion.

### 2.2 OPERATION

Room operation is on a "first in, first served" basis due to the high current demand and safety requirements. Only one slide-out unit may be operated at a time

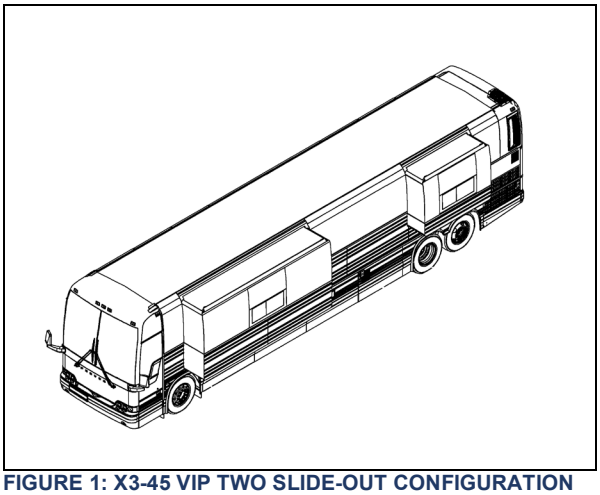

**FIGURE 1: X3-45 VIP TWO SLIDE-OUT CONFIGURATION**

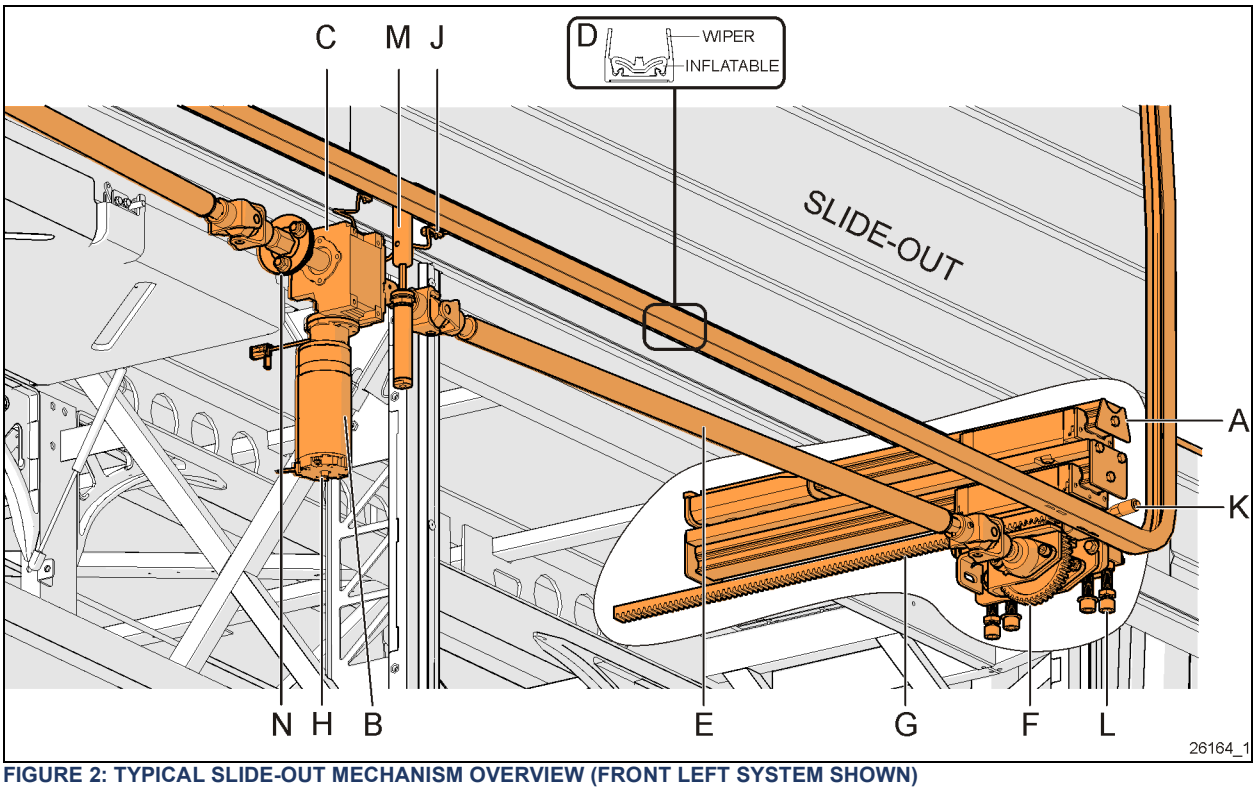


FIGURE 2: TYPICAL SLIDE-OUT MECHANISM OVERVIEW (FRONT LEFT SYSTEM SHOWN)

## 2.3 SLIDE-OUT MECHANISM OVERVIEW

Refer to Figure 2. Each slide-out is moved in and out on stacked linear bearings, (**A**). Power comes from one electrical motor (**B**). It is either oriented vertically or horizontally. The motor drives a right angle speed reducing gearbox (**C**).

Water tightness of the slide-out is ensured by a wiper seal and an inflatable seal (**D**).

The gearbox is coupled to drive shafts (**E**) and two pinion gears (**F**). An adjustable flange (**N**) allows pinion gear synchronization. Rack gears (**G**) transform pinion gear rotation into horizontal motion.

Manual extension or retraction is possible by the motor shaft extension (**H**). Closely follow instructions provided further in this manual to perform this procedure.

To limit rail extension, the system includes two proximity sensors (**J**) and in case of proximity sensor failure, two factory adjusted rail stoppers (one per rail) (**K**). An additional inner stopper along the top edge of the slide-out limits room extension. Refer to Figure 25 and Figure 26.

Slide-out room tilt and leveling adjustment is carried-out by the adjustment plate and screws (**L**).

Structural integrity of the vehicle platform is ensured with stainless steel casting corner reinforcements in the luggage bays.

A security pin (**M**) locks the slide-out in the retracted or “in” position for road travel.

A flexible rail cover (Figure 22) protects the linear bearing assembly from the elements. As the room moves out, it is pulled under the linear bearing and rack gear assembly. It is pushed back and curls up over the assembly as the room moves in.

For more information on the various mechanical components, refer to paragraph 7, MAIN COMPONENTS.

## 2.4 SLIDE OUT CONTROL SYSTEM OVERVIEW

Slide out operation is controlled electrically and pneumatically. The control panel is located in the first road side luggage bay, fixed to the ceiling

(Figure 49). It controls all slide-outs installed on the vehicle.

The control panel includes multiplex modules, power relays and pneumatic control valves. Logic control and operation is achieved by using the same Volvo multiplex modules found on the vehicle chassis.

A Control Pad provides the input command for extension and retraction of the slide-out room. One control pad per room is provided from factory. Final location and type of control may vary from one vehicle to another depending on interior layout and vehicle converter.

Troubleshooting is performed through the DID. For more information on slide-out control systems, refer to paragraphs 8 SLIDE-OUT PNEUMATIC SYSTEM and 9 SLIDE-OUT ELECTRICAL SYSTEM.

For more information on troubleshooting, refer to paragraph 14 TROUBLESHOOTING.

## 2.5 REPLACEMENT PARTS

Refer to the Prevost parts manual for the latest information to order replacement parts.

## 2.6 MAXIMUM LOADS

| *NOTE* |
| --- |
| Maximum load includes occupant weight and equipment added by the converters in the slide-out |

**Front slide-outs:**
Maximum load with vehicle at stand still (retracted or extended) **1500 lb**

Maximum load with vehicle or slide-out moving **1200 lb**[1]

**Rear slide-outs:**
Maximum load with vehicle at stand still (retracted or extended) **1500 lb**

Maximum load with vehicle or slide-out moving **1000 lb**[1]

**WARNING**

Overloading may damage the seal, interfere with slide-out operation and may cause the system to malfunction.

Do not exceed 1/4" deflection. (Figure 3)

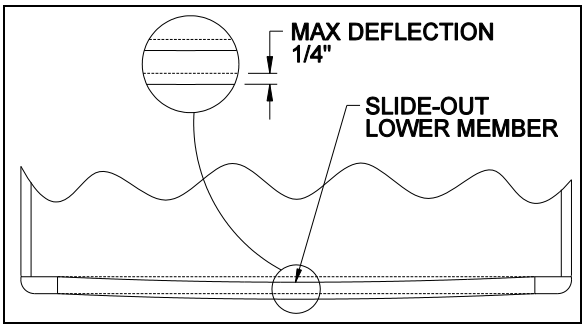


**FIGURE 3: FRONT SLIDE-OUT DEFLECTION**

[1] Value is for an equally distributed load to prevent seal damage by excessive deflection.

## 3 LEVEL & TILT ADJUSTMENT

Tilt and leveling adjustment is carried-out by the adjustment plate and screws located under each linear bearing assembly. (Figure 4).

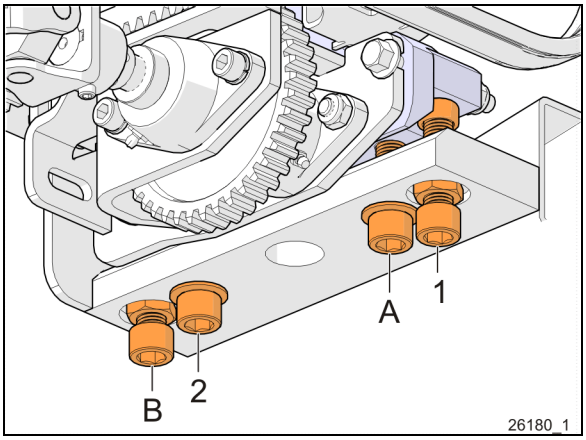


FIGURE 4: LEVELING & TILTING SCREWS

**A & B TORQUE: 55-65 lb-ft (75-88 Nm)**

**1 & 2 NUT TORQUE: 43-53 lb-ft (58-72 Nm)**

### 3.1 HEIGHT ADJUSTMENT VALUE

The desired height level is 13/16” (21mm) from the bottom (Figure 5)

**WARNING**

A height under 17mm may damage the seal

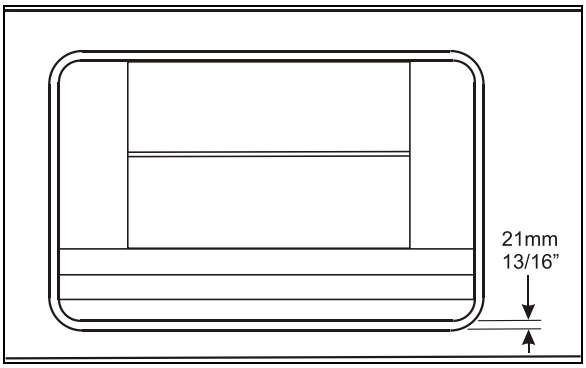


FIGURE 5: SLIDE-OUT LEVEL ADJUSTMENT

When proper level is reached (Figure 5) retaining screws A & B maintain the support seated on the leveling screws.

### 3.2 LATERAL ADJUSTMENT

The desired gap on each side is 13/16” (21mm) (Figure 5)

**WARNING**

A gap under 17mm may damage the seal

### 3.3 TILT ADJUSTMENT VALUES

The desired tilt adjustment is one where the top of the slide-out is slightly more recessed (inside) than the bottom. (Figure 6)

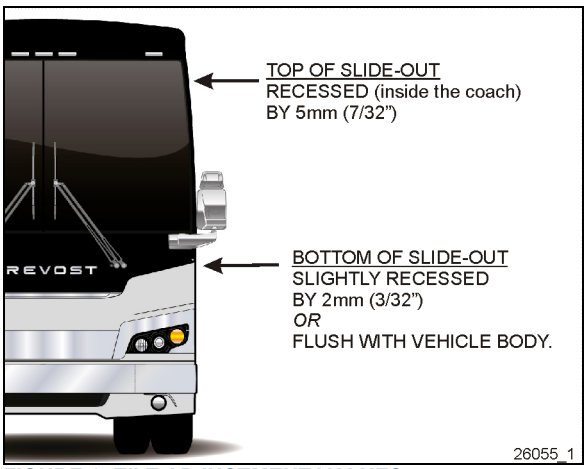


FIGURE 6: TILT ADJUSTMENT VALUES

Tilt adjustment is done by changing the linear bearing support inclination using leveling screws 1 & 2 to adjust the angle (Figure 4).

### 3.4 STOPPER SEQUENCE

When retracting, the upper "in limit" stoppers should touch the vehicle structure first, followed by the lower "in limit" stoppers.

### 3.5 TILT ADJUSTMENT SEQUENCE

Before proceeding with the level and tilt adjustment, check the following conditions:

- The slide-out is retracted;
- The 2 lower “in limit” stoppers are perfectly adjusted, that means that the lower edge of the slide-out outer panel is flush or slightly in by 2mm (3/32”) with the vehicle body when retracted;(Figure 6)
- The 2 upper “in limit” stoppers are removed from the slide-out (see paragraph 7.3).
-

**WARNING**

Leveling and tilting adjustment must be performed with a retracted (fully in) slide-out.

**WARNING**

Never unscrew completely retaining screw A and B (Figure 4) or the slide-out may tip inside.

1. With the lower edge of the slide-out outer panel flush with the vehicle body, adjust the slide-out level. (Figure 5) The distance between the top of the horizontal member under the slide-out and the slide-out under panel must be 21mm (13/16" approximately).

**To raise the linear bearing support plate,** turn levelling screw 1 & 2 clockwise. Slightly and gradually, loosen the retaining screws A & B as the support plate elevates, but keep the retaining screws tight.

**To lower the linear bearing support plate,** turn screw 1 & 2 counter clockwise. As the support plate goes down, maintain the retaining screw A & B tight.

2. Tighten retaining screws A & B (Figure 4)

**TORQUE: 55-65 lb-ft (75-88 Nm**)

3. Ensure that leveling screw 1 & 2, are firmly leaning on the support plate and then firmly tighten the jam nuts.

**TORQUE: 43-53 lb-ft (58-72 Nm)**

4. Verify that the tilt is still properly adjusted (7/32").

## 4 ROOM EXTENSION FOR MAINTENANCE

It is possible to extend the room further out for maintenance operations.

**CAUTION**

Prepare a scissor lift or a set of jack stands to support the slide-out room while it is extended for maintenance.

From the inside of the vehicle, remove any capping or trims hiding linear bearings at the bottom of the slide-out on both sides.

Then remove the room extrusion end caps. (Figure 7)

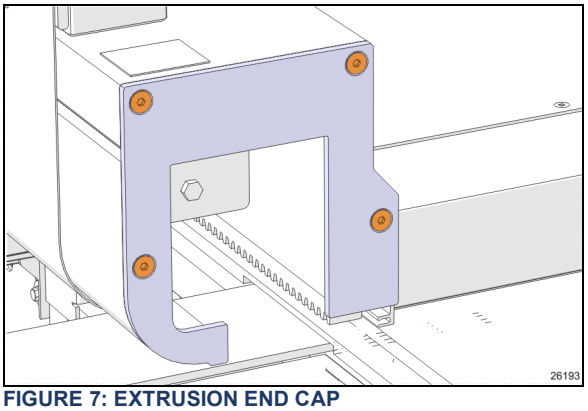


FIGURE 7: EXTRUSION END CAP

Once the room is fully extended, remove the screw and tab holding the flexible plastic rail cover in place. (Figure 8) *Perform this on both sides*.

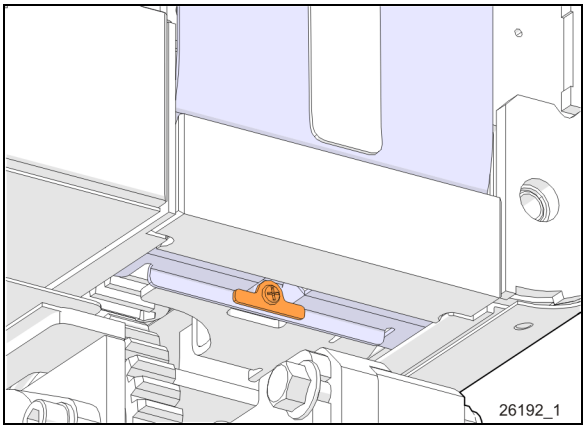


FIGURE 8: TAB AND MOUNTING SCREW

Remove the upper inner stopper (Figure 9).

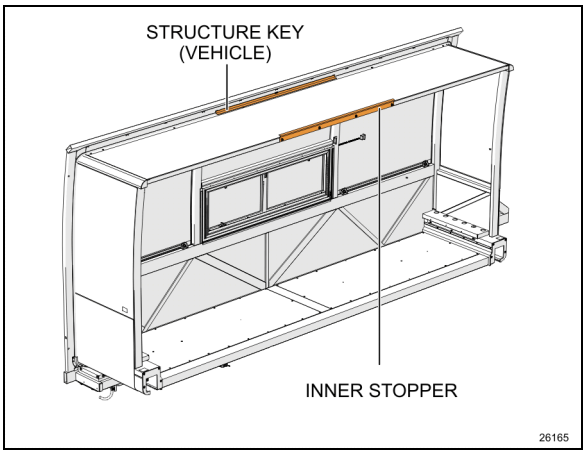


FIGURE 9: UPPER INNER STOPPER

Remove the two nuts holding the extension stopper (perform both sides). (Figure 10)

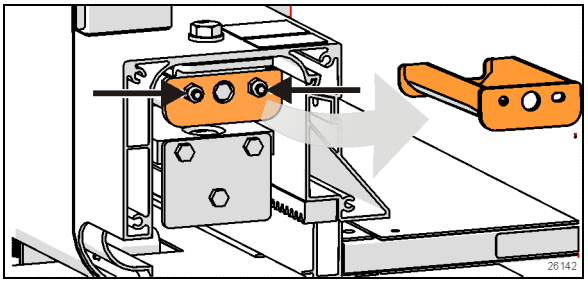


FIGURE 10 EXTENSION STOPPER REMOVAL

The room can now be extended further.

Do not remove any additional stoppers. Heed the safety warning below.

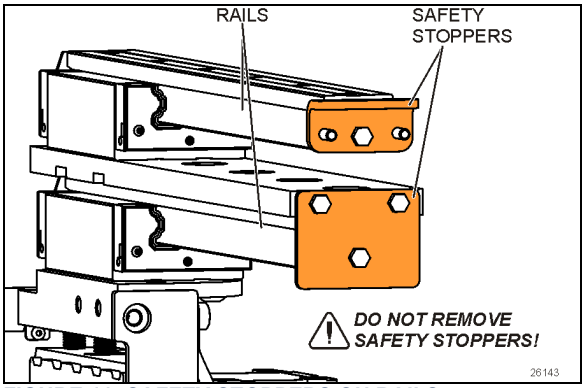


FIGURE 11: SAFETY STOPPERS ON RAILS

**DANGER**

Safety stoppers are bolted to the rail ends. (Figure 11)

Never remove these stoppers.

These prevent the room from sliding out of the bearings.

Without these stoppers, the room could slide completely out of the bearings, therefore posing a risk of serious injury or death and significant damage to the vehicle's components

Deflate the seal by using the relieving shut-off valve located on the pneumatic component panel. Confirm by the pressure gage.

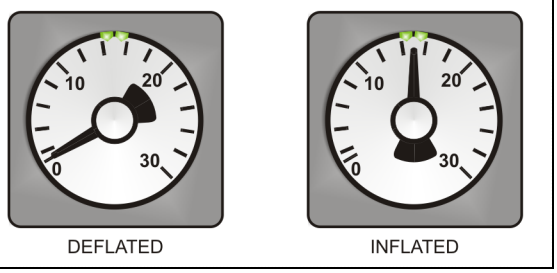


**FIGURE 12: INFLATABLE SEAL PRESSURE GAGE**

**CAUTION**

Failure to deflate the seal may result in seal damage. Refer to Paragraph 7.5 "SEAL" for further details

Prepare the supports under the room.

Using a cordless drill with a 10 mm hexagonal socket, drive the motor extension to further extend the slide-out room until the gears leave the rack gear.

Finish by pushing out the room by hand. A minimum of two persons are required.

Raise the supports in place

## 5 SLIDE-OUT MANUAL OVERRIDE PROCEDURES

**CAUTION**

Never use an impact wrench to manually operate the slide-out. Doing so would damage the various mechanical components of the slide-out.

In case of power retracting system failure, it is possible to use the manual override procedure to retract or extend the slide-out.

The manual override procedures consist in rotating the slide-out motor shaft extension using a cordless power drill with a 10 mm hexagonal socket.

Follow all instructions carefully to avoid damaging the inflatable seal or the retraction mechanism.

### 5.1 PRELIMINARY CONDITIONS FOR MANUAL OVERRIDE PROCEDURE

Before using the slide-out manual override procedures, make sure that the problem cannot be solved by one of the following simple checks:

- Check the fuses. See paragraph 9.2.
- Make sure the parking brake is applied and that transmission is in the "NEUTRAL" position.

*NOTE*

*The slide-out control system inhibits transmission range selection to prevent the vehicle from moving if the slide-out is not in its full "IN" position.*

- Make sure the voltage is high enough by running the engine at fast idle or having a battery charger connected.

**CAUTION**

Before extending or retracting the slide-out, always open a window to avoid movement restriction and to prevent the motor from stopping in overcurrent because of a vacuum or pressure build up inside the vehicle.

#### 5.1.1 Manual retracting procedure – Front and rear slide-out

1. Turn the ignition switch to the "OFF" position, and remove the ignition key for more safety.
2. Deflate the seal by using the relieving shut-off valve located on the pneumatic component panel (Item 1, Figure 48).
3. Turn the handle clockwise to deflate the seal. Make sure the pressure indicator reading is "0 psi".

**CAUTION**

The pressure in the inflatable seal must be completely relieved to prevent any damage to the seal.

*NOTE*

*When air pressure is relieved using the shut-off valve, the normal extending and retracting operation cycle is disabled, for that reason the slide-out cannot be moved using the control pad.*

4. To move the slide-out, use a cordless power drill with a 10 mm hexagonal socket. on the shaft extension of the slide-out motor.
5. Rotate the slide-out motor shaft extension with the power drill until the slide-out comes to its closed position. (Figure 13)

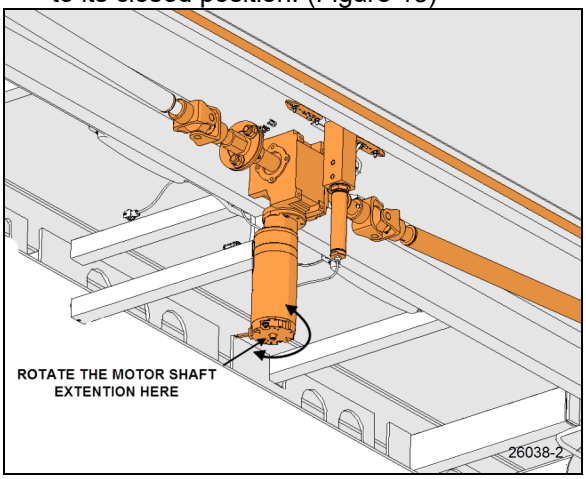


**FIGURE 13: SLIDE-OUT MOTOR ROTATION**

6. Once the slide-out room is lined up to its closed position, remove the tool from the motor.

**CAUTION**

Slow down the closing speed as the slide-out approaches its closed position. As soon as the “in limit” stoppers come in contact with their bearing surface, stop immediately the power drill rotating movement. Not doing so could overload the drive mechanism and cause damage to the reduction gearbox.

4. Finally, the inflatable seal can be re-inflated by turning the shut-off valve handle counterclockwise. Check the pressure gage on the inflatable seal regulator to see if the pressure increases to 15 psi ± 5 psi (Figure 14). Needle should be pointing between the two small green marks on the dial.

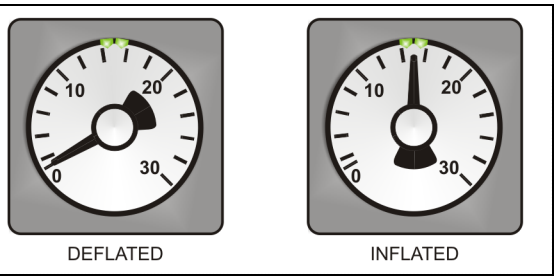


**FIGURE 14: INFLATABLE SEAL PRESSURE GAGE**

5.1.2 Manual extending procedure – Front and rear slide-out

1. Apply parking brake to disengage the security pin from the receptacle.
2. Turn the ignition switch to the "OFF" position, and remove the ignition key for more safety.
3. Deflate the seal by using the relieving shut-off valve located on the pneumatic component panel (Figure 48, Item 1). Turn the handle clockwise to deflate the seal. Make sure the pressure indicator reading is "0 psi".

**CAUTION**

The pressure in the seal must be completely relieved to prevent any damage to the seal.

*NOTE*

*The slide-out cannot be moved with the control pad when seal air pressure is relieved.*

4. To move the slide-out, use a cordless power drill with a 10 mm hexagonal socket on the shaft extension of the slide-out motor.
5. Rotate the slide-out motor shaft extension with the power drill until the slide-out comes to its opened position.
6. Once the slide-out is lined up to its opened position, remove the tool from the motor.

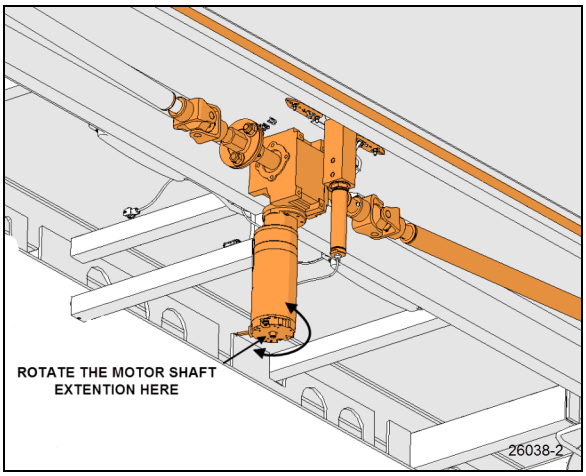


**FIGURE 15: SLIDE-OUT MOTOR ROTATION**

*NOTE*

*The **front slide-out motor** is located inside the 2nd baggage compartment while the **rear slide-out motor** is accessible from inside the vehicle, under the bed structure.*

**CAUTION**

Slow down on the closing speed as the slide-out approaches its extended position. As soon as the “out limit” stoppers come in contact with their bearing surface, stop immediately the power drill rotating movement. Not doing so could overload the drive mechanism and cause damage to the reduction gearbox.

7. Finally, the inflatable seal can be re-inflated by turning the shut-off valve handle counterclockwise. Check the pressure gage on the inflatable seal regulator to see if the pressure is increasing to 15 psi ± 5 psi (Figure 14).

## 6 SLIDE-OUT 2" INSIDE RETRACTION

Use this procedure to change a damage seal or for maintenance of the rear right slide-out.

**CAUTION**

Do not retract slide-out room too far in. Retract just past the wiper seal. (Figure 21)

**CAUTION**

*Avoid using the slide-out control pad to move the slide-out inwards.* The limits are not recognized over the closed position. The slide-out will not stop and damage may occur.

1. Fully deflate the air seal by turning the shut-off valve clockwise (Item 1, Figure 48). Make sure the pressure indicator is at "0 psi".
2. Turn the ignition to the off position. Using the manual override procedure (Paragraph 5), extend the slide-out a few inches so the exterior extrusion screws located on the top of the slide-out are accessible from outside (Figure 30).
3. Some items need to be removed to provide clearance for the pinion. (Figure 16, top image)

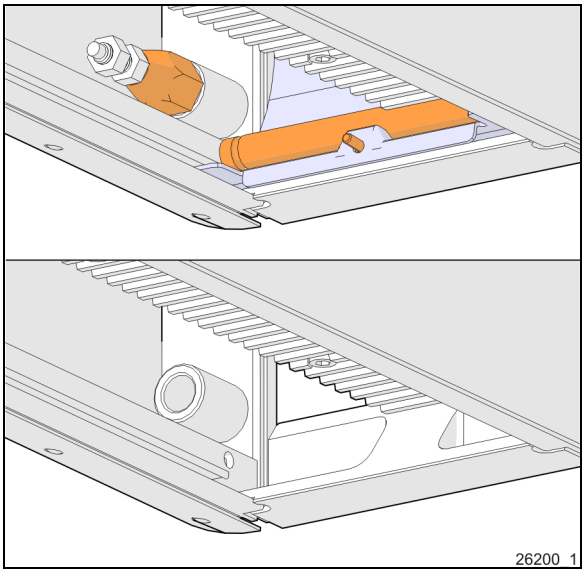


FIGURE 16: REMOVAL FOR PINION CLEARANCE.

4. Remove the flexible rail cover, refer to 7.1.2
5. Mark and remove the in limit stoppers, refer to 7.3.2. Once the procedure is completed, they should be returned in their original location to preserve room adjustment.

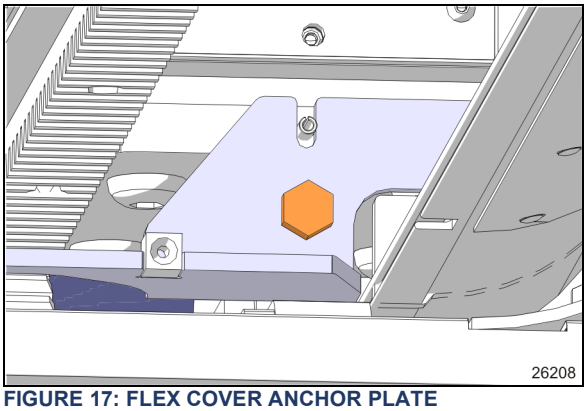


FIGURE 17: FLEX COVER ANCHOR PLATE

6. Remove the flexible cover anchor plate to provide clearance moving in. (Figure 17).
7. Using a knife, cut the sealant between the Top extrusion and the roof. (Figure 18, Figure 30)

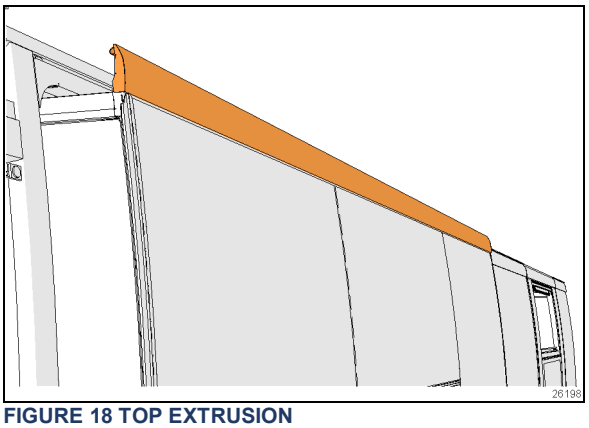


FIGURE 18 TOP EXTRUSION

8. Remove the screws holding the top extrusion to the room structure. (Figure 18)

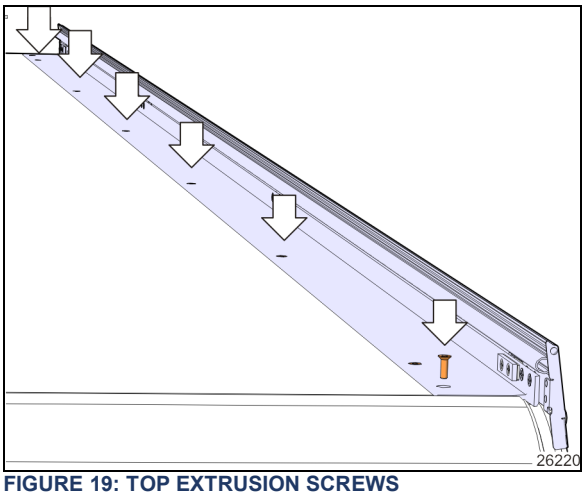


FIGURE 19: TOP EXTRUSION SCREWS

9. Carefully remove the top extrusion
10. Optionally you may disengage the pinion, see PINION GEAR DISENGAGEMENT.

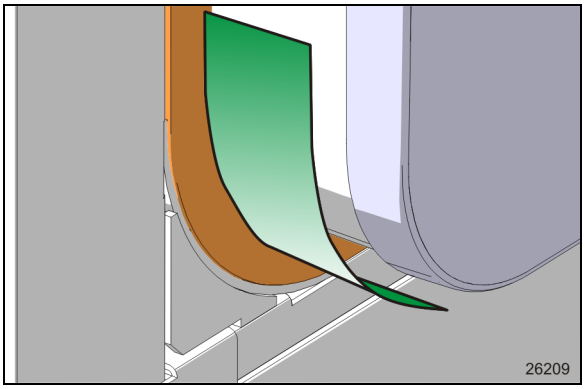


**FIGURE 20: PLASTIC SHEET -WIPER SEAL PROTECTION**

11. Protect the wiper seal by inserting a polypropylene plastic sheet between the room and the wiper seal. Do this on both bottom corners (Figure 20). This will distribute the compression of the wiper seal on a wider zone and prevent the room exterior panel corner from binding or pulling on the wiper seal.
12. Using the manual override procedure paragraph 5, move the slide-out 2" inside the vehicle just so the seal becomes accessible from the outside (Figure 21).

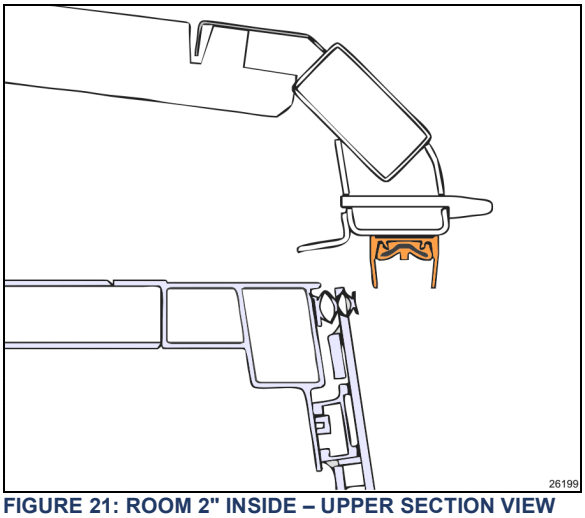


**FIGURE 21: ROOM 2" INSIDE – UPPER SECTION VIEW**

13. Once completed, use the manual override procedure to extend the slide-out and reinstall the exterior extrusion. Apply appropriate sealant on the exterior extrusion screws and between the extrusion, the roof and the edges to prevent water infiltration (Figure 30).
14. Re install all removed components.
15. Using the manual override procedure, retract the slide-out to its closed position.
16. Finally, the seal can be re-inflated by turning the shut-off valve handle counterclockwise. Check the pressure gage on the inflatable seal regulator to see if the pressure is increasing to 15 psi ± 5 psi.

# 7 MAIN COMPONENTS

## 7.1 FLEXIBLE RAIL COVER

A flexible rail cover (Figure 22) protects the linear bearing assembly from water, dust and debris. As the room moves out, it is pulled under the linear bearing and rack gear assembly. It is pushed back and curls up over the assembly or slide up in the wall as the room moves in.

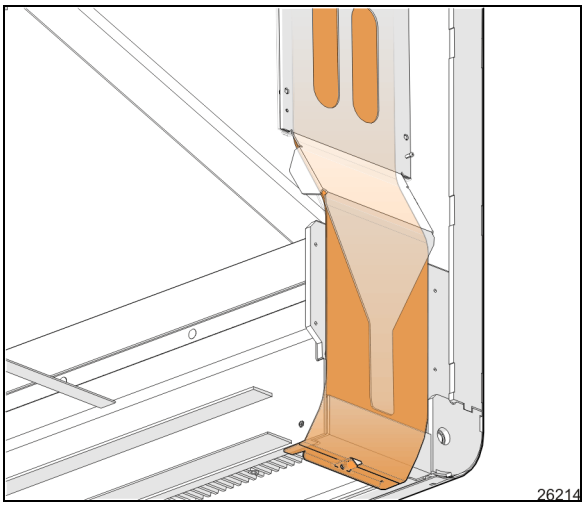


**FIGURE 22: FLEXIBLE RAIL COVER (FRONT LEFT S/O SHOWN)**

### 7.1.1 Maintenance

Regular visual inspection of the rail cover will ensure the rail and bearing system is protected from debris and dust intrusion.

If it is damaged or cracked, it must be replaced. The flexible cover is fixed by a tab and mounting screw. (Figure 23)

### 7.1.2 Removal

Deflate inflatable seal completely by turning the relief shut-off valve handle clockwise (see Figure 48, Item 1)
Push down wiper seal with a soft pry tool taking care not to damage the inflatable seal.
Unscrew the retaining screw (Figure 23)

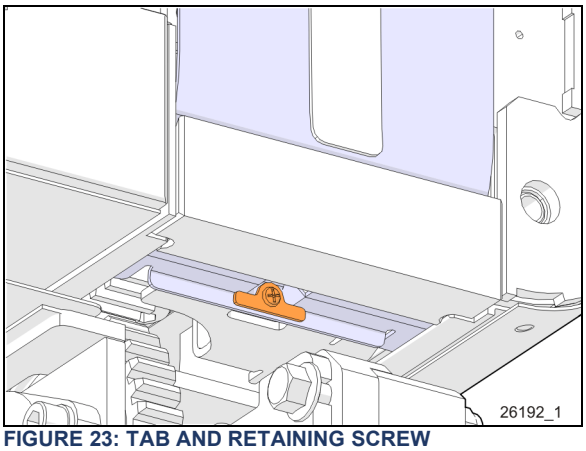


**FIGURE 23: TAB AND RETAINING SCREW**

Pull flexible cover towards the inside of the vehicle. Slip the cover out of the extrusion at the notch in extrusion bottom (Figure 24)

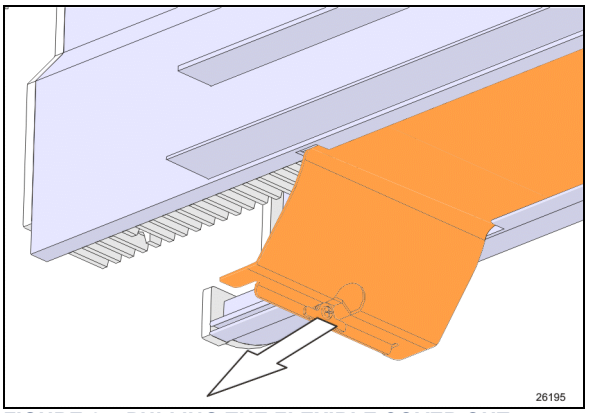


**FIGURE 24: PULLING THE FLEXIBLE COVER OUT.**

## 7.2 INNER STOPPER

The slide-outs are equipped with one inner stopper on the top horizontal member of the slide-out (Figure 26). The upper inner stoppers are used to provide a support to align the slide-out with the vehicle structure.

Note that when the “out limit” sensors are properly adjusted, the slide-out extension stops before the stoppers reach the structure keys (Figure 26 & Figure 25).

### 7.2.1 Maintenance

Check that the inner stopper screws are tight and that no damage or deformation has occurred.

### 7.2.2 Adjustment

1. Adjust the upper structure key and the inner stoppers according to Figure 27 with the seal deflated. When inflating, the seal

presses the roof structure upward slightly and at that moment, the upper inner stopper comes into contact with the upper structure key.

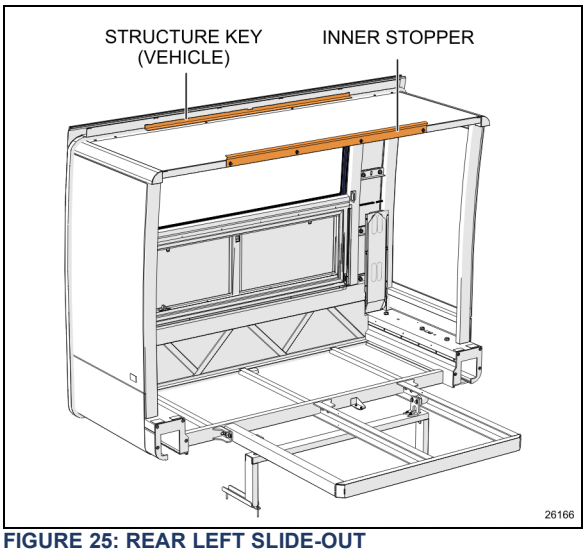


**FIGURE 25: REAR LEFT SLIDE-OUT**

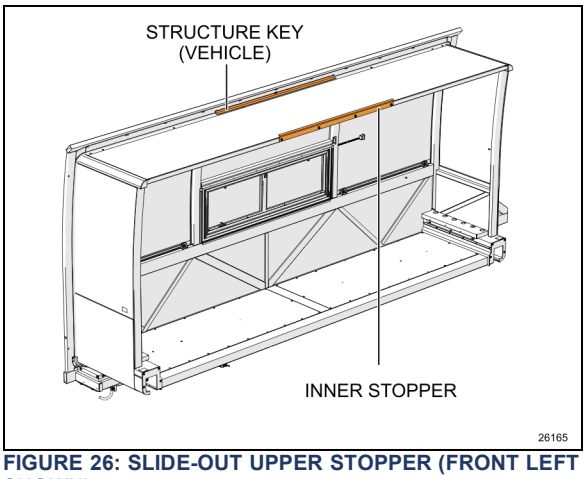


**FIGURE 26: SLIDE-OUT UPPER STOPPER (FRONT LEFT SHOWN)**

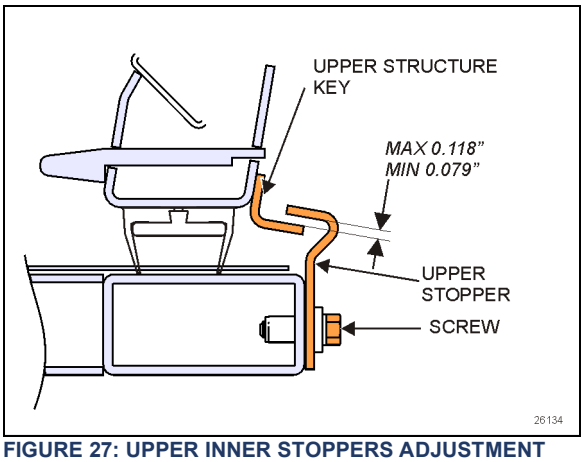


**FIGURE 27: UPPER INNER STOPPERS ADJUSTMENT**

## 7.3 "IN LIMIT" STOPPER

Each slide-out has four "in limit" stoppers. Two "in limit" stoppers are mounted under the slide-out, next to the rail (Figure 28) and two other "in limit" stoppers are mounted on the exterior extrusion at the top of the slide-out (Figure 29). These stoppers are used to adjust the outer face of the slide-out flush with the vehicle body when retracted.

### 7.3.1 Maintenance

Check that the "in limit" stoppers are clean and that there is no foreign matter accumulated between the stopper and their bearing surface. Check that the screws locking the stoppers in proper position are tight.

### 7.3.2 Removal

If removal of the lower in limit stoppers is required for maintenance, only unscrew the body. (Figure 28)
Leave the stem and jam nut in position to preserve adjustment. Adjustment may differ in fore and aft. We recommend marking the stoppers and returning them to their original position.
At reassembly, **Tighten to 7 lb-ft (10 Nm).** (Aluminum threads)

### 7.3.3 Adjustment

| *NOTE* |
| --- |
| *To properly adjust the "in limit" stoppers, the slide-out system must be turned off to prevent the "in limit" sensors from stopping the slide-out movement before having the "in limit" stoppers contacting their bearing surface.* |

1. Extend the slide-out partially.
2. Set the ignition switch to the OFF position.
3. Unscrew the flexible cover retaining screw (Figure 23)
4. Slide the flexible cover fully towards the outside to gain access to the stopper.
5. To adjust the lower "in limit" stoppers, loosen the jam nut, then rotate the stem CW or CCW to move it back or forward depending on the required adjustment. **Tighten to 7 lb-ft (10 Nm).**
6. To adjust the upper "in limit" stoppers, add or remove shims as required between the stopper and the extrusion.

7. Using the manual override procedure (paragraph 5), move the slide-out to its full "in" position.
8. With the stoppers contacting their bearing surface, check the outer face of the slide-out using a straight edge. Confirm it is flush with the vehicle body. Readjust the stoppers if required
9. Readjust the “in limit” sensor.

| *NOTE* |
| --- |
| *To make sure that the lower “in limit” stoppers are contacting their bearing surface when the slide-out is closed, put white paint on the “in limit” stopper before and check if the surfaces are marked with paint.* |

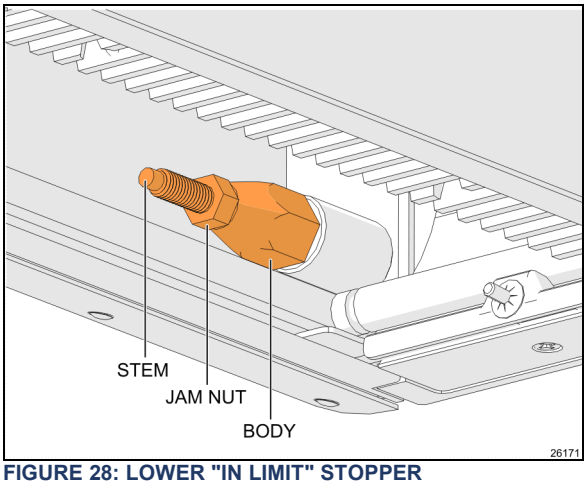


**FIGURE 28: LOWER "IN LIMIT" STOPPER**

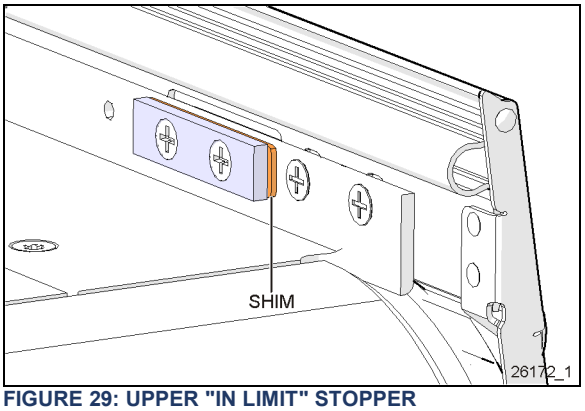


**FIGURE 29: UPPER "IN LIMIT" STOPPER**

## 7.4 EXTERIOR EXTRUSION

The exterior extrusion provides a support for the upper in limit stoppers and upper body joint.

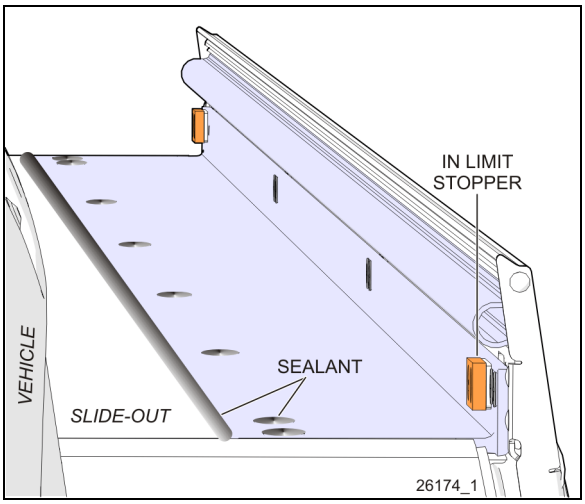


**FIGURE 30: EXTERIOR EXTRUSION**

### 7.4.1 Maintenance

Inspect the exterior extrusion for any deformation or deterioration. Check that the screws are tight. Inspect sealant condition on all screw heads and between the extrusion and the structure, and also at both ends of the extrusion. If needed, clean old sealant and replace with Sika 221 sealant or equivalent product.

## 7.5 INFLATABLE SEAL ASSEMBLY

An inflatable seal is used to prevent any type of infiltration that may occur between the vehicle body and the slide-out itself.

It is composed of an inflatable seal which is used as the *primary* sealing measure for both the retracted and extended slide-out position. There is also a wiper seal acting as a *secondary* sealing measure used to wipe water out and to ensure sealing during slide-out movement.

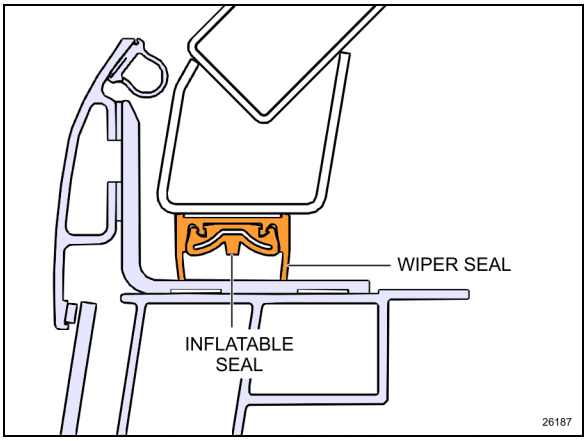


**FIGURE 31: INFLATABLE SEAL ASSEMBLY**

Seal is deflated automatically each time the slide-out is moved. The deflating valve solenoid is activated before and during slide-out movement. The deflating solenoid is deactivated upon reaching the retracted or extended position. Then the inflating solenoid is activated to re-inflate the seal.

**CAUTION**

Make sure the inflatable seal is deflated when manually moving the slide-out during service maintenance. Deflate inflatable seals completely by turning the relief shut-off valve handle clockwise (see Figure 48, Item 1).

**CAUTION**

Check before using any cleaning or adhesive product on seal, panel or glass to prevent alteration or damage.

### 7.5.1 Maintenance

The inflatable seal pressure must be set to 15 psi ± 5 psi with the pressure regulator. It is recommended to check the inflatable seal pressure once a month to ensure sealing efficiency and prevent any infiltration from outside. Check both seals for air leaks or cracks. Check the sealant between the inflatable seal and the exterior panels and glasses. Add sealant if necessary.

### 7.5.2 Seal assembly replacement

*NOTE*

*Refer to MI19-27 for detailed instructions on inflatable seal assembly replacement*

## 7.6 SECURITY PIN

During normal ride, the slide-out cannot extend by itself because the 740:1 ratio speed reduction worm gear type gearbox system is not reversible, the output shafts are self-locking. The security pin purpose is to lock the slide-out in retracted position if an accident occurs. It is built to withstand any resulting lateral acceleration of the slide-out.

The system consists of a stainless steel pin connected to a single action/spring return pneumatic cylinder (Figure 32). The pin engages in the slide-out receptacle with releasing of the parking brake. A knocking sound may be heard at this moment. An O-ring is located at the base of the pin housing to reduce knocking when the pin retracts. The lower hole on the pin housing permits water to drain. The upper hole allows inserting a small screwdriver to prevent pin rotation on air cylinder removal.

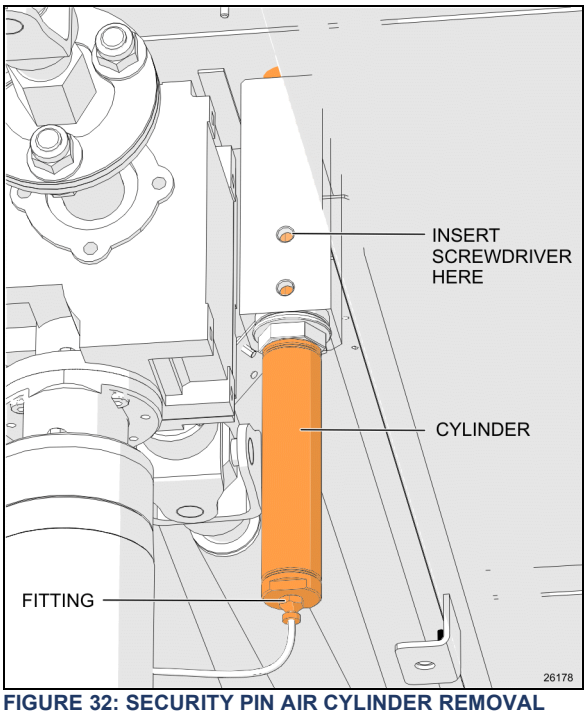


**FIGURE 32: SECURITY PIN AIR CYLINDER REMOVAL**

### 7.6.1 MAINTENANCE

Inspect air cylinder and fitting for air leaks. Periodically, check that the pin retracts and engages in the receptacle as it should when the parking brake is applied or released.

To extend the slide-out, it must be at full “IN” position with the engine running. If the pin produces excessive knocking when it engages on parking brake release, reduce air cylinder speed by adjusting the air flow regulator on the pneumatic control panel (Figure 48, item 5).

### 7.6.2 AIR CYLINDER REPLACEMENT

1. Ensure the parking brake is applied.
2. Disconnect the fitting from the cylinder base. (Figure 32).
3. Using a wrench at its lower end, unscrew the air cylinder from the pin housing.
4. Insert a small screwdriver through pin and housing to prevent pin rotation. Unscrew the cylinder rod from the pin.
5. Transfer the fitting on the new cylinder. Apply Teflon paste on threads.
6. Cylinder installation is like removal but in reverse order.

## 7.7 RACK GEAR

Slide-out movement is made by a system of racks and pinions. There are two racks on each slide-out.

### 7.7.1 MAINTENANCE

Once a year, check the rack gears for broken or worn tooth, especially the front slide-out racks. Also, check the rack fastening hole teeth that are weaker and might break (Figure 33). Replace the racks if excessive wear is present. Clean racks from sand or other debris. Check that the racks are properly secured. Check the backlash between the gear and the rack. Excessive backlash indicates rack wear.

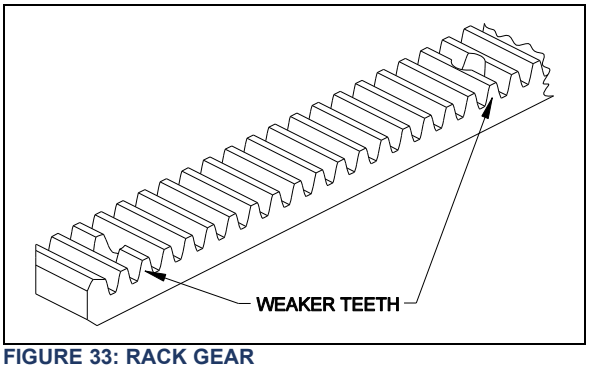


**FIGURE 33: RACK GEAR**

### 7.7.2 FRONT SLIDE-OUT RACK GEAR REPLACEMENT

1. Remove the slide-out from the vehicle (removal must be performed according to MI18-31).
2. From under the slide-out, unscrew all the rack screws and remove the rack.
3. Install a new rack and tighten the screws. Use Loctite™ 242 or equivalent product on threads.

   **TORQUE: 1.9-2.1 lb-ft (2.58-2.85 Nm) MAX**

4. Reinstall the front slide-out inside the vehicle.

### 7.7.3 REAR SLIDE-OUT RACK GEAR REPLACEMENT

1. Using the slide-out control pad, extend the slide-out about one foot.
2. If using the manual override procedure, paragraph 12, do not forget to deflate the inflatable seal completely
3. From outside, unscrew and remove only the first two screws of the rack to be changed.
4. Using the manual override procedure (paragraph 5) only, retract the slide-out to its fully closed position.
5. Rotate the pinion assembly away from the rack as described in 7.8.1
6. From under the slide-out, unscrew all the rack screws and remove the rack.
7. Install a new rack between the slide out structural rack seat and the pinion and tighten the screws. Use Loctite™ 242 or equivalent product.

   **TORQUE: 1.9-2.1 lb-ft (2.58-2.85 Nm)**

8. Rotate the pinion assembly back in place. As described in 7.8.1
9. Using the slide-out manual override procedure only, extend the slide-out about one foot.
10. Tighten the two remaining screws. Use Loctite™ 242 or equivalent product.

    **TORQUE: 1.9-2.1 lb-ft (2.58-2.85 Nm) MAX**

11. Using the slide-out control pad key or the manual override procedure, retract the slide-out to its fully closed position.
12. Re-inflate the air seal and confirm pressure is 15 psi ± 5 psi on the pressure gage. (Item 7, Figure 48)

## 7.8 PINION GEAR

A pinion gear is located on each side of the slide-out. It is used to move the slide out inward and outward.

The gear is mounted on a keyed shaft supported by two flange bearings. (Figure 34).

The *pinion assembly* (Figure 34) includes flange bearings, shaft, pinion and a mounting bracket.

The bracket rotates around a pivot screw. This screw serves as a locating pin only.

Gear play is adjusted by using tool G36772.

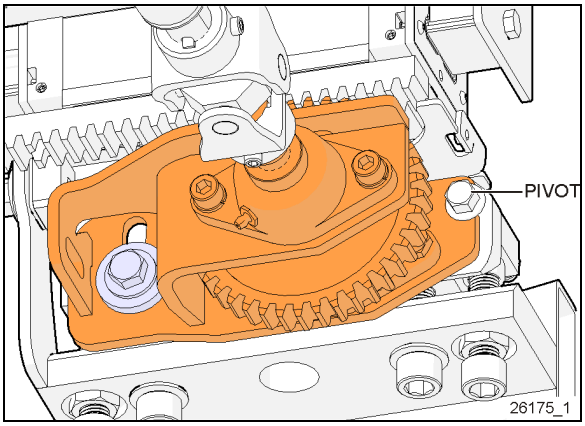


**FIGURE 34: PINION ASSEMBLY**

**CAUTION**

In normal maintenance the pivot screw should not be tampered with or removed.

If it is removed by error, apply thread locker and hand tighten.

### 7.8.1 PINION GEAR DISENGAGEMENT

*NOTE*

*To achieve proper gap between pinion and rack gear, use special tool: G36772. See 7.8.2* RACK AND PINION GAP SETTING

Pinion disengagement can be achieved by rotating the pinion assembly.

The pinion assembly rotates around a screw. (Figure 34) This screw serves as a locating pin only.

1. Slightly unscrew the slot screw to remove tension as shown in Figure 35

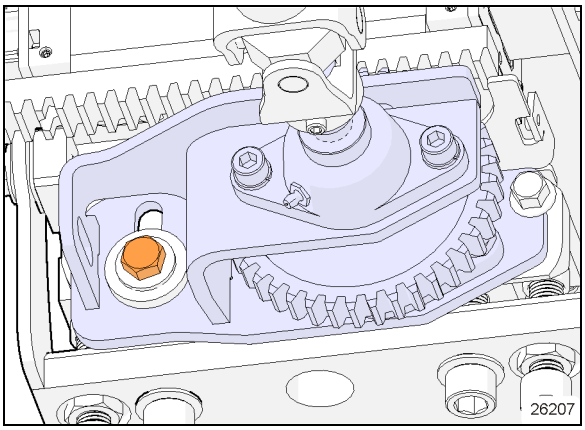


**FIGURE 35: REMOVE TENSION. SLIGHTLY UNSCREW.**

2. Rotate pinion assembly down. (Figure 36)

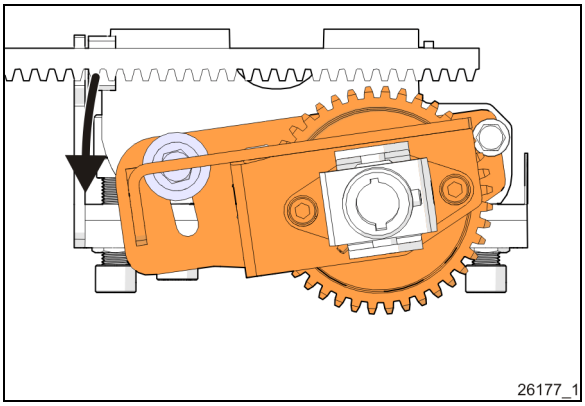


**FIGURE 36: PINION ASSEMBLY ROTATION**

3. Reverse steps to return the pinion assembly in position.
4. Set gear gap, see RACK AND PINION GAP SETTING.
5. Tighten screw to:

   **198 lb-ft (268 Nm)**

### 7.8.2 RACK AND PINION GAP SETTING

Disengage pinion and place tool G36772 between the pinion gear and rack to set the gap. Push pinion gear to the bottom of the rack gear. Tighten pinion assembly in place.

Tighten screw to: **198 lb-ft (268 Nm**).

Move the room to free the tool. Proceed to other side.

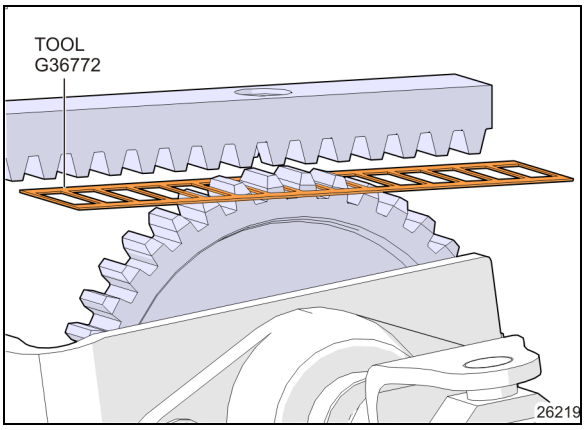


**FIGURE 37: TOOL G36772**

### 7.8.3 PINION GEAR SYNCHRONIZATION

To synchronize the pinion gears, use the adjustable flange.

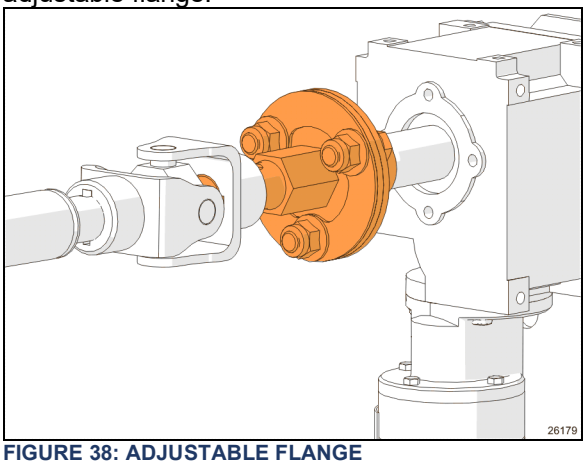


**FIGURE 38: ADJUSTABLE FLANGE**

1. Loosen flange screws. This disconnects the right angle gearbox and allows rotating the driveshaft leading to the pinion.
2. Rotate until pinion gears are synchronized.
3. The flange mating surfaces should be clean and dry to have proper friction.
4. Tighten screws to **59 lb-ft (80 Nm)**

### 7.8.4 FRONT SLIDE-OUT PINION REPLACEMENT

1. Unscrew all set screws on the drive shaft yokes (item 4 in TORQUE TABLES). Slide drive shaft towards gearbox to disengage the yoke from the pinion shaft (item 1 in Figure 39).
2. Disengage the pinion assembly. See 7.8.1.
3. Completely remove the pinion assembly. Place on a workbench.

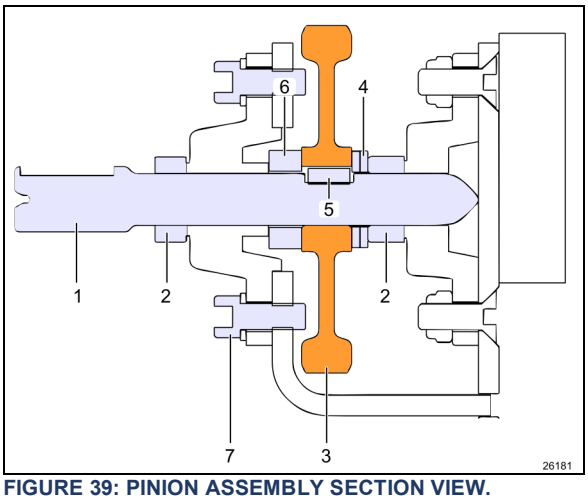


**FIGURE 39: PINION ASSEMBLY SECTION VIEW.**

1) Pinion shaft
2) Locking collars (2)
3) Pinion gear
4) Thrust washers (2)
5) Pinion key
6) Thrust bushing
7) Mounting screw, top pillow block bearing

4. Release both locking collars (2) by backing out the set screws and turning the collar.
5. Unscrew and remove the top pillow block mounting screws (7). Keep hardware.
6. Pull shaft (1) out
7. Remove old pinion gear (3). If key is damaged, replace with new.
8. On shaft (1), install thrust bushing (6), key (5), new pinion (3) and thrust washers (4).
9. Push shaft through bottom locking collar (2) and bottom pillow bearing until the shaft end contacts the bottom mounting plate.
10. Maintain shaft in contact with plate and lock bottom collar (2).

11. Using a drift and hammer, tension the eccentric locking collar (2) by means of one or two strong blows. There is a cavity on the collar made for that purpose.
12. Apply blue loctite 243 threadlocker to set screws and hand tighten.
13. Re-install the top pillow block hardware **Tighten to 48 lb-ft (65 Nm)**
14. Re-install pinion assembly.
15. On the pinion assembly, tighten screw (Figure 35) to: **198 lb-ft (268 Nm)**
16. Slide driveshaft back in place

    Tighten drive shaft yokes set screws to **27 lb-ft (37 Nm)**

### 7.8.5 REAR SLIDE-OUT PINION REPLACEMENT

The procedure is similar to the front slide-out shaft pinion replacement.
Gain access to the mechanism from inside the vehicle under the bed structure.

## 7.9 ELECTRIC MOTOR

The power is supplied by a 24V, 1/3 HP electric motor coupled with a speed reduction gearbox.

Opposite to the gearbox, the motor is equipped with a 10 mm hexagonal shaft extension allowing slide-out movement without the control pad.

This shaft extension is used to move the slide-out at low speed during the inner stoppers adjustment, the tilt adjustment or the 2" inside retraction.

See paragraph 5 for the manual override procedures.

**⚠ CAUTION**

When moving the slide-out with a cordless power drill as described in the manual override procedure, be careful as the slide-out approaches the open or closed position, in order not to overload the mechanism.

### 7.9.1 MAINTENANCE

Inspect the electrical connections and water seal condition. Check that the mounting bolts are tight (Figure 41).

### 7.9.2 REPLACEMENT

1. The slide-out must be retracted half way in.

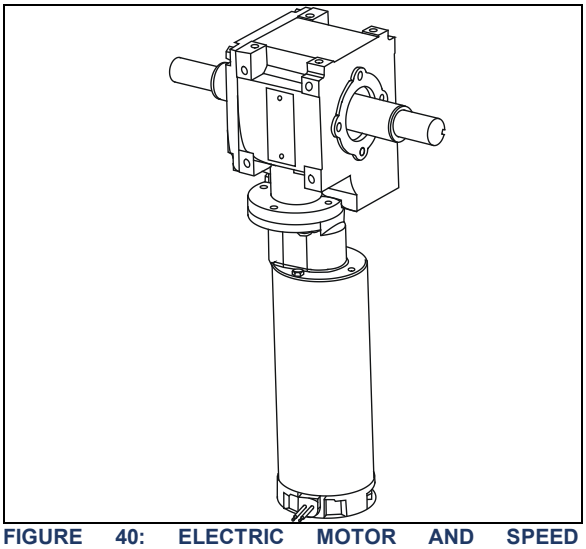

**FIGURE 40: ELECTRIC MOTOR AND SPEED REDUCTION GEARBOX**

2. Unplug the electric cable connector.
3. Remove the motor from the gearbox.
4. Fasten the new motor to the gearbox using screws.
5. Re-connect the electric cable connector.

## 7.10 SPEED REDUCTION GEARBOX

The speed reduction gearbox used is a helical worm gear type. This gearbox has a 2-stage 740:1 ratio and the output shafts are self-locking. Keys on output shafts are glued into keyseats.

### 7.10.1 MAINTENANCE

Inspect the gearbox to check if there is any leakage or backlash in the box. Replace the gearbox if excessive wear is present. Check that all bolts are tight.

The gearbox is lubricated for life and the oil should not have to be changed.

### 7.10.2 GEARBOX REPLACEMENT

1. The slide-out must be retracted half way in.
2. Disengage the drive shafts
3. Remove the 4 cap screws securing the drive motor/gearbox assembly and dismount the assembly.
4. Remove the gearbox from the motor and install the new one.
5. Reinstall the drive motor/gearbox assembly on the vehicle mounting bracket. Tighten mounting bolts in a crisscross pattern.

**TORQUE: 16-20 lb-ft (22-27 Nm)**

> **CAUTION**
>
> To prevent damaging threads, use your fingers to drive the bolts into the aluminum gearbox housing mounting holes.

6. Reinstall the drive shafts.

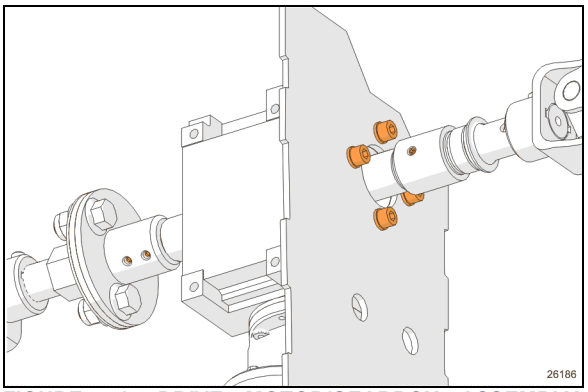


**FIGURE 41: DRIVE MOTOR/GEARBOX ASSEMBLY MOUNTING BOLTS**

## 7.11 DRIVE SHAFT

A driveshaft transmits the rotation from the gearbox to the pinion.

### 7.11.1 MAINTENANCE

Due to the low speed and low duty cycle of slide-out operation, the drive shafts do not require any maintenance or additional greasing. In

### 7.11.2 REPLACEMENT

1. The slide-out must be retracted.
2. Disengage the yokes by unscrewing the set screws and sliding out of the pinion and gearbox shafts.
3. Install the new drive shaft.
4. Tighten the yoke set screws to

   **27 lb-ft (37 Nm)**

## 7.12 FLANGE BEARINGS

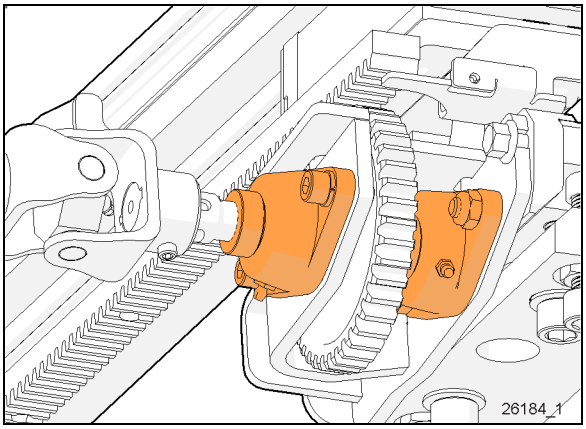


**FIGURE 42: FLANGE BEARINGS**

The flange bearings are pre-lubricated and no subsequent lubrication is required due to the very low extending and retracting speed of the slide-out system.

## 7.13 LOCKING COLLAR

The locking collar secures the shaft and the flange bearing together using friction. Once locked, it prevents axial translation and rotation of the shaft in the flange bearing bore.

### 7.13.1 INSTALLATION

Slide the locking collar along the shaft up to the flange bearing. Turn the locking collar clockwise while maintaining it pressed against the bearing.

Using a drift and hammer, tension the eccentric locking collar by means of one or two strong blows. There is a cavity on the collar made for that purpose.

Apply Loctite 243 blue thread locker and tighten the set screw to **4.4 lb-ft (6 Nm)**.

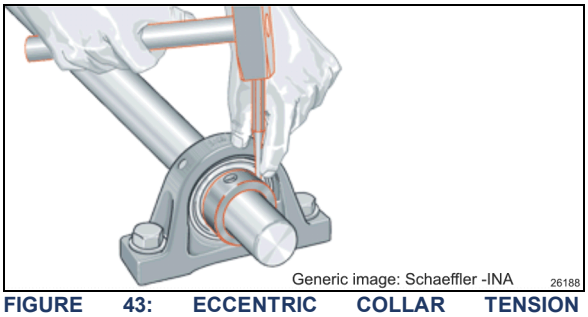


**FIGURE 43: ECCENTRIC COLLAR TENSION APPLICATION**

To remove the collar, loosen the set screw and strike with a drift and hammer in the opposite direction.

## 7.14 LINEAR BEARING AND RAIL

Rail and linear bearing system provide precise frictionless linear movement together with high load carrying capacity and high stiffness. This standardized equipment is fully interchangeable.

To prevent corrosion, an electrolytic black film treatment is performed to the rail. Do not strike the rail with metal tools, this could damage the treatment.

A flexible rail cover (Figure 22) protects the linear bearing assembly from water, dust and debris.

### 7.14.1 DUMMY RAIL

The bearing carriages are sold with a dummy rail. It prevents damage to the rolling element set if the carriage is removed from the main rail.

Additional dummy rails are useful for carriage replacement.

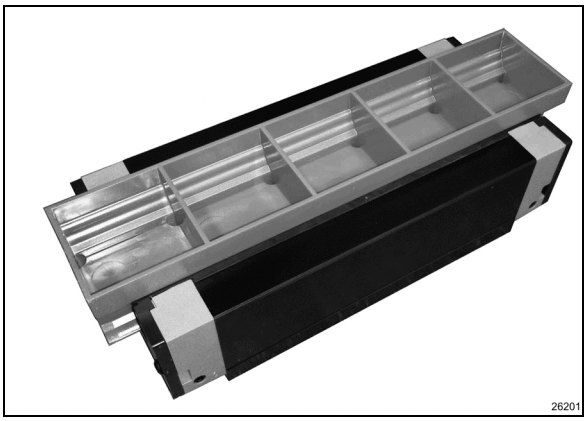


**FIGURE 44: BEARING CARRIAGE AND DUMMY RAIL**

### 7.14.2 BEARING CARRIAGE MAINTENANCE

Make every effort not to allow dust and foreign objects to enter inside the linear bearing.
Regularly inspect and clean the flexible rail cover to make sure it is in good condition.

The linear bearings are pre-lubricated and no subsequent lubrication is required.

### 7.14.3 BEARING REPLACEMENT

| *NOTE* |
| --- |
| Before starting procedure, we recommend having at least one dummy rail in hand. |

The procedure allows replacement of the bearings with minimal impact on the adjusted position of the slide-out room. Perform the procedure on one side at a time.

1. Extend the room for maintenance. See paragraph 3
2. Remove the top rail screws (3) on one side.

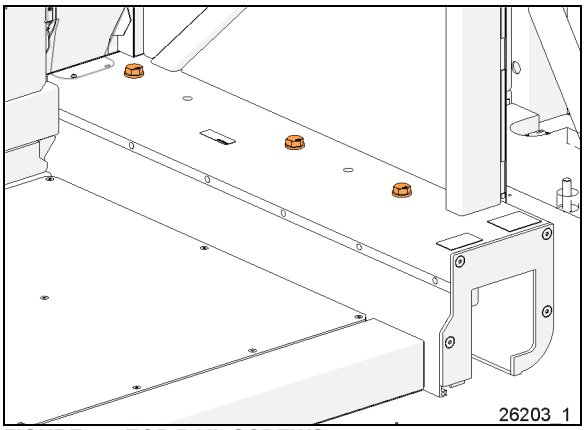


**FIGURE 45: TOP RAIL SCREWS**

3. On the same side, remove retaining screws A & B, (Figure 4).
4. Remove the lower carriage mounting screws. (Figure 46)

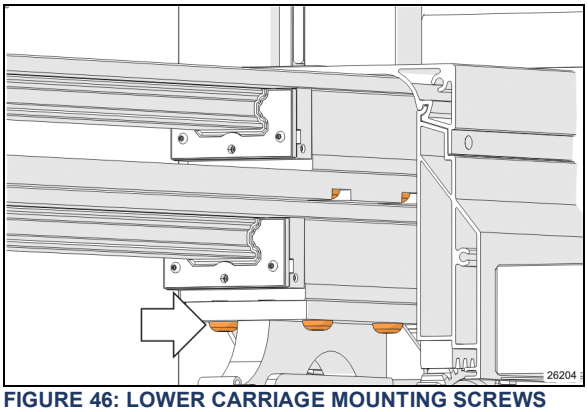


**FIGURE 46: LOWER CARRIAGE MOUNTING SCREWS**

5. Pull out bearing and rail sub-assembly. Place on a work table.
6. Turn the assembly upside down to access and remove the bearing mounting screws (Figure 47).

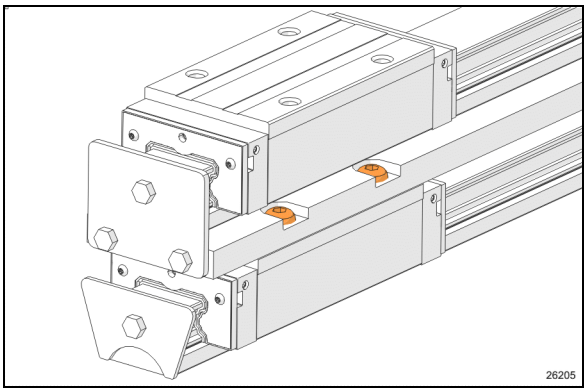


FIGURE 47: BEARING CARRIAGE MOUNTING SCREWS

7. Remove rail end plates.
8. Place the dummy rail at the end of the rail.
9. Dismount one of the two linear bearing carriages onto the dummy rail. Proceed similarly for second carriage.

**WARNING**

Always push the bearing carriage directly from the slide-out rail onto the dummy rail.

Leave dummy rail in the carriage until ready to reassemble.

10. Slip new carriages onto the slide-out rail.
11. Tighten the mounting bolts in a crisscross pattern.

    **TORQUE: 59 lb-ft (80 Nm)**

12. Reinstall end plates

    **TORQUE: 17 lb-ft (23 Nm)**

13. Re install the lower carriage mounting screws. (Figure 46).

    **TORQUE: 59 lb-ft (80 Nm)**

14. Re-install retaining screws A & B, (Figure 4).

    **TORQUE: 55-65 lb-ft (75-88 Nm)**

15. Proceed to bearing assembly on the remaining side and re-start procedure.

## 8 SLIDE-OUT PNEUMATIC SYSTEM

The slide-out is controlled by a pneumatic and electrical system. The pneumatic system consists of electrically controlled valves that operate slide-out components and control safety operations.

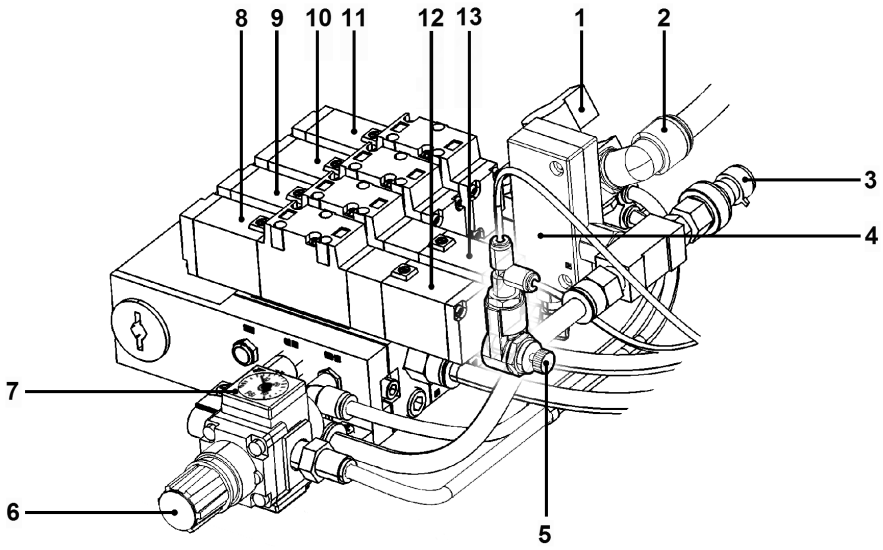


1. RELIEF SHUT-OFF VALVE AND HANDLE
2. AIR SUPPLY
3. PRESSURE TRANSDUCER
4. VACUUM GENERATOR
5. SECURITY PIN FLOW REGULATOR
6. AIR SEAL PRESSURE REGULATOR
7. PRESSURE INDICATOR
8. REAR SLIDE-OUT SEAL DEFLATION
9. FRONT SLIDE-OUT SEAL DEFLATION
10. SECURITY PIN VALVE
11. VACUUM VALVE
12. REAR SLIDE-OUT SEAL INFLATION
13. FRONT SLIDE-OUT SEAL INFLATION

**FIGURE 48: PNEUMATIC COMPONENT PANEL**

### 8.1 DESCRIPTION

#### AIR PRESSURE INLET VALVE

The slide-out air supply comes from the accessory tank.

The supply line for the pneumatic component panel (Item 2, Figure 48) is connected to the air pressure inlet valve on the pneumatic panel in the front service compartment.

#### INFLATABLE SEAL VALVE

Seal inflation and deflation is done using a 5-port 2-position manifold valve with two solenoids. One solenoid is used for inflating of the seal and the other for deflating of the seal. When one of the solenoids is activated (seal deflating valve for example), the valve will keep its state even if the solenoid is deactivated. The inflating valve solenoid is activated to re-inflate the seal when the slide-out reaches its inner or outer limit. The inflatable seal pressure is set to 15 psi ± 5 psi. In full “IN” or full “OUT” position, this pressure is continuously applied to the seal as long as the accessory air tank (which supplies the slide-out) is not empty.

#### VACUUM GENERATOR

A vacuum generator using Venturi principle is controlled by a 5-port 2-position manifold valve and is used to evacuate the air faster from the seal and to ensure that the seal surface does not stay in contact with the slide-out.

The vacuum generator valve is activated simultaneously with seal deflating valve solenoid for 10 seconds. A pressure transducer will detect a seal, vacuum valve or generator failure if -5 psig is not reached after the 10 seconds delay. In that situation, an error code will be stored in the DID. In normal operating condition, -5 psig is

a necessary condition to consider the seal as deflated.

| *NOTE* |
| --- |
| *When air pressure is relieved using the shut-off valve, the normal extending and retracting operation cycle is disabled. This is due to the pressure transducer reading 0 psig and that is higher than -5 psig (vacuum). For that reason the slide-out cannot be moved with the control pad.* |

## 8.2 MAINTENANCE

### COMPRESSED AIR LINE

Inspect all compressed air line tubing for cuts, swelling, kinks or other damage or deterioration. Inspect the pneumatic fittings and components for any leak.

The slide-out air supply comes from the accessory air tank. For maintenance information, refer to Section 12, “Brake and air system”.

### INFLATABLE SEAL CIRCUIT

The efficiency of the seal could be affected by impurities, such as white powder in the pneumatic control valve. It is recommended to inspect the inflatable seal control components once a year to prevent malfunction. In this case, remove the seal valves and clean the interior valve components using a compressed air nozzle. Do the same thing with the vacuum generators.

The inflatable seal pressure must be set to 15 psi maximum. It is recommended to check the inflatable seal pressure once a month to ensure sealing efficiency and prevent any infiltration from outside. The needle on the pressure gage should indicate between the two small green arrows on the dial (Figure 14).

## 9 SLIDE-OUT ELECTRICAL SYSTEM

**DANGER**

Never modify the slide-out electrical wiring. Any modifications may cause an unexpected slide-out action and could result in personal injuries.

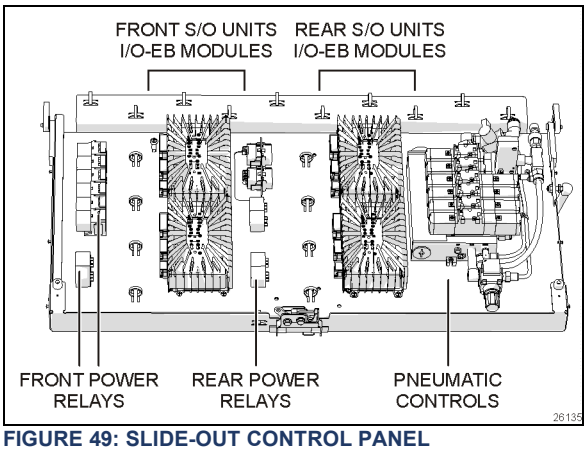


**FIGURE 49: SLIDE-OUT CONTROL PANEL**

The multiplexed slide-out electrical system is mainly composed of the MCM module, the VEC module and one I/O-EB module per installed slide-out.

For standard Prevost slide-outs, each I/O-EB module has two power relays assigned.

I/O-EB modules analyze the input signal conditions and activate outputs like pneumatic valves, retraction and extension sequence, etc. The power relays are used to supply power coming from the I/O-EB module to the electric motor and to change polarity to reverse motor rotation.

I/O-EB modules input signals are:

- Control pad switch IN;
- Control pad switch OUT;

Also, the following input signals are required for a safe operation of the slide-out:

- Pressure transducer;
- Parking brake;
- “in limit” sensor;
- “out limit” sensor;

I/O-EB modules output signals are:

- Control pad green indicator light;
- Power relay current reversing;
- Seal valve inflating solenoid;
- Seal valve deflating solenoid;
- Vacuum generator valve solenoid;
- Security pin valve solenoid;
- Electric motor, output 16 amps; one per motor

**DANGER**

Before working on the slide-out electrical system, turn the ignition key to the “OFF” position.

### 9.1 ELECTRICAL INTERCONNECTION WITH PREVOST VEHICLE

The slide-out power supply comes from the 24-volt circuit breaker in the rear electrical compartment. The other interconnections are located on the pneumatic panel and the electrical panel in the front service compartment. All the interconnections are shown on the electrical diagrams of your vehicle.

A blinking green light on the control pad means that an error condition or a missing operation condition is present on a slide-out.

### 9.2 SLIDE-OUT FUSES

The main fuse for the slide-out electrical system is F136. It is located in the rear electrical compartment

#### 9.2.1 Multiplex fuses

The multiplex module outputs are protected in current by an internal “soft-fuse”. Each output is programmed to specific maximum amperage. When an output is shorted, the current gets above the limit and the soft-fuse intervenes to

turn the output OFF. The output stays OFF until the "soft-fuse" is reset.

Turn the ignition key to the OFF position and turn to the ON position again. This resets all "soft-fuses".

**⚠ CAUTION**

Never put grease, Cortec VCI-238 or other product on the multiplex modules connector terminals.

### 9.3 PROBING VOLTAGE ON THE MULTIPLEX CIRCUITS

Multiplex modules are supplied by 24 volts.

Inactive Multiplex output = Residual voltage of 18% to 33% of supply voltage.
Inactive Multiplex input = Residual voltage of 50% of supply voltage.

*NOTE*

*For a 24V module: an active voltage would be 24V or 0V but not in between. If you measure the intermediate tensions (ex. 12V, 4V, or 8V) this must be interpreted as if the input or the output is inactive.*

### 9.4 MODULE REPLACEMENT

I/O-EB modules can be replaced and reprogrammed without having to connect a computer to the vehicle.

Refer to Section 06 under heading “MULTIPLEX MODULES REPLACEMENT” for the detailed procedure.

### 9.5 SLIDE-OUT LIMIT SENSORS

Two Hall-Effect sensors are used on each slide-out to define end limit positions. The "in limit" and "out limit" sensors detect two pairs of permanent magnets fixed on the slide-out underbody.

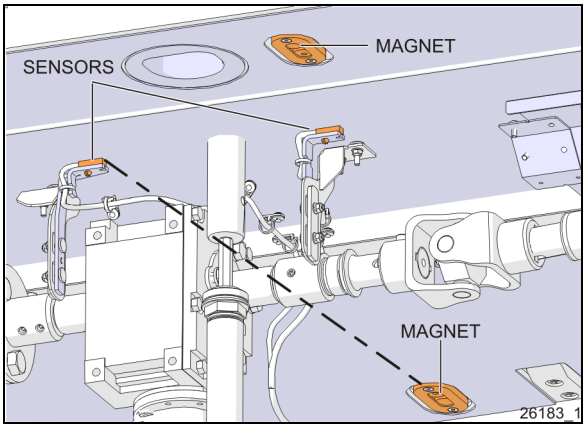


**FIGURE 50: SENSORS & MAGNETS (FRONT S/O SHOWN)**

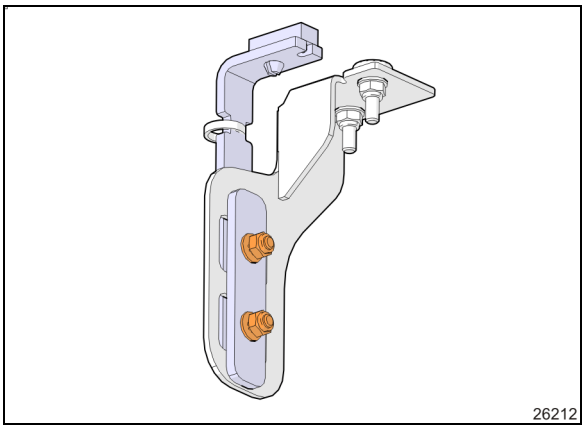


**FIGURE 51: SENSOR BRACKET (FRONT)**

#### 9.5.1 Accessibility

The front slide-out sensors can be reached from the baggage compartment. The rear slide-out sensors are accessible from inside of the vehicle, under the bed structure.

#### 9.5.2 To adjust the "in limit" sensor:

Before adjusting the “in limit” sensor, ensure that the “in limit” *stoppers* are perfectly adjusted (see paragraph 7.3.3).

1. Retract the slide-out to its full “IN” position with the “in limit” stoppers in contact with their bearing surface.

2. Loosen the “in limit” sensor mounting bracket screws and move back the sensor completely (toward the inside of the vehicle).
3. Bring slowly the sensor toward the outside of the vehicle until the LED turns on. When it does, move it 0.079” (2mm) further in the same direction. Adjust vertically to 7mm from magnet support face (Figure 52). Tighten the mounting bracket screws.

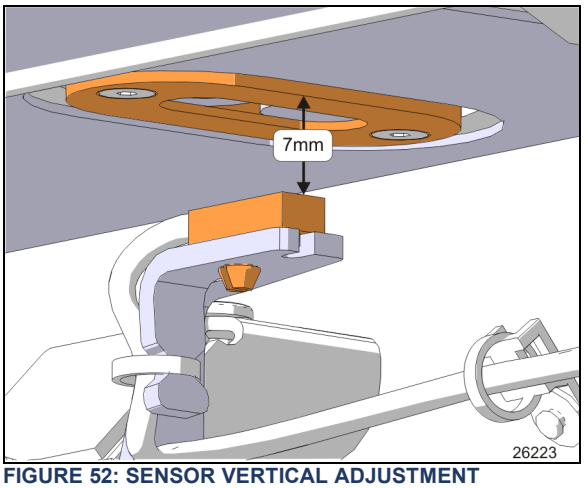


FIGURE 52: SENSOR VERTICAL ADJUSTMENT

4. Check if the “in limit” sensor is properly adjusted. At the moment when the slide-out stops during normal retraction, the “in limit” stoppers must contact their bearing surface. Put white grease on the “in limit” stopper beforehand to visually confirm the system stops the motion before hitting the surface. There should be a grease mark on the surface.

9.5.3 To adjust the "out limit" sensor:

Before adjusting the “out limit” sensor, ensure that the inner stoppers are perfectly adjusted (see paragraph 3).

1. The slide-out is slightly tilted except when it is in its full “IN” or “OUT” position. Extend the slide-out near its full “OUT” position. When the slide-out straightens up and is perpendicular with the vehicle body, stop the slide-out.
2. Loosen the “out limit” sensor mounting bracket screws and move back the sensor completely (toward the inside of the vehicle).
3. Bring slowly the sensor toward the outside of the vehicle until the led turns on. When it does, move it 0.079” (2mm) further in the same direction and adjust vertically to 7mm from magnet support face (Figure 52). Tighten the mounting bracket screws.

| NOTE |
| --- |
| *When the “out limit” sensor is properly adjusted, the slide-out extension stops before the side inner stoppers reach the vehicle structure.* |

## 10 SLIDE-OUT EXTERIOR FINISHING PANELS & WINDOWS

| NOTE |
| --- |
| *The removal and installation procedures are all based on standard service methods described in section 18: BODY. Refer to this manual for procedures, tools, cleaner, adhesives and other product needed.* |

## 11 WELDING PRECAUTIONS

| CAUTION |
| --- |
| Prior to arc welding on the vehicle, refer to the Welding Precautions Procedure Prior To Welding" in section 00 GENERAL of this manual to avoid serious damage to the vehicle components. |

## 12 FINISHING PRECAUTIONS FOR CONVERTERS

No drilling is allowed in the zones identified by Figure 53, and Figure 54. *This applies on both sides of the slide-out room.*

This precaution is to avoid drilling through the flexible rail cover (Figure 22) which slides inside the slide out wall or rail housing when the slide-out is closed

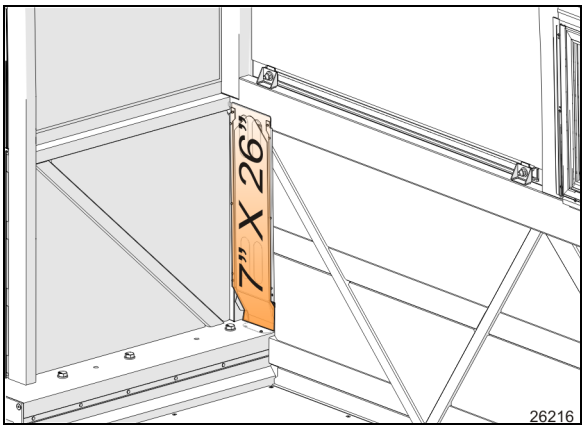


**FIGURE 53: FRONT LEFT SLIDE-OUT "NO DRILLING" ZONE**

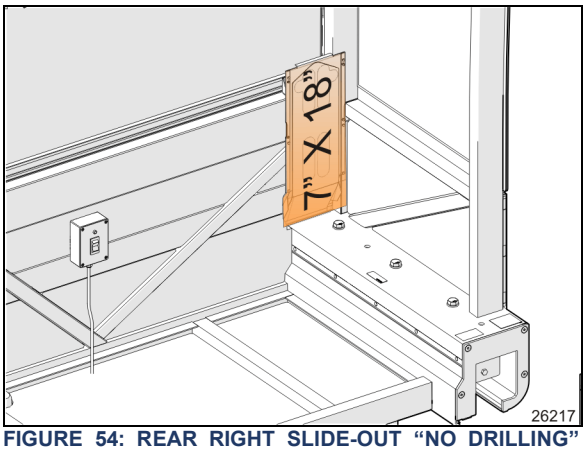


**FIGURE 54: REAR RIGHT SLIDE-OUT "NO DRILLING" ZONE**

## CAUTION

Never remove the structural reinforcement angle brackets inside the baggage compartments. Doing so could lead to termination of the warranty coverage concerning the structural integrity.

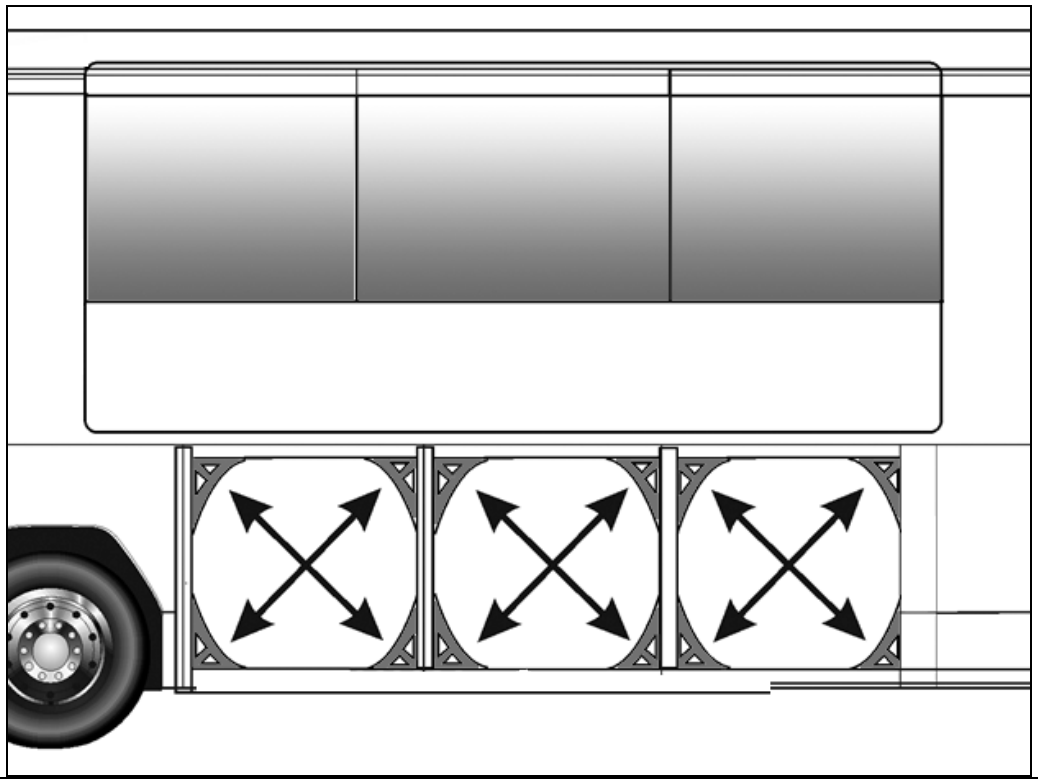

## 13 CONVERSION CHECKLIST

The converter should check these points before closing the walls covering the mechanism:

1. Check that the front slide-out exterior panels are parallel with the vehicle panels when retracted. If not, readjust the tilt.
2. Check that the slide-out is straight when completely extended, and that it leans against all inner stoppers.
3. Check slide-out operation. The slide-out should retract and extend smoothly without vibration.

Final check:

- Make sure the slide-out air pressure inlet valve is completely opened.
- Check the inflatable seal air pressure on the pressure regulator. The pressure should be 15 psi ± 5 psi.

## 14 TROUBLESHOOTING

### 14.1 ERROR CONDITION OR MISSING OPERATION CONDITION

When an error condition or a missing operation condition is detected on a slide-out being operated, the green indicator light will blink on the control pad.
Turning the ignition OFF and ON again, will stop the blinking and reset the fault. If the error condition or a missing operation condition is still present, the blinking will start again the next time that the slide-out is operated.
To initiate fault diagnostic, use the DID right after operating the slide-out without cycling the ignition switch.

| *NOTE* |
| --- |
| *The DID is the main tool for troubleshooting a multiplex vehicle. It is essential to have it in working condition.* |

**Fault diagnostic**

To get detailed information about the error condition or the missing operation condition, request a diagnostic using the dashboard Driver's Info Display (DID). Check if there are active errors in the slide-out electrical system. Highlight the DIAGNOSTICS menu and click Enter, highlight the VIEW ACTIVE FAULTS menu and click Enter, then highlight the ELECTRICAL SYSTEM menu and click Enter to request a diagnostic of the electrical system from the MCM.

Press the enter key. If applicable, the DID shows the device ID, the fault messages or fault codes recorded. When more than one fault is recorded, an arrow pointing down appears on the right of the display. Use the down arrow to see all the fault messages.

Once the problem is corrected, the DID will still shows the fault as being active. Leave VIEW ACTIVE FAULTS up to the main menu. Then return to DIAGNOSTICS, VIEW ACTIVE FAULTS, and then ELECTRICAL SYSTEM. The DID should not display any faults

## 14.2 TROUBLESHOOTING TABLE

| PROBLEM | CAUSE | CORRECTIVE ACTION |
|---|---|---|
| The slide-out functions normally but the handheld control green indicator light blinks | Something is defective and may eventually create an issue if not repaired. The problem may be:<br><br>A. Faulty limit sensor causing the slide-out to stop in overcurrent;<br><br>B. CAN network problem causing the transmission inhibit safety to be non-operational;<br><br>C. Vacuum pressure transducer disconnected or damaged (vacuum is applied for a fixed time of 7 seconds);<br><br>D. Seal inflating valve solenoid open circuit (the seal is not re-inflated and water can penetrate in the vehicle);<br><br>E. Security pin valve solenoid open circuit (the security pin is not extended while vehicle is riding). | Request a diagnostic from the DIAGNOSTIC menu using the DID. |
| The slide-out does not extend | A. The parking brake is not seen by the controller as being applied;<br><br>B. Not enough air pressure in the accessory air tank to permit proper operation of the vacuum generator;<br><br>C. Faulty vacuum generator, connection to the vacuum generator open, seal deflating valve solenoid open circuit;<br><br>D. I/O-B module output defective, regulated 5-volt supply to sensors shorted to ground, “out limit” sensor shorted to ground, connection to the motor negative relay solenoid open circuit; | A. Make sure the parking brake is applied. Confirm parking brake application with the parking brake light on the telltale panel.<br><br>B. Run the engine at fast idle a few minutes to increase air pressure in the accessory air tank and try again.<br><br>C. Turn the relieving shut-off valve handle clockwise to deflate the seal, disconnect the pressure transducer. Do not forget to reconnect the pressure transducer and to close the relieving shut-off valve. Failure to do so could damage the seal and lead to water infiltration;<br><br>D. Operate the slide-out with the manual override procedures. |

| PROBLEM | CAUSE | CORRECTIVE ACTION |
|---|---|---|
| The slide-out does not retract | A. Not enough air pressure in the accessory air tank to permit proper operation of the vacuum generator;<br><br>B. Faulty vacuum generator, connection to the vacuum generator open, seal deflating valve solenoid open circuit;<br><br>C. I/O-B module output defective, “in limit” sensor shorted to ground, connection to the motor positive relay solenoid open circuit; | A. Run the engine at fast idle a few minutes to increase air pressure in the accessory air tank and try again.<br><br>B. Turn the relieving shut-off valve handle clockwise to deflate the seal, disconnect the pressure transducer. CAUTION, do not forget to reconnect the pressure transducer and to close the relieving shut-off valve. Failure to do so could damage the seal and lead to water infiltration;<br><br>C. Operate the slide-out with the manual override procedures. |
| When extending, the slide-out stops after having extended by approximately 1 inch | A. The security pin valve solenoid circuit is shorted to (+) 24-volt and the security pin remains engaged; | A. Disconnect air supply from the security pin cylinder; |
| Transmission DRIVE range or REVERSE cannot be selected (the slide-out telltale light is illuminating). | A. Slide-out not in full "in" position;<br><br>B. Faulty “in limit” sensor. The slide-out is retracted but the controller doesn’t not see it as retracted. | A. Retract slide-out.<br><br>B. Confirm that all slide-outs are retracted. On the slide-out control panel, disconnect the 5 pins green connector on the I/O-B module to disable the transmission inhibit. CAUTION, this is a temporary measure, the vehicle must be serviced as soon as possible. |
| Slide-out does not retract or extend when depressing the control switch. | A. Electrical motor failure;<br><br>B. Speed reduction gearbox failure;<br><br>C. Security pin still engaged in receptacle; (Standard Prevost Slide-out) | A. Replace motor.<br><br>B. Inspect gearbox components, particularly: bronze wheel or first reduction stage output shaft. Replace damaged components.<br><br>C. Disengage pin and check if air cylinder is damaged. |
| Slide-out is not straight once retracted or during retracting or extending operation. | A. Broken rack tooth;<br><br>B. Faulty rack attachment;<br><br>C. Faulty shaft key at speed reduction gearbox; Pinion slipping,<br><br>D. Shaft breaking;<br><br>E. Flange bearing attachment loosen; | A. Replace rack.<br><br>B. Tighten mounting bolts, apply proper torque and use Loctite thread locker (replace rack if necessary).<br><br>C. Replace key or component having a damaged keyway.<br><br>D. Replace shaft.<br><br>E. Reposition shaft and tighten flange bearing mounting bolts. |

| PROBLEM | CAUSE | CORRECTIVE ACTION |
|---|---|---|
| Slide-out moves out slightly when vehicle is traveling. | A. Lower "in limit" stoppers are not leaning against the structure at the moment when the "in limit" sensor detects the magnet; | A. Adjust the sensor position in order to have contact of the stoppers against the structure at the time when the system stops the slide-out retraction. |
| Slide-out moves when vehicle is moving. | A. Inflatable seal not inflated | A. Check seal condition and seal air supply system. |
| Slide-out retracts or extends difficultly. | A. Foreign matters accumulated in the linear bearing; | A. Inspect the linear bearing end seals to see if they are in good condition. If not, replace the end seals and clean the inside of linear bearing. |
| Slide-out oscillates vertically when retracting or extending | A. Linear bearing balls hardened due to a too heavy load;<br>B. Linear bearing mounting bolts loosen; | A. If balls clearance is excessive, replace linear bearing.<br>B. Tighten mounting bolts. |
| Slide-out vibrating or noisy when extending or retracting | A. Worn-out anti-friction coating on wiper seal around slide-out;<br>B. Debris in protective flexible shield guides; | A. Replace wiper seal.<br>B. Inspect and remove debris. |
| Slide-out does not retract to its full "in" position | A. Interference between the exterior extrusion and the vehicle upper horizontal member above the slide-out; | A. Check for outer wiper seal lip straightness on the slide-out roof. |
| Bottom of slide-out not flush with vehicle body | A. Broken or misadjusted lower "in limit" stopper;<br>B. Lower "in limit" stoppers are not leaning against the structure at the moment when the "in limit" sensor detects the magnet; | A. Replace or adjust lower "in limit" stopper.<br>B. Adjust the sensor position in order to have contact of the stoppers against the structure when slide-out is stopped. |
| Top of slide-out not flush with vehicle body | A. Broken or misadjusted leveling or retaining screw;<br>B. Faulty upper “in limit" stopper; | A. Check and replace screw.<br>B. Replace upper “in limit" stopper. |
| Lower edge of slide-out not parallel with vehicle body opening | A. Faulty leveling and retaining screw (4 screws each side). | A. Inspect screw, replace and adjust slide-out level. |

| PROBLEM | CAUSE | CORRECTIVE ACTION |
|---|---|---|
| Water tightness problem | A. Inflatable seal and/or wiper seal damaged or unstuck;<br>B. Insufficient air pressure in the seal;<br>C. No air pressure in the slide-out pneumatic system;<br>D. Sealant missing;<br>E. Wiper seal draining hole clogged;<br>F. Faulty water recovery pan;<br>G. Faulty internal gutter; | A. Check both seals condition.<br>B. Check the pressure regulator, the relieving shut-off valve and the seal valve condition.<br>C. Check the slide-out air pressure inlet valve condition and the accessory air tank pressure.<br>D. Check the exterior extrusion screws, the windows and the exterior panels sealant condition.<br>E. Unclog draining hole.<br>F. Check the recovery pan.<br>G. Check internal gutter. |
| Knocking sound at end of travel when extending slide-out | A. Inner stoppers misadjusted; | A. Readjust the inner stoppers. |
| Knocking sound when parking brake is released | A. Security pin retracts too rapidly; | A. Adjust security pin air flow regulator. |
| Inflatable seal damaged or removed, or wiper seal unstuck from the structure. | A. Slide-out has been retracted or extended with the manual procedure with the inflatable seal not deflated;<br>B. Pressure transducer malfunction;<br>C. Seal valve malfunction;<br>D. Excessive load in the slide-out;<br>E. Slide-out not centered in the structure opening; | A. Always deflate the seal when manually retracting or extending the slide-out.<br>B. Check the pressure transducer condition, replace if necessary.<br>C. Check the seal valve condition.<br>D. Reduce load or distribute load evenly in order to respect the deflection criterion and slide-out load capacity.<br>E. Readjust the slide-out height and center horizontally in opening. |
| Friction at end of travel when in full OUT position or at beginning of retraction | A. Interference between upper structure key and upper inner stopper; | A. Readjust the upper inner stopper. |

## 14.3 SLIDE-OUT FAULT MESSAGE ON DID

| SID # | FAULT MESSAGE | TEXT | PROBABLE CAUSE | CORRECTIVE ACTION |
|---|---|---|---|---|
| 1 | Voltage Module AE58 | Value Too Low | Module AE58 sees a Voltage less than 22.0V on its power supply connector.<br>Breaker, fuse or wiring harness open. | Check/ reset circuit breaker F136.<br>Fix wiring harness |
| 2 | No Response Mod AE58 | Data Error | MCM module does not receive CAN communication from module AE58.<br>Connector J3 is disconnected or CAN wiring harness open, or module AE58 is defective. | Check connection AE58 J3<br>Fix CAN wiring harness<br>Replace module AE58 |
| 3 | Voltage Module AE59 | Value Too Low | Module AE59 sees a Voltage less than 22.0V on its power supply connector.<br>Breaker, fuse or wiring harness open. | Check/ reset circuit breaker F136.<br>Fix wiring harness |
| 4 | No Response Mod AE59 | Data Error | MCM module does not receive CAN communication from module AE59.<br>Connector J3 is disconnected or CAN wiring harness open or module AE59 is defective. | Check connection AE59 J3<br>Fix CAN wiring harness<br>Replace module |
| 5 | SldO Vacuum Sensor | Open Circuit | Pressure transducer disconnected.<br>Faulty pressure transducer.<br>Connection or wiring harness open. | Check/ replace vacuum transducer<br>Check/ reconnect the connector SESo1<br>Fix wiring harness |
| | | Shorted High | Pressure transducer is faulty<br>Wiring harness shorted to 12v or 24v | Check/ replace vacuum transducer<br>Fix wiring harness |
| 6 | SldO Seal Def Vac | Mechanical Fault | Does not reach vacuum level (-5 PSIG).<br>Slide-out seal damaged or air leak in the seal deflating pneumatic circuit.<br>Accessories tank near empty. | Check the seals and the pneumatic circuit.<br>Run engine at fast idle to recharge accessories tank. |
| 7 | SldO Motor/Limit se | Mechanical Or Electrical Fault | **Standard Prevost slide-outs**:<br>Slide-Out motor is activated for more than 7 seconds and the limit sensor from the departing end is still seen as active.<br>Either the motor is defective and the slide-out is not moving or the limit sensor from the departing end is broken active. | **Standard Prevost slide-outs**:<br>If the slide-Out is not moving, then check the motor and its wiring.<br>If the slide-out is moving, then check the limit sensor from the departing end, also check and clear any obstruction that might prevent the slide-out from moving. (If problem occurs when extending, check the in-limit sensor. If the problem occurred when retracting, then check the out-limit sensor). |

| SID # | FAULT MESSAGE | TEXT | PROBABLE CAUSE | CORRECTIVE ACTION |
|---|---|---|---|---|
| | | | | |
| 8 | SldO Park Br Signal | Mechanical Or Electrical Fault | Parking brake is not applied.<br>Wire between parking brake switch and MCM is open. | Make sure the parking brake is applied and the parking brake telltale illuminates.<br>Check / replace parking brake switch.<br>Fix wiring harness. |
| | | Shorted High | Wire between parking brake switch and MCM is shorted to 12v or 24v. | Fix wiring harness. |
| 9 | SldO Mot SpeedA Ctr | Shorted High | Wiring harness shorted to 12v or 24v | Fix wiring harness |
| | | Current Above normal | Security pin or object stop the movement of a slide-out | Check / fix security pin functionality.<br>Check / remove any object around the slide-out. |
| 10[2] | SldO Mot SpeedB Ctr | Shorted High | Wiring harness shorted to 12v or 24v | Fix wiring harness |
| | | Current Above normal | Security pin or object stop the movement of a slide-out | Check / fix security pin functionality.<br>Check / remove any object around the slide-out. |
| 11 | SldO Remote Led | Shorted High | LED or wiring harness shorted to 12v or 24v | Fix LED or wiring harness |
| | | Shorted Low | Led or wiring harness shorted to ground | Fix LED or wiring harness |
| | | Open Circuit | LED is broken.<br>Bad connection on control pad.<br>Wiring harness is cut. | Check / fix remote LED or connection<br>Check /fix wiring harness |
| | | Current Above normal | Led or wiring harness shorted to 12v or 24v | Fix Led or wiring harness |
| 12 | SldO Seal Inf Sol | Shorted High | Solenoid or wiring harness shorted to 12v or 24v | Fix solenoid or wiring harness |
| | | Shorted Low | Solenoid or wiring harness shorted to ground | Fix solenoid or wiring harness |
| | | Open Circuit | Solenoid is broken or open.<br>Bad connection on solenoid or bloc valve.<br>Wiring harness is cut. | Check / fix solenoid or connection<br><br>Check /fix wiring harness |
| | | Current Above normal | Solenoid or wiring harness shorted to 12v or 24v | Fix solenoid or wiring harness |
| 13 | SldO Seal Def Sol | Shorted High | Solenoid or wiring harness shorted to 12v or 24v | Fix solenoid or wiring harness |
| | | Shorted Low | Solenoid or wiring harness shorted to ground | Fix solenoid or wiring harness |
| | | Open Circuit | Solenoid is broken or open.<br>Bad connection on solenoid or bloc valve.<br>Wiring harness is cut. | Check / fix solenoid or connection.<br><br>Check /fix wiring harness |
| | | Current Above normal | Solenoid or wiring harness shorted to 12v or 24v | Fix solenoid or wiring harness |
| 14 | SldO Vacc Gen Sol | Shorted High | Solenoid or wiring harness shorted to 12v or 24v | Fix solenoid or wiring harness |
| | | Shorted Low | Solenoid or wiring harness Shorted to ground | Fix solenoid or wiring harness |

[2] For SID items 9 & 10 (*SldO Mot SpeedX Ctr*) it should be noted that standard Prevost slide-outs are now only wired to ''*SpeedA Ctr output*''. ''*SpeedB Ctr output*'' can be used as a spare in the event output A fails.

| SID # | FAULT MESSAGE | TEXT | PROBABLE CAUSE | CORRECTIVE ACTION |
|---|---|---|---|---|
| | | Open Circuit | Solenoid is broken or open.<br>Bad connection on solenoid or bloc valve.<br>Wiring harness is cut. | Check / fix solenoid or connection<br><br>Check / fix wiring harness |
| | | Current Above normal | Solenoid or wiring harness shorted to 12v or 24v | Fix Solenoid or wiring harness |
| 15 | SldO Mot Neg Rly | Shorted High | Relay coil or wiring harness shorted to 12v or 24v | Fix relay coil or wiring harness |
| | | Shorted Low | Relay coil or wiring harness shorted to ground | Fix relay coil or wiring harness |
| | | Open Circuit | Relay coil is broken or open.<br>Bad connection on relay.<br>Wiring harness is cut. | Check / fix relay coil or connection<br>Check / fix wiring harness |
| | | Current Above normal | Relay coil or wiring harness shorted to 12v or 24v | Fix relay coil or wiring harness |
| 16 | SldO Mot Pos Rly | Shorted High | Relay coil or wiring harness shorted to 12v or 24v | Fix relay coil or wiring harness |
| | | Shorted Low | Relay coil or wiring harness shorted to ground | Fix relay coil or wiring harness |
| | | Open Circuit | Relay coil is broken or open.<br>Bad connection on relay.<br>Wiring harness is cut. | Check / fix relay coil or connection<br>Check / fix wiring harness |
| | | Current Above normal | Relay coil or wiring harness shorted to 12v or 24v | Fix relay coil or wiring harness |
| 17 | SldO Open Sw | Shorted High | Switch or wiring harness shorted to 12v or 24v | Fix switch or wiring harness |
| 18 | SldO Close Sw | Shorted High | Switch or wiring harness shorted to 12v or 24v | Fix switch or wiring harness |
| 19 | SldO Limit In Se | Shorted High | Sensor or wiring harness shorted to 12v or 24v | Fix sensor or wiring harness |
| 20 | SldO Limit Out Se | Shorted High | Sensor or wiring harness shorted to 12v or 24v | Fix sensor or wiring harness |
| 21 | SldO Secu Pin Sol | Shorted High | Solenoid or wiring harness shorted to 12v or 24v | Fix solenoid or wiring harness |
| | | Shorted Low | Solenoid or wiring Harness shorted to ground | Fix solenoid or wiring harness |
| | | Open Circuit | Solenoid is broken or open.<br>Bad connection on solenoid or bloc valve.<br>Wiring harness is cut. | Check / fix solenoid or connection.<br><br>Check / fix wiring harness |
| | | Current Above normal | Solenoid or wiring harness shorted to 12v or 24v | Fix solenoid or wiring harness |
| 22 | SldO Limit In Out | Mechanical Or Electrical Fault | **Standard Prevost slide-out**:<br>In Limit and Out Limit are seen at the same time.<br>In Limit or Out Limit problem. | Check / replace in limit or out limit sensors<br>Fix wiring harness. |
| 23 | Limit Sensor 5 V supply | Shorted Low | 5v I/O-BE output is less than 2v.<br>Wiring harness is open or shorted to ground. | Check 5v output on I/O-BE / replace I/O-BE module.<br>Fix wiring harness. |
| | | Mechanical Fault | Bad sensor adjustment | |

# MAINTENANCE INFORMATION

**MI18-31A**

| | | |
|---|---|---|
| DATE : | July 2018 | SECTION : 26 SLIDE-OUT |
| SUBJECT : | **SLIDE OUT REMOVAL PROCEDURE** | |

Revision: A

2019-07-17

*IMPORTANT NOTICE*

*This modification is recommended by Prevost to increase your vehicle's performance. Note that no reimbursement will be awarded for carrying out this modification.*

## APPLICATION

| Model | VIN  |
|---|---|
| H3-45 VIP motorhomes<br>Model Year : 2019- | From 2PCV33496**K**C71**0295**. |
| X3-45 VIP motorhomes<br>Model Year : 2019- | From 2PCBS3490**K**C736**462** |
| X3-45 VIP commercial use<br>Model Year : 2019- | From 2PCCS3491**L**C73**6492** |

## DESCRIPTION

This procedure is for the removal of the Prevost slide-outs.

## MATERIAL

- Two straight 4x4 beams of sufficient length for the slide-out, wood or metal.
- Soft, clean material carpet or blanket.

## PROCEDURE

**DANGER**

Park vehicle safely, apply parking brake, stop engine. Prior to working on the vehicle, set the ignition switch to the OFF position and trip the main circuit breakers equipped with a trip button.

**PREPARATION**

## CAUTION

Prepare scissor lift tables with a combined *minimum* Safe Working Load (SWL) rating of **2000 lb (1 ton)** to support the slide-out room.

This SWL value takes into account the largest model of slide-out. It also includes any flooring and trim that may be installed. Slide out must be empty for the procedure.

## CAUTION

Two 4x4 beams will be placed transversally under the room (Figure 1). Beams should be cut to length to support the maximum width of the room while clearly avoiding the rounded corner trim, (⚠ in Figure 1).

Upon placement of the beams under the room, place the outer beam inside to avoid the room exterior finish panel (⚠ in Figure 1). Place the inner beam as far inside as possible.

Prepare clean, soft material to place on top of the beams to avoid damaging the underside of the room.

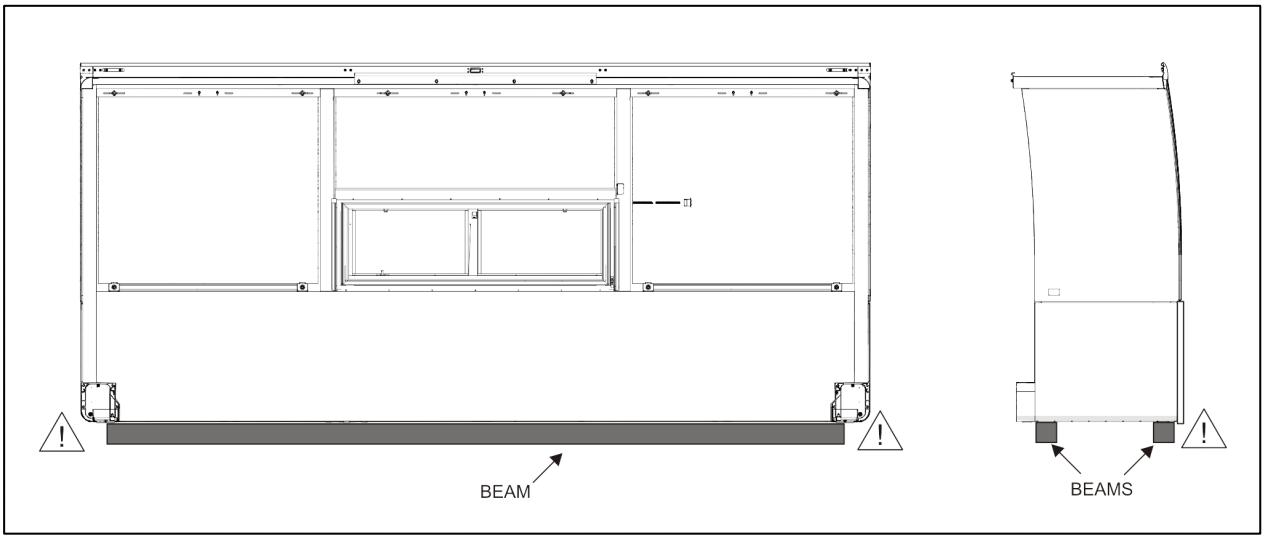


**FIGURE 1: BEAM PLACEMENT**

## ROOM PREPARATION

1. From the inside of the vehicle, remove any capping or trims hiding linear bearings at the bottom of the slide-out on both sides.
2. Then remove the room extrusion end caps. (Figure 2)

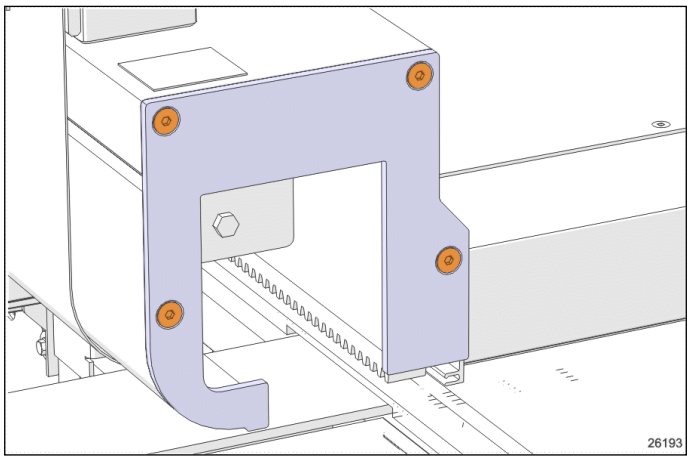


**FIGURE 2: EXTRUSION END CAP**

3. Once the room is fully extended, remove the screw and tab holding the flexible plastic rail cover in place. (Figure 3) *Perform this on both sides*.

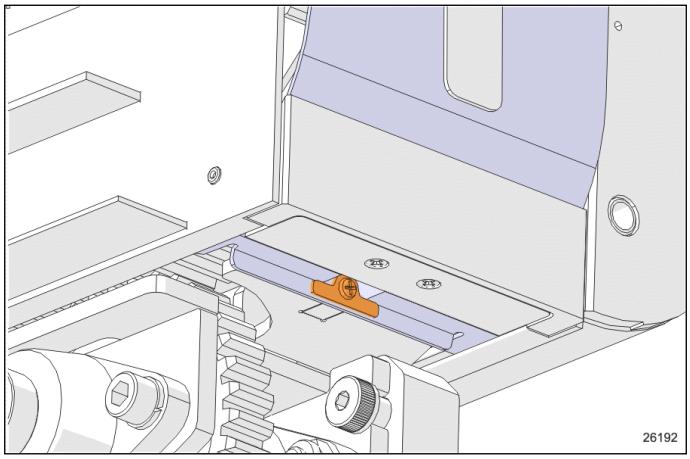


**FIGURE 3: TAB AND MOUNTING SCREW**

4. Remove the upper inner stopper (Figure 4).

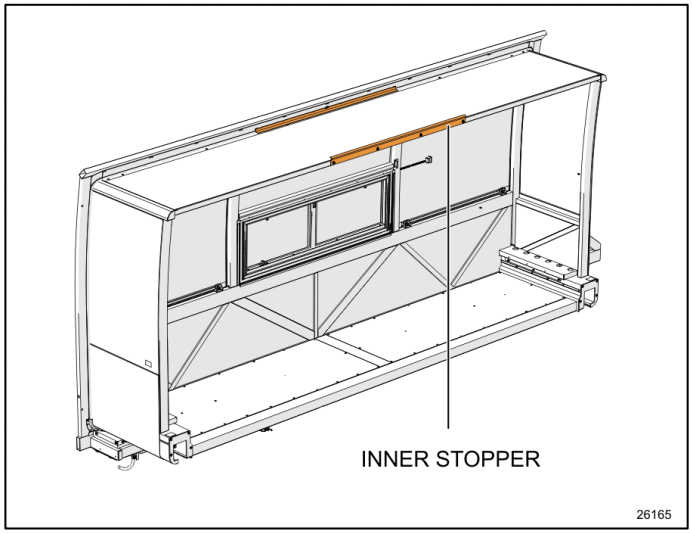


**FIGURE 4: UPPER INNER STOPPER**

5. Remove the two nuts holding the extension stopper (perform on both sides). (Figure 5)

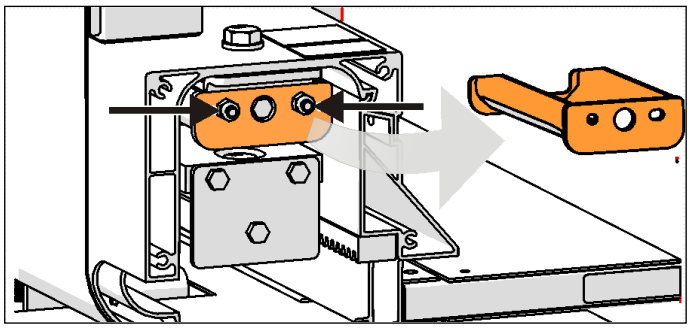

FIGURE 5 EXTENSION STOPPER REMOVAL

6. The room can now be extended further.

Do not remove any additional stoppers.
Heed the safety warning below.

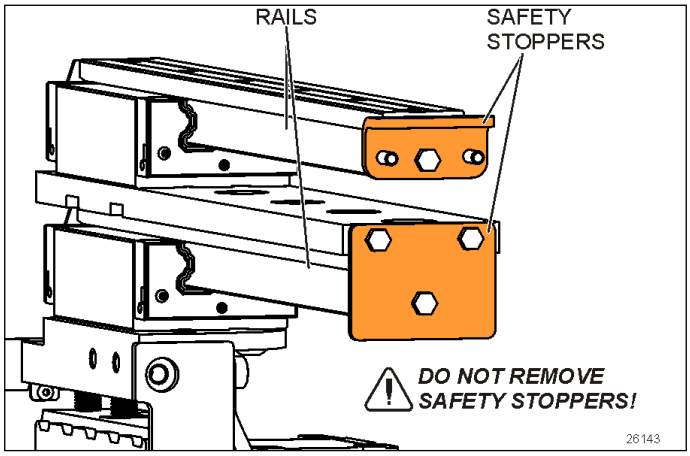


FIGURE 6: SAFETY STOPPERS ON RAILS

## DANGER

Safety stoppers are bolted to the rail ends. (Figure 6)

Never remove these stoppers.

These prevent the room from sliding out of the bearings.

Without these stoppers, the room could slide completely out of the bearings, therefore posing a risk of death and significant damage to the vehicle's components

7. Deflate the seal by using the relieving shut-off valve located on the pneumatic component panel. Confirm by the pressure gage

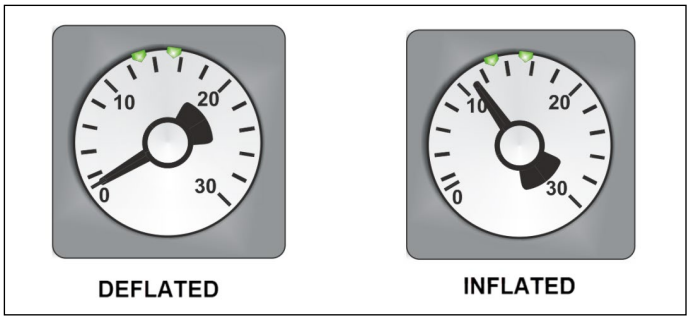


FIGURE 7: INFLATABLE SEAL PRESSURE GAGE

**ROOM REMOVAL**

> **CAUTION**
>
> Failure to deflate the seal may result in seal damage.

8. Place scissor lift tables level with 4x4 beams placed on top and ready to receive the room. Leave room for fork lift placement in the center.
9. Confirm proper placement of beams according to PREPARATION instructions.
10. Using a cordless drill with a 10 mm hexagonal socket, drive the motor extension to further extend the slide-out room until the gears leave the rack gear.
11. Finish by pushing out the room evenly on both sides by hand. A minimum of two persons are required
12. Support the slide-out room with the prepared scissor lift tables.

13. Remove the six bolts securing the rail to the slide-out structure.
14. At reassembly, tighten to **130lb-ft**

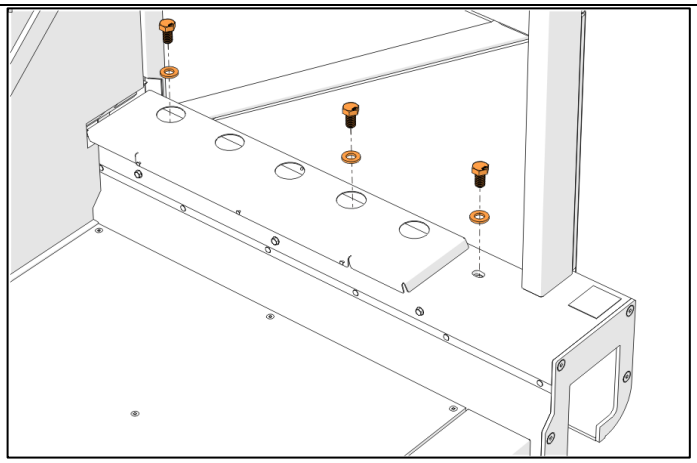

**FIGURE 8: RAIL BOLTS (6X)**

15. The rail housing interior dimensions provides enough clearance around the rail assembly to pull the room outwards. (Figure 9)

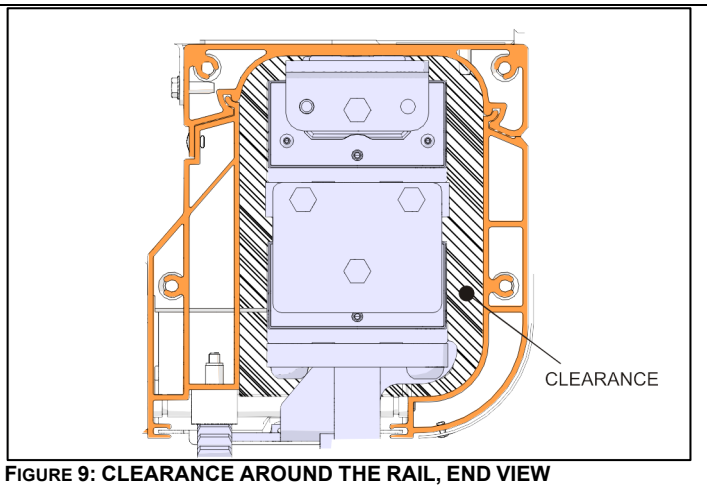


**FIGURE 9: CLEARANCE AROUND THE RAIL, END VIEW**

16. With a suitable fork lift placed in the center, raise the room just slightly by the beams.
17. Inspect to make sure the rails are released from the structure.
18. Slowly pull the room straight out while keeping level.(Figure 10)

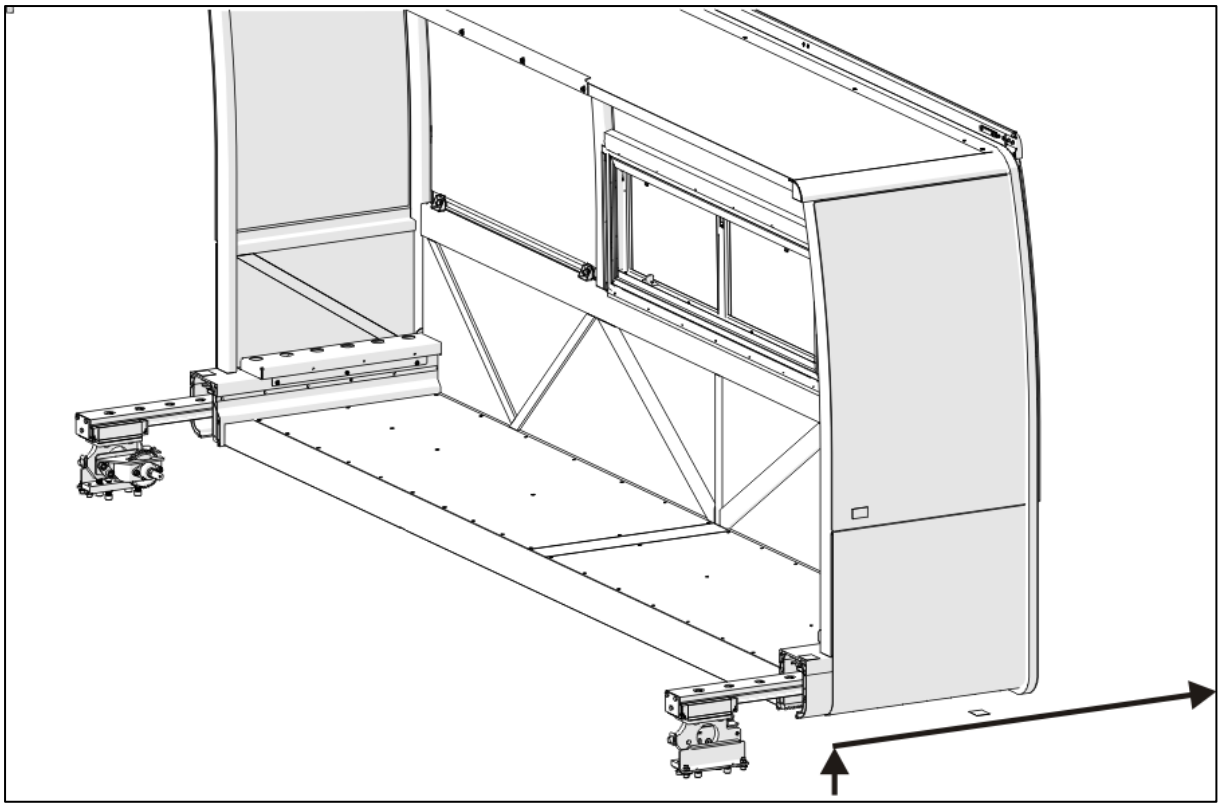

**FIGURE 10: LIFTING AND PULLING THE ROOM OUT**

19. Place room down on a level surface, on appropriate supports.

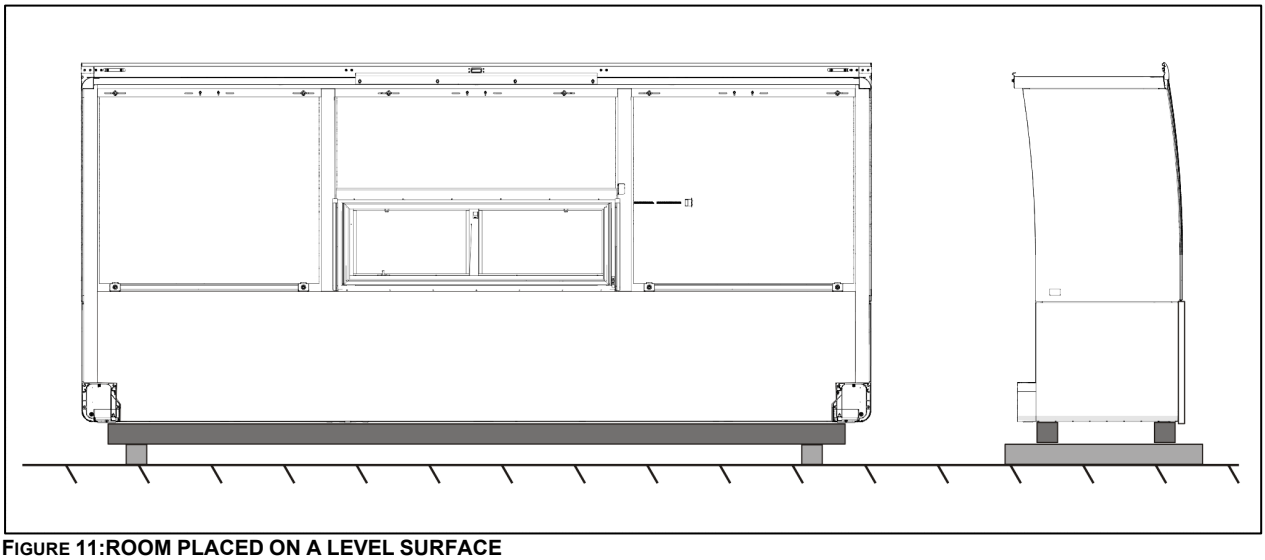

**FIGURE 11:ROOM PLACED ON A LEVEL SURFACE**

20. Installation is the reverse of removal

## PARTS / WASTE DISPOSAL

Discard according to applicable environmental regulations (Municipal/State[Prov.]/ Federal)

*Access all our Service Bulletins on http://techpub.prevostcar.com/en/*
*Or scan the QR-Code with your smart phone*
.

**Are you a Vehicle owner?**
*E-mail us at **technicalpublications_prev@volvo.com** and type "ADD" in the subject to receive warranty bulletins applicable to your vehicle(s) by e-mail.*



# MAINTENANCE INFORMATION MI19-27A

| | | |
|---|---|---|
| DATE : | July 2019 | SECTION : 26 SLIDE-OUT |
| SUBJECT : | TWO PART SLIDE-OUT SEAL INSTALLATION | |

Revision: A Roller tool # were G36374GA; G36373GA, are G36374;G36373 2019-08-22

## DESCRIPTION

Follow these instructions to perform the installation of *two-part slide-out seals* with clip-on inflatable seal. (Figure 1) This procedure should be performed by skilled technicians and may involve slide-out adjustments.

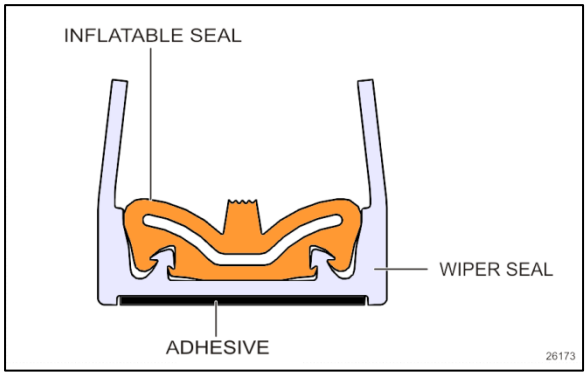


**FIGURE 1: TWO-PART SLIDE-OUT SEAL**

## MATERIAL

Required shop supplies:

| Part No. | Description | Qty |
|---|---|---|
| 680879 | P-80 Grip-It Quick-Drying Temporary Lubricant, 1litre | 1 |
| 682989 | Anti-silicone Standox, 4 liter | 1 |
| 683446 | Primer, Sika 206 G+P, 1 liter | 1 |
| 684685 | Sealant Simson #ISR 70-03 / 310ml Cartridge | 1 |
| 685332 | 3M Primer 94, 236ml | 1 |

| NOTE |
|---|
| Material can be obtained through regular channels. |

## TOOLS



FIGURE 2: HOLLOW PUNCH, ½" (LEATHER PUNCH)

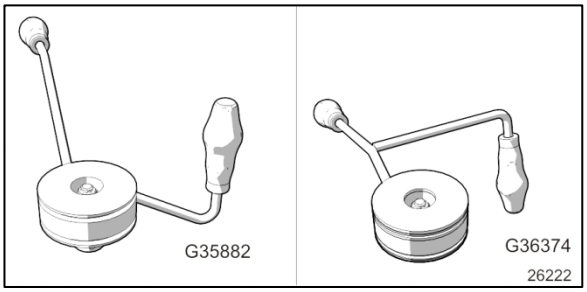


FIGURE 3: BASE WIPER SEAL ROLLER TOOLS

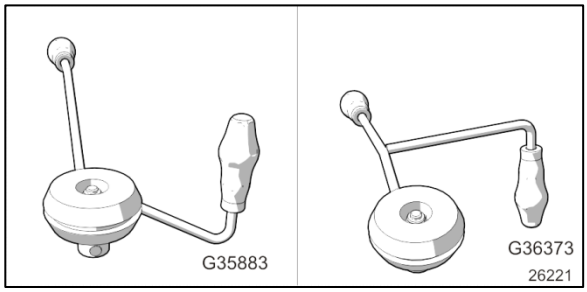


FIGURE 4: INFLATABLE SEAL ROLLER TOOLS

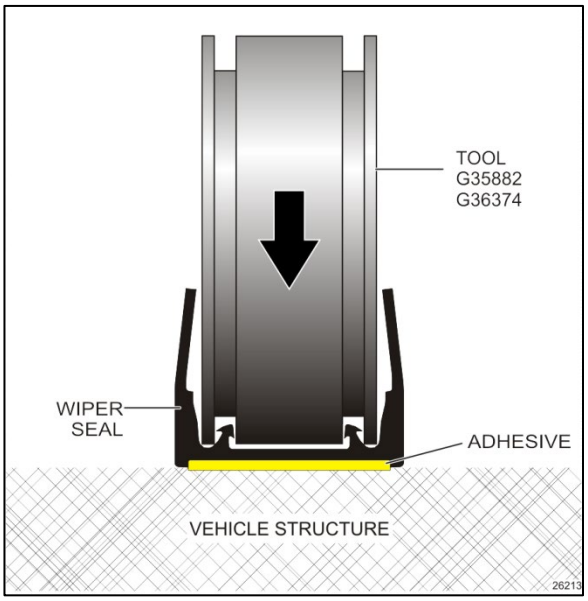


FIGURE 5: ROLLER TOOL (BASE WIPER SEAL)

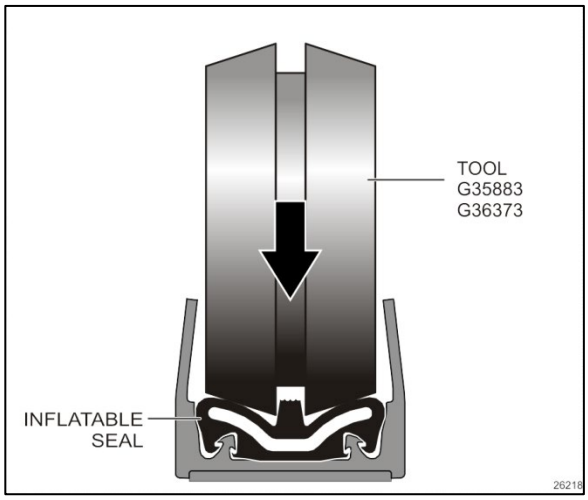


FIGURE 6: ROLLER TOOL (INFLATABLE SEAL)

| NOTE |
| --- |
| If the wiper seal does not have pre-cut holes, consult IS16080. The drain and air supply holes must be marked on the vehicle prior to installation and punched out in the base wiper seal after installation using a hollow punch. This will ensure proper draining of the seal and allow passage of the inflatable seal hose to the vehicle air supply. |

## OVERVIEW

Estimated labor: 4 hours

Allow time for Primer curing and inflatable joint settle-in time: up to 28 hours

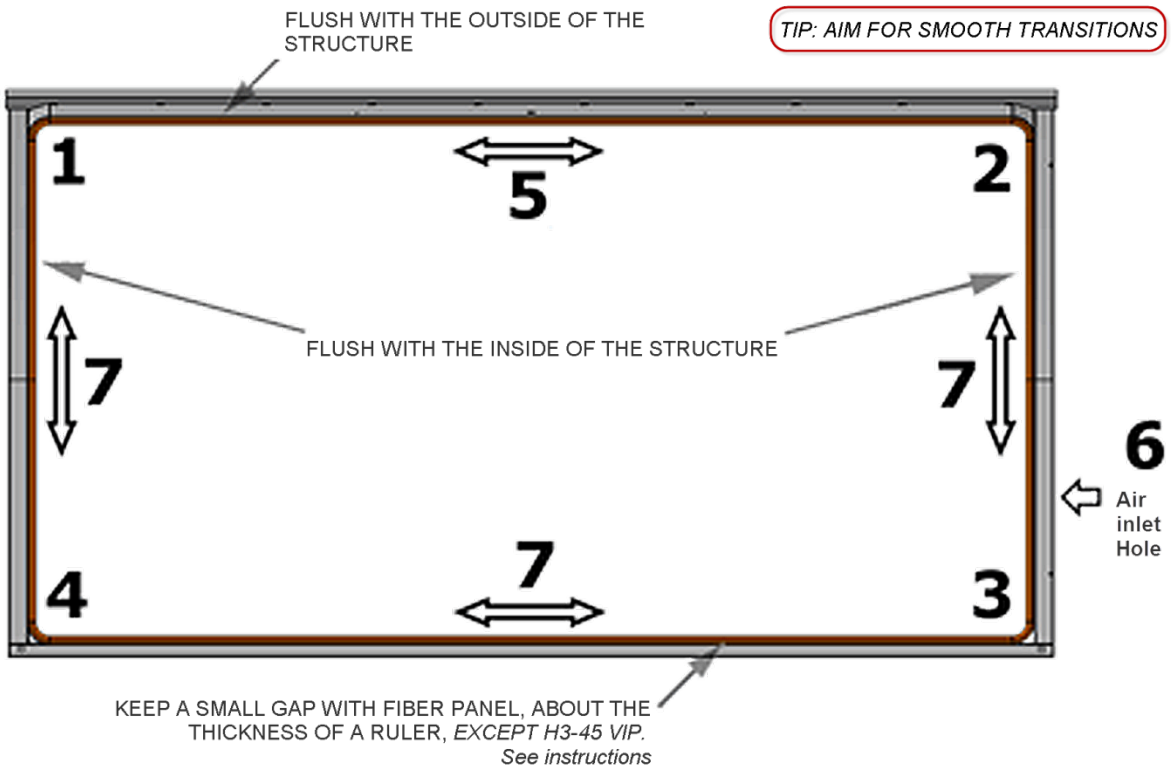


**FIGURE 7: SEAL INSTALLATION POSITION AND SEQUENCE OVERVIEW**

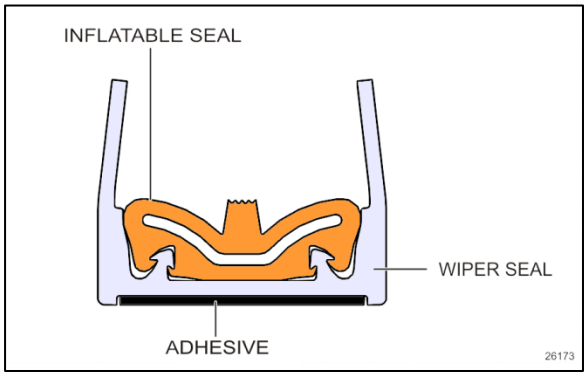


**FIGURE 8: TWO-PART SEAL ASSEMBLY**

## PROCEDURE

**DANGER**

Park vehicle safely, apply parking brake, stop engine. Prior to working on the vehicle, set the ignition switch to the OFF position and trip the main circuit breakers equipped with a trip button. On Commuter type vehicles, set the battery master switch (master cut-out) to the OFF position.

Lock out & Tag out (LOTO) must be performed during set-up, maintenance or repair activities. Refer to your local procedure for detailed information regarding the control of hazardous energy.

### PREPARATION

1. Inspect gaps all around the slide-out. Gaps must be between 17 and 27mm.
2. Adjust gaps to reach the values above. Refer to maintenance manual for procedure.

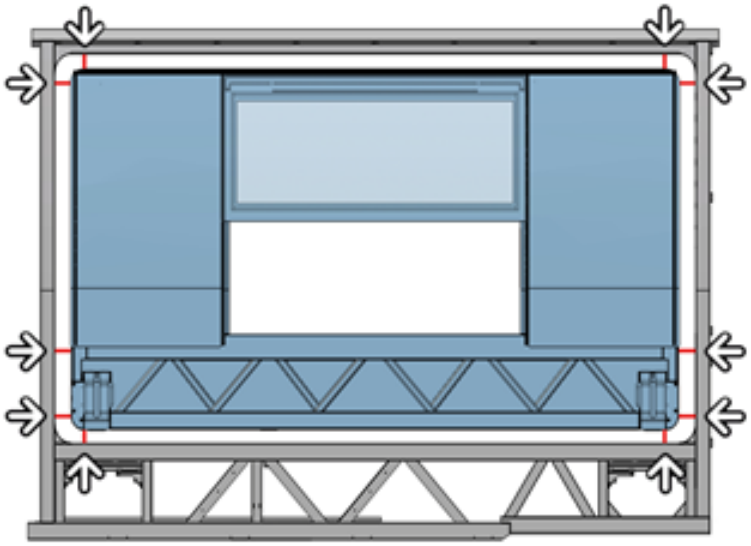

**FIGURE 9**

3. Retract the slide-out 2" inside the vehicle. Consult maintenance manual for procedure.

   *Heed the cautionary notes outlined in the manual before retracting.*
4. Remove the old slide-out seal.
5. Thoroughly clean the bonding surface receiving the seal adhesive with anti-silicone. Surface must be smooth, without any glue or paint residue.
6. Scuff the bonding surface with a very fine abrasive pad.
7. Clean the structure again with anti-silicone.
8. Mask the slide-out edge and vehicle opening all around to protect the vehicle finish.
9. Apply Sika 206 G+P. Apply all around the bonding surface. Minimum drying time: 4 hours.

10. Ensure Sika 206 is dry and clean.
11. Apply 3M Primer 94 at the 4 corners; *Apply with very light pressure* to avoid peeling or damaging the Sika 206 primer.

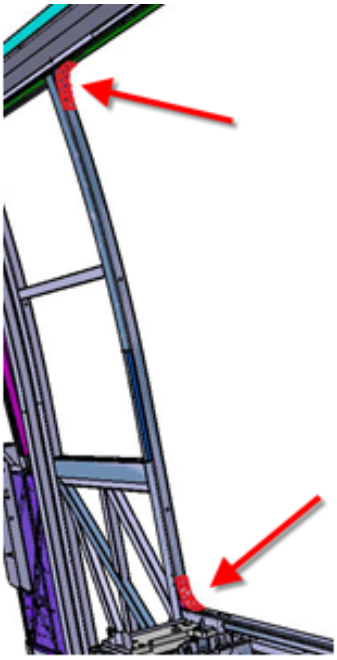

FIGURE 10



FIGURE 11

12. On the wiper seal corners locate the small rib identifying the corner mid-point. Make it more visible by marking the corners with a paint marker.

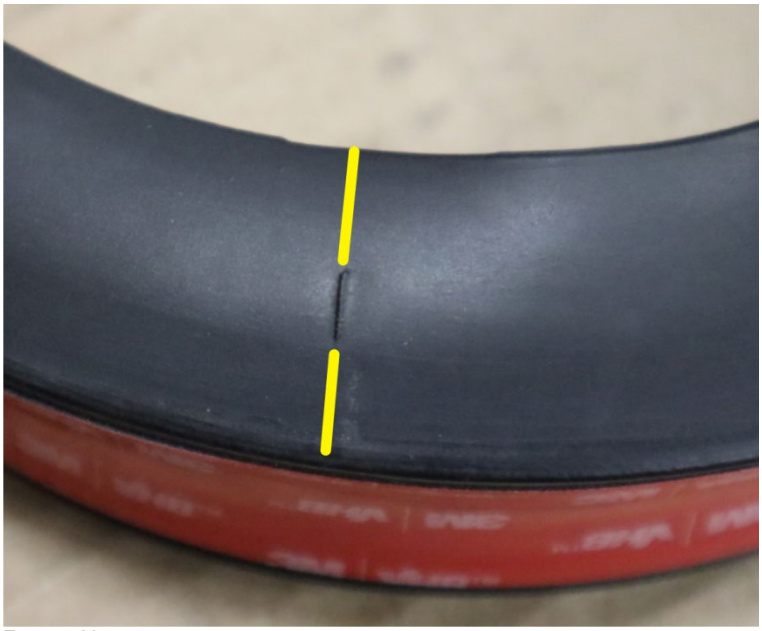

FIGURE 12

13. Also mark the midpoint of each corner on the structure.

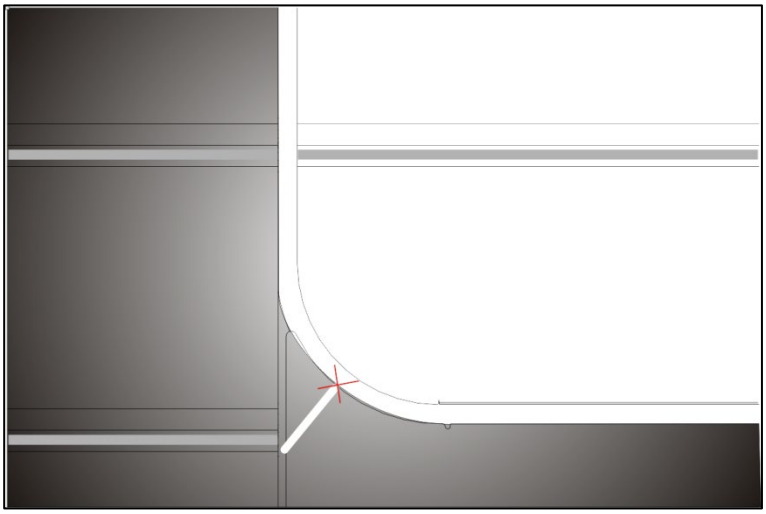

FIGURE 13: CORNER MID POINT

14. Mark the position of the drain holes in the structure.
15. Place the drain and air inlet holes aligned with the provision on the structure.

If there are no holes in the wiper seal, refer to IS-16080.

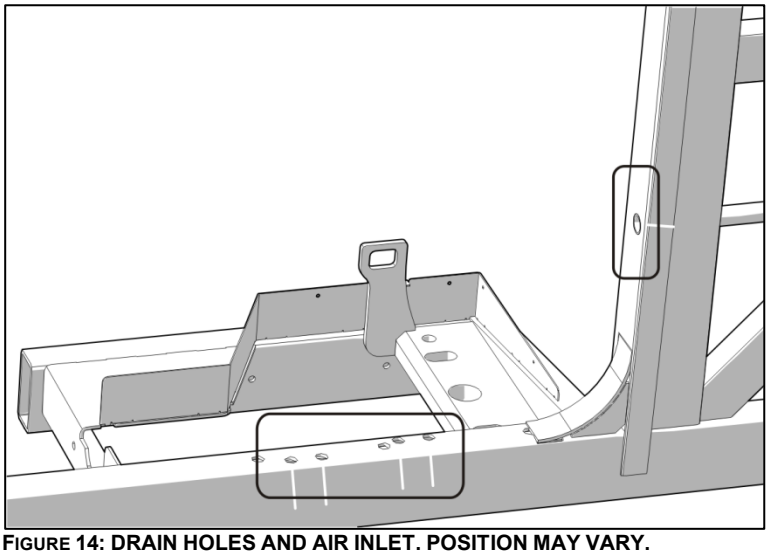

FIGURE 14: DRAIN HOLES AND AIR INLET. POSITION MAY VARY.

## BASE WIPER SEAL INSTALLATION Two people required from this point.

16. *One upper corner at a time*, remove the adhesive protecting film on approximately 8 inches.

**Warning:** Bonding occurs instantly!

17. Align the corner marks.
18. Place the seal corner as flush as possible to the *exterior side of the structure*. (Figure 6)



FIGURE 15



FIGURE 16

19. Support the upper part of the seal with masking tape.



FIGURE 17

20. Test fit to align air inlet holes with structure.
21. Remove the adhesive protecting film on approximately 8 inches.
22. Align air inlet holes in base and structure and bond base to structure.



FIGURE 18

23. Test fit the lower corners. Align the corner marks.

    **Note:** On H3-45 VIP vehicles, see Figure 18 for the bonding of the *lower section* of the seal.

24. Bond the lower corners.
25. Be sure to align the seal drain holes with the structure drain holes.
26. Progressively bond the remainder of the lower section.

27. ***H3-45 VIP* vehicles only.** Bond the lower part of the wiper seal flush to the inside of the tube round edge.

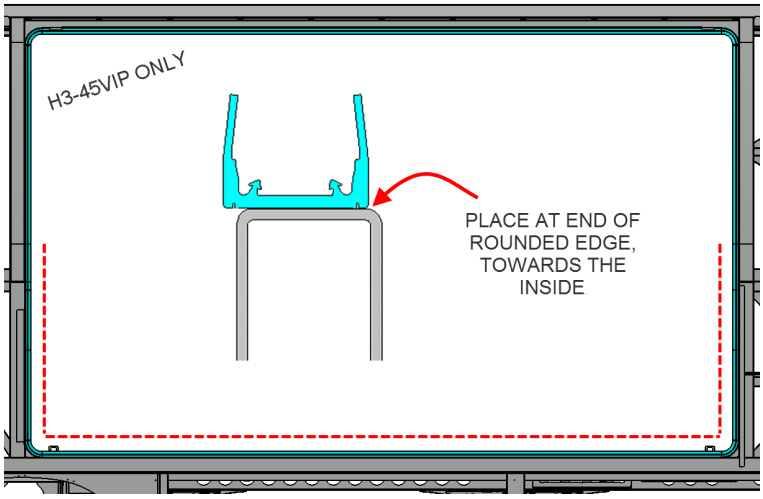


**FIGURE 19: SPECIAL INSTRUCTION FOR H3-45VIP ONLY**

28. Bond the upper section by starting at the middle. Evenly spread any excess or tension on both sides.

Make sure you are bonding flush to the exterior side of the structure. (Figure 6)



**FIGURE 20**

29. Test fit the remainder of the base wiper seal. Even out any slack or tension all around.
30. Visually inspect the corners marks and the air inlet hose to confirm everything is aligned.



FIGURE 21

31. Use roller tool all around.

32. Confirm that the drain holes in the structure are aligned with the openings in the seal base. If not, punch or cut-out the base using the marks.

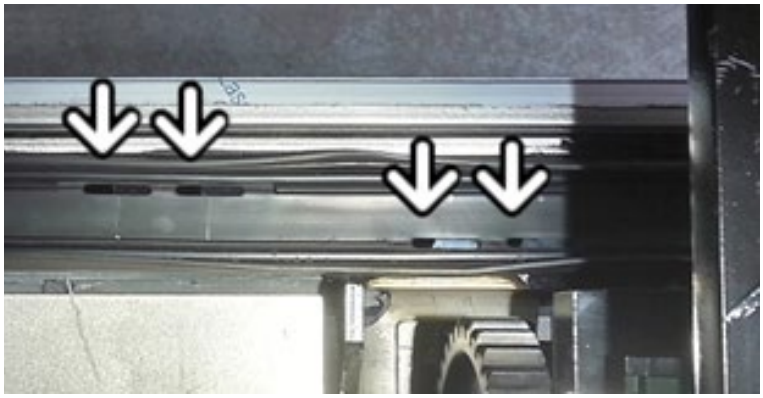

FIGURE 22

## Inflatable seal installation

33. Clean the base wiper seal to make sure it is free of debris.

34. Slip the inflation tube in the vehicle structure. Seal with #684685 Simpson ISR 70-03 sealer all round. (Figure 22)

35. Position the inflatable joint inside the base wiper. Even out any slack or tension all around.

    **Note:** *Support with tape in the upper section.*

36. Between the air inlet and the nearest corner, locally clip the seal on the base. (Arrows, Figure 22)

    **Note** *: Dry clip! (no lubricant)*

37. At the lower corner, insert seal in the bottom of the base, *without clipping*. (Figure 22)

    **Note:** *Follow this guideline for all corners; they will be clipped at the very end.*

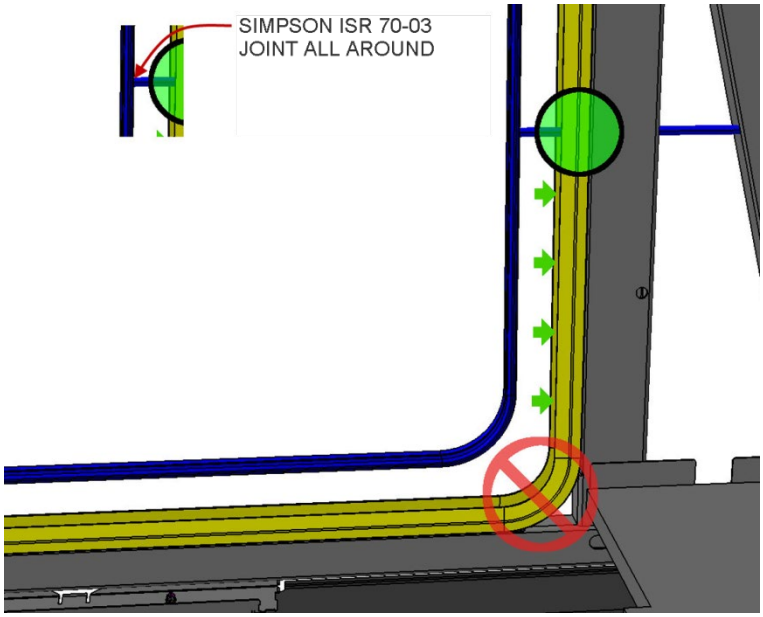


**FIGURE 23: AIR INLET**

38. Clip seal up to the corner tangent.

39. To avoid creases in the corner, stretch the seal as if it were too short in length compared with the base.

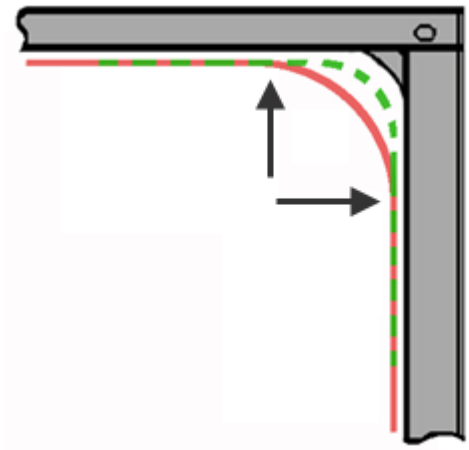

**FIGURE 24**

40. Spray a small amount of #680879 P80 lubricant in the base.

    **Caution:** P80 application is only allowed in the straight sections, stopping one foot from the corners.




**FIGURE 25**

41. Begin by locally clipping the seal, at each 24 in.

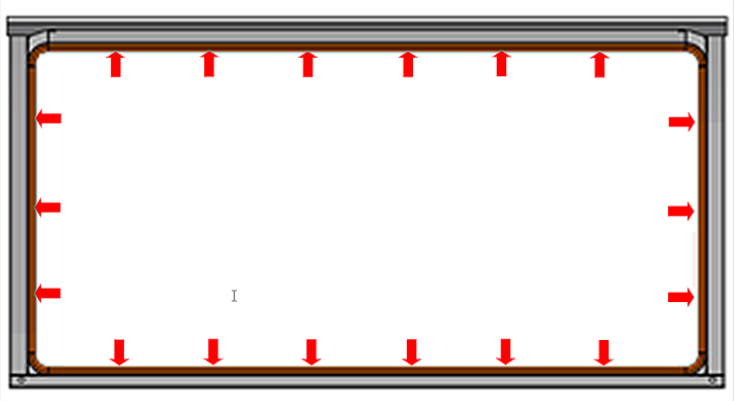

**FIGURE 26**

42. Insert the joint in the lower section.
43. Clip with the help of roller tool.

    **Important:** *Always start at the corner tangent (away from the corner) and roll towards the center.*

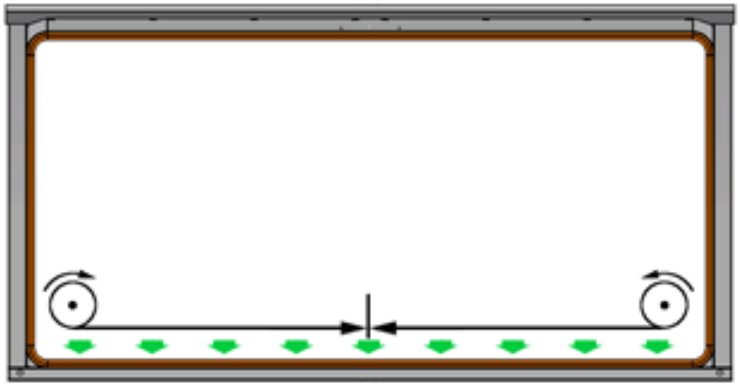

**FIGURE 27**

44. Repeat the same method on all remaining sides, skipping the corners.

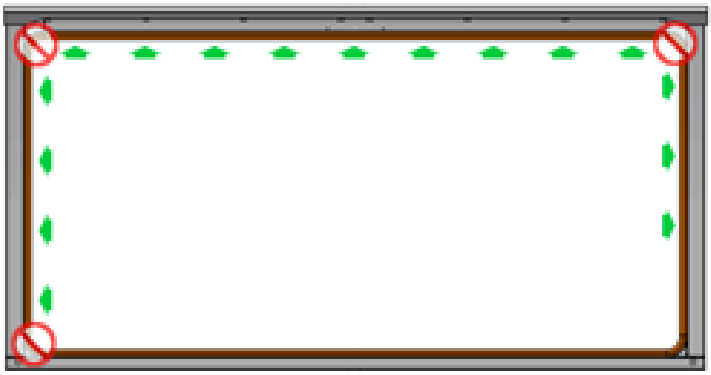

FIGURE 28

45. Clip the four corners

**Note**: *If the corner is too tight and needs a bit of slack, roll the sides from the outside towards the corner*.

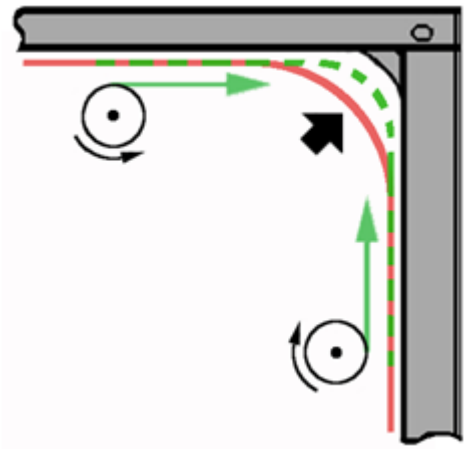

FIGURE 29

46. Confirm the seal is well clipped in the base by feeling with your fingers.

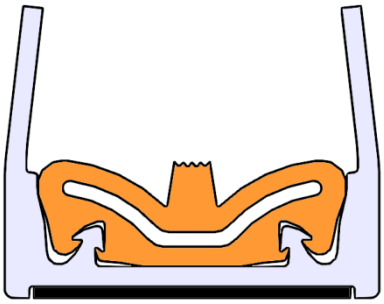


FIGURE 30

## Inflation test

47. On the slide-out control panel, confirm air pressure is set to 15 psi ± 5 psi.
48. If not, adjust the pressure.
49. Move the green pegs on each side of the needle to indicate the new pressure range.

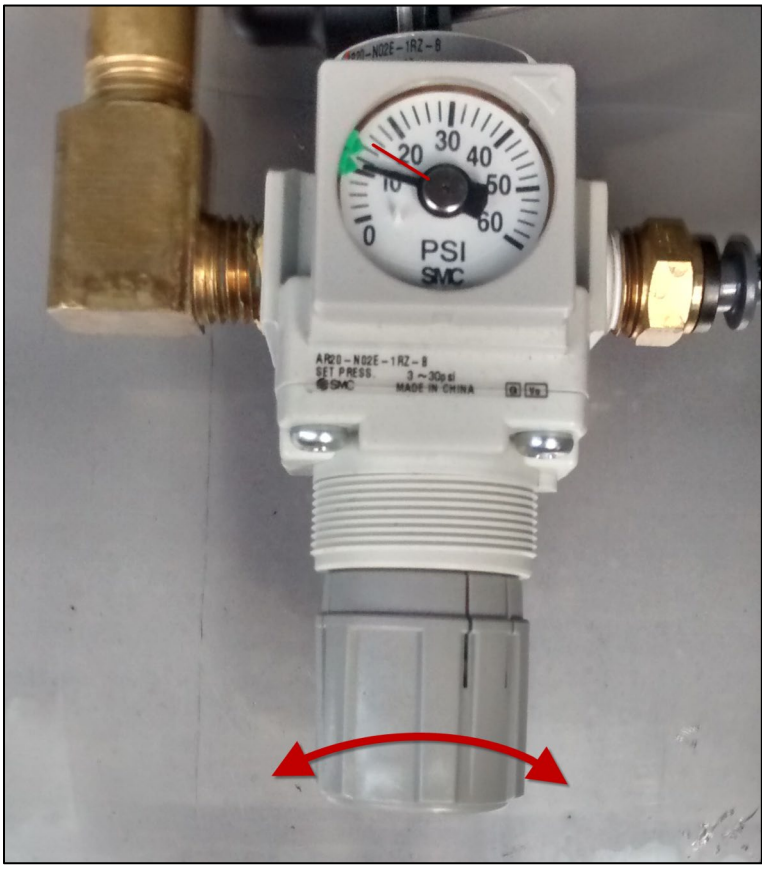


FIGURE 31: ADJUST TO 15 PSI ± 5 PSI

50. Connect the air inlet to the inflatable seal air supply, vehicle side.

    **Caution:** *The seal air supply tube is soft; do not squeeze it with the cable ties.*

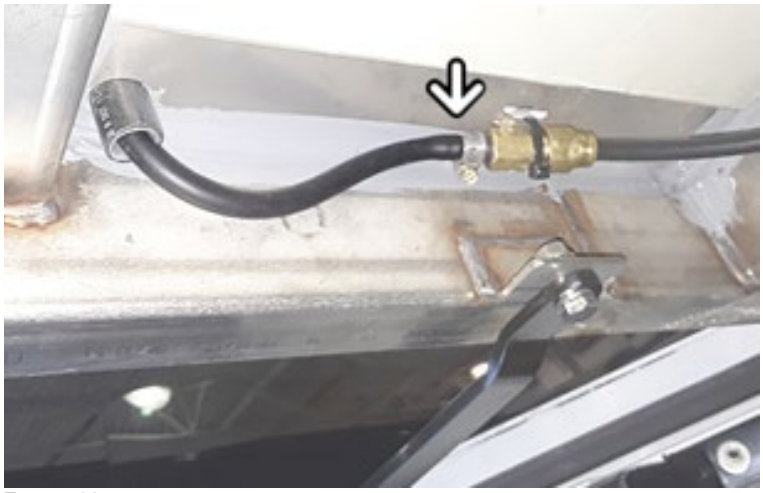

FIGURE 32

51. Extend the slide-out room.
52. Inflate the seal.
53. Confirm that the corners do not show any creases.

**IF THERE ARE CREASES:**

A. Return the room inward.

B. Unclip the inflatable seal from the corner plus along one or two feet on each side.

C. Clip the straight sections by rolling from the corner *towards the center*.

   Make sure you are stretching the corner; it should be flush with the top of the base wiper seal.

D. Clip corner in.

**IF CORNERS ARE FREE FROM CREASES:**

54. Inflate the seal. Leave inflated for a settle-in period of 24h.

    **Caution:** *Applied pressure should not exceed 15 psi ± 5 psi.*



FIGURE 33

**PARTS / WASTE DISPOSAL**

| |
|---|
| Discard according to applicable environmental regulations (Municipal/State[Prov.]/ Federal) |

Access all our Service Bulletins on http://techpub.prevostcar.com/en/

Or scan the QR-Code with your smart phone

**Are you a Vehicle owner?** E-mail us at ***technicalpublications_prev@volvo.com*** and type “ADD” in the subject to receive warranty bulletins applicable to your vehicle(s) by e-mail.