Wheel chair lift Ricon 9000

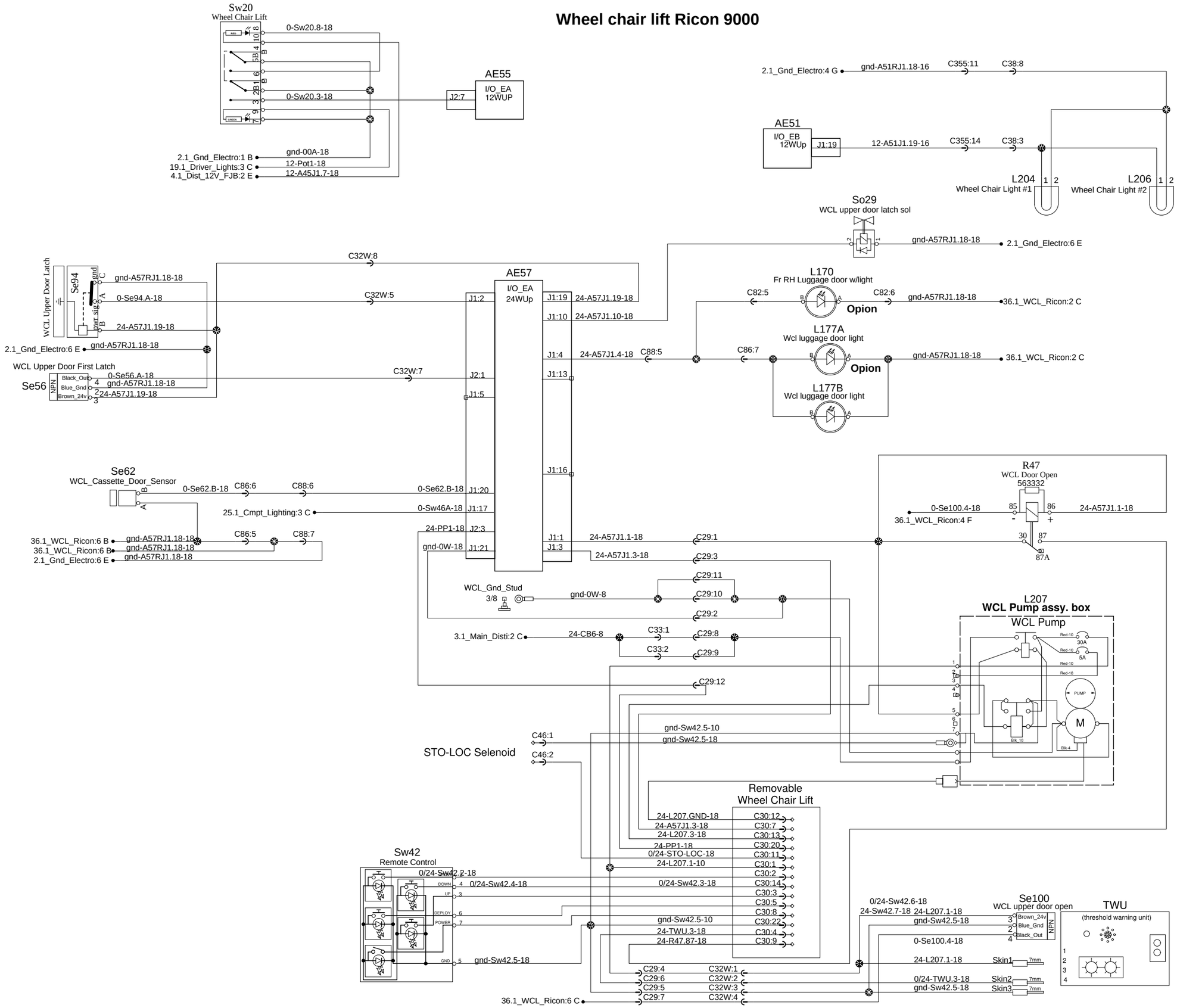

PREVOST®

WIRING DIAGRAM	No:D061550	Page:36.1	Rev:10