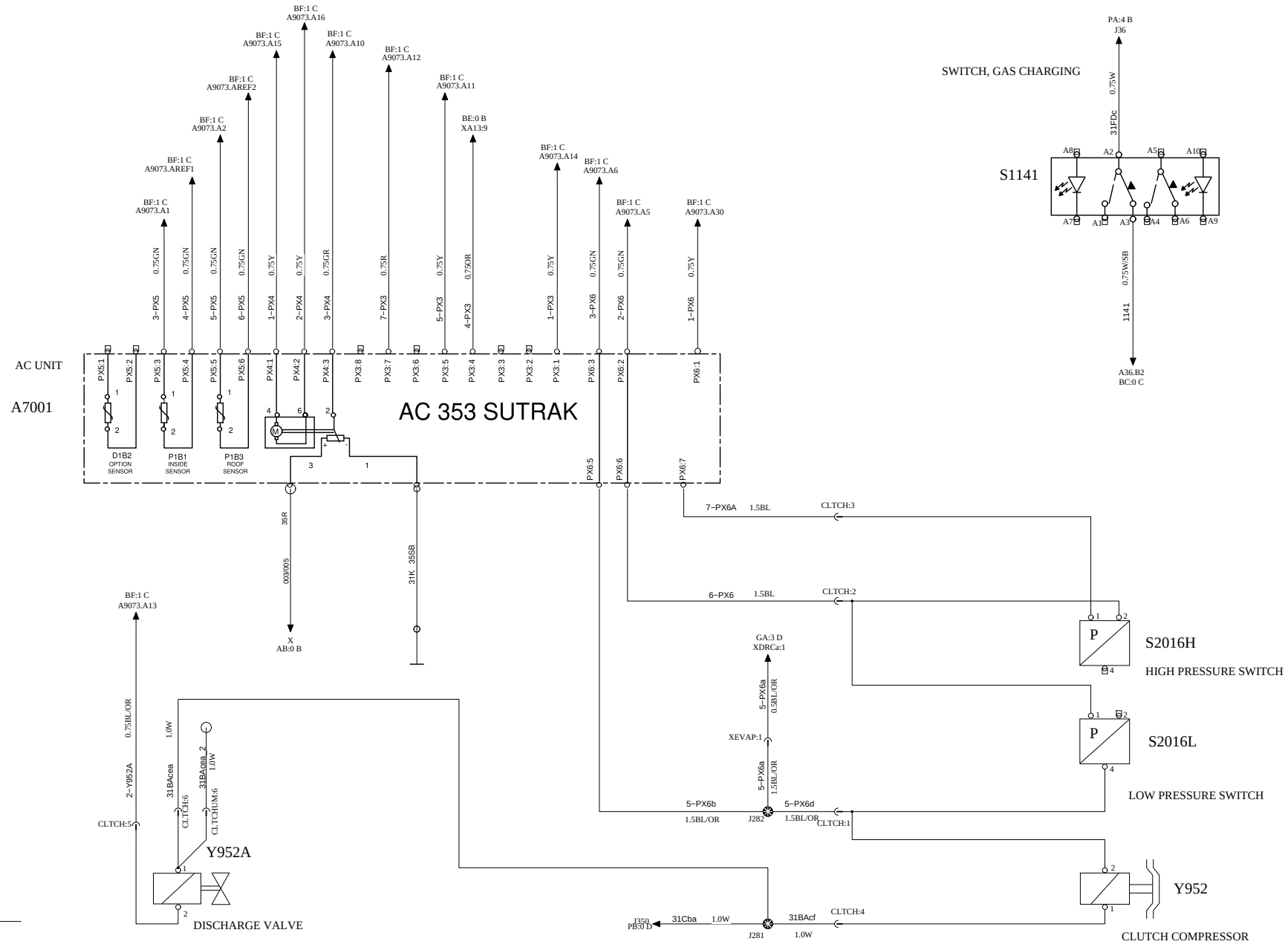

Volvo Bus Corporation	Document title: WIRING DIAGRAM	Document No	Issue	Volume	Page
	Document type: PRODUCT SCHEMATIC	22600119	04	01	63/74