Brake, Engine brake and Retarder

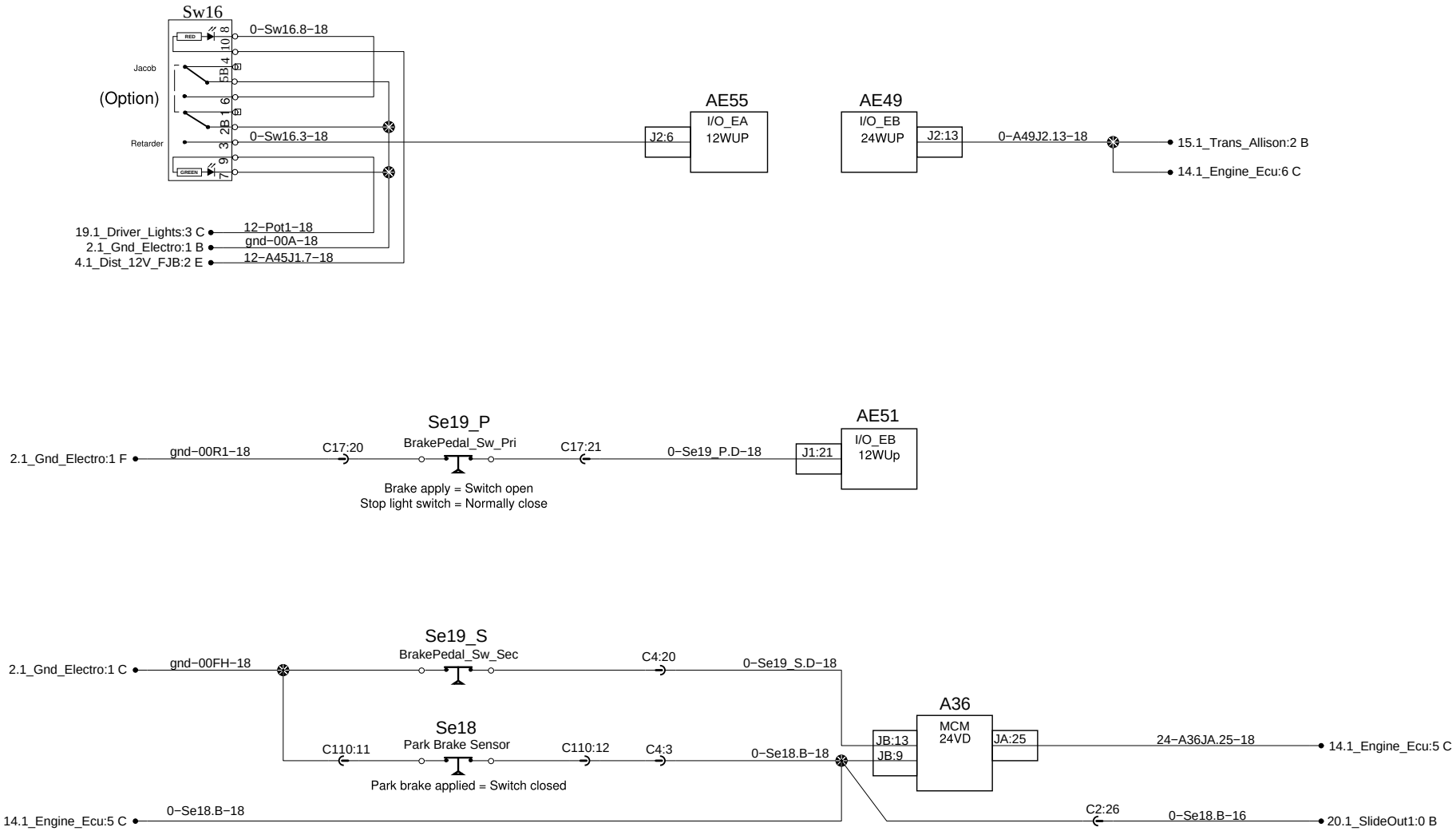

PREVOST®	WIRING DIAGRAM	No:D061670	Page:12.1	Rev:1