24V Power distribution front junction box

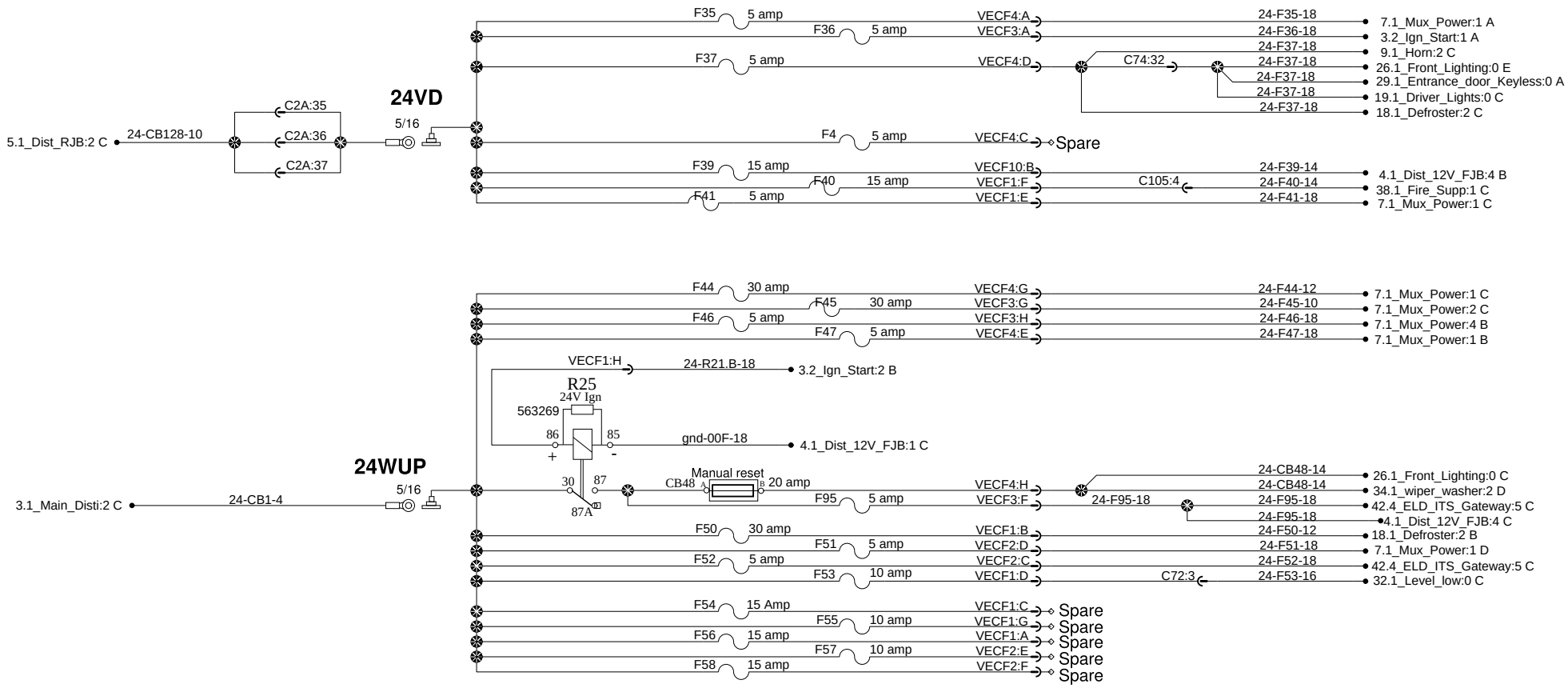
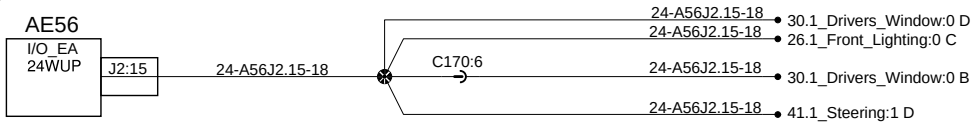
Ignition