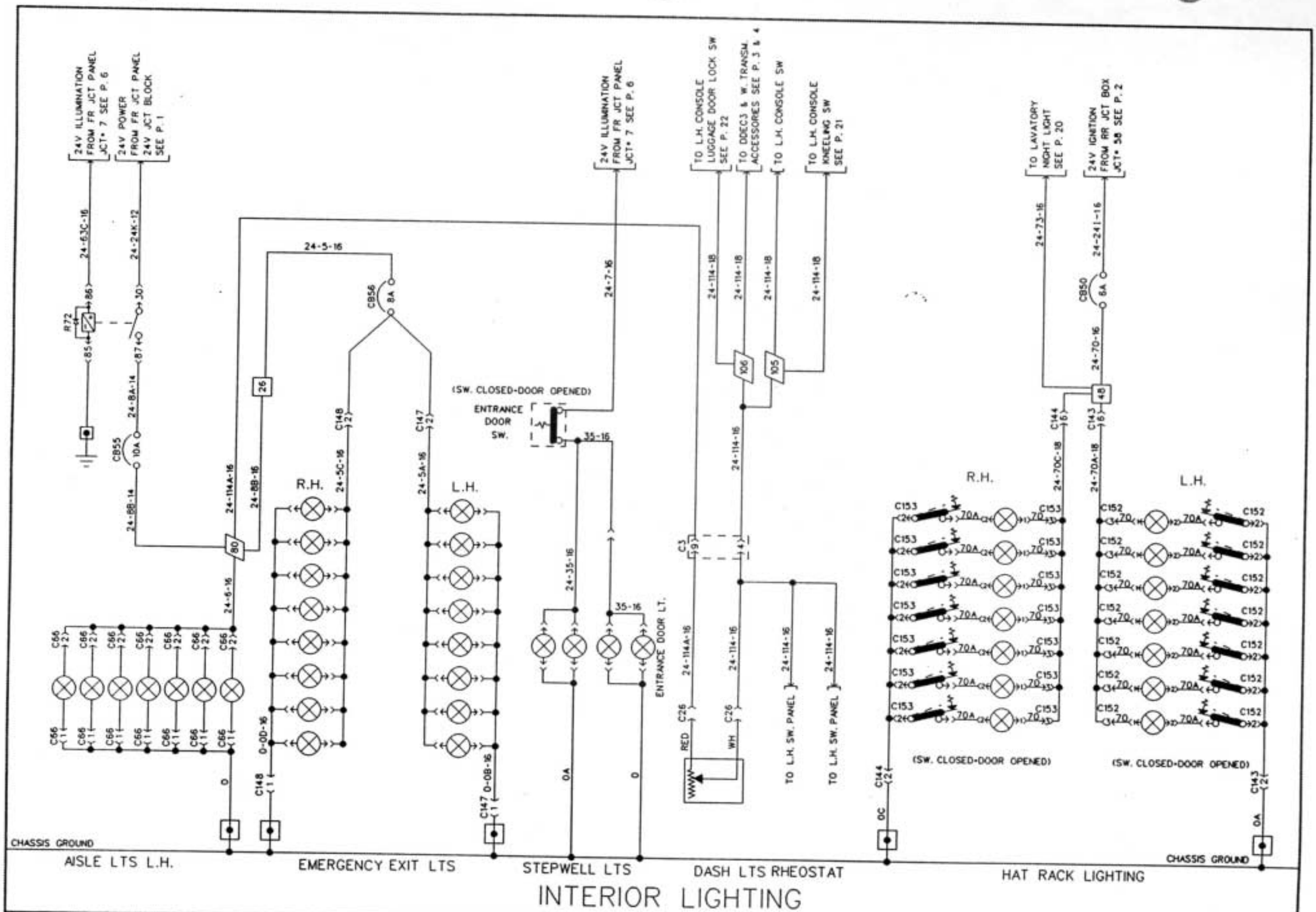

INTERIOR LIGHTING

PREVOST CAR inc.	WIRING DIAGRAM	NO: D060853	REVISION DATE 95-06-01	P. 11