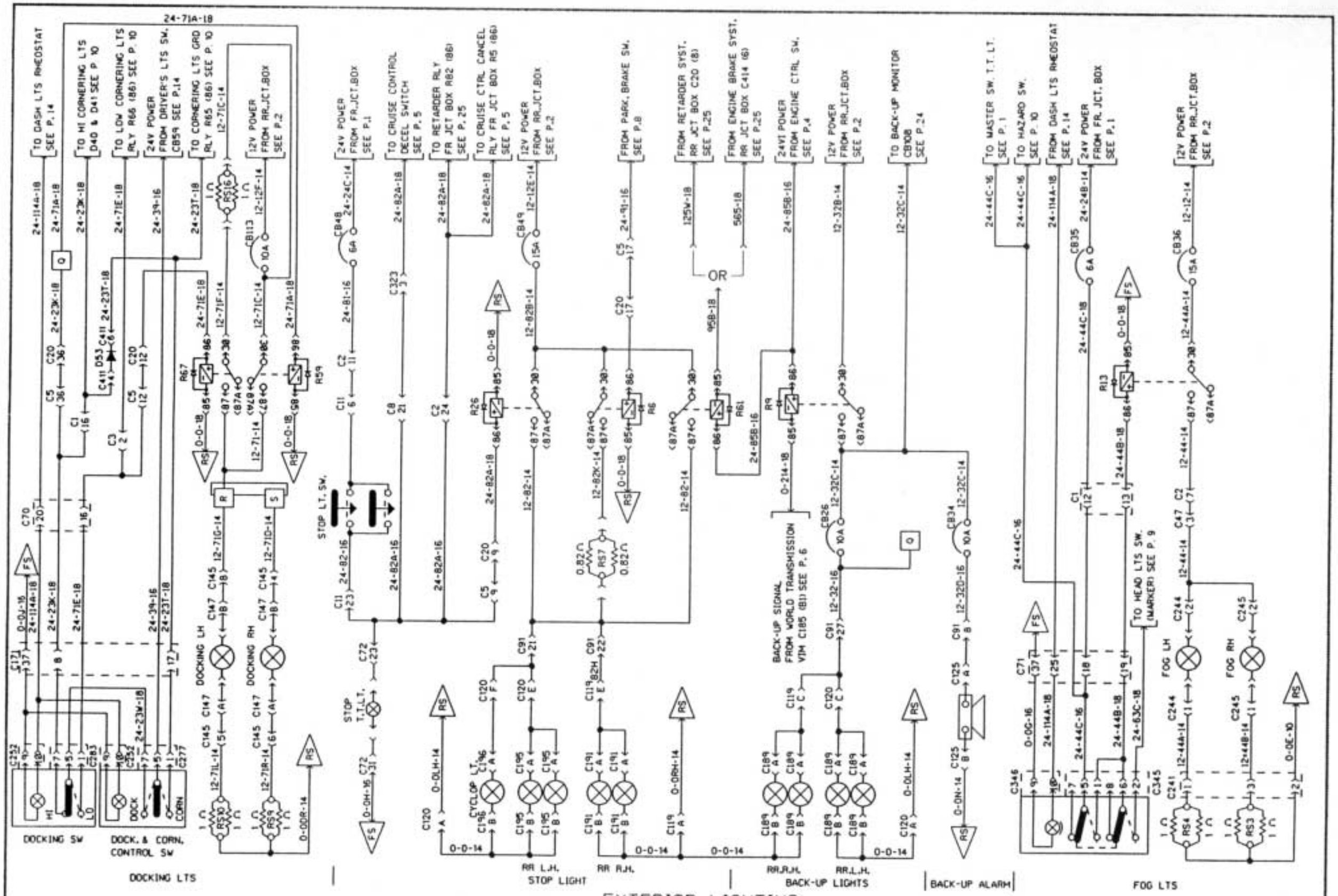

EXTERIOR LIGHTING