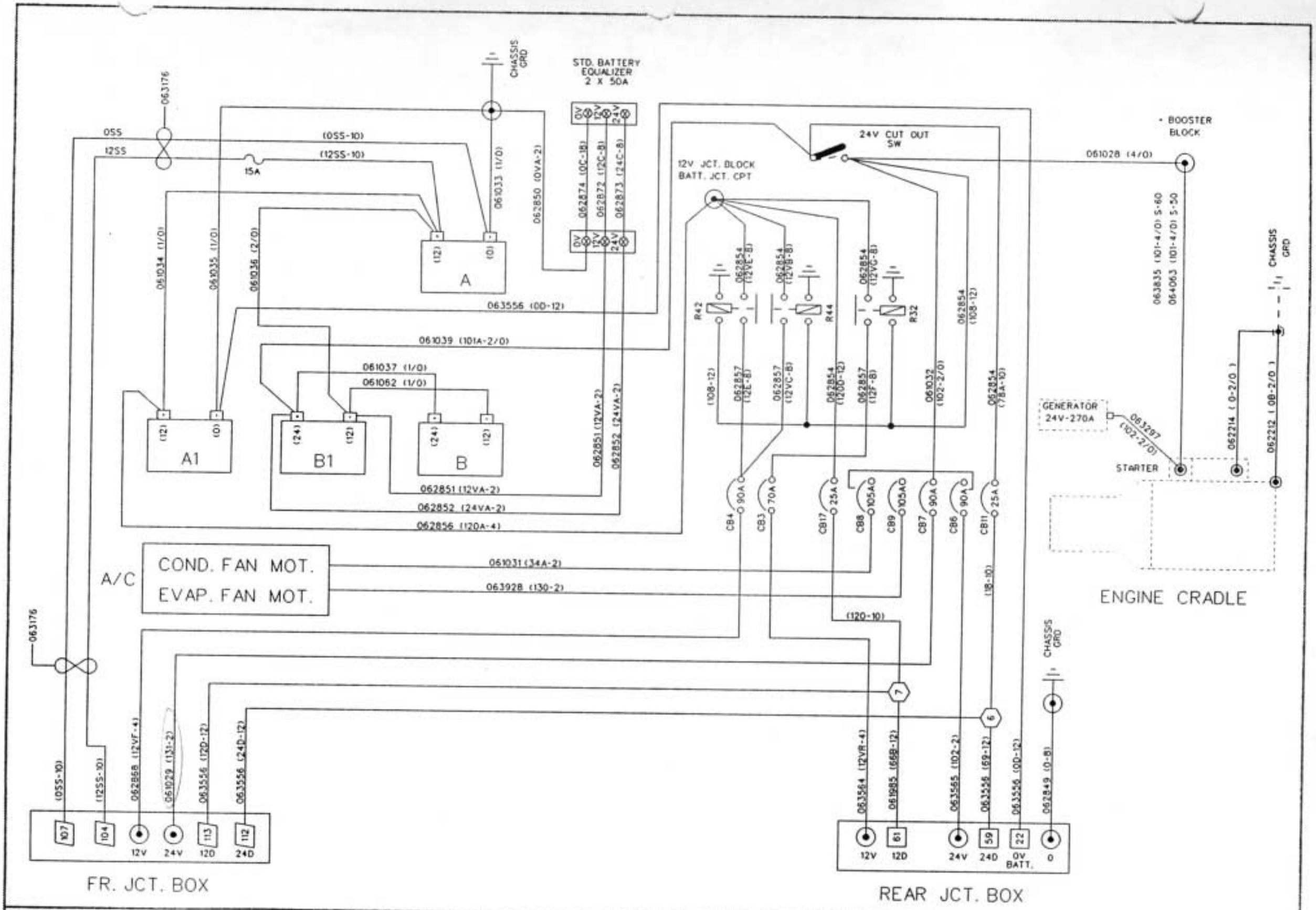

PREVOST CAR inc.	WIRING DIAGRAM	NO: D060811	REVISION DATE 95-01-10	P. Bb