Water PreHeater (Spheros or Pro-Heat)

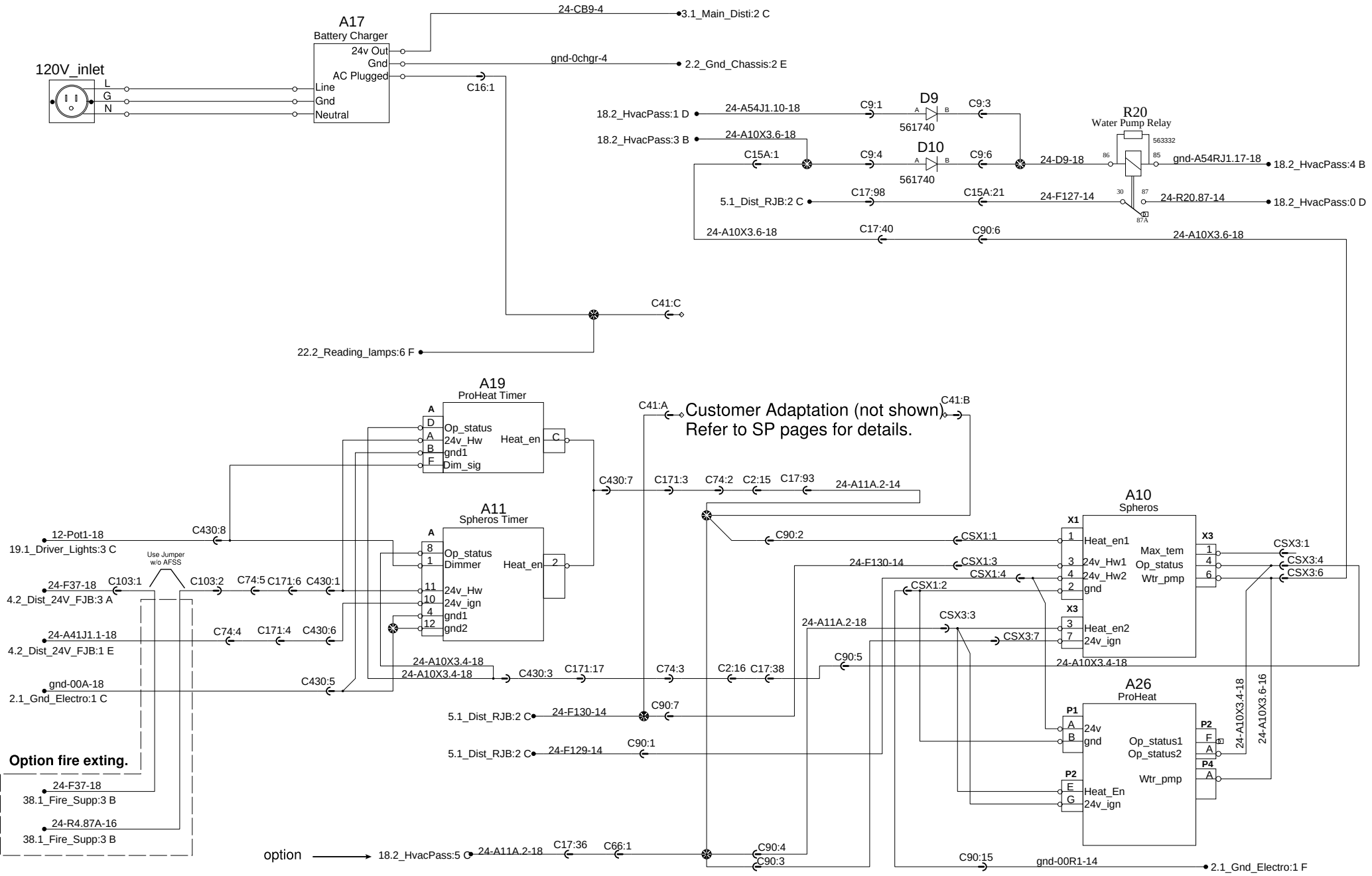

PREVOST®	WIRING DIAGRAM	No:D061640	Page:17.1	Rev:8