Customer Adaptation AIR PURIFIER HVAC

REFER TO P18.2(STD) FOR ALL DETAILS

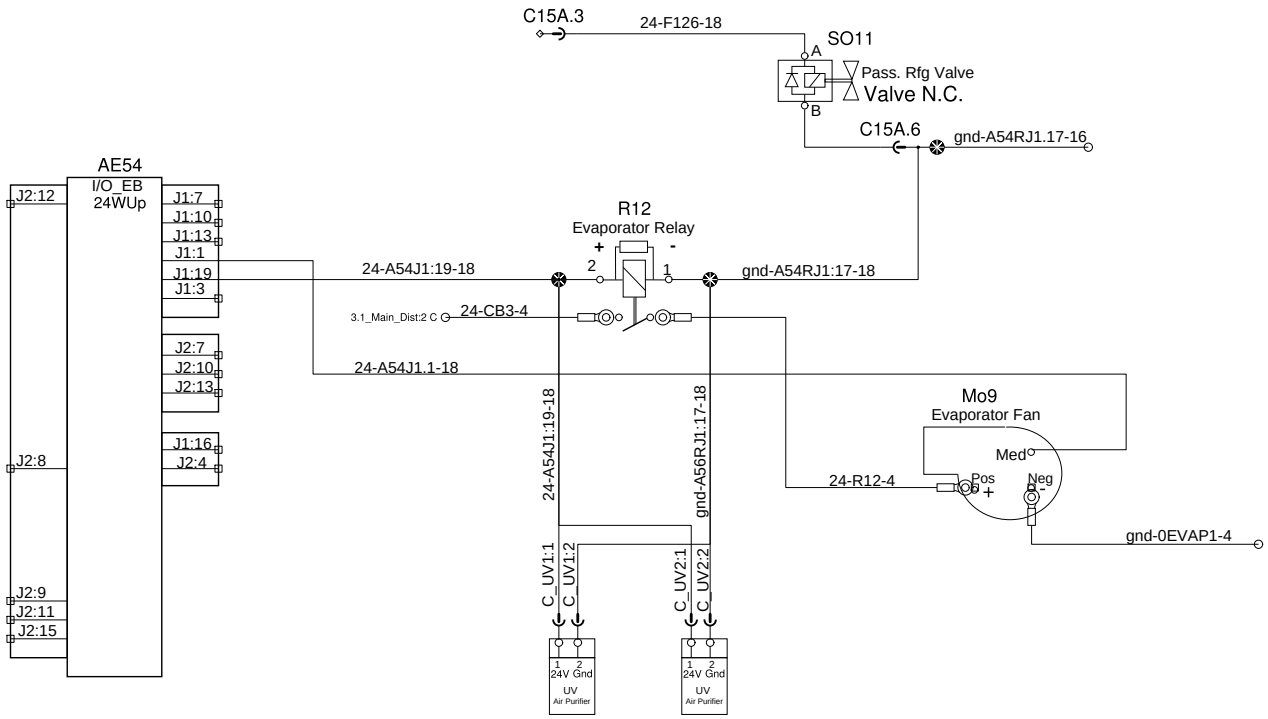

PREVOST®	WIRING DIAGRAM	No:D061640	Page:18.2 SP3	Rev:00