Emergency Lights

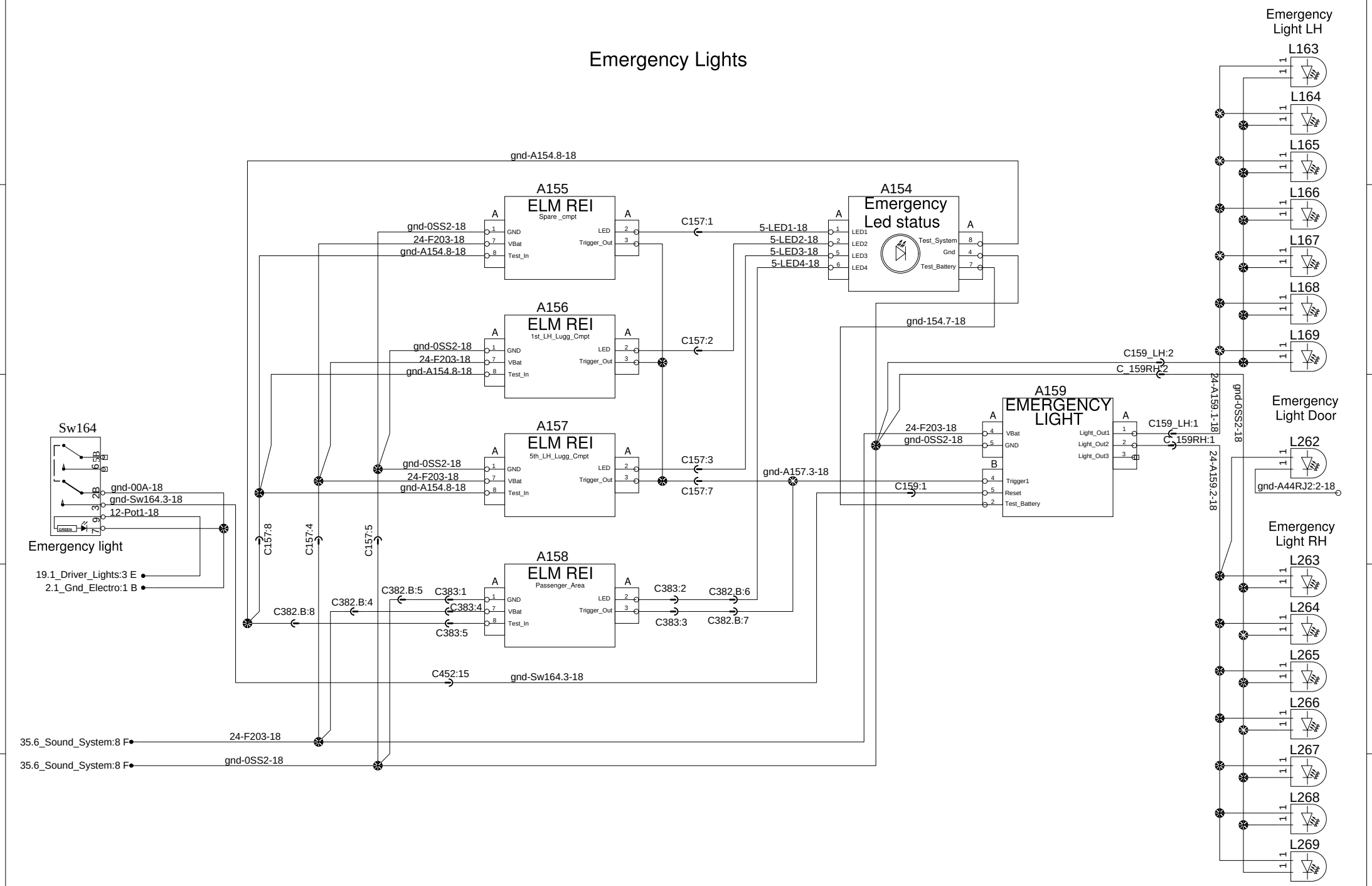

PREVOST®	WIRING DIAGRAM	No:D061640	Page:45.0	Rev:16