TIRE PRESSURE MONITORING SYSTEM

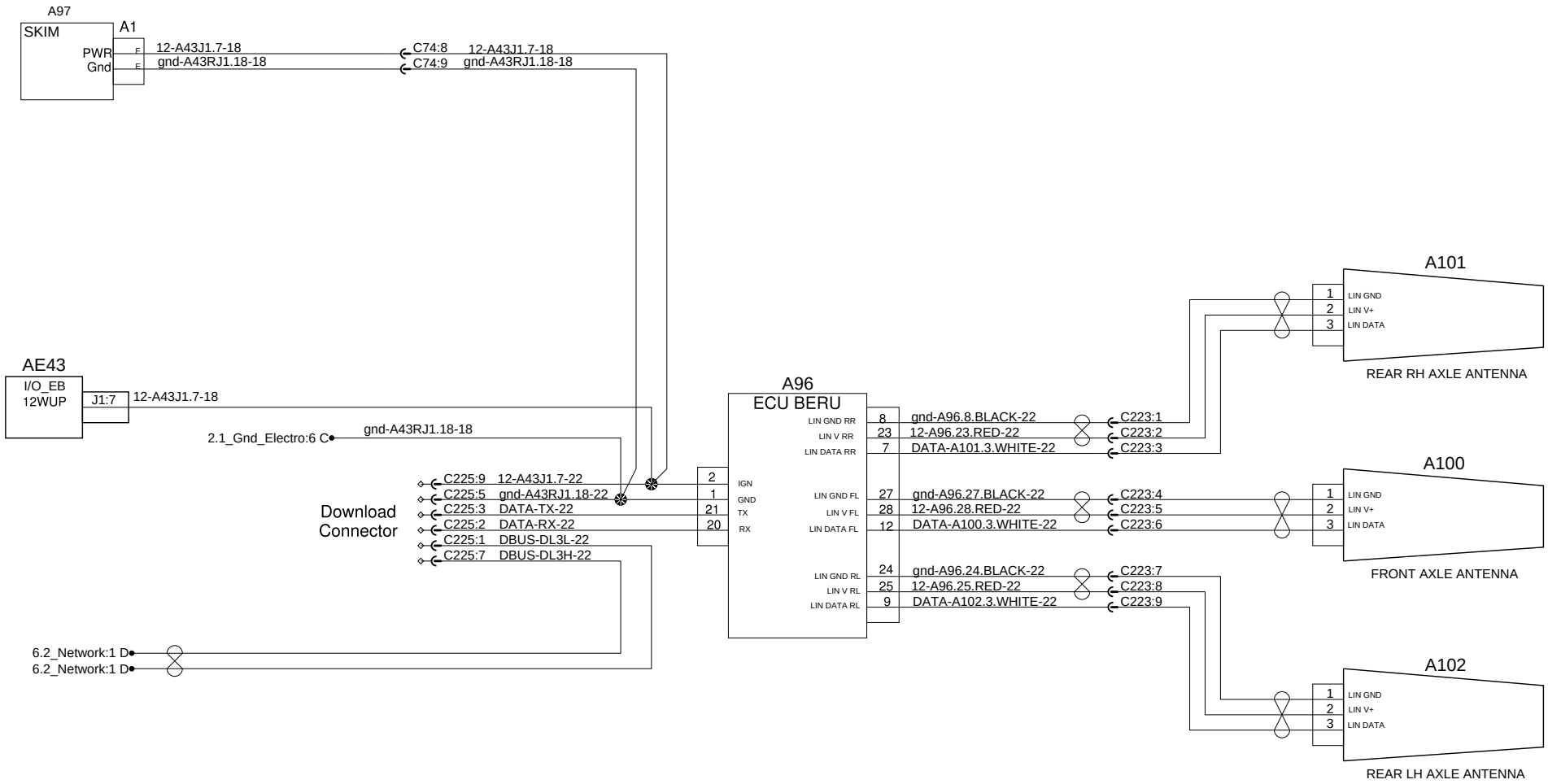

PREVOST®	WIRING DIAGRAM	No:D061780	Page:39.1	Rev:0