Batteries and alternators

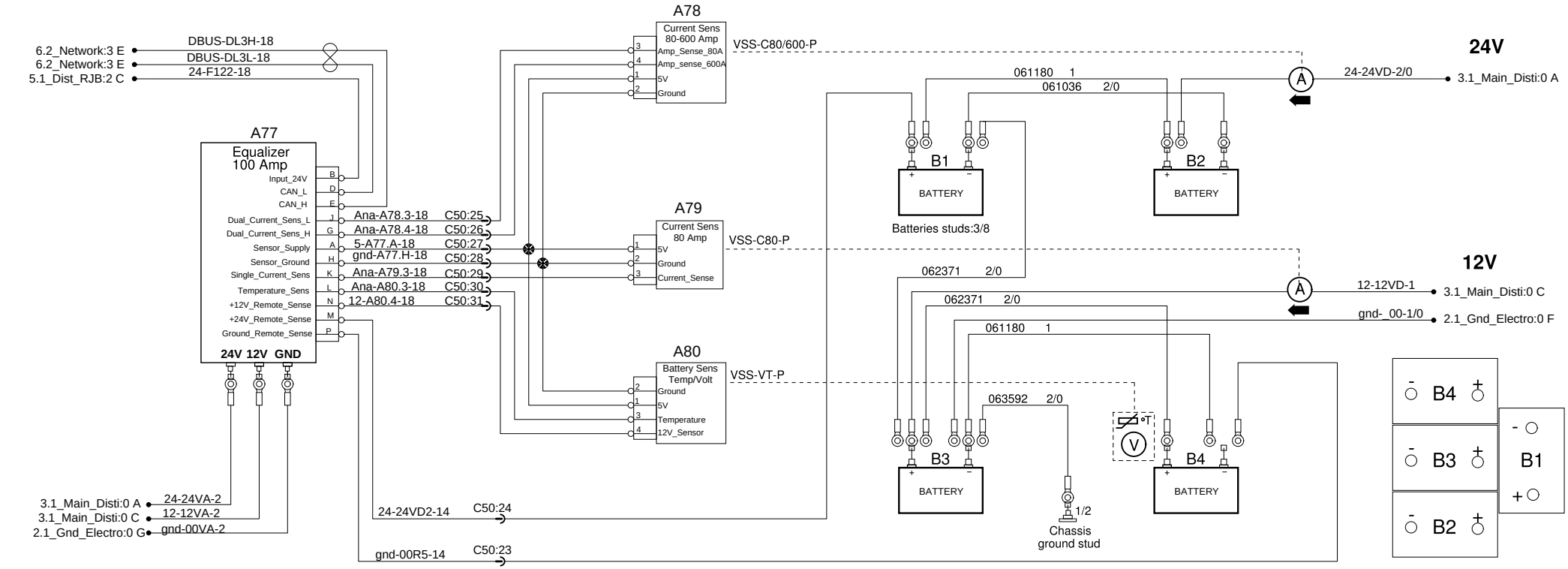

Alternators

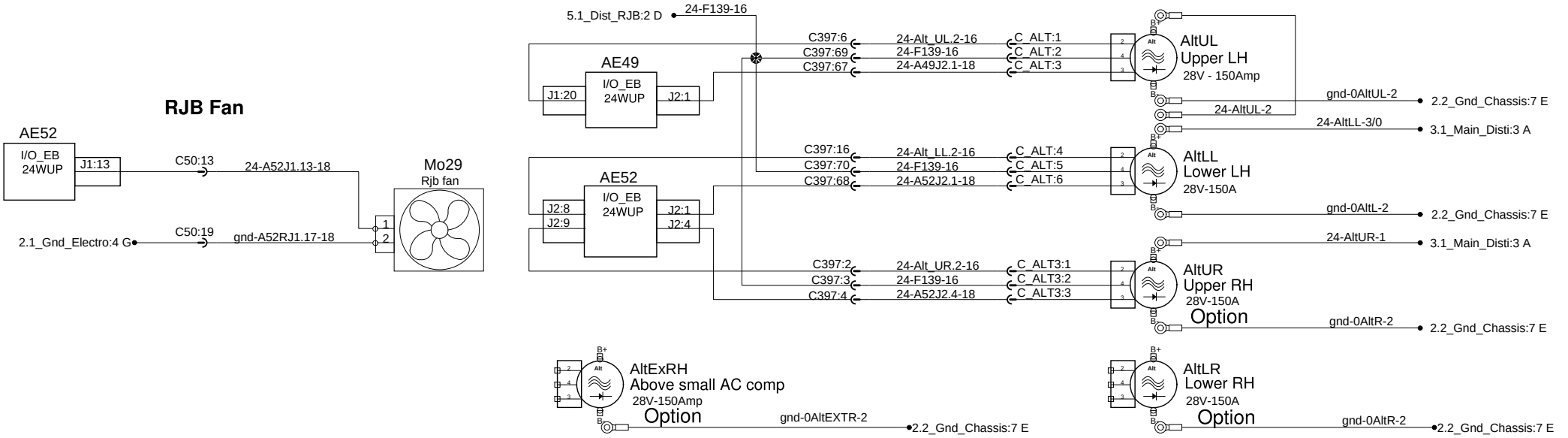

RJB Fan

PREVOST®	WIRING DIAGRAM	No:D061760	Page:1.1	Rev:0