Indirect lighting

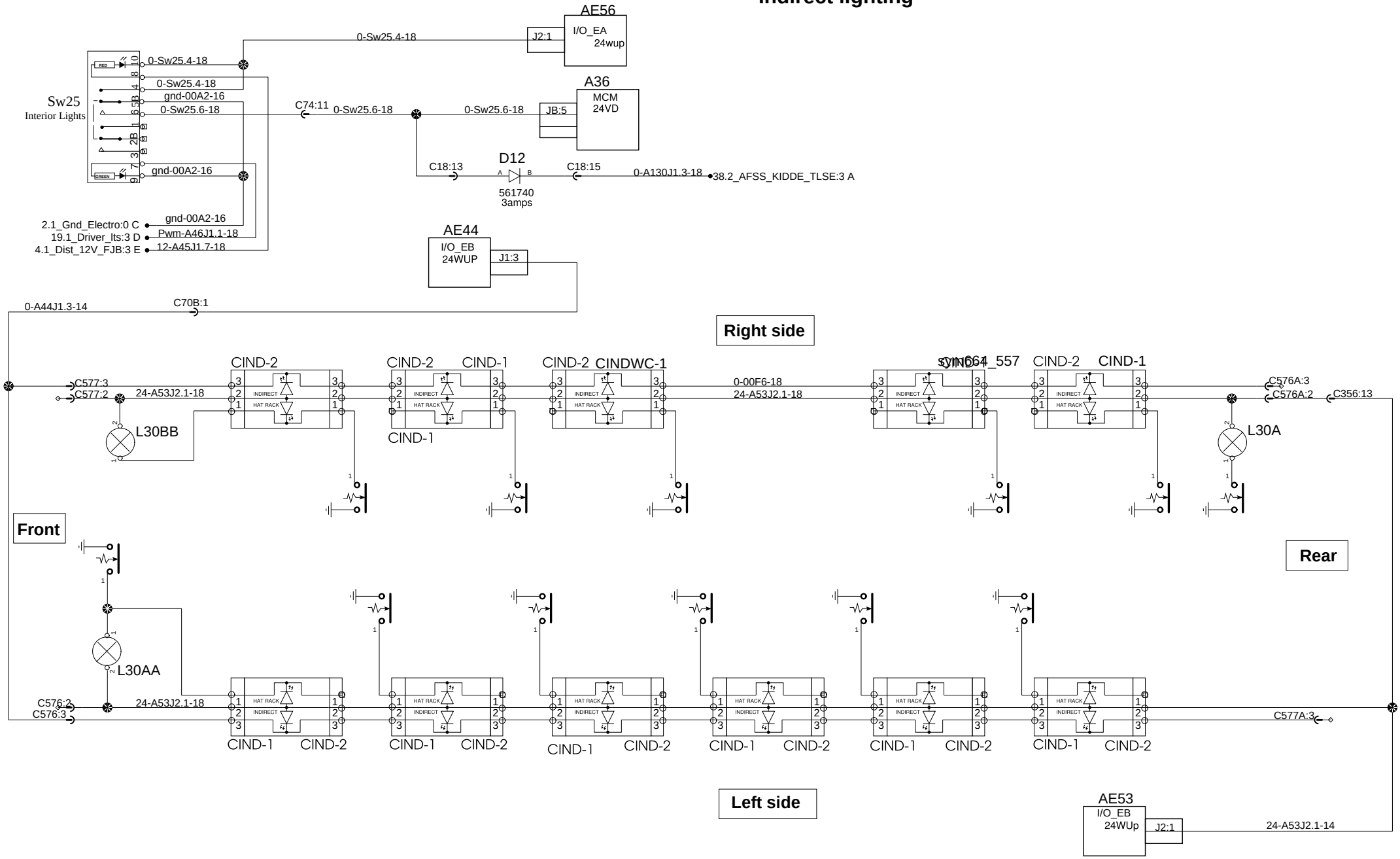

PREVOST®	WIRING DIAGRAM	No:D061780	Page:23.1	Rev:4