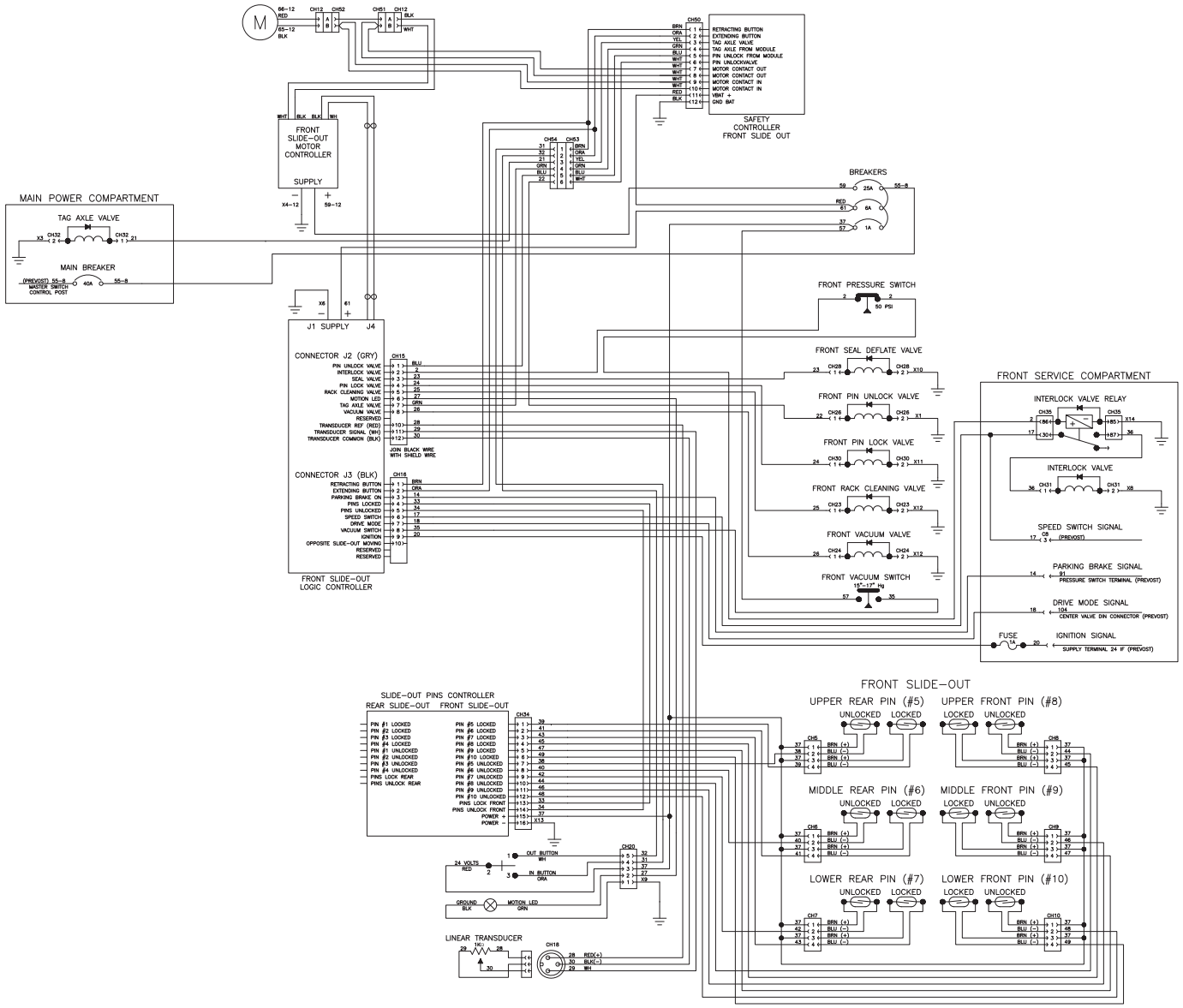


# XL2 SINGLE SLIDE-OUT ELECTRIC DIAGRAM (RETROFIT)

**EFFECTIVE FROM SERIAL NUMBER Y-7450 TO 1-7718**
**AND FROM 1-7724 TO 1-7773**

**(ALL WIRES ARE 18 AWG EXCEPT WHEN SPECIFIED)**

2002/04/26