Horn

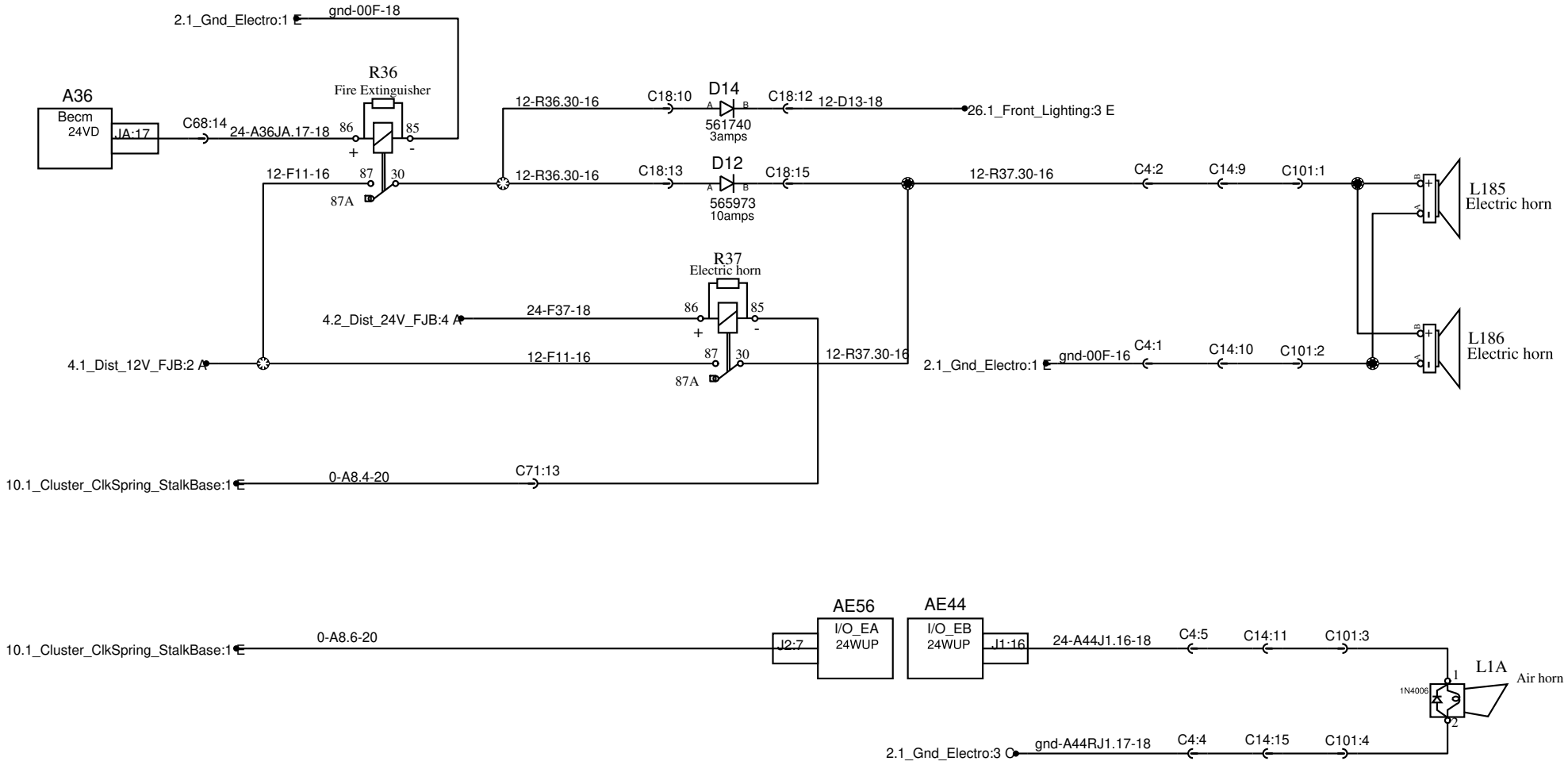

PREVOST®	WIRING DIAGRAM	No:D062140	Page:9.1	Rev:3