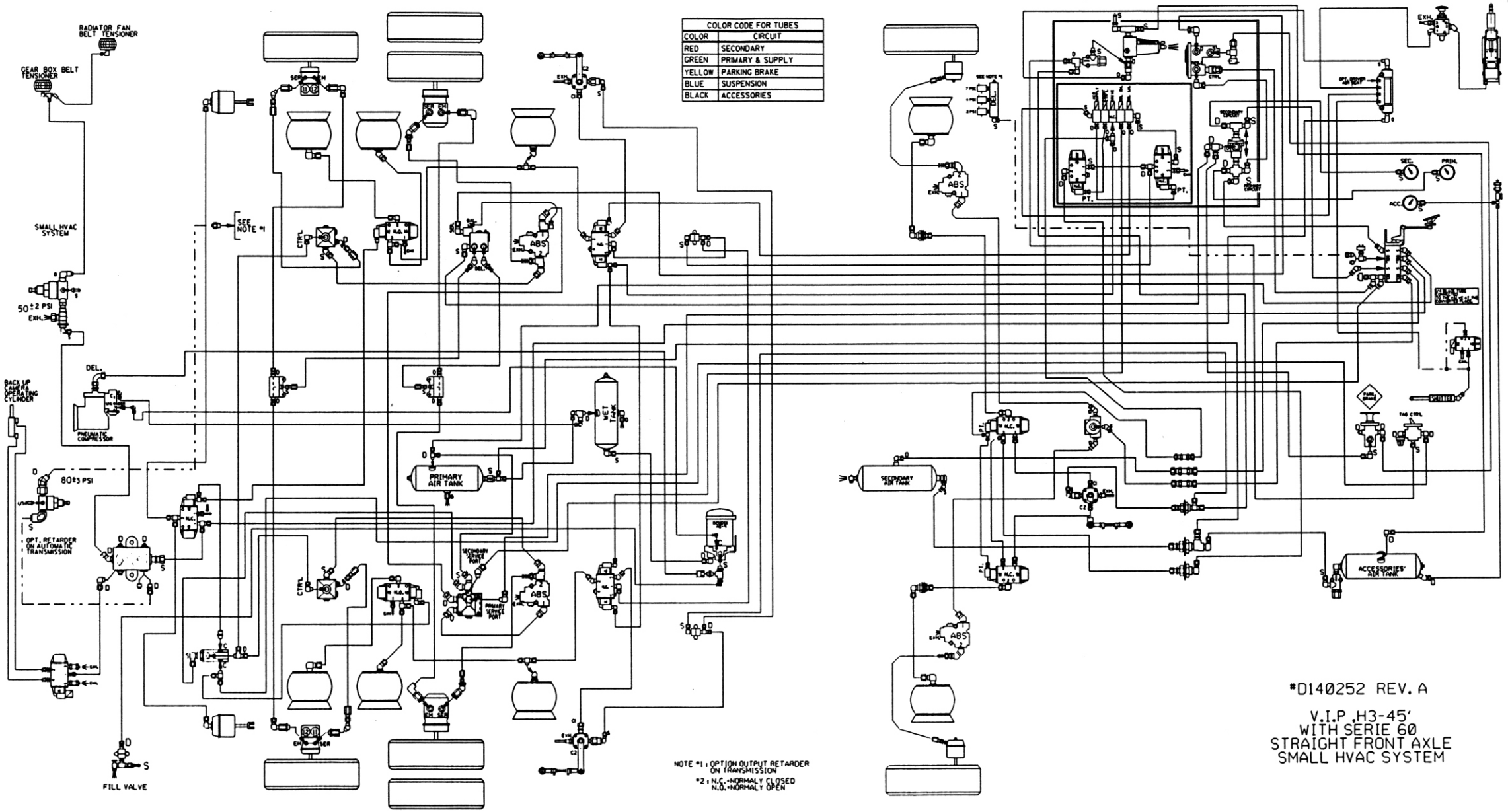
RADIATOR FAN BELT TENSIONER
GEAR BOX BELT TENSIONER
SMALL HVAC SYSTEM
50±2 PSI
EXH.
DEL.
BACK UP CAMERA OPERATING CYLINDER
PNEUMATIC COMPRESSOR
80±3 PSI
OPT. RETARDER ON AUTOMATIC TRANSMISSION
FILL VALVE
SEE NOTE #1
CTRL
ABS
PRIMARY AIR TANK
WET TANK
SECONDARY AIR TANK
SECONDARY SERVICE PORT
PRIMARY SERVICE PORT
SEC.
PRIM.
ACC.
PT.
ACCESSORIES' AIR TANK
TAG CTRL
COLOR CODE FOR TUBES
COLOR | CIRCUIT
RED | SECONDARY
GREEN | PRIMARY & SUPPLY
YELLOW | PARKING BRAKE
BLUE | SUSPENSION
BLACK | ACCESSORIES
NOTE #1 : OPTION OUTPUT RETARDER ON TRANSMISSION
#2 : N.C.=NORMALY CLOSED
N.O.=NORMALY OPEN
#D140252 REV. A
V.I.P .H3-45'
WITH SERIE 60
STRAIGHT FRONT AXLE
SMALL HVAC SYSTEM