PREVOST

COACH MANUFACTURER

PARTS MANUAL

PA1152

2014-01

Le Mirage XL II

PARTS MANUAL

General information

A. Vehicle Identification Number (V.I.N.)

Each time spare parts have to be ordered, you must refer to your vehicle identification number serial number. In order to understand the meaning of this number, please refer to the following:

2 P C X 3 3 4 9 5 Y 1 0 2 6951

X = VEHICLE MODEL
9 = VEHICLE LENGHT
Y= MODEL YEAR
6951= SEQUENCE NUMBER

Vehicle Model
This manual covers vehicle model XL coaches and MTH bus shells.

X	XL-II coaches
W	MTH bus shell
Y	MTH bus shell Entertainer

Vehicle Length

0	40 feet	**9**	45 feet

Model Year

YEAR	CODE	YEAR	CODE	YEAR	CODE	YEAR	CODE
1999	X	2002	2	2005	5	2008	8
2000	Y	2003	3	2006	6	2009	9
2001	1	2004	4	2007	7	2010	A

Sequence Number
This number represents the sequence the vehicle has followed on the assembly line. Since 1996 model year, the sequence number is represented by the last four digits

B. Effectivity

This manual covers information for vehicles from the Y-7046 to present.

The heading of each page in this manual refers to an effectivity serial number and in the parts description, you may find additional information on the effectivity of a specific part to a serial number (refer to FROM:).

In the description, you may also remark the expression UP TO which means that a component is effective to the vehicles manufactured up to the specified serial number (refer to UP TO:).

Le Mirage XL II

PARTS MANUAL

C. Illustrations

An exploded view is conveniently located at the beginning of each section and is meant to assist the user in identifying parts and components.
The illustrations show the typical construction of the different assemblies and , in all cases, may not reproduced the full detail or exact shape of parts shown, however, they represent parts which have same or similar function.

D. General

The information, illustrations and components/system descriptions contained in this manual are correct at time of publication. Prévost Car Inc., however, maintains a policy of continuous improvement of its product without imposing upon itself any obligation to install them on products previously manufactured.

Prévost Car Inc., reserves the right at any time to discontinue or change specifications, designs, features, models or equipment without incurring obligation.

E. Parts and Service Center

CANADA

Canadian Parts Customer Service 2955-A Watt Street Québec, Québec Canada, G1X 3W1	Toll free phone: 1 (800) 463-8876 Tel.: (418) 654-0174 Fax: (800) 939-0133 Fax: (418) 658-1723	**Service Center British Columbia** 11911 No. 5 Road Richmond, British Columbia Canada, V7A 4E9	Tel.: (604) 940-3306 Fax: (604) 940-3384
Service Center 850 Chemin Olivier Saint-Nicolas, Quebec Canada G7A 2N1	Toll free phone: 1 866 870-2046 Tel.: (418) 831-2046 Fax: (418) 831-7432	**Service Ontario** 8301-A Keele Street Vaughan, Ontario Canada, L4K 1Z6	Tel.: (905) 738-0881 Fax: (905) 738-0891
Service Center Alberta 292 MacDonald Crescent Fort McMurray, Alberta Canada T9H 4B6	Tel.: (780) 792-9526 Fax: (780) 743-0983		

UNITED STATES

Prevost Parts & Service Center 201 South Avenue South Plainfield, NJ USA, 07080	Toll free phone: (800) 223-0830 Tel.: (908) 222-7211 Fax: (908) 222-7304	**Prevost Parts & Service Center** 800 South Cartwright Street Goodlettsville, TN USA, 37072	Toll free phone: (877) 299-8881 Tel.: (615) 299-8881 Fax: (615) 299-8816
Prevost Parts & Service Center 3384 De Forest Circle Mira Loma, CA USA, 91752	Toll free phone: (800) 421-9958 Tel.: (909) 360-2550 Fax: (909) 360-2560	**US Parts Customer Service** 2200 Point Blvd., Suite 100 Elgin, IL USA, 60123	Toll free phone: (800) 621-5519 Tel.: (847) 844-7680 Toll free Fax : (877) 999-8809 Fax : (847) 844-6955
Prevost Parts & Service Center 6931 Business Park Blvd North Jacksonville, FL USA, 32256	Toll free phone: (800) 874-7740 Tel.: (904) 886-4555 Fax: (904) 886-0093	**Prevost Parts & Service Center** 15200 Frye Road Fort Worth, TX USA, 76155-2702	Toll free phone: (866) 773-8678 Tel.: (817) 685-0250 Fax: (817) 685-0460
Prevost Parts & Service Center 10155 Windfern Road Houston, TX USA, 77064	Toll free phone: (800) 874-7740 Tel.: (713) 849-8562 Fax: (713) 849-8562		

Le Mirage XL II

PARTS MANUAL

KEY & ABBREVIATIONS

(XXXX-XX) ..... SEE PAGE
<>..... BETWEEN
° ..... DEGREE
..... NUMBER
?? ..... INFORMATION NOT AVAILABLE AT TIME OF PUBLICATION

ABS..... ANTILOCK BRAKING SYSTEM
AR..... AS REQUIRED
ASSY..... ASSEMBLY
CCW ..... COUNTERCLOCKWISE
C.E. ..... COMMUTATOR END
CHR ..... CHROME
CW ..... CLOCKWISE
CYL. ..... CYLINDER
C/C ..... CENTER/CENTER
D.E. ..... DRIVE END
DIA. ..... DIAMETER
DIFF. ..... DIFFERENTIAL
D.P.D.T. ..... DOUBLE POLE DOUBLE THROW
ECU ..... ELECTRONIC CONTROL UNIT
EDU ..... ELECTRONIC DISTRIBUTOR UNIT
EFF ..... EFFECTIVE
ENG. ..... ENGINE
EXT ..... EXTERNAL
FR ..... FRONT
GND ..... GROUND
HD ..... HEAD
HEX ..... HEXAGONAL
H.P. ..... HIGH PRESSURE
HVAC ..... HEATING, VENTILATION & AIR CONDITIONING
HYD ..... HYDRAULIC
I.D. ..... INSIDE DIAMETER
INT ..... INTERNAL
JCT ..... JUNCTION
LED ..... LIGHT-EMITTING DIODE
L.P. ..... LOW PRESSURE
LUGG. ..... LUGGAGE
M & F ..... MALE & FEMALE
N/A ..... NOT AVAILABLE
NEG. ..... NEGATIVE
N.O. ..... NORMALY OPEN
N.C. ..... NORMALY CLOSE
N.P.N. ..... NO PARTS NUMBER
NPT ..... NATIONAL PIPE THREAD
NS ..... NOT SHOWN
N.S.P. ..... NOT SOLD AT PREVOST (SEE MANUFACTURING PART NUMBER AT THE END OF DESCRIPTION LINE)
N.S.S. ..... NOT SOLD SEPARATELY
O.D. ..... OUTSIDE DIAMETER
OPT. ..... OPTION
O.S. ..... OVERSIZE
PH ..... PHILLIPS
POS. ..... POSITIVE
RR ..... REAR
S.C.C. ..... SPECIFY COLOR CODE
SCT ..... SECTION
S.D. ..... SPECIFY DIMENSION
S.L. ..... SPECIFY LENGHT
SM ..... SMALL
S.P.S.T. ..... SINGLE POLE SINGLE THROW
S.P.D.T. ..... SINGLE POLE DOUBLE THROW
S.Q. ..... SPECIFY QUANTITY
SS ..... STAINLESS STEEL
STD ..... STANDARD
STO ..... STOVER
SW ..... SWIVEL
SWL FITT. ..... SWIVEL FITTING
TPG ..... TAPING
TH ..... THICKNESS
TRANS. ..... TRANSMISSION
TXV ..... THERMAL EXPANSION VALVE
U.S. ..... UNDERSIZE
W ..... WITH
W/O ..... WITHOUT
WIND. ..... WINDOW
ZP ..... ZINC PLATED

Le Mirage XL II

PARTS MANUAL

MEASUREMENT EQUIVALENTS

Fraction - Inches (dec.) - Millimeter 25.4mm = 1 inch 1mm = .03937 inch

fraction	decimal	mm	fraction	decimal	mm
1/64	0.0156	0.397	33/64	0.5156	13.097
1/32	0.0313	0.794	17/32	0.5313	13.494
-	0.0394	1	35/64	0.5469	13.891
3/64	0.0469	1.191	-	0.5512	14
1/16	0.0625	1.588	9/16	0.5625	14.288
5/64	0.0781	1.984	37/64	0.5781	14.684
-	0.0787	2	-	0.5906	15
3/32	0.0938	2.381	19/32	0.5938	15.081
7/64	0.1093	2.778	39/64	0.6094	15.478
-	0.1181	3	5/8	0.6250	15.875
1/8	0.1250	3.175	-	0.6299	16
9/64	0.1406	3.572	41/64	0.6406	16.272
5/32	0.1563	3.969	21/32	0.6563	16.669
-	0.1575	4	-	0.6693	17
11/64	0.1719	4.366	43/64	0.6719	17.066
3/16	0.1875	4.762	11/16	0.6875	17.462
-	0.1969	5	45/64	0.7031	17.859
13/64	0.2031	5.159	-	0.7087	18
7/32	0.2188	5.556	23/32	0.7188	18.256
15/64	0.2344	5.953	47/64	0.7344	18.653
-	0.2362	6	-	0.7480	19
1/4	0.2500	6.350	3/4	0.7500	19.050
17/64	0.2656	6.747	49/64	0.7656	19.447
-	0.2756	7	25/32	0.7813	19.844
9/32	0.2813	7.144	-	0.7874	20
19/64	0.2969	7.541	51/64	0.7969	20.241
5/16	0.3125	7.938	13/16	0.8125	20.638
-	0.3150	8	-	0.8268	21
21/64	0.3281	8.334	53/64	0.8281	21.034
11/32	0.3438	8.731	27/32	0.8438	21.431
-	0.3543	9	55/64	0.8594	21.828
23/64	0.3594	9.128	-	0.8661	22
3/8	0.3750	9.525	7/8	0.8750	22.225
25/64	0.3906	9.922	57/64	0.8096	22.622
-	0.3937	10	-	0.9055	23
13/32	0.4063	10.319	29/32	0.9063	23.019
27/64	0.4219	10.716	59/64	0.9219	23.416
-	0.4331	11	15/16	0.9375	23.812
7/16	0.4375	11.112	-	0.9449	24
29/64	0.4531	11.509	61/64	0.9531	24.209
15/32	0.4688	11.906	31/32	0.9688	24.606
-	0.4724	12	-	0.9843	25
31/64	0.4844	12.303	63/64	09844	25.003
12	0.5000	12.700	1/1	1	25.400
-	0.5118	13	-	-	-

Le Mirage XL II

PARTS MANUAL

TABLE OF CONTENTS

GENERAL	00
ENGINE	01
CLUTCH	02
FUEL	03
EXHAUST	04
COOLING	05
ELECTRICAL	06
TRANSMISSION	07
PROPELLER SHAFT	09
FRONT AXLE	10
REAR AXLE	11
BRAKE	12
WHEEL, HUBS & TIRES	13
STEERING	14
SUSPENSION	16
BODY	18
HEATING & AIR CONDITIONING	22
ACCESSORIES	23

PREVOST®

To have more information about fast moving parts, place an order for the book PA-1105 to your nearest parts order desk.

Thank you!

MTH-45

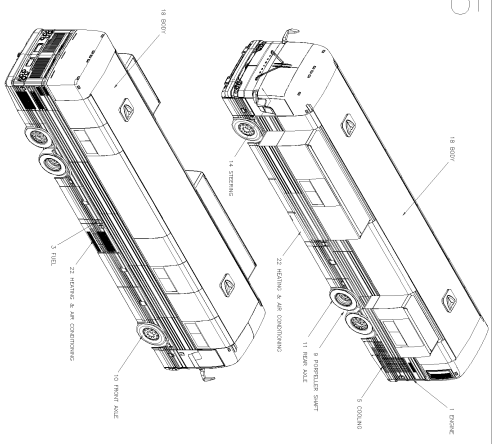

XL-45

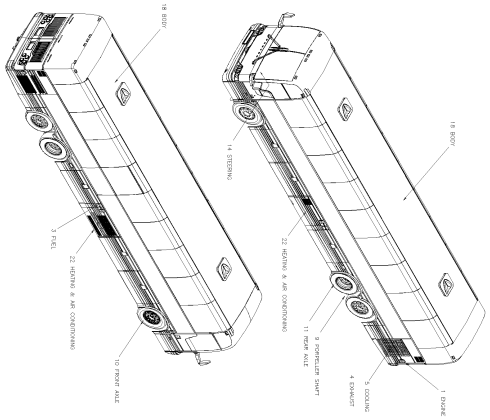

MTH-45S

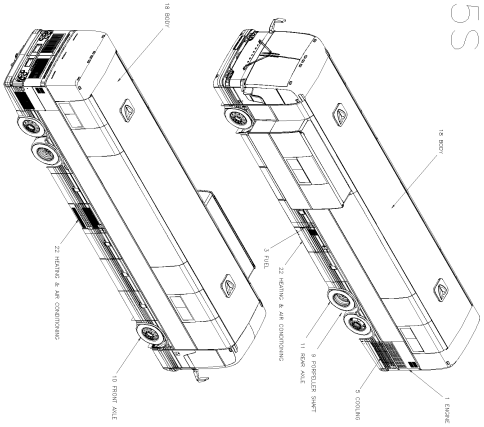

MTH-40

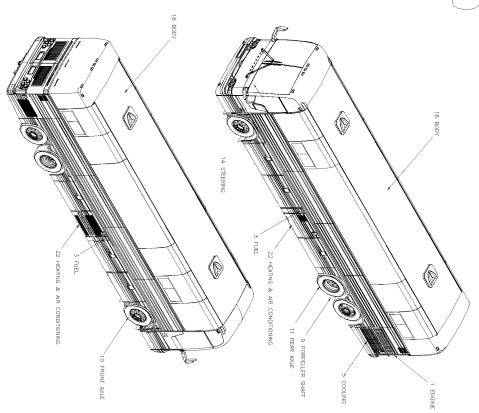

		DATE: 01/2014	PAGE: _XL-II					
XL-II / BUS & MTH - MODEL 2000 - 2006 From VIN Y-7046 to 8-9339								
ITEM	PART	DESCRIPTION	XL45	MTH40	MTH45	MTH45S	NOTE	
		FOR MTH ONLY						
		FOR VEHICLES FROM 8-9122 TO 8-9339						
		VERIFY IF YOU HAVE						
		A PARTICULE FILTER EXHAUST SYSTEM						
		IF NO USE THIS BOOK						
		IF YES USE BOOK XL-II MTH (PA-1230)						
1	Y2-01	**ENGINE From Y-7046 Up to 8-9339**						
2	Y2-02	**CLUTCH From Y-7046 Up to 8-9339**						
3	Y2-03	**FUEL From Y-7046 Up to 8-9339**						
4	Y2-04	**EXHAUST From Y-7046 Up to 8-9339**						
5	Y2-05	**COOLING From Y-7046 Up to 8-9339**						
6	Y2-06	**ELECTRICAL From Y-7046 Up to 8-9339**						
7	Y2-07	**TRANSMISSION From Y-7046 Up to 8-9339**						
9	Y2-09	**PROPELLER SHAFT From Y-7046 Up to 8-9339**						
10	Y2-10	**FRONT AXLE From Y-7046 Up to 8-9339**						
11	Y2-11	**REAR AXLE From Y-7046 Up to 8-9339**						
12	Y2-12	**BRAKE From Y-7046 Up to 8-9339**						
13	Y2-13	**WHEELS, HUBS & TIRES From Y-7046 Up to 8-9339**						
14	Y2-14	**STEERING From Y-7046 Up to 8-9339**						
16	Y2-16	**SUSPENSION From Y-7046 Up to 8-9339**						
18	Y2-18	**BODY From Y-7046 Up to 8-9339**						
22	Y2-22	**HEATING & AIR CONDITIONING From Y-7046 Up to 8-9339**						
23	Y2-23	**ACCESSORIES From Y-7046 Up to 8-9339**						
50	PA-1151	**MAINTENANCE MANUAL XL-II / 2000 & 2003 From Y-7046 Up to 3-8164**						
50	PA-1216	**MAINTENANCE MANUAL XL-II / 2004 From 4-8165**						
50	PA-1218	**MAINTENANCE MANUAL XL-II / 2005**						
50	PA-1553	**MAINTENANCE MANUAL XL-II / 2007 DDEC V MUX**						
55	PA-1149	**OPERATOR'S MANUAL XL-II / 2000 TO 2003 From Y-7046 Up to 3-8164**						
55	PA-1511	**OPERATOR'S MANUAL XL-II / BILINGUAL / 2004 From 4-8165**						
55	PA-1525	**OPERATOR'S MANUAL XL-II / BILINGUAL / 2005**						
60	PA-1150	**MANUEL DE L'OPÉRATEUR XL-II / 2000 À 2003 From Y-7046 Up to 3-8164**						
60	PA-1511	**OPERATOR'S MANUAL XL-II / BILINGUAL / 2004 From 4-8165**						
60	PA-1525	**OPERATOR'S MANUAL XL-II / BILINGUAL / 2005**						
65	PA-1148	**OWNER'S MANUAL MTH XL-II / 2000 TO 2003 From Y-7046 Up to 3-8164**						
65	PA-1513	**OWNER'S MANUAL MTH XL-II / 2004 From 4-8165 Up to 5-8805**						
65	PA-1527	**OWNER'S MANUAL MTH XL-II / 2005 & 2006 From 6-8806 Up to 7-9095**						
65	PA-1552	**OWNER'S MANUAL MTH XL-II / 2007 DDEC V MUX From 7-9096**						
70	PA-1152	PARTS MANUAL XL-II / 2000 TO 2006 From Y-7046						

		DATE: 01/2014	PAGE: _XL-II					
XL-II / BUS & MTH - MODEL 2000 - 2006 From VIN Y-7046 to 8-9339								
ITEM	PART	DESCRIPTION	XL45	MTH40	MTH45	MTH45S	NOTE	
80	SERIAL NUMBER	**HOW TO USE FONCTION <SN>**						

	DATE: 01/2014	PAGE: _XL-II

XL-II / BUS & MTH - MODEL 2000 - 2006 From VIN Y-7046 to 8-9339

ITEM	PART	DESCRIPTION	XL45	MTH40	MTH45	MTH45S	NOTE

From Y-7046 Up to 8-9339	DATE: 01/2014	PAGE: Y2-01
ENGINE		

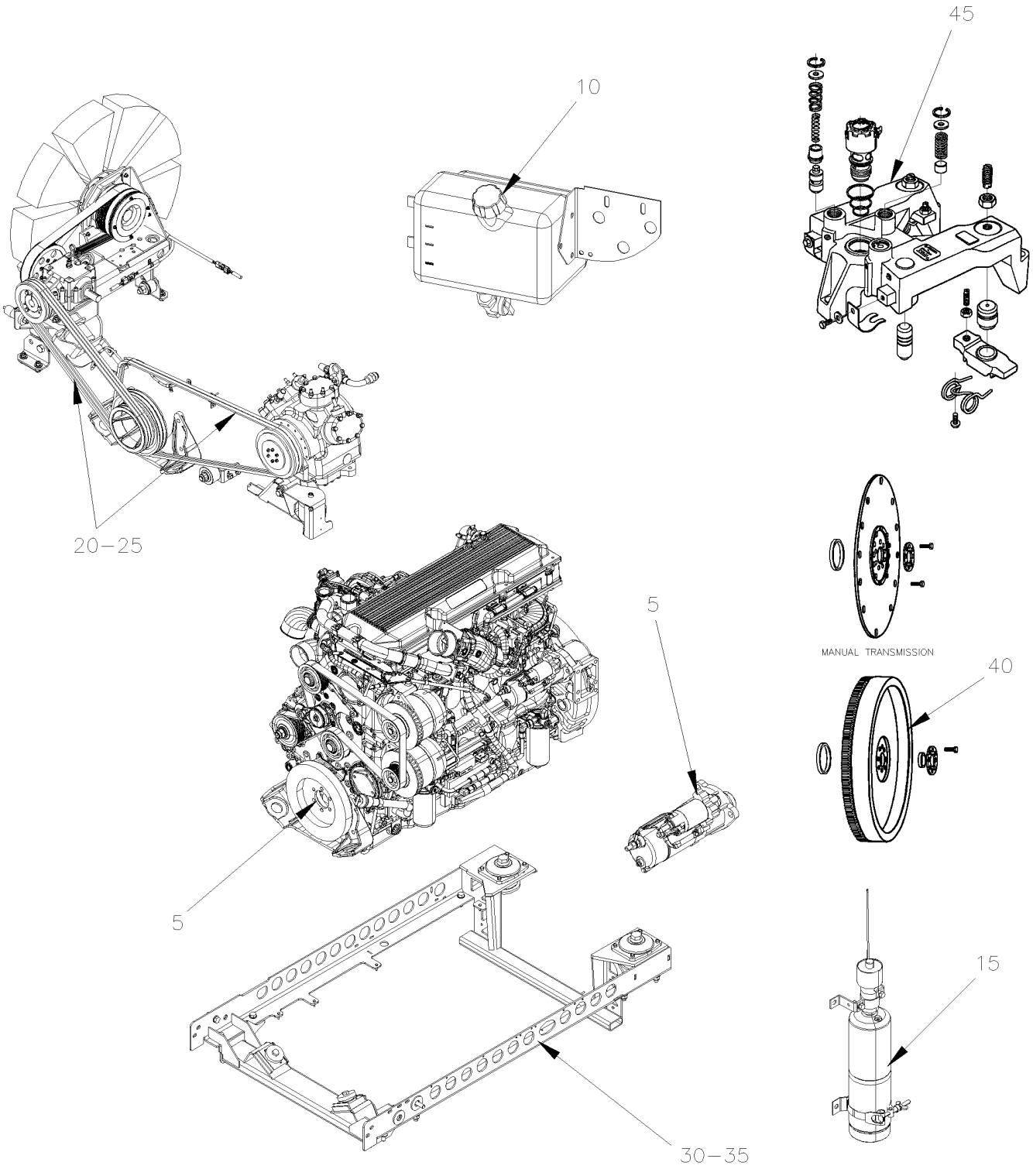

From Y-7046 Up to 8-9339	DATE: 01/2014	PAGE: Y2-01

ENGINE

ITEM	PART	DESCRIPTION	XL45	MTH40	MTH45	MTH45S	NOTE
5	Y2-0100-00	**ENGINE WIRING HARNESS - INSTALLATION From Y-7046 Up to 8-9339**					
10	Y2-0105-00	**ENGINE OIL RESERVOIR - PLASTIC From Y-7046 Up to 8-9339**					
15	Y2-0116-00	**STARTING AID - INSTALLATION From Y-7046 Up to 8-9339**					
20	Y2-0120-00	**DRIVE PULLEY & BELTS - BUS & MTH 45' ENT From Y-7046 Up to 8-9339**					
20	Y2-0120-50	**DRIVE PULLEY & BELTS - MTH From Y-7046 Up to 8-9339**					
25	Y2-0125-00	**BELTS TENSIONERS - WITH DETROIT S-60 From Y-7046 Up to 3-8164**					
25	Y2-0125-01	**BELTS TENSIONERS - WITH DETROIT S-60 From 4-8165 Up to 8-9339**					
30	Y2-0150-00	**ENGINE CRADLE - WITH DETROIT S-60 From Y-7046 Up to 4-8345**					
30	Y2-0150-01	**ENGINE CRADLE - WITH DETROIT S-60 From 4-8346 Up to 8-9339**					
35	Y2-0155-10	**ENGINE TRANSMISSION GUARD & AIR SHIELD DETROIT S-60 From Y-7046 Up to 8-9339**					
40	Y2-0160-00	**FLYWHEEL - WITH MANUAL TRANS From Y-7462 Up to 8-9339**					
45	Y2-0165-00	**JACOB'S - ENGINE BRAKE - WITH DETROIT S-60 From Y-7046 Up to 8-9339**					

From Y-7046 Up to 8-9339	DATE: 01/2014	PAGE: Y2-0100-00

ENGINE WIRING HARNESS - INSTALLATION

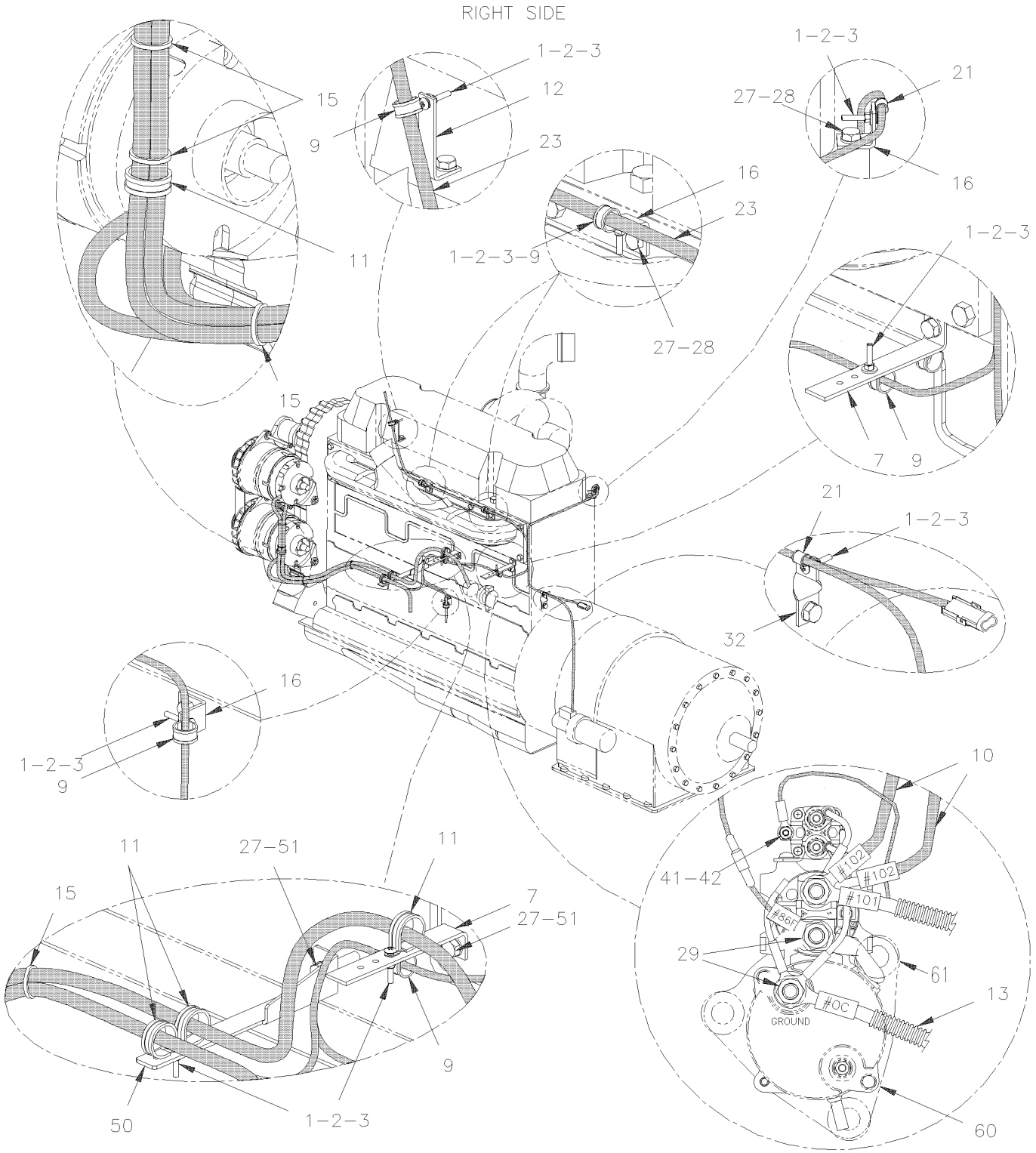

From Y-7046 Up to 8-9339	DATE: 01/2014	PAGE: Y2-0100-00

ENGINE WIRING HARNESS - INSTALLATION

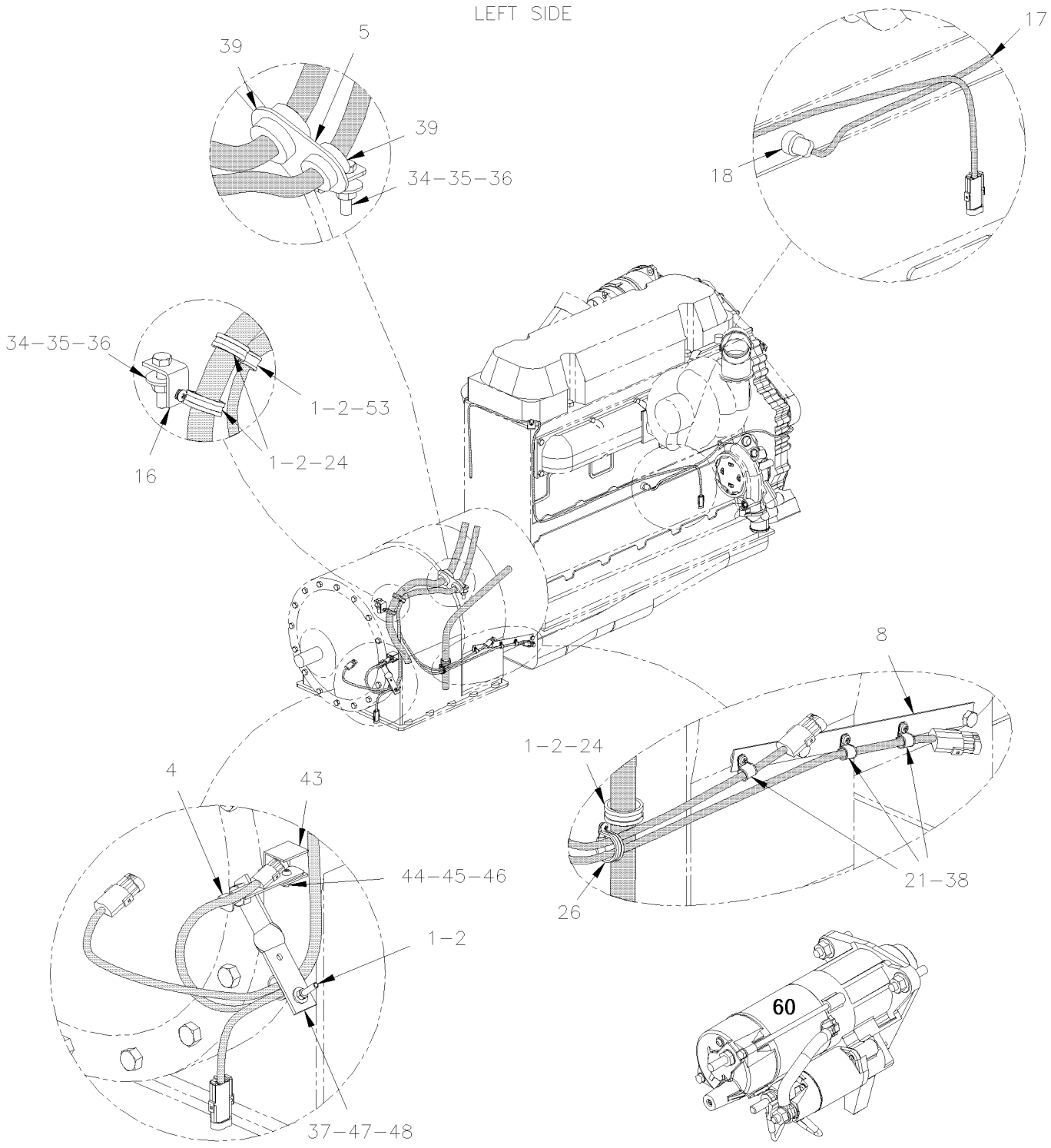

From Y-7046 Up to 8-9339	DATE: 01/2014	PAGE: Y2-0100-00

ENGINE WIRING HARNESS - INSTALLATION

ITEM	PART	DESCRIPTION	XL45	MTH40	MTH45	MTH45S	NOTE
1	500574	SCREW MA TR PH #10-24x1 1/4 SS	AR				
2	500786	NUT HEX #10-24 ZP	AR				
3	500440	WASHER FL .250x.562x.065 ZP	AR	AR	AR	AR	
4	504637	CABLE TIE / 3/16" x 13"	AR	AR	AR	AR	
5	071035	SUPPORT CABLE HARNESS / W/2 HOLES / WTEC III Up to 7-9000	1	1	1	1	
5	071403	SUPPORT CABLE HARNESS / W/1 HOLE & 1 STUD / GEN IV From 7-9001	1	1	1	1	
6	065697	SUPPORT HARNESS / LONG	1	1	1	1	
7	010667	SUPPORT	2	2	2	2	
8	071029	SUPPORT CABLE / STRAP 298MM	1	1	1	1	
9	952631	CLAMP / 3/4" I.D. / REPLACED BY: 977742	6	6	6	6	
10	064740	CABLE ASSY # 102-2/0 W/"BOSCH" ALTERNATOR	2			2	
11	952637	CLAMP / 1"1/16 I.D.	3	3	3	3	
12	070368	SUPPORT	1	1	1	1	
13	062214	CABLE ASSY # 0C	1	1	1	1	
NS	062212	CABLE ASSY # 0B	1	1	1	1	
15	504016	CABLE TIE / 5/16" X 14"1/2	1	1	1	1	
16	061025	SUPPORT	1	1	1	1	
17	063295	CABLE ASSY / 110V BLOCK HEATER ENGINE SECTION	1	1	1	1	
18	560410	BLOCK HEATER	1	1	1	1	
19	5001098	WASHER FL 14.0x20.0x1.5 COP	AR	AR	AR	AR	
20	684013	RUBBER PROTECTOR / COLOR GUARD	AR	AR	AR	AR	
21	952625	CLAMP / 3/8" I.D.	2	2	2	2	
22	065027	CABLE GROUND ALT "BOSCH"	2			2	
23	064881	CABLE ASSY / ENGINE ACCESSORIES Up to 2-7823	1	1	1	1	
23	065598	CABLE ASSY / ENGINE ACCESSORIES From 2-7824 Up to 3-8164	1	1	1	1	
23	065786	CABLE ASSY / ENGINE ACCESSORIES From 4-8165 Up to 4-8279 / REPLACED BY: 066008	1	1	1	1	
23	066008	CABLE ASSY / ENGINE ACCESSORIES From 4-8280 Up to 5-8425	1	1	1	1	
23	066200	CABLE ASSY / ENGINE ACCESSORIES From 5-8426 Up to 7-9000	1	1	1	1	
23	066848	CABLE ASSY / ENGINE ACCESSORIES From 7-9001		1	1	1	
24	952635	CLAMP / 1" I.D.	3	3	3	3	
25	500257	WASHER LO SPT 10.2x18.1x2.2 ZP	AR	AR	AR	AR	
26	060025	CLAMP / 5/8" I.D / W/HOLE 13/32" Up to 3-8164 / REPLACED BY: 560481	1	1	1	1	
. NS	952629	. CLAMP / 5/8" I.D. Up to 3-8164	1	1	1	1	
26	952629	CLAMP / 5/8" I.D. From 4-8165	2	2	2	2	
27	502559	SCREW CAP HEX M10-1.5x25 G8.8 ZP	AR	AR	AR	AR	
28	500441	WASHER FL .312x.734x.065 ZP	AR	AR	AR	AR	
29	500482	WASHER LO SPT .506x.873x.125 ZP	AR	AR	AR	AR	
30	500857	WASHER LO INT .512x.900x.045 ZP	AR	AR	AR	AR	
31	500850	SCREW CAP HEX M12-1.75X25 G8.8 ZP	AR	AR	AR	AR	

From Y-7046 Up to 8-9339	DATE: 01/2014	PAGE: Y2-0100-00

ENGINE WIRING HARNESS - INSTALLATION

ITEM	PART	DESCRIPTION	XL45	MTH40	MTH45	MTH45S	NOTE
32	061027	SUPPORT 2"1/2 LG	1	1	1	1	
33	500860	NUT HEX M12-1.75 ZP	AR	AR	AR	AR	
34	502549	SCREW CAP HEX M10-1.5x35 G8.8 ZP	AR	AR	AR	AR	
35	500680	NUT HEX STO M10-1.5 ZP	AR	AR	AR	AR	
36	502644	WASHER FL 10.5x30.0x2.5 ZP	AR	AR	AR	AR	
37	061129	SUPPORT FLAT TWISTED / TUBE DIPSTICK	1	1	1	1	
38	5001036	SCREW MA PAN PH M4-0.7x10 ZP	AR	AR	AR	AR	
39	064716	CABLE ASSY / <> TRANS & SPEED SWITCH Up to Y-7364 / REPLACED BY: 065330	1	1	1	1	R
39	065330	CABLE ASSY / <> TRANS & SPEED SWITCH / W/RETARDER From Y-7365 Up to 3-7984 / REPLACED BY: 065750	1	1	1	1	R
39	065750	CABLE ASSY / <> TRANS & SPEED SWITCH / W/RETARDER From 3-7985	1	1	1	1	R
39	064716	CABLE ASSY / <> TRANS & SPEED SWITCH Up to Y-7351 / REPLACED BY: 065330	1	1	1	1	O
39	065331	CABLE ASSY / <> TRANS & SPEED SWITCH / W/O RETARDER From Y-7352 Up to 3-7984 / REPLACED BY: 065750	1	1	1	1	O
39	065751	CABLE ASSY / <> TRANS & SPEED SWITCH / W/O RETARDER From 3-7985	1	1	1	1	O
40	064942	CABLE ASSY / W/2 "BOSCH" 140 AMPS Up to 5-8425	1			1	
41	502561	NUT HEX M5-0.8 ZP	AR	AR	AR	AR	
42	504601	CLAMP / 5/16" I.D. x 375 HOLE	1	1	1	1	R
43	065398	SUPPORT RETARDER TEMPERATURE SENSOR	1	1	1	1	R
44	500344	SCREW MA RND PH M4-0.7x12 ZP	AR	AR	AR	AR	R
45	502524	NUT HEX M4-0.7 NP	AR	AR	AR	AR	R
46	502636	WASHER LO SPT 4.1x7.6x0.9 ZP	AR	AR	AR	AR	R
47	071097	PROTECTOR SUPPORT SS 102MM X 90MM	1	1	1	1	R
48	071096	PROTECTOR SUPPORT SS ANGLE SHAPE 61MM X 73MM Up to 7-9240	1	1	1	1	O
49	071440	PROTECTOR SUPPORT SS "V" SHAPE 80MM HIGH From 7-9241		1	1	1	O
50	065697	SUPPORT HARNESS / LONG Up to 3-8164	1	1	1	1	
50	382033	PROTECTOR "E.C.M." / PLASTIC From 4-8165	1	1	1	1	
50	952627	CLAMP / 1/2" I.D.	3	3	3	3	
50	Y2-0155-10	**ENGINE TRANSMISSION GUARD & AIR SHIELD DETROIT S-60**					
51	500257	WASHER LO SPT 10.2x18.1x2.2 ZP Up to 3-8164	AR	AR	AR	AR	
51	502862	SCREW CAP HEX M8-1.25x20 G8.8 ZG603 From 4-8165	AR	AR	AR	AR	
NS	500381	WASHER FL 8.4x25.0x2.0 ZG603 From 4-8165	AR	AR	AR	AR	
60	510485	STARTER MOTOR / 24V 42MT "DELCO" Up to 3-8119	1	1	1	1	F
60	510752	STARTER MOTOR / "MELCO" / W/RELAY From 3-8120	1	1	1	1	
. NS	510888	. SOLONOID KIT From 3-8120	1	1	1	1	
. . NS	IS752SOL	. . INSTRUCTION SHEET / SOLENOID REPLACEMENT From 3-8120	1	1	1	1	
. NS	510889	. SMALL STARTOR RELAY KIT / WITH CABLES From 3-8120	1	1	1	1	
. . NS	564095	. . SMALL STARTOR RELAY From 3-8120	1	1	1	1	
. . NS	IS752MAG	. . INSTRUCTION SHEET / MAGNETIC SWITCH REPLACEMENT From 3-8120	1	1	1	1	
61	5001668	SCREW CB 12POINT 5/8-11x2 1/4	3				
NS	502884	WASHER LO SPT 16.2x27.4x3.5 ZG603	3				
		F) FOR PRODUCT IMPROVEMENT, ASK KIT #012260 AND					
		SEE INSTRUCTION SHEET					
		O) W/O RETARDER					
		R) WITH RETARDER					

From Y-7046 Up to 8-9339	DATE: 01/2014	PAGE: Y2-0100-00

ENGINE WIRING HARNESS - INSTALLATION

ITEM	PART	DESCRIPTION	XL45	MTH40	MTH45	MTH45S	NOTE
NS	061025	SUPPORT Up to 2-7407	1	1	1	1	A
NS	561012	PROTECTOR, TRANS. SWITCH Up to 2-7407	1				A
NS	064765	CABLE ASSY BACK-UP Up to 2-7407	1				A
NS	684013	RUBBER PROTECTOR / COLOR GUARD Up to 2-7407	AR				A
NS	070368	SUPPORT Up to 2-7407	1				A
NS	012260	KIT, RETROFIT STARTOR "MELCO"	1	1	1	1	
. NS	IS-02053C	. SEE INSTRUCTION SHEET	1	1	1	1	
		A) WITH "EATON TRANS"					

From Y-7046 Up to 8-9339	DATE: 01/2014	PAGE: Y2-0100-00

ENGINE WIRING HARNESS - INSTALLATION

ITEM	PART	DESCRIPTION	XL45	MTH400	MTH445	MTH445S	NOTE

From Y-7046 Up to 8-9339	DATE: 01/2014	PAGE: Y2-0105-00

ENGINE OIL RESERVOIR - PLASTIC

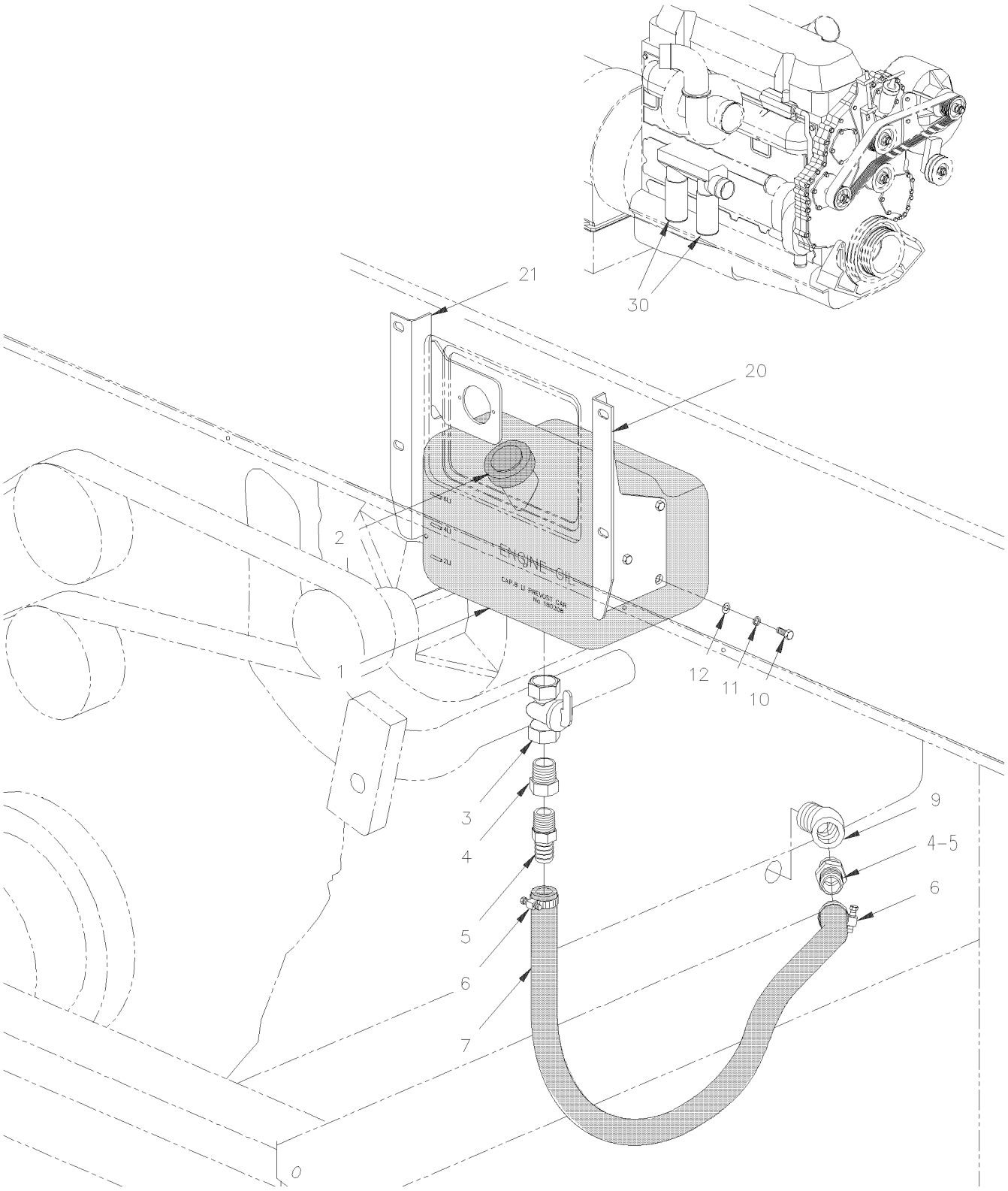

From Y-7046 Up to 8-9339	DATE: 01/2014	PAGE: Y2-0105-00

ENGINE OIL RESERVOIR - PLASTIC

ITEM	PART	DESCRIPTION	XL45	MTH40	MTH45	MTH45S	NOTE
1	180208	TANK OIL	1	1	1	1	
2	683477	CAP	1	1	1	1	
3	5011045	VALVE 3/4"	1	1	1	1	
4	501462	BUSHING REDUCER / PIPE FITTING / 3/4NTP-Mx1/2NPT-F BR	1	1	1	1	
5	507605	MALE CONNECTOR / HOSE BARB FITTING / #12x1/2NPT-M BR	1	1	1	1	
6	504020	HOSE CLAMP / 9/16"-1"1/4 SS / HS-12	2	2	2	2	
7	180196	HOSE #12 1853MM	1	1	1	1	
7	503547	. HOSE RUBBER #12 / S.L.	AR	AR	AR	AR	
8	507605	MALE CONNECTOR / HOSE BARB FITTING / #12x1/2NPT-M BR	1	1	1	1	
NS	501462	BUSHING REDUCER / PIPE FITTING / 3/4NTP-Mx1/2NPT-F BR	1	1	1	1	
9	5011051	STREET ELBOW 45º / PIPE FITTING / 3/4NPT-Mx3/4NPT-F BR	1	1	1	1	
9	501528	STREET ELBOW 45º / PIPE FITTING / 1/2NPT-Mx1/2NPT-F BR		1	1	1	
10	502531	SCREW CAP HEX M6-1.0x16 G8.8 ZP	6	6	6	6	
11	500411	WASHER FL .260x.697x.050 SS	6	6	6	6	
NS	502564	WASHER LO SPT 6.1x11.8x1.6 ZP	6	6	6	6	
NS	403536	DECAL "OIL SPEC" Up to 3-8164	1	1	1	1	
11	012182	DECAL "OIL SPEC" 15W/40 FR/ENG From 4-8165 / REPLACED BY: 012399	1	1	1	1	
20	213960	SUPPORT L.H. / OIL RESERVOIR Up to 2-7888	1	1	1	1	
20	180239	SUPPORT L.H. / OIL RESERVOIR From 2-7889	1	1	1	1	
21	213268	SUPPORT R.H. / OIL RESERVOIR Up to 2-7888	1	1	1	1	
21	180240	SUPPORT R.H. / OIL RESERVOIR From 2-7889	1	1	1	1	
21	502862	SCREW CAP HEX M8-1.25x20 G8.8 ZG603	4	4	4	4	A
21	502889	WASHER LO SPT 8.1x12.7x2.0 ZG603	4	4	4	4	A
21	192288	WASHER FL 8.4x18.0x2.0 ZG603	4	4	4	4	A
30	510458	OIL FILTER, CARTRIDGE / PF-2100 / ENGINE / W/SERIES 60	2	2	2	2	
		A) TO FIX AT STRUCTURE					

From Y-7046 Up to 8-9339	DATE: 01/2014	PAGE: Y2-0116-00

STARTING AID - INSTALLATION

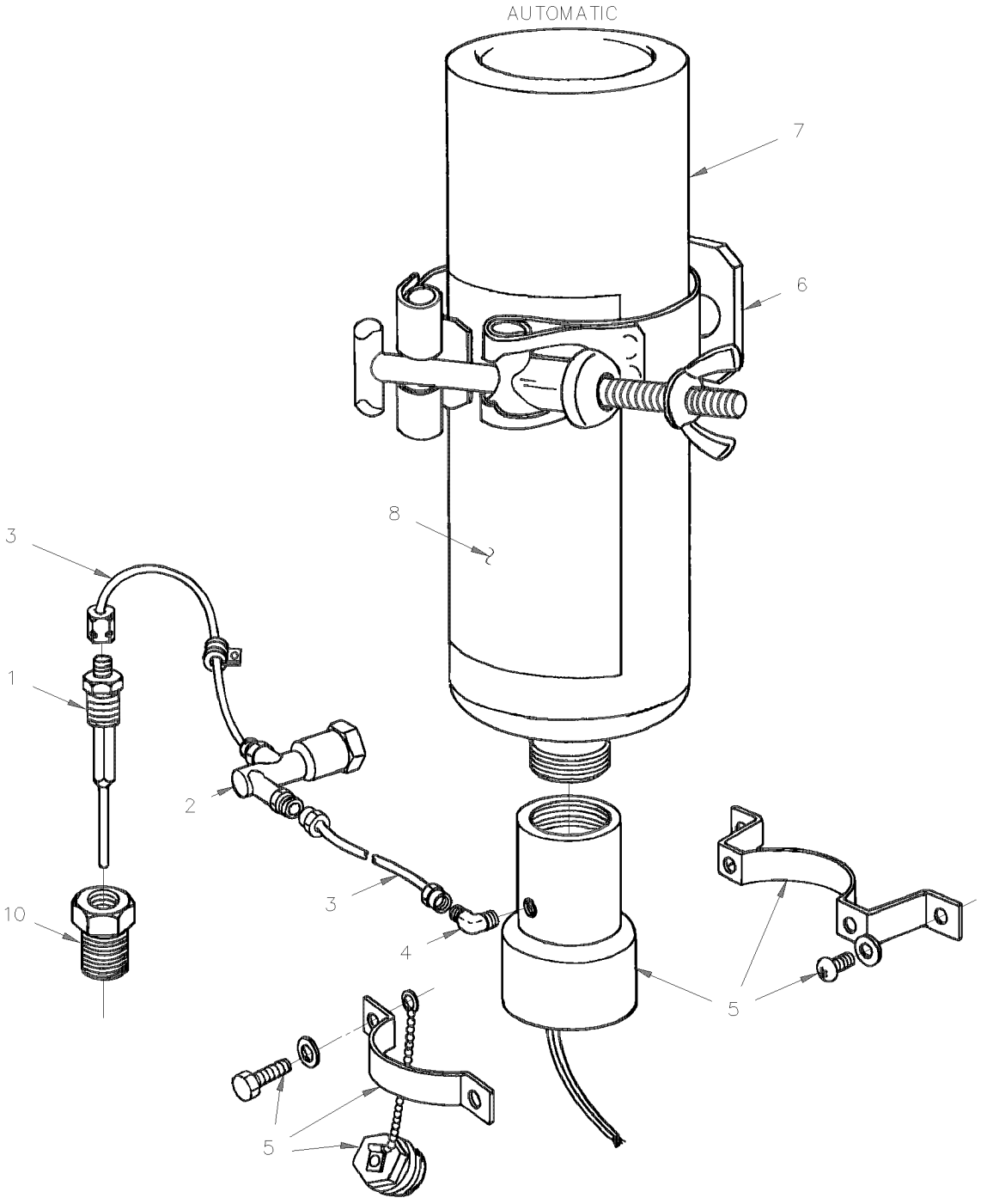

From Y-7046 Up to 8-9339	DATE: 01/2014	PAGE: Y2-0116-00

STARTING AID - INSTALLATION

ITEM	PART	DESCRIPTION	XL45	MTH40	MTH45	MTH45S	NOTE
1	510170	ATOMIZER	1	1	1	1	
2	510169	THERMACLOZ	1	1	1	1	
3	510168	TUBE PLASTIC	1	1	1	1	
4	510171	ELBOW 90° / REPLACED BY: 501832	1	1	1	1	
5	011338	VALVE ASSY W/CONNECTOR	1	1	1	1	
5	510167	. VALVE	1	1	1	1	
6	510166	CLAMP CYLINDER	1	1	1	1	
7	510173	CYLINDER DIESEL STARTING FUEL	1	1	1	1	
8	510172	DECAL	1	1	1	1	
NS	500165	SCREW CAP HEX 1/4-20x1 G5 ZP	2	2	2	2	
10	501534	BUSHING REDUCER / PIPE FITTING / 1/2NPT-Mx3/8NPT-F BR	1	1	1	1	
NS	032410	SUPPORT / RIVETED ON FRAME	1	1	1	1	
NS	562698	SWITCH / OFF-M/ON / D.P.S.T. / W/GREEN LED	1	1	1	1	
NS	562734	CAP / ETHER	1	1	1	1	
NS	061409	WIRING ASSY / REAR JCT BOX & VALVE	1	1	1	1	

From Y-7046 Up to 8-9339	DATE: 01/2014	PAGE: Y2-0120-00

DRIVE PULLEY & BELTS - BUS & MTH 45' ENT

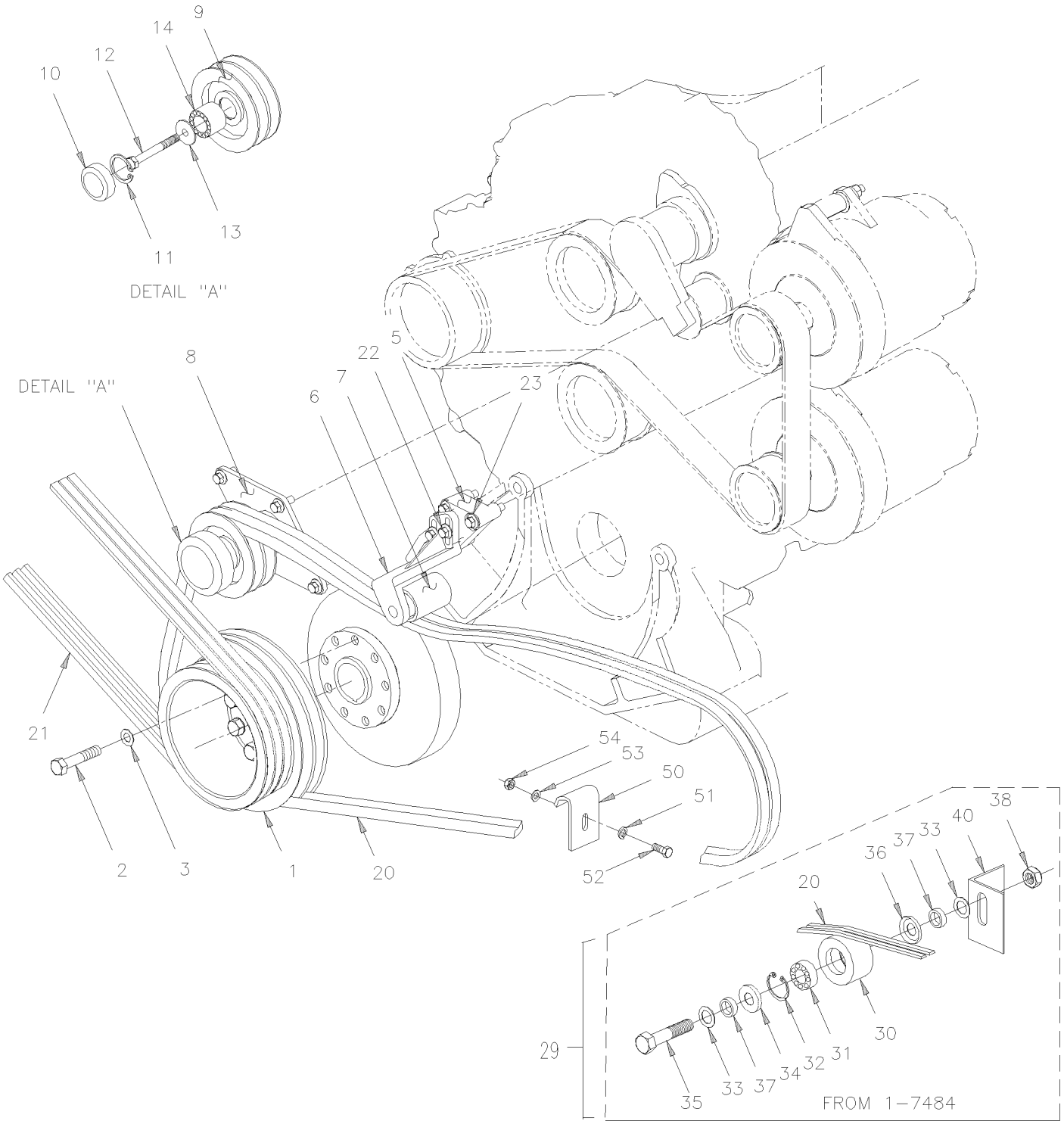

From Y-7046 Up to 8-9339	DATE: 01/2014	PAGE: Y2-0120-00

DRIVE PULLEY & BELTS - BUS & MTH 45' ENT

ITEM	PART	DESCRIPTION	XL45	MTH40	MTH45	MTH45S	NOTE
1	011584	PULLEY W/60 (2V X 11" O.D. + 3V X 8" O.D. / BOLTED ON HUB Up to 5-8412 / REPLACED BY: 012267				1	
1	012267	PULLEY W/60 (2V X 11" O.D. + 3V X 8" O.D. BOL From 5-8413	1			1	
2	N.S.P.	BOLT 9/16-18 X 2"1/2 / (8929222)	9			9	2
3	N.S.P.	WASHER SPECIAL 9/16" / (5133981)	9			9	2
5	012064	ADAPTOR SNUBBER MOUNTING Up to 3-8164	1			1	
5	012191	ADAPTOR SNUBBER MOUNTING From 4-8165 Up to 5-8412	1			1	
5	012265	ADAPTOR SNUBBER MOUNTING From 5-8413 Up to 7-9226	1			1	
5	012455	ADAPTOR SNUBBER MOUNTING From 8-9251	1			1	
6	012063	SNUBBER ASSY Up to 5-8412 / REPLACED BY: 012467	1			1	
6	012268	SNUBBER ASSY From 5-8413 Up to 8-9250 / REPLACED BY: 012467	1			1	
6	012467	SNUBBER ASSY From 8-9251				1	
6		. SUPPORT Up to 8-9250	1			1	
6	012453	. SUPPORT From 8-9251	1			1	
7	N.S.P.	. ROLLER Up to 8-9250	1			1	2
7	012456	. ROLLER 48MM O.D. x 64MM From 8-9251	1			1	
7	N.S.P.	. BEARING Up to 8-9250	1			1	2
7	012458	. BEARING MODIFIED PREVOST From 8-9251	1			1	
7	5006768	. SCREW DRV RND #14x5/8 ZP	1			1	
8	012058	PULLEY ASSY IDLER Up to 3-8164	1			1	
8	012269	PULLEY ASSY IDLER From 4-8165 Up to 8-9250 / REPLACED BY: 012466	1			1	
8	012466	PULLEY ASSY IDLER From 8-9251	1			1	
9	N.S.P.	. PULLEY Up to 8-9250	1			1	2
9	012459	. PULLEY 116MM O.D. x 53.5MM From 8-9251	1			1	
10	N.S.P.	. PROTECTOR CAP / (05107293) Up to 8-9250	1			1	2
10	510798	. PROTECTOR CAP / "PREVOST"	1			1	A
11	N.S.P.	. SNAP RING / (23518223) Up to 8-9250	1			1	2
11	504040	. RING RETAINER / INT 2.440 x 1.860 x 0.078 STL BLK From 8-9251	1			1	
12	5001308	. SCREW CAP HEXF M10-1.5x40 G10.9 Up to 8-9250	1			1	
12	500829	. SCREW CAP HEX M10-1.5x40 G8.8 ZP From 8-9251	1			1	
13	N.S.P.	. WASHER / (23518224)	1			1	2
13	012062	. WASHER FL 10.2 x38.1x5 ST	1			1	
14	510618	. BALL BEARING DBL ROW /	1			1	
14	507371	. SEAL From 8-9251	1			1	
20	506864	V-BELT / BX-100 / SET OF 2 9212-0404	1			1	
20	506681	V-BELT / BX-100 9013-2100 From 2-7908 / REPLACED BY: 506864				1	B
21	506691	V-BELT / AX-73 9012-2073				3	
21	506691	V-BELT / AX-73 9012-2073 Up to 3-8164	3				
21	505522	V-BELT / AX-71 9012-2071 From 4-8165	3				
		2) NOT SOLD BY PREVOST (SEE MANUFACTURING PART					
		NUMBER AT END OF DESCRIPTION LINE)					
		A) FIT ONLY WITH PULLEY "PREVOST"					
		B) MOUNTED WITH " 2 BOSCH ALTERNATOR"					

From Y-7046 Up to 8-9339	DATE: 01/2014	PAGE: Y2-0120-00

DRIVE PULLEY & BELTS - BUS & MTH 45' ENT

ITEM	PART	DESCRIPTION	XL45	MTH40	MTH45	MTH45S	NOTE
22	955297	SCREW CAP HEX M8-1.25x25 G8.8 ZG603	2			2	
23	975102	SCREW CAP HEXF M10-1.5x60 G10.9 PHC / REPLACED BY: 5001595	3			3	
NS	453630	KIT, PULLEY ASSY W/ANGLE SUPPORT Up to 1-7483	1			1	
. NS	IS-96114A	. SEE INSTRUCTION SHEET Up to 1-7483	1			1	
29	454187	KIT, PULLEY ASSY W/ANGLE SUPPORT / SERIES "XL" From 1-7484	1			1	
30	052208	. PULLEY ASSY W/BEARING & SEAL / 43MM x 78MM From 1-7484	1			1	
30	052207	. . PULLEY BELT TENSIONER / 43MM x 78MM O.D. From 1-7484 Up to 5-8412 / REPLACED BY: 052594				1	
30	052594	. . PULLEY BELT TENSIONER / 43MM x 78MM O.D. From 5-8413	1			1	
31	507340	. . BALL BEARING From 1-7484	1			1	
32	504095	. . RING RETAINER / INT 2.00 x 2.12 x .062 From 1-7484	1			1	
33	5001205	. . WASHER FL .875x1.375x.047 From 1-7484	AR			AR	
34	507361	. . SEAL From 1-7484	1			1	
35	5001124	. . SCREW CAP HEX M20-2.5x80 G8.8 ZP From 1-7484	1			1	
36	507360	. . SEAL From 1-7484	1			1	
37	051895	. . SPACER 20MM I.D. X 9MM TH From 1-7484	1			1	
37	052205	. . SPACER 20MM I.D. X 12.5MM TH From 1-7484	2			2	
38	500809	. . NUT HEX STO M20-2.5 ZP From 1-7484	1			1	
40	052393	. ANGLE SUPPORT / BOLTED TO ENGINE CRADLE Up to 1-7483	1			1	
40	454185	. ANGLE SUPPORT / BOLTED TO ENGINE CRADLE / SERIES "XL" From 1-7484	1			1	
40	011623	ANGLE SUPPORT / (WELDED TO ENGINE CRADLE)	1			1	
50	453077	BELT PROTECTOR Up to 1-7483 / REPLACED BY: 453709	1			1	C
51	500445	WASHER FL .437x1.000x.083 ZP Up to 1-7483	2			2	
52	502559	SCREW CAP HEX M10-1.5x25 G8.8 ZP Up to 1-7483	1			1	
53	500257	WASHER LO SPT 10.2x18.1x2.2 ZP Up to 1-7483	1			1	
54	500256	NUT HEX M10-1.5 ZP Up to 1-7483	1			1	
		C) FOR PRODUCT IMPROVEMENT USE KIT #453630 & SEE					
		INSTRUCTION SHEET					

From Y-7046 Up to 8-9339	DATE: 01/2014	PAGE: Y2-0120-00

DRIVE PULLEY & BELTS - BUS & MTH 45' ENT

ITEM	PART	DESCRIPTION	XL45	MTH40	MTH45	MTH45S	NOTE

From Y-7046 Up to 8-9339	DATE: 01/2014	PAGE: Y2-0120-50
DRIVE PULLEY & BELTS - MTH		

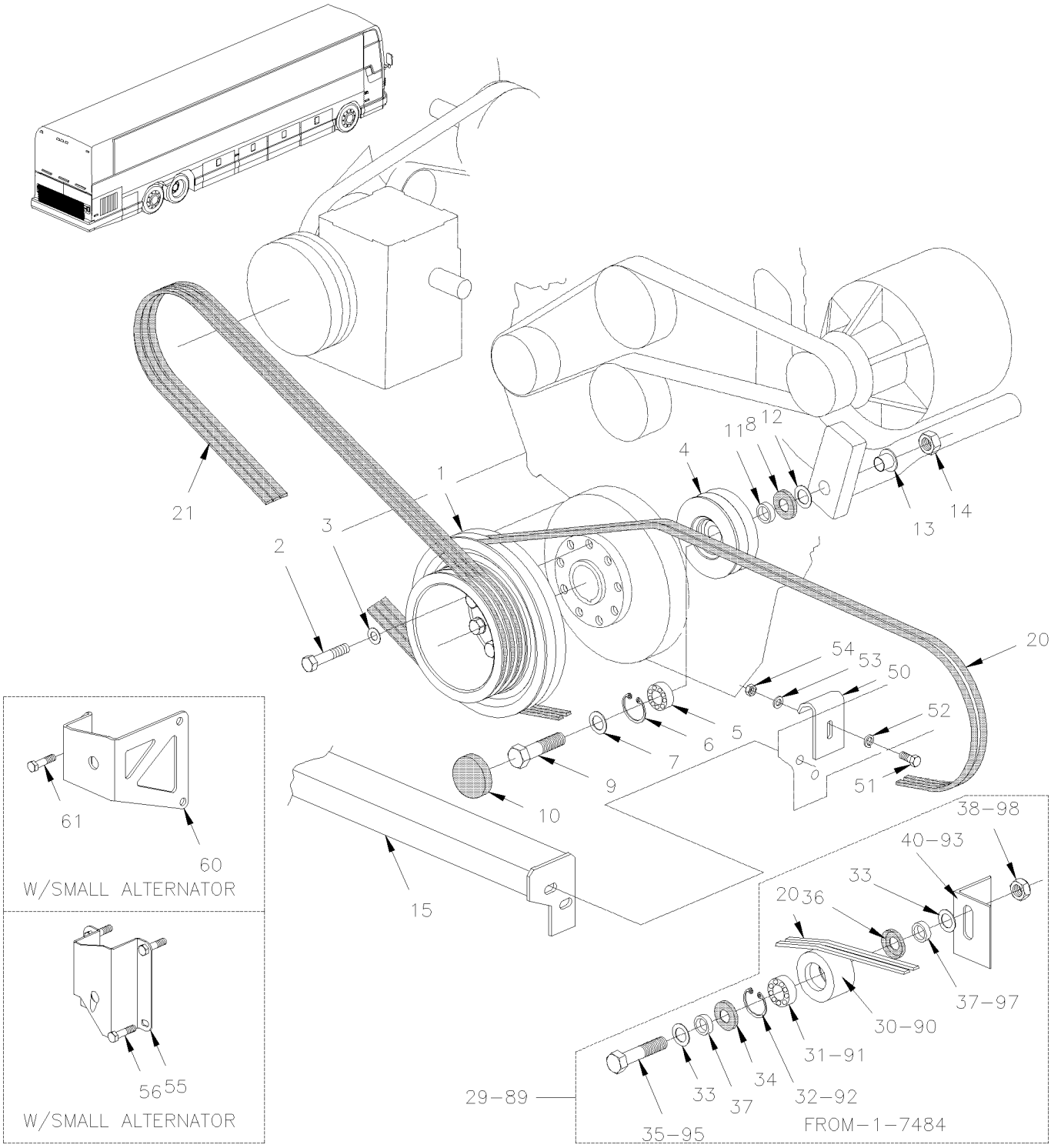

From Y-7046 Up to 8-9339	DATE: 01/2014	PAGE: Y2-0120-50

DRIVE PULLEY & BELTS - MTH

ITEM	PART	DESCRIPTION	XL45	MTH40	MTH45	MTH45S	NOTE
1	011584	PULLEY W/60 (2V X 11" O.D. + 3V X 8" O.D. / BOLTED ON HUB Up to / REPLACED BY: 012267		1		1	
1	012267	PULLEY W/60 (2V X 11" O.D. + 3V X 8" O.D. BOL From 5-8413		1		1	
1	011584	PULLEY W/60 (2V X 11" O.D. + 3V X 8" O.D. / BOLTED ON HUB Up to 3-8164 / REPLACED BY: 012267			1		
1	019206	PULLEY W/60 (2V X 11" O.D. + 3V X 8" O.D. From 4-8165 Up to 5-8412			1		
1	012266	PULLEY W/60 (2V X 11" O.D. + 3V X 8" O.D. From 5-8413			1		
2	N.S.P.	BOLT 9/16-18 X 2 1/2" / (8929222)		9	9	9	2
3	N.S.P.	WASHER SPECIAL 9/16" / (5133981)		9	9	9	2
4	453078	PULLEY ASSY W/BEARING & SEAL / 5" O.D. X 2V		1	1	1	
4	453075	. PULLEY / 5" O.D. X 2V Up to 5-8412 / REPLACED BY: K453075		1	1	1	
4	454182	. PULLEY / 5" O.D. X 2V From 5-8413		1	1	1	
5	507340	. BALL BEARING		1	1	1	
6	504095	. RING RETAINER / INT 2.00 x 2.12 x .062		1	1	1	
7	502558	WASHER FL 21.0x37.0x3.0 G500		1	1	1	
8	507360	SEAL		1	1	1	
NS	680500	GREASE 400 GR		1	1	1	
9	5001124	SCREW CAP HEX M20-2.5x80 G8.8 ZP		1	1	1	
10	453076	CAP, DUST		1	1	1	
11	052205	SPACER 20MM I.D. X 12.5MM TH		1	1	1	
12	5001205	WASHER FL .875x1.375x.047		AR	AR	AR	
13	452276	CENTERING BUSHING, FLANGE		1	1	1	
14	500809	NUT HEX STO M20-2.5 ZP		1	1	1	
15	Y2-0150-00	**ENGINE CRADLE - WITH DETROIT S-60**					
20	506664	V-BELT / BX-97 / SET OF 2 9212-0390		2	2	2	
20	506864	V-BELT / BX-100 / SET OF 2 9212-0404		1	1	1	
21	506690	V-BELT / AX-74 9012-2074 Up to 3-8164		3	3	3	
21	509822	SUPER V-BELT / 3BX-77 From 4-8165			1		
21	506691	V-BELT / AX-73 9012-2073 From 4-8165		1		1	
NS	453630	KIT, PULLEY ASSY W/ANGLE SUPPORT Up to 1-7483		1	1	1	
. NS	IS-96114A	. SEE INSTRUCTION SHEET Up to 1-7483		1	1	1	
29	453709	KIT, PULLEY ASSY W/ANGLE SUPPORT From 1-7485 Up to 4-8320		1	1	1	
29	454187	KIT, PULLEY ASSY W/ANGLE SUPPORT / SERIES "XL" From 4-8321		1	1	1	
30	052208	. PULLEY ASSY W/BEARING & SEAL / 43MM x 78MM From 1-7484		1	1	1	
30	052207	. . PULLEY BELT TENSIONER / 43MM x 78MM O.D. From 1-7484 Up to 5-8412 / REPLACED BY: 052594		1	1	1	
30	052594	. . PULLEY BELT TENSIONER / 43MM x 78MM O.D. From 5-8413		1	1	1	
31	507340	. . BALL BEARING From 1-7484		1	1	1	
32	504095	. . RING RETAINER / INT 2.00 x 2.12 x .062 From 1-7484		1	1	1	
33	5001205	. . WASHER FL .875x1.375x.047 From 1-7484		AR	AR	AR	
34	507361	. . SEAL From 1-7484		1	1	1	
		2) NOT SOLD BY PREVOST (SEE MANUFACTURING PART					
		NUMBER AT END OF DESCRIPTION LINE)					

From Y-7046 Up to 8-9339	DATE: 01/2014	PAGE: Y2-0120-50

DRIVE PULLEY & BELTS - MTH

ITEM	PART	DESCRIPTION	XL45	MTH40	MTH45	MTH45S	NOTE
35	5001124	. SCREW CAP HEX M20-2.5x80 G8.8 ZP From 1-7484		1	1	1	
36	507360	. SEAL From 1-7484		1	1	1	
37	051895	. SPACER 20MM I.D. X 9MM TH From 1-7484		1	1	1	
37	052205	. SPACER 20MM I.D. X 12.5MM TH From 1-7484		2	2	2	
38	500809	. NUT HEX STO M20-2.5 ZP From 1-7484		1	1	1	
40	052393	. ANGLE SUPPORT / BOLTED TO ENGINE CRADLE From 1-7484 Up to 4-8320		1	1	1	B
401	454185	. ANGLE SUPPORT / BOLTED TO ENGINE CRADLE / SERIES "XL" From 4-8321		1	1	1	C
50	453077	BELT PROTECTOR Up to 1-7483 / REPLACED BY: 453709		1	1	1	A
51	502559	SCREW CAP HEX M10-1.5x25 G8.8 ZP Up to 1-7483		1	1	1	
52	500445	WASHER FL .437x1.000x.083 ZP Up to 1-7483		2	2	2	
53	500257	WASHER LO SPT 10.2x18.1x2.2 ZP Up to 1-7483		1	1	1	
54	500256	NUT HEX M10-1.5 ZP Up to 1-7483		1	1	1	
55	453307	SUPPORT IDLER PULLEY / STEEL / W/SMALL A/C		1	1	1	
56	500080	SCREW CAP HEX 7/16-20x4 1/2 G5 ZP		2	2	2	
60	453795	SUPPORT IDLER PULLEY / W/SMALL A/C		1	1	1	
61	502705	SCREW CAP HEX M12-1.75X25 G8.8 ZG603		2	2	2	
NS	500747	WASHER LO SPT 12.2x21.1x2.5 ZG603		2	2	2	
		A) FOR PRODUCT IMPROVEMENT USE KIT #453630 & SEE					
		INSTRUCTION SHEET					
		B) INCLUDE IN KIT # 453709					
		C) INCLUDE IN KIT # 454187					

From Y-7046 Up to 8-9339	DATE: 01/2014	PAGE: Y2-0120-50

DRIVE PULLEY & BELTS - MTH

ITEM	PART	DESCRIPTION	XL45	MTH40	MTH45	MTH45S	NOTE

From Y-7046 Up to 3-8164	DATE: 01/2014	PAGE: Y2-0125-00
BELTS TENSIONERS - WITH DETROIT S-60		

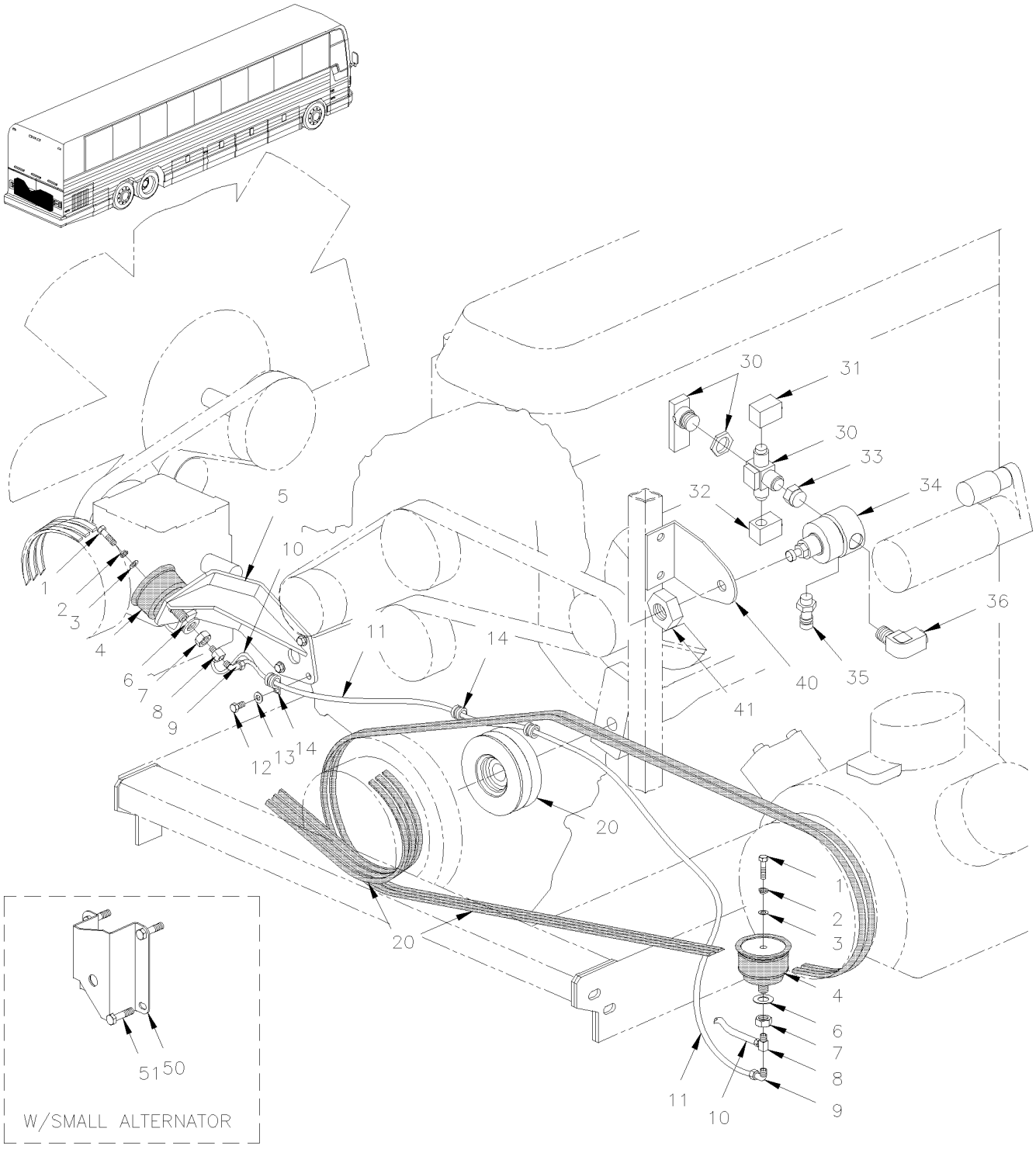

From Y-7046 Up to 3-8164	DATE: 01/2014	PAGE: Y2-0125-00

BELTS TENSIONERS - WITH DETROIT S-60

ITEM	PART	DESCRIPTION	XL45	MTH40	MTH45	MTH45S	NOTE
1	500179	SCREW CAP HEX 5/16-18x3/4 G5 ZP	2	2	2	2	
2	500482	WASHER LO SPT .506x.873x.125 ZP	2	2	2	2	
3	500441	WASHER FL .312x.734x.065 ZP	2	2	2	2	
4	950208	BELLOW ASSY 3" O.D. / BELT TENSIONER	1	1	1	1	
. NS	504695	. HOSE CLAMP STEPLESS SPRING SS /	1	1	1	1	
5	052050	SUPPORT BELLOW TENTIONER Up to 2-7809 / REPLACED BY: 059055	1	1	1	1	
5	059055	SUPPORT BELLOW TENSIONER From 2-7810	1	1	1	1	
6	5001150	WASHER FL 17.0x30.0x3.0 ZP	2	2	2	2	
7	500792	NUT HEX 5/8-11 ZP	1	1	1	1	
8	501707	ADAPTER TEE / SAE 45º FITTING / #4FL-Mx1/8NPT-Mx1/8NPT-F BR	1	1	1	1	
9	640996	MALE ELBOW 90º / NTA FITTING / #4x1/8NPT-M BR	1	1	1	1	
9	641127	MALE ELBOW 45º / NTA FITTING / #4x1/8NPT-M BR / REPLACED BY: 641365	2	2	2	2	
10	503402	TUBE, NYLON 1/4 O.D. / BLACK S.L.	AR	AR	AR	AR	
11	052317	HOSE ASSY TEFLON #4 1217MM	1				
11	052041	HOSE ASSY TEFLON #4 1230MM		1	1	1	
11	142080	HOSE ASSY TEFLON #4 1990MM		1	1	1	A
12	500069	SCREW CAP HEX M8-1.25x16 G10.9 DP	3	3	3	3	
13	500874	WASHER FL 8.4x17.0x1.6 ZP	3	3	3	3	
14	504601	CLAMP / 5/16" I.D. x 375 HOLE	3	3	3	3	
20	Y2-0120-00	**DRIVE PULLEY & BELTS - BUS & MTH 45' ENT**					
20	Y2-0120-50	**DRIVE PULLEY & BELTS - MTH**					
30	641417	VALVE, 3 WAYS 1/8NPT-Fx1/8NPT-Fx1/8NPT-F BR / REPLACED BY: 642161	1	1	1	1	
. NS	642014	. HANDLE / RED	1	1	1	1	
30	642161	VALVE, 3 WAYS 1/8NPT-Fx1/8NPT-Fx1/8NPT-F BR / SERVICE	1	1	1	1	
31	641369	MALE ELBOW 90° NON-SWIVEL / PUSH-IN FITTING #4x1/8NPT-M BR	1	1	1	1	
32	501331	STREET ELBOW 90º / PIPE FITTING / 1/8NPT-Mx1/8NPT-F BR	1	1	1	1	
33	501650	NIPPLE REDUCER HEX / PIPE FITTING / 1/4NPT-Mx1/8NPT-Mx1 3/16 BR	2	2	2	2	
34	641472	AIR PRESSURE REGULATOR 1/4" NPT / COPPER	1	1	1	1	
35	640488	VALVE, AIR FILL 1/8" NPT	1	1	1	1	
. NS	650164	. CAP VALVE / CHROME	1	1	1	1	
36	641371	MALE ELBOW 90° NON-SWIVEL / PUSH-IN FITTING #4x1/4NPT-M BR	1	1	1	1	
36	501037	MALE ELBOW 90º / SAE 45º FITTING / #4FL-Mx1/4NPT-M BR		1	1	1	A
40	142065	SUPPORT AIR REGULATOR Up to 2-7888	1	1	1	1	
40	142454	SUPPORT AIR REGULATOR / FLAT STYLE From 2-7889	1	1	1	1	
41	500734	NUT HEX JAM 3/4-16 ZP	1	1	1	1	
50	453307	SUPPORT IDLER PULLEY / STEEL / W/SMALL A/C		1	1	1	
NS	452280	SPACER / <> SUPPORT & ENGINE		AR	AR	AR	
51	500080	SCREW CAP HEX 7/16-20x4 1/2 G5 ZP		2	2	2	
NS	500480	WASHER LO SPT .443x.779x.109 ZP		2	2	2	
NS	500445	WASHER FL .437x1.000x.083 ZP		2	2	2	
NS	500709	NUT HEX 7/16-20 ZP		2	2	2	
NS	011894	DECAL "BELT TENSIONER"	1	1	1	1	
		A) W/ SMALL A/C SYSTEM					

From 4-8165 Up to 8-9339	DATE: 01/2014	PAGE: Y2-0125-01

BELTS TENSIONERS - WITH DETROIT S-60

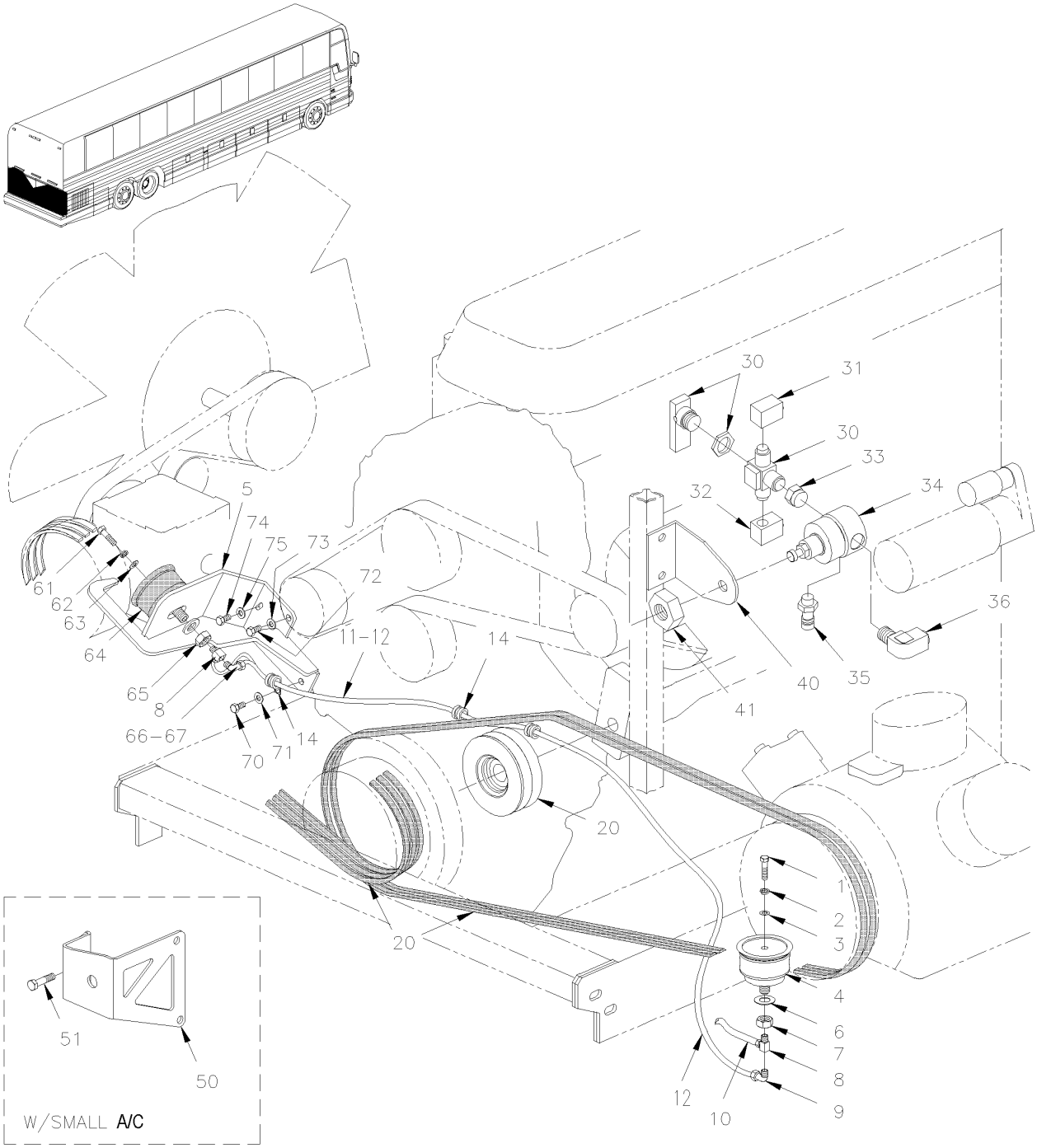

From 4-8165 Up to 8-9339	DATE: 01/2014	PAGE: Y2-0125-01
BELTS TENSIONERS - WITH DETROIT S-60		

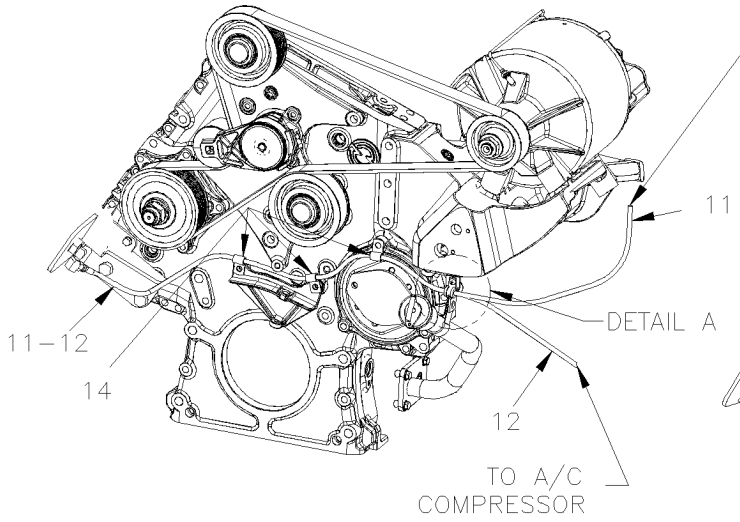

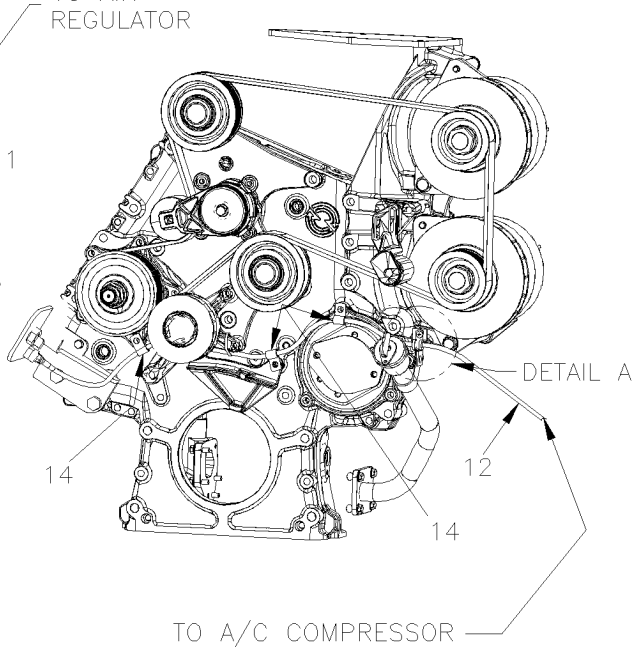

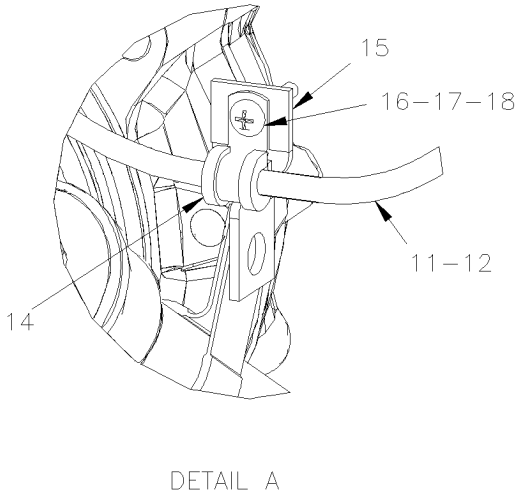

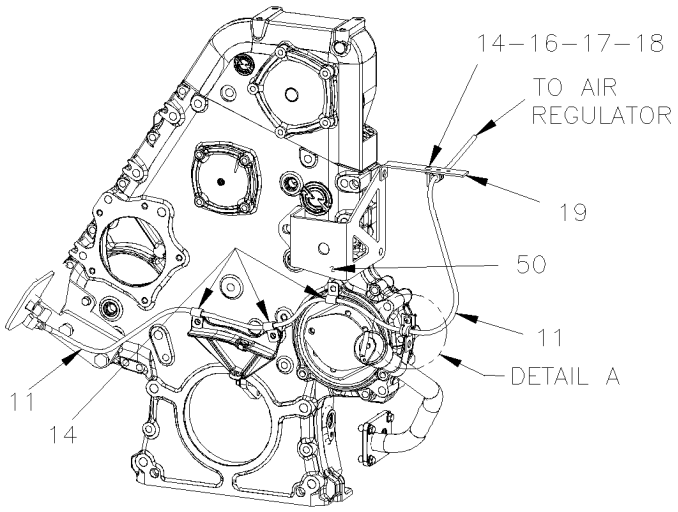

From 4-8165 Up to 8-9339	DATE: 01/2014	PAGE: Y2-0125-01

BELTS TENSIONERS - WITH DETROIT S-60

ITEM	PART	DESCRIPTION	XL45	MTH40	MTH45	MTH45S	NOTE
1	500836	SCREW CAP HEX 5/16-18x3/4 G5 ZG603 Up to 5-8392	2	2		2	
1	500836	SCREW CAP HEX 5/16-18x3/4 G5 ZG603 Up to 5-8392			1		
1	502916	SCREW CAP HEX 3/8-16x3/4 G8 ZG603 From 5-8393			1		
2	500942	WASHER LO SPT .317x.586x.078 ZG603 Up to 5-8392	2	2		2	
2	500942	WASHER LO SPT .317x.586x.078 ZG603 Up to 5-8392			1		
2	500218	WASHER LO SPT .380x.683x.098 DP320 From 5-8393			1		
3	3852162	WASHER FL .312x.734x.065 ZG603 Up to 5-8392	2	2		2	
3	3852162	WASHER FL .312x.734x.065 ZG603 Up to 5-8392			1		
3	500832	WASHER FL .406x.812x.065 ZG603 From 5-8393			1		
4	950208	BELLOW ASSY 3" O.D. / BELT TENSIONER Up to 5-8392	1	1	1	1	
. NS	504695	. HOSE CLAMP STEPLESS SPRING SS / Up to 5-8392	1	1	1	1	
4	550840	BELLOW ASSY 4" O.D. / BELT TENSIONER From 5-8393	1	1	1	1	
5	052488	SUPPORT BELLOW TENTIONER Up to 5-8440 / REPLACED BY: 052240			1		F
. NS	WB04-05C	. SEE WARRANTY BULLETIN Up to 5-8440			1		
5	052240	SUPPORT BELLOW TENTIONER From 5-8441 Up to 5-8489 / REPLACED BY: 052709			1		F
. NS	WB04-05C	. SEE WARRANTY BULLETIN From 5-8441 Up to 5-8489			1		
5	053441	SUPPORT BELLOW TENTIONER From 5-8490 Up to 6-8878 / REPLACED BY: 052707			1		F
. NS	WB04-05C	. SEE WARRANTY BULLETIN From 5-8490 Up to 6-8878			1		
5	052707	SUPPORT BELLOW TENTIONER From 6-8879			1		
5	052491	SUPPORT BELLOW TENSIONER / W/3" BELLOW Up to 5-8392	1	1		1	
5	052589	SUPPORT BELLOW TENSIONER / W/4" BELLOW From 5-8393 Up to 5-8622 / REPLACED BY: K052589					D
. NS	WB04-05C	. SEE WARRANTY BULLETIN From 5-8393 Up to 5-8622	1				
5	052641	SUPPORT BELLOW TENSIONER / W/4" BELLOW From 5-8623 Up to 6-8878 / REPLACED BY: 052708					D
. NS	WB04-05C	. SEE WARRANTY BULLETIN From 5-8623 Up to 6-8878	1				
5	052708	SUPPORT BELLOW TENTIONER / W/4" BELLOW From 6-8879	1				
5	052607	SUPPORT BELLOW TENSIONER / W/4" BELLOW From 5-8393 Up to 5-8622 / REPLACED BY: K052607				1	
. NS	WB04-05C	. SEE WARRANTY BULLETIN From 5-8393 Up to 5-8622		1		1	
5	052646	SUPPORT BELLOW TENSIONER / W/4" BELLOW From 5-8623 Up to 6-8878 / REPLACED BY: 052706				1	E
5	052706	SUPPORT BELLOW TENTIONER / W/4" BELLOW From 6-8879				1	
6	5001150	WASHER FL 17.0x30.0x3.0 ZP	2	2		2	
6	5001150	WASHER FL 17.0x30.0x3.0 ZP			1		
7	500792	NUT HEX 5/8-11 ZP	1	1	1	1	

D) FOR PRODUCT IMPROVEMENT, ASK PART #052708 AND
SEE WARRANTY BULLETIN WB05-03B

E) FOR PRODUCT IMPROVEMENT, ASK PART #052706 AND
SEE WARRANTY BULLETIN WB05-03B

F) FOR PRODUCT IMPROVEMENT, ASK PART #052707 AND
SEE WARRANTY BULLETIN WB04-05B

From 4-8165 Up to 8-9339	DATE: 01/2014	PAGE: Y2-0125-01

BELTS TENSIONERS - WITH DETROIT S-60

ITEM	PART	DESCRIPTION	XL45	MTH40	MTH45	MTH45S	NOTE
8	501707	ADAPTER TEE / SAE 45º FITTING / #4FL-Mx1/8NPT-Mx1/8NPT-F BR	1	1	1	1	
9	640996	MALE ELBOW 90º / NTA FITTING / #4x1/8NPT-M BR	1	1	1	1	
9	641127	MALE ELBOW 45º / NTA FITTING / #4x1/8NPT-M BR / REPLACED BY: 641365	2	2	2	2	
10	503402	TUBE, NYLON 1/4 O.D. / BLACK S.L.	AR	AR	AR	AR	
11	142080	HOSE ASSY TEFLON #4 1990MM		1	1	1	
12	052317	HOSE ASSY TEFLON #4 1217MM Up to 5-8392	1				
12	052041	HOSE ASSY TEFLON #4 1230MM Up to 5-8392		1	1	1	
12	052570	HOSE ASSY TEFLON #4 1750MM From 5-8373	1	1	1	1	
NS	012245	HOSE ASSY TEFLON #6 1200MM Up to 7-9095	1	1		1	B
NS	012185	HOSE ASSY TEFLON #6 1600MM From 7-9096			1		B
12	141720	HOSE ASSY TEFLON #6 1400MM From 7-9096			1	1	
14	952624	CLAMP / 1/4" I.D.	4	4	4	4	
15	061129	SUPPORT FLAT TWISTED / TUBE DIPSTICK	1	1	1	1	
16	500574	SCREW MA TR PH #10-24x1 1/4 SS	AR	AR	AR	AR	
17	500914	WASHER LO SPT .193x.334x.047 ZG603	AR	AR	AR	AR	
18	502882	NUT HEX #10-24 ZG603	AR	AR	AR	AR	
19	010667	SUPPORT		1	1	1	
20	Y2-0120-00	**DRIVE PULLEY & BELTS - BUS & MTH 45' ENT**					
20	Y2-0120-50	**DRIVE PULLEY & BELTS - MTH**					
30	641417	VALVE, 3 WAYS 1/8NPT-Fx1/8NPT-Fx1/8NPT-F BR / REPLACED BY: 642161	1	1	1	1	
. NS	642014	. HANDLE / RED	1	1	1	1	
30	642161	VALVE, 3 WAYS 1/8NPT-Fx1/8NPT-Fx1/8NPT-F BR / SERVICE	1	1	1	1	
31	641369	MALE ELBOW 90° NON-SWIVEL / PUSH-IN FITTING #4x1/8NPT-M BR	1	1	1	1	
32	501331	STREET ELBOW 90º / PIPE FITTING / 1/8NPT-Mx1/8NPT-F BR	1	1	1	1	
33	501650	NIPPLE REDUCER HEX / PIPE FITTING / 1/4NPT-Mx1/8NPT-Mx1 3/16 BR	2	2	2	2	
34	641472	AIR PRESSURE REGULATOR 1/4" NPT / COPPER	1	1	1	1	
34	012222	DECAL "BELT TENSIONER" 45 PSI			1		
34	012247	DECAL "BELT TENSIONER" 50 PSI Up to 5-8392	1	1		1	
34	012123	DECAL "BELT TENSIONER" 35 PSI From 5-8393	1	1		1	
35	640488	VALVE, AIR FILL 1/8" NPT	1	1	1	1	
. NS	650164	. CAP VALVE / CHROME	1	1	1	1	
36	641371	MALE ELBOW 90° NON-SWIVEL / PUSH-IN FITTING #4x1/4NPT-M BR	1	1	1	1	
		B) FROM REAR MANIFOLD TO V POD ON ENGINE STREET					
		SIDE					

From 4-8165 Up to 8-9339	DATE: 01/2014	PAGE: Y2-0125-01

BELTS TENSIONERS - WITH DETROIT S-60

ITEM	PART	DESCRIPTION	XL45	MTH40	MTH45	MTH45S	NOTE
36	501037	MALE ELBOW 90º / SAE 45º FITTING / #4FL-Mx1/4NPT-M BR		1	1	1	A
40	142454	SUPPORT AIR REGULATOR / FLAT STYLE	1	1	1	1	
41	500734	NUT HEX JAM 3/4-16 ZP	1	1	1	1	
50	453795	SUPPORT IDLER PULLEY / W/SMALL A/C		1	1	1	
51	502705	SCREW CAP HEX M12-1.75X25 G8.8 ZG603		2	2	2	
NS	500747	WASHER LO SPT 12.2x21.1x2.5 ZG603		2	2	2	
61	502916	SCREW CAP HEX 3/8-16x3/4 G8 ZG603			1		
61	500836	SCREW CAP HEX 5/16-18x3/4 G5 ZG603 Up to 5-8392	1	1		1	
61	502916	SCREW CAP HEX 3/8-16x3/4 G8 ZG603 From 5-8393	1	1		1	
62	500218	WASHER LO SPT .380x.683x.098 DP320			1		
62	500942	WASHER LO SPT .317x.586x.078 ZG603 Up to 5-8392	1	1		1	
62	500218	WASHER LO SPT .380x.683x.098 DP320 From 5-8393	1	1		1	
63	500832	WASHER FL .406x.812x.065 ZG603			1		
63	3852162	WASHER FL .312x.734x.065 ZG603 Up to 5-8392	1	1		1	
63	500832	WASHER FL .406x.812x.065 ZG603 From 5-8393	1	1		1	
64	550840	BELLOW ASSY 4" O.D. / BELT TENSIONER			1		
64	950208	BELLOW ASSY 3" O.D. / BELT TENSIONER Up to 5-8392	1	1		1	
. NS	504695	. HOSE CLAMP STEPLESS SPRING SS / Up to 5-8392	1	1		1	
64	550840	BELLOW ASSY 4" O.D. / BELT TENSIONER From 5-8393	1	1		1	
65	502917	NUT HEX JAM 3/4-16 G2 ZG603			1		
65	500792	NUT HEX 5/8-11 ZP Up to 5-8392	1	1		1	
65	502917	NUT HEX JAM 3/4-16 G2 ZG603 From 5-8393	1	1		1	
66	501036	MALE ELBOW 90º / SAE 45º FITTING / #4FL-Mx1/8NPT-M BR			1		
67	031054	HOSE ASSY TEFLON #4 770MM Up to 5-8392			1		
67	052535	HOSE ASSY TEFLON #4 662MM Up to 5-8392		1		1	
67	052590	HOSE ASSY TEFLON #4 830MM From 5-8393		1	1	1	
70	502914	SCREW CAP HEX M12-1.75x60 G8.8 ZG603	1	1	1	1	
71	500944	WASHER LO SPT .506x.873x.125 ZG603	2	2	2	2	
72	500820	SCREW CAP HEX M8-1.25x16 G10.9 ZG603	1	1	1	1	
73	500942	WASHER LO SPT .317x.586x.078 ZG603	1	1	1	1	
74	970978	SCREW CAP HEX M12-1.75x70 G8.8 ZG603	1	1	1	1	
75	500211	WASHER FL .531x1.250x.125 N500	1	1	1	1	
		A) W/ SMALL A/C SYSTEM					

From 4-8165 Up to 8-9339	DATE: 01/2014	PAGE: Y2-0125-01

BELTS TENSIONERS - WITH DETROIT S-60

ITEM	PART	DESCRIPTION	XL45	MTH40	MTH45	MTH45S	NOTE
NS	052646	SUPPORT BELLOW TENSIONER / W/4" BELLOW / REPLACED BY: 052706				1	

From Y-7046 Up to 4-8345	DATE: 01/2014	PAGE: Y2-0150-00

ENGINE CRADLE - WITH DETROIT S-60

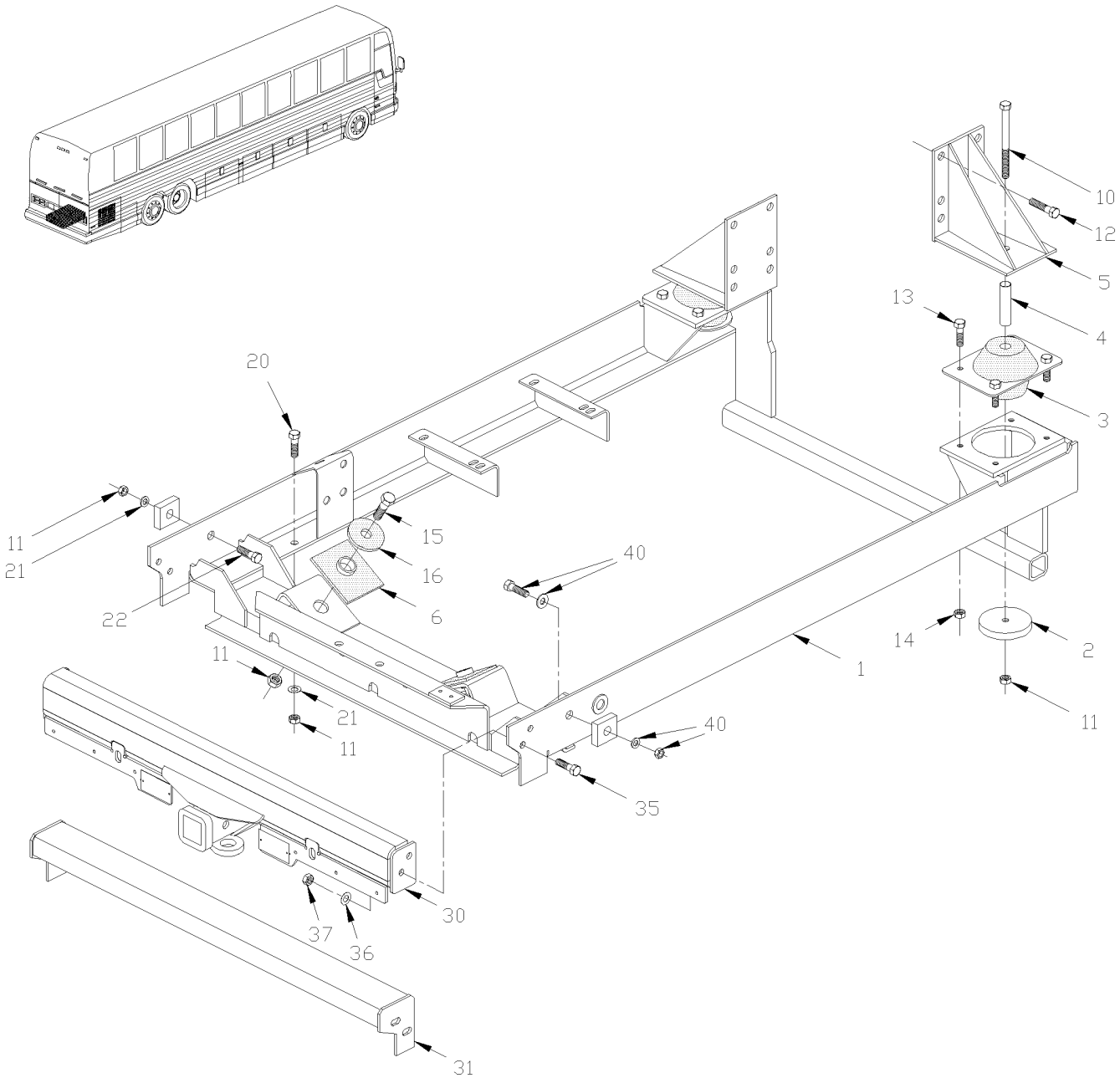

From Y-7046 Up to 4-8345	DATE: 01/2014	PAGE: Y2-0150-00

ENGINE CRADLE - WITH DETROIT S-60

ITEM	PART	DESCRIPTION	XL45	MTH40	MTH45	MTH45S	NOTE
1	012029P	CRADLE ASSY / WTRAILER HITCH	1	1	1	1	
1	015994	. ENGINE CRADLE FIXING /	1	1	1	1	
2	011662	WASHER, INSULATOR / R.H. & L.H.	2	2	2	2	
3	510456	INSULATOR, RUBBER	2	2	2	2	
4	011629	SPACER BUSHING	2	2	2	2	
5	011585	SUPPORT, L.H.	1	1	1	1	
5	011585	SUPPORT, L.H.	1				
5	011785	SUPPORT, L.H. / W/S-50 & AUTOMATIC TRANSMISSION	1				
5	011586	SUPPORT, R.H. / W/S-60	1	1	1	1	
5	011772	SUPPORT, R.H. / W/S-50 & MANUAL TRANSMISSION	1				
5	011790	SUPPORT, R.H. / W/S-50 & AUTOMATIC TRANSMISSION	1				
6	510484	INSULATOR, RUBBER MOUNT SQUARE Up to 3-8007	2	2	2	2	
6	510427	INSULATOR, RUBBER MOUNT SQUARE From 3-3008	2	2	2	2	
10	5001051	SCREW CAP HEX M16-2.0x160 G8.8 ZP	2	2	2	2	
11	500781	NUT HEX STO M16-2.0 DP	2	2	2	2	
12	500817	SCREW CAP HEX 5/8-11x1 3/4 G5 ZP	12				
12	502544	SCREW CAP HEX M16-2.0x40 G8.8 ZP	12	12	12	12	
13	502549	SCREW CAP HEX M10-1.5x35 G8.8 ZP	8	8	8	8	
14	500680	NUT HEX STO M10-1.5 ZP	AR	AR	AR	AR	
NS	502644	WASHER FL 10.5x30.0x2.5 ZP	8	8	8	8	
15	502545	SCREW CAP HEX M16-2.0x80 G8.8 ZP	2	2	2	2	
16	510428	INSULATOR, RUBBER MOUNT ROUND	2	2	2	2	
16	012153	SPACER SHIM 1/8" From 1-7713		AR	AR	AR	D
16	012154	SPACER SHIM 1/16" From 1-7713		AR	AR	AR	D
20	502544	SCREW CAP HEX M16-2.0x40 G8.8 ZP	2	2	2	2	
21	500846	WASHER FL 17.0x50.0x3.0 ZP	6	6	6	6	
22	500776	SCREW CAP HEX M16-2.0x110 G8.8 ZP	2	2	2	2	
30	410732	PROTECTOR ASSY / W/TRAILER HITCH Up to Y-7278		1	1	1	A
30	410778	PROTECTOR ASSY / W/TRAILER HITCH From Y-7279		1	1	1	E
31	410733	PROTECTOR ASSY Up to Y-7278	1	1		1	
31	410807	PROTECTOR ASSY From Y-7279	1	1		1	
35	502731	SCREW CAP HEX M12-1.75x40 G8.8 ZP	4	4	4	4	
35	502544	SCREW CAP HEX M16-2.0x40 G8.8 ZP		4	4	4	
36	500446	WASHER FL .531x1.250x.125 ZP	4	4	4	4	
36	5001150	WASHER FL 17.0x30.0x3.0 ZP		4	4	4	
37	500811	NUT HEX STO M12-1.75 DP	4	4	4	4	
37	500781	NUT HEX STO M16-2.0 DP		4	4	4	
40	Y2-0120-00	**DRIVE PULLEY & BELTS - BUS & MTH 45' ENT**					
		A) 10,000 LBS CERTIFIED					
		D) FOR PRODUCT IMPROVEMENT UP TO SN 1-7712 ASK					
		FOR KIT #012155					
		E) REQUIRE ENGINE CRADLE # 012029P					

From Y-7046 Up to 4-8345	DATE: 01/2014	PAGE: Y2-0150-00

ENGINE CRADLE - WITH DETROIT S-60

ITEM	PART	DESCRIPTION	XL45	MTH40	MTH45	MTH45S	NOTE
40	Y2-0120-50	**DRIVE PULLEY & BELTS - MTH**					
NS		FOR RETROFIT A 10000LBS TRAILER HITCH					
NS		YOU NEED NEXT FOLLOWING ITEMS					
NS	500446	WASHER FL .531x1.250x.125 ZP		4	4	4	
NS	500781	NUT HEX STO M16-2.0 DP		4	4	4	
NS	500811	NUT HEX STO M12-1.75 DP		4	4	4	
NS	502731	SCREW CAP HEX M12-1.75x40 G8.8 ZP		4	4	4	
NS	502744	NUT HEX STO M8-1.25 ZP		4	4	4	
NS	910006	NAME PLATE "CERTIFICATION HITCH PLATE"		1	1	1	A
NS	502627	SCREW DRV RND #2x1/4 ZP		2	2	2	
NS	211484	SPACER / EACH SIDE OF ENGINE CRADLE		2	2	2	B
NS	410575	ANGLE / TRAILER HITCH SUPPORT		1	1	1	B
NS	410804	KIT TRAILER HITCH / UPGRADE TO 20000LBS		AR		AR	
. NS	IS-99092A	. SEE INSTRUCTION SHEET		1		1	
NS	410805	KIT TRAILER HITCH / UPGRADE TO 20000LBS			AR		
. NS	IS-99092A	. SEE INSTRUCTION SHEET			1		
NS	012155	KIT, SPACER FOR ENGINE MOUNT	AR	AR	AR	AR	
. NS	IS-01108	. SEE INSTRUCTION SHEET	1	1	1	1	
		A) 10,000 LBS CERTIFIED					
		B) THIS ITEM NEED TO BE WELDED AT THE ENGINE CRADLE 10000LBS					

From Y-7046 Up to 4-8345	DATE: 01/2014	PAGE: Y2-0150-00

ENGINE CRADLE - WITH DETROIT S-60

ITEM	PART	DESCRIPTION	XL45	MTH40	MTH45	MTH45S	NOTE

From 4-8346 Up to 8-9339	DATE: 01/2014	PAGE: Y2-0150-01

ENGINE CRADLE - WITH DETROIT S-60

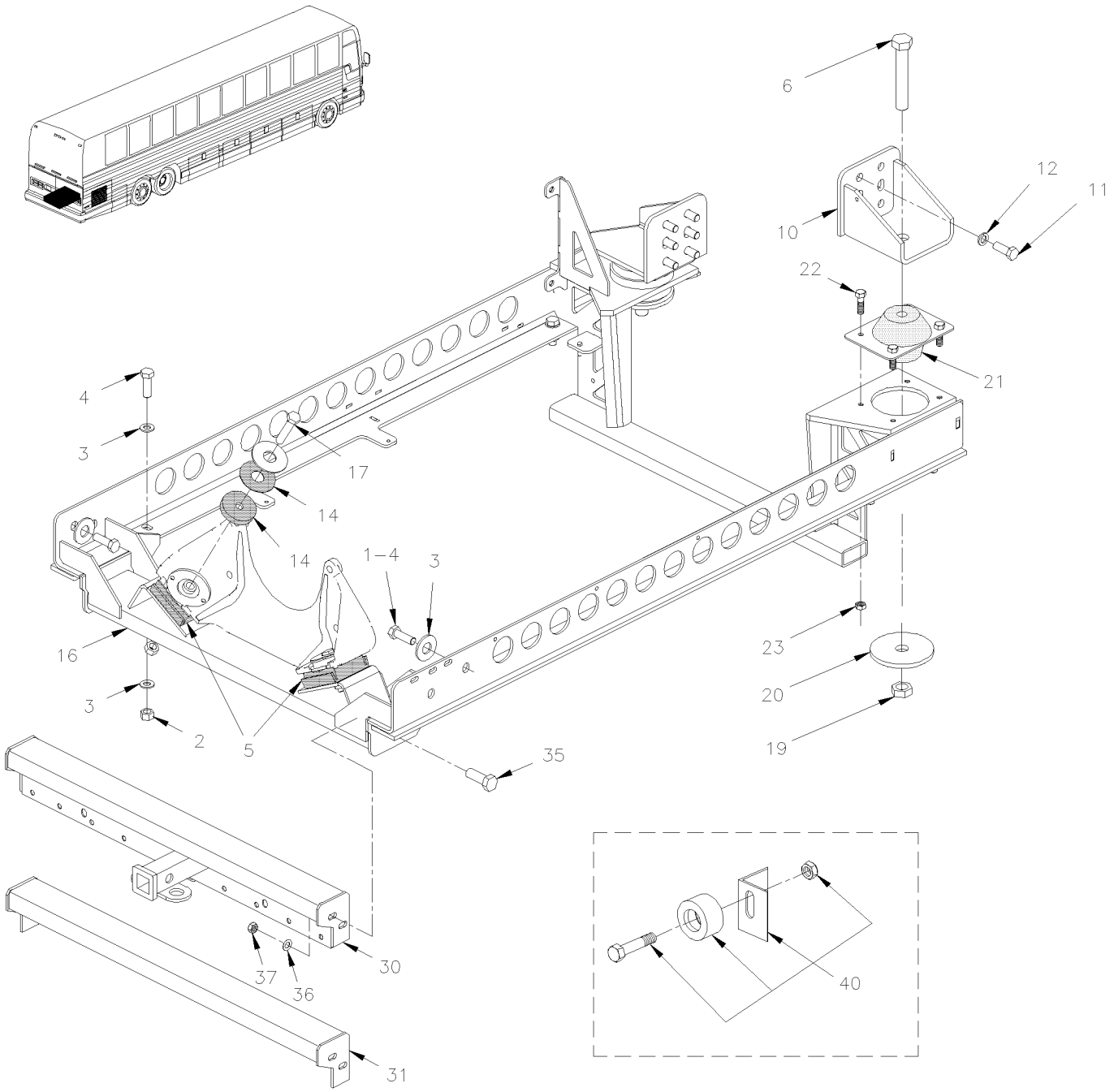

From 4-8346 Up to 8-9339	DATE: 01/2014	PAGE: Y2-0150-01

ENGINE CRADLE - WITH DETROIT S-60

ITEM	PART	DESCRIPTION	XL45	MTH40	MTH45	MTH45S	NOTE
1	500776	SCREW CAP HEX M16-2.0x110 G8.8 ZP	2	2	2	2	
2	500781	NUT HEX STO M16-2.0 DP	8	8	8	8	
3	5001150	WASHER FL 17.0x30.0x3.0 ZP	14	14	14	14	
4	5001372	SCREW CAP HEX M16-2.0x50 G10.9 DP	8	8	8	8	
5	510427	INSULATOR, RUBBER MOUNT SQUARE	2	2	2	2	
6	500571	SCREW CAP HEX M24-3.0x150 G10.9 ZG603	2	2	2	2	
10	012194	SUPPORT REAR	2	2	2	2	
NS	012282	SUPPORT REAR R.H. W/"ZF" TRANS	1				Z
NS	012278	SUPPORT REAR L.H. W/"ZF" TRANS	1				Z
11	5001590	SCREW CAP HEX M16-2.0x40 G10.9 DP	12	12	12	12	
11	501591	MALE CONNECTOR / JIC 37° FITTING / #6JIC-Mx1/2NPT-M STL	8				Z
12	502894	SCREW CAP HEX M8-1.25x120 G8.8 ZG603	12	12	12	12	
13	5001150	WASHER FL 17.0x30.0x3.0 ZP	12	12	12	12	
14	510428	INSULATOR, RUBBER MOUNT ROUND	2	2	2	2	
16	012376	ENGINE CRADLE / "ZF" TRANS	1				
16	012379	ENGINE CRADLE / W/WORLD, W/O RETARDER	1	1	1	1	
16	012378	ENGINE CRADLE / W/WORLD, W/RETARDER & TRAILER HITCH		1	1	1	
16	012837	ENGINE CRADLE / W/WORLD, W/O RETARDER & W/TRAILER HITCH		1	1	1	
16	012386	ENGINE CRADLE / W/WORLD, W/RETARDER	1	1	1	1	
16	Call Order Desk	ENGINE CRADLE	1				P T
16	015994	. ENGINE CRADLE FIXING /	1	1	1	1	
17	5001501	SCREW CAP HEX M16-2.0x90 G10.9 ZP	2	2	2	2	
19	500570	NUT HEX STO M24-3.0 GR.10 ZG603	2	2	2	2	
20	012178	WASHER, INSULATOR	2	2	2	2	
21	510456	INSULATOR, RUBBER	2	2	2	2	
22	5001308	SCREW CAP HEXF M10-1.5x40 G10.9	8	8	8	8	
23	5001758	NUT HEX STO M10-1.5 ZG603	8	8	8	8	
30	410778	PROTECTOR ASSY / W/TRAILER HITCH	1	1	1	1	
31	410807	PROTECTOR ASSY	1	1	1	1	
35	502731	SCREW CAP HEX M12-1.75x40 G8.8 ZP	4	4	4	4	
35	502544	SCREW CAP HEX M16-2.0x40 G8.8 ZP	4	4	4	4	
36	500446	WASHER FL .531x1.250x.125 ZP	4	4	4	4	
36	5001150	WASHER FL 17.0x30.0x3.0 ZP	4	4	4	4	
37	500811	NUT HEX STO M12-1.75 DP	4	4	4	4	
37	500781	NUT HEX STO M16-2.0 DP	4	4	4	4	
40	Y2-0120-00	**DRIVE PULLEY & BELTS - BUS & MTH 45' ENT**					
40	Y2-0120-50	**DRIVE PULLEY & BELTS - MTH**					
		P) CALL ORDER DESK FOR SPECIFIC APPLICATION					
		(V.I.N.)					
		T) WITH TRAILER HITCH 10,000 LBS					
		Z) WITH "ZF" TRANSMISSION					

From Y-7046 Up to 8-9339	DATE: 01/2014	PAGE: Y2-0155-10

ENGINE TRANSMISSION GUARD & AIR SHIELD DETROIT S-60

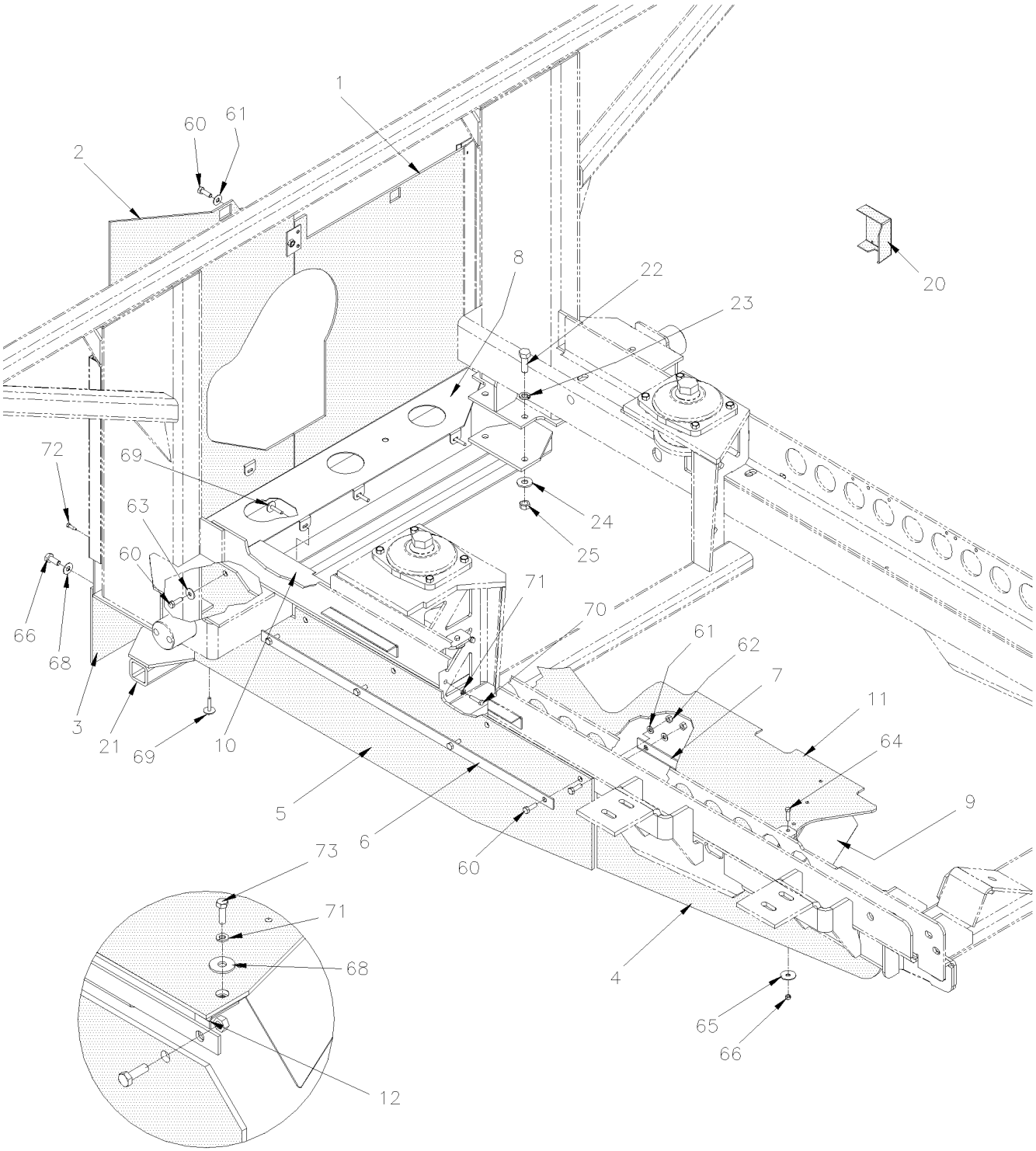

WITH "ZF" TRANSMISSION

WITH BUS & MTH-45

From Y-7046 Up to 8-9339	DATE: 01/2014	PAGE: Y2-0155-10
ENGINE TRANSMISSION GUARD & AIR SHIELD DETROIT S-60		

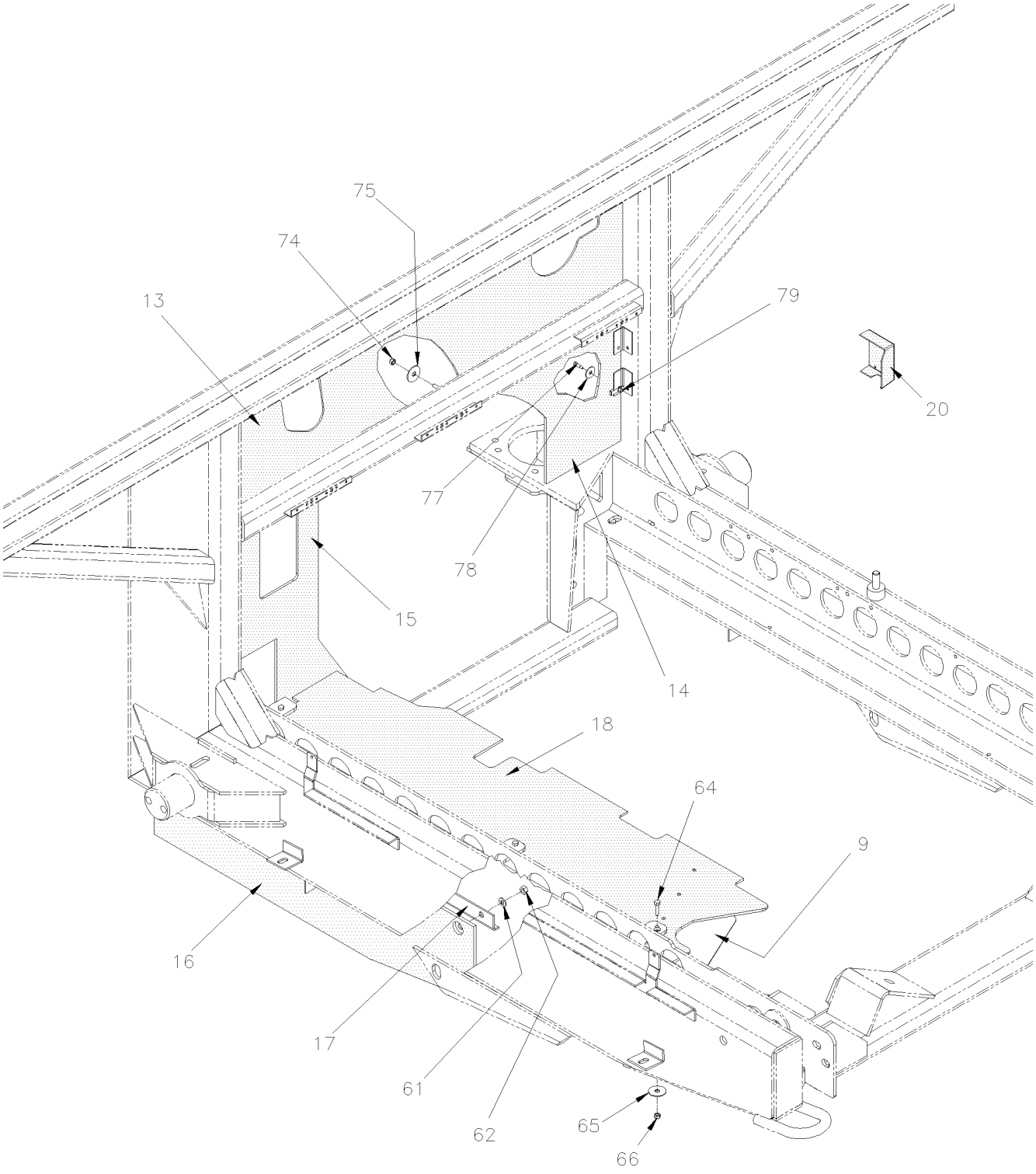

WITH MTH-40 & MTH-45E

From Y-7046 Up to 8-9339	DATE: 01/2014	PAGE: Y2-0155-10

ENGINE TRANSMISSION GUARD & AIR SHIELD DETROIT S-60

ITEM	PART	DESCRIPTION	XL45	MTH40	MTH45	MTH45S	NOTE
1	071101	PROTECTOR R.H.	1		1		S
. NS	071109	. PLATE ASSY W/WEDL-NUT M8-1.25	2		2		
. NS	504379	. RIVET POP DOME OE 3/16x1/4 SS	4		4		
1	071101	PROTECTOR R.H. Up to 1-7413	1		1		R
. NS	071109	. PLATE ASSY W/WEDL-NUT M8-1.25 Up to 1-7413	2		2		
. NS	504379	. RIVET POP DOME OE 3/16x1/4 SS Up to 1-7413	4		4		
1	071223	PROTECTOR R.H. / W/RETARDER From 1-7414	1		1		A,R
2	071102	PROTECTOR L.H.	1				S,ZF
2	071130	PROTECTOR L.H. Up to 8-9331			1		S
2	071464	PROTECTOR L.H. / W/O RETARDER From 8-9332			1		S
2	071130	PROTECTOR L.H. Up to 1-7413	1		1		R
2	071224	PROTECTOR L.H. From 1-7414 Up to 4-8345	1		1		R
2	071370	PROTECTOR L.H. From 4-8346 Up to 8-9331	1		1		R
2	071465	PROTECTOR L.H. / W/RETARDER From 8-9332			1		R
3	071103	PROTECTOR LOWER 186MM x 1094MM	1		1		
4	052369	AIR SHIELD BACKWARD	1		1		
5	052368	AIR SHIELD FORWARD	1		1		
6	052371	PLATE ATTACHMENT	1		1		
7	052370	ANGLE ATTACHMENT	1		1		
8	071131	SUPPORT, LOWER Up to 5-8369	1		1		
8	071365	SUPPORT, LOWER From 5-8370	1		1		
9	012301	DEFLECTOR PROTECTOR SS 110MM x 215MM / ENGINE COOLANT PIPE From 5-8797	1	1	1	1	
9	504339	RIVET POP DOME OE 1/8x3/8 SS From 5-8797	3	3	3	3	
10	052327	AIR SHIELD BOX SS Up to 4-8345	1		1		
10	052540	AIR SHIELD BOX SS From 4-8346	1		1		
10	012226	AIR SHIELD BOX SS / W/"ZF" TRANS From 4-8165 Up to 4-8345	1				
10	012275	AIR SHIELD BOX SS / W/"ZF" TRANS From 4-8346	1				
11	011999	AIR SHIELD Up to 4-8345	1		1		
11	012173	AIR SHIELD Up to 4-8345	1		1		
11	012184	AIR SHIELD / W/RETARDER From 4-8346	1		1		A
11	012201	AIR SHIELD / W/O RETARDER From 4-8346	1		1		
11	012227	AIR SHIELD / W/"ZF" TRANS From 4-8165 Up to 4-8345	1				
11	012272	AIR SHIELD / W/"ZF" TRANS From 4-8346	1				
12	012228	AIR SHIELD ANGLE SUPPORT / W/"ZF" TRANS From 4-8165	1				
13	011704	GUARD UPPER		1		1	
14	011706	GUARD LOWER R.H. Up to 4-8345		1		1	A
14	012198	GUARD LOWER R.H. / W/RETARDER From 4-8346		1		1	
14	012252	GUARD LOWER R.H. / W/O RETARDER From 4-8346		1		1	
15	011705	GUARD LOWER L.H. Up to 3-8164		1		1	A
15	012170	GUARD LOWER L.H. W/MODINE From 4-8165 Up to 4-8345		1		1	
		A) AS SHOWN					
		R) WITH RETARDER					
		S) WITHOUT RETARDER					
		ZF) WITH "ZF" TRANSMISSION					

From Y-7046 Up to 8-9339	DATE: 01/2014	PAGE: Y2-0155-10

ENGINE TRANSMISSION GUARD & AIR SHIELD DETROIT S-60

ITEM	PART	DESCRIPTION	XL45	MTH40	MTH45	MTH45S	NOTE
15	012251	GUARD LOWER L.H. / W/O RETARDER From 4-8346		1		1	
16	052373	AIR SHIELD Up to 4-8345		1		1	
16	052563	AIR SHIELD From 4-8346		1		1	
17	052372	ANGLE ATTACHMENT Up to 4-8345		1		1	
17	052564	ANGLE ATTACHMENT 743MM From 4-8346		1		1	
18	011999	AIR SHIELD o Up to 3-8164		1		1	
18	012173	AIR SHIELD From 4-8165 Up to 4-8345		1		1	
18	012201	AIR SHIELD / W/O RETARDER From 4-8346 Up to 8-9276				1	A
18	012428	AIR SHIELD / W/O RETARDER From 8-9277				1	
18	012184	AIR SHIELD / W/RETARDER From 4-8346				1	
20	382033	PROTECTOR "E.C.M." / PLASTIC From 4-8165 Up to 4-8358	1				
21	171605	BAR, TRANSMISSION PROTECTOR	1		1		
22	502731	SCREW CAP HEX M12-1.75x40 G8.8 ZP	4		4		
23	500482	WASHER LO SPT .506x.873x.125 ZP	4		4		
24	500446	WASHER FL .531x1.250x.125 ZP	4		4		
25	500860	NUT HEX M12-1.75 ZP	4		4		
60	502780	SCREW CAP HEX M8-1.25x25 SS EMN	10	10	10	10	
61	500874	WASHER FL 8.4x17.0x1.6 ZP	10	10	10	10	
61	5001341	WASHER FL 8.4x17.0x1.6 SS	AR	AR	AR	AR	
62	502744	NUT HEX STO M8-1.25 ZP	8	8	8	8	
63	500381	WASHER FL 8.4x25.0x2.0 ZG603	1	1	1	1	
64	502737	SCREW CAP HEX M6-1.0x25 SS EMN	3	3	3	3	
65	5001467	WASHER FL .343x1.250x.062 SS18-8	3	3	3	3	
66	502511	NUT HEX NYRT M6-1.0 ZP	3	3	3	3	
67	5001231	SCREW CAP HEX M10-1.5x25 SS	6	6	6	6	
68	500270	WASHER FL .406x1.000x.063 SS	6	6	6	6	
69	502810	SCREW TP CAP HEXW FL M6.3-1.81x30 PHC	6	6	6	6	
70	502686	SCREW CAP HEX M6-1.0x30 SS EMN	2	2	2	2	
71	502853	WASHER LO SPT 6.1x11.8x1.6 ZG603	2	2	2	2	
72	5001169	SCREW TP CAP HEXW #12x3/4 SS410	2	2	2	2	
73	502622	SCREW CAP HEX M6-1.0x20 SS EMN	1	1	1	1	
74	502621	NUT HEX STO M6-1.0 ZP		AR		AR	
75	500468	WASHER FL .281x1.250x.065 ZP		AR		AR	
77	500535	SCREW TP CAP HEX #14x3/4 ZP	2	2	2	2	
77	502818	SCREW CAP HEX M6-1.0x35 G8.8 ZP	AR	AR	AR	AR	
78	502573	WASHER FL 6.4x12.5x1.6 SS	2	2	2	2	
78	500468	WASHER FL .281x1.250x.065 ZP	AR	AR	AR	AR	
79	502764	NUT SPR J #14A .035-.046 / REPLACED BY: K502764	2	2	2	2	
79	502621	NUT HEX STO M6-1.0 ZP	AR	AR	AR	AR	
		A) AS SHOWN					

From Y-7462 Up to 8-9339	DATE: 01/2014	PAGE: Y2-0160-00
FLYWHEEL - WITH MANUAL TRANS		

AUTOMATIC TRANSMISSION

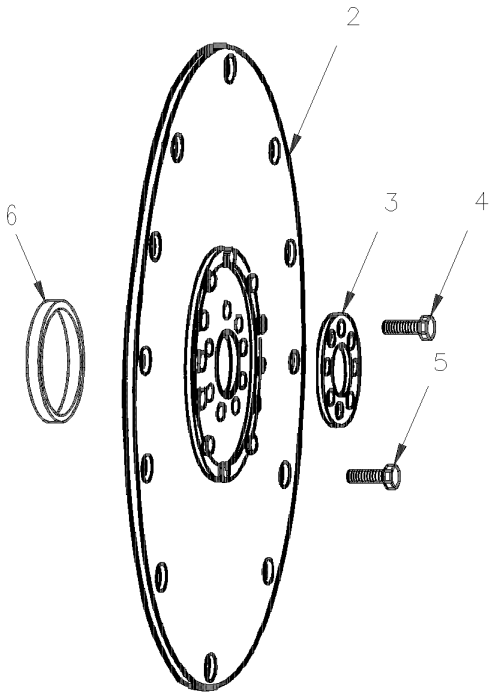

MANUAL TRANSMISSION

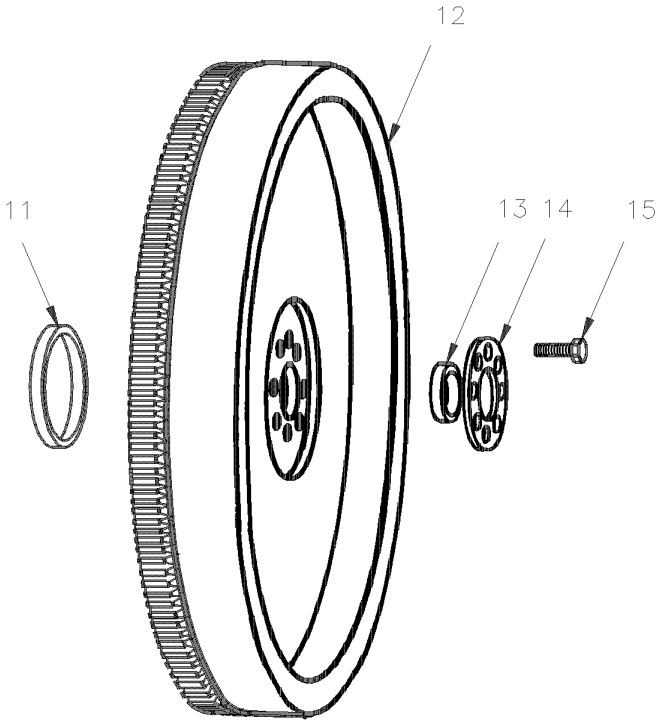

From Y-7462 Up to 8-9339	DATE: 01/2014	PAGE: Y2-0160-00

FLYWHEEL - WITH MANUAL TRANS

ITEM	PART	DESCRIPTION	XL45	MTH40	MTH45	MTH45S	NOTE
		SERIES 60 WITH AUTOMATIC TRANSMISSION					
	571728	KIT AUTO TRANS ADAPTOR FOR SERIES 60	1				
	510363	KIT AUTO TRANS ADAPTOR FOR SERIES 60	1				
2	N.S.P.	. PLATE FLEXIBLE 29513005	3				2
3	N.S.P.	. WEARPLATE 29514029	1				2
4	510476	. BOLTS 9/16-18 X 1 3/4" FLEX PLATE	12				
NS		. HUB ADAPTOR 29510823	1				
NS	510937	. SCREW PATCH LOCK M5-0.8x14	2				
	295131006	RING GEAR ADAPTOR ASSY / W/AUTOMATIC TRANS	1				
5	5001217	SCREW CAP HEX M8-1.25x20 G10.9 ZP	12				
6	N.S.P.	SEAL OIL / FORMER ENGINE (BELOW 430XXX APROX) 23516969	1				2
6	N.S.P.	SEAL OIL 23519651	1				2
		SERIES 60 WITH "ZF" TRANSMISSION					
11	N.S.P.	SEAL OIL 23519651	1				2
12	N.S.P.	FLYWHEEL 23529418	1				2
13	507113	BALL BEARING	1				
14	510225	PLATE SCUFF	1				
15	510476	BOLTS 9/16-18 X 1 3/4" FLEX PLATE	12				
		2) NOT SOLD BY PREVOST (SEE MANUFACTURING PART NUMBER AT END OF DESCRIPTION LINE)					

From Y-7046 Up to 8-9339	DATE: 01/2014	PAGE: Y2-0165-00
JACOB'S - ENGINE BRAKE - WITH DETROIT S-60		

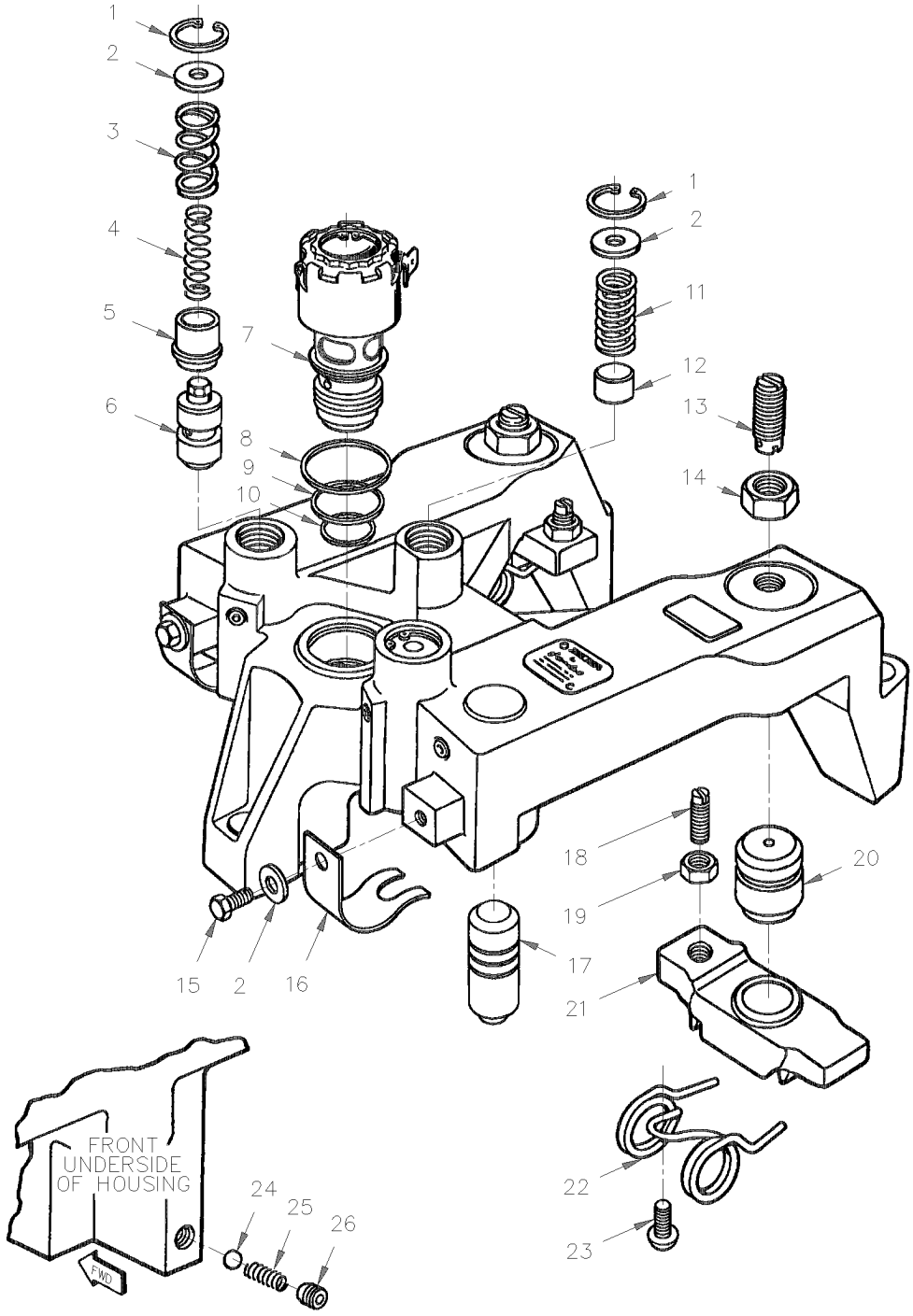

From Y-7046 Up to 8-9339	DATE: 01/2014	PAGE: Y2-0165-00

JACOB'S - ENGINE BRAKE - WITH DETROIT S-60

ITEM	PART	DESCRIPTION	XL45	MTH40	MTH45	MTH45S	NOTE
	510507	KIT JACOB'S 11.1 LITER	1	1	1	1	
	510508	KIT JACOB'S 12.7 LITER	1	1	1	1	
	N.S.P.	HOUSING ASSY - 12 VOLTS (#017122)	3	3	3	3	2
1	N.S.P.	. RETAINING RING (#012991)	3	3	3	3	2
2	N.S.P.	. COVER (#016505)	5	5	5	5	2
3	N.S.P.	. STOP SPRING (#001519)	2	2	2	2	2
4	N.S.P.	. SPRING (GREEN) (#001518)	2	2	2	2	2
5	N.S.P.	. COLLAR (#016557)	2	2	2	2	2
6	N.S.P.	. CONTROL VALVE (011930)	2	2	2	2	2
7	N.S.P.	. SOLENOID VALVE (#016440)	1	1	1	1	2
8	510411	. SEAL RING / UPPER	1	1	1	1	
9	510412	. SEAL RING / CENTER	1	1	1	1	
10	510413	. SEAL RING / LOWER	1	1	1	1	
11	N.S.P.	. SPRING (#012990)	1	1	1	1	2
12	N.S.P.	. PISTON - ACCUMULATOR (#012983)	1	1	1	1	2
13	N.S.P.	. POWER LASH SCREW ASSY (#020382)	2	2	2	2	2
14	N.S.P.	. HEX NUT (#011395)	2	2	2	2	2
15	N.S.P.	. SCREW (#001492)	2	2	2	2	2
16	N.S.P.	. FLAT SPRING (#016535)	2	2	2	2	2
17	N.S.P.	. MASTER PISTON (#012981)	2	2	2	2	2
18	N.S.P.	. ADJUSTING SCREW (#011426)	2	2	2	2	2
19	N.S.P.	. HEX NUT (#001026)	2	2	2	2	2
20	N.S.P.	. SLAVE PISTON (#017048)	2	2	2	2	2
21	N.S.P.	. BRIDGE (#016771)	2	2	2	2	2
22	N.S.P.	. TORSION SPRING (#019576)	2	2	2	2	2
23	N.S.P.	. BUTTONHEAD SCREW (#0190741)	2	2	2	2	2
24	N.S.P.	. BALL (#001021)	2	2	2	2	2
25	N.S.P.	. BALL CHECK SPRING (#011720)	1	1	1	1	2
26	N.S.P.	. PIPE PLUG (#008888)	1	1	1	1	2
NS	N.S.P.	SOLONOID HARNESS EXTERNAL (#017393)	1	1	1	1	2
NS	N.S.P.	SOLONOID HARNESS INTERNAL (#017392)	1	1	1	1	2
NS							
NS	N.S.P.	FILLER GAUGE .040 LASH / TO USE W/11.1 LITER (#017277)	AR				2
NS	N.S.P.	FILLER GAUGE .020 LASH / TO USE W/12.7 LITER (#017278)	AR				2
		2) NOT SOLD BY PREVOST (SEE MANUFACTURING PART					
		NUMBER AT END OF DESCRIPTION LINE)					

From Y-7046 Up to 8-9339	DATE: 01/2014	PAGE: Y2-02
CLUTCH		

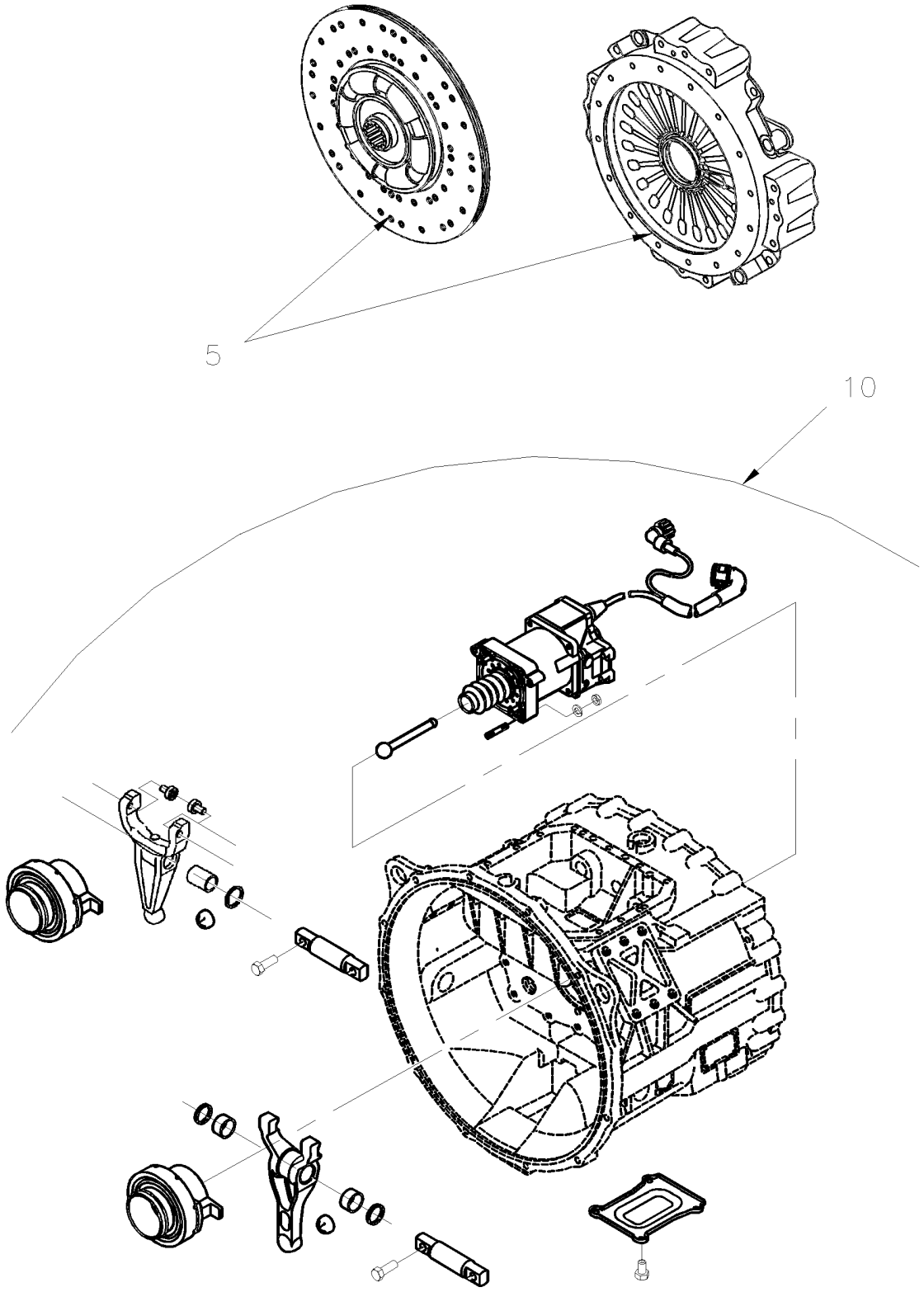

From Y-7046 Up to 8-9339	DATE: 01/2014	PAGE: Y2-02

CLUTCH

ITEM	PART	DESCRIPTION	XL45	MTH40	MTH45	MTH45S	NOTE
5	Y2-0205-00	**CLUTCH PRESSURE PLATE WITH "ZF" TRANS From Y-7462 Up to 6-8906**	1				
10	Y2-0215-00	**CLUTCH CONTROL REAR SECTION WITH "ZF" TRANS From Y-7462 Up to 6-8906**	1				

From Y-7462 Up to 6-8906	DATE: 01/2014	PAGE: Y2-0205-00
CLUTCH PRESSURE PLATE WITH "ZF" TRANS		

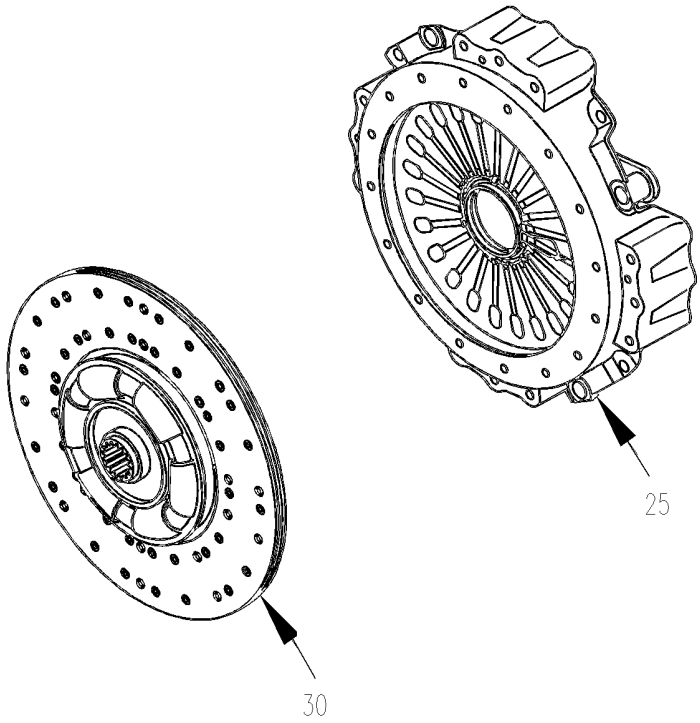

From Y-7462 Up to 6-8906	DATE: 01/2014	PAGE: Y2-0205-00

CLUTCH PRESSURE PLATE WITH "ZF" TRANS

ITEM	PART	DESCRIPTION	XL45	MTH40	MTH45	MTH45S	NOTE
25	571776	PRESSURE PLATE	1				
30	571775	CLUTCH ASSY	1				
NS	510476	BOLTS 9/16-18 X 1 3/4" FLEX PLATE	12				

From Y-7462 Up to 6-8906	DATE: 01/2014	PAGE: Y2-0215-00
CLUTCH CONTROL REAR SECTION WITH "ZF" TRANS		

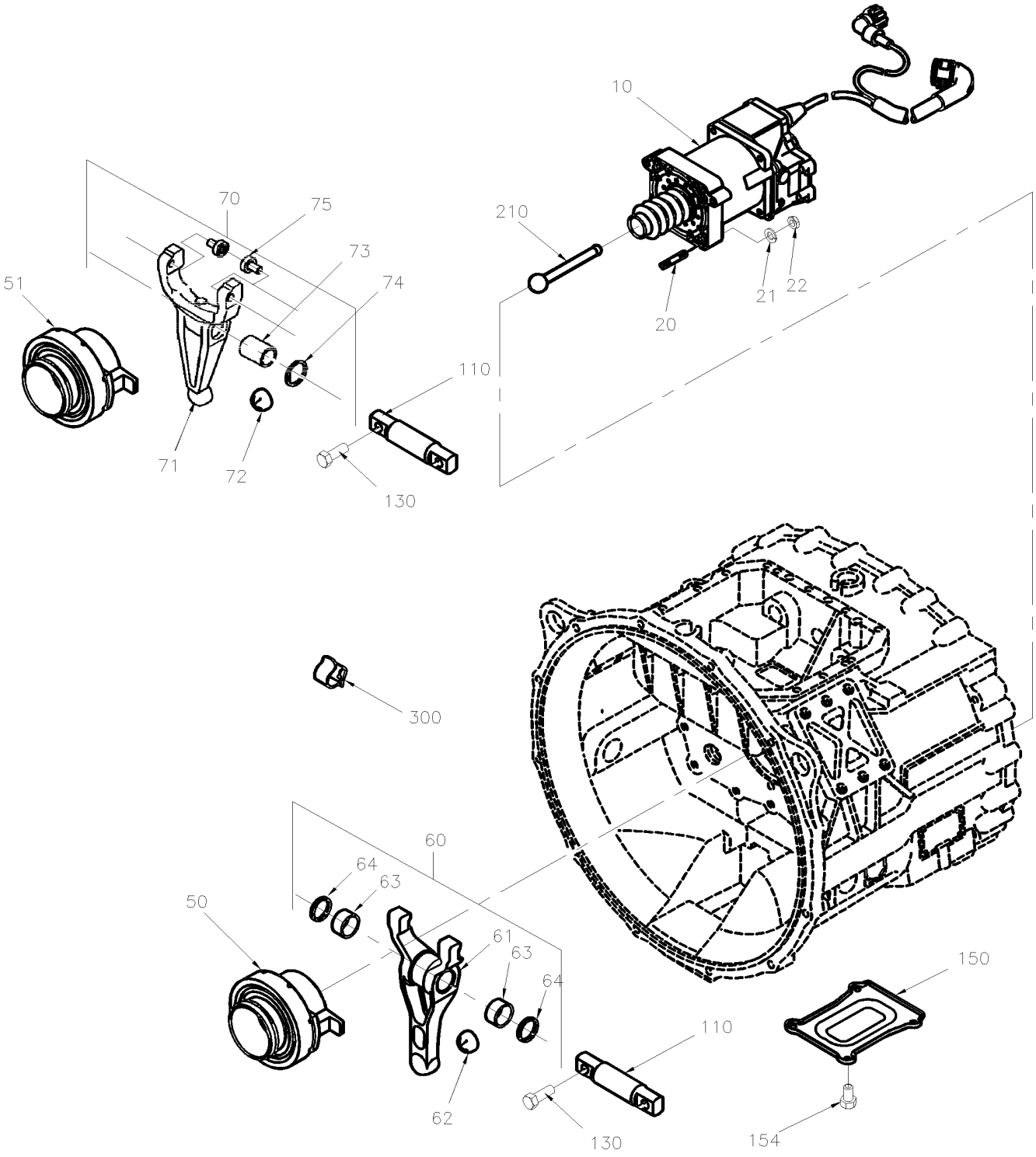

From Y-7462 Up to 6-8906	DATE: 01/2014	PAGE: Y2-0215-00

CLUTCH CONTROL REAR SECTION WITH "ZF" TRANS

ITEM	PART	DESCRIPTION	XL45	MTH40	MTH45	MTH45S	NOTE
	MI06-06	SEE MAINTENANCE INFORMATION					
10	572005	CLUTCH ACTUATOR ASSY WITH CABLE HARNESS / TO GS3 SHIFTER	1				
. NS	572135	. CHECK VALVE FILTER IN LINE CONNECTOR	1				
. NS	MI06-06	. SEE MAINTENANCE INFORMATION	1				
10	85109289	CLUTCH ACTUATOR ASSY WITH CABLE HARNESS / TO GS3 SHIFTER	1				
20	572007	STUD M8x45 8.8 DIN 835	4				
21	500874	WASHER FL 8.4x17.0x1.6 ZP	4				
22	572006	NUT HEX M8	4				
50	572008	RELEASE BEARING	1				
51	572088	RELEASE BEARING / REPLACED BY: 572089	1				
60	572009	RELEASE FORK ASSY / REPLACED BY: 572089	1				
61	572010	. RELEASE FORK / REPLACED BY: 572009	1				
62	572011	. BALL CUP	1				
63	572012	. BUSHING	2				
64	572013	. SHAFT SEAL	2				
		NEXT RELEASE FORK ASSY MAY BE ALSO					
		USE IN RETROFIT ASK PART NUMBER 572039					
70	572089	RELEASE FORK ASSY	1				
71	572090	RELEASE FORK / REPLACED BY: 572089	1				
72	572011	BALL CUP	1				
73	572091	BUSHING	1				
74	572013	SHAFT SEAL	2				
75	572092	CAM FOLWER	2				
110	572014	RELEASE SHAFT	1				
130	572015	SCREW CAP HEX M12x50 G10.9 DIN 933	2				
150	572016	COVER	1				
154	502790	SCREW CAP HEX M8-1.25x20 G8.8 ZP	4				
210	572017	PRESSING ROD	1				
300	572018	CABLE CLIP	1				
300	572019	CABLE CLIP	1				
400	572039	KIT RETROFIT NEW FORK & BEARING RELEASE / REPLACED BY: 572089	1				
. NS	572089	. RELEASE FORK ASSY	1				
. NS	572090	. RELEASE FORK / REPLACED BY: 572089	1				
. NS	572011	. BALL CUP	1				
. NS	572091	. BUSHING	1				
. NS	572013	. SHAFT SEAL	2				
. NS	572092	. CAM FOLWER	2				

From Y-7046 Up to 8-9339	DATE: 01/2014	PAGE: Y2-03
FUEL		

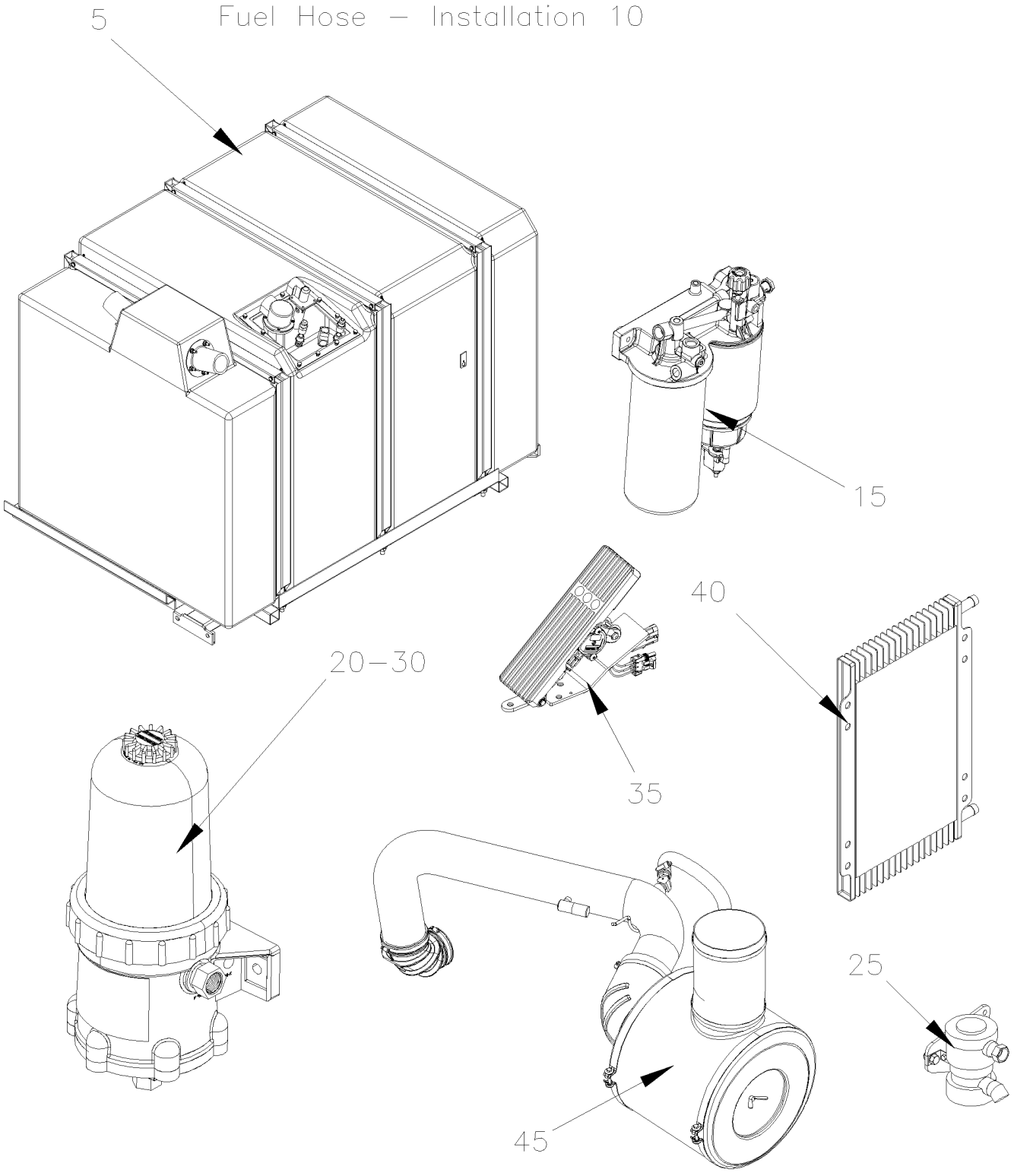

From Y-7046 Up to 8-9339	DATE: 01/2014	PAGE: Y2-03

FUEL

ITEM	PART	DESCRIPTION	XL45	MTH40	MTH45	MTH45S	NOTE
5	Y2-0305-00	**FUEL TANK PLASTIC 208 GALLONS From Y-7046 Up to 8-9339**					
5	Y2-0305-01	**FUEL TANK PLASTIC 180 & 70 GALLONS From Y-7046 Up to 8-9339**					
10	Y2-0310-00	**FUEL HOSE - INSTALLATION From Y-7046 Up to 8-9339**					
15	Y2-0311-00	**FUEL FILTER - PRIMARY & SECONDARY From Y-7046 Up to 8-9339**					
20	Y2-0311-15	**FUEL FILTER / "PRO 382" From Y-7046 Up to 8-9339**					
25	Y2-0312-00	**FUEL PUMP - AUXILIARY From Y-7046 Up to 8-9339**					
30	Y2-0312-10	**FUEL PRO - INSTALLATION From Y-7046 Up to 3-8164**					
30	Y2-0312-11	**FUEL PRO - INSTALLATION From 4-8165 Up to 8-9339**					
35	Y2-0315-10	**ACCELERATOR PEDAL - ELECTRONIC From Y-7046 Up to 8-9339**					
40	Y2-0316-00	**FUEL COOLER - INSTALLATION From Y-7046 Up to 3-8164**					
40	Y2-0316-01	**FUEL COOLER - INSTALLATION From 4-8165 Up to 8-9339**					
45	Y2-0330-00	**AIR FILTER & INTAKE - INSTALLATION WITH DETROIT S-60 From Y-7046 Up to 8-9339**					

From Y-7046 Up to 8-9339	DATE: 01/2014	PAGE: Y2-0305-00

FUEL TANK PLASTIC 208 GALLONS

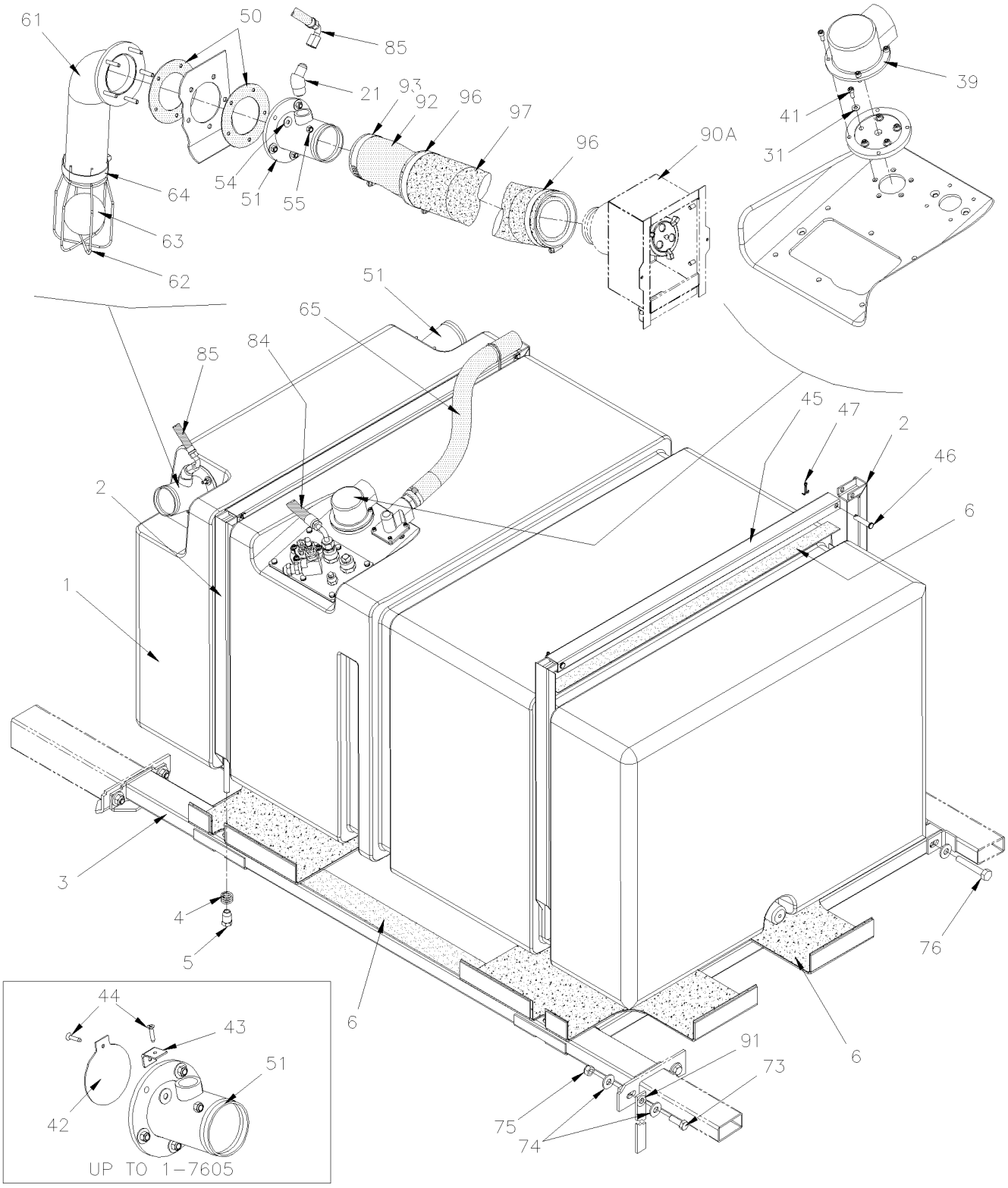

From Y-7046 Up to 8-9339	DATE: 01/2014	PAGE: Y2-0305-00
FUEL TANK PLASTIC 208 GALLONS		

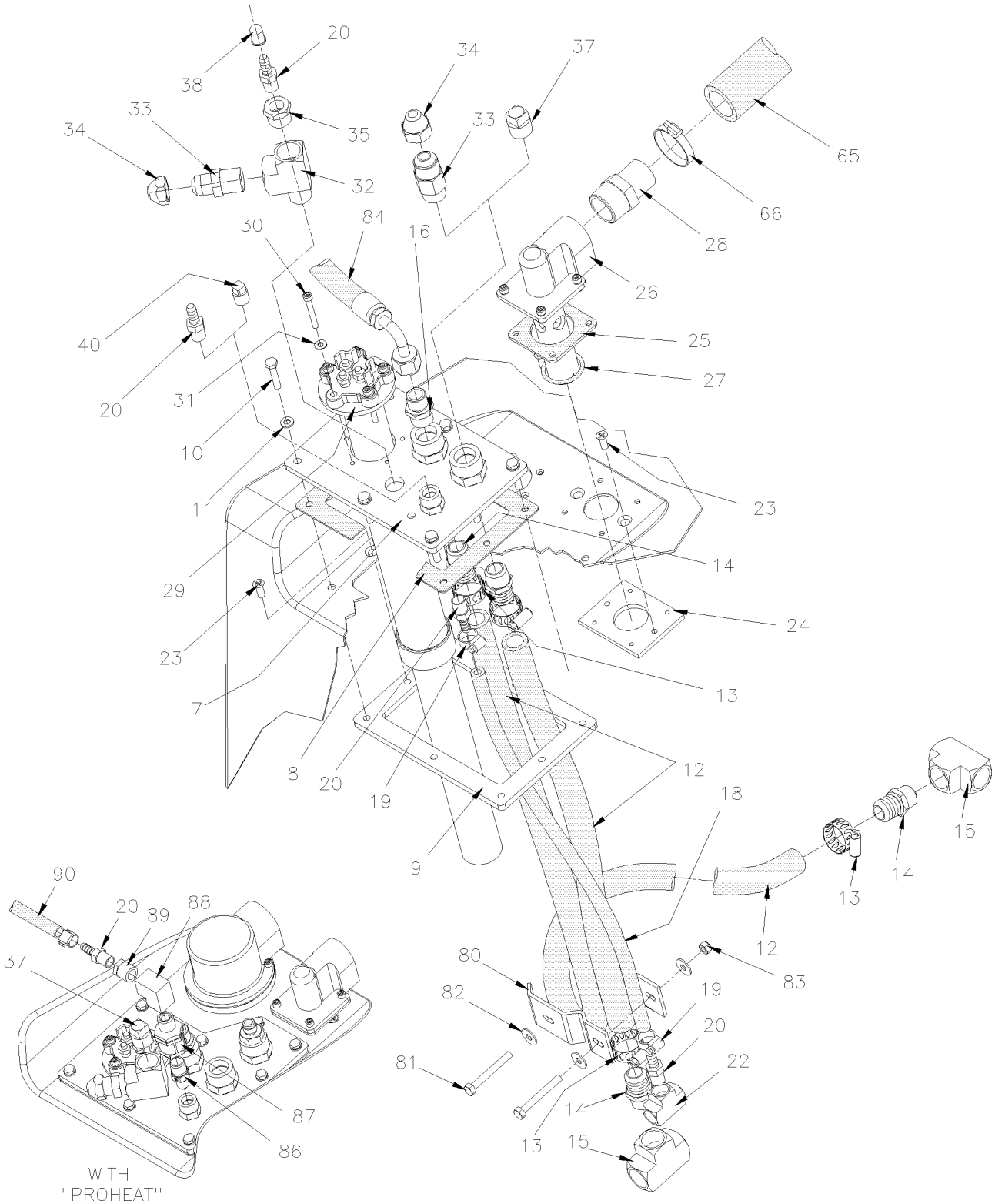

From Y-7046 Up to 8-9339	DATE: 01/2014	PAGE: Y2-0305-00

FUEL TANK PLASTIC 208 GALLONS

ITEM	PART	DESCRIPTION	XL45	MTH40	MTH45	MTH45S	NOTE
	Call Order Desk	FUEL TANK ASSY	1		1		P
	Call Order Desk	FUEL TANK ASSY	1		1		P
1	031794	. FUEL TANK / 208 GALLONS US / W/TWO INLET HOLES Up to 1-7603 / REPLACED BY: 032455	1		1		
1	032455	. FUEL TANK / 208 GALLONS US / W/TWO INLET HOLES From 1-7604	1		1		
2	031846	. STRAP ASSY Up to 3-7990 / REPLACED BY: K031846	2		2		
2	032463	. ATTACHMENT POST ASSY / 689MM From 3-7991	4		4		
3	031814	. REMOVABLE FLOOR ASSY	1		1		
3	032465	. REMOVABLE FLOOR ASSY	1				B
3	032447	. SHIM SS 197MM x 40MM	AR		AR		
4	502210	. SPRING COMPRESSION / .975 O.D. x 1.250 x .125 Up to 5-8574	1		1		
4	502932	. SPRING COMPRESSION / SS .975 O.D. x 1.250 x .125 From 5-8575	AR		AR		
5	031930	. NUT HEX SPECIAL ST M12-1.75 Up to 5-8574 / REPLACED BY: 032607	4		4		
5	032607	. NUT HEX SPECIAL SS M12-1.75 From 5-8575	4		4		
NS	680038	. THREAD LOCKER LOCTITE #243 / BLUE / 50ml	AR		AR		
6	506758	. RUB AD1 NEO 1/16"X 1 1/2"X50'	AR		AR		
6	031857	. RUBBER / ON THE CORNER OF TANK 418MM x 549MM	4		4		
6	031861	. RUBBER / ON THE RIGHT SIDE OF TANK 70MM x 480MM	1		1		
6	031859	. RUBBER / ON TOP OF TANK 30MM x 480MM	3		3		
6	031860	. RUBBER / BOTH SIDE OF TANK 30MM x 152MM	2		2		
NS	506007	. TAPE RUB ADH1 CC NEO 3/4" x 1" x 10' / BLACK 1220	AR		AR		
7	032189	. MAIN PLATE / REPLACED BY: 032826	1		1		
7	032826	. MAIN PLATE SERVICE	1		1		
8	031849	. GASKET	1		1		
9	031851	. INTERIOR FRAME ASSY	1		1		
10	502686	. SCREW CAP HEX M6-1.0x30 SS EMN	8		8		
11	5001392	. WASHER FL 6.0x12.0x1.5 COP	8		8		
12	531417	. HOSE / 2556 / #10 X 48"	3		3		
13	504019	. HOSE CLAMP / 9/16"-1"1/16 SS / HS-10	6		6		
14	501942	. MALE CONNECTOR / PUSH-LOK FITTING / 1/2NPT-Mx#10 BR	3		3		
15	501472	. FEMALE UNION TEE / PIPE FITTING / 1/2NPT-Fx1/2NPT-Fx1/2NPT-F BR	3		3		
16	501739	. MALE CONNECTOR / JIC 37° FITTING / #8JIC-Mx1/2NPT-M STL	1		1		
18	531444	. HOSE / 2556 / #4 X 18 1/2"	1		1		
19	504014	. HOSE CLAMP / 1/4"-5/8" SS / HM-4	2		2		
20	507602	. MALE CONNECTOR / PUSH-LOK FITTING / 1/4NPT-Mx#4 BR	4		4		
		P) CALL ORDER DESK FOR SPECIFIC APPLICATION					
		(V.I.N.)					
		B) WITH "EMCO WHEATON" FUEL CAP					

From Y-7046 Up to 8-9339	DATE: 01/2014	PAGE: Y2-0305-00

FUEL TANK PLASTIC 208 GALLONS

ITEM	PART	DESCRIPTION	XL45	MTH40	MTH45	MTH45S	NOTE
21	5011159	. MALE ELBOW 45º / JIC 37° FITTING / #6JIC-Mx1/2NPT-M STL	1		1		
22	501337	. FEMALE UNION TEE / PIPE FITTING / 1/4NPT-Fx1/4NPT-Fx1/4NPT-F BR	1		1		
23	5001198	. SCREW MA FL PH M6-1.0x16 ZP	8		8		
24	031899	. INTERIOR FRAME	1		1		
25	531443	. GASKET	1		1		
26	530099	. VALVE, FUEL TANK LEVEL CONTROL Up to 1-7603 / REPLACED BY: 504701	1		1		
26	504701	. VALVE, FUEL TANK LEVEL CONTROL From 1-7604	1		1		
27	507356	. O-RING	1		1		
28	501605	. BUSHING REDUCER / PIPE FITTING / 1NPT-Mx1/2NPT-F STL Up to 1-7603	1		1		
28	501205	. ADAPTER / COPPER @ PIPE / 1Mx1NPT-M From 1-7604	1		1		
28	030827	. NIPPLE Up to 1-7603	1		1		
29	531387	. SENSOR, FUEL LEVEL / 24"/ W/PLASTIC TANK	1		1		
. NS	531419	. . GASKET, FUEL SENSOR	1		1		
30	5011135	. SCREW CAP HEXS #10-24x1 1/2 ZP	10		10		
31	500593	. WASHER FL .200x.437x.036 BR	10		10		
32	501473	. MALE RUN TEE / PIPE FITTING / 1/2NPT-Mx1/2NPT-Fx1/2NPT-F BR	1		1		
33	501616	. MALE CONNECTOR / SAE 45º FITTING / #8FL-Mx1/2NPT-M BR	1		1		
34	501053	. CAP NUT / SAE 45º FITTING / #8FL-F BR	1		1		
35	501316	. BUSHING REDUCER / PIPE FITTING / 1/2NPT-Mx1/4NPT-F BR	1		1		
37	501306	. PLUG SQUARE HEAD / PIPE FITTING / 1/2NPT-M BR	1		1		
38	680733	. CAP PROTECTOR (NO-THREADED)	1		1		
39	530156	. VALVE PRESSURE	1		1		
. NS	531427	. . GASKET / (SMALL)	1		1		
. NS	531428	. . GASKET / (LARGE)	1		1		
39	531414	. VALVE PRESSURE	1				B
NS	531410	. WHISTLE	1				B
NS	531459	. VALVE CONTROL LEVEL	1				B
40	501304	. PLUG SQUARE HEAD / PIPE FITTING / 1/4NPT-M BR	1		1		
41	500143	. SCREW CAP HEXS #10-24x1/2 ZP	5		5		
42	031898	. VALVE Up to 1-7603	1		1		
43	031897	. ANGLE Up to 1-7603	1		1		
44	500260	. SCREW TC FL PH #8-32x3/4 BK Up to 1-7603	2		2		
45	032443	. TRANSVERSAL CROSS BAR / 833.5MM From 3-7991	2		2		
46	502121	. PIN, CLEVIS 3/8 x 1.625 BZC From 3-7991	4		4		
		B) WITH "EMCO WHEATON" FUEL CAP					

From Y-7046 Up to 8-9339	DATE: 01/2014	PAGE: Y2-0305-00

FUEL TANK PLASTIC 208 GALLONS

ITEM	PART	DESCRIPTION	XL45	MTH40	MTH45	MTH45S	NOTE
47	502102	. PIN, COTTER 1/8 x 1 From 3-7991	4		4		
50	031804	. GASKET	4		4		
50	032938	. GASKET	2		2		
51	031800	. FILLING HOSE ADAPTOR ASSY / R.H. WITH FUEL HOSE RETURN	1		1		
51	031896	. FILLING HOSE ADAPTOR ASSY / L.H.	2		2		
54	502686	. SCREW CAP HEX M6-1.0x30 SS EMN Up to 1-7605	10		10		A
54	502511	. NUT HEX NYRT M6-1.0 ZP	10		10		
55	500411	. WASHER FL .260x.697x.050 SS	10		10		
61	031850	. INTERIOR FRAME Up to 1-7605	2		2		A
61	032437	. TUBE BALL RETAINER From 1-7606	2		2		
61	032914	. TUBE BALL RETAINER	2		2		
62	032438	. BASKET From 1-7606	2		2		
63	032657	. BALL 70MM O.D. From 1-7606 / REPLACED BY: 032871	2		2		
63	032871	. BALL 77MM O.D.	2		2		S
64	504293	. HOSE CLAMP / 2"5/16-3"1/4 SS / E.T. 44 From 1-7606	2		2		
65	031474	. HOSE #12 27" Up to 1-7603	1		1		
65	032415	. HOSE #16 X 27" LG From 1-7604	2		2		
. NS	503579	. . HOSE 1" I.D. X 50' / "GREEN STRIPE" From 1-7604	AR		AR		
NS	504637	. CABLE TIE / 3/16" x 13"	AR		AR		
66	504021	. HOSE CLAMP / 11/16"-1"1/2 SS / HS-16	1		1		
73	500806	. SCREW CAP HEX M12-1.75X35 G10.9	4		4		
74	500211	. WASHER FL .531x1.250x.125 N500	12		12		
75	500811	. NUT HEX STO M12-1.75 DP	6		6		
76	5001609	. SCREW CAP HEX M12-1.75x80 G10.9 DP	2		2		
80	032240	. HOLDING PLATE / TO HOLD TUBE	2		2		
81	502656	. SCREW CAP HEX M6-1.0x50 SS	2		2		
82	500411	. WASHER FL .260x.697x.050 SS	4		4		
83	502511	. NUT HEX NYRT M6-1.0 ZP	4		4		
84	032579	HOSE ASSY / #8 6125MM	1				
84	032652	HOSE ASSY / #8 6500MM	1				
85	032097	HOSE ASSY / #6 7991MM	1				
86	501749	NIPPLE REDUCER HEX / PIPE FITTING / 3/8NPT-Mx1/4NPT-Mx1 13/32 BR	1				
87	530042	CHECK VALVE 3/8 NPT	4				
88	509863	FEMALE ELBOW 90º / PIPE FITTING / 3/8NPT-Fx3/8NPT-F BR	1				
		A) FOR PRODUCT IMPROVEMENT OF SPILLWAY USE KIT #					
		032413 FOR VIN FROM Y-7046 TO 1-7605					
		S) SERVICE					

From Y-7046 Up to 8-9339	DATE: 01/2014	PAGE: Y2-0305-00

FUEL TANK PLASTIC 208 GALLONS

ITEM	PART	DESCRIPTION	XL45	MTH40	MTH45	MTH45S	NOTE
89	501314	BUSHING REDUCER / PIPE FITTING / 3/8NTP-Mx1/4NPT-F BR	1				
90	Y2-2350-10	**WATER HEATER - INSTALLATION**					
90A	Y2-1875-00	**FUEL TANK FILLING DOOR**					
91	505056	ANTISTATIC STRAP / UNDER STRUCTURE	1		1		
NS	031161	DECAL / FUEL RECOMMENDATIONS / FRENCH	1		1		
NS	031162	DECAL / FUEL RECOMMENDATIONS / ENGLISH	1		1		
NS	031164	DECAL / CERTIFICATION	1		1		
NS	400137	DECAL / DIESEL FUEL	1		1		
NS	403747	DECAL / INSTRUCTION FOR FILLING TANK /208 GAL	1		1		
92	031956	FILLING HOSE #40 652MM	1		1		
92	031855	FILLING HOSE #40 937MM	1		1		
93	504381	HOSE CLAMP / 2"3/4-3"5/8 SS / HT-350	2		2		
96	504235	HOSE CLAMP / 3"9/16"-4"1/2 SS / HS-64	4		4		
97	032569	HOSE 3 1/2" I.D. X 610MM	1		1		
97	032289	HOSE 3 1/2" I.D. X 750MM W/SLIDE-OUT From 6-8806			1		
97	032570	HOSE 3 1/2" I.D. X 915MM	1		1		
100	032413	KIT, FUEL SPILLWAY RETROFIT From Y-7046 Up to 1-7605	1				C
. NS	IS-98080	. SEE INSTRUCTION SHEET From Y-7046 Up to 1-7605					
101	032504	KIT, RETROFIT FUEL TANK STRAP From Y-7046 Up to 3-7990	1				D
. NS	IS-02059	. SEE INSTRUCTION SHEET From Y-7046 Up to 3-7990	1				
		C) INCLUDE ITEMS 8, 26, 28, 50, 54, 55, 61 to 66					
		D) INCLUDE ITEMS 2, 45 to 46					

From Y-7046 Up to 8-9339	DATE: 01/2014	PAGE: Y2-0305-01

FUEL TANK PLASTIC 180 & 70 GALLONS

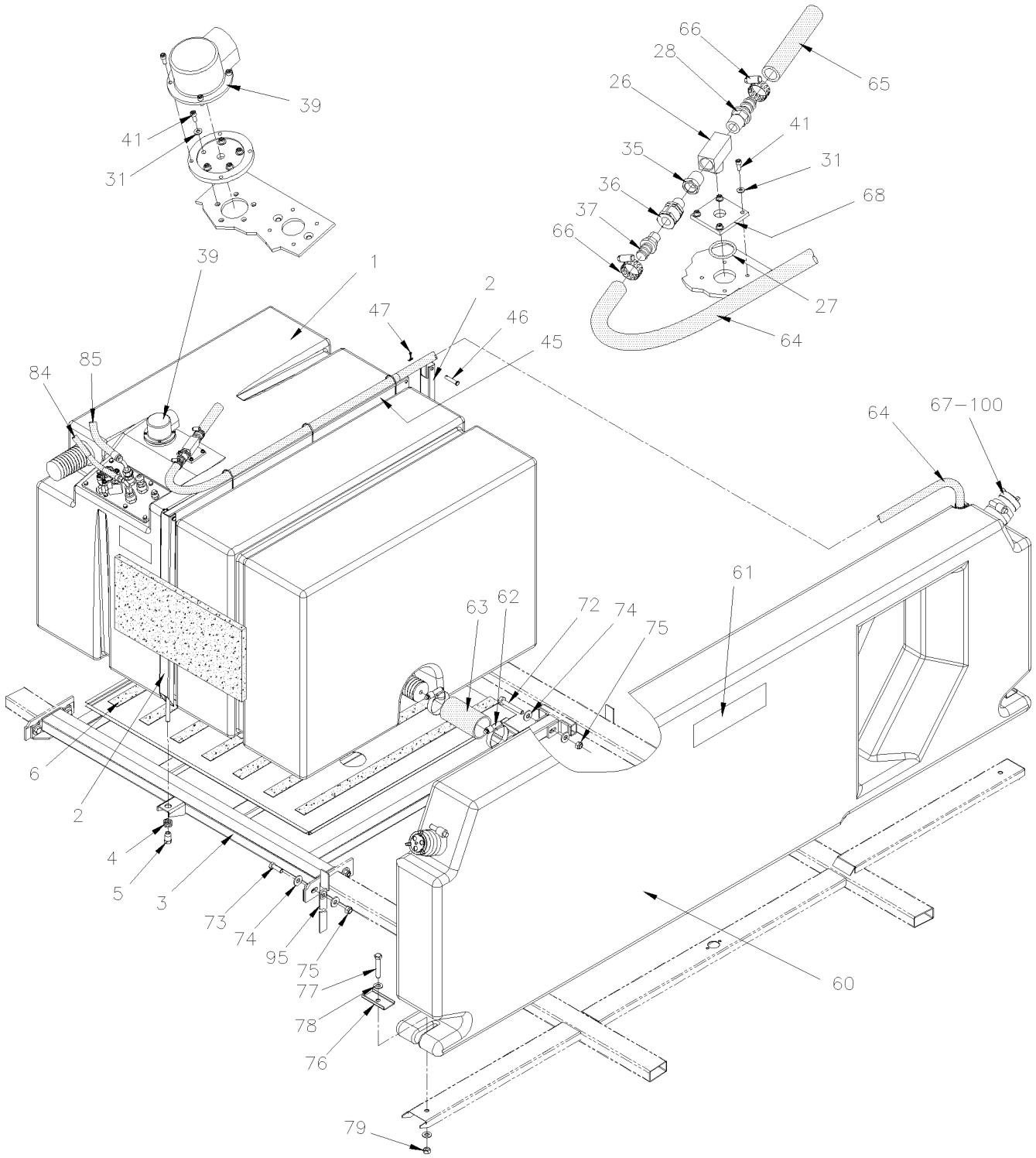

From Y-7046 Up to 8-9339	DATE: 01/2014	PAGE: Y2-0305-01

FUEL TANK PLASTIC 180 & 70 GALLONS

From Y-7046 Up to 8-9339	DATE: 01/2014	PAGE: Y2-0305-01

FUEL TANK PLASTIC 180 & 70 GALLONS

ITEM	PART	DESCRIPTION	XL45	MTH40	MTH45	MTH45S	NOTE
1	032015	FUEL TANK / 180 GALLONS US Up to 2-7739 / REPLACED BY: 032480		1		1	
. NS	032361	. ADAPTOR DRAIN PLUG Up to 2-7739		1		1	
. NS	032362	. O-RING DRAIN PLUG Up to 2-7739		1		1	
1	032480	FUEL TANK / 180 GALLONS US From 2-7740		1		1	
2	032095	HOLDING STRAP Up to 3-7990 / REPLACED BY: K032095		2		2	A
2	032506	ATTACMENT ASSY 722MM From 3-7991		2		2	
3	032017	REMOVABLE FLOOR Up to 5-8607		1		1	
3	032608	REMOVABLE FLOOR From 5-8608				1	
NS	032091	BOTTOM PANEL		1		1	
4	502210	SPRING COMPRESSION / .975 O.D. x 1.250 x .125 Up to 5-8574		2		2	
4	502932	SPRING COMPRESSION / SS .975 O.D. x 1.250 x .125 From 5-8575				2	
5	031930	NUT HEX SPECIAL ST M12-1.75 Up to 5-8574 / REPLACED BY: 032607		2		2	
5	032607	NUT HEX SPECIAL SS M12-1.75 From 5-8575				2	
6	506758	RUB AD1 NEO 1/16"X 1 1/2"X50'		AR		AR	
NS	506757	TAPE RUB ADH1 NEO 3/4" x 10" x 25 1/2" / BLACK 1220		1		1	
NS	506007	TAPE RUB ADH1 CC NEO 3/4" x 1" x 10' / BLACK 1220		AR		AR	
7	032090	MAIN PLATE / REPLACED BY: 032813		1		1	
8	032096	GASKET		1		1	
9	032092	INTERIOR FRAME		1		1	
10	502686	SCREW CAP HEX M6-1.0x30 SS EMN		10		10	
11	5001392	WASHER FL 6.0x12.0x1.5 COP		10		10	
12	531417	HOSE / 2556 / #10 X 48"		1		1	
13	504019	HOSE CLAMP / 9/16"-1"1/16 SS / HS-10		2		2	
14	501942	MALE CONNECTOR / PUSH-LOK FITTING / 1/2NPT-Mx#10 BR		2		2	
15	501472	FEMALE UNION TEE / PIPE FITTING / 1/2NPT-Fx1/2NPT-Fx1/2NPT-F BR		1		1	
17	501930	MALE CONNECTOR / JIC 37° FITTING / #6JIC-Mx1/2NPT-M STL		1		1	
18	531444	HOSE / 2556 / #4 X 18 1/2"		1		1	
19	504014	HOSE CLAMP / 1/4"-5/8" SS / HM-4		2		2	
20	507602	MALE CONNECTOR / PUSH-LOK FITTING / 1/4NPT-Mx#4 BR		4		4	
22	501337	FEMALE UNION TEE / PIPE FITTING / 1/4NPT-Fx1/4NPT-Fx1/4NPT-F BR		1		1	
23	5001198	SCREW MA FL PH M6-1.0x16 ZP		2		2	
25	531443	GASKET		1		1	
26	507556	MALE BRANCHE TEE / PIPE FITTING / 1/2NPT-Fx1/2NPT-Fx1/2NPT-M BR		1		1	
27	507356	O-RING		1		1	
28	507605	MALE CONNECTOR / HOSE BARB FITTING / #12x1/2NPT-M BR		1		1	
29	531387	SENSOR, FUEL LEVEL / 24"/ W/PLASTIC TANK		1		1	
. NS	531419	. GASKET, FUEL SENSOR		1		1	
30	5011135	SCREW CAP HEXS #10-24x1 1/2 ZP		5		5	
31	500593	WASHER FL .200x.437x.036 BR		5		5	
32	501473	MALE RUN TEE / PIPE FITTING / 1/2NPT-Mx1/2NPT-Fx1/2NPT-F BR		1		1	
33	501616	MALE CONNECTOR / SAE 45º FITTING / #8FL-Mx1/2NPT-M BR		2		2	
34	501053	CAP NUT / SAE 45º FITTING / #8FL-F BR		1		1	
		A) FOR PRODUCT IMPROVMENT USE KIT #032509 FOR					
		VEHICULE Up to 3-7990					

From Y-7046 Up to 8-9339	DATE: 01/2014	PAGE: Y2-0305-01

FUEL TANK PLASTIC 180 & 70 GALLONS

ITEM	PART	DESCRIPTION	XL45	MTH40	MTH45	MTH45S	NOTE
35	501534	BUSHING REDUCER / PIPE FITTING / 1/2NPT-Mx3/8NPT-F BR		1		1	
36	530042	CHECK VALVE 3/8 NPT		1		1	
37	501949	MALE CONNECTOR / PUSH-LOK FITTING / 3/8NPT-Mx#8 BR		1		1	
38	5011064	MALE CONNECTOR / HOSE BARB FITTING / #3x1/4NPT-M BR		1		1	
39	530156	VALVE PRESSURE		1		1	
. NS	531427	. GASKET / (SMALL)		1		1	
. NS	531428	. GASKET / (LARGE)		1		1	
41	500143	SCREW CAP HEXS #10-24x1/2 ZP		5		5	
42	531445	HOSE / 2556 / #10 X 18 1/2"		1		1	
45	032508	TRANSVERSAL BAR 985MM From 3-7991		1		1	
46	502121	PIN, CLEVIS 3/8 x 1.625 BZC From 3-7991		2		2	
47	502102	PIN, COTTER 1/8 x 1 From 3-7991		2		2	
60	032194	FUEL TANK / 70 GALLONS US Up to 6-8805		1		1	
. NS	032147	. FILLING TUBE STRAIGHT Up to 6-8805		2		2	
60	032605	FUEL TANK / 70 GALLONS US From 6-8806 Up to 7-9035 / REPLACED BY: 032705				1	
. NS	032147	. FILLING TUBE STRAIGHT From 6-8806 Up to 7-9035				2	
60	032705	FUEL TANK / 70 GALLONS US From 7-9036				1	
. NS	032147	. FILLING TUBE STRAIGHT From 7-9036				1	
. NS	030003	. FILLING TUBE WITH 145 DEG / BEND From 7-9036				1	
61	032178	DECAL "CAUTION"		1		1	
62	504562	HOSE CLAMP / 2"3/4-3"5/8 / C.T. 350		2		2	
63	032177	HOSE #40 150MM		1		1	
64	032210	HOSE #8 1090MM		1		1	
65	032166	HOSE #12 120"		1		1	
NS	504637	CABLE TIE / 3/16" x 13"		4		4	
66	504021	HOSE CLAMP / 11/16"-1"1/2 SS / HS-16		1		1	
67	531424	FUEL FILLING CAP / SCREW TYPE CAP		2		2	
68	032204	SPIRACLE PLATE		1		1	
69	501316	BUSHING REDUCER / PIPE FITTING / 1/2NPT-Mx1/4NPT-F BR		1		1	
70	502737	SCREW CAP HEX M6-1.0x25 SS EMN		2		2	
71	502570	WASHER LO SPT 6.1x11.8x1.6 SS		2		2	
72	5001862	SCREW CAP HEX M12-1.75x70 G10.9 N500		2		2	
73	500806	SCREW CAP HEX M12-1.75X35 G10.9		8		8	
74	500211	WASHER FL .531x1.250x.125 N500		16		16	
75	500811	NUT HEX STO M12-1.75 DP		8		8	
76	032149	FIXING PLATE		2		2	
77	5001392	WASHER FL 6.0x12.0x1.5 COP		10		10	
78	500958	WASHER FL .531x1.062x.095 SS		2		2	
79	500875	NUT HEX M12-1.75 SS		2		2	
80	032240	HOLDING PLATE / TO HOLD TUBE		2		2	
81	502656	SCREW CAP HEX M6-1.0x50 SS		2		2	
82	500411	WASHER FL .260x.697x.050 SS		2		2	

From Y-7046 Up to 8-9339	DATE: 01/2014	PAGE: Y2-0305-01

FUEL TANK PLASTIC 180 & 70 GALLONS

ITEM	PART	DESCRIPTION	XL45	MTH40	MTH45	MTH45S	NOTE
83	502511	NUT HEX NYRT M6-1.0 ZP		2		2	
95	505056	ANTISTATIC STRAP / UNDER STRUCTURE		1		1	
100	Y2-1875-00	**FUEL TANK FILLING DOOR**					
NS	032509	KIT, RETROFIT FUEL TANK STRAP From Y-7046 Up to 3-7990		1		1	
. NS	IS-02059	. SEE INSTRUCTION SHEET From Y-7046 Up to 3-7990		1		1	

From Y-7046 Up to 8-9339	DATE: 01/2014	PAGE: Y2-0305-01

FUEL TANK PLASTIC 180 & 70 GALLONS

ITEM	PART	DESCRIPTION	XL45	MTH40	MTH45	MTH45S	NOTE

From Y-7046 Up to 8-9339	DATE: 01/2014	PAGE: Y2-0310-00

FUEL HOSE - INSTALLATION

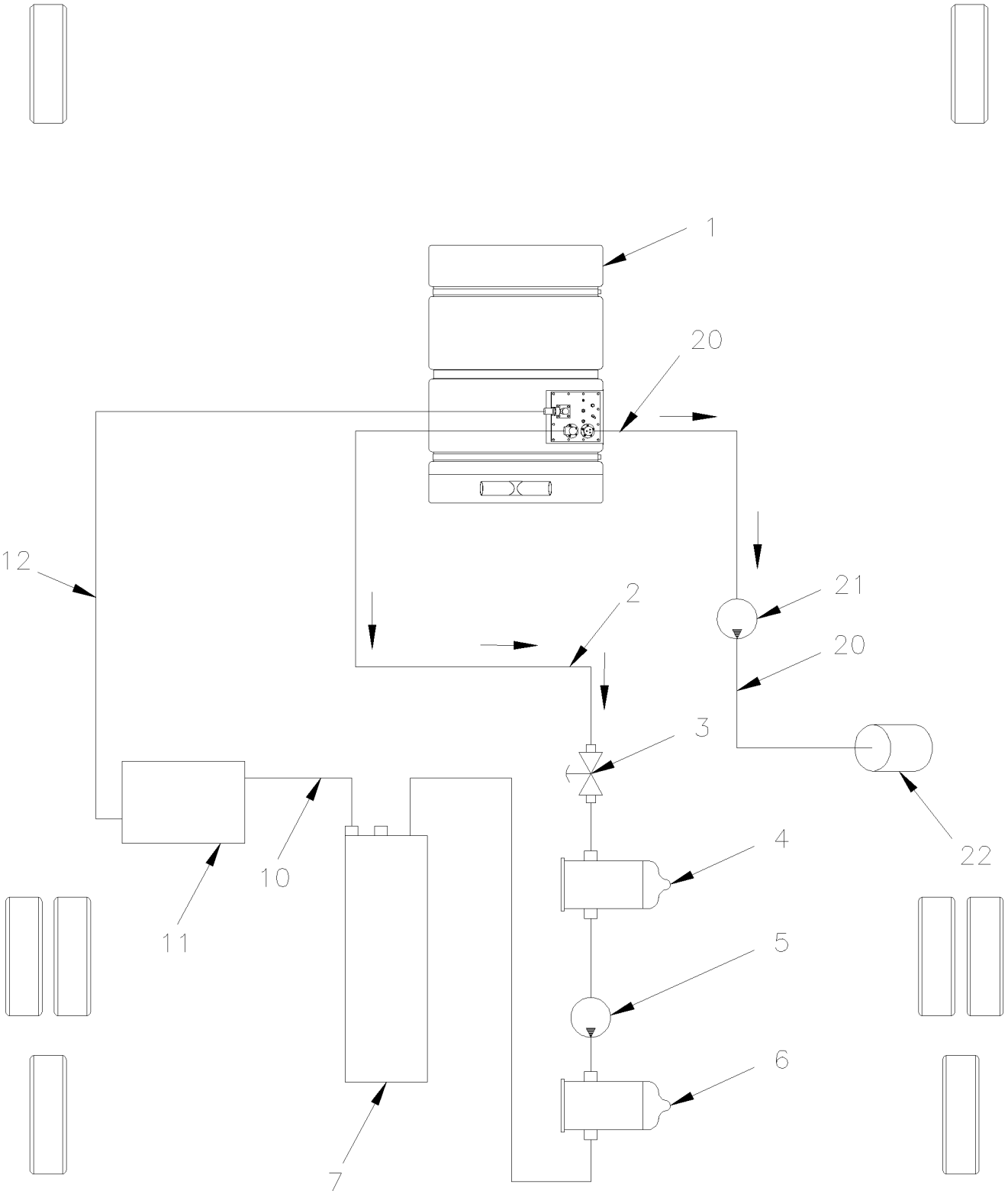

From Y-7046 Up to 8-9339	DATE: 01/2014	PAGE: Y2-0310-00

FUEL HOSE - INSTALLATION

ITEM	PART	DESCRIPTION	XL45	MTH40	MTH45	MTH45S	NOTE
1	Y2-0305-00	**FUEL TANK PLASTIC 208 GALLONS**					
1	Y2-0305-01	**FUEL TANK PLASTIC 180 & 70 GALLONS**					
2	032183	HOSE ASSY / #8 5982MM		1		1	
2	032098	HOSE ASSY / #8 6632MM	1		1		
3	530096	BALL VALVE 1/2" NPT 1/2 NPT F x 1/2 NPT F	1	1	1	1	
4	530052	FILTER ASSY PRIMARY / REPLACED BY: K530052	1	1	1	1	
5	N.S.P.	FUEL PUMP / SUPPLY W/MOTOR	1				2
6	530051	FILTER ASSY SECONDARY / REPLACED BY: K530051	1	1	1	1	
7		ENGINE CYLINDER HEAD					
10	032137	HOSE ASSY / FROM CYLINDER HEAD / #6 2009MM	1		1		
10	032185	HOSE ASSY / FROM CYLINDER HEAD / #6 1910MM		1		1	
11	Y2-0316-00	**FUEL COOLER - INSTALLATION**					
11	Y2-0316-01	**FUEL COOLER - INSTALLATION**					
12	032097	HOSE ASSY / #6 7991MM	1		1		
12	032184	HOSE ASSY / TO FUEL TANK / #6 7440MM		1		1	
		. . . . FOLLOWING PARTS ARE USED WITH					
		. . . . WATER HEATER					
20	503411	HOSE / 2556 / #4 X 50'	AR				
NS	504230	HOSE CLAMP / 3/8"-7/8" SS / HS-6	4				
21	871037	FILTER, FUEL	1				
NS	871038	SUPPORT, FILTER FUEL	1				
22	871036	**WATER HEATER - "WEBASTO" 80,000 B.T.U.**					
22	871085	**WATER HEATER - "WEBASTO" 45,000 B.T.U.**					
22	871097	**WATER HEATER - "ESPAR" 41,000 B.T.U.**					
22	871202	**WATER HEATER - "WEBASTO" 100,000 B.T.U.**					
22	871100	**WATER HEATER - "PROHEAT" 80,000 B.T.U.**					
22	871329	**WATER HEATER - "PROHEAT" 80,000 B.T.U.**					
		2) NOT SOLD BY PREVOST (SEE MANUFACTURING PART					
		NUMBER AT END OF DESCRIPTION LINE)					

From Y-7046 Up to 8-9339	DATE: 01/2014	PAGE: Y2-0311-00

FUEL FILTER - PRIMARY & SECONDARY

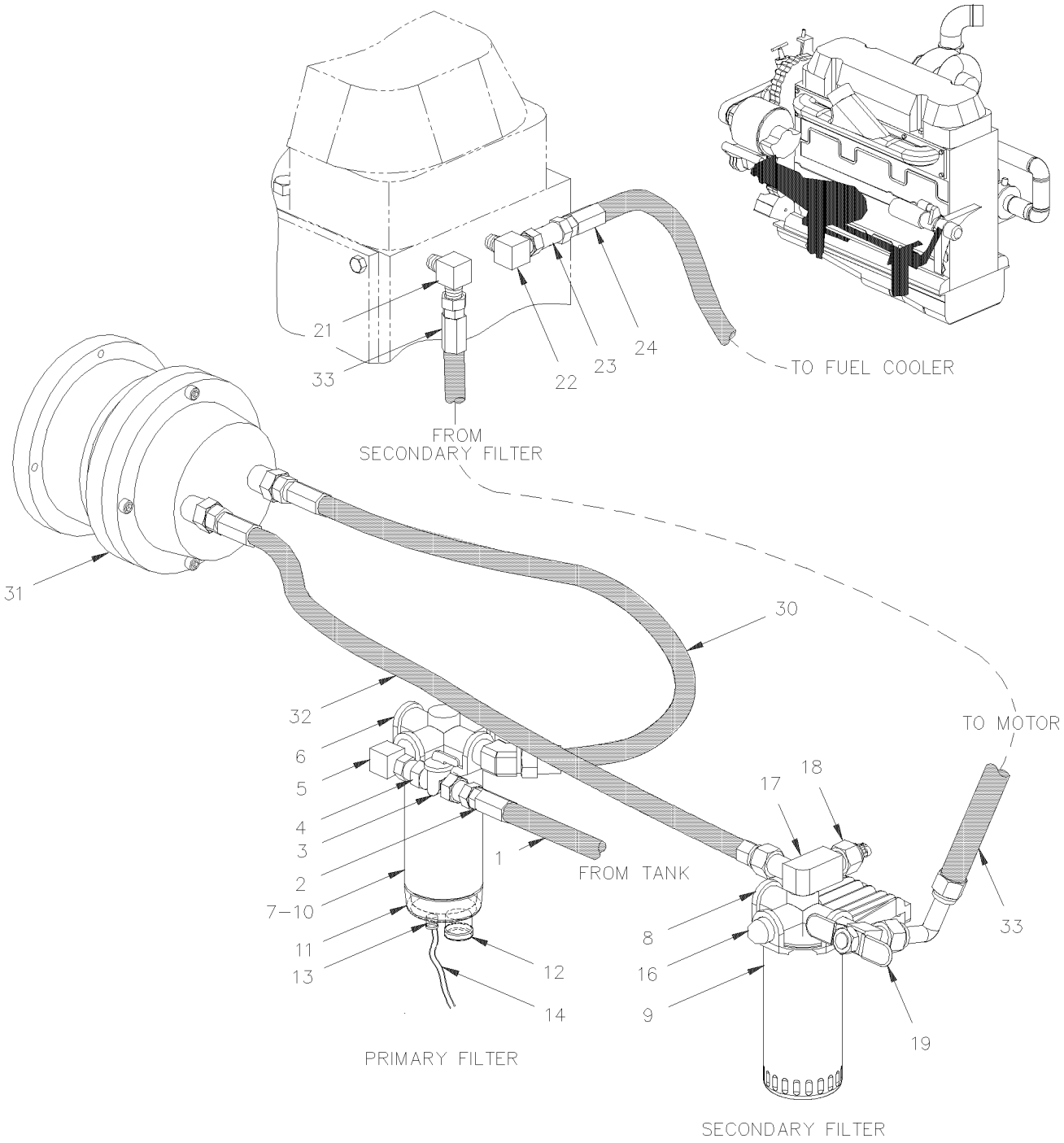

From Y-7046 Up to 8-9339	DATE: 01/2014	PAGE: Y2-0311-00

FUEL FILTER - PRIMARY & SECONDARY

ITEM	PART	DESCRIPTION	XL45	MTH40	MTH45	MTH45S	NOTE
1	032098	HOSE ASSY / #8 6632MM Up to 3-8164	1		1		A
1	032499	HOSE ASSY / #8 6000MM From 4-8165 Up to 4-8345	1		1		A
1	032579	HOSE ASSY / #8 6125MM From 5-8346 Up to 7-8932	1		1		A
1	032652	HOSE ASSY / #8 6500MM From 7-8933			1		
1	032183	HOSE ASSY / #8 5982MM Up to 3-8164		1		1	A
1	032511	HOSE ASSY / #8 5150MM From 4-8165 Up to 4-8345		1		1	
1	032554	HOSE ASSY / #8 5225MM From 5-8346 Up to 7-8932		1		1	
1	032699	HOSE ASSY / #8 5764MM From 7-8933				1	
2	501034	MALE CONNECTOR / SAE 45º FITTING / #10FL-Mx1/2NPT-M BR Up to 3-8164	1	1	1	1	
2	501612	MALE ELBOW 90º / SAE 45º FITTING / #8FL-Mx1/2NPT-M BR From 4-8165	1	1	1	1	
3	530096	BALL VALVE 1/2" NPT 1/2 NPT F x 1/2 NPT F	1	1	1	1	
4	501322	NIPPLE HEX / PIPE FITTING / 3/8NPT-Mx3/8NPT-Mx1 13/32 BR	1	1	1	1	
NS	501534	BUSHING REDUCER / PIPE FITTING / 1/2NPT-Mx3/8NPT-F BR	1	1	1	1	
5	501333	STREET ELBOW 90º / PIPE FITTING / 3/8NPT-Mx3/8NPT-F BR Up to 3-8164	1	1	1	1	H
5	5011260	FEMALE CONNECTOR SWIVEL / PUSH-LOK FITTING / #8FL-Fx#6 BR From 4-8165	1	1	1	1	H
NS	501305	PLUG SQUARE HEAD / PIPE FITTING / 3/8NPT-M BR	AR	AR	AR	AR	
6	530052	FILTER ASSY PRIMARY / REPLACED BY: K530052	1	1	1	1	
NS	510157	. COVER / W/PRIMARY FILTER	1	1	1	1	
7	510137	. FUEL FILTER, CARTRIDGE / T-915 / PRIMARY	1	1	1	1	
8	530051	FILTER ASSY SECONDARY / REPLACED BY: K530051	1	1	1	1	
8	510344	. COVER / W/SECONDARY FILTER	1	1	1	1	
9	510128	. FUEL FILTER, CARTRIDGE / TP-916 / SECONDARY Up to 5-8358 / REPLACED BY: 510794	1	1	1	1	
9	510794	. FUEL FILTER, CARTRIDGE / / SECONDARY From 5-8359	1	1	1	1	
10	531390	CARTRIDGE / W/WATER SEPARATOR FILTER	1	1	1	1	C
11	531389	BOWL PLASTIC	1	1	1	1	
12	531397	. DRAIN VALVE & SEAL	1	1	1	1	
NS	531398	. O-RING	1	1	1	1	
13	531391	. SENSOR / WATER LEVEL	1	1	1	1	
14	063715	CABLE ASSY / <> ENGINE ACC. & WATER SEPARATOR	1	1	1	1	
NS	561566	. CONNECTOR / WEATHER PACK / PH 2C / BLACK / PED 12010973	1	1	1	1	
NS	561565	. CABLE SEAL / GREEN / PED 15324982	2	2	2	2	
NS	561567	. PIN TERMINAL / 20-18 / PED 12089040	2	2	2	2	
NS	560483	CLAMP / 7/8" I.D. / REPLACED BY: 952633	1	1	1	1	G
16	950249	SCHROUDER VALVE 1/4NPT-M Up to 3-8031	1	1	1	1	
16	504706	NIPPLE / QUICK DISCONNECT "SAE J1502" / #4x1/4NPT-M STL W/DUST CAP From 3-8032	1	1	1	1	
		A) THOSE HOSES COME FROM BULKHEAD CONNECTOR TO					
		FUEL TANK					
		C) FOR FILTER CARTRIDGE WATER SPERATOR W/O PROB					
		SENSOR & PLASTIC BOWL USE PART # 531407					
		G) FOR CABLE					
		H) W/PRIMARY					

From Y-7046 Up to 8-9339	DATE: 01/2014	PAGE: Y2-0311-00

FUEL FILTER - PRIMARY & SECONDARY

ITEM	PART	DESCRIPTION	XL45	MTH40	MTH45	MTH45S	NOTE
17	N.S.P.	ELBOW ADAPTOR FUEL PRESSURE / (23505246-247) Up to 3-8164	1	1	1	1	2
18	N.S.P.	FUEL TEMP SENSOR / (23518092) Up to 3-8164	1	1	1	1	2
19	N.S.P.	ELBOW BALL VALVE / (235.....) Up to 3-8164	1	1	1	1	2
21	N.S.P.	ELBOW / (23513205) Up to 3-8164	1	1	1	1	2
22	N.S.P.	ELBOW / RESTRICTION / (8929725)	1	1	1	1	2
23	531415	CHECK VALVE	1	1	1	1	
24	Y2-0316-00	**FUEL COOLER - INSTALLATION**					
24	Y2-0316-01	**FUEL COOLER - INSTALLATION**					
30	N.S.P.	HOSE ASSY / <> PRIMARY & FUEL PUMP / (23509154) Up to 3-8164	1	1	1	1	2
31	N.S.P.	FUEL PUMP / SUPPLY W/MOTOR (23517845) Up to 3-8164	1	1	1	1	2
32	N.S.P.	HOSE ASSY / <> FUEL PUMP & SECONDARY/ (23505202) Up to 3-8164	1	1	1	1	2
33	N.S.P.	HOSE ASSY / <> SECONDARY & ENGINE / (8929841) Up to 3-8164	1	1	1	1	2
		2) NOT SOLD BY PREVOST (SEE MANUFACTURING PART					
		NUMBER AT END OF DESCRIPTION LINE)					

From Y-7046 Up to 8-9339	DATE: 01/2014	PAGE: Y2-0311-00

FUEL FILTER - PRIMARY & SECONDARY

ITEM	PART	DESCRIPTION	XL45	MTH40	MTH45	MTH45S	NOTE

From Y-7046 Up to 8-9339	DATE: 01/2014	PAGE: Y2-0311-15
FUEL FILTER / "PRO 382"		

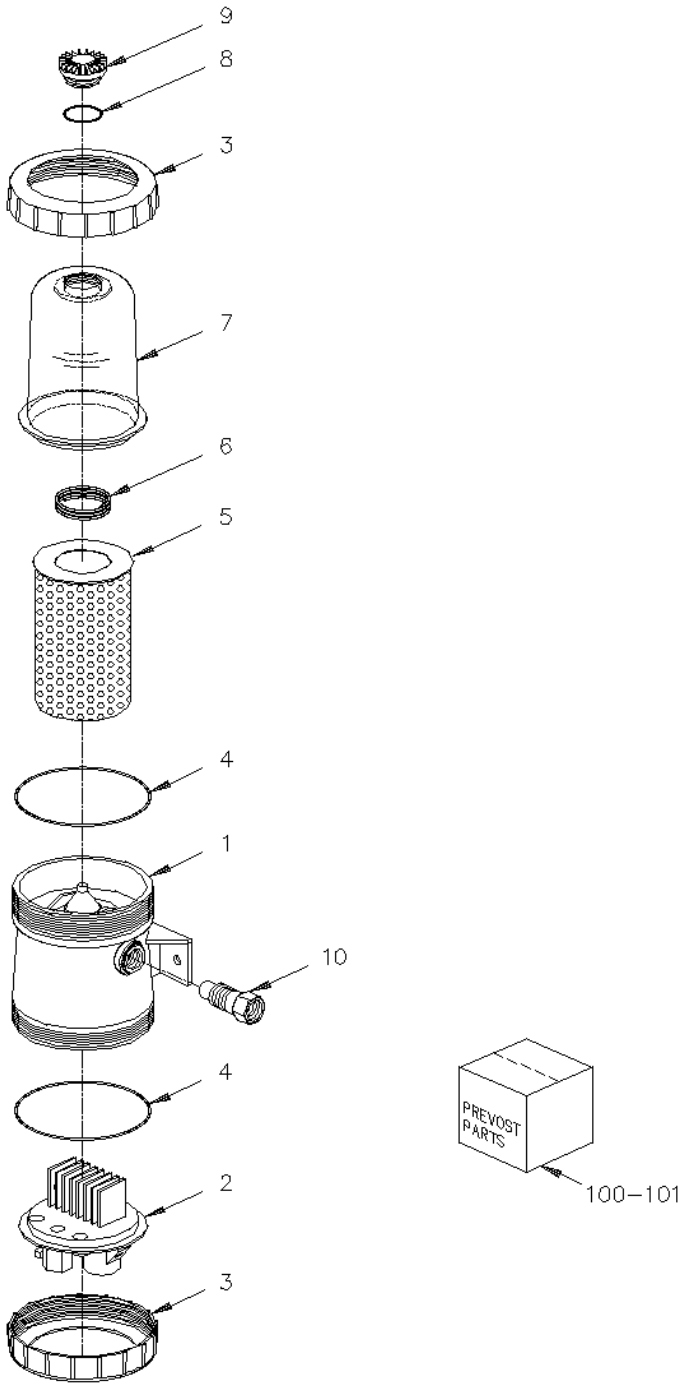

From Y-7046 Up to 8-9339	DATE: 01/2014	PAGE: Y2-0311-15

FUEL FILTER / "PRO 382"

ITEM	PART	DESCRIPTION	XL45	MTH40	MTH45	MTH45S	NOTE
	531448	FILTER ASSY "FUEL PRO 382" / W/HEATER ELEMENT Up to 4-8341 / REPLACED BY: 531468	1	1	1	1	
	531468	FILTER ASSY "FUEL PRO 382" / WITHOUT HEATER ELEMENT From 4-8342	1	1	1	1	
1	N.S.S.	. BODY CASTING	1	1	1	1	1
2	N.S.S.	. FLUID HEATER BASE	1	1	1	1	1
3	531441	. COLLAR, COVER	2	2	2	2	
4	N.S.S.	. SEAL COVER	2	2	2	2	1
5	531437	. FILTER FUEL ELEMENT / Up to 5-8358	1	1	1	1	
5	510795	. FILTER FUEL, ELEMENT / W/"PRO FILTER" From 5-8359	1	1	1	1	
6	531440	. SPRING	1	1	1	1	
7	531438	. COVER, FILTER ELEMENT	1	1	1	1	
8	N.S.S.	. SEAL CAP VENT	1	1	1	1	1
9	531439	. CAP VENT	1	1	1	1	
10	N.S.P.	. CHECK VALVE / (23518325)	1	1	1	1	2
NS	500190	SCREW CAP HEX 3/8-16x3/4 G5 ZP	2	2	2	2	
NS	5001396	NUT SPR FL REC 3/8-16 .69x.91	2	2	2	2	
NS	500935	WASHER FL .390x1.500x.083	2	2	2	2	
NS	500265	NUT HEX STO 3/8-16 ZP	2	2	2	2	
NS	032478	REINFORCEMENT "U" SHAPE 381MM From 1-7709	2				B
100	531442	O-RING SET	1	1	1	1	A
101	N.S.P.	CHECK VALVE REPAIR KIT / (23518326)	1	1	1	1	2

1) NOT SOLD SEPARATELY
2) NOT SOLD BY PREVOST (SEE MANUFACTURING PART NUMBER AT END OF DESCRIPTION LINE)
A) INCLUDES ITEMS # 4 AND 8
B) LOCATED IN BATTERIES COMPARTMENT

From Y-7046 Up to 8-9339	DATE: 01/2014	PAGE: Y2-0312-00
FUEL PUMP - AUXILIARY		

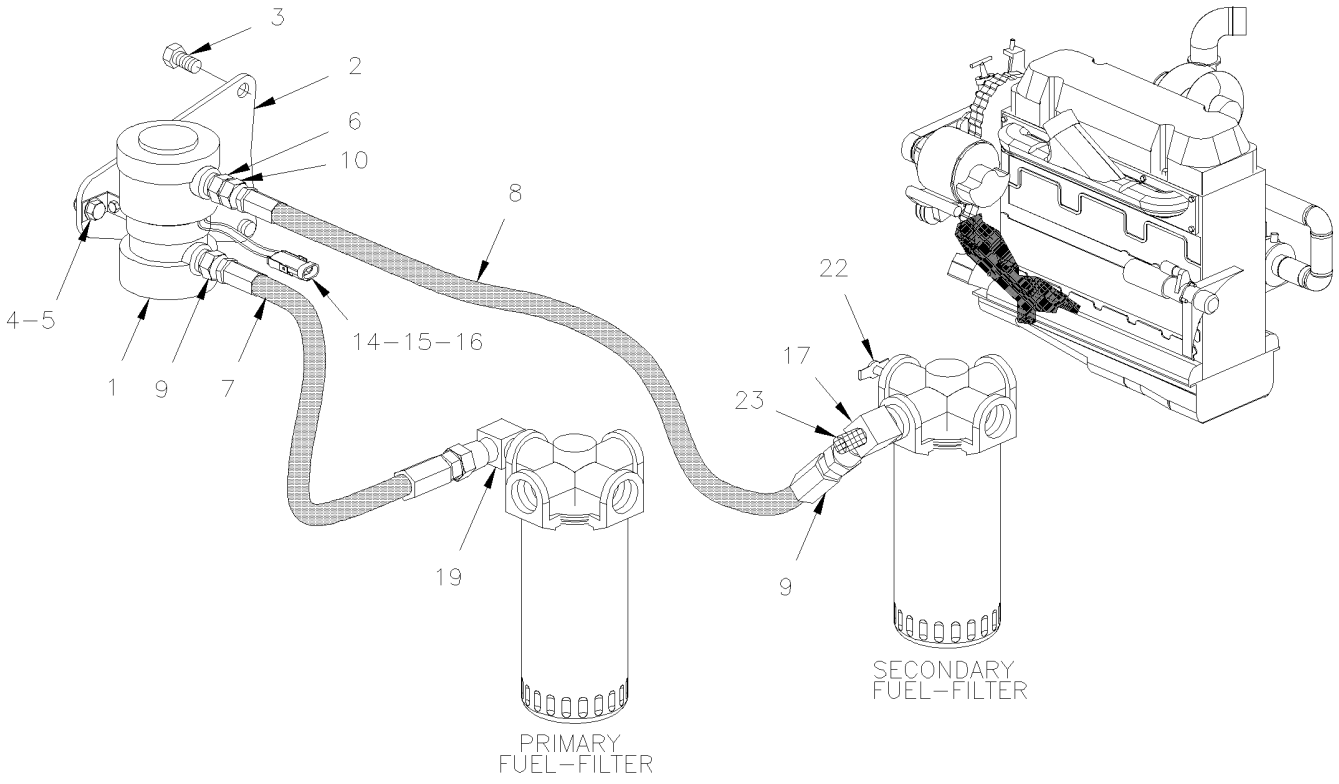

From Y-7046 Up to 8-9339	DATE: 01/2014	PAGE: Y2-0312-00

FUEL PUMP - AUXILIARY

ITEM	PART	DESCRIPTION	XL45	MTH40	MTH45	MTH45S	NOTE
1	531388	FUEL PUMP ELECTRICAL / REPLACED BY: 531477	1	1	1	1	
2	032254	SUPPORT Up to 3-8164	1	1	1	1	
3	502790	SCREW CAP HEX M8-1.25x20 G8.8 ZP Up to 3-8164	2	2	2	2	
3	502651	SCREW CAP HEX M8-1.25x35 G8.8 ZP Up to 3-8164	2	2	2	2	
3	502830	SCREW CAP HEX M6-1.0x20 G8.8 ZG603 From 4-8165	2	2	2	2	
4	500874	WASHER FL 8.4x17.0x1.6 ZP Up to 3-8164	4	4	4	4	
4	502889	WASHER LO SPT 8.1x12.7x2.0 ZG603 From 4-8165	4	4	4	4	
4	500877	WASHER FL .250x.562x.065 ZG603 From 4-8165	4	4	4	4	
5	500868	NUT HEX NYRT M8-1.25 CP Up to 3-8164	4	4	4	4	
5	500232	NUT HEX M6-1.0 ZG603 From 4-8165	4	4	4	4	
6	501749	NIPPLE REDUCER HEX / PIPE FITTING / 3/8NPT-Mx1/4NPT-Mx1 13/32 BR Up to 3-8164	1	1	1	1	
6	5011253	SWIVEL NUT MALE CONNECTOR / JIC 37° FITTING / #6JIC-Fx1/4NPT-M STL From 4-8165	1	1	1	1	
7	032266	HOSE ASSY / #6 267MM Up to 3-8164	1	1	1	1	
7	030971	HOSE ASSY / #6 220MM From 4-8165	1	1	1	1	
8	032002	HOSE ASSY / #8 320MM Up to 3-8164	1	1	1	1	
8	032021	HOSE ASSY / #8 212MM Up to 3-8164	1	1	1	1	
8	032267	HOSE ASSY / #6 756MM Up to 3-8164	1	1	1	1	
8	032275	HOSE ASSY / #6 756MM Up to 3-8164	1	1	1	1	
8	030972	HOSE ASSY / #6 255MM From 4-8165	1	1	1	1	
9	501687	MALE CONNECTOR / JIC 37° FITTING / #6JIC-Mx1/4NPT-M STL	1	1	1	1	
10	531415	CHECK VALVE	1	1	1	1	
14	561566	CONNECTOR / WEATHER PACK / PH 2C / BLACK / PED 12010973	1	1	1	1	
15	561568	PIN TERMINAL / 16-14 / PED 12089305	2	2	2	2	
16	561565	CABLE SEAL / GREEN / PED 15324982	2	2	2	2	
17	501338	MALE RUN TEE / PIPE FITTING / 1/4NPT-Mx1/4NPT-Fx1/4NPT-F BR Up to 3-8164	1	1	1	1	
17	501695	MALE ELBOW 90° / JIC 37° FITTING / #6JIC-Mx1/4NPT-M STL From 4-8165	1	1	1	1	
19	5011066	MALE ELBOW 90° / JIC 37° FITTING / #6JIC-Mx3/8NPT-M STL	1	1	1	1	
22	501129	EXTERNAL SEAL DRAIN 1/4 NPT	1	1	1	1	
NS	032258	KIT INSTALLATION FUEL PUMP TO USE W/FUEL PRO FILTER Up to 3-8164	1	1	1	1	
. NS	IS-97114	. SEE INSTRUCTION SHEET Up to 3-8164	1	1	1	1	
NS	032257	KIT INSTALLATION FUEL PUMP Up to 3-8164	1	1	1	1	
. NS	IS-97114	. SEE INSTRUCTION SHEET Up to 3-8164					
NS	064825	KIT INSTALLATION PRIMER PUMP SWITCH Up to 3-8164	1	1	1	1	
. NS	IS-97114	. SEE INSTRUCTION SHEET Up to 3-8164	1	1	1	1	
23	504706	NIPPLE / QUICK DISCONNECT "SAE J1502" / #4x1/4NPT-M STL W/DUST CAP From 3-8032	1	1	1	1	
. NS	195533	. DUST CAP / QUICK DISCONNECT "SAE J1502" / From 3-8032	1	1	1	1	
23	950249	SCHROUDER VALVE 1/4NPT-M Up to 3-8031	1	1	1	1	
24	032833	KIT, RETROFIT AUX FUEL PUMP	1				
. NS	IS-08003	. SEE INSTRUCTION SHEET	1				

From Y-7046 Up to 3-8164	DATE: 01/2014	PAGE: Y2-0312-10

FUEL PRO - INSTALLATION

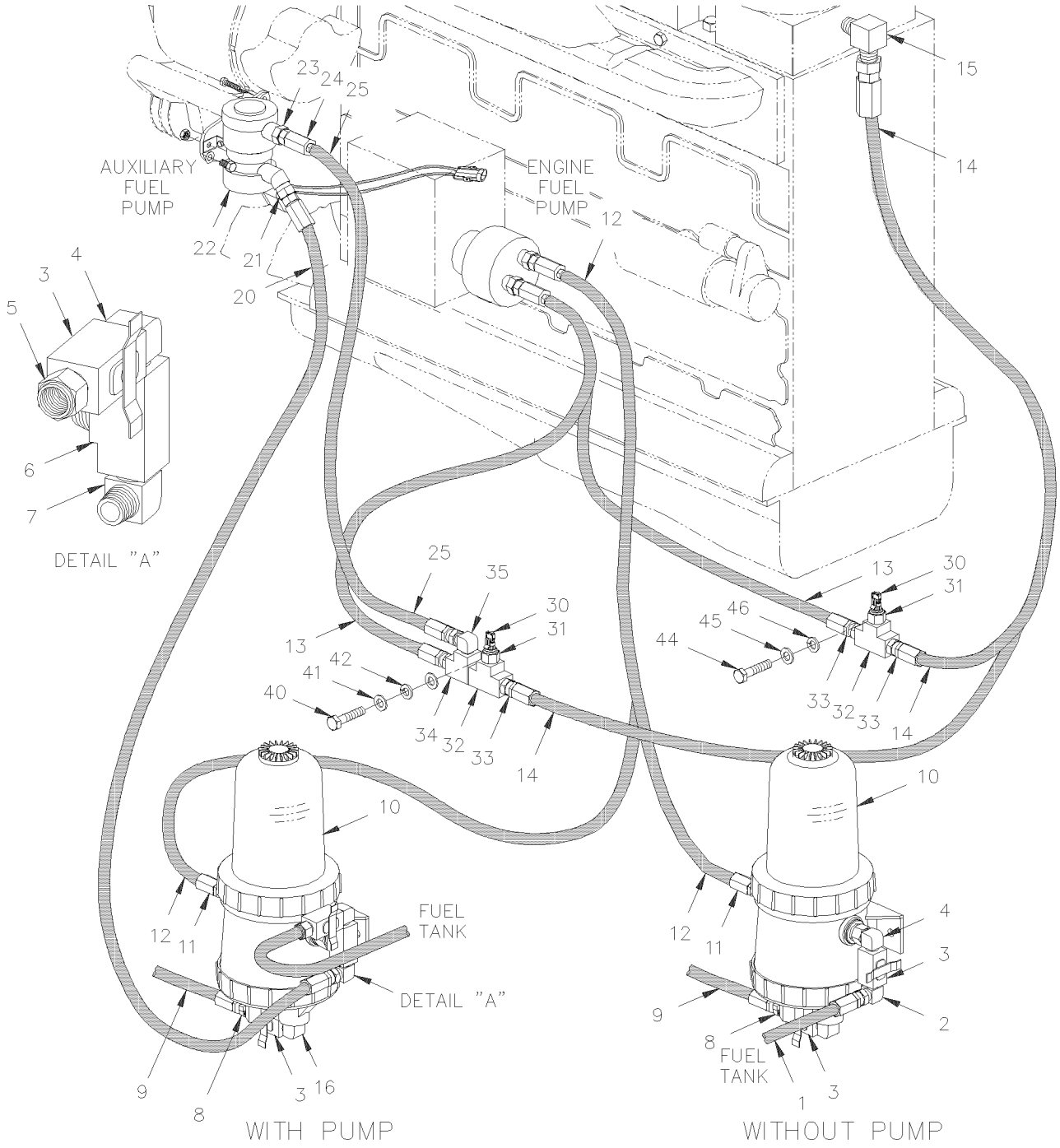

From Y-7046 Up to 3-8164	DATE: 01/2014	PAGE: Y2-0312-10

FUEL PRO - INSTALLATION

ITEM	PART	DESCRIPTION	XL45	MTH40	MTH45	MTH45S	NOTE
1	032144	HOSE ASSY / #8 6402MM	1	1	1	1	
2	5011061	MALE ELBOW 90° / JIC 37° FITTING / #8JIC-Mx1/2NPT-M STL Up to 1-7721	1	1	1	1	
2	501719	MALE ELBOW 90° / JIC 37° FITTING / #8JIC-Mx1/2NPT-M BR From 1-7722	1	1	1	1	
3	530096	BALL VALVE 1/2" NPT 1/2 NPT F x 1/2 NPT F	1	1	1	1	
4	501908	MALE ELBOW 90º / PIPE FITTING / 1/2NPT-Mx1/2NPT-M STL Up to 1-7721	1	1	1	1	
4	501713	MALE ELBOW 90º / PIPE FITTING / 1/2NPT-Mx1/2NPT-M BR From 1-7722	1	1	1	1	
5	501616	MALE CONNECTOR / SAE 45º FITTING / #8FL-Mx1/2NPT-M BR	1	1	1	1	
6	507556	MALE BRANCHE TEE / PIPE FITTING / 1/2NPT-Fx1/2NPT-Fx1/2NPT-M BR	1	1	1	1	
7	5011056	MALE ELBOW 90° / JIC 37° FITTING / #6JIC-Mx1/2NPT-M STL Up to 1-7721	1	1	1	1	
7	501716	MALE ELBOW 90° / JIC 37° FITTING / #6JIC-Mx1/2NPT-M BR From 1-7722	1	1	1	1	
8	507557	STREET ELBOW 90º / PIPE FITTING / 1/2NPT-Mx1/2NPT-F BR	1	1	1	1	
9	032133	HOSE ASSY / #6 740MM	1	1	1	1	
9	507557	. STREET ELBOW 90º / PIPE FITTING / 1/2NPT-Mx1/2NPT-F BR	1	1	1	1	
10	Y2-0311-15	**FUEL FILTER / "PRO 382"**	1	1	1	1	
11	501739	MALE CONNECTOR / JIC 37° FITTING / #8JIC-Mx1/2NPT-M STL	1	1	1	1	
12	160381	HOSE ASSY / #8 737MM		1		1	
12	032270	HOSE ASSY / #8 1100MM	1		1		
13	N.S.P.	HOSE ASSY / <>FUEL PUMP & JUCTION / (23505202)	1	1	1	1	2
14	N.S.P.	HOSE ASSY / <>JUNCTION & ENGINE / (8929841)	1	1	1	1	2
15	N.S.P.	ELBOW 90° / (23513205)	1	1	1	1	2
16	501618	MALE CONNECTOR / SAE 45º FITTING / #6FL-Mx1/2NPT-M BR	1	1	1	1	
20	032276	HOSE ASSY / #6 1220MM	1	1	1	1	
21	501687	MALE CONNECTOR / JIC 37° FITTING / #6JIC-Mx1/4NPT-M STL	1	1	1	1	
22	Y2-0312-00	**FUEL PUMP - AUXILIARY**	1				
23	501749	NIPPLE REDUCER HEX / PIPE FITTING / 3/8NPT-Mx1/4NPT-Mx1 13/32 BR	1	1	1	1	
24	531415	CHECK VALVE	1	1	1	1	
25	032275	HOSE ASSY / #6 756MM	1	1	1	1	
30	N.S.P.	FUEL TEMP SENSOR / (23518092)	1	1	1	1	2
31	501314	BUSHING REDUCER / PIPE FITTING / 3/8NTP-Mx1/4NPT-F BR	1	1	1	1	
32	501527	FEMALE UNION TEE / PIPE FITTING / 3/8NPT-Fx3/8NPT-Fx3/8NPT-F BR	1	1	1	1	
33	501617	MALE CONNECTOR / SAE 45º FITTING / #6FL-Mx3/8NPT-M BR	1	1	1	1	
34	501699	MALE RUN TEE / PIPE FITTING / 3/8NPT-Mx3/8NPT-Fx3/8NPT-F BR	1	1	1	1	
35	5011066	MALE ELBOW 90° / JIC 37° FITTING / #6JIC-Mx3/8NPT-M STL	1	1	1	1	
40	502559	SCREW CAP HEX M10-1.5x25 G8.8 ZP	1	1	1	1	
41	500257	WASHER LO SPT 10.2x18.1x2.2 ZP	1	1	1	1	
42	500935	WASHER FL .390x1.500x.083	1	1	1	1	
NS	070368	SUPPORT	1	1	1	1	
NS	560481	CLAMP / 5/8" I.D. / REPLACED BY: 952629	1	1	1	1	
NS	500774	NUT WING 1/4-20 ZP	1	1	1	1	
NS	500786	NUT HEX #10-24 ZP	1	1	1	1	
NS	500470	WASHER LO SPT .193x.334x.047 ZP	1	1	1	1	
44	500072	SCREW CAP HEX M10-1.5x45 G10.9 ZP	1	1	1	1	
		2) NOT SOLD BY PREVOST (SEE MANUFACTURING PART					
		NUMBER AT END OF DESCRIPTION LINE)					

From Y-7046 Up to 3-8164	DATE: 01/2014	PAGE: Y2-0312-10

FUEL PRO - INSTALLATION

ITEM	PART	DESCRIPTION	XL45	MTH40	MTH45	MTH45S	NOTE
45	500257	WASHER LO SPT 10.2x18.1x2.2 ZP	1	1	1	1	
46	500935	WASHER FL .390x1.500x.083	1	1	1	1	
NS	500446	WASHER FL .531x1.250x.125 ZP	1	1	1	1	
NS	032258	KIT INSTALLATION FUEL PUMP TO USE W/FUEL PRO FILTER	1	1	1	1	
. NS	IS-97114	. SEE INSTRUCTION SHEET	1	1	1	1	
NS	064825	KIT INSTALLATION PRIMER PUMP SWITCH	1	1	1	1	
. NS	IS-97114	. SEE INSTRUCTION SHEET	1	1	1	1	

From Y-7046 Up to 3-8164	DATE: 01/2014	PAGE: Y2-0312-10

FUEL PRO - INSTALLATION

ITEM	PART	DESCRIPTION	XL45	MTH40	MTH45	MTH45S	NOTE

From 4-8165 Up to 8-9339	DATE: 01/2014	PAGE: Y2-0312-11

FUEL PRO - INSTALLATION

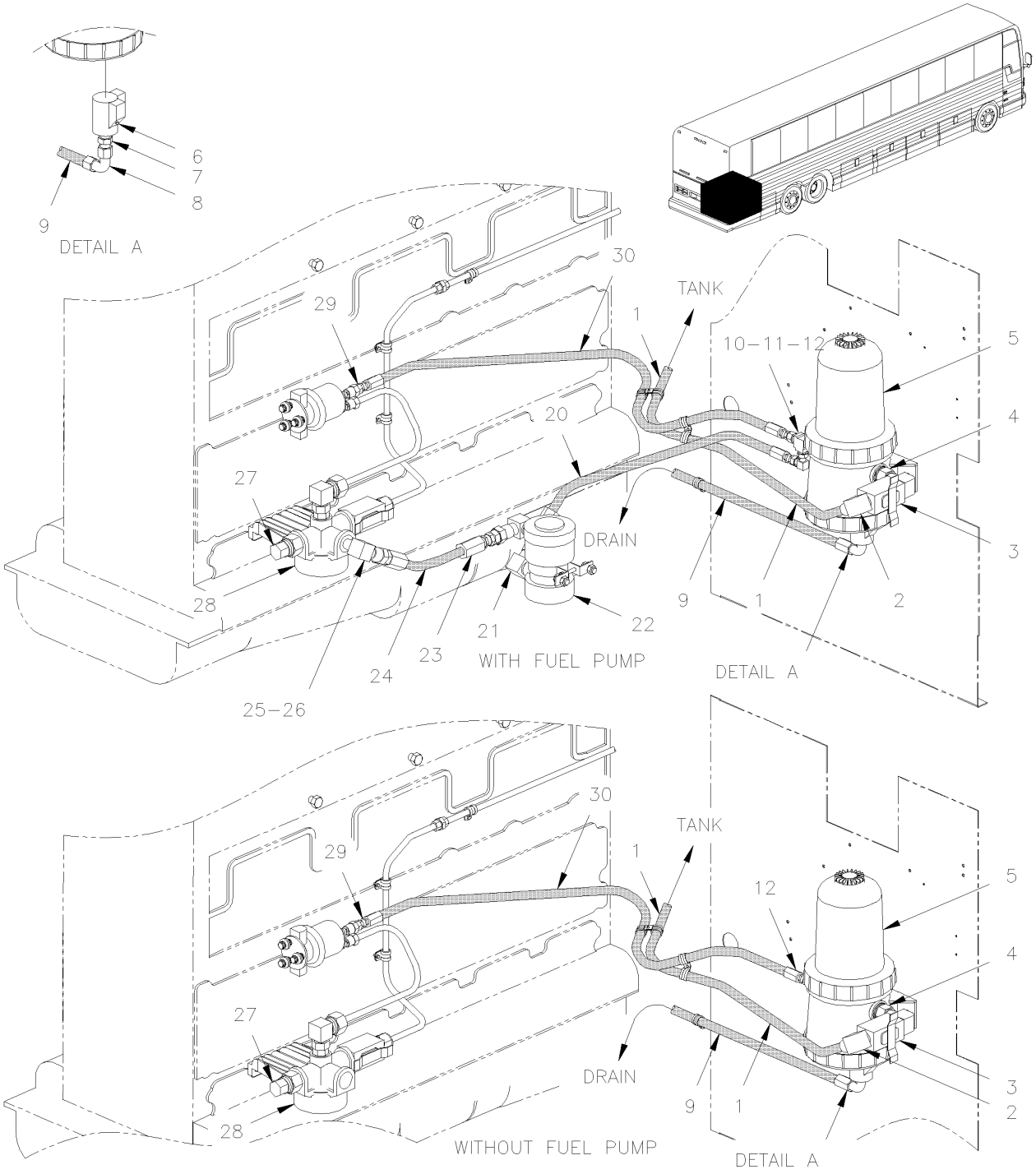

From 4-8165 Up to 8-9339	DATE: 01/2014	PAGE: Y2-0312-11

FUEL PRO - INSTALLATION

ITEM	PART	DESCRIPTION	XL45	MTH40	MTH45	MTH45S	NOTE
1	032183	HOSE ASSY / #8 5982MM		1		1	
1	032098	HOSE ASSY / #8 6632MM	1		1		
2	501612	MALE ELBOW 90º / SAE 45º FITTING / #8FL-Mx1/2NPT-M BR	1	1	1	1	
3	530096	BALL VALVE 1/2" NPT 1/2 NPT F x 1/2 NPT F	1	1	1	1	
4	501713	MALE ELBOW 90º / PIPE FITTING / 1/2NPT-Mx1/2NPT-M BR	1	1	1	1	
5	Y2-0311-15	**FUEL FILTER / "PRO 382"**					
6	501305	PLUG SQUARE HEAD / PIPE FITTING / 3/8NPT-M BR	2	2	2	2	
7	507557	STREET ELBOW 90º / PIPE FITTING / 1/2NPT-Mx1/2NPT-F BR	1	1	1	1	
8	501618	MALE CONNECTOR / SAE 45º FITTING / #6FL-Mx1/2NPT-M BR	1	1	1	1	
9	032133	HOSE ASSY / #6 740MM	1	1	1	1	
10	501473	MALE RUN TEE / PIPE FITTING / 1/2NPT-Mx1/2NPT-Fx1/2NPT-F BR	1	1	1	1	A
11	501716	MALE ELBOW 90° / JIC 37° FITTING / #6JIC-Mx1/2NPT-M BR	1	1	1	1	A
12	501739	MALE CONNECTOR / JIC 37° FITTING / #8JIC-Mx1/2NPT-M STL	1	1	1	1	
20	032520	HOSE ASSY / #6 730MM	1				
20	032536	HOSE ASSY / #6 480MM		1	1	1	
21	501695	MALE ELBOW 90° / JIC 37° FITTING / #6JIC-Mx1/4NPT-M STL	1	1	1	1	
22	Y2-0312-00	**FUEL PUMP - AUXILIARY**					
23	531415	CHECK VALVE	1	1	1	1	
24	030972	HOSE ASSY / #6 255MM	1	1	1	1	
25	501687	MALE CONNECTOR / JIC 37° FITTING / #6JIC-Mx1/4NPT-M STL	1	1	1	1	
26	501338	MALE RUN TEE / PIPE FITTING / 1/4NPT-Mx1/4NPT-Fx1/4NPT-F BR	1	1	1	1	
27	504706	NIPPLE / QUICK DISCONNECT "SAE J1502" / #4x1/4NPT-M STL W/DUST CAP	1	1	1	1	
. NS	195533	. DUST CAP / QUICK DISCONNECT "SAE J1502" /	1	1	1	1	
28	531465	COVER "BY-PASS" / SECONDARY FILTER	1	1	1	1	
29	5011247	MALE CONNECTOR / JIC 37° FITTING / #8JIC-MxM16-1.5 ORB-M STL	1	1	1	1	
30	032270	HOSE ASSY / #8 1100MM	1				
30	032535	HOSE ASSY / #8 680MM		1	1	1	
		A) WITH FUEL PUMP ONLY					

From Y-7046 Up to 8-9339	DATE: 01/2014	PAGE: Y2-0315-10

ACCELERATOR PEDAL - ELECTRONIC

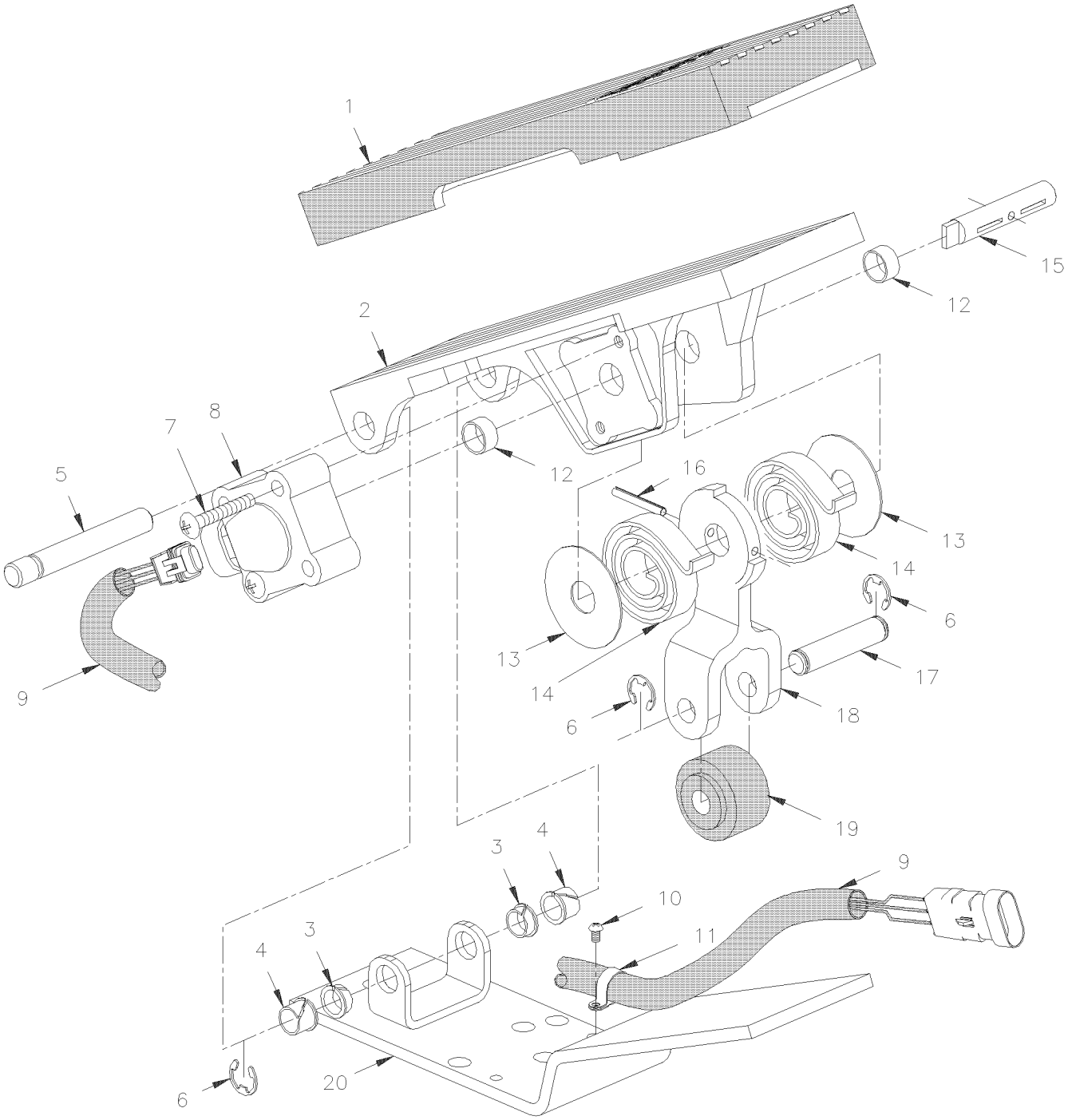

From Y-7046 Up to 8-9339	DATE: 01/2014	PAGE: Y2-0315-10

ACCELERATOR PEDAL - ELECTRONIC

ITEM	PART	DESCRIPTION	XL45	MTH40	MTH45	MTH45S	NOTE
	531455	ACCELERATOR PEDAL ASSY	1	1	1	1	
1	531401	. THREADLE COVER	1	1	1	1	
2	N.S.S.	. THREADLE	1	1	1	1	1
3	N.S.S.	. BUSHING, INNER	2	2			1
3	N.S.S.	. BUSHING, INNER			1	1	1
4	507260	. BUSHING NYLINER W/SHOULDER .375x.437x.375x.594	2	2	2	2	
5	N.S.S.	. PIN, THREADLE	1	1	1	1	1
6	N.S.S.	. RING, SNAP 5/16" I.D.	3	3	3	3	1
7	500427	. SCREW MA RND PH #10-32x1 1/4 ZP	2	2	2	2	
8	531402	. POTENTIOMETER PEDAL SENSOR 0-5V	1	1	1	1	
9	N8887087	. . WIRE HARNESS	1	1	1	1	
10	500883	. . SCREW TC PAN PH #8-32x3/8 ZP	2	2	2	2	
11	N.S.S.	. . CLIP	2	2	2	2	1
12	N.S.S.	. BUSHING, GARLOCK	2	2	2	2	1
13	N.S.S.	. THRUST, WASHER-OUTER	2	2	2	2	1
13	N.S.S.	. THRUST, WASHER-INNER	2	2	2	2	1
14	N.S.S.	. SPRING	2	2	2	2	1
15	N.S.S.	. SHAFT SENSOR DRIVE	1	1	1	1	1
16	505208	. SPRING, PIN 1/8 X 7/8	1	1	1	1	
17	N.S.S.	. ROLLER, PIN	1	1	1	1	1
18	N.S.S.	. LEVER, THREADLE	1	1	1	1	1
19	N.S.S.	. ROLLER	1	1	1	1	1
20	531462	. BASE PLATE / (includes item #5)	1				
NS							
NS	531393	KIT REPAIR / LOWER THREADLE PIN	1	1	1	1	A
NS							
NS	531394	KIT REPAIR / ROLLER	1	1	1	1	B
		1) NOT SOLD SEPARATELY					
		A) INCLUDES ITEMS #3-4-5-6					
		B) INCLUDES ITEMS 6-18-19					

From Y-7046 Up to 3-8164	DATE: 01/2014	PAGE: Y2-0316-00

FUEL COOLER - INSTALLATION

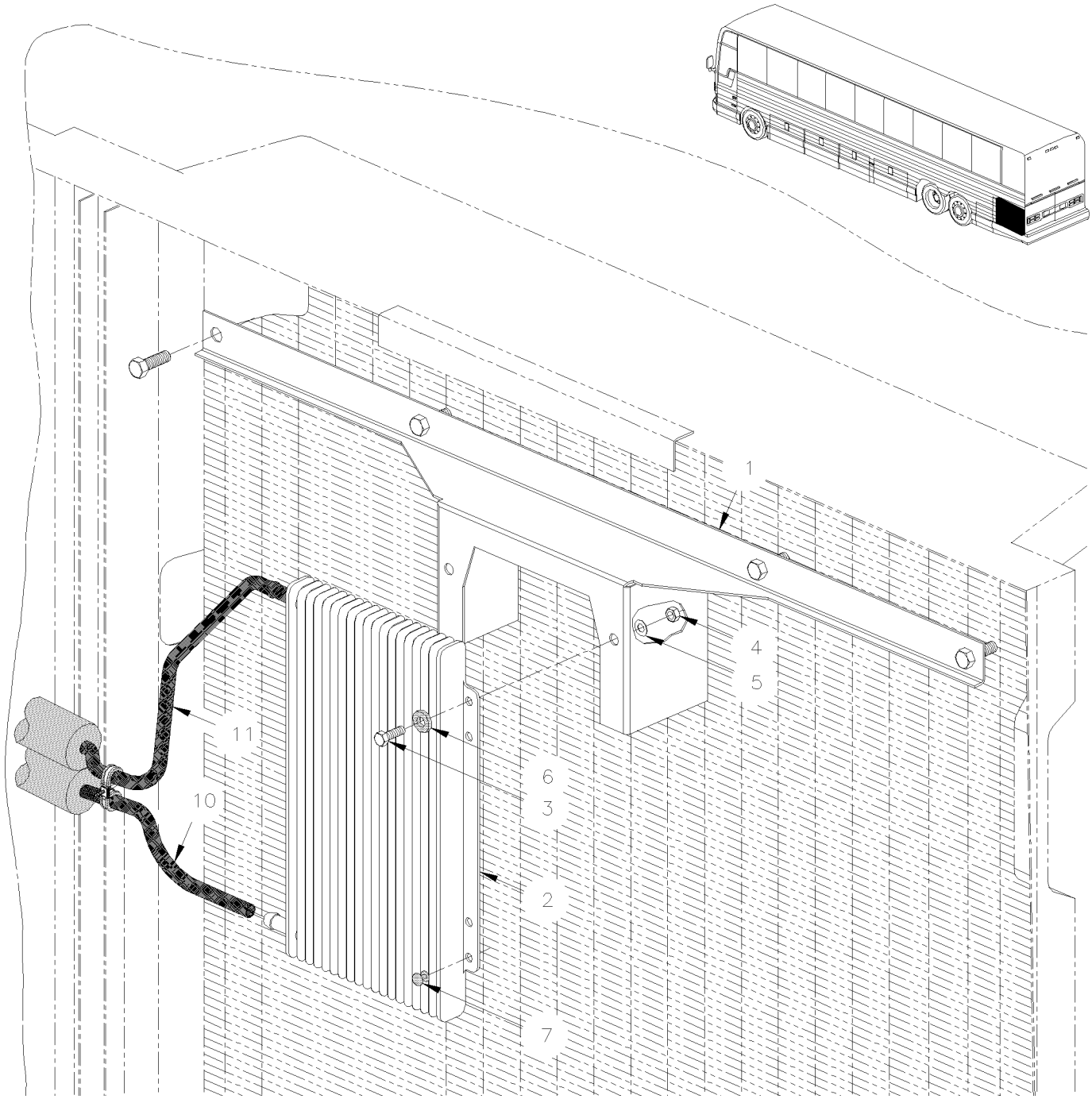

From Y-7046 Up to 3-8164	DATE: 01/2014	PAGE: Y2-0316-00

FUEL COOLER - INSTALLATION

ITEM	PART	DESCRIPTION	XL45	MTH40	MTH45	MTH45S	NOTE
1	032242	SUPPORT / FUEL COOLER	1				
1	032242	SUPPORT / FUEL COOLER				AR	
1	032264	SUPPORT / FUEL COOLER / W/AIR COOLER OVER RAD & SMALL A/C		1	1		
1	032264	SUPPORT / FUEL COOLER / W/AIR COOLER OVER RAD & SMALL A/C				AR	
1	032265	SUPPORT / FUEL COOLER / W/AIR COOLER OVER RAD & LARGE A/C		1	1		
1	032265	SUPPORT / FUEL COOLER / W/AIR COOLER OVER RAD & LARGE A/C				AR	
2	531422	FUEL COOLER	1	1	1	1	
3	502563	SCREW CAP HEX M6-1.0x12 G8.8 ZP	4	4	4	4	
4	502854	NUT HEX M6-1.0 ZG603	4	4	4	4	
5	502853	WASHER LO SPT 6.1x11.8x1.6 ZG603	4	4	4	4	
10	032137	HOSE ASSY / FROM CYLINDER HEAD / #6 2009MM	1		1		
10	032185	HOSE ASSY / FROM CYLINDER HEAD / #6 1910MM		1		1	
11	032184	HOSE ASSY / TO FUEL TANK / #6 7440MM	1		1		
11	032097	HOSE ASSY / #6 7991MM		1		1	

From 4-8165 Up to 8-9339	DATE: 01/2014	PAGE: Y2-0316-01

FUEL COOLER - INSTALLATION

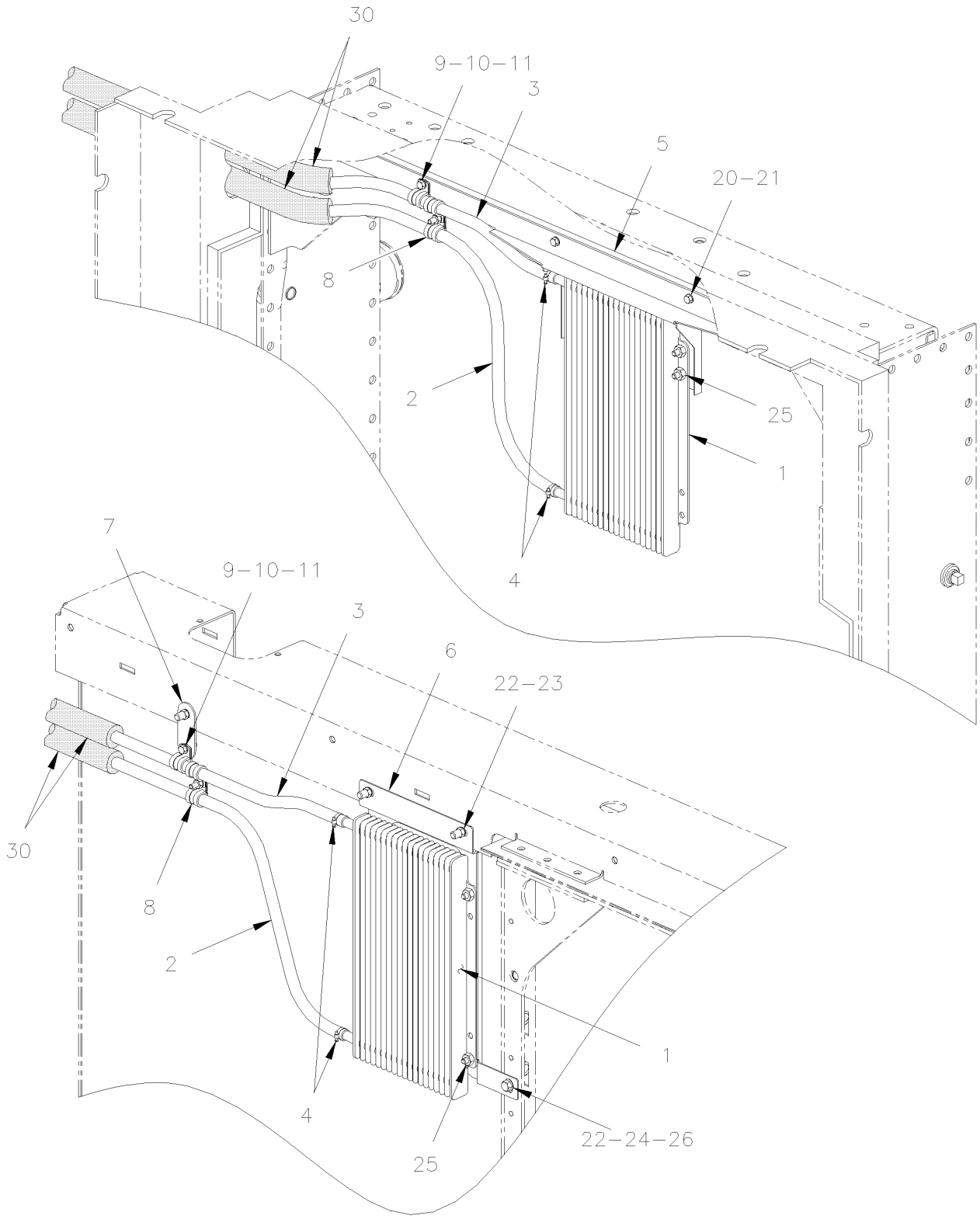

From 4-8165 Up to 8-9339	DATE: 01/2014	PAGE: Y2-0316-01

FUEL COOLER - INSTALLATION

ITEM	PART	DESCRIPTION	XL45	MTH40	MTH45	MTH45S	NOTE
1	531422	FUEL COOLER	1	1	1	1	
2	032531	HOSE ASSY / FROM CYLINDER HEAD / #6 2060MM Up to 5-8358		1		1	
2	032565	HOSE ASSY / FROM CYLINDER HEAD / #6 2650MM From 5-8359		1		1	
2	032530	HOSE ASSY / FROM CYLINDER HEAD / #6 2650MM Up to 5-8358			1		
2	032498	HOSE ASSY / FROM CYLINDER HEAD / #6 2060MM From 5-8359			1		
2	032097	HOSE ASSY / #6 7991MM	1				
NS	5011260	FEMALE CONNECTOR SWIVEL / PUSH-LOK FITTING / #8FL-Fx#6 BR From 5-8359	1	1	1	1	
3	032183	HOSE ASSY / #8 5982MM		1		1	
3	032500	HOSE ASSY / TO FUEL TANK / #6 7440MM			1		
3	032530	HOSE ASSY / FROM CYLINDER HEAD / #6 2650MM Up to 5-8358	1				
3	032498	HOSE ASSY / FROM CYLINDER HEAD / #6 2060MM From 5-8359	1				
3	032184	HOSE ASSY / TO FUEL TANK / #6 7440MM From 5-8359		1		1	
4	504230	HOSE CLAMP / 3/8"-7/8" SS / HS-6	AR	AR	AR	AR	
5	032477	SUPPORT FUEL COOLER	1	1		1	
6	032502	SUPPORT FUEL COOLER			1		
7	031701	SUPPORT HOSE FUEL			1		
8	952629	CLAMP / 5/8" I.D.	AR	AR	AR	AR	
9	500574	SCREW MA TR PH #10-24x1 1/4 SS	AR	AR		AR	
10	500914	WASHER LO SPT .193x.334x.047 ZG603	AR	AR		AR	
11	502882	NUT HEX #10-24 ZG603	1	1		1	
20	502830	SCREW CAP HEX M6-1.0x20 G8.8 ZG603	5	5		5	
21	502853	WASHER LO SPT 6.1x11.8x1.6 ZG603	1	1		1	
22	192288	WASHER FL 8.4x18.0x2.0 ZG603			3		
23	502902	NUT HEXF NYRT 5/16-18 ZG603			3		
24	500942	WASHER LO SPT .317x.586x.078 ZG603			1		
25	500836	SCREW CAP HEX 5/16-18x3/4 G5 ZG603			1		
26	502681	NUT HEX NYRT M6-1.0 ZG603			3		
30	506216	PIPE INSULATING / 5/8" I.D. X 1/2" TH. X 72 / APT05812			AR		

From Y-7046 Up to 8-9339	DATE: 01/2014	PAGE: Y2-0330-00

AIR FILTER & INTAKE - INSTALLATION WITH DETROIT S-60

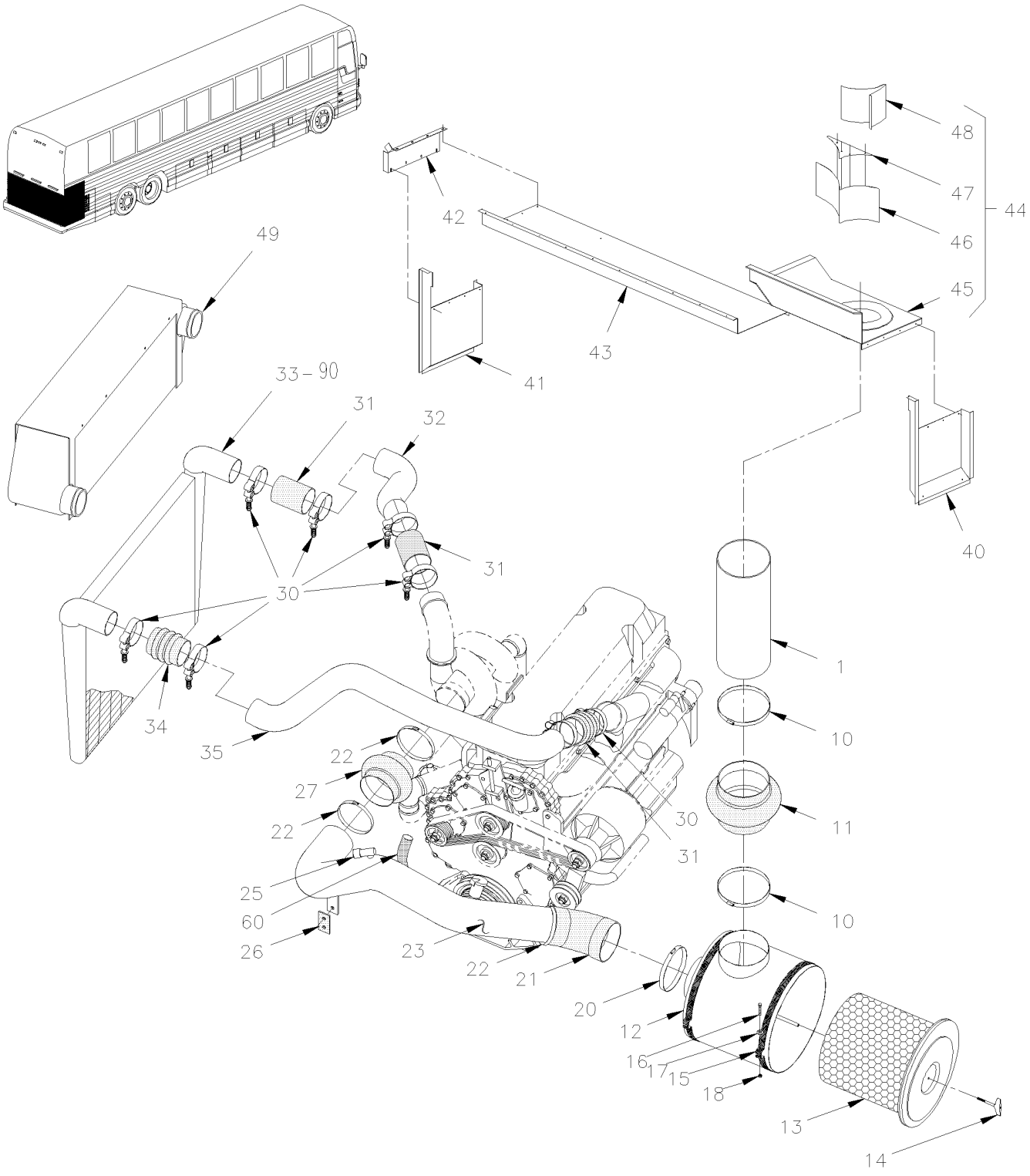

From Y-7046 Up to 8-9339	DATE: 01/2014	PAGE: Y2-0330-00

AIR FILTER & INTAKE - INSTALLATION WITH DETROIT S-60

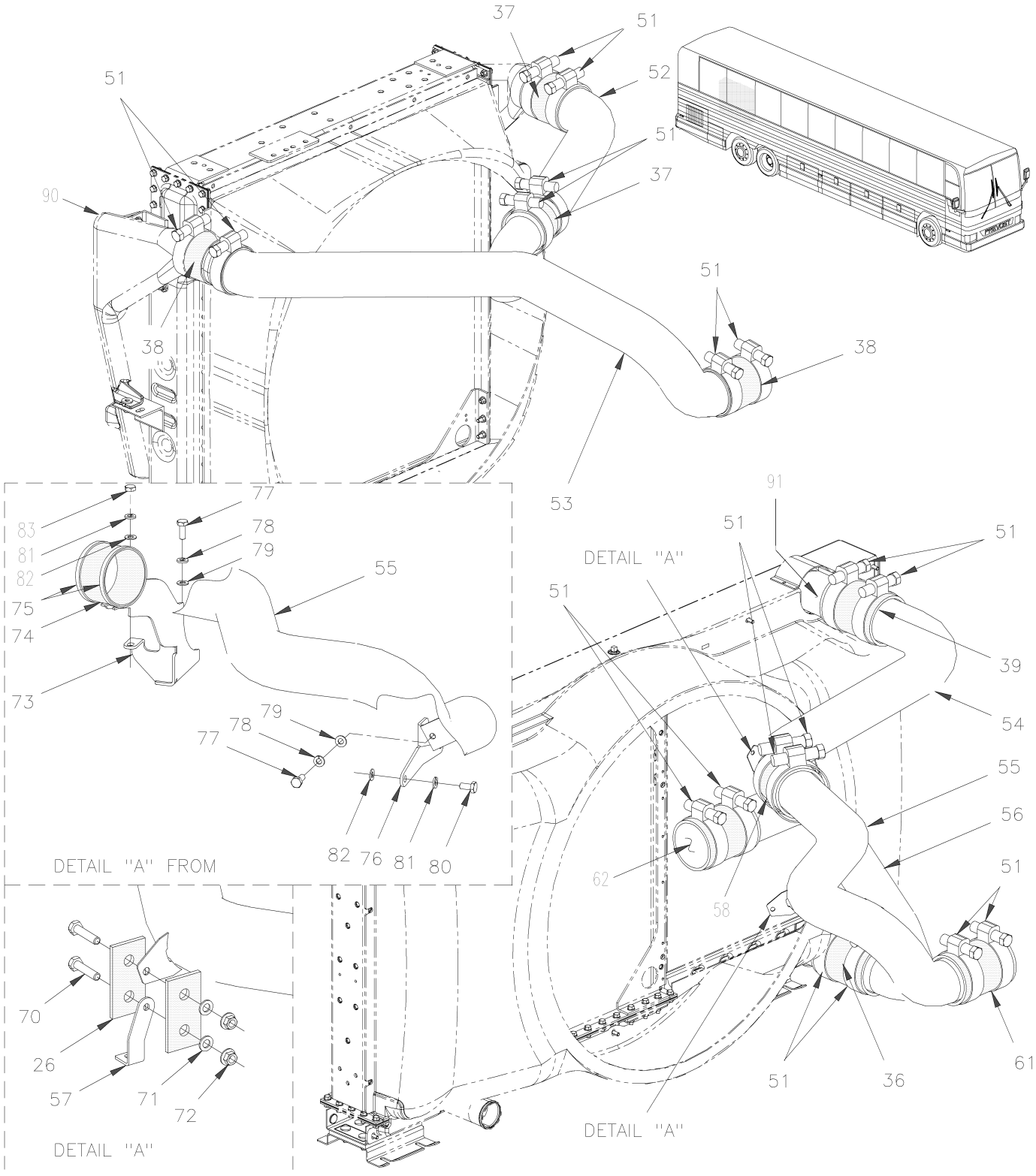

From Y-7046 Up to 8-9339	DATE: 01/2014	PAGE: Y2-0330-00

AIR FILTER & INTAKE - INSTALLATION WITH DETROIT S-60

ITEM	PART	DESCRIPTION	XL45	MTH40	MTH45	MTH45S	NOTE
1	032392	TUBE 8" O.D. X 5 3/4"	1				
1	031777	TUBE 8" O.D. X 8 5/16" / MTH 83"		1	1	1	
10	504415	HOSE CLAMP / 7"1/4-9"1/4 SS / HS-152	2	2	2	2	
11	530210	HOSE FLEXIBLE / 8" O.D. x 125MM		1	1	1	
11	531403	HOSE 8" I.D. 3"	1				
12	530206	FILTER AIR 18"	1	1	1	1	
13	530197	. ELEMENT AIR FILTER 18"	1	1	1	1	
14	531420	. NUT WING 1/2-13 NY	1	1	1	1	
15	031465	STRAP MOUNTING / W/18" AIR FILTER	2	2	2	2	
16	500183	SCREW CAP HEX 5/16-18x1 1/2 G5 PT ZP	2	2	2	2	
17	500441	WASHER FL .312x.734x.065 ZP	2	2	2	2	
18	500777	NUT HEX STO 5/16-18 ZP	2	2	2	2	
20	504229	HOSE CLAMP / 6"1/2-8"1/2 SS / HS-100	1	1	1	1	
21	530169	ELBOW 45° DEGRES / REDUCER 7" X 6"	1	1	1	1	
22	504324	HOSE CLAMP / 4"1/2-6"1/2 SS / HS-96	3	3	3	3	
23	032269	PIPE 5 1/2" O.D. / <> AIR FILTER & TURBO Up to 2-7799 / REPLACED BY: 032538	1	1	1	1	
23	032466	PIPE 5 1/2" O.D. / <> AIR FILTER & TURBO From 2-7800 Up to 3-8164 / REPLACED BY: 032538	1	1	1	1	
23	032538	PIPE 5 1/2" O.D. / <> AIR FILTER & TURBO From 4-8165 Up to 4-8358	1	1	1	1	
23	032562	PIPE 5 1/2" O.D. / <> AIR FILTER & TURBO From 4-8359	1	1	1	1	
NS	563275	HUMIDITY SENSOR 1/2" NPT / FIXED AT PIPE NEAR TURBO Up to 4-8358	1				
NS	510848	HUMIDITY SENSOR 3/8" NPT / FIXED AT PIPE NEAR TURBO From 4-8359	1				
25	530161	GAUGE AIR RESTRICTION 20" H2O 1/8" NPT	AR	AR	AR	AR	
25	530193	GAUGE AIR RESTRICTION 15" H2O / (AS SHOWN) 1/8" NPT	AR	AR	AR	AR	
NS	530121	GAUGE AIR RESTRICTION INDICATOR 1/8" NPT WITH HOSE	1	1	1	1	
NS	031904	SUPPORT / TO FIX GAUGE RESTRICTION	1	1	1	1	
26	040535	MUFFLER CONNECTION Up to 7-8966			AR		
NS	032540	SPACER SS 1/2" O.D.X 12MM From 4-8262 Up to 7-8966			2		
27	530102	REDUCER RUBBER / 5 1/2" X 5" DIA.	1	1	1	1	
30	531386	HOSE CLAMP SPRING LOAD / HEAVY DUTY 4"1/8-4"7/16 Up to 3-8164	8	8	8	8	
31	531396	HOSE 4" I.D. 6 1/4" Up to 3-8164 / REPLACED BY: 531471	2	2	2	2	F
32	032261	PIPE 4" O.D. / <> AIR COOLER & TURBO Up to 3-8164		1	1	1	
32	031954	PIPE 4" O.D. / <> AIR COOLER & TURBO Up to 3-8164	1				
33	550801	AIR COOLER ASSY Up to 3-8164	1				
. NS	MI06-02	. SEE MAINTENANCE INFORMATION Up to 3-8164	1				
34	531385	HOSE / W/3 RING / 4" I.D. 6" Up to 3-8164	AR	AR	AR	AR	
35	032262	PIPE 4" O.D./<> AIR COOLER & MANIFOLD Up to 3-8164 / REPLACED BY: 032305		1	1	1	
35	031928	PIPE 4" O.D./<>AIR COOLER & MANIFOLD / W/O RESTRICTION GAUGE Up to 3-8164	1				
35	031827	PIPE 4" O.D./<>AIR COOLER & MANIFOLD / W/AIR RESTRICTION GAUGE Up to 3-8164	1				
36	531385	HOSE / W/3 RING / 4" I.D. 6" From 4-8165 Up to 4-8261			1		F
36	531396	HOSE 4" I.D. 6 1/4" From 4-8262 Up to 7-8966 / REPLACED BY: 531471			1		
		F) FOR PRODUCT IMPROVEMENT, SEE WARRANTY					
		BULLETIN WB04-04					

From Y-7046 Up to 8-9339	DATE: 01/2014	PAGE: Y2-0330-00

AIR FILTER & INTAKE - INSTALLATION WITH DETROIT S-60

ITEM	PART	DESCRIPTION	XL45	MTH40	MTH45	MTH45S	NOTE
36	531471	HOSE SILICONE 4" I.D. 6 1/2" From 7-8967			1		
37	531385	HOSE / W/3 RING / 4" I.D. 6" From 4-8165 Up to 4-8289	2	2		2	F
37	531467	HOSE / W/2 RING / 4" I.D. 7" From 4-8290	2	2		2	
38	531385	HOSE / W/3 RING / 4" I.D. 6" From 4-8165 Up to 4-8289	2	2		2	F
38	531469	HOSE / W/2 RING / 4" I.D. 8" From 4-8290	2	2		2	
39	531469	HOSE / W/2 RING / 4" I.D. 8" From 4-8165 Up to 7-8966			3		F
39	531471	HOSE SILICONE 4" I.D. 6 1/2" From 7-8967			3		
40	032385	AIR INTAKE RH Up to 4-8234	1				
40	215302	AIR INTAKE RH From 4-8235	1				
40	032360	AIR INTAKE RH / MTH 86" Up to 4-8234		1	1	1	
40	215305	AIR INTAKE RH / MTH 86" From 4-8235		1	1	1	
40	032486	AIR INTAKE RH / MTH 89" From 2-7908 Up to 4-8234				1	A
40	215347	AIR INTAKE RH / MTH 89" From 4-8235				1	A
40	032424	AIR INTAKE Up to 2-7907				1	
41	032358	AIR INTAKE LH / MTH 83"		1	1		
41	032386	AIR INTAKE LH Up to 4-8234	1				
41	215303	AIR INTAKE LH From 4-8235	1				
41	215304	AIR INTAKE LH / MTH From 4-8235		1	1		
41	032423	AIR INTAKE Up to 2-7907				1	
42	031760	ANGLE CLOSING L.H. DUCT	1	1	1	1	
43	032384	DUCT CENTER PART 1622MM Up to 4-8234	1	1	1	1	
43	215320	DUCT CENTER PART 1622MM From 4-8235	1	1	1	1	
44	031767P	BOX ASSY / FIBERGLASS	1	1	1	1	
45	031754	. FIBERGLASS BOX	1	1	1	1	
46	031769	. DEFLECTOR FRONT	1	1	1	1	
47	031775	. COVER FRONT DEFLECTOR	1	1	1	1	
48	031757	. DEFLECTOR REAR	1	1	1	1	
NS	504528	HOLE PLUG BUTTON / .437 O.D. BLACK		3	3	3	
NS	500642	SCREW TP BDG PH #10x3/4 ZP	AR	AR	AR	AR	
NS	500641	SCREW TP BDG PH #8x3/4 ZP	AR	AR	AR	AR	
49	550772	AIR COOLER ASSY / OVER COOLANT RADIATOR Up to 3-8164		1	1	1	
. NS	MI06-02	. SEE MAINTENANCE INFORMATION Up to 3-8164		1	1	1	
51	550851	CLAMP JO SS/HD/CT/PS/SL 4.25" From 4-8165 Up to 4-8226 / REPLACED BY: 531386	8	8	8	8	
51	531386	HOSE CLAMP SPRING LOAD / HEAVY DUTY 4"1/8-4"7/16 From 4-8227 Up to 4-8239	8	8	8	8	
51	032543	HOSE CLAMP SPRING LOAD / MODIFIED "PREVOST" / 4"1/8-4"7/16 From 4-8240	AR	AR	AR	AR	F
. NS	531386	. HOSE CLAMP SPRING LOAD / HEAVY DUTY 4"1/8-4"7/16 From 4-8240	1	1	1	1	
. NS	502930	. SPRING COMPRESSION / .975 O.D. x 1.5 x .225 From 4-8240	1	1	1	1	
. NS	500401	. WASHER FL .343x.875x.125 ZG603 From 4-8240	1	1	1	1	
. NS	500897	. WASHER FL .437x1.000x.083 ZG603 From 4-8240	2	2	2	2	
52	032473	PIPE 4" O.D. / <> AIR COOLER & TURBO From 4-8165 Up to 4-8358	1	1		1	
		A) MTH WITH "BOSCH" ALTERNATOR					
		F) FOR PRODUCT IMPROVEMENT, SEE WARRANTY					
		BULLETIN WB04-04					

From Y-7046 Up to 8-9339	DATE: 01/2014	PAGE: Y2-0330-00

AIR FILTER & INTAKE - INSTALLATION WITH DETROIT S-60

ITEM	PART	DESCRIPTION	XL45	MTH40	MTH45	MTH45S	NOTE
52	052580	PIPE 4" O.D. / <> AIR COOLER & TURBO From 4-8359	1	1		1	
53	032472	PIPE 4" O.D. / <> AIR COOLER & MANIFOLD From 4-8165	1	1		1	F
54	052466	PIPE 4" O.D. / AIR COOLER SIDE From 4-8165 Up to 7-8966			1		
54	052568	PIPE 4" O.D. / AIR COOLER SIDE From 7-8967			1		
55	052467	PIPE 4" O.D. / MANIFOLD SIDE From 4-8165 Up to 7-8966			1		
55	052567	PIPE 4" O.D. / MANIFOLD SIDE From 7-8967			1		
56	052465	PIPE 4" O.D. / <> AIR COOLER & TURBO From 4-8165 Up to 4-8358			1		
56	052581	PIPE 4" O.D. / <> AIR COOLER & TURBO From 4-8359			1		
57	052516	ANGLE SUPPORT, UPPER PIPE From 4-8165 Up to 7-8966			1		
58	531467	HOSE / W/2 RING / 4" I.D. 7" From 4-8165 Up to 4-8358			1		
58	531469	HOSE / W/2 RING / 4" I.D. 8" From 4-8359			1		
60	142290	HOSE / (SUCTION AIR COMPRESSOR) / #16 870MM From 4-8165	1	1	1	1	B
NS	5011240	MALE CONNECTOR / BEADED HOSE BARB / #16x3/4NPT-M BR From 4-8165	1	1	1	1	
NS	952641	CLAMP / 1 5/16" I.D. From 4-8165	1	1	1	1	
NS	500659	SCREW TC BDG PH #10-32x1 ZP From 4-8165	1	1	1	1	
61	531469	HOSE / W/2 RING / 4" I.D. 8" From 4-8165 Up to 7-8966			1		
61	531463	HOSE 4" I.D. 4.33" From 7-8967			1		
62	531385	HOSE / W/3 RING / 4" I.D. 6" From 4-8165 Up to 4-8283			1		F
62	531467	HOSE / W/2 RING / 4" I.D. 7" From 4-8284			1		
70	940142	SCREW CAP HEX M8-1.25x30 G8.8 ZG603 Up to 7-8966			2		
71	500381	WASHER FL 8.4x25.0x2.0 ZG603 Up to 7-8966			4		
72	502847	NUT HEX NYRT M8-1.25 ZG603 Up to 7-8966			2		
73	052614	SUPPORT From 7-8967			1		
74	531470	PROTECTOR SILICONE 4" I.D. X 1 3/4" WIDE From 7-8967			1		
75	531386	HOSE CLAMP SPRING LOAD / HEAVY DUTY 4"1/8-4"7/16 From 7-8967			1		
76	052615	SUPPORT "Y" SHAPE From 7-8967			1		
77	955297	SCREW CAP HEX M8-1.25x25 G8.8 ZG603 From 7-8967			2		
78	500942	WASHER LO SPT .317x.586x.078 ZG603 From 7-8967			2		
79	192288	WASHER FL 8.4x18.0x2.0 ZG603 From 7-8967			3		
80	502804	SCREW CAP HEX M10-1.5x25 G8.8 ZG603 From 7-8967			2		
81	3852496	WASHER LO SPT 10.2x18.1x2.2 ZG603 From 7-8967			3		
82	960143	WASHER FL 10.5x26.0x2.0 ZP From 7-8967			3		
83	500847	NUT HEX M10-1.5 N500 From 7-8967			1		
90	550845	AIR COOLER ASSY From 4-8165 / REPLACED BY: 550968	1	1		1	
. NS	MI06-02	. SEE MAINTENANCE INFORMATION From 4-8165	1	1		1	
90	550968	AIR COOLER ASSY TitanX From 4-8165	1	1		1	
90	550978	AIR COOLER ASSY Dura-Lite From 4-8165	1	1		1	
91	550847	AIR COOLER ASSY / SIDE BY SIDE MODEL From 4-8165 / REPLACED BY: 550959			1		
. NS	MI06-02	. SEE MAINTENANCE INFORMATION From 4-8165			1		
91	550976	AIR COOLER ASSY / "duralite" / SIDE BY SIDE MODEL Dura-Lite From 4-8165			1		
		B) TO AIR COMPRESSOR					
		F) FOR PRODUCT IMPROVEMENT, SEE WARRANTY					
		BULLETIN WB04-04					

From Y-7046 Up to 8-9339	DATE: 01/2014	PAGE: Y2-0330-00

AIR FILTER & INTAKE - INSTALLATION WITH DETROIT S-60

ITEM	PART	DESCRIPTION	XL45	MTH40	MTH45	MTH45S	NOTE
NS	WB04-04	SEE WARRANTY BULLETIN	1	1	1	1	
102	032719	KIT RETROFIT, AIR COOLER ATTACHMENT Up to 7-8966	1				
. NS	IS-03071	. SEE INSTRUCTION SHEET Up to 7-8966	1				

From Y-7046 Up to 8-9339	DATE: 01/2014	PAGE: Y2-04
EXHAUST		

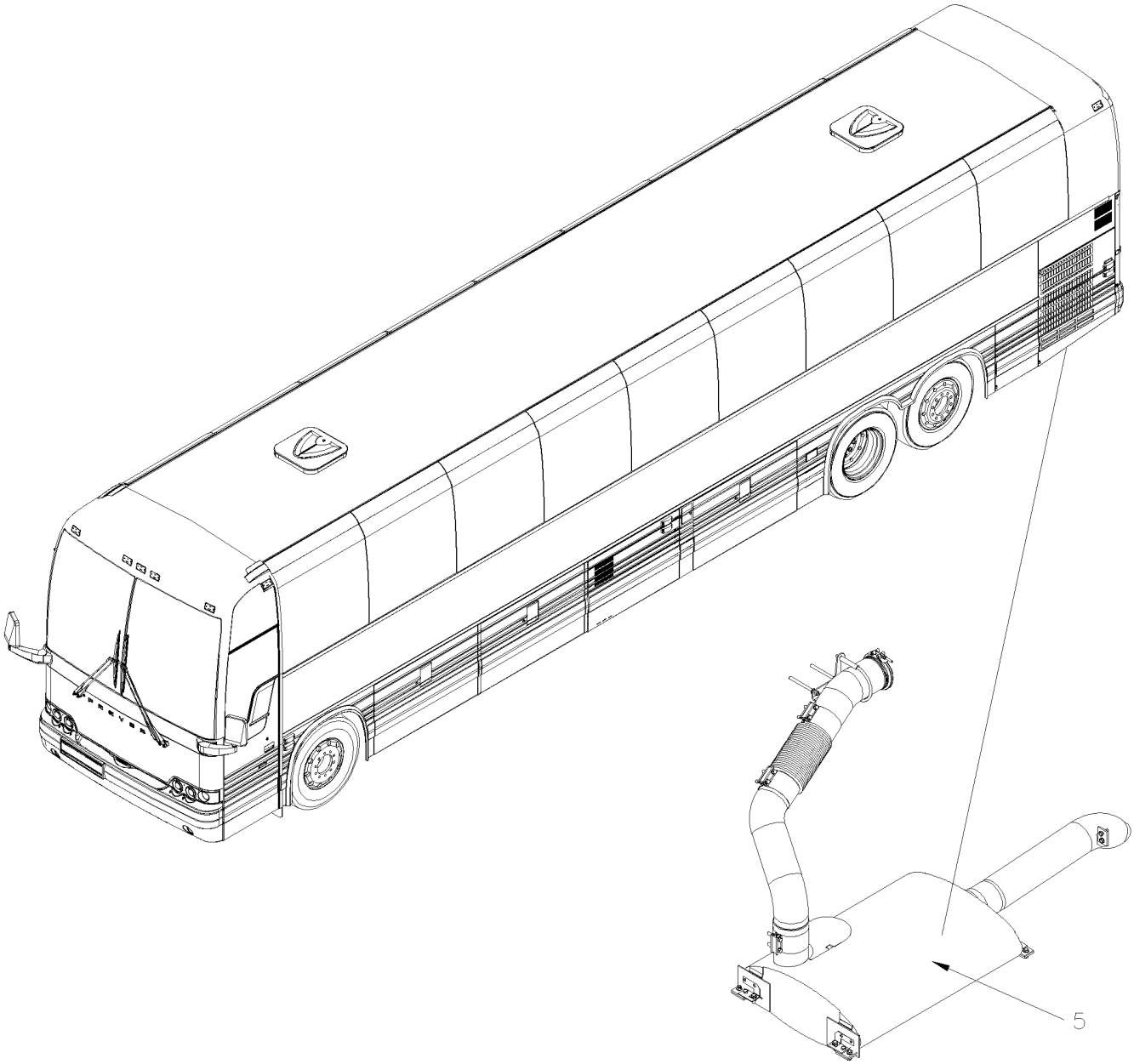

From Y-7046 Up to 8-9339	DATE: 01/2014	PAGE: Y2-04

EXHAUST

ITEM	PART	DESCRIPTION	XL45	MTH40	MTH45	MTH45S	NOTE
5	Y2-0405-00	**MUFFLER - INSTALLATION WITH DETROIT S-60 From Y-7046 Up to 8-9339**					

From Y-7046 Up to 8-9339	DATE: 01/2014	PAGE: Y2-0405-00

MUFFLER - INSTALLATION WITH DETROIT S-60

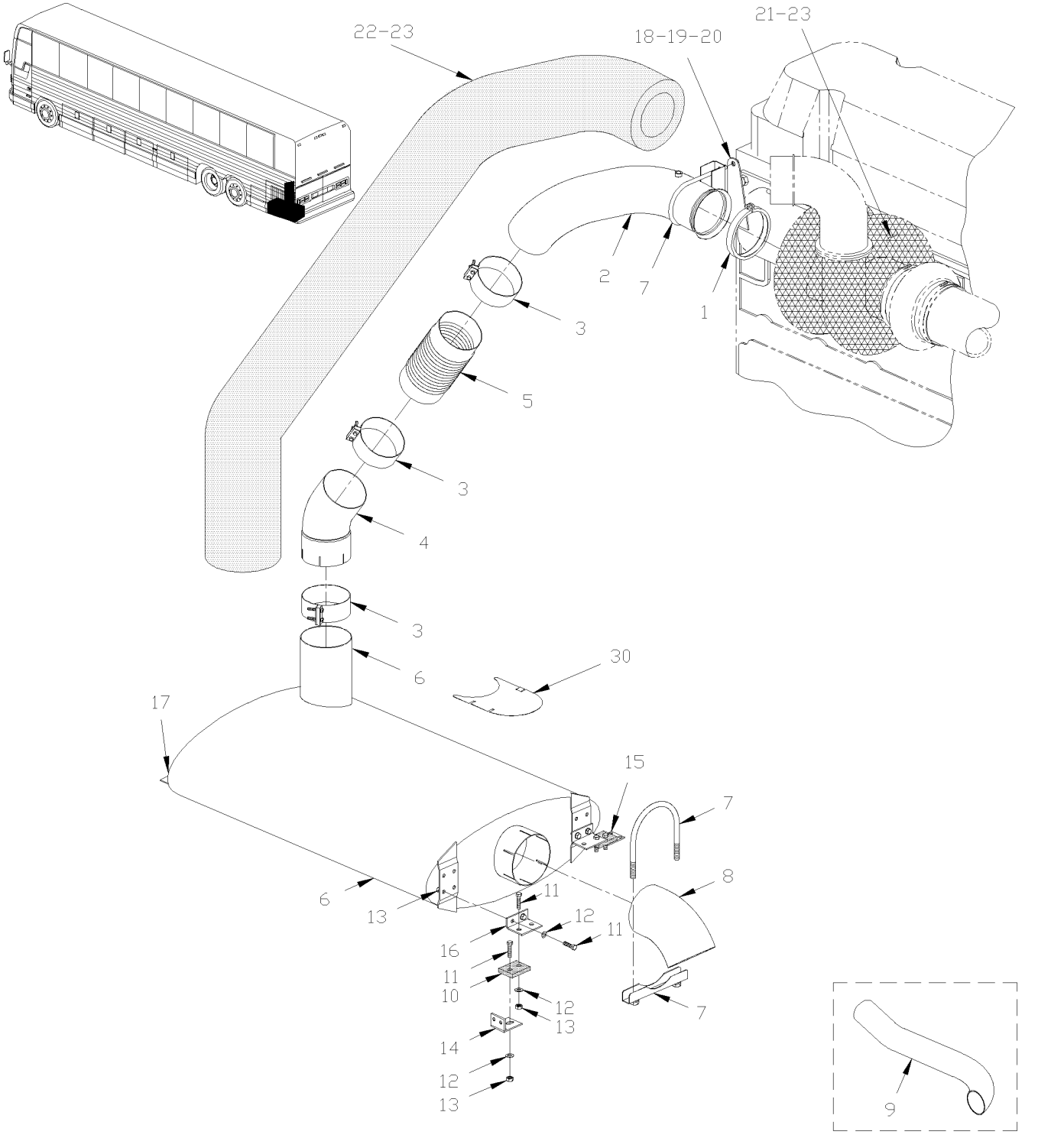

From Y-7046 Up to 8-9339	DATE: 01/2014	PAGE: Y2-0405-00

MUFFLER - INSTALLATION WITH DETROIT S-60

ITEM	PART	DESCRIPTION	XL45	MTH40	MTH45	MTH45S	NOTE
1	540047	V-CLAMP / 5.588" I.D. Up to 4-8242 / REPLACED BY: 540056	1	1	1	1	
1	540056	V-CLAMP / 5.588" I.D. From 4-8243	1	1	1	1	
2	040521	PIPE / W/SERIES 60 Up to 3-8164		1		1	
2	040531	PIPE / W/SERIES 60 / STANLESS STEEL Up to 3-8164		1		1	
2	040523	PIPE / W/SERIES 60 Up to 3-8164	1		1		
2	040545	PIPE / W/SERIE 60 From 4-8165	1		1		
2	040542	PIPE / W/SERIE 60 From 4-8165		1		1	
3	540024	CLAMP BAND SEAL / BUTT JOINT / 5" I.D.x3"		2		2	
3	540024	CLAMP BAND SEAL / BUTT JOINT / 5" I.D.x3"	3		3		
4	040488	PIPE, ELBOW Up to 3-8164	1		1		
4	040520	PIPE ELBOW / W/SERIES 60 Up to 3-8164		1		1	
4	040532	PIPE ELBOW / W/SERIES 60 / STAINLESS STEEL Up to 3-8164		1		1	
4	040546	PIPE, ELBOW From 4-8165	1		1		
4	040543	PIPE, ELBOW From 4-8165		1		1	
5	540031	BELLOWS - EXHAUST 5" I.D. x 11.87"	1	1	1	1	
6	540045	MUFFLER SERIES 50 & 60	1	1	1	1	
. NS	503008	. NUT SPR U M8-1.25 0.6-4.0	16	16	16	16	
6	540053	MUFFLER SERIES 50 & 60 / STAINLESS	1	1	1	1	
7	540018	U-CLAMP / (GUILLOTINE TYPE) / 5" I.D.	1	1	1	1	
8	040467	PIPE, TAIL Up to 3-8164		1		1	
8	040563	PIPE, TAIL From 4-8165		1		1	
8	040534	PIPE, TAIL / STAINLESS STEEL Up to 3-8164		1		1	
9	040498	PIPE, TAIL Up to 3-8164	1		1		
9	040558	PIPE, TAIL / STAINLESS STEEL Up to 3-8164	1		1		
9	040552	PIPE, TAIL From 4-8165	1		1		
10	040988	MUFFLER CONNECTION	8	8	8	8	S
11	502549	SCREW CAP HEX M10-1.5x35 G8.8 ZP	8	8	8	8	
12	502510	WASHER FL .375x.875x.083		8		8	
13	500680	NUT HEX STO M10-1.5 ZP	8	8	8	8	
14	260632	SUPPORT, ANGLE / MUFFLER (WELDED)	2	2	2	2	
14	212573	SUPPORT, ANGLE / MUFFLER (WELDED)	1		1		
14	260632	SUPPORT, ANGLE / MUFFLER (WELDED) Up to 2-7848		2		2	
14	260913	SUPPORT, ANGLE / MUFFLER (WELDED) From 2-7849 Up to 3-8164		2		2	
14	260936	SUPPORT, ANGLE / MUFFLER (WELDED) From 4-8165		1		1	
14	260934	SUPPORT, ANGLE / MUFFLER (WELDED) From 4-8165		1		1	
NS	211564	SUPPORT, ANGLE / MUFFLER (WELDED) Up to 3-8164		2		2	
NS	217912	SUPPORT, ANGLE / MUFFLER (WELDED) From 4-8165		2		2	
15	040465	SUPPORT, ANGLE / 30MM x 54MM x 72MM		4		4	
15	260689	ANGLE MUFFLER SUPPORT 28 5/8" / BACKWARD Up to 3-8164	1		1		
15	260864	ANGLE MUFFLER SUPPORT 755MM BACKWARD From 4-8165	1		1		
15	260662	ANGLE MUFFLER SUPPORT 28 5/8" / FORWARD Up to 3-8164	1		1		
		S) SERVICE					

From Y-7046 Up to 8-9339	DATE: 01/2014	PAGE: Y2-0405-00

MUFFLER - INSTALLATION WITH DETROIT S-60

ITEM	PART	DESCRIPTION	XL45	MTH40	MTH45	MTH45S	NOTE
15	260947	SUPPORT MUFFLE "U" SHAPE 727MM / FORWARD From 4-8165	1		1		
16	040465	SUPPORT, ANGLE / 30MM x 54MM x 72MM	1	1	1	1	
17	040489	SUPPORT, ANGLE / 1 7/16" x 4" x 2 11/32"		1		1	
17	040489	SUPPORT, ANGLE / 1 7/16" x 4" x 2 11/32"	4		4		
NS	502790	SCREW CAP HEX M8-1.25x20 G8.8 ZP	8	8	8	8	
17	502528	SCREW CAP HEX M8-1.25x20 G8.8 EMN	8	8	8	8	
NS	500874	WASHER FL 8.4x17.0x1.6 ZP	8	8	8	8	
17	5001161	WASHER LO SPT 8.1x14.8x2.0 SS-304	8	8	8	8	
NS	502744	NUT HEX STO M8-1.25 ZP	8	8	8	8	
18	040517	SUPPORT, PIPE Up to 1-7566 / REPLACED BY: 040560	1	1	1	1	A
18	040541	SUPPORT, PIPE From 1-7567 Up to 3-8164	1	1	1	1	
18	040561	SUPPORT, PIPE From 4-8165	1	1	1	1	
NS	040560	KIT SUPPORT Up to 1-7566	1	1	1	1	
. NS	IS-00142	. SEE INSTRUCTION SHEET Up to 1-7566	1	1	1	1	
19	510626	STUD M10-1.5 x 120 From 1-7567	2	2	2	2	
20	500680	NUT HEX STO M10-1.5 ZP From 1-7567	2	2	2	2	
21	040526	INSULATED BLANKET / TURBO Up to 1-7646 / REPLACED BY: 040548		1	1	1	
21	040548	INSULATED BLANKET / TURBO From 1-7647 Up to 3-8164		1	1	1	
21	040557	INSULATING BLANKET / TURBO From 4-8165 Up to 5-8652		1	1	1	
22	040528	INSULATED BLANKET / PIPE & BELLOW Up to 1-7646 / REPLACED BY: 040549		1		1	
22	040549	INSULATED BLANKET / PIPE & BELLOW From 1-7647 Up to 3-8164		1		1	
22	040537	INSULATED BLANKET / PIPE Up to 3-8164 / REPLACED BY: 040652			1		
22	040553	INSULATING BLANKET / PIPE & BELLOW From 4-8165			1		
22	040564	INSULATING BLANKET / PIPE & BELLOW From 4-8165			1		
22	040565	INSULATING BLANKET / PIPE & BELLOW From 4-8165 Up to 7-9192 / REPLACED BY: 040652		1		1	
22	040652	INSULATING BLANKET / PIPE & BELLOW From 7-9193		1		1	
23	509754	WIRE LACING SS / TO FIX BLANKET RL 25'		1	1	1	
30	040562	CLOSING PLATE From 4-8165		1		1	
30	040559	CLOSING PLATE From 4-8165		1		1	
		A) FOR PRODUCT IMPROVMENT YOUR REQUIRE					
		KIT#040560					

From Y-7046 Up to 8-9339	DATE: 01/2014	PAGE: Y2-0405-00

MUFFLER - INSTALLATION WITH DETROIT S-60

ITEM	PART	DESCRIPTION	XL45	MTH40	MTH45	MTH45S	NOTE

From Y-7046 Up to 8-9339	DATE: 01/2014	PAGE: Y2-05
COOLING		

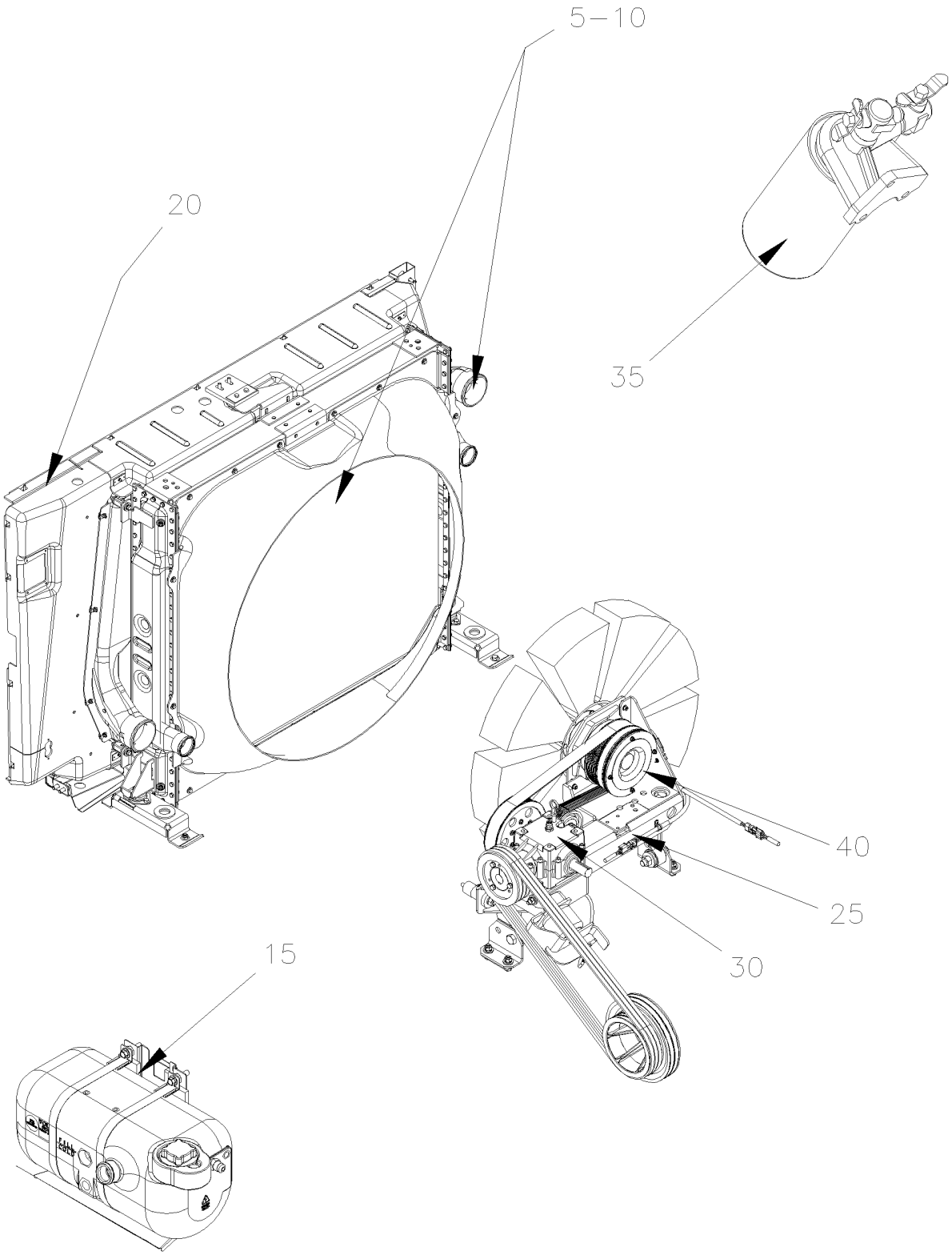

From Y-7046 Up to 8-9339	DATE: 01/2014	PAGE: Y2-05

COOLING

ITEM	PART	DESCRIPTION	XL45	MTH40	MTH45	MTH45S	NOTE
5	Y2-0500-00	**COOLANT PIPING WITH DETROIT S-60 From Y-7046 Up to 3-8164**					
5	Y2-0500-01	**COOLANT PIPING WITH DETROIT S-60 From 4-8165 Up to 8-9339**					
10	Y2-0505-00	**RADIATOR ASSY - BUS From Y-7046 Up to 1-7604**					
10	Y2-0505-01	**RADIATOR ASSY - BUS From 1-7605 Up to 3-8164**					
10	Y2-0505-02	**RADIATOR ASSY - BUS, MTH 40' & MTH 45E From 4-8165 Up to 8-9339**					
10	Y2-0505-50	**RADIATOR ASSY - MTH From Y-7046 Up to 3-8164**					
10	Y2-0505-51	**RADIATOR ASSY - MTH 45' From 4-8165 Up to 8-9339**					
15	Y2-0510-00	**SURGE TANK From Y-7046 Up to 8-9339**					
20	Y2-0518-00	**RADIATOR SEALING FRAME From Y-7046 Up to 3-8164**					
20	Y2-0518-01	**RADIATOR SEALING FRAME - BUS, MTH 40' & MTH-45E From 4-8165 Up to 8-9339**					
20	Y2-0518-50	**RADIATOR SEALING FRAME - MTH 45' From 4-8165 Up to 8-9339**					
25	Y2-0520-00	**FAN DRIVE - INSTALLATION - SHORT From Y-7046 Up to 3-8164**					
25	Y2-0520-01	**FAN DRIVE - INSTALLATION - SHORT From 4-8165 Up to 6-8814**					
25	Y2-0520-02	**FAN DRIVE - INSTALLATION - SHORT From 6-8815 Up to 8-9339**					
25	Y2-0520-50	**FAN DRIVE - INSTALLATION - LONG From 4-8165 Up to 6-8814**					
25	Y2-0520-51	**FAN DRIVE - INSTALLATION - LONG From 6-8815 Up to 8-9339**					
25	Y2-0520-99	**FAN DRIVE - INSTALLATION - SHORT / "RETROFIT" From Y-7046 Up to 6-8814**					
30	Y2-0525-00	**GEARBOX "SUPERIOR" - #550789, 550810 & 550897 From Y-7046 Up to 8-9339**					
35	Y2-0530-00	**COOLANT FILTER - INSTALLATION WITH DETROIT S-60 From Y-7046 Up to 3-8164**					
35	Y2-0530-01	**COOLANT FILTER - INSTALLATION WITH DETROIT S-60 From 4-8165 Up to 8-9339**					
40	Y2-0540-00	**FAN CLUTCH ASSY - #550803 - BUS From Y-7046 Up to 3-7940**					
40	Y2-0540-01	**FAN CLUTCH ASSY - #550837 - BUS From 3-7941 Up to 3-8164**					
40	Y2-0540-02	**FAN CLUTCH ASSY - #550836 - BUS, MTH 40' & MTH-45E From 4-8165 Up to 6-8906**					
40	Y2-0540-50	**FAN CLUTCH ASSY - #550802 - MTH From Y-7046 Up to 2-7837**					
40	Y2-0540-51	**FAN CLUTCH ASSY - #550836 - MTH From 2-7838 Up to 3-8164**					
40	Y2-0540-52	**FAN CLUTCH ASSY - #550839 - MTH 45' From 4-8165 Up to 8-9339**					

From Y-7046 Up to 3-8164	DATE: 01/2014	PAGE: Y2-0500-00
COOLANT PIPING WITH DETROIT S-60		

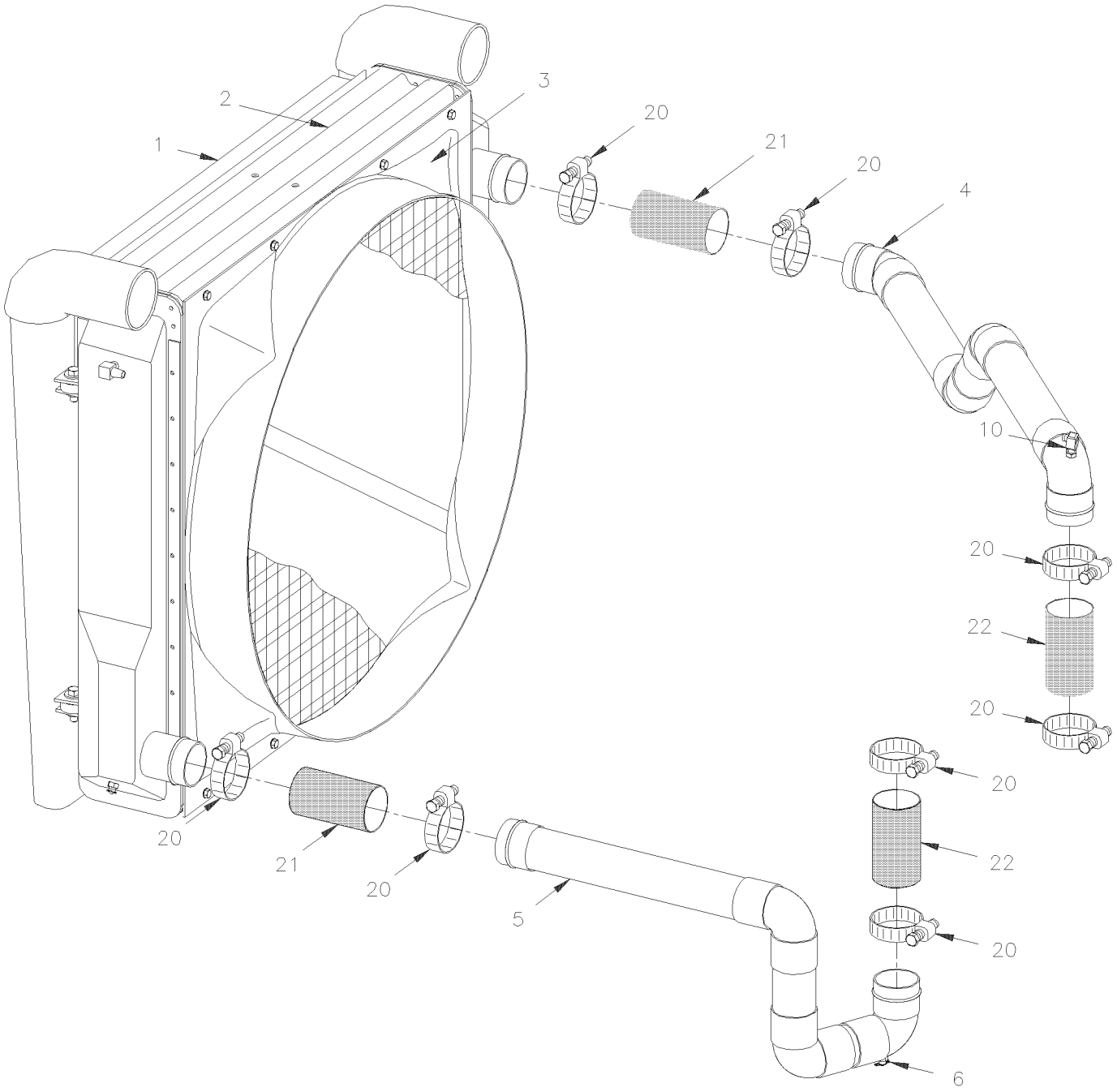

From Y-7046 Up to 3-8164	DATE: 01/2014	PAGE: Y2-0500-00

COOLANT PIPING WITH DETROIT S-60

ITEM	PART	DESCRIPTION	XL45	MTH40	MTH45	MTH45S	NOTE
1	Y2-0330-00	**AIR FILTER & INTAKE - INSTALLATION WITH DETROIT S-60**					
2	Y2-0505-00	**RADIATOR ASSY - BUS**					
2	Y2-0505-01	**RADIATOR ASSY - BUS**					
2	Y2-0505-50	**RADIATOR ASSY - MTH**					
3	Y2-0505-50	**RADIATOR ASSY - MTH**					
4	052257	PIPE / <> RADIATOR & THERMOSTAT HOUSING	1				
4	052038	PIPE / <> RADIATOR & THERMOSTAT HOUSING		1	1	1	
4	052220	PIPE / RADIATOR SIDE		1	1		
4	052220	PIPE / RADIATOR SIDE				AR	
4	052221	PIPE / THERMOSTAT HOUSING SIDE		1	1		
4	052221	PIPE / THERMOSTAT HOUSING SIDE				AR	
5	052025	PIPE / <> RADIATOR & ENGINE WATER PUMP	1	1	1	1	
5	052222	PIPE / <> RADIATOR & ENGINE WATER PUMP		1	1		
5	052222	PIPE / <> RADIATOR & ENGINE WATER PUMP				AR	
6	501129	EXTERNAL SEAL DRAIN 1/4 NPT	1	1	1	1	
20	504562	HOSE CLAMP / 2"3/4-3"5/8 / C.T. 350	8	8	8	8	
21	051604	HOSE 2 3/4" I.D. 130MM	2	2	2	2	
. NS	503395	. HOSE SILICONE 4 PLY 2 3/4" I.D. x 3'	AR	AR	AR	AR	
22	051873	HOSE 2 5/8" I.D. 100MM		2	2	2	
22	051873	HOSE 2 5/8" I.D. 100MM	1				
22	052080	HOSE 2 5/8" I.D. 75MM	1				
NS	503580	. HOSE SILICONE 2 5/8" I.D. x 3'	AR	AR	AR	AR	
NS	503395	. HOSE SILICONE 4 PLY 2 3/4" I.D. x 3'	AR	AR	AR	AR	

From 4-8165 Up to 8-9339	DATE: 01/2014	PAGE: Y2-0500-01
COOLANT PIPING WITH DETROIT S-60		

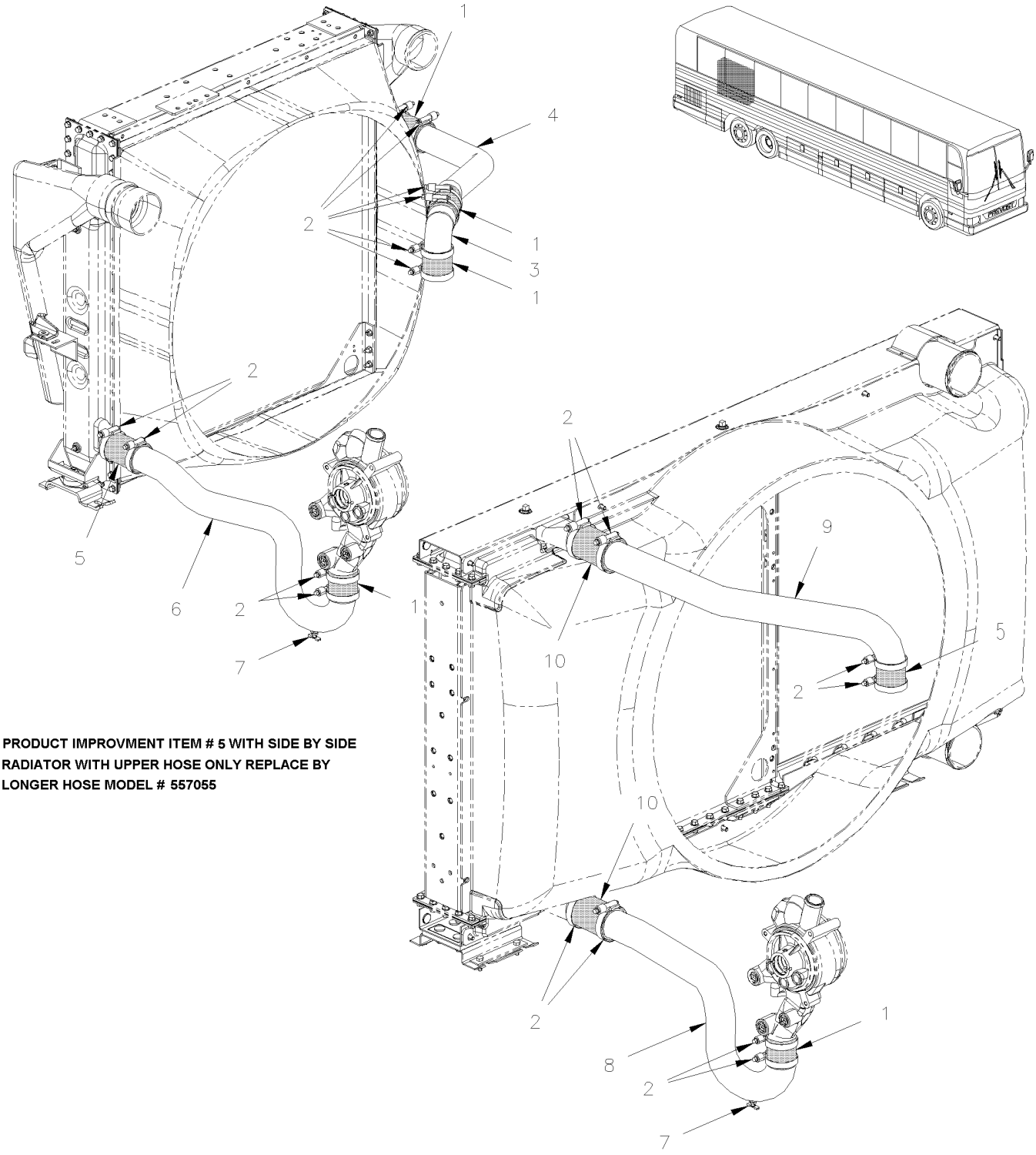

PRODUCT IMPROVMENT ITEM # 5 WITH SIDE BY SIDE RADIATOR WITH UPPER HOSE ONLY REPLACE BY LONGER HOSE MODEL # 557055

From 4-8165 Up to 8-9339	DATE: 01/2014	PAGE: Y2-0500-01

COOLANT PIPING WITH DETROIT S-60

ITEM	PART	DESCRIPTION	XL45	MTH40	MTH45	MTH45S	NOTE
1	052415	HOSE 2 1/2" I.D. 76MM / REPLACED BY: 557055	3	3		3	
1	052415	HOSE 2 1/2" I.D. 76MM / REPLACED BY: 557055			2		A
2	504562	HOSE CLAMP / 2"3/4-3"5/8 / C.T. 350	10	10		10	
2	504562	HOSE CLAMP / 2"3/4-3"5/8 / C.T. 350			8		
3	052447	PIPE, ELBOW 2 1/2" O.D. Up to 3-8164	1	1		1	
3	052599	ELBOW 90° X 2 1/2" I.D. / 118MM x 118MM C/C / SILICONE From 4-8165 Up to 8-9293 / REPLACED BY: 052897	1	1		1	
3	052897	ELBOW 90° X 2 1/2" I.D. / 118MM x 118MM C/C / SILICONE From 8-9294			1	1	
4	052431	PIPE / THERMOSTAT HOUSING SIDE Up to 3-8164	1	1		1	
4	052601	PIPE / THERMOSTAT HOUSING SIDE From 4-8165	1	1		1	
5	052416	HOSE 2 1/2" I.D. 105MM / REPLACED BY: 557055	2	2		2	
5	557055	HOSE / W/HUMP 2 1/2" I.D. x 4" SERVICE	2				
6	052432	PIPE / <> RADIATOR & ENGINE WATER PUMP Up to 6-8807	1	1		1	
6	053522	PIPE / <> RADIATOR & ENGINE WATER PUMP SS SERVICE Up to 6-8807	1	1		1	
6	052704	PIPE / <> RADIATOR & ENGINE WATER PUMP From 6-8808	1	1		1	
6	053523	PIPE / <> RADIATOR & ENGINE WATER PUMP SS SERVICE From 6-8808	1	1		1	
7	501129	EXTERNAL SEAL DRAIN 1/4 NPT	1	1	1	1	
8	052420	PIPE / <> RADIATOR & ENGINE WATER PUMP			1		
8	053530	PIPE / <> RADIATOR & ENGINE WATER PUMP SS SERVICE			1		
9	052419	PIPE / THERMOSTAT HOUSING SIDE			1		
10	052480	HOSE 2 1/2" I.D. 152MM			2		
		A) FOR PRODUCT IMPROVEMENT SEE NOTE ON DRAWING					

From Y-7046 Up to 1-7604	DATE: 01/2014	PAGE: Y2-0505-00

RADIATOR ASSY - BUS

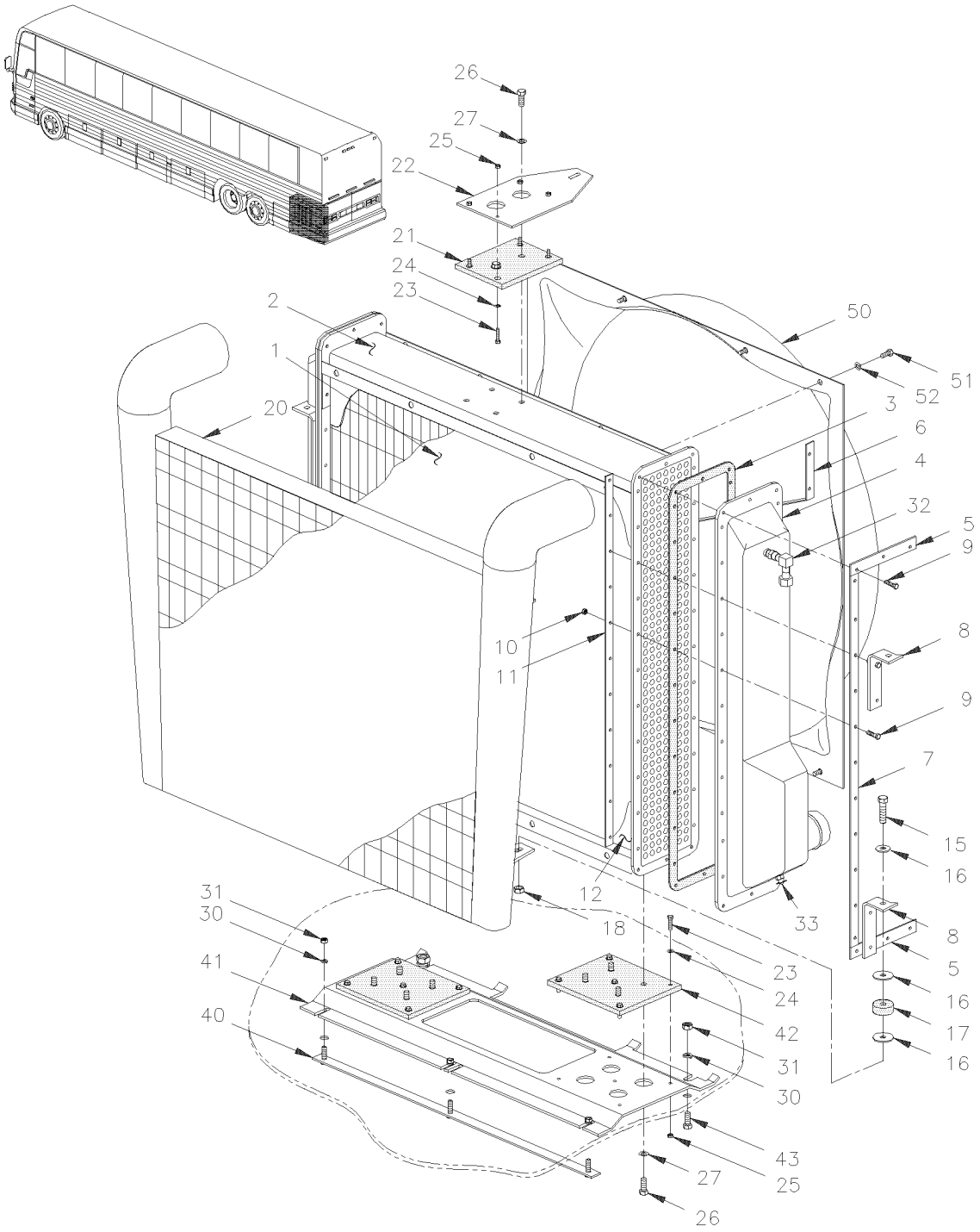

From Y-7046 Up to 1-7604	DATE: 01/2014	PAGE: Y2-0505-00

RADIATOR ASSY - BUS

ITEM	PART	DESCRIPTION	XL45	MTH40	MTH45	MTH45S	NOTE
	550800	RADIATOR ASSY / WATER / REPLACED BY: 550824	1				
1	550707	. CORE	1				
2	550796	. SUPPORT ASSY TOP	1				
3	550562	. GASKET, HALF / REPLACED BY: 550815	4				
4	550798	. TANK / RADIATOR FRONT	1				
4	550799	. TANK / RADIATOR REAR	1				
5	051704	. STRIP / EXTERIOR 7"	4				
NS	550705	. STRIP / INTERIOR 5.44"	4				
6	550753	. REINFORCEMENT STRIP "Z" SHAPE / FRONT	1				
6	550754	. REINFORCEMENT STRIP "Z" SHAPE / REAR	1				
7	550702	. STRIP / EXTERIOR 35.06"	4				
8	N.P.N.	. ANGLE	1				4
9	500029	. SCREW CAP HEX 5/16-24x1 1/2 G5 ZP	AR				
10	500699	. NUT HEX 5/16-24 ZP	AR				
NS	500826	. WASHER LO EXT .320x.610x.034 ZP	AR				
11	550703	. STRIP / INTERIOR 33.44"	4				
12	550797	. SUPPORT ASSY BOTTOM	1				
15	500831	SCREW CAP HEX 3/8-16x2 G5 ZP	4				
16	500446	WASHER FL .531x1.250x.125 ZP	8				
17	550685	BUSHING INSULATOR / <> RADIATORS	4				
18	500265	NUT HEX STO 3/8-16 ZP	4				
20	Y2-0330-00	**AIR FILTER & INTAKE - INSTALLATION WITH DETROIT S-60**					
21	052060	RUBBER PAD / <> SUPPORT & RADIATOR 165MM x 127MM W/6 HOLES	1				
22	051982	PLATE SUPPORT UPPER RADIATOR	1				
23	502737	SCREW CAP HEX M6-1.0x25 SS EMN	12				
24	500468	WASHER FL .281x1.250x.065 ZP	15				
25	502621	NUT HEX STO M6-1.0 ZP	15				
26	500191	SCREW CAP HEX 3/8-16x1 G5 ZP	12				
27	500445	WASHER FL .437x1.000x.083 ZP	15				
28	052058	ATTACHMENT, ANGLE 55.50MM X 72.50 X 50.80MM	2				
30	502584	WASHER LO SERR 8.2x26.3x1.8 ZP	AR				
31	502543	NUT HEX M8-1.25 ZP	AR				
32	501332	STREET ELBOW 90º / PIPE FITTING / 1/4NPT-Mx1/4NPT-F BR	1				
NS	501308	ADAPTER / PIPE FITTING / 1/4NPT-Fx1/4NPT-M BR	1				
NS	501027	MALE CONNECTOR / SAE 45º FITTING / #4FL-Mx1/4NPT-M BR	1				
33	501129	EXTERNAL SEAL DRAIN 1/4 NPT	AR				
40	052224	ATTACHMENT, STRIP 768MM W/3 STUDS / TO FIX SUPPORT 364/364c/c	1				
41	052201	PLATE SUPPORT LOWER RADIATOR	1				
42	051836	RUBBER PAD / <> SUPPORT & RADIATOR 242MM x 165MM W/9 HOLES	1				
43	502780	SCREW CAP HEX M8-1.25x25 SS EMN	2				
50	051837	SHROUD / W/32" FAN BLADE	1				
51	500179	SCREW CAP HEX 5/16-18x3/4 G5 ZP	8				
52	500476	WASHER LO SPT .317x.586x.078 ZP	8				
		4) NO PARTS NUMBER					

From Y-7046 Up to 1-7604	DATE: 01/2014	PAGE: Y2-0505-00

RADIATOR ASSY - BUS

ITEM	PART	DESCRIPTION	XL45	MTH40	MTH45	MTH45S	NOTE
NS	506001	TAPE RUB ADH1 CC POL 1/8" x 3/4" x 50' / GREY 2520X	AR				

From Y-7046 Up to 1-7604	DATE: 01/2014	PAGE: Y2-0505-00

RADIATOR ASSY - BUS

ITEM	PART	DESCRIPTION	XL45	MTH400	MTH445	MTH455S	NOTE

From 1-7605 Up to 3-8164	DATE: 01/2014	PAGE: Y2-0505-01
RADIATOR ASSY - BUS		

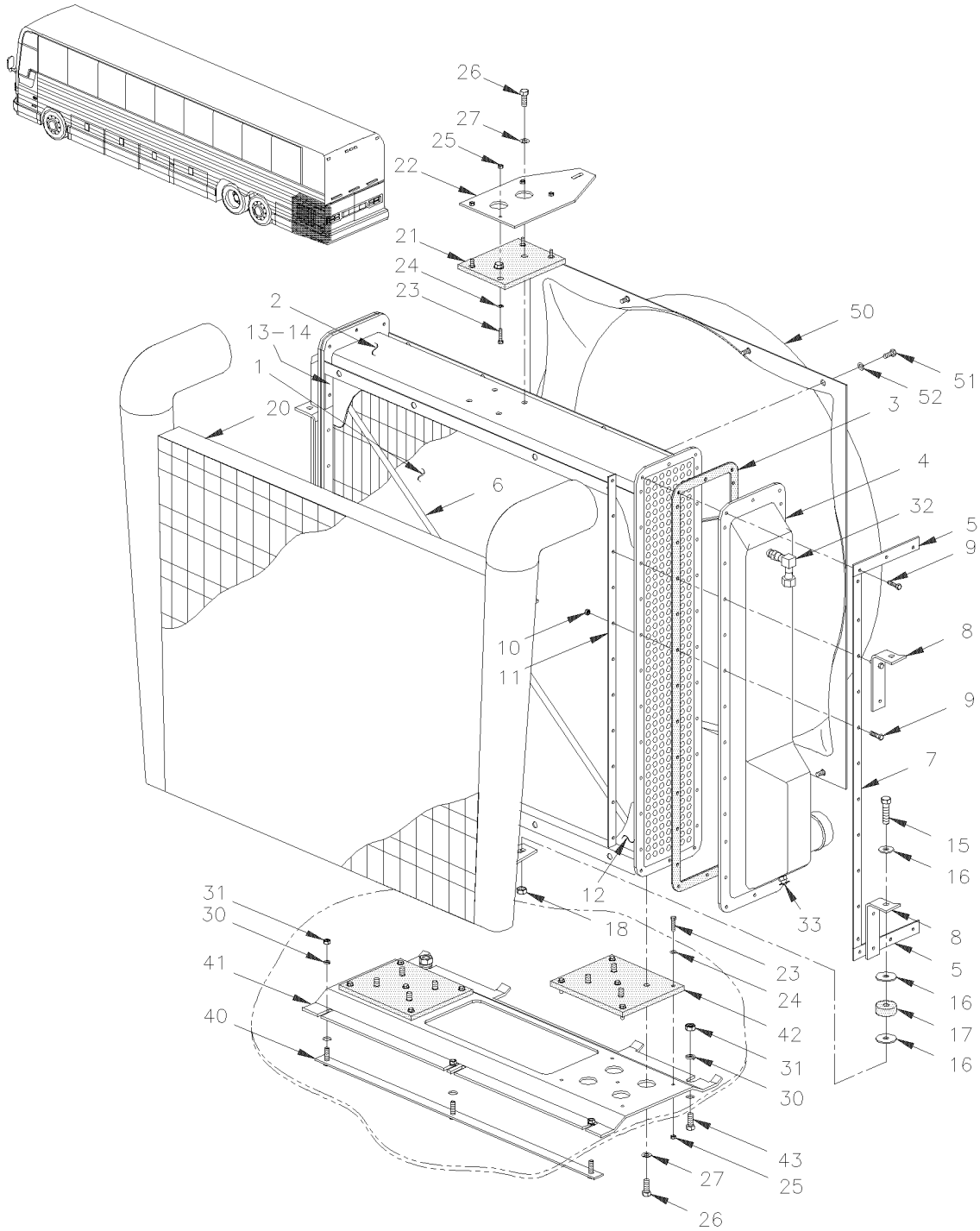

From 1-7605 Up to 3-8164	DATE: 01/2014	PAGE: Y2-0505-01

RADIATOR ASSY - BUS

ITEM	PART	DESCRIPTION	XL45	MTH40	MTH45	MTH45S	NOTE
	550824	RADIATOR ASSY / WATER	1				
1	550707	. CORE	1				
2	550827	. SUPPORT ASSY TOP	1				
3	550815	. GASKET (ONE PIECE)	2				
4	550798	. TANK / RADIATOR FRONT	1				
4	550799	. TANK / RADIATOR REAR	1				
5	051704	. STRIP / EXTERIOR 7"	4				
NS	550705	. STRIP / INTERIOR 5.44"	4				
6	550829	. REINFORCEMENT ROD 3/8" x 41"	2				
7	550702	. STRIP / EXTERIOR 35.06"	4				
8	N.P.N.	. ANGLE	1				4
9	500182	. SCREW CAP HEX 5/16-18x1 1/4 G5 PT ZP	AR				
10	500701	. NUT HEX 5/16-18 ZP / REPLACED BY: 5001189	AR				
NS	500826	. WASHER LO EXT .320x.610x.034 ZP	AR				
11	550703	. STRIP / INTERIOR 33.44"	4				
12	550828	. SUPPORT ASSY BOTTOM	1				
13	550830	. TIE BAR / <> UPPER & LOWER SUPPORT	2				
NS	550770	. BUSHING	4				
14	500265	. NUT HEX STO 3/8-16 ZP	4				
15	500831	SCREW CAP HEX 3/8-16x2 G5 ZP	4				
16	500446	WASHER FL .531x1.250x.125 ZP	8				
17	550685	BUSHING INSULATOR / <> RADIATORS	4				
18	500265	NUT HEX STO 3/8-16 ZP	4				
20	Y2-0330-00	**AIR FILTER & INTAKE - INSTALLATION WITH DETROIT S-60**					
21	052060	RUBBER PAD / <> SUPPORT & RADIATOR 165MM x 127MM W/6 HOLES	1				
22	051982	PLATE SUPPORT UPPER RADIATOR	1				
23	502737	SCREW CAP HEX M6-1.0x25 SS EMN	12				
24	500468	WASHER FL .281x1.250x.065 ZP	15				
25	502621	NUT HEX STO M6-1.0 ZP	15				
26	500191	SCREW CAP HEX 3/8-16x1 G5 ZP	12				
27	500445	WASHER FL .437x1.000x.083 ZP	15				
28	052058	ATTACHMENT, ANGLE 55.50MM X 72.50 X 50.80MM	2				
30	502584	WASHER LO SERR 8.2x26.3x1.8 ZP	AR				
31	502543	NUT HEX M8-1.25 ZP	AR				
32	501332	STREET ELBOW 90º / PIPE FITTING / 1/4NPT-Mx1/4NPT-F BR	1				
NS	501308	ADAPTER / PIPE FITTING / 1/4NPT-Fx1/4NPT-M BR	1				
NS	501027	MALE CONNECTOR / SAE 45º FITTING / #4FL-Mx1/4NPT-M BR	1				
33	501129	EXTERNAL SEAL DRAIN 1/4 NPT	AR				
40	052224	ATTACHMENT, STRIP 768MM W/3 STUDS / TO FIX SUPPORT 364/364c/c	1				
41	052201	PLATE SUPPORT LOWER RADIATOR	1				
42	051836	RUBBER PAD / <> SUPPORT & RADIATOR 242MM x 165MM W/9 HOLES	1				
43	502780	SCREW CAP HEX M8-1.25x25 SS EMN	2				
50	051837	SHROUD / W/32" FAN BLADE	1				
		4) NO PARTS NUMBER					

From 1-7605 Up to 3-8164	DATE: 01/2014	PAGE: Y2-0505-01

RADIATOR ASSY - BUS

ITEM	PART	DESCRIPTION	XL45	MTH40	MTH45	MTH45S	NOTE
51	500179	SCREW CAP HEX 5/16-18x3/4 G5 ZP	8				
52	500476	WASHER LO SPT .317x.586x.078 ZP	8				
NS	506001	TAPE RUB ADH1 CC POL 1/8" x 3/4" x 50' / GREY 2520X	AR				

From 1-7605 Up to 3-8164	DATE: 01/2014	PAGE: Y2-0505-01

RADIATOR ASSY - BUS

ITEM	PART	DESCRIPTION	XL45	MTH40	MTH45	MTH45S	NOTE

From 4-8165 Up to 8-9339	DATE: 01/2014	PAGE: Y2-0505-02

RADIATOR ASSY - BUS, MTH 40' & MTH 45E

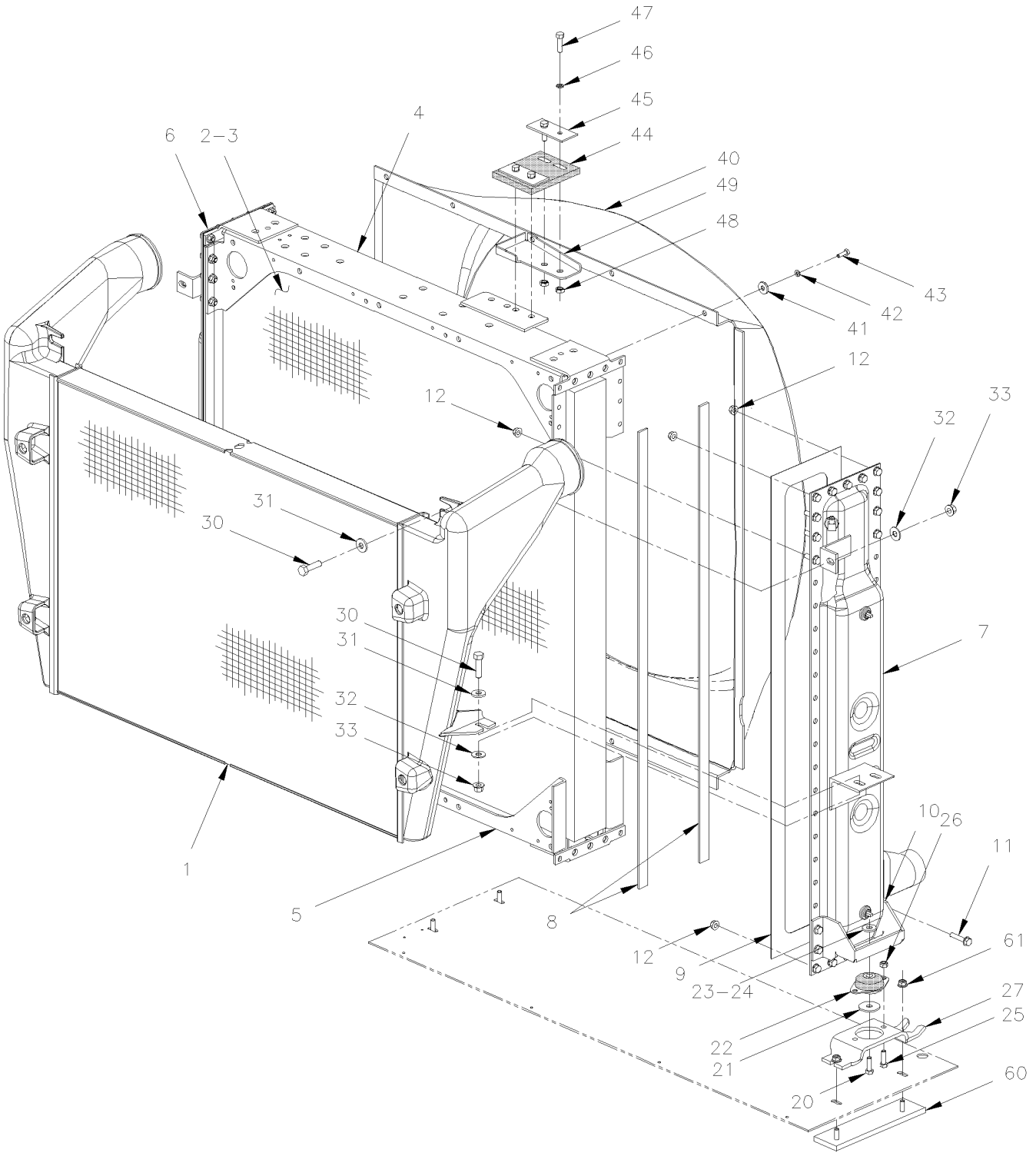

From 4-8165 Up to 8-9339	DATE: 01/2014	PAGE: Y2-0505-02

RADIATOR ASSY - BUS, MTH 40' & MTH 45E

ITEM	PART	DESCRIPTION	XL45	MTH40	MTH45	MTH45S	NOTE
	550820	RADIATOR ASSY W/AIR CHARGER / SANDWICH	1	1		1	
1	550845	. AIR COOLER ASSY / REPLACED BY: 550968	1	1		1	
. NS	MI06-02	. . SEE MAINTENANCE INFORMATION	1	1		1	
1	550968	. AIR COOLER ASSY TitanX	1	1		1	
1	550978	. AIR COOLER ASSY Dura-Lite	1	1		1	
2	550844	. RADIATOR ASSY	1	1		1	
3	550852	. . CORE	1	1		1	
4	550855	. . SUPPORT UPPER	1	1		1	
5	550856	. . SUPPORT LOWER	1	1		1	
6	550853	. . TANK FRONT	1	1		1	
7	550854	. . TANK REAR	1	1		1	
8	550859	. . REINFORCEMENT STRIP	4	4		4	
9	550857	. . GASKET / REPLACED BY: 550952	2	2		2	
9	550952	. . GASKET	2	2		2	
10	550860	. . SUPPORT BOTTOM	2	2		2	
11	500179	. . SCREW CAP HEX 5/16-18x3/4 G5 ZP	62	62		62	
11	500181	. . SCREW CAP HEX 5/16-18x1 G5 ZP	27	27		27	
11	500183	. . SCREW CAP HEX 5/16-18x1 1/2 G5 PT ZP	8	8		8	
12	5001083	. . NUT HEXF NYRT 5/16-18 ZP	88	88		88	
20	500195	. SCREW CAP HEX 3/8-16x2 1/2 G5 ZP	2	2		2	
21	550825	. WASHER SPECIAL	2	2		2	
22	550826	. INSULATOR MOUNTING	2	2		2	
23	N.P.N.	. WASHER / (1320875)	2	2		2	4
24	500301	. NUT HEXF STO 3/8-16 ZP	2	2		2	
25	500179	. SCREW CAP HEX 5/16-18x3/4 G5 ZP	4	4		4	
26	5001083	. NUT HEXF NYRT 5/16-18 ZP	4	4		4	
27	550858	. BRACKET MOUNTING	2	2		2	
30	502527	. SCREW CAP HEX M8-1.25x50 G8.8 ZP	4	4		4	
31	N.P.N.	. WASHER / (132866)	1	1		1	4
31	N.P.N.	. WASHERT SP / (132873)	1	1		1	4
32	N.P.N.	. WASHER FL NYL .443x.750x.125 / (132813)	1	1		1	4
33	502692	. NUT HEXF STO M8-1.25 ZP	4	4		4	
40	052428	SHROUD	1	1		1	
40	506001	TAPE RUB ADH1 CC POL 1/8" x 3/4" x 50' / GREY 2520X	AR	AR		AR	
41	502838	NUT HEX TWAY M8-1.25 ZG603	10	10		10	
42	502853	WASHER LO SPT 6.1x11.8x1.6 ZG603	10	10		10	
43	502830	SCREW CAP HEX M6-1.0x20 G8.8 ZG603	10	10		10	
44	052441	RUBBER PAD 100MM X 123MM / REPLACED BY: 21185073	1	1		1	
44	21185073	RUBBER PAD 100MM X 123MM	1	1		1	
45	052473	PLATE 40MM X 90MM / UPPER RADIATOR	2	2		2	
47	940142	SCREW CAP HEX M8-1.25x30 G8.8 ZG603	4	4		4	
		4) NO PARTS NUMBER					

From Y-7046 Up to 3-8164	DATE: 01/2014	PAGE: Y2-0505-50

RADIATOR ASSY - MTH

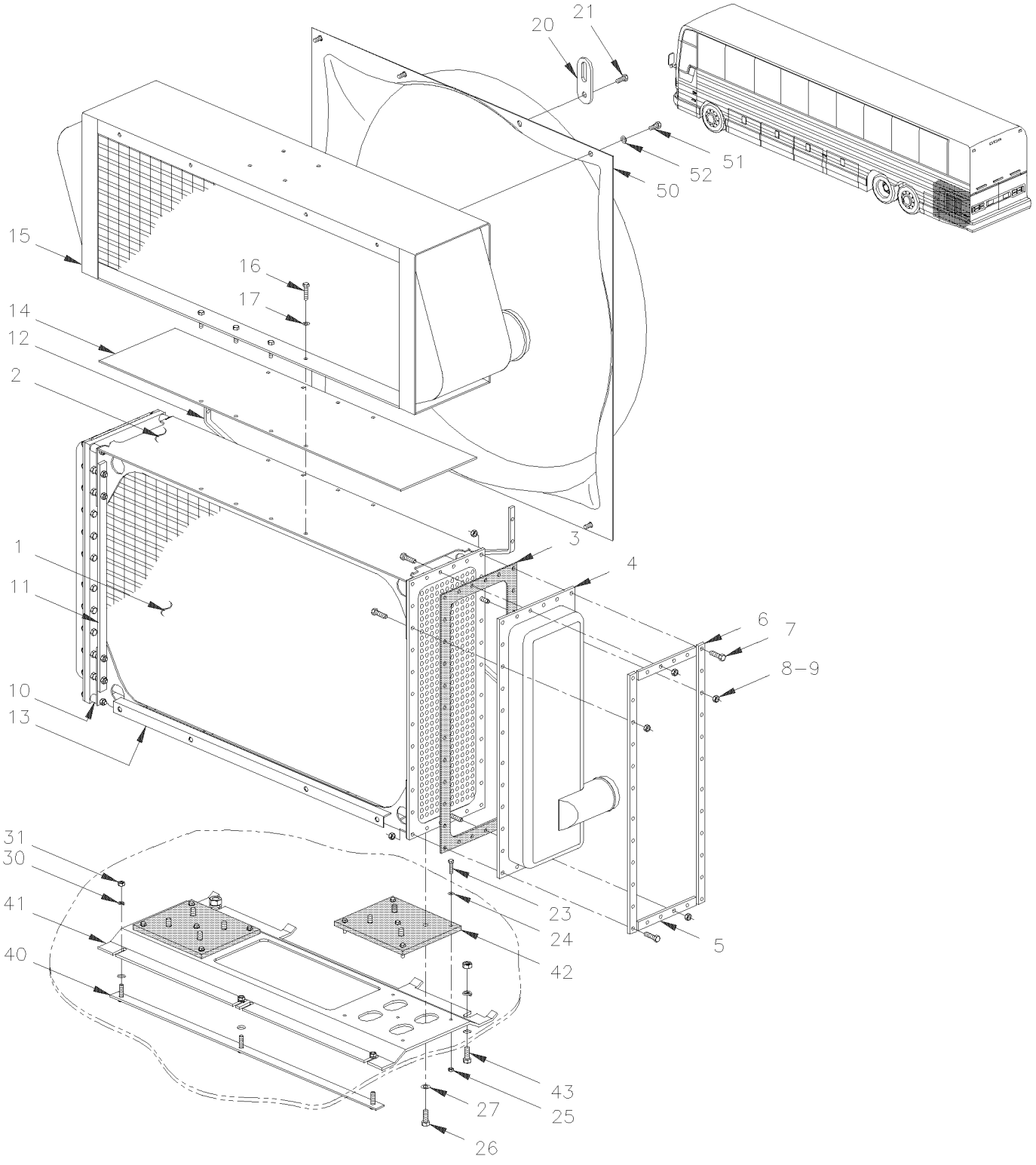

From Y-7046 Up to 3-8164	DATE: 01/2014	PAGE: Y2-0505-50

RADIATOR ASSY - MTH

ITEM	PART	DESCRIPTION	XL45	MTH40	MTH45	MTH45S	NOTE
	550759	RADIATOR ASSY / WATER		1	1	1	A
1	550760	. CORE		1	1	1	
2	550764	. SUPPORT ASSY TOP		1	1	1	
3	550768	. GASKET, HALF		4	4	4	
4	550761	. TANK / RADIATOR FRONT		1	1	1	
4	550762	. TANK / RADIATOR REAR		1	1	1	
5	550766	. STRIP / EXTERIOR & INTERIOR 6 1/2"		8	8	8	
6	550767	. STRIP / EXTERIOR & INTERIOR 22 1/2"		8	8	8	
7	500029	SCREW CAP HEX 5/16-24x1 1/2 G5 ZP		AR	AR	AR	
8	500778	. NUT HEX 5/16-18 ZP		68	68	68	
9	500446	. WASHER FL .531x1.250x.125 ZP		72	72	72	
10	550770	. BUSHING		4	4	4	
NS	500183	. SCREW CAP HEX 5/16-18x1 1/2 G5 PT ZP		4	4	4	
NS	500185	. SCREW CAP HEX 5/16-18x2 1/4 G5 ZP		4	4	4	
NS	502600	. NUT HEX NYRT 5/16-18 ZP		4	4	4	
11	550771	. STRIP, TIE BAR 20"		1	1	1	
12	550763	. REINFORCEMENT STRIP "Z" SHAPE		1	1	1	
13	550765	. SUPPORT ASSY BOTTOM		1	1	1	
14	550769	. RUBBER		1	1	1	
NS	500826	. WASHER LO EXT .320x.610x.034 ZP		8	8	8	
NS	500181	. SCREW CAP HEX 5/16-18x1 G5 ZP		8	8	8	
NS	500985	. WASHER FL .343x.875x.125 ZP		8	8	8	
15	Y2-0330-00	**AIR FILTER & INTAKE - INSTALLATION WITH DETROIT S-60**					
16	500191	SCREW CAP HEX 3/8-16x1 G5 ZP		AR	AR	AR	
17	500445	WASHER FL .437x1.000x.083 ZP		AR	AR	AR	
NS	052199	PLATE "OBLON" / TO FIX RADIATOR UPPER		1	1	1	
NS	500195	SCREW CAP HEX 3/8-16x2 1/2 G5 ZP		1	1	1	B
23	502737	SCREW CAP HEX M6-1.0x25 SS EMN		12	12	12	
24	500468	WASHER FL .281x1.250x.065 ZP		15	15	15	
25	502621	NUT HEX STO M6-1.0 ZP		12	12	12	
26	500191	SCREW CAP HEX 3/8-16x1 G5 ZP		12	12	12	
27	500445	WASHER FL .437x1.000x.083 ZP		AR	AR	AR	
30	502584	WASHER LO SERR 8.2x26.3x1.8 ZP		AR	AR	AR	
31	502543	NUT HEX M8-1.25 ZP		3	3	3	
32	501332	STREET ELBOW 90º / PIPE FITTING / 1/4NPT-Mx1/4NPT-F BR		1	1	1	
NS	501308	ADAPTER / PIPE FITTING / 1/4NPT-Fx1/4NPT-M BR		1	1	1	
NS	501027	MALE CONNECTOR / SAE 45º FITTING / #4FL-Mx1/4NPT-M BR		1	1	1	
33	501129	EXTERNAL SEAL DRAIN 1/4 NPT		1	1	1	
NS	501329	STREET ELBOW 45º / PIPE FITTING / 1/4NPT-Mx1/4NPT-F BR		1	1	1	
40	052224	ATTACHMENT, STRIP 768MM W/3 STUDS / TO FIX SUPPORT 364/364c/c		1	1	1	
41	052201	PLATE SUPPORT LOWER RADIATOR		1	1	1	
		A) USE WITH 500HP ENGINE OPTIONAL ON 45'					
		ENTERTAINER SEE FINAL COACH RECORD					
		B) TO FIX RADIATOR PLATE UPPER					

From Y-7046 Up to 3-8164	DATE: 01/2014	PAGE: Y2-0505-50

RADIATOR ASSY - MTH

ITEM	PART	DESCRIPTION	XL45	MTH40	MTH45	MTH45S	NOTE
42	051836	RUBBER PAD / <> SUPPORT & RADIATOR 242MM x 165MM W/9 HOLES		2	2	2	
43	502780	SCREW CAP HEX M8-1.25x25 SS EMN		2	2	2	
50	052197	SHROUD / W/36" FAN BLADE		1	1	1	
51	5001040	SCREW TC PAN PH #6-32x3/4 SS		4	4	4	
52	500157	WASHER FL .125x.375x.032 SS		4	4	4	
NS	506001	TAPE RUB ADH1 CC POL 1/8" x 3/4" x 50' / GREY 2520X		AR	AR	AR	
60	052110	ATTACHMENT / UPPER RADIATOR		1	1	1	
61	660253	BUSHING / RUBBER / (ONE PIECE) 1 ½" x 5/8" I.D.		1	1	1	
62	505217	SPACER 7/16" X 1 1/4"		1	1	1	
63	500935	WASHER FL .390x1.500x.083		2	2	2	
64	500195	SCREW CAP HEX 3/8-16x2 1/2 G5 ZP		1	1	1	
65	500265	NUT HEX STO 3/8-16 ZP		1	1	1	
66	500191	SCREW CAP HEX 3/8-16x1 G5 ZP		2	2	2	
67	500478	WASHER LO SPT .380x.683x.094 ZP		2	2	2	

From Y-7046 Up to 3-8164	DATE: 01/2014	PAGE: Y2-0505-50

RADIATOR ASSY - MTH

ITEM	PART	DESCRIPTION	XL45	MTH40	MTH45	MTH45S	NOTE

From 4-8165 Up to 8-9339	DATE: 01/2014	PAGE: Y2-0505-51
RADIATOR ASSY - MTH 45'		

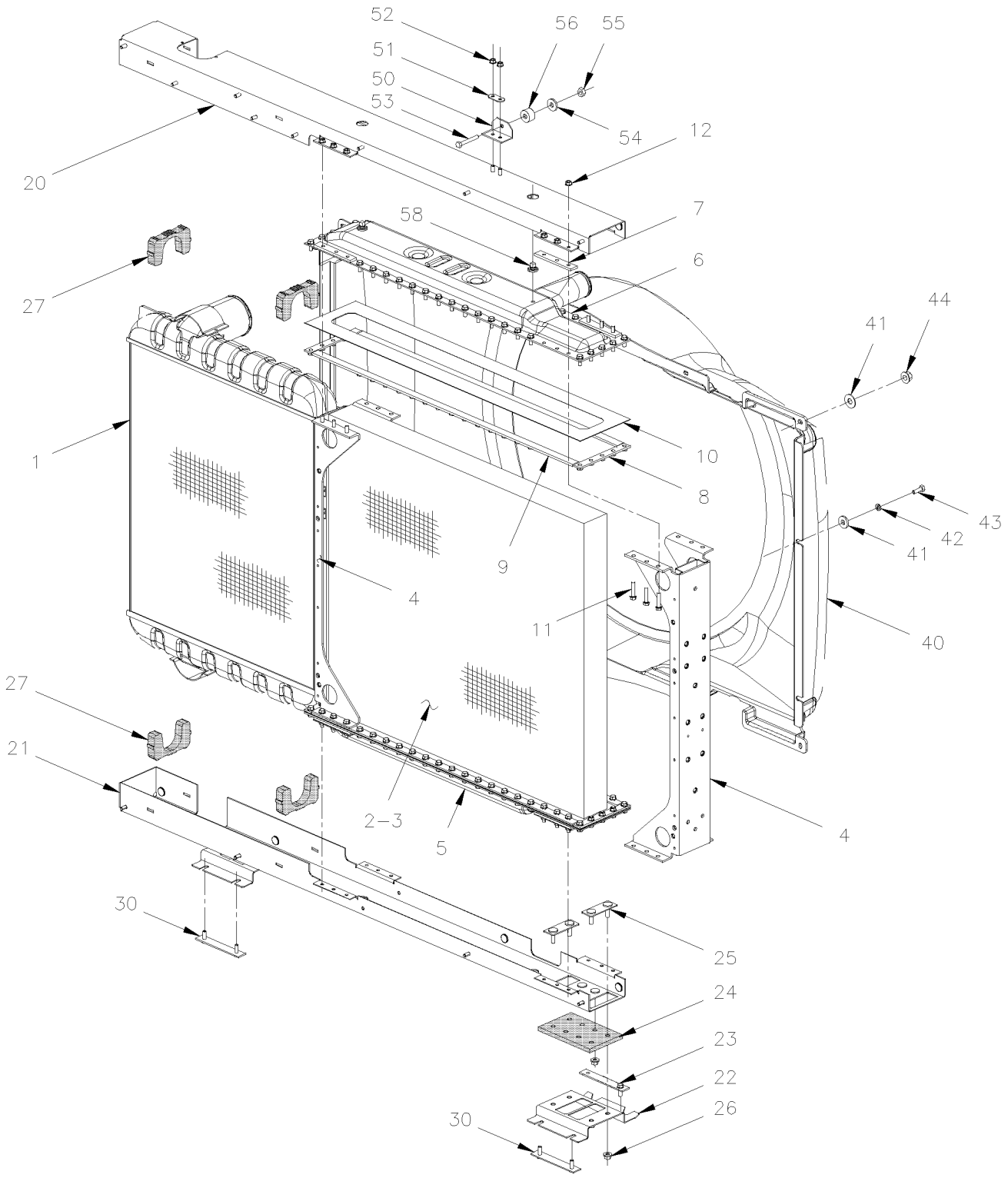

From 4-8165 Up to 8-9339	DATE: 01/2014	PAGE: Y2-0505-51

RADIATOR ASSY - MTH 45'

ITEM	PART	DESCRIPTION	XL45	MTH40	MTH45	MTH45S	NOTE
	550819	RADIATOR & AIR COOLER / SIDE/SIDE			1		A
1	550847	. AIR COOLER ASSY / SIDE BY SIDE MODEL / REPLACED BY: 550959			1		
. NS	MI06-02	. . SEE MAINTENANCE INFORMATION			1		
1	550976	. AIR COOLER ASSY / "duralite" / SIDE BY SIDE MODEL			1		
1	550959	. AIR COOLER ASSY / "TitanX" / SIDE BY SIDE MODEL			1		
2	550846	. RADIATOR ASSY			1		
3	550863	. . CORE			1		
4	550866	. . SIDE MEMBER			2		
5	550865	. . TANK BOTTOM			1		
6	550864	. . TANK TOP			1		
7	550867	. . REINFORCEMENT STRIP (TAPPED) / REPLACED BY: 550952			8		
8	550868	. . REINFORCEMENT STRIP			4		
9	550859	. . REINFORCEMENT STRIP			1		
10	550857	. . GASKET / REPLACED BY: 550952			2		
10	550952	. . GASKET			2		
11	500179	. . SCREW CAP HEX 5/16-18x3/4 G5 ZP			74		
11	500183	. . SCREW CAP HEX 5/16-18x1 1/2 G5 PT ZP			24		
12	5001083	. . NUT HEXF NYRT 5/16-18 ZP			76		
20	550869	. SUPPORT UPPER			1		
21	550870	. SUPPORT LOWER STEEL			1		A
21	053525	. SUPPORT LOWER STAINLESS STEEL			1		B
22	550861	. SUPPORT LOWER STEEL			2		A
22	053529	. SUPPORT LOWER STAINLESS STEEL			1		B
23	550862	. SUPPORT LOWER ASSY			4		
24	550872	. RUBBER PAD			2		
25	550871	. INSIDE STRIP SUPPORT			4		
26	500301	. NUT HEXF STO 3/8-16 ZP			16		
27	550873	. INSULATOR MOUNTING			24		
30	052497	ATTACHMENT, STRIP 150MM W/2 STUDS			4		
40	052464	SHROUD / W/36" FAN BLADE			1		
41	500831	SCREW CAP HEX 3/8-16x2 G5 ZP			AR		
42	500942	WASHER LO SPT .317x.586x.078 ZG603			AR		
43	500836	SCREW CAP HEX 5/16-18x3/4 G5 ZG603			AR		
44	502902	NUT HEXF NYRT 5/16-18 ZG603			AR		
50	052525	ANGLE SUPPORT, UPPER RADIATOR			1		
51	052557	PLATE HOLDING / W/2 HOLES 1" C/C			1		
52	502902	NUT HEXF NYRT 5/16-18 ZG603			4		
53	500207	SCREW CAP HEX 3/8-16x2 1/2 G5 N500			1		
54	500832	WASHER FL .406x.812x.065 ZG603			1		
55	500208	NUT HEX STO 3/8-16 ZG603			1		
56	661074	BUSHING / RUBBER / (TWO PIECES) ¾" x 5/8" I.D.			2		
		A) FOR PRODUCT IMPROVMENT FOR LOWER STAINLESS					
		SUPPORT ASK FOR KIT # 052936					
		B) THIS PART IT NOT INCLUDE WITH # 550819					

From 4-8165 Up to 8-9339	DATE: 01/2014	PAGE: Y2-0505-51

RADIATOR ASSY - MTH 45'

ITEM	PART	DESCRIPTION	XL45	MTH40	MTH45	MTH45S	NOTE
57	505217	SPACER 7/16" X 1 1/4"			1		
58	501037	MALE ELBOW 90º / SAE 45º FITTING / #4FL-Mx1/4NPT-M BR			1		
59	052936	KIT LOWER SUPPORT RADIATOR STAINLESS STEEL			1		
. NS	053525	. SUPPORT LOWER STAINLESS STEEL			1		
. NS	053529	. SUPPORT LOWER STAINLESS STEEL			1		

From 4-8165 Up to 8-9339	DATE: 01/2014	PAGE: Y2-0505-51

RADIATOR ASSY - MTH 45'

ITEM	PART	DESCRIPTION	XL45	MTH40	MTH45	MTH45S	NOTE

From Y-7046 Up to 8-9339	DATE: 01/2014	PAGE: Y2-0510-00
SURGE TANK		

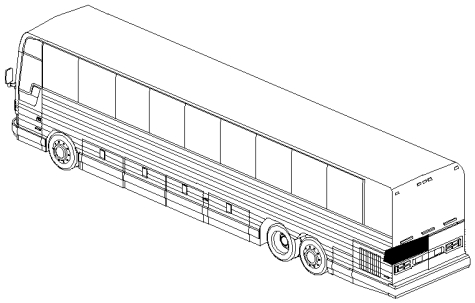

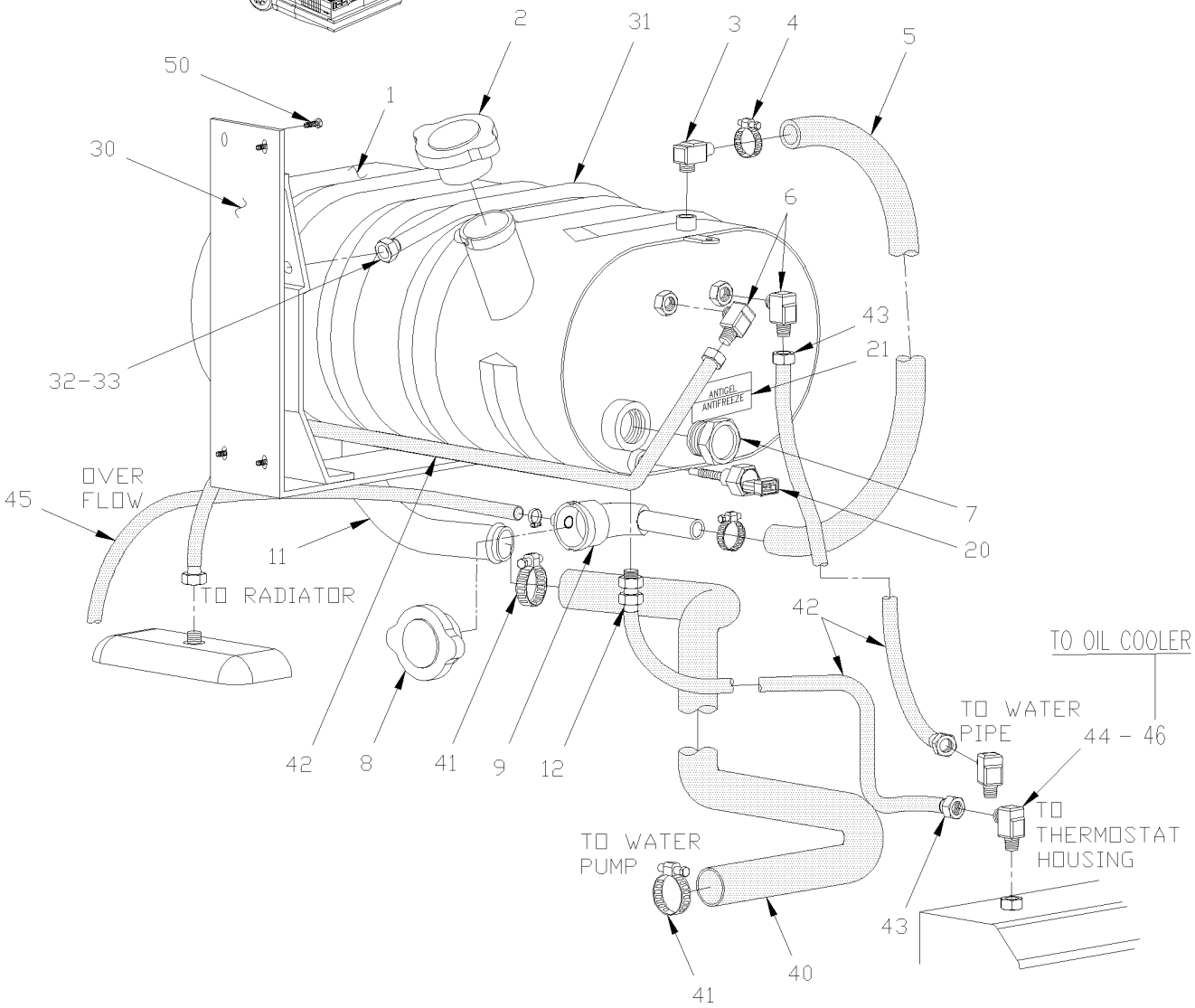

From Y-7046 Up to 8-9339	DATE: 01/2014	PAGE: Y2-0510-00

SURGE TANK

ITEM	PART	DESCRIPTION	XL45	MTH40	MTH45	MTH45S	NOTE
	052287P	TANK ASSY (S.S.) Up to 3-8164	1	1	1	1	
	Call Order Desk	TANK ASSY (S.S.) From 4-8165	1	1	1	1	P
1	052286	. TANK (S.S.) Up to 3-8164	1	1	1	1	
1	052528	. TANK (S.S.) From 4-8165	1	1	1	1	
2	052355	. . CAP FILLER	1	1	1	1	
3	5011025	. MALE ELBOW 90º / BEADED HOSE BARB / #10x1/4NPT-M	1	1	1	1	
4	504019	. HOSE CLAMP / 9/16"-1"1/16 SS / HS-10	2	2	2	2	
5	051554	. HOSE #10 560MM	1	1	1	1	
6	501037	. MALE ELBOW 90º / SAE 45º FITTING / #4FL-Mx1/4NPT-M BR	2	2	2	2	
7	550618	. SIGHT GLASS 1" NPT Up to 3-8164 / REPLACED BY: 21331481	1	1	1	1	
7	550850	. SIGHT GLASS 1/2" NPT From 4-8165	1	1	1	1	
. NS	N8881803	_. BODY ½ NPT From 4-8165	1	1	1	1	
. NS	N8881804	_. NUT BODY TO FIX GLASS From 4-8165	1	1	1	1	
. NS	N8881805	_. GLASS From 4-8165	1	1	1	1	
. NS	N8881806	_. O-RING From 4-8165	1	1	1	1	
8	550606	. CAP PRESSURE / OVER 14 LBS	1	1	1	1	
9	051495	. PIPE ASSY	1	1	1	1	
11	5011036	. MALE ELBOW 90° / COLLAR FITTING / 1NPT-Mx#16 STL	1	1	1	1	
12	501027	. MALE CONNECTOR / SAE 45º FITTING / #4FL-Mx1/4NPT-M BR	1	1	1	1	
20	562395	. SENSOR PROBE "LOW LEVEL COOLANT" / 1/4" NPT	1	1	1	1	
21	050682	. DECAL / ANTIFREEZE Up to 5-8404 / REPLACED BY: 052635	1	1	1	1	
21	052635	. DECAL SPEC / ANTIFREEZE / W/ "DETROIT" ENGINE FR/ENG From 5-8405	1	1	1	1	
30	052250	. SUPPORT EXPANSION TANK ASSY Up to 2-7888	1	1	1	1	
30	052483	. SUPPORT EXPANSION TANK ASSY From 2-7889 Up to 3-8164	1	1	1	1	
30	052501	. SUPPORT EXPANSION TANK ASSY From 4-8165 Up to 4-8229	1	1	1	1	
30	052565	. SUPPORT EXPANSION TANK ASSY From 4-8230	1	1	1	1	
31	052245	. ROD	1	1	1	1	
32	502543	. NUT HEX M8-1.25 ZP	2	2	2	2	
33	500868	. NUT HEX NYRT M8-1.25 CP	2	2	2	2	
40	052342	HOSE 1" I.D. 1574MM Up to Y-7280 / REPLACED BY: 052388	1	1	1	1	
40	052388	HOSE 1" I.D. 1345MM From Y-7281 Up to 3-8164	1	1	1	1	
40	052510	HOSE 1" I.D. X 1194MM From 4-8165	1	1	1	1	
40	503579	. HOSE 1" I.D. X 50' / "GREEN STRIPE"	AR	AR	AR	AR	
NS	5011147	FEMALE CONNECTOR SWIVEL / COLLAR FITTING / #16JIC-Fx#16 STL	1	1	1	1	
NS	5011255	MALE ELBOW 90° / JIC 37° FITTING / #16JIC-MxM33-2.0 ORB-M STL	1	1	1	1	
41	504658	HOSE CLAMP / 13/16"-1"3/4 / C.T. 9420	2	2	2	2	
42	052333	HOSE ASSY / #4 990MM Up to 3-8164	3	3	3	3	
42	052507	HOSE ASSY / TO RADIATOR / #4 655MM From 4-8165	1	1	1	1	
42	052508	HOSE ASSY / TO THERMOSTAT / #4 956MM From 4-8165	1	1	1	1	
42	503692	. HOSE / (SAFETY STRIPE) / 1/4" I.D. 50' / S.L.	AR	AR	AR	AR	
43	501347	. FEMALE CONNECTOR SWIVEL / PUSH-LOK FITTING #4JIC-Fx#4 BR	2	2	2	2	
44	501037	MALE ELBOW 90º / SAE 45º FITTING / #4FL-Mx1/4NPT-M BR	1	1	1	1	
		P) CALL ORDER DESK FOR SPECIFIC APPLICATION					
		(V.I.N.)					

From Y-7046 Up to 8-9339	DATE: 01/2014	PAGE: Y2-0510-00

SURGE TANK

ITEM	PART	DESCRIPTION	XL45	MTH40	MTH45	MTH45S	NOTE
45	503047	HOSE RUBBER #6 / S.L.	AR	AR	AR	AR	
46	052509	HOSE ASSY TEFLON #4 1170MM From 4-8165	1	1	1	1	
50	500417	SCREW TP BDG PH #6x3/8 ZP	4	4	4	4	
NS	685125	ANTIFREEZE / ETHYLENE GLYCOL / SPEC #7SE298 & TMC RP-329, T	AR	AR	AR	AR	
. NS	MI04-06	. SEE MAINTENANCE INFORMATION	1	1	1	1	

From Y-7046 Up to 8-9339	DATE: 01/2014	PAGE: Y2-0510-00

SURGE TANK

ITEM	PART	DESCRIPTION	XL45	MTH40	MTH45	MTH45S	NOTE

From Y-7046 Up to 3-8164	DATE: 01/2014	PAGE: Y2-0518-00

RADIATOR SEALING FRAME

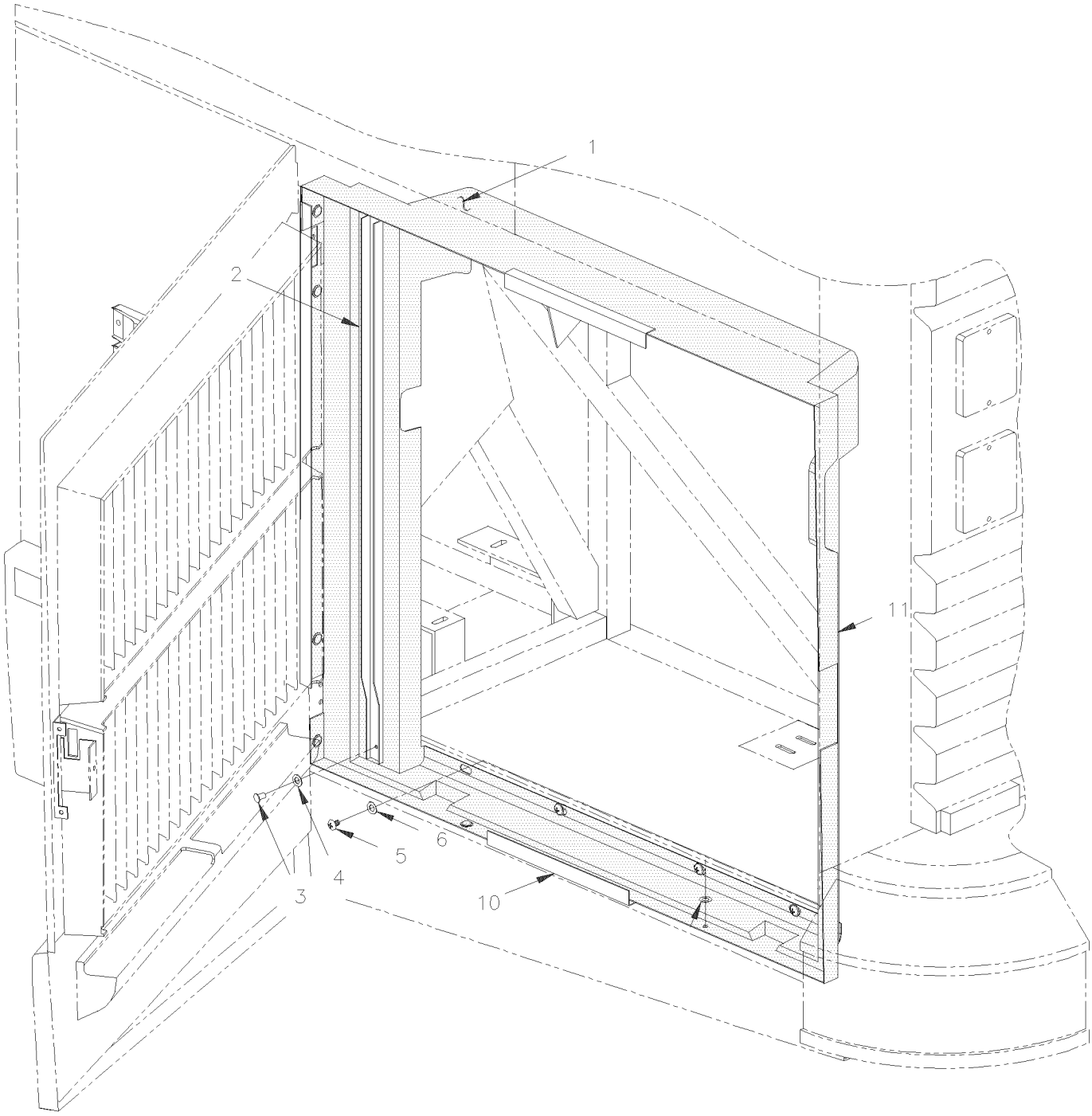

From Y-7046 Up to 3-8164	DATE: 01/2014	PAGE: Y2-0518-00

RADIATOR SEALING FRAME

ITEM	PART	DESCRIPTION	XL45	MTH40	MTH45	MTH45S	NOTE
1	052354	FRAME, SEALING Up to Y-7264	1				
1	052396	FRAME, SEALING From Y-7265	1				
1	052193	FRAME, SEALING		1			
1	052192	FRAME, SEALING		1	1		
1	052193	FRAME, SEALING				1	
NS	506003	TAPE RUB ADH1 CC POL 3/16" x 3/4" x 40' / GREY 2520X	AR	AR	AR	AR	
NS	506007	TAPE RUB ADH1 CC NEO 3/4" x 1" x 10' / BLACK 1220	AR	AR	AR	AR	
NS	506302	RUBBER EXTRUSION TRIM SEAL / GRIP .024 / 7/16" HOLLOW BULB C.T.L.		AR	AR		
2	051986	U CHANEL RETAINER	1	1	1	1	
3	504340	RIVET POP DOME OE 1/8x3/16 SS	AR	AR	AR	AR	
4	502630	WASHER FL .156x.375x.049 ZP	AR	AR	AR	AR	
5	500179	SCREW CAP HEX 5/16-18x3/4 G5 ZP	8	8	8	8	
6	500874	WASHER FL 8.4x17.0x1.6 ZP	8	8	8	8	
10	212056	RETAINER 12" / WELDED TO FRAME	2	2	2	2	
11	212055	RETAINER 32" / WELDED TO FRAME	2	2	2	2	

From 4-8165 Up to 8-9339	DATE: 01/2014	PAGE: Y2-0518-01

RADIATOR SEALING FRAME - BUS, MTH 40' & MTH-45E

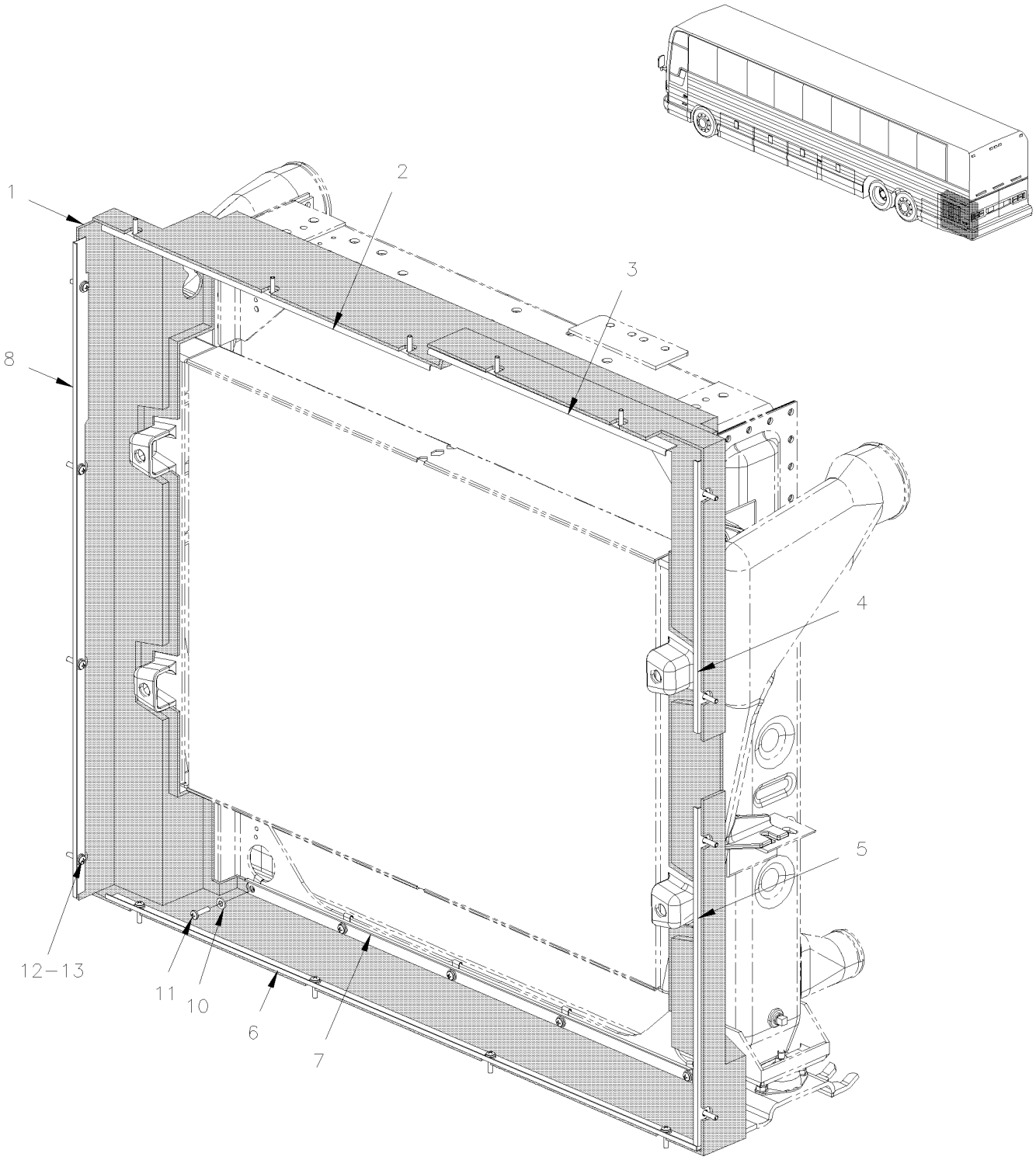

From 4-8165 Up to 8-9339	DATE: 01/2014	PAGE: Y2-0518-01

RADIATOR SEALING FRAME - BUS, MTH 40' & MTH-45E

ITEM	PART	DESCRIPTION	XL45	MTH40	MTH45	MTH45S	NOTE
1	052523	FRAME, SEALING		1		1	
NS	052524	CLOSING PLATE LOWER BACKWARD / W/LARGE A/C		1		1	
NS	5001067	WASHER FL .128x.312x.032 SS		4		4	
NS	504339	RIVET POP DOME OE 1/8x3/8 SS		4		4	
1	052446	FRAME, SEALING	1				
2	052458	ANGLE REINFORCEMENT 611MM	1	1		1	
3	052457	ANGLE REINFORCEMENT 442MM	1	1		1	
4	052454	ANGLE REINFORCEMENT 395MM	1	1		1	
5	052453	ANGLE REINFORCEMENT 491MM	1	1		1	
6	052452	ANGLE REINFORCEMENT 827MM	1	1		1	
7	052455	ANGLE REINFORCEMENT 1100MM	1	1		1	
8	052459	ANGLE REINFORCEMENT 957MM	1	1		1	
10	502638	WASHER FL .312x.734x.065 ZG603	10	10		10	
11	502830	SCREW CAP HEX M6-1.0x20 G8.8 ZG603	10	10		10	
11	502738	NUT SPR U M6-1.0 0.6-4.0	10	10		10	
12	500526	SCREW TP CAP HEXW #12x3/4 ZG603	17	17		17	
13	500877	WASHER FL .250x.562x.065 ZG603	17	17		17	

From 4-8165 Up to 8-9339	DATE: 01/2014	PAGE: Y2-0518-50

RADIATOR SEALING FRAME - MTH 45'

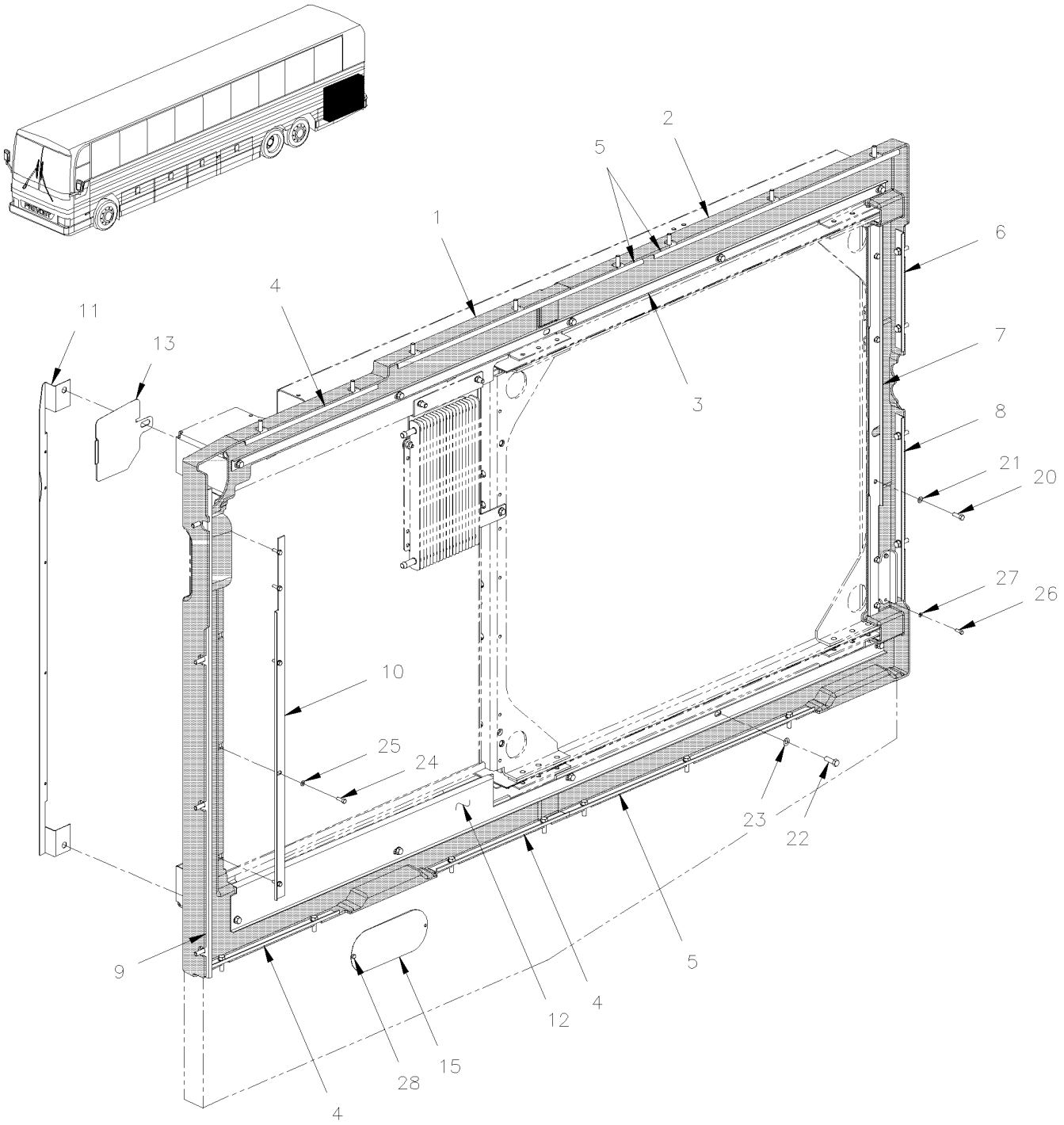

From 4-8165 Up to 8-9339	DATE: 01/2014	PAGE: Y2-0518-50

RADIATOR SEALING FRAME - MTH 45'

ITEM	PART	DESCRIPTION	XL45	MTH40	MTH45	MTH45S	NOTE
1	052546	FRAME, SEALING / FORWARD Up to 5-8805			1		
1	052622	FRAME, SEALING / FORWARD TOP SECTION From 5-8806			1		
2	052505	FRAME, SEALING / BACKWARD Up to 5-8805			1		
2	052623	FRAME, SEALING / FORWARD BOTTOM SECTION From 5-8806			1		
NS	506001	TAPE RUB ADH1 CC POL 1/8" x 3/4" x 50' / GREY 2520X			AR		
NS	506004	TAPE RUB ADH1 CC POL 3/8" x 1/2" x 20' / GREY 2520X			AR		
NS	506302	RUBBER EXTRUSION TRIM SEAL / GRIP .024 / 7/16" HOLLOW BULB C.T.L.			AR		
3	052513	ANGLE REINFORCEMENT 1628.4MM Up to 5-8805			1		
3	052638	ANGLE REINFORCEMENT 800MM From 5-8806			1		
4	052457	ANGLE REINFORCEMENT 442MM			3		
5	052458	ANGLE REINFORCEMENT 611MM			2		
6	052549	ANGLE REINFORCEMENT 230MM			1		
7	052521	ANGLE REINFORCEMENT 760MM			1		
8	052548	ANGLE REINFORCEMENT 355MM			1		
9	052459	ANGLE REINFORCEMENT 957MM Up to 5-8805			1		
9	052637	ANGLE REINFORCEMENT 850MM From 5-8806			1		
10	052519	ANGLE REINFORCEMENT 700MM			1		
11	052537	ANGLE REINFORCEMENT 915MM			1		
12	052543	ANGLE REINFORCEMENT 1613.4MM			1		
13	052544	CLOSING PANEL ACCESS TRAP Up to 5-8805			1		
13	052639	ANGLE REINFORCEMENT 860MM From 5-8806			1		
15	052200	CLOSING PLATE 80MM X 190MM			1		
20	502848	SCREW TC CAP HEX 1/4-20x3/4 ZG603			6		
21	955920	WASHER LO SPT 6.5x11.5x1.6 ZP			6		
22	502902	NUT HEXF NYRT 5/16-18 ZG603			10		
23	192288	WASHER FL 8.4x18.0x2.0 ZG603			10		
24	500526	SCREW TP CAP HEXW #12x3/4 ZG603			38		
25	500877	WASHER FL .250x.562x.065 ZG603			38		
26	504339	RIVET POP DOME OE 1/8x3/8 SS			AR		
27	5001067	WASHER FL .128x.312x.032 SS			AR		

From Y-7046 Up to 3-8164	DATE: 01/2014	PAGE: Y2-0520-00

FAN DRIVE - INSTALLATION - SHORT

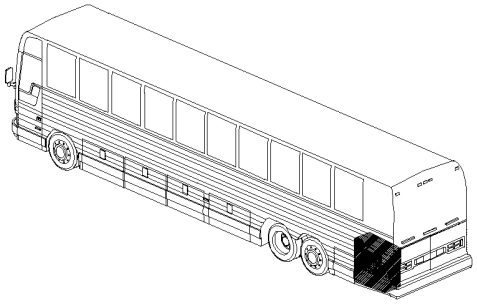

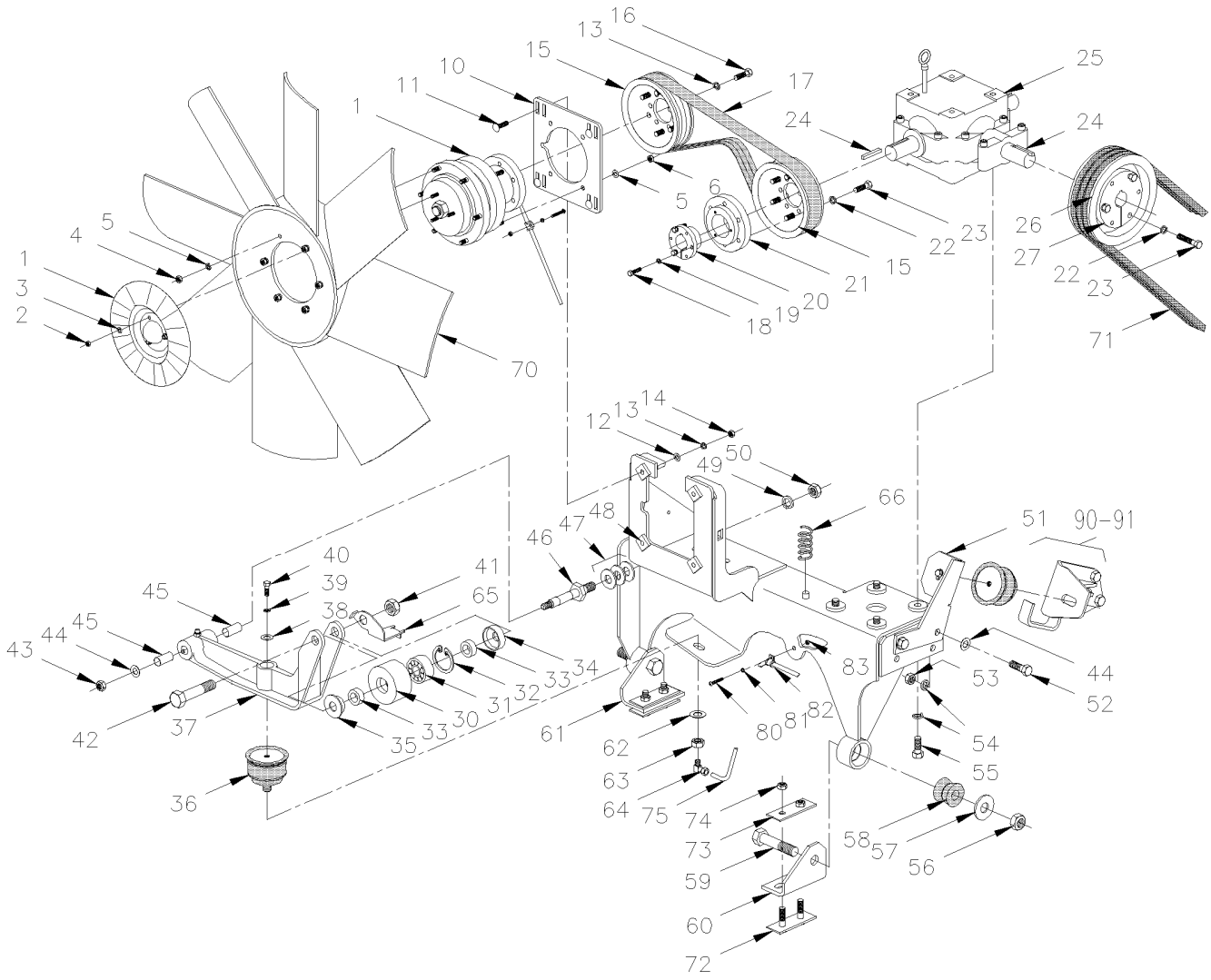

From Y-7046 Up to 3-8164	DATE: 01/2014	PAGE: Y2-0520-00

FAN DRIVE - INSTALLATION - SHORT

ITEM	PART	DESCRIPTION	XL45	MTH40	MTH45	MTH45S	NOTE
	052006P	FAN DRIVE ASSY	1	1	1	1	
1	Y2-0540-00	**. FAN CLUTCH ASSY - #550803 - BUS**					
1	Y2-0540-50	**. FAN CLUTCH ASSY - #550802 - MTH**					
2	502511	. . NUT HEX NYRT M6-1.0 ZP	3	3	3	3	
3	502573	. . WASHER FL 6.4x12.5x1.6 SS	3	3	3	3	
4	502543	. . NUT HEX M8-1.25 ZP	6	6	6	6	
5	500874	. . WASHER FL 8.4x17.0x1.6 ZP	8	8	8	8	
NS	502644	. . WASHER FL 10.5x30.0x2.5 ZP		8	8	8	
6	502744	. . NUT HEX STO M8-1.25 ZP	4	4	4	4	
NS	500680	. . NUT HEX STO M10-1.5 ZP		4	4	4	
NS	052196	. PLATE TRANSITION / <> FAN CLUTCH & SUPPORT		1	1	1	
11	5001208	. SCREW CRG M8-1.25x30 G8.8 ZP	4	4	4	4	
12	500874	. WASHER FL 8.4x17.0x1.6 ZP	8	8	8	8	
13	5001003	. WASHER LO SPT 8.1x12.7x2.0 ZP	10	10	10	10	
14	502543	. NUT HEX M8-1.25 ZP	4	4	4	4	
15	051830	. PULLEY / W/10RIB X 6.10" DIA / REPLACED BY: 052587	2	2	2	2	
16	502528	. SCREW CAP HEX M8-1.25x20 G8.8 EMN	6	6	6	6	
17	506688	. MULTI V-BELT / 10 RIB 51" 5100510-51	1	1	1	1	
18	500177	. SCREW CAP HEX 1/4-20x1 G8 ZP	3	3	3	3	
19	500473	. WASHER LO SPT .262x.489x.062 ZP	3	3	3	3	
20	550690	. CONE BUSHING 1 1/4 I.D X 1 13/16 O.D. X 2 5 / REPLACED BY: 550879	1	1	1	1	
21	050907	. COUPLING FAN / TO FIX PULLEY / REPLACED BY: 052593	3	3	3	3	
22	500478	. WASHER LO SPT .380x.683x.094 ZP	6	6	6	6	
23	500048	. SCREW CAP HEX 3/8-24x1 1/4 G5 ZP	6	6	6	6	
24	550186	. KEY 1/4" X 1/4" X 1 1/4"	2	2	2	2	
25	Y2-0525-00	**. GEARBOX "SUPERIOR" - #550789, 550810 & 550897**					
26	051603	. PULLEY (3V X 7.40 DIA)	1	1	1	1	
27	550691	. CONE BUSHING 1 1/4 I.D X 3 O.D. X 4 5/8 O.D / REPLACED BY: 550878	1	1	1	1	
30	052208	. PULLEY ASSY W/BEARING & SEAL / 43MM x 78MM	1	1	1	1	
30	052676	. PULLEY ASSY W/BEARING & SEAL / 54MM x 75MM O.D.	1	1	1	1	A
30	052207	. . PULLEY BELT TENSIONER / 43MM x 78MM O.D. / REPLACED BY: 052594	1	1	1	1	
30	052677	. . PULLEY / 54MM WIDE x 75MM O.D.	1	1	1	1	A
31	507340	. . BALL BEARING	1	1	1	1	
31	510618	. . BALL BEARING DBL ROW /	1	1	1	1	A
32	504095	. . RING RETAINER / INT 2.00 x 2.12 x .062	1	1	1	1	
32	504040	. . RING RETAINER / INT 2.440 x 1.860 x 0.078 STL BLK	1	1	1	1	A
33	052205	. . SPACER 20MM I.D. X 12.5MM TH	2	2	2	2	
33	052627	. . BUSHING TRANSFER FAN	2	2	2	2	A
34	507361	. . SEAL	1	1	1	1	
		A) THIS PART ARE INCLUDE WITH NEW ARM ASSY #					
		052689					

From Y-7046 Up to 3-8164	DATE: 01/2014	PAGE: Y2-0520-00

FAN DRIVE - INSTALLATION - SHORT

ITEM	PART	DESCRIPTION	XL45	MTH40	MTH45	MTH45S	NOTE
34	507371	. . SEAL	1				A
35	507360	. . SEAL	1	1	1	1	
35	507371	. . SEAL	1				A
NS	680500	. . GREASE 400 GR	AR	AR	AR	AR	
35	680752	. . GREASE LITHIUM / BLUE	AR				A
36	950208	. BELLOW ASSY 3" O.D. / BELT TENSIONER	2	2	2	2	
. NS	504695	. . HOSE CLAMP STEPLESS SPRING SS /	1	1	1	1	
37	051991	. ARM, BELT TENSIONER / IRON USE W 45MM WIDE PULLEY / REPLACED BY: 052689	1	1	1	1	B
37	052624	. ARM, BELT TENSIONER / IRON USE W 54MM WIDE PULLEY	1				A
38	500985	. WASHER FL .343x.875x.125 ZP	1	1	1	1	
39	500476	. WASHER LO SPT .317x.586x.078 ZP	1	1	1	1	
40	5001132	. SCREW CAP HEX 5/16-18x7/8 G5 ZP	1	1	1	1	
41	500735	. NUT HEX STO 3/4-16 ZP	3	3	3	3	
42	500145	. SCREW CAP HEX 3/4-16x3 1/2 G5 ZP	3	3	3	3	
42	983296	. SCREW CAP HEX M20-2.5x90 G10.9 ZP	1	1	1	1	A,S
43	500811	. NUT HEX STO M12-1.75 DP	1	1	1	1	
43	5001628	. NUT HEX NYRT M10-1.5 SS	1	1	1	1	S
44	500446	. WASHER FL .531x1.250x.125 ZP	1	1	1	1	
44	500270	. WASHER FL .406x1.000x.063 SS	1	1	1	1	S
45	507293	. BUSHING NYLINED .625x.750x.750	2	2	2	2	
46	052003	. PIVOT / TO FIX TENSIONER TO SUPPORT / REPLACED BY: 052670	1	1	1	1	
46	052670	. PIVOT / TO FIX TENSIONER TO SUPPORT	1	1	1	1	
46	501497	. GREASE FITTING / 1/4-28	1	1	1	1	
47	500449	. WASHER FL .625x1.500 SS	AR	AR	AR	AR	
48	052198	. SUPPORT FAN CLUTCH & GEAR BOX / SHORT Up to 2-7809 / REPLACED BY: 052665	1	1	1	1	
48	059056	. SUPPORT FAN CLUTCH & GEAR BOX / SHORT From 2-7810 / REPLACED BY: 052665	1	1	1	1	
49	500802	. WASHER LO SPT 16.2x37.4x3.5 ZP	1	1	1	1	
50	502588	. NUT HEX M16-2.0 ZP	1	1	1	1	
51	052346	BELLOW TENSIONER Up to 2-7809 / REPLACED BY: 059050	1				
51	059050	BELLOW TENSIONER From 2-7810	1				
51	052066	BELLOW TENSIONER Up to 2-7809 / REPLACED BY: 059049		1	1	1	
51	059049	BELLOW TENSIONER From 2-7810		1	1	1	
52	500088	SCREW CAP HEX 1/2-20x1 1/2 G5 ZP	2	2	2	2	
53	500716	NUT HEX 1/2-20 ZP	2	2	2	2	
54	500482	WASHER LO SPT .506x.873x.125 ZP	6	6	6	6	
55	500214	SCREW CAP HEX 1/2-13x1 1/4 G5 ZP	4	4	4	4	
57	500451	WASHER FL .812x2.000x.148 ZP	2	2	2	2	
58	630002	BUSHING / RUBBER / (TWO PIECES) 1" x 1.005" I.D.	2	2	2	2	
NS	507347	SPACER / BUSHING	2	2	2	2	
		A) THIS PART ARE INCLUDE WITH NEW ARM ASSY #					
		052689					
		B) THIS ARM IT SUPPERSEEDED BY # 052689 ARM ASSY					
		W/PULLEY					
		S) SERVICE					

From Y-7046 Up to 3-8164	DATE: 01/2014	PAGE: Y2-0520-00

FAN DRIVE - INSTALLATION - SHORT

ITEM	PART	DESCRIPTION	XL45	MTH40	MTH45	MTH45S	NOTE
60	052347	SUPPORT, ANGLE / FRONT Up to 2-7809 / REPLACED BY: 059054	1				
60	059054	SUPPORT, ANGLE / FRONT From 2-7810	1				
60	052123	SUPPORT, ANGLE / FRONT Up to 2-7809 / REPLACED BY: 059053		1	1	1	
60	059053	SUPPORT, ANGLE / FRONT From 2-7810		1	1	1	
61	052348	SUPPORT, ANGLE / REAR Up to 2-7809 / REPLACED BY: 059052	1				
61	059052	SUPPORT, ANGLE / REAR From 2-7810	1				
61	052124	SUPPORT, ANGLE / REAR Up to 2-7809 / REPLACED BY: 059051		1	1	1	
61	059051	SUPPORT, ANGLE / REAR From 2-7810		1	1	1	
62	5001150	WASHER FL 17.0x30.0x3.0 ZP	1	1	1	1	
63	500792	NUT HEX 5/8-11 ZP	1	1	1	1	
64	501808	MALE ELBOW 45º / SAE 45º FITTING / #4FL-Mx1/8NPT-M BR	1	1	1	1	
65	052206	SPRING ATTACHMENT W/45MM WIDE PULLEY	1	1	1	1	
66	502247	SPRING COMPRESSION / 1.250 O.D. x 2.5 x .125	1	1	1	1	
70	550686	FAN ASSY / CW 32" / 9 BLADES PLASTIC	1				
70	550757	FAN ASSY / CW 36" / 8 BLADES PLASTIC		1	1	1	
71	506691	V-BELT / AX-73 9012-2073	3	3	3	3	
72	051779	ATTACHMENT PLATE ASSY / TO FIX ANGLE TO FLOOR	2	2	2	2	
73	050706	SPACER 3/8" TH	AR	AR	AR	AR	
73	050705	SPACER 1/4" TH	AR	AR	AR	AR	
74	500714	NUT HEX STO 7/16-20 ZP	4	4	4	4	
NS	500666	NUT SPR FL REC 7/16-20 .69x.91	4	4	4	4	
75	031145	HOSE ASSY TEFLON #4 611MM	1	1	1	1	
80	500574	SCREW MA TR PH #10-24x1 1/4 SS	1	1	1	1	
81	500470	WASHER LO SPT .193x.334x.047 ZP	2	2	2	2	
82	560503	CLAMP / 1/4" I.D. / REPLACED BY: 952624	1	1	1	1	
83	500786	NUT HEX #10-24 ZP	1	1	1	1	
90	052050	SUPPORT BELLOW TENTIONER Up to 2-7809 / REPLACED BY: 059055	1				
90	059055	SUPPORT BELLOW TENSIONER From 2-7810	1				
91	Y2-0125-00	**BELTS TENSIONERS - WITH DETROIT S-60**					
NS	052689	KIT, RETROFIT ARM W/54MM PULLEY	1	1	1	1	

From 4-8165 Up to 6-8814	DATE: 01/2014	PAGE: Y2-0520-01

FAN DRIVE - INSTALLATION - SHORT

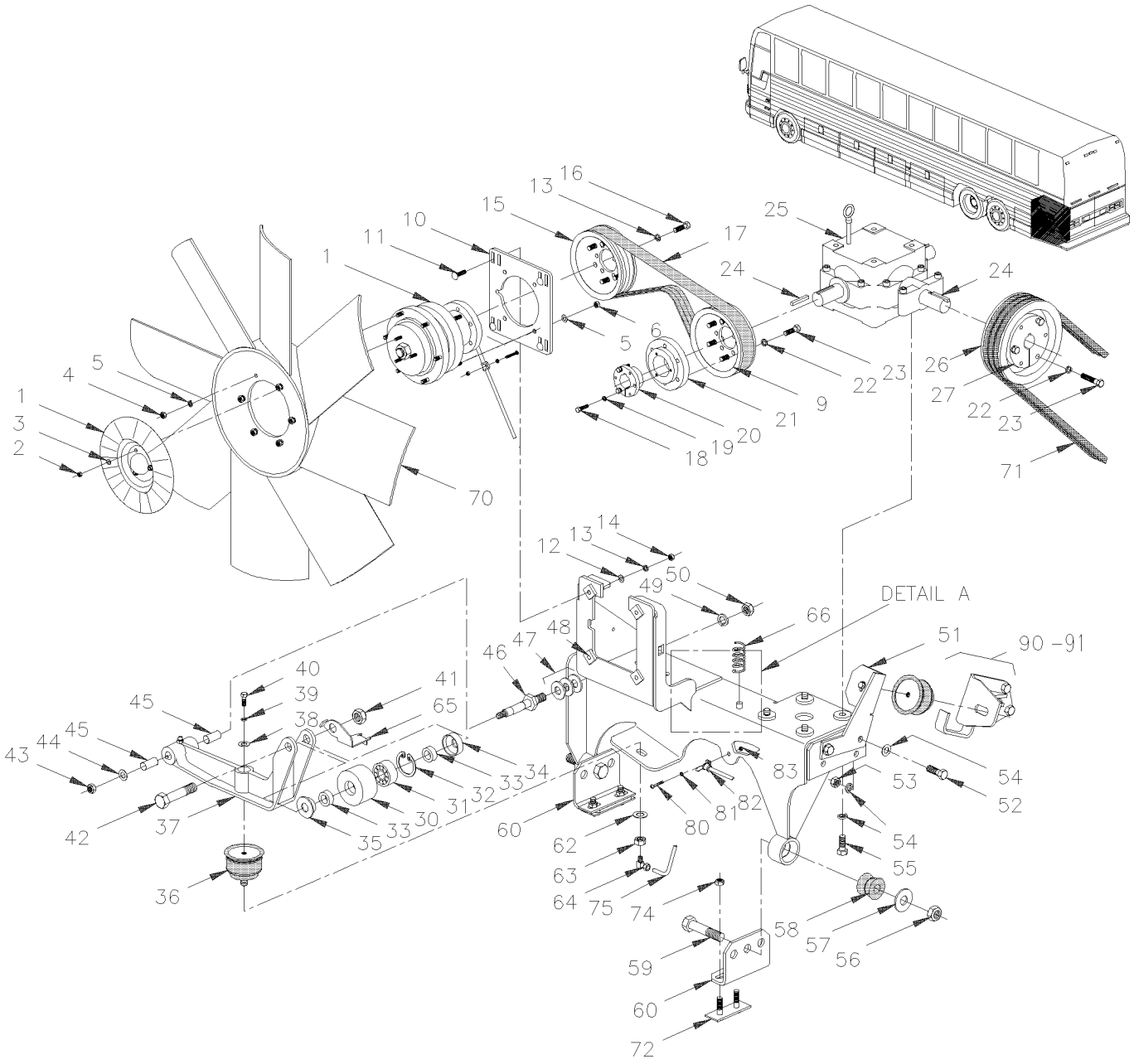

From 4-8165 Up to 6-8814	DATE: 01/2014	PAGE: Y2-0520-01

FAN DRIVE - INSTALLATION - SHORT

ITEM	PART	DESCRIPTION	XL45	MTH40	MTH45	MTH45S	NOTE
	N.S.A.	FAN DRIVE ASSY	1	1		1	3
1	Y2-0540-02	**. FAN CLUTCH ASSY - #550836 - BUS, MTH 40' & MTH-45E**					
2	502511	. . NUT HEX NYRT M6-1.0 ZP	3	3		3	
3	502573	. . WASHER FL 6.4x12.5x1.6 SS	3	3		3	
4	502543	. . NUT HEX M8-1.25 ZP	6	6		6	
5	500897	. . WASHER FL .437x1.000x.083 ZG603	8	8		8	
6	5001758	. . NUT HEX STO M10-1.5 ZG603	4	4		4	
9	051830	. PULLEY / W/10RIB X 6.10" DIA Up to 5-8412 / REPLACED BY: 052587	1	1		1	
9	052587	. PULLEY / W/10RIB X 6.10" DIA From 5-8413	1	1		1	
10	052437	. PLATE TRANSITION / <> FAN CLUTCH & SUPPORT	1	1		1	
11	5001208	. SCREW CRG M8-1.25x30 G8.8 ZP	4	4		4	
12	500874	. WASHER FL 8.4x17.0x1.6 ZP	8	8		8	
13	502889	. WASHER LO SPT 8.1x12.7x2.0 ZG603	10	10		10	
14	502543	. NUT HEX M8-1.25 ZP	4	4		4	
15	051830	. PULLEY / W/10RIB X 6.10" DIA Up to 5-8412 / REPLACED BY: 052587	1	1		1	
15	052587	. PULLEY / W/10RIB X 6.10" DIA From 5-8413	1	1		1	
16	502528	. SCREW CAP HEX M8-1.25x20 G8.8 EMN	6	6		6	
17	506684	. MULTI V-BELT / 10 RIB 55" 550K10	1	1		1	
18	500171	. SCREW CAP HEX 1/4-20x1 G5 ZG603	3	3		3	
19	955920	. WASHER LO SPT 6.5x11.5x1.6 ZP	3	3		3	
20	550690	. CONE BUSHING 1 1/4 I.D X 1 13/16 O.D. X 2 5 Up to 5-8412 / REPLACED BY: 550879	1	1		1	
20	550879	. CONE BUSHING 1 1/4 I.D X 1 13/16 O.D. X 2 5 From 5-8413	1	1		1	
21	050907	. COUPLING FAN / TO FIX PULLEY Up to 5-8412 / REPLACED BY: 052593	1	1		1	
21	052593	. COUPLING FAN / TO FIX PULLEY From 5-8413	1	1		1	
22	500218	. WASHER LO SPT .380x.683x.098 DP320	6	6		6	
23	502906	. SCREW CAP HEX 3/8-24x1 1/4 G5 ZG603	6	6		6	
24	550186	. KEY 1/4" X 1/4" X 1 1/4"	2	2		2	
25	Y2-0525-00	**. GEARBOX "SUPERIOR" - #550789, 550810 & 550897**					
26	052500	. PULLEY (3V X 6.92 DIA) Up to 5-8412 / REPLACED BY: 052585	1	1		1	
26	052585	. PULLEY (3V X 6.92 DIA) From 5-8413	1	1		1	
27	550691	. CONE BUSHING 1 1/4 I.D X 3 O.D. X 4 5/8 O.D Up to 5-8412 / REPLACED BY: 550878	1	1		1	
27	550878	. CONE BUSHING 1 1/4 I.D X 3 O.D. X 4 5/8 O.D From 5-8413	1	1		1	
30	052277	. PULLEY ASSY W/BEARING & SEAL / 45MM x 78MM O.D.	1	1		1	
30	052676	. PULLEY ASSY W/BEARING & SEAL / 54MM x 75MM O.D.	1	1		1	A
		3) NOT SOLD ASSEMBLY					
		A) THIS PART ARE INCLUDE WITH NEW ARM ASSY # 052689					

From 4-8165 Up to 6-8814	DATE: 01/2014	PAGE: Y2-0520-01

FAN DRIVE - INSTALLATION - SHORT

ITEM	PART	DESCRIPTION	XL45	MTH40	MTH45	MTH45S	NOTE
30	052499	. . PULLEY / 45MM x 78MM O.D. Up to 5-8412 / REPLACED BY: 052595	1	1		1	
30	052595	. . PULLEY / 45MM x 78MM O.D. From 5-8413 / REPLACED BY: 052594	1	1		1	
30	052677	. . PULLEY / 54MM WIDE x 75MM O.D.	1	1		1	A
31	507340	. . BALL BEARING	1	1		1	
31	510618	. . BALL BEARING DBL ROW /	1	1		1	A
32	504095	. . RING RETAINER / INT 2.00 x 2.12 x .062	1	1		1	
32	504040	. . RING RETAINER / INT 2.440 x 1.860 x 0.078 STL BLK	1	1		1	A
33	052205	. . SPACER 20MM I.D. X 12.5MM TH	2	2		2	
33	052627	. . BUSHING TRANSFER FAN	2	2		2	A
34	507361	. . SEAL	1	1		1	
34	507371	. . SEAL	1	1		1	A
35	507360	. . SEAL	1	1		1	
35	507371	. . SEAL	1	1		1	A
NS	680500	. . GREASE 400 GR	AR	AR		AR	
NS	680752	. . GREASE LITHIUM / BLUE	AR	AR		AR	A
36	950208	. BELLOW ASSY 3" O.D. / BELT TENSIONER Up to 5-8392	1	1		1	
. NS	504695	. . HOSE CLAMP STEPLESS SPRING SS / Up to 5-8392	1	1		1	
36	550840	. BELLOW ASSY 4" O.D. / BELT TENSIONER From 5-8393	1	1		1	
37	051991	. ARM, BELT TENSIONER / IRON USE W 45MM WIDE PULLEY / REPLACED BY: 052689	1	1		1	D
37	052624	. ARM, BELT TENSIONER / IRON USE W 54MM WIDE PULLEY	1	1		1	A
38	3852162	. WASHER FL .312x.734x.065 ZG603 Up to 5-8392	1	1		1	
38	500444	. WASHER FL .406x.812x.065 ZP From 5-8393	1	1		1	
39	500942	. WASHER LO SPT .317x.586x.078 ZG603 Up to 5-8392	1	1		1	
39	500478	. WASHER LO SPT .380x.683x.094 ZP From 5-8393	1	1		1	
40	500836	. SCREW CAP HEX 5/16-18x3/4 G5 ZG603 Up to 5-8392	1	1		1	
40	500191	. SCREW CAP HEX 3/8-16x1 G5 ZP From 5-8393	1	1		1	
41	500735	. NUT HEX STO 3/4-16 ZP	1	1		1	
41	5001252	. NUT HEX STO M20-2.5 DP	1	1		1	A
NS	502558	. WASHER FL 21.0x37.0x3.0 G500	1	1		1	
42	500145	. SCREW CAP HEX 3/4-16x3 1/2 G5 ZP	1	1		1	
42	983296	. SCREW CAP HEX M20-2.5x90 G10.9 ZP	1	1		1	A
43	500811	. NUT HEX STO M12-1.75 DP	1	1		1	
43	5001628	. NUT HEX NYRT M10-1.5 SS	1	1		1	S
44	500446	. WASHER FL .531x1.250x.125 ZP	1	1		1	
		A) THIS PART ARE INCLUDE WITH NEW ARM ASSY #					
		052689					
		D) THIS ARM IS SUPERSEEDED BY #052689 "ARM ASSY					
		PULLEY"					
		S) SERVICE					

From 4-8165 Up to 6-8814	DATE: 01/2014	PAGE: Y2-0520-01

FAN DRIVE - INSTALLATION - SHORT

ITEM	PART	DESCRIPTION	XL45	MTH40	MTH45	MTH45S	NOTE
44	500270	. WASHER FL .406x1.000x.063 SS	1	1		1	S
45	507293	. BUSHING NYLINED .625x.750x.750	2	2		2	
46	052485	. PIVOT / TO FIX TENSIONER TO SUPPORT / REPLACED BY: 052670	1	1		1	
46	052670	. PIVOT / TO FIX TENSIONER TO SUPPORT	1	1		1	S
NS	501497	. GREASE FITTING / 1/4-28	1	1		1	
47	500449	. WASHER FL .625x1.500 SS	AR	AR		AR	
48	052433	. SUPPORT FAN CLUTCH & GEAR BOX / SHORT Up to 5-8392	1	1		1	
48	052588	. SUPPORT FAN CLUTCH & GEAR BOX / SHORT From 5-8393	1	1		1	
49	500802	. WASHER LO SPT 16.2x37.4x3.5 ZP	1	1		1	
50	502588	. NUT HEX M16-2.0 ZP	1	1		1	
51	052558	. BELLOW TENSIONER / W/3" BELLOW Up to 5-8392	1				
51	052606	. BELLOW TENSIONER / W/4" BELLOW From 5-8393 Up to 5-8622	1				B
. NS	WB04-05C	. . SEE WARRANTY BULLETIN From 5-8393 Up to 5-8622	1				
51	052644	. BELLOW TENSIONER / W/4" BELLOW From 5-8623	1				S
51	052556	. BELLOW TENSIONER / W/3" BELLOW Up to 5-8392		1		1	
51	052606	. BELLOW TENSIONER / W/4" BELLOW From 5-8393 Up to 5-8622		1		1	B
. NS	WB04-05C	. . SEE WARRANTY BULLETIN From 5-8393 Up to 5-8622		1		1	
51	052645	. BELLOW TENSIONER / W/4" BELLOW From 5-8623		1		1	S
53	971072	. NUT HEX M12-1.75 ZG603	2	2		2	
54	500944	. WASHER LO SPT .506x.873x.125 ZG603	6	6		6	
55	500214	. SCREW CAP HEX 1/2-13x1 1/4 G5 ZP	4	4		4	
56	500735	. NUT HEX STO 3/4-16 ZP	2	2		2	
57	500451	. WASHER FL .812x2.000x.148 ZP	2	2		2	
58	630002	. BUSHING / RUBBER / (TWO PIECES) 1" x 1.005" I.D.	4	4		4	
NS	507347	. SPACER / BUSHING	2	2		2	
59	500145	. SCREW CAP HEX 3/4-16x3 1/2 G5 ZP	2	2		2	
60	052494	. SUPPORT, ANGLE	2				
60	052555	. SUPPORT, ANGLE		2		2	
62	502901	. WASHER FL .625x1.469x.109 ZG603	1	1		1	
63	502915	. NUT HEX 5/8-11 ZG603 Up to 5-8392	1	1		1	
63	502917	. NUT HEX JAM 3/4-16 G2 ZG603 From 5-8393	1	1		1	
64	501036	. MALE ELBOW 90° / SAE 45° FITTING / #4FL-Mx1/8NPT-M BR	1	1		1	
65	052206	. SPRING ATTACHMENT W/45MM WIDE PULLEY	1	1		1	
66	502247	. SPRING COMPRESSION / 1.250 O.D. x 2.5 x .125	1	1		1	
		B) FOR PRODUCT IMPROVEMENT, ASK PART #052644 FOR					
		XL-45 AND PART #052645 FOR XL-40 & MTH-45S.					
		SEE WARRANTY BULLETIN WB05-03					
		S) SERVICE					

From 4-8165 Up to 6-8814	DATE: 01/2014	PAGE: Y2-0520-01

FAN DRIVE - INSTALLATION - SHORT

ITEM	PART	DESCRIPTION	XL45	MTH40	MTH45	MTH45S	NOTE
70	550832	FAN ASSY / CW 34" / 9 BLADES PLASTIC	1	1		1	
71	Y2-0120-00	**DRIVE PULLEY & BELTS - BUS & MTH 45' ENT**					
71	Y2-0120-50	**DRIVE PULLEY & BELTS - MTH**					
72	052310	ATTACHMENT PLATE ASSY / TO FIX ANGLE TO FLOOR	2	2		2	
74	971072	NUT HEX M12-1.75 ZG603	4	4		4	
NS	5001568	NUT PUSH RND M12 ZP	4	4		4	
75	052535	HOSE ASSY TEFLON #4 662MM Up to 5-8392	1	1		1	
75	052590	HOSE ASSY TEFLON #4 830MM From 5-8393	1	1		1	
80	500606	SCREW MA TR PH #10-24x3/4 SS	1	1		1	
81	500914	WASHER LO SPT .193x.334x.047 ZG603	2	2		2	
82	952624	CLAMP / 1/4" I.D.	1	1		1	
83	502882	NUT HEX #10-24 ZG603	1	1		1	
90	052491	SUPPORT BELLOW TENSIONER / W/3" BELLOW Up to 5-8392	1				
90	052589	SUPPORT BELLOW TENSIONER / W/4" BELLOW From 5-8393 Up to 5-8622 / REPLACED BY: K052589					
. NS	WB04-05C	. SEE WARRANTY BULLETIN From 5-8393 Up to 5-8622	1				
90	052641	SUPPORT BELLOW TENSIONER / W/4" BELLOW From 5-8623 / REPLACED BY: 052708	1				
. NS	WB04-05C	. SEE WARRANTY BULLETIN From 5-8623	1				
90	052708	SUPPORT BELLOW TENTIONER / W/4" BELLOW	1				S
90	052491	SUPPORT BELLOW TENSIONER / W/3" BELLOW Up to 5-8392		1		1	
90	052607	SUPPORT BELLOW TENSIONER / W/4" BELLOW From 5-8393 Up to 5-8622 / REPLACED BY: K052607				1	
. NS	WB04-05C	. SEE WARRANTY BULLETIN From 5-8393 Up to 5-8622		1		1	
90	052646	SUPPORT BELLOW TENSIONER / W/4" BELLOW From 5-8623 / REPLACED BY: 052706		1		1	
90	052706	SUPPORT BELLOW TENTIONER / W/4" BELLOW		1		1	S
91	Y2-0125-01	**BELTS TENSIONERS - WITH DETROIT S-60**					
		S) SERVICE					

From 4-8165 Up to 6-8814	DATE: 01/2014	PAGE: Y2-0520-01

FAN DRIVE - INSTALLATION - SHORT

ITEM	PART	DESCRIPTION	XL45	MTH40	MTH45	MTH45S	NOTE

From 6-8815 Up to 8-9339	DATE: 01/2014	PAGE: Y2-0520-02

FAN DRIVE - INSTALLATION - SHORT

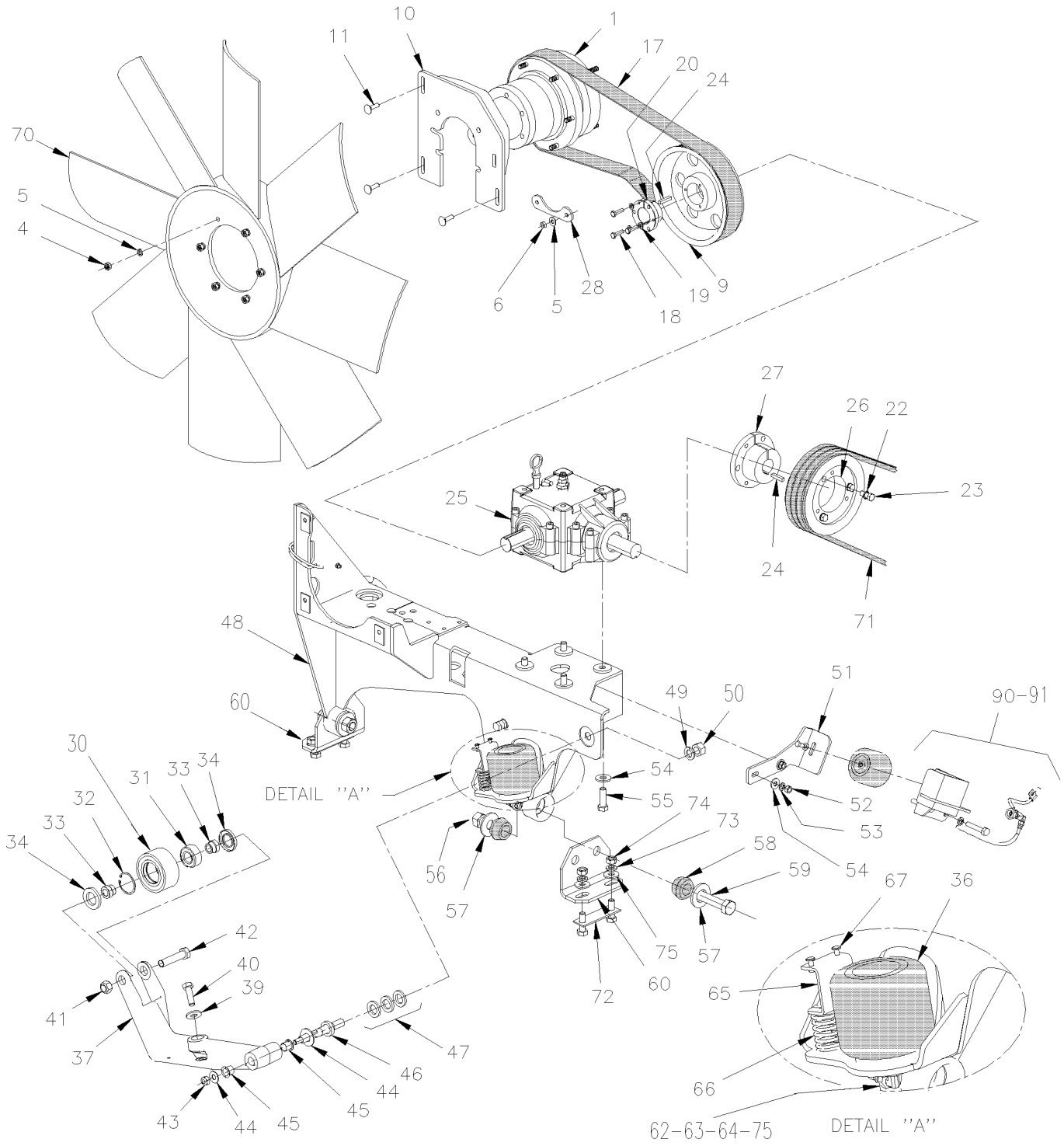

From 6-8815 Up to 8-9339	DATE: 01/2014	PAGE: Y2-0520-02

FAN DRIVE - INSTALLATION - SHORT

ITEM	PART	DESCRIPTION	XL45	MTH40	MTH45	MTH45S	NOTE
1	Y2-0540-52	**FAN CLUTCH ASSY - #550839 - MTH 45'**					
4	502543	. NUT HEX M8-1.25 ZP	6	6		6	
5	502644	. WASHER FL 10.5x30.0x2.5 ZP	8	8		8	
6	5001758	. NUT HEX STO M10-1.5 ZG603	4	4		4	
9	052584	PULLEY / W/12RIB X 8.582" DIA	1	1		1	
10	052596	PLATE TRANSITION / <> FAN CLUTCH & SUPPORT	1	1		1	
11	502891	SCREW CRG M8-1.25x40 G8.8 ZP	4	4		4	
12	500874	WASHER FL 8.4x17.0x1.6 ZP	3	3		3	
13	502889	WASHER LO SPT 8.1x12.7x2.0 ZG603	3	3		3	
13	955920	WASHER LO SPT 6.5x11.5x1.6 ZP	3	3		3	
14	502543	NUT HEX M8-1.25 ZP	3	3		3	
17	5060073	MULTI V-BELT / 12 RIB 61.41" (1560MM) VBR614K12	1	1		1	
18	500171	SCREW CAP HEX 1/4-20x1 G5 ZG603	3	3		3	
19	955920	WASHER LO SPT 6.5x11.5x1.6 ZP	3	3		3	
20	550879	CONE BUSHING 1 1/4 I.D X 1 13/16 O.D. X 2 5	1	1		1	
22	500546	WASHER LO EXT .384x.694x.040 ZP	6	6		6	
23	502906	SCREW CAP HEX 3/8-24x1 1/4 G5 ZG603	6	6		6	
24	550186	KEY 1/4" X 1/4" X 1 1/4"	2	2		2	
25	Y2-0525-00	**GEARBOX "SUPERIOR" - #550789, 550810 & 550897**					
26	052585	PULLEY (3V X 6.92 DIA)	1	1		1	
27	550878	CONE BUSHING 1 1/4 I.D X 3 O.D. X 4 5/8 O.D	1	1		1	
28	052492	PLATE	1	1		1	
30	052673	PULLEY ASSY W/BEARING & SEAL / 54MM x 117MM O.D.	1	1		1	
30	052896	. PULLEY ASSY W/BEARING / 54MM x 117MM O.D.	1	1		1	
30	052625	. . PULLEY / 54MM x 117MM O.D.	1	1		1	
31	510618	. . BALL BEARING DBL ROW /	1	1		1	
32	504040	. . RING RETAINER / INT 2.440 x 1.860 x 0.078 STL BLK	1	1		1	
33	052627	. BUSHING TRANSFER FAN	2	2		2	
34	507371	. SEAL	2	2		2	
NS	680752	. GREASE LITHIUM / BLUE	AR	AR		AR	
36	550840	BELLOW ASSY 4" O.D. / BELT TENSIONER	1	1		1	
37	052624	ARM, BELT TENSIONER / IRON USE W 54MM WIDE PULLEY	1	1		1	
39	500218	WASHER LO SPT .380x.683x.098 DP320	1	1		1	
NS	500832	WASHER FL .406x.812x.065 ZG603	1	1		1	
40	502926	SCREW CAP HEX 3/8-16x7/8 G5 ZG603	1	1		1	
41	5001252	NUT HEX STO M20-2.5 DP	1	1		1	
NS	502558	WASHER FL 21.0x37.0x3.0 G500	1	1		1	
42	983296	SCREW CAP HEX M20-2.5x90 G10.9 ZP	1	1		1	
43	502617	NUT HEX NYRT M10-1.5 CP	1	1		1	
44	500270	WASHER FL .406x1.000x.063 SS	1	1		1	
45	507293	BUSHING NYLINED .625x.750x.750	2	2		2	
46	052670	PIVOT / TO FIX TENSIONER TO SUPPORT	1	1		1	
NS	501497	GREASE FITTING / 1/4-28	1	1		1	

From 6-8815 Up to 8-9339	DATE: 01/2014	PAGE: Y2-0520-02

FAN DRIVE - INSTALLATION - SHORT

ITEM	PART	DESCRIPTION	XL45	MTH40	MTH45	MTH45S	NOTE
47	500449	WASHER FL .625x1.500 SS	AR	AR		AR	
48	052571	SUPPORT FAN CLUTCH & GEAR BOX / SHORT	1	1		1	
49	500802	WASHER LO SPT 16.2x37.4x3.5 ZP	1	1		1	
50	502588	NUT HEX M16-2.0 ZP	1	1		1	
51	052644	BELLOW TENSIONER / W/4" BELLOW	1				
51	052645	BELLOW TENSIONER / W/4" BELLOW		1		1	
52	502875	SCREW CAP HEX M12-1.75x40 G8.8 ZG603	2	2		2	
53	500811	NUT HEX STO M12-1.75 DP	2	2		2	
54	500944	WASHER LO SPT .506x.873x.125 ZG603	6	6		6	
NS	500211	WASHER FL .531x1.250x.125 N500	2	2		2	
55	500214	SCREW CAP HEX 1/2-13x1 1/4 G5 ZP	4	4		4	
56	500735	NUT HEX STO 3/4-16 ZP	2	2		2	
57	500451	WASHER FL .812x2.000x.148 ZP	2	2		2	
58	630002	BUSHING / RUBBER / (TWO PIECES) 1" x 1.005" I.D.	2	2		2	
NS	507347	SPACER / BUSHING	2	2		2	
59	500145	SCREW CAP HEX 3/4-16x3 1/2 G5 ZP	2	2		2	
60	052494	SUPPORT, ANGLE	2				
60	052555	SUPPORT, ANGLE		2		2	
62	502901	WASHER FL .625x1.469x.109 ZG603	1	1		1	
63	502917	NUT HEX JAM 3/4-16 G2 ZG603	1	1		1	
64	501036	MALE ELBOW 90º / SAE 45º FITTING / #4FL-Mx1/8NPT-M BR	1	1		1	
65	052688	SPRING ATTACHMENT W/54MM WIDE PULLEY	1	1		1	
66	502247	SPRING COMPRESSION / 1.250 O.D. x 2.5 x .125	1	1		1	
67	504487	RIVET MGLP PRDG 3/16x7/16 SS	2	2		2	
70	550832	FAN ASSY / CW 34" / 9 BLADES PLASTIC	1	1		1	
71	Y2-0120-00	**DRIVE PULLEY & BELTS - BUS & MTH 45' ENT**					
71	Y2-0120-50	**DRIVE PULLEY & BELTS - MTH**					
72	052310	ATTACHMENT PLATE ASSY / TO FIX ANGLE TO FLOOR	2	2		2	
73	5001568	NUT PUSH RND M12 ZP	4	4		4	
74	971072	NUT HEX M12-1.75 ZG603	4	4		4	
75	052590	HOSE ASSY TEFLON #4 830MM	1	1		1	
NS	500606	SCREW MA TR PH #10-24x3/4 SS	1	1		1	
NS	500914	WASHER LO SPT .193x.334x.047 ZG603	2	2		2	
NS	952624	CLAMP / 1/4" I.D.	1	1		1	
NS	502882	NUT HEX #10-24 ZG603	1	1		1	
90	052641	SUPPORT BELLOW TENSIONER / W/4" BELLOW Up to 6-8878 / REPLACED BY: 052708	1				
. NS	WB04-05C	. SEE WARRANTY BULLETIN Up to 6-8878	1				
90	052708	SUPPORT BELLOW TENTIONER / W/4" BELLOW From 6-8879	1				S
90	052646	SUPPORT BELLOW TENSIONER / W/4" BELLOW Up to 6-8878 / REPLACED BY: 052706		1		1	
90	052706	SUPPORT BELLOW TENTIONER / W/4" BELLOW From 6-8879		1		1	S
91	Y2-0125-01	**BELTS TENSIONERS - WITH DETROIT S-60**					
		S) SERVICE					

From 6-8815 Up to 8-9339	DATE: 01/2014	PAGE: Y2-0520-02

FAN DRIVE - INSTALLATION - SHORT

ITEM	PART	DESCRIPTION	XL45	MTH400	MTH445	MTH445S	NOTE

From 4-8165 Up to 6-8814	DATE: 01/2014	PAGE: Y2-0520-50

FAN DRIVE - INSTALLATION - LONG

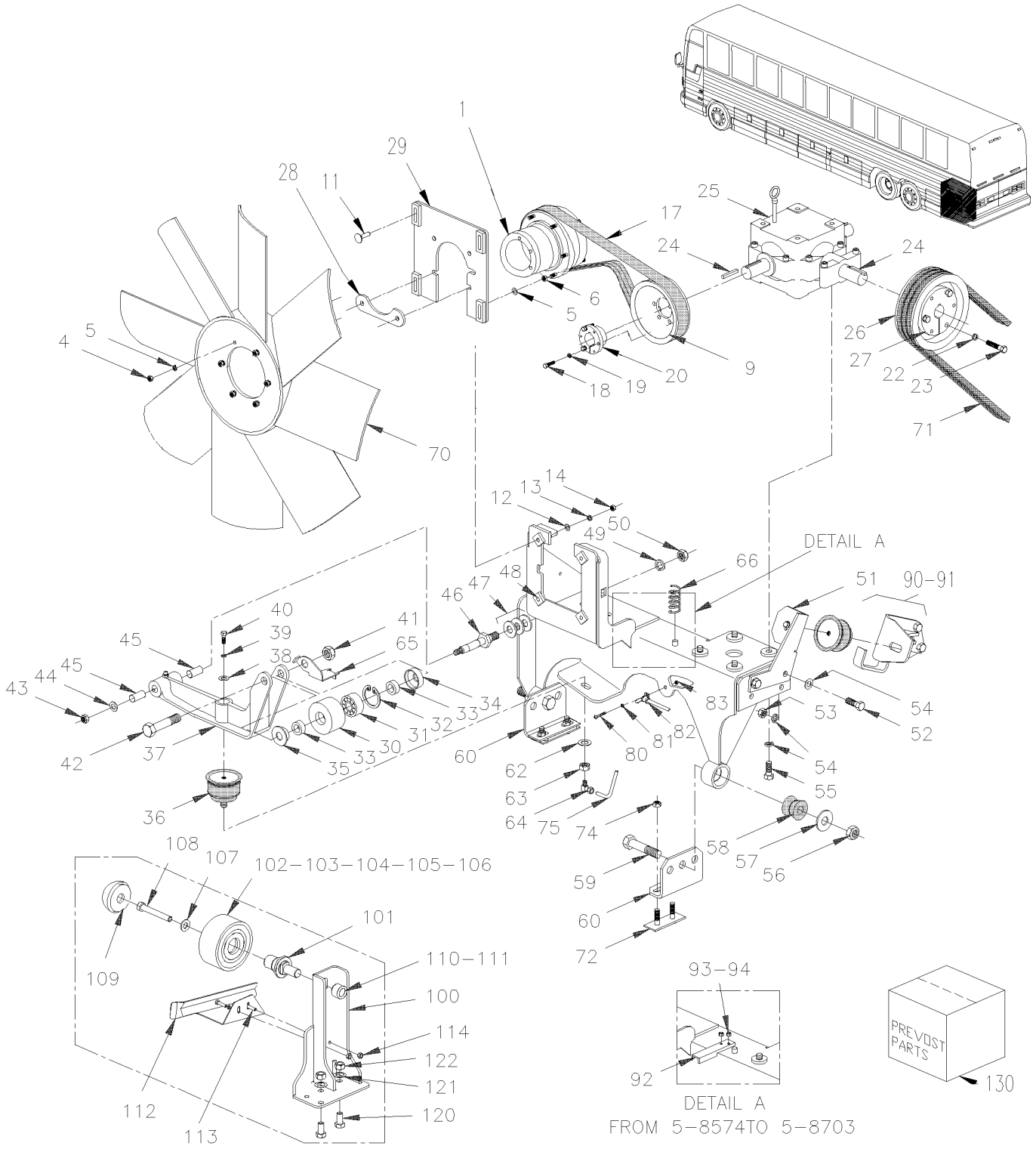

From 4-8165 Up to 6-8814	DATE: 01/2014	PAGE: Y2-0520-50

FAN DRIVE - INSTALLATION - LONG

ITEM	PART	DESCRIPTION	XL45	MTH40	MTH45	MTH45S	NOTE
	N.S.A.	FAN DRIVE ASSY			1		3
1	Y2-0540-52	**. FAN CLUTCH ASSY - #550839 - MTH 45'**					
4	502543	. . NUT HEX M8-1.25 ZP			6		
5	500897	. . WASHER FL .437x1.000x.083 ZG603			8		
6	5001758	. . NUT HEX STO M10-1.5 ZG603			4		
9	059057	. PULLEY / W/12RIB X 8.582" DIA Up to 5-8412 / REPLACED BY: 052584			1		
9	052584	. PULLEY / W/12RIB X 8.582" DIA From 5-8413			1		
11	502891	. SCREW CRG M8-1.25x40 G8.8 ZP			4		
12	500874	. WASHER FL 8.4x17.0x1.6 ZP			8		
13	5001003	. WASHER LO SPT 8.1x12.7x2.0 ZP			10		
14	502543	. NUT HEX M8-1.25 ZP			4		
15	500897	. WASHER FL .437x1.000x.083 ZG603			4		
16	500680	. NUT HEX STO M10-1.5 ZP			4		
17	507627	. MULTI V-BELT / 12 RIB 82 41/64" (2100) 827K12BU			1		C
18	500171	. SCREW CAP HEX 1/4-20x1 G5 ZG603			3		
19	955920	. WASHER LO SPT 6.5x11.5x1.6 ZP			3		
20	550690	. CONE BUSHING 1 1/4 I.D X 1 13/16 O.D. X 2 5 Up to 5-8412 / REPLACED BY: 550879			1		
20	550879	. CONE BUSHING 1 1/4 I.D X 1 13/16 O.D. X 2 5 From 5-8413			1		
22	500218	. WASHER LO SPT .380x.683x.098 DP320			6		
23	502906	. SCREW CAP HEX 3/8-24x1 1/4 G5 ZG603			6		
24	550186	. KEY 1/4" X 1/4" X 1 1/4"			2		
25	Y2-0525-00	**GEARBOX "SUPERIOR" - #550789, 550810 & 550897**					
26	059059	. PULLEY (3V X 7.40 DIA) Up to 5-8412 / REPLACED BY: 052586			1		
26	052586	. PULLEY (3V X 7.40 DIA) From 5-8413			1		
27	550691	. CONE BUSHING 1 1/4 I.D X 3 O.D. X 4 5/8 O.D Up to 5-8412 / REPLACED BY: 550878			1		
27	550878	. CONE BUSHING 1 1/4 I.D X 3 O.D. X 4 5/8 O.D From 5-8413			1		
28	052492	. PLATE			1		
29	052476	. PLATE TRANSITION / <> FAN CLUTCH & SUPPORT			1		
30	052277	. PULLEY ASSY W/BEARING & SEAL / 45MM x 78MM O.D. Up to 6-8809			1		
		3) NOT SOLD ASSEMBLY					
		C) FOR PRODUCT IMPROVEMENT, ASK KIT #052675					

From 4-8165 Up to 6-8814	DATE: 01/2014	PAGE: Y2-0520-50

FAN DRIVE - INSTALLATION - LONG

ITEM	PART	DESCRIPTION	XL45	MTH40	MTH45	MTH45S	NOTE
30	052676	. PULLEY ASSY W/BEARING & SEAL / 54MM x 75MM O.D.			1		B
30	052499	. . PULLEY / 45MM x 78MM O.D. Up to 5-8412 / REPLACED BY: 052595			1		
30	052595	. . PULLEY / 45MM x 78MM O.D. From 5-8413 Up to 6-8809 / REPLACED BY: 052594			1		
30	052677	. . PULLEY / 54MM WIDE x 75MM O.D.			1		B
31	507340	. . BALL BEARING Up to 6-8809			1		
31	510618	. . BALL BEARING DBL ROW / From 6-8810			1		B
32	504095	. . RING RETAINER / INT 2.00 x 2.12 x .062 Up to 6-8809			1		
32	504040	. . RING RETAINER / INT 2.440 x 1.860 x 0.078 STL BLK From 6-8810			1		B
33	052205	. . SPACER 20MM I.D. X 12.5MM TH Up to 6-8809			2		
33	052627	. . BUSHING TRANSFER FAN From 6-8810			2		B
34	507361	. . SEAL Up to 6-8809			1		
34	507371	. . SEAL From 6-8810			1		B
35	507360	. . SEAL Up to 6-8809			1		
35	507371	. . SEAL From 6-8810			1		B
NS	680500	. . GREASE 400 GR Up to 6-8809			AR		
NS	680752	. . GREASE LITHIUM / BLUE From 6-8810			AR		B
36	550840	. BELLOW ASSY 4" O.D. / BELT TENSIONER			1		
37	051991	. ARM, BELT TENSIONER / IRON USE W 45MM WIDE PULLEY Up to 6-8809 / REPLACED BY: 052689			1		D
37	052624	. ARM, BELT TENSIONER / IRON USE W 54MM WIDE PULLEY From 6-8810			1		B
38	500444	. WASHER FL .406x.812x.065 ZP			1		
39	500478	. WASHER LO SPT .380x.683x.094 ZP			1		
40	500191	. SCREW CAP HEX 3/8-16x1 G5 ZP			1		
41	500735	. NUT HEX STO 3/4-16 ZP Up to 6-8809			1		
41	5001252	. NUT HEX STO M20-2.5 DP From 6-8810			1		B
NS	502558	. WASHER FL 21.0x37.0x3.0 G500			1		
42	500145	. SCREW CAP HEX 3/4-16x3 1/2 G5 ZP Up to 6-8809			1		
42	983296	. SCREW CAP HEX M20-2.5x90 G10.9 ZP			1		B,S
43	500811	. NUT HEX STO M12-1.75 DP Up to 5-8692			1		
43	5001628	. NUT HEX NYRT M10-1.5 SS From 5-8693			1		S
		B) THIS PART ARE INCLUDE WITH NEW ARM # 052689					
		D) THIS ARM IS SUPERSEEDED BY #052689 "ARM ASSY					
		PULLEY" WHO INCLUDE ALLS PARTS WITH NOTE "B"					
		S) SERVICE					

From 4-8165 Up to 6-8814	DATE: 01/2014	PAGE: Y2-0520-50

FAN DRIVE - INSTALLATION - LONG

ITEM	PART	DESCRIPTION	XL45	MTH40	MTH45	MTH45S	NOTE
44	500446	. WASHER FL .531x1.250x.125 ZP Up to 5-8692			1		
44	500270	. WASHER FL .406x1.000x.063 SS From 5-8693			1		S
45	507293	. BUSHING NYLINED .625x.750x.750			2		
46	052485	. PIVOT / TO FIX TENSIONER TO SUPPORT Up to 5-8692 / REPLACED BY: 052670			1		
46	052670	. PIVOT / TO FIX TENSIONER TO SUPPORT From 5-8693			1		S
NS	501497	. GREASE FITTING / 1/4-28			1		
47	500449	. WASHER FL .625x1.500 SS			AR		
48	052539	. SUPPORT FAN CLUTCH & GEAR BOX / LONG Up to 4-8325			1		
48	052578	. SUPPORT FAN CLUTCH & GEAR BOX / LONG From 4-8326			1		
49	500802	. WASHER LO SPT 16.2x37.4x3.5 ZP			1		
50	502588	. NUT HEX M16-2.0 ZP			1		
51	052427	. BELLOW TENSIONER Up to 5-8440 / REPLACED BY: 052621			1		F
. NS	WB04-05C	. . SEE WARRANTY BULLETIN Up to 5-8440			1		
51	052621	. BELLOW TENSIONER From 5-8441			1		S
52	502875	. SCREW CAP HEX M12-1.75x40 G8.8 ZG603			2		
53	971072	. NUT HEX M12-1.75 ZG603			2		
54	500944	. WASHER LO SPT .506x.873x.125 ZG603			6		
NS	500211	. WASHER FL .531x1.250x.125 N500			2		
55	500214	. SCREW CAP HEX 1/2-13x1 1/4 G5 ZP			4		
56	500735	. NUT HEX STO 3/4-16 ZP			2		
57	500451	. WASHER FL .812x2.000x.148 ZP			2		
58	630002	. BUSHING / RUBBER / (TWO PIECES) 1" x 1.005" I.D.			2		
NS	507347	. SPACER / BUSHING			2		
59	500145	. SCREW CAP HEX 3/4-16x3 1/2 G5 ZP			2		
60	052429	. SUPPORT, ANGLE			2		
62	502901	. WASHER FL .625x1.469x.109 ZG603			1		
63	502917	. NUT HEX JAM 3/4-16 G2 ZG603			1		
64	501036	. MALE ELBOW 90º / SAE 45º FITTING / #4FL-Mx1/8NPT-M BR			1		
65	052477	. SPRING ATTACHMENT From 4-8465 Up to 6-8814			1		
		F) FOR PRODUCT IMPROVEMENT, ASK PART #052621 AND					
		SEE WARRANTY BULLETIN WB04-05A					
		S) SERVICE					

From 4-8165 Up to 6-8814	DATE: 01/2014	PAGE: Y2-0520-50

FAN DRIVE - INSTALLATION - LONG

ITEM	PART	DESCRIPTION	XL45	MTH40	MTH45	MTH45S	NOTE
65	052688	. SPRING ATTACHMENT W/54MM WIDE PULLEY From 6-8815			1		
NS	504487	. RIVET MGLP PRDG 3/16x7/16 SS From 6-8815			1		H
NS	502903	. SCREW TC FL PH #10-24x1 1/4 ZG603			1		G
66	502247	. SPRING COMPRESSION / 1.250 O.D. x 2.5 x .125			1		
70	550838	FAN ASSY / CW 36" / 9 BLADES PLASTIC			1		
71	Y2-0120-50	**DRIVE PULLEY & BELTS - MTH**					
72	052310	ATTACHMENT PLATE ASSY / TO FIX ANGLE TO FLOOR			2		
NS	050706	SPACER 3/8" TH			AR		
NS	050705	SPACER 1/4" TH			AR		
74	971072	NUT HEX M12-1.75 ZG603			4		
NS	5001568	NUT PUSH RND M12 ZP			4		
75	031054	HOSE ASSY TEFLON #4 770MM Up to 6-8809			1		
75	052361	HOSE ASSY TEFLON #4 950MM From 6-8810			1		
80	500606	SCREW MA TR PH #10-24x3/4 SS			1		
81	500914	WASHER LO SPT .193x.334x.047 ZG603			2		
82	952624	CLAMP / 1/4" I.D.			1		
83	502882	NUT HEX #10-24 ZG603			1		
90	052488	SUPPORT BELLOW TENTIONER Up to 5-8440 / REPLACED BY: 052240			1		
. NS	WB04-05C	. SEE WARRANTY BULLETIN Up to 5-8440			1		
90	052240	SUPPORT BELLOW TENTIONER From 5-8441 Up to 5-8489 / REPLACED BY: 052709			1		
. NS	WB04-05C	. SEE WARRANTY BULLETIN From 5-8441 Up to 5-8489			1		
90	053441	SUPPORT BELLOW TENTIONER From 5-8490 / REPLACED BY: 052707			1		
. NS	WB04-05C	. SEE WARRANTY BULLETIN From 5-8490			1		
90	052707	SUPPORT BELLOW TENTIONER			1		S
91	Y2-0125-01	**BELTS TENSIONERS - WITH DETROIT S-60**					
92	052631	STOPPER TENSIONER ARM / "U" SHAPE 40MM X 1 From 5-8574 Up to 5-8692			1		A
93	5001338	SCREW CAP HEX M12-1.75x45 G10.9 DP From 5-8574 Up to 5-8692			2		A
94	500811	NUT HEX STO M12-1.75 DP From 5-8574 Up to 5-8692			2		A
100	052661	SUPPORT UPPER PULLEY TENSIONER From 5-8693			1		
		A) FOR PRODUCT IMPROVEMENT, INSTALL THOSE PARTS					
		UP TO 5-8593					
		G) TO FIX SPRING					
		H) TO FIX SPRING ATTACHMENT TO ARM					
		S) SERVICE					

From 4-8165 Up to 6-8814	DATE: 01/2014	PAGE: Y2-0520-50

FAN DRIVE - INSTALLATION - LONG

ITEM	PART	DESCRIPTION	XL45	MTH40	MTH45	MTH45S	NOTE
101	052626	SHAFT UPPER PULLEY TENSIONER From 5-8693			1		
102	052672	PULLEY ASSY W/BEARING & SHAFT / 54MM x 117MM From 5-8693			1		
103	052896	. PULLEY ASSY W/BEARING / 54MM x 117MM O.D. From 5-8693			1		
103	052625	. . PULLEY / 54MM x 117MM O.D. From 5-8693			1		
104	507371	. SEAL From 5-8693			1		
105	504040	. RING RETAINER / INT 2.440 x 1.860 x 0.078 STL BLK From 5-8693			1		
106	510618	. BALL BEARING DBL ROW / From 5-8693			1		
107	012062	WASHER FL 10.2 x38.1x5 ST From 5-8693			1		
108	500829	SCREW CAP HEX M10-1.5x40 G8.8 ZP From 5-8693			1		
109	510798	PROTECTOR CAP / "PREVOST" From 5-8693			1		
110	5001252	NUT HEX STO M20-2.5 DP From 5-8693			1		
111	502558	WASHER FL 21.0x37.0x3.0 G500 From 5-8693			1		
112	052666	AIR DEFLECTOR / BELT From 5-8693			1		
113	5001433	SCREW CAP HEX M6-1.0x25 SS From 5-8693			2		
114	5001182	NUT HEX NYRT M6-1.0 SS From 5-8693			2		
120	500806	SCREW CAP HEX M12-1.75X35 G10.9 From 5-8693			1		
120	500065	SCREW CAP HEX M10-1.5x30 G10.9 DP From 5-8693			3		
NS	500270	WASHER FL .406x1.000x.063 SS From 5-8693			3		
121	500958	WASHER FL .531x1.062x.095 SS From 5-8693			1		
121	502616	WASHER LO SPT 10.2x18.1x2.2 SS From 5-8693			1		
122	500811	NUT HEX STO M12-1.75 DP From 5-8693			1		
NS	052675	KIT, RETROFIT UPPER TENSIONER & AIR DEFLEC / W/LONG FAN CLUTCH SUPPORT From 4-8165 Up to 5-8691					
. NS	WB05-05C	. SEE WARRANTY BULLETIN From 4-8165 Up to 5-8691			1		

From 6-8815 Up to 8-9339	DATE: 01/2014	PAGE: Y2-0520-51

FAN DRIVE - INSTALLATION - LONG

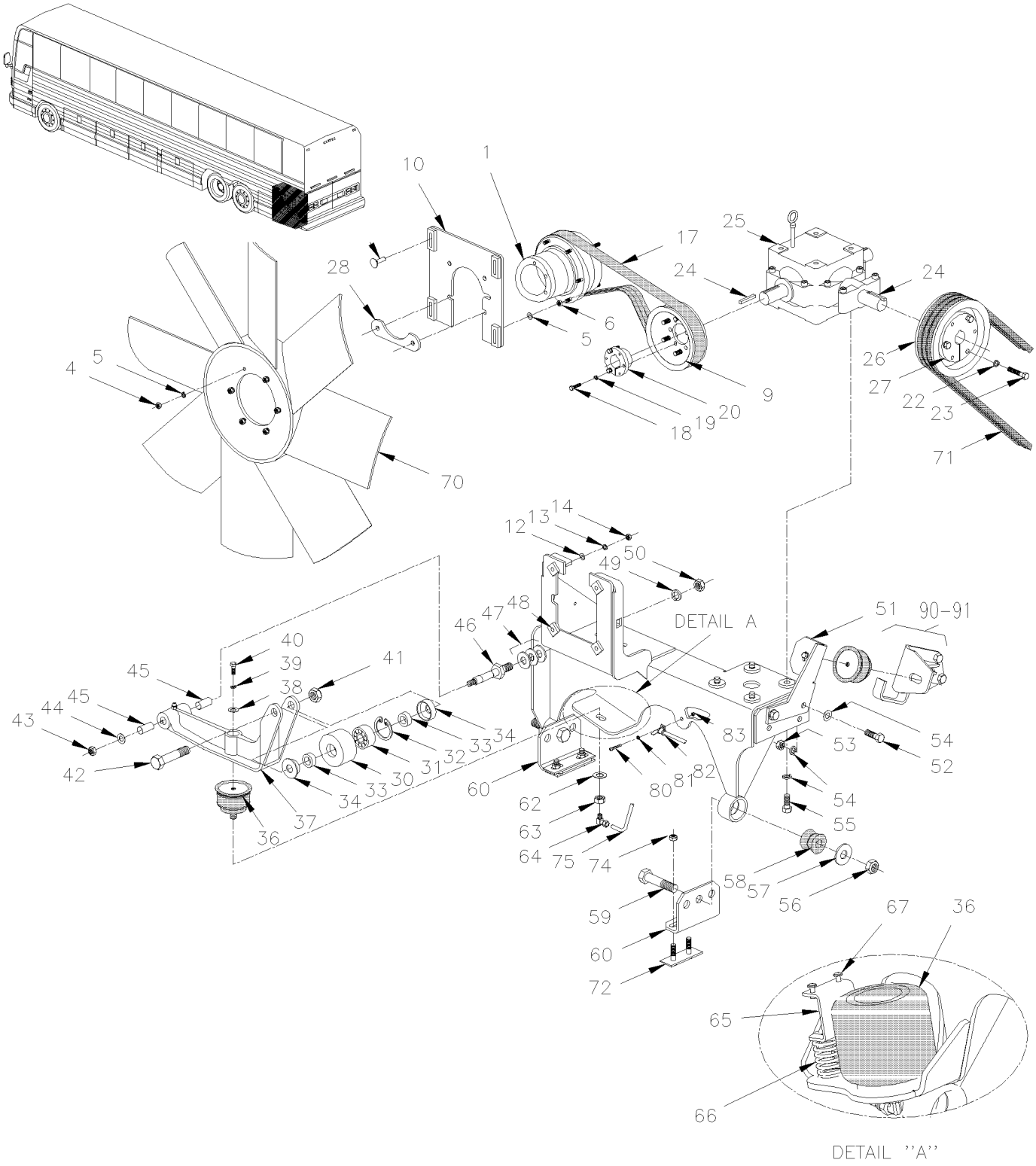

From 6-8815 Up to 8-9339	DATE: 01/2014	PAGE: Y2-0520-51

FAN DRIVE - INSTALLATION - LONG

ITEM	PART	DESCRIPTION	XL45	MTH40	MTH45	MTH45S	NOTE
	Call Order Desk	FAN DRIVE ASSY			1		P
1	Y2-0540-52	**FAN CLUTCH ASSY - #550839 - MTH 45'**			1		
4	502543	. . NUT HEX M8-1.25 ZP			6		
5	500897	. . WASHER FL .437x1.000x.083 ZG603			8		
6	5001758	. . NUT HEX STO M10-1.5 ZG603			4		
9	052584	. PULLEY / W/12RIB X 8.582" DIA			1		
10	052476	. PLATE TRANSITION / <> FAN CLUTCH & SUPPORT			1		
11	502891	. SCREW CRG M8-1.25x40 G8.8 ZP			4		
12	500874	. WASHER FL 8.4x17.0x1.6 ZP			8		
13	5001003	. WASHER LO SPT 8.1x12.7x2.0 ZP			10		
14	502543	. NUT HEX M8-1.25 ZP			4		
15	500897	. WASHER FL .437x1.000x.083 ZG603			4		
16	500680	. NUT HEX STO M10-1.5 ZP			4		
17	507627	. MULTI V-BELT / 12 RIB 82 41/64" (2100) 827K12BU			1		
18	500171	. SCREW CAP HEX 1/4-20x1 G5 ZG603			3		
19	955920	. WASHER LO SPT 6.5x11.5x1.6 ZP			3		
20	550879	. CONE BUSHING 1 1/4 I.D X 1 13/16 O.D. X 2 5			1		
22	500218	. WASHER LO SPT .380x.683x.098 DP320			6		
23	502906	. SCREW CAP HEX 3/8-24x1 1/4 G5 ZG603			6		
24	550186	. KEY 1/4" X 1/4" X 1 1/4"			2		
25	Y2-0525-00	**. GEARBOX "SUPERIOR" - #550789, 550810 & 550897**					
26	052585	. PULLEY (3V X 6.92 DIA)			1		
26	052586	. PULLEY (3V X 7.40 DIA)			1		
27	550878	. CONE BUSHING 1 1/4 I.D X 3 O.D. X 4 5/8 O.D			1		
28	052492	. PLATE			1		
30	052673	. PULLEY ASSY W/BEARING & SEAL / 54MM x 117MM O.D.			1		
30	052896	. . PULLEY ASSY W/BEARING / 54MM x 117MM O.D.			1		
30	052625	. . . PULLEY / 54MM x 117MM O.D.			1		
31	510618	. . . BALL BEARING DBL ROW /			1		
32	504040	. . . RING RETAINER / INT 2.440 x 1.860 x 0.078 STL BLK			1		
33	052627	. . BUSHING TRANSFER FAN			2		
34	507371	. . SEAL			2		
NS	680752	. . GREASE LITHIUM / BLUE			AR		
36	550840	. BELLOW ASSY 4" O.D. / BELT TENSIONER			1		
37	052624	. ARM, BELT TENSIONER / IRON USE W 54MM WIDE PULLEY			1		
38	500444	. WASHER FL .406x.812x.065 ZP			1		
39	500478	. WASHER LO SPT .380x.683x.094 ZP			1		
40	500191	. SCREW CAP HEX 3/8-16x1 G5 ZP			1		
41	5001252	. NUT HEX STO M20-2.5 DP			1		
NS	502558	. WASHER FL 21.0x37.0x3.0 G500			1		
42	983296	. SCREW CAP HEX M20-2.5x90 G10.9 ZP			1		
		P) CALL ORDER DESK FOR SPECIFIC APPLICATION					
		(V.I.N.)					

From 6-8815 Up to 8-9339	DATE: 01/2014	PAGE: Y2-0520-51

FAN DRIVE - INSTALLATION - LONG

ITEM	PART	DESCRIPTION	XL45	MTH40	MTH45	MTH45S	NOTE
43	5001628	. NUT HEX NYRT M10-1.5 SS			1		
44	500270	. WASHER FL .406x1.000x.063 SS			1		
45	507293	. BUSHING NYLINED .625x.750x.750			2		
46	052670	. PIVOT / TO FIX TENSIONER TO SUPPORT			1		
NS	501497	. GREASE FITTING / 1/4-28			1		
47	500449	. WASHER FL .625x1.500 SS			AR		
48	052664	. SUPPORT FAN CLUTCH & GEAR BOX / LONG			1		
49	500802	. WASHER LO SPT 16.2x37.4x3.5 ZP			1		
50	502588	. NUT HEX M16-2.0 ZP			1		
51	052621	. BELLOW TENSIONER			1		
52	502875	. SCREW CAP HEX M12-1.75x40 G8.8 ZG603			2		
53	971072	. NUT HEX M12-1.75 ZG603			2		
54	500944	. WASHER LO SPT .506x.873x.125 ZG603			6		
NS	500211	. WASHER FL .531x1.250x.125 N500			2		
55	500214	. SCREW CAP HEX 1/2-13x1 1/4 G5 ZP			4		
56	500735	. NUT HEX STO 3/4-16 ZP			2		
57	500451	. WASHER FL .812x2.000x.148 ZP			2		
58	630002	. BUSHING / RUBBER / (TWO PIECES) 1" x 1.005" I.D.			2		
NS	507347	. SPACER / BUSHING			2		
59	500145	. SCREW CAP HEX 3/4-16x3 1/2 G5 ZP			2		
60	052429	. SUPPORT, ANGLE			2		
62	502901	. WASHER FL .625x1.469x.109 ZG603			1		
63	502917	. NUT HEX JAM 3/4-16 G2 ZG603			1		
64	501036	. MALE ELBOW 90º / SAE 45º FITTING / #4FL-Mx1/8NPT-M BR			1		
65	052688	. SPRING ATTACHMENT W/54MM WIDE PULLEY			1		
NS	502903	. SCREW TC FL PH #10-24x1 1/4 ZG603			1		
66	502247	. SPRING COMPRESSION / 1.250 O.D. x 2.5 x .125			1		
67	504487	. RIVET MGLP PRDG 3/16x7/16 SS			2		
70	550838	FAN ASSY / CW 36" / 9 BLADES PLASTIC			1		
71	Y2-0120-50	**DRIVE PULLEY & BELTS - MTH**	1				
72	052310	ATTACHMENT PLATE ASSY / TO FIX ANGLE TO FLOOR			2		
74	971072	NUT HEX M12-1.75 ZG603			4		
NS	5001568	NUT PUSH RND M12 ZP			4		
75	052361	HOSE ASSY TEFLON #4 950MM			1		
NS	500606	SCREW MA TR PH #10-24x3/4 SS			1		
NS	500914	WASHER LO SPT .193x.334x.047 ZG603			2		
NS	952624	CLAMP / 1/4" I.D.			1		
NS	502882	NUT HEX #10-24 ZG603			1		
90	053441	SUPPORT BELLOW TENTIONER Up to 6-8878 / REPLACED BY: 052707			1		
. NS	WB04-05C	. SEE WARRANTY BULLETIN Up to 6-8878			1		
90	052707	SUPPORT BELLOW TENTIONER From 6-8879			1		S
		S) SERVICE					

From 6-8815 Up to 8-9339	DATE: 01/2014	PAGE: Y2-0520-51

FAN DRIVE - INSTALLATION - LONG

ITEM	PART	DESCRIPTION	XL45	MTH40	MTH45	MTH45S	NOTE
91	Y2-0125-01	**BELTS TENSIONERS - WITH DETROIT S-60**					

From Y-7046 Up to 6-8814	DATE: 01/2014	PAGE: Y2-0520-99

FAN DRIVE - INSTALLATION - SHORT / "RETROFIT"

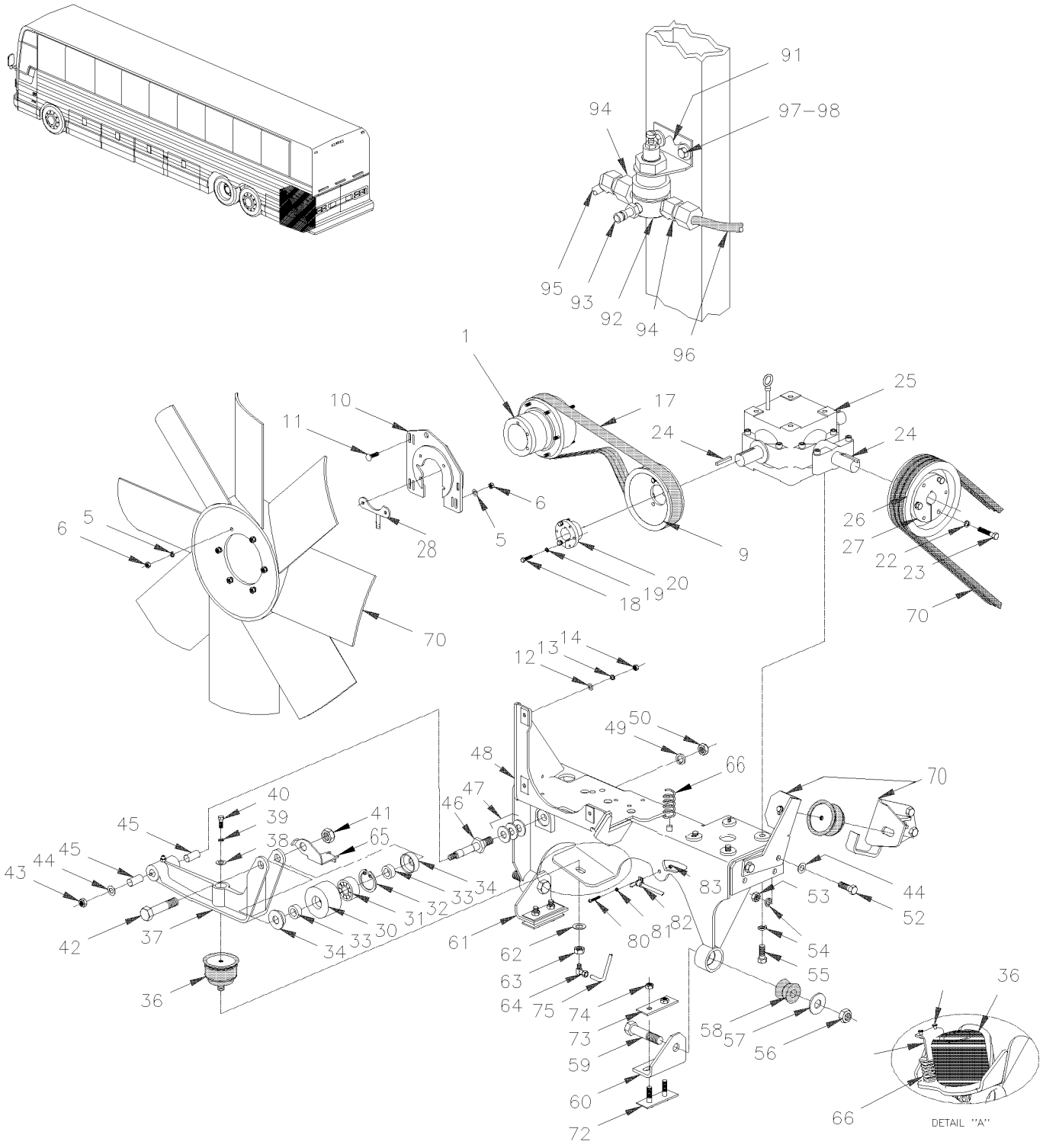

From Y-7046 Up to 6-8814	DATE: 01/2014	PAGE: Y2-0520-99

FAN DRIVE - INSTALLATION - SHORT / "RETROFIT"

ITEM	PART	DESCRIPTION	XL45	MTH40	MTH45	MTH45S	NOTE
		NEXT KIT ARE USE ONLY WITH					
		3" BELLOW TENSIONER W/O.E.M. INSTALLATION	1				
NS	052665	KIT, UPGRADE ONLY / SMALL TO LARGE FAN CLUTCH Up to 3-8164		1		1	
. NS	IS-04106A	. SEE INSTRUCTION SHEET Up to 3-8164		1		1	
	052788	KIT, UPGRADE ONLY / SMALL TO LARGE FAN CLUTCH From 4-8165 Up to 4-8392	1	1		1	
. NS	IS-04019	. SEE INSTRUCTION SHEET From 4-8165 Up to 4-8392	1	1		1	
		NEXT KIT ARE USE ONLY WITH					
		4" BELLOW TENSIONER W/O.E.M. INSTALLATION	1				
	052705	KIT, UPGRADE ONLY / SMALL TO LARGE FAN CLUTCH W/O.E.M. INSTALLATION From 4-8393 Up to 6-8809	1				
. NS	IS-04019	. SEE INSTRUCTION SHEET From 4-8393 Up to 6-8809	1	1		1	
	052674	FAN DRIVE ASSY W/LARGE FAN CLUTCH 550839 Up to 3-8164					A
1	Y2-0540-52	**. FAN CLUTCH ASSY - #550839 - MTH 45'**					
4	502543	. . NUT HEX M8-1.25 ZP	6				
5	502644	. . WASHER FL 10.5x30.0x2.5 ZP	8				
6	5001758	. . NUT HEX STO M10-1.5 ZG603	4				
9	052584	. PULLEY / W/12RIB X 8.582" DIA	1				
10	052652	. PLATE TRANSITION / <> FAN CLUTCH & SUPPORT / W/550839 RETROFIT ONLY	1				
11	502891	. SCREW CRG M8-1.25x40 G8.8 ZP	3				
12	500874	. WASHER FL 8.4x17.0x1.6 ZP	3				
13	502889	. WASHER LO SPT 8.1x12.7x2.0 ZG603	3				
13	955920	. WASHER LO SPT 6.5x11.5x1.6 ZP	3				
14	502543	. NUT HEX M8-1.25 ZP	3				
17	5060071	. MULTI V-BELT / 12 RIB 57.48" (1460MM) VBR1460K12	1				
18	500171	. SCREW CAP HEX 1/4-20x1 G5 ZG603	3				
19	955920	. WASHER LO SPT 6.5x11.5x1.6 ZP	3				
20	550879	. CONE BUSHING 1 1/4 I.D X 1 13/16 O.D. X 2 5	1				
22	500218	. WASHER LO SPT .380x.683x.098 DP320	3				
23	502906	. SCREW CAP HEX 3/8-24x1 1/4 G5 ZG603	3				
24	550186	. KEY 1/4" X 1/4" X 1 1/4"	2				
25	Y2-0525-00	**. GEARBOX "SUPERIOR" - #550789, 550810 & 550897**					
26	051603	. PULLEY (3V X 7.40 DIA)	1				
27	550878	. CONE BUSHING 1 1/4 I.D X 3 O.D. X 4 5/8 O.D	1				
28	052691	. PLATE ASSY / W/RETAINER CABLE	1				
30	052676	. PULLEY ASSY W/BEARING & SEAL / 54MM x 75MM O.D.	1				
30	052677	. . PULLEY / 54MM WIDE x 75MM O.D.	1				
		A) FAN DRIVE ASSY SUPPERSEEDE FORMER MODEL ASSY					
		052006P					

From Y-7046 Up to 6-8814	DATE: 01/2014	PAGE: Y2-0520-99

FAN DRIVE - INSTALLATION - SHORT / "RETROFIT"

ITEM	PART	DESCRIPTION	XL45	MTH40	MTH45	MTH45S	NOTE
31	510618	. . BALL BEARING DBL ROW /	1				
32	504040	. . RING RETAINER / INT 2.440 x 1.860 x 0.078 STL BLK	1				
33	052627	. . BUSHING TRANSFER FAN	2				
34	507371	. . SEAL	2				
NS	680752	. . GREASE LITHIUM / BLUE	AR				
36	550840	. BELLOW ASSY 4" O.D. / BELT TENSIONER	1				
37	051991	. ARM, BELT TENSIONER / IRON USE W 45MM WIDE PULLEY / REPLACED BY: 052689	1				
38	500444	. WASHER FL .406x.812x.065 ZP	1				
39	500478	. WASHER LO SPT .380x.683x.094 ZP	1				
40	500191	. SCREW CAP HEX 3/8-16x1 G5 ZP	1				
41	5001252	. NUT HEX STO M20-2.5 DP	1				
NS	502558	. WASHER FL 21.0x37.0x3.0 G500	1				
42	983296	. SCREW CAP HEX M20-2.5x90 G10.9 ZP	1				
43	5001628	. NUT HEX NYRT M10-1.5 SS	1				
44	500446	. WASHER FL .531x1.250x.125 ZP	1				
45	507293	. BUSHING NYLINED .625x.750x.750	2				
46	052670	. PIVOT / TO FIX TENSIONER TO SUPPORT	1				
NS	501497	. GREASE FITTING / 1/4-28	1				
47	500449	. WASHER FL .625x1.500 SS	AR				
48	052649	. SUPPORT FAN CLUTCH & GEAR BOX / SHORT / W/550839 RETROFIT ONLY	1				
49	500802	. WASHER LO SPT 16.2x37.4x3.5 ZP	1				
50	502588	. NUT HEX M16-2.0 ZP	1				
52	502875	. SCREW CAP HEX M12-1.75x40 G8.8 ZG603	2				
53	500811	. NUT HEX STO M12-1.75 DP	2				
54	500944	. WASHER LO SPT .506x.873x.125 ZG603	6				
NS	500211	. WASHER FL .531x1.250x.125 N500	6				
55	500214	. SCREW CAP HEX 1/2-13x1 1/4 G5 ZP	4				
56	500735	. NUT HEX STO 3/4-16 ZP	2				
57	500451	. WASHER FL .812x2.000x.148 ZP	2				
58	630002	. BUSHING / RUBBER / (TWO PIECES) 1" x 1.005" I.D.	2				
NS	507347	. SPACER / BUSHING	2				
59	500145	. SCREW CAP HEX 3/4-16x3 1/2 G5 ZP	2				
60	059053	. SUPPORT, ANGLE / FRONT	1				
61	059051	. SUPPORT, ANGLE / REAR	1				
62	502901	. WASHER FL .625x1.469x.109 ZG603	1				
63	502917	. NUT HEX JAM 3/4-16 G2 ZG603	1				
64	501036	. MALE ELBOW 90º / SAE 45º FITTING / #4FL-Mx1/8NPT-M BR	1				
65	052655	SPRING ATTACHMENT	1				
66	502247	SPRING COMPRESSION / 1.250 O.D. x 2.5 x .125	1				
67	504487	RIVET MGLP PRDG 3/16x7/16 SS	2				
70	Y2-0520-00	**FAN DRIVE - INSTALLATION - SHORT**					
72	051779	ATTACHMENT PLATE ASSY / TO FIX ANGLE TO FLOOR	2				

From Y-7046 Up to 6-8814	DATE: 01/2014	PAGE: Y2-0520-99

FAN DRIVE - INSTALLATION - SHORT / "RETROFIT"

ITEM	PART	DESCRIPTION	XL45	MTH40	MTH45	MTH45S	NOTE
73	050706	SPACER 3/8" TH	AR				
73	050705	SPACER 1/4" TH	AR				
74	971072	NUT HEX M12-1.75 ZG603	4				
NS	5001568	NUT PUSH RND M12 ZP	4				
75	031054	HOSE ASSY TEFLON #4 770MM	1				
75	052535	HOSE ASSY TEFLON #4 662MM	1				
NS	500606	SCREW MA TR PH #10-24x3/4 SS	1				
NS	500914	WASHER LO SPT .193x.334x.047 ZG603	2				
NS	952624	CLAMP / 1/4" I.D.	1				
NS	502882	NUT HEX #10-24 ZG603	1				
91	142013	SUPPORT AIR REGULATOR / ANGLE 90DEG STYLE	1				
92	641472	AIR PRESSURE REGULATOR 1/4" NPT / COPPER	1				
93	640488	VALVE, AIR FILL 1/8" NPT	1				
. NS	650164	. CAP VALVE / CHROME	1				
94	501027	MALE CONNECTOR / SAE 45º FITTING / #4FL-Mx1/4NPT-M BR	2				
95	052667	HOSE ASSY TEFLON #4 1524MM	1				
96	052668	HOSE ASSY TEFLON #4 1524MM / REPLACED BY: 052667	1				
NS	509815	TIE MOUNT / ATTACHMENT W/TREE MOUNT	3				

From Y-7046 Up to 8-9339	DATE: 01/2014	PAGE: Y2-0525-00
GEARBOX "SUPERIOR" - #550789, 550810 & 550897		

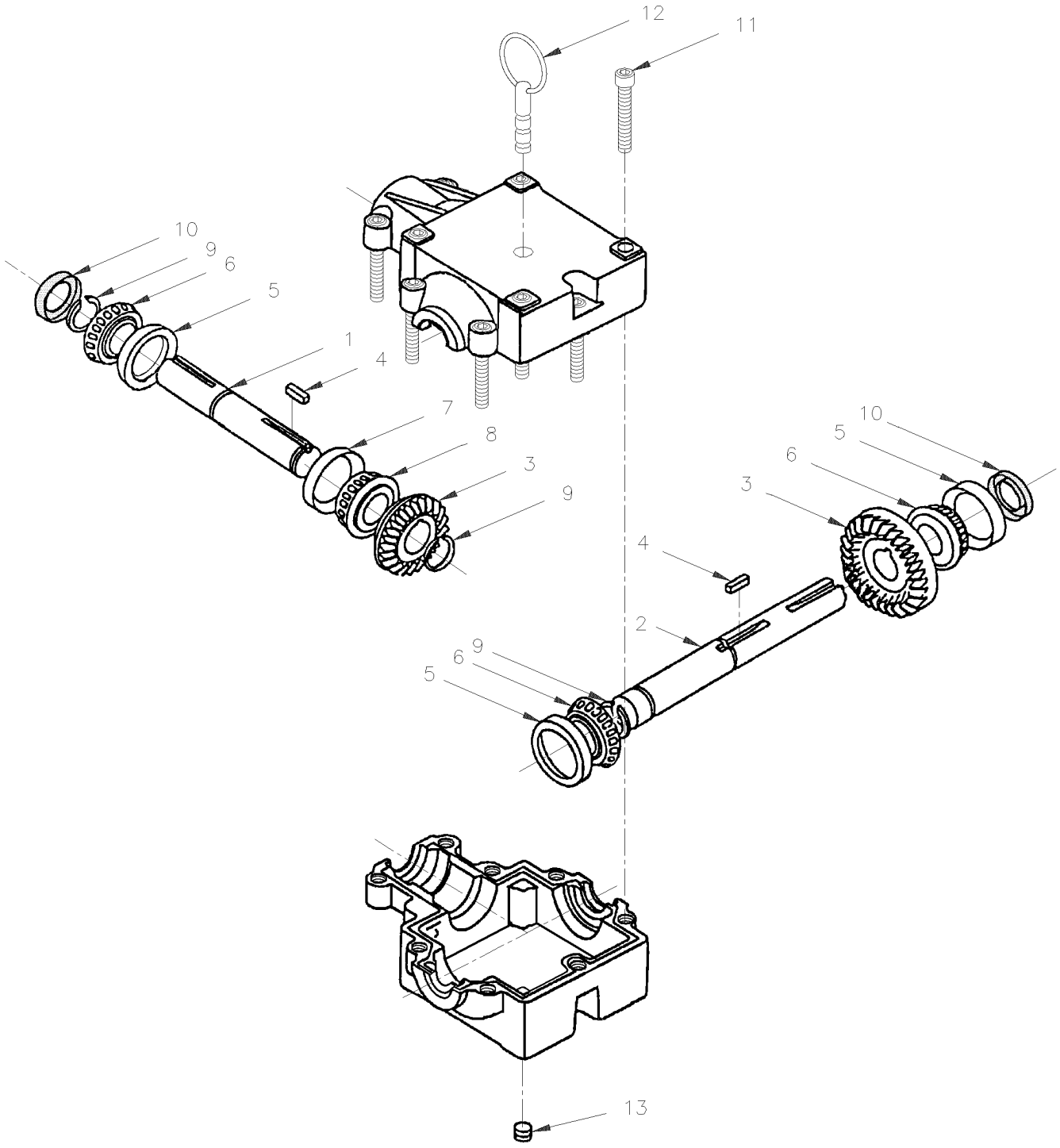

From Y-7046 Up to 8-9339	DATE: 01/2014	PAGE: Y2-0525-00

GEARBOX "SUPERIOR" - #550789, 550810 & 550897

ITEM	PART	DESCRIPTION	XL45	MTH40	MTH45	MTH45S	NOTE
	550789	GEARBOX ASSY (CW) Up to 4-7304 / REPLACED BY: 550897	1	1	1	1	A
	550810	GEARBOX ASSY (CW) From 4-7305 Up to 5-8512 / REPLACED BY: 550897	1	1	1	1	
	550897	GEARBOX ASSY (CW) From 5-8513	1	1	1	1	
1	550732	. PINION SHAFT ASSY / INPUT 1 1/4" O.D. Up to 5-8512 / REPLACED BY: 550880	1	1	1	1	
1	550880	. PINION SHAFT ASSY / INPUT 1 1/4" O.D. From 5-8513	1	1	1	1	
2	550733	. CROSS SHAFT ASSY / OUTPUT 1 1 1/4" O.D. Up to 5-8512 / REPLACED BY: K550733	1	1	1	1	
2	550881	. CROSS SHAFT ASSY / OUTPUT 1 1 1/4" O.D. From 5-8513	1	1	1	1	
3	N.S.P.	. GEAR / (SOLD ASSY W/SHAFT)	2	2	2	2	2
4	N.S.P.	. KEY	2	2	2	2	2
5	550697	. CUP BEARING	3	3	3	3	
6	550696	. CONE BEARING	3	3	3	3	
7	550735	. CUP BEARING	1	1	1	1	
8	550734	. CONE BEARING	1	1	1	1	
9	550698	. RETAINING RING / GEAR	2	2	2	2	
10	550695	. SEAL 1 1/4" I.D. / (200 X 125 X 31)	3	3	3	3	
11	N.S.A.	. SCREW 3/8-16 X 2 1/4"	9	9	9	9	3
12	550773	. DIPSTICK Up to 4-7304 / REPLACED BY: K550773	1	1	1	1	A
12	550812	. DIPSTICK From 4-7305	1	1	1	1	
13	504599	MAGNETIC DRAIN PLUG 1/4 NPT	1	1	1	1	
NS	550790	DECAL	1	1	1	1	
NS	180217	OIL SYNTHETIC SCH 630 (1 LITER)	AR	AR	AR	AR	
NS	683666	OIL SYNTHETIC SCH 630 (19 LITERS)	AR	AR	AR	AR	
NS	052387	KIT, FAN GEARBOX BREATHER	AR	AR	AR	AR	
. NS	IS-00049	. SEE INSTRUCTION SHEET					
		2) NOT SOLD BY PREVOST (SEE MANUFACTURING PART					
		NUMBER AT END OF DESCRIPTION LINE)					
		3) NOT SOLD ASSEMBLY					
		A) FOR PRODUCT IMPROVMENT ASK FOR KIT #052387					

From Y-7046 Up to 3-8164	DATE: 01/2014	PAGE: Y2-0530-00

COOLANT FILTER - INSTALLATION WITH DETROIT S-60

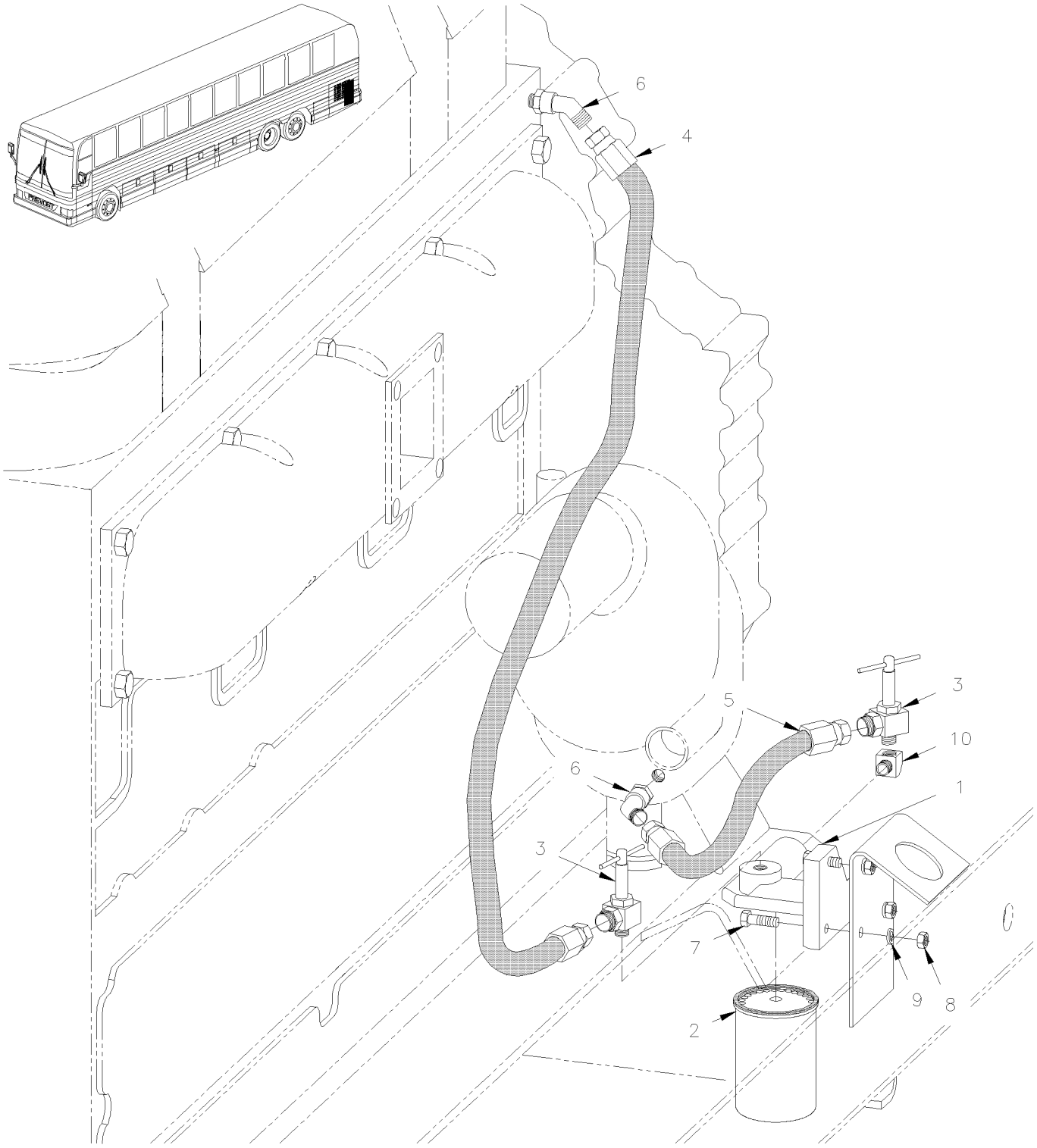

From Y-7046 Up to 3-8164	DATE: 01/2014	PAGE: Y2-0530-00

COOLANT FILTER - INSTALLATION WITH DETROIT S-60

ITEM	PART	DESCRIPTION	XL45	MTH40	MTH45	MTH45S	NOTE
1	550645	ADAPTOR HEAD, COOLANT FILTER / REPLACED BY: 550804	1	1	1	1	
1	550804	ADAPTOR HEAD, COOLANT FILTER	1	1	1	1	
2	550630	CARTRIGE "MAINTENANCE" "NALCOOL" 3000	1	1	1	1	
3	N.S.P.	VALVE, SHUTT-OFF 1/4 X 3/8 NPT (#330) W/HEATER HEAD	1	1	1	1	2
4	051902	HOSE ASSY / #6 865MM	1	1	1	1	
5	051903	HOSE ASSY / #6 300MM	1	1	1	1	
NS	503582	. HOSE / FC-300-06 / #6 S.L.	AR	AR	AR	AR	
NS	501836	. FEMALE CONNECTOR SWIVEL / SAE 45° FITTING / #6FL-Fx#6 STL	2	2	2	2	
6	5011034	MALE ELBOW 45º / SAE 45º FITTING / #6FL-Mx1/4NPT-M BR	2	2	2	2	
7	502589	SCREW CAP HEX M8-1.25x25 G8.8 ZP	3	3	3	3	
8	502543	NUT HEX M8-1.25 ZP	3	3	3	3	
9	5001003	WASHER LO SPT 8.1x12.7x2.0 ZP	3	3	3	3	
10	501333	STREET ELBOW 90º / PIPE FITTING / 3/8NPT-Mx3/8NPT-F BR	1	1	1	1	
11	011632	SUPPORT / WELD TO CRADLE	1	1	1	1	
		2) NOT SOLD BY PREVOST (SEE MANUFACTURING PART					
		NUMBER AT END OF DESCRIPTION LINE)					

From 4-8165 Up to 8-9339	DATE: 01/2014	PAGE: Y2-0530-01

COOLANT FILTER - INSTALLATION WITH DETROIT S-60

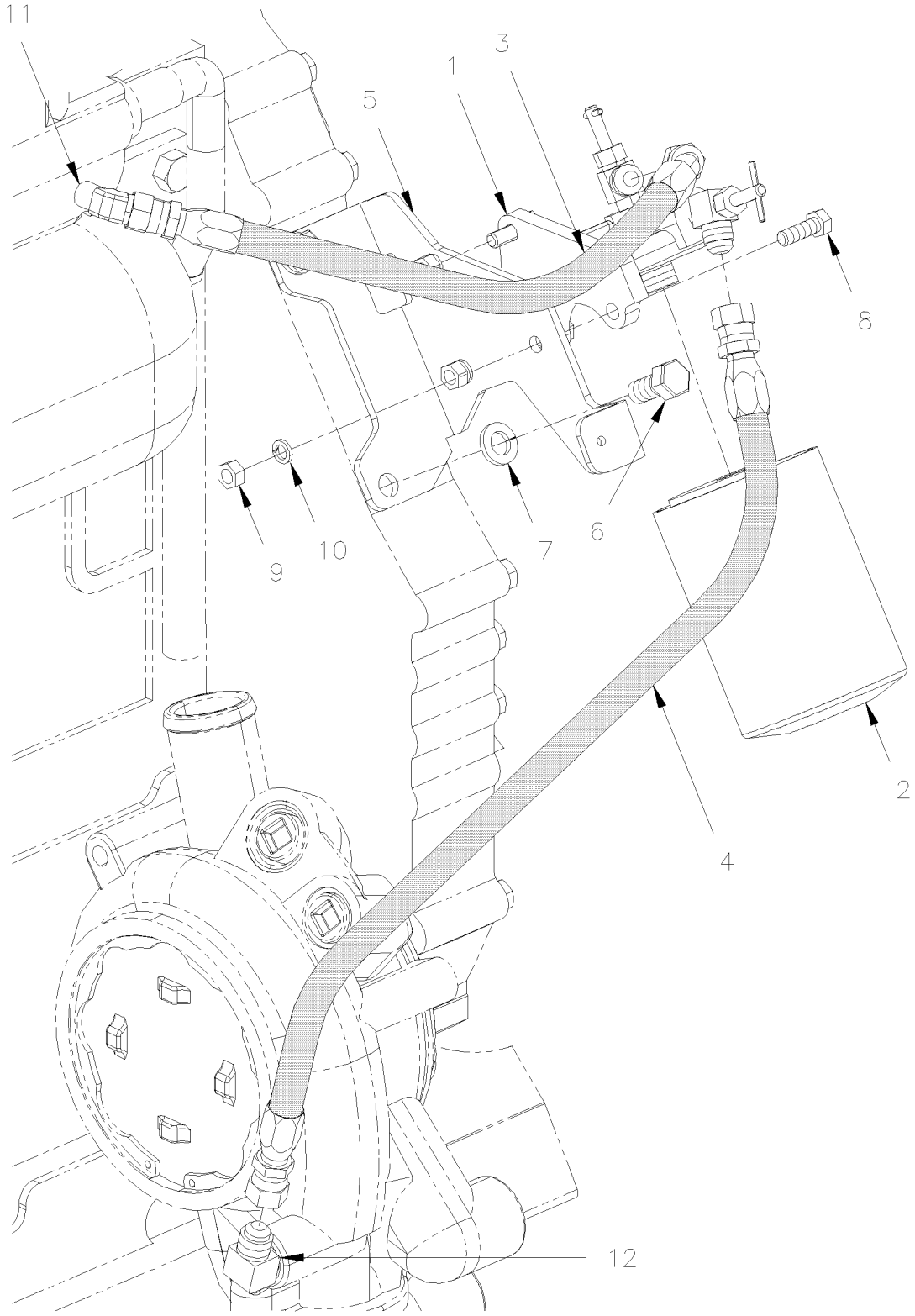

From 4-8165 Up to 8-9339	DATE: 01/2014	PAGE: Y2-0530-01

COOLANT FILTER - INSTALLATION WITH DETROIT S-60

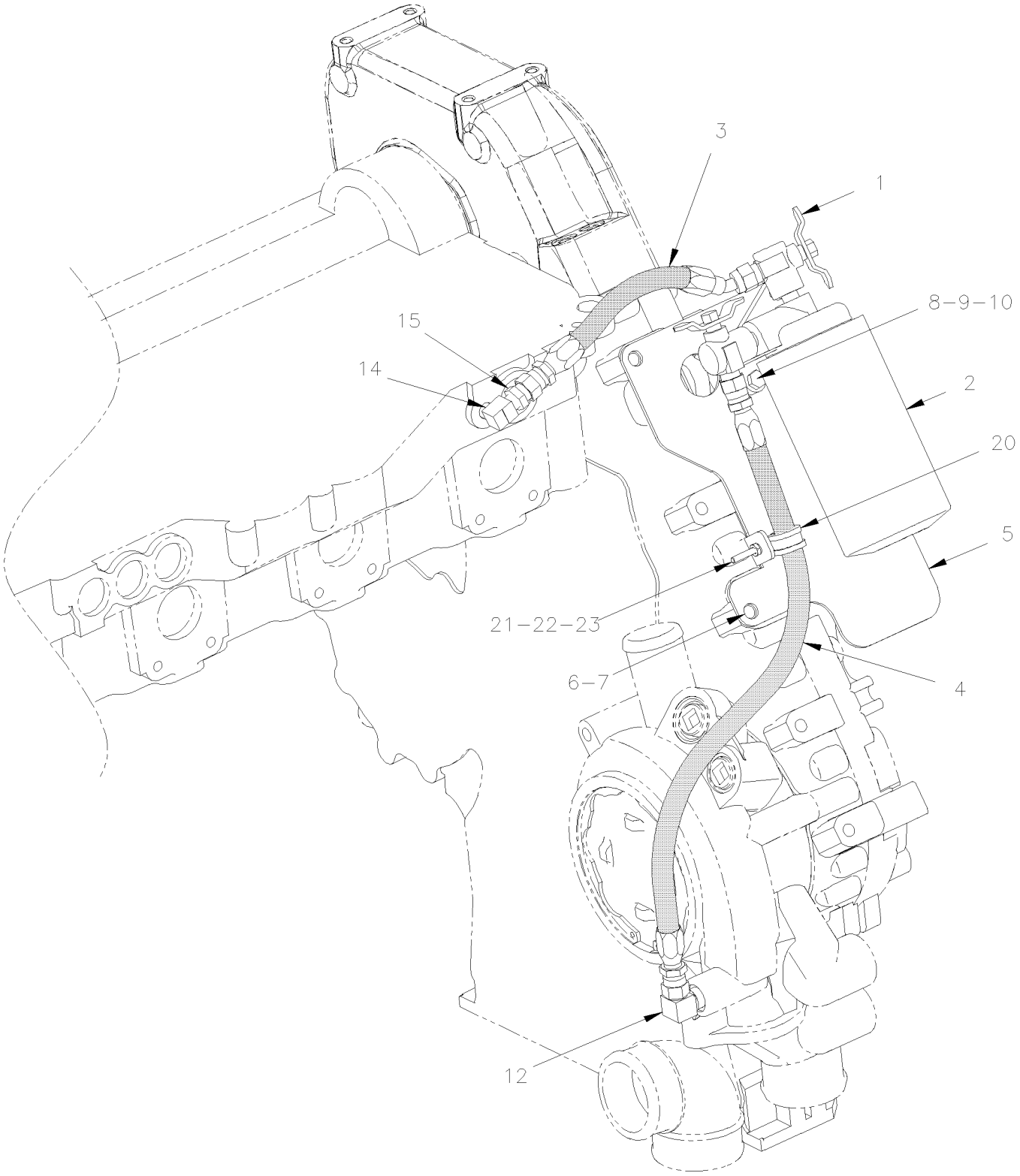

From 4-8165 Up to 8-9339	DATE: 01/2014	PAGE: Y2-0530-01

COOLANT FILTER - INSTALLATION WITH DETROIT S-60

ITEM	PART	DESCRIPTION	XL45	MTH40	MTH45	MTH45S	NOTE
1	550804	ADAPTOR HEAD, COOLANT FILTER Up to 4-8267	1	1	1	1	
1	550874	ADAPTOR HEAD, COOLANT FILTER From 4-8268	1	1	1	1	
2	550630	CARTRIGE "MAINTENANCE" "NALCOOL" 3000	1	1	1	1	
3	052472	HOSE ASSY / #6 270MM Up to 4-8267	1	1	1	1	
3	052561	HOSE ASSY / #6 172MM From 4-8268 Up to 4-8308	1	1	1	1	
3	052609	HOSE ASSY / #6 151MM From 4-8309	1	1	1	1	
4	052471	HOSE ASSY / #6 540MM Up to 4-8267	1	1	1	1	
4	052562	HOSE ASSY / #6 465MM From 4-8268	1	1	1	1	
5	052438	SUPPORT, COOLANT FILTER Up to 4-8267	1	1	1	1	
5	052560	SUPPORT, COOLANT FILTER From 4-8268	1	1	1	1	
6	502705	SCREW CAP HEX M12-1.75X25 G8.8 ZG603	2	2	2	2	
7	500747	WASHER LO SPT 12.2x21.1x2.5 ZG603	2	2	2	2	
8	955297	SCREW CAP HEX M8-1.25x25 G8.8 ZG603	3	3	3	3	
9	502851	NUT HEX M8-1.25 ZG603	3	3	3	3	
10	502889	WASHER LO SPT 8.1x12.7x2.0 ZG603	3	3	3	3	
11	5011034	MALE ELBOW 45º / SAE 45º FITTING / #6FL-Mx1/4NPT-M BR Up to 4-8267	1	1	1	1	
12	501042	MALE ELBOW 90º / SAE 45º FITTING / #6FL-Mx3/8NPT-M BR	AR	AR	AR	AR	
14	501332	STREET ELBOW 90º / PIPE FITTING / 1/4NPT-Mx1/4NPT-F BR From 4-8268	1	1	1	1	
15	501029	MALE CONNECTOR / SAE 45º FITTING / #6FL-Mx1/4NPT-M BR From 4-8268 Up to 4-8308	1	1	1	1	
15	5011266	MALE CONNECTOR LONG / JIC 37° FITTING / #6JIC-Mx1/4NPT-Mx2 1/4 STL From 4-8309	1	1	1	1	
20	952629	CLAMP / 5/8" I.D. From 4-8268	1	1	1	1	
21	500574	SCREW MA TR PH #10-24x1 1/4 SS From 4-8268	1	1	1	1	
22	502882	NUT HEX #10-24 ZG603 From 4-8268	1	1	1	1	
23	500914	WASHER LO SPT .193x.334x.047 ZG603 From 4-8268	1	1	1	1	

From 4-8165 Up to 8-9339	DATE: 01/2014	PAGE: Y2-0530-01

COOLANT FILTER - INSTALLATION WITH DETROIT S-60

ITEM	PART	DESCRIPTION	XL45	MTH40	MTH45	MTH45S	NOTE

From Y-7046 Up to 3-7940	DATE: 01/2014	PAGE: Y2-0540-00

FAN CLUTCH ASSY - #550803 - BUS

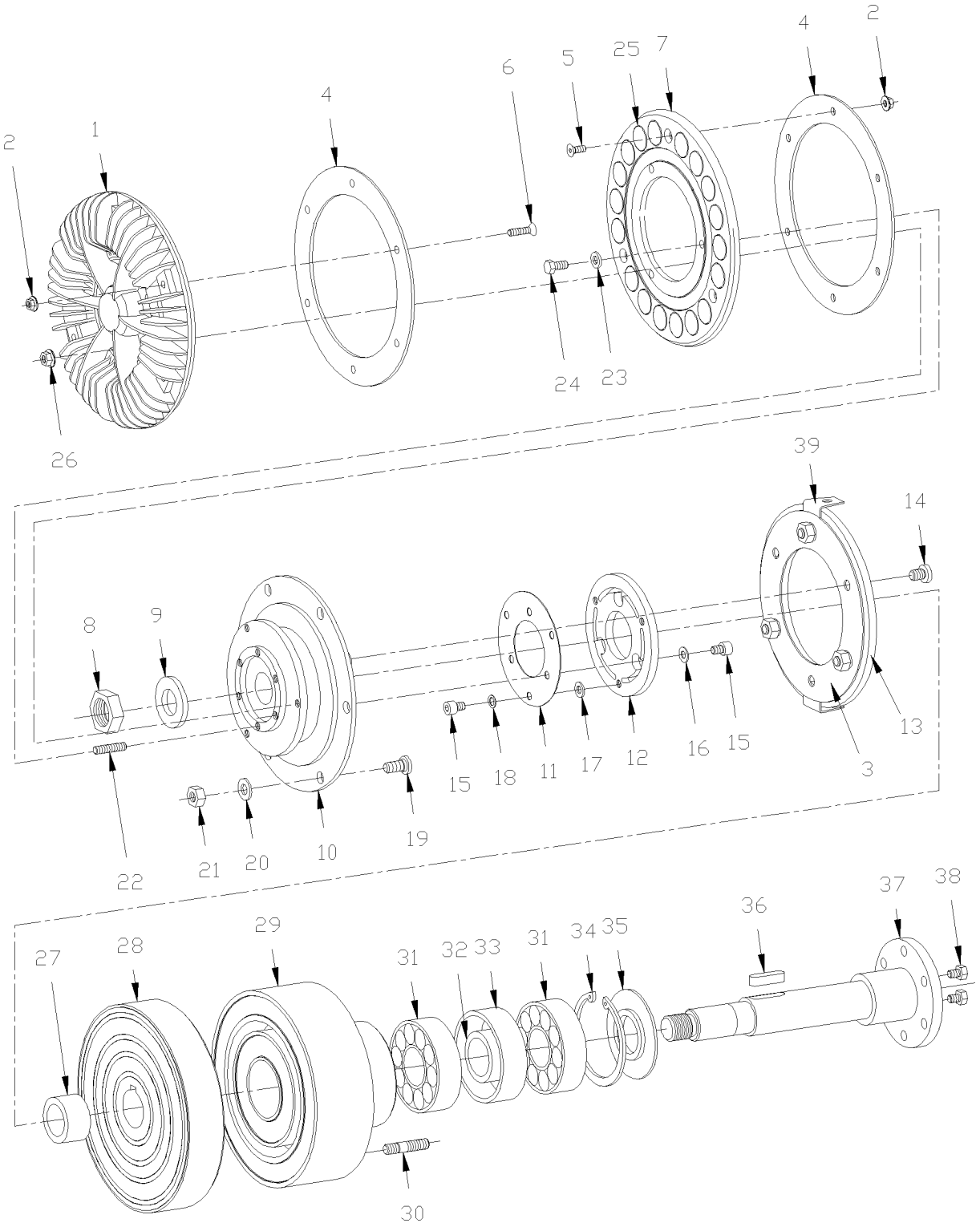

From Y-7046 Up to 3-7940	DATE: 01/2014	PAGE: Y2-0540-00

FAN CLUTCH ASSY - #550803 - BUS

ITEM	PART	DESCRIPTION	XL45	MTH40	MTH45	MTH45S	NOTE
	550803	FAN CLUTCH ASSY / / REPLACED BY: 550837	1				
1	550792	. COOLING FAN	1				
2	502782	. NUT HEX NYRT M5-0.8 CP	9				
3	550667	. SPRING PLATE	1				
4	550659	. DISC	2				
5	502639	. SCREW MA FL PH M5-0.8X12 ZP	3				
6	N.P.N.	. SCREW, M5-0.8 X 25MM FLAT HEAD	6				4
7	550779	. MAGNET PLATE SUPPORT	1				
8	502767	. NUT HEX JAM M20-1.5 ZP	2				
9	502558	. WASHER FL 21.0x37.0x3.0 G500	2				
10	550780	. FLANGE DRIVEN ASSY W/BEARING	1				
. NS	550664	. . BEARING ASSY	1				
11	550781	. SPRING PLATE	1				
12	550782	. ARMATURE DISC / 1ST SPEED	1				
13	550783	. ARMATURE DISC / 2ND SPEED	1				
14	N.P.N.	. SOCKET HEAD CAP SCREW, M8-1.25 X 16MM (50-2755)	3				4
15	N.P.N.	. SOCKET HEAD CAP SCREW, M6-1.0 X 8MM (50-01025)	6				4
16	N.P.N.	. WASHER SHIM .05MM	3				4
17	N.P.N.	. WASHER	3				4
18	502564	. WASHER LO SPT 6.1x11.8x1.6 ZP	3				
19	550669	. STUD M8-1.25 X 19MM	6				B
20	500874	. WASHER FL 8.4x17.0x1.6 ZP	6				
21	502744	. NUT HEX STO M8-1.25 ZP	6				C
22	N.P.N.	. SET SCREW, M6-1.0 X 20MM	3				4
23	N.P.N.	. WASHER	3				4
24	5001106	. SCREW CAP HEX M6-1.0x10 G8.8 ZP	3				
25	550661	. MAGNET	18				
26	502511	. NUT HEX NYRT M6-1.0 ZP	3				
27	N.P.N.	. SPACER	1				4
28	550784	. ROTOR	1				
29	550785	. MAGNETIC COIL ASSY	1				
30	550675	. STUD M8-1.25 X 35MM	4				
31	507113	. BALL BEARING	2				
32	N.P.N.	. SPACER SMALL	1				4
33	N.P.N.	. SPACER LARGE	1				4
34	N.P.N.	. RETAINER RING (72 X 2.5)	1				4
35	N.P.N.	. DEFLECTOR	1				4
36	550671	. KEY (8 X 7 X 28)	1				
37	550786	. SHAFT	1				
		4) NO PARTS NUMBER					
		B) TO FIX FAN BLADE					
		C) TO FIX FAN CLUTCH TO SUPPORT					

From Y-7046 Up to 3-7940	DATE: 01/2014	PAGE: Y2-0540-00

FAN CLUTCH ASSY - #550803 - BUS

ITEM	PART	DESCRIPTION	XL45	MTH40	MTH45	MTH45S	NOTE
38	5001106	. SCREW CAP HEX M6-1.0x10 G8.8 ZP	2				D
NS	561781	. CONNECTOR / WEATHER PACK / PH 3C / BLACK / PED 12010717	1				
NS	561567	. PIN TERMINAL / 20-18 / PED 12089040	3				
NS	561565	. CABLE SEAL / GREEN / PED 15324982	3				
39	550713	. ANGLE	2				A
NS	502744	NUT HEX STO M8-1.25 ZP	4				
NS	500874	WASHER FL 8.4x17.0x1.6 ZP	4				
		A) (EMERGENCY)					
		D) EMERGENCY USE ONLY					

From Y-7046 Up to 3-7940	DATE: 01/2014	PAGE: Y2-0540-00

FAN CLUTCH ASSY - #550803 - BUS

ITEM	PART	DESCRIPTION	XL45	MTH40	MTH45	MTH45S	NOTE

From 3-7941 Up to 3-8164	DATE: 01/2014	PAGE: Y2-0540-01
FAN CLUTCH ASSY - #550837 - BUS		

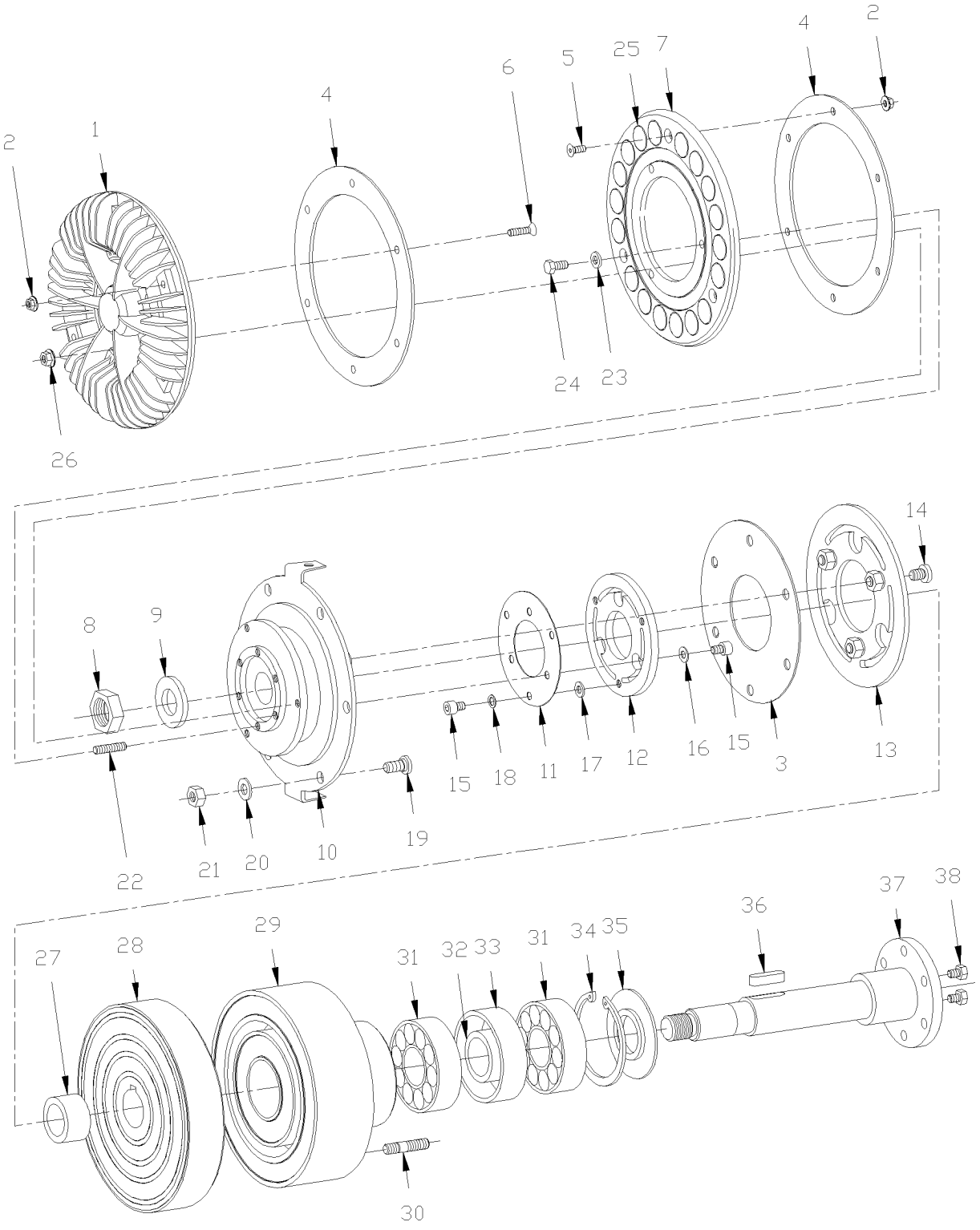

From 3-7941 Up to 3-8164	DATE: 01/2014	PAGE: Y2-0540-01

FAN CLUTCH ASSY - #550837 - BUS

ITEM	PART	DESCRIPTION	XL45	MTH40	MTH45	MTH45S	NOTE
	550837	FAN CLUTCH ASSY /	1				
. NS	550977	. REPAIR KIT	1				
1	550835	. COOLING FAN	1				
2	502782	. NUT HEX NYRT M5-0.8 CP	9				
3	550667	. SPRING PLATE	1				
4	550659	. DISC	2				
5	502639	. SCREW MA FL PH M5-0.8X12 ZP	3				
6	N.P.N.	. SCREW, MA FL PH ZP M5-0.8 X 25MM	6				4
7	550779	. MAGNET PLATE SUPPORT	1				
8	502767	. NUT HEX JAM M20-1.5 ZP	1				
9	502558	. WASHER FL 21.0x37.0x3.0 G500	1				
10	550848	. FLANGE DRIVEN ASSY W/BEARING	1				
. NS	550664	. . BEARING ASSY	1				
11	550842	. SPRING PLATE	1				
12	550843	. ARMATURE DISC / 1ST SPEED	1				
13	550849	. ARMATURE DISC / 2ND SPEED	1				
14	N.P.N.	. . SOCKET HEAD CAP SCREW, M8-1.25 X 16MM (50-2755)	3				4
15	N.P.N.	. SOCKET HEAD CAP SCREW, M6-1.0 X 8MM (50-01025)	6				4
16	N.P.N.	. WASHER, SHIM .05MM	3				4
17	502573	. WASHER FL 6.4x12.5x1.6 SS	3				
18	502564	. WASHER LO SPT 6.1x11.8x1.6 ZP	3				
19	550669	. STUD M8-1.25 X 19MM	6				
20	500874	. WASHER FL 8.4x17.0x1.6 ZP	6				
21	502744	. NUT HEX STO M8-1.25 ZP	6				
22	N.P.N.	. SET SCREW, M6-1.0 X 20MM	3				4
23	N.P.N.	. WASHER	3				4
24	5001106	. SCREW CAP HEX M6-1.0x10 G8.8 ZP	3				
25	550661	. MAGNET	18				
26	502511	. NUT HEX NYRT M6-1.0 ZP	3				
27	N.P.N.	. SPACER	1				4
28	550776	. ROTOR	1				
29	550777	. MAGNETIC COIL ASSY	1				
30	550788	. STUD M10-1.5 X 35MM	4				
31	507113	. BALL BEARING	2				
32	N.P.N.	. SPACER SMALL	1				4
33	N.P.N.	. SPACER LARGE	1				4
34	N.P.N.	. RETAINER RING (72 X 2.5)	1				4
35	N.P.N.	. DEFLECTOR	1				4
36	550671	. KEY (8 X 7 X 28)	1				
37	550786	. SHAFT	1				
38	5001106	. SCREW CAP HEX M6-1.0x10 G8.8 ZP	4				A
NS	561781	CONNECTOR / WEATHER PACK / PH 3C / BLACK / PED 12010717	1				
		4) NO PARTS NUMBER					
		A) EMERGENCY USE					

From 3-7941 Up to 3-8164	DATE: 01/2014	PAGE: Y2-0540-01

FAN CLUTCH ASSY - #550837 - BUS

ITEM	PART	DESCRIPTION	XL45	MTH40	MTH45	MTH45S	NOTE
NS	561567	PIN TERMINAL / 20-18 / PED 12089040	3				
NS	561565	CABLE SEAL / GREEN / PED 15324982	3				

From 3-7941 Up to 3-8164	DATE: 01/2014	PAGE: Y2-0540-01

FAN CLUTCH ASSY - #550837 - BUS

ITEM	PART	DESCRIPTION	XL45	MTH40	MTH45	MTH45S	NOTE

From 4-8165 Up to 6-8906	DATE: 01/2014	PAGE: Y2-0540-02
FAN CLUTCH ASSY - #550836 - BUS, MTH 40' & MTH-45E		

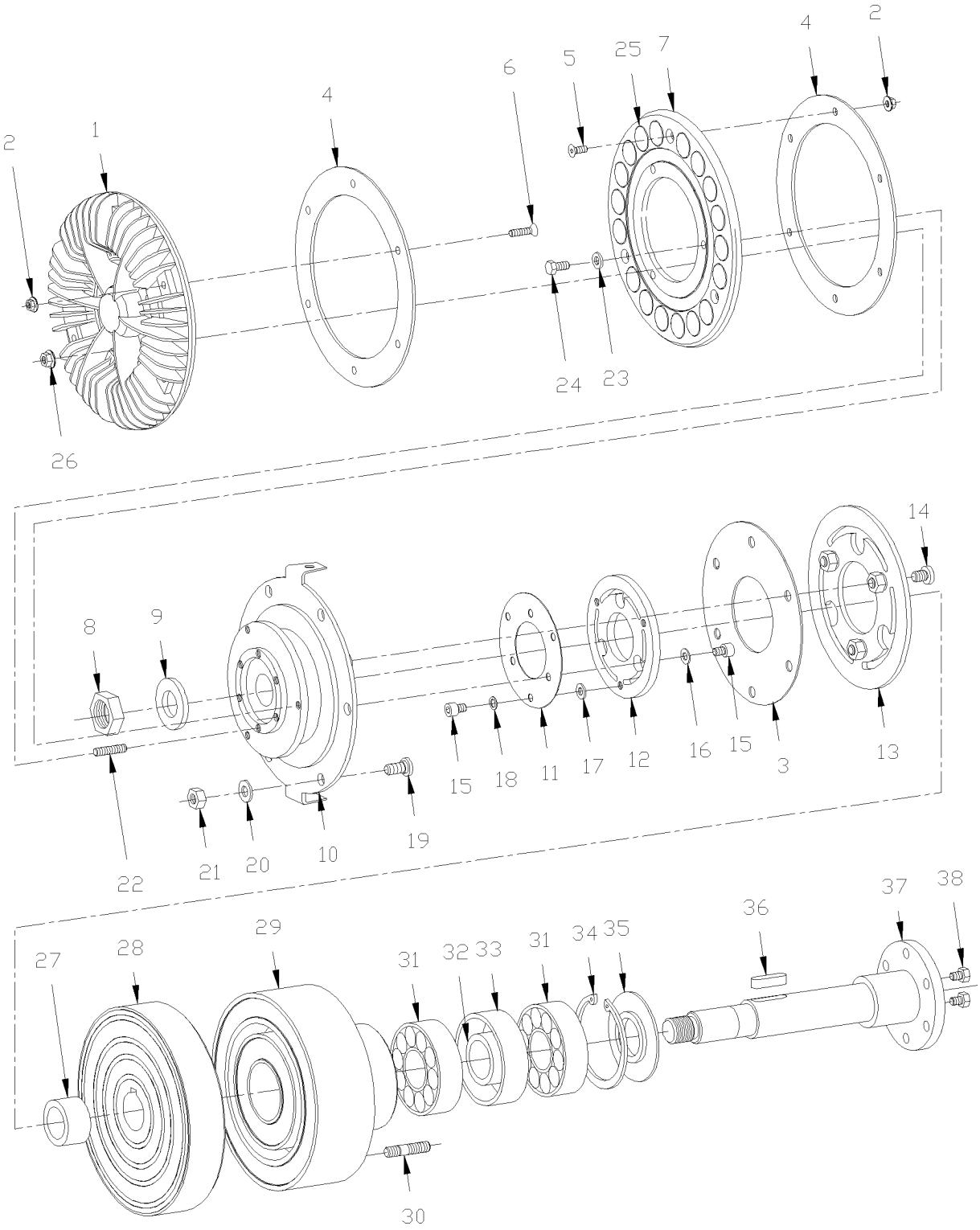

From 4-8165 Up to 6-8906	DATE: 01/2014	PAGE: Y2-0540-02

FAN CLUTCH ASSY - #550836 - BUS, MTH 40' & MTH-45E

ITEM	PART	DESCRIPTION	XL45	MTH40	MTH45	MTH45S	NOTE
	550836	FAN CLUTCH ASSY /	1	1		1	
1	550835	. COOLING FAN	1	1		1	
2	502782	. NUT HEX NYRT M5-0.8 CP	9	9		9	
3	550667	. SPRING PLATE	1	1		1	
4	550659	. DISC	2	2		2	
5	502639	. SCREW MA FL PH M5-0.8X12 ZP	3	3		3	
6	N.P.N.	. SCREW, MA FL PH ZP M5-0.8 X 25MM	6	6		6	4
7	550779	. MAGNET PLATE SUPPORT	1	1		1	
8	502767	. NUT HEX JAM M20-1.5 ZP	1	1		1	
9	502558	. WASHER FL 21.0x37.0x3.0 G500	1	1		1	
10	550841	. FLANGE DRIVEN ASSY W/BEARING	1	1		1	
11	550842	. SPRING PLATE	1	1		1	
12	550843	. ARMATURE DISC / 1ST SPEED	1	1		1	
13	550783	. ARMATURE DISC / 2ND SPEED	1	1		1	
14	N.P.N.	. . SOCKET HEAD CAP SCREW, M8-1.25 X 16MM (50-2755)	3	3		3	4
15	N.P.N.	. SOCKET HEAD CAP SCREW, M6-1.0 X 8MM (50-01025)	6	6		6	4
16	N.P.N.	. WASHER, SHIM .05MM	3	3		3	4
17	502573	. WASHER FL 6.4x12.5x1.6 SS	3	3		3	
18	502564	. WASHER LO SPT 6.1x11.8x1.6 ZP	3	3		3	
19	550669	. STUD M8-1.25 X 19MM	6	6		6	
20	500874	. WASHER FL 8.4x17.0x1.6 ZP	6	6		6	
21	502744	. NUT HEX STO M8-1.25 ZP	6	6		6	
22	N.P.N.	. SET SCREW, M6-1.0 X 20MM	3	3		3	4
23	N.P.N.	. WASHER	3	3		3	4
24	5001106	. SCREW CAP HEX M6-1.0x10 G8.8 ZP	3	3		3	
25	550661	. MAGNET	18	18		18	
26	502511	. NUT HEX NYRT M6-1.0 ZP	3	3		3	
27	N.P.N.	. SPACER	1	1		1	4
28	550776	. ROTOR	1	1		1	
29	550777	. MAGNETIC COIL ASSY	1	1		1	
30	550788	. STUD M10-1.5 X 35MM	4	4		4	
31	507113	. BALL BEARING	2	2		2	
32	N.P.N.	. SPACER SMALL	1	1		1	4
33	N.P.N.	. SPACER LARGE	1	1		1	4
34	N.P.N.	. RETAINER RING (72 X 2.5)	1	1		1	4
35	N.P.N.	. DEFLECTOR	1	1		1	4
36	550671	. KEY (8 X 7 X 28)	1	1		1	
37	550786	. SHAFT	1	1		1	
38	5001106	. SCREW CAP HEX M6-1.0x10 G8.8 ZP	4	4		4	A
NS	561781	CONNECTOR / WEATHER PACK / PH 3C / BLACK / PED 12010717	1	1		1	
NS	561567	PIN TERMINAL / 20-18 / PED 12089040	3	3		3	
NS	561565	CABLE SEAL / GREEN / PED 15324982	3	3		3	
		4) NO PARTS NUMBER					
		A) EMERGENCY USE					

From Y-7046 Up to 2-7837	DATE: 01/2014	PAGE: Y2-0540-50
FAN CLUTCH ASSY - #550802 - MTH		

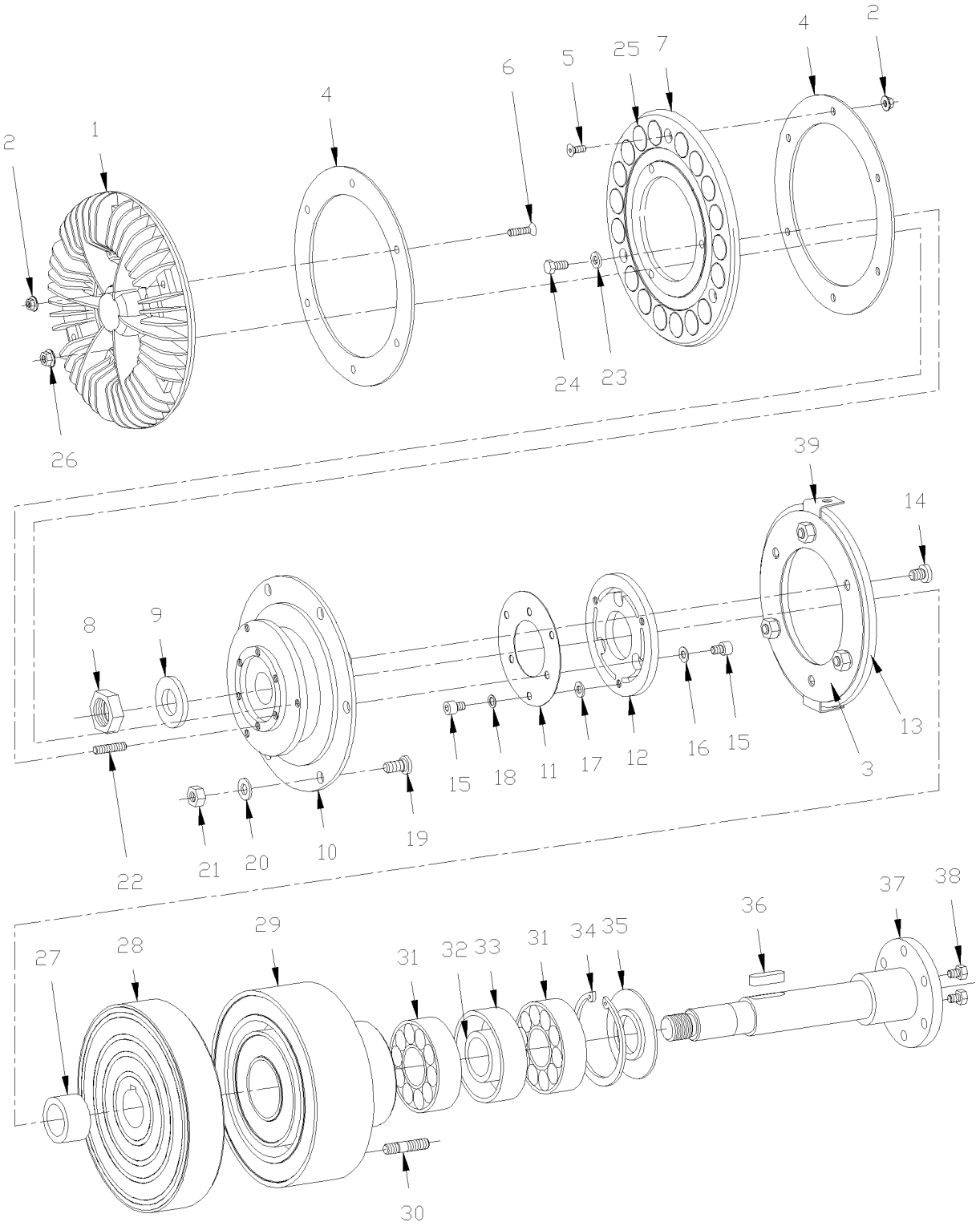

From Y-7046 Up to 2-7837	DATE: 01/2014	PAGE: Y2-0540-50

FAN CLUTCH ASSY - #550802 - MTH

ITEM	PART	DESCRIPTION	XL45	MTH40	MTH45	MTH45S	NOTE
	550802	FAN CLUTCH ASSY / / REPLACED BY: 550836		1	1	1	
1	550774	. COOLING FAN / REPLACED BY: K550774		1	1	1	
2	502782	. NUT HEX NYRT M5-0.8 CP		9	9	9	
3	550667	. . SPRING PLATE		1	1	1	
4	550659	. DISC		2	2	2	
5	502639	. SCREW MA FL PH M5-0.8X12 ZP		3	3	3	
6	N.P.N.	. SCREW, MA FL PH ZP M5-0.8 X 25MM		6	6	6	4
7	550779	. MAGNET PLATE SUPPORT		1	1	1	
8	502767	. NUT HEX JAM M20-1.5 ZP		1	1	1	
9	502558	. WASHER FL 21.0x37.0x3.0 G500		1	1	1	
10	550780	. FLANGE DRIVEN ASSY W/BEARING		1	1	1	
. NS	550664	. . BEARING ASSY		1	1	1	
11	550781	. SPRING PLATE		1	1	1	
12	550782	. ARMATURE DISC / 1ST SPEED		1	1	1	
13	550783	. ARMATURE DISC / 2ND SPEED		1	1	1	
14	N.P.N.	. . SOCKET HEAD CAP SCREW, M8-1.25 X 16MM (50-2755)		3	3	3	4
15	N.P.N.	. SOCKET HEAD CAP SCREW, M6-1.0 X 8MM (50-01025)		6	6	6	4
16	N.P.N.	. WASHER, SHIM .05MM		3	3	3	4
17	502573	. WASHER FL 6.4x12.5x1.6 SS		3	3	3	
18	502564	. WASHER LO SPT 6.1x11.8x1.6 ZP		3	3	3	
19	550669	. STUD M8-1.25 X 19MM		6	6	6	
20	500874	. WASHER FL 8.4x17.0x1.6 ZP		6	6	6	
21	502744	. NUT HEX STO M8-1.25 ZP		6	6	6	
22	N.P.N.	. SET SCREW, M6-1.0 X 20MM		3	3	3	4
23	N.P.N.	. WASHER		3	3	3	4
24	5001106	. SCREW CAP HEX M6-1.0x10 G8.8 ZP		3	3	3	
25	550661	. MAGNET		18	18	18	
26	502511	. NUT HEX NYRT M6-1.0 ZP		3	3	3	
27	N.P.N.	. SPACER		1	1	1	4
28	550776	. ROTOR		1	1	1	
29	550777	. MAGNETIC COIL ASSY		1	1	1	
30	550788	. STUD M10-1.5 X 35MM		4	4	4	
31	507113	. BALL BEARING		2	2	2	
32	N.P.N.	. SPACER SMALL		1	1	1	4
33	N.P.N.	. SPACER LARGE		1	1	1	4
34	N.P.N.	. RETAINER RING (72 X 2.5)		1	1	1	4
35	N.P.N.	. DEFLECTOR		1	1	1	4
36	550671	. KEY (8 X 7 X 28)		1	1	1	
37	550786	. SHAFT		1	1	1	
NS	5001106	. SCREW CAP HEX M6-1.0x10 G8.8 ZP		2	2	2	A
NS	550713	. ANGLE		2	2	2	A
NS	561781	CONNECTOR / WEATHER PACK / PH 3C / BLACK / PED 12010717		1	1	1	
		4) NO PARTS NUMBER					
		A) EMERGENCY USE					

From Y-7046 Up to 2-7837	DATE: 01/2014	PAGE: Y2-0540-50

FAN CLUTCH ASSY - #550802 - MTH

ITEM	PART	DESCRIPTION	XL45	MTH40	MTH45	MTH45S	NOTE
NS	561567	PIN TERMINAL / 20-18 / PED 12089040		3	3	3	
NS	561565	CABLE SEAL / GREEN / PED 15324982		3	3	3	

From Y-7046 Up to 2-7837	DATE: 01/2014	PAGE: Y2-0540-50

FAN CLUTCH ASSY - #550802 - MTH

ITEM	PART	DESCRIPTION	XL45	MTH40	MTH45	MTH45S	NOTE

From 2-7838 Up to 3-8164	DATE: 01/2014	PAGE: Y2-0540-51
FAN CLUTCH ASSY - #550836 - MTH		

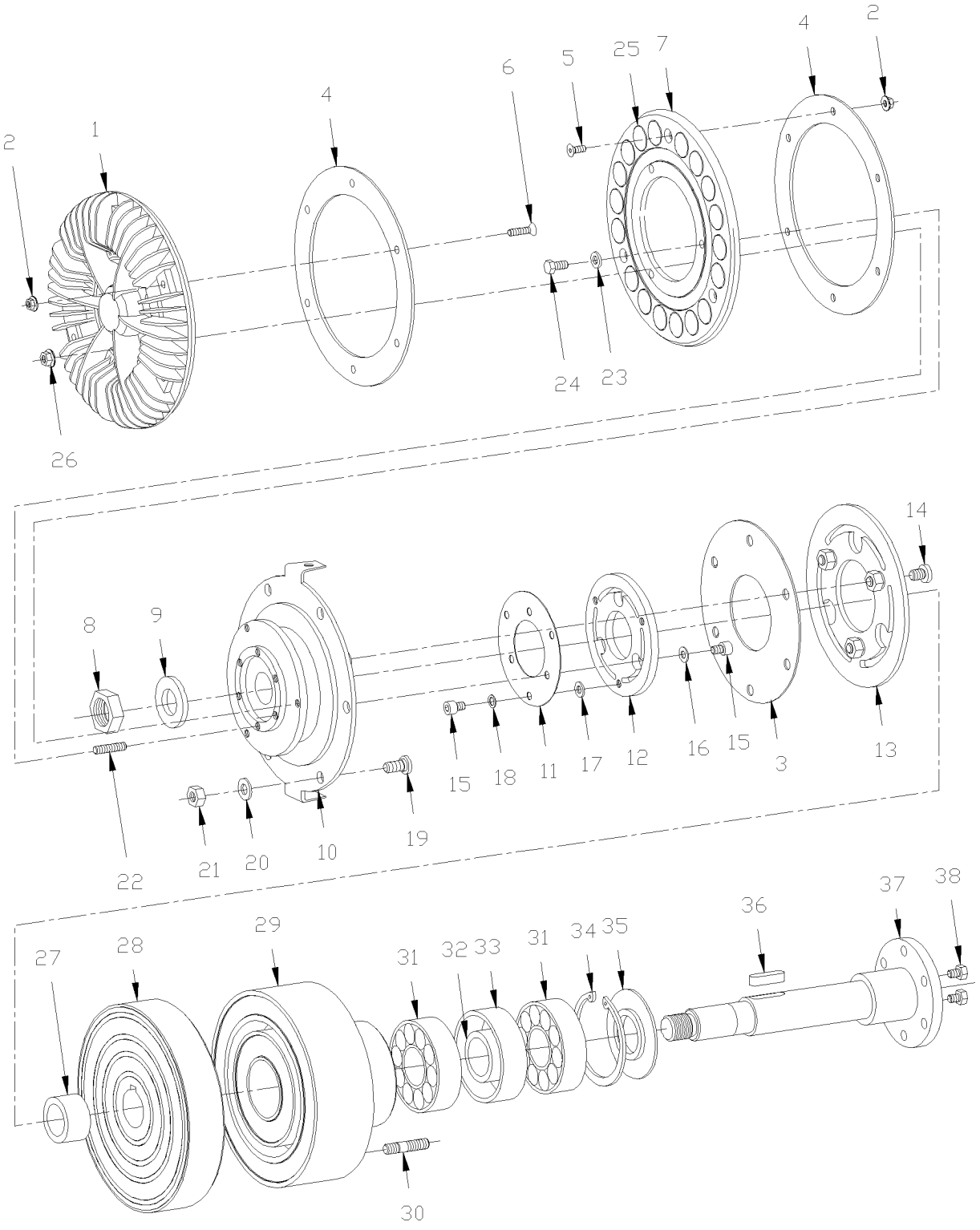

From 2-7838 Up to 3-8164	DATE: 01/2014	PAGE: Y2-0540-51

FAN CLUTCH ASSY - #550836 - MTH

ITEM	PART	DESCRIPTION	XL45	MTH40	MTH45	MTH45S	NOTE
	550836	FAN CLUTCH ASSY /		1	1	1	
1	550835	. COOLING FAN		1	1	1	
2	502782	. NUT HEX NYRT M5-0.8 CP		9	9	9	
3	550667	. SPRING PLATE		1	1	1	
4	550659	. DISC		2	2	2	
5	502639	. SCREW MA FL PH M5-0.8X12 ZP		3	3	3	
6	N.P.N.	. SCREW, MA FL PH ZP M5-0.8 X 25MM		6	6	6	4
7	550779	. MAGNET PLATE SUPPORT		1	1	1	
8	502767	. NUT HEX JAM M20-1.5 ZP		1	1	1	
9	502558	. WASHER FL 21.0x37.0x3.0 G500		1	1	1	
10	550841	. FLANGE DRIVEN ASSY W/BEARING		1	1	1	
11	550842	. SPRING PLATE		1	1	1	
12	550843	. ARMATURE DISC / 1ST SPEED		1	1	1	
13	550783	. ARMATURE DISC / 2ND SPEED		1	1	1	
14	N.P.N.	. . SOCKET HEAD CAP SCREW, M8-1.25 X 16MM (50-2755)		3	3	3	4
15	N.P.N.	. SOCKET HEAD CAP SCREW, M6-1.0 X 8MM (50-01025)		6	6	6	4
16	N.P.N.	. WASHER, SHIM .05MM		3	3	3	4
17	502573	. WASHER FL 6.4x12.5x1.6 SS		3	3	3	
18	502564	. WASHER LO SPT 6.1x11.8x1.6 ZP		3	3	3	
19	550669	. STUD M8-1.25 X 19MM		6	6	6	
20	500874	. WASHER FL 8.4x17.0x1.6 ZP		6	6	6	
21	502744	. NUT HEX STO M8-1.25 ZP		6	6	6	
22	N.P.N.	. SET SCREW, M6-1.0 X 20MM		3	3	3	4
23	N.P.N.	. WASHER		3	3	3	4
24	5001106	. SCREW CAP HEX M6-1.0x10 G8.8 ZP		3	3	3	
25	550661	. MAGNET		18	18	18	
26	502511	. NUT HEX NYRT M6-1.0 ZP		3	3	3	
27	N.P.N.	. SPACER		1	1	1	4
28	550776	. ROTOR		1	1	1	
29	550777	. MAGNETIC COIL ASSY		1	1	1	
30	550788	. STUD M10-1.5 X 35MM		4	4	4	
31	507113	. BALL BEARING		2	2	2	
32	N.P.N.	. SPACER SMALL		1	1	1	4
33	N.P.N.	. SPACER LARGE		1	1	1	4
34	N.P.N.	. RETAINER RING (72 X 2.5)		1	1	1	4
35	N.P.N.	. DEFLECTOR		1	1	1	4
36	550671	. KEY (8 X 7 X 28)		1	1	1	
37	550786	. SHAFT		1	1	1	
38	5001106	. SCREW CAP HEX M6-1.0x10 G8.8 ZP		4	4	4	A
NS	561781	CONNECTOR / WEATHER PACK / PH 3C / BLACK / PED 12010717		1	1	1	
NS	561567	PIN TERMINAL / 20-18 / PED 12089040		3	3	3	
NS	561565	CABLE SEAL / GREEN / PED 15324982		3	3	3	
		4) NO PARTS NUMBER					
		A) EMERGENCY USE					

From 4-8165 Up to 8-9339	DATE: 01/2014	PAGE: Y2-0540-52
FAN CLUTCH ASSY - #550839 - MTH 45'		

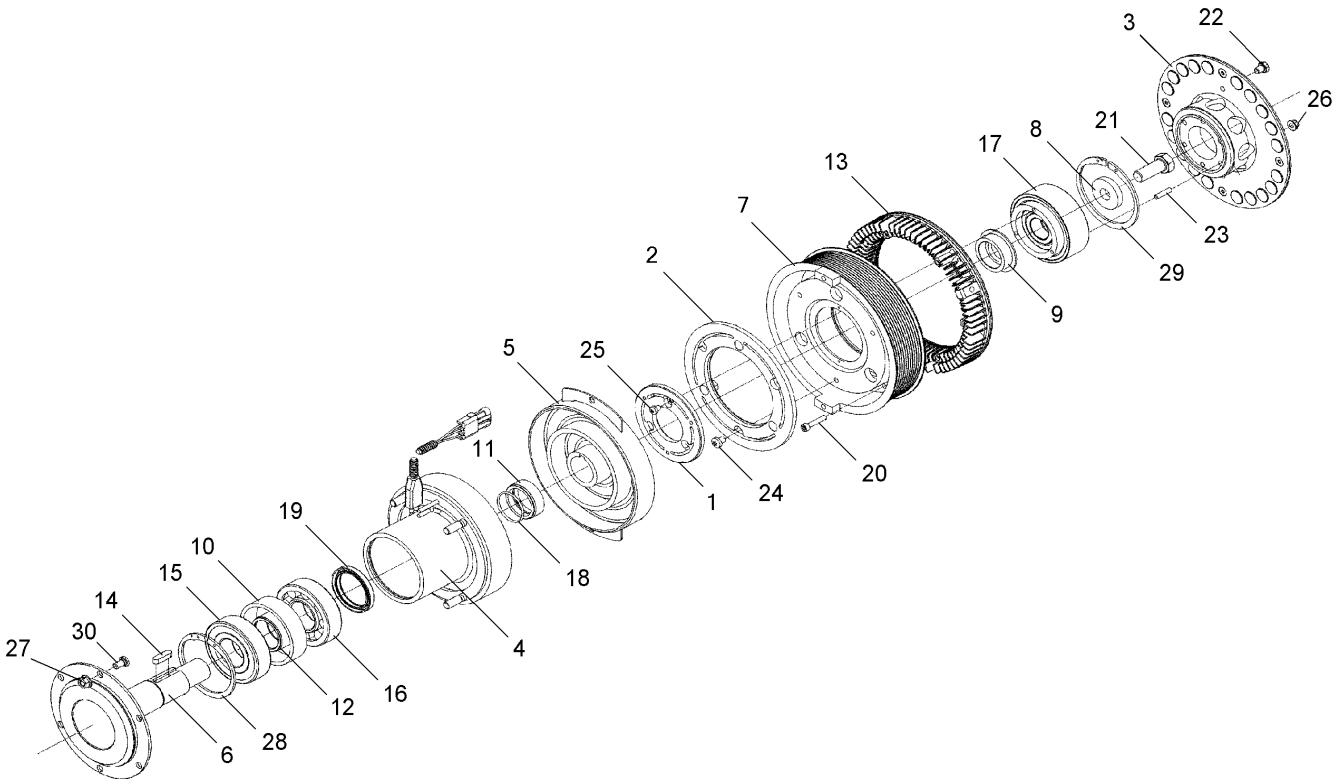

From 4-8165 Up to 8-9339	DATE: 01/2014	PAGE: Y2-0540-52

FAN CLUTCH ASSY - #550839 - MTH 45'

ITEM	PART	DESCRIPTION	XL45	MTH40	MTH45	MTH45S	NOTE
	550839	FAN CLUTCH ASSY /			1		
. NS	IS-EB0140 A	. SEE INSTRUCTION SHEET			1		
	550839	FAN CLUTCH ASSY / From 6-8810	1	1		1	
. NS	IS-EB0140 A	. SEE INSTRUCTION SHEET From 6-8810	1	1		1	
1		. ARMATURE DISC	1				
2		. ARMATURE DISC	1				
3	550882	. MAGNET RING ASSY	1				
4	550883	. MAGNETIC COIL ASSY	1				
5	550884	. ROTOR	1				
6	550885	. SHAFT	1				
7	550890	. PULLEY ASSY WBEARING & DISC	1				A
8	550887	. WASHER	1				
9	550888	. BUSHING FLANGE	1				
10	N.P.N.	. SPACER	1				4
11	550893	. BUSHING W/GROOVE	1				
12	N.P.N.	. SPACER	1				4
13	550889	. COOLING RING	1				
14	550671	. KEY (8 X 7 X 28)	1				
15	550895	. BALL BEARING	1				
16	550894	. ROLLER BEARING	1				
17	550886	. BEARING ASSY	1				
18	550891	. O-RING 40 X 2.5	1				
19	550892	. SEAL 50 X 65 X 8	1				
20	N.P.N.	. SCREW CAP HEX S.ZP MG X 30 G8.8	6				4
21	N.P.N.	. SCREW CAP HEX M16 X 40 G10.9	1				4
22	500069	. SCREW CAP HEX M8-1.25x16 G10.9 DP	2				B
23	N.S.S.	. INSERT	3				1
24	N.S.S.	. INSERT	3				1
25		. SCREW M6 X 8	6				
26	502744	. NUT HEX STO M8-1.25 ZP	4				
27	500680	. NUT HEX STO M10-1.5 ZP	6				
28	N.P.N.	. RETAINER RING (90 X 3)	1				4
29	N.P.N.	. RETAINER RING (100 X 3)	1				4
30	N.P.N.	. INSERT	4				4
		1) NOT SOLD SEPARATELY					
		4) NO PARTS NUMBER					
		A) INCLUDES ITEMS #1, 2, 17, 23, 24, 25 & 29					
		B) USE IN EMERGENCY ONLY					

From Y-7046 Up to 8-9339	DATE: 01/2014	PAGE: Y2-06
ELECTRICAL		

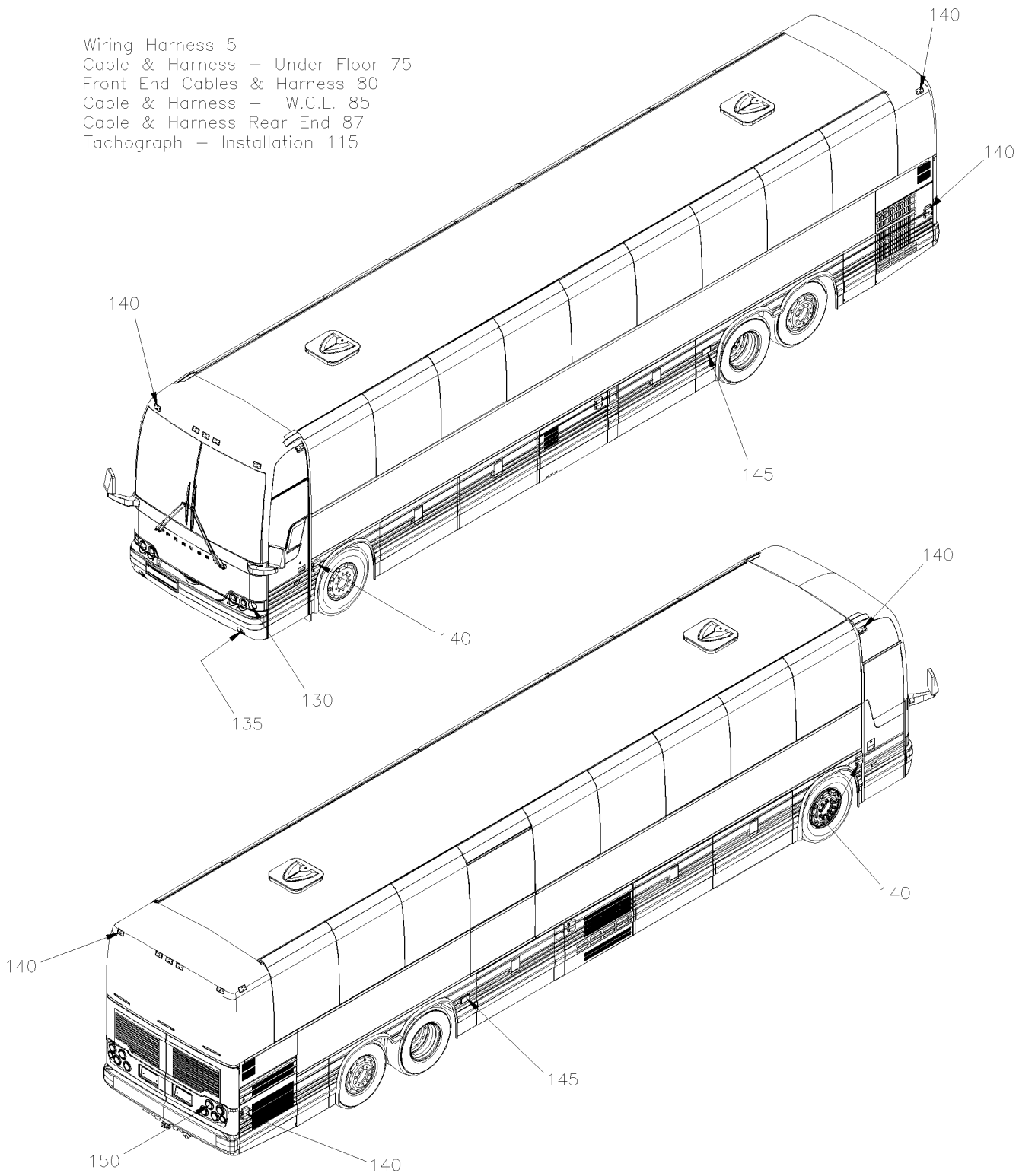

From Y-7046 Up to 8-9339	DATE: 01/2014	PAGE: Y2-06
ELECTRICAL		

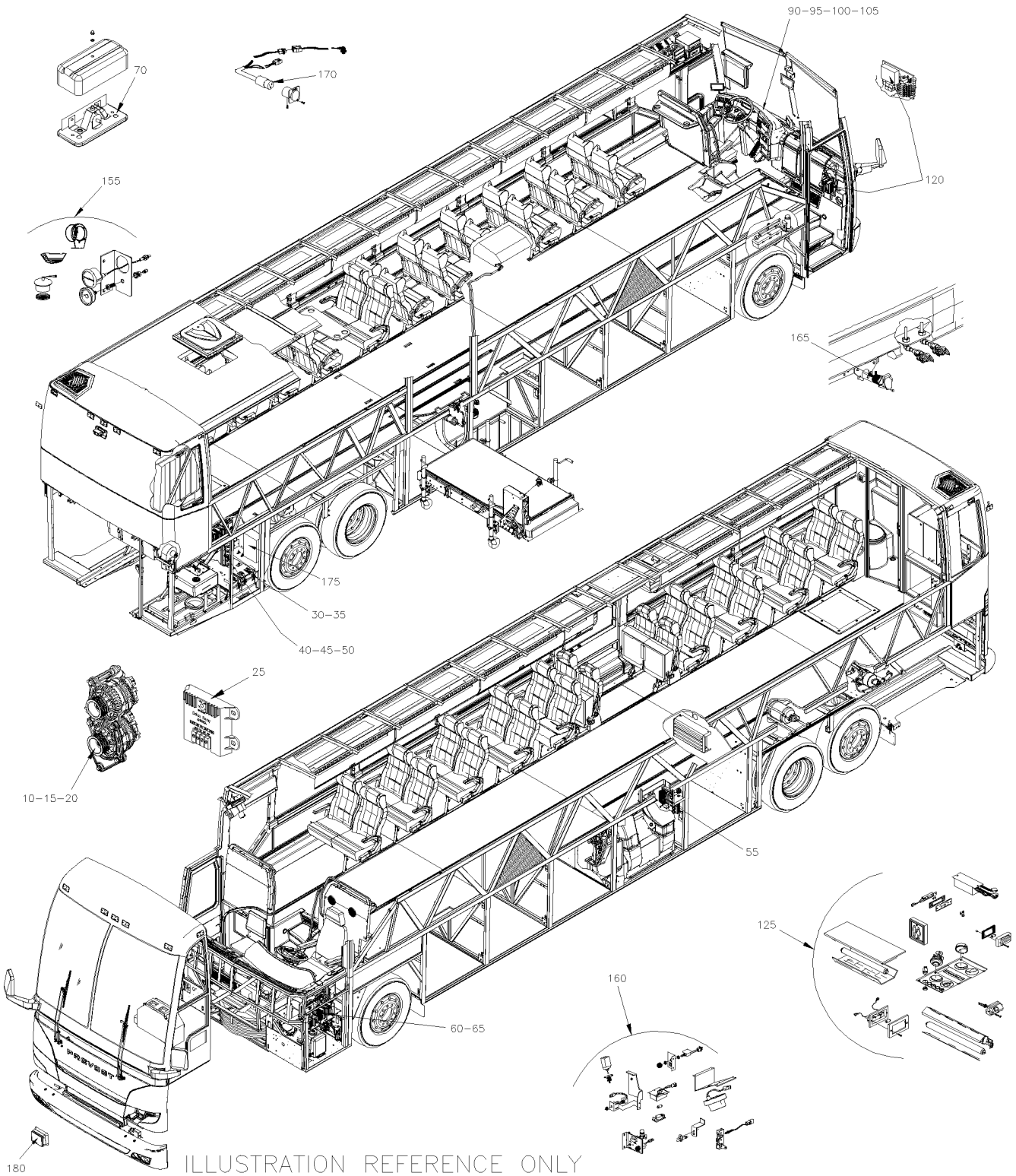

From Y-7046 Up to 8-9339	DATE: 01/2014	PAGE: Y2-06

ELECTRICAL

ITEM	PART	DESCRIPTION	XL45	MTH40	MTH45	MTH45S	NOTE
5	Y2-0600-00	**WIRING HARNESS - BUS 45' DIAGRAM D-060938 From Y-7046 Up to 6-8906**					
5	Y2-0600-50	**WIRING HARNESS - MTH 40' & MTH 45' DIAGRAM D-060921 From Y-7046 Up to 7-9095**					
5	Y2-0600-52	**WIRING HARNESS - MTH W/MUX DIAGRAM D-061080 From 7-9096 Up to 8-9339**					
10	Y2-0605-00	**ALTERNATOR 24V/140 AMPS / "BOSCH" From Y-7046 Up to 8-9339**					
10	Y2-0605-51	**ALTERNATOR 24V/270 AMPS / "DELCO" #562235 From Y-7046 Up to 8-9339**					
10	Y2-0605-52	**ALTERNATOR 12V/300 AMPS / "DELCO" #562355 From Y-7046 Up to 8-9339**					
15	Y2-0610-00	**ALTERNATOR MOUNTING / "BOSCH" WITH DETROIT S-60 From Y-7046 Up to 3-8164**					
15	Y2-0610-01	**ALTERNATOR MOUNTING / "BOSCH" WITH DETROIT S-60 From 4-8165 Up to 8-9339**					
20	Y2-0610-50	**ALTERNATOR MOUNTING / "DELCO" WITH DETROIT S-60 From Y-7046 Up to 3-8164**					
20	Y2-0610-51	**ALTERNATOR MOUNTING / 12V & 24V - MTH From Y-7046 Up to 8-9339**					
20	Y2-0610-52	**ALTERNATOR MOUNTING / 12V & 24V - MTH / GEARBOX INSTAL From Y-7046 Up to 8-9339**					
20	Y2-0610-54	**ALTERNATOR MOUNTING / "BOSCH" - 24V/140A / GEARBOX INSTAL From 6-8864 Up to 8-9339**					
20	Y2-0610-55	**ALTERNATOR MOUNTING / "DELCO" WITH DETROIT S-60 From 4-8165 Up to 8-9339**					
25	Y2-0610-60	**VOLTAGE REGULATOR - 24 VOLTS W/270 AMPS From Y-7046 Up to 8-9339**					
30	Y2-0615-00	**BATTERIES INSTALLATION - BUS From Y-7046 Up to 6-8906**					
30	Y2-0615-10	**BATTERIES COMPARTMENT PANEL From Y-7046 Up to 6-8906**					
35	Y2-0615-50	**BATTERIES INSTALLATION - MTH40' & MTH-45' ENT From Y-7046 Up to 7-9095**					
35	Y2-0615-51	**BATTERIES INSTALLATION - MTH WITH / MUX From 7-9096 Up to 8-9339**					
35	Y2-0615-60	**BATTERIES INSTALLATION - MTH-45' From Y-7046 Up to 7-9095**					
40	Y2-0616-00	**JUNCTION BOX COMPONENTS, RELAY & BREAKER From Y-7046 Up to 7-9095**					
40	Y2-0616-01	**JUNCTION BOX COMPONENTS, RELAY & BREAKER / MUX From 7-9096 Up to 8-9339**					
45	Y2-0616-10	**BREAKER PANEL - BUS From Y-7046 Up to 6-8906**					
45	Y2-0616-50	**BREAKER PANEL - MTH From Y-7046 Up to 7-9095**					
50	Y2-0620-00	**REAR JUNCTION BOX ASSY From Y-7046 Up to 7-9095**					
50	Y2-0620-05	**REAR JUNCTION BOX FAN - INSTALLATION From 7-9096 Up to 8-9339**					
50	Y2-0620-50	**REAR JUNCTION BOX ASSY - MTH WITH MUX (D380244) From 7-9096 Up to 8-9339**					
55	Y2-0621-00	**A/C JUNCTION BOX ASSY From Y-7046 Up to 7-9095**					
55	Y2-0621-10	**CABLE & HARNESS EVAPO. & CONDENSOR - INST From Y-7046 Up to 7-9095**					
55	Y2-0621-50	**A/C CONDENSOR MOTOR RELAY From 7-9096 Up to 8-9339**					
60	Y2-0625-00	**FRONT JUNCTION PANEL From Y-7046 Up to 7-9095**					
60	Y2-0625-01	**FRONT JUNCTION PANEL / MUX From 7-9096 Up to 8-9339**					
65	Y2-0625-10	**FRONT JUNCTION BOX - INSTALLATION From Y-7046 Up to 7-9095**					
65	Y2-0625-11	**FRONT JUNCTION BOX - INSTALLATION From 7-9096 Up to 8-9339**					
70	Y2-0628-00	**CHIME BELL - INSTALLATION From Y-7046 Up to 6-8906**					
75	Y2-0630-00	**CABLE & HARNESS - UNDER FLOOR - BUS From Y-7046 Up to 6-8906**					
75	Y2-0630-50	**CABLE & HARNESS - UNDER FLOOR - MTH-40' & MTH-45' ENT From Y-7046 Up to 7-9095**					
75	Y2-0630-51	**CABLE & HARNESS UNDER FLOOR - MTH WITH / MUX From 7-9096 Up to 8-9339**					
75	Y2-0630-60	**CABLE & HARNESS - UNDER FLOOR - MTH-45' From Y-7046 Up to 7-9095**					
80	Y2-0640-00	**FRONT END CABLE & HARNESS - BUS From Y-7046 Up to 6-8906**					
80	Y2-0640-50	**FRONT END CABLE & HARNESS - MTH From Y-7046 Up to 7-9095**					
80	Y2-0640-51	**FRONT END CABLE & HARNESS - MTH / MUX // D061083 From 7-9096 Up to 8-9339**					
85	Y2-0640-80	**CABLE & HARNESS - W.C.L. From Y-7046 Up to 6-8906**					
87	Y2-0641-00	**CABLE & HARNESS REAR END - BUS From Y-7046 Up to 6-8906**					
90	Y2-0645-00	**SWITCHES L.H. CONSOLE - BUS From Y-7046 Up to 6-8906**					

From Y-7046 Up to 8-9339	DATE: 01/2014	PAGE: Y2-06

ELECTRICAL

ITEM	PART	DESCRIPTION	XL45	MTH40	MTH45	MTH45S	NOTE
90	Y2-0645-05	**SWITCHES L.H. CONSOLE - MTH From Y-7046 Up to 8-9339**					
95	Y2-0645-10	**L.H. DASHBOARD PANEL From Y-7046 Up to 8-9339**					
100	Y2-0645-20	**CENTER DASHBOARD PANEL From Y-7046 Up to 8-9339**					
105	Y2-0645-30	**R.H. DASHBOARD PANEL From Y-7046 Up to 8-9339**					
115	Y2-0650-10	**TACHOGRAPH - INSTALLATION From Y-7046 Up to 6-8906**					
120	Y2-0650-50	**KEYLESS MODULE From Y-7046 Up to 7-9095**					
125	Y2-0655-00	**INTERIOR LIGHTING From Y-7046 Up to 8-9339**					
130	Y2-0660-00	**HEADLAMP & FRONT DIRECTIONAL LAMPS RECTANGULAR "HALOGENE" From Y-7046 Up to 4-8358**					
130	Y2-0660-01	**HEADLAMP & FRONT DIRECTIONAL LAMPS ROUND "HALOGENE" & "XENON" From 4-8359 Up to 8-9339**					
135	Y2-0661-00	**FOG LAMP From Y-7046 Up to 4-8358**					
135	Y2-0661-01	**FOG LAMP From 4-8359 Up to 8-9339**					
140	Y2-0662-00	**CLEARANCE & MARKER LIGHT From Y-7046 Up to 8-9339**					
145	Y2-0663-00	**DOCK & CORNERING LIGHT From Y-7046 Up to 8-9339**					
150	Y2-0664-00	**REAR EXTERIOR LIGHTS & PLATE HOLDER From Y-7046 Up to 3-8164**					
150	Y2-0664-01	**REAR EXTERIOR LIGHTS & PLATE HOLDER From 4-8165 Up to 8-9339**					
155	Y2-0665-00	**ENGINE COMPARTMENT - ELECTRIC COMPONENTS From Y-7046 Up to 8-9339**					
160	Y2-0665-10	**SWITCHES, LIGHTS, AJAR - UNDER FLOOR From Y-7046 Up to 8-9339**					
165	Y2-0665-20	**CABLE TRAILER - INSTALLATION - BUS From Y-7046 Up to 6-8906**					
170	Y2-0666-00	**BLOCK HEATER RECEPTACLE From Y-7046 Up to 8-9339**					
175	Y2-0670-10	**BATTERIES CHARGER - INSTALLATION From Y-7046 Up to 6-8906**					
180	Y2-0675-00	**SYSTEM - "VORAD" From Y-7046 Up to 8-9339**					

From Y-7046 Up to 6-8906	DATE: 01/2014	PAGE: Y2-0600-00

WIRING HARNESS - BUS 45' DIAGRAM D-060938

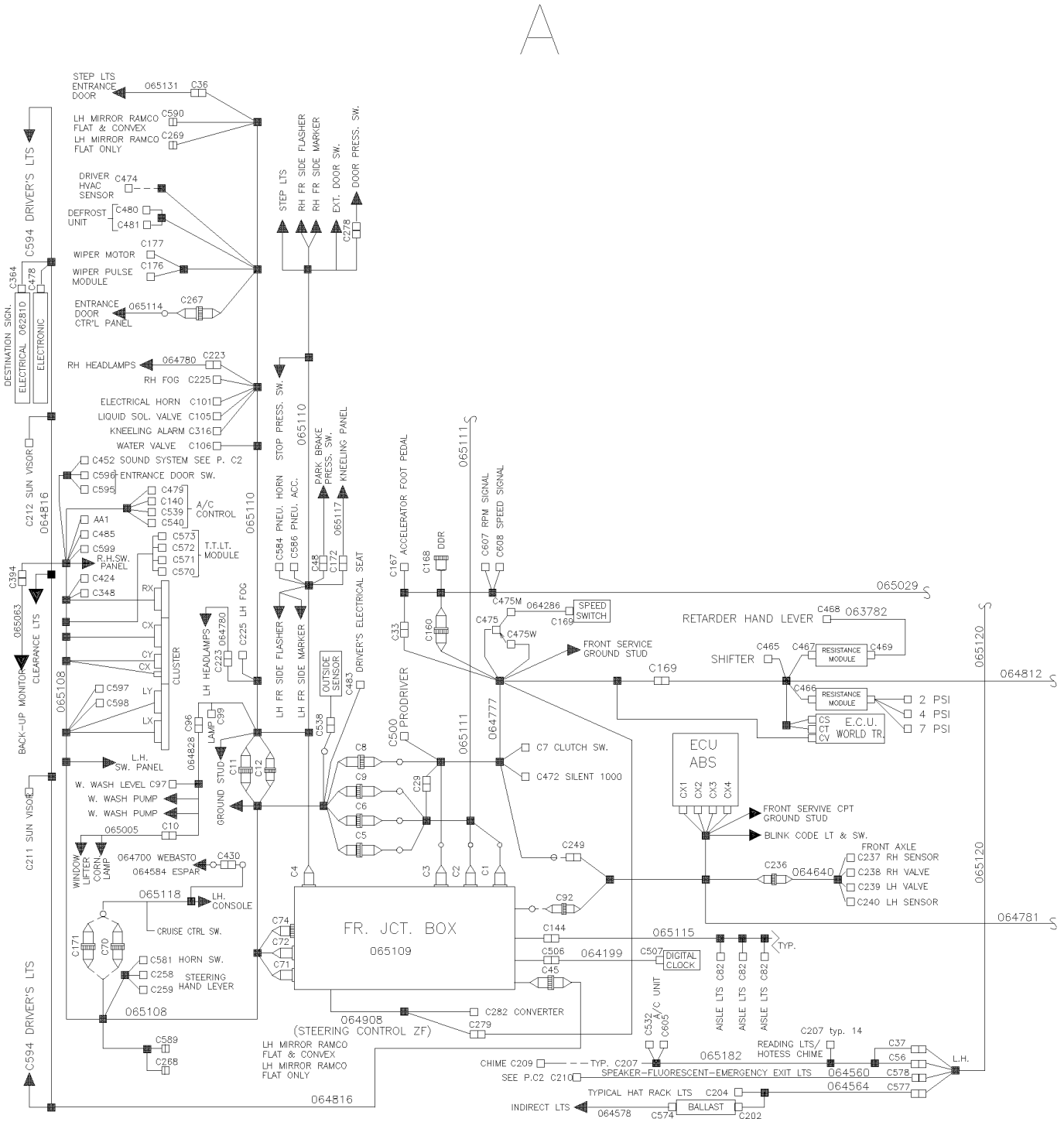

From Y-7046 Up to 6-8906	DATE: 01/2014	PAGE: Y2-0600-00

WIRING HARNESS - BUS 45' DIAGRAM D-060938

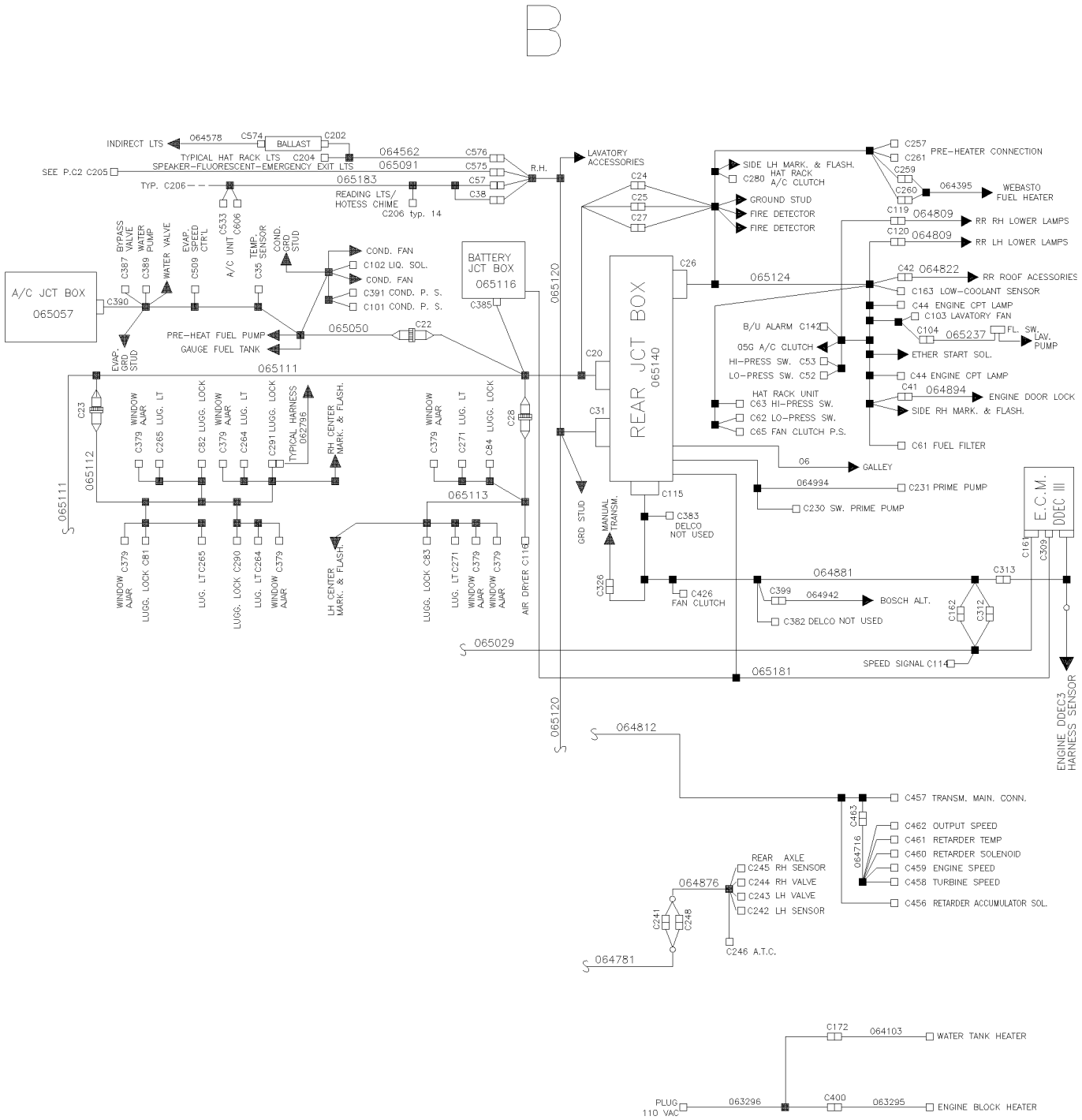

From Y-7046 Up to 6-8906	DATE: 01/2014	PAGE: Y2-0600-00

WIRING HARNESS - BUS 45' DIAGRAM D-060938

ITEM	PART	DESCRIPTION	XL45	MTH40	MTH45	MTH45S	NOTE
		IN BATTERIES COMPARTMENT					
1	063592	CABLE ASSY / <> B - TO GROUND	1				
1	064255	CABLE ASSY / <> B - TO GROUND	1				
2	062371	CABLE ASSY / <> B + TO B +	2				
3	061180	CABLE ASSY / <> B - TO B -	2				D
3	063903	CABLE ASSY / <> B + TO B -	1				
4	061036	CABLE ASSY / <> B - TO B -	2				
5	063591	CABLE ASSY / #24 <> RELAY BATTERY & BATTERY	1				
5	064256	CABLE ASSY / #24 <> RELAY BATTERY & BATTERY	1				D
6	063595	CABLE ASSY / #24 TO BOOST BLOCK	1				
7	063588	CABLE ASSY / #0VA / REPLACED BY: 065819	1				
7	065819	CABLE ASSY / #0VA	1				
7	063897	CABLE ASSY / #0VA / REPLACED BY: 065821	1				D
7	065821	CABLE ASSY / #0VA	1				D
8	063636	CABLE ASSY / #12VA / REPLACED BY: 065825	1				
8	065825	WIRING HARNESS	1				
8	063898	CABLE ASSY / #12VA / REPLACED BY: 065822	1				D
8	065822	CABLE ASSY / #12VA	1				D
9	064046	CABLE ASSY / #24VA / REPLACED BY: 065826	1				
9	065826	CABLE NO: 24VA ASSY	1				
9	064257	CABLE NO: 24VA ASSY / REPLACED BY: 065824	1				D
9	065824	CABLE NO: 24VA ASSY	1				D
10	064047	CABLE ASSY / #0 BATTERY BOOSTER BLOCK	1				
11	064045	CABLE NO: 12P ASSY	1				
11	064258	CABLE NO: 12P ASSY / W/ 8D BATTERIES	1				D
12	065116	WIRING HARNESS, BATTERIES COMPARTMENT ACCES	1				
13	063911	CABLE ASSY / #12	1				
14	064042	CABLE NO: 24E ASSY	1				
15	063999	CABLE NO: 101 ASSY	1				
17	064740	CABLE ASSY # 102-2/0 W/"BOSCH" ALTERNATOR	2				
18	062214	CABLE ASSY # 0C	1				
19	062212	CABLE ASSY # 0B	1				
20	062849	CABLE ASSY # 0-8	1				
22	063403	CABLE ASSY / #90	1				
24	065088	CABLE ASSY #102	1				
25	064044	CABLE ASSY / #00A	1				
25	063908	CABLE ASSY / #00A	1				D
		INSIDE BATTERIES JUNCTION BOX					
		D) WITH 8D BATTERIES "OPTION"					

From Y-7046 Up to 6-8906	DATE: 01/2014	PAGE: Y2-0600-00

WIRING HARNESS - BUS 45' DIAGRAM D-060938

ITEM	PART	DESCRIPTION	XL45	MTH40	MTH45	MTH45S	NOTE
31	065116	WIRING HARNESS, BATTERIES COMPARTMENT ACCES	1				
31	065345	WIRING HARNESS, BATTERIES COMPARTMENT ACCES	1				
31	065336	WIRING HARNESS, W.C.L.	1				
32	065344	CABLE ASSY / W.C.L. ACCESSORIES DOOR	1				
33	065916	CABLE ASSY / W.C.L. ACCESSORIES DOOR	1				
33	066468	CABLE ASSY / W.C.L. ACCESSORIES DOOR	1				
34	065343	WIRING HARNESS INTERFACE RICON	1				
34	065917	WIRING HARNESS INTERFACE RICON	1				
34	066107	CABLE ASSY / POWER / W.C.L. "RICON"	1				
34	066307	CABLE ASSY / POWER / W.C.L. "RICON"	1				
35	065857	CABLE ASSY / POWER / W.C.L. "RICON"	1				
		FROM BATTERIES JUNCTION COMPARTMENT					
		TO COMPONENTS					
41	065050	CABLE ASSY / TO A/C BOX & FUEL TANK	1				
41	066440	CABLE ASSY / ENGINE COMPT ACCESSORIES	1				
42	065057	CABLE ASSY / A/C JCT BOX	1				
42	065768	CABLE ASSY / A/C JCT BOX	1				
		INSIDE REAR JUNCTION BOX					
51	065140	CABLE ASSY / FOR MAJOR COMPONENTS	1				
51	065447	CABLE ASSY / FOR MAJOR COMPONENTS	1				
51	065533	CABLE ASSY / FOR MAJOR COMPONENTS	1				
51	065570	CABLE ASSY / FOR MAJOR COMPONENTS	1				
51	065599	CABLE ASSY / FOR MAJOR COMPONENTS	1				
51	065935	CABLE ASSY / FOR MAJOR COMPONENTS	1				
51	065978	CABLE ASSY / FOR MAJOR COMPONENTS	1				
51	066441	CABLE ASSY / FOR MAJOR COMPONENTS	1				
		FROM REAR JUNCTION BOX					
		TO REAR ENGINE COMPARTMENT					
61	065124	CABLE ASSY / ENGINE COMPT ACCESSORIES	1				
61	065286	CABLE ASSY / ENGINE COMPT ACCESSORIES	1				
61	065571	CABLE ASSY / ENGINE COMPT ACCESSORIES	1				
61	065665	CABLE ASSY / ENGINE COMPT ACCESSORIES	1				
61	065469	CABLE ASSY / ENGINE COMPT ACCESSORIES	1				
61	065827	CABLE ASSY / ENGINE COMPT ACCESSORIES	1				
61	065767	CABLE ASSY / ENGINE COMPT ACCESSORIES	1				
61	065975	CABLE ASSY / ENGINE COMPT ACCESSORIES	1				

From Y-7046 Up to 6-8906	DATE: 01/2014	PAGE: Y2-0600-00

WIRING HARNESS - BUS 45' DIAGRAM D-060938

ITEM	PART	DESCRIPTION	XL45	MTH40	MTH45	MTH45S	NOTE
61	066567	CABLE ASSY / ENGINE COMPT ACCESSORIES	1				
62	064395	CABLE ASSY / W/"WEBASTO"	1				
63	064809	CABLE / ENGINE DOOR REAR LAMP W/BULB	2				
63	065712	CABLE / ENGINE DOOR REAR LAMP W/LEDS	1				
64	064822	CABLE HARNESS / REAR ROOF	1				
64	066117	CABLE HARNESS / REAR ROOF	1				
65	065237	CABLE ASSY / TIMER FLUSH PUMP	1				
65	065470	CABLE ASSY / TIMER FLUSH PUMP	1				
65	065813	CABLE ASSY / TIMER FLUSH PUMP	1				
66	064894	CABLE ASSY / COMPRESSOR DOOR LOCK	1				
67	065395	CABLE ASSY / W/GALLEY	1				
67	065705	CABLE ASSY / W/REAR GALLEY RELAY	1				
68	064994	CABLE ASSY / FUEL PUMP ELECTRIC	1				
69	064881	CABLE ASSY / ENGINE ACCESSORIES Up to 2-7823	1				
69	065598	CABLE ASSY / ENGINE ACCESSORIES From 2-7824 Up to 3-8164	1				
69	065786	CABLE ASSY / ENGINE ACCESSORIES From 4-8165 Up to 4-8279 / REPLACED BY: 066008	1				
69	066008	CABLE ASSY / ENGINE ACCESSORIES From 4-8280 Up to 5-8358	1				
69	065976	CABLE ASSY / ENGINE ACCESSORIES From 5-8359 Up to 5-8425	1				
69	066200	CABLE ASSY / ENGINE ACCESSORIES From 5-8426	1				
70	064942	CABLE ASSY / W/2 "BOSCH" 140 AMPS	1				
71	065181	CABLE ASSY / <> ECU & REAR JCT BOX	1				
72	065789	CABLE ASSY / <> ECU & REAR JCT BOX	1				
72	065977	CABLE ASSY / <> ECU & REAR JCT BOX	1				
72	065977	CABLE ASSY / <> ECU & REAR JCT BOX	1				
		FROM REAR JUNCTION BOX					
		TO PARCEL RACK & LAVATORY					
81	065120	CABLE ASSY / PARCEL RACK & LAVATORY	1				
81	065249	CABLE ASSY / PARCEL RACK & LAVATORY	1				
81	065911	CABLE ASSY / PARCEL RACK & LAVATORY	1				
82	064562	CABLE HARNESS / IND LIGHT R.H. / W/DOOR	1				
83	064578	CABLE HARNESS / IND LIGHT BALLAST	2				
84	065091	CABLE ASSY / DIRECT LIGHT & SPEAKER R.H.	1				
84	065498	CABLE ASSY / DIRECT LIGHT & SPEAKER R.H.	1				
85	065183	CABLE ASSY / READING LIGHT CURBSIDE	1				
86	064564	CABLE HARNESS / IND LIGHT L.H. / W/DOOR	1				
87	064560	CABLE ASSY / DIRECT LIGHT & SPEAKER L.H.	1				
87	065494	CABLE ASSY / DIRECT LIGHT & SPEAKER L.H.	1				
88	065182	CABLE ASSY / READING LIGHT STREETSIDE	1				
		FROM REAR JUNCTION BOX					
		TO COMPARTMENT UNDER FLOOR					

From Y-7046 Up to 6-8906	DATE: 01/2014	PAGE: Y2-0600-00

WIRING HARNESS - BUS 45' DIAGRAM D-060938

ITEM	PART	DESCRIPTION	XL45	MTH40	MTH45	MTH45S	NOTE
101	065111	CABLE ASSY / <> FRT JCT BOX & REAR JCT BOX	1				
101	065337	CABLE ASSY / <> FRT JCT BOX & REAR JCT BOX	1				
101	065405	CABLE ASSY / <> FRT JCT BOX & REAR JCT BOX	1				
101	065594	CABLE ASSY / <> FRT JCT BOX & REAR JCT BOX	1				
101	066439	CABLE ASSY / <> FRT JCT BOX & REAR JCT BOX	1				
101	066590	CABLE ASSY / <> FRT JCT BOX & REAR JCT BOX	1				
102	065112	CABLE ASSY / FRONT BAGGAGE COMPARTMENT	1				
103	062796	CABLE ASSY / ACTUATOR POWER / EACH DOOR	6				
104	065113	CABLE ASSY / REAR BAGGAGE COMPARTMENT	1				
104	065577	CABLE ASSY / REAR BAGGAGE COMPARTMENT	1				
		VEHICLE WITH "WORLD" TRANSMISSION					
111	064777	CABLE, FRONT INTERFACE	1				
111	065348	CABLE, FRONT INTERFACE	1				
111	065448	CABLE, FRONT INTERFACE	1				
111	065596	CABLE, FRONT INTERFACE	1				
111	065860	CABLE, FRONT INTERFACE	1				
112	063782	CABLE ASSY / <> RESISTANCE MODULE & SWITCH	1				
113	064716	CABLE ASSY / <> TRANS & SPEED SWITCH / REPLACED BY: 065330	1				
114	064812	CABLE ASSY / <> TRANS & E.C.U. MODULE	1				
115	065330	CABLE ASSY / <> TRANS & SPEED SWITCH / W/RETARDER / REPLACED BY: 065750	1				
115	065750	CABLE ASSY / <> TRANS & SPEED SWITCH / W/RETARDER	1				
116	065331	CABLE ASSY / <> TRANS & SPEED SWITCH / W/O RETARDER / REPLACED BY: 065751	1				
116	065751	CABLE ASSY / <> TRANS & SPEED SWITCH / W/O RETARDER	1				
117	065029	CABLE ASSY / <> E.C.M. & ACCELERATOR PEDAL	1				
117	065404	CABLE ASSY / <> E.C.M. & ACCELERATOR PEDAL	1				
117	065446	CABLE ASSY / <> E.C.M. & ACCELERATOR PEDAL	1				
117	065597	CABLE ASSY / <> E.C.M. & ACCELERATOR PEDAL	1				
117	065787	CABLE ASSY / <> E.C.M. & ACCELERATOR PEDAL	1				
117	065979	CABLE ASSY / <> E.C.M. & ACCELERATOR PEDAL	1				
118	064286	CABLE ASSY / SPEED SWITCH	1				
119	065410	CABLE ASSY / SPEED SENSOR	1				
		VEHICLE WITH "EATON" TRANSMISSION					
121	065402	CABLE ASSY / <> ECU & FRONT SHIFTER	1				
121	065848	CABLE ASSY "ZF" TRANS	1				
121	066124	CABLE ASSY "ZF" TRANS	1				
121	066592	CABLE ASSY "ZF" TRANS	1				
122	065408	CABLE ASSY / "EATON"	1				
122	065833	CABLE ASSY / <> ECU & TRANS CONTROL "ZF" / REPLACED BY: 066636	1				

From Y-7046 Up to 6-8906	DATE: 01/2014	PAGE: Y2-0600-00

WIRING HARNESS - BUS 45' DIAGRAM D-060938

ITEM	PART	DESCRIPTION	XL45	MTH40	MTH45	MTH45S	NOTE
		INSIDE FRONT JUNCTION BOX					
141	065109	WIRING HARNESS FRONT JUNCTION BOX	1				
141	065347	WIRING HARNESS FRONT JUNCTION BOX	1				
141	065403	WIRING HARNESS FRONT JUNCTION BOX	1				
141	065449	WIRING HARNESS FRONT JUNCTION BOX	1				
141	065575	WIRING HARNESS FRONT JUNCTION BOX	1				
141	065595	WIRING HARNESS FRONT JUNCTION BOX	1				
141	065648	WIRING HARNESS FRONT JUNCTION BOX	1				
141	065762	WIRING HARNESS FRONT JUNCTION BOX	1				
141	065854	WIRING HARNESS FRONT JUNCTION BOX	1				
141	065716	WIRING HARNESS FRONT JUNCTION BOX	1				
141	066229	WIRING HARNESS FRONT JUNCTION BOX	1				
141	066438	WIRING HARNESS FRONT JUNCTION BOX	1				
141	066591	WIRING HARNESS FRONT JUNCTION BOX	1				
142	064908	CABLE ASSY TO STEERING SPEED SIGNAL ECU / W/"ZF" STEERING	1				
143	064199	CABLE ASSY / <> CLOCK & FRONT JCT PANEL	1				
144	065115	CABLE ASSY / MAIN AILE LAMP	1				
		FROM FRONT JUNCTION BOX					
		TO "ABS" MODULE					
161	064781	CABLE ASSY / ABS MODULE TO FRONT & REAR CABLE	1				
161	065631	CABLE ASSY / ABS MODULE TO FRONT & REAR CABLE	1				
162	064640	CABLE ASSY / FRONT "ABS" SENSOR & VALVE	1				
162	065632	CABLE ASSY / FRONT "ABS" SENSOR & VALVE	1				
163	064876	CABLE ASSY / REAR "ABS" SENSOR & VALVE	1				
163	065634	CABLE ASSY / REAR "ABS" SENSOR & VALVE	1				
		FROM FRONT JUNCTION BOX					
		TO FORWARD VEHICULE					
173	065110	CABLE ASSY / FRONT LOWER END	1				
173	065346	CABLE ASSY / FRONT LOWER END	1				
173	065379	CABLE ASSY / FRONT LOWER END	1				
173	065562	CABLE ASSY / FRONT LOWER END	1				
173	065742	CABLE ASSY / FRONT LOWER END	1				
173	065718	CABLE ASSY / FRONT LOWER END	1				
173	066097	CABLE ASSY / FRONT LOWER END	1				
174	064816	CABLE HARNESS / FRONT ROOF	1				
174	065761	CABLE HARNESS / FRONT ROOF	1				
175	065108	WIRING HARNESS DASHBOARD CENTRAL MODULE	1				

From Y-7046 Up to 6-8906	DATE: 01/2014	PAGE: Y2-0600-00

WIRING HARNESS - BUS 45' DIAGRAM D-060938

ITEM	PART	DESCRIPTION	XL45	MTH40	MTH45	MTH45S	NOTE
175	065325	WIRING HARNESS DASHBOARD CENTRAL MODULE	1				
175	065561	WIRING HARNESS DASHBOARD CENTRAL MODULE	1				
175	065763	WIRING HARNESS DASHBOARD CENTRAL MODULE	1				
175	066093	WIRING HARNESS DASHBOARD CENTRAL MODULE	1				
175	066096	WIRING HARNESS DASHBOARD CENTRAL MODULE	1				
175	066437	WIRING HARNESS DASHBOARD CENTRAL MODULE	1				
179	062810	CABLE / FROM DESTINATION SIGN TO HARNESS	1				
		CABLE / CONNECTED AT HARNESS / # 173					
		FROM CABLE ASSY FRONT LOWER END					
181	065117	CABLE ASSY / "KNEELING PANEL"	1				
181	065349	CABLE ASSY / "KNEELING PANEL"	1				
181	066092	CABLE ASSY / "KNEELING PANEL"	1				
181	066225	CABLE ASSY / "KNEELING PANEL"	1				
182	065131	CABLE ASSY / ENTRANCE DOOR	1				
183	065114	CABLE ASSY / ENTRANCE DOOR CONTROL PANEL	1				
184	064780	CABLE ASSY / HEADLAMP	2				
184	065929	CABLE ASSY / W/"HALOGENE" LAMPS / W/XL-II	1				
184	065930	CABLE ASSY / W/"XENON" LAMPS / W/XL-II	1				
185	064828	CABLE ASSY / WINDSHIELD WASHER PUMP	1				
186	065005	CABLE ASSY / SERVICE DOOR	1				
187	065222	CABLE ASSY / PARKING BRAKE PRESSURE	1				
		CABLE / CONNECTED AT HARNESS / # 175					
		FROM CABLE ASSY DASHBOARD PANEL					
191	065063	CABLE ASSY / BACK-UP MONITOR	1				
. NS	990335	. CABLE MONITOR "CLARION" 652-0105-30	1				
. NS	560851	. CONNECTOR / COM. MATE-N-LOCK / PH 4C / AMP 1-480426-0	1				
. NS	504397	. GROMMET / .750x1.062x.062x.375x1.375	1				
. NS		.	AR				
192	065118	WIRING HARNESS DASHBOARD LEFT MODULE	1				
192	065339	WIRING HARNESS DASHBOARD LEFT MODULE	1				
192	065406	WIRING HARNESS DASHBOARD LEFT MODULE	1				
192	065568	WIRING HARNESS DASHBOARD LEFT MODULE	1				
193	064584	WIRING HARNESS / W/ "ESPAR" PREHEATER	1				
193	065572	WIRING HARNESS / W/ "WEBASTO" PREHEATER	1				
193	064700	WIRING HARNESS / W/ "WEBASTO" PREHEATER	1				
		MISCELLANEOUS CABLES					
201	063296	CABLE ASSY / 110V BLOCK HEATER	1				

From Y-7046 Up to 6-8906	DATE: 01/2014	PAGE: Y2-0600-00

WIRING HARNESS - BUS 45' DIAGRAM D-060938

ITEM	PART	DESCRIPTION	XL45	MTH40	MTH45	MTH45S	NOTE
201	065517	CABLE ASSY / 110V BLOCK HEATER	1				
202	063295	CABLE ASSY / 110V BLOCK HEATER ENGINE SECTION	1				
203	064103	CABLE ASSY / 110V WATER HEATER LAVATORY TANK	1				

From Y-7046 Up to 6-8906	DATE: 01/2014	PAGE: Y2-0600-00

WIRING HARNESS - BUS 45' DIAGRAM D-060938

ITEM	PART	DESCRIPTION	XL45	MTH40	MTH45	MTH45S	NOTE

From Y-7046 Up to 7-9095	DATE: 01/2014	PAGE: Y2-0600-50
WIRING HARNESS - MTH 40' & MTH 45' DIAGRAM D-060921		

DRAWING NOT AVAILABLE

From Y-7046 Up to 7-9095	DATE: 01/2014	PAGE: Y2-0600-50

WIRING HARNESS - MTH 40' & MTH 45' DIAGRAM D-060921

ITEM	PART	DESCRIPTION	XL45	MTH40	MTH45	MTH45S	NOTE
		IN BATTERIES COMPARTMENT					
1	061329	CABLE ASSY / <> B - TO GRD	1				
1	063410	CABLE ASSY / <> B - TO GRD	1				
1	063406	CABLE ASSY / <> B - TO BOOSTER BLOCK	1				
2	062371	CABLE ASSY / <> B + TO B +	2				
3	061180	CABLE ASSY / <> B - TO B -	AR				
4	064887	CABLE ASSY POWER	1				
6	063412	CABLE ASSY 24-2/0		1	1	1	
7	061036	CABLE ASSY / <> B - TO B -		1	1	1	
8	063411	CABLE ASSY / #0VA / REPLACED BY: 065815		1	1	1	
9	063415	CABLE ASSY / #12VA / REPLACED BY: 065817		1	1	1	
10	063414	CABLE ASSY / #24VA / REPLACED BY: 065816		1	1	1	
15	060717	CABLE ASSY / <> ALT & GROUND		1	1	1	
16	063894	CABLE NO: 101 ASSY		1	1	1	
16	063409	CABLE NO: 101 ASSY		1	1	1	
17	063297	CABLE ASSY # 102-2/0		1	1	1	
18	062214	CABLE ASSY # 0C		1	1	1	
19	062212	CABLE ASSY # 0B		1	1	1	
20	063432	CABLE ASSY #24G-2		1	1	1	
24	065088	CABLE ASSY #102		1	1	1	
28	064930	CABLE NO: 24B ASSY		1	1	1	
		FROM REAR & BATTERIES JUNCTION BOX					
		TO A/C COMPARTMENT					
41	065050	CABLE ASSY / TO A/C BOX & FUEL TANK		1	1	1	
41	065636	CABLE ASSY / TO A/C BOX & FUEL TANK		1	1	1	
41	065769	CABLE ASSY / TO A/C BOX & FUEL TANK		1	1	1	
41	066004	CABLE ASSY / TO A/C BOX & FUEL TANK		1	1	1	
41	066472	CABLE ASSY / TO A/C BOX & FUEL TANK		1	1	1	
41	066392	CABLE ASSY / TO A/C BOX & FUEL TANK From VOIR DESSIN		1	1	1	
42	065768	CABLE ASSY / A/C JCT BOX		1	1	1	
43	064883	CABLE ASSY / FUEL TANK		1	1	1	
43	065699	CABLE ASSY / FUEL TANK		1	1	1	
		INSIDE REAR JUNCTION BOX					
51	064827	CABLE ASSY / FOR MAJOR COMPONENTS		1	1	1	
51	065452	CABLE ASSY / FOR MAJOR COMPONENTS		1	1	1	
51	065666	CABLE ASSY / FOR MAJOR COMPONENTS		1	1	1	
51	065947	CABLE ASSY / FOR MAJOR COMPONENTS		1	1	1	
51	065974	CABLE ASSY / FOR MAJOR COMPONENTS		1	1	1	

From Y-7046 Up to 7-9095	DATE: 01/2014	PAGE: Y2-0600-50

WIRING HARNESS - MTH 40' & MTH 45' DIAGRAM D-060921

ITEM	PART	DESCRIPTION	XL45	MTH40	MTH45	MTH45S	NOTE
51	066349	CABLE ASSY / FOR MAJOR COMPONENTS		1	1	1	
		FROM REAR JUNCTION BOX					
		TO REAR ENGINE COMPARTMENT					
61	064793	WIRING HARNESS ENGINE COMPARTMENT		1	1	1	
61	065285	WIRING HARNESS ENGINE COMPARTMENT		1	1	1	
61	065667	WIRING HARNESS ENGINE COMPARTMENT		1	1	1	
61	065766	WIRING HARNESS ENGINE COMPARTMENT		1	1	1	
61	065970	WIRING HARNESS ENGINE COMPARTMENT		1	1	1	
61	065350	WIRING HARNESS ENGINE COMPARTMENT From VOIR DESSIN		1	1	1	
64	064822	CABLE HARNESS / REAR ROOF		1	1	1	
64	066117	CABLE HARNESS / REAR ROOF		1	1	1	
66	064894	CABLE ASSY / COMPRESSOR DOOR LOCK		1	1	1	
68	064994	CABLE ASSY / FUEL PUMP ELECTRIC		1	1	1	
69	064881	CABLE ASSY / ENGINE ACCESSORIES		1	1	1	
69	065598	CABLE ASSY / ENGINE ACCESSORIES		1	1	1	
69	065786	CABLE ASSY / ENGINE ACCESSORIES / REPLACED BY: 066008		1	1	1	
69	066008	CABLE ASSY / ENGINE ACCESSORIES		1	1	1	
69	065976	CABLE ASSY / ENGINE ACCESSORIES		1	1	1	
69	066200	CABLE ASSY / ENGINE ACCESSORIES		1	1	1	
69	066848	CABLE ASSY / ENGINE ACCESSORIES		1	1	1	
70	064942	CABLE ASSY / W/2 "BOSCH" 140 AMPS		1	1	1	
71	062723	CABLE ASSY / W/"DELCO" 75 AMPS		1	1	1	
71	065013	CABLE ASSY / W/"DELCO" 300 AMPS		1	1	1	
72	064886	CABLE ASSY / ACCESSORY BATTERY		1	1	1	
72	065421	CABLE ASSY / ACCESSORY BATTERY		1	1	1	
72	065790	CABLE ASSY / ACCESSORY BATTERY		1	1	1	
72	065973	CABLE ASSY / ACCESSORY BATTERY From VOIR DESSIN		.	.	.	
		FROM REAR JUNCTION BOX					
		TO COMPARTMENT UNDER FLOOR					
101	065195	CABLE ASSY / <> FRT JCT BOX & REAR JCT BOX		1			
101	066025	CABLE ASSY / <> FRT JCT BOX & REAR JCT BOX		1			
101	066351	CABLE ASSY / <> FRT JCT BOX & REAR JCT BOX		1			
101	064804	CABLE ASSY / <> FRT JCT BOX & REAR JCT BOX			1		
101	066026	CABLE ASSY / <> FRT JCT BOX & REAR JCT BOX			1		
101	066345	CABLE ASSY / <> FRT JCT BOX & REAR JCT BOX			1		
101	065298	CABLE ASSY / <> FRT JCT BOX & REAR JCT BOX				1	
101	066027	CABLE ASSY / <> FRT JCT BOX & REAR JCT BOX				1	
101	066351	CABLE ASSY / <> FRT JCT BOX & REAR JCT BOX				1	
102	064872	CABLE ASSY / FRONT BAGGAGE COMPARTMENT		1		1	
102	066024	CABLE ASSY / FRONT BAGGAGE COMPARTMENT		1		1	

From Y-7046 Up to 7-9095	DATE: 01/2014	PAGE: Y2-0600-50

WIRING HARNESS - MTH 40' & MTH 45' DIAGRAM D-060921

ITEM	PART	DESCRIPTION	XL45	MTH40	MTH45	MTH45S	NOTE
102	065196	CABLE ASSY / FRONT BAGGAGE COMPARTMENT			1		
102	066023	CABLE ASSY / FRONT BAGGAGE COMPARTMENT			1		
104	064873	CABLE ASSY / REAR BAGGAGE COMPARTMENT		1	1	1	
104	065578	CABLE ASSY / REAR BAGGAGE COMPARTMENT		1	1	1	
104	066022	CABLE ASSY / REAR BAGGAGE COMPARTMENT		1	1	1	
104	066390	CABLE ASSY / REAR BAGGAGE COMPARTMENT		1	1	1	
		VEHICLE WITH "WORLD" TRANSMISSION					
111	064777	CABLE, FRONT INTERFACE		1	1	1	
111	065348	CABLE, FRONT INTERFACE		1	1	1	
111	065596	CABLE, FRONT INTERFACE		1	1	1	
111	066387	CABLE, FRONT INTERFACE		1	1	1	
111	066842	CABLE, FRONT INTERFACE		1	1	1	
112	063782	CABLE ASSY / <> RESISTANCE MODULE & SWITCH		1	1	1	
114	064812	CABLE ASSY / <> TRANS & E.C.U. MODULE	1				
114	065260	CABLE ASSY / <> TRANS & E.C.U. MODULE	1				
115	065330	CABLE ASSY / <> TRANS & SPEED SWITCH / W/RETARDER / REPLACED BY: 065750		1	1	1	
115	065750	CABLE ASSY / <> TRANS & SPEED SWITCH / W/RETARDER		1	1	1	
116	065331	CABLE ASSY / <> TRANS & SPEED SWITCH / W/O RETARDER / REPLACED BY: 065751		1	1	1	
116	065751	CABLE ASSY / <> TRANS & SPEED SWITCH / W/O RETARDER		1	1	1	
117	065261	CABLE ASSY / <> E.C.M. & ACCELERATOR PEDAL / REPLACED BY: 065427		1			
117	065427	CABLE ASSY / <> E.C.M. & ACCELERATOR PEDAL		1			
117	065451	CABLE ASSY / <> E.C.M. & ACCELERATOR PEDAL		1			
117	065788	CABLE ASSY / <> E.C.M. & ACCELERATOR PEDAL		1			
117	065972	CABLE ASSY / <> E.C.M. & ACCELERATOR PEDAL		1			
117	066845	CABLE ASSY / <> E.C.M. & ACCELERATOR PEDAL		1			
117	065029	CABLE ASSY / <> E.C.M. & ACCELERATOR PEDAL			1	1	
117	065404	CABLE ASSY / <> E.C.M. & ACCELERATOR PEDAL			1	1	
117	065446	CABLE ASSY / <> E.C.M. & ACCELERATOR PEDAL			1	1	
117	065597	CABLE ASSY / <> E.C.M. & ACCELERATOR PEDAL			1	1	
117	065787	CABLE ASSY / <> E.C.M. & ACCELERATOR PEDAL			1	1	
117	065979	CABLE ASSY / <> E.C.M. & ACCELERATOR PEDAL			1	1	
117	066846	CABLE ASSY / <> E.C.M. & ACCELERATOR PEDAL			1	1	
		INSIDE FRONT JUNCTION BOX					
141	064815	WIRING HARNESS FRONT JUNCTION BOX		1	1	1	
141	065425	WIRING HARNESS FRONT JUNCTION BOX		1	1	1	
141	065450	WIRING HARNESS FRONT JUNCTION BOX		1	1	1	
141	065551	WIRING HARNESS FRONT JUNCTION BOX		1	1	1	
141	065640	WIRING HARNESS FRONT JUNCTION BOX		1	1	1	
141	065688	WIRING HARNESS FRONT JUNCTION BOX				1	
141	065764	WIRING HARNESS FRONT JUNCTION BOX				1	

From Y-7046 Up to 7-9095	DATE: 01/2014	PAGE: Y2-0600-50

WIRING HARNESS - MTH 40' & MTH 45' DIAGRAM D-060921

ITEM	PART	DESCRIPTION	XL45	MTH40	MTH45	MTH45S	NOTE
141	065711	WIRING HARNESS FRONT JUNCTION BOX		1	1	1	
141	066231	WIRING HARNESS FRONT JUNCTION BOX		1	1	1	
141	066470	WIRING HARNESS FRONT JUNCTION BOX		1	1	1	
141	066384	WIRING HARNESS FRONT JUNCTION BOX		1	1	1	
141	065713	WIRING HARNESS FRONT JUNCTION BOX		1	1	1	
141	066232	WIRING HARNESS FRONT JUNCTION BOX		1	1	1	
141	066471	WIRING HARNESS FRONT JUNCTION BOX		1	1	1	
141	066385	WIRING HARNESS FRONT JUNCTION BOX		1	1	1	
142	064908	CABLE ASSY TO STEERING SPEED SIGNAL ECU / W/"ZF" STEERING		1	1	1	
143	066837	CABLE ASSY / HEADLAMP WASHER RELAY		1	1	1	
144	066838	CABLE ASSY / SWITCH HEADLAMP WASHER PUMP / "H" SERIES		1	1	1	
		FROM FRONT JUNCTION BOX					
		TO "ABS" MODULE					
161	064781	CABLE ASSY / ABS MODULE TO FRONT & REAR CABLE		1	1	1	
161	065631	CABLE ASSY / ABS MODULE TO FRONT & REAR CABLE		1	1	1	
162	064640	CABLE ASSY / FRONT "ABS" SENSOR & VALVE		1	1	1	
162	065632	CABLE ASSY / FRONT "ABS" SENSOR & VALVE		1	1	1	
163	064876	CABLE ASSY / REAR "ABS" SENSOR & VALVE		1	1	1	
163	065634	CABLE ASSY / REAR "ABS" SENSOR & VALVE		1	1	1	
		FROM FRONT JUNCTION BOX					
		TO FORWARD VEHICULE					
173	064779	CABLE ASSY / FRONT LOWER END		1	1	1	
173	065439	CABLE ASSY / FRONT LOWER END		1	1	1	
173	065564	CABLE ASSY / FRONT LOWER END		1	1	1	
173	065550	CABLE ASSY / FRONT LOWER END		1	1	1	
173	065783	CABLE ASSY / FRONT LOWER END		1	1	1	
173	065715	CABLE ASSY / FRONT LOWER END		1	1	1	
173	066099	CABLE ASSY / FRONT LOWER END		1	1	1	
173	066388	CABLE ASSY / FRONT LOWER END		1	1	1	
174	064816	CABLE HARNESS / FRONT ROOF		1	1	1	
174	065761	CABLE HARNESS / FRONT ROOF		1	1	1	
174	066116	CABLE HARNESS / FRONT ROOF		1	1	1	
175	064849	WIRING HARNESS DASHBOARD CENTRAL MODULE		1	1	1	
175	065324	WIRING HARNESS DASHBOARD CENTRAL MODULE		1	1	1	
175	065428	WIRING HARNESS DASHBOARD CENTRAL MODULE		1	1	1	
175	065563	WIRING HARNESS DASHBOARD CENTRAL MODULE		1	1	1	
175	065765	WIRING HARNESS DASHBOARD CENTRAL MODULE		1	1	1	
175	065855	WIRING HARNESS DASHBOARD CENTRAL MODULE		1	1	1	
175	066098	WIRING HARNESS DASHBOARD CENTRAL MODULE		1	1	1	
175	066339	WIRING HARNESS DASHBOARD CENTRAL MODULE		1	1	1	

From Y-7046 Up to 7-9095	DATE: 01/2014	PAGE: Y2-0600-50

WIRING HARNESS - MTH 40' & MTH 45' DIAGRAM D-060921

ITEM	PART	DESCRIPTION	XL45	MTH40	MTH45	MTH45S	NOTE
175	066386	WIRING HARNESS DASHBOARD CENTRAL MODULE		1	1	1	
		CABLE / CONNECTED AT HARNESS / # 173					
		FROM CABLE ASSY FRONT LOWER END					
182	064829	CABLE ASSY / ENTRANCE DOOR		1	1	1	
183	064817	WIRING HARNESS KEYLESS MODULE		1	1	1	
183	065382	WIRING HARNESS KEYLESS MODULE		1	1	1	
183	065549	WIRING HARNESS KEYLESS MODULE		1	1	1	
184	064780	CABLE ASSY / HEADLAMP		1	1	1	
184	065929	CABLE ASSY / W/"HALOGENE" LAMPS / W/XL-II		1	1	1	
184	065930	CABLE ASSY / W/"XENON" LAMPS / W/XL-II		1	1	1	
185	066516	CABLE ASSY / WINDSHIELD WASHER PUMP		1	1	1	
186	065005	CABLE ASSY / SERVICE DOOR		1	1	1	
187	065222	CABLE ASSY / PARKING BRAKE PRESSURE		1	1	1	
		CABLE / CONNECTED AT HARNESS / # 175					
		FROM CABLE ASSY DASHBOARD PANEL					
192	064871	WIRING HARNESS DASHBOARD LEFT MODULE		1	1	1	
192	065338	WIRING HARNESS DASHBOARD LEFT MODULE		1	1	1	
193	064521	WIRING HARNESS / W/ "ESPAR" PREHEATER		1	1	1	
193	064726	WIRING HARNESS / W/ "WEBASTO" PREHEATER		1	1	1	
		MISCELLANEOUS CABLE					
201	063296	CABLE ASSY / 110V BLOCK HEATER		1	1	1	
201	065517	CABLE ASSY / 110V BLOCK HEATER		1	1	1	
202	063295	CABLE ASSY / 110V BLOCK HEATER ENGINE SECTION		1	1	1	

From 7-9096 Up to 8-9339	DATE: 01/2014	PAGE: Y2-0600-52

WIRING HARNESS - MTH W/MUX DIAGRAM D-061080

DRAWING FROM REV 02

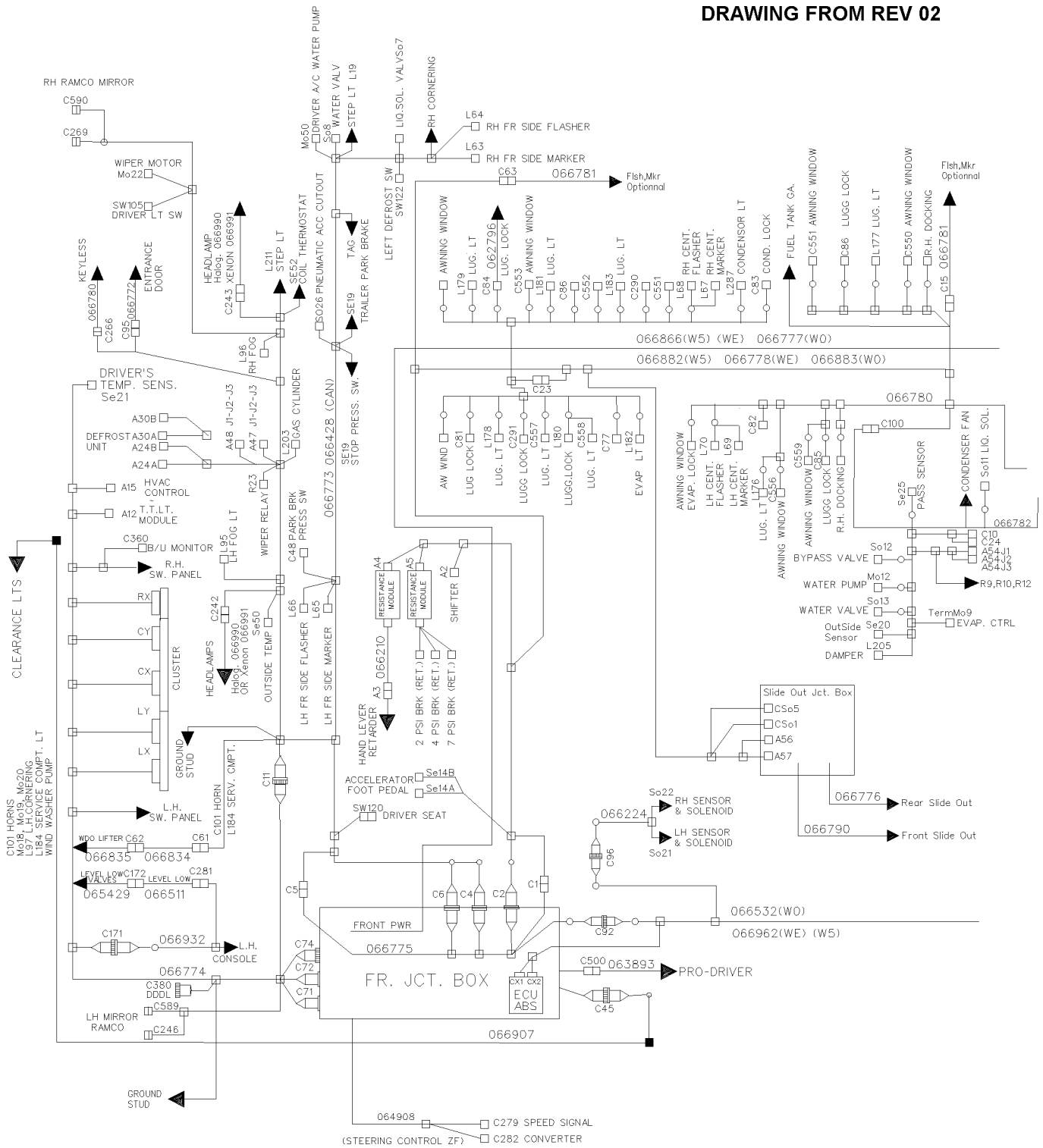

From 7-9096 Up to 8-9339	DATE: 01/2014	PAGE: Y2-0600-52

WIRING HARNESS - MTH W/MUX DIAGRAM D-061080

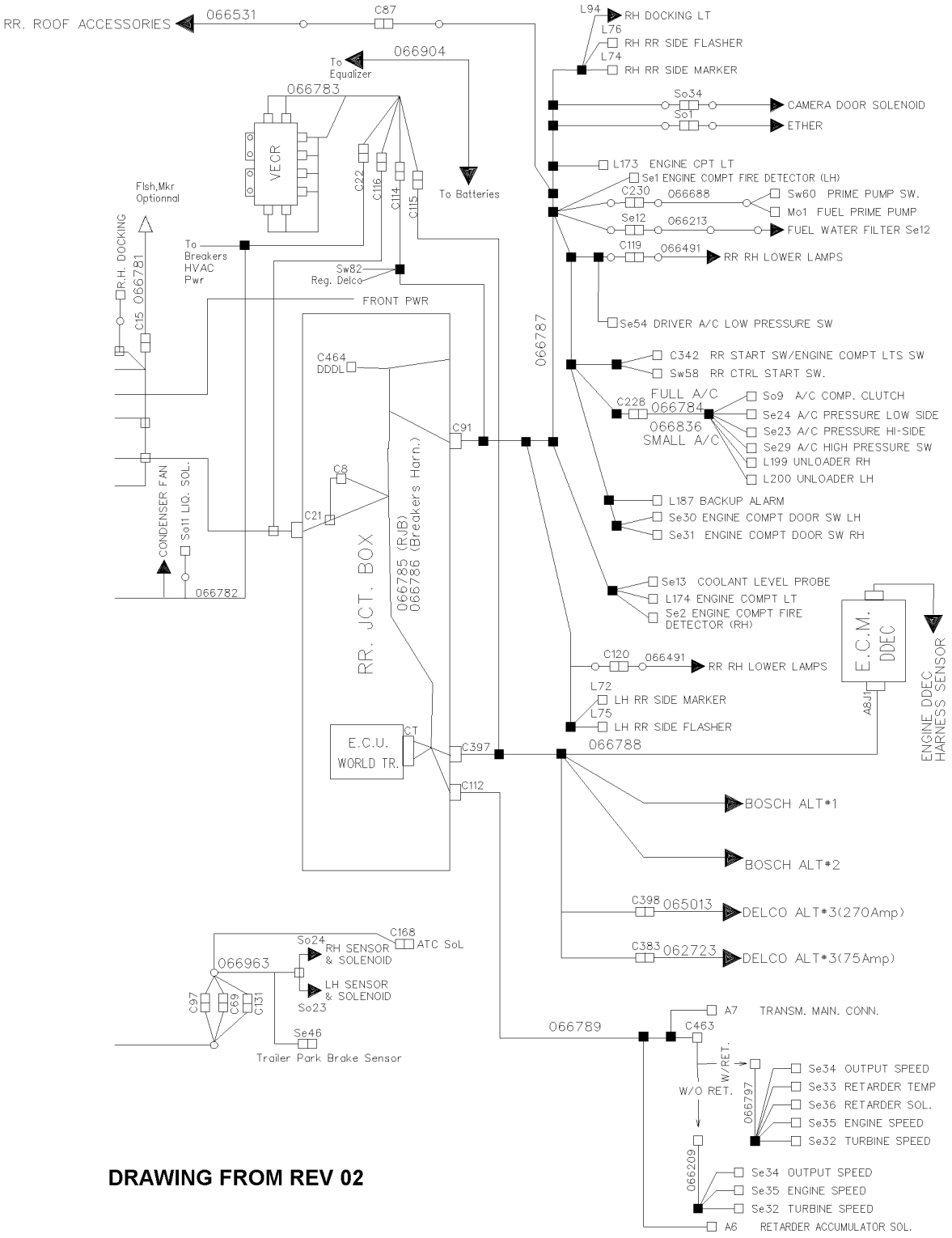

DRAWING FROM REV 02

From 7-9096 Up to 8-9339	DATE: 01/2014	PAGE: Y2-0600-52
WIRING HARNESS - MTH W/MUX DIAGRAM D-061080		

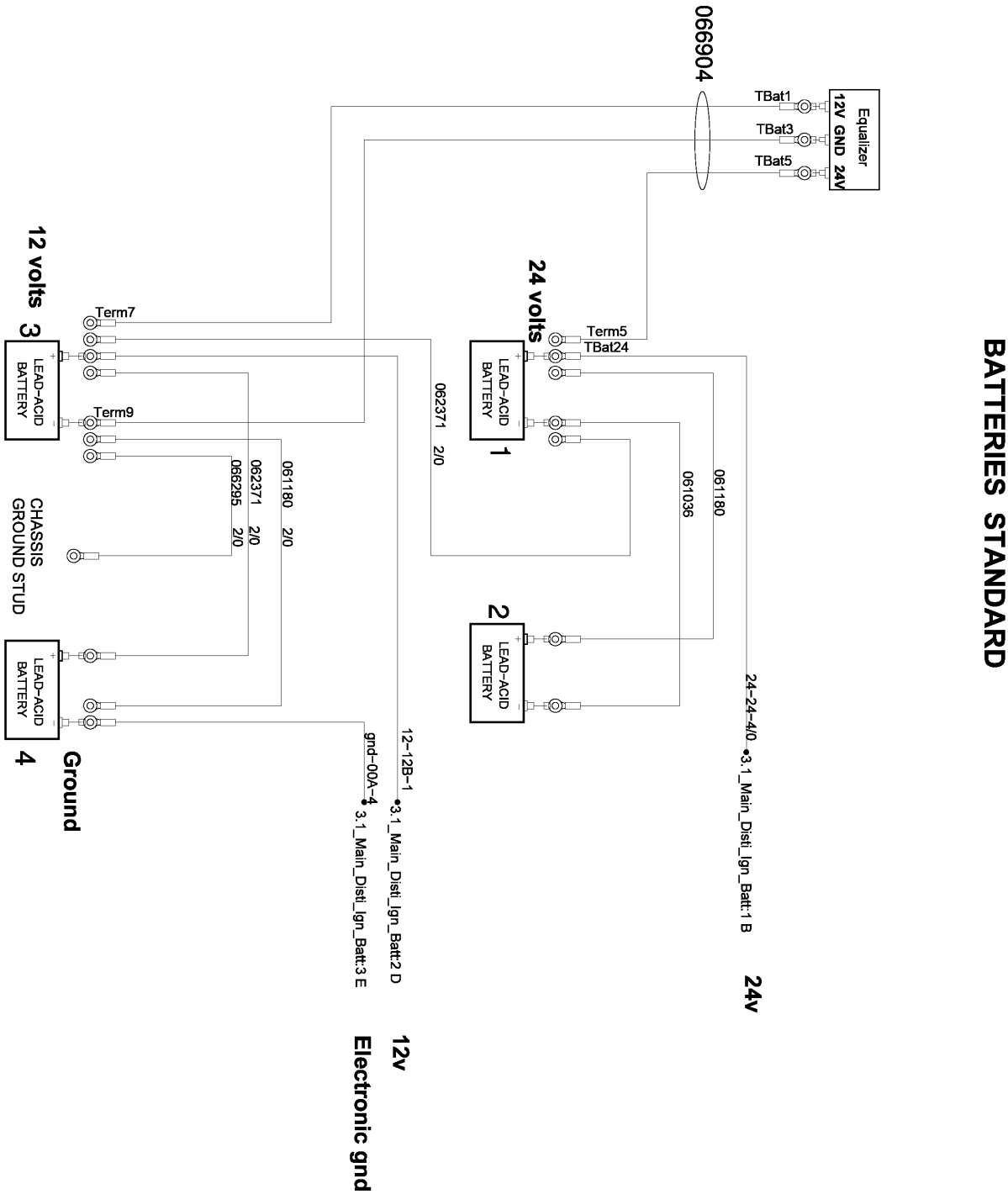

From 7-9096 Up to 8-9339	DATE: 01/2014	PAGE: Y2-0600-52

WIRING HARNESS - MTH W/MUX DIAGRAM D-061080

ITEM	PART	DESCRIPTION	XL45	MTH40	MTH45	MTH45S	NOTE
		IN BATTERIES COMPARTMENT					
1	066295	CABLE ASSY / TO GROUND			1	1	
2	062371	CABLE ASSY / <> B + TO B +			1	1	
3	061180	CABLE ASSY / <> B - TO B -			1	1	
4	061036	CABLE ASSY / <> B - TO B -			1	1	
7	066904	CABLE HARNESS / EQUALISER / MUX			1	1	
		FROM REAR JUNCTION BOX					
		TO E.C.U. & ENGINE ACCESSORIES					
42	066788	CABLE ASSY / <> ECU & RJB			1	1	
47	066461	CABLE ASSY / <> ECU & "DELCO" 50DN			1	1	
47	065013	CABLE ASSY / W/"DELCO" 300 AMPS			1	1	
48	062723	CABLE ASSY / W/"DELCO" 75 AMPS			1	1	
		INSIDE REAR JUNCTION BOX					
51	066785	CABLE HARNESS / REAR JUNCTION BOX			1	1	
53	066786	CABLE POWER / <> BREAKERS & HVAC			1	1	
		FROM REAR JUNCTION BOX					
		TO ENGINE COMPARTMENT					
61	066787	CABLE HARNESS / ENG. ACC. / W/MUX			1	1	
62	066531	CABLE ASSY / RH ROOF ACCESSORIES			1	1	
63	066491	CABLE / ENGINE DOOR REAR LAMP W/LEDS			2	2	
64	066783	CABLE ASSY TO REAR "VEC"			1	1	
65	066213	CABLE ASSY / FUEL WATER FILTER			1	1	
68	066784	CABLE ASSY / A/C COMPRESSOR 05G			1	1	
68	066836	CABLE ASSY / A/C COMPRESSOR W/SMALL SYSTEM			1	1	
69	066688	CABLE ASSY / FUEL PUMP PRIMER			1	1	
		FROM REAR JUNCTION BOX					
		TO COMPARTMENT UNDER FLOOR					
101	066777	CABLE ASSY / <> FRT JCT BOX & REAR JCT BOX				1	
101	066886	CABLE ASSY / <> FRT JCT BOX & REAR JCT BOX			1		
102	066883	CABLE ASSY / POWER TO FRONT ACCESSORIES WO		1			
102	066882	CABLE ASSY / POWER TO FRONT ACCESSORIES			1		
102	066778	CABLE ASSY / POWER TO FRONT ACCESSORIES				1	
103	062796	CABLE ASSY / ACTUATOR POWER / EACH DOOR			1	1	
104	066780	CABLE ASSY / KEYLESS ENTRANCE DOOR / REPLACED BY: 068082			1	1	
105	066781	CABLE ASSY / SIDE MARKER "ADDITIONAL"			1	1	

From 7-9096 Up to 8-9339	DATE: 01/2014	PAGE: Y2-0600-52

WIRING HARNESS - MTH W/MUX DIAGRAM D-061080

ITEM	PART	DESCRIPTION	XL45	MTH40	MTH45	MTH45S	NOTE
106	066782	CABLE ASSY / EVAPORATOR ACCESSORIES COMPART,			1	1	
107	066776	WIRING HARNESS SLIDE-OUT REAR LEFT			1		
108	066790	WIRING HARNESS SLIDE-OUT FRONT LEFT			1	1	
		FROM REAR JUNCTION BOX					
		OF VEHICLE WITH "WORLD" TRANSMISSION					
112	066210	CABLE ASSY / <> RESISTANCE MODULE & SWITCH / MUX			1	1	
114	066789	CABLE ASSY / <> E.C.U. & TRANS SPEED SWITCH / MUX			1	1	
115	066797	CABLE HARNESS / SENSOR WTEC W/RETARDER / MUX			1	1	
116	066209	CABLE HARNESS / SENSOR WTEC W/OUT RETARDER / MUX			1	1	
		INSIDE FRONT JUNCTION BOX					
141	066775	WIRING HARNESS FRT JCT BOX / W/MUX			1	1	
142	064908	CABLE ASSY TO STEERING SPEED SIGNAL ECU / W/"ZF" STEERING			1	1	
		FROM FRONT JUNCTION BOX					
		TO "ABS" MODULE					
161	066532	CABLE ASSY / FJB TO "ABS" CABLE FR & RR				1	
161	066962	CABLE ASSY / FJB TO "ABS" CABLE FR & RR			1		
162	066224	CABLE ASSY / FRONT "ABS" SENSOR & VALVE / MUX			1	1	
163	066550	CABLE ASSY / REAR "ABS" SENSOR & VALVE / MUX			1	1	
163	066963	CABLE ASSY / REAR "ABS" SENSOR & VALVE / MUX			1	1	
		FROM FRONT JUNCTION BOX					
		TO FORWARD VEHICULE					
173	066773	CABLE ASSY / FRONT LOWER END / MUX			1	1	
173	066428	CABLE ASSY CAN POWER LOGIC			1	1	
174	066907	CABLE ASSY / FRONT ROOF / MUX			1	1	
175	066774	WIRING HARNESS DASHBOARD CENTRAL MODULE			1	1	
176	066834	CABLE ASSY FRT SERVICE COMPARTMENT / MUX			1	1	
177	066835	CABLE ASSY FRONT SERVICE DOOR / MUX			1	1	
		CABLE / CONNECTED AT HARNESS / # 175					
		FROM DASHBOARD CENTRAL MODULE					
181	066932	WIRING HARNESS DASHBOARD LEFT MODULE			1	1	
182	066511	CABLE HARNESS /CLEAR. LIGHT REAR IN DEFLECTOR / MUX			1	1	
183	065429	CABLE ASSY / VALVE "LEVEL-LOW"			1	1	
		CABLE / CONNECTED AT HARNESS / # 173					

From 7-9096 Up to 8-9339	DATE: 01/2014	PAGE: Y2-0600-52

WIRING HARNESS - MTH W/MUX DIAGRAM D-061080

ITEM	PART	DESCRIPTION	XL45	MTH40	MTH45	MTH45S	NOTE
		FROM CABLE ASS FRONT LOWER END					
191	066772	CABLE ASSY / ENTRANCE DOOR MODULE / MUX Up to 7-9263			1	1	
191	067176	CABLE ASSY / ENTRANCE DOOR MODULE / MUX From 7-9264			1	1	
192	066780	CABLE ASSY / KEYLESS ENTRANCE DOOR / REPLACED BY: 068082			1	1	
194	066990	CABLE ASSY / W/"HALOGENE" LAMPS / MUX			2	2	
195	066991	CABLE ASSY / W/"XENON" LAMPS / MUX			2	2	
		MISCELLANEOUS CABLE					
201	063296	CABLE ASSY / 110V BLOCK HEATER			1	1	
201	065517	CABLE ASSY / 110V BLOCK HEATER			1	1	
202	063295	CABLE ASSY / 110V BLOCK HEATER ENGINE SECTION			1	1	

From Y-7046 Up to 8-9339	DATE: 01/2014	PAGE: Y2-0605-00

ALTERNATOR 24V/140 AMPS / "BOSCH"

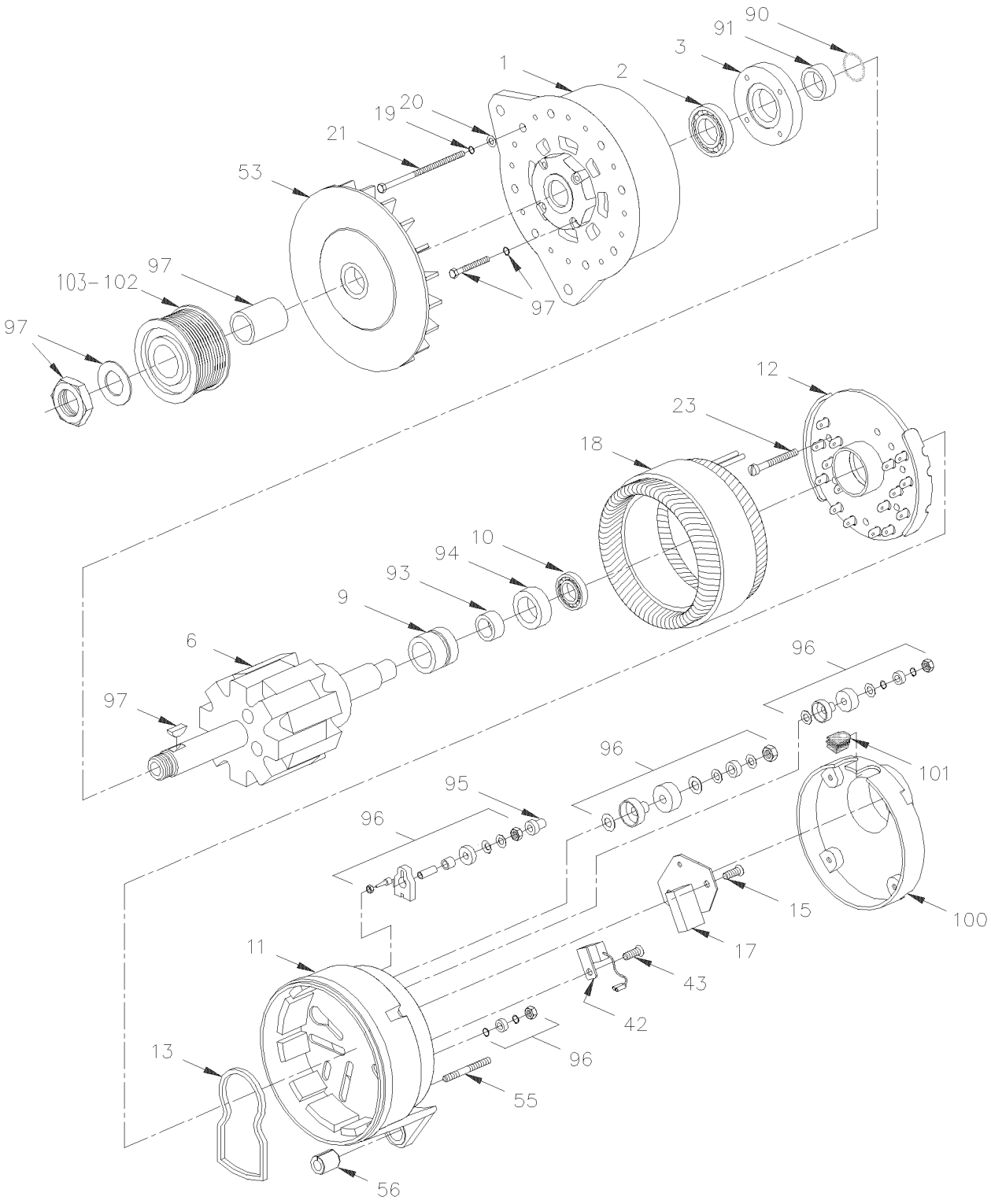

From Y-7046 Up to 8-9339	DATE: 01/2014	PAGE: Y2-0605-00

ALTERNATOR 24V/140 AMPS / "BOSCH"

ITEM	PART	DESCRIPTION	XL45	MTH40	MTH45	MTH45S	NOTE
	562752	ALTERNATOR ASSY 24V/140 AMPS	2				
	562752	ALTERNATOR ASSY 24V/140 AMPS From 2-7908				2	
1	562971	. DRIVE END SHIELD	1			1	
2	562972	. BALL BEARING	1			1	
3	562973	. COVER PLATE / (1 120 033 009)	1			1	
6	562974	. ROTOR / (1 124 037 004)	1			1	
9	562975	. . COLLECTOR-RING	1			1	
10	562976	. CYLINDER ROLLER BEARING	1			1	
NS	684922	. . GREASE "POLYREX" EM / TO USE W/"BOSCH" ALTERNATOR	AR			AR	
11	562977	. COLLECTOR-RING END SHIELD	1			1	
12	562978	. RECTIFIER PLATE ASSY / (1 127 320 973)	1			1	
13	562979	. . SEAL	1			1	
15	562980	. WASHER-AND-SCREW ASSEMBLY	3			3	
17	562981	. TRANSISTOR REGULATOR	1			1	
17	562982	. . COMPRESSION SPRING	2			2	
17	562983	. . BRUSH SET	2			2	
17	562984	. GASKET	1			1	
18	562985	. STATOR ASSY	1			1	
19	562986	. WASHER LOCK SPRING 6MM	4			4	
20	562987	. PLAIN WASHER	4			4	
21	562988	. OVAL-HEAD SCREW	4			4	
23	562989	. WASHER-AND-SCREW ASSEMBLY	3			3	
42	562990	. SUPPRESSION CAPACITOR	1			1	
43	562991	. OVAL-HEAD SCREW M6 X 10-5.8	1			1	
53	562992	. FAN	1			1	
55	562993	. STUD M6 X 35-5.6 / (2 912 212 207)	4			4	
56	562994	. EXPANSION BUSHING / (1 120 300 018)	1			1	
90	562995	. RETAINER DIN 9045-30 / (2916 600 016)	1			1	
91	562996	. SUPPORT RING / (1 120 114 002)	1			1	
93	562997	. SPACER RING	1			1	
94	562998	. RADIAL SEAL	1			1	
95	562999	. PROTECTIVE CAP	1			1	
96	563000	. PARTS SET TERMINAL B+,B-,D+,W /	1			1	
97	563001	. KIT NUT & WASHER M24-1.5 YC	1			1	
100	562851	AIR-INTAKE COVER	1			1	
101	563002	GROMMET / (1 120 312 000)	1			1	
102	065465	PULLEY ALTERNATOR / "BOSCH" / 12 RIB Up to 3-8164	1			1	
102	065835	PULLEY ALTERNATOR / "BOSCH" / 10 RIB From 4-8165 Up to 5-8412 / REPLACED BY: 066062	1			1	
102	066062	PULLEY ALTERNATOR / "BOSCH" / 10 RIB From 5-8413	1			1	
103	Y2-0610-00	**ALTERNATOR MOUNTING / "BOSCH" WITH DETROIT S-60 Up to 3-8164**					
103	Y2-0610-01	**ALTERNATOR MOUNTING / "BOSCH" WITH DETROIT S-60 From 4-8165**					

From Y-7046 Up to 8-9339	DATE: 01/2014	PAGE: Y2-0605-51
ALTERNATOR 24V/270 AMPS / "DELCO" #562235		

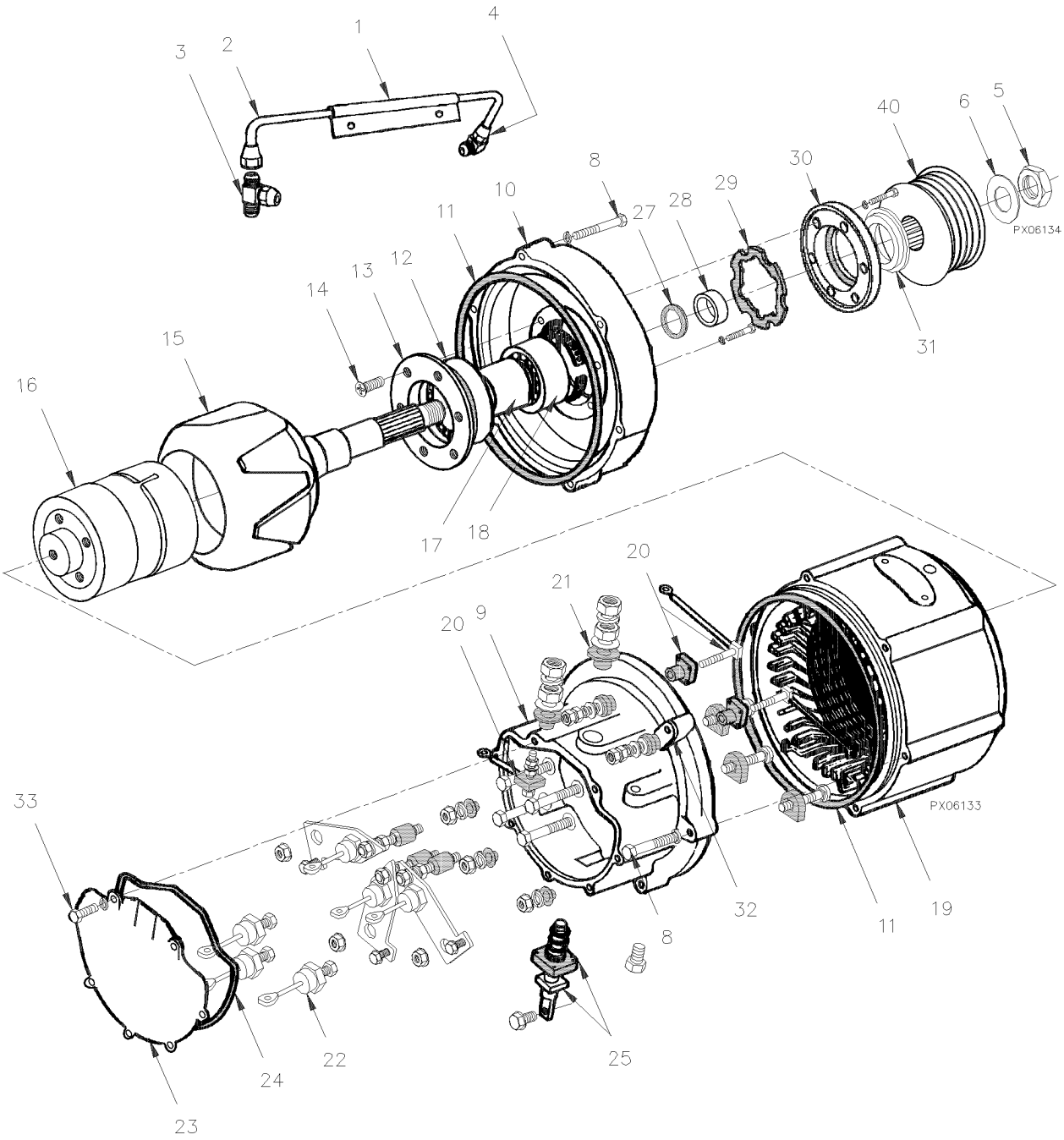

From Y-7046 Up to 8-9339	DATE: 01/2014	PAGE: Y2-0605-51

ALTERNATOR 24V/270 AMPS / "DELCO" #562235

ITEM	PART	DESCRIPTION	XL45	MTH40	MTH45	MTH45S	NOTE
	562235	ALTERNATOR ASSY 24V/270 AMPS Up to 4-8313		1	1	1	
	563437	ALTERNATOR ASSY 24V/270 AMPS From 4-8314		1	1	1	
1	561169	. CLAMP / OIL LINE TUBE		1	1	1	
2	562238	. OIL LINE TUBE		1	1	1	
3	561171	. TEE		1	1	1	
4	561170	. ELBOW 90°		1	1	1	
5	562457	. NUT, DRIVE END		1	1	1	
6	560973	. WASHER / PINION		1	1	1	
8	500170	. SCREW CAP HEX 1/4-20x2 G5 PT ZP		12	12	12	
NS	500473	. WASHER LO SPT .262x.489x.062 ZP		12	12	12	
9	N8885614	. FRAME RECTIFIER END Up to 4-8313		1	1	1	
9	563440	. FRAME RECTIFIER END From 4-8314		1	1	1	
10	562241	. FRAME D.E.		1	1	1	
. NS	562509	. . OIL SEAL 2.247" O.D.		1	1	1	
10	10523585	. FRAME D.E.		1	1	1	
11	562196	. O-RING		2	2	2	
12	562186	. BEARING INNER D.E.		1	1	1	
13	N8885671	. RETAINER BEARING (1941060)		1	1	1	
14	500371	. SCREW MA FL PH M4-0.7x8 ZG603		6	6	6	
15	562240	. ROTOR		1	1	1	
16	562182	. FIELD ASSY		1	1	1	
18	562184	. BEARING OUTER D.E.		1	1	1	
19	562694	. STATOR ASSY / W/FLEX LEAD Up to 4-8313 / REPLACED BY: 563438		1	1	1	
19	563438	. STATOR ASSY / W/FLEX LEAD & INSULATOR From 4-8314		1	1	1	
20	560724	. STUD TERMINAL FIELD / REPLACED BY: N8885628		2	2	2	
21	560846	. SLEEVE INSULATOR DC+ STUD		1	1	1	
22	562193	. DIODE (NEGATIF) / ALTERNATOR 50 DN		6	6	6	
23	562466	. COVER / RECTIFIER END / ALUMINUM DIE CAST		1	1	1	
24	562467	. . O-RING		1	1	1	
25	562450	. STUD TERMINAL DC +		1	1	1	
27	562242	. O-RING / <> SPACER COLLAR & BEARING		1	1	1	
28	562245	. SPACER COLLAR D.E.		1	1	1	
29	562243	. GASKET PLATE DRIVE END		1	1	1	
30	562244	. RETAINER BEARING D.E.		1	1	1	
31	562509	. . OIL SEAL 2.247" O.D.		1	1	1	
31	N8896697	. OIL SEAL W/FLANGE 30375" O.D.		1	1	1	
. NS	N8885631	_. O-RING / <> SPACER COLLAR & BEARING / REPLACED BY: 562242		1	1	1	
. NS	N8893250	_. SPACER COLLAR D.E. / REPLACED BY: 562245		1	1	1	
32	562386	. STRAP / <> FIELD TERMINAL & GROUND		1	1	1	
33	500163	. SCREW CAP HEX 1/4-20x3/4 G5 ZP		6	6	6	
40	510439	PULLEY ALTERNATOR 12 RIB Up to 3-8164		1	1	1	
40	510926	PULLEY ALTERNATOR 10 RIB From 4-8165		1	1	1	

From Y-7046 Up to 8-9339	DATE: 01/2014	PAGE: Y2-0605-52

ALTERNATOR 12V/300 AMPS / "DELCO" #562355

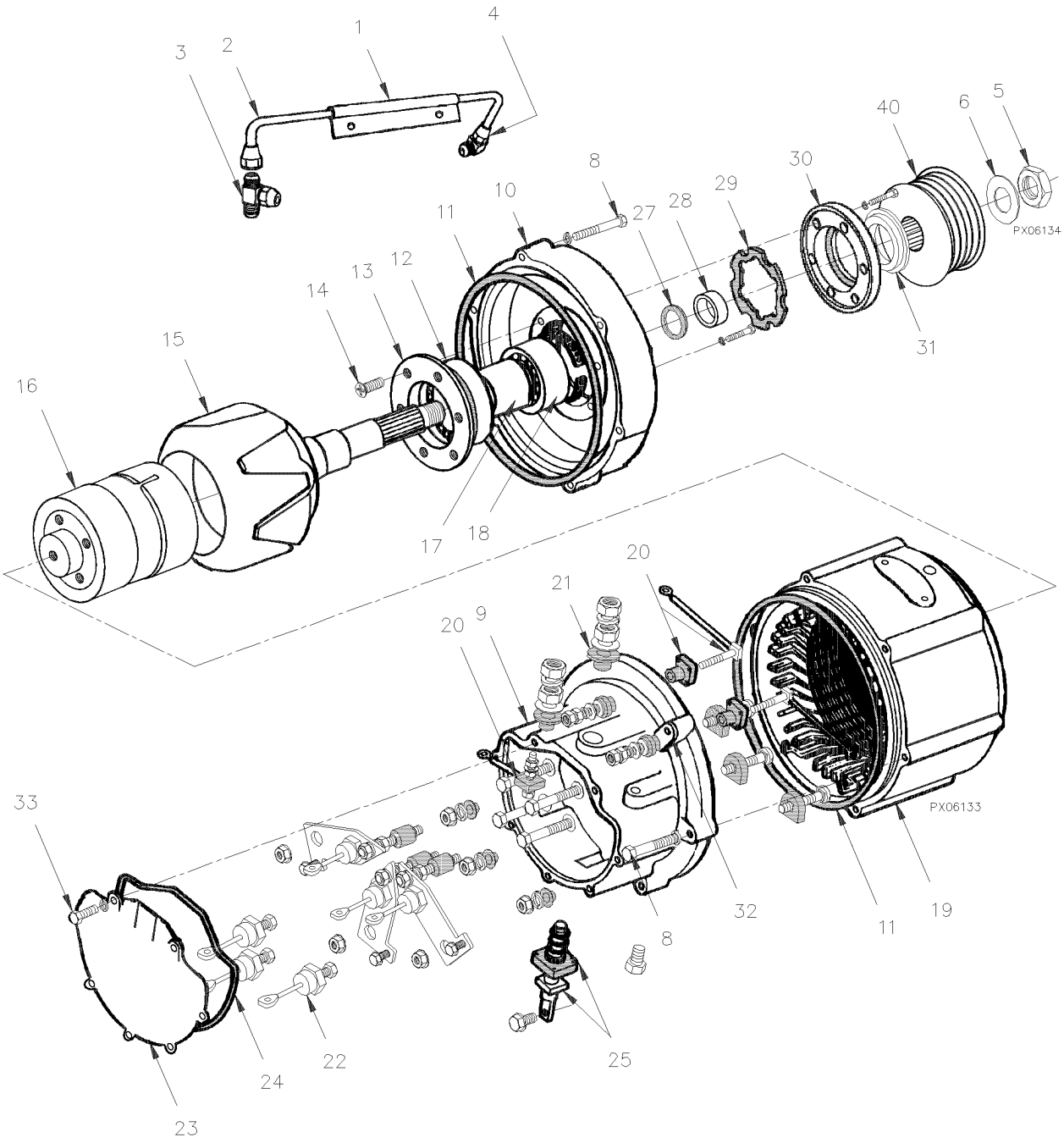

From Y-7046 Up to 8-9339	DATE: 01/2014	PAGE: Y2-0605-52

ALTERNATOR 12V/300 AMPS / "DELCO" #562355

ITEM	PART	DESCRIPTION	XL45	MTH40	MTH45	MTH45S	NOTE
	562355	ALTERNATOR ASSY 12V/300 AMPS /		1	1	1	
1	561169	. CLAMP / OIL LINE TUBE		1	1	1	
2	562238	. OIL LINE TUBE		1	1	1	
3	561171	. TEE		1	1	1	
4	561170	. ELBOW 90°		1	1	1	
5	562457	. NUT, DRIVE END		1	1	1	
6	560973	. WASHER / PINION		1	1	1	
8	500170	. SCREW CAP HEX 1/4-20x2 G5 PT ZP		12	12	12	
NS	500473	. WASHER LO SPT .262x.489x.062 ZP		12	12	12	
9	N8885614	. FRAME RECTIFIER END		1	1	1	
10	562241	. FRAME D.E.		1	1	1	
. NS	562509	. . OIL SEAL 2.247" O.D.		1	1	1	
10	10523585	. FRAME D.E.		1	1	1	
11	562196	. O-RING		2	2	2	
12	562186	. BEARING INNER D.E.		1	1	1	
13	N8885671	. RETAINER BEARING (1941060)		1	1	1	
14	500371	. SCREW MA FL PH M4-0.7x8 ZG603		6	6	6	
15	562240	. ROTOR		1	1	1	
16	562448	. FIELD ASSY		1	1	1	
18	562184	. BEARING OUTER D.E.		1	1	1	
19	562449	. STATOR ASSY / W/RIGID LEAD		1	1	1	
20	560724	. STUD TERMINAL FIELD / REPLACED BY: N8885628		2	2	2	
21	560846	. SLEEVE INSULATOR DC+ STUD		1	1	1	
22	562193	. DIODE (NEGATIF) / ALTERNATOR 50 DN		6	6	6	
23	562466	. COVER / RECTIFIER END / ALUMINUM DIE CAST		1	1	1	
24	562467	. . O-RING		1	1	1	
25	562450	. STUD TERMINAL DC +		1	1	1	
27	562242	. O-RING / <> SPACER COLLAR & BEARING		1	1	1	
28	562245	. SPACER COLLAR D.E.		1	1	1	
29	562243	. GASKET PLATE DRIVE END		1	1	1	
30	562244	. RETAINER BEARING D.E.		1	1	1	
31	562509	. . OIL SEAL 2.247" O.D.		1	1	1	
31	N8896697	. OIL SEAL W/FLANGE 30375" O.D.		1	1	1	
. NS	N8885631	_. O-RING / <> SPACER COLLAR & BEARING / REPLACED BY: 562242		1	1	1	
. NS	N8893250	_. SPACER COLLAR D.E. / REPLACED BY: 562245		1	1	1	
32	562386	. STRAP / <> FIELD TERMINAL & GROUND		1	1	1	
33	500163	. SCREW CAP HEX 1/4-20x3/4 G5 ZP		6	6	6	
40	510439	PULLEY ALTERNATOR 12 RIB Up to 3-8164		1	1	1	
40	510926	PULLEY ALTERNATOR 10 RIB From 4-8165		1	1	1	

From Y-7046 Up to 3-8164	DATE: 01/2014	PAGE: Y2-0610-00

ALTERNATOR MOUNTING / "BOSCH" WITH DETROIT S-60

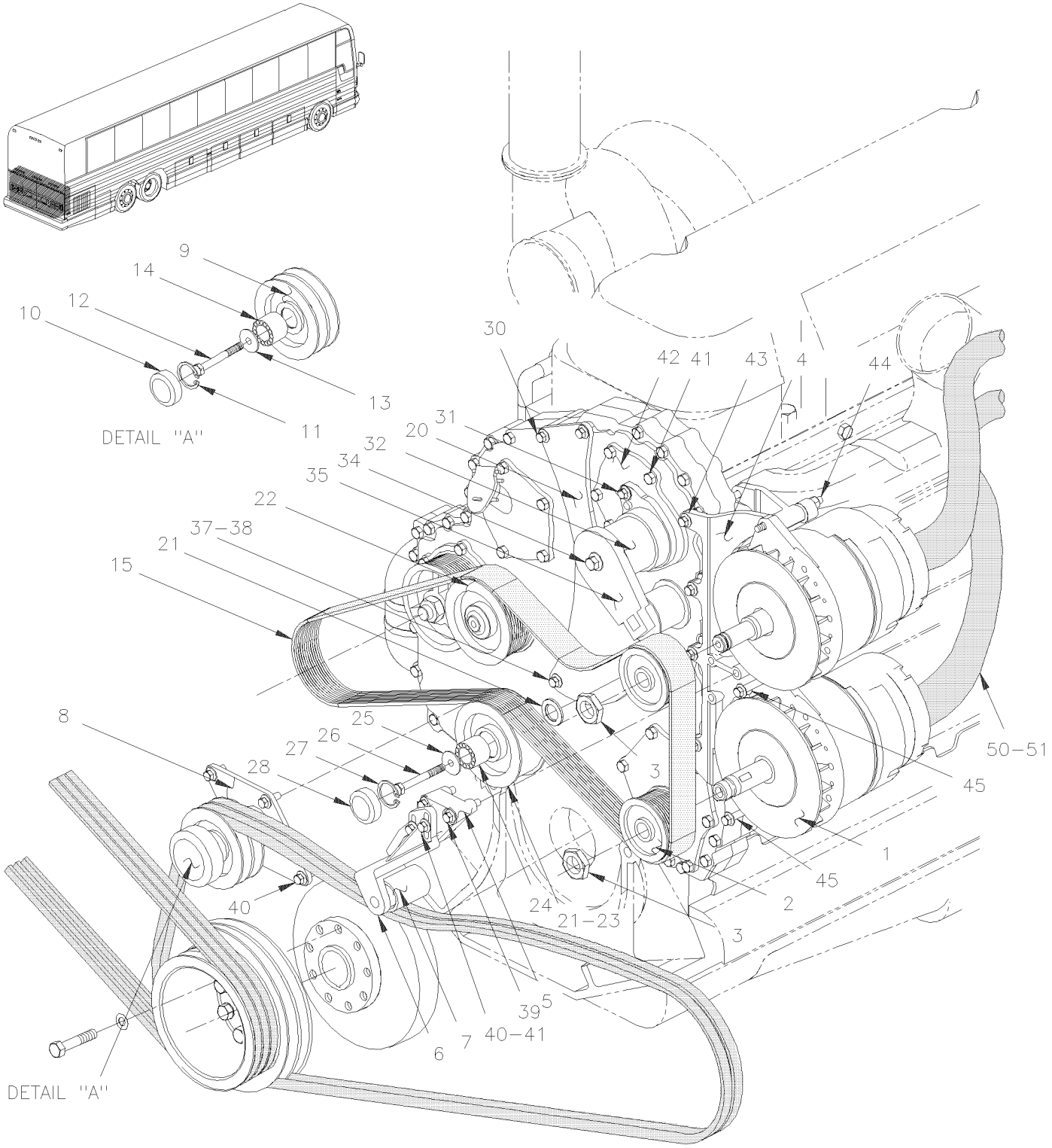

From Y-7046 Up to 3-8164	DATE: 01/2014	PAGE: Y2-0610-00

ALTERNATOR MOUNTING / "BOSCH" WITH DETROIT S-60

ITEM	PART	DESCRIPTION	XL45	MTH40	MTH45	MTH45S	NOTE
1	562752	ALTERNATOR ASSY 24V/140 AMPS	2				
1	562752	ALTERNATOR ASSY 24V/140 AMPS From 2-7908				2	
2	065465	PULLEY ALTERNATOR / "BOSCH" / 12 RIB	2			2	
3	N.S.P.	NUT	1			1	2
4	510663	SUPPORT ALTERNATOR MOUNTING	1			1	
5	012064	ADAPTOR SNUBBER MOUNTING	1			1	
6	012063	SNUBBER ASSY / REPLACED BY: 012467	1			1	
6	N.S.P.	. SUPPORT / (23522973)	1			1	2
7	N.S.P.	. ROLLER / (23512825)	1			1	2
NS	N.S.P.	. BEARING / (907394)	1			1	2
8	012058	PULLEY ASSY IDLER	1			1	
8	N.S.P.	. SUPPORT / (23521658)	1			1	2
9	N.S.P.	. PULLEY / (23519390)	1			1	2
10	N.S.P.	. PROTECTOR CAP / (05107293)	1			1	2
10	510798	PROTECTOR CAP / "PREVOST"	1			1	B
11	N.S.P.	. SNAP RING / (23518223)	1			1	2
12	5001308	. SCREW CAP HEXF M10-1.5x40 G10.9	1			1	
13	N.S.P.	. WASHER / (23518224)	1			1	2
NS	N.S.P.	SEAL / (23520961)	1			1	2
14	510618	. BALL BEARING DBL ROW /	1			1	
15	506865	MULTI V-BELT / 12 RIB 85 ½" 208585	1			1	
15	506669	MULTI V-BELT / 12 RIB 72" (1830) 23521337	1			1	A
20	012065	IDLER PULLEY ASSY	1			1	
21	N.S.P.	. SEAL / (CR 14960) / (23521013)	2			2	2
22	N.S.P.	. PULLEY IDLER 12G / 5"1/4 O.D. / (23520994)	1			1	2
23	N.S.P.	. PULLEY BELT TENSIONER / 5 1/4 O.D. / (23520999)	2			2	2
24	N.S.P.	. BALL BEARING DBL ROW /	1			1	2
25	N.S.P.	. WASHER / (23518224)	1			1	2
26	5001308	. SCREW CAP HEXF M10-1.5x40 G10.9	2			2	
26	510627	. BOLT M10-1.5 X 45MM LH G10.9 /	1			1	
27	N.S.P.	. BEARING DBL ROW / (30BGS1D53) / (23518189)	1			1	2
28	N.S.P.	. PROTECTOR CAP / 05107293)	2			2	2
28	510798	PROTECTOR CAP / "PREVOST"	1			1	B
30	975104	SCREW CAP HEXF M10-1.5x85 G10.9 PHC	2			2	
31	969445	SCREW CAP HEXF M10-1.5x30 G10.9 PHC	1			1	
32	012103	AUTOMATIC TENSIONER ASSY / REPLACED BY: 199018	1			1	
NS	N.S.S.	. SPRING	2			2	1
NS	N.S.S.	. PROTECTOR CAP	1			1	1
34	975104	. SCREW CAP HEXF M10-1.5x85 G10.9 PHC	1			1	
		1) NOT SOLD SEPARATELY					
		2) NOT SOLD BY PREVOST (SEE MANUFACTURING PART					
		NUMBER AT END OF DESCRIPTION LINE)					
		A) EMERGENCY USE ONLY W/ONE ALTERNATOR					
		B) FIT ONLY WITH PULLEY SOLD BY "PREVOST"					

From Y-7046 Up to 3-8164	DATE: 01/2014	PAGE: Y2-0610-00

ALTERNATOR MOUNTING / "BOSCH" WITH DETROIT S-60

ITEM	PART	DESCRIPTION	XL45	MTH40	MTH45	MTH45S	NOTE
35	N.S.S.	. LEVER	1			1	1
NS	N.S.S.	. PULLEY	1			1	1
NS	N.S.S.	. BEARING	1			1	1
NS	N.S.S.	. PROTECTOR CAP	1			1	1
37	975121	SCREW CAP HEXF M14-2.0x50 G10.9 PHC	1			1	
38	975124	SCREW CAP HEXF M14-2.0x80 G10.9 PHC	1			1	
38	510642	STUD M14-2.0 X 92MM GR 10.9	1			1	
NS	510643	NUT HEXF ZP M14-2.0 6H	1			1	
39	5001595	SCREW CAP HEXF M10-1.5x60 G8.8 DP	3			3	
40	955297	SCREW CAP HEX M8-1.25x25 G8.8 ZG603	3			3	
41	510641	SCREW CAP HEXF M8-1.25x30 G10.9	5			5	
42	012104	TENSIONER, MOUNTING PLATE	1			1	
NS	N.S.P.	O-RING / (8929253)	1			1	2
43	510635	SCREW CAP HEXF 7/16-14x5.50 ZP	4			4	
NS	510636	NUT HEXF 7/16-14 ZP	4			4	
44	510639	BOLT M12-1.5 X 80MM	1			1	
44	5001584	SCREW CAP HEX M12-1.5x150 G10.9 DP	1			1	
45	510637	BOLT M12-1.5 X 50MM / REPLACED BY: 5001582	4			4	
NS	5001585	WASHER FL 13.5x27x2.46-4.5 DP	6			6	
NS	975111	SCREW CAP HEXF M12-1.75x50MM G10.9 PHC	1			1	
50	064981	HOSE FLEXIBLE / 2 3/4" I.D. X 1524MM	2			2	
51	504025	HOSE CLAMP / 2"5/16-3"1/4 SS / HS-44	4			4	
		1) NOT SOLD SEPARATELY					
		2) NOT SOLD BY PREVOST (SEE MANUFACTURING PART NUMBER AT END OF DESCRIPTION LINE)					

From Y-7046 Up to 3-8164	DATE: 01/2014	PAGE: Y2-0610-00

ALTERNATOR MOUNTING / "BOSCH" WITH DETROIT S-60

ITEM	PART	DESCRIPTION	XL45	MTH40	MTH45	MTH45S	NOTE

From 4-8165 Up to 8-9339	DATE: 01/2014	PAGE: Y2-0610-01
ALTERNATOR MOUNTING / "BOSCH" WITH DETROIT S-60		

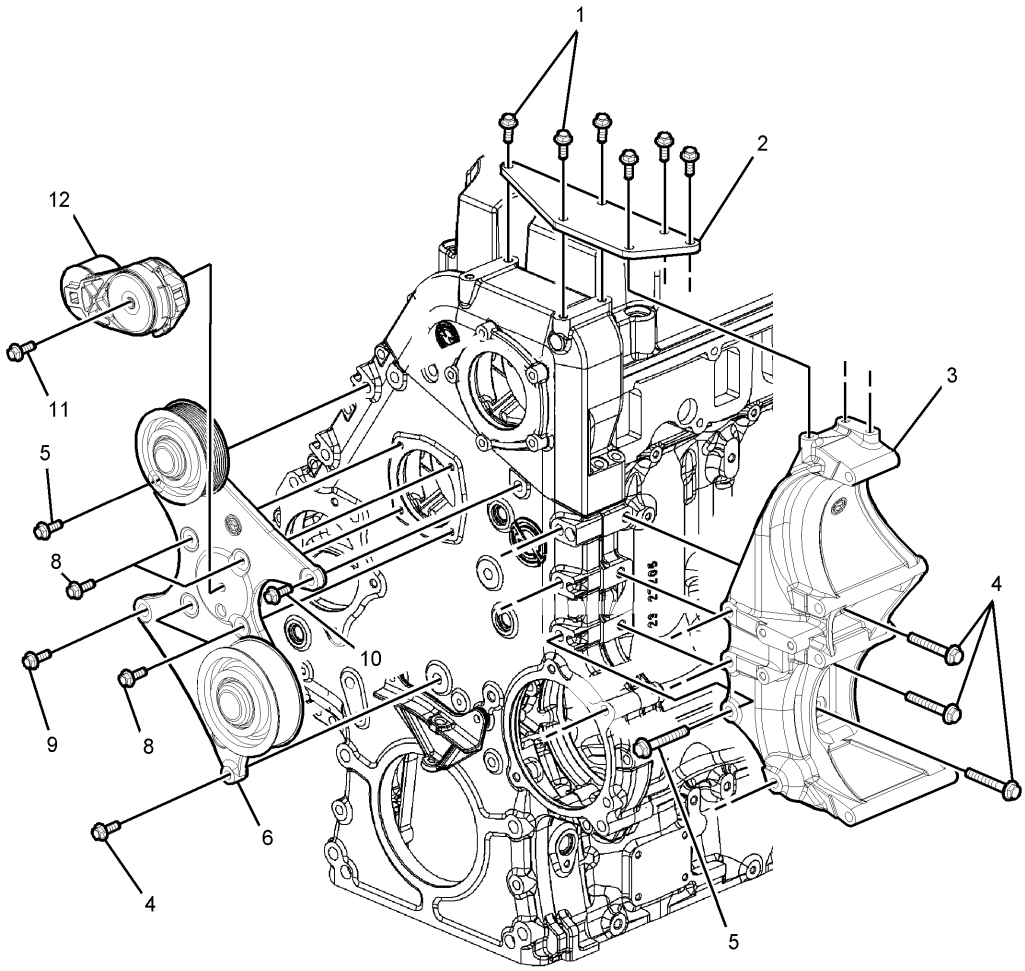

From 4-8165 Up to 8-9339	DATE: 01/2014	PAGE: Y2-0610-01
ALTERNATOR MOUNTING / "BOSCH" WITH DETROIT S-60		

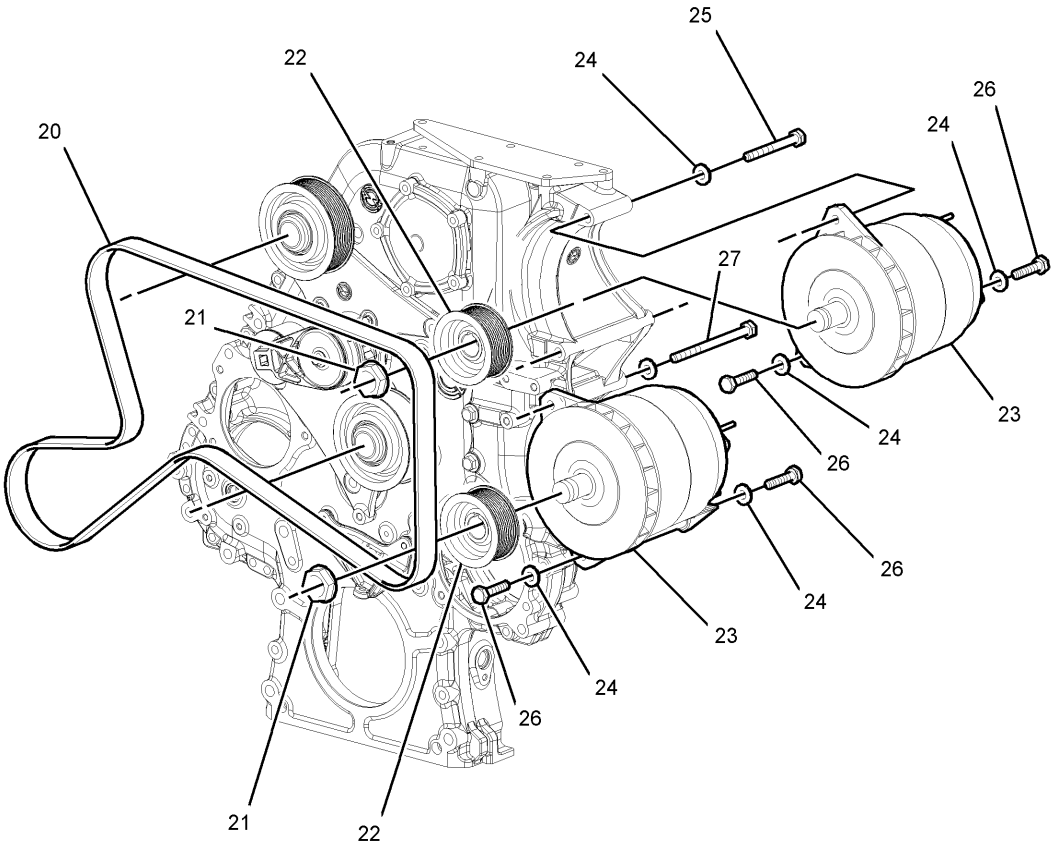

From 4-8165 Up to 8-9339	DATE: 01/2014	PAGE: Y2-0610-01
ALTERNATOR MOUNTING / "BOSCH" WITH DETROIT S-60		

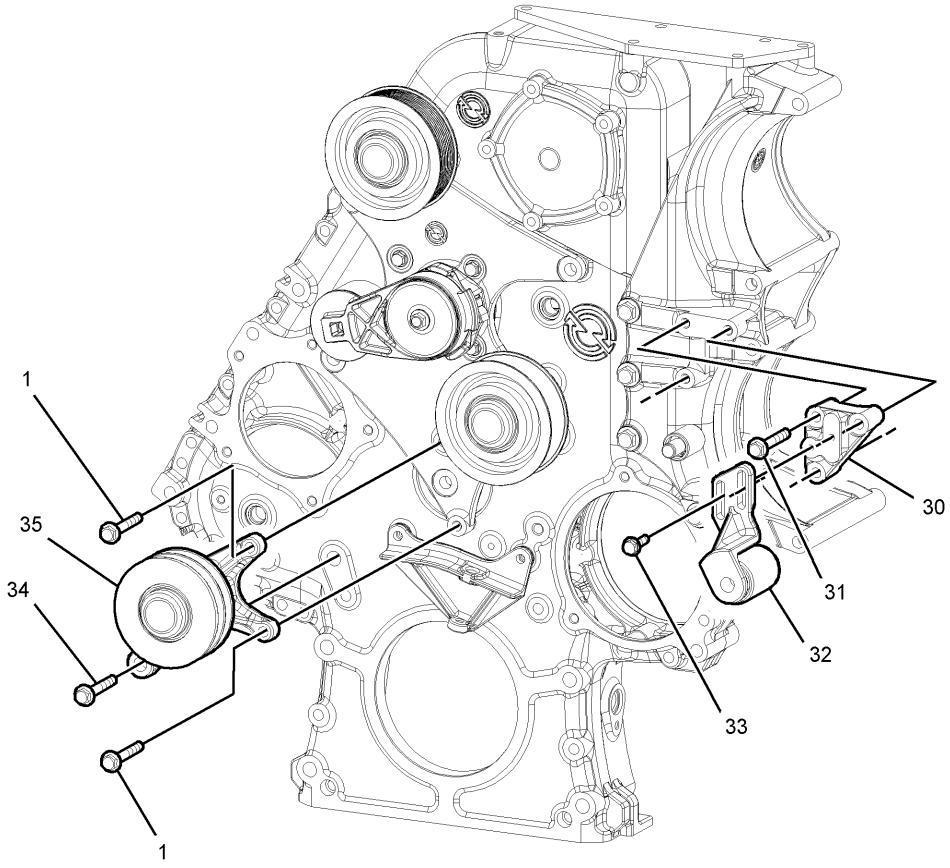

From 4-8165 Up to 8-9339	DATE: 01/2014	PAGE: Y2-0610-01

ALTERNATOR MOUNTING / "BOSCH" WITH DETROIT S-60

ITEM	PART	DESCRIPTION	XL45	MTH40	MTH45	MTH45S	NOTE
1	5001644	SCREW CAP HEXF M10-1.5x30 G8.8 DP	8			8	
2	23527310	STRAP	1			1	
3	23530258	BRACKET	1			1	
4	23528697	SCREW CAP HEXF M12-1.75x60 G10.9	4			4	
5	23528406	SCREW CAP HEXF M12-1.75x80 G10.9	6			6	
6	23530231	PULLEY ASSY FORMER / REPLACED BY: 23534290	1			1	
6	23534290	PULLEY ASSY CURRENT	1			1	
8	11504822	SCREW CAP HEXF M9-1.25x30 G10.9	4			4	
9	23528698	SCREW CAP HEX M14-2.00x130 G10.9	1			1	
10	23528406	SCREW CAP HEXF M12-1.75x80 G10.9	2			2	
11	11503669	SCREW CAP HEX M10-1.50x80 G10.9	1			1	
12	012329	AUTOMATIC TENSIONER ASSY	1			1	
20	5060055	MULTI V-BELT / 10 RIB 87 7/8" (2232) 23530281	1			1	
20	5060056	MULTI V-BELT / 10 RIB 78 3/4" (2000) 23530282	1			1	A
21	563001	KIT NUT & WASHER M24-1.5 YC	2			2	
22	065835	PULLEY ALTERNATOR / "BOSCH" / 10 RIB Up to 4-4952 / REPLACED BY: 066062	2			2	
22	066062	PULLEY ALTERNATOR / "BOSCH" / 10 RIB From 4-4953	2			2	
23	Y2-0605-00	**ALTERNATOR 24V/140 AMPS / "BOSCH"**					
24	23509483	WASHER	6			6	
25	23528696	SCREW CAP HEX M12-1.50x100	1			1	
26	23523176	SCREW CAP HEX M12-1.75x50	4			4	
27	23523490	SCREW CAP HEX M12-1.50x150	1			1	
30	012265	ADAPTOR SNUBBER MOUNTING Up to 8-9250	1			1	
30	012455	ADAPTOR SNUBBER MOUNTING From 8-9251	1			1	
31	5001595	SCREW CAP HEXF M10-1.5x60 G8.8 DP	3			3	
32	012268	SNUBBER ASSY Up to 8-9250 / REPLACED BY: 012467	1			1	
32	012467	SNUBBER ASSY From 8-9251	1			1	D
33	5001643	SCREW CAP HEXF M8-1.25x25 G8.8 DP	2			2	
34	5001596	SCREW CAP HEXF M14-2.0x90 G8.8 MAGNI 565	1			1	
35	012269	PULLEY ASSY IDLER Up to 8-9250 / REPLACED BY: 012466	1			1	
35	012466	PULLEY ASSY IDLER From 8-9251	1			1	D
		A) EMERGENCY USE ONLY WITH ONE ALTERNATOR					
		D) SEE DETAIL AT PAGE Y2-0120-00					

From Y-7046 Up to 3-8164	DATE: 01/2014	PAGE: Y2-0610-50
ALTERNATOR MOUNTING / "DELCO" WITH DETROIT S-60		

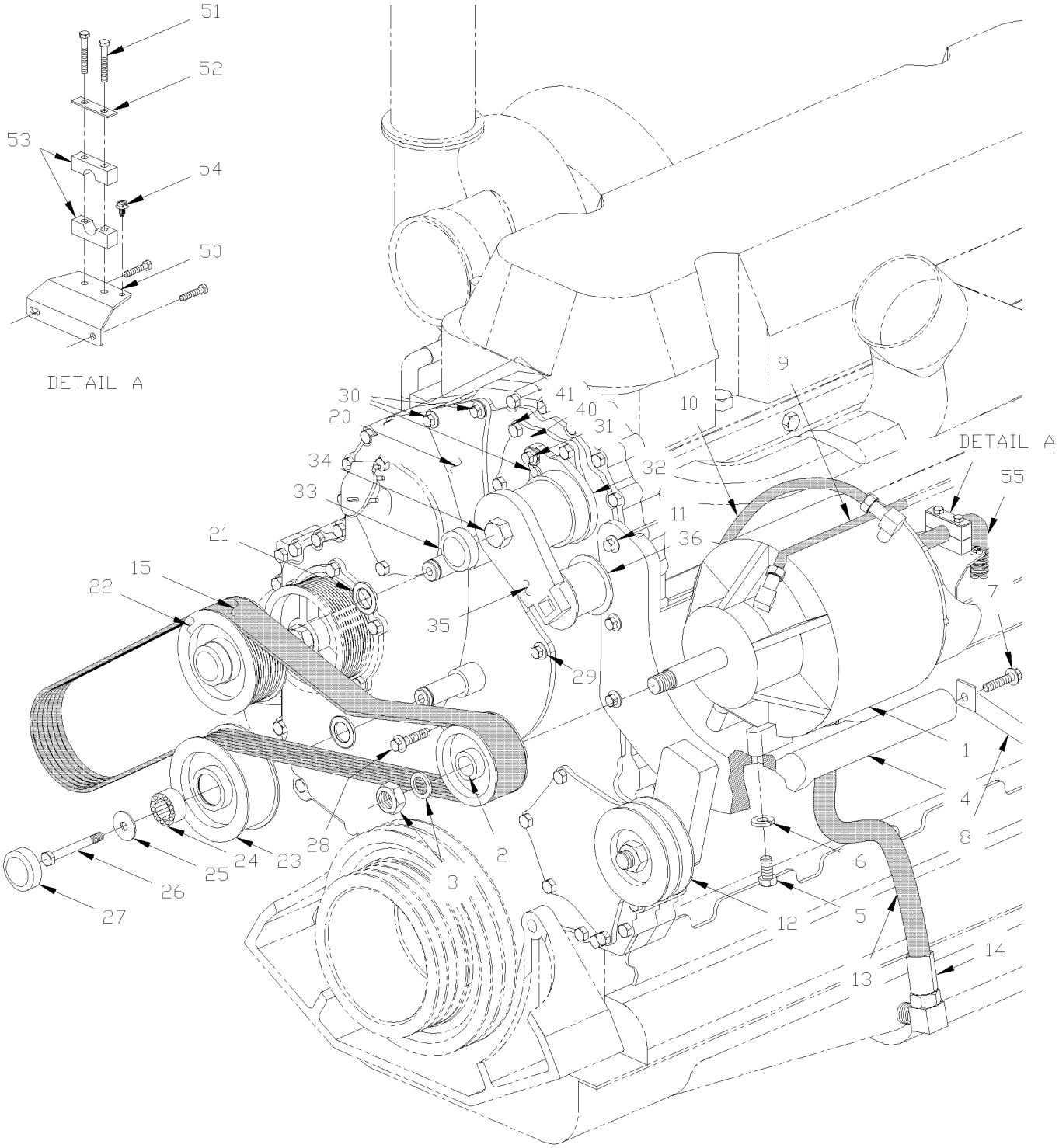

From Y-7046 Up to 3-8164	DATE: 01/2014	PAGE: Y2-0610-50

ALTERNATOR MOUNTING / "DELCO" WITH DETROIT S-60

ITEM	PART	DESCRIPTION	XL45	MTH40	MTH45	MTH45S	NOTE
1	562235	ALTERNATOR ASSY 24V/270 AMPS Up to 4-8313		1	1	1	
NS	562355	ALTERNATOR ASSY 12V/300 AMPS /		1	1	1	
1	563437	ALTERNATOR ASSY 24V/270 AMPS From 4-8314		1	1	1	
2	510439	PULLEY ALTERNATOR 12 RIB		1	1	1	
3	Y2-0605-51	**ALTERNATOR 24V/270 AMPS / "DELCO" #562235**					
4	N.S.P.	SUPPORT ALTERNATOR MOUNTING / (23521128)		1	1	1	2
NS	N.S.P.	KEY, WOODRUFF 3/16" X 7/8" / (120502)		2	2	2	2
5	N.S.P.	BOLT 1/2-13 X 2.00" / (00455001)		2	2	2	2
NS	N.S.P.	BOLT 1/2-13 X 2.25" / (00186631)		2	2	2	2
6	N.S.P.	WASHER LO SPT ZP / (5132715)		4	4	4	2
7	N.S.P.	BOLT FLG M12-1.75 X 30MM / TO FIX BRACE / (11509528)		4	4	4	2
NS	N.S.P.	BRACKET ALTERNATOR SUPPORT / ON BLOCK / (23511744)		1	1	1	2
NS	N.S.P.	BOLT FLG M10-1.5 X 30MM / TO FIX SUPPORT ON BLOCK (11505299)		3	3	3	2
8	N.S.P.	BRACE ALTERNATOR SUPPORT / (23511743)		1	1	1	2
9	N.S.P.	HOSE ASSY 25.25" / #5 TEFLON OIL SUPPLY / (23504343)		1	1	1	2
10	N.S.P.	HOSE ASSY 21" / #4 ALT VENT TOP OF ALTERNATOR / (5133163)		1	1	1	2
11	N.S.P.	BOLT FLG 7/16-14 X 5.75 / (23521130)		2	2	2	2
NS	N.S.P.	BOLT FLG 7/16-14 X 5.50 / (23521132)		1	1	1	2
11	N.S.P.	NUT FLG 7/16-14 / (23521131)		3	3	3	2
12	Y2-0120-50	**DRIVE PULLEY & BELTS - MTH**					
13	N.S.P.	HOSE ASSY 23.40" / #16 OIL DRAIN / (23517561)		1	1	1	2
NS	N.S.P.	CONNECTOR 1" NPT 1" TUBE / OIL DRAIN / (09402713)		1	1	1	2
14	N.S.P.	ELBOW 90° 3/4" NPT 1" TUBE / OIL DRAIN / (02492119)		1	1	1	2
15	506782	MULTI V-BELT / 12 RIB 73" (1854) 23521000		1	1	1	
20	N.S.P.	IDLER PULLEY ASSY / (23520959)		1	1	1	2
21	N.S.P.	. SEAL / (CR 14960) / (23521013)		2	2	2	2
22	N.S.P.	. PULLEY IDLER 12G / 5 1/4" O.D. / (23520994)		1	1	1	2
23	N.S.P.	. PULLEY BELT TENSIONER / 5 1/4 O.D. / (23520999)		1	1	1	2
24	N.S.P.	. BEARING DBL ROW / (30BGS1D53) / (23518189)		1	1	1	2
25	N.S.P.	. WASHER / (23518224)		2	2	2	2
26	N.S.P.	. BOLT M10-1.5 X 45MM G10.9 / (23518303)		2	2	2	2
26	510627	. BOLT M10-1.5 X 45MM LH G10.9 /		1	1	1	
27	N.S.P.	. PROTECTOR CAP / (05107293)		2	2	2	2
28	N.S.P.	BOLT FLG M14-2.0 X 50MM / (23511779)		1	1	1	2
29	N.S.P.	BOLT FLG M14-2.0 X 80MM / (23511257)		2	2	2	2
30	N.S.P.	BOLT FLG M10-1.5 X 85MM / (23505050)		3	3	3	2
31	N.S.P.	BOLT FLG M10-1.5 X 30MM / (23511786)		1	1	1	2
32	N.S.P.	AUTOMATIC TENSIONER / (23521020)		1	1	1	2
NS	N.S.S.	. SPRING		2	2	2	1
		1) NOT SOLD SEPARATELY					
		2) NOT SOLD BY PREVOST (SEE MANUFACTURING PART NUMBER AT END OF DESCRIPTION LINE)					

From Y-7046 Up to 3-8164	DATE: 01/2014	PAGE: Y2-0610-50

ALTERNATOR MOUNTING / "DELCO" WITH DETROIT S-60

ITEM	PART	DESCRIPTION	XL45	MTH40	MTH45	MTH45S	NOTE
33	N.S.S.	. PROTECTOR CAP		1	1	1	1
34	N.S.S.	. BOLT		1	1	1	1
35	N.S.S.	. LEVER		1	1	1	1
36	N.S.S.	. PULLEY		1	1	1	1
NS	N.S.S.	. BEARING		1	1	1	1
NS	N.S.S.	PROTECTOR CAP		1	1	1	1
40	N.S.P.	TENSIONNER, MOUNTED / (23520920)		1	1	1	2
NS	N.S.P.	O-RING / (8929253)		1	1	1	2
41	N.S.P.	BOLT FLG M8-1.25X30 / (11504822)		5	5	5	2
50	065693	SUPPORT, DELCO ALT HARNESS From 2-7891		1	1	1	A
51	500170	SCREW CAP HEX 1/4-20x2 G5 PT ZP From 2-7891		2	2	2	A
52	504614	PLATE RETAINING / COLLAR From 2-7891		1	1	1	A
53	504703	COLLAR 1/2" I.D. / TO FIX HOSE From 2-7891		1	1	1	A
54	509815	TIE MOUNT / ATTACHMENT W/TREE MOUNT From 2-7891		2	2	2	A
NS	504637	CABLE TIE / 3/16" x 13" From 2-7891		AR	AR	AR	A
55	065701	CABLE ASSY #102 From 2-7891		1	1	1	A
NS	065696	KIT, RETROFIT HARNESS SUPPORT W/"DELCO" ALT Up to 2-7890		AR	AR	AR	
		1) NOT SOLD SEPARATELY					
		2) NOT SOLD BY PREVOST (SEE MANUFACTURING PART					
		NUMBER AT END OF DESCRIPTION LINE)					
		A) FOR PRODUCT IMPROVEMENT ASK FOR KIT #065696					
		INCLUDE ALL THOSE PARTS					

From Y-7046 Up to 3-8164	DATE: 01/2014	PAGE: Y2-0610-50

ALTERNATOR MOUNTING / "DELCO" WITH DETROIT S-60

ITEM	PART	DESCRIPTION	XL45	MTH40	MTH45	MTH45S	NOTE

From Y-7046 Up to 8-9339	DATE: 01/2014	PAGE: Y2-0610-51

ALTERNATOR MOUNTING / 12V & 24V - MTH

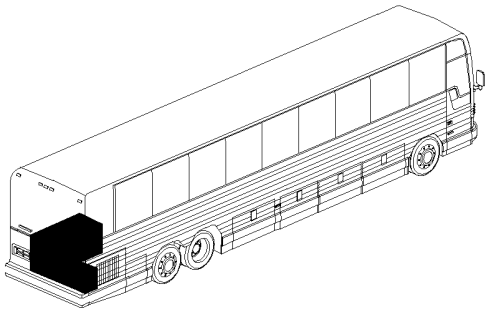

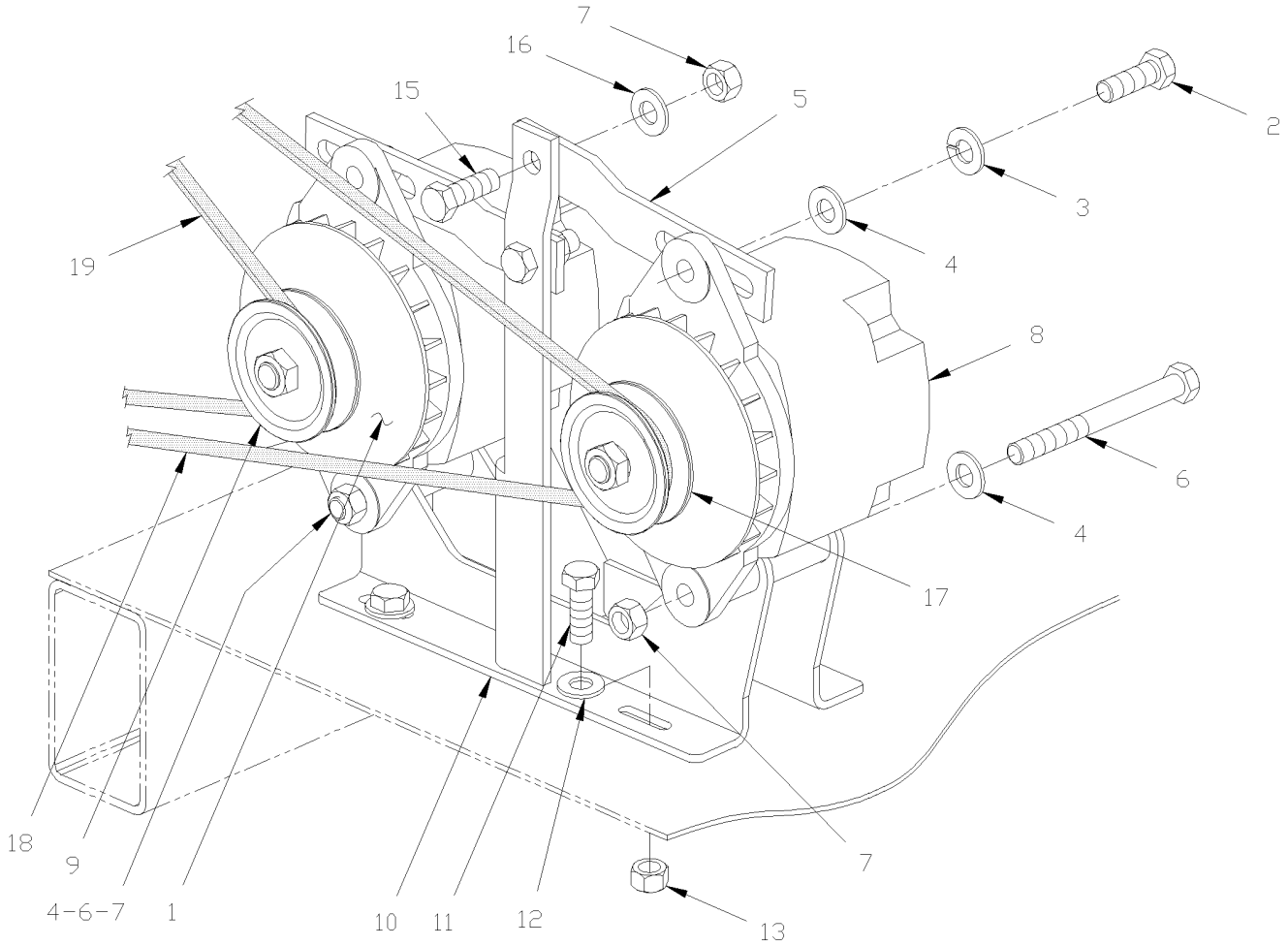

From Y-7046 Up to 8-9339	DATE: 01/2014	PAGE: Y2-0610-51

ALTERNATOR MOUNTING / 12V & 24V - MTH

ITEM	PART	DESCRIPTION	XL45	MTH40	MTH45	MTH45S	NOTE
1	562326	ALTERNATOR ASSY 24V/75 AMPS		1	1	1	
NS	562612	ALTERNATOR ASSY 24V/100 AMPS / PRESTOLITE				1	
2	500214	SCREW CAP HEX 1/2-13x1 1/4 G5 ZP		2	2	2	
3	500482	WASHER LO SPT .506x.873x.125 ZP		2	2	2	
4	500547	WASHER FL .484x.750x.031 ZP / REPLACED BY: 502525		2	2	2	
5	061531	TENSIONNER		2	2	2	
6	500106	SCREW CAP HEX 1/2-20x6 G5 PT ZP		2	2	2	
7	500718	NUT HEX STO 1/2-20 ZP		3	3	3	
8	562911	ALTERNATOR ASSY 12V/145 AMPS /LEECE-NEVILLE		1	1	1	
9	062418	PULLEY ALTERNATOR / W/1V x 3 ¼" O.D. Up to 4-4952 / REPLACED BY: 066065		1	1	1	
9	066065	PULLEY ALTERNATOR / W/1V x 3 ¼" O.D. From 4-4953		1	1	1	
9	562926	PULLEY 3.3" O.D. / W/ "LEECE-NEVILLE"		1	1	1	
NS	500420	WASHER FL .938x1.750x.134 ZP		1	1	1	
NS	5001426	WASHER FL .875x1.375x.047 STL KEYWAY		3	3	3	
10	064455	SUPPORT / ALTERNATOR Up to 2-7809 / REPLACED BY: 065616		1	1	1	
10	065616	SUPPORT / ALTERNATOR From 2-7810 Up to 4-8220 / REPLACED BY: 065887		1	1	1	
10	065887	SUPPORT / ALTERNATOR From 4-8221		1	1	1	
NS	505213	SHIM 1/16" THICK		AR	AR	AR	
NS	062362	SHIM / .067" THICK / REPLACED BY: 505213		AR	AR	AR	
NS	062361	SHIM / .082" THICK		AR	AR	AR	
11	955535	SCREW CAP HEX 3/8-16x1 1/4 G5 ZG603		4	4	4	
12	500832	WASHER FL .406x.812x.065 ZG603		8	8	8	
13	500208	NUT HEX STO 3/8-16 ZG603		4	4	4	
15	500088	SCREW CAP HEX 1/2-20x1 1/2 G5 ZP		1	1	1	
16	500446	WASHER FL .531x1.250x.125 ZP		1	1	1	
17	060697	PULLEY ALTERNATOR / W/1V x 4" O.D. / REPLACED BY: 066065		1	1	1	
18	506760	V-BELT / BX-97 9013-2097		1	1	1	
19	506680	V-BELT / BX-80 9013-2080		1	1	1	E
19	506708	V-BELT / BX-77 9013-2077		1	1	1	D

D) USE WITH PULLEY MOUNTED ON ALTERNATOR SUPPORT
"DELCO" MODEL 50DN MOUNTED ON ENGINE
"OPTION". (NEIHOFF)

E) USE WITH PULLEY MOUNTED ON SMALL SUPPORT
FIXED AT ENGINE.

From Y-7046 Up to 8-9339	DATE: 01/2014	PAGE: Y2-0610-52

ALTERNATOR MOUNTING / 12V & 24V - MTH / GEARBOX INSTAL

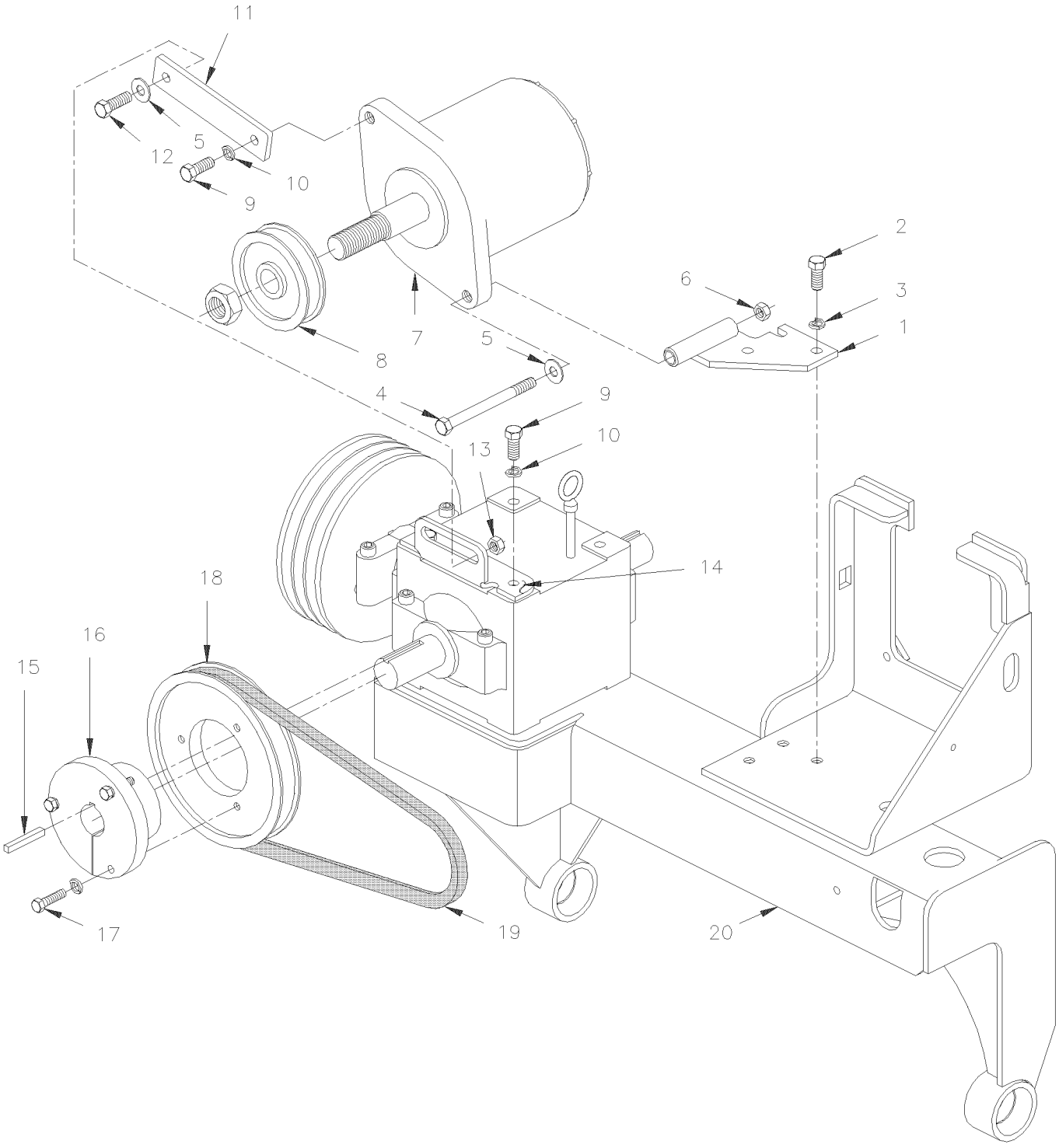

From Y-7046 Up to 8-9339	DATE: 01/2014	PAGE: Y2-0610-52

ALTERNATOR MOUNTING / 12V & 24V - MTH / GEARBOX INSTAL

ITEM	PART	DESCRIPTION	XL45	MTH40	MTH45	MTH45S	NOTE
1	063777	PIVOT ASSY / SUPPORT		1	1	1	
NS	063855	SPACER SS 16GA / BETWEN GEAR BOX & PIVOT		1	1	1	
NS	067526	SUPPORT PIVOT ALTERNATOR	1				RF
NS	067529	SUPPORT ALTERNATOR LOWER "BOSCH" 12V	1				RF
NS	067524	SUPPORT ALTERNATOR UPPER "BOSCH" 12V	1				RF
2	502559	SCREW CAP HEX M10-1.5x25 G8.8 ZP		3	3	3	
3	500257	WASHER LO SPT 10.2x18.1x2.2 ZP		3	3	3	
NS	502525	WASHER FL .484x.750x.031 NP		3	3	3	
4	500106	SCREW CAP HEX 1/2-20x6 G5 PT ZP		1	1	1	
5	571351	WASHER, 1/2" I.D. FLAT / REPLACED BY: 500958		2	2	2	
6	500718	NUT HEX STO 1/2-20 ZP		1	1	1	
7	562612	ALTERNATOR ASSY 24V/100 AMPS / PRESTOLITE		1	1	1	
7	562911	ALTERNATOR ASSY 12V/145 AMPS /LEECE-NEVILLE		1	1	1	R
7	563734	ALTERNATOR ASSY 12V/200AMPS / HD10E 200A 14V	1				RF
8	562926	PULLEY 3.3" O.D. / W/ "LEECE-NEVILLE"		1	1	1	
8	5001426	WASHER FL .875x1.375x.047 STL KEYWAY		1	1	1	
8	067065	PULLEY ALTERNATOR "BOSCH" / W/2V x 82.5MM OD	1				RF
NS	067208	PROTECTOR PULLEY PLASTIC BLACK	1				RF
9	500213	SCREW CAP HEX 1/2-13x1 G5 ZP		3	3	3	
10	500482	WASHER LO SPT .506x.873x.125 ZP		3	3	3	
11	063779	TENSIONER 154MM C/C Up to 3-8164		1	1	1	
11	065995	TENSIONER 254MM C/C From 4-8165		1	1	1	
11	067523	TENSIONER 77.3 MM C/C	1				RF
12	500214	SCREW CAP HEX 1/2-13x1 1/4 G5 ZP		1	1	1	
13	500968	NUT HEX STO 1/2-13 ZP		3	3	3	
14	452443	TENSIONER BRACKET / GEARBOX		1	1	1	RF
15	550186	KEY 1/4" X 1/4" X 1 1/4"		1	1	1	
15	550293	KEY 1/4" X 1/4" X 1 13/16"	1				RF
16	950230	CONE BUSHING 1 1/4 I.D X 2 1/8 O.D. X 3 5/16 Up to 4-4952 / REPLACED BY: 950387		1	1	1	
16	950387	CONE BUSHING 1 1/4 I.D X 2 1/8 O.D. X 3 5/16 From 4-4953		1	1	1	
16	950389	CONE BUSHING 1 1/4 I.D X 2 1/8 O.D. X 3 5/16	1				RF
17	500167	SCREW CAP HEX 1/4-20x1 1/4 G5 PT ZP		3	3	3	
NS	500473	WASHER LO SPT .262x.489x.062 ZP		3	3	3	
18	950211	PULLEY DRIVE 7.15 O.D. / SINGLE "V" Up to 4-4952 / REPLACED BY: 950386		1	1	1	
18	950386	PULLEY DRIVE 7.15 O.D. / SINGLE "V" From 4-4953		1	1	1	
18	950392	PULLEY DRIVE 7.25 O.D. / DOUBLE "V"	1				RF
19	506683	V-BELT / BX-31 9013-2031 Up to 3-8164		1	1	1	
19	5060058	V-BELT / BX-35 9013-2035 From 4-8165		1	1	1	
19	5060100	V-BELT / AX-32 9012-2032	1				RF
20	Y2-0520-00	**FAN DRIVE - INSTALLATION - SHORT**					
		R) FOR PRODUCT IMPROVEMENT ASK FOR KIT # 067513					
		KIT 12V-200AMPS "BOSCH"					
		RF) THIS PARTS ARE INCLUDE IN RETROFIT KIT #					
		067513					

From Y-7046 Up to 8-9339	DATE: 01/2014	PAGE: Y2-0610-52

ALTERNATOR MOUNTING / 12V & 24V - MTH / GEARBOX INSTAL

ITEM	PART	DESCRIPTION	XL45	MTH40	MTH45	MTH45S	NOTE
20	Y2-0520-01	**FAN DRIVE - INSTALLATION - SHORT**					
30	067513	KIT, RETROFIT 12V-200AMPS ALTERNATOR	1				
. NS	IS-07038	. SEE INSTRUCTION SHEET	1				
31	IS-07038	SEE INSTRUCTION SHEET	1				RF
		RF) THIS PARTS ARE INCLUDE IN RETROFIT KIT # 067513					

From Y-7046 Up to 8-9339	DATE: 01/2014	PAGE: Y2-0610-52

ALTERNATOR MOUNTING / 12V & 24V - MTH / GEARBOX INSTAL

ITEM	PART	DESCRIPTION	XL45	MTH40	MTH45	MTH45S	NOTE

From 6-8864 Up to 8-9339	DATE: 01/2014	PAGE: Y2-0610-54
ALTERNATOR MOUNTING / "BOSCH" - 24V/140A / GEARBOX INSTAL		

MTH-45 WITH SMALL A/C COMPRESSOR

INSTALLATION SEE PAGE Y2-2245-11

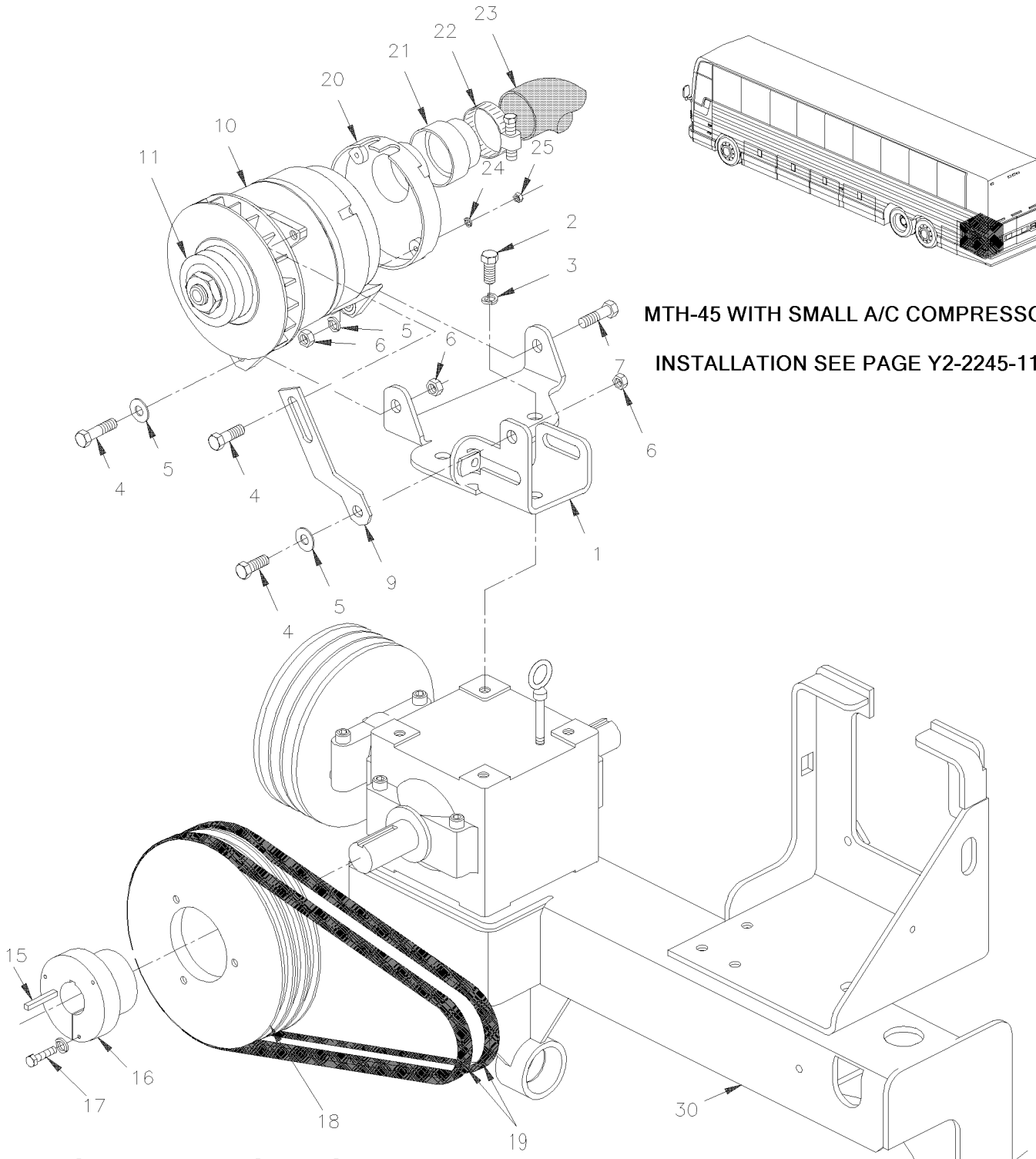

TYPICAL PULLEY ILLUSTRATION

From 6-8864 Up to 8-9339	DATE: 01/2014	PAGE: Y2-0610-54

ALTERNATOR MOUNTING / "BOSCH" - 24V/140A / GEARBOX INSTAL

ITEM	PART	DESCRIPTION	XL45	MTH40	MTH45	MTH45S	NOTE
1	066496	SUPPORT ALTERNATOR & A/C COMPRESSOR			1		S
NS	066184	SPACER 35MM X 25.4 O.D. x 12.7 I.D.			3		A
2	500217	SCREW CAP HEX 1/2-13x2 1/2 G5 CP			3		
3	500482	WASHER LO SPT .506x.873x.125 ZP			3		
4	502731	SCREW CAP HEX M12-1.75x40 G8.8 ZP			3		
5	500958	WASHER FL .531x1.062x.095 SS			4		
6	500811	NUT HEX STO M12-1.75 DP			4		
7	5001043	SCREW CAP HEX M12-1.75x50 G8.8 ZP			1		
9	066495	TENSIONNER			1		
10	Y2-0605-00	**ALTERNATOR 24V/140 AMPS / "BOSCH"**					
11	064543	PULLEY ALTERNATOR "BOSCH" / W/1Vx 88.9MM O.D.			1		
13	500968	NUT HEX STO 1/2-13 ZP			1		
15	550293	KEY 1/4" X 1/4" X 1 13/16"			1		
16	950398	CONE BUSHING 1 1/4 I.D X 2 1/8 O.D. X 3 5/16			1		
17	500167	SCREW CAP HEX 1/4-20x1 1/4 G5 PT ZP			3		
18	950397	PULLEY DRIVE 7.15 O.D. / TRIPLE "V"			1		
19	5060072	V-BELT / B-33 / SET OF 3 9003-2033			AR		
20	562851	AIR-INTAKE COVER			1		
21	064552	ADAPTOR			1		
22	504025	HOSE CLAMP / 2"5/16-3"1/4 SS / HS-44			1		
23	503674	HOSE FLEXIBLE / AIR DUCT 2 1/2" I.D. X 25`			AR		
NS	454149	SUPPORT HOSE			1		
NS	502622	SCREW CAP HEX M6-1.0x20 SS EMN			2		B
NS	5001608	WASHER BEL SPR 6.2x15.0x0.7 DP320			2		B
24	502570	WASHER LO SPT 6.1x11.8x1.6 SS			4		
25	502565	NUT HEX M6-1.0 SS			4		
30	Y2-0520-50	**FAN DRIVE - INSTALLATION - LONG**					
30	Y2-0520-51	**FAN DRIVE - INSTALLATION - LONG**					
31	Y2-2245-11	**A/C COMPRESSOR SMALL - INSTALLATION**					
		A) BETWEEN SUPPORT & GEARBOX					
		B) TO FIX HOSE SUPPORT					
		S) AS SHOWN					

From 4-8165 Up to 8-9339	DATE: 01/2014	PAGE: Y2-0610-55
ALTERNATOR MOUNTING / "DELCO" WITH DETROIT S-60		

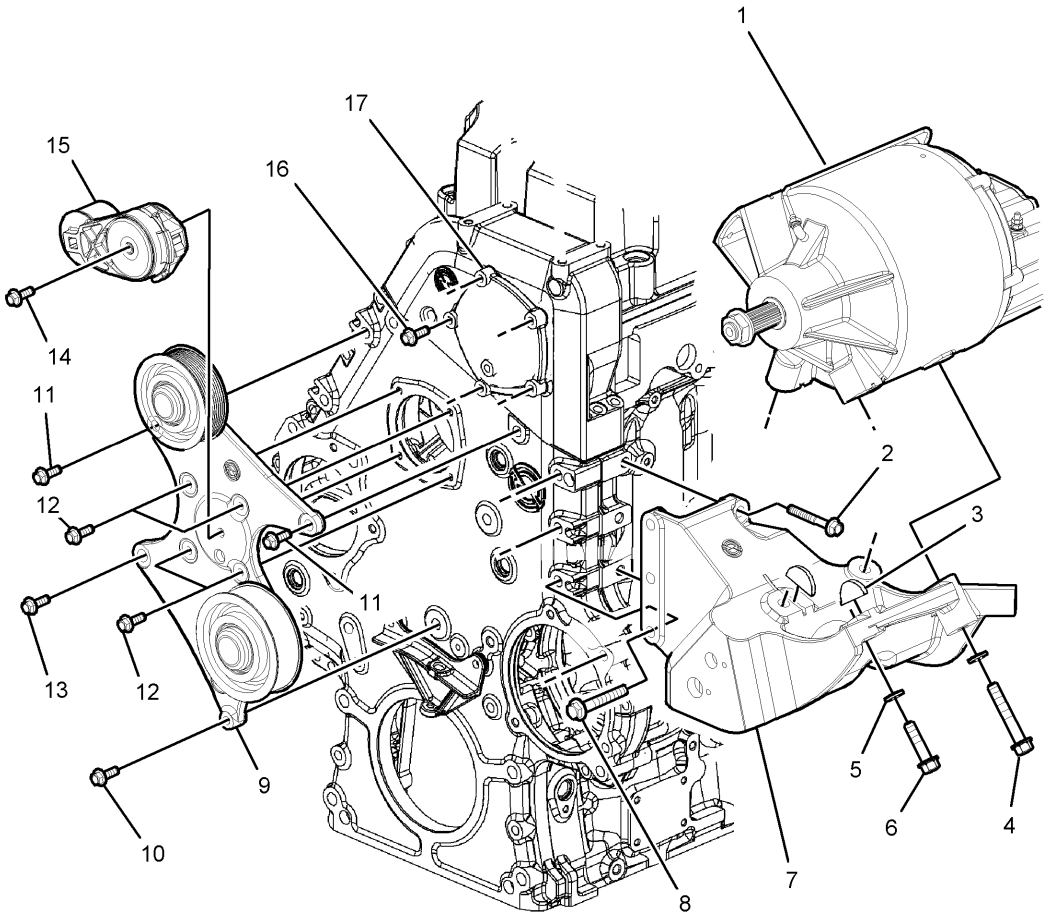

From 4-8165 Up to 8-9339	DATE: 01/2014	PAGE: Y2-0610-55
ALTERNATOR MOUNTING / "DELCO" WITH DETROIT S-60		

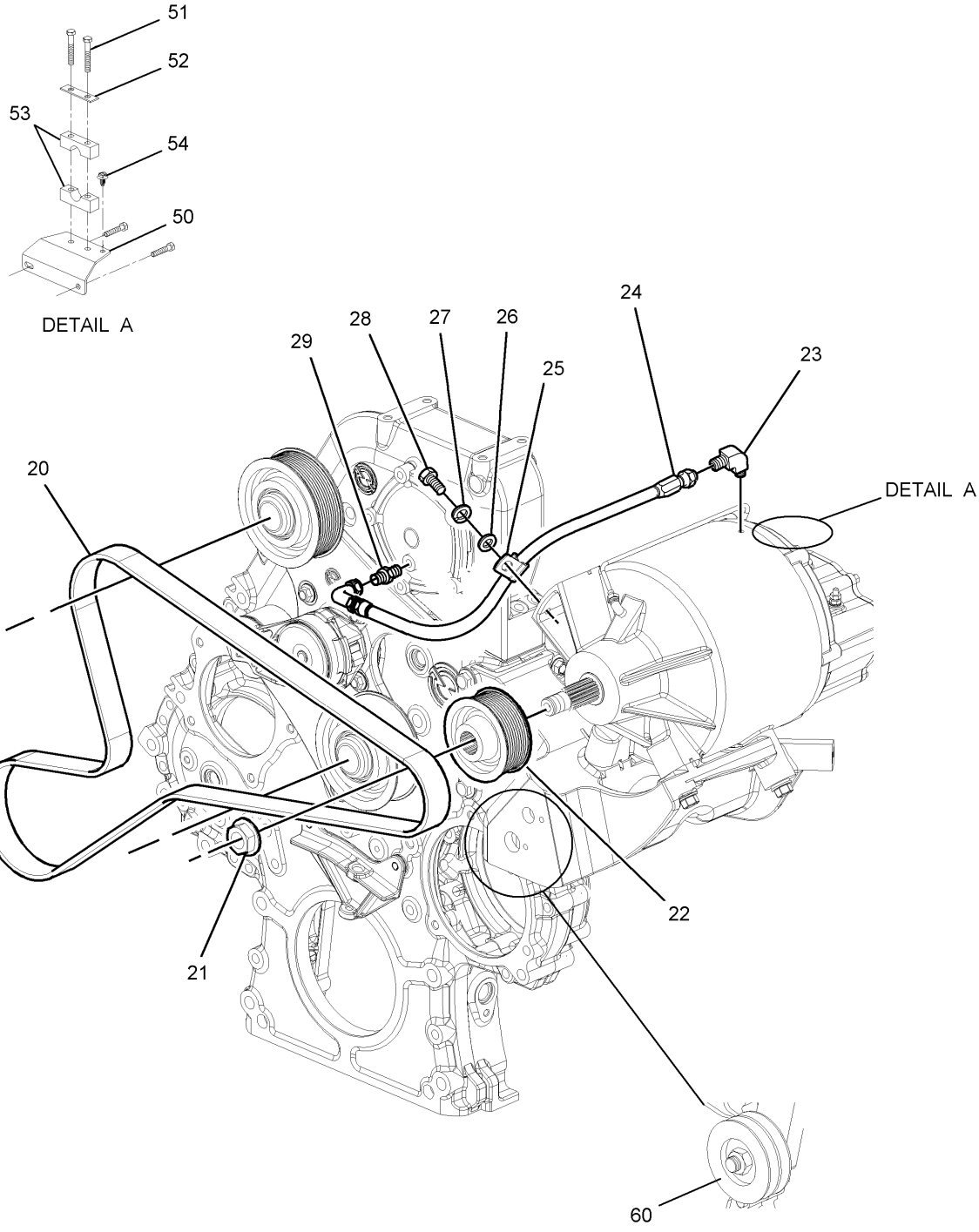

From 4-8165 Up to 8-9339	DATE: 01/2014	PAGE: Y2-0610-55
ALTERNATOR MOUNTING / "DELCO" WITH DETROIT S-60		

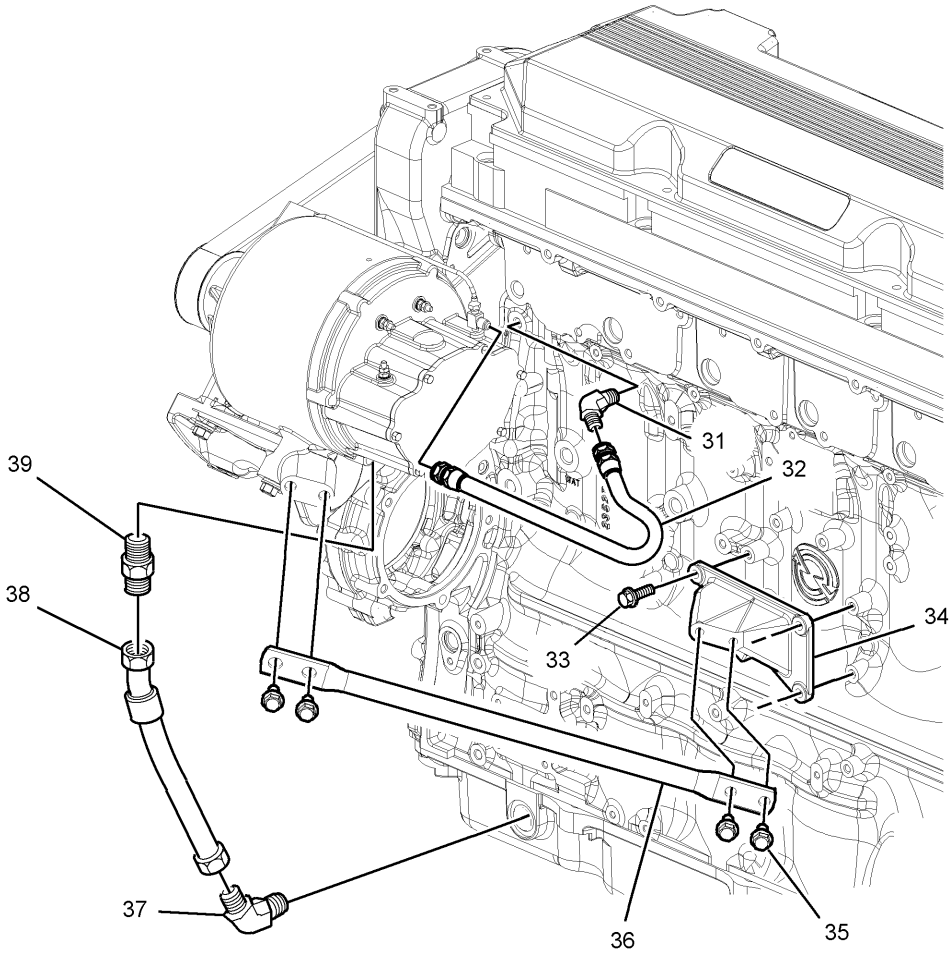

From 4-8165 Up to 8-9339	DATE: 01/2014	PAGE: Y2-0610-55

ALTERNATOR MOUNTING / "DELCO" WITH DETROIT S-60

ITEM	PART	DESCRIPTION	XL45	MTH40	MTH45	MTH45S	NOTE
1	Y2-0605-51	**ALTERNATOR 24V/270 AMPS / "DELCO" #562235**					
1	Y2-0605-52	**ALTERNATOR 12V/300 AMPS / "DELCO" #562355**					
2	23509520	SCREW CAP HEXF M12-1.75x47		2	2	2	
3	00120502	KEY, WOODRUFF 3/16" X 7/8"		2	2	2	
4	179893	SCREW CAP HEX 1/2-13x3.00		1	1	1	
5	5132715	WASHER		4	4	4	
6	0455001	SCREW CAP HEX 1/2-13x2 G8 ZP		3	3	3	
7	23530336	SUPPORT		1	1	1	
8	23528406	SCREW CAP HEXF M12-1.75x80 G10.9		3	3	3	
9	23530231	PULLEY ASSY FORMER / REPLACED BY: 23534290		1	1	1	
9	23534290	PULLEY ASSY CURRENT		1	1	1	
10	23528697	SCREW CAP HEXF M12-1.75x60 G10.9		1	1	1	
11	23519770	SCREW CAP HEXF M12-1.75x75 G10.9		2	2	2	
12	5249900304	SCREW CAP HEXF M12-1.75x75 G10.9		4	4	4	
13	23528696	SCREW CAP HEX M12-1.50x100		1	1	1	
14	11503669	SCREW CAP HEX M10-1.50x80 G10.9		1	1	1	
15	012329	AUTOMATIC TENSIONER ASSY		1	1	1	
16	11504822	SCREW CAP HEXF M9-1.25x30 G10.9		5	5	5	
17	23530576	COVER		1	1	1	
20	5060056	MULTI V-BELT / 10 RIB 78 3/4" (2000) 23530282		1	1	1	
21	562457	NUT, DRIVE END		1	1	1	
22	510926	PULLEY ALTERNATOR 10 RIB		1	1	1	
23	8924998	ELBOW 1/4 NPT X 3/8 TUBE		1	1	1	
24	HAHU0185	HOSE		1	1	1	
25	23528937	CLIP		1	1	1	
26	500985	WASHER FL .343x.875x.125 ZP		1	1	1	
27	500480	WASHER LO SPT .443x.779x.109 ZP		1	1	1	
28	500305	SCREW CAP HEX 3/8-16x7/8 G5 ZP		1	1	1	
29	8929833	CONNECTOR 1/4 NPT X 1/4 TUBE		1	1	1	
31	23523489	ELBOW 1/4 NPT X 3/8 TUBE		1	1	1	
32	FKHH0182	HOSE ASSY #5 X 20.50"		1	1	1	
34	23511744	SUPPORT		1	1	1	
35	11509528	SCREW CAP HEX M12-1.75x30 G10.9		4	4	4	
36	23530558	BRACE		1	1	1	
37	9402830	ELBOW 1" NPT X 1" TUBE		1	1	1	
38	BELM0194	HOSE ASSY /		1	1	1	
39	9402713	MALE CONNECTOR / JIC 37° FITTING / #16JIC-Mx1NPT-M STL		1	1	1	
50	065693	SUPPORT, DELCO ALT HARNESS		1	1	1	
51	500170	SCREW CAP HEX 1/4-20x2 G5 PT ZP		2	2	2	
52	504614	PLATE RETAINING / COLLAR		1	1	1	
53	504703	COLLAR 1/2" I.D. / TO FIX HOSE		1	1	1	
54	509815	TIE MOUNT / ATTACHMENT W/TREE MOUNT		2	2	2	
60	Y2-0120-50	**DRIVE PULLEY & BELTS - MTH**					

From Y-7046 Up to 8-9339	DATE: 01/2014	PAGE: Y2-0610-60

VOLTAGE REGULATOR - 24 VOLTS W/270 AMPS

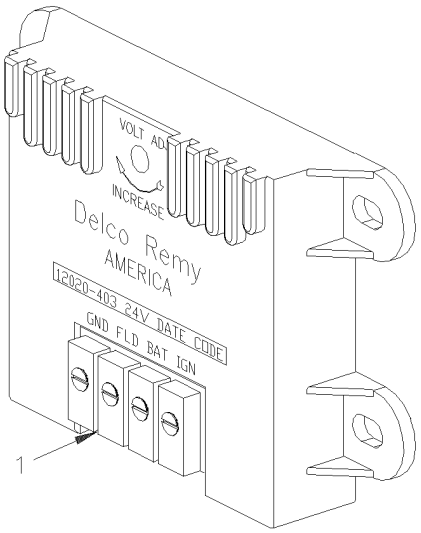

From Y-7046 Up to 8-9339	DATE: 01/2014	PAGE: Y2-0610-60

VOLTAGE REGULATOR - 24 VOLTS W/270 AMPS

ITEM	PART	DESCRIPTION	XL45	MTH40	MTH45	MTH45S	NOTE
1	562775	REGULATOR ASSY 24V / W/4 SCREWS Up to 3-8164 / REPLACED BY: 563439		1	1	1	
1	563439	REGULATOR ASSY 24V / W/5 SCREWS From 4-8165		1	1		
1	564017	NOISE SUPPRESSOR CONDENSATOR / STAMPED		1	1		
. NS	MI06-04	.		1	1		
1	562776	REGULATOR ASSY 12V		1	1	1	
1	064577	JUMPER, WIRE		1	1	1	

From Y-7046 Up to 6-8906	DATE: 01/2014	PAGE: Y2-0615-00

BATTERIES INSTALLATION - BUS

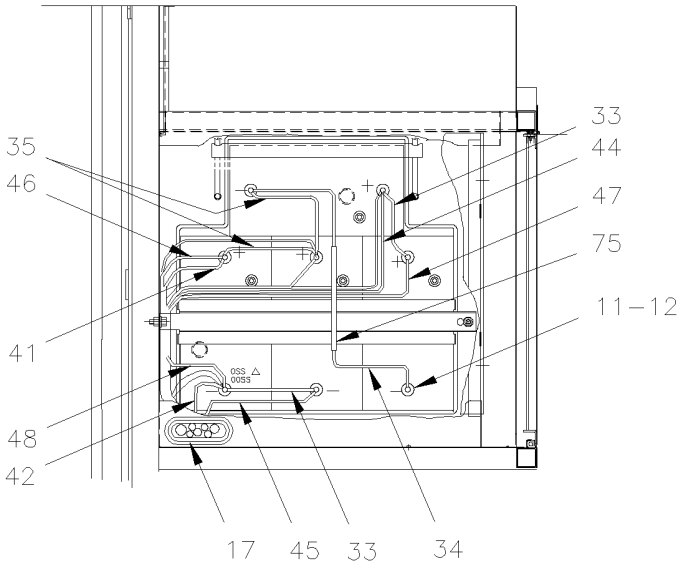

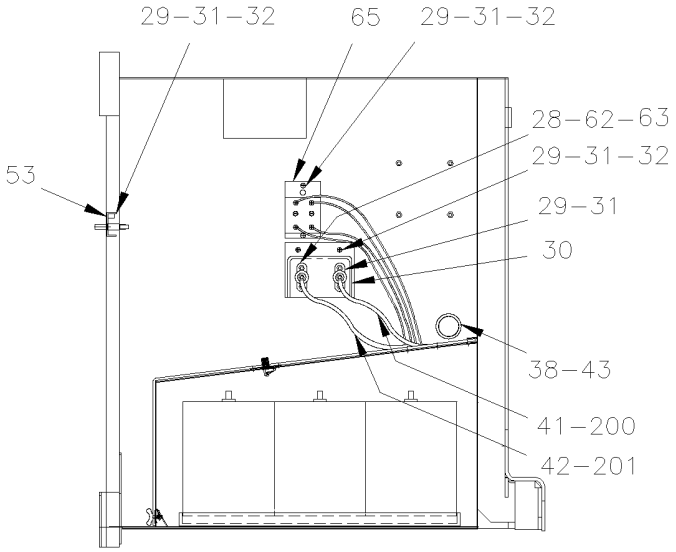

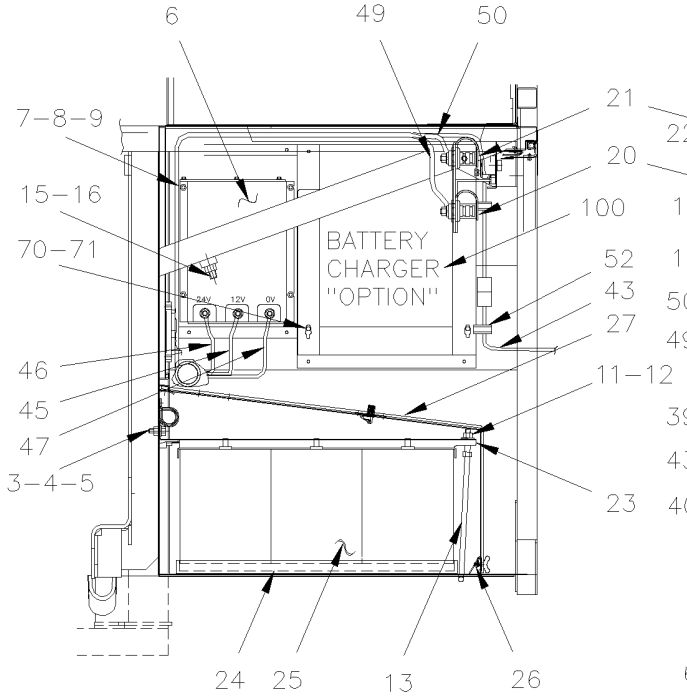

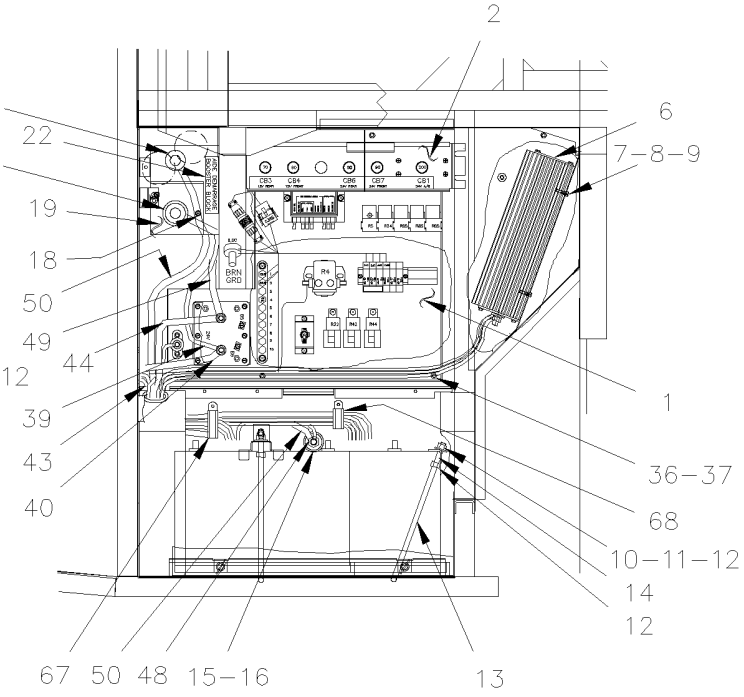

From Y-7046 Up to 6-8906	DATE: 01/2014	PAGE: Y2-0615-00

BATTERIES INSTALLATION - BUS

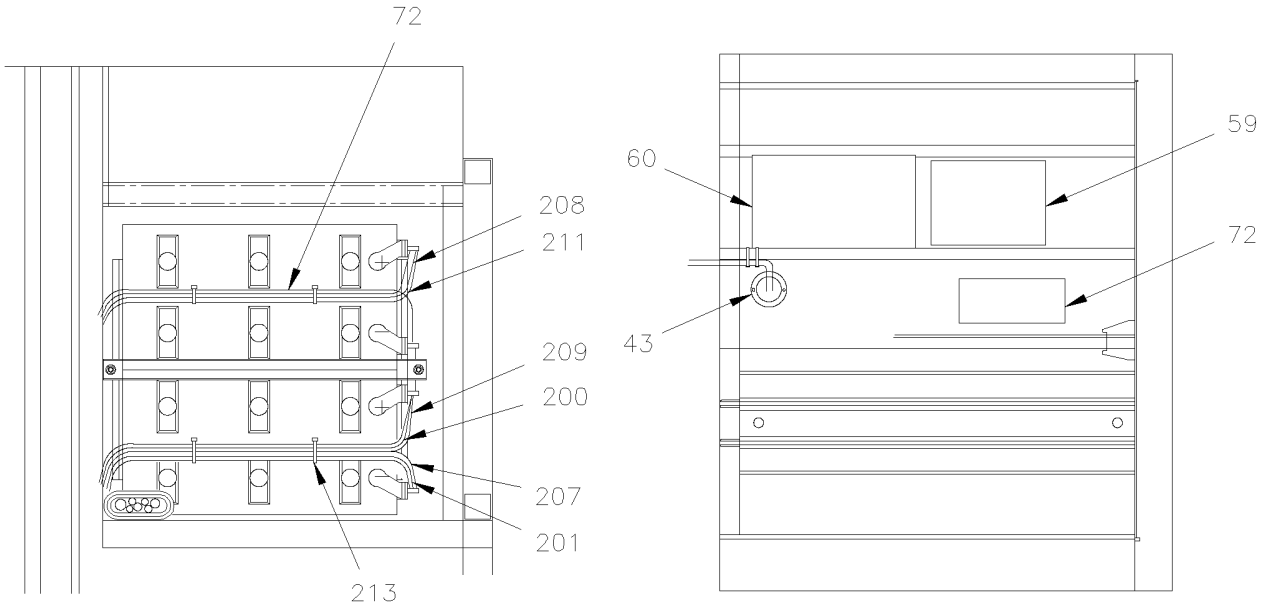

WITH 8D BATTERIES

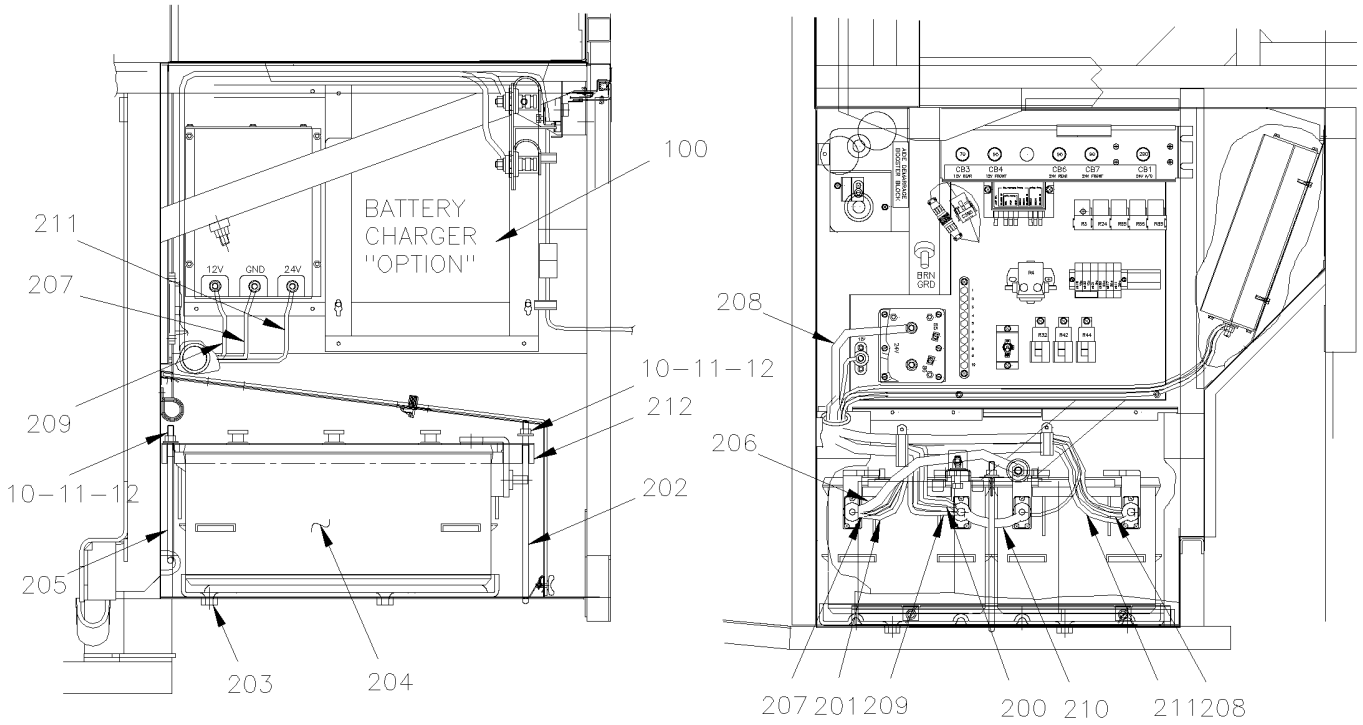

From Y-7046 Up to 6-8906	DATE: 01/2014	PAGE: Y2-0615-00

BATTERIES INSTALLATION - BUS

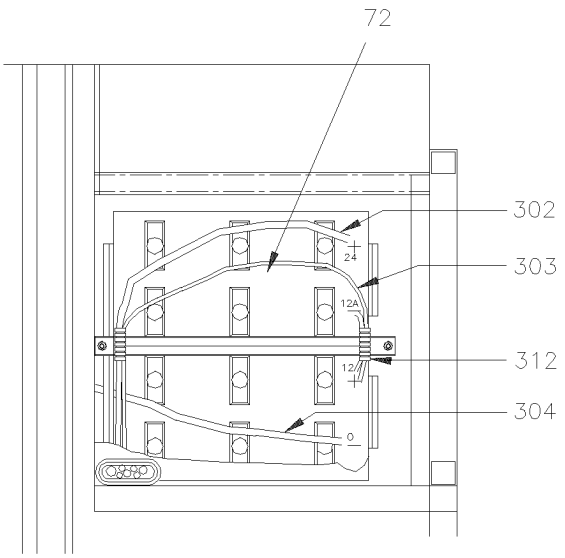

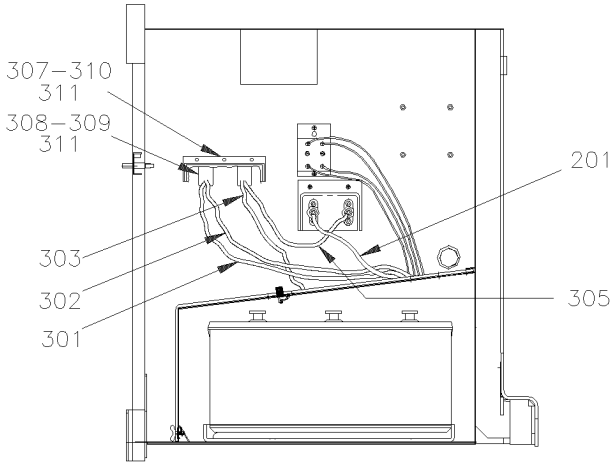

WITH 8D BATTERIES TOP POST

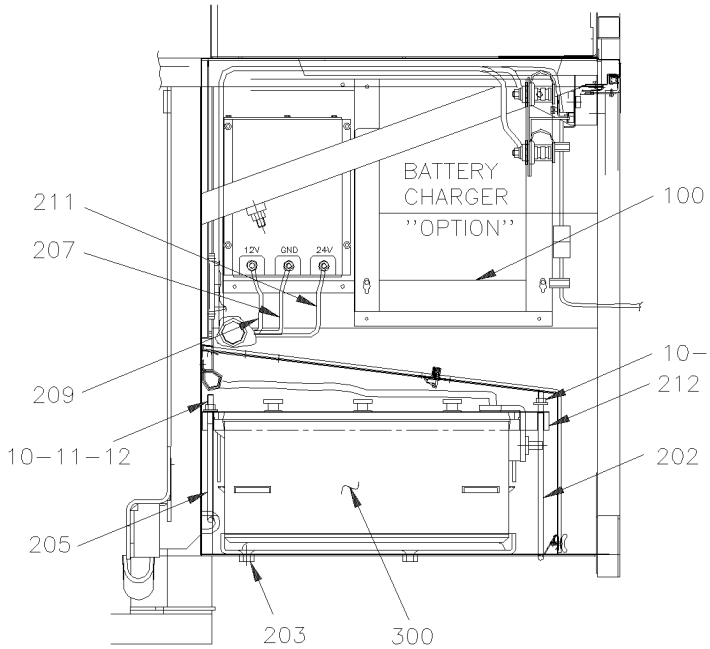

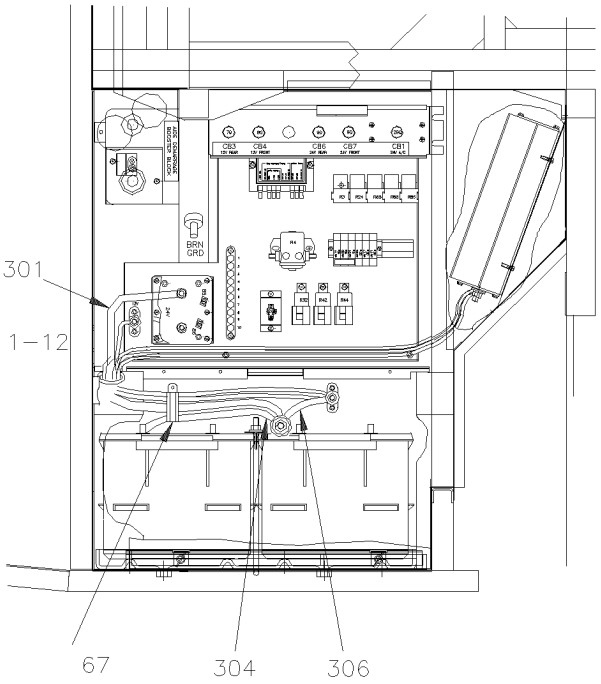

From Y-7046 Up to 6-8906	DATE: 01/2014	PAGE: Y2-0615-00

BATTERIES INSTALLATION - BUS

ITEM	PART	DESCRIPTION	XL45	MTH40	MTH45	MTH45S	NOTE
1	Y2-0615-10	**BATTERIES COMPARTMENT PANEL**					
2	Y2-0616-10	**BREAKER PANEL - BUS**					
3	502790	SCREW CAP HEX M8-1.25x20 G8.8 ZP	1				
4	500874	WASHER FL 8.4x17.0x1.6 ZP	1				
5	5001003	WASHER LO SPT 8.1x12.7x2.0 ZP	1				
6	562970	EQUALIZER "VANNER" 100AMPS Up to 1-7407 / REPLACED BY: 563334	1				
6	563130	EQUALIZER "VANNER" 100AMPS From 1-7408 Up to 3-8109 / REPLACED BY: 563334	1				
6	563334	EQUALIZER "VANNER" 100AMPS From 3-8110 / REPLACED BY: 563634	1				
7	500786	NUT HEX #10-24 ZP	4				
8	500964	WASHER FL .203x.500x.047 ZP	4				
9	500470	WASHER LO SPT .193x.334x.047 ZP	4				
10	500445	WASHER FL .437x1.000x.083 ZP	2				
11	500257	WASHER LO SPT 10.2x18.1x2.2 ZP	11				
12	500102	NUT HEX 3/8-16 SS	14				
13	381660	BATTERY SUP. HOOK 38-16x280MM SS	3				
14	381602	RACK BATTERIES	1				
15	500998	NUT HEX 1/2-13 BR	2				
16	500482	WASHER LO SPT .506x.873x.125 ZP	2				
17	504606	GROMMET / 3.000x3.500x.062x.500x4.000	1				
18	504118	RIVET POP DOME OE 3/16x3/8 AL	2				
19	381210	SEPARATOR / FIBERGLASS RED	1				
20	561856	BOOSTER BLOCK, REMOTE / RED	1				
21	561857	BOOSTER BLOCK, REMOTE / BLACK	1				
22	062682	DECAL / "BOOSTER BLOCK" ENG & FRENCH	1				
23	381600	BATTERIES SUPPORT	1				
24	380671	TRAY, BATTERIES	1				
25	563030	BATTERY 12V/930 CCA / GR31	4				
26	214400	NUT SPR U 1/4-20 .064-.125 YC	2				
27	381970	COVER BATTERIES ASSY / W/2 LATCH Up to 1-7590	1				
. NS	381671	. COVER PANEL Up to 1-7590	1				
. NS	504203	. SPRING LATCH / KNURLED STEEL KNOB Up to 1-7590	2				
. NS	5001302	. SCREW TH SHR 1/4-20x3/4 SS Up to 1-7590	2				
. NS	504699	. RING RETAINER / EXT Up to 1-7590	2				
. NS	500411	. WASHER FL .260x.697x.050 SS Up to 1-7590	2				
. NS	504339	. RIVET POP DOME OE 1/8x3/8 SS Up to 1-7590	4				
. NS	160295	. DECAL / "IT FORBIDDEN TO STOCK ANYTING IN TH. Up to 1-7590	1				
27	381983	COVER BATTERIES ASSY / W/2 LATCH From 1-7591	1				
27	504203	. SPRING LATCH / KNURLED STEEL KNOB From 1-7591	2				
27	504717	. RIVET POP DOME OE 1/8x1/4 SS From 1-7591	4				
27	381982	. COVER PANEL From 1-7591	1				
27	506738	. TAPE RUB ADH1 CC POL 1/8" x 1" x 50' / GREY 2520 From 1-7591	AR				

From Y-7046 Up to 6-8906	DATE: 01/2014	PAGE: Y2-0615-00

BATTERIES INSTALLATION - BUS

ITEM	PART	DESCRIPTION	XL45	MTH40	MTH45	MTH45S	NOTE
27	160295	. DECAL / "IT FORBIDDEN TO STOCK ANYTING IN TH. ENG & FRENCH From 1-7591	1				
27	161191	DECAL / "IT FORBIDDEN TO STOCK ANYTING IN TH. ENG & SPANISH	1				
28	560422	BLOCK, TERMINAL / 1 STUD 3/8-16 / BLACK	2				
29	502698	SCREW MA PAN PH M4-0.7x16 SS EMN	8				
30	381223	COVER PROTECTOR	1				
31	502636	WASHER LO SPT 4.1x7.6x0.9 ZP	8				
32	500438	WASHER FL .187x.437x.050 ZP	4				
33	061180	CABLE ASSY / <> B - TO B -	2				
34	061036	CABLE ASSY / <> B - TO B -	1				
35	062371	CABLE ASSY / <> B + TO B +	2				
36	502565	NUT HEX M6-1.0 SS	4				
37	502564	WASHER LO SPT 6.1x11.8x1.6 ZP	4				
38	504059	GROMMET / 1.250x1.500x.094x.375x1.875	1				
39	064042	CABLE NO: 24E ASSY	1				
40	063999	CABLE NO: 101 ASSY Up to 3-8128	1				
40	065914	CABLE NO: 101 ASSY From 3-8129	1				
41	063911	CABLE ASSY / #12	1				
42	064044	CABLE ASSY / #00A	1				
NS	680532	SEALANT SIKA #221 / GREY / 310ml CARTRIDGE	1				
43	562967	BATTERY CHARGER 24V	1				
44	Call Order Desk	CABLE 24 ASSY	1				P
45	063588	CABLE ASSY / #0VA Up to 3-8146 / REPLACED BY: 065819	1				
45	065819	CABLE ASSY / #0VA From 3-8147	1				
46	063636	CABLE ASSY / #12VA Up to 3-8146 / REPLACED BY: 065825	1				
46	065825	WIRING HARNESS From 3-8147	1				
47	064046	CABLE ASSY / #24VA Up to 3-8146 / REPLACED BY: 065826	1				
47	065826	CABLE NO: 24VA ASSY From 3-8147	1				
48	063592	CABLE ASSY / <> B - TO GROUND	1				
49	063595	CABLE ASSY / #24 TO BOOST BLOCK	1				
50	064047	CABLE ASSY / #0 BATTERY BOOSTER BLOCK	1				
52	952631	CLAMP / 3/4" I.D. / REPLACED BY: 977742	2				
53	Y2-0665-10	**SWITCHES, LIGHTS, AJAR - UNDER FLOOR**					
NS	064052	CABLE BATTERIES COMPARTMENT LIGHT	1				
59	065308	DECAL BATTERIE DELCO	1				
59	065309	DECAL BATTERIES 8D	1				
60	065374	DECAL BATTERIES COMPARTMENT	1				
60	065185	DECAL BATTERIES COMPARTMENT	1				
62	500379	NUT HEX 3/8-16 BR	2				
63	500478	WASHER LO SPT .380x.683x.094 ZP	2				
65	381758	BASE, BREAKER	1				
65	870690	BREAKER 30AMPS / 24V /	2				
		P) CALL ORDER DESK FOR SPECIFIC APPLICATION					
		(V.I.N.)					

From Y-7046 Up to 6-8906	DATE: 01/2014	PAGE: Y2-0615-00

BATTERIES INSTALLATION - BUS

ITEM	PART	DESCRIPTION	XL45	MTH40	MTH45	MTH45S	NOTE
67	504458	CLAMP / 1 5/8" I.D.	1				
68	952635	CLAMP / 1" I.D.	1				
70	502565	NUT HEX M6-1.0 SS	4				
71	502570	WASHER LO SPT 6.1x11.8x1.6 SS	4				
72	061325	DECAL "CAUTION" ALWAYS FIRST....	1				
72	061325	DECAL "CAUTION" ALWAYS FIRST....	1				
75	562053	CONVOLUTED TUBING / 1.000" / UNSLIT / BLACK	AR				
100	Y2-0670-10	**BATTERIES CHARGER - INSTALLATION**					
200	063909	CABLE ASSY / #12	1				
201	063908	CABLE ASSY / #00A	1				
202	381660	BATTERY SUP. HOOK 38-16x280MM SS	1				
203	381670	TRAY, BATTERIES 8D	1				
204	562434	BATTERY 12V/8D / W/SIDE POSTS / WET / REPLACED BY: K562434	2				
NS	563065	BATTERY KIT, SIDE POSTS / FOR 8D BATTERIES	AR				
205	381513	J-HOOK / 209.55MM 3/8-16 SS	1				
206	064255	CABLE ASSY / <> B - TO GROUND	1				
207	063897	CABLE ASSY / #0VA Up to 3-8146 / REPLACED BY: 065821	1				
207	065821	CABLE ASSY / #0VA From 3-8147	1				
208	064256	CABLE ASSY / #24 <> RELAY BATTERY & BATTERY	1				
209	063898	CABLE ASSY / #12VA Up to 3-8146 / REPLACED BY: 065822	1				
209	065822	CABLE ASSY / #12VA From 3-8147	1				
210	063903	CABLE ASSY / <> B + TO B -	1				
211	064257	CABLE NO: 24VA ASSY Up to 3-8146 / REPLACED BY: 065824	1				
211	065824	CABLE NO: 24VA ASSY From 3-8147	1				
212	381669	RACK BATTERIES	1				
213	504637	CABLE TIE / 3/16" x 13"	4				
300	562665	BATTERY 12V/8D / W/TOP POSTS / WET Up to 1-7503 / REPLACED BY: 563031	2				
300	562628	BATTERY 12V/8D / W/TOP POSTS / GEL	2				
300	563031	BATTERY 12V/8D / W/TOP POSTS	1				
301	065234	CABLE #24 ASSY	1				
302	064376	CABLE ASSY / #24V	1				
303	064380	CABLE ASSY / #12V	1				
304	065184	CABLE #0 ASSY	1				
305	065434	CABLE 12VOLT ASSY	1				
306	065435	CABLE #0 ASSY	1				
307	381780	PROTECTOR BOUNDS	1				
308	500658	SCREW TC PAN PH #10-24x3/4 ZP	10				
309	560177	BLOCK, TERMINAL / 1 STUD 1/2-13 / BLACK	2				
310	500964	WASHER FL .203x.500x.047 ZP	3				
311	500470	WASHER LO SPT .193x.334x.047 ZP	15				
312	561683	CONVOLUTED TUBING / .500" / SLIT / BL.&GR.	AR				

From Y-7046 Up to 6-8906	DATE: 01/2014	PAGE: Y2-0615-00

BATTERIES INSTALLATION - BUS

ITEM	PART	DESCRIPTION	XL45	MTH40	MTH45	MTH45S	NOTE
NS	065462	CABLE ASSY / 110V BATTERIES WARMER INSTALL	1				A
NS	562501	BATTERY WARMER 160 WATTS	2				A
NS	065445	DECAL / BATTERY HEATING & WARMER 164MM x 30MM	1				A
		A) USE WITH BATTERY WARMER 110V.					

From Y-7046 Up to 6-8906	DATE: 01/2014	PAGE: Y2-0615-00

BATTERIES INSTALLATION - BUS

ITEM	PART	DESCRIPTION	XL45	MTH400	MTH445	MTH445S	NOTE

From Y-7046 Up to 6-8906	DATE: 01/2014	PAGE: Y2-0615-10

BATTERIES COMPARTMENT PANEL

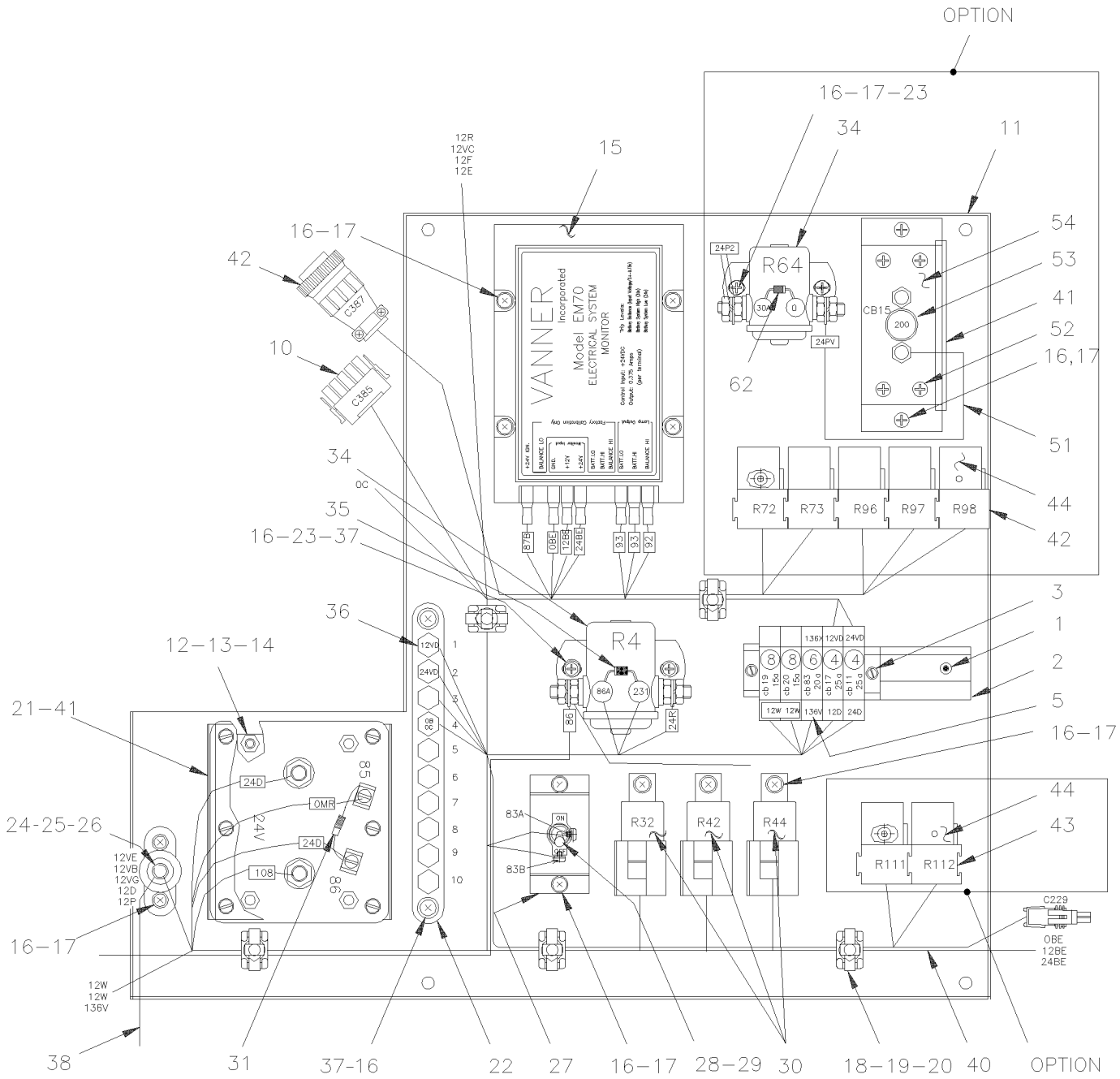

From Y-7046 Up to 6-8906	DATE: 01/2014	PAGE: Y2-0615-10

BATTERIES COMPARTMENT PANEL

ITEM	PART	DESCRIPTION	XL45	MTH40	MTH45	MTH45S	NOTE
1	504006	RIVET POP CK OE 1/8x5/16 AL	2				
2	380905	RAIL SUPPORT / 150MM	1				
3	561729	STOPPER	2				
4	561795	BREAKER 25AMPS / 24V /	2				
5	381813	BUS BAR / W/2 HOLES 25MM	1				
6	381814	BUS BAR / W/3 HOLES 38MM	1				
7	561790	BREAKER 6AMPS / 24V /	1				
8	561793	BREAKER 15AMPS / 24V /	2				
10	065116	WIRING HARNESS, BATTERIES COMPARTMENT ACCES Up to Y-7310	1				
10	065345	WIRING HARNESS, BATTERIES COMPARTMENT ACCES From Y-7311 Up to 1-7479	1				
10	065420	WIRING HARNESS, BATTERIES COMPARTMENT ACCES From 1-7480	1				
11	381834	BATTERIES COMPARTMENT BOARD Up to Y-7310	1				
11	381966	BATTERIES COMPARTMENT BOARD From Y-7311 Up to Y-7376 / REPLACED BY: 381976	1				
11	381976	BATTERIES COMPARTMENT BOARD From Y-7311 Up to Y-7376	1				
12	502565	NUT HEX M6-1.0 SS	8				
13	502573	WASHER FL 6.4x12.5x1.6 SS	8				
14	502570	WASHER LO SPT 6.1x11.8x1.6 SS	8				
15	563032	MONITOR / BATTERY EQUALIZER	1				
16	500654	SCREW TC BDG PH #8-32x1/2 ZP	18				
17	500022	WASHER LO INT .168x.340x.023 ZP	18				
18	504013	TIE MOUNT / 1/4" X 1/4" I.D.	5				
19	504637	CABLE TIE / 3/16" x 13"	5				
20	504114	RIVET POP DOME OE 3/16x1/4 AL	5				
21	562364	RELAY 24V S.P.S.T. / 300 AMPS N.O. / / BATTERY DISCONECT	1				
22	562173	JUNCTION BLOCK W/10 STUDS	1				
23	500438	WASHER FL .187x.437x.050 ZP	4				
24	560422	BLOCK, TERMINAL / 1 STUD 3/8-16 / BLACK	1				
25	500478	WASHER LO SPT .380x.683x.094 ZP	1				
26	500379	NUT HEX 3/8-16 BR	1				
27	381594	SUPPORT, SWITCH	1				
28	562394	PLATE, INDICATING (ON/OFF)	1				
29	560256	SWITCH / OFF-ON / S.P.S.T.	1				
30	561991	RELAY 24V S.P.S.T. / 70 AMPS N.O.	3				
31	561740	DIODE / 3AMPS	1				
34	561005	SWITCH MAGNETIC / 24V S.P.S.T. / 200AMPS N.O.	1				
35	060798	DIODE ASSY / REPLACED BY: 064792	1				
36	500765	NUT HEX #10-32 BR	6				
37	500438	WASHER FL .187x.437x.050 ZP	4				
38	064045	CABLE NO: 12P ASSY	1				
38	064258	CABLE NO: 12P ASSY / W/ 8D BATTERIES	1				
NS	064577	JUMPER, WIRE	1				
40	064048	WIRE NO:86 ASSY	1				

From Y-7046 Up to 6-8906	DATE: 01/2014	PAGE: Y2-0615-10

BATTERIES COMPARTMENT PANEL

ITEM	PART	DESCRIPTION	XL45	MTH40	MTH45	MTH45S	NOTE
41	506338	RUBBER CHANNEL / 1/16" x 1/4" INT "U" SHAPE / ROUND C.T.L.	AR				
NS	680066	GLUE / ADBOND 5014 ADH 23.6ML BOTTLE	AR				
42	065336	WIRING HARNESS, W.C.L. From Y-7311 Up to 5-8605	1				
42	066467	WIRING HARNESS, W.C.L. From 5-8606	1				
43	561707	RELAY 24V S.P.D.T. W/RESISTOR / From Y-7377 Up to 5-8577	5				
43	563332	RELAY 24V S.P.D.T. W/RESISTOR / "VOLVO" (20374662) From 5-8578	5				
44	065368	WIRING HARNESS, WATER HEATER	1				
51	065737	CABLE ASSY / BREAKER TO SWITCH	1				I
52	500510	SCREW MA BDG PH #10-32x3/4 SS EMN	4				I
53	560838	BREAKER 200AMPS / 24V /	1				I
54	382025	SUPPORT, BREAKER	1				I
55	060798	DIODE ASSY / REPLACED BY: 064792	1				
NS	060793	DECAL	1				I
NS	063595	CABLE ASSY / #24 TO BOOST BLOCK	1				I
NS	560815	RING TERMINAL #10 / 22-18 / INSULATED / AMP 42037-2	1				I
NS	562590	WIRE CABLE 18 / RED / TXL	AR				I
NS	562587	WIRE CABLE 18 / BLACK / TXL	AR				I
NS	065738	CABLE ASSY / 24 /SWITCH TO INVERTER	1				I
NS	065739	CABLE ASSY / 0A BATTERIES TO INVERTER	1				I
NS	Y2-2345-41	**POWERVERTER - 24/110 VOLTS - 5000 WATTS**					
		I) USE WITH INVERTER #562567 SEE PAGE Y2-2345-41					

From Y-7046 Up to 6-8906	DATE: 01/2014	PAGE: Y2-0615-10

BATTERIES COMPARTMENT PANEL

ITEM	PART	DESCRIPTION	XL45	MTH40	MTH45	MTH45S	NOTE

From Y-7046 Up to 7-9095	DATE: 01/2014	PAGE: Y2-0615-50

BATTERIES INSTALLATION - MTH40' & MTH-45' ENT

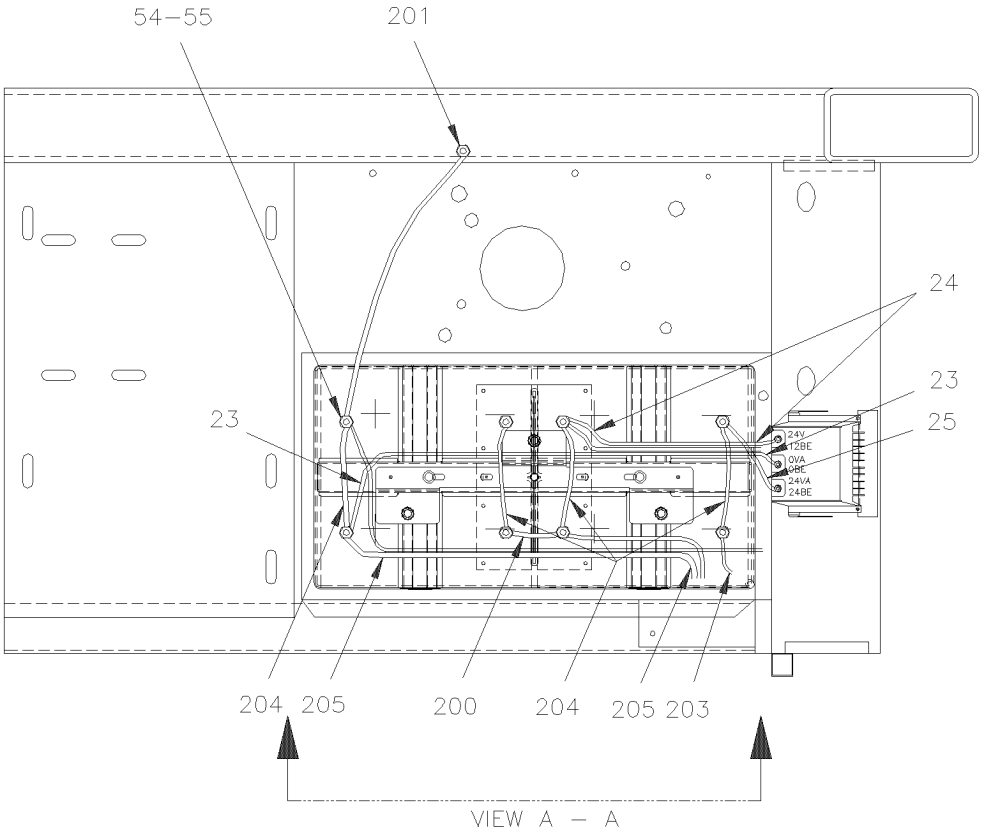

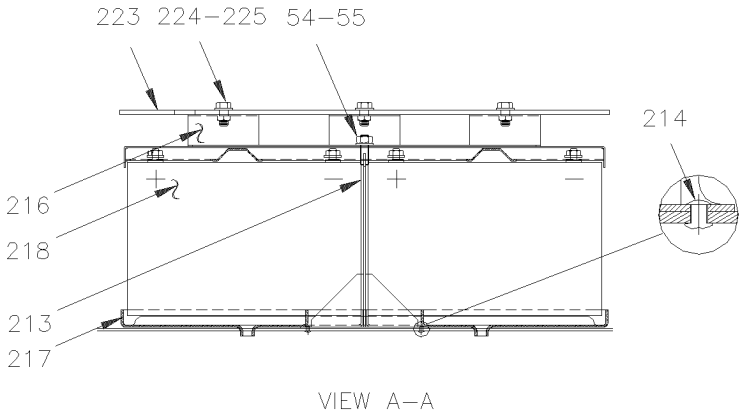

From Y-7046 Up to 7-9095	DATE: 01/2014	PAGE: Y2-0615-50

BATTERIES INSTALLATION - MTH40' & MTH-45' ENT

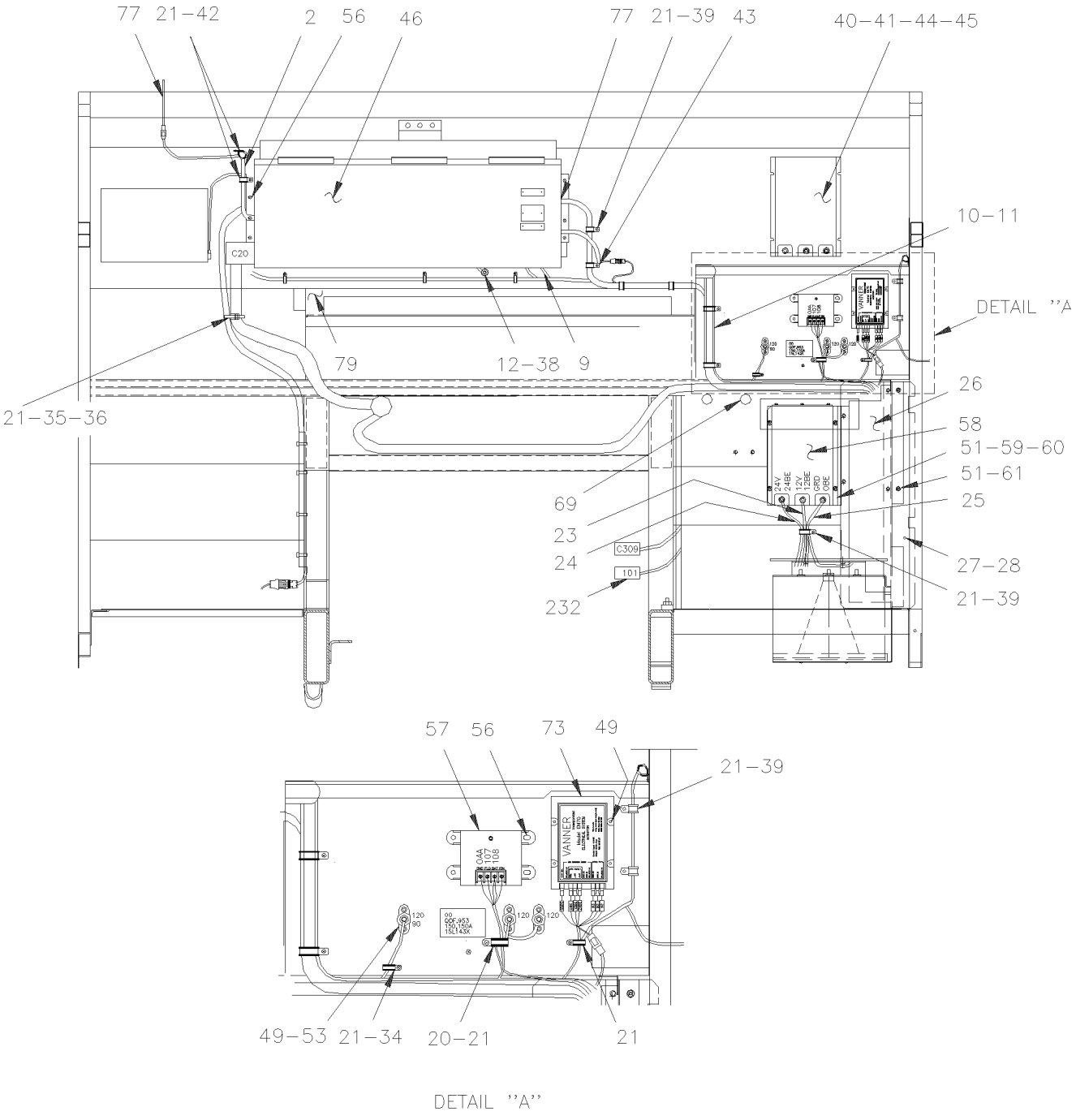

From Y-7046 Up to 7-9095	DATE: 01/2014	PAGE: Y2-0615-50

BATTERIES INSTALLATION - MTH40' & MTH-45' ENT

ITEM	PART	DESCRIPTION	XL45	MTH40	MTH45	MTH45S	NOTE
2	064793	WIRING HARNESS ENGINE COMPARTMENT Up to 2-7229		1		1	
2	065285	WIRING HARNESS ENGINE COMPARTMENT From 2-7230 Up to 2-7843		1		1	
2	065667	WIRING HARNESS ENGINE COMPARTMENT From 2-7844 Up to 3-8164		1		1	
2	065766	WIRING HARNESS ENGINE COMPARTMENT From 4-8165 Up to 5-8358		1		1	
2	065970	WIRING HARNESS ENGINE COMPARTMENT From 5-8359 Up to 5-8644		1		1	
2	066350	WIRING HARNESS ENGINE COMPARTMENT From 5-8645		1		1	
9	561916	NUT, SPEED		2		2	
10	064925	CABLE NO:12VR ASSY		1		1	
11	063416	CABLE NO:24VR ASSY		1		1	
12	062849	CABLE ASSY # 0-8		1		1	
20	952625	CLAMP / 3/8" I.D.		4		4	
21	500879	SCREW TP BDG PH #10x1 ZP		45		45	
23	065197	CABLE NO: OVA ASSY		1		1	
24	065198	CABLE NO: 12VA ASSY		1		1	
25	063666	CABLE ASSY / #24VA		1		1	
26	381944	BREAKER PROTECTOR		1		1	
27	502500	SCREW TC BDG PH #8-32x1/2 CJ		5		5	
28	500593	WASHER FL .200x.437x.036 BR		5		5	
34	952629	CLAMP / 5/8" I.D.		1		1	
35	980464	TIE CABLE BK 385 X 7.6		13		13	
36	504013	TIE MOUNT / 1/4" X 1/4" I.D.		9		9	
38	500968	NUT HEX STO 1/2-13 ZP		2		2	
39	952631	CLAMP / 3/4" I.D. / REPLACED BY: 977742		16		16	
40	562969	EQUALIZER "VANNER" 60AMPS Up to 1-7407		1		1	
40	563129	EQUALIZER "VANNER" 60AMPS From 1-7408 / REPLACED BY: 562969		1		1	
41	500642	SCREW TP BDG PH #10x3/4 ZP		4		4	
42	560484	CLAMP / 1" I.D. / REPLACED BY: 952635		3		3	
43	504637	CABLE TIE / 3/16" x 13"		20		20	
44	500470	WASHER LO SPT .193x.334x.047 ZP		4		4	
45	500964	WASHER FL .203x.500x.047 ZP		4		4	
46	Y2-0620-00	**REAR JUNCTION BOX ASSY**					
49	500641	SCREW TP BDG PH #8x3/4 ZP		26		26	
51	500473	WASHER LO SPT .262x.489x.062 ZP		6		6	
53	560422	BLOCK, TERMINAL / 1 STUD 3/8-16 / BLACK		3		3	
54	502616	WASHER LO SPT 10.2x18.1x2.2 SS		8		8	
55	500102	NUT HEX 3/8-16 SS		8		8	
56	500642	SCREW TP BDG PH #10x3/4 ZP		6		6	
57	562775	REGULATOR ASSY 24V / W/4 SCREWS Up to 3-8164 / REPLACED BY: 563439		1		1	
57	563439	REGULATOR ASSY 24V / W/5 SCREWS From 4-8165		1		1	
57	564017	NOISE SUPPRESSOR CONDENSATOR / STAMPED		1		1	
. NS	MI06-04	.		1		1	
58	562970	EQUALIZER "VANNER" 100AMPS Up to 1-7407 / REPLACED BY: 563334		1		1	
58	563130	EQUALIZER "VANNER" 100AMPS From 1-7408 Up to 3-8109 / REPLACED BY: 563334		1		1	
58	563334	EQUALIZER "VANNER" 100AMPS From 3-8110 / REPLACED BY: 563634		1		1	

From Y-7046 Up to 7-9095	DATE: 01/2014	PAGE: Y2-0615-50

BATTERIES INSTALLATION - MTH40' & MTH-45' ENT

ITEM	PART	DESCRIPTION	XL45	MTH40	MTH45	MTH45S	NOTE
59	500769	NUT HEX 1/4-20 ZP		4		4	
60	500441	WASHER FL .312x.734x.065 ZP		4		4	
61	500536	SCREW TP HEXW SLT #14x1 ZP		2		2	
69	562333	TIE MOUNT BAR / 5/8" X 8" (5 TIE HOLDER)		2		2	
73	563032	MONITOR / BATTERY EQUALIZER		1		1	
77	680025	CAULKING STRIP 3/16" O.D. X 14'		1		1	
79	065290	HEAT DETECTOR "THERMO-DISK"		2		2	
200	062371	CABLE ASSY / <> B + TO B +		1		1	
201	061329	CABLE ASSY / <> B - TO GRD		1		1	
203	064929	CABLE NO:24 ASSY		1		1	
204	061180	CABLE ASSY / <> B - TO B -		4		4	
205	063406	CABLE ASSY / <> B - TO BOOSTER BLOCK		1		1	
213	381558	SEPARATOR ASSY		1		1	
214	504379	RIVET POP DOME OE 3/16x1/4 SS		7		7	
216	381553	SUPPORT BATTERIES		1		1	
217	381560	TRAY, BATTERIES		1		1	
218	563030	BATTERY 12V/930 CCA / GR31		4		4	
223	381945	BATTERIES PROTECTOR		1		1	
224	502655	SCREW CAP HEX M10-1.5x25 SS EMN		3		3	
225	500270	WASHER FL .406x1.000x.063 SS		3		3	
232	063894	CABLE NO: 101 ASSY Up to 3-8120		1		1	
232	065913	CABLE #101 ASSY From 3-8121		1		1	

From 7-9096 Up to 8-9339	DATE: 01/2014	PAGE: Y2-0615-51

BATTERIES INSTALLATION - MTH WITH / MUX

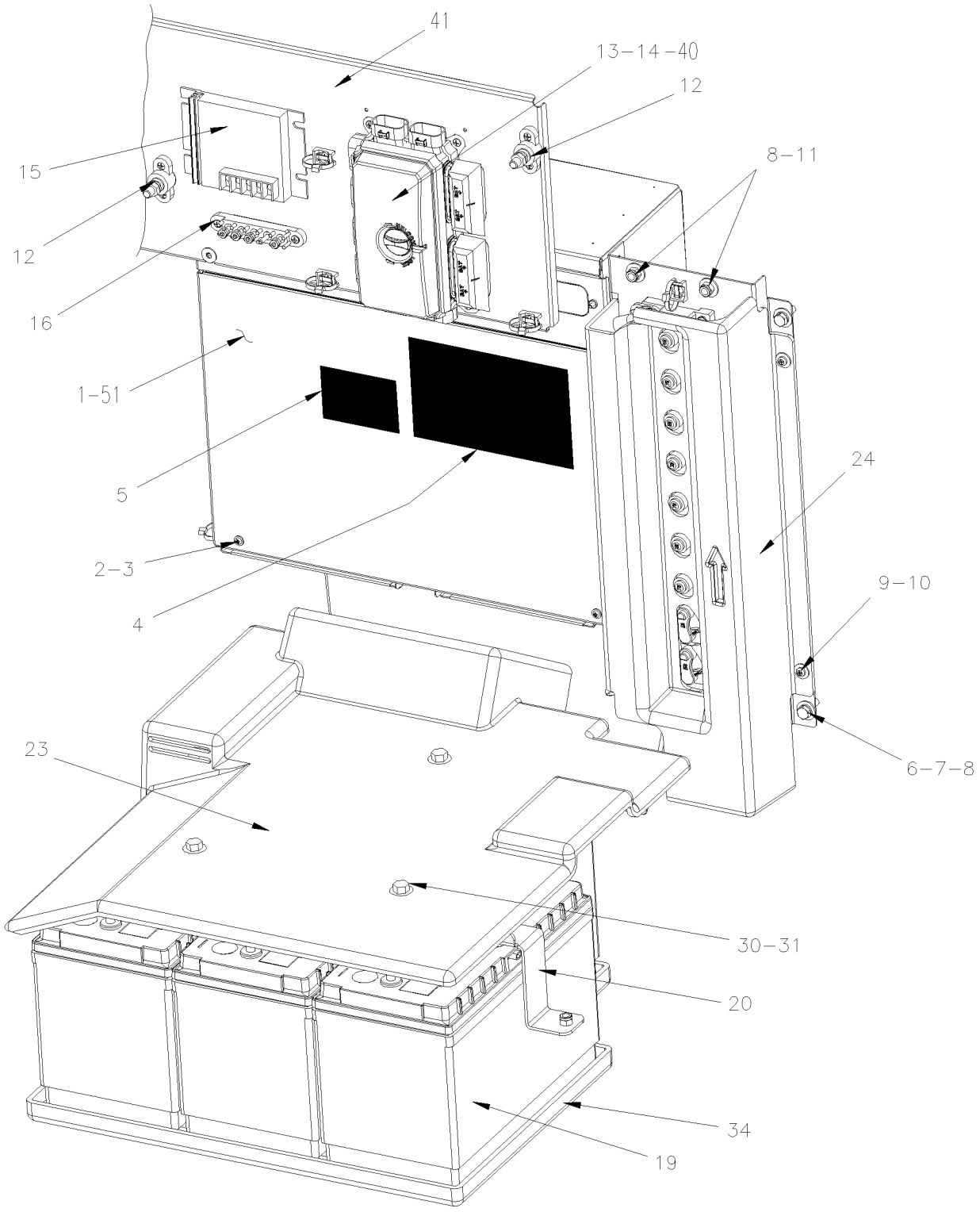

From 7-9096 Up to 8-9339	DATE: 01/2014	PAGE: Y2-0615-51

BATTERIES INSTALLATION - MTH WITH / MUX

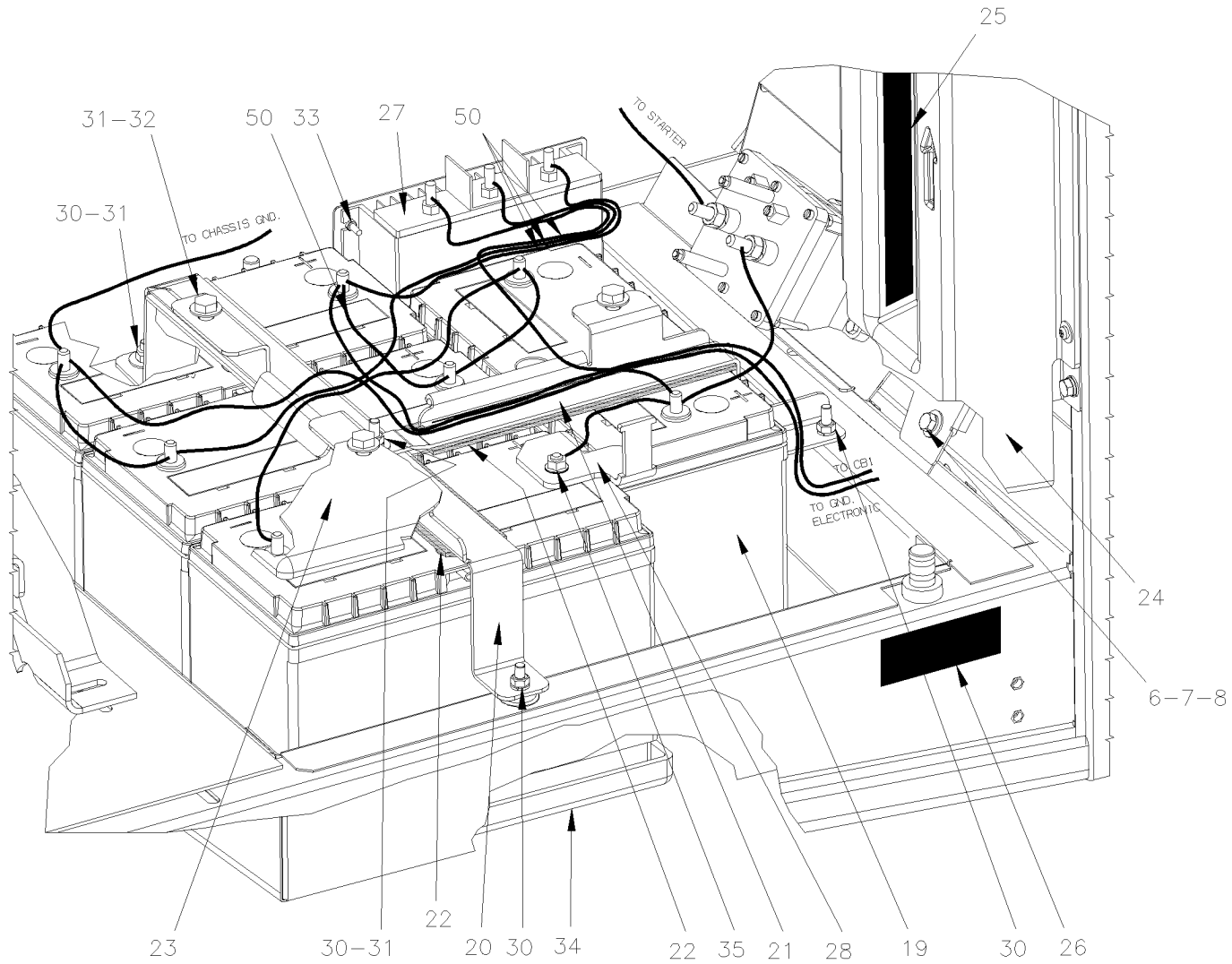

From 7-9096 Up to 8-9339	DATE: 01/2014	PAGE: Y2-0615-51

BATTERIES INSTALLATION - MTH WITH / MUX

ITEM	PART	DESCRIPTION	XL45	MTH40	MTH45	MTH45S	NOTE
1	382226	COVER REAR JCT BOX			1	1	
2	502698	SCREW MA PAN PH M4-0.7x16 SS EMN			3	3	
3	504357	WASHER FL .187x.437x.050 SS			3	3	
4	066913	DECAL / REAR JCT BOX COMPONENTS CONN,			1	1	
5	066155	DECAL PIN OUT / JCT BOX W/MUX			1	1	
6	502780	SCREW CAP HEX M8-1.25x25 SS EMN			4	4	
7	5001161	WASHER LO SPT 8.1x14.8x2.0 SS-304			4	4	
8	5001448	WASHER FL .343x.875x.062 SS18-8			8	8	
9	502568	SCREW MA PAN PH M6-1.0x20 EMN			2	2	
10	500411	WASHER FL .260x.697x.050 SS			2	2	
11	966171	NUT HEX NYRT M8x1.25 SS			4	4	
12	560422	BLOCK, TERMINAL / 1 STUD 3/8-16 / BLACK			1	1	
13	067035	DECAL / VEC REAR			1	1	
14	563698	VEC DISTRIBUTION MODULE / REAR JCT BOX			1	1	
. NS	564104	. COVER / VEC BOX			1	1	
. NS	563269	. RELAY 24V S.P.D.T. W/RESISTOR / VJ28-95H24-S08			3	3	
. NS	563004	. FUSE / ATM 2 AMPS GREY			1	1	
. NS	563279	. FUSE / ATM 3 AMPS VIOLET			1	1	
. NS	563005	. FUSE / ATM 7.5 AMPS BROWN			1	1	
. NS	563283	. FUSE / ATM 10 AMPS RED			12	12	
. NS	563284	. FUSE / ATM 15 AMPS BLUE			11	11	
. NS	563282	. FUSE / ATM 20 AMPS YELLOW			9	9	
. NS	563153	. FUSE / ATM 25 AMPS NATURAL			6	6	
. NS	563165	. FUSE / ATM 30 AMPS GREEN			1	1	
. NS	564464	. MINI BREAKER 20 AMPS / SERIES 223			1	1	
. NS	563181	. CONNECTOR / SH 8C / YELLOW / BUSSMANN 32006-E21			1	1	
. NS	563182	. CONNECTOR / SH 8C / ORANGE / BUSSMANN 32006-G21			1	1	
. NS	563183	. CONNECTOR / SH 8C / RED / BUSSMANN 32006-F21			1	1	
. NS	563184	. CONNECTOR / SH 8C / GREEN / BUSSMANN 32006-C21			1	1	
. NS	563185	. CONNECTOR / SH 8C / BLACK / BUSSMANN 32006-A21			1	1	
. NS	563186	. CONNECTOR / SH 8C / GREY / BUSSMANN 32006-B21			1	1	
. NS	563187	. CONNECTOR / SH 8C / BROWN / BUSSMANN 32006-H21			1	1	
. NS	563448	. CONNECTOR / SH 8C / BLUE / BUSSMANN 32006-D21			1	1	
15	563439	REGULATOR ASSY 24V / W/5 SCREWS			1	1	
16	563218	JUNCTION BLOCK W/5 STUDS			1	1	
19	563030	BATTERY 12V/930 CCA / GR31			4	4	
20	382216	ATTACHMENT BATTERIES LONG			1	1	
21	382217	ATTACHMENT BATTERIES SHORT			1	1	
22	5060074	TAPE RUB ADH1 URE 3/8" X 2" X 30' / GREY 1820			AR	AR	
23	382192	COVER PROTECTOR BATTERIES			1	1	
24	382215	COVER PROTECTOR BREAKERS			1	1	
25	067024	DECAL / BREAKERS			1	1	
26	062682	DECAL / "BOOSTER BLOCK" ENG & FRENCH			1	1	
27	563334	EQUALIZER "VANNER" 100AMPS / REPLACED BY: 563634			1	1	

From 7-9096 Up to 8-9339	DATE: 01/2014	PAGE: Y2-0615-51

BATTERIES INSTALLATION - MTH WITH / MUX

ITEM	PART	DESCRIPTION	XL45	MTH40	MTH45	MTH45S	NOTE
28	382210	BOOSTER PLATE			1	1	
30	966171	NUT HEX NYRT M8x1.25 SS			4	4	
31	500270	WASHER FL .406x1.000x.063 SS			5	5	
32	502655	SCREW CAP HEX M10-1.5x25 SS EMN			3	3	
33	5001180	NUT HEX NYRT #10-24 SS			4	4	
34	380671	TRAY, BATTERIES			1	1	
35	5001522	NUT HEXF LO 3/8-16 SS			1	1	
40	066783	CABLE ASSY TO REAR "VEC"			1	1	
41	382366	PANEL MOUNTING			1	1	
50	Y2-0600-52	**WIRING HARNESS - MTH W/MUX DIAGRAM D-061080**					
51	Y2-0620-50	**REAR JUNCTION BOX ASSY - MTH WITH MUX (D380244)**					

From Y-7046 Up to 7-9095	DATE: 01/2014	PAGE: Y2-0615-60

BATTERIES INSTALLATION - MTH-45'

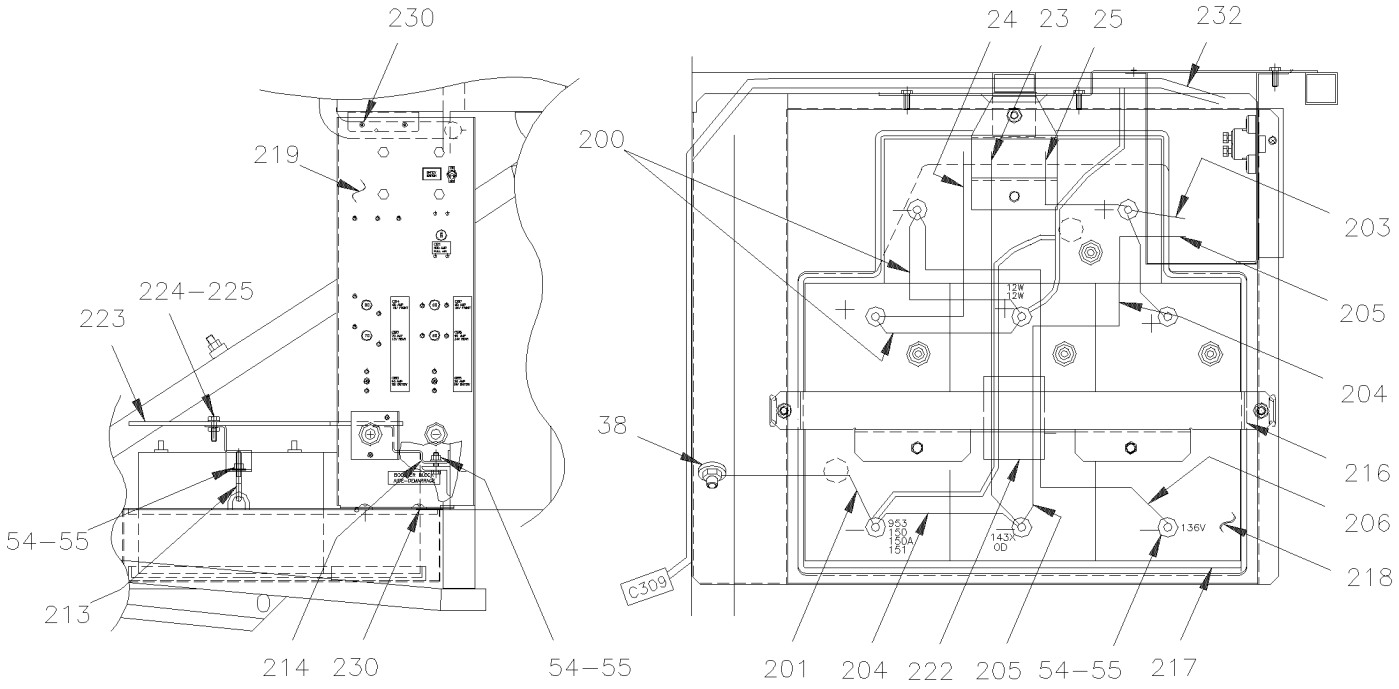

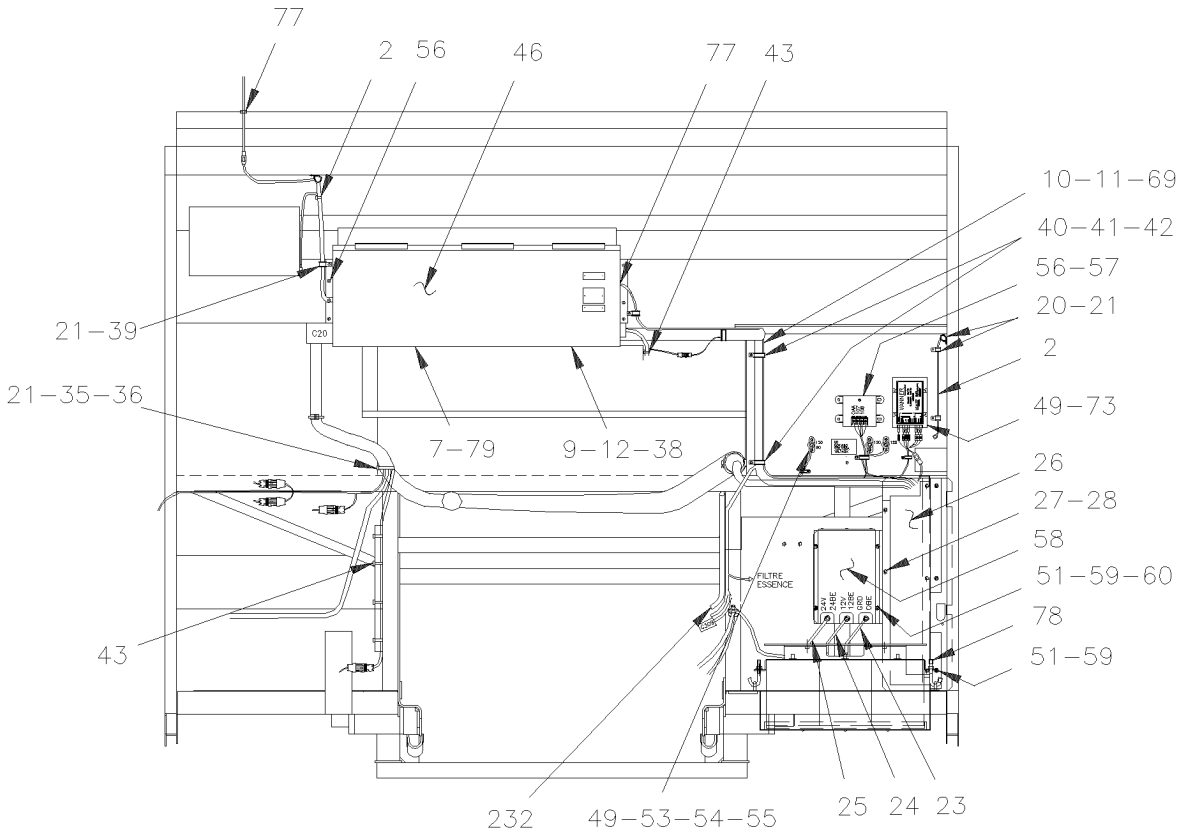

From Y-7046 Up to 7-9095	DATE: 01/2014	PAGE: Y2-0615-60

BATTERIES INSTALLATION - MTH-45'

ITEM	PART	DESCRIPTION	XL45	MTH40	MTH45	MTH45S	NOTE
2	064793	WIRING HARNESS ENGINE COMPARTMENT Up to 2-7229			1		
2	065285	WIRING HARNESS ENGINE COMPARTMENT From 2-7230 Up to 2-7843			1		
2	065667	WIRING HARNESS ENGINE COMPARTMENT From 2-7844 Up to 3-8164			1		
2	065766	WIRING HARNESS ENGINE COMPARTMENT From 4-8165 Up to 5-8358			1		
2	065970	WIRING HARNESS ENGINE COMPARTMENT From 5-8359 Up to 5-8644			1		
2	066350	WIRING HARNESS ENGINE COMPARTMENT From 5-8645			1		
7	5001204	SCREW TP FL PH #6x1 1/4 ZP			4		
9	561916	NUT, SPEED			2		
10	064925	CABLE NO:12VR ASSY			1		
11	063416	CABLE NO:24VR ASSY			1		
12	062849	CABLE ASSY # 0-8			1		
20	952625	CLAMP / 3/8" I.D.			13		
21	500879	SCREW TP BDG PH #10x1 ZP			45		
23	063411	CABLE ASSY / #0VA Up to 3-8146 / REPLACED BY: 065815			1		
23	065815	CABLE NO: 0VA ASSY From 3-8147			1		
24	063415	CABLE ASSY / #12VA Up to 3-8146 / REPLACED BY: 065817			1		
24	065817	CABLE NO:12VA ASSY From 3-8147			1		
25	063414	CABLE ASSY / #24VA Up to 3-8146 / REPLACED BY: 065816			1		
25	065816	CABLE NO:24VA ASSY From 3-8147			1		
26	381881	BREAKER PROTECTOR			1		
27	502500	SCREW TC BDG PH #8-32x1/2 CJ			5		
28	500593	WASHER FL .200x.437x.036 BR			5		
35	980464	TIE CABLE BK 385 X 7.6			13		
36	504013	TIE MOUNT / 1/4" X 1/4" I.D.			9		
38	500968	NUT HEX STO 1/2-13 ZP			2		
39	952631	CLAMP / 3/4" I.D. / REPLACED BY: 977742			7		
40	952629	CLAMP / 5/8" I.D.			5		
41	952627	CLAMP / 1/2" I.D.			4		
42	952635	CLAMP / 1" I.D.			7		
43	504637	CABLE TIE / 3/16" x 13"			20		
46	Y2-0620-00	**REAR JUNCTION BOX ASSY**					
49	500641	SCREW TP BDG PH #8x3/4 ZP			26		
51	500473	WASHER LO SPT .262x.489x.062 ZP			6		
53	560422	BLOCK, TERMINAL / 1 STUD 3/8-16 / BLACK			3		
54	502616	WASHER LO SPT 10.2x18.1x2.2 SS			8		
55	500102	NUT HEX 3/8-16 SS			8		
56	500642	SCREW TP BDG PH #10x3/4 ZP			6		
57	562775	REGULATOR ASSY 24V / W/4 SCREWS Up to 3-8164 / REPLACED BY: 563439			1		
57	563439	REGULATOR ASSY 24V / W/5 SCREWS From 4-8165			1		
57	564017	NOISE SUPPRESSOR CONDENSATOR / STAMPED			1		
. NS	MI06-04	.			1		
58	562970	EQUALIZER "VANNER" 100AMPS Up to 1-7407 / REPLACED BY: 563334			1		

From Y-7046 Up to 7-9095	DATE: 01/2014	PAGE: Y2-0615-60

BATTERIES INSTALLATION - MTH-45'

ITEM	PART	DESCRIPTION	XL45	MTH40	MTH45	MTH45S	NOTE
58	563130	EQUALIZER "VANNER" 100AMPS From 1-7408 Up to 3-8109 / REPLACED BY: 563334			1		
58	563334	EQUALIZER "VANNER" 100AMPS From 3-8110 / REPLACED BY: 563634			1		
59	500769	NUT HEX 1/4-20 ZP			4		
60	500441	WASHER FL .312x.734x.065 ZP			4		
69	562333	TIE MOUNT BAR / 5/8" X 8" (5 TIE HOLDER)			2		
73	563032	MONITOR / BATTERY EQUALIZER			1		
77	680025	CAULKING STRIP 3/16" O.D. X 14'			1		
78	504645	PROTECTOR CAP / BLACK / .313 I.D. x .500			2		
79	065290	HEAT DETECTOR "THERMO-DISK"			2		
200	062371	CABLE ASSY / <> B + TO B +			2		
201	063410	CABLE ASSY / <> B - TO GRD			1		
203	064929	CABLE NO:24 ASSY			1		
204	061180	CABLE ASSY / <> B - TO B -			2		
205	063406	CABLE ASSY / <> B - TO BOOSTER BLOCK			1		
206	061036	CABLE ASSY / <> B - TO B -			1		
213	381755	FIXATION ROD			2		
214	381756	HOLDING BRACKET			1		
216	381753	HOLDING BRACKET			1		
217	380671	TRAY, BATTERIES			1		
218	563030	BATTERY 12V/930 CCA / GR31			4		
219	Y2-0616-50	**BREAKER PANEL - MTH**					
222	Call Order Desk	INSULATING TUBE 4"			1		P
223	381510	BATTERIES PROTECTOR			1		
224	502655	SCREW CAP HEX M10-1.5x25 SS EMN			3		
225	500270	WASHER FL .406x1.000x.063 SS			3		
230	502526	SCREW TC BDG PH #12-24x3/4 ZP			2		
232	063894	CABLE NO: 101 ASSY Up to 3-8120			1		
232	065913	CABLE #101 ASSY From 3-8121			1		
		P) CALL ORDER DESK FOR SPECIFIC APPLICATION					
		(V.I.N.)					

From Y-7046 Up to 7-9095	DATE: 01/2014	PAGE: Y2-0615-60

BATTERIES INSTALLATION - MTH-45'

ITEM	PART	DESCRIPTION	XL45	MTH40	MTH45	MTH45S	NOTE

From Y-7046 Up to 7-9095	DATE: 01/2014	PAGE: Y2-0616-00

JUNCTION BOX COMPONENTS, RELAY & BREAKER

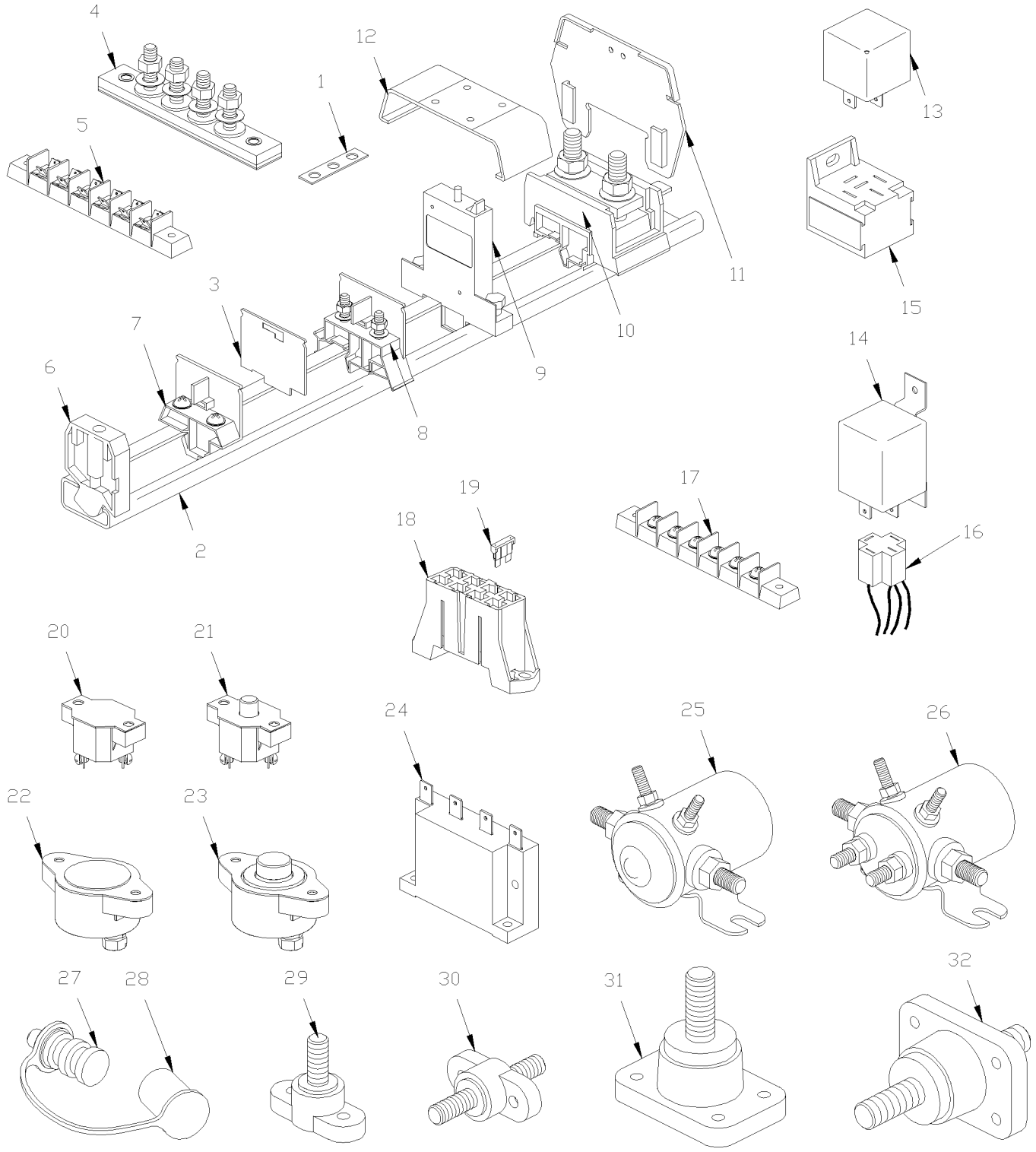

From Y-7046 Up to 7-9095	DATE: 01/2014	PAGE: Y2-0616-00

JUNCTION BOX COMPONENTS, RELAY & BREAKER

ITEM	PART	DESCRIPTION	XL45	MTH40	MTH45	MTH45S	NOTE
1	381813	BUS BAR / W/2 HOLES 25MM	AR	AR	AR	AR	
1	381814	BUS BAR / W/3 HOLES 38MM	AR	AR	AR	AR	
1	381815	BUS BAR / W/4 HOLES 51MM	AR	AR	AR	AR	
1	381816	BUS BAR / W/4 HOLES 64MM	AR	AR	AR	AR	
1	381818	BUS BAR / W/4 HOLES 103MM	AR	AR	AR	AR	
1	381817	BUS BAR / W/6 HOLES 77MM	AR	AR	AR	AR	
1	381819	BUS BAR / W/8 HOLES 103MM	AR	AR	AR	AR	
1	381820	BUS BAR / W/9 HOLES 117MM	AR	AR	AR	AR	
1	880027	BUS BAR / W/10 HOLES 128MM	AR	AR	AR	AR	
2	880026	RAIL SUPPORT / 2 METERS	AR	AR	AR	AR	
2	381300	RAIL SUPPORT / 45MM	AR	AR	AR	AR	
2	380927	RAIL SUPPORT / 72MM	AR	AR	AR	AR	
2	380904	RAIL SUPPORT / 80MM	AR	AR	AR	AR	
2	381203	RAIL SUPPORT / 100MM	AR	AR	AR	AR	
2	380905	RAIL SUPPORT / 150MM	AR	AR	AR	AR	
2	381249	RAIL SUPPORT / 155MM	AR	AR	AR	AR	
2	380964	RAIL SUPPORT / 171MM	AR	AR	AR	AR	
2	380839	RAIL SUPPORT / 180MM	AR	AR	AR	AR	
2	380883	RAIL SUPPORT / 200MM	AR	AR	AR	AR	
2	381638	RAIL SUPPORT / 209MM	AR	AR	AR	AR	
2	380885	RAIL SUPPORT / 225MM	AR	AR	AR	AR	
2	380793	RAIL SUPPORT / 230MM	AR	AR	AR	AR	
2	380751	RAIL SUPPORT / 280MM	AR	AR	AR	AR	
2	380756	RAIL SUPPORT / 290MM	AR	AR	AR	AR	
2	380712	RAIL SUPPORT / 315MM	AR	AR	AR	AR	
2	380838	RAIL SUPPORT / 320MM	AR	AR	AR	AR	
2	380937	RAIL SUPPORT / 324MM	AR	AR	AR	AR	
2	380914	RAIL SUPPORT / 350MM	AR	AR	AR	AR	
2	380884	RAIL SUPPORT / 360MM	AR	AR	AR	AR	
2	381124	RAIL SUPPORT / 460MM	AR	AR	AR	AR	
2	381123	RAIL SUPPORT / 525MM	AR	AR	AR	AR	
2	380713	RAIL SUPPORT / 605MM	AR	AR	AR	AR	
2	380752	RAIL SUPPORT / 1050MM	AR	AR	AR	AR	
3	561728	END CLOSING	AR	AR	AR	AR	
4	560112	JUNCTION BLOCK W/2 STUDS	AR	AR	AR	AR	
4	560113	JUNCTION BLOCK W/4 STUDS / REPLACED BY: 562504	AR	AR	AR	AR	
4	562504	JUNCTION BLOCK W/6 STUDS	AR	AR	AR	AR	
4	560291	JUNCTION BLOCK W/8 STUDS / REPLACED BY: 562173	AR	AR	AR	AR	
4	560116	JUNCTION BLOCK W/10 STUDS / REPLACED BY: 562173	AR	AR	AR	AR	
5	562373	CONNECTOR, MULTIPLE BLADE	AR	AR	AR	AR	
6	561729	STOPPER	AR	AR	AR	AR	
NS	500583	. SCREW TP BDG PH #6x1/2 ZP	1	1	1	1	
7	381236	DUMMY ASSY W/SCREW	AR	AR	AR	AR	
NS	562198	. BLOCK JUNCTION	1	1	1	1	

From Y-7046 Up to 7-9095	DATE: 01/2014	PAGE: Y2-0616-00

JUNCTION BOX COMPONENTS, RELAY & BREAKER

ITEM	PART	DESCRIPTION	XL45	MTH40	MTH45	MTH45S	NOTE
NS	500583	. SCREW TP BDG PH #6x1/2 ZP	2	2	2	2	
NS	500438	. WASHER FL .187x.437x.050 ZP	2	2	2	2	
8	561726	BLOCK JUNCTION	AR	AR	AR	AR	
9	690356	BREAKER 1AMP / 24V / / REPLACED BY: 563382	AR	AR	AR	AR	
9	563382	BREAKER 1AMP / 24V /	AR	AR	AR	AR	
9	561797	BREAKER 3AMPS / 24V /	AR	AR	AR	AR	
9	561790	BREAKER 6AMPS / 24V /	AR	AR	AR	AR	
9	561791	BREAKER 8AMPS / 24V /	AR	AR	AR	AR	
9	561792	BREAKER 10AMPS / 24V /	AR	AR	AR	AR	
9	561793	BREAKER 15AMPS / 24V /	AR	AR	AR	AR	
9	561794	BREAKER 20AMPS / 24V /	AR	AR	AR	AR	
9	561795	BREAKER 25AMPS / 24V /	AR	AR	AR	AR	
NS	502660	. SCREW QUARTER TURN	2	2	2	2	
10	561727	SCREW MA PAN PH	AR	AR	AR	AR	
NS	500615	. NUT HEX M8-1.25 BR	2	2	2	2	
11	561731	COVER SUPPORT	AR	AR	AR	AR	
12	561730	COVER / PROTECTOR / 1 BLOCK	AR	AR	AR	AR	
12	561732	COVER / PROTECTOR / 2 BLOCKS	AR	AR	AR	AR	
12	562024	COVER / PROTECTOR / 3 BLOCKS	AR	AR	AR	AR	
		FOR RELAY IDENTIFICATION, SEE NUMBER					
		STAMPED ON / BOSCH # / POTTER BRUMFIELD #					
13	562751	RELAY 6V S.P.D.T.	AR	AR	AR	AR	
13	561538	RELAY 12V S.P.D.T. V 415 F11	AR	AR	AR	AR	
13	561706	RELAY 12V S.P.D.T. W/DIODE /	AR	AR	AR	AR	
13	562092	RELAY 12V S.P.D.T. W/DIODE / Up to 5-8577 / REPLACED BY: 563337	AR	AR	AR	AR	
13	563337	RELAY 12V S.P.D.T. W/RESISTOR / From 5-8578	AR				
13	561182	RELAY 24V S.P.S.T. N.O. VF4-11H11	AR	AR	AR	AR	
13	561230	RELAY 24V S.P.D.T. VF4-15H / REPLACED BY: 561707	AR	AR	AR	AR	
13	561557	RELAY 24V S.P.D.T. N.O.	AR	AR	AR	AR	
13	561707	RELAY 24V S.P.D.T. W/RESISTOR / Up to 5-8577	AR	AR	AR	AR	
13	563332	RELAY 24V S.P.D.T. W/RESISTOR / "VOLVO" (20374662) From 5-8578	AR				
14	561928	RELAY 12V S.P.D.T. / 50 AMPS N.O. VF7-41F	AR	AR	AR	AR	
14	561991	RELAY 24V S.P.S.T. / 70 AMPS N.O.	AR	AR	AR	AR	
15	561183	RELAY BASE / TAB TERMINAL / BOSCH 3334485008	AR	AR	AR	AR	
16	562367	CONNECTOR / TAB HOUSING 4C / POTTER BRUMFIELD VCF7-1000	AR	AR	AR	AR	
16	561908	TAB RECEPTACLE TERMINAL / 22-18 / AMP 60295-2	AR	AR	AR	AR	
16	561108	TAB RECEPTACLE TERMINAL / 18-14 / AMP 42238-2	AR	AR	AR	AR	
16	561181	TAB RECEPTACLE TERMINAL / 12 / AMP 60508-2	AR	AR	AR	AR	
16	562368	TAB TERMINAL / 12-8 / AMP 280756-4	AR	AR	AR	AR	
17	562173	JUNCTION BLOCK W/10 STUDS	AR	AR	AR	AR	
17	560116	JUNCTION BLOCK W/10 STUDS / REPLACED BY: 562173	AR	AR	AR	AR	
17	560291	JUNCTION BLOCK W/8 STUDS / REPLACED BY: 562173	AR	AR	AR	AR	

From Y-7046 Up to 7-9095	DATE: 01/2014	PAGE: Y2-0616-00

JUNCTION BOX COMPONENTS, RELAY & BREAKER

ITEM	PART	DESCRIPTION	XL45	MTH40	MTH45	MTH45S	NOTE
17	562504	JUNCTION BLOCK W/6 STUDS	AR	AR	AR	AR	
17	560113	JUNCTION BLOCK W/4 STUDS / REPLACED BY: 562504	AR	AR	AR	AR	
17	560112	JUNCTION BLOCK W/2 STUDS	AR	AR	AR	AR	
18	562621	FUSE BLOCK W/4 LEDS & WIRES / REPLACED BY: 563535	AR	AR	AR	AR	
19	562597	FUSE / ATO 1AMP BLACK	AR	AR	AR	AR	
19	562598	FUSE / ATO 2 AMPS GREY	AR	AR	AR	AR	
19	562599	FUSE / ATO 3 AMPS VIOLET	AR	AR	AR	AR	
19	562600	FUSE / ATO 4 AMPS PINK	AR	AR	AR	AR	
19	562259	FUSE / ATO 5 AMPS AMBER	AR	AR	AR	AR	
19	562602	FUSE / ATO 7.5 AMPS BROWN	AR	AR	AR	AR	
19	562407	FUSE / ATO 10 AMPS RED	AR	AR	AR	AR	
19	562604	FUSE / ATO 15 AMPS BLUE	AR	AR	AR	AR	
19	562605	FUSE / ATO 20 AMPS YELLOW	AR	AR	AR	AR	
19	562606	FUSE / ATO 25 AMPS NATURAL	AR	AR	AR	AR	
19	562396	FUSE / ATO 30 AMPS GREEN	AR	AR	AR	AR	
19	562608	FUSE / ATO 35 AMPS BLUE-GREEN	AR	AR	AR	AR	
19	562609	FUSE / ATC 40 AMPS ORANGE	AR	AR	AR	AR	
20	560295	BREAKER 6AMPS / 24V /	AR	AR	AR	AR	
20	560296	BREAKER 10AMPS / 24V /	AR	AR	AR	AR	
20	560297	BREAKER 20AMPS / 24V /	AR	AR	AR	AR	
21	870690	BREAKER 30AMPS / 24V /	AR	AR	AR	AR	
21	870093	BREAKER 40AMPS / 24V /	AR	AR	AR	AR	
22	560794	BREAKER 90AMPS / 24V / / REPLACED BY: 562938	AR	AR	AR	AR	
22	560308	BREAKER 150AMPS / 24V /	AR	AR	AR	AR	
23	560703	BREAKER 40AMPS / 24V / / REPLACED BY: 562686	AR	AR	AR	AR	
23	562686	BREAKER 40AMPS / 24V /	AR	AR	AR	AR	
23	561767	BREAKER 70AMPS / 24V / / REPLACED BY: 562687	AR	AR	AR	AR	
23	562687	BREAKER 70AMPS / 24V /	AR	AR	AR	AR	
23	560298	BREAKER 90AMPS / 24V / / REPLACED BY: 562683	AR	AR	AR	AR	
23	562683	BREAKER 90AMPS / 24V /	AR	AR	AR	AR	
23	560465	BREAKER 105AMPS / 24V / / REPLACED BY: 562685	AR	AR	AR	AR	
23	562685	BREAKER 105AMPS / 24V /	AR	AR	AR	AR	
23	562397	BREAKER 120AMPS / 24V / / REPLACED BY: 562688	AR	AR	AR	AR	
23	562688	BREAKER 120AMPS / 24V /	AR	AR	AR	AR	
23	560299	BREAKER 150AMPS / 24V / / REPLACED BY: 562684	AR	AR	AR	AR	
23	562684	BREAKER 150AMPS / 24V /	AR	AR	AR	AR	
NS	560838	BREAKER 200AMPS / 24V /	AR	AR	AR	AR	
24	560772	TIME DELAY RELAY	AR	AR	AR	AR	
25	560407	SWITCH MAGNETIC / 24V S.P.S.T. / 50AMPS N.O.	AR	AR	AR	AR	
25	561005	SWITCH MAGNETIC / 24V S.P.S.T. / 200AMPS N.O.	AR	AR	AR	AR	
26	561014	SWITCH MAGNETIC / 24V D.P.S.T. / 200AMPS N.O.	AR	AR	AR	AR	
27	561856	BOOSTER BLOCK, REMOTE / RED	1	1	1	1	
27	561857	BOOSTER BLOCK, REMOTE / BLACK	1	1	1	1	
28	562691	. PROTECTOR CAP / RED	1	1	1	1	

From Y-7046 Up to 7-9095	DATE: 01/2014	PAGE: Y2-0616-00

JUNCTION BOX COMPONENTS, RELAY & BREAKER

ITEM	PART	DESCRIPTION	XL45	MTH40	MTH45	MTH45S	NOTE
28	562692	. PROTECTOR CAP / BLACK	1	1	1	1	
NS	381210	SEPARATOR / FIBERGLASS RED	AR	AR	AR	AR	
29	560422	BLOCK, TERMINAL / 1 STUD 3/8-16 / BLACK	AR	AR	AR	AR	
30	561102	BLOCK, JUNCTION / 2 STUD 3/8-16 / BLACK	AR	AR	AR	AR	
31	560177	BLOCK, TERMINAL / 1 STUD 1/2-13 / BLACK	AR	AR	AR	AR	
32	560176	BLOCK, JUNCTION / 2 STUD 1/2-13 / RED	AR	AR	AR	AR	

From Y-7046 Up to 7-9095	DATE: 01/2014	PAGE: Y2-0616-00

JUNCTION BOX COMPONENTS, RELAY & BREAKER

ITEM	PART	DESCRIPTION	XL45	MTH400	MTH445	MTH445S	NOTE

From 7-9096 Up to 8-9339	DATE: 01/2014	PAGE: Y2-0616-01

JUNCTION BOX COMPONENTS, RELAY & BREAKER / MUX

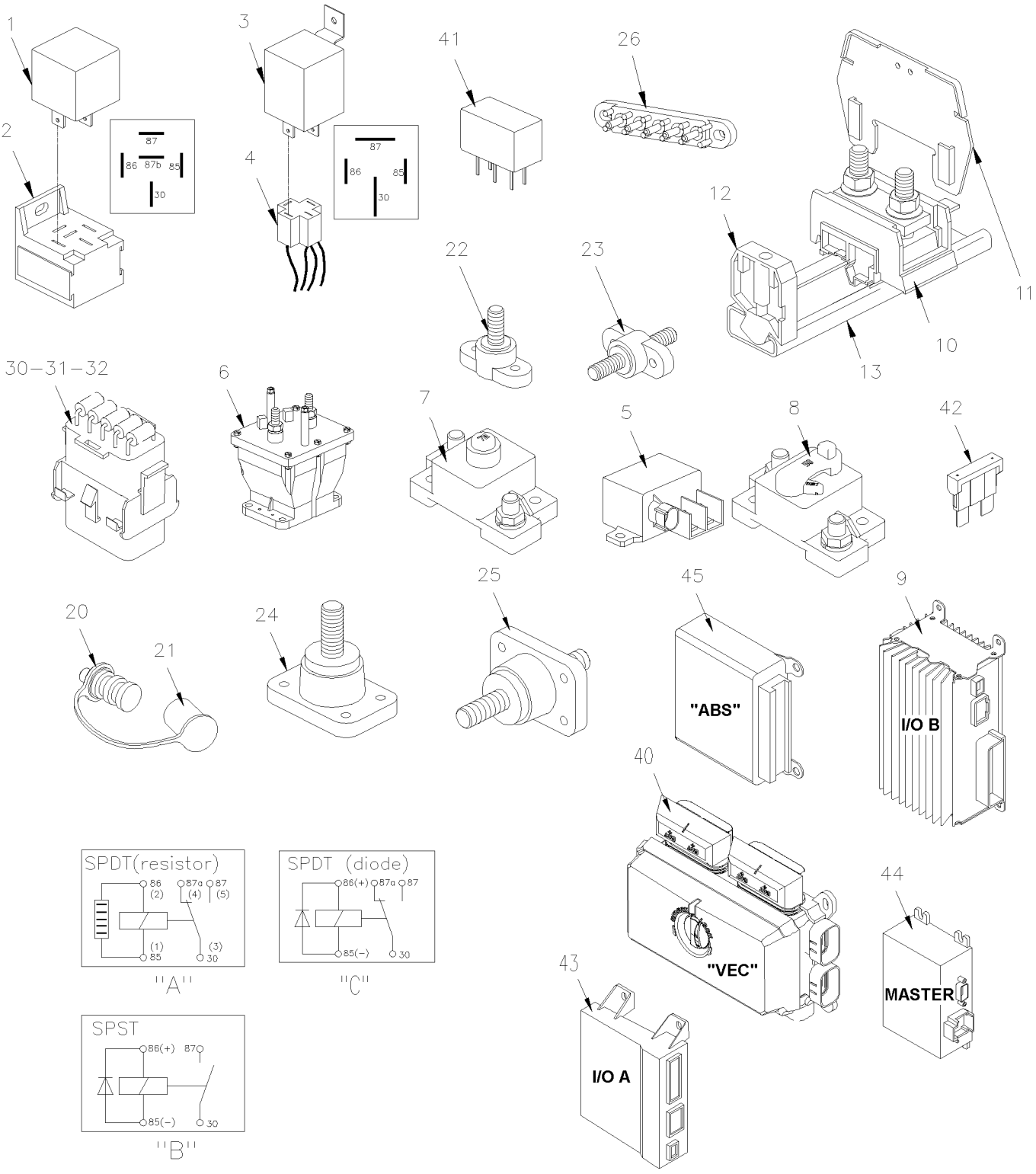

From 7-9096 Up to 8-9339	DATE: 01/2014	PAGE: Y2-0616-01

JUNCTION BOX COMPONENTS, RELAY & BREAKER / MUX

ITEM	PART	DESCRIPTION	XL45	MTH40	MTH45	MTH45S	NOTE
1	563332	RELAY 24V S.P.D.T. W/RESISTOR / "VOLVO" (20374662)			AR	AR	A
1	561707	RELAY 24V S.P.D.T. W/RESISTOR /			1	1	C
1	563337	RELAY 12V S.P.D.T. W/RESISTOR /			AR	AR	A
2	561183	RELAY BASE / TAB TERMINAL / BOSCH 3334485008			AR	AR	
3	561991	RELAY 24V S.P.S.T. / 70 AMPS N.O.			AR	AR	B
4	562367	CONNECTOR / TAB HOUSING 4C / POTTER BRUMFIELD VCF7-1000			AR	AR	
5	563348	RELAY POWER 24V 200 AMPS / S.P.D.T. N.O.			AR	AR	
. NS	502581	. NUT HEX M6-1.0 ZP			2	2	
. NS	502564	. WASHER LO SPT 6.1x11.8x1.6 ZP			2	2	
. NS	563409	. CONNECTOR / SUPERSEAL 1.5 SERIES / SH 2C / AMP 282080-1			1	1	
. NS	562607	. SOCKET TERMINAL 20-16 / AMP 183025-1			2	2	
6	562364	RELAY 24V S.P.S.T. / 300 AMPS N.O. / / BATTERY DISCONECT			1	1	
7	563704	BREAKER 35AMPS / 24V /			AR	AR	
7	563705	BREAKER 40AMPS / 24V /			AR	AR	
7	563706	BREAKER 60AMPS / 24V /			AR	AR	
7	563707	BREAKER 70AMPS / 24V /			AR	AR	
7	563708	BREAKER 90AMPS / 24V /			AR	AR	
8	563710	BREAKER 50AMPS / 24V /			AR	AR	
8	563709	BREAKER 150AMPS / 24V /			AR	AR	
9	563273	I/O B-MODULE VOLVO MULTIPLEX / ALLUMINUM Up to 7-9116			AR	AR	
9	565865	I/O B-MODULE VOLVO MULTIPLEX / ALLUMINUM From 7-9117 / REPLACED BY: 564075			AR	AR	
10	561727	SCREW MA PAN PH			AR	AR	
11	561731	COVER SUPPORT			AR	AR	
NS	562024	COVER / PROTECTOR / 3 BLOCKS			1	1	
12	562645	STOPPER "U" RAIL			AR	AR	
13	382184	RAIL SUPPORT 112MM "U" SHAPE			AR	AR	
13	382187	RAIL SUPPORT 400MM "U" SHAPE			AR	AR	
20	561856	BOOSTER BLOCK, REMOTE / RED			AR	AR	
20	561857	BOOSTER BLOCK, REMOTE / BLACK			AR	AR	
21	562691	. PROTECTOR CAP / RED			1	1	
21	562692	. PROTECTOR CAP / BLACK			1	1	
22	560422	BLOCK, TERMINAL / 1 STUD 3/8-16 / BLACK			AR	AR	
23	561102	BLOCK, JUNCTION / 2 STUD 3/8-16 / BLACK			AR	AR	
24	560177	BLOCK, TERMINAL / 1 STUD 1/2-13 / BLACK			AR	AR	
NS	562024	COVER / PROTECTOR / 3 BLOCKS			AR	AR	
25	560176	BLOCK, JUNCTION / 2 STUD 1/2-13 / RED			AR	AR	
26	563218	JUNCTION BLOCK W/5 STUDS			AR	AR	
NS	500765	NUT HEX #10-32 BR			AR	AR	
30	381145	DIODE ASSY / W/5 3AMPS			AR	AR	
31	382097	DIODE ASSY / W/3 3AMPS & 2 RESISTORS 270 OHMS			AR	AR	
		A) SEE CONTACT CONFIGURATION "A"					
		B) SEE CONTACT CONFIGURATION "B"					
		C) SEE CONTACT CONFIGURATION "C"					

From 7-9096 Up to 8-9339	DATE: 01/2014	PAGE: Y2-0616-01

JUNCTION BOX COMPONENTS, RELAY & BREAKER / MUX

ITEM	PART	DESCRIPTION	XL45	MTH40	MTH45	MTH45S	NOTE
32	382175	DIODE ASSY / W/3 3AMPS & 2 RESISTORS 100 OHMS			AR	AR	
40	563698	VEC DISTRIBUTION MODULE / REAR JCT BOX			1	1	
. NS	564104	. COVER / VEC BOX			1	1	
. NS	563269	. RELAY 24V S.P.D.T. W/RESISTOR / VJ28-95H24-S08			3	3	
. NS	563004	. FUSE / ATM 2 AMPS GREY			1	1	
. NS	563279	. FUSE / ATM 3 AMPS VIOLET			1	1	
. NS	563005	. FUSE / ATM 7.5 AMPS BROWN			1	1	
. NS	563283	. FUSE / ATM 10 AMPS RED			12	12	
. NS	563284	. FUSE / ATM 15 AMPS BLUE			11	11	
. NS	563282	. FUSE / ATM 20 AMPS YELLOW			9	9	
. NS	563153	. FUSE / ATM 25 AMPS NATURAL			6	6	
. NS	563165	. FUSE / ATM 30 AMPS GREEN			1	1	
. NS	564464	. MINI BREAKER 20 AMPS / SERIES 223			1	1	
. NS	563181	. CONNECTOR / SH 8C / YELLOW / BUSSMANN 32006-E21			1	1	
. NS	563182	. CONNECTOR / SH 8C / ORANGE / BUSSMANN 32006-G21			1	1	
. NS	563183	. CONNECTOR / SH 8C / RED / BUSSMANN 32006-F21			1	1	
. NS	563184	. CONNECTOR / SH 8C / GREEN / BUSSMANN 32006-C21			1	1	
. NS	563185	. CONNECTOR / SH 8C / BLACK / BUSSMANN 32006-A21			1	1	
. NS	563186	. CONNECTOR / SH 8C / GREY / BUSSMANN 32006-B21			1	1	
. NS	563187	. CONNECTOR / SH 8C / BROWN / BUSSMANN 32006-H21			1	1	
. NS	563448	. CONNECTOR / SH 8C / BLUE / BUSSMANN 32006-D21			1	1	
40	563674	VEC DISTRIBUTION MODULE / FRONT JCT BOX			1	1	
. NS	564104	. COVER / VEC BOX			1	1	
. NS	563004	. FUSE / ATM 2 AMPS GREY			1	1	
. NS	563279	. FUSE / ATM 3 AMPS VIOLET			14	14	
. NS	563280	. FUSE / ATM 5 AMPS AMBER			2	2	
. NS	563005	. FUSE / ATM 7.5 AMPS BROWN			3	3	
. NS	563283	. FUSE / ATM 10 AMPS RED			6	6	
. NS	563284	. FUSE / ATM 15 AMPS BLUE			9	9	
. NS	563282	. FUSE / ATM 20 AMPS YELLOW			6	6	
. NS	563153	. FUSE / ATM 25 AMPS NATURAL			1	1	
. NS	563165	. FUSE / ATM 30 AMPS GREEN			3	3	
. NS	564464	. MINI BREAKER 20 AMPS / SERIES 223			1	1	
. NS	563181	. CONNECTOR / SH 8C / YELLOW / BUSSMANN 32006-E21			1	1	
. NS	563182	. CONNECTOR / SH 8C / ORANGE / BUSSMANN 32006-G21			1	1	
. NS	563183	. CONNECTOR / SH 8C / RED / BUSSMANN 32006-F21			1	1	
. NS	563184	. CONNECTOR / SH 8C / GREEN / BUSSMANN 32006-C21			1	1	
. NS	563185	. CONNECTOR / SH 8C / BLACK / BUSSMANN 32006-A21			1	1	
. NS	563186	. CONNECTOR / SH 8C / GREY / BUSSMANN 32006-B21			1	1	
. NS	563187	. CONNECTOR / SH 8C / BROWN / BUSSMANN 32006-H21			1	1	

From 7-9096 Up to 8-9339	DATE: 01/2014	PAGE: Y2-0616-01

JUNCTION BOX COMPONENTS, RELAY & BREAKER / MUX

ITEM	PART	DESCRIPTION	XL45	MTH40	MTH45	MTH45S	NOTE
. NS	563448	. CONNECTOR / SH 8C / BLUE / BUSSMANN 32006-D21			1	1	
40	563449	VEC DISTRIBUTION MODULE / W/SLIDE-OUT			1	1	
. NS	564104	. COVER / VEC BOX			1	1	
. NS	563004	. FUSE / ATM 2 AMPS GREY			1	1	
. NS	563279	. FUSE / ATM 3 AMPS VIOLET			1	1	
. NS	563280	. FUSE / ATM 5 AMPS AMBER			1	1	
. NS	563005	. FUSE / ATM 7.5 AMPS BROWN			1	1	
. NS	563284	. FUSE / ATM 15 AMPS BLUE			1	1	
. NS	563282	. FUSE / ATM 20 AMPS YELLOW			1	1	
. NS	563153	. FUSE / ATM 25 AMPS NATURAL			1	1	
. NS	563165	. FUSE / ATM 30 AMPS GREEN			1	1	
. NS	563181	. CONNECTOR / SH 8C / YELLOW / BUSSMANN 32006-E21			1	1	
. NS	563182	. CONNECTOR / SH 8C / ORANGE / BUSSMANN 32006-G21			1	1	
. NS	563183	. CONNECTOR / SH 8C / RED / BUSSMANN 32006-F21			1	1	
. NS	563184	. CONNECTOR / SH 8C / GREEN / BUSSMANN 32006-C21			1	1	
. NS	563185	. CONNECTOR / SH 8C / BLACK / BUSSMANN 32006-A21			1	1	
. NS	563186	. CONNECTOR / SH 8C / GREY / BUSSMANN 32006-B21			1	1	
. NS	563187	. CONNECTOR / SH 8C / BROWN / BUSSMANN 32006-H21			1	1	
. NS	563448	. CONNECTOR / SH 8C / BLUE / BUSSMANN 32006-D21			1	1	
41	563269	. RELAY 24V S.P.D.T. W/RESISTOR /			AR	AR	A,V
42	563004	. FUSE / ATM 2 AMPS GREY			AR	AR	V
42	563279	. FUSE / ATM 3 AMPS VIOLET			AR	AR	V
42	563280	. FUSE / ATM 5 AMPS AMBER			AR	AR	V
42	563005	. FUSE / ATM 7.5 AMPS BROWN			AR	AR	V
42	563283	. FUSE / ATM 10 AMPS RED			AR	AR	V
42	563284	. FUSE / ATM 15 AMPS BLUE			AR	AR	V
42	563282	. FUSE / ATM 20 AMPS YELLOW			AR	AR	V
42	563153	. FUSE / ATM 25 AMPS NATURAL			AR	AR	V
42	563165	. FUSE / ATM 30 AMPS GREEN			AR	AR	V
43	563272	I/O A-MODULE VOLVO MULTIPLEX / BLACK Up to 7-9116 / REPLACED BY: 564101			AR	AR	
43	565864	I/O A-MODULE VOLVO MULTIPLEX / BLACK From 7-9117 / REPLACED BY: 564101			AR	AR	
44	563295	MASTER ID-MODULE VOLVO MULTIPLEX			1	1	
45	641948	CONTROL UNIT 12V / ABS 4 CH			1	1	
		A) SEE CONTACT CONFIGURATION "A"					
		V) INSIDE OF "VEC"					

From Y-7046 Up to 6-8906	DATE: 01/2014	PAGE: Y2-0616-10
BREAKER PANEL - BUS		

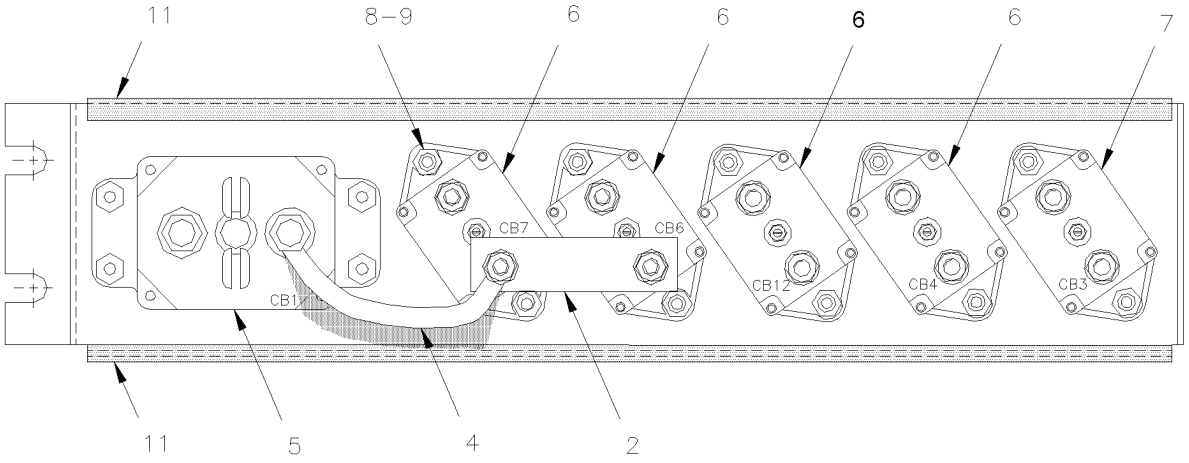

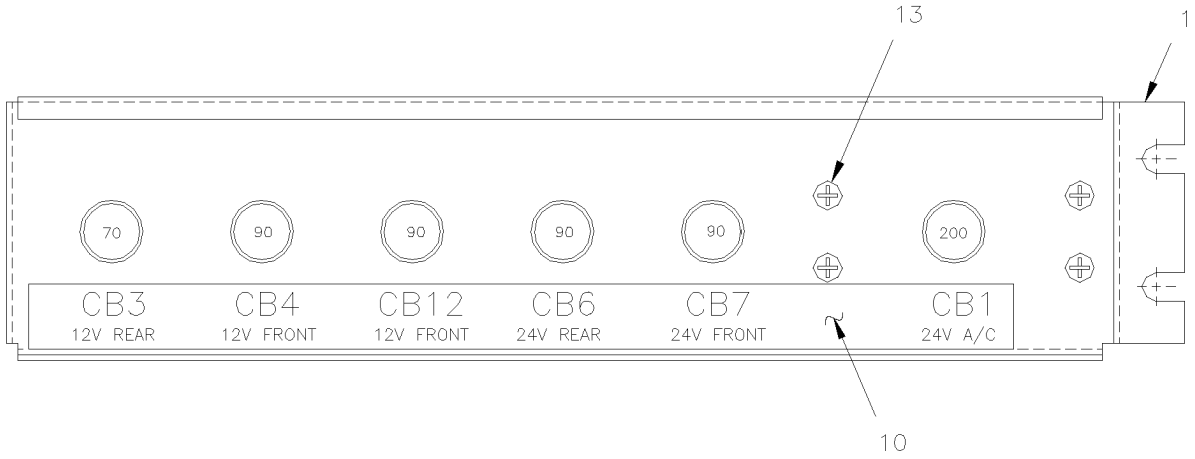

From Y-7046 Up to 6-8906	DATE: 01/2014	PAGE: Y2-0616-10

BREAKER PANEL - BUS

ITEM	PART	DESCRIPTION	XL45	MTH40	MTH45	MTH45S	NOTE
1	381949	BREAKER SUPPORT	1				
2	381717	BUS BAR / W/2 HOLES / 53MM C/C	1				
4	063403	CABLE ASSY / #90	1				
5	560838	BREAKER 200AMPS / 24V /	1				
6	562683	BREAKER 90AMPS / 24V /	3				
7	562687	BREAKER 70AMPS / 24V /	1				
8	502524	NUT HEX M4-0.7 NP	8				
9	502636	WASHER LO SPT 4.1x7.6x0.9 ZP	8				
10	065354	DECAL BREAKER	1				
11	680066	GLUE / ADBOND 5014 ADH 23.6ML BOTTLE	AR				
12	506338	RUBBER CHANNEL / 1/16" x 1/4" INT "U" SHAPE / ROUND C.T.L.	AR				
13	500510	SCREW MA BDG PH #10-32x3/4 SS EMN	4				

From Y-7046 Up to 7-9095	DATE: 01/2014	PAGE: Y2-0616-50

BREAKER PANEL - MTH

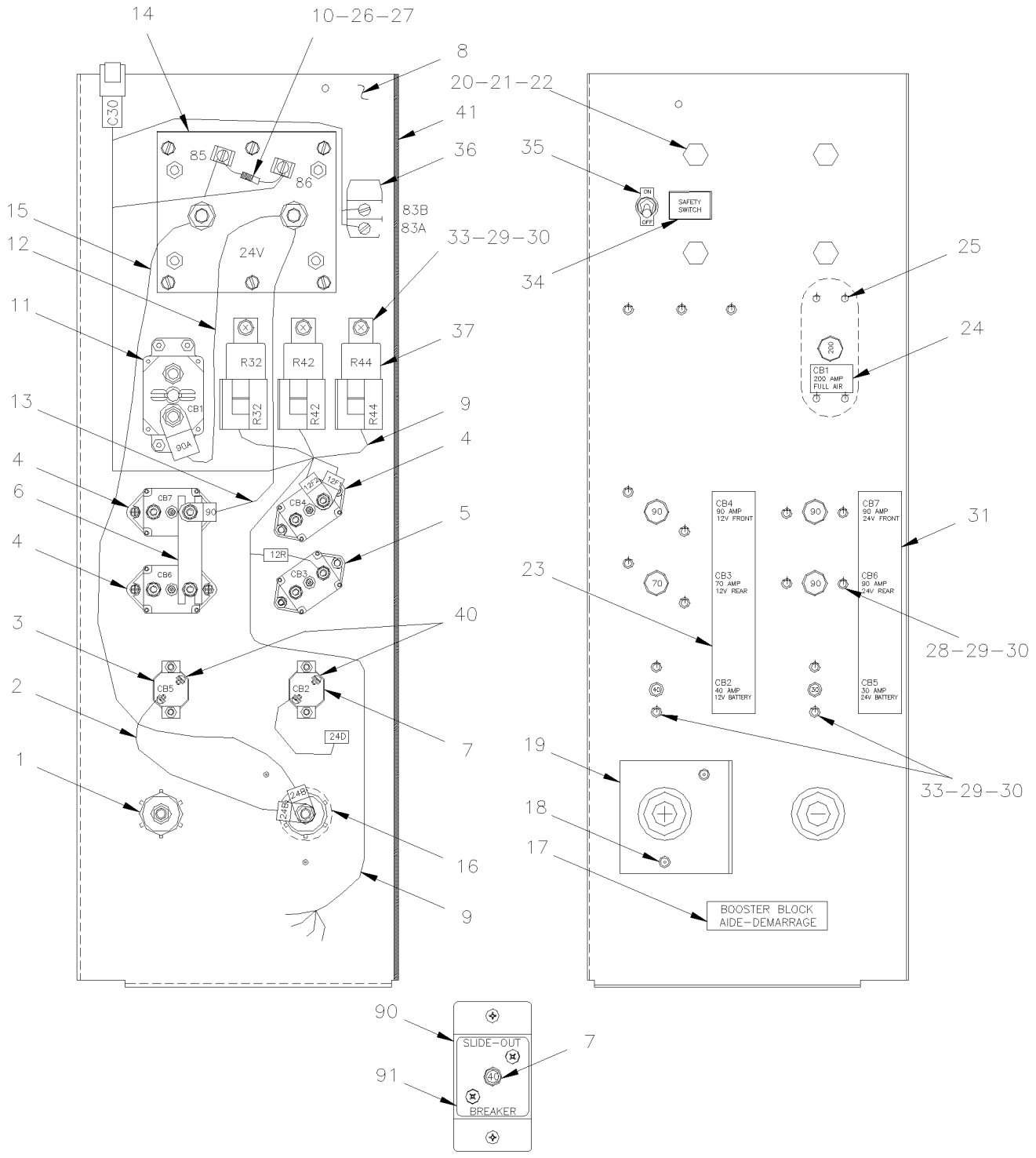

From Y-7046 Up to 7-9095	DATE: 01/2014	PAGE: Y2-0616-50

BREAKER PANEL - MTH

ITEM	PART	DESCRIPTION	XL45	MTH40	MTH45	MTH45S	NOTE
	381903P	BREAKER'S PANEL ASSY	1				
1	561857	. BOOSTER BLOCK, REMOTE / BLACK		1	1	1	
2	064926	. CABLE NO:24D ASSY		1	1	1	
3	870690	. BREAKER 30AMPS / 24V /		1	1	1	
4	562683	. BREAKER 90AMPS / 24V /		3	3	3	
5	562687	. BREAKER 70AMPS / 24V /		1	1	1	
6	380059	. BUS BAR / W/2 SLOTS / 3 3/8" C/C		1	1	1	
7	870093	. BREAKER 40AMPS / 24V /		1	1	1	
8	381963	. BREAKER SUPPORT		1	1	1	
9	064924	. WIRING HARNESS RELAY 12V (BATTERIES)		1	1	1	
10	561740	. DIODE / 3AMPS		1	1	1	
11	560838	. BREAKER 200AMPS / 24V /		1	1	1	
12	064928	. CABLE ASSY #90A		1	1	1	
13	064927	. CABLE NO:90 ASSY		1	1	1	
NS	063894	. CABLE NO: 101 ASSY Up to 3-8120		1	1	1	
NS	065913	. CABLE #101 ASSY From 3-8121		1	1	1	
14	562364	. RELAY 24V S.P.S.T. / 300 AMPS N.O. / / BATTERY DISCONECT		1	1	1	
15	064930	. CABLE NO: 24B ASSY		1	1	1	
NS	064929	. CABLE NO:24 ASSY		1	1	1	
16	561856	. BOOSTER BLOCK, REMOTE / RED		1	1	1	
17	062682	. DECAL / "BOOSTER BLOCK" ENG & FRENCH		1	1	1	
18	504347	. RIVET POP DOME OE 3/16x1/4 AL		2	2	2	
19	381210	. SEPARATOR / FIBERGLASS RED		1	1	1	
20	5001190	. SCREW CAP HEX 1/4-20x3/4 SS EMN		4	4	4	
21	500770	. NUT HEX STO 1/4-20 ZP		4	4	4	
22	500473	. WASHER LO SPT .262x.489x.062 ZP		4	4	4	
23	064960	. DECAL		1	1	1	
24	063422	. DECAL-CBI FULL AIR		1	1	1	
25	500510	. SCREW MA BDG PH #10-32x3/4 SS EMN		1	1	1	
25	381516	. CLOSING PLATE		1	1	1	
26	560082	. RING TERMINAL #10 / 16-14 / INSULATED / AMP 626033-2		2	2	2	
27	560382	. PLASTIC TUBING / 1/4" / CLEAR		AR	AR	AR	
28	500387	. SCREW MA RND PH #10-24x3/4 ZP		8	8	8	
29	500470	. WASHER LO SPT .193x.334x.047 ZP		15	15	15	
30	500786	. NUT HEX #10-24 ZP		15	15	15	
31	064961	. DECAL		1	1	1	
33	500386	. SCREW MA RND PH #10-24x1/2 ZP		7	7	7	
34	065306	. DECAL "SAFETY SWITCH"		1	1	1	
35	562394	. PLATE, INDICATING (ON/OFF)		1	1	1	
36	562942	. SWITCH / OFF-ON / S.P.S.T.		1	1	1	
37	561991	. RELAY 24V S.P.S.T. / 70 AMPS N.O.		3	3	3	
38	500102	. NUT HEX 3/8-16 SS		2	2	2	
39	502616	. WASHER LO SPT 10.2x18.1x2.2 SS		2	2	2	
40	500557	. SCREW MA PAN PH #8-32x3/8 SS		2	2	2	

From Y-7046 Up to 7-9095	DATE: 01/2014	PAGE: Y2-0616-50

BREAKER PANEL - MTH

ITEM	PART	DESCRIPTION	XL45	MTH40	MTH45	MTH45S	NOTE
41	506025	. RUBBER CHANNEL / 1/18" x 5/16" INT "U" SHAPE / SQUARE C.T.L.		AR	AR	AR	
90	690098	SUPPORT BREAKER Up to 4-8251 / REPLACED BY: 065910			1		
90	065910	SUPPORT BREAKER From 4-8252			1		
90	065954	CABLE MAIN SUPLY / BREAKER From 4-8252			1		
NS	690296	CABLE MAIN SUPLY / BREAKER Up to 4-8251 / REPLACED BY: 065954			1		
91	690099	DECAL "SLIDE-OUT" BREAKER Up to 4-8251 / REPLACED BY: 065923			1		
91	065923	DECAL "SLIDE-OUT" BREAKER From 4-8252 Up to 5-8384			1		
91	065989	DECAL "SLIDE-OUT" BREAKER From 5-8385			1		

From Y-7046 Up to 7-9095	DATE: 01/2014	PAGE: Y2-0616-50

BREAKER PANEL - MTH

ITEM	PART	DESCRIPTION	XL45	MTH40	MTH45	MTH45S	NOTE

From Y-7046 Up to 7-9095	DATE: 01/2014	PAGE: Y2-0620-00

REAR JUNCTION BOX ASSY

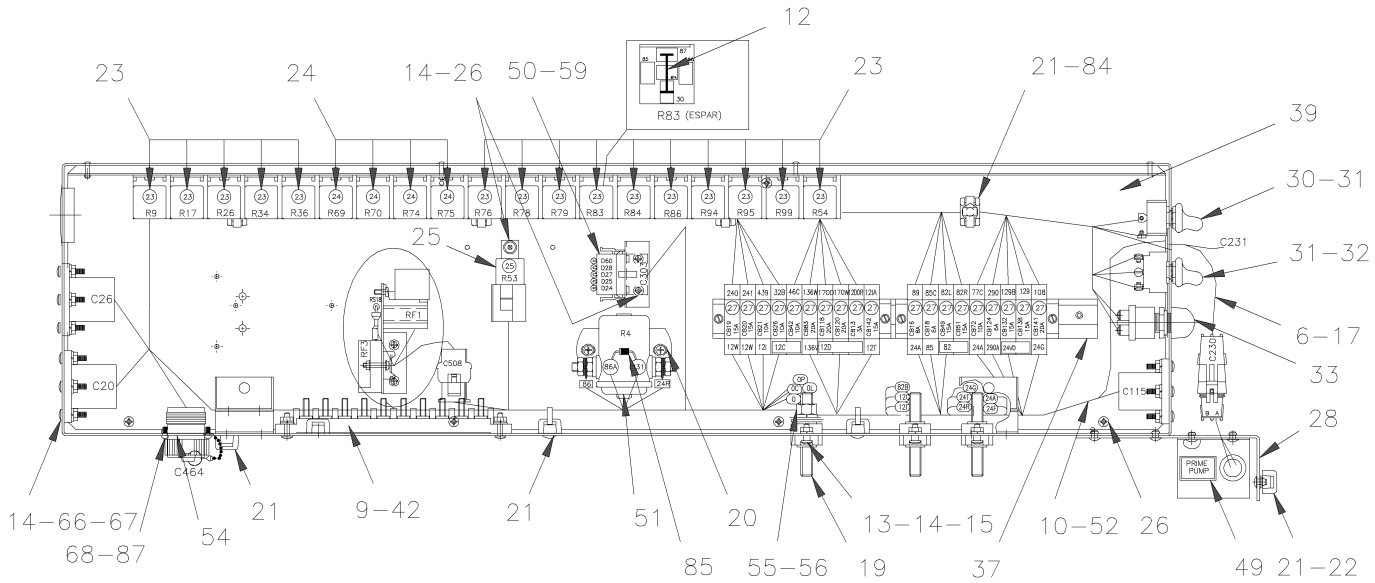

MTH

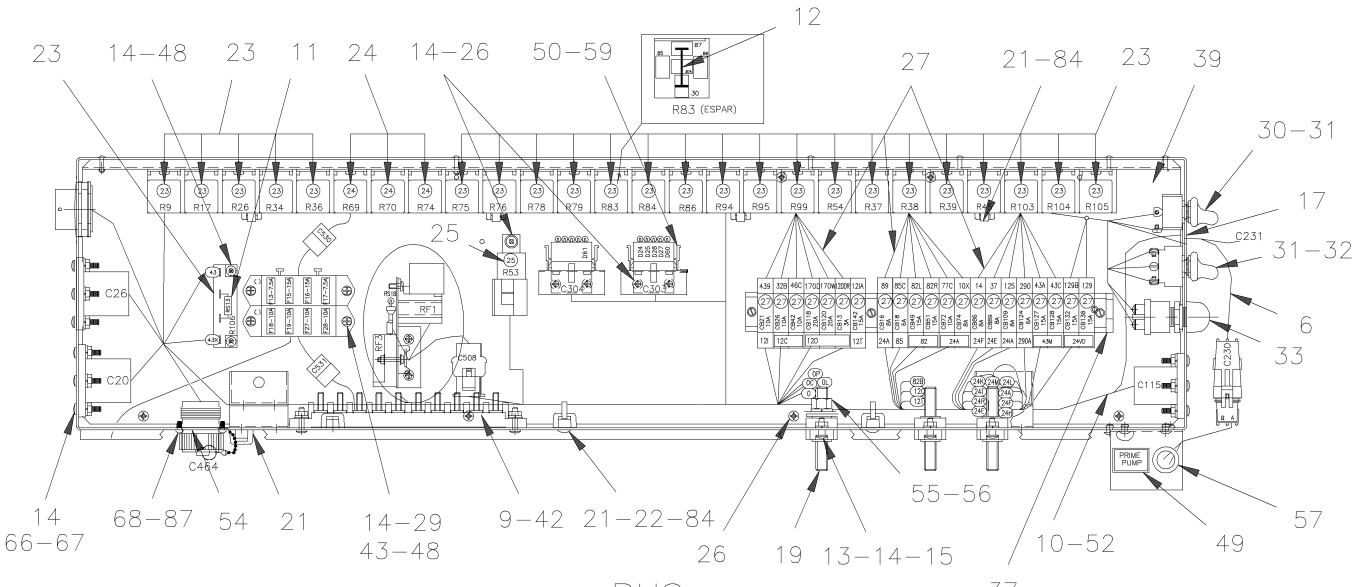

BUS

From Y-7046 Up to 7-9095	DATE: 01/2014	PAGE: Y2-0620-00

REAR JUNCTION BOX ASSY

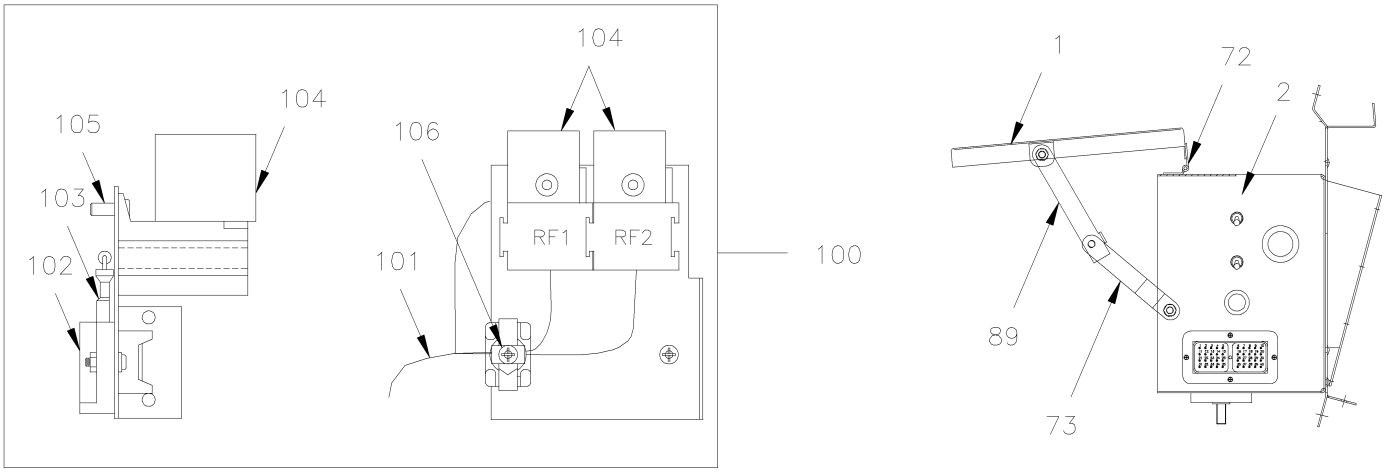

DETAIL ''A''

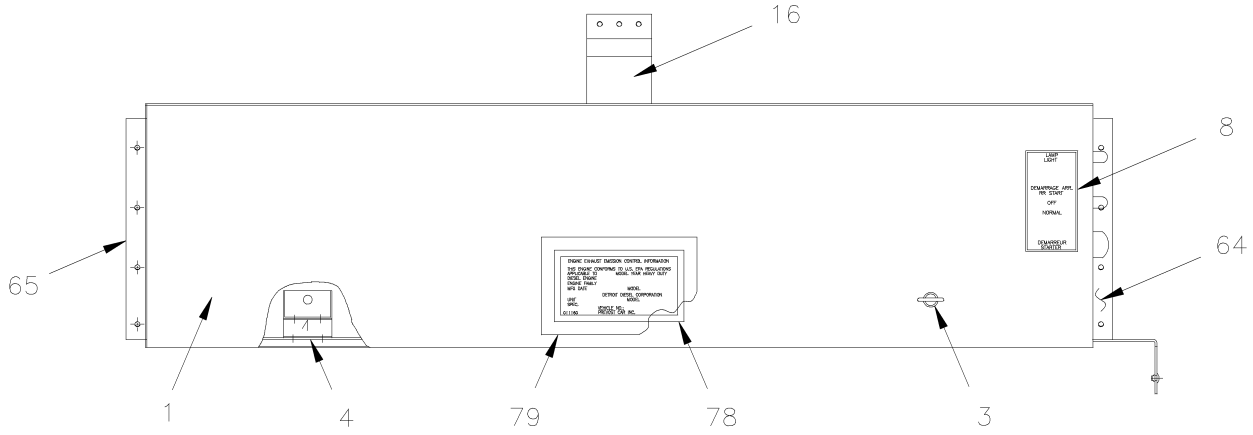

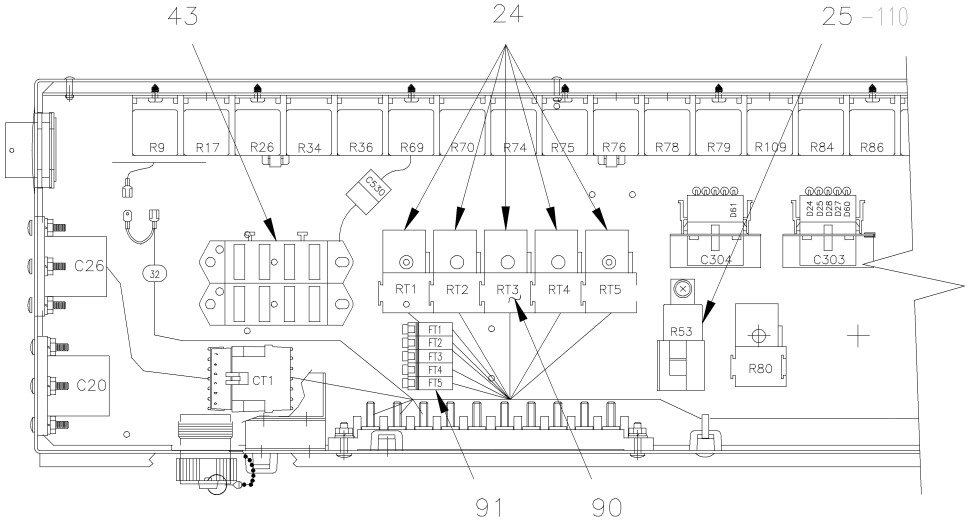

From Y-7046 Up to 7-9095	DATE: 01/2014	PAGE: Y2-0620-00

REAR JUNCTION BOX ASSY

ITEM	PART	DESCRIPTION	XL45	MTH40	MTH45	MTH45S	NOTE
1	381917	DOOR ASSY	1				
2	381869	BOX ASSY W/O DOOR & COMPONENTS	1				
3	504276	SCREW FST WI #17 12.3x22.3 STL	2				
4	380649	BRACKET / DOOR LOCK	2				
. NS	504275	. MOUNTING, FASTENER SIDE MOUNT # 17 SCREW NUT	1				
. NS	380619	. SUPPORT "Z" SHAPE	1				
. NS	504104	. RIVET POP DOME OE 1/8x1/8 SS	2				
6	064994	CABLE ASSY / FUEL PUMP ELECTRIC	1				
8	381915	DECAL / LAMP..NORMAL..START..	1				
9	500765	NUT HEX #10-32 BR	AR				
10	065181	CABLE ASSY / <> ECU & REAR JCT BOX Up to 3-8164	1				
10	065789	CABLE ASSY / <> ECU & REAR JCT BOX From 4-8165 Up to 4-8358	1				
10	065977	CABLE ASSY / <> ECU & REAR JCT BOX From 4-8359	1				
10	064886	CABLE ASSY / ACCESSORY BATTERY Up to 1-7461		1	1	1	
10	065421	CABLE ASSY / ACCESSORY BATTERY From 1-7462 Up to 3-8164		1	1	1	
10	065790	CABLE ASSY / ACCESSORY BATTERY From 4-8165 Up to 4-8358		1	1	1	
10	065976	CABLE ASSY / ENGINE ACCESSORIES From 4-8359 Up to 5-8425		1	1	1	
10	066200	CABLE ASSY / ENGINE ACCESSORIES From 5-8426 Up to 7-9000		1	1	1	
10	066848	CABLE ASSY / ENGINE ACCESSORIES From 7-9001		1	1	1	
10	063297	CABLE ASSY # 102-2/0 Up to 2-7890		1	1	1	A,B
10	065701	CABLE ASSY #102 From 2-7891		1	1	1	A,C
11	061962	RESISTOR ASSY 470 OHMS 1/2W	1	1			
11	560805	. RESISTOR / 470 OHMS / 1/2W	1	1			
11	561539	. TAB RECEPTACLE TERMINAL INSUL. NYLON / 16 / AMP 3-520141-2	1	1			
12	063643	WIRE ASSY	1				
13	500786	NUT HEX #10-24 ZP	6				
14	500470	WASHER LO SPT .193x.334x.047 ZP	AR				
15	500386	SCREW MA RND PH #10-24x1/2 ZP	6				
16	381954	SUPPORT CENTER	1				
16	381505	SUPPORT, CENTRAL			1		
16	381686	SUPPORT, CENTRAL		1		1	
16	382026	SUPPORT, CENTRAL From 4-8165	1				
17	504059	GROMMET / 1.250x1.500x.094x.375x1.875	1				
19	561102	BLOCK, JUNCTION / 2 STUD 3/8-16 / BLACK	3				
20	500622	NUT PUSH RND 5/16	2				
21	504013	TIE MOUNT / 1/4" X 1/4" I.D.	7				
22	502637	WASHER FL .200x.437x.037 SS	7				
		A) WITH ALTERNATOR 24VOLTS 270 AMPS					
		B) FOR PRODUCT IMPROVMENT ASK FOR KIT #065696					
		C) THOSE PARTS ARE INCLUDE IN KIT #065696					

From Y-7046 Up to 7-9095	DATE: 01/2014	PAGE: Y2-0620-00

REAR JUNCTION BOX ASSY

ITEM	PART	DESCRIPTION	XL45	MTH40	MTH45	MTH45S	NOTE
23	561707	RELAY 24V S.P.D.T. W/RESISTOR / Up to 5-8577	AR				
23	563332	RELAY 24V S.P.D.T. W/RESISTOR / "VOLVO" (20374662) From 5-8578 Up to 7-9094	AR				W
23	561707	RELAY 24V S.P.D.T. W/RESISTOR / From 5-8578	AR				
24	562092	RELAY 12V S.P.D.T. W/DIODE / Up to 5-8577 / REPLACED BY: 563337	AR				
24	563337	RELAY 12V S.P.D.T. W/RESISTOR / From 5-8578	AR				
25	561991	RELAY 24V S.P.S.T. / 70 AMPS N.O.	1				
26	500582	SCREW TP BDG PH #8x3/8 ZP	AR				
27	561790	BREAKER 6AMPS / 24V /	AR				
27	561791	BREAKER 8AMPS / 24V /	AR				
27	561792	BREAKER 10AMPS / 24V /	AR				
27	561793	BREAKER 15AMPS / 24V /	AR				
27	561794	BREAKER 20AMPS / 24V /	AR				
27	561795	BREAKER 25AMPS / 24V /	AR				
27	561796	BREAKER 30AMPS / 24V / / REPLACED BY: 561795	AR				
27	561797	BREAKER 3AMPS / 24V /	AR				
28	381761	CABLE SUPPORT	1				
29	562602	FUSE / ATO 7.5 AMPS BROWN	AR				
29	562604	FUSE / ATO 15 AMPS BLUE	2				
29	562407	FUSE / ATO 10 AMPS RED	4				
30	560256	SWITCH / OFF-ON / S.P.S.T.	1				
31	560241	RUBBER PROTECTOR, TOGGLE SWITCH	2				
32	560330	SWITCH / ON-OFF-ON / D.P.D.T.	1				
33	560267	SWITCH, PUSH BUTTON S.P.S.T. / N.O.	1				
. NS	561891	. CAP RUBBER	1				
37	Y2-0616-00	**JUNCTION BOX COMPONENTS, RELAY & BREAKER**					
39	381874	BOARD, MOUNTING / LAMINATED	1				
42	562173	JUNCTION BLOCK W/10 STUDS	1				
43	562797	FUSE BLOCK W/4 LEDS & WIRES / REPLACED BY: 563535	2				
48	500641	SCREW TP BDG PH #8x3/4 ZP	1				
49	064099	DECAL "PRIME PUMP"	1				
50	381518	SUPPORT / FOR 10 PINS CONNECTOR	2				
50	381518	SUPPORT / FOR 10 PINS CONNECTOR		1	1	1	
51	561005	SWITCH MAGNETIC / 24V S.P.S.T. / 200AMPS N.O.		1	1	1	
52	065140	CABLE ASSY / FOR MAJOR COMPONENTS Up to 1-7524	1				
52	065447	CABLE ASSY / FOR MAJOR COMPONENTS From 1-7525 Up to 1-7686	1				
52	064827	CABLE ASSY / FOR MAJOR COMPONENTS Up to 1-7531		1	1	1	
52	065452	CABLE ASSY / FOR MAJOR COMPONENTS From 1-7532 Up to 2-7843		1	1	1	
		W) SEE WB-0608 WARRANTY BULLETIN					

From Y-7046 Up to 7-9095	DATE: 01/2014	PAGE: Y2-0620-00

REAR JUNCTION BOX ASSY

ITEM	PART	DESCRIPTION	XL45	MTH40	MTH45	MTH45S	NOTE
52	065666	CABLE ASSY / FOR MAJOR COMPONENTS From 2-7844 Up to 4-8251		1	1	1	
52	065947	CABLE ASSY / FOR MAJOR COMPONENTS From 4-8252 Up to 4-8358		1	1	1	
52	065974	CABLE ASSY / FOR MAJOR COMPONENTS From 4-8359 Up to 5-8644		1	1	1	
52	066349	CABLE ASSY / FOR MAJOR COMPONENTS From 5-8645 Up to 7-9000		1	1	1	
52	066847	CABLE ASSY / FOR MAJOR COMPONENTS From 7-9001		1	1	1	
52	065533	CABLE ASSY / FOR MAJOR COMPONENTS From 1-7687 Up to 2-7764	1				
52	065570	CABLE ASSY / FOR MAJOR COMPONENTS From 2-7765 Up to 2-7823	1				
52	065599	CABLE ASSY / FOR MAJOR COMPONENTS From 2-7824 Up to 4-8244	1				
52	065935	CABLE ASSY / FOR MAJOR COMPONENTS From 4-8245 Up to 4-8358	1				
52	065978	CABLE ASSY / FOR MAJOR COMPONENTS From 4-8359 Up to 5-8644	1				
52	066441	CABLE ASSY / FOR MAJOR COMPONENTS From 5-8645 Up to 6-8758	1				
52	066566	CABLE ASSY / FOR MAJOR COMPONENTS From 6-8759	1				
52	066589	CABLE ASSY / FOR MAJOR COMPONENTS / O.C.2004089 From 6-8606	1				
54	562360	CONNECTOR / HD10 SERIES / PH 6C / BLACK / DEUTSCH HD10-6-12P-BLACK	1				
55	500379	NUT HEX 3/8-16 BR	3				
56	500478	WASHER LO SPT .380x.683x.094 ZP	3				
57	Y2-0665-10	**SWITCHES, LIGHTS, AJAR - UNDER FLOOR**					
59	381145	DIODE ASSY / W/5 3AMPS	2				
59	381145	DIODE ASSY / W/5 3AMPS		1	1	1	
59	560931	. DIODE / 3AMPS		5	5	5	
59	561986	. CONNECTOR / UNIVERSAL MATE-N-LOK / SH 15C / AMP 1-480710-0		1	1	1	
59	561514	. SOCKET TERMINAL / 20-14 / AMP 350537-3		10	10	10	
64	381566	SUPPORT / R.H.	2				
64	381503	SUPPORT / R.H.		1	1	1	
65	381504	SUPPORT / L.H.		1	1	1	
66	500873	SCREW MA RND PH #8-32x3/4 SS EMN	14				
67	500764	NUT HEX #8-32 ZP	14				
68	500518	SCREW MA BDG PH #4-40x1/2 ZP	4				
72	381737	HINGE	3				
73	063459	ARM, STRAIGHT SECTION / DOOR RETAINING	1				
73	500010	SCREW CAP HEX 1/4-28x1 G5 PT ZP	1				
73	500440	WASHER FL .250x.562x.065 ZP	2				
73	500473	WASHER LO SPT .262x.489x.062 ZP	1				
73	500162	SCREW CAP HEX 1/4-20x1/2 G5 ZP	2				
73	500770	NUT HEX STO 1/4-20 ZP	2				
78	011166	DECAL / V.I.N.	1				
79	681277	PROTECTOR TAPE / C.T.L.	AR				

From Y-7046 Up to 7-9095	DATE: 01/2014	PAGE: Y2-0620-00

REAR JUNCTION BOX ASSY

ITEM	PART	DESCRIPTION	XL45	MTH40	MTH45	MTH45S	NOTE
84	504637	CABLE TIE / 3/16" x 13"	7				
85	060798	DIODE ASSY / REPLACED BY: 064792		1	1	1	
87	561821	NUT, RING #17 & 20 / 1.500" I.D W/4 4-40	1				
89	064051	ARM, W/OFFSET SECTION / DOOR RETAINING	1				
90	065812	CABLE ASSY / W/TRAILER	1				D
91	562602	FUSE / ATO 7.5 AMPS BROWN	5				
100	064206	FAN CLUTCH, MODULE ASSY	1				
100	064207	. SUPPORT	1				
101	064209	. CABLE ASSY	1				
102	560772	. TIME DELAY RELAY	1				
103	064208	. RESISTOR ASSY 75K OHMS / 1/4 W	1				
104	561707	. RELAY 24V S.P.D.T. W/RESISTOR / Up to 5-8577	2				
104	563332	. RELAY 24V S.P.D.T. W/RESISTOR / "VOLVO" (20374662) From 5-8578	2				
105	500883	. SCREW TC PAN PH #8-32x3/8 ZP	2				
106	504013	. TIE MOUNT / 1/4" X 1/4" I.D.	1				
106	500378	. SCREW MA RND SLT #5-40x3/4 ZP / REPLACED BY: 500380	2				
106	502630	. WASHER FL .156x.375x.049 ZP	1				
106	500766	. NUT HEX #5-40 ZP	2				
106	504273	. CABLE TIE / 1/8" X 3"1/2	1				
106	502691	. WASHER LO SPT 3.6x6.7x0.8 ZP	2				
110	066757	KIT, LAVATORY FAN POWER W/"ZF" TRANS From 3-7962 Up to 5-8682	1				
. NS	WB06-03	. SEE WARRANTY BULLETIN From 3-7962 Up to 5-8682					
		D) USE WITHOUT RETARDER & WITHOUT A/C IN PARCEL					
		RACK					

From 7-9096 Up to 8-9339	DATE: 01/2014	PAGE: Y2-0620-05

REAR JUNCTION BOX FAN - INSTALLATION

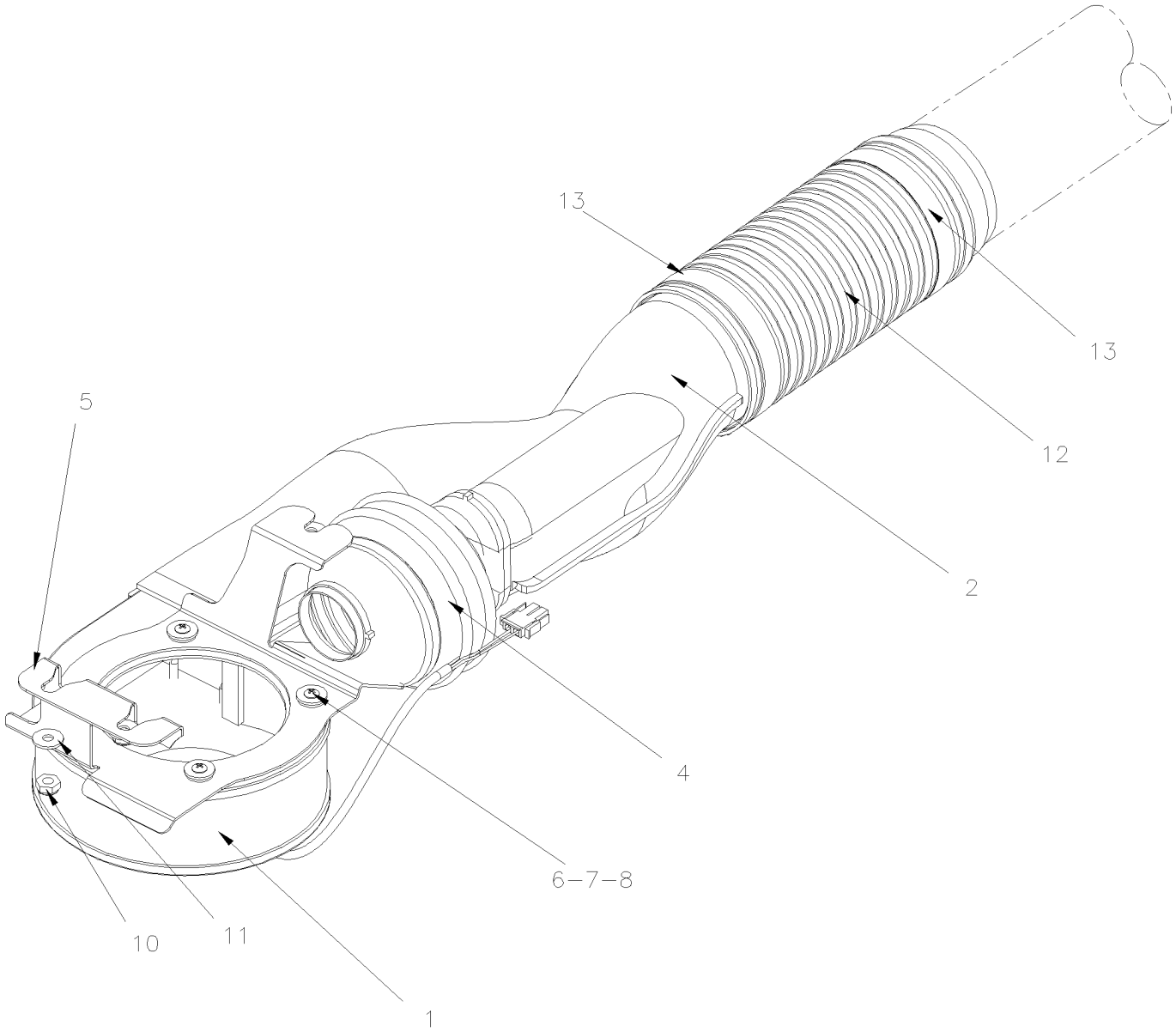

From 7-9096 Up to 8-9339	DATE: 01/2014	PAGE: Y2-0620-05

REAR JUNCTION BOX FAN - INSTALLATION

ITEM	PART	DESCRIPTION	XL45	MTH40	MTH45	MTH45S	NOTE
	Call Order Desk	FAN ASSY / REAR JUNCTION BOX, W/MUX			1	1	P
1	454539	. FAN ASSY 24V W/CONNECTOR			1	1	
2	950438	. ADAPTOR "Y" FAN & CABLE TUBE			1	1	
3	504024	. HOSE CLAMP / 1"13/16"-2"3/4 SS / HS-36			1	1	
4	504533	. CUFF END BELLOW / 2 3/8" I.D. x 2 3/8" x 4"			1	1	
5	454521	. SUPPORT			1	1	
6	500642	. SCREW TP BDG PH #10x3/4 ZP			8	8	
7	5001462	. WASHER FL 6.4x18.0x1.6 ZP			4	4	
8	500950	. WASHER FL .187x.625x.094 RUB			8	8	
10	502716	NUT HEX NYRT 1/4-20 / REPLACED BY: 5001123			4	4	
11	5001462	WASHER FL 6.4x18.0x1.6 ZP			4	4	
12	454522	HOSE FLEXIBLE 3 1/2 I.D X 200MM			1	1	
NS	503746	. HOSE FLEXIBLE / AIR DUCT 3 1/2" I.D. X 12`/ PLASTIC			AR	AR	
13	504026	HOSE CLAMP / 2"13/16-3"3/4 SS / HS-52			2	2	
		P) CALL ORDER DESK FOR SPECIFIC APPLICATION					
		(V.I.N.)					

From 7-9096 Up to 8-9339	DATE: 01/2014	PAGE: Y2-0620-50

REAR JUNCTION BOX ASSY - MTH WITH MUX (D380244)

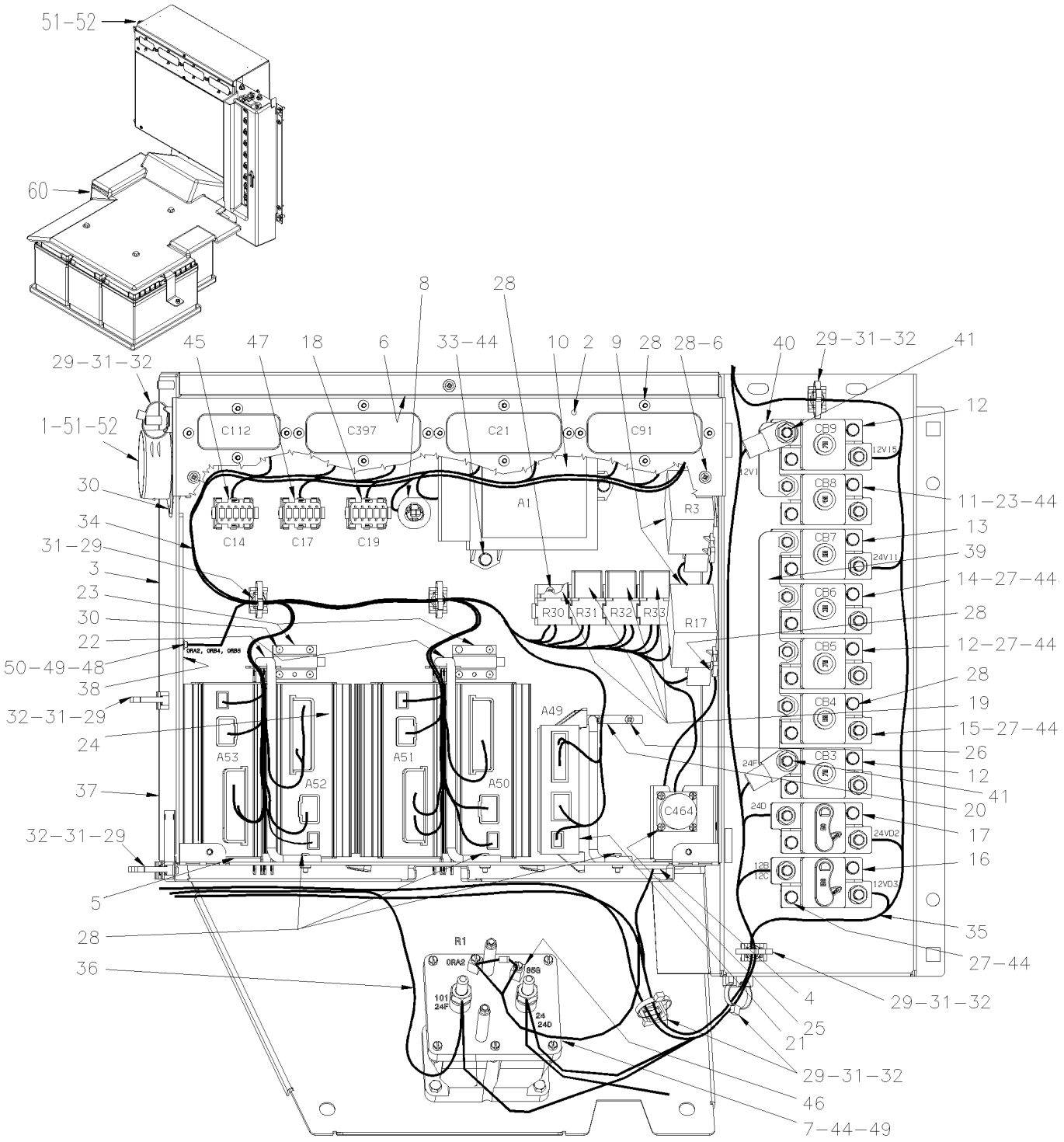

From 7-9096 Up to 8-9339	DATE: 01/2014	PAGE: Y2-0620-50

REAR JUNCTION BOX ASSY - MTH WITH MUX (D380244)

ITEM	PART	DESCRIPTION	XL45	MTH40	MTH45	MTH45S	NOTE
1	329119	HOSE ADAPTOR 2 1/2" O.D.			1	1	
2	382199	CONECTOR PANEL SUPPORT			1	1	
NS	382226	COVER REAR JCT BOX			1	1	
3	382203	BOX ASSY			1	1	
4	502681	NUT HEX NYRT M6-1.0 ZG603			3	3	
5	5060074	TAPE RUB ADH1 URE 3/8" X 2" X 30' / GREY 1820			AR	AR	
6	504357	WASHER FL .187x.437x.050 SS			3	3	
7	562364	RELAY 24V S.P.S.T. / 300 AMPS N.O. / / BATTERY DISCONECT			1	1	
8	563335	SENSOR THERMISTOR ASSY / OUTSIDE / / PED 15416387			1	1	
9	563348	RELAY POWER 24V 200 AMPS / S.P.D.T. N.O.			2	2	
. NS	502581	. NUT HEX M6-1.0 ZP			2	2	
. NS	502564	. WASHER LO SPT 6.1x11.8x1.6 ZP			2	2	
. NS	563409	. CONNECTOR / SUPERSEAL 1.5 SERIES / SH 2C / AMP 282080-1			1	1	
. NS	562607	. SOCKET TERMINAL 20-16 / AMP 183025-1			2	2	
10	572037	E.C.U. HD4060R / GEN IV Up to 7-9146			1		
10	572045	E.C.U. HD4000MG / GEN IV Up to 7-9143			1		
10	572028	E.C.U. B500 / GEN IV Up to 7-9146				1	
10	572044	E.C.U. B500 / GEN IV From 7-9144				1	
11	563705	BREAKER 40AMPS / 24V /			1	1	
12	563707	BREAKER 70AMPS / 24V /			1	1	
13	563706	BREAKER 60AMPS / 24V /			1	1	
14	563704	BREAKER 35AMPS / 24V /			1	1	
15	563708	BREAKER 90AMPS / 24V /			1	1	
16	563709	BREAKER 150AMPS / 24V /			1	1	
17	563710	BREAKER 50AMPS / 24V /			1	1	
18	381145	DIODE ASSY / W/5 3AMPS			1	1	
19	563332	RELAY 24V S.P.D.T. W/RESISTOR / "VOLVO" (20374662)			4	4	
20	382179	ROD ATTACHMENT CABLE / I/O A			1	1	
21	563272	I/O A-MODULE VOLVO MULTIPLEX / BLACK Up to 7-9116 / REPLACED BY: 564101			1	1	
21	565864	I/O A-MODULE VOLVO MULTIPLEX / BLACK From 7-9117 / REPLACED BY: 564101			1	1	
22	382166	ROD ATTACHMENT CABLE / I/O B			2	2	
23	382169	HINGE ROD ATTACHMENT			2	2	
24	563273	I/O B-MODULE VOLVO MULTIPLEX / ALLUMINUM Up to 7-9116			4	4	
24	565865	I/O B-MODULE VOLVO MULTIPLEX / ALLUMINUM From 7-9117 / REPLACED BY: 564075			4	4	
25	500601	SCREW TC PAN PH #6-32x3/8 ZG603			4	4	
26	500965	SCREW TC BDG PH #8-32x1/2 ZG603			2	2	
27	502622	SCREW CAP HEX M6-1.0x20 SS EMN			22	22	
28	502698	SCREW MA PAN PH M4-0.7x16 SS EMN			30	30	
29	504013	TIE MOUNT / 1/4" X 1/4" I.D.			10	10	
30	504340	RIVET POP DOME OE 1/8x3/16 SS			12	12	
31	504379	RIVET POP DOME OE 3/16x1/4 SS			10	10	
32	504637	CABLE TIE / 3/16" x 13"			AR	AR	
33	955269	SCREW CAP HEX M6-1.0x12 G8.8 ZG603			3	3	
34	066785	CABLE HARNESS / REAR JUNCTION BOX			1	1	

From 7-9096 Up to 8-9339	DATE: 01/2014	PAGE: Y2-0620-50

REAR JUNCTION BOX ASSY - MTH WITH MUX (D380244)

ITEM	PART	DESCRIPTION	XL45	MTH40	MTH45	MTH45S	NOTE
35	066786	CABLE POWER / <> BREAKERS & HVAC			1	1	
36	066833	CABLE STARTER W/MUX			1	1	
37	066918	INSULATED PAD			1	1	
38	066938	INSULATED PAD			1	1	
39	382211	BUS BAR 5 HOLES			1	1	
40	382212	BUS BAR 2 HOLES			1	1	
41	5001522	NUT HEXF LO 3/8-16 SS			2	2	
44	502570	WASHER LO SPT 6.1x11.8x1.6 SS			21	21	
45	382175	DIODE ASSY / W/3 3AMPS & 2 RESISTORS 100 OHMS			1	1	
46	064792	DIODE ASSY			1	1	
. NS	561740	. DIODE / 3AMPS			1	1	
. NS	560082	. RING TERMINAL #10 / 16-14 / INSULATED / AMP 626033-2			1	1	
. NS	560815	. RING TERMINAL #10 / 22-18 / INSULATED / AMP 42037-2			1	1	
. NS	562499	. SHRINK TUBING / .250" - .125" / CLEAR / ALPHA FIT 221-1/4			AR	AR	
47	382097	DIODE ASSY / W/3 3AMPS & 2 RESISTORS 270 OHMS			1	1	
48	502681	NUT HEX NYRT M6-1.0 ZG603			1	1	
49	500877	WASHER FL .250x.562x.065 ZG603			1	1	
50	5001182	NUT HEX NYRT M6-1.0 SS			4	4	
51	503031	HOSE FLEXIBLE / AIR DUCT 2 1/2" I.D. X 12`/ RUBBER			AR	AR	
NS	5060085	PIPE INSULATING / 2 5/8" I.D. X 1/2" TH. X 72			AR	AR	
52	504023	HOSE CLAMP / 1"5/16-2"1/4 SS / HS-28			1	1	
60	Y2-0615-51	**BATTERIES INSTALLATION - MTH WITH / MUX**	1				

From 7-9096 Up to 8-9339	DATE: 01/2014	PAGE: Y2-0620-50

REAR JUNCTION BOX ASSY - MTH WITH MUX (D380244)

ITEM	PART	DESCRIPTION	XL45	MTH40	MTH45	MTH45S	NOTE

From Y-7046 Up to 8-9095	DATE: 01/2014	PAGE: Y2-0621-00
A/C JUNCTION BOX ASSY		

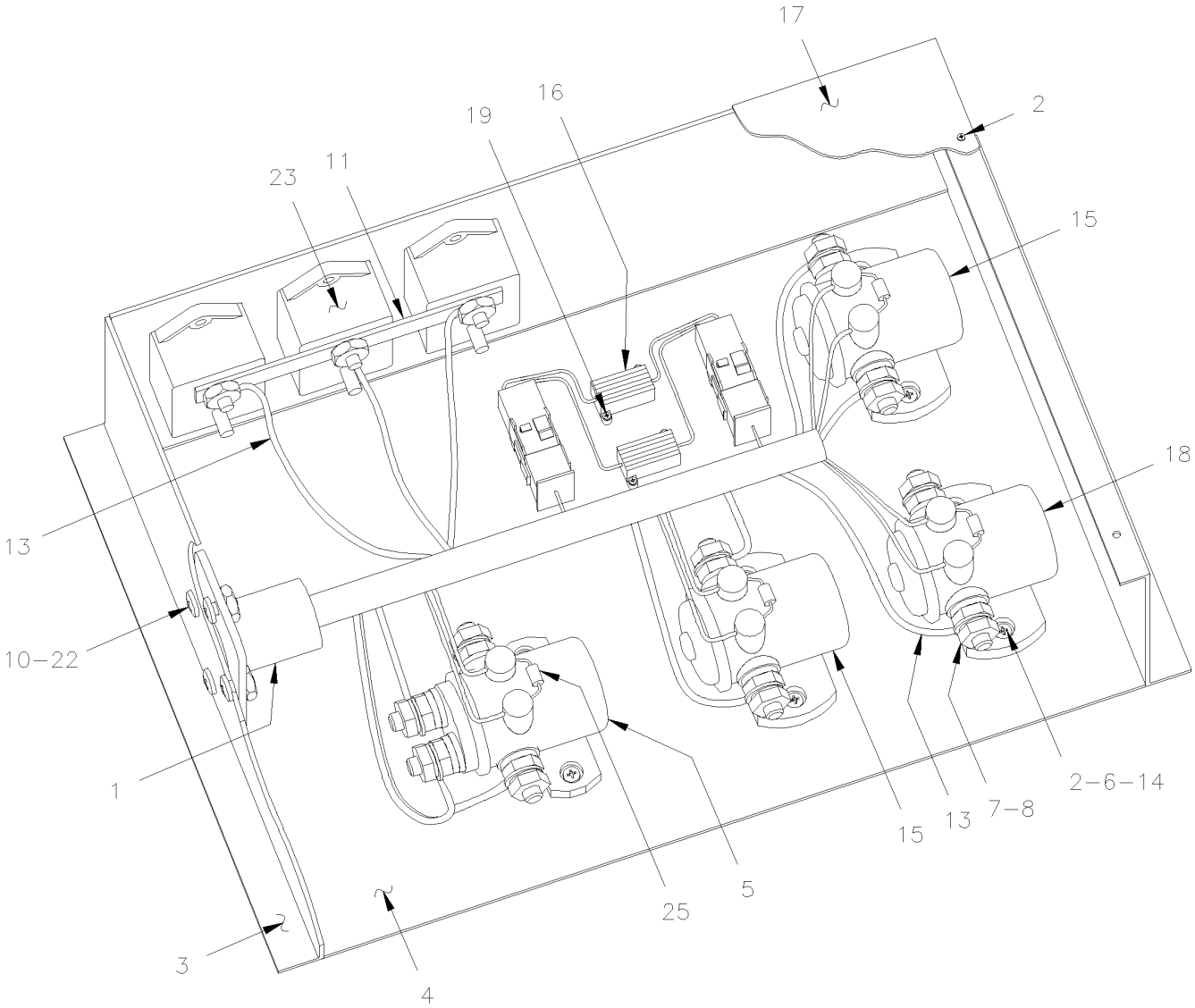

UP TO 3–8101

From Y-7046 Up to 8-9095	DATE: 01/2014	PAGE: Y2-0621-00
A/C JUNCTION BOX ASSY		

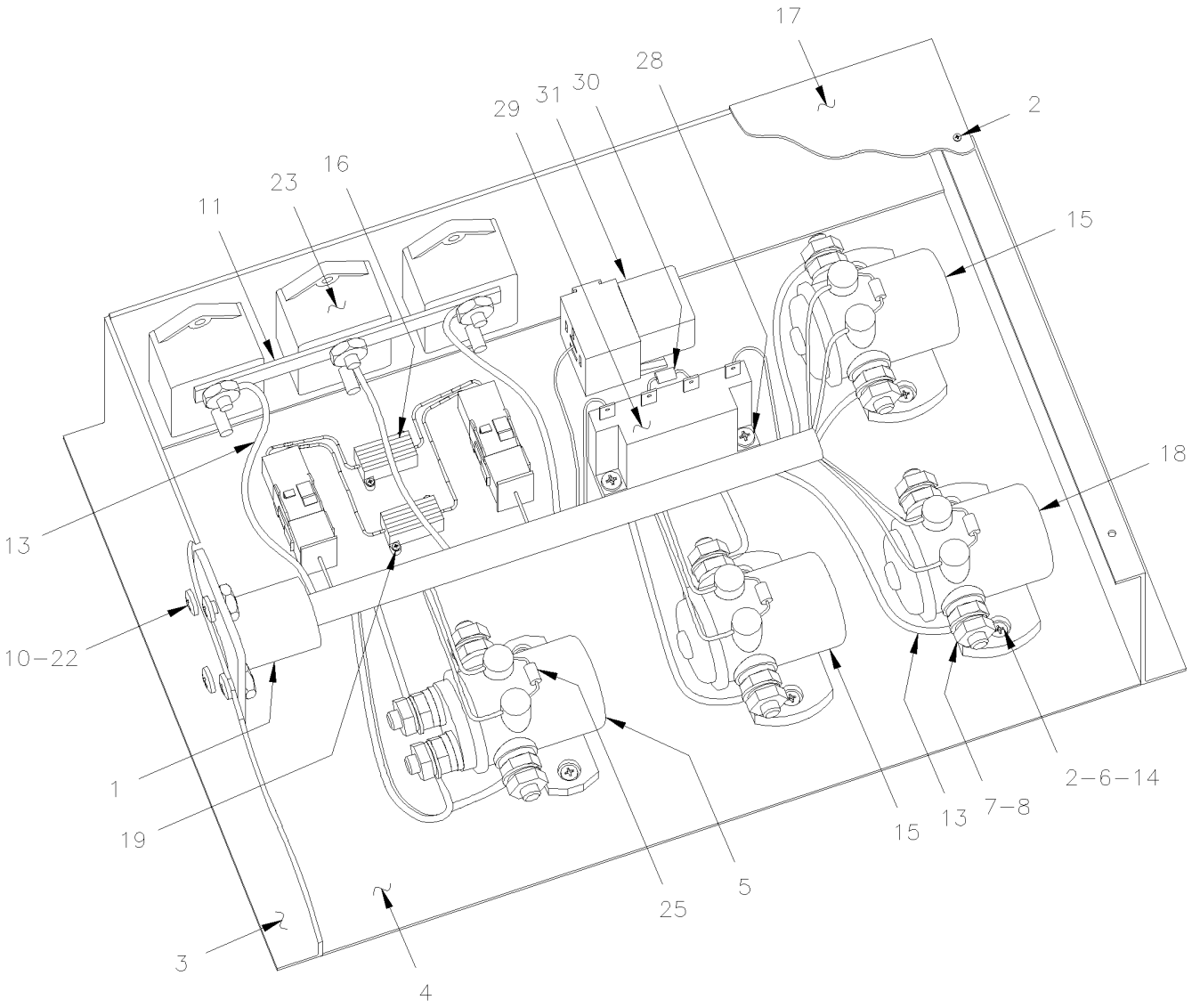

FROM 3–8102

From Y-7046 Up to 8-9095	DATE: 01/2014	PAGE: Y2-0621-00

A/C JUNCTION BOX ASSY

ITEM	PART	DESCRIPTION	XL45	MTH40	MTH45	MTH45S	NOTE
	382029	A/C JUNCTION BOX ASSY / W/RELAY Up to 3-8101	1	1	1	1	
	Call Order Desk	A/C JUNCTION BOX ASSY / W/RELAY From 3-8102	1				P
	Call Order Desk	A/C JUNCTION BOX ASSY / W/RELAY From 3-8102 Up to 6-8805		1	1	1	P
	Call Order Desk	A/C JUNCTION BOX ASSY / W/RELAY From 6-8806		1	1	1	P D
1	065057	. CABLE ASSY / A/C JCT BOX Up to 3-8101	1	1	1	1	
1	065768	. CABLE ASSY / A/C JCT BOX From 3-8102	1	1	1	1	
2	500632	. SCREW TP OV PH #8x1 1/2 ZP	2				
2	500638	. SCREW TP BDG PH #8x1/2 ZP	8	8	8	8	
3	381919	. A/C FRAME BOX	1	1	1	1	
3	381919	. A/C FRAME BOX Up to 6-8805		1	1	1	
3	382140	. A/C FRAME BOX From 6-8806		1	1	1	D
4	381921	. BOX BOTTOM	1				
5	561014	. SWITCH MAGNETIC / 24V D.P.S.T. / 200AMPS N.O.	1	1	1	1	
6	500438	. WASHER FL .187x.437x.050 ZP	2				
6	500438	. WASHER FL .187x.437x.050 ZP	12	12	12	12	
7	500699	. NUT HEX 5/16-24 ZP	8	8	8	8	
8	500476	. WASHER LO SPT .317x.586x.078 ZP	8	8	8	8	
9	502677	. SCREW MA RND PH M4-0.7x25 SS	6	6	6	6	
10	500590	. NUT HEX NYRT M4-0.7 ZP	10	10	10	10	
11	381047	. BUS BAR / W/3 HOLES / 60MM C/C	1	1	1	1	
12	562688	. BREAKER 120AMPS / 24V /	1	1	1	1	
13	065133	. CABLE ASSY NO. 130A	1				
14	500470	. WASHER LO SPT .193x.334x.047 ZP	2				
14	500470	. WASHER LO SPT .193x.334x.047 ZP	6	6	6	6	
15	561005	. SWITCH MAGNETIC / 24V S.P.S.T. / 200AMPS N.O.	2	2	2	2	
16	064907	. RESISTOR ASSY	1	1	1	1	
17	381920	. BOX COVER	1	1	1	1	
NS	065058	. DECAL A/C JCT BOX	1	1	1	1	
18	561005	. SWITCH MAGNETIC / 24V S.P.S.T. / 200AMPS N.O.	1				
19	500798	. SCREW TP PAN PH #4-3/8 ZP	4	4	4	4	
20	504068	. GROMMET / .500x.750x.062x.312x1.062	1	1	1	1	
21	504264	. GROMMET / .750x1.250x.062x.250x1.625	1	1	1	1	
22	502698	. SCREW MA PAN PH M4-0.7x16 SS EMN	4	4	4	4	
23	562686	. BREAKER 40AMPS / 24V /	2	2	2	2	
NS	Call Order Desk	. DECAL Up to 3-8101	1	1	1	1	P
NS	065770	. DECAL From 3-8102	1	1	1	1	
25	060798	. DIODE ASSY / REPLACED BY: 064792	3	3	3	3	
26	506071	. TAPE RUB ADH1 CC POL 1/8" x 1/2" x 50' / GREY 2520X	AR	AR	AR	AR	
28	500583	. SCREW TP BDG PH #6x1/2 ZP From 3-8102	2	2	2	2	
29	560772	. TIME DELAY RELAY From 3-8102	1	1	1	1	
30	065755	. RESISTOR ASSY 330K/OHMS / 1/2 W From 3-8102	1				
		P) CALL ORDER DESK FOR SPECIFIC APPLICATION					
		(V.I.N.)					
		D) FIXED ON EVAPORATOR DOOR					

From Y-7046 Up to 8-9095	DATE: 01/2014	PAGE: Y2-0621-00

A/C JUNCTION BOX ASSY

ITEM	PART	DESCRIPTION	XL45	MTH40	MTH45	MTH45S	NOTE
30	065613	. RESISTOR ASSY 30K OHMS / 1/4 W From 3-8102		1	1	1	
31	561707	. RELAY 24V S.P.D.T. W/RESISTOR / From 3-8102 Up to 5-8577	1	1	1	1	
31	563332	. RELAY 24V S.P.D.T. W/RESISTOR / "VOLVO" (20374662) From 5-8578	1				

From Y-7046 Up to 7-9095	DATE: 01/2014	PAGE: Y2-0621-10

CABLE & HARNESS EVAPO. & CONDENSOR - INST

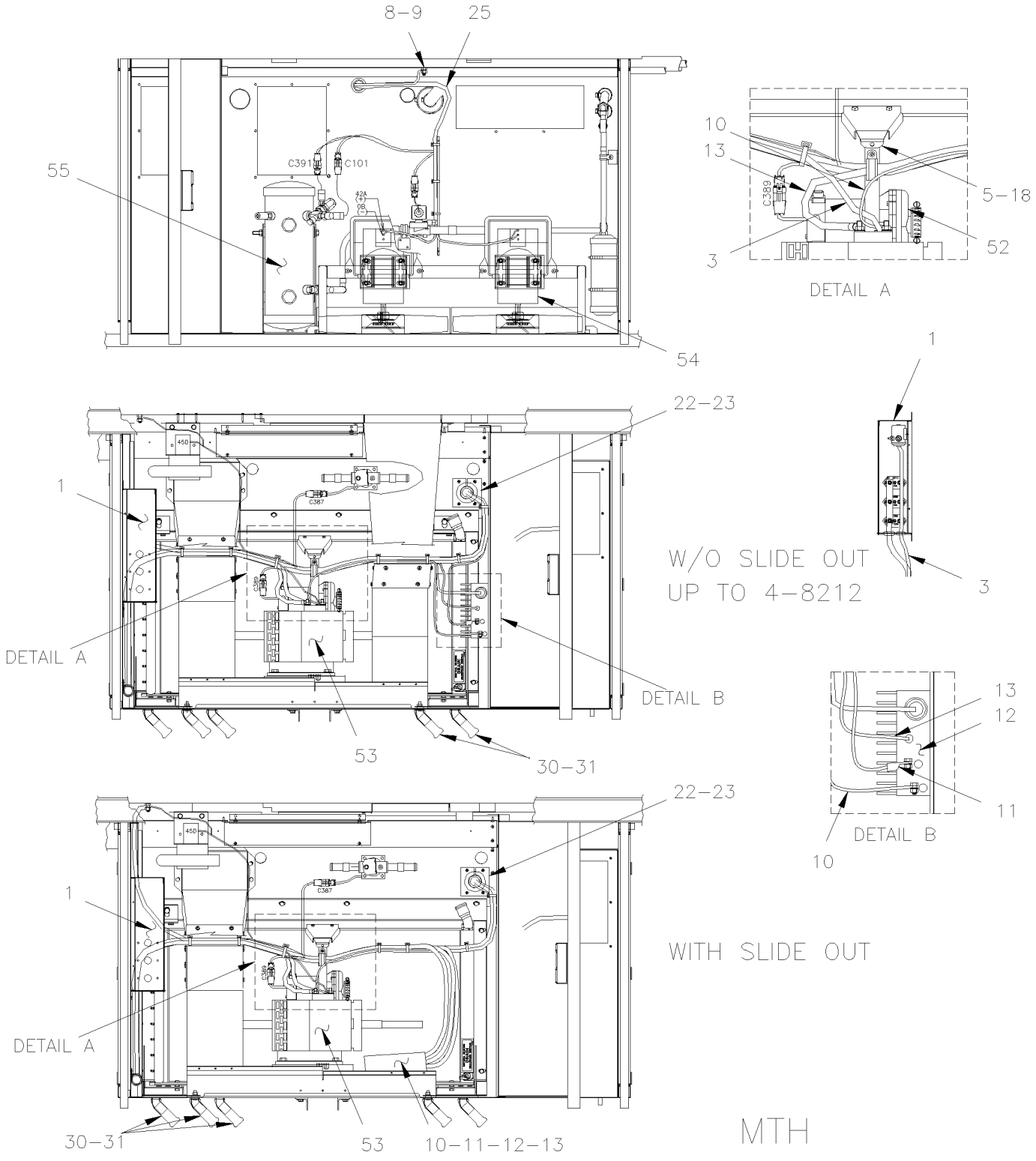

From Y-7046 Up to 7-9095	DATE: 01/2014	PAGE: Y2-0621-10

CABLE & HARNESS EVAPO. & CONDENSOR - INST

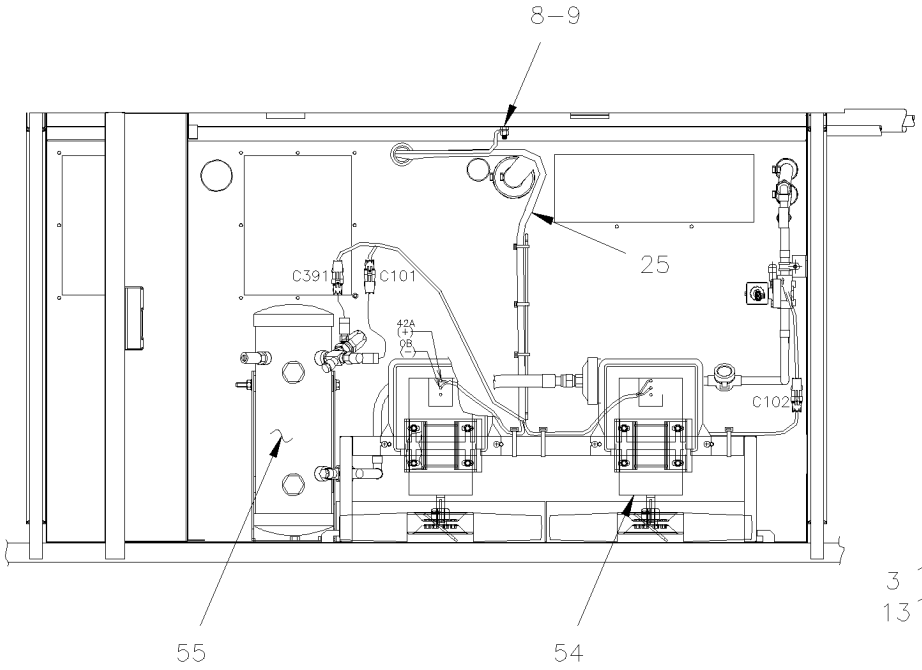

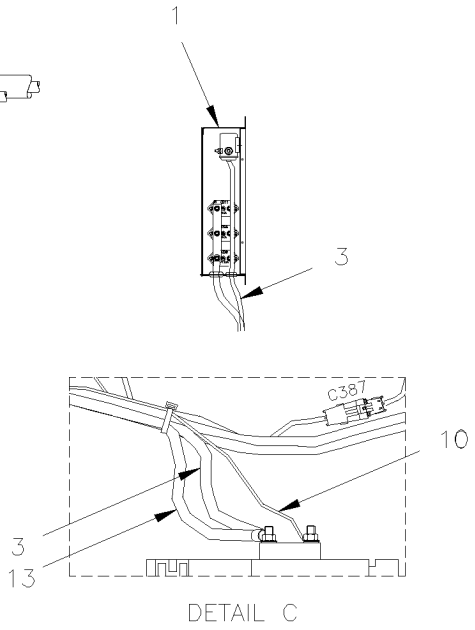

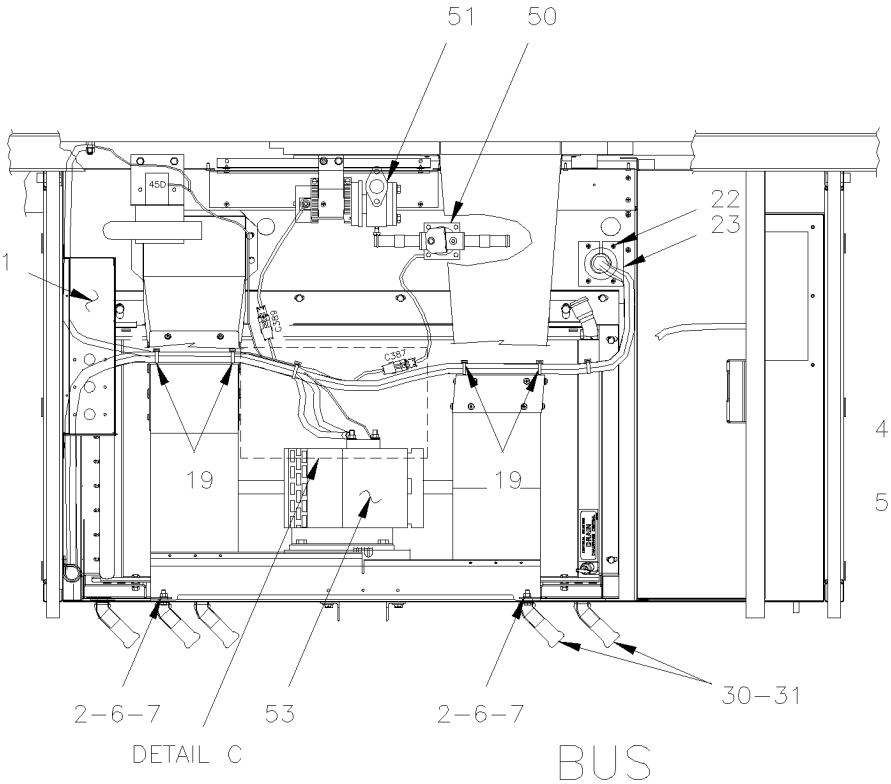

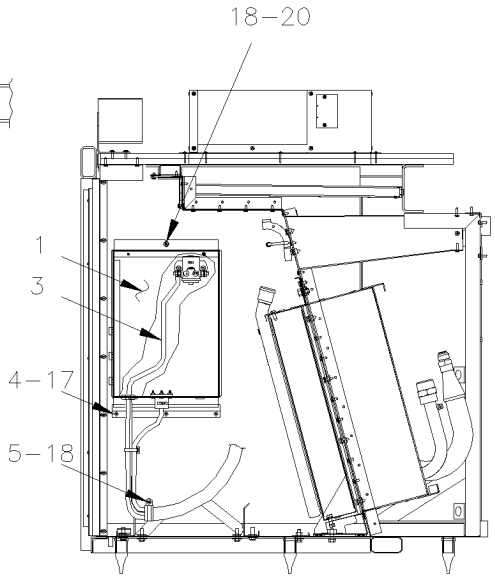

BUS

From Y-7046 Up to 7-9095	DATE: 01/2014	PAGE: Y2-0621-10

CABLE & HARNESS EVAPO. & CONDENSOR - INST

ITEM	PART	DESCRIPTION	XL45	MTH40	MTH45	MTH45S	NOTE
1	Y2-0621-00	**A/C JUNCTION BOX ASSY**					
3	065134	CABLE ASSY #130	1				
3	065087	CABLE ASSY #130 Up to 4-8212		1	1	1	
3	065134	CABLE ASSY #130 Up to 4-8212			1		
3	065888	CABLE ASSY #130 / W/SLIDE-OUT From 4-8213			1		
4	381929	SUPPORT A/C BOX	1	1	1	1	
5	952641	CLAMP / 1 5/16" I.D.	1	1	1	1	
6	502909	NUT HEX 5/16-24 ZG603	2	2	2	2	
7	500476	WASHER LO SPT .317x.586x.078 ZP	2	2	2	2	
8	500379	NUT HEX 3/8-16 BR	1	1	1	1	
9	500478	WASHER LO SPT .380x.683x.094 ZP	1	1	1	1	
10	063840	CABLE #166B / <> SPEED CONTROL & MOTOR Up to 4-8212		1	1	1	
11	063625	CABLE #0 / <> GROUND & SPEED CONTROL		1	1	1	
12	871086	CONTROL SPEED Up to 4-8212		1	1	1	
13	063841	CABLE #0A / <> SPEED CONTROL & MOTOR Up to 4-8212			1		
13	061073	CABLE GROUND Up to 4-8212			1		
14	502531	SCREW CAP HEX M6-1.0x16 G8.8 ZP Up to 4-8212		3	3	3	
15	502621	NUT HEX STO M6-1.0 ZP Up to 4-8212		3	3	3	
16	500446	WASHER FL .531x1.250x.125 ZP Up to 4-8212		3	3	3	
17	504105	RIVET POP DOME OE 1/8x3/16 AL	3	3	3	3	
18	500946	SCREW TP BDG PH #8x1/2 ZG603	6	6	6	6	
19	504637	CABLE TIE / 3/16" x 13"	10	10	10	10	
20	500940	SCREW TP FL PH #10x2 ZP	1	1	1	1	
21	500535	SCREW TP CAP HEX #14x3/4 ZP	4	4	4	4	
22	500948	SCREW TC CAP HEX 1/4-20x1 ZP	4	4	4	4	
23	065179	PLATE CLOSING	1	1	1	1	
24	684013	RUBBER PROTECTOR / COLOR GUARD	AR	AR	AR	AR	
30	590284	DRAIN BOOT 1" I.D. X 5" / FLAT	6	6	6	6	
31	504021	HOSE CLAMP / 11/16"-1"1/2 SS / HS-16	6	6	6	6	
50	Y2-2207-20	**WATER VALVE - BYPASS W/WATER HEATER**					
51	Y2-2206-00	**WATER PUMP #871052 & #871204**					
51	Y2-2206-01	**WATER PUMP #871342 SEALLESS**					
52	Y2-2206-50	**WATER PUMP #871032**					
53	Y2-2265-00	**MOTOR - "PREVOST" - T-17**					
53	Y2-2265-01	**MOTOR - "PREVOST" - T-17 - 2 SPEEDS**					
54	Y2-2265-50	**MOTOR - "PREVOST" - TF-12**					
54	Y2-2265-51	**MOTOR - "PREVOST" - T11G**					
55	Y2-2270-00	**RECEIVER TANK & FILTER DRYER**					

From Y-7046 Up to 7-9095	DATE: 01/2014	PAGE: Y2-0621-10

CABLE & HARNESS EVAPO. & CONDENSOR - INST

ITEM	PART	DESCRIPTION	XL45	MTH400	MTH445	MTH445S	NOTE

From 7-9096 Up to 8-9339	DATE: 01/2014	PAGE: Y2-0621-50
A/C CONDENSOR MOTOR RELAY		

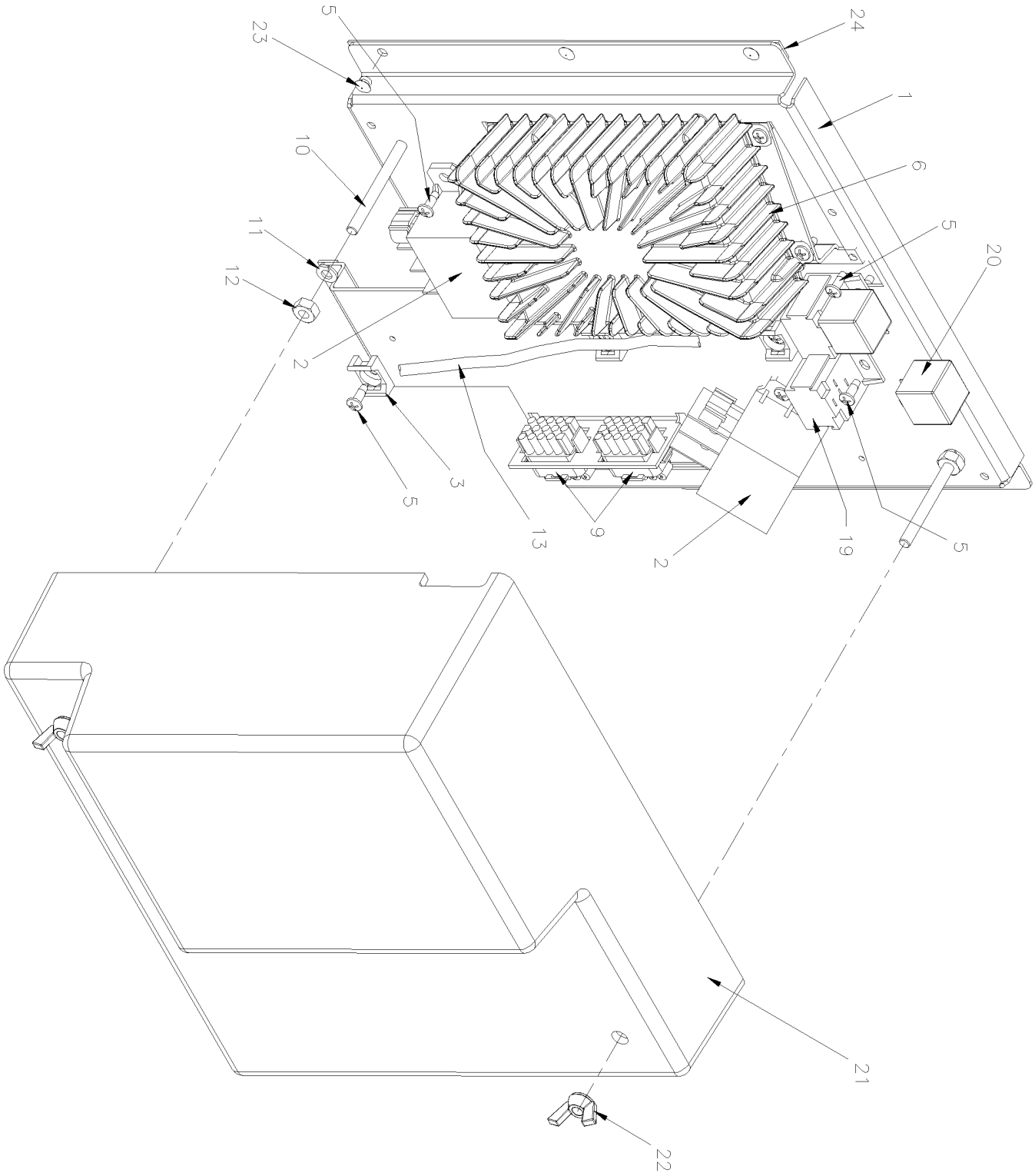

From 7-9096 Up to 8-9339	DATE: 01/2014	PAGE: Y2-0621-50

A/C CONDENSOR MOTOR RELAY

ITEM	PART	DESCRIPTION	XL45	MTH40	MTH45	MTH45S	NOTE
1	382077	PANEL MOUNTING REAR JCT BOX / MUX			1	1	
2	563348	RELAY POWER 24V 200 AMPS / S.P.D.T. N.O.			1	1	
. NS	502581	. NUT HEX M6-1.0 ZP			2	2	
. NS	502564	. WASHER LO SPT 6.1x11.8x1.6 ZP			2	2	
. NS	563409	. CONNECTOR / SUPERSEAL 1.5 SERIES / SH 2C / AMP 282080-1			1	1	
. NS	562607	. SOCKET TERMINAL 20-16 / AMP 183025-1			2	2	
3	504013	TIE MOUNT / 1/4" X 1/4" I.D.			AR	AR	
NS	504637	CABLE TIE / 3/16" x 13"			AR	AR	
5	502868	SCREW TC TR PH 10-24x1/2 ZG603			AR	AR	
6	563273	I/O B-MODULE VOLVO MULTIPLEX / ALLUMINUM Up to 7-9116			1	1	
6	565865	I/O B-MODULE VOLVO MULTIPLEX / ALLUMINUM From 7-9117 / REPLACED BY: 564075			1	1	
9	381145	DIODE ASSY / W/5 3AMPS			2	2	
10	5001593	SCREW MA RND SLT 1/4-20x2 3/4 SS			1	1	
11	500477	WASHER LO SPT .262x.489x.062 SS			1	1	
12	500771	NUT HEX 1/4-20 SS			1	1	
13	066782	CABLE ASSY / EVAPORATOR ACCESSORIES COMPART,			1	1	
19	561183	RELAY BASE / TAB TERMINAL / BOSCH 3334485008			1	1	
20	563332	RELAY 24V S.P.D.T. W/RESISTOR / "VOLVO" (20374662)			2	2	
21	382078	COVER PROTECTOR			1	1	
21	066279	DECAL RELAY IDENTIFICATION EVAPORATOR CONTROL			1	1	
NS	066155	DECAL PIN OUT / JCT BOX W/MUX			1	1	
22	5001348	NUT WING 1/4-20 NYL			1	1	
23	504379	RIVET POP DOME OE 3/16x1/4 SS			7	7	
24	506236	TAPE RUB ADH1 CC POL 1/16" x 1/2" x 100' / GREY 2520			AR	AR	

From Y-7046 Up to 7-9095	DATE: 01/2014	PAGE: Y2-0625-00

FRONT JUNCTION PANEL

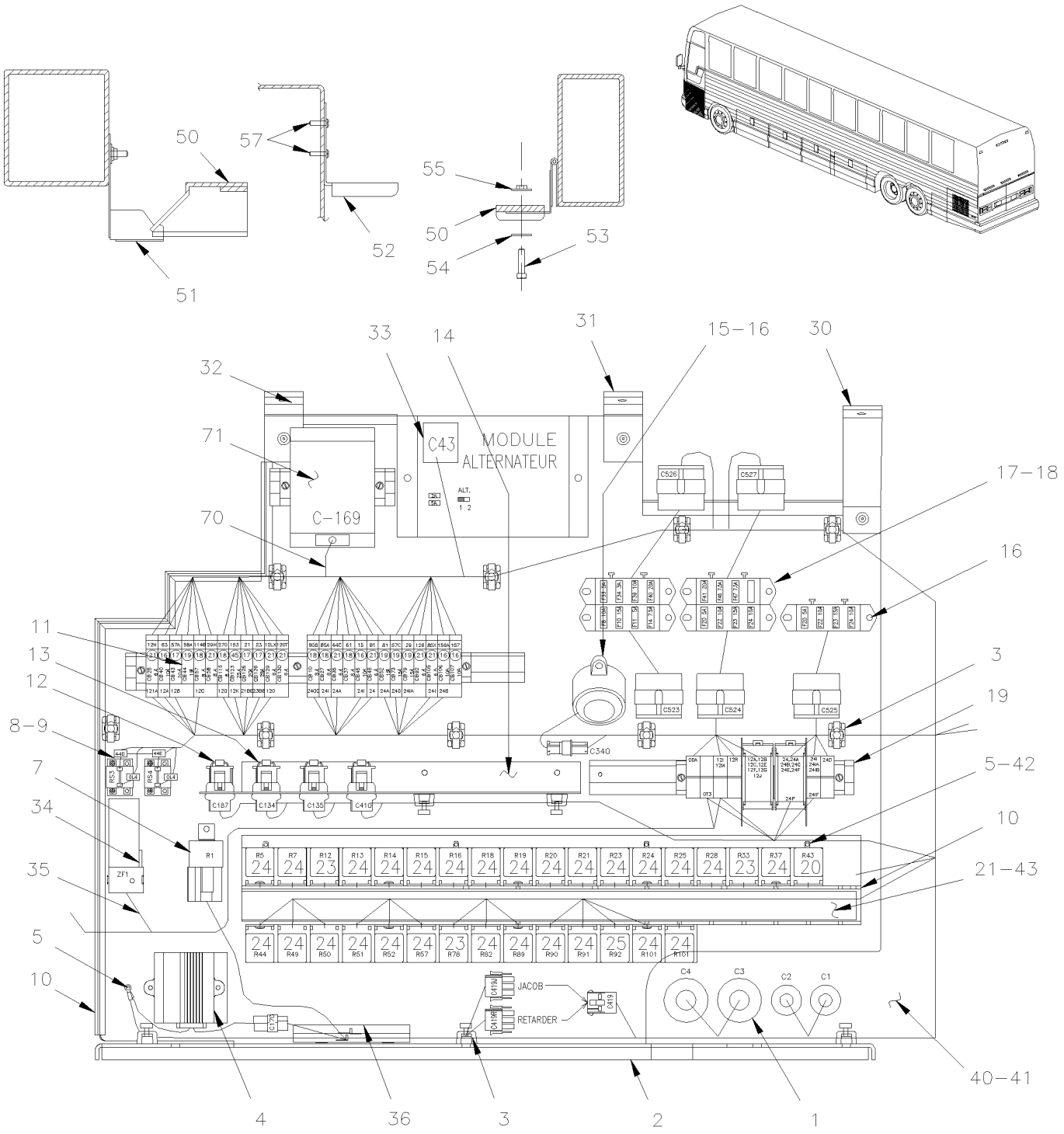

From Y-7046 Up to 7-9095	DATE: 01/2014	PAGE: Y2-0625-00
FRONT JUNCTION PANEL		

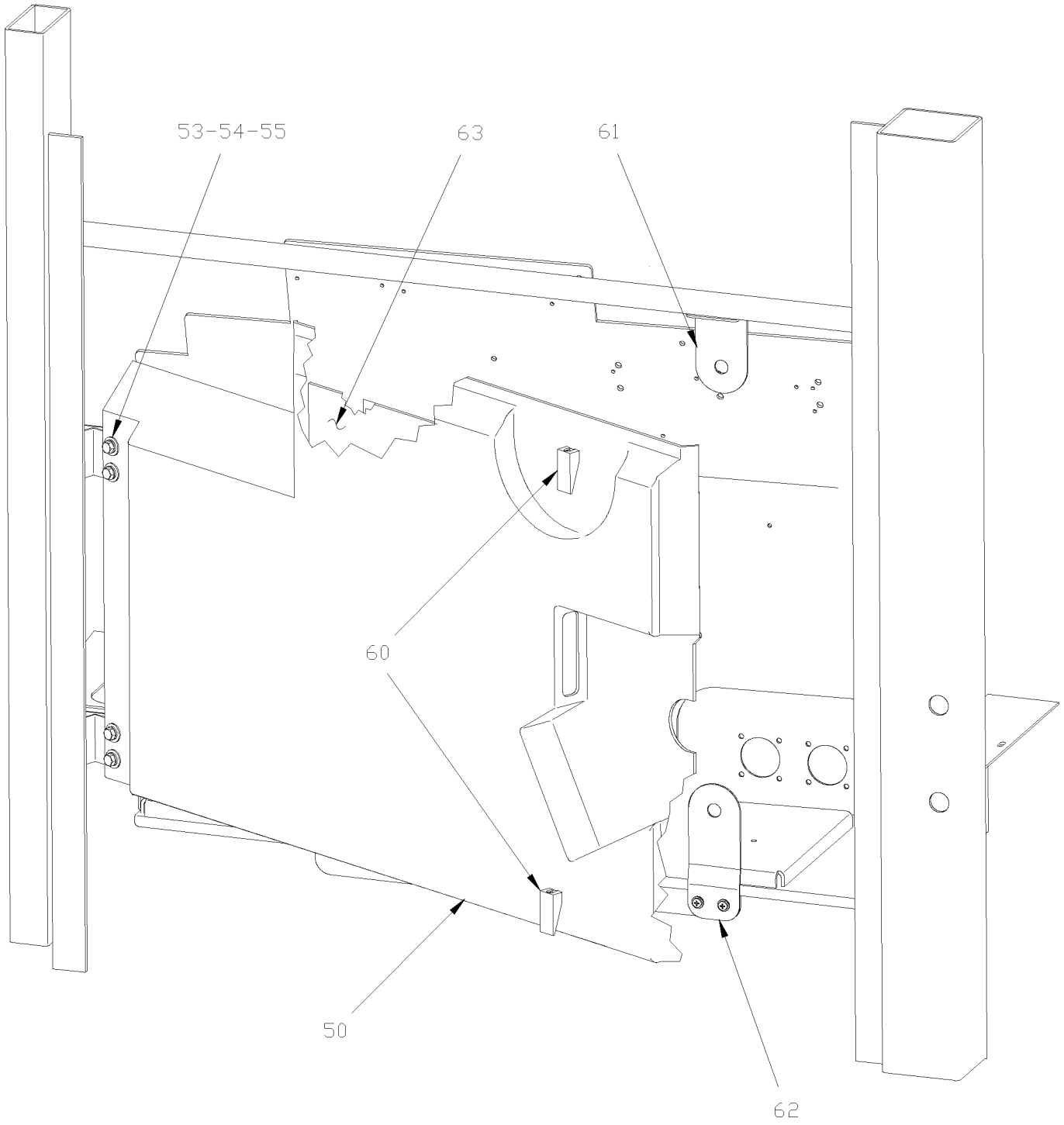

From Y-7046 Up to 7-9095	DATE: 01/2014	PAGE: Y2-0625-00

FRONT JUNCTION PANEL

ITEM	PART	DESCRIPTION	XL45	MTH40	MTH45	MTH45S	NOTE
1	065109	WIRING HARNESS FRONT JUNCTION BOX Up to 1-7310	1				
1	065347	WIRING HARNESS FRONT JUNCTION BOX From Y-7311 Up to Y-7376	1				
1	065403	WIRING HARNESS FRONT JUNCTION BOX From Y-7377 Up to 1-7524	1				
1	065449	WIRING HARNESS FRONT JUNCTION BOX From 1-7525 Up to 2-7799	1				
1	065575	WIRING HARNESS FRONT JUNCTION BOX From 2-7800 Up to 2-7824	1				
1	065595	WIRING HARNESS FRONT JUNCTION BOX From 2-7825 Up to 2-7832	1				
1	065648	WIRING HARNESS FRONT JUNCTION BOX From 2-7833 Up to 2-8130	1				
1	065762	WIRING HARNESS FRONT JUNCTION BOX From 3-8131 Up to 3-8164	1				C
1	065854	WIRING HARNESS FRONT JUNCTION BOX From 4-8165 Up to 4-8359	1				
1	065716	WIRING HARNESS FRONT JUNCTION BOX From 4-8359 Up to 5-8469	1				
1	066229	WIRING HARNESS FRONT JUNCTION BOX From 5-8470 Up to 5-8644	1				
1	066438	WIRING HARNESS FRONT JUNCTION BOX From 5-8645 Up to 6-8605	1				
1	066591	WIRING HARNESS FRONT JUNCTION BOX From 6-8606	1				
1	064815	WIRING HARNESS FRONT JUNCTION BOX Up to 1-7411		1	1	1	
1	065425	WIRING HARNESS FRONT JUNCTION BOX From 1-7412 Up to 1-7530		1	1	1	
1	065450	WIRING HARNESS FRONT JUNCTION BOX From 1-7531 Up to 2-7799		1	1	1	
1	065551	WIRING HARNESS FRONT JUNCTION BOX From 2-7800 Up to 2-7832		1	1	1	
1	065640	WIRING HARNESS FRONT JUNCTION BOX From 2-7833 Up to 4-8359		1	1	1	
1	065711	WIRING HARNESS FRONT JUNCTION BOX From 4-8359 Up to 5-8469		1	1	1	
1	066231	WIRING HARNESS FRONT JUNCTION BOX From 5-8470 Up to 5-8644		1	1	1	
1	066470	WIRING HARNESS FRONT JUNCTION BOX From 5-8645		1	1	1	
1	065688	WIRING HARNESS FRONT JUNCTION BOX From 2-7908 Up to 3-8130				1	D
1	065764	WIRING HARNESS FRONT JUNCTION BOX From 3-8131 Up to 4-8359				1	D
1	065713	WIRING HARNESS FRONT JUNCTION BOX From 4-8359 Up to 5-8469				1	D
1	066232	WIRING HARNESS FRONT JUNCTION BOX From 5-8470 Up to 5-8644				1	
1	066471	WIRING HARNESS FRONT JUNCTION BOX From 5-8645				1	
2	381941	FRONT PANEL BOX		1	1	1	
2	381909	FRONT PANEL BOX	1				
3	504013	TIE MOUNT / 1/4" X 1/4" I.D.	AR	AR	AR	AR	
NS	504347	RIVET POP DOME OE 3/16x1/4 AL	AR	AR	AR	AR	
NS	504637	CABLE TIE / 3/16" x 13"	AR	AR	AR	AR	
4	064421	FLASHER UNIT 12V ASSY W/CONNECTOR	4	4	4	4	
5	500638	SCREW TP BDG PH #8x1/2 ZP	AR	AR	AR	AR	
7	561991	RELAY 24V S.P.S.T. / 70 AMPS N.O.	1	1	1	1	
8	061976	RESISTOR ASSY 1 OHM 10 W	4	4	4	4	
NS	380923	INSULATOR	2	2	2	2	
NS	066001	RESISTOR ASSY 0.2 OHM 12.5 WATTS W/CONNECTOR From 4-8359	1	1	1	1	H
9	500583	SCREW TP BDG PH #6x1/2 ZP	8	8	8	8	
		C) WITH UPPER DEFROSTER					
		D) WITH TWIN ALTERNATOR "BOSCH"					
		H) USE ONLY WITH "HALOGENE" LAMP					

From Y-7046 Up to 7-9095	DATE: 01/2014	PAGE: Y2-0625-00

FRONT JUNCTION PANEL

ITEM	PART	DESCRIPTION	XL45	MTH40	MTH45	MTH45S	NOTE
10	506025	RUBBER CHANNEL / 1/18" x 5/16" INT "U" SHAPE / SQUARE C.T.L.	AR	AR	AR	AR	
NS	680066	GLUE / ADBOND 5014 ADH 23.6ML BOTTLE	AR	AR	AR	AR	
11	561790	BREAKER 6AMPS / 24V /	AR	AR	AR	AR	
11	561791	BREAKER 8AMPS / 24V /	AR	AR	AR	AR	
11	561792	BREAKER 10AMPS / 24V /	AR	AR	AR	AR	
11	561793	BREAKER 15AMPS / 24V /	AR	AR	AR	AR	
11	561794	BREAKER 20AMPS / 24V /	AR	AR	AR	AR	
NS	381802	FRONT BOX CLIP	1	1	1	1	
NS	504106	RIVET POP DOME OE 1/8x1/4 AL	1	1	1	1	
12	063286	RESISTOR CONNECTOR ASSY (FAST IDLE)	1	1	1	1	
13	381145	DIODE ASSY / W/5 3AMPS	6	6	6	6	
14	381880	DIODE SUPPORT	1	1	1	1	
15	064094	FIRE & KNEELING / ALARM ASSY / SERVICE / REPLACED BY: K064094	1	1	1	1	
16	500641	SCREW TP BDG PH #8x3/4 ZP	14	14	14	14	
17	562797	FUSE BLOCK W/4 LEDS & WIRES Up to 4-8244 / REPLACED BY: 563535	6	6	6	6	
17	563535	FUSE BLOCK W/4 LEDS & WIRES From 4-8245	6	6	6	6	
18	562599	FUSE / ATO 3 AMPS VIOLET	AR	AR	AR	AR	
18	562259	FUSE / ATO 5 AMPS AMBER	AR	AR	AR	AR	
18	562602	FUSE / ATO 7.5 AMPS BROWN	AR	AR	AR	AR	
18	562407	FUSE / ATO 10 AMPS RED	AR	AR	AR	AR	
18	562604	FUSE / ATO 15 AMPS BLUE	AR	AR	AR	AR	
18	562605	FUSE / ATO 20 AMPS YELLOW	AR	AR	AR	AR	
19	Y2-0616-00	**JUNCTION BOX COMPONENTS, RELAY & BREAKER**					
20	562622	DAYTIME RUN LTS MODULE 12V W/LOW BEAM	1	1	1	1	
21	064910	DECAL FRONT JUNCTION BOX RELAY Up to 2-7832		1	1	1	
21	065647	DECAL FRONT JUNCTION BOX RELAY From 2-7833		1	1	1	
21	065139	DECAL FRONT JUNCTION BOX RELAY Up to 2-7832	1				
21	065646	DECAL FRONT JUNCTION BOX RELAY From 2-7833 Up to 3-7992	1				
21	065759	DECAL FRONT JUNCTION BOX RELAY From 3-7993	1				
21	064911	DECAL FRONT JUNCTION BOX RELAY Up to 1-7411		1	1	1	
21	065426	DECAL FRONT JUNCTION BOX RELAY From 1-7412 Up to 2-7799		1	1	1	
21	065579	DECAL FRONT JUNCTION BOX RELAY From 2-7800 Up to 2-7832		1	1	1	
21	065643	DECAL FRONT JUNCTION BOX RELAY From 2-7833 Up to 3-7992		1	1	1	
21	065759	DECAL FRONT JUNCTION BOX RELAY From 3-7993 Up to 3-8130		1	1	1	
21	065760	DECAL FRONT JUNCTION BOX RELAY From 3-8131 Up to 4-8164		1	1	1	
21	065901	DECAL FRONT JUNCTION BOX RELAY From 4-8165 Up to 5-8358		1	1	1	
21	065714	DECAL FRONT JUNCTION BOX RELAY From 5-8359 Up to 5-8469		1	1	1	
21	066233	DECAL FRONT JUNCTION BOX RELAY From 5-8470		1	1	1	

From Y-7046 Up to 7-9095	DATE: 01/2014	PAGE: Y2-0625-00

FRONT JUNCTION PANEL

ITEM	PART	DESCRIPTION	XL45	MTH40	MTH45	MTH45S	NOTE
23	562092	RELAY 12V S.P.D.T. W/DIODE / Up to 5-8577 / REPLACED BY: 563337	3	3	3	3	
23	563337	RELAY 12V S.P.D.T. W/RESISTOR / From 5-8578	3				
24	561707	RELAY 24V S.P.D.T. W/RESISTOR / Up to 5-8577	AR	AR	AR	AR	
24	563332	RELAY 24V S.P.D.T. W/RESISTOR / "VOLVO" (20374662) From 5-8578	AR				
25	561538	RELAY 12V S.P.D.T. V 415 F11	1	1	1	1	
30	381912	ATTACHMENT BACKWARD	1	1	1	1	
31	381911	ATTACHMENT CENTER	1	1	1	1	
32	381914	ATTACHMENT FORWARD	1	1	1	1	
33	562947	CONTROL MODULE BOX / W / 2 "BOSCH" ALTERNATOR	1			1	
34	563033	E.C.U. / W/STEERING ASSIST (STP 272 or 330) ((77//125))	1	1	1	1	
34	563465	E.C.U. / W/STEERING ASSIST W/"ZF" TRANS ONLY (STP 146)	1				
35	064908	CABLE ASSY TO STEERING SPEED SIGNAL ECU / W/"ZF" STEERING	1	1	1	1	
36	064505	SPARE FUSE BOX	1	1	1	1	
40	381999	SUPPORT HARNESS & FRONT PANEL BOX Up to 4-8269	1				
40	382043	SUPPORT HARNESS & FRONT PANEL BOX From 4-8270	1				
40	381988	SUPPORT HARNESS & FRONT PANEL BOX Up to 4-8274		1	1	1	
40	382042	SUPPORT HARNESS & FRONT PANEL BOX From 4-8275		1	1	1	
41	064428	DECAL CONNECTOR / C1,C2,C3,C4	1	1	1	1	
42	286228	PROTECTOR RELAY	1	1	1	1	
43	381779	RELAY SUPPORT	1	1	1	1	
50	286967	PROTECTOR FRONT ELECTRIC COMPARTMENT.	1	1	1	1	
51	287019	LATCH UPPER Up to Y-7299	1	1	1	1	
51	289230	LATCH UPPER From Y-7300 Up to 2-7820	1	1	1	1	
52	287088	LATCH LOWER Up to 2-7820	1	1	1	1	
53	502531	SCREW CAP HEX M6-1.0x16 G8.8 ZP	4	4	4	4	
54	500411	WASHER FL .260x.697x.050 SS	10	10	10	10	
NS	502570	WASHER LO SPT 6.1x11.8x1.6 SS	6	6	6	6	
55	287210	ATTACHMENT PLATE W/NUT	2	2	2	2	
57	500641	SCREW TP BDG PH #8x3/4 ZP	2	2	2	2	
NS	065389	CABLE ASSY / "JACOB`S" & RETARDER	1	1	1	1	A
NS	561707	RELAY 24V S.P.D.T. W/RESISTOR / Up to 5-8577	1	1	1	1	A
59	563332	RELAY 24V S.P.D.T. W/RESISTOR / "VOLVO" (20374662) From 5-8578	1				A
60	901052	LATCH RUBBER From 2-7821	2	2	2	2	
61	384286	RETAINER UPPER From 2-7821	1	1	1	1	
62	384287	RETAINER LOWER From 2-7821	1	1	1	1	
63	065375	DECAL "FRT JCT BOX" COMPONENTS Up to 2-7799	1				
63	065580	DECAL "FRT JCT BOX" COMPONENTS From 2-7800 Up to 2-7823	1				
63	065649	DECAL "FRT JCT BOX" COMPONENTS From 2-7824 Up to 3-7992	1				
		A) VEHICLE EQUIPPED WITH DUAL OPTION "JACOB" &					
		RETARDER					

From Y-7046 Up to 7-9095	DATE: 01/2014	PAGE: Y2-0625-00

FRONT JUNCTION PANEL

ITEM	PART	DESCRIPTION	XL45	MTH40	MTH45	MTH45S	NOTE
63	065758	DECAL "FRT JCT BOX" COMPONENTS From 3-7993 Up to 3-8130	1				
63	065756	DECAL "FRT JCT BOX" COMPONENTS From 3-8131 Up to 4-8164	1				
63	065856	DECAL "FRT JCT BOX" COMPONENTS From 4-8165 Up to 5-8358	1				
63	065717	DECAL "FRT JCT BOX" COMPONENTS From 5-8359 Up to 5-8469	1				
63	066230	DECAL "FRT JCT BOX" COMPONENTS From 5-8470	1				
70	065407	CABLE ASSY / SPEED SWITCH W/ "EATON" TRANS	1				B
71	381250	SWITCH, PROGRAMMABLE SPEED	1				B
		B) WITH "EATON" TRANSMISSION ONLY					

From 7-9096 Up to 8-9339	DATE: 01/2014	PAGE: Y2-0625-01

FRONT JUNCTION PANEL / MUX

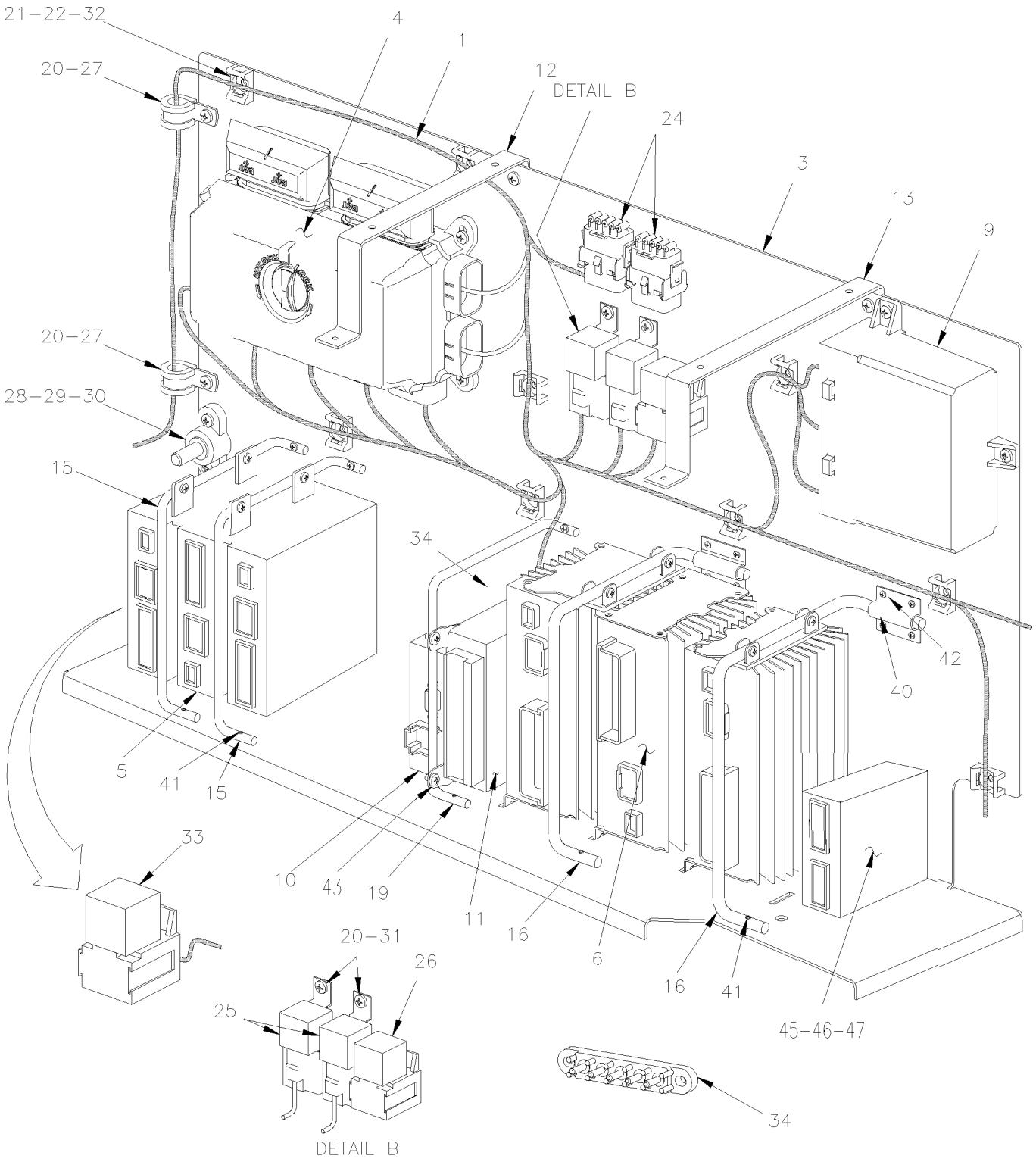

From 7-9096 Up to 8-9339	DATE: 01/2014	PAGE: Y2-0625-01

FRONT JUNCTION PANEL / MUX

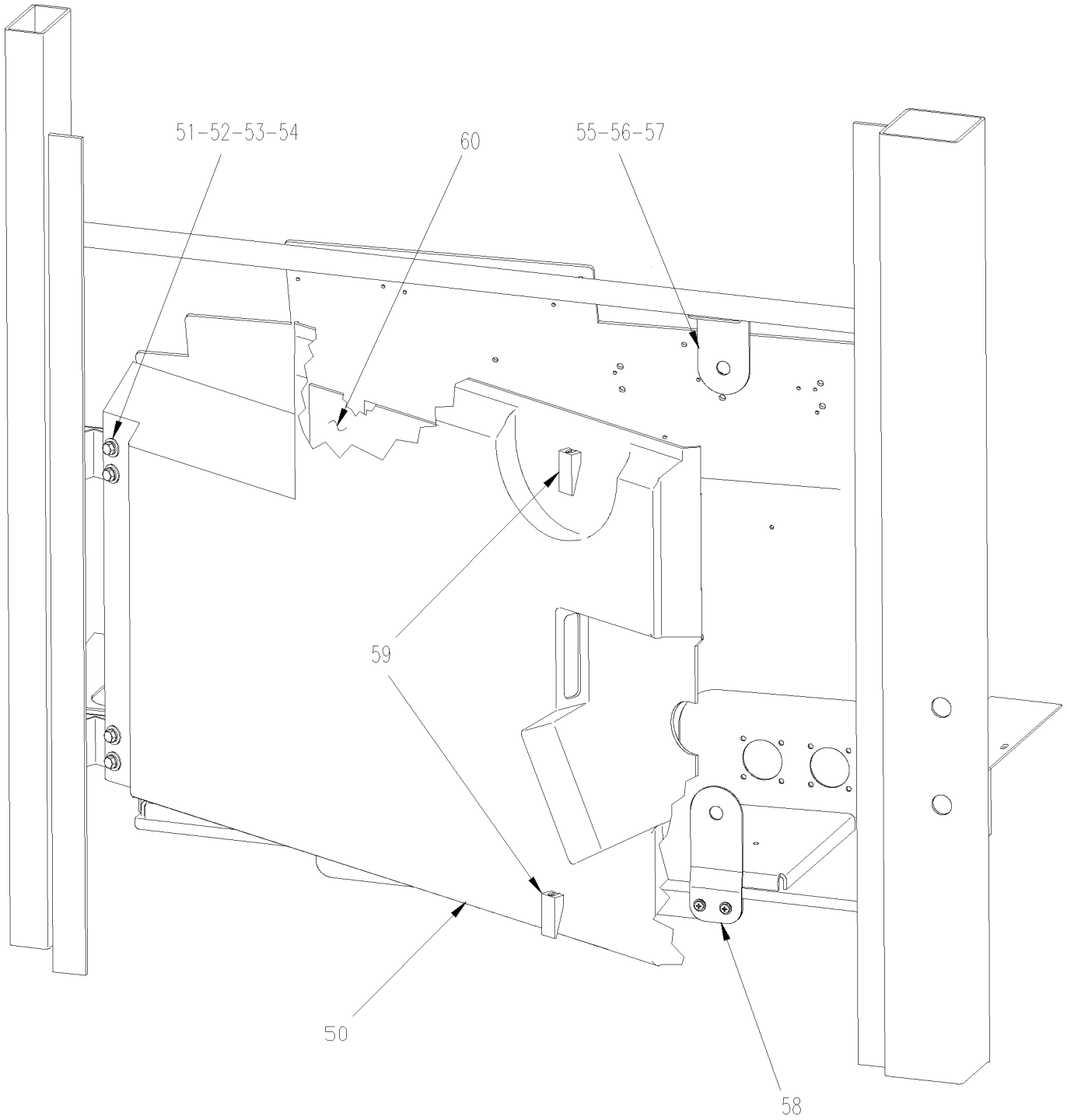

From 7-9096 Up to 8-9339	DATE: 01/2014	PAGE: Y2-0625-01

FRONT JUNCTION PANEL / MUX

ITEM	PART	DESCRIPTION	XL45	MTH40	MTH45	MTH45S	NOTE
1	066775	WIRING HARNESS FRT JCT BOX / W/MUX			1	1	
3	382160	FRONT PANEL BOX Up to 8-9278			1	1	
3	382374	FRONT PANEL BOX From 8-9279			1	1	
4	563361	VEC DISTRIBUTION MODULE / FRONT JCT BOX Up to 7-9116			1	1	P
. NS	564104	. COVER / VEC BOX Up to 7-9116			1	1	
. NS	563269	. RELAY 24V S.P.D.T. W/RESISTOR / VJ28-95H24-S08 Up to 7-9116			1	1	
. NS	563004	. FUSE / ATM 2 AMPS GREY Up to 7-9116			1	1	
. NS	563279	. FUSE / ATM 3 AMPS VIOLET Up to 7-9116			14	14	
. NS	563280	. FUSE / ATM 5 AMPS AMBER Up to 7-9116			2	2	
. NS	563005	. FUSE / ATM 7.5 AMPS BROWN Up to 7-9116			5	5	
. NS	563283	. FUSE / ATM 10 AMPS RED Up to 7-9116			6	6	
. NS	563284	. FUSE / ATM 15 AMPS BLUE Up to 7-9116			4	4	
. NS	563282	. FUSE / ATM 20 AMPS YELLOW Up to 7-9116			7	7	
. NS	563153	. FUSE / ATM 25 AMPS NATURAL Up to 7-9116			2	2	
. NS	563165	. FUSE / ATM 30 AMPS GREEN Up to 7-9116			3	3	
. NS	564464	. MINI BREAKER 20 AMPS / SERIES 223 Up to 7-9116			1	1	
. NS	563181	. CONNECTOR / SH 8C / YELLOW / BUSSMANN 32006-E21 Up to 7-9116			1	1	
. NS	563182	. CONNECTOR / SH 8C / ORANGE / BUSSMANN 32006-G21 Up to 7-9116			1	1	
. NS	563183	. CONNECTOR / SH 8C / RED / BUSSMANN 32006-F21 Up to 7-9116			1	1	
. NS	563184	. CONNECTOR / SH 8C / GREEN / BUSSMANN 32006-C21 Up to 7-9116			1	1	
. NS	563185	. CONNECTOR / SH 8C / BLACK / BUSSMANN 32006-A21 Up to 7-9116			1	1	
. NS	563186	. CONNECTOR / SH 8C / GREY / BUSSMANN 32006-B21 Up to 7-9116			1	1	
. NS	563187	. CONNECTOR / SH 8C / BROWN / BUSSMANN 32006-H21 Up to 7-9116			1	1	
. NS	563448	. CONNECTOR / SH 8C / BLUE / BUSSMANN 32006-D21 Up to 7-9116			1	1	
4	563674	VEC DISTRIBUTION MODULE / FRONT JCT BOX SERVICE From 7-9117			1	1	
. NS	564104	. COVER / VEC BOX From 7-9117			1	1	
. NS	563004	. FUSE / ATM 2 AMPS GREY From 7-9117			1	1	
. NS	563279	. FUSE / ATM 3 AMPS VIOLET From 7-9117			14	14	
. NS	563280	. FUSE / ATM 5 AMPS AMBER From 7-9117			2	2	
. NS	563005	. FUSE / ATM 7.5 AMPS BROWN From 7-9117			3	3	
. NS	563283	. FUSE / ATM 10 AMPS RED From 7-9117			6	6	
. NS	563284	. FUSE / ATM 15 AMPS BLUE From 7-9117			9	9	
. NS	563282	. FUSE / ATM 20 AMPS YELLOW From 7-9117			6	6	
. NS	563153	. FUSE / ATM 25 AMPS NATURAL From 7-9117			1	1	
. NS	563165	. FUSE / ATM 30 AMPS GREEN From 7-9117			3	3	
. NS	564464	. MINI BREAKER 20 AMPS / SERIES 223 From 7-9117			1	1	
. NS	563181	. CONNECTOR / SH 8C / YELLOW / BUSSMANN 32006-E21 From 7-9117			1	1	
. NS	563182	. CONNECTOR / SH 8C / ORANGE / BUSSMANN 32006-G21 From 7-9117			1	1	
. NS	563183	. CONNECTOR / SH 8C / RED / BUSSMANN 32006-F21 From 7-9117			1	1	
. NS	563184	. CONNECTOR / SH 8C / GREEN / BUSSMANN 32006-C21 From 7-9117			1	1	
. NS	563185	. CONNECTOR / SH 8C / BLACK / BUSSMANN 32006-A21 From 7-9117			1	1	
		P) FOR PRODUCT IMPROVEMENT FUSE F82 MAY BE					
		REPLACE BY MINI BREAKER # 564464 WITH NEW					
		DECAL # 382408					

From 7-9096 Up to 8-9339	DATE: 01/2014	PAGE: Y2-0625-01

FRONT JUNCTION PANEL / MUX

ITEM	PART	DESCRIPTION	XL45	MTH40	MTH45	MTH45S	NOTE
. NS	563186	. CONNECTOR / SH 8C / GREY / BUSSMANN 32006-B21 From 7-9117			1	1	
. NS	563187	. CONNECTOR / SH 8C / BROWN / BUSSMANN 32006-H21 From 7-9117			1	1	
. NS	563448	. CONNECTOR / SH 8C / BLUE / BUSSMANN 32006-D21 From 7-9117			1	1	
5	563272	I/O A-MODULE VOLVO MULTIPLEX / BLACK Up to 7-9116 / REPLACED BY: 564101			3	3	
5	565864	I/O A-MODULE VOLVO MULTIPLEX / BLACK From 7-9117 / REPLACED BY: 564101			3	3	
6	563273	I/O B-MODULE VOLVO MULTIPLEX / ALLUMINUM Up to 7-9116			3	3	
6	565865	I/O B-MODULE VOLVO MULTIPLEX / ALLUMINUM From 7-9117 / REPLACED BY: 564075			3	3	
9	563274	CECM VOLVO MULTIPLEX MODULE			1	1	
10	563295	MASTER ID-MODULE VOLVO MULTIPLEX			1	1	
10	066009	CABLE ADAPTOR / INTERFACE PC TO MASTER ID (3Meter)			1	1	
NS	068158	KIT, INSULATED MASTER ID MODULE			1	1	
. NS	IS-09040	. SEE INSTRUCTION SHEET			1	1	
. NS	5001438	. RIVET DRV TR 1/4x3/4 NYL			2	2	
. NS	900251	. BUSHING, RUBBER			2	2	
. NS	502698	. SCREW MA PAN PH M4-0.7x16 SS EMN			2	2	
. NS	563295	. MASTER ID-MODULE VOLVO MULTIPLEX			1	1	
11	641948	CONTROL UNIT 12V / ABS 4 CH			1	1	
12	382126	SUPPORT FRONT PANEL UPPER FORWARD			1	1	
13	382129	SUPPORT FRONT PANEL UPPER BACKWARD			1	1	
15	382179	ROD ATTACHMENT CABLE / I/O A			2	2	
16	382166	ROD ATTACHMENT CABLE / I/O B			2	2	
19	382167	ROD ATTACHMENT CABLE			1	1	
20	500945	SCREW TC BDG PH #10-24x1/2 ZG603			AR	AR	
21	504013	TIE MOUNT / 1/4" X 1/4" I.D.			AR	AR	
22	504347	RIVET POP DOME OE 3/16x1/4 AL			AR	AR	
24	381145	DIODE ASSY / W/5 3AMPS			2	2	
25	561991	RELAY 24V S.P.S.T. / 70 AMPS N.O.			2	2	
27	952627	CLAMP / 1/2" I.D.			2	2	
28	560422	BLOCK, TERMINAL / 1 STUD 3/8-16 / BLACK			1	1	
29	500478	WASHER LO SPT .380x.683x.094 ZP			1	1	
30	500379	NUT HEX 3/8-16 BR			1	1	
31	500623	SCREW TC PAN PH #10-24x3/4 ZG603			1	1	
32	504637	CABLE TIE / 3/16" x 13"			AR	AR	
33	563033	E.C.U. / W/STEERING ASSIST (STP 272 or 330) ((77//125))			1	1	
34	563218	JUNCTION BLOCK W/5 STUDS			1	1	
NS	500765	NUT HEX #10-32 BR			AR	AR	
40	382169	HINGE ROD ATTACHMENT			5	5	
41	509827	SCREW MA RND PH M4-0.7x20 SS			9	9	
42	504340	RIVET POP DOME OE 1/8x3/16 SS			12	12	
43	502868	SCREW TC TR PH 10-24x1/2 ZG603			AR	AR	
44	500965	SCREW TC BDG PH #8-32x1/2 ZG603			AR	AR	

From 7-9096 Up to 8-9339	DATE: 01/2014	PAGE: Y2-0625-01

FRONT JUNCTION PANEL / MUX

ITEM	PART	DESCRIPTION	XL45	MTH40	MTH45	MTH45S	NOTE
45	563541	KEYLESS MODULE / 350' RANGE			1	1	
46	382162	SUPPORT UPPER KEYLESS MODULE			1	1	
47	382163	SUPPORT LOWER KEYLESS MODULE			1	1	
50	286967	PROTECTOR FRONT ELECTRIC COMPARTMENT.			1	1	
51	502531	SCREW CAP HEX M6-1.0x16 G8.8 ZP			4	4	
52	500411	WASHER FL .260x.697x.050 SS			10	10	
53	502570	WASHER LO SPT 6.1x11.8x1.6 SS			6	6	
54	287210	ATTACHMENT PLATE W/NUT			2	2	
55	500641	SCREW TP BDG PH #8x3/4 ZP			4	4	
56	500438	WASHER FL .187x.437x.050 ZP			4	4	
57	384286	RETAINER UPPER			1	1	
58	382360	RETAINER LOWER			1	1	
59	901052	LATCH RUBBER			2	2	
60	066584	DECAL "FRT JCT BOX" COMPONENTS			1	1	
60	067013	DECAL "FRT JCT BOX" COMPONENTS			1	1	
61	066155	DECAL PIN OUT / JCT BOX W/MUX			1	1	

From 7-9096 Up to 8-9339	DATE: 01/2014	PAGE: Y2-0625-01

FRONT JUNCTION PANEL / MUX

ITEM	PART	DESCRIPTION	XL45	MTH40	MTH45	MTH45S	NOTE

From Y-7046 Up to 7-9095	DATE: 01/2014	PAGE: Y2-0625-10

FRONT JUNCTION BOX - INSTALLATION

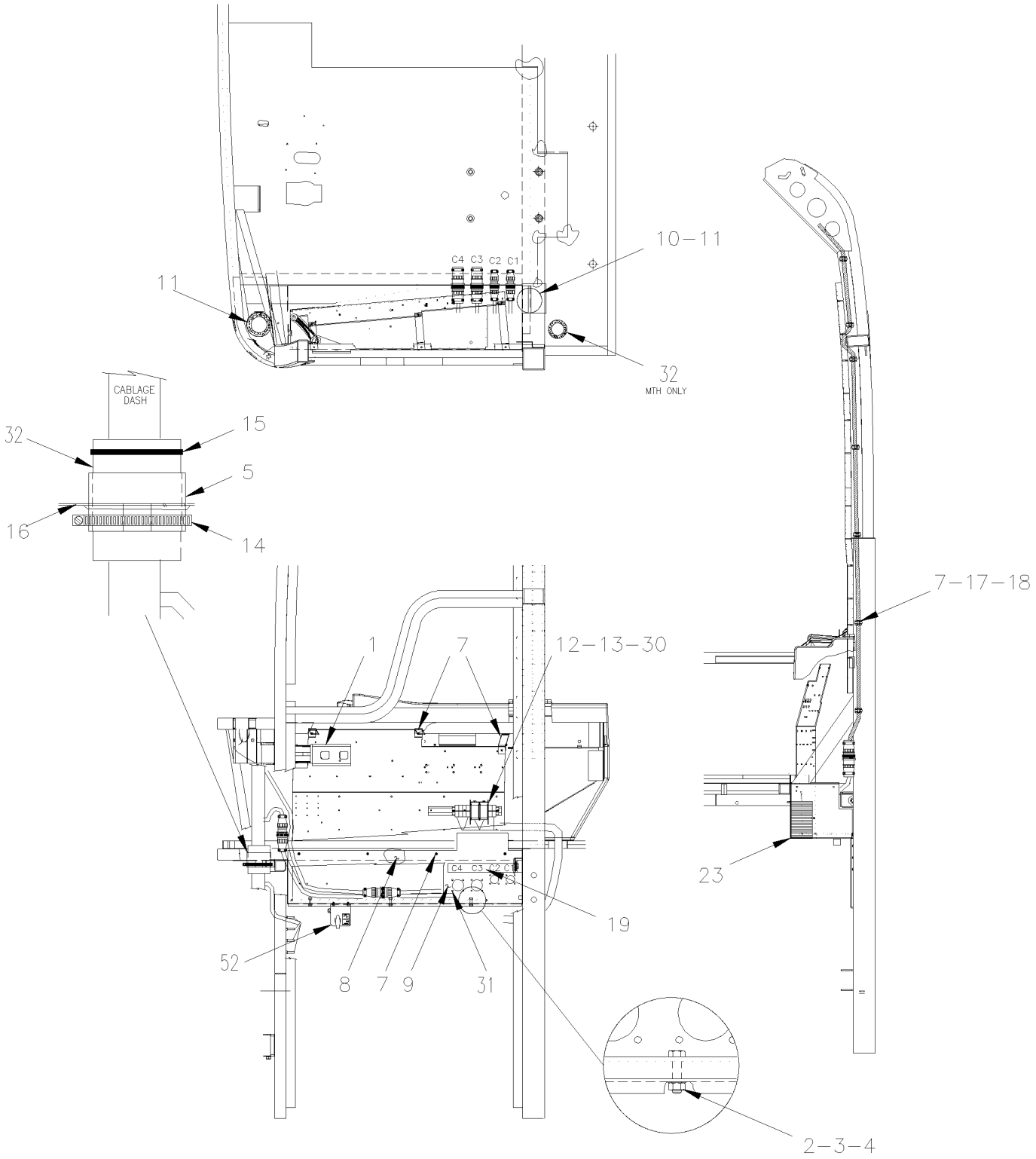

From Y-7046 Up to 7-9095	DATE: 01/2014	PAGE: Y2-0625-10
FRONT JUNCTION BOX - INSTALLATION		

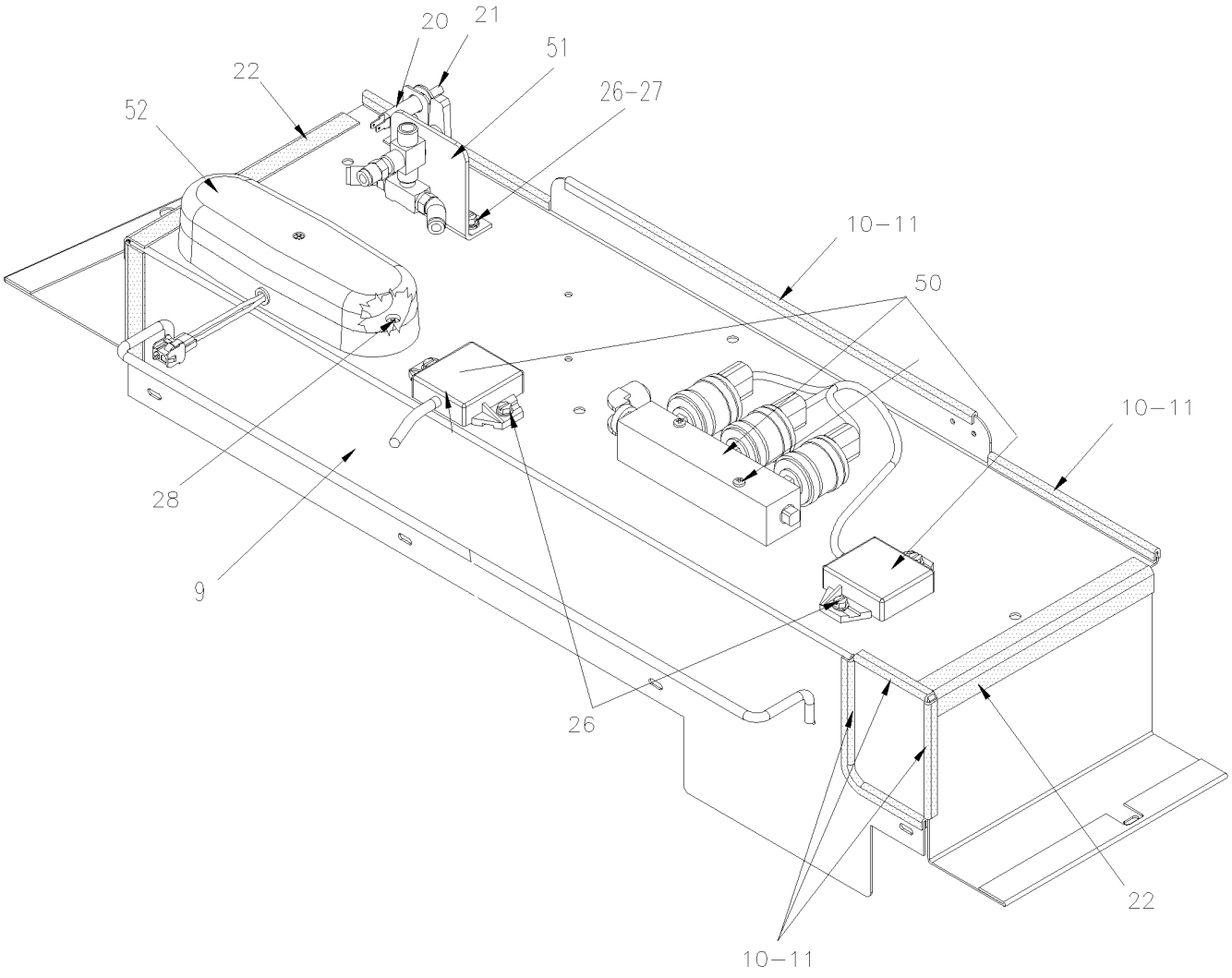

From Y-7046 Up to 7-9095	DATE: 01/2014	PAGE: Y2-0625-10

FRONT JUNCTION BOX - INSTALLATION

ITEM	PART	DESCRIPTION	XL45	MTH40	MTH45	MTH45S	NOTE
1	Y2-0625-00	**FRONT JUNCTION PANEL**	1	1	1	1	
2	502511	NUT HEX NYRT M6-1.0 ZP	3	3	3	3	
3	502564	WASHER LO SPT 6.1x11.8x1.6 ZP	3	3	3	3	
4	502737	SCREW CAP HEX M6-1.0x25 SS EMN	3	3	3	3	
5	065035	TUBE PVC / 3" X 50MM		1	1	1	
7	500641	SCREW TP BDG PH #8x3/4 ZP	16	16	16	16	
8	680532	SEALANT SIKA #221 / GREY / 310ml CARTRIDGE	AR	AR	AR	AR	
9	381940	SUPPORT FRONT BOX		1	1	1	
90	381906	SUPPORT FRONT BOX Up to 6-8906	1				
10	506338	RUBBER CHANNEL / 1/16" x 1/4" INT "U" SHAPE / ROUND C.T.L.	3	3	3	3	
11	680066	GLUE / ADBOND 5014 ADH 23.6ML BOTTLE	AR	AR	AR	AR	
12	500615	NUT HEX M8-1.25 BR	1	1	1	1	
13	064993	CABLE ASSY / 12Volt "CB" DELIVERY		1	1	1	
14	504026	HOSE CLAMP / 2"13/16-3"3/4 SS / HS-52		1	1	1	
15	504637	CABLE TIE / 3/16" x 13"		4	4	4	
16	680067	SEALANT TAPE BUTYL / BLACK / 1/8"x3/4"x25' / 75211E760		AR	AR	AR	
17	504013	TIE MOUNT / 1/4" X 1/4" I.D.	7	7	7	7	
18	504637	CABLE TIE / 3/16" x 13"	7	7	7	7	
19	064428	DECAL CONNECTOR / C1,C2,C3,C4	1	1	1	1	
20	066638	SWITCH SUPPORT / FRONT SERVICE DOOR	1				
21	563464	SWITCH / S.P.S.T. / N.C. / W/RUBBER BOOT	1				
22	382402	FRONT PANEL BOX	2				
23	350980	INSULATION	1				
25	500508	SCREW TC PAN PH #10-32x1 1/2 ZP / REPLACED BY: 5001143	1				
26	5001245	SCREW TC CAP HEXW SLT #12-24x1/2 ZP Up to 6-8906	2				
27	500473	WASHER LO SPT .262x.489x.062 ZP Up to 6-8906	2				
28	500430	SCREW TC PAN PH #8-32x1 1/4 SS BK	2				
30	062963	CABLE ASSY / 12V POWER C.B. Up to 6-8906	1				
31	500124	SCREW TP TR PH #8x1/2 SS	16	16	16	16	
32	371600	INSULATING PAD		2	2	2	
50	Y2-0750-00	**AUTOMATIC TRANSMISSION - "WORLD" WITH DETROIT S-60**	1				
51	Y2-0665-10	**SWITCHES, LIGHTS, AJAR - UNDER FLOOR**	1				
52	Y2-1802-00	**ENTRANCE DOOR CONTROL**	1				

From Y-7046 Up to 7-9095	DATE: 01/2014	PAGE: Y2-0625-10

FRONT JUNCTION BOX - INSTALLATION

ITEM	PART	DESCRIPTION	XL45	MTH400	MTH445	MTH445S	NOTE

From 7-9096 Up to 8-9339	DATE: 01/2014	PAGE: Y2-0625-11

FRONT JUNCTION BOX - INSTALLATION

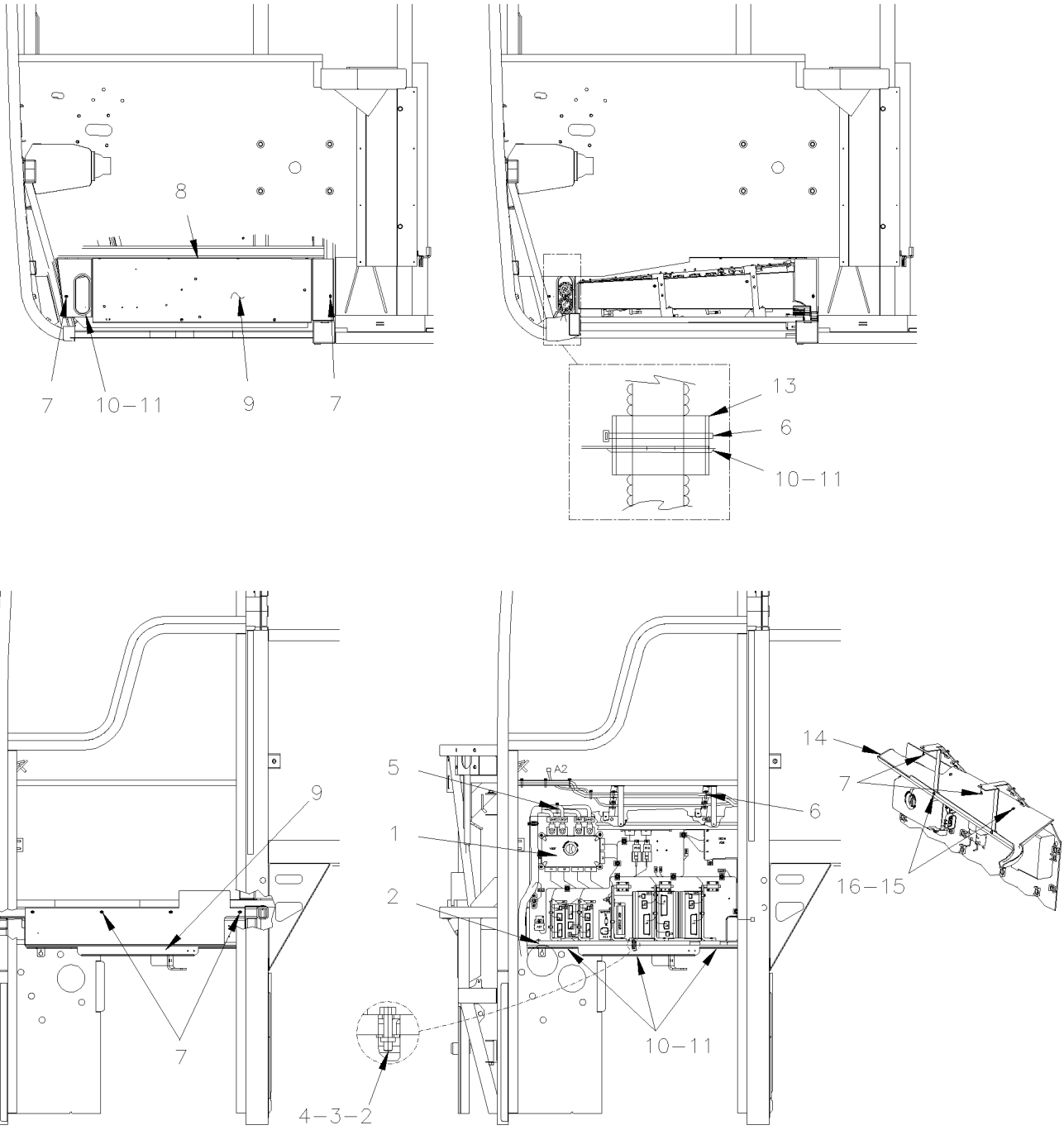

From 7-9096 Up to 8-9339	DATE: 01/2014	PAGE: Y2-0625-11

FRONT JUNCTION BOX - INSTALLATION

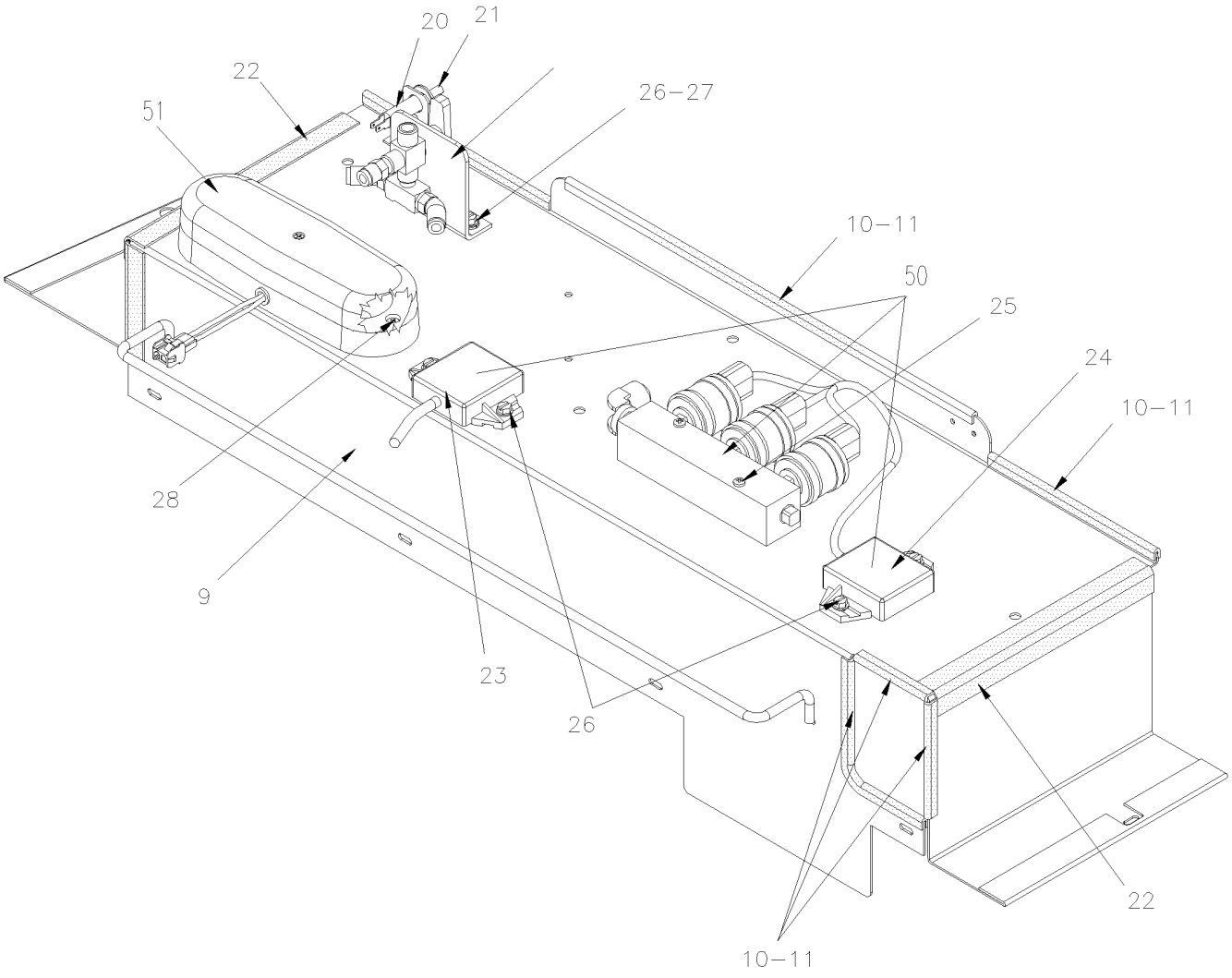

From 7-9096 Up to 8-9339	DATE: 01/2014	PAGE: Y2-0625-11

FRONT JUNCTION BOX - INSTALLATION

ITEM	PART	DESCRIPTION	XL45	MTH40	MTH45	MTH45S	NOTE
1	Y2-0625-01	**FRONT JUNCTION PANEL / MUX**	1				
2	502565	NUT HEX M6-1.0 SS			4	4	
3	502564	WASHER LO SPT 6.1x11.8x1.6 ZP			4	4	
4	502737	SCREW CAP HEX M6-1.0x25 SS EMN			1	1	
5	504016	CABLE TIE / 5/16" X 14"1/2			AR	AR	
6	504637	CABLE TIE / 3/16" x 13"			AR	AR	
7	500641	SCREW TP BDG PH #8x3/4 ZP			6	6	
8	680532	SEALANT SIKA #221 / GREY / 310ml CARTRIDGE			AR	AR	
9	382188	SUPPORT FRONT JCT BOX Up to 7-9232			1	1	
9	382378	SUPPORT FRONT JCT BOX From 7-9233 / REPLACED BY: 382452			1	1	
10	506338	RUBBER CHANNEL / 1/16" x 1/4" INT "U" SHAPE / ROUND C.T.L.			AR	AR	
11	680066	GLUE / ADBOND 5014 ADH 23.6ML BOTTLE			AR	AR	
12	500615	NUT HEX M8-1.25 BR			12	12	
13	371600	INSULATING PAD			1	1	
14	382135	DRIP PAN FRONT JCT BOX			1	1	
15	502556	WASHER FL 4.3x9.0X0.8 SS			4	4	
16	502698	SCREW MA PAN PH M4-0.7x16 SS EMN			4	4	
NS	5001182	NUT HEX NYRT M6-1.0 SS			1	1	
NS	500964	WASHER FL .203x.500x.047 ZP			1	1	
NS	064993	CABLE ASSY / 12Volt "CB" DELIVERY			1	1	
20	066638	SWITCH SUPPORT / FRONT SERVICE DOOR			1	1	
21	563464	SWITCH / S.P.S.T. / N.C. / W/RUBBER BOOT			1	1	
22	506758	RUB AD1 NEO 1/16"X 1 1/2"X50'			AR	AR	
23	562357	RESISTANCE MODULE			1	1	
24	562381	RESISTANCE MODULE			1	1	
25	500508	SCREW TC PAN PH #10-32x1 1/2 ZP / REPLACED BY: 5001143			AR	AR	
26	5001245	SCREW TC CAP HEXW SLT #12-24x1/2 ZP			AR	AR	
27	500473	WASHER LO SPT .262x.489x.062 ZP			AR	AR	
28	500430	SCREW TC PAN PH #8-32x1 1/4 SS BK			AR	AR	
50	Y2-0750-01	**AUTOMATIC TRANSMISSION - "WORLD" WITH DETROIT S-60**					
51	Y2-0665-10	**SWITCHES, LIGHTS, AJAR - UNDER FLOOR**					

From 7-9096 Up to 8-9339	DATE: 01/2014	PAGE: Y2-0625-11

FRONT JUNCTION BOX - INSTALLATION

ITEM	PART	DESCRIPTION	XL45	MTH400	MTH445	MTH445S	NOTE

From Y-7046 Up to 6-8906	DATE: 01/2014	PAGE: Y2-0628-00

CHIME BELL - INSTALLATION

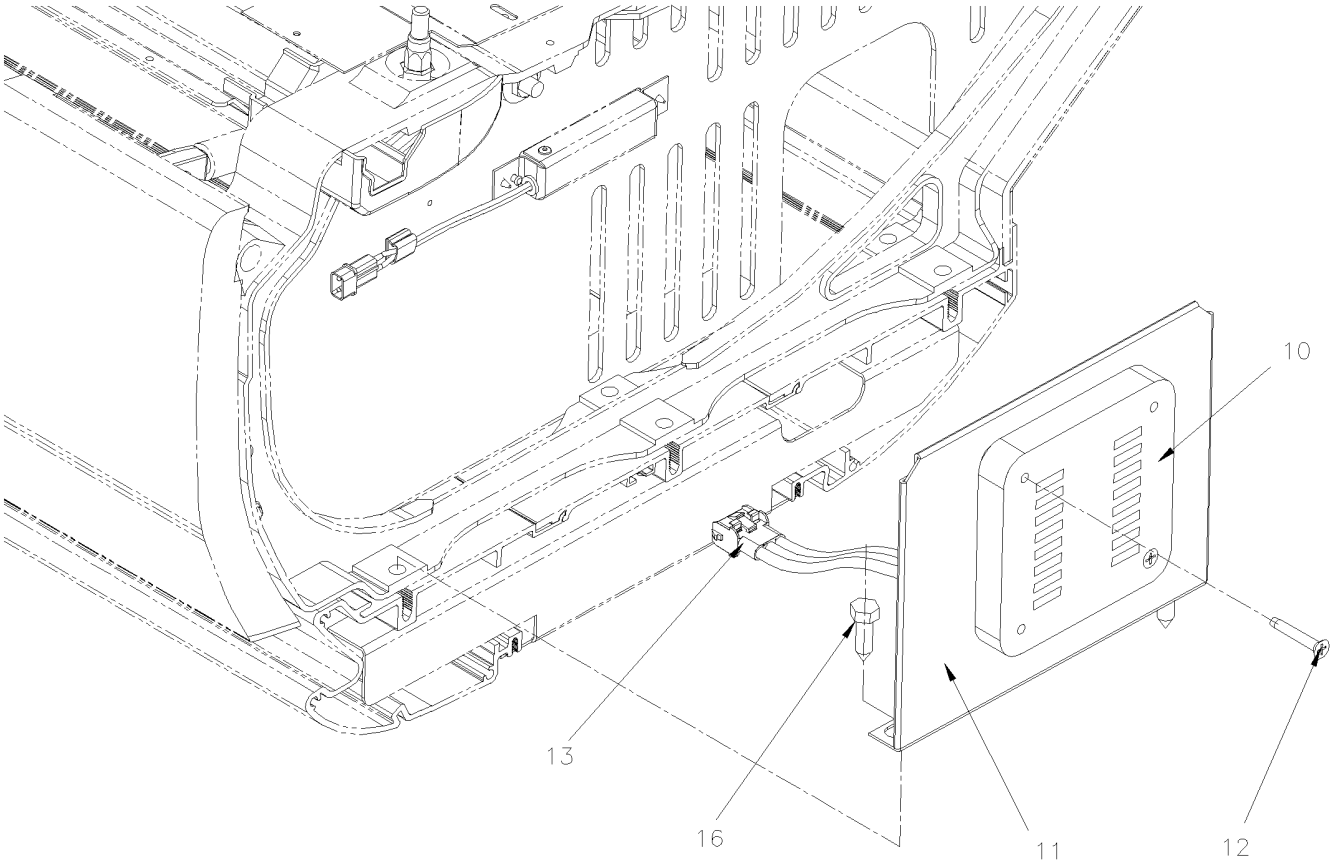

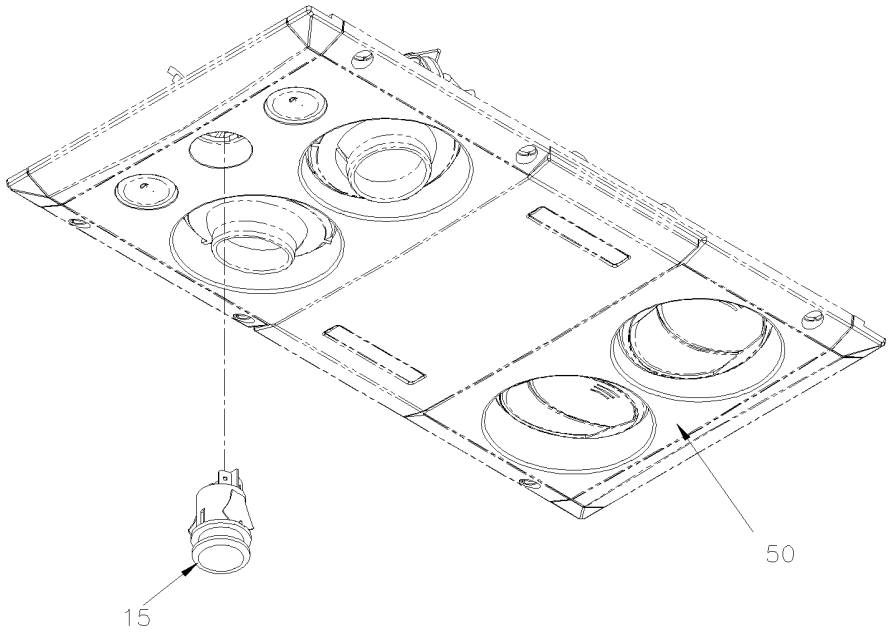

From Y-7046 Up to 6-8906	DATE: 01/2014	PAGE: Y2-0628-00

CHIME BELL - INSTALLATION

ITEM	PART	DESCRIPTION	XL45	MTH40	MTH45	MTH45S	NOTE
10	381854	CHIME / PASSENGER`S SIGNAL	1				
11	312709	. SUPPORT CHIM BELL	1				
12	500844	. SCREW TC FL PH #10-32x1 1/4 ZP	2				
13	561667	. CONNECTOR / UNIVERSAL MATE-N-LOK / PH 3C / AMP 1-480701-0	1				
NS	561671	. PIN TERMINAL / 24-18 / AMP 350690-1	2				
NS	562122	. PIN TERMINAL / 20-14 / AMP 350547-1	1				
NS	561740	. DIODE / 3AMPS	1				
15	830159	SWITCH / OFF-M/ON / S.P.S.T. / CHIME	AR				
16	502513	SCREW TP CAP HEX 5/16x1 ZP	2				
50	Y2-0655-00	**INTERIOR LIGHTING**					

From Y-7046 Up to 6-8906	DATE: 01/2014	PAGE: Y2-0630-00

CABLE & HARNESS - UNDER FLOOR - BUS

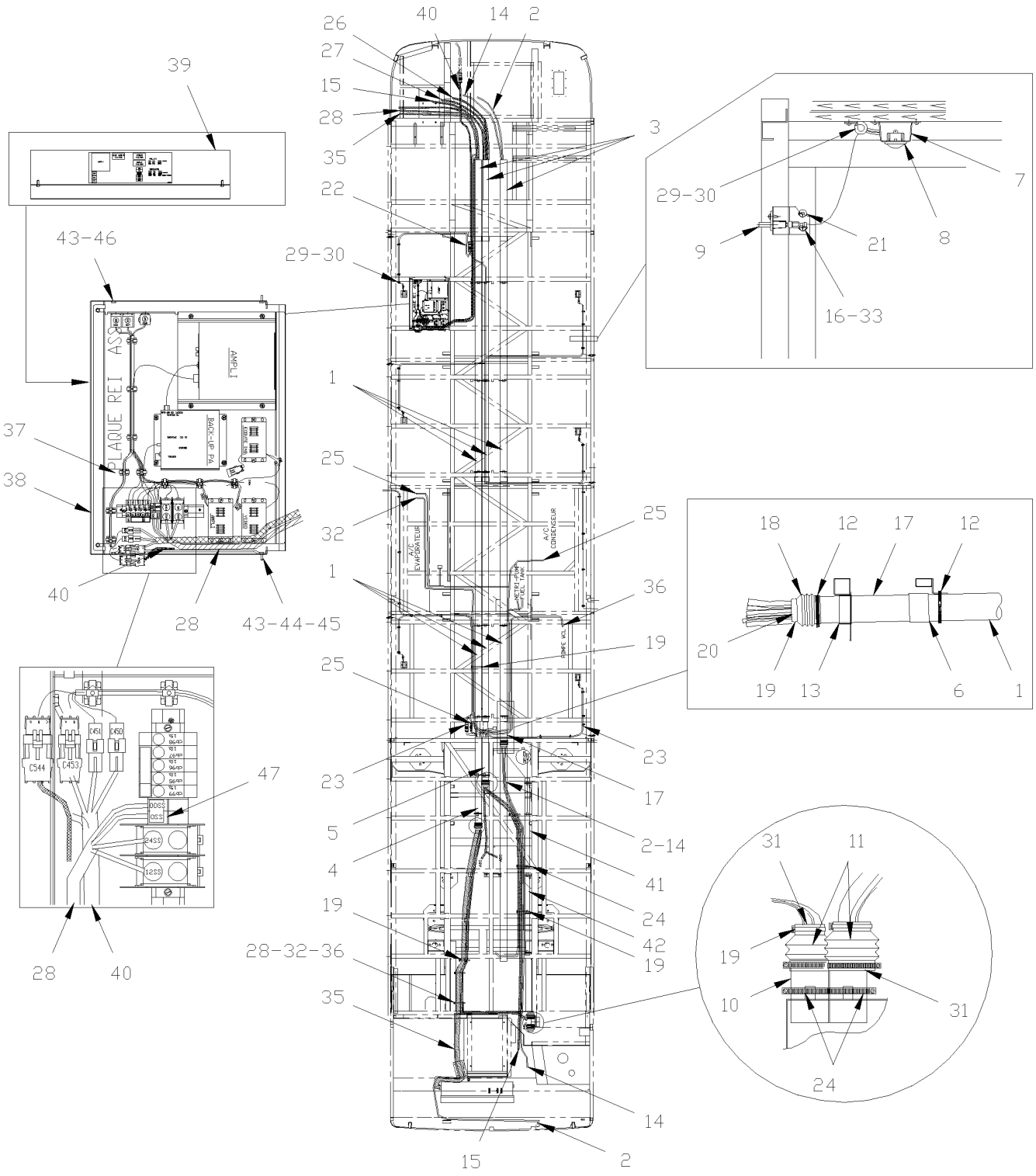

From Y-7046 Up to 6-8906	DATE: 01/2014	PAGE: Y2-0630-00

CABLE & HARNESS - UNDER FLOOR - BUS

ITEM	PART	DESCRIPTION	XL45	MTH40	MTH45	MTH45S	NOTE
1	503390	TUBE / PVC PIPE / 3"x10' WHITE PVC	6				
2	064410	CABLE ASSY / BACK-UP CAMERA VIDEO 60' / <> CAMERA & MONITOR B&W	1				
. NS	990288	. CABLE BACK-UP CAMERA 60'	1				
. NS	561681	. CONVOLUTED TUBING / .350" / SLIT / BL.&GR.	25				
3	063384	TUBE PVC / 3" X 1020MM	3				
4	063386	TUBE PVC / 3" X 1090MM	1				
5	063760	TUBE PVC / 3" X 560MM	1				
6	680290	GLUE PVC / 946ml	AR				
7	500235	SCREW TP BDG PH #6x3/4 ZG603	12				
8	Y2-0655-00	**INTERIOR LIGHTING**					
9	Y2-0665-10	**SWITCHES, LIGHTS, AJAR - UNDER FLOOR**					
10	380692	TUBE ABS	2				
11	504533	CUFF END BELLOW / 2 3/8" I.D. x 2 3/8" x 4"	2				
12	504026	HOSE CLAMP / 2"13/16-3"3/4 SS / HS-52	AR				
13	680096	SEALANT BUTYL ALUM / GREY / 310ml CARTRIDGE	AR				
14	404460	CABLE ASSY MICRO OUTPUT	1				
15	065597	CABLE ASSY / <> E.C.M. & ACCELERATOR PEDAL Up to 3-8164	1				
15	065787	CABLE ASSY / <> E.C.M. & ACCELERATOR PEDAL From 4-8165	1				
16	500432	SCREW TC BDG PH #8-32x3/4 ZP	12				
17	141843	TUBE PVC / 3" X 490MM W/F	17				
18	504499	CUFF END BELLOW / 2 7/8" I.D. x 3 5/8" x 4 7/16	3				
19	504016	CABLE TIE / 5/16" X 14"1/2	9				
20	371600	INSULATING PAD	3				
21	504357	WASHER FL .187x.437x.050 SS	24				
22	065112	CABLE ASSY / FRONT BAGGAGE COMPARTMENT Up to 4-8358	1				
22	066042	CABLE ASSY FRT BAG COMP From 5-8359	1				
23	065577	CABLE ASSY / REAR BAGGAGE COMPARTMENT Up to 4-8358	1				
23	066041	CABLE ASSY REAR BAG COMP From 5-8359	1				
24	504024	HOSE CLAMP / 1"13/16"-2"3/4 SS / HS-36	10				
25	065636	CABLE ASSY / TO A/C BOX & FUEL TANK Up to 3-8101	1				
25	065769	CABLE ASSY / TO A/C BOX & FUEL TANK From 3-8102 Up to 5-8644	1				
25	066440	CABLE ASSY / ENGINE COMPT ACCESSORIES From 5-8645 Up to 6-8855	1				
25	066679	CABLE ASSY / ENGINE COMPT ACCESSORIES From 6-8856	1				
26	065631	CABLE ASSY / ABS MODULE TO FRONT & REAR CABLE	1				
27	064812	CABLE ASSY / <> TRANS & E.C.U. MODULE	1				
27	065848	CABLE ASSY "ZF" TRANS Up to 4-8358	1				
27	066124	CABLE ASSY "ZF" TRANS From 5-8359 Up to 5-8605	1				
27	066592	CABLE ASSY "ZF" TRANS From 5-8606	1				
28	065097	CABLE ASSY POWER	1				
29	952631	CLAMP / 3/4" I.D. / REPLACED BY: 977742	AR				
30	500244	SCREW TP BDG PH #8x3/4 ZG603	AR				
31	680096	SEALANT BUTYL ALUM / GREY / 310ml CARTRIDGE	AR				
32	065088	CABLE ASSY #102	1				
33	500834	WASHER LO INT .168x.340x.023 ZG603	12				

From Y-7046 Up to 6-8906	DATE: 01/2014	PAGE: Y2-0630-00

CABLE & HARNESS - UNDER FLOOR - BUS

ITEM	PART	DESCRIPTION	XL45	MTH40	MTH45	MTH45S	NOTE
34	504534	GROMMET / .875x1.250x.187x.562x1.625	6				
35	065594	CABLE ASSY / <> FRT JCT BOX & REAR JCT BOX Up to 5-8644	1				
35	066439	CABLE ASSY / <> FRT JCT BOX & REAR JCT BOX From 5-8645 Up to 5-8605	1				
35	066590	CABLE ASSY / <> FRT JCT BOX & REAR JCT BOX From 6-8606	1				
36	065341	CABLE ASSY #24WC	1				
37	Y2-2315-00	**SOUND SYSTEM & ACCESSORIES - "R.E.I."**					
38	404402	SUPPORT / PLATE ASSY	1				
39	404579	DECAL "SOUND SYSTEM"	1				
40	405315	CABLE ASSY / <> DASH & PLATE IN BAGGAGE	1				
41	142117	TUBE PVC / 2" X MM 1118MM	1				
42	142071	TUBE PVC / 2" X 1016MM W/ 1 HOLE	1				
43	500473	WASHER LO SPT .262x.489x.062 ZP	6				
44	500441	WASHER FL .312x.734x.065 ZP	4				
45	500769	NUT HEX 1/4-20 ZP	4				
46	500602	SCREW TH SHR 1/4-20x3/4	2				
47	500765	NUT HEX #10-32 BR	2				
48	680532	SEALANT SIKA #221 / GREY / 310ml CARTRIDGE	AR				

From Y-7046 Up to 6-8906	DATE: 01/2014	PAGE: Y2-0630-00

CABLE & HARNESS - UNDER FLOOR - BUS

ITEM	PART	DESCRIPTION	XL45	MTH400	MTH445	MTH445S	NOTE

From Y-7046 Up to 7-9095	DATE: 01/2014	PAGE: Y2-0630-50

CABLE & HARNESS - UNDER FLOOR - MTH-40' & MTH-45' ENT

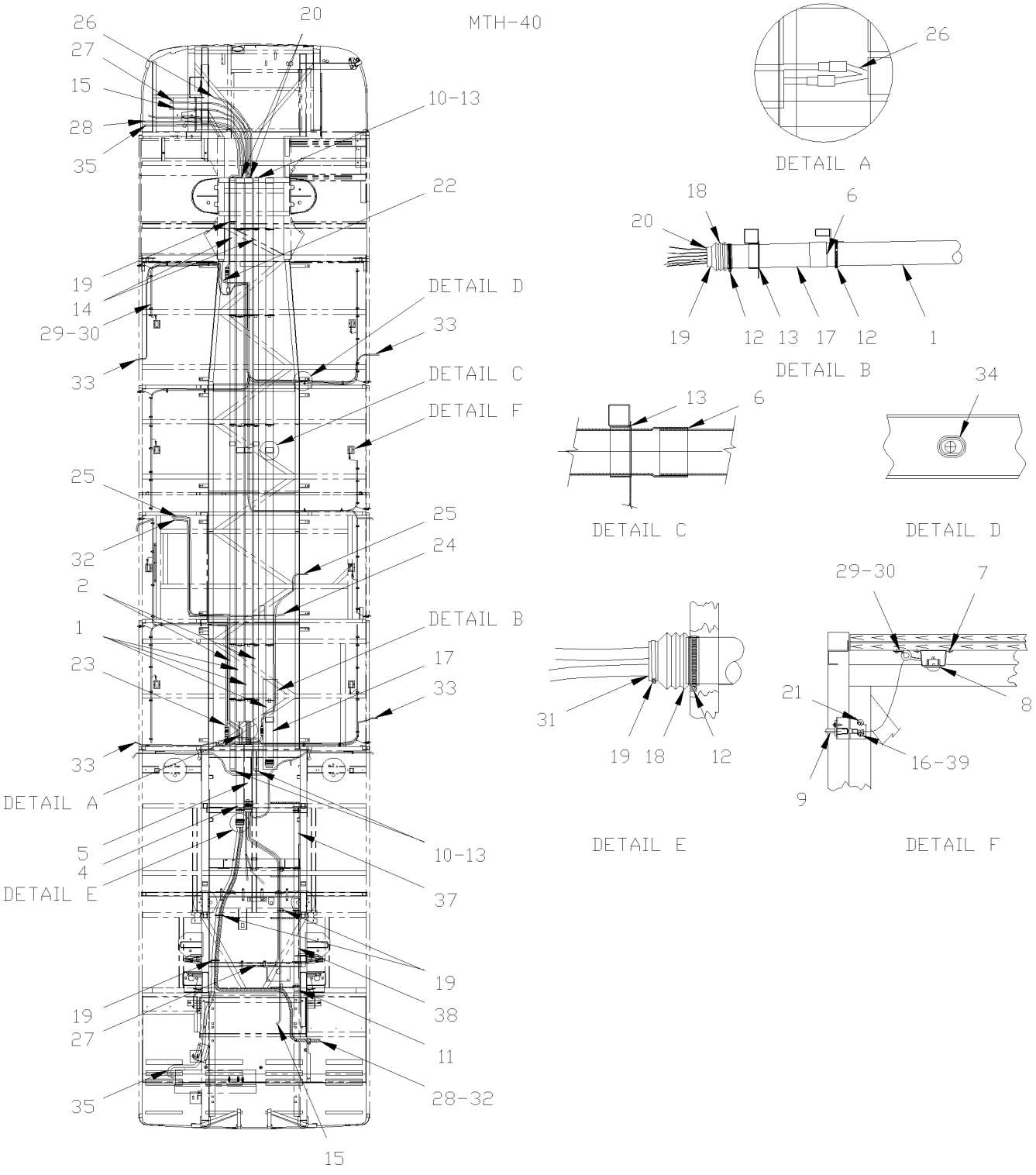

From Y-7046 Up to 7-9095	DATE: 01/2014	PAGE: Y2-0630-50

CABLE & HARNESS - UNDER FLOOR - MTH-40' & MTH-45' ENT

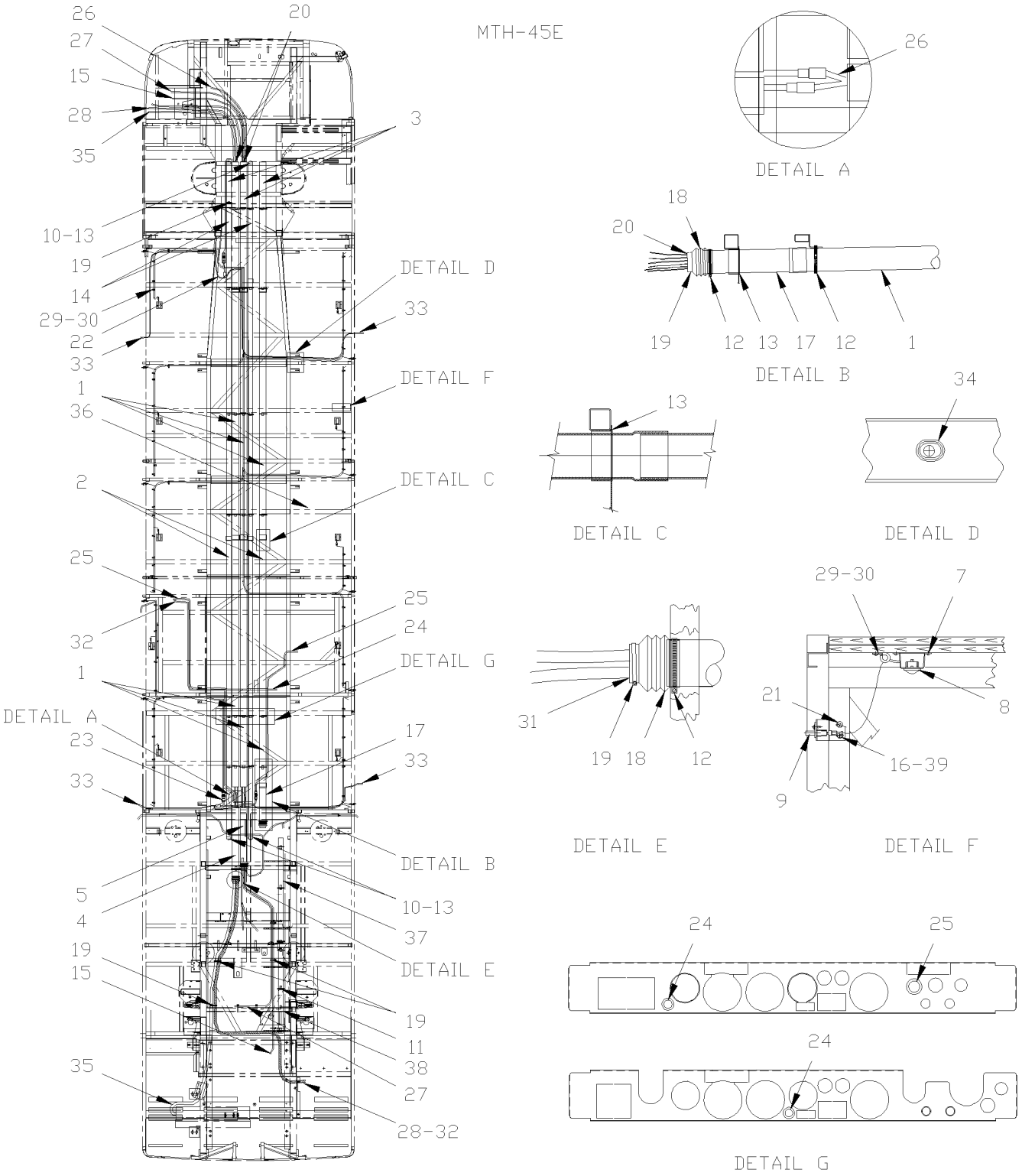

From Y-7046 Up to 7-9095	DATE: 01/2014	PAGE: Y2-0630-50

CABLE & HARNESS - UNDER FLOOR - MTH-40' & MTH-45' ENT

ITEM	PART	DESCRIPTION	XL45	MTH40	MTH45	MTH45S	NOTE
1	503390	TUBE / PVC PIPE / 3"x10' WHITE PVC		6		6	
2	065443	TUBE PVC / 2" X 3660MM W/F		2		2	
3	063796	TUBE PVC / 3" X 1575MM				3	
4	063550	TUBE PVC / 3" X 870MM		1		1	
5	063938	TUBE PVC / 3" X 680MM		1		1	
6	680290	GLUE PVC / 946ml		AR		AR	
7	500235	SCREW TP BDG PH #6x3/4 ZG603		AR		AR	
8	Y2-0655-00	**INTERIOR LIGHTING**					
9	Y2-0665-10	**SWITCHES, LIGHTS, AJAR - UNDER FLOOR**					
10	504489	PLUG		4		4	
11	504024	HOSE CLAMP / 1"13/16"-2"3/4 SS / HS-36		18		18	
12	504026	HOSE CLAMP / 2"13/16-3"3/4 SS / HS-52		29		29	
13	680532	SEALANT SIKA #221 / GREY / 310ml CARTRIDGE		AR		AR	
14	065442	TUBE PVC / 2" X 2971MM		2			
14	065459	TUBE PVC / 2" X 1453MM				2	
15	065451	CABLE ASSY / <> E.C.M. & ACCELERATOR PEDAL Up to 3-8164		1			
15	065788	CABLE ASSY / <> E.C.M. & ACCELERATOR PEDAL From 4-8165		1			
15	065597	CABLE ASSY / <> E.C.M. & ACCELERATOR PEDAL Up to 3-8164				1	
15	065787	CABLE ASSY / <> E.C.M. & ACCELERATOR PEDAL From 4-8165				1	
16	500432	SCREW TC BDG PH #8-32x3/4 ZP		AR		AR	
17	141843	TUBE PVC / 3" X 490MM W/F		1		1	
18	504499	CUFF END BELLOW / 2 7/8" I.D. x 3 5/8" x 4 7/16		3		3	
19	504016	CABLE TIE / 5/16" X 14"1/2		9		9	
20	371600	INSULATING PAD		3		3	
21	504357	WASHER FL .187x.437x.050 SS		AR		AR	
22	064872	CABLE ASSY / FRONT BAGGAGE COMPARTMENT Up to 5-8379		1			
22	066024	CABLE ASSY / FRONT BAGGAGE COMPARTMENT From 5-8380		1			
22	065196	CABLE ASSY / FRONT BAGGAGE COMPARTMENT Up to 5-8379				1	
22	066023	CABLE ASSY / FRONT BAGGAGE COMPARTMENT From 5-8380				1	
23	065578	CABLE ASSY / REAR BAGGAGE COMPARTMENT Up to 5-8379		1		1	
23	066022	CABLE ASSY / REAR BAGGAGE COMPARTMENT From 5-8380		1		1	
24	065699	CABLE ASSY / FUEL TANK		1		1	
25	065636	CABLE ASSY / TO A/C BOX & FUEL TANK Up to 4-8212		1		1	
25	065769	CABLE ASSY / TO A/C BOX & FUEL TANK From 4-8213 Up to 4-8226		1		1	
25	066004	CABLE ASSY / TO A/C BOX & FUEL TANK From 4-8227 Up to 5-8644		1		1	
25	066472	CABLE ASSY / TO A/C BOX & FUEL TANK From 5-8645		1		1	
26	065631	CABLE ASSY / ABS MODULE TO FRONT & REAR CABLE		1		1	
27	065260	CABLE ASSY / <> TRANS & E.C.U. MODULE Up to 7-9000		1			
27	066844	CABLE ASSY "WORLD" TRANS From 7-9001		1			
27	064812	CABLE ASSY / <> TRANS & E.C.U. MODULE Up to 7-9000				1	
27	Call Order Desk	CABLE ASSY "WORLD" TRANS From 7-9001				1	P
28	065299	CABLE ASSY POWER		1			
		P) CALL ORDER DESK FOR SPECIFIC APPLICATION					
		(V.I.N.)					

From Y-7046 Up to 7-9095	DATE: 01/2014	PAGE: Y2-0630-50

CABLE & HARNESS - UNDER FLOOR - MTH-40' & MTH-45' ENT

ITEM	PART	DESCRIPTION	XL45	MTH40	MTH45	MTH45S	NOTE
28	064887	CABLE ASSY POWER				1	
29	952631	CLAMP / 3/4" I.D. / REPLACED BY: 977742		AR		AR	
30	500244	SCREW TP BDG PH #8x3/4 ZG603		AR		AR	
31	680096	SEALANT BUTYL ALUM / GREY / 310ml CARTRIDGE		AR		AR	
32	065088	CABLE ASSY #102		1		1	
33	064888	CABLE ASSY / AUXILIARY SIDE MARKER LIGHT Up to 5-8358		2		2	
33	066038	CABLE ASSY / AUXILIARY SIDE MARKER LIGHT From 5-8359		2		2	
34	504534	GROMMET / .875x1.250x.187x.562x1.625		6		6	
35	065298	CABLE ASSY / <> FRT JCT BOX & REAR JCT BOX Up to 5-8358		1		1	
35	066027	CABLE ASSY / <> FRT JCT BOX & REAR JCT BOX From 5-8359 Up to 5-8644		1		1	
35	066351	CABLE ASSY / <> FRT JCT BOX & REAR JCT BOX From 5-8645		1		1	
36	503715	TUBE / PVC PIPE / 2"x10' GRAY PVC		2		2	
37	142116	TUBE PVC / 2" X MM 973MM		1		1	
38	142071	TUBE PVC / 2" X 1016MM W/ 1 HOLE		1		1	
39	500834	WASHER LO INT .168x.340x.023 ZG603		AR		AR	

From 7-9096 Up to 8-9339	DATE: 01/2014	PAGE: Y2-0630-51

CABLE & HARNESS UNDER FLOOR - MTH WITH / MUX

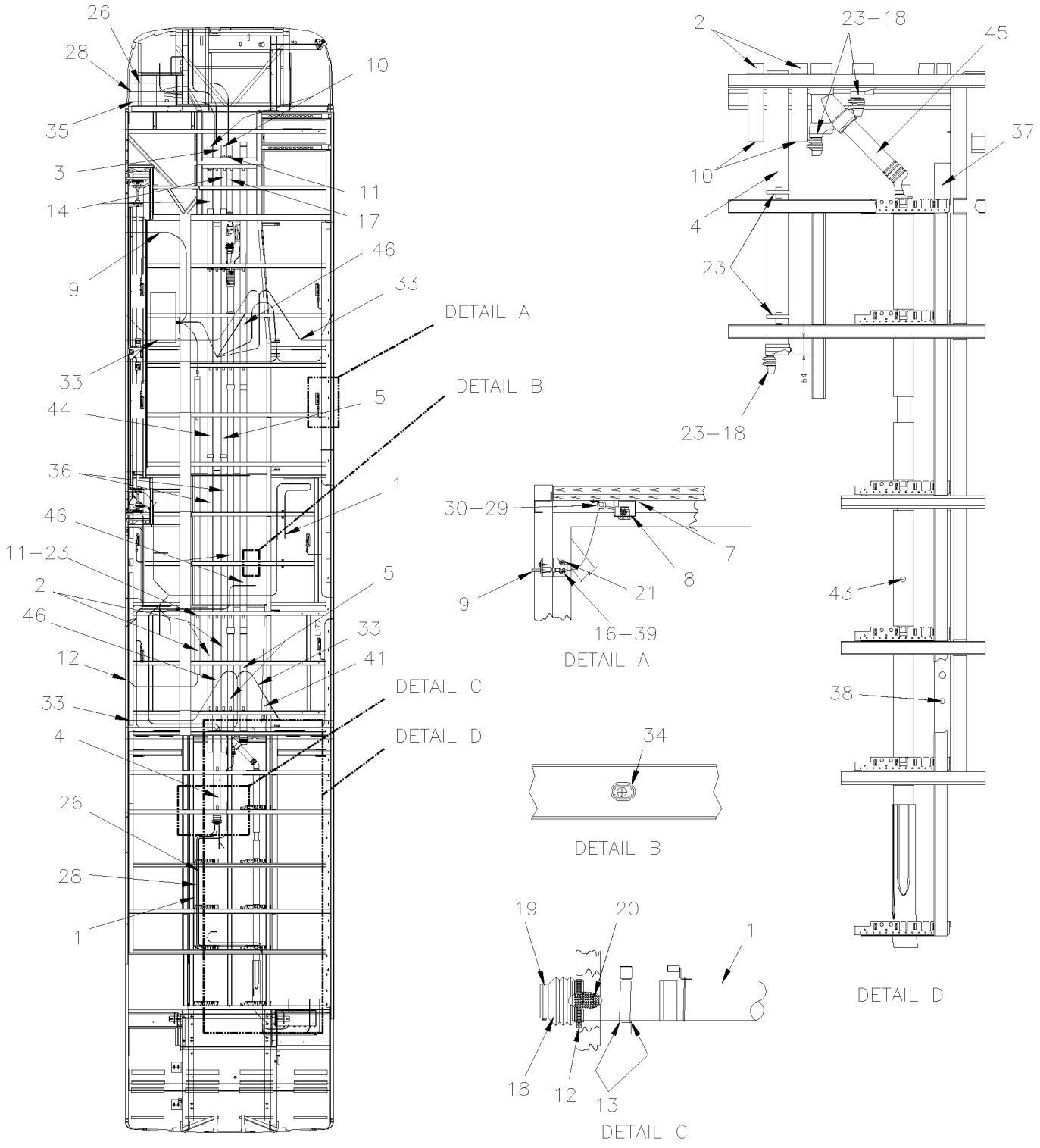

From 7-9096 Up to 8-9339	DATE: 01/2014	PAGE: Y2-0630-51

CABLE & HARNESS UNDER FLOOR - MTH WITH / MUX

ITEM	PART	DESCRIPTION	XL45	MTH40	MTH45	MTH45S	NOTE
1	067012	CABLE ASSY / POWER HVAC			1		
1	066782	CABLE ASSY / EVAPORATOR ACCESSORIES COMPART,				1	
2	065443	TUBE PVC / 2" X 3660MM W/F			AR	AR	
3	063384	TUBE PVC / 3" X 1020MM			1		
3	063796	TUBE PVC / 3" X 1575MM				1	
4	063386	TUBE PVC / 3" X 1090MM			1		
4	066983	TUBE PVC / 3" X 456MM		1			
4	066698	TUBE PVC / 3" X 1980MM				1	
5	066929	TUBE PVC / 3" X 1350MM			1		
6	066170	TUBE PVC / 2" X 1450MM				1	
NS	680290	GLUE PVC / 946ml			AR		
7	5001452	SCREW TP PAN PH #8x1 1/2 SS			AR		
8	330372	LAMP ASSY 24V / BAGGAGE COMPARTMENT LAMP W//2 BULBS 5W Up to 7-9224 / REPLACED BY: 330224			AR	AR	
8	330224	LAMP ASSY 24V / BAGGAGE COMPARTMENT LAMP W/2 BULBS G4-10W From 7-9225			1	1	
. NS	330396	. BULB / 10 WATTS -28VOLTS / SAE# G4-28 From 7-9225			1	1	
9	066533	SWITCH ASSY / BAGGAGE COMPARTMENT			AR	AR	
10	504489	PLUG			4	4	
11	504024	HOSE CLAMP / 1"13/16"-2"3/4 SS / HS-36			23	23	
12	504023	HOSE CLAMP / 1"5/16-2"1/4 SS / HS-28			20	20	
13	680532	SEALANT SIKA #221 / GREY / 310ml CARTRIDGE			AR	AR	
14	065460	TUBE PVC / 2" X 845MM			2		
14	065459	TUBE PVC / 2" X 1453MM				2	
16	500432	SCREW TC BDG PH #8-32x3/4 ZP			AR	AR	
17	066919	TUBE PVC / 2" X 900MM			1	1	
18	504499	CUFF END BELLOW / 2 7/8" I.D. x 3 5/8" x 4 7/16			3	3	
19	504016	CABLE TIE / 5/16" X 14"1/2			9	9	
20	371600	INSULATING PAD			AR	AR	
21	504357	WASHER FL .187x.437x.050 SS			AR	AR	
22	066779	CABLE FRONT BAGGAGE COMPARTMENT				1	
23	504026	HOSE CLAMP / 2"13/16-3"3/4 SS / HS-52			AR	AR	
26	066962	CABLE ASSY / FJB TO "ABS" CABLE FR & RR			1	1	
28	066886	CABLE ASSY / <> FRT JCT BOX & REAR JCT BOX			1	1	
29	952631	CLAMP / 3/4" I.D. / REPLACED BY: 977742			AR	AR	
30	500641	SCREW TP BDG PH #8x3/4 ZP			AR	AR	
33	066781	CABLE ASSY / SIDE MARKER "ADDITIONAL"			AR	AR	
34	504534	GROMMET / .875x1.250x.187x.562x1.625			6	6	
35	066778	CABLE ASSY / POWER TO FRONT ACCESSORIES				1	
36	503715	TUBE / PVC PIPE / 2"x10' GRAY PVC			2		
37	142070	TUBE PVC / 2" X 1270MM			1		
37	144849	TUBE PVC / 2" X 1320MM				1	
38	142071	TUBE PVC / 2" X 1016MM W/ 1 HOLE			1		
380	144850	TUBE PVC / 2" X 1000MM W/ 1 HOLE				1	

From 7-9096 Up to 8-9339	DATE: 01/2014	PAGE: Y2-0630-51

CABLE & HARNESS UNDER FLOOR - MTH WITH / MUX

ITEM	PART	DESCRIPTION	XL45	MTH40	MTH45	MTH45S	NOTE
39	500834	WASHER LO INT .168x.340x.023 ZG603			12		
NS	500022	WASHER LO INT .168x.340x.023 ZP			4		
40	562679	4 WAY ADH. BACKED MOUNTS 1.000 x 1.000 x .200			1		
41	066112	TUBE PVC / 2" X 1575MM			1		
42	Y2-0620-05	**REAR JUNCTION BOX FAN - INSTALLATION**					
43	Call Order Desk	TUBE PVC 2" X VEHICULE ASSY W/INSULATED NOT FO SALE			1		P
44	066947	TUBE PVC / 3" X 3048MM			1		
45	Call Order Desk	TUBE PVC Y 3" X 3" X 3" ASSY NOT FO SALE			1		P
46	503390	TUBE / PVC PIPE / 3"x10' WHITE PVC			AR		
		P) CALL ORDER DESK FOR SPECIFIC APPLICATION					
		(V.I.N.)					

From 7-9096 Up to 8-9339	DATE: 01/2014	PAGE: Y2-0630-51

CABLE & HARNESS UNDER FLOOR - MTH WITH / MUX

ITEM	PART	DESCRIPTION	XL45	MTH400	MTH445	MTH445S	NOTE

From Y-7046 Up to 7-9095	DATE: 01/2014	PAGE: Y2-0630-60

CABLE & HARNESS - UNDER FLOOR - MTH-45'

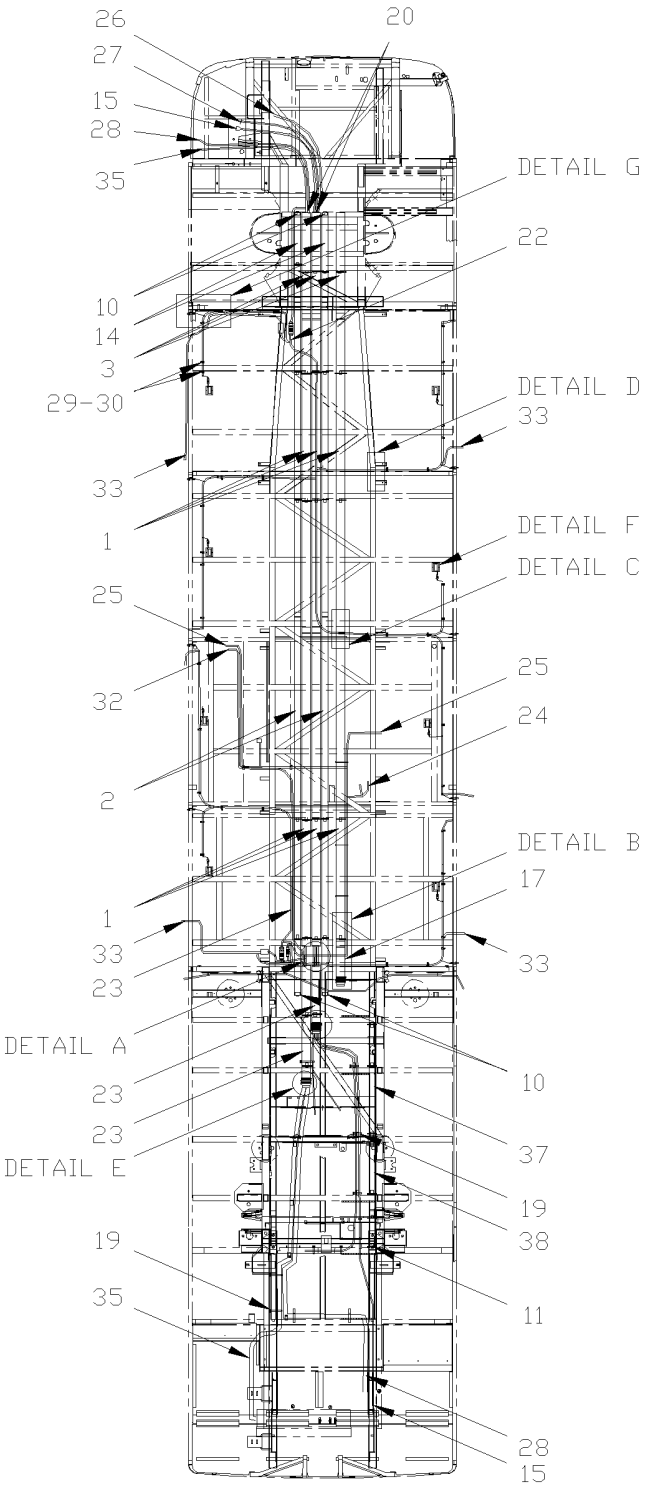

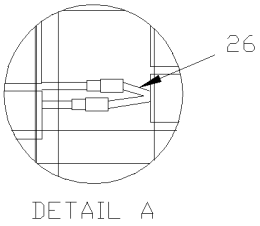

DETAIL A

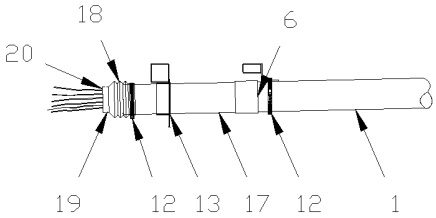

DETAIL B

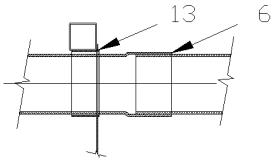

DETAIL C

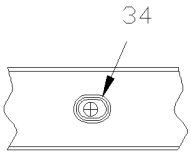

DETAIL D

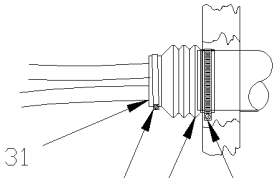

DETAIL E

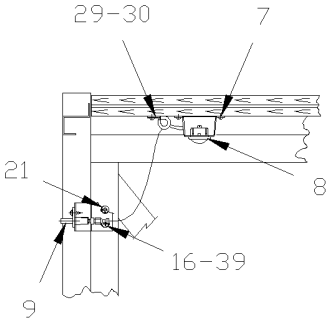

DETAIL F

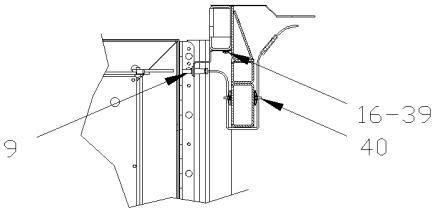

DETAIL G

From Y-7046 Up to 7-9095	DATE: 01/2014	PAGE: Y2-0630-60

CABLE & HARNESS - UNDER FLOOR - MTH-45'

ITEM	PART	DESCRIPTION	XL45	MTH40	MTH45	MTH45S	NOTE
1	503390	TUBE / PVC PIPE / 3"x10' WHITE PVC			6		
2	065443	TUBE PVC / 2" X 3660MM W/F			2		
3	063384	TUBE PVC / 3" X 1020MM			3		
4	063386	TUBE PVC / 3" X 1090MM			1		
5	063760	TUBE PVC / 3" X 560MM			1		
6	680290	GLUE PVC / 946ml			AR		
7	500235	SCREW TP BDG PH #6x3/4 ZG603			AR		
8	Y2-0655-00	**INTERIOR LIGHTING**					
9	Y2-0665-10	**SWITCHES, LIGHTS, AJAR - UNDER FLOOR**					
10	504489	PLUG			4		
11	504024	HOSE CLAMP / 1"13/16"-2"3/4 SS / HS-36			18		
12	504026	HOSE CLAMP / 2"13/16-3"3/4 SS / HS-52			29		
13	680532	SEALANT SIKA #221 / GREY / 310ml CARTRIDGE			AR		
14	065460	TUBE PVC / 2" X 845MM			2		
15	065597	CABLE ASSY / <> E.C.M. & ACCELERATOR PEDAL Up to 3-8164			1		
15	065787	CABLE ASSY / <> E.C.M. & ACCELERATOR PEDAL From 4-8165			1		
16	500654	SCREW TC BDG PH #8-32x1/2 ZP			AR		
17	141843	TUBE PVC / 3" X 490MM W/F			1		
18	504499	CUFF END BELLOW / 2 7/8" I.D. x 3 5/8" x 4 7/16			3		
19	504016	CABLE TIE / 5/16" X 14"1/2			9		
20	371600	INSULATING PAD			3		
21	504357	WASHER FL .187x.437x.050 SS			AR		
22	064872	CABLE ASSY / FRONT BAGGAGE COMPARTMENT Up to 5-8379			1		
22	066024	CABLE ASSY / FRONT BAGGAGE COMPARTMENT From 5-8380			1		
23	065578	CABLE ASSY / REAR BAGGAGE COMPARTMENT			1		
23	066022	CABLE ASSY / REAR BAGGAGE COMPARTMENT From 5-8380			1		
24	065699	CABLE ASSY / FUEL TANK			1		
25	065636	CABLE ASSY / TO A/C BOX & FUEL TANK Up to 4-8212			1		
25	065769	CABLE ASSY / TO A/C BOX & FUEL TANK From 4-8213 Up to 4-8226			1		
25	066004	CABLE ASSY / TO A/C BOX & FUEL TANK From 4-8227 Up to 5-8644			1		
25	066472	CABLE ASSY / TO A/C BOX & FUEL TANK From 5-8645			1		
26	065631	CABLE ASSY / ABS MODULE TO FRONT & REAR CABLE			1		
27	064812	CABLE ASSY / <> TRANS & E.C.U. MODULE Up to 7-9000			1		
27	Call Order Desk	CABLE ASSY "WORLD" TRANS From 7-9001			1		P
28	064887	CABLE ASSY POWER			1		
29	952631	CLAMP / 3/4" I.D. / REPLACED BY: 977742			AR		
30	500641	SCREW TP BDG PH #8x3/4 ZP			AR		
31	680123	SEALANT BUTYL ALUM / GREY / 50Gl U.S.			AR		
32	065088	CABLE ASSY #102			1		
33	064888	CABLE ASSY / AUXILIARY SIDE MARKER LIGHT Up to 5-8358			2		
33	066038	CABLE ASSY / AUXILIARY SIDE MARKER LIGHT From 5-8359			2		
34	504534	GROMMET / .875x1.250x.187x.562x1.625			6		
		P) CALL ORDER DESK FOR SPECIFIC APPLICATION					
		(V.I.N.)					

From Y-7046 Up to 7-9095	DATE: 01/2014	PAGE: Y2-0630-60

CABLE & HARNESS - UNDER FLOOR - MTH-45'

ITEM	PART	DESCRIPTION	XL45	MTH40	MTH45	MTH45S	NOTE
35	064804	CABLE ASSY / <> FRT JCT BOX & REAR JCT BOX Up to 5-8379			1		
35	066026	CABLE ASSY / <> FRT JCT BOX & REAR JCT BOX From 5-8380 Up to 5-8644			1		
35	066345	CABLE ASSY / <> FRT JCT BOX & REAR JCT BOX From 5-8645			1		
36	503715	TUBE / PVC PIPE / 2"x10' GRAY PVC			2		
37	142070	TUBE PVC / 2" X 1270MM			1		
38	142071	TUBE PVC / 2" X 1016MM W/ 1 HOLE			1		
39	500834	WASHER LO INT .168x.340x.023 ZG603			AR		
40	562679	4 WAY ADH. BACKED MOUNTS 1.000 x 1.000 x .200			6		

From Y-7046 Up to 7-9095	DATE: 01/2014	PAGE: Y2-0630-60

CABLE & HARNESS - UNDER FLOOR - MTH-45'

ITEM	PART	DESCRIPTION	XL45	MTH40	MTH45	MTH45S	NOTE

From Y-7046 Up to 6-8906	DATE: 01/2014	PAGE: Y2-0640-00

FRONT END CABLE & HARNESS - BUS

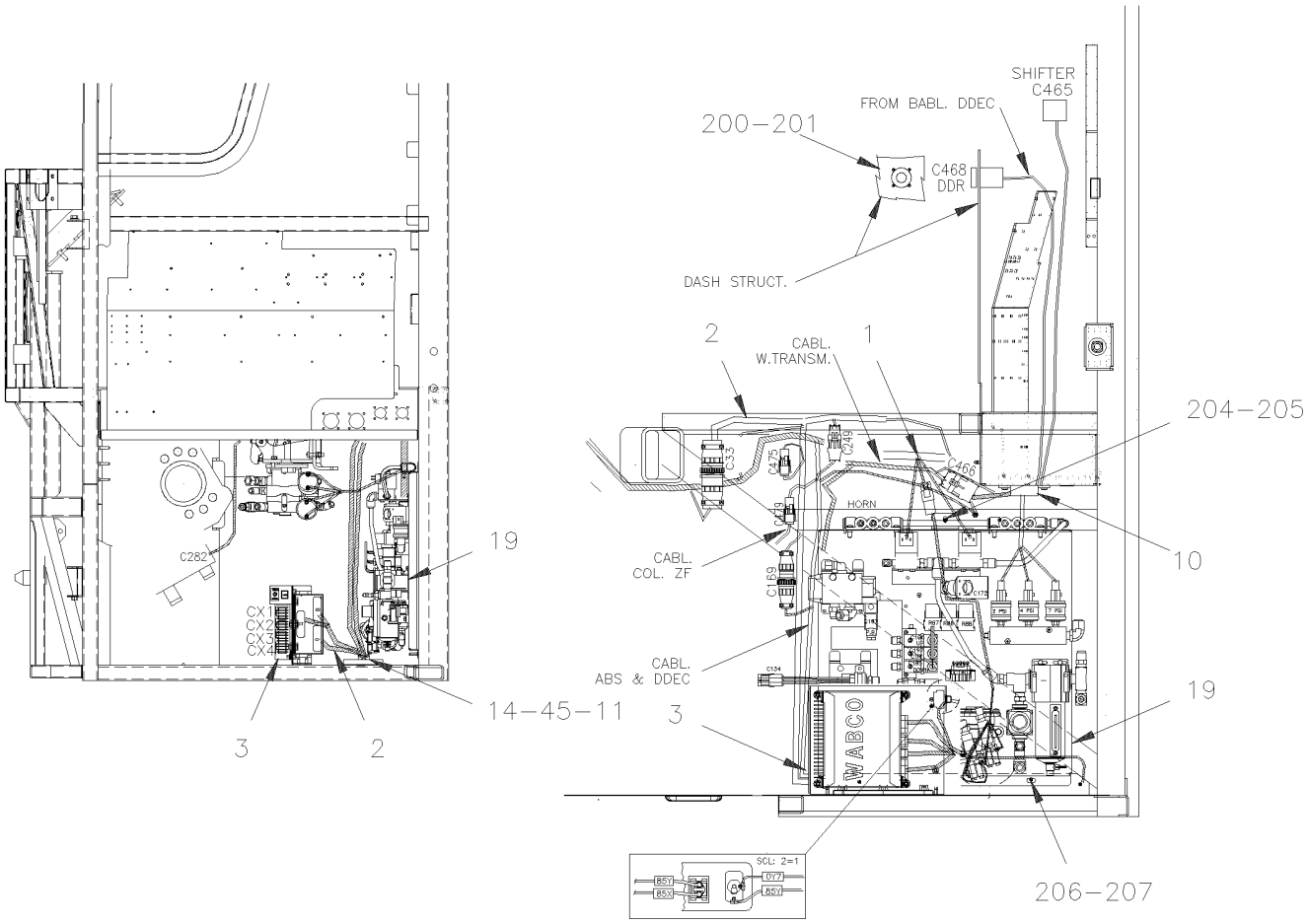

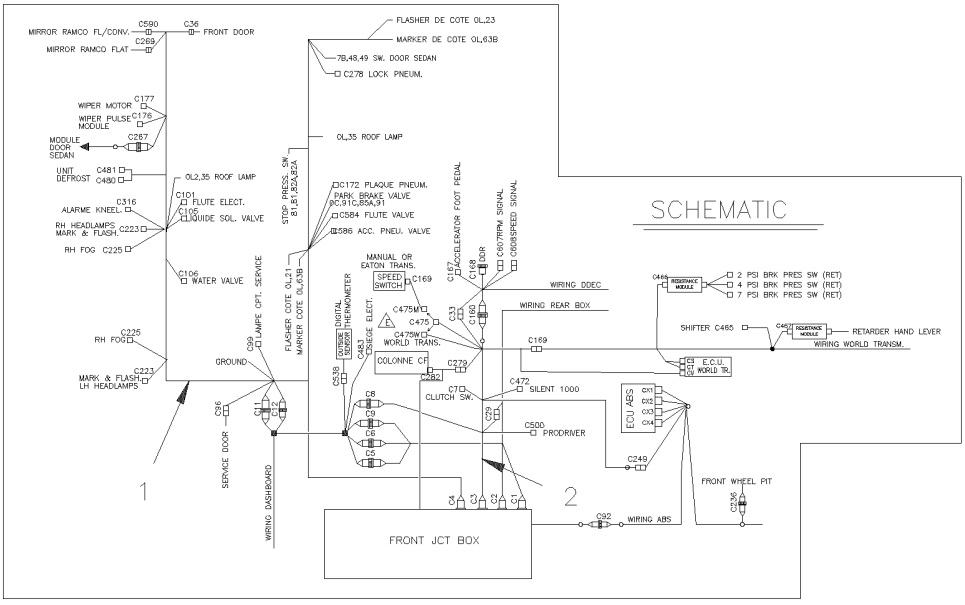

From Y-7046 Up to 6-8906	DATE: 01/2014	PAGE: Y2-0640-00

FRONT END CABLE & HARNESS - BUS

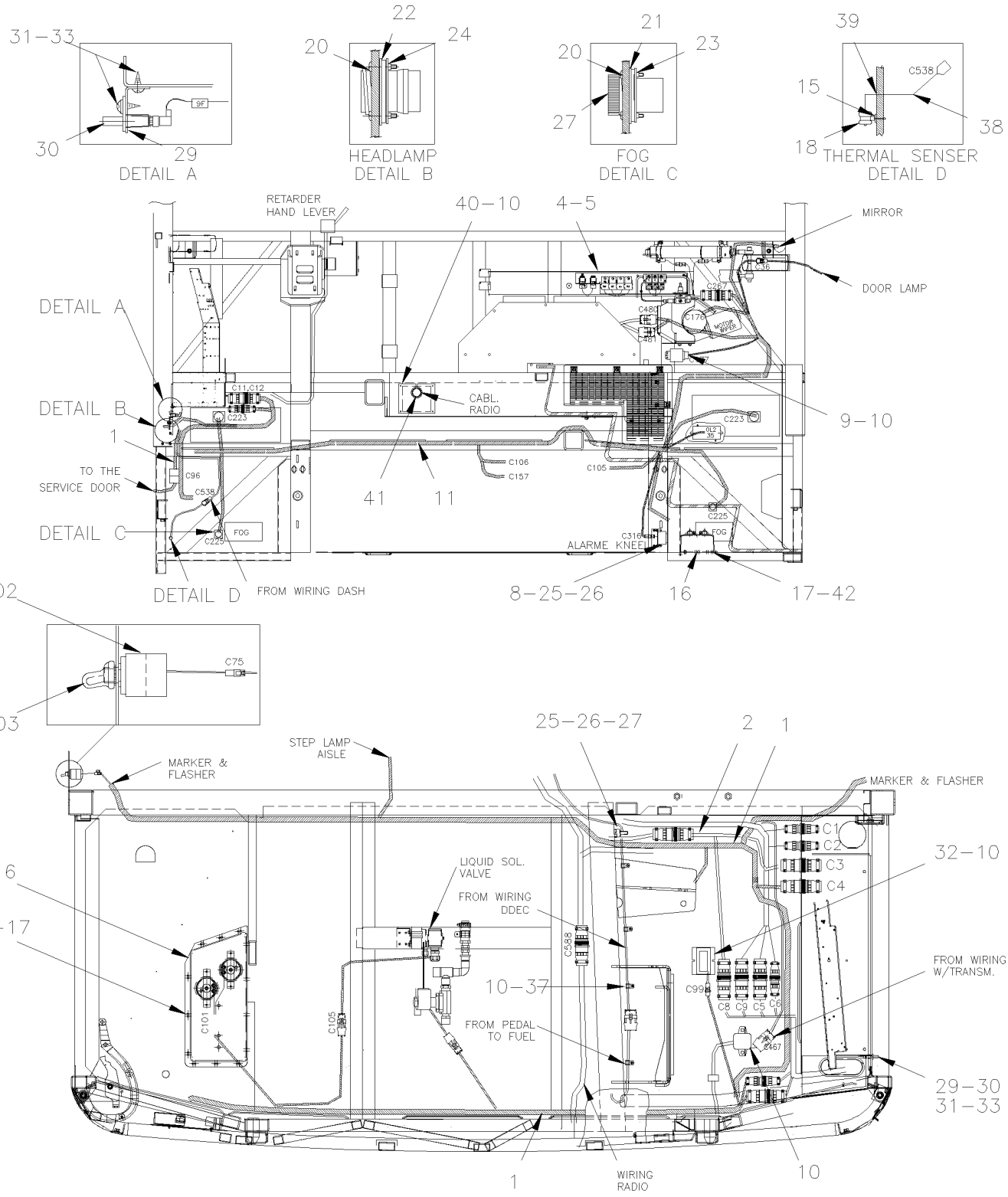

From Y-7046 Up to 6-8906	DATE: 01/2014	PAGE: Y2-0640-00

FRONT END CABLE & HARNESS - BUS

ITEM	PART	DESCRIPTION	XL45	MTH40	MTH45	MTH45S	NOTE
1	065110	CABLE ASSY / FRONT LOWER END Up to Y-7310	1				
1	065346	CABLE ASSY / FRONT LOWER END From Y-7311 Up to Y-7524	1				
1	065379	CABLE ASSY / FRONT LOWER END From Y-7525 Up to 2-7764	1				
1	065562	CABLE ASSY / FRONT LOWER END From 2-7765 Up to 3-8077	1				
1	065742	CABLE ASSY / FRONT LOWER END From 3-8078 Up to 5-8358	1				
1	065718	CABLE ASSY / FRONT LOWER END From 5-8359 Up to 5-8469	1				
1	066097	CABLE ASSY / FRONT LOWER END From 5-8470	1				
2	064777	CABLE, FRONT INTERFACE Up to Y-7310	1				
2	065348	CABLE, FRONT INTERFACE From Y-7311 Up to Y-7524	1				
2	065448	CABLE, FRONT INTERFACE From Y-7525 Up to 2-7823	1				
2	065596	CABLE, FRONT INTERFACE From 2-7824 Up to 5-8358	1				
2	065860	CABLE, FRONT INTERFACE From 5-8359	1				
3	Y2-1250-00	**ANTI-LOCK BRAKING SYSTEM**					
4	Y2-1802-00	**ENTRANCE DOOR CONTROL**					
5	064094	FIRE & KNEELING / ALARM ASSY / SERVICE / REPLACED BY: K064094	1				
8	500588	SCREW CAP HEX M4-0.7x20 G8.8 ZP / REPLACED BY: 500414	2				
9	800293	GENERATOR, PULSE / FOR WIPER MOTOR	AR				
10	Y2-0750-00	**AUTOMATIC TRANSMISSION - "WORLD" WITH DETROIT S-60**					
11	504637	CABLE TIE / 3/16" x 13"	25				
14	504347	RIVET POP DOME OE 3/16x1/4 AL	3				
15	500952	SCREW TP BDG PH #8x1/2 SS	1				
16	Y2-2310-00	**HORN - INSTALLATION**					
17	500964	WASHER FL .203x.500x.047 ZP	13				
18	952625	CLAMP / 3/8" I.D.	1				
19	Y2-1630-00	**FRONT KNEELING - CONTROL PANEL**					
20	5001454	SCREW MA BDG PH #4-40x1/2 SS	16				
21	562945	GASKET MOUNTING / HD10 SERIES / 3C / DEUTSCH HD10-3-GKT	2				
22	562946	GASKET MOUNTING / HD10 SERIES / 5C / DEUTSCH HD10-5-GKT	2				
23	062268	NUT, RING #11 / .940" I.D. W/4 4-40	2				
24	561820	NUT, RING #13 / 1.125" I.D. W/4 4-40	2				
25	502524	NUT HEX M4-0.7 NP	2				
26	502636	WASHER LO SPT 4.1x7.6x0.9 ZP	2				
27	562904	PROTECTIVE CAP / HD10 SERIES / 3C / DEUTSCH HDC16-3	2				
29	064434	SUPPORT / LIGHT SWITCH / REPLACED BY: 066638	1				
30	562303	SWITCH / S.P.S.T. / N.C. Up to 5-8788	1				
30	563464	SWITCH / S.P.S.T. / N.C. / W/RUBBER BOOT From 5-8789	1				
31	500022	WASHER LO INT .168x.340x.023 ZP	2				
32	Y2-0655-00	**INTERIOR LIGHTING**					
32	Y2-0665-10	**SWITCHES, LIGHTS, AJAR - UNDER FLOOR**					
33	500657	SCREW TC TR PH #10-24x1/2 ZP	3				
37	952625	CLAMP / 3/8" I.D.	4				
38	562636	SENSOR / PASSENGER'S TEMP. CONTROL Up to 1-7493	1				
38	563066	SENSOR THERMISTOR ASSY ("DALLAS") From 1-7494	1				
39	682176	SEALANT SIKA #221 / BLACK / 310ml CARTRIDGE	AR				

From Y-7046 Up to 6-8906	DATE: 01/2014	PAGE: Y2-0640-00

FRONT END CABLE & HARNESS - BUS

ITEM	PART	DESCRIPTION	XL45	MTH40	MTH45	MTH45S	NOTE
40	065209	PLATE, CLOSING	1				
41	504398	GROMMET / 1.000x1.375x.062x.437x1.750	1				
42	500658	SCREW TC PAN PH #10-24x3/4 ZP	13				
45	504013	TIE MOUNT / 1/4" X 1/4" I.D.	1				
200	500518	SCREW MA BDG PH #4-40x1/2 ZP	4				
201	561821	NUT, RING #17 & 20 / 1.500" I.D W/4 4-40	1				
202	563047	SWITCH ASSY / WATERPROOF	1				
203	560241	RUBBER PROTECTOR, TOGGLE SWITCH	1				
204	500476	WASHER LO SPT .317x.586x.078 ZP	1				
205	502790	SCREW CAP HEX M8-1.25x20 G8.8 ZP	1				
206	502573	WASHER FL 6.4x12.5x1.6 SS	2				
207	500609	NUT HEX M6-1.0 ZP	2				

From Y-7046 Up to 7-9095	DATE: 01/2014	PAGE: Y2-0640-50

FRONT END CABLE & HARNESS - MTH

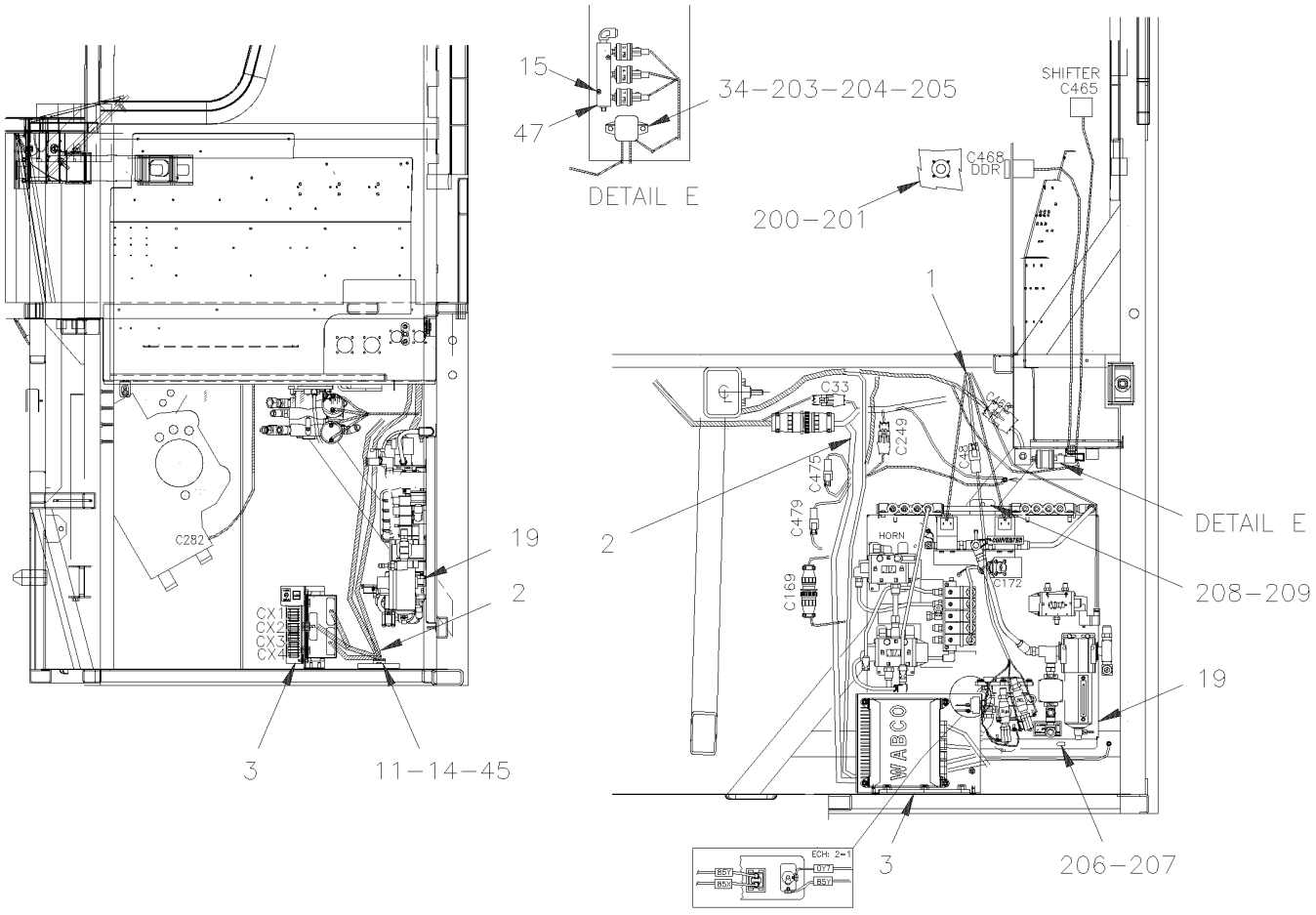

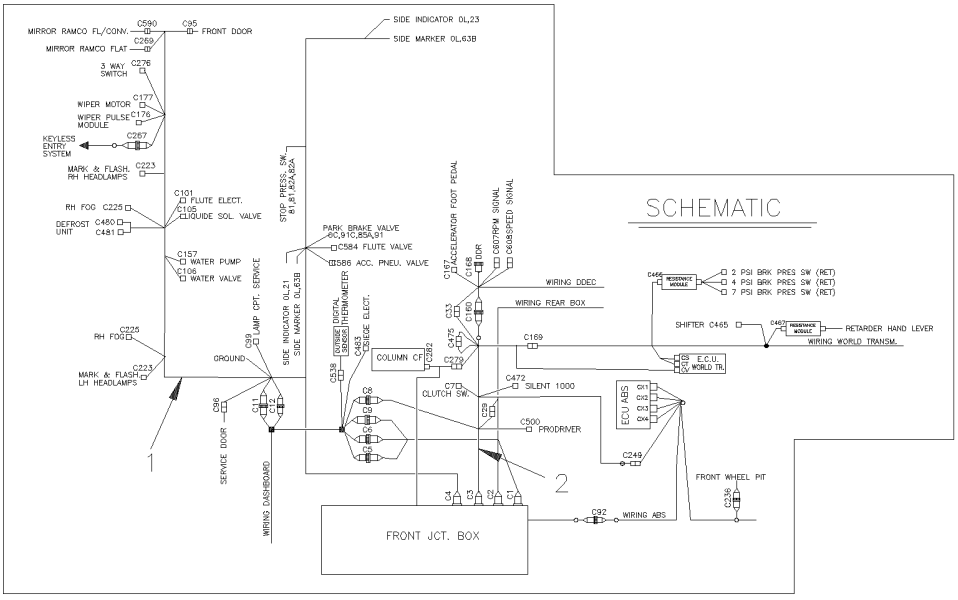

From Y-7046 Up to 7-9095	DATE: 01/2014	PAGE: Y2-0640-50

FRONT END CABLE & HARNESS - MTH

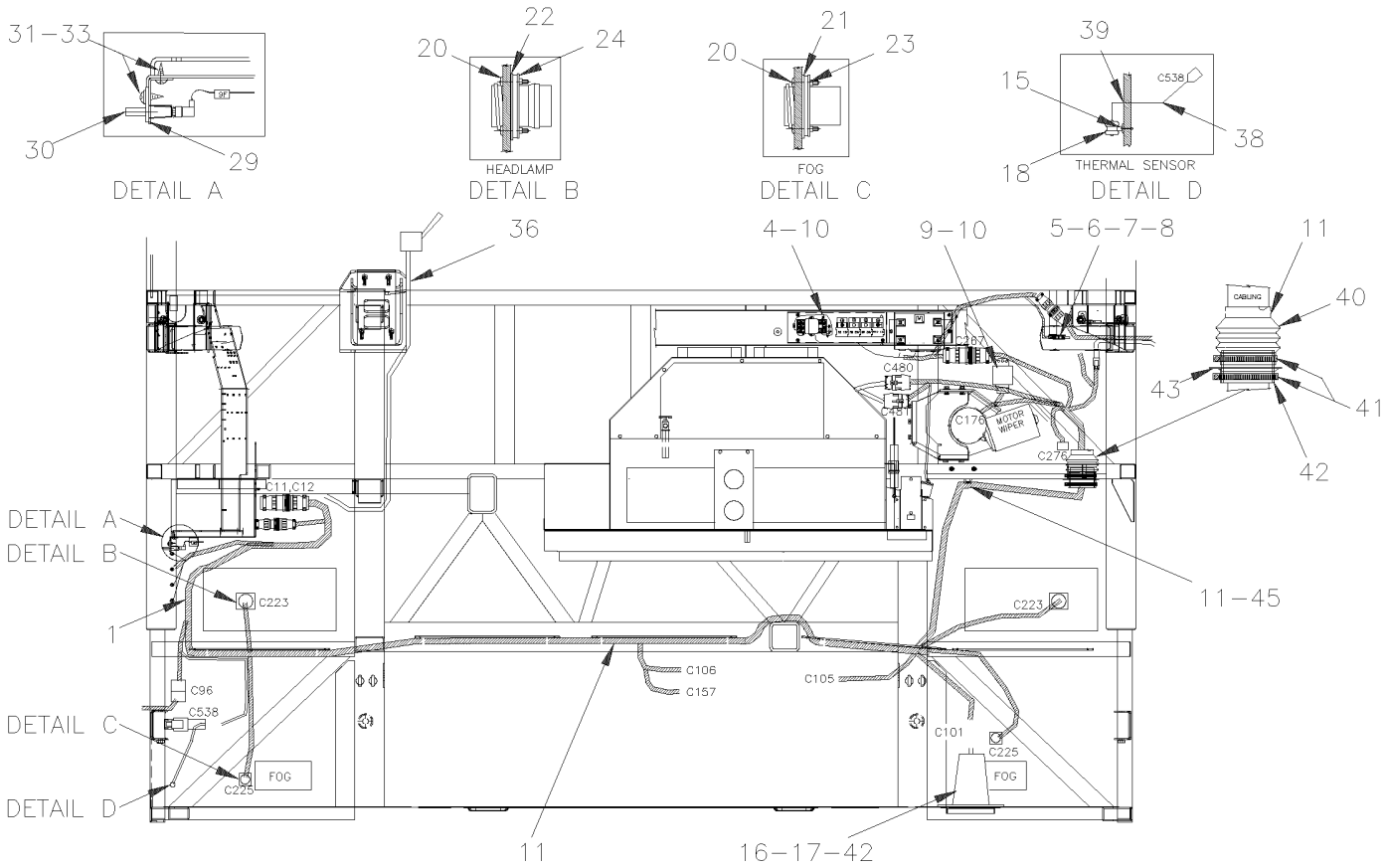

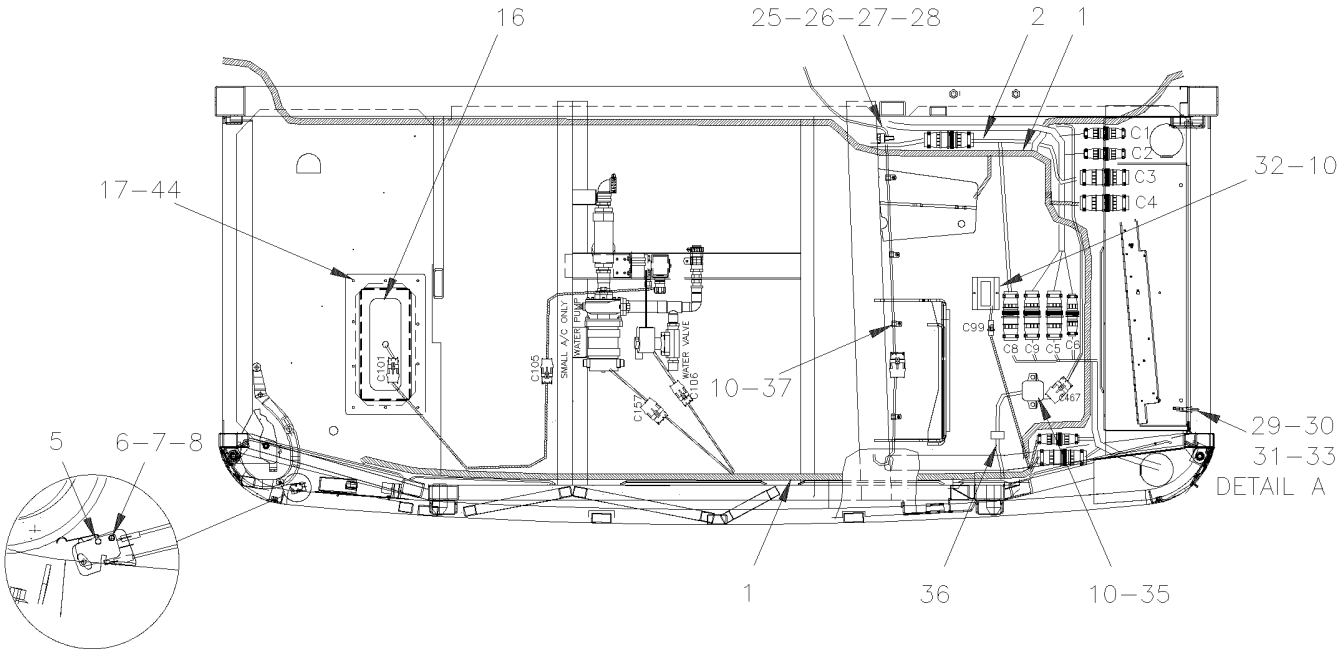

From Y-7046 Up to 7-9095	DATE: 01/2014	PAGE: Y2-0640-50

FRONT END CABLE & HARNESS - MTH

ITEM	PART	DESCRIPTION	XL45	MTH40	MTH45	MTH45S	NOTE
1	064779	CABLE ASSY / FRONT LOWER END Up to Y-7493		1	1	1	
1	065439	CABLE ASSY / FRONT LOWER END From Y-7494 Up to 2-7764		1	1	1	
1	065564	CABLE ASSY / FRONT LOWER END From 2-7765 Up to 2-7799		1	1	1	
1	065550	CABLE ASSY / FRONT LOWER END From 2-7800 Up to 3-7957		1	1	1	
1	065783	CABLE ASSY / FRONT LOWER END From 3-7958 Up to 4-8379		1	1	1	
1	065715	CABLE ASSY / FRONT LOWER END From 5-8380 Up to 5-8469		1	1	1	
1	066099	CABLE ASSY / FRONT LOWER END From 5-8470		1	1	1	
2	064777	CABLE, FRONT INTERFACE Up to Y-7310		1	1	1	
2	065348	CABLE, FRONT INTERFACE From Y-7311 Up to Y-7531		1	1	1	
2	065448	CABLE, FRONT INTERFACE From Y-7532 Up to 2-7823		1	1	1	
2	065596	CABLE, FRONT INTERFACE From 2-7824 Up to 4-8358		1	1	1	
2	065860	CABLE, FRONT INTERFACE From 5-8359		1	1	1	
3	Y2-1250-00	**ANTI-LOCK BRAKING SYSTEM**					
4	Y2-0650-50	**KEYLESS MODULE**					
5	562096	MICRO SWITCH		1	1	1	
6	502577	SCREW MA PAN PH M3-0.5x16 ZP		2	2	2	
7	502579	NUT HEX M3-0.5 NP		2	2	2	
8	5001407	WASHER LO EXT 3.2x6.0x0.4 SS		2	2	2	
9	800293	GENERATOR, PULSE / FOR WIPER MOTOR		1	1	1	
10	500638	SCREW TP BDG PH #8x1/2 ZP		6	6	6	
11	504637	CABLE TIE / 3/16" x 13"		25	25	25	
15	500952	SCREW TP BDG PH #8x1/2 SS		1	1	1	
16	Y2-2310-00	**HORN - INSTALLATION**					
17	500658	SCREW TC PAN PH #10-24x3/4 ZP		10	10	10	
18	952625	CLAMP / 3/8" I.D.		1	1	1	
19	Y2-1640-51	**LEVEL-LOW - CONTROL PANEL & VALVES**					
20	5001454	SCREW MA BDG PH #4-40x1/2 SS		16	16	16	
21	562945	GASKET MOUNTING / HD10 SERIES / 3C / DEUTSCH HD10-3-GKT		2	2	2	
22	562946	GASKET MOUNTING / HD10 SERIES / 5C / DEUTSCH HD10-5-GKT		2	2	2	
23	062268	NUT, RING #11 / .940" I.D. W/4 4-40		2	2	2	
24	561820	NUT, RING #13 / 1.125" I.D. W/4 4-40		2	2	2	
25	560422	BLOCK, TERMINAL / 1 STUD 3/8-16 / BLACK		1	1	1	
26	500641	SCREW TP BDG PH #8x3/4 ZP		2	2	2	
27	502616	WASHER LO SPT 10.2x18.1x2.2 SS		1	1	1	
28	500102	NUT HEX 3/8-16 SS		1	1	1	
29	064434	SUPPORT / LIGHT SWITCH / REPLACED BY: 066638		1	1	1	
30	562303	SWITCH / S.P.S.T. / N.C. Up to 5-8788		1	1	1	
30	563464	SWITCH / S.P.S.T. / N.C. / W/RUBBER BOOT From 5-8789		1	1	1	
31	500022	WASHER LO INT .168x.340x.023 ZP		2	2	2	
32	Y2-0665-10	**SWITCHES, LIGHTS, AJAR - UNDER FLOOR**					
33	500657	SCREW TC TR PH #10-24x1/2 ZP		3	3	3	
34	562381	RESISTANCE MODULE		1	1	1	
35	562357	RESISTANCE MODULE		1	1	1	
36	063782	CABLE ASSY / <> RESISTANCE MODULE & SWITCH		1	1	1	

From Y-7046 Up to 7-9095	DATE: 01/2014	PAGE: Y2-0640-50

FRONT END CABLE & HARNESS - MTH

ITEM	PART	DESCRIPTION	XL45	MTH40	MTH45	MTH45S	NOTE
37	952625	CLAMP / 3/8" I.D.		4	4	4	
38	562636	SENSOR / PASSENGER'S TEMP. CONTROL Up to 1-7493		1	1	1	
38	563066	SENSOR THERMISTOR ASSY ("DALLAS") From 1-7494		1	1	1	
39	682176	SEALANT SIKA #221 / BLACK / 310ml CARTRIDGE		AR	AR	AR	
40	504533	CUFF END BELLOW / 2 3/8" I.D. x 2 3/8" x 4"		1	1	1	
41	504024	HOSE CLAMP / 1"13/16"-2"3/4 SS / HS-36		2	2	2	
42	380692	TUBE ABS		1	1	1	
43	680067	SEALANT TAPE BUTYL / BLACK / 1/8"x3/4"x25' / 75211E760		AR	AR	AR	
44	500989	WASHER FL .219x.875x.062 ZP		10	10	10	
45	504013	TIE MOUNT / 1/4" X 1/4" I.D.		1	1	1	
47	Y2-0750-00	**AUTOMATIC TRANSMISSION - "WORLD" WITH DETROIT S-60**					
200	500518	SCREW MA BDG PH #4-40x1/2 ZP		4	4	4	
201	561821	NUT, RING #17 & 20 / 1.500" I.D W/4 4-40		1	1	1	
203	502564	WASHER LO SPT 6.1x11.8x1.6 ZP		2	2	2	
204	502737	SCREW CAP HEX M6-1.0x25 SS EMN		2	2	2	
205	502511	NUT HEX NYRT M6-1.0 ZP		2	2	2	
206	502573	WASHER FL 6.4x12.5x1.6 SS		3	3	3	
207	500609	NUT HEX M6-1.0 ZP		3	3	3	
208	500476	WASHER LO SPT .317x.586x.078 ZP		3	3	3	
209	502790	SCREW CAP HEX M8-1.25x20 G8.8 ZP		7	7	7	

From 7-9096 Up to 8-9339	DATE: 01/2014	PAGE: Y2-0640-51

FRONT END CABLE & HARNESS - MTH / MUX // D061083

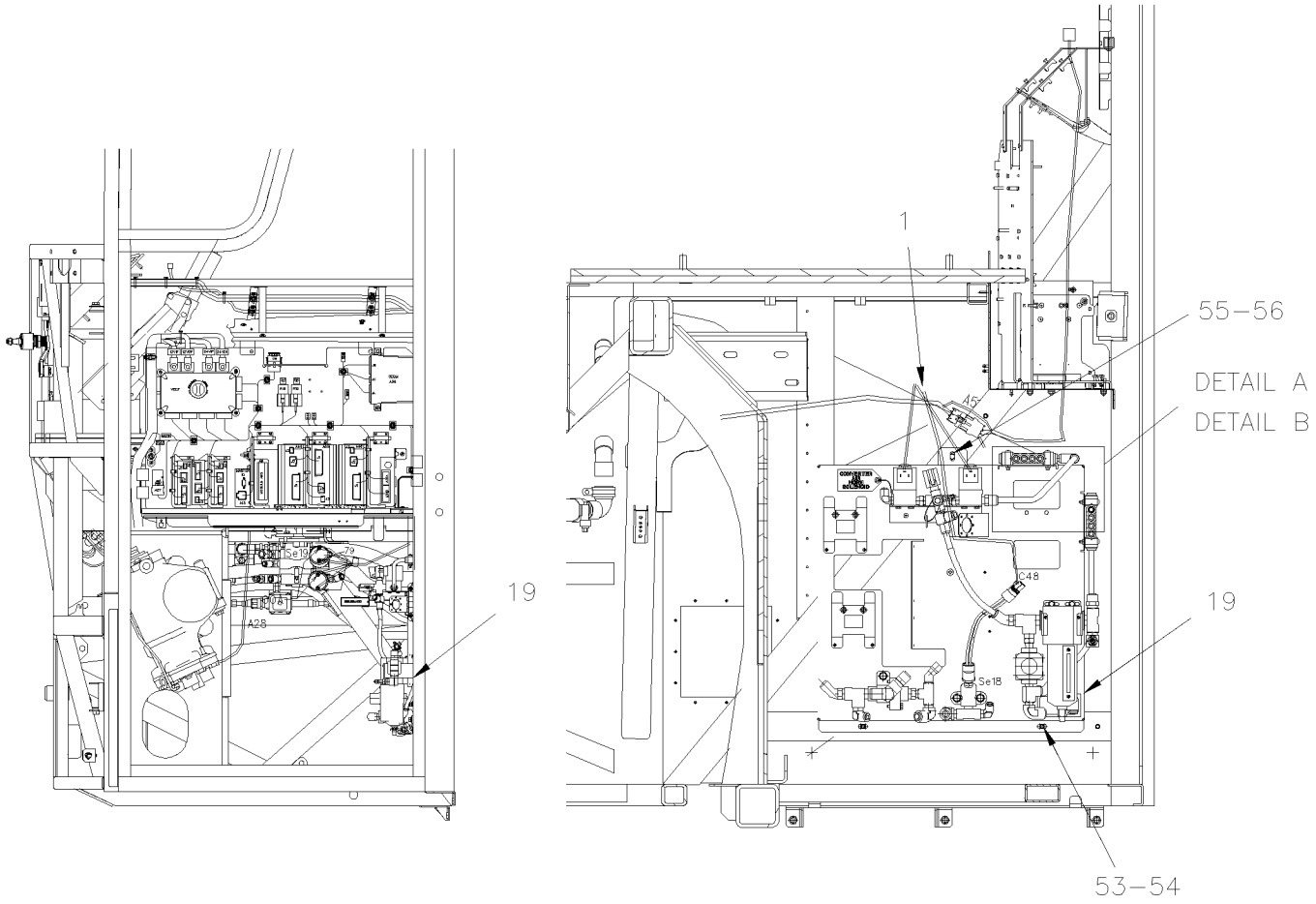

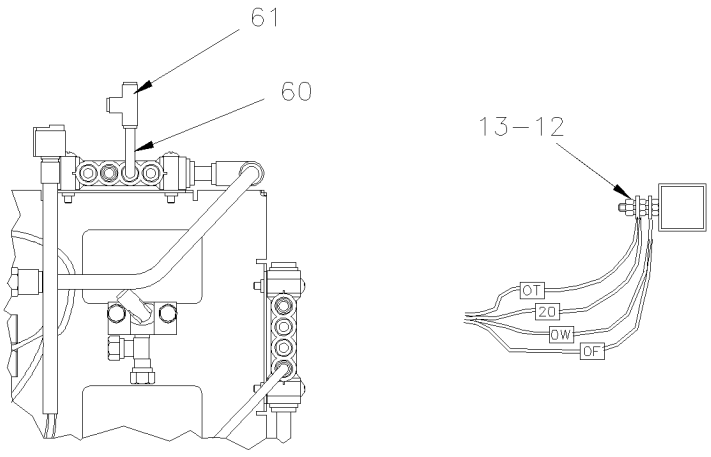

DETAIL A

DETAIL B

From 7-9096 Up to 8-9339	DATE: 01/2014	PAGE: Y2-0640-51

FRONT END CABLE & HARNESS - MTH / MUX // D061083

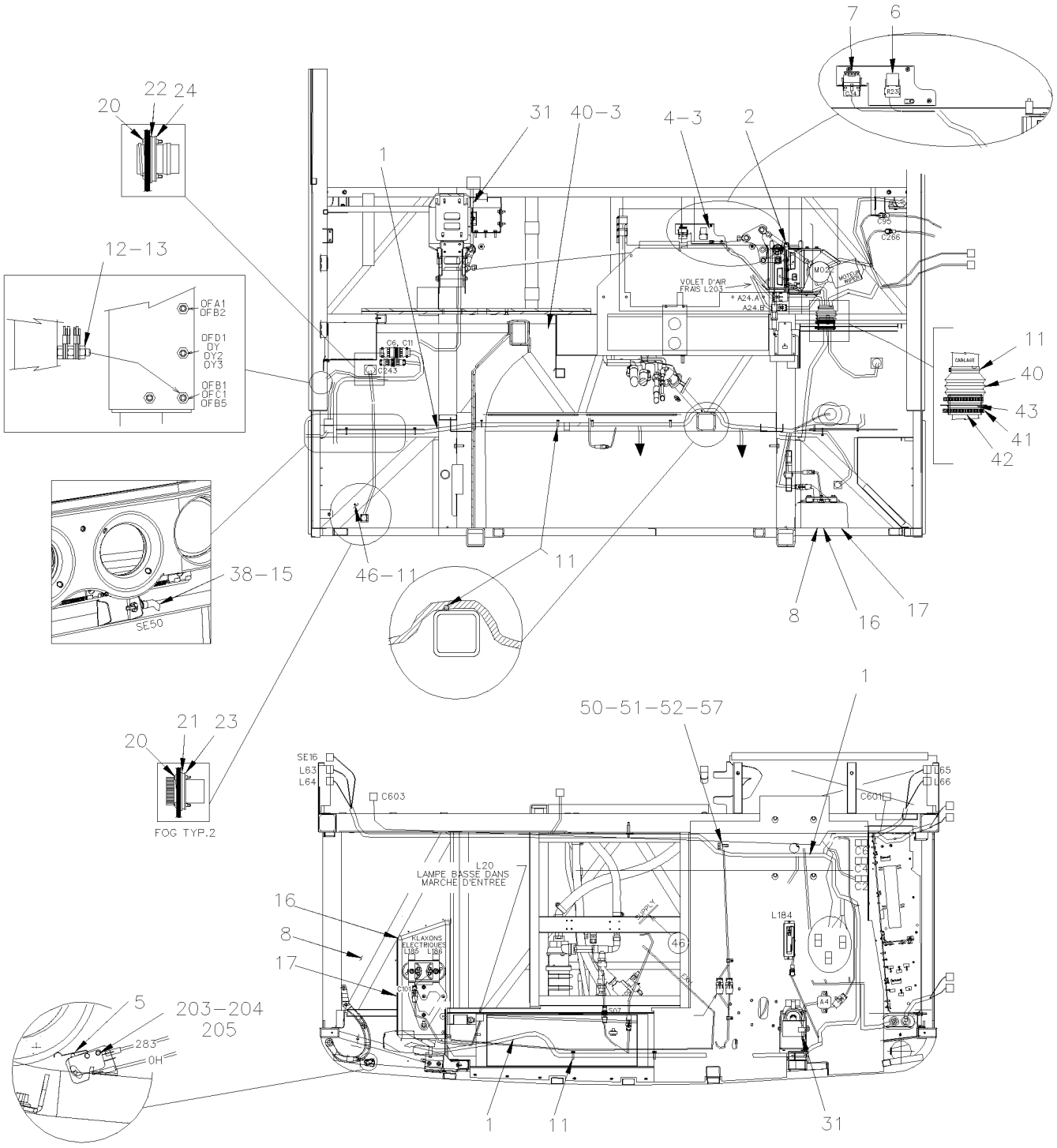

From 7-9096 Up to 8-9339	DATE: 01/2014	PAGE: Y2-0640-51

FRONT END CABLE & HARNESS - MTH / MUX // D061083

ITEM	PART	DESCRIPTION	XL45	MTH40	MTH45	MTH45S	NOTE
1	066773	CABLE ASSY / FRONT LOWER END / MUX			1	1	
2	Call Order Desk	I/O B-MODULE VOLVO MULTIPLEX ASSY			1	1	P
3	500638	SCREW TP BDG PH #8x1/2 ZP			3	3	
4	288821	SUPPORT & RELAY ASSY			1	1	
5	562096	MICRO SWITCH			1	1	
6	563332	RELAY 24V S.P.D.T. W/RESISTOR / "VOLVO" (20374662)			1	1	
7	381145	DIODE ASSY / W/5 3AMPS			1	1	
8	5001407	WASHER LO EXT 3.2x6.0x0.4 SS			2	2	
11	504637	CABLE TIE / 3/16" x 13"			AR	AR	
12	502565	NUT HEX M6-1.0 SS			15	15	
13	502570	WASHER LO SPT 6.1x11.8x1.6 SS			8	8	
14	500167	SCREW CAP HEX 1/4-20x1 1/4 G5 PT ZP			3	3	
15	502716	NUT HEX NYRT 1/4-20 / REPLACED BY: 5001123			3	3	
16	562387	CONVOLUTED TUBING / .250" / SLIT / BLACK			AR	AR	
17	Y2-2310-00	**HORN - INSTALLATION**					
18	500658	SCREW TC PAN PH #10-24x3/4 ZP			10	10	
19	Y2-1640-52	**LEVEL-LOW - CONTROL PANEL & VALVES**					
20	5001454	SCREW MA BDG PH #4-40x1/2 SS			16	16	
21	562945	GASKET MOUNTING / HD10 SERIES / 3C / DEUTSCH HD10-3-GKT			2	2	
22	563096	GASKET MOUNTING / HD10 SERIES / 6C / DEUTSCH HD10-6-GKT / REPLACED BY: 564195			2	2	
23	562381	RESISTANCE MODULE			1	1	
24	062268	NUT, RING #11 / .940" I.D. W/4 4-40			2	2	
25	500642	SCREW TP BDG PH #10x3/4 ZP			4	4	
26	561821	NUT, RING #17 & 20 / 1.500" I.D W/4 4-40			2	2	
30	562357	RESISTANCE MODULE			1	1	
31	063782	CABLE ASSY / <> RESISTANCE MODULE & SWITCH			1	1	
34	500411	WASHER FL .260x.697x.050 SS			6	6	
38	563335	SENSOR THERMISTOR ASSY / OUTSIDE / / PED 15416387			1	1	
40	504499	CUFF END BELLOW / 2 7/8" I.D. x 3 5/8" x 4 7/16			1	1	
41	504026	HOSE CLAMP / 2"13/16-3"3/4 SS / HS-52			2	2	
42	065035	TUBE PVC / 3" X 50MM			1	1	
43	680067	SEALANT TAPE BUTYL / BLACK / 1/8"x3/4"x25' / 75211E760			1	1	
46	562679	4 WAY ADH. BACKED MOUNTS 1.000 x 1.000 x .200			1	1	
50	500102	NUT HEX 3/8-16 SS			1	1	
51	502616	WASHER LO SPT 10.2x18.1x2.2 SS			1	1	
52	500641	SCREW TP BDG PH #8x3/4 ZP			2	2	
53	502573	WASHER FL 6.4x12.5x1.6 SS			1	1	
54	502854	NUT HEX M6-1.0 ZG603			2	2	
55	500942	WASHER LO SPT .317x.586x.078 ZG603			1	1	
56	502862	SCREW CAP HEX M8-1.25x20 G8.8 ZG603			1	1	
57	560422	BLOCK, TERMINAL / 1 STUD 3/8-16 / BLACK			1	1	
58	952624	CLAMP / 1/4" I.D.			1	1	
		P) CALL ORDER DESK FOR SPECIFIC APPLICATION					
		(V.I.N.)					

From 7-9096 Up to 8-9339	DATE: 01/2014	PAGE: Y2-0640-51

FRONT END CABLE & HARNESS - MTH / MUX // D061083

ITEM	PART	DESCRIPTION	XL45	MTH40	MTH45	MTH45S	NOTE
59	684685	ADHESIVE SIMSON #ISR 70-03 / BLACK / 310ml CARTRIDGE			AR	AR	
60	503402	TUBE, NYLON 1/4 O.D. / BLACK S.L.			AR	AR	
61	641955	UNION TEE / PUSH-IN FITTING / #4x#4x#4 BR			1	1	
62	502526	SCREW TC BDG PH #12-24x3/4 ZP			10	10	

From Y-7046 Up to 6-8906	DATE: 01/2014	PAGE: Y2-0640-80

CABLE & HARNESS - W.C.L.

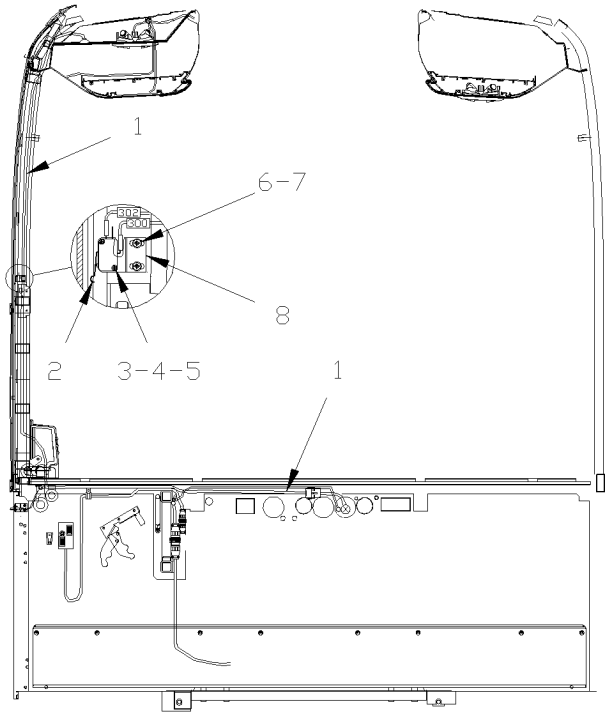

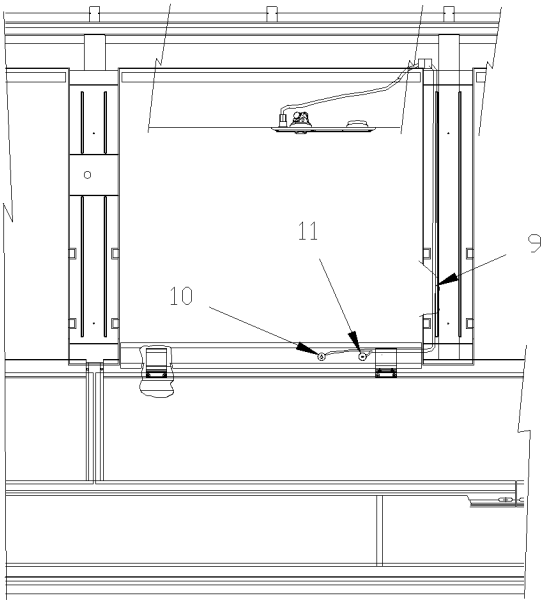

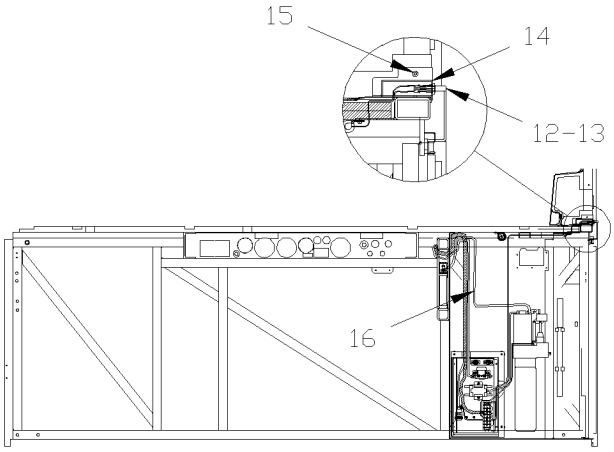

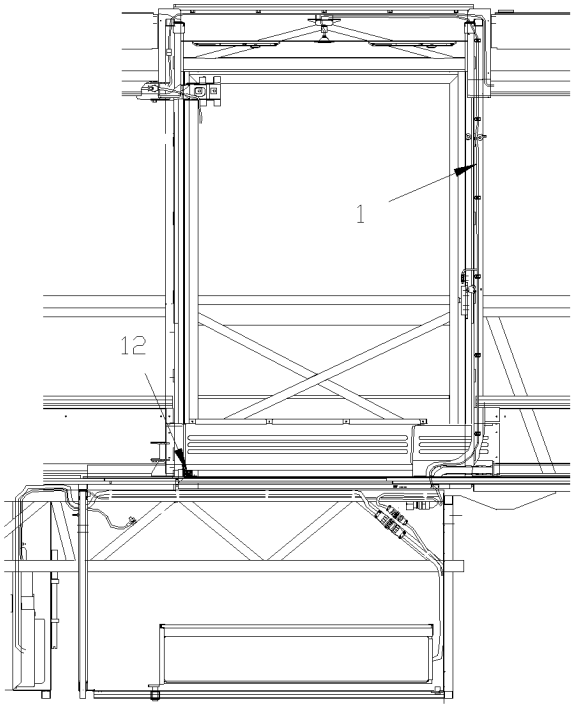

WCL DOOR INTERIOR VIEW

From Y-7046 Up to 6-8906	DATE: 01/2014	PAGE: Y2-0640-80

CABLE & HARNESS - W.C.L.

ITEM	PART	DESCRIPTION	XL45	MTH40	MTH45	MTH45S	NOTE
1	065344	CABLE ASSY / W.C.L. ACCESSORIES DOOR Up to 4-8278	1				
1	065916	CABLE ASSY / W.C.L. ACCESSORIES DOOR From 4-8279	1				
NS	504264	GROMMET / .750x1.250x.062x.250x1.625	1				
2	502096	PIN COTTER 1/16x1 ZP	1				
3	502519	SCREW MA FL SLT #4-40x5/8 ZP	2				
4	502520	NUT HEX #4-40 ZP	2				
5	5001407	WASHER LO EXT 3.2x6.0x0.4 SS	2				
6	5001491	SCREW TC PAN PH #8-32x3/4 SS	2				
7	500581	WASHER LO SPT .141x.250x.031 SS	2				
8	065388	SUPPORT / SWITCH	1				
9	065369	CABLE HARNESS / READING LIGHT CURBSIDE DOOR / W/W.C.L.	1				
10	830159	SWITCH / OFF-M/ON / S.P.S.T. / CHIME	1				WCL
11	830158	SWITCH / OFF-ON / S.P.S.T. / READING LIGHT	1				WCL
NS	409259	PROTECTOR SWITCH / CAP	2				
NS	500814	SCREW TP BDG PH #6x3/4 BK	4				
12	562303	SWITCH / S.P.S.T. / N.C. Up to 5-8788	1				
12	563464	SWITCH / S.P.S.T. / N.C. / W/RUBBER BOOT From 5-8789	1				
13	500148	SCREW MA RND PH #6-32x1/2 SS	1				
NS	500553	NUT HEX #6-32 SS / REPLACED BY: 500997	1				
NS	502649	WASHER LO EXT .141x.320x.022 ZP	1				
14	065444	SWITCH SUPPORT / ENTRANCE DOOR W.C.L.	1				
15	500552	SCREW TP OV PH #6x3/4 ZP	2				
NS	500463	WASHER FN CKF .187x.500x.090 BR NP	2				
16	065343	WIRING HARNESS INTERFACE RICON	1				
NS	504637	CABLE TIE / 3/16" x 13"	AR				
NS	504013	TIE MOUNT / 1/4" X 1/4" I.D.	AR				
NS	952639	CLAMP / 1"1/4 I.D.	AR				
NS	504536	CABLE CLIP ½" / ADHESIVE	AR				
NS	680096	SEALANT BUTYL ALUM / GREY / 310ml CARTRIDGE	AR				
NS	065342	CABLE # 0W ASSY Up to 4-8278	1				
		WCL) THIS SWITCH INSTALL ON LOWER WINDOW MOULDING					
		WITH PROTECTOR # 409259 FOR IMPROVEMENT					

From Y-7046 Up to 6-8906	DATE: 01/2014	PAGE: Y2-0641-00
CABLE & HARNESS REAR END - BUS		

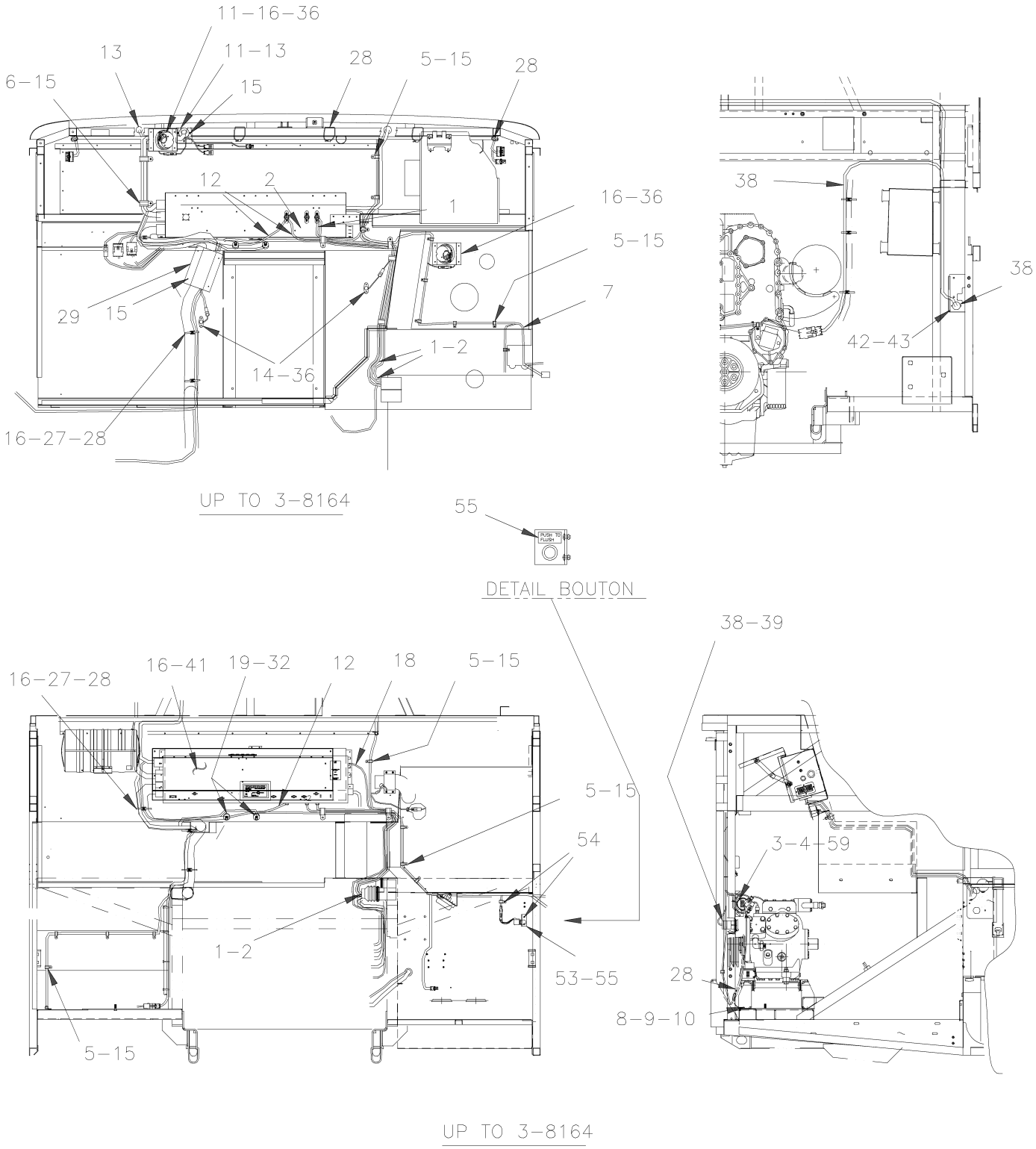

From Y-7046 Up to 6-8906	DATE: 01/2014	PAGE: Y2-0641-00

CABLE & HARNESS REAR END - BUS

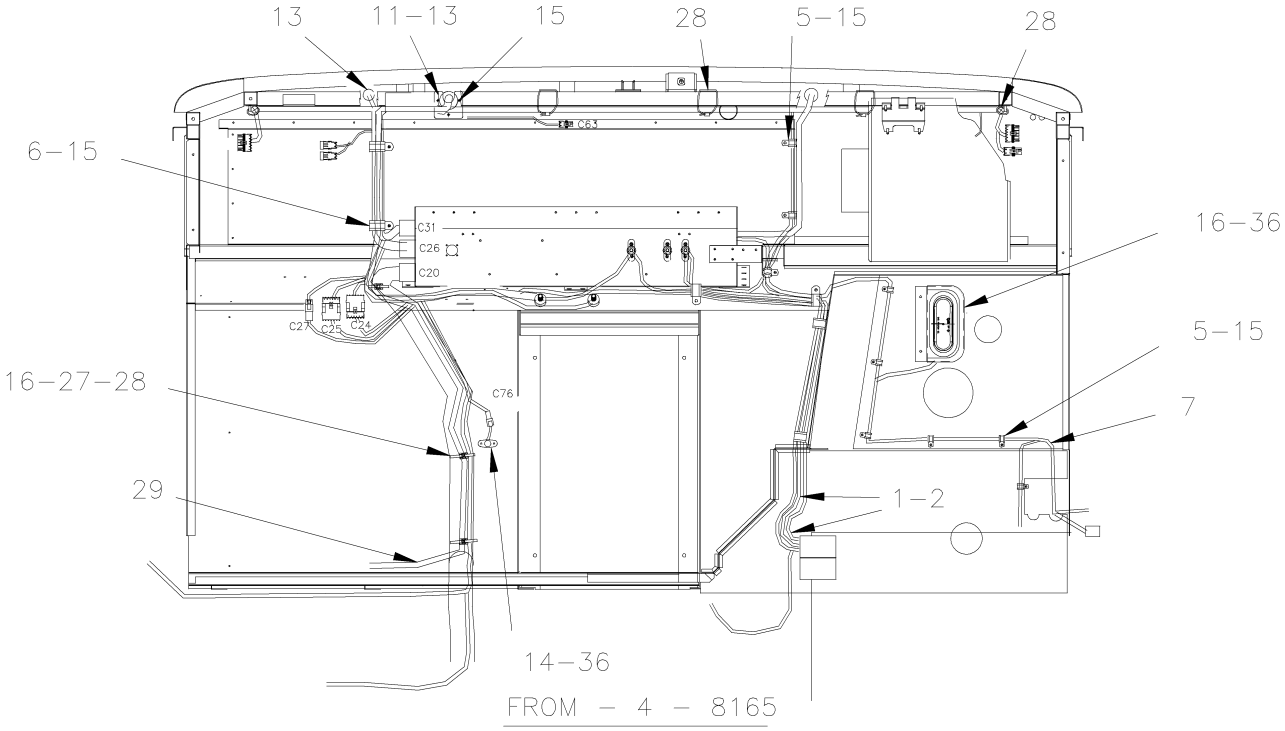

FROM – 4 – 8165

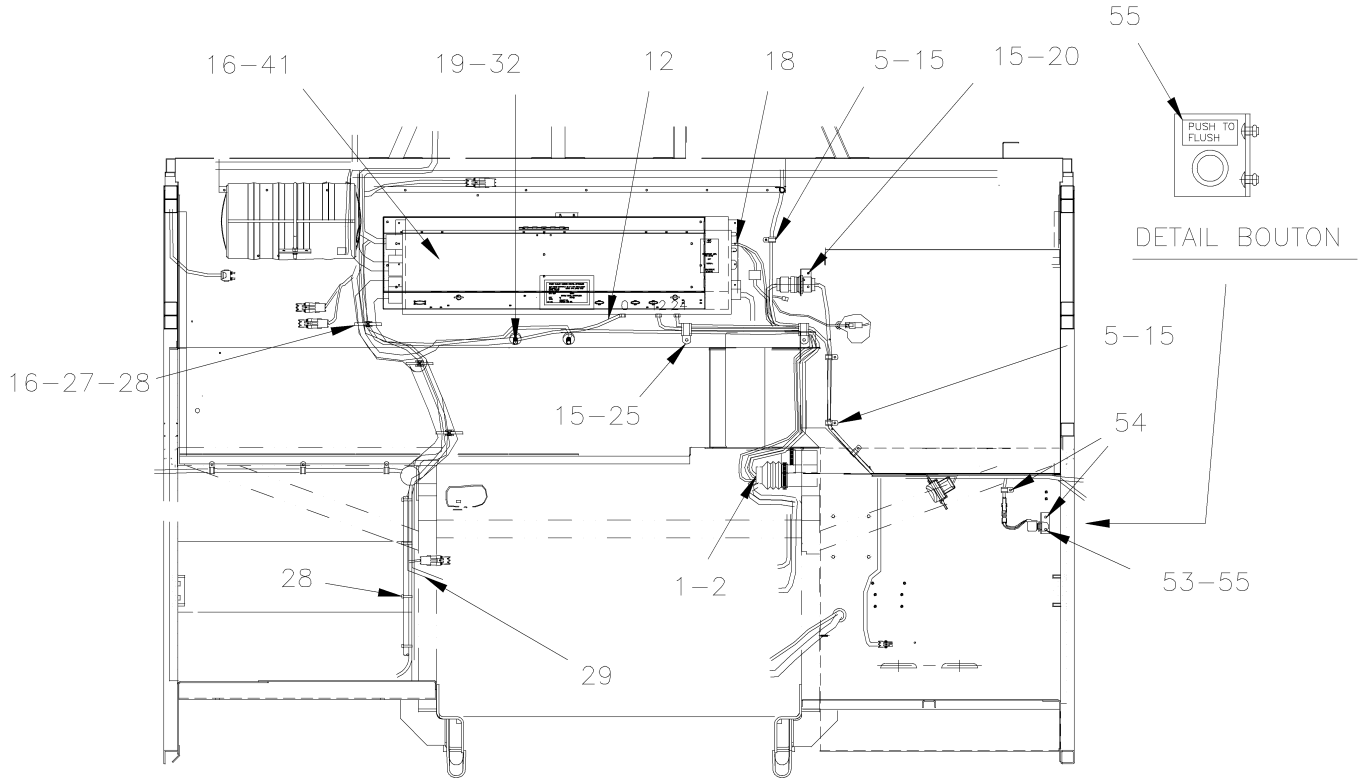

FROM – 4 – 8165

From Y-7046 Up to 6-8906	DATE: 01/2014	PAGE: Y2-0641-00

CABLE & HARNESS REAR END - BUS

ITEM	PART	DESCRIPTION	XL45	MTH40	MTH45	MTH45S	NOTE
1	063416	CABLE NO:24VR ASSY	1				
2	063413	CABLE ASSY # 12VR	1				
3	563199	BACK-UP ALARM "ECCO" / 12-36vdc / 107db	1				
4	5001524	WASHER FL .625x.812x.100 NYL	2				
5	952625	CLAMP / 3/8" I.D.	15				
6	952639	CLAMP / 1"1/4 I.D.	2				
7	065124	CABLE ASSY / ENGINE COMPT ACCESSORIES Up to Y-7229	1				
7	065286	CABLE ASSY / ENGINE COMPT ACCESSORIES From Y-7230 Up to 2-7764	1				
7	065571	CABLE ASSY / ENGINE COMPT ACCESSORIES From 2-7765 Up to 2-7842	1				
7	065665	CABLE ASSY / ENGINE COMPT ACCESSORIES From 2-7843 Up to 3-8020	1				
7	065469	CABLE ASSY / ENGINE COMPT ACCESSORIES From 3-8021 Up to 3-8057	1				
7	065827	CABLE ASSY / ENGINE COMPT ACCESSORIES From 3-8058 Up to 3-8164	1				
7	065767	CABLE ASSY / ENGINE COMPT ACCESSORIES From 4-8165 Up to 4-8379	1				
7	065975	CABLE ASSY / ENGINE COMPT ACCESSORIES From 5-8380 Up to 6-8758	1				
7	066567	CABLE ASSY / ENGINE COMPT ACCESSORIES From 6-8759	1				
8	500786	NUT HEX #10-24 ZP	1				
9	500470	WASHER LO SPT .193x.334x.047 ZP	1				
10	500574	SCREW MA TR PH #10-24x1 1/4 SS	1				
11	065236	CLOSING PLATE 80MM X 75.4MM	1				
12	062849	CABLE ASSY # 0-8	1				
13	680532	SEALANT SIKA #221 / GREY / 310ml CARTRIDGE	AR				
14	5001204	SCREW TP FL PH #6x1 1/4 ZP	4				
15	500244	SCREW TP BDG PH #8x3/4 ZG603	AR				
16	500965	SCREW TC BDG PH #8-32x1/2 ZG603	AR				
18	680025	CAULKING STRIP 3/16" O.D. X 14'	AR				
19	500968	NUT HEX STO 1/2-13 ZP	2				
20	382027	BRACKET CONNECTOR	1				
21	500478	WASHER LO SPT .380x.683x.094 ZP	3				
22	500379	NUT HEX 3/8-16 BR	3				
25	952635	CLAMP / 1" I.D.	AR				
27	504013	TIE MOUNT / 1/4" X 1/4" I.D.	AR				
28	504016	CABLE TIE / 5/16" X 14"1/2	AR				
29	063788	PROTECTOR CABLE / ALLUMINUM / 200MM Up to 1-7657	1				
29	065566	PROTECTOR CABLE / SS / 200MM From 1-7658 Up to 3-8164	1				
32	500482	WASHER LO SPT .506x.873x.125 ZP	2				
33	561916	NUT, SPEED	2				
36	Y2-0665-00	**ENGINE COMPARTMENT - ELECTRIC COMPONENTS**					
38	Y2-0666-00	**BLOCK HEATER RECEPTACLE**					
39	500965	SCREW TC BDG PH #8-32x1/2 ZG603	2				
41	Y2-0620-00	**REAR JUNCTION BOX ASSY**					
42	506025	RUBBER CHANNEL / 1/18" x 5/16" INT "U" SHAPE / SQUARE C.T.L.	AR				
43	680066	GLUE / ADBOND 5014 ADH 23.6ML BOTTLE	AR				
44	562402	DETECTOR / FIRE / REPLACED BY: 065290	1				
44	065323	KIT, FIRE DETECTOR REPLACEMENT	1				

From Y-7046 Up to 6-8906	DATE: 01/2014	PAGE: Y2-0641-00

CABLE & HARNESS REAR END - BUS

ITEM	PART	DESCRIPTION	XL45	MTH40	MTH45	MTH45S	NOTE
48	500642	SCREW TP BDG PH #10x3/4 ZP	AR				
49	500769	NUT HEX 1/4-20 ZP	2				
53	Y2-0665-10	**SWITCHES, LIGHTS, AJAR - UNDER FLOOR**					
54	504117	RIVET POP DOME CLE 3/16x3/8 AL	3				
55	065466	DECAL / LAVATORY PUMP FLUSH ENG & FRENCH	1				
56	500539	NUT HEX NYRT M4-0.7 ZG603	1				
57	504357	WASHER FL .187x.437x.050 SS	2				
59	966171	NUT HEX NYRT M8x1.25 SS	2				

From Y-7046 Up to 6-8906	DATE: 01/2014	PAGE: Y2-0645-00
SWITCHES L.H. CONSOLE - BUS		

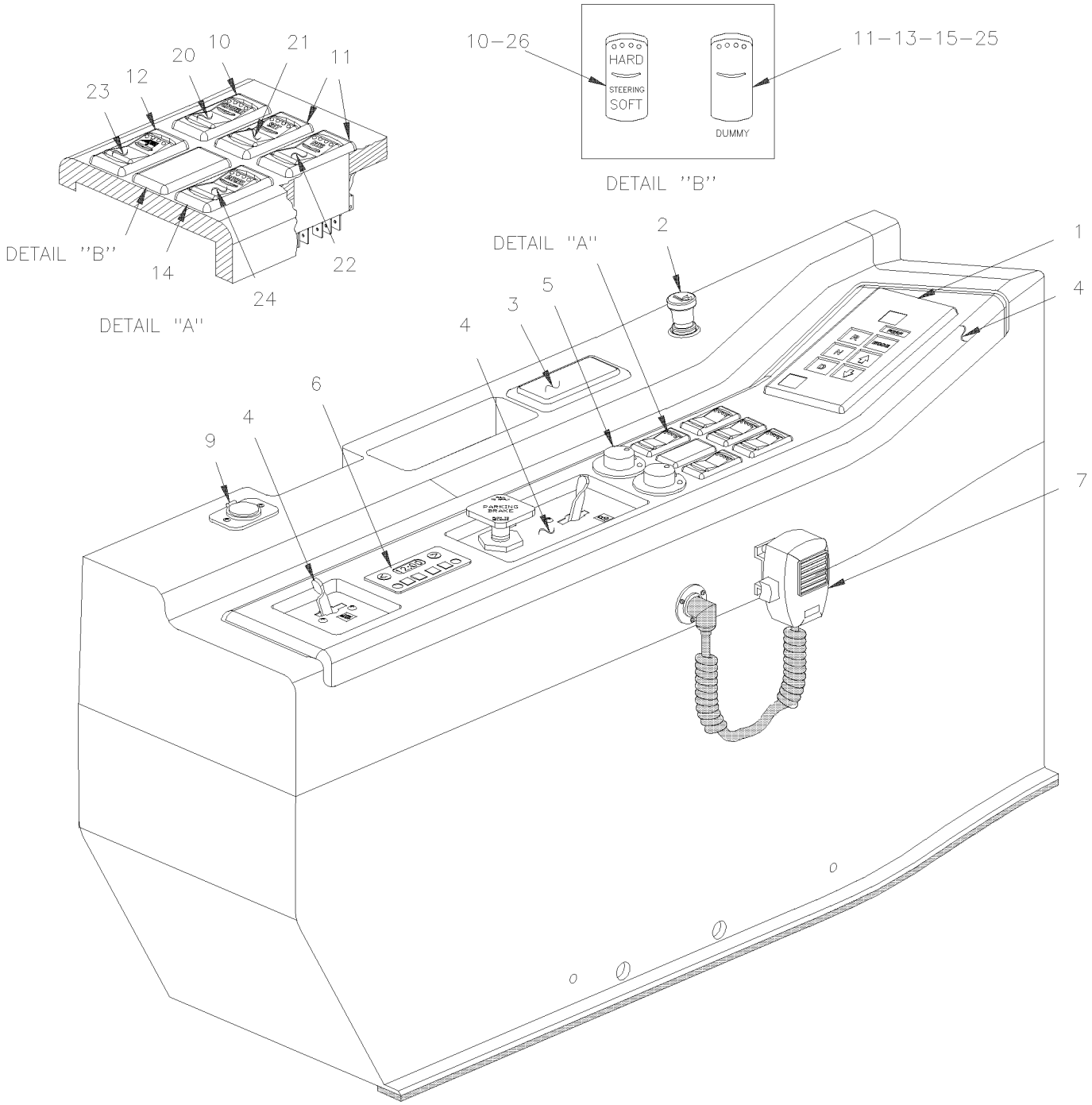

From Y-7046 Up to 6-8906	DATE: 01/2014	PAGE: Y2-0645-00

SWITCHES L.H. CONSOLE - BUS

ITEM	PART	DESCRIPTION	XL45	MTH40	MTH45	MTH45S	NOTE
1	571718	SHIFTER, SELECTOR "WORLD" / WTEC III	1				
1	571759	SHIFTER, SELECTOR "EATON" Up to Y-7461	1				
1	571773	SHIFTER SELECTOR "ZF"	1				
1	071562	DECAL / USE ELECTRONIC...PROXI...MAY CAUSE... / ENGLISH	1				ZF
1	071563	DECAL / USE ELECTRONIC...PROXI...MAY CAUSE... / FRENCH / ENGLISH	1				ZF
1	071564	DECAL / USE ELECTRONIC...PROXI...MAY CAUSE... / ENGLISH / SPANISH	1				ZF
NS	071300	SUPPORT / SHIFTER SELECTOR "ZF"	2				
NS	500423	NUT HEX NYRT #10-32 SS	2				
NS	065118	WIRING HARNESS DASHBOARD LEFT MODULE Up to Y-7264	1				
NS	065339	WIRING HARNESS DASHBOARD LEFT MODULE From Y-7265 Up to Y-7376	1				
1	065568	WIRING HARNESS DASHBOARD LEFT MODULE From 2-7765	1				
1	065406	WIRING HARNESS DASHBOARD LEFT MODULE From Y-7377 Up to 2-7764	1				
2	561491	LIGHTER ASSY / 12V	1				
2	561492	. POP OUT 12V	1				
2	562944	. BASE LIGHTER	1				
3	890006	ASHTRAY	1				
4	Y2-1806-10	**L.H. CONSOLE - BUS**					
5	562748	SWITCH, MIRROR / ROUND	AR				
NS		CLIP RETAINER / MIRROR SWITCH (R2000-1372P)	2				
NS	562749	CONNECTOR / SH 8C / EURAMTEC W-RT8-200	2				
NS	507295	HOLE PLUG BUTTON / 1.375 O.D. BLACK	AR				
6	562680	TIMER ASSY / W/"ESPAR" PREHEATER / 7 DAYS Up to 2-7764	1				
6	871160	TIMER ASSY / W/"WEBASTO" PREHEATER Up to 2-7764	1				
. NS	871102	. BULB / 24 VOLTS Up to 2-7764	1				
6	871250	TIMER ASSY / W/"WEBASTO" PREHEATER From 2-7765	1				
6	871101	TIMER ASSY / W/"PROHEAT" PREHEATER	1				
NS	064584	WIRING HARNESS / W/ "ESPAR" PREHEATER Up to 2-7764	1				
NS	064700	WIRING HARNESS / W/ "WEBASTO" PREHEATER Up to 2-7764	1				
NS	065572	WIRING HARNESS / W/ "WEBASTO" PREHEATER From 2-7765	1				
NS	065392	WIRING HARNESS / W/ "PROHEAT" PREHEATER	1				
NS	391968	DUMMY / W/O TIMER	1				
7	Y2-2315-00	**SOUND SYSTEM & ACCESSORIES - "R.E.I."**					
9	562796	12 VOLTS POWER OUTLET	1				
10	562697	SWITCH / ON-ON / D.P.D.T. / CH-OVER / W/RED & GREEN LED	1				A
11	562698	SWITCH / OFF-M/ON / D.P.S.T. / W/GREEN LED	3				
12	562699	SWITCH / M/ON-OFF-M/ON / D.P.D.T. / W/GREEN LED	AR				
13	562773	SWITCH / "DUMMY" / PLUG	1				
14	562855	SWITCH / OFF-M/ON / D.P.S.T. / W/RED LED	1				
NS	562763	CONNECTOR RH 10C / SWITCH / NGR 28-5637-2	AR				
NS	562768	SOCKET TERMINAL / 16-14 / PED 12015870	AR				
		A) WITH STEERING ASSIST					
		ZF) WITH "ZF" TRANSMISION					

From Y-7046 Up to 6-8906	DATE: 01/2014	PAGE: Y2-0645-00

SWITCHES L.H. CONSOLE - BUS

ITEM	PART	DESCRIPTION	XL45	MTH40	MTH45	MTH45S	NOTE
15	563376	SWITCH / ON-M/ON / D.P.S.T. / NOMALY CLOSE 1-2 / 4-5 From 4-8181	1				B
20	562724	CAP / CRUISE CONTROL	1				
21	562725	CAP / SET / CRUISE CONTROL	1				
22	562726	CAP / RESUME / CRUISE CONTROL	1				
23	562740	CAP / WINDOW DRIVER'S	1				
24	562787	CAP / DECEL / CRUISE CONTROL	1				
25	562714	CAP / PLAIN (W/O DESCRIPTION)	1				B
NS	065479	CABLE ASSY / SAFETY SW./PARKING BRAKE (BETWEN SWITCH & RELAY) Up to 4-8180 / REPLACED BY: 065951	1				B, C
26	562940	CAP / POWER STEERING / HARD-SOFT	1				A
NS	065951	KIT, RETROFIT PARKING BRAKE RELEASE SWITCH	AR				
		A) WITH STEERING ASSIST					
		B) WITH SAFETY SWITCH PARKING BRAKE					
		C) FOR PRODUCT IMPROVMENT ASK KIT #065951					

From Y-7046 Up to 6-8906	DATE: 01/2014	PAGE: Y2-0645-00

SWITCHES L.H. CONSOLE - BUS

ITEM	PART	DESCRIPTION	XL45	MTH400	MTH445	MTH445S	NOTE

From Y-7046 Up to 8-9339	DATE: 01/2014	PAGE: Y2-0645-05
SWITCHES L.H. CONSOLE - MTH		

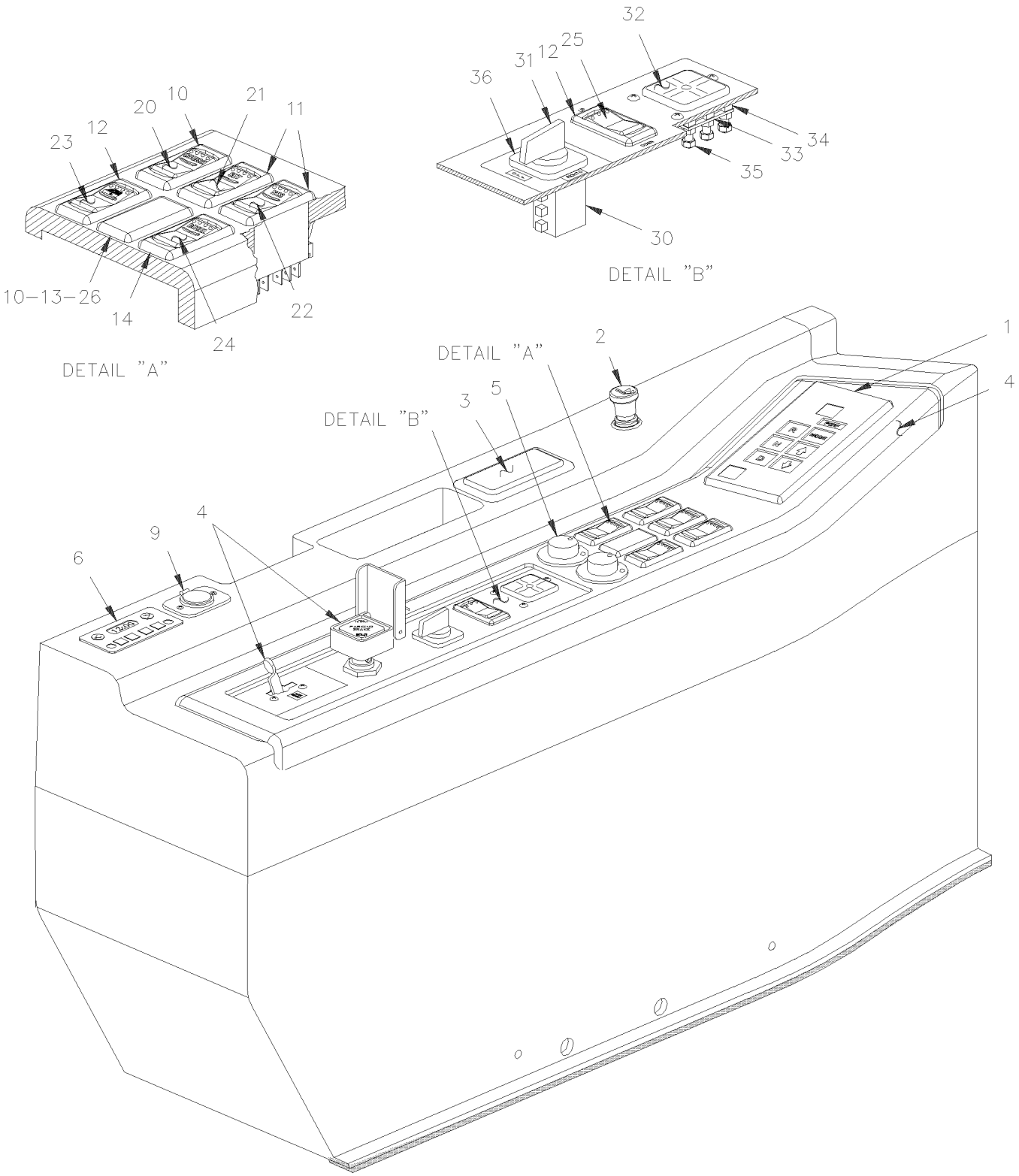

From Y-7046 Up to 8-9339	DATE: 01/2014	PAGE: Y2-0645-05

SWITCHES L.H. CONSOLE - MTH

ITEM	PART	DESCRIPTION	XL45	MTH40	MTH45	MTH45S	NOTE
1	571718	SHIFTER, SELECTOR "WORLD" / WTEC III Up to 7-9000		1	1	1	
1	572031	SHIFTER, SELECTOR "WORLD" / GEN IV From 7-9001		1	1	1	
NS	064871	WIRING HARNESS DASHBOARD LEFT MODULE Up to Y-7264		1	1	1	
NS	065338	WIRING HARNESS DASHBOARD LEFT MODULE From Y-7265 Up to 5-8644		1	1	1	
1	066353	WIRING HARNESS DASHBOARD LEFT MODULE From 5-8645 Up to 7-9095		1	1	1	
1	066932	WIRING HARNESS DASHBOARD LEFT MODULE From 7-9096			1	1	
2	561491	LIGHTER ASSY / 12V		1	1	1	
2	561492	. POP OUT 12V		1	1	1	
2	562944	. BASE LIGHTER		1	1	1	
NS	392043	DUMMY PLUG LIGHTER		AR	AR	AR	
3	890006	ASHTRAY		1	1	1	
4	Y2-1806-50	**L.H. CONSOLE - MTH**					
5	562748	SWITCH, MIRROR / ROUND		AR	AR	AR	
NS		CLIP RETAINER / MIRROR SWITCH (R2000-1372P)		2	2	2	
NS	562749	CONNECTOR / SH 8C / EURAMTEC W-RT8-200		2	2	2	
NS	507295	HOLE PLUG BUTTON / 1.375 O.D. BLACK		AR	AR	AR	
NS	562799	DUMMY PLUG MIRROR / REPLACED BY: 507295		AR	AR	AR	
6	562680	TIMER ASSY / W/"ESPAR" PREHEATER / 7 DAYS		1	1	1	
6	871160	TIMER ASSY / W/"WEBASTO" PREHEATER		1	1	1	
. NS	871102	. BULB / 24 VOLTS		1	1	1	
NS	064521	WIRING HARNESS / W/ "ESPAR" PREHEATER		1	1	1	
NS	064726	WIRING HARNESS / W/ "WEBASTO" PREHEATER		1	1	1	
9	562796	12 VOLTS POWER OUTLET		1	1	1	
10	562697	SWITCH / ON-ON / D.P.D.T. / CH-OVER / W/RED & GREEN LED		1	1	1	
11	562698	SWITCH / OFF-M/ON / D.P.S.T. / W/GREEN LED		3	3	3	
12	562699	SWITCH / M/ON-OFF-M/ON / D.P.D.T. / W/GREEN LED		AR	AR	AR	
13	562773	SWITCH / "DUMMY" / PLUG		1	1	1	
14	562855	SWITCH / OFF-M/ON / D.P.S.T. / W/RED LED		1	1	1	
20	562724	CAP / CRUISE CONTROL		1	1	1	
21	562725	CAP / SET / CRUISE CONTROL		1	1	1	
22	562726	CAP / RESUME / CRUISE CONTROL		1	1	1	
23	562740	CAP / WINDOW DRIVER'S		1	1	1	
24	562787	CAP / DECEL / CRUISE CONTROL		1	1	1	
25	562738	CAP / UP-DOWN		1	1	1	
26	562940	CAP / POWER STEERING / HARD-SOFT		1	1	1	
30	562517	SWITCH / 10 AMPS 4 POSITIONS 90° Up to 6-8931 / REPLACED BY: 561259		1	1	1	A
30	563086	SWITCH / 10 AMPS 4 POSITIONS 90° From 6-8932		1	1	1	
31	561855	. KNOB Up to 6-8931		1	1	1	
NS	064657	CABLE ASSY / W/"LEVEL LOW" Up to 6-8931		1	1	1	
NS	066510	CABLE ASSY / W/"LEVEL LOW" / MUX From 6-8932			1	1	
32	630075	LEVEL 5 WAYS		1	1	1	
33	391827	BRACKET / TO FIX LEVEL		1	1	1	
		A) THIS SWITCH IT SUPPERSEEDED BY KIT # 065381					

From Y-7046 Up to 8-9339	DATE: 01/2014	PAGE: Y2-0645-05

SWITCHES L.H. CONSOLE - MTH

ITEM	PART	DESCRIPTION	XL45	MTH40	MTH45	MTH45S	NOTE
34	502162	SPRING COMPRESSION / .240 O.D. x .312 x .026		3	3	3	
35	500670	NUT HEX NYRT #8-32 ZP		3	3	3	
36	391994	DECAL "LEVEL LOW" Up to 6-8931		1	1	1	
36	392317	PLATE PLASTIC "LEVEL LOW" From 6-8932			1	1	
NS	065381	KIT, SWITCH LEVEL LOW Up to 6-8931		1	1	1	

From Y-7046 Up to 8-9339	DATE: 01/2014	PAGE: Y2-0645-05

SWITCHES L.H. CONSOLE - MTH

ITEM	PART	DESCRIPTION	XL45	MTH40	MTH45	MTH45S	NOTE

From Y-7046 Up to 8-9339	DATE: 01/2014	PAGE: Y2-0645-10

L.H. DASHBOARD PANEL

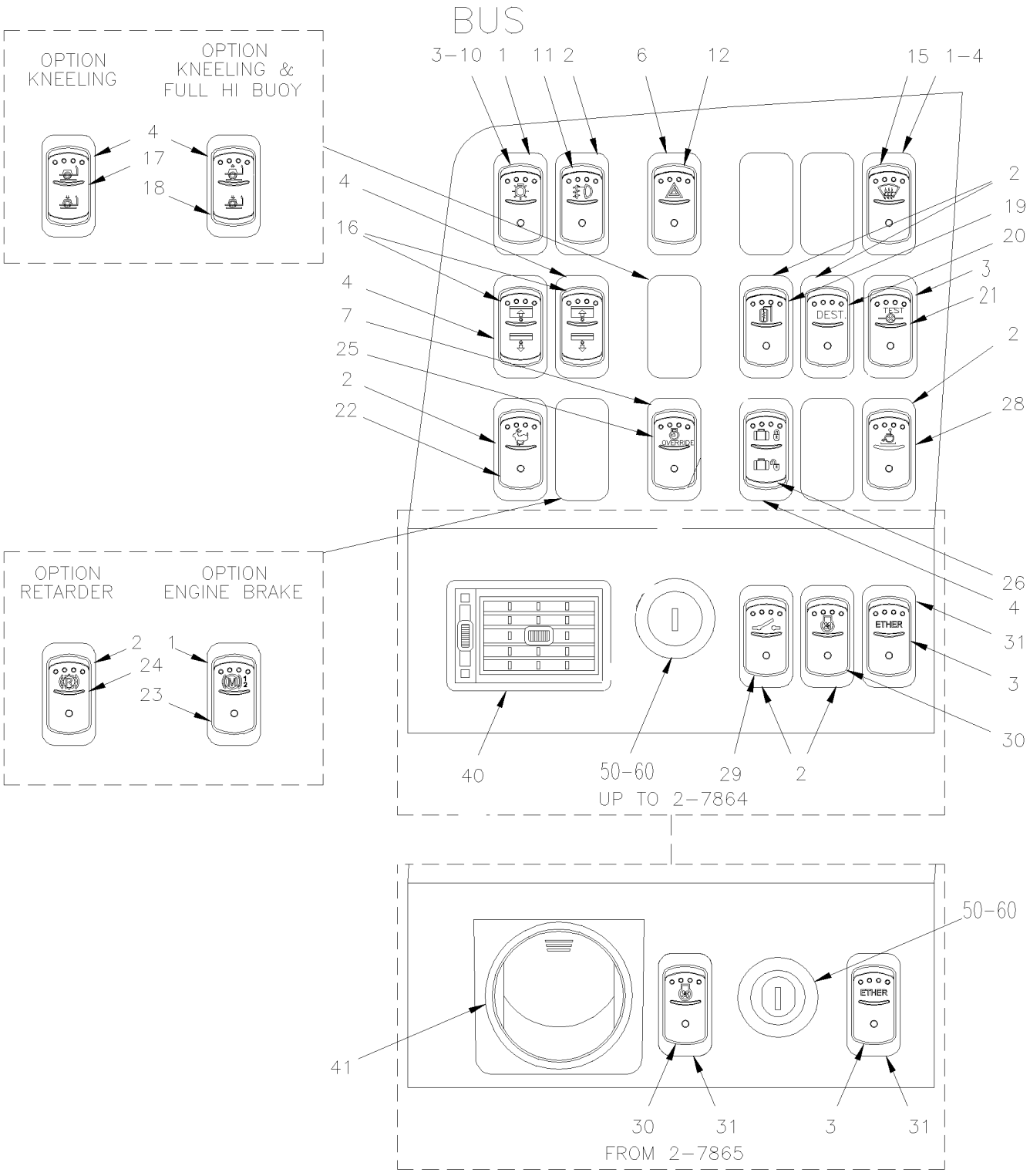

From Y-7046 Up to 8-9339	DATE: 01/2014	PAGE: Y2-0645-10
L.H. DASHBOARD PANEL		

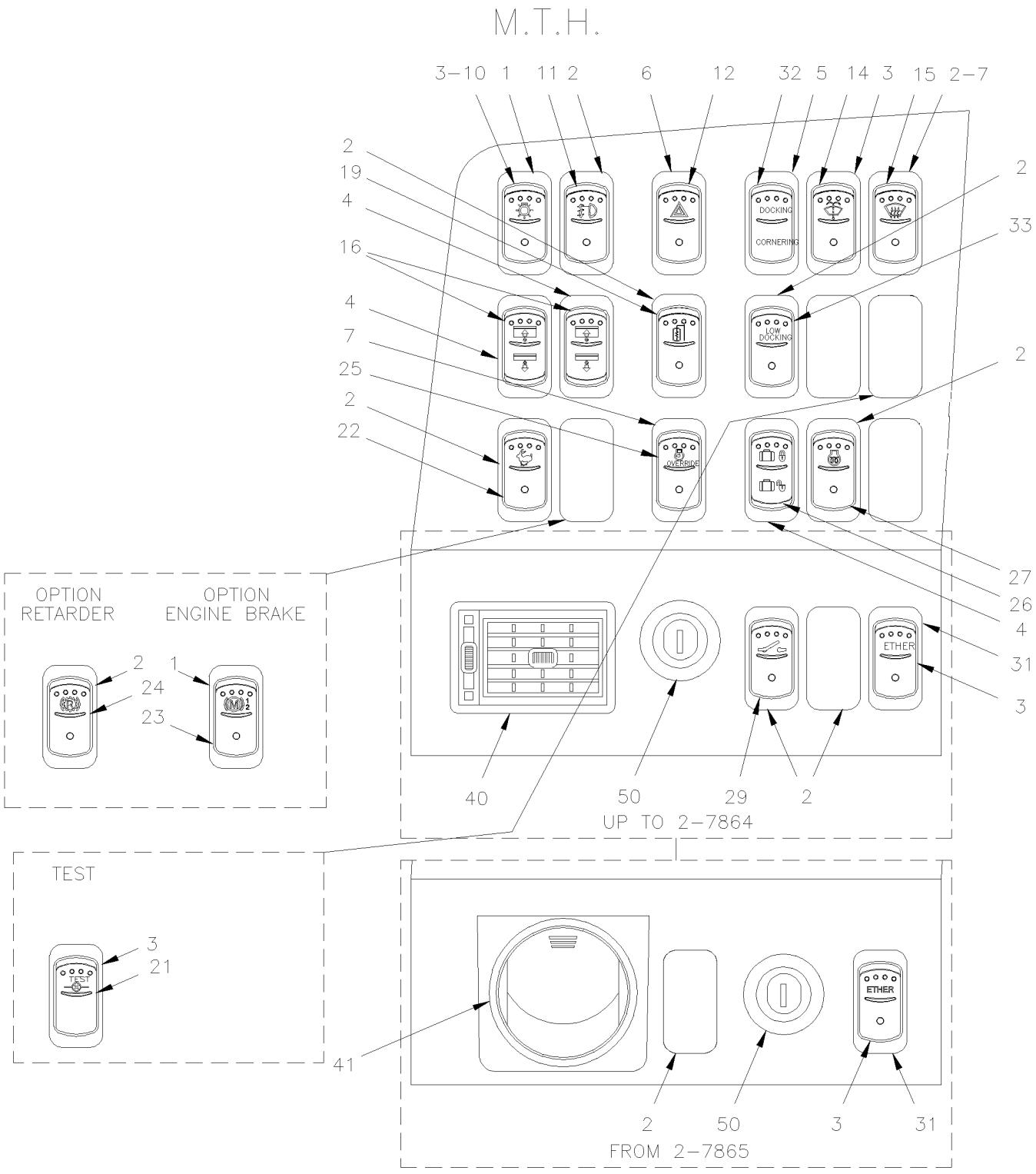

From Y-7046 Up to 8-9339	DATE: 01/2014	PAGE: Y2-0645-10

L.H. DASHBOARD PANEL

ITEM	PART	DESCRIPTION	XL45	MTH40	MTH45	MTH45S	NOTE
1	562696	SWITCH / OFF-ON-ON SERIES S.P.D.T. / W/RED & GREEN LED	4	4	4	4	
2	562697	SWITCH / ON-ON / D.P.D.T. / CH-OVER / W/RED & GREEN LED	AR	AR	AR	AR	
3	562698	SWITCH / OFF-M/ON / D.P.S.T. / W/GREEN LED	1	1	1	1	
4	562699	SWITCH / M/ON-OFF-M/ON / D.P.D.T. / W/GREEN LED	3	3	3	3	
5	562700	SWITCH / ON-OFF-ON / D.P.D.T. / W/GREEN LED	1	1	1	1	
6	562854	SWITCH / ON-ON / D.P.D.T. / CH-OVER / W/RED LED	1	1	1	1	
7	562855	SWITCH / OFF-M/ON / D.P.S.T. / W/RED LED	1	1	1	1	
NS	562773	SWITCH / "DUMMY" / PLUG	AR	AR	AR	AR	
NS	562763	CONNECTOR RH 10C / SWITCH / NGR 28-5637-2	AR	AR	AR	AR	
NS	562768	SOCKET TERMINAL / 16-14 / PED 12015870	AR	AR	AR	AR	
10	562708	CAP / HEADLIGHT	1	1	1	1	
11	562709	CAP / FOG	1	1	1	1	
12	562710	CAP / WARNING LIGHT HAZARD	1	1	1	1	
13	562711	CAP / WIPER (UPPER)	1	1	1	1	
14	562715	CAP / WINDSHIELD WASHER (UPPER)	1	1	1	1	
15	562712	CAP / DEFOGGER	1	1	1	1	
16	562739	CAP / ROLLER BLIND	2	2	2	2	
17	562737	CAP / KNEELING	1	1	1	1	
18	562738	CAP / UP-DOWN	1	1	1	1	
19	562713	CAP / MIRROR HEATER	1	1	1	1	
20	562743	CAP / DESTINATION SIGN	1	1	1	1	
21	562741	CAP / TELL TALE TEST	1	1	1	1	
NS	064673	CABLE ASSY / ANTI-THEF	1				B
NS	065053	CABLE ASSY SWITCH READING LIGHT	1				D
22	562723	CAP / FAST IDLE	1	1	1	1	
23	562728	CAP / "JACOB'S"	1	1	1	1	
24	562729	CAP / "RETARDER"	1	1	1	1	
25	562727	CAP / ENGINE OVERRIDE	1	1	1	1	
NS	064819	DIODE DOUBLE ASSY		1	1	1	E
NS	065389	CABLE ASSY / "JACOB`S" & RETARDER		1	1	1	E
NS	562697	SWITCH / ON-ON / D.P.D.T. / CH-OVER / W/RED & GREEN LED		1	1	1	E
		B) COACH EQUIPPED WITH THIEF PROTECTOR ON "TELL					
		TALE TEST"					
		D) COACH EQUIPPED WITH READING LIGHT TEST					
		(DIAGRAM D060938 PAGE 11.4 SP2)					
		E) VEHICLE EQUIPPED WITH "JACOB" & "RETARDER"					

From Y-7046 Up to 8-9339	DATE: 01/2014	PAGE: Y2-0645-10

L.H. DASHBOARD PANEL

ITEM	PART	DESCRIPTION	XL45	MTH40	MTH45	MTH45S	NOTE
NS	561707	RELAY 24V S.P.D.T. W/RESISTOR / Up to 5-8577		1	1	1	E
NS	563332	RELAY 24V S.P.D.T. W/RESISTOR / "VOLVO" (20374662) From 5-8578		1	1	1	E
26	562736	CAP / LUGGAGE DOOR LOCK	1	1	1	1	
27	562722	CAP / PRE-HEATER	1				
28	562774	CAP / W.C.L.	1				
29	562742	CAP / MASTER CUT-OFF	1	1	1	1	
30	562735	CAP / RADIATOR FAN	1	1	1	1	
31	562734	CAP / ETHER	AR	AR	AR	AR	
32	562733	CAP / DOCKING & CORNERING	1	1	1	1	
33	562732	CAP / LIGHT LOW DOCKING	1	1	1	1	
34	562731	CAP / BACK-UP ALARM	1	1	1	1	
40	871106	LOUVER, ADJUSTABLE Up to 2-7864	1	1	1	1	
41	871314	LOUVER, ADJUSTABLE / ROUND 2 5/8" O.D. From 2-7865	1	1	1	1	
50	562147	SWITCH, IGNITION / CODE 801	1	1	1	1	
50	562148	SWITCH, IGNITION / CODE 802	1	1	1	1	
50	562151	SWITCH, IGNITION / CODE 803	1	1	1	1	
50	562150	SWITCH, IGNITION / CODE 804	1	1	1	1	
50	562152	SWITCH, IGNITION / CODE 805	1	1	1	1	
50	562149	SWITCH, IGNITION / CODE 806	1	1	1	1	
50	562146	SWITCH, IGNITION / KEYLESS (ACC-OFF-IGN-START)	1	1	1	1	
50	562296	KEY / IGNITION BLANCK UNCUT	AR	AR	AR	AR	
NS	562674	KEYLESS / TRANSMITTER KEY RING / W/DESCRIPT Up to 4-8295		1	1	1	S
. NS	IS-03103	. SEE INSTRUCTION SHEET Up to 4-8295		1	1	1	
NS	563542	KEYLESS / TRANSMITTER KEY RING / W/PICTOGRA From 4-8296		1	1	1	
NS	064436	CABLE ASSY / BETWEN IGN SWITCH & RELAY	1				C
NS	064437	CABLE ASSY / BETWEN REAR SWITCH & HARNESS	1				C
NS	561707	RELAY 24V S.P.D.T. W/RESISTOR / Up to 5-8577	1				C
NS	563332	RELAY 24V S.P.D.T. W/RESISTOR / "VOLVO" (20374662) From 5-8578	1				C
		NEXT ITEMS USED WITH "FORD" IGNITION SWITCH					
		C) COACH EQUIPPED WITH 3 MINUTES IDLE TIME DELAY					
		E) VEHICLE EQUIPPED WITH "JACOB" & "RETARDER"					
		S) FOR SERVICE, SEE INSTRUCTION SHEET IS-03103					

From Y-7046 Up to 8-9339	DATE: 01/2014	PAGE: Y2-0645-10

L.H. DASHBOARD PANEL

ITEM	PART	DESCRIPTION	XL45	MTH40	MTH45	MTH45S	NOTE
60	065512	CYLINDER IGNITION / CODE A	1				A
60	065658	CYLINDER IGNITION / CODE FA 0001	1				A
NS	064902	CYLINDER IGNITION / CODE FA 0013	1				A
60	065590	CYLINDER IGNITION / CODE FA 0055	1				A
60	065409	CYLINDER IGNITION / CODE FA 0107	1				A
60	065851	CYLINDER IGNITION / CODE FA 0109	1				A
60	065396	CYLINDER IGNITION / CODE FA 0113	1				A
60	065397	CYLINDER IGNITION / CODE FA 0206	1				A
60	065878	CYLINDER IGNITION / CODE FA 0208	1				A
60	064417	CYLINDER IGNITION / CODE FA 0528	1				A
60	065043	CYLINDER IGNITION / CODE FA 0528	1				A
60	065500	CYLINDER IGNITION / CODE FA 0704	1				A
60	065607	CYLINDER IGNITION / CODE FA 0714	1				A
60	065501	CYLINDER IGNITION / CODE FA 1343	1				A
NS	562654	SWITCH & CABLE / SWITCH	1				A
NS	562655	NUT / TO FIX SWITCH	1				A
NS	391904	SPACER / <> SWITCH & MOUNTING PLATE	1				A
NS	064419	CABLE ASSY / <> RELAY AND SWITCH	1				A
NS	561707	RELAY 24V S.P.D.T. W/RESISTOR / Up to 5-8577	1				A
NS	563332	RELAY 24V S.P.D.T. W/RESISTOR / "VOLVO" (20374662) From 5-8578	1				A
61	780645	KEY CODE A / REPLACED BY: 780217	1				A
61	780654	KEY CODE / FA 0001	1				A
61	780604	KEY CODE / FA 0013	1				A
61	780651	KEY CODE FA 0055	1				A
61	780634	KEY CODE / FA 0107	1				A
61	780656	KEY CODE / FA 0109	1				A
61	780627	KEY CODE / FA 0113	1				A
61	780631	KEY CODE / FA 0206	1				A
61	780659	KEY CODE / FA 0208	1				A
61	780579	KEY CODE / FA 0528	1				A
		A) THOSE ITEMS ARE USED WITH "FORD" IGNITION					
		KEY. SEE DIAGRAM D060950 FOR MORE INFORMATION					

From Y-7046 Up to 8-9339	DATE: 01/2014	PAGE: Y2-0645-10

L.H. DASHBOARD PANEL

ITEM	PART	DESCRIPTION	XL45	MTH40	MTH45	MTH45S	NOTE
61	780639	KEY CODE FA 0704	1				A
61	780608	KEY CODE / FA 0714	1				A
61	780644	KEY CODE / FA 1343	1				A
		A) THOSE ITEMS ARE USED WITH "FORD" IGNITION					
		KEY. SEE DIAGRAM D060950 FOR MORE INFORMATION					

From Y-7046 Up to 8-9339	DATE: 01/2014	PAGE: Y2-0645-20

CENTER DASHBOARD PANEL

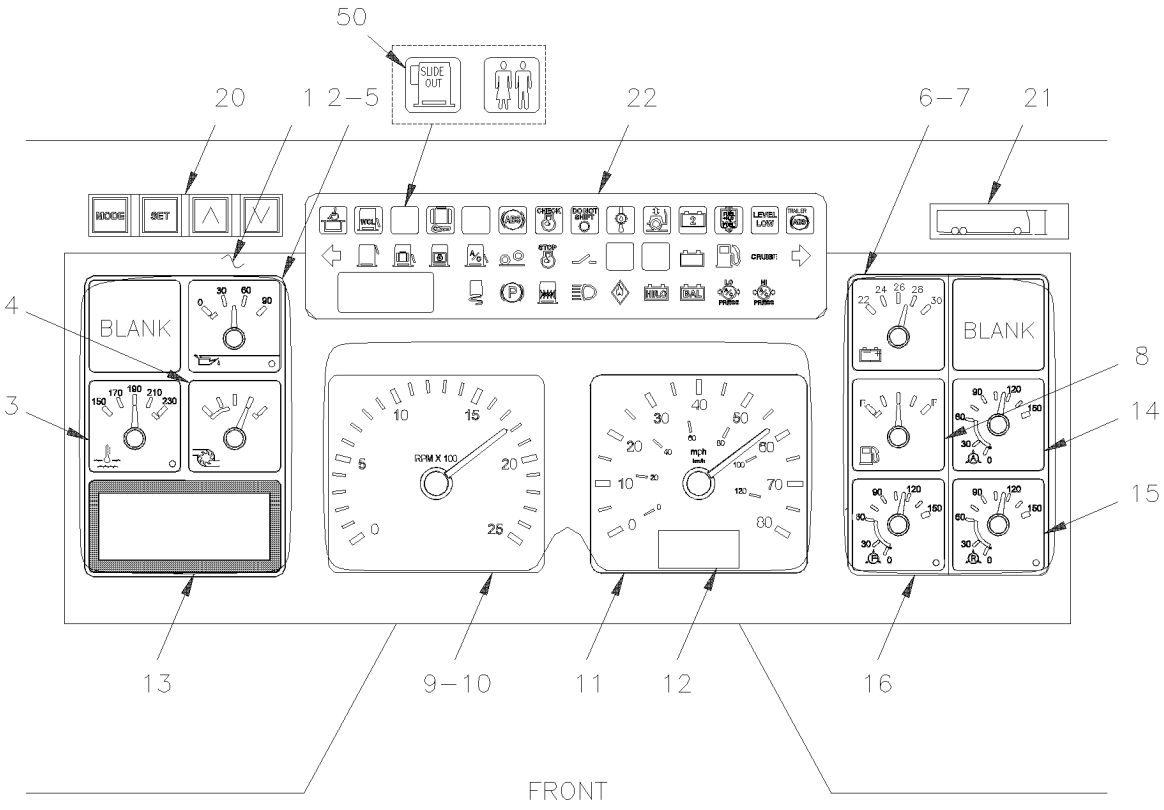

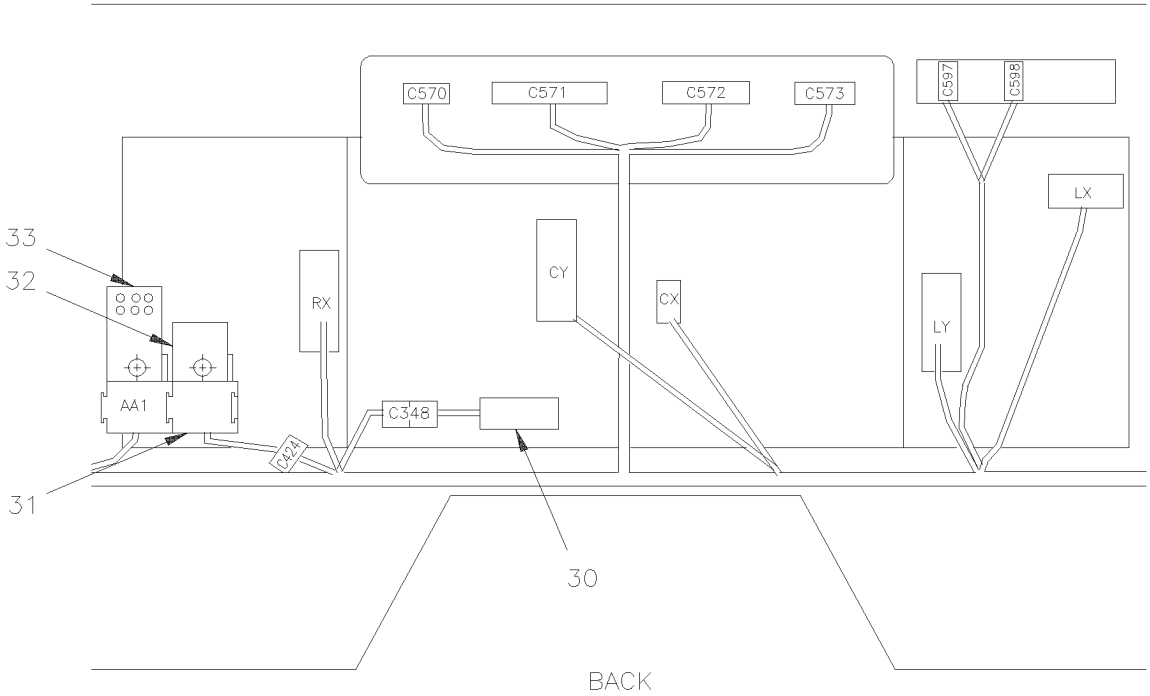

From Y-7046 Up to 8-9339	DATE: 01/2014	PAGE: Y2-0645-20

CENTER DASHBOARD PANEL

ITEM	PART	DESCRIPTION	XL45	MTH40	MTH45	MTH45S	NOTE
1	065126	CLUSTER, MPH Up to 5-8373 / REPLACED BY: 563666	1	1	1	1	
1	066071	CLUSTER, MPH From 5-8374 Up to 5-8619 / REPLACED BY: 563666	1	1	1	1	
1	563560	CLUSTER, MPH From 5-8620 / REPLACED BY: 563666	1	1	1	1	
1	065128	CLUSTER, MPH From Y-7377 Up to Y-7461	1				B
1	065127	CLUSTER, KPH Up to 5-8367 / REPLACED BY: 563665	1	1	1	1	
1	066072	CLUSTER, KPH From 5-8368 Up to 5-8619 / REPLACED BY: 563665	1	1	1	1	
1	563559	CLUSTER, KPH From 5-8620 / REPLACED BY: 563665	1				
1	065129	CLUSTER, KPH From Y-7377 Up to Y-7461	1				B
1	065944	CLUSTER, MPH / W/"ZF" TRANS Up to 5-8373	1				
1	066073	CLUSTER, MPH / W/"ZF" TRANS From 5-8374 Up to 5-8619 / REPLACED BY: 563667	1				
1	563561	CLUSTER, MPH / W/"ZF" TRANS From 5-8620 / REPLACED BY: 563667	1				
1	065945	CLUSTER, KPH / W/"ZF" TRANS Up to 5-8367	1				
1	066074	CLUSTER, KPH / W/"ZF" TRANS From 4-8165 Up to 5-8619 / REPLACED BY: 563668	1				
1	563562	CLUSTER, KPH / W/"ZF" TRANS From 5-8620 / REPLACED BY: 563668	1				
NS	065703	KIT, CLUSTER "POLLACK" GLASS REPLACEMENT	1	1	1	1	
. NS	IS-02038	. SEE INSTRUCTION SHEET					
2	563573	. GAUGES LEFT SIDE ASSY / 3 GAUGES	1	1	1	1	
3	N.P.N.	. . GAUGE WATER TEMPERATURE	1	1	1	1	4
4	N.P.N.	. . GAUGE BOOSTER	1	1	1	1	4
5	N.P.N.	. . GAUGE OIL PRESSURE	1	1	1	1	4
6	563574	. GAUGES RIGHT SIDE ASSY / 2 GAUGES	1	1	1	1	
7	N.P.N.	. . GAUGE VOLTAGE	1	1	1	1	4
8	N.P.N.	. . GAUGE FUEL LEVEL	1	1	1	1	4
9	563566	. TACHO & SPEEDOMETER ASSY / MILES	1	1	1	1	
9	563567	. TACHO & SPEEDOMETER ASSY / KM	1	1	1	1	
10	N.P.N.	. . TACHOMETER	1	1	1	1	4
11	N.P.N.	. . SPEEDOMETER MILES	1	1	1	1	4
11	N.P.N.	. . SPEEDOMETER KM	1	1	1	1	4
12	N.P.N.	. . ODO LCD	1	1	1	1	4
13	066075	. KIT, GRAPHIC DISPLAY "POLLACK"	1	1	1	1	
. NS	563539	. . GRAPHIC DISPLAY "POLLACK" FORMER	1	1	1	1	
. NS	564586	. . GRAPHIC DISPLAY MODULE "POLLACK" CURRENT	1	1	1	1	
. NS	IS-03901	. . SEE INSTRUCTION SHEET	1	1	1	1	
NS	562838	. BULB / .50WATT-12VOLTS / SAE #2721MFX	AR	AR	AR	AR	A
NS	562909	TOOL / CLUSTER BULB REMOVER	1	1	1	1	
. NS	MI03-14A	. SEE MAINTENANCE INFORMATION	1	1	1	1	
NS	392009	MOUNTING PLATE / CLUSTER	2	2	2	2	
NS	5001402	SCREW MA CHE PH M4-0.7x25 ZP	5	5	5	5	
14	563565	. GAUGE AIR APPLICATION	1	1	1	1	
15	563564	. GAUGE AIR REAR	1	1	1	1	
16	563563	. GAUGE AIR FRONT	1	1	1	1	
		4) NO PARTS NUMBER					
		A) TOOL TO REMOVE BULB #562909					
		B) WITH MANUAL TRANSMISSION					

From Y-7046 Up to 8-9339	DATE: 01/2014	PAGE: Y2-0645-20

CENTER DASHBOARD PANEL

ITEM	PART	DESCRIPTION	XL45	MTH40	MTH45	MTH45S	NOTE
NS	563575	. BUZZER	1				
NS	563576	. CPU BOARD SPARE	1				
20	563017	CLUSTER SWITCH ASSY "POLLACK"	1	1	1	1	
NS	392011	MOUNTING PLATE / CLUSTER SWITCH	1	1	1	1	
NS	5001412	SCREW MA CHE PH M3-0.5x20 EMN	2	2	2	2	
NS	5001408	NUT HEX STO M3-0.5 ZP	2	2	2	2	
21	402469	DECAL / VEHICLE HEIGHT 11' 8" / MTH 83"	1	1	1		
21	402468	DECAL / VEHICLE HEIGHT 11' 11" / MTH 86"		1	1	1	
21	405108	DECAL / VEHICLE HEIGHT 12' 2" / MTH 89"				1	
22	562907	TELLTALE MODULE ASSY	1				
. NS	563672	. FACE PLACE INSERT RETAINER	AR				
22	562907	TELLTALE MODULE ASSY Up to 7-9095		1	1	1	
. NS	563672	. FACE PLACE INSERT RETAINER Up to 7-9095		AR	AR	AR	
22	563333	TELLTALE MODULE ASSY From 7-9096		1	1	1	
. NS	563720	. FACE PLACE INSERT RETAINER From 7-9096		1	1	1	
NS	392010	ATTACHMENT ANGLE / TO FIX TELLTALE	1	1	1	1	
NS	5001401	SCREW MA CHE PH M4-0.7x8 ZP	4	4	4	4	
NS	5001397	SCREW MA CHE PH M3-0.5x8 SS	4	4	4	4	
NS	5001407	WASHER LO EXT 3.2x6.0x0.4 SS	4	4	4	4	
30	064474	ALARM ASSY / WATER IN FUEL / (C-348)	1	1	1	1	
. NS	561479	. PIN TERMINAL / 24-18 / MOLEX 02-06-2103	1	1	1	1	
. NS	562070	. CONNECTOR / (.062) / PH 6C / MOLEX 03-06-2061	1	1	1	1	
. NS	561479	. PIN TERMINAL / 24-18 / MOLEX 02-06-2103	5	5	5	5	
NS	Y2-1806-00	**CENTRAL DASHBOARD PANEL**					
31	063070	HARNESS ASSY / ALARM	1				
31	063070	HARNESS ASSY / ALARM Up to 7-9095		1	1	1	
32	561706	RELAY 12V S.P.D.T. W/DIODE /	1				
32	561706	RELAY 12V S.P.D.T. W/DIODE / Up to 7-9095		1	1	1	
33	562117	ALARM BUZZER Up to 4-8165 / REPLACED BY: 563161	2	2	2	2	
33	563161	ALARM BUZZER From 4-8166	2	2	2	2	
50	FM-00IM-00	**INSERT - "MEGATECH"**					

From Y-7046 Up to 8-9339	DATE: 01/2014	PAGE: Y2-0645-20

CENTER DASHBOARD PANEL

ITEM	PART	DESCRIPTION	XL45	MTH40	MTH45	MTH45S	NOTE

	DATE: 01/2014	PAGE: **FM-00IM-00**
INSERT - "MEGATECH"		

10000 – AC0354	10001 – AC0355	10002 – AC0356	10003 – AC0357	10004 – AC0358
		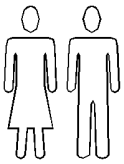	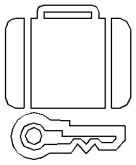	
563384	563385	563386	563387	563388
10005 – AC0359	10006 – AC0360	10007 – AC0361	10008 – AC0362	10009 – AC0363
		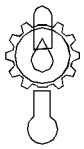	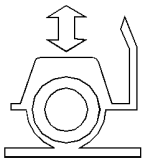	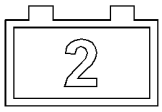
563389	563390	563391	563392	562958
10010 – AC0364	10011 – AC0365	10012 – AC0410	10013 – AC0367	10014 – AC0530
563393	563394	563395	563396	562966
10015 – AC1148	10016 – AC1151	10017 – AC1152	10018 – AC1153	
		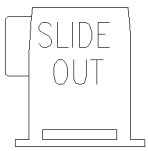		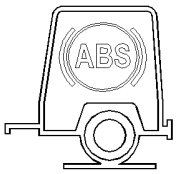
563397	563016	563178	563179	563427
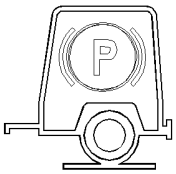	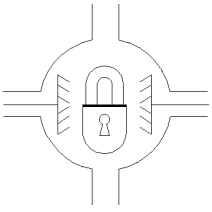		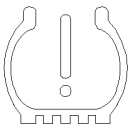	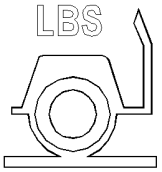
563428	563655	565860	563469	564480

	DATE: 01/2014	PAGE: **FM-00IM-00**
INSERT - "MEGATECH"		

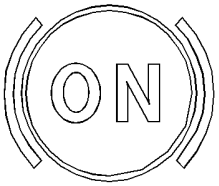

564481

	DATE: 01/2014	PAGE: **FM-00IM-00**
INSERT - "MEGATECH"		

A

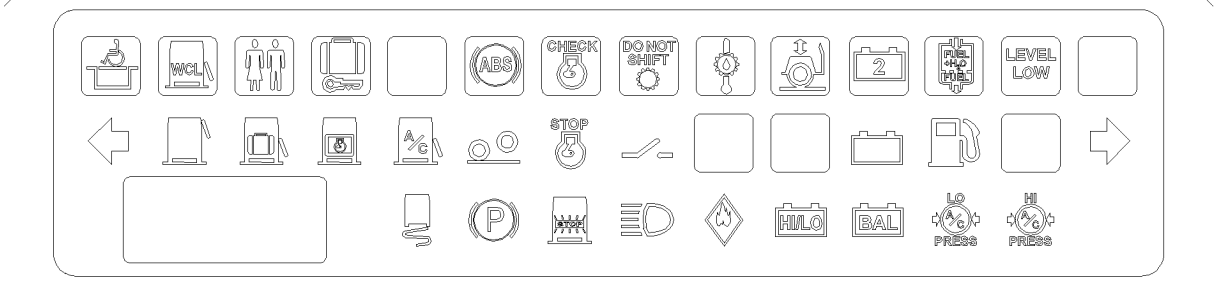

B

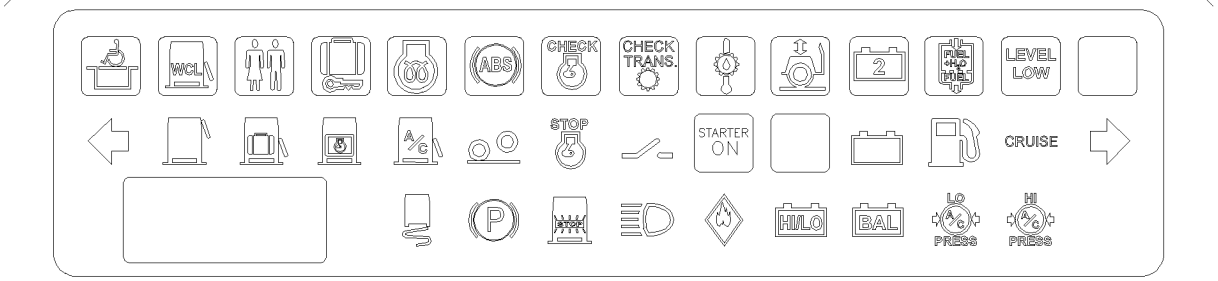

C

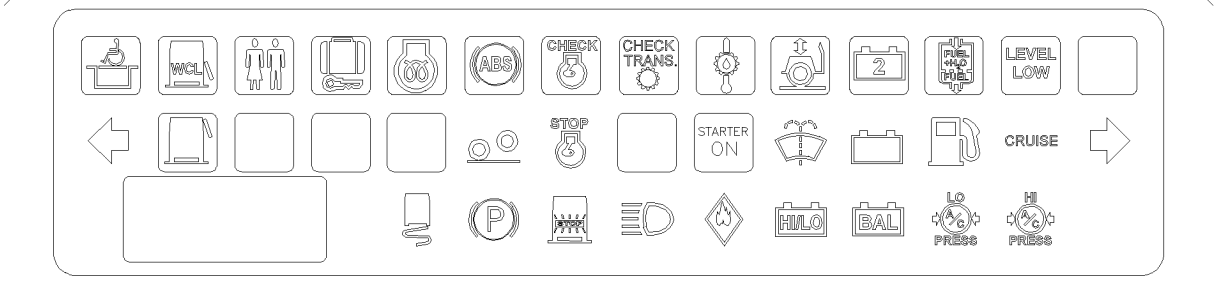

D

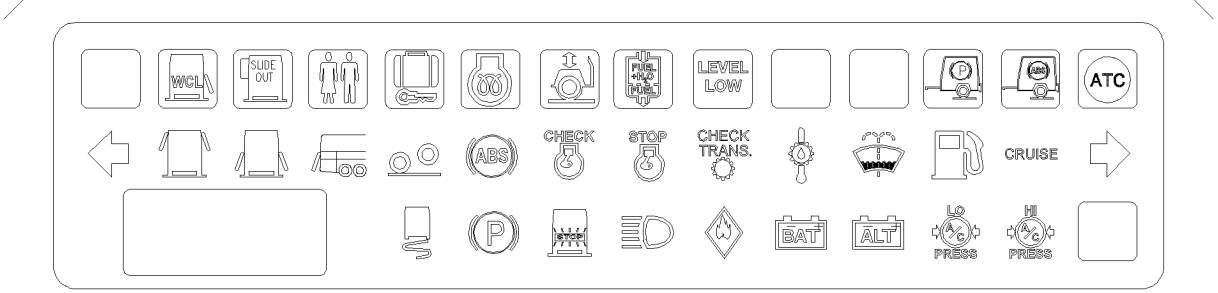

	DATE: 01/2014	PAGE: **FM-00IM-00**
INSERT - "MEGATECH"		

E

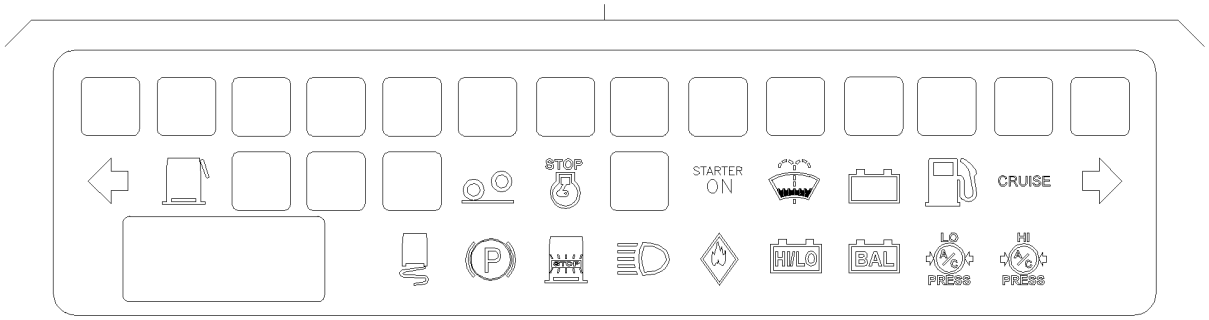

F

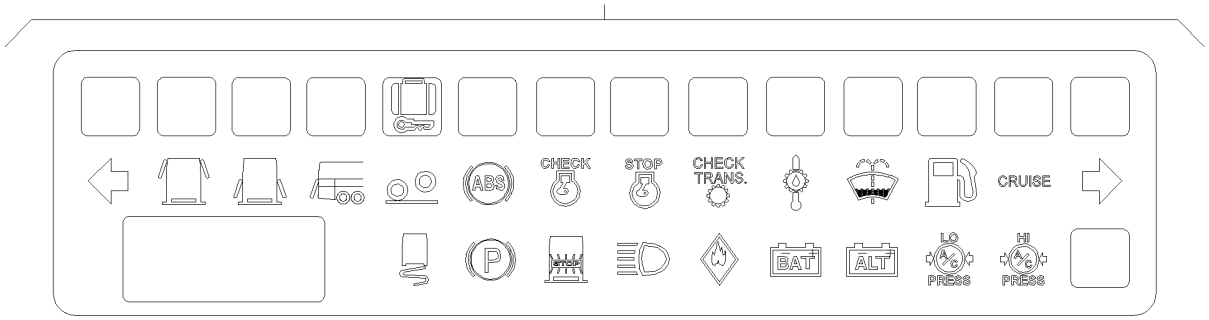

G

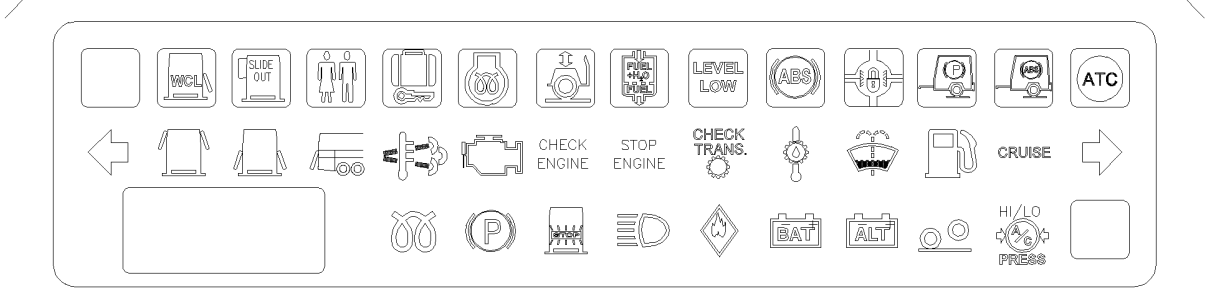

H

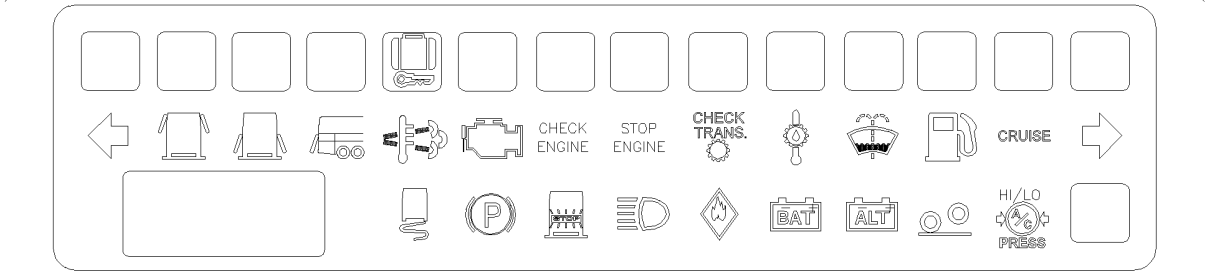

	DATE: 01/2014	PAGE: **FM-00IM-00**
INSERT - "MEGATECH"		

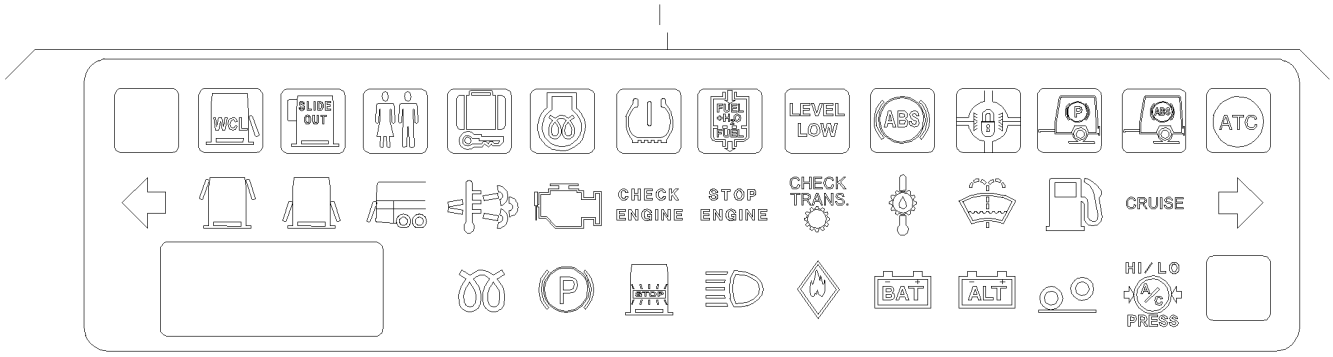

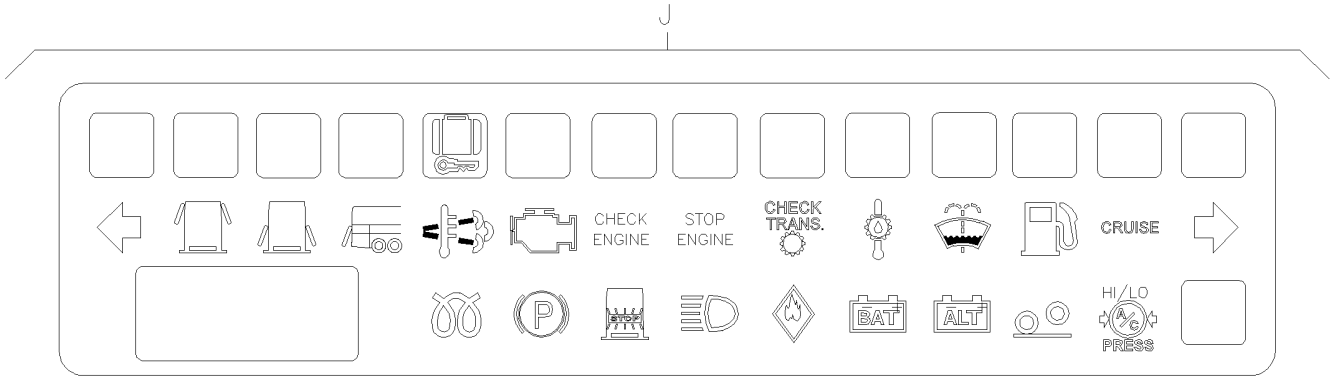

	DATE: 01/2014	PAGE: **FM-00IM-00**

INSERT - "MEGATECH"

ITEM	PART	DESCRIPTION	XL45	MTH40	MTH45	MTH45S	NOTE
1	563384	INSERT / RED / PLATFORM	AR				
2	563385	INSERT / RED / W.C.L. DOOR AJAR	AR				
3	563386	INSERT / RED / LAVATORY OCCIPIED	AR				
4	563387	INSERT / AMBER / LUGGAGE DOOR LOCK	AR				
5	563388	INSERT / AMBER / ABS	AR				
6	563389	INSERT / AMBER / CHECK ENGINE	AR				
7	563390	INSERT / RED / DO NOT SHIFT	AR				
8	563391	INSERT / AMBER / OIL TEMPERATURE	AR				
9	563392	INSERT / AMBER / KNEELING / HI-BUOY	AR				
10	563393	INSERT / AMBER / WATER IN FUEL	AR				
11	563394	INSERT / RED / LEVEL LOW	AR				
12	563395	INSERT / RED / CHECK TRANSMISSION	AR				
13	563396	INSERT / DOOR AJAR	AR				
14	563397	INSERT / AUXILIARY WATER HEATER	AR				
15	563016	INSERT / BLACK / STARTOR ON / W/LETTER CLEAR	AR				
15	563022	INSERT / RED / STARTOR ON	AR				
16	562966	INSERT / BLACK W/LETTER CLEAR / ATC	AR				
17	562958	INSERT / RED / BATTERY # 2	AR				
18	563178	INSERT / SLIDE OUT	AR				
19	563179	INSERT / BLACK W/LETTER CLEAR / TRAILER ABS	AR				
20	563427	INSERT / TRAILER ABS	AR				
21	563428	INSERT / TRAILER BRAKE PROBLEM	AR				
22	563655	INSERT / DIFERENTIAL LOCK	AR				
23	565860	INSERT / ESCAPPE HATCH	AR				
24	563469	INSERT / TIRE PRESSURE	AR				
25	564480	INSERT / VEHICULE WEIGHT	1				
26	564481	INSERT / BRAKE ON	1				
A	562791	TELLTALE MODULE ASSY / REPLACED BY: 562891	AR				
B	562891	TELLTALE MODULE ASSY	AR				
C	562907	TELLTALE MODULE ASSY	AR				
. NS	563672	. FACE PLACE INSERT RETAINER	AR				
D	563333	TELLTALE MODULE ASSY	AR				
. NS	563720	. FACE PLACE INSERT RETAINER	1				
E	563672	. FACE PLACE INSERT RETAINER	1				A
F	563720	. FACE PLACE INSERT RETAINER	1				B
G	564032	TELLTALE MODULE ASSY	AR				
. NS	564201	. FACE PLACE INSERT RETAINER	1				
I	564080	TELLTALE MODULE ASSY	1				
		A) TO FIX ANY INSERT ABOVE TO TELLS TALES MODULE					
		562907					
		B) TO FIX ANY INSERT ABOVE TO TELLS TALES MODULE					
		563333					

From Y-7046 Up to 8-9339	DATE: 01/2014	PAGE: Y2-0645-30

R.H. DASHBOARD PANEL

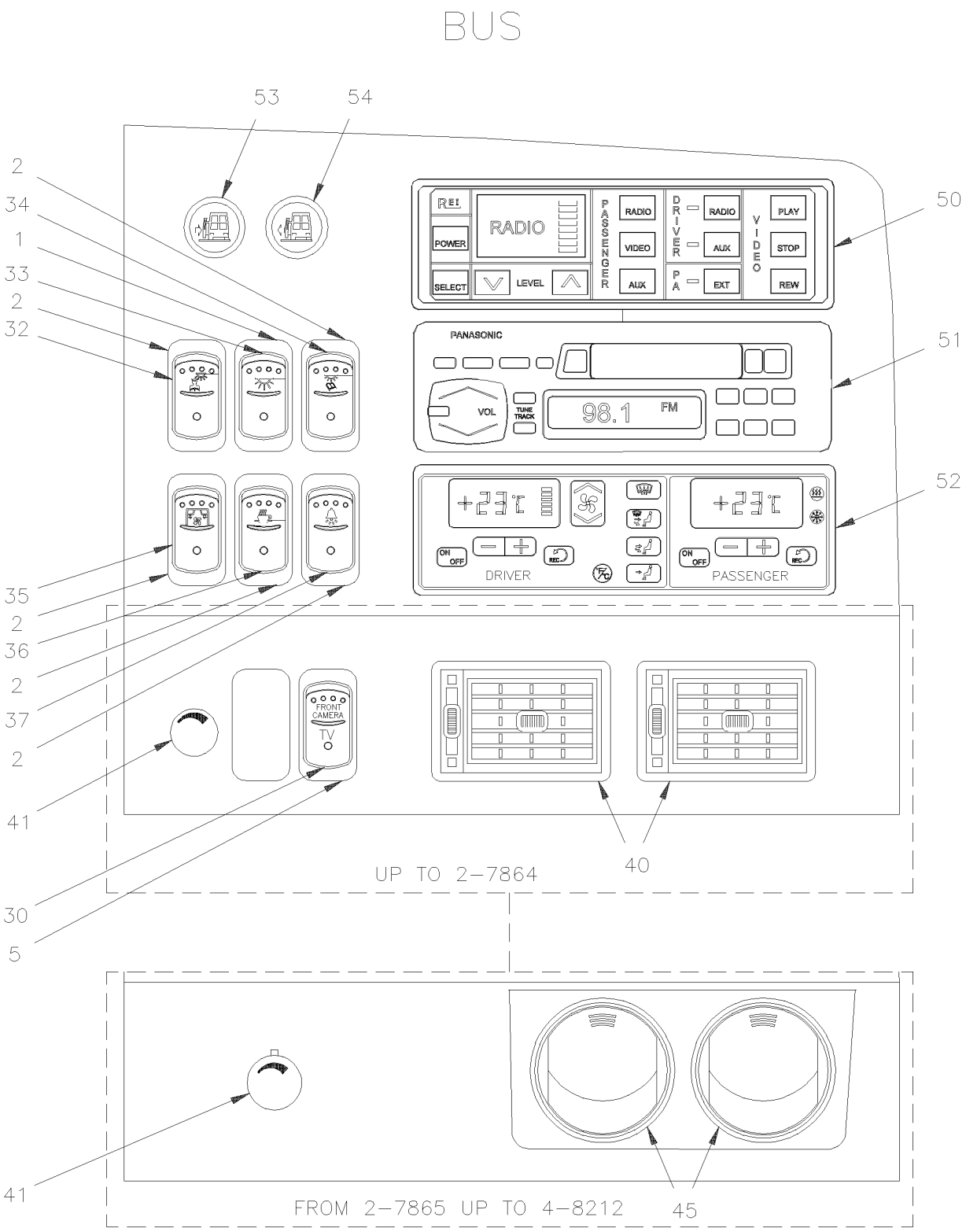

From Y-7046 Up to 8-9339	DATE: 01/2014	PAGE: Y2-0645-30
R.H. DASHBOARD PANEL		

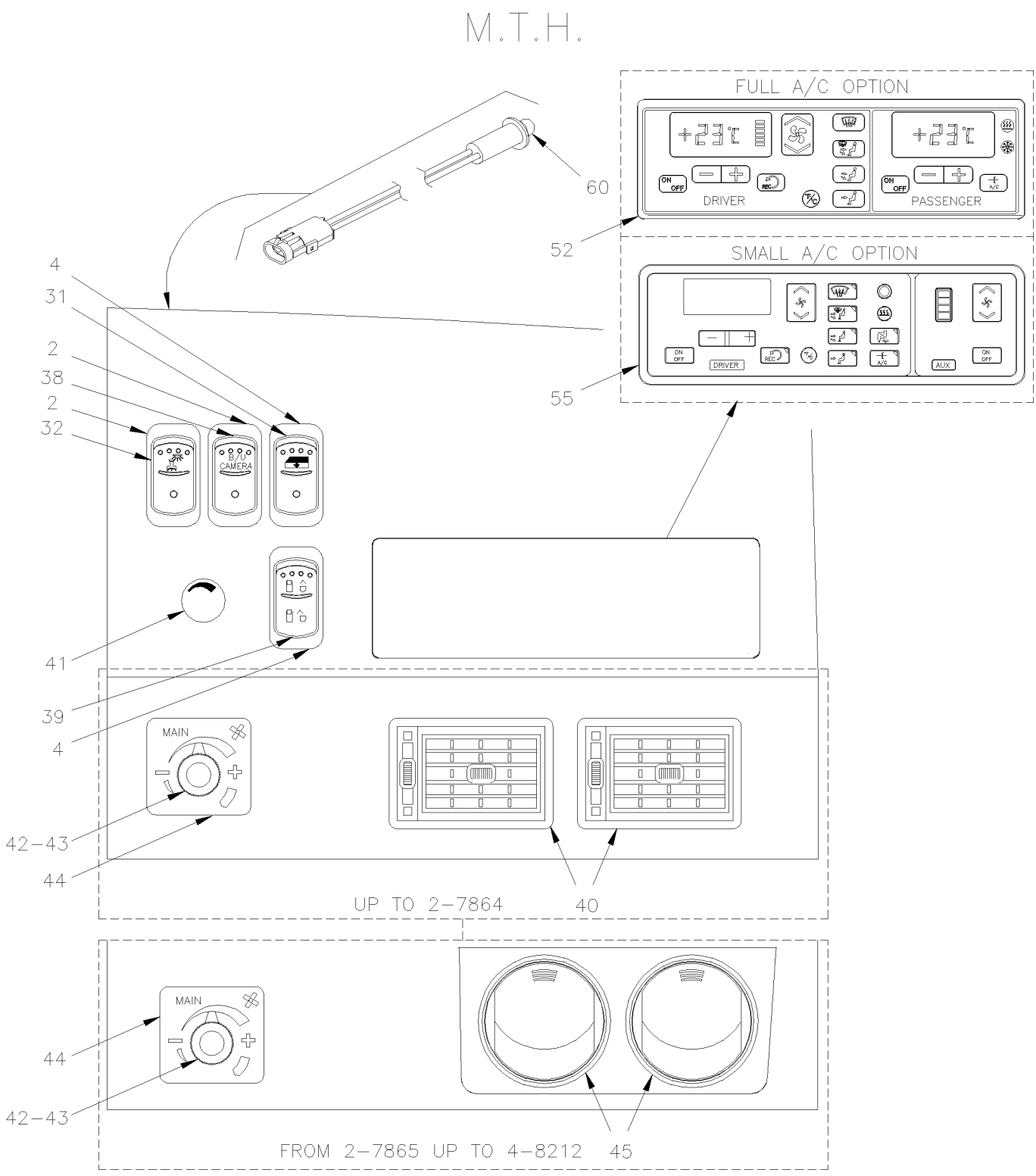

From Y-7046 Up to 8-9339	DATE: 01/2014	PAGE: Y2-0645-30
R.H. DASHBOARD PANEL		

M.T.H.

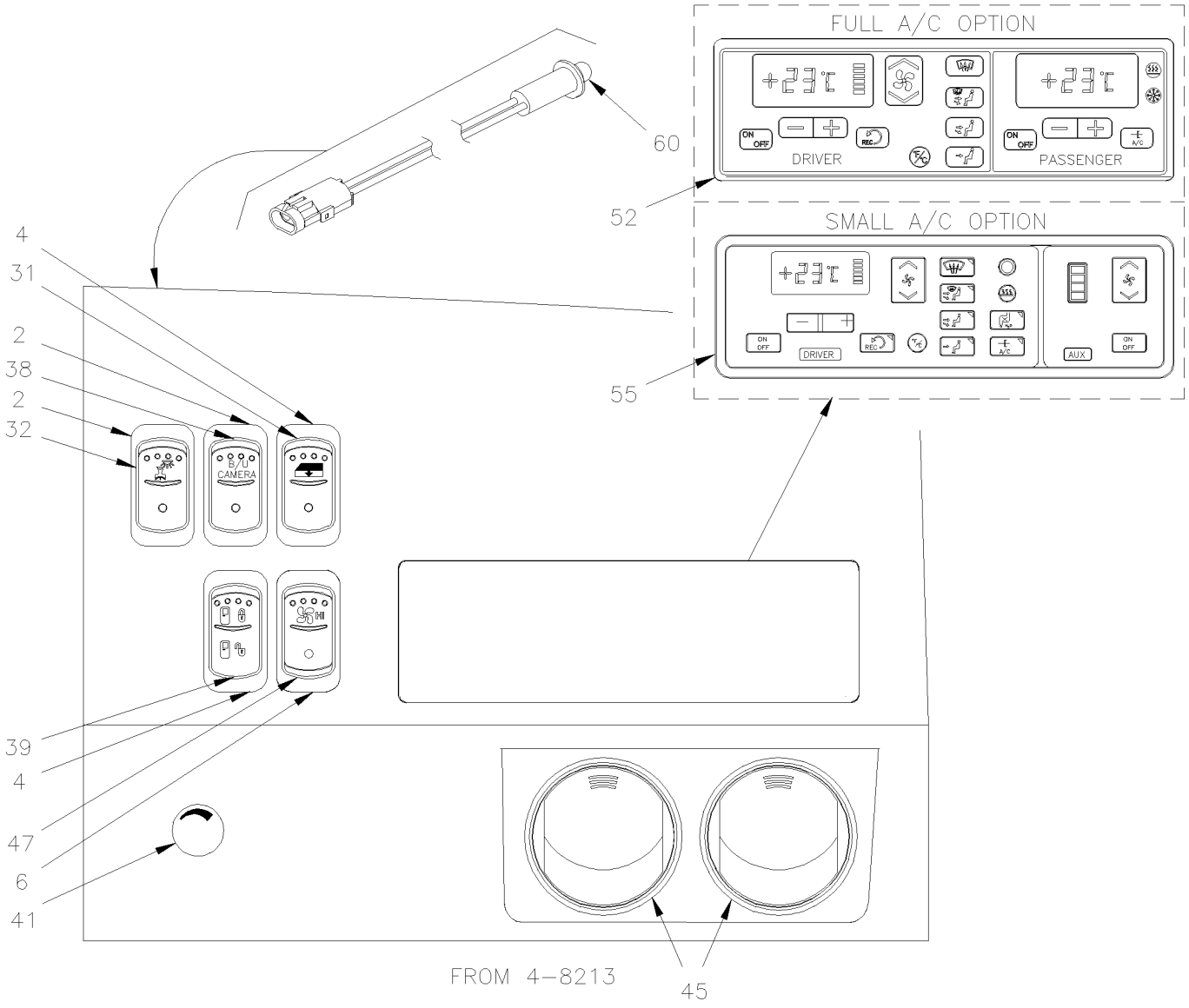

From Y-7046 Up to 8-9339	DATE: 01/2014	PAGE: Y2-0645-30

R.H. DASHBOARD PANEL

ITEM	PART	DESCRIPTION	XL45	MTH40	MTH45	MTH45S	NOTE
1	562696	SWITCH / OFF-ON-ON SERIES S.P.D.T. / W/RED & GREEN LED	AR	AR	AR	AR	
2	562697	SWITCH / ON-ON / D.P.D.T. / CH-OVER / W/RED & GREEN LED	AR	AR	AR	AR	
4	562699	SWITCH / M/ON-OFF-M/ON / D.P.D.T. / W/GREEN LED	1	1	1	1	
NS	562773	SWITCH / "DUMMY" / PLUG	AR	AR	AR	AR	
NS	562763	CONNECTOR RH 10C / SWITCH / NGR 28-5637-2	AR	AR	AR	AR	
NS	562768	SOCKET TERMINAL / 16-14 / PED 12015870	AR	AR	AR	AR	
5	563012	SWITCH / ON-ON / D.P.D.T. / CH-OVER / W/GREEN LED	1				
6	562854	SWITCH / ON-ON / D.P.D.T. / CH-OVER / W/RED LED From 4-8213		1	1	1	
30	562941	CAP / FRONT CAMERA	1				
31	562740	CAP / WINDOW DRIVER'S		1	1	1	
32	562716	CAP / DRIVER'S LAMP	1	1	1	1	
33	562717	CAP / INTERIOR LIGHT	1				
34	562718	CAP / READING LAMP	1				
35	562720	CAP / PARCEL RACK VENTILATION	1				A
36	562721	CAP / GALLEY	1				
37	562719	CAP / HOSTESS BELL	1				
38	562786	CAP / BACK-UP CAMERA	1				
39	562831	CAP / DOOR LOCK	1	1	1	1	
40	871106	LOUVER, ADJUSTABLE Up to 2-7864	2	2	2	2	
41	562846	KNOB / DASH ILLUMINATION	1	1	1	1	
NS	562845	RHEOSTAT / DASH ILLUMINATION	1	1	1	1	
NS	N.S.P.	. NUT (1212770)	1	1	1	1	2
42	063661	RHEOSTAT BLOWER SPEED CONTROL Up to 4-8212		1	1	1	
43	505306	KNOB, POINTER Up to 4-8212		1	1	1	
44	392021	DECAL FAN EVAPORATOR SPEED Up to 4-8212		1	1	1	
45	871314	LOUVER, ADJUSTABLE / ROUND 2 5/8" O.D. From 2-7865	1			1	
45	871315	LOUVER, ADJUSTABLE / ROUND 2 1/8" O.D. From 2-7865		1	1		
47	563278	CAP / HI SPEED MAIN VENTILATION From 4-8213		1	1	1	
50	900803	CONTROL HEAD / "R.E.I." SYSTEM 2000	1				
. NS	563064	. BULB (CONTROL HEAD GREEN) /	1				
NS	563064	. BULB (CONTROL HEAD GREEN) / 12VOLTS / 2700	AR				
NS	404571	CABLE ASSY / <> DASH & PARCEL RACK Up to 6-8797	1				
NS	409149	CABLE ASSY / <> DASH & PARCEL RACK / AUDIO From 6-8798	1				
51	Y2-2315-00	**SOUND SYSTEM & ACCESSORIES - "R.E.I."**					
		2) NOT SOLD BY PREVOST (SEE MANUFACTURING PART					
		NUMBER AT END OF DESCRIPTION LINE)					
		A) WE USE #562699 SWITCH AND RESISTOR #562908					

From Y-7046 Up to 8-9339	DATE: 01/2014	PAGE: Y2-0645-30

R.H. DASHBOARD PANEL

ITEM	PART	DESCRIPTION	XL45	MTH40	MTH45	MTH45S	NOTE
52	871171	A/C CONTROL MODULE Up to Y-7267 / REPLACED BY: 871201	1	1	1	1	
52	871200	A/C CONTROL MODULE From Y-7268 Up to 1-7493	1	1	1	1	C
52	871201	KIT RETROFIT SENSOR BOX W/PROTECTOR WITH LARGE A/C SYSTEM XL-II Up to 1-7493	1	1	1	1	
. NS	871214	. A/C CONTROL MODULE Up to 1-7493 / REPLACED BY: 871373	1	1	1	1	
. . NS	MI04-14C	. . SEE MAINTENANCE INFORMATION Up to 1-7493	1	1	1	1	
. NS	065328	. CABLE ASSY Up to 1-7493	1	1	1	1	
. NS	563063	. SENSOR THERMISTOR ASSY ("DELPHI") Up to 1-7493	1	1	1	1	
. NS	373792	. BOX SENSOR PROTECTOR Up to 1-7493	1	1	1	1	
. NS	373793	. ADAPTOR SENSOR BOX Up to 1-7493	1	1	1	1	
. NS	373802	. HOSE Up to 1-7493	1	1	1	1	
. NS	065302	. CABLE ASSY SENSOR EXTENTION Up to 1-7493	1	1	1	1	
. NS	500638	. SCREW TP BDG PH #8x1/2 ZP Up to 1-7493	4	4	4	4	
. NS	504637	. CABLE TIE / 3/16" X 13" Up to 1-7493	4	4	4	4	
52	871214	A/C CONTROL MODULE From 1-7494 Up to 5-8487 / REPLACED BY: 871373	1	1	1	1	
. NS	MI04-14C	. SEE MAINTENANCE INFORMATION From 1-7494 Up to 5-8487	1	1	1	1	
52	871373	A/C CONTROL MODULE From 5-8488	1				
52	871373	A/C CONTROL MODULE From 5-8488 Up to 7-9095		1	1	1	
52	871350	A/C CONTROL MODULE / W/MUX From 7-9096			1	1	
52	563026	SENSOR THERMISTOR ASSY ("KEYSTONE") Up to 1-7493	2	2	2	2	B
52	563063	SENSOR THERMISTOR ASSY ("DELPHI") From 1-7494	2	2	2	2	B
53	562801	SWITCH / DOOR CLOSE Up to Y-7178 / REPLACED BY: 563578	1				
53	563043	SWITCH / DOOR CLOSE From Y-7179 Up to 3-7926 / REPLACED BY: 563084	1				
53	563084	SWITCH / DOOR CLOSE From 3-7927 Up to 5-8578 / REPLACED BY: 563578	1				
53	563578	SWITCH / DOOR CLOSE From 5-8579	1				
53	562810	INSERT / DOOR CLOSE	1				
54	562802	SWITCH / DOOR OPEN Up to Y-7178 / REPLACED BY: 563579	1				
54	563044	SWITCH / DOOR OPEN From Y-7179 Up to 3-7926 / REPLACED BY: 563085	1				
54	563085	SWITCH / DOOR OPEN From 3-7927 Up to 5-8578 / REPLACED BY: 563579	1				
54	563579	SWITCH / DOOR OPEN From 5-8579	1				
54	562830	INSERT / DOOR OPEN	1				
55	871170	A/C CONTROL MODULE / W/SMALL A/C SYSTEM Up to 1-7547 / REPLACED BY: 871248		1	1	1	D
55	871248	KIT RETROFIT SENSOR BOX W/PROTECTOR WITH SMALL A/C SYSTEM XL-II Up to 1-7457		AR	AR	AR	
. NS	IS-00093	. SEE INSTRUCTION SHEET Up to 1-7457		1	1	1	
. NS	871212	. A/C CONTROL MODULE / W/SMALL A/C SYSTEM Up to 1-7457		1	1	1	
		B) USE IN PASSENGER'S RETURN AIR BOX UNDER					
		PASSENGER'S SEAT & DRIVER'S KNEE					
		C) FOR PRODUCT IMPROVMENT ASK FOR KIT #871201					
		D) FOR PRODUCT IMPROVMENT ASK FOR KIT #871248					
		(SEE W.B. #0034)					

From Y-7046 Up to 8-9339	DATE: 01/2014	PAGE: Y2-0645-30

R.H. DASHBOARD PANEL

ITEM	PART	DESCRIPTION	XL45	MTH40	MTH45	MTH45S	NOTE
. NS	065328	. CABLE ASSY Up to 1-7457		1	1	1	
. NS	563063	. SENSOR THERMISTOR ASSY ("DELPHI") Up to 1-7457		1	1	1	
. NS	373792	. BOX SENSOR PROTECTOR Up to 1-7457		1	1	1	
. NS	373793	. ADAPTOR SENSOR BOX Up to 1-7457		1	1	1	
. NS	373802	. HOSE Up to 1-7457		1	1	1	
. NS	065302	. CABLE ASSY SENSOR EXTENTION Up to 1-7457		1	1	1	
. NS	500638	. SCREW TP BDG PH #8x1/2 ZP Up to 1-7457		4	4	4	
. NS	504637	. CABLE TIE / 3/16" X 13" Up to 1-7457		4	4	4	
55	871212	A/C CONTROL MODULE / W/SMALL A/C SYSTEM From 1-7548 Up to 7-9095		1	1	1	
55	871417	A/C CONTROL MODULE / W/SMALL A/C SYSTEM / W/MUX From 7-9096			1	1	
60	330238P	TELLTALE ASSY / RED		1	1	1	

From Y-7046 Up to 6-8906	DATE: 01/2014	PAGE: Y2-0650-10
TACHOGRAPH - INSTALLATION		

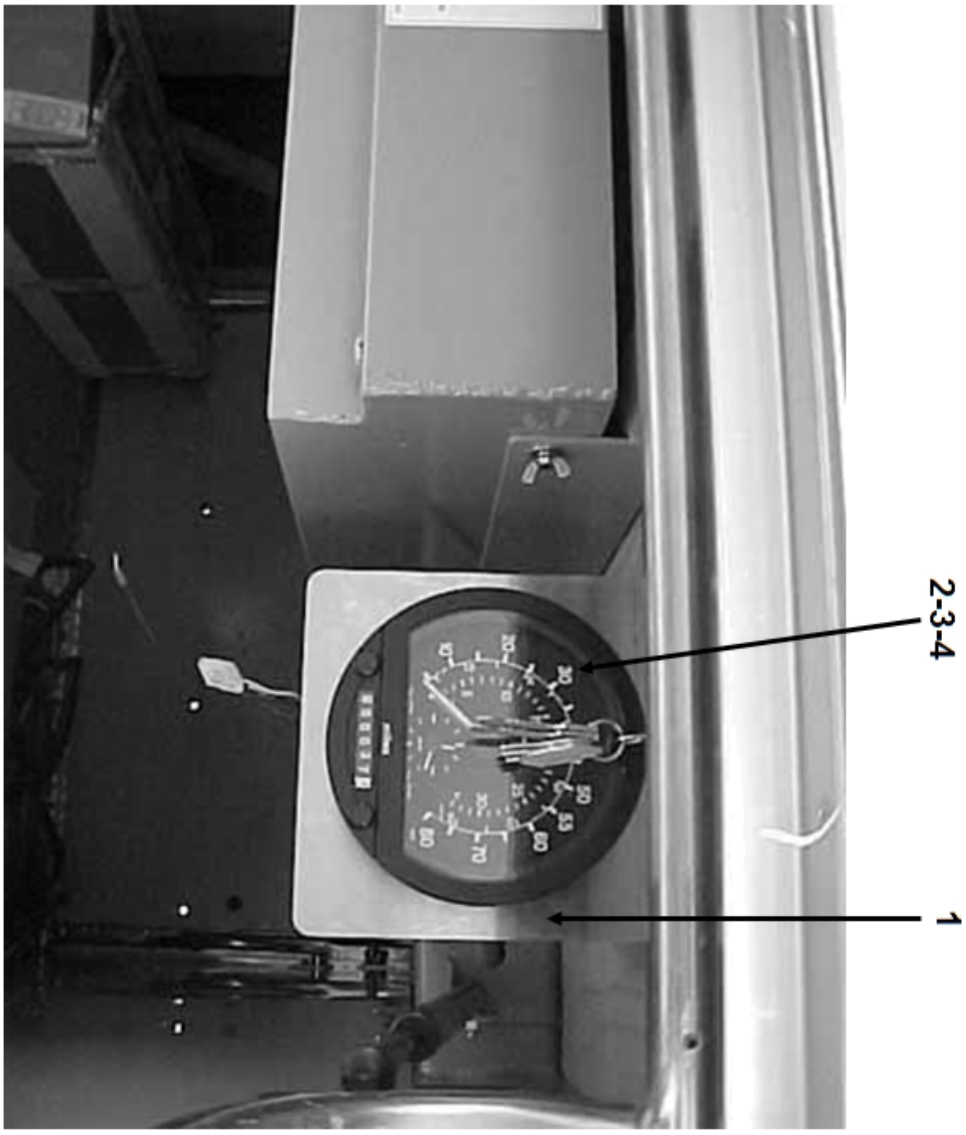

From Y-7046 Up to 6-8906	DATE: 01/2014	PAGE: Y2-0650-10

TACHOGRAPH - INSTALLATION

ITEM	PART	DESCRIPTION	XL45	MTH40	MTH45	MTH45S	NOTE
1	065455	SUPPORT / TO FIX HEAD	1				
NS	500642	SCREW TP BDG PH #10x3/4 ZP	3				
2	090195	MODULE ASSY / W/TACHOGRAPH W/4 WIRES	1				
3	590259	TACHOGRAPH ASSY / MPH / W/4 WIRES	1				
3	590258	TACHOGRAPH ASSY / KM/H / W/4 WIRES	1				
NS	561006	. BULB / 1WATT-24VOLTS / SAE# 2741MF	3				
NS	590236	. KEY	1				
NS	590270	BRACKET	2				
NS	590235	NUT KNURLED	2				
4	064669	CABLE ASSY	1				
5	590179	CHART KM/H	AR				
5	590122	CHART MPH	AR				
5	590251	CHART DUMMY PROTECTOR	AR				

From Y-7046 Up to 7-9095	DATE: 01/2014	PAGE: Y2-0650-50
KEYLESS MODULE		

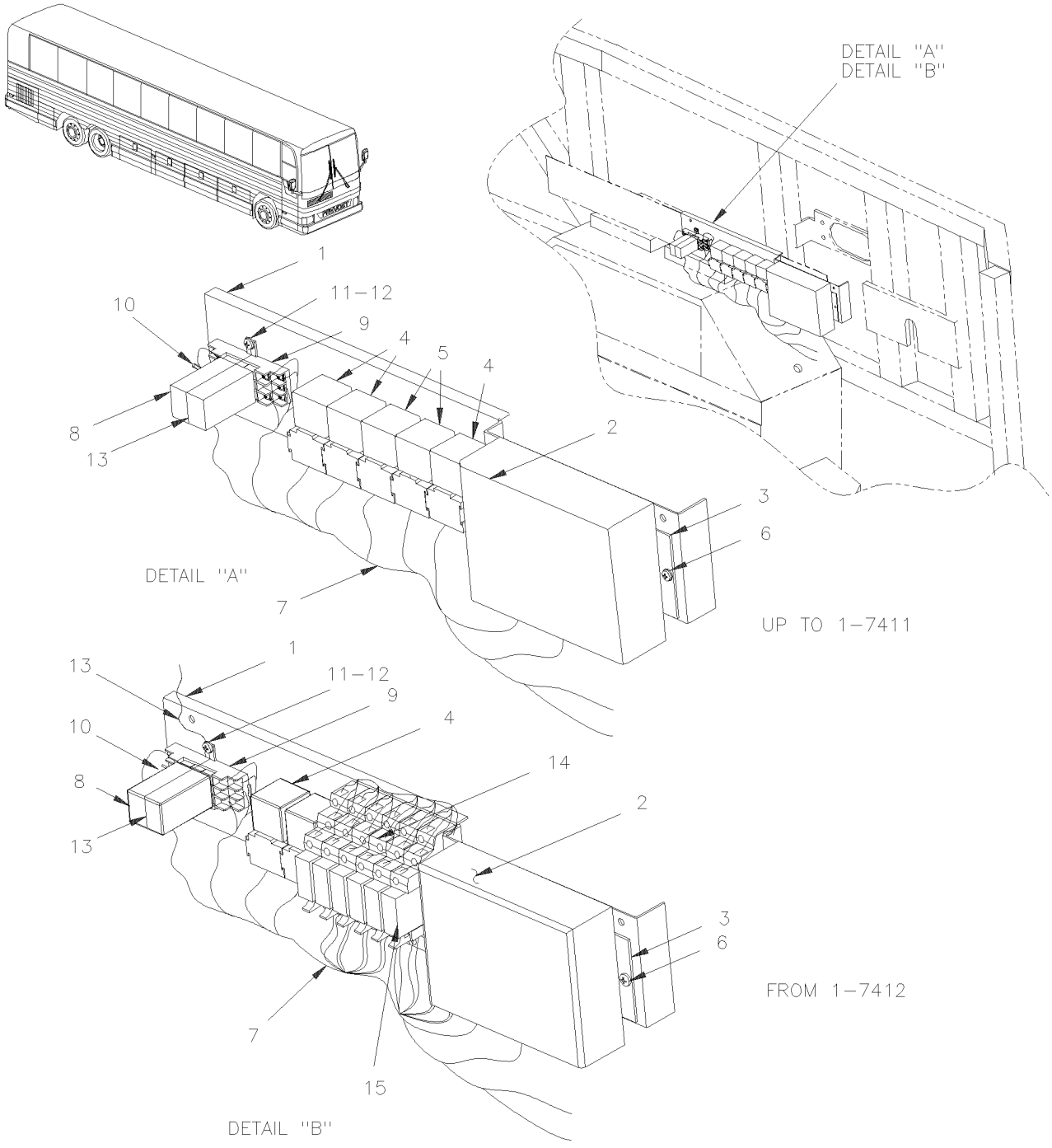

From Y-7046 Up to 7-9095	DATE: 01/2014	PAGE: Y2-0650-50

KEYLESS MODULE

ITEM	PART	DESCRIPTION	XL45	MTH40	MTH45	MTH45S	NOTE
	381907	KEYLESS MODULE ASSY Up to 1-7411 / REPLACED BY: 065541		1	1	1	
	381973	KEYLESS MODULE ASSY / MTH XL From 1-7412 Up to 4-8285		1	1	1	
	382319	KEYLESS MODULE ASSY / MTH XL From 4-8286 Up to 5-8517		1	1	1	
	382327	KEYLESS MODULE ASSY / MTH XL From 5-8518		1	1	1	
1	381930	. SUPPORT KEYLESS MODULE Up to 1-7411		1	1	1	
1	381974	. SUPPORT KEYLESS MODULE From 1-7412		1	1	1	
2	562673	. KEYLESS MODULE / 50' RANGE Up to 4-8285 / REPLACED BY: K562673		1	1	1	S
. NS	IS-03103	. . SEE INSTRUCTION SHEET Up to 4-8285		1	1	1	
2	563541	. KEYLESS MODULE / 350' RANGE From 4-8286		1	1	1	
3	064494	. SUPPORT MODULE		2	2	2	
4	562092	. RELAY 12V S.P.D.T. W/DIODE / Up to 5-8577 / REPLACED BY: 563337		3	3	3	
4	563337	. RELAY 12V S.P.D.T. W/RESISTOR / From 5-8578		3	3	3	
5	561707	. RELAY 24V S.P.D.T. W/RESISTOR / Up to 5-0142		2	2	2	
5	563332	. RELAY 24V S.P.D.T. W/RESISTOR / "VOLVO" (20374662) From 5-0143		2	2	2	
6	500582	. SCREW TP BDG PH #8x3/8 ZP		4	4	4	
7	064817	. WIRING HARNESS KEYLESS MODULE Up to 1-7411		1	1	1	
7	065382	. WIRING HARNESS KEYLESS MODULE From 1-7412 Up to 2-7799		1	1	1	
7	065549	. WIRING HARNESS KEYLESS MODULE From 2-7800 Up to 5-8517		1	1	1	
7	066399	. WIRING HARNESS KEYLESS MODULE From 5-8518 Up to 5-8609		1	1	1	
7	066309	. WIRING HARNESS KEYLESS MODULE From 5-8610		1	1	1	
8	562341	. RELAY, TIME DELAY RELAY - OFF Up to 5-8517 / REPLACED BY: 067982		1	1	1	
8	067982	. KIT RETROFIT TIME DELAY RELAY Up to 5-8517					
. NS	IS-04093	. . SEE INSTRUCTION SHEET Up to 5-8517		1	1	1	
8	563584	. RELAY, TIME DELAY RELAY - OFF / 30 SEC From 5-8518		1	1	1	R
9	562340	. BASE SOCKET		1	1	1	
10	560805	. RESISTOR / 470 OHMS / 1/2W		2	2	2	
11	500640	. SCREW TP BDG PH #6x3/4 ZP		2	2	2	
12	502630	. WASHER FL .156x.375x.049 ZP		2	2	2	
13	560920	. SPRING HOLDER		1	1	1	
14	563055	. BASE RELAY From 1-7412		7	7	7	
15	563054	. RELAY 12V S.P.D.T. From 1-7412		7	7	7	
NS	065541	KIT KEYLESS MODULE Up to 1-7411		AR	AR	AR	
. NS	IS-00053A	. SEE INSTRUCTION SHEET Up to 1-7411		1	1	1	
		R) SEE ATTACHMENT DOCUMENT 2004093					
		S) FOR SERVICE, SEE INSTRUCTION SHEET					

From Y-7046 Up to 8-9339	DATE: 01/2014	PAGE: Y2-0655-00

INTERIOR LIGHTING

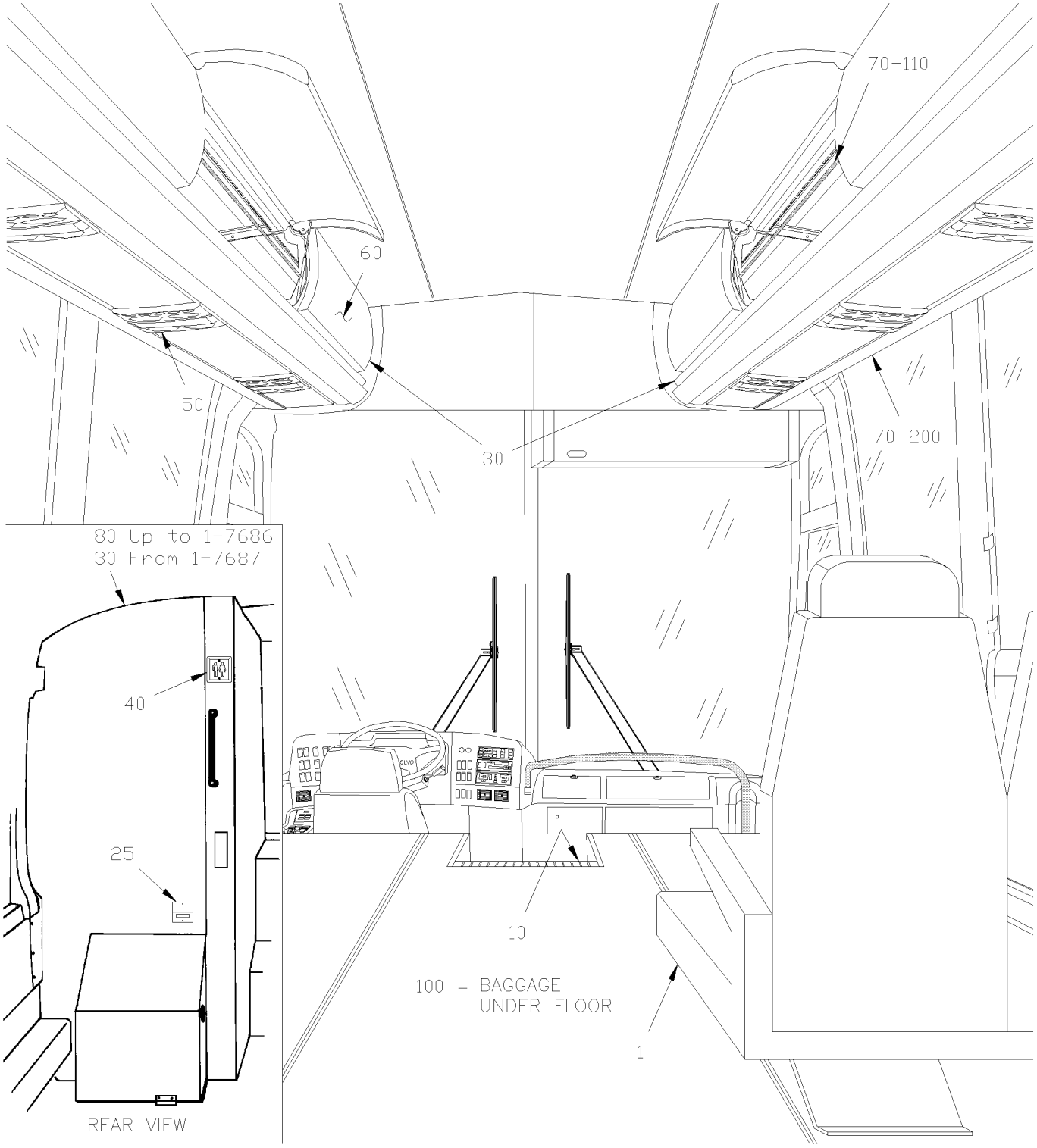

From Y-7046 Up to 8-9339	DATE: 01/2014	PAGE: Y2-0655-00
INTERIOR LIGHTING		

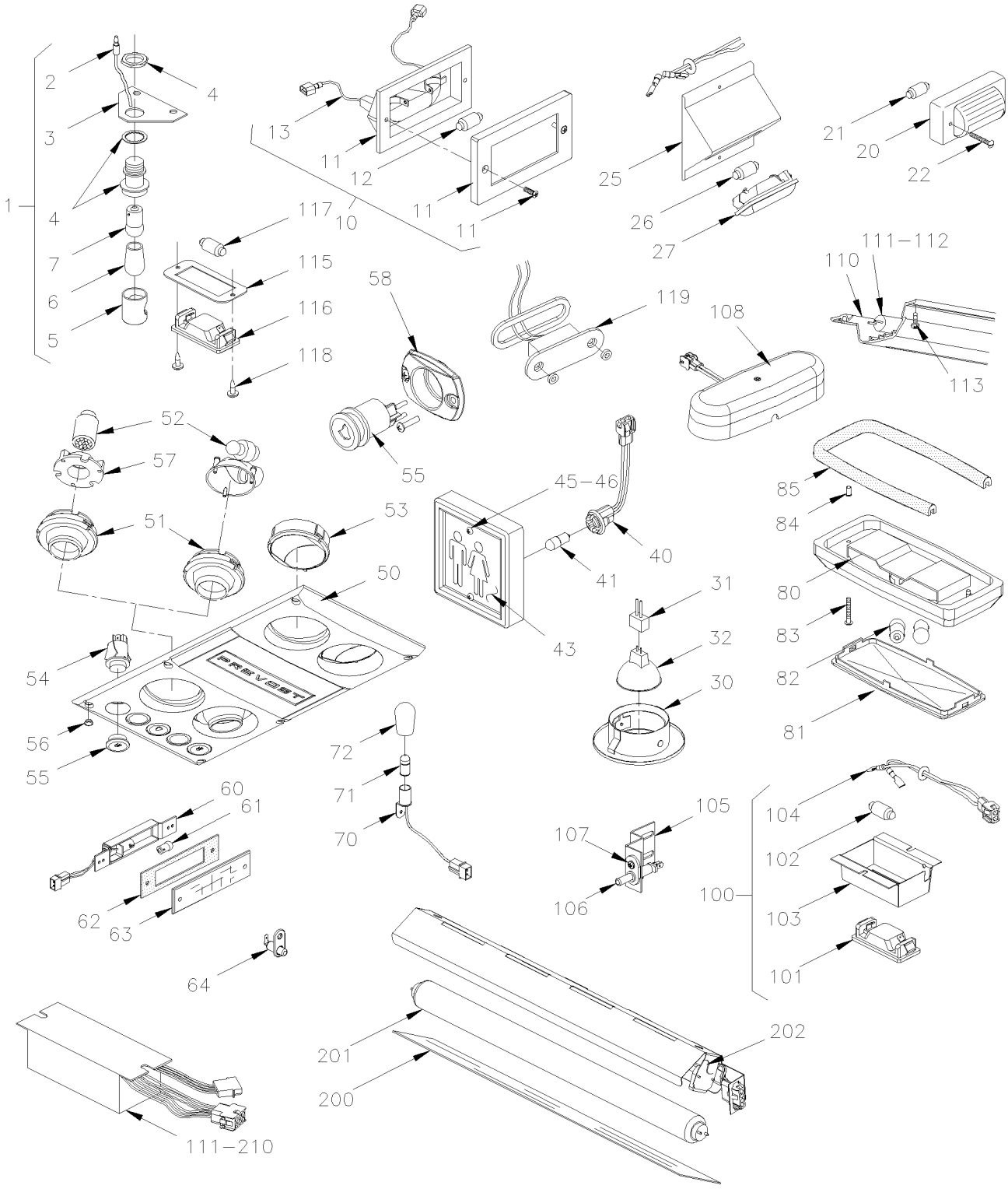

From Y-7046 Up to 8-9339	DATE: 01/2014	PAGE: Y2-0655-00

INTERIOR LIGHTING

ITEM	PART	DESCRIPTION	XL45	MTH40	MTH45	MTH45S	NOTE
		AISLE LAMP - UNDER PASSENGER'S SEAT					
1	330146	LAMP ASSY / UNDER SEAT W/BULB Up to 5-8416 / REPLACED BY: K330146	AR				
1	330367	LAMP ASSY / UNDER SEAT W/LED From 5-8417	AR				
2	560098	. TERMINAL SNAP PLUG / 16-14 / INSULATED / AMP 2-324225-1	1				
3	361343	. SUPPORT	1				
4	830096	. LAMP	1				
5	830113	. . CAP PROTECTOR	1				
6	560940	. BULB COVERING / BLUE Up to 5-8416	1				
7	560141	. BULB / 3WATT-24VOLTS / SAE# 1251 Up to 5-8416	1				
7	563546	. BULB / 7 LEDS BLUE / UNDER SEAT / #B607-2PB-028W From 5-8417 / REPLACED BY: 564100	1				
7	564100	. BULB / 7 LEDS BLUE / UNDER SEAT / #270015	1				
NS	061310	CABLE ASSY / <> LIGHT & MAIN CABLE	AR				
		STEPWELL LAMP					
10	330279	LAMP ASSY 24V W/BULB / REPLACED BY: K330279	2				
10	830197	LAMP ASSY 24V LEDS	2				
NS	068140	CABLE INTERFACE 330279 TO 830197	AR				
12	562278	. BULB / 10WATT-24VOLTS / SAE# 6429	1				
13	561904	TAB TERMINAL INSULATION NYLON / 22-18 / AMP 2-520103-2	2				
NS	500148	SCREW MA RND PH #6-32x1/2 SS	AR				
NS	500422	NUT SPR U #6-32 .110-.120 SS	AR				
20		GALLEY & WASTE CONTAINER LAMP					
20	830124	LAMP ASSY	1				
21	562278	BULB / 10WATT-24VOLTS / SAE# 6429	1				
21	562305	BULB / 5WATT-12VOLTS / SAE# 6413	AR				
22	500613	SCREW TP PAN PH #10x1/2 ZP	2				
25	327378	LAMP SUPPORT Up to 5-8592	1				

From Y-7046 Up to 8-9339	DATE: 01/2014	PAGE: Y2-0655-00

INTERIOR LIGHTING

ITEM	PART	DESCRIPTION	XL45	MTH40	MTH45	MTH45S	NOTE
26	562278	BULB / 10WATT-24VOLTS / SAE# 6429 Up to 5-8592	1				
27	830139	LAMP ASSY / W/ONE BULB Up to 5-8592	1				
27	066480	KIT, REPLACEMENT WASTE CONTAINER NIGHT LIGHT	1				
. NS	IS-04094	. SEE INSTRUCTION SHEET	1				
27	065350	WIRING HARNESS ENGINE COMPARTMENT Up to 5-8592	1				
		LAVATORY LAMP / FROM 1-7687					
		DRIVER'S LAMP					
30	830150	LAMP BASE Up to 2-7892 / REPLACED BY: 830179	2	2	2	2	
30	830179	LAMP BASE From 2-7893	2	2	2	2	
31	562803	CONNECTOR / SOCKET HOUSING ASSY / LEECRAFT QBL-12	1	1	1	1	
32	830151	BULB / 35 WATTS12V/SAE# Q35MR16/SP20D Up to 1-7686 / REPLACED BY: 830176	2	2	2	2	
32	830176	BULB / 20 WATTS-12V/SAE#Q20MR16/FL40D From 1-7687	1	1	1	1	
40		LAVATORY LAMP (OCCUPIED)					
40	330342	BASE ASSY W/SOCKET & BULB 24V / LIGHT GREY Up to 2-7922	1	1	1	1	
40	330360	BASE ASSY W/SOCKET & BULB 12V / LIGHT GREY From 2-7923	1	1	1	1	
NS	330265	. SOCKET ASSY W/CONNECTOR / W2.1x9.Dd	1				
41	561166	. BULB / 3WATT-24VOLTS / SAE# 464 Up to 2-7922	1				
41	563108	. BULB / 3WATT-12VOLTS / SAE# 168 From 2-7923	1				
42	330341	. BASE BOX, LAMP / LIGHT GREY	1				
43	403137	LENS	1				
45	500504	SCREW TC OV PH #6-32x1/2 BK	2				
46	500422	NUT SPR U #6-32 .110-.120 SS	2				
50		READING LIGHT					
50	830149	MODULE ASSY WITH LAMP AND AIR DIFFUSOR Up to 2-7770 / REPLACED BY: 830178	AR				BS
50	830174	MODULE ASSY WITH LAMP AND AIR DIFFUSOR From 2-7771 Up to 2-7879 / REPLACED BY: 830178					BS
		BS) BULB SOCKET IT NOT AVALIABLE FOR REPLACEMENT					
		ASK FOR CHEAPER MODULE # 830178					

From Y-7046 Up to 8-9339	DATE: 01/2014	PAGE: Y2-0655-00

INTERIOR LIGHTING

ITEM	PART	DESCRIPTION	XL45	MTH40	MTH45	MTH45S	NOTE
50	830178	MODULE ASSY WITH LAMP AND AIR DIFFUSOR From 2-7880	1				BS
50	330366	MODULE ASSY WITH LEDS LAMP, AIR DIFFUSOR From 4-8291	1				
50	830170	MODULE ASSY W/OUT LAMP AND W/AIR DIFFUSOR Up to 2-7770 / REPLACED BY: 830175	1				B
50	830175	MODULE ASSY W/OUT LAMP AND W/AIR DIFFUSOR From 2-7771	1				B
NS	065387	CABLE	1				B
51	830156	. READING LAMP ASSY W/RFLECTOR LENS & CLIP	2				C
NS	830172	. . REFLECTOR ASSY W/CLIP	1				C
NS	830169	. . . CLIP SOKET RETAINER	1				C
52	563073	. BULB / 7 WATT-24VOLTS / SAE# 64479 Up to 2-7879 / REPLACED BY: 560135	2				C
52	563260	. BULB / 6WATT-24VOLTS / SAE# 303 From 2-7880 / REPLACED BY: 560135	1				C
52	563349	. BULB / 12 LEDS / READING LIGHT / #B612-0WW-024S / REPLACED BY: 563630	1				
52	563630	. BULB / 12 LEDS / READING LIGHT / #270017	1				
53	830157	. AIR DIFFUSOR	2				
54	830158	. SWITCH / OFF-ON / S.P.S.T. / READING LIGHT	2				WCL
55	830159	. SWITCH / OFF-M/ON / S.P.S.T. / CHIME	1				WCL
56	830160	. PLUG COVER SCREW	6				
56	065044	DIODE ASSY	1				A
NS	5001439	SCREW TP OV PH #6x5/8 BK	4				
NS	830164	TOOL / LENS REMOVER READING LIGHT	AR				
57	830180	SUPPORT / 12 LEDS BULB	2				
58	409259	PROTECTOR SWITCH / CAP	AR				WCL
58	500814	SCREW TP BDG PH #6x3/4 BK	2				WCL
		PARCEL RACK - INTERIOR LIGHT					
60	430314	LAMP ASSY	AR				
60	430313	. BOX	1				
60	561556	. SOCKET BULB / METAL W/2 WIRES / BA9s / LEECRAFT B22Q2	1				
60	504462	. SNAP BUSHING / .187x.375x.312	1				
60	560853	. PIN TERMINAL / 24-18 / AMP 60618-1	2				
60	560900	. CONNECTOR / COM. MATE-N-LOCK / PH 2C / AMP 1-480319-0	1				
		A) ONLY ON COACH WITH READING LIGHT TEST SWITCH					
		B) ONLY ON COACH W/O READING LAMP ON FIRST SEAT					
		BS) BULB SOCKET IT NOT AVALIABLE FOR REPLACEMENT					
		ASK FOR CHEAPER MODULE # 830178					
		C) FOR PRODUCT IMPROVMENT USE 563349 WITH 830180					
		WCL) THIS SWITCH IT ALSO INSTALL ON LOWER WINDOW					
		MOULDING WITH PROTECTOR # 409259 IN SERVICE					

From Y-7046 Up to 8-9339	DATE: 01/2014	PAGE: Y2-0655-00

INTERIOR LIGHTING

ITEM	PART	DESCRIPTION	XL45	MTH40	MTH45	MTH45S	NOTE
60	504109	. RIVET POP DOME OE 5/32x3/16 AL	2				
61	560144	BULB / 1.6WATT-24VOLTS / SAE# 1820	AR				
62	430316	SEAL	1				
63	430312	LENS	2				
NS	500124	SCREW TP TR PH #8x1/2 SS	1				
64	561563	SWITCH / S.P.S.T. / N.C.	1				
70		EMERGENCY EXIT LAMP - LOCATED					
		UPPER OF SIDE WINDOW					
70	330217	SOCKET ASSY	AR				
71	560601	BULB / 2WATT-24VOLTS / SAE# 456	AR				
71	560623	BULB / 3.5WATT-24VOLTS / SAE# 313 / REPLACED BY: 562112	AR				
72	560942	BULB COVERING / BLUE	AR				
NS	500648	SCREW TC BDG PH #6-32x1/4 ZP	AR				
NS	500438	WASHER FL .187x.437x.050 ZP	AR				
80		LAVATORY LAMP / UP TO 1-7686					
80	830110	LAMP ASSY	1				
81	830125	LENS	1				
82	563010	BULB / 16WATT-24VOLTS / SAE# 1308	1				
83	500654	SCREW TC BDG PH #8-32x1/2 ZP	1				
84	500678	NUT WELL #8-32x.450	1				
85	506025	RUBBER CHANNEL / 1/18" x 5/16" INT "U" SHAPE / SQUARE C.T.L.	1				
100		BAGGAGE & SERVICE DOOR					
100	330268	LAMP ASSY 24V / BAGGAGE COMPARTMENT LAMP / W/ONE BULB 10W Up to 5-8421 / REPLACED BY: 330224	AR				
100	330370	LAMP ASSY 24V / BAGGAGE COMPARTMENT LAMP / W/2 BULB 10W From 5-8422 Up to 5-8673 / REPLACED BY: 330224	AR				
100	330372	LAMP ASSY 24V / BAGGAGE COMPARTMENT LAMP W//2 BULBS 5W From 5-8674 Up to 7-9224 / REPLACED BY: 330224	AR				

From Y-7046 Up to 8-9339	DATE: 01/2014	PAGE: Y2-0655-00

INTERIOR LIGHTING

ITEM	PART	DESCRIPTION	XL45	MTH40	MTH45	MTH45S	NOTE
101	830139	. LAMP ASSY / W/ONE BULB Up to 5-8421	1				
101	830183	. LAMP ASSY / W/2 BULBS From 5-8422 Up to 7-9224	1				
102	562278	. BULB / 10WATT-24VOLTS / SAE# 6429 Up to 5-8421	AR				
102	562411	. BULB / 5WATT-24VOLTS / SAE # 6424 From 5-8422 Up to 7-9224	2				
103	330267	. SUPPORT / SS / TO FIX LAMP / W/ONE BULB Up to 5-8421 / REPLACED BY: 330224	1				
103	330369	. SUPPORT / SS / TO FIX LAMP / W/2 BULBS From 5-8422 Up to 7-9224	1				
104	063435	. CABLE ASSY / W/ONE BULB Up to 5-8421 / REPLACED BY: 330224	1				
104	066271	. CABLE ASSY / W/2 BULBS From 5-8422 Up to 7-9224	1				
NS	504273	. CABLE TIE / 1/8" X 3"1/2 Up to 7-9224	1				
105	064278	CABLE ASSY / TO ADD MORE LAMP IN BAGGAGE CO	8				
105	064167	SWITCH ASSY / BAGGAGE COMPARTMENT Up to 5-8788 / REPLACED BY: 066533	1				
105	066533	SWITCH ASSY / BAGGAGE COMPARTMENT From 5-8789	1				
105	063434	SWITCH SUPPORT / W/BAGGAGE DOORS STD Up to 5-8788 / REPLACED BY: 066639	1				
105	066639	SWITCH SUPPORT / W/BAGGAGE DOORS STD From 5-8789	1				
106	562303	SWITCH / S.P.S.T. / N.C. Up to 5-8788	1				
106	563464	SWITCH / S.P.S.T. / N.C. / W/RUBBER BOOT From 5-8789	1				
107	500613	SCREW TP PAN PH #10x1/2 ZP	1				
107	500022	WASHER LO INT .168x.340x.023 ZP	1				
108	330224	LAMP ASSY 24V / BAGGAGE COMPARTMENT LAMP W/2 BULBS G4-10W From 7-9225	AR				
. NS	330396	. BULB / 10 WATTS -28VOLTS / SAE# G4-28 From 7-9225	1				
		FRONT PARCEL RACK FLUORESCENT					
110	312445	LIGHTING MODULE / W/TUBE 1590MM	12				D
110	312450	LIGHTING MODULE / "DUMMY" 779.5MM	2				
110	313256	LIGHTING MODULE / "DUMMY" 1318MM	1				
110	313257	LIGHTING MODULE / "DUMMY" 609MM / W/W.C.L. "RICON"	1				
110	313460	LIGHTING MODULE / "DUMMY" 424MM / W/W.C.L. "RICON"	1				
111	830154	BALLAST / 24 VOLTS / TO USE W/830152	AR				
NS	562850	. FUSE / 4 AMPS / GMA-4A	1				
NS	562784	. SOCKET / BIPIN HOLDER / LEVITON 420	AR				
		D) INCLUDE ITEMS # 70 & 111					

From Y-7046 Up to 8-9339	DATE: 01/2014	PAGE: Y2-0655-00

INTERIOR LIGHTING

ITEM	PART	DESCRIPTION	XL45	MTH40	MTH45	MTH45S	NOTE
112	830152	TUBE / 13WATT / F13T5CW - 21" / G5 MINI BIPIN	AR				
113	500583	SCREW TP BDG PH #6x1/2 ZP	AR				
115		LAVATORY SAFETY LAMP					
115	324944	PLATE Up to 5-8592	1				
116	830139	LAMP ASSY / W/ONE BULB Up to 5-8592	1				
117	562278	BULB / 10WATT-24VOLTS / SAE# 6429 Up to 5-8592	1				
NS	064031	CABLE ASSY Up to 5-8592	1				
118	500641	SCREW TP BDG PH #8x3/4 ZP Up to 5-8592	2				
119	066401	KIT, REPLACEMENT LAVATORY NIGHT LIGHT Up to 5-8592	1				
. NS	IS-04094	. SEE INSTRUCTION SHEET Up to 5-8592	1				
119	563460	LAMP ASSY "LED" From 5-8593	1				
200		FLUORESCENT UNDER PARCEL RACK					
200	312502	LENS 470MM	1				
200	312503	LENS 831MM	1				
200	312501	LENS 1235MM	12				
200	313344	LENS 411MM / W/A/C	1				
200	313345	LENS 800MM / W/A/C	1				
200	313346	LENS 637MM / W/A/C	1				
200	313347	LENS 574MM / W/A/C	1				
201	830153	TUBE / 32WATT / F32T8SPX41 - 48"	AR				
202	330340	SOCKET / TUBE	2				
202	561247	. CONNECTOR / UNIVERSAL MATE-N-LOK / SH 2C / AMP 1-480698-0	1				
202	561514	. SOCKET TERMINAL / 20-14 / AMP 350537-3	2				
202	830145	. SOCKET / BIPIN HOLDER	1				
210	830155	BALLAST / 24 VOLTS / TO USE W/830153	AR				
210	562850	. FUSE / 4 AMPS / GMA-4A	1				

From Y-7046 Up to 4-8358	DATE: 01/2014	PAGE: Y2-0660-00
HEADLAMP & FRONT DIRECTIONAL LAMPS RECTANGULAR "HALOGENE"		

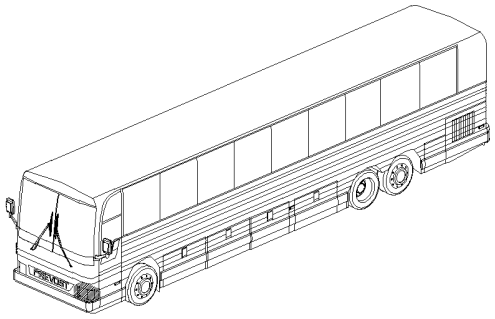

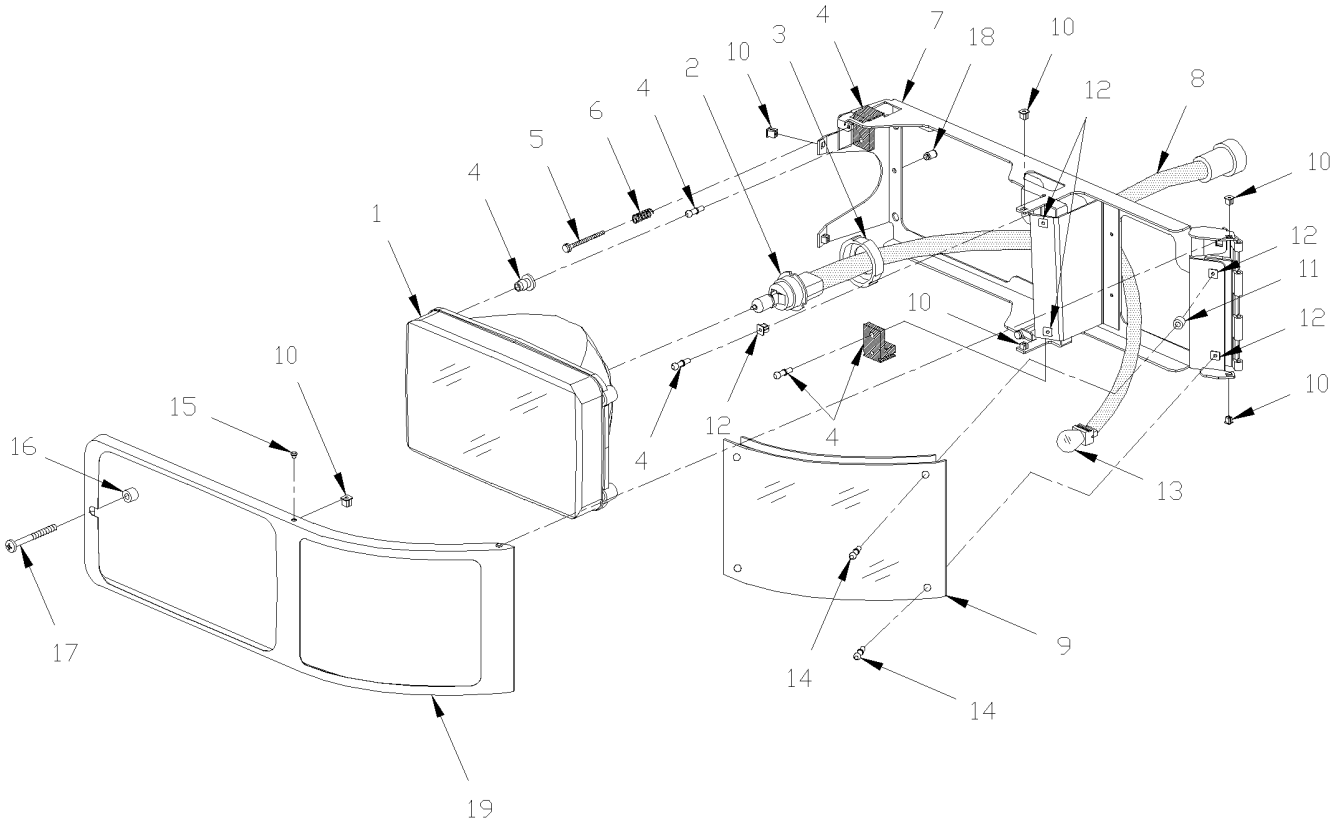

From Y-7046 Up to 4-8358	DATE: 01/2014	PAGE: Y2-0660-00

HEADLAMP & FRONT DIRECTIONAL LAMPS RECTANGULAR "HALOGENE"

ITEM	PART	DESCRIPTION	XL45	MTH40	MTH45	MTH45S	NOTE
	430496P	HEADLAMP & FLASHER ASSY LH					
	430503P	HEADLAMP & FLASHER ASSY RH					
1	930328	. HEADLAMP ASSY WITH BULB	1	1	1	1	
1	930354	. . HEADLAMP INSERT	1	1	1	1	
2	930291	. . BULB / 65/45WATT-12VOLTS / SAE# 9004 / REPLACED BY: 930385	1	1	1	1	
2	930385	. . BULB / 65/45WATT-12VOLTS / SAE#9004XL	1	1	1	1	
3	930355	. . RETAINER RING	1	1	1	1	
4	930356	. . PIVOT ADJUSTER ASSY	3	3	3	3	
5	930357	. . ADJUSTER SCREW	2	2	2	2	
6	502169	. SPRING COMPRESSION / .240 O.D. x 1.5 x .032	2	2	2	2	
7	430479	. SUPPORT ASSY L.H. (WELDED) Up to Y-7139	1	1	1	1	
7	430544	. SUPPORT ASSY L.H. (WELDED) From Y-7140	1	1	1	1	
7	430502	. SUPPORT ASSY R.H. (WELDED) Up to Y-7139	1	1	1	1	
7	430539	. SUPPORT ASSY R.H. (WELDED) From Y-7140	1	1	1	1	
8	064780	. CABLE ASSY / HEADLAMP	1	1	1	1	
NS	504637	. CABLE TIE / 3/16" x 13"	3	3	3	3	
9	930329	. FLASHER L.H.	1	1	1	1	
9	930333	. FLASHER R.H.	1	1	1	1	
10	502741	. NUT AN #8 NYL	6	6	6	6	
11	430537	. SPACER	1	1	1	1	
12	5001052	. NUT AN #10 NYL	5	5	5	5	
13	562135	. BULB / 32/3WATT-12VOLTS / SAE# 3057 / REPLACED BY: 563314	1	1	1	1	
14	5001042	. SCREW MA RND PH #10-32x1 1/4 SS	4	4	4	4	
15	500028	. SCREW TC TR PH #8-32x3/8 SS	6	6	6	6	
16	430508	. SPACER	1	1	1	1	
17	5001508	. SCREW CAP BUT HEXS M6-1.0x40 SS	1	1	1	1	
NS	5001507	. SCREW MA PAN PH M6-1.0x20 SS	6	6	6	6	A
18	5001416	. RUBBER BUMPER PLUG 11/16X1/2X3/32	2	2	2	2	
19	430488	. HEADLAMP BEZEL	1	1	1	1	
		A) TO FIX LAMP TO FRONTCAP					

From 4-8359 Up to 8-9339	DATE: 01/2014	PAGE: Y2-0660-01
HEADLAMP & FRONT DIRECTIONAL LAMPS ROUND "HALOGENE" & "XENON"		

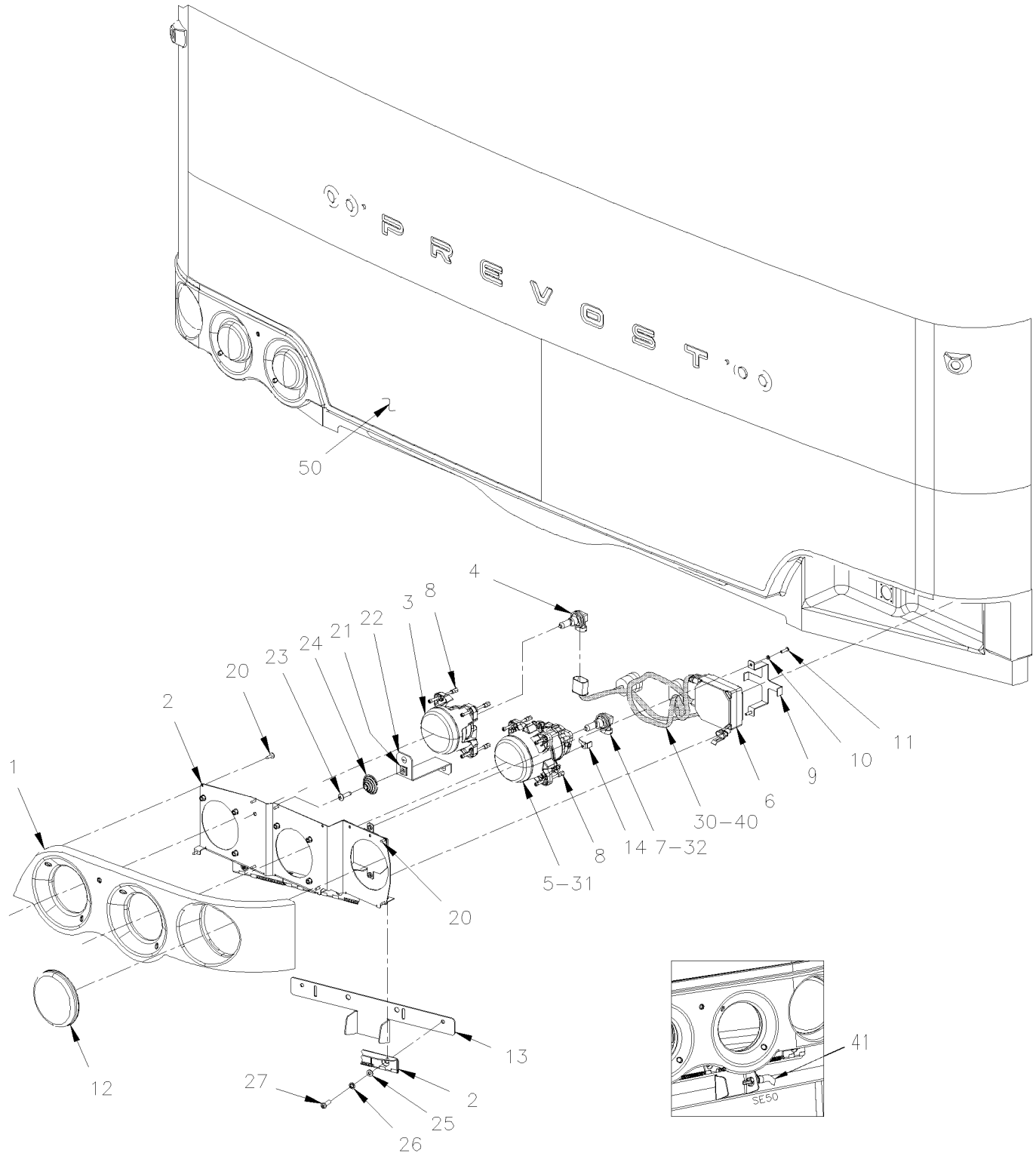

From 4-8359 Up to 8-9339	DATE: 01/2014	PAGE: Y2-0660-01

HEADLAMP & FRONT DIRECTIONAL LAMPS ROUND "HALOGENE" & "XENON"

ITEM	PART	DESCRIPTION	XL45	MTH40	MTH45	MTH45S	NOTE
	430615	LAMP ASSY L.H. "XENON" W/BEZEL XL-II	1				
	430619	LAMP ASSY L.H. "HALOGENE" W/BEZEL XL-II	1				
	430616	LAMP ASSY R.H. "XENON" W/BEZEL XL-II	1				
	430620	LAMP ASSY R.H. "HALOGENE" W/BEZEL XL-II	1				
1	476210	. HEADLAMP BEZEL, R.H. / CURBE SIDE	1	1	1	1	
1	476211	. HEADLAMP BEZEL, L.H. / STREET SIDE	1	1	1	1	
2	430575	. SUPPORT R.H.	1	1	1	1	
2	430587	. SUPPORT L.H.	1	1	1	1	
3	930359	. LAMP ASSY / HIGH	1	1	1	1	
4	563092	. . BULB / 65WATT-12VOLTS / SAE# H9	1	1	1	1	
5	930388	. LAMP ASSY "XENON" / W/TRANFORMER	1	1	1	1	
5	930389	. . LAMP ASSY "XENON" / W/OUT TRANFORMER & W/OUT BULB	1	1	1	1	
6	930390	. . TRANFORMER "XENON" 12Volt Power	1	1	1	1	
7	563365	. . BULB / 35WATT / SAE D2S / 85122	1	1	1	1	
8	930373	. . KIT, BOLTS ADJUSTMENT (3 BOLTS)	1	1	1	1	
9	930434	. . SUPPORT "XENON" BALLAST BLACK	1	1	1	1	
10	502698	. SCREW MA PAN PH M4-0.7x16 SS EMN	4	4	4	4	
11	502834	. WASHER LO SPT 4.1x7.6x0.9 ZG603	4	4	4	4	
12	930364	. LED AMBER 4" / DIRECTIONAL / FRONT 12Volt / 60L (PREVOST)	1	1	1	1	
13	430576	. HOLDER LAMP	1	1	1	1	
14	430604	. BULB STOPPER / "SAFETY FAILURE STRESS" / SS	2	2	2	2	
20	5001536	. SCREW PTR BDG PH M4x12 SS	8	8	8	8	
21	5001009	. NUT AN 1/4 NYL	1	1	1	1	
22	430572	. SUPPORT CENTRAL	1	1	1	1	
23	504249	. RIVET CHY Q PRDG 3/16x3/8 SS / REPLACED BY: 504747	AR	AR	AR	AR	
24	930369	. SPRING CONICAL	1	1	1	1	
25	502573	. WASHER FL 6.4x12.5x1.6 SS	4	4	4	4	
26	5001432	. WASHER LO INT .256x.478x.028 SS 410	4	4	4	4	
27	5001507	. SCREW MA PAN PH M6-1.0x20 SS	4	4	4	4	
30	065929	. CABLE ASSY / W/"HALOGENE" LAMPS / W/XL-II Up to 7-9095	1	1	1	1	H
30	066990	. CABLE ASSY / W/"HALOGENE" LAMPS / MUX From 7-9096			1	1	H
31	930360	. LAMP ASSY / LOW	1	1	1	1	H,A
32	563092	. BULB / 65WATT-12VOLTS / SAE# H9	1	1	1	1	H
40	065930	. CABLE ASSY / W/"XENON" LAMPS / W/XL-II Up to 7-9095	1	1	1	1	
40	066991	. CABLE ASSY / W/"XENON" LAMPS / MUX From 7-9096			1	1	
41	563335	SENSOR THERMISTOR ASSY / OUTSIDE / / PED 15416387 From 7-9096		1	1	1	
NS	430602	KIT RETROFIT "XENON" FROM HALOGENE "XL-II"	1	1	1	1	
50	Y2-1851-00	**FRONT CAP - INSTALLATION**					
		A) TO CONVERT HALOGENE TO XENON, ASK KIT #430603					
		H) USE WITH HALOGENE ONLY					

From Y-7046 Up to 4-8358	DATE: 01/2014	PAGE: Y2-0661-00
FOG LAMP		

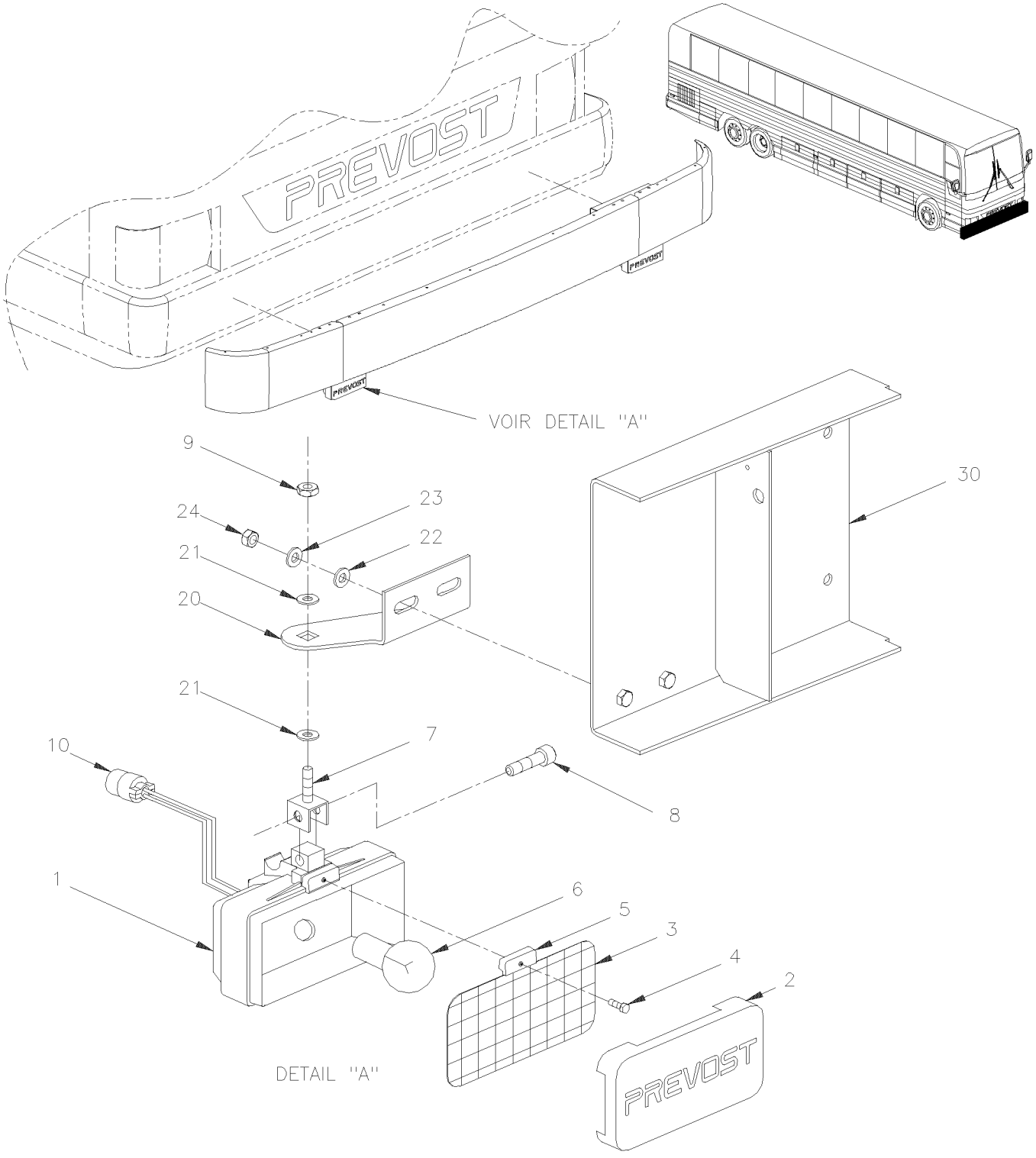

From Y-7046 Up to 4-8358	DATE: 01/2014	PAGE: Y2-0661-00

FOG LAMP

ITEM	PART	DESCRIPTION	XL45	MTH40	MTH45	MTH45S	NOTE
	430499	FOG LAMP 12 V / "BOSCH" TOURING 170 / W/CONECTOR "DEUTSCH"	1	1	1	1	
	430563	DRIVING LAMP ASSY	1	1	1	1	A
1	N.S.S.	. HOUSING	1	1	1	1	1
2	930246	. COVER FOG / "BOSH" TOURING	1	1	1	1	
3	930241	. LAMP UNIT / FOG	1	1	1	1	
3	930381	. LAMP UNIT / DRIVING LAMP	1	1	1	1	A
4	930243	. SCREW	1	1	1	1	
5	930242	. RETAINER	1	1	1	1	
6	561882	. BULB / 55WATT-12VOLTS / SAE# H3 / 64151	1	1	1	1	
7	930244	. BRACKET KIT	1	1	1	1	
8	502527	. . SCREW CAP HEX M8-1.25x50 G8.8 ZP	1	1	1	1	
9	5001006	. NUT HEX JAM M10-1.0 ZP	1	1	1	1	
10	562901	CONNECTOR / HD10 SERIES / SH 3C / DEUTSCH HD16-3-96S	1	1	1	1	
NS	562482	SOCKET TERMINAL / 16-14 / DEUTSCH 0462-209-16141	2	2	2	2	
NS	562387	CONVOLUTED TUBING / .250" / SLIT / BLACK	AR	AR	AR	AR	
NS	561996	SEALING PLUG TYPE 12 & 16 / DEUTSCH 114017	1	1	1	1	
20	410666	SUPPORT L.H. FOG LAMP	1	1	1	1	
20	410722	SUPPORT R.H. FOG LAMP	1	1	1	1	
21	500445	WASHER FL .437x1.000x.083 ZP	2	2	2	2	
22	500441	WASHER FL .312x.734x.065 ZP	2	2	2	2	
23	500476	WASHER LO SPT .317x.586x.078 ZP	2	2	2	2	
24	500778	NUT HEX 5/16-18 ZP	2	2	2	2	
30	Y2-1850-00	**BUMPER FRONT**					
		1) NOT SOLD SEPARATELY					
		A) USE IN "OPTION" DRIVING LAMP					

From 4-8359 Up to 8-9339	DATE: 01/2014	PAGE: Y2-0661-01
FOG LAMP		

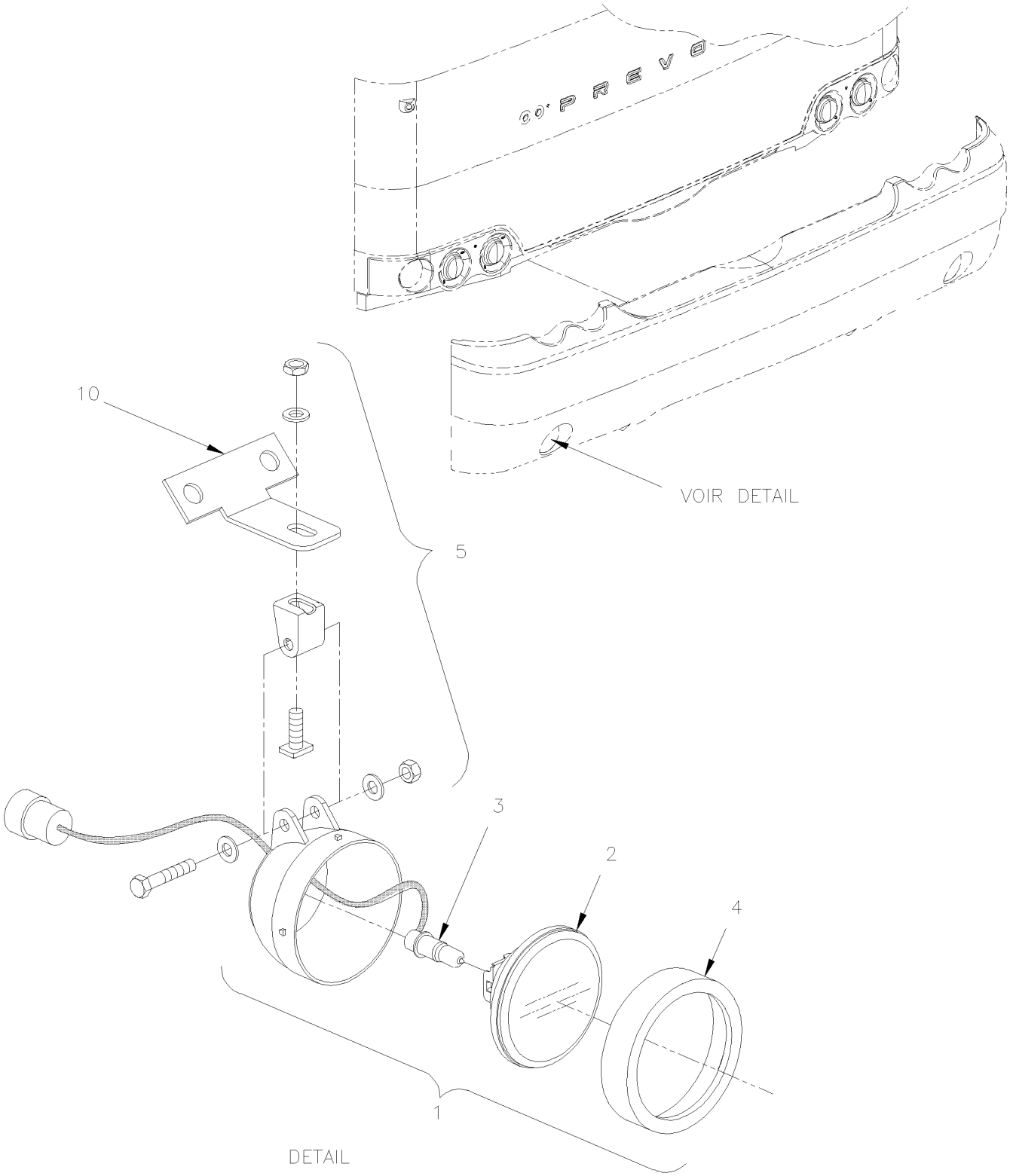

From 4-8359 Up to 8-9339	DATE: 01/2014	PAGE: Y2-0661-01

FOG LAMP

ITEM	PART	DESCRIPTION	XL45	MTH40	MTH45	MTH45S	NOTE
	430553	FOG LAMP 12 V / "BOSCH" COMPACT 100 / W/CONECTOR "DEUTSCH"	2	2	2	2	
1	930361	. FOG LAMP ASSY / REPLACED BY: 430553	1	1	1	1	
2	930370	. GLASS	1	1	1	1	
3	561882	. BULB / 55WATT-12VOLTS / SAE# H3 / 64151	1	1	1	1	
4	930371	. HOLDER RING	1	1	1	1	
5	930372	. KIT HARDWARE / REPLACED BY: 430553	1	1	1	1	
10	Y2-1850-02	**BUMPER FRONT**					

From Y-7046 Up to 8-9339	DATE: 01/2014	PAGE: Y2-0662-00
CLEARANCE & MARKER LIGHT		

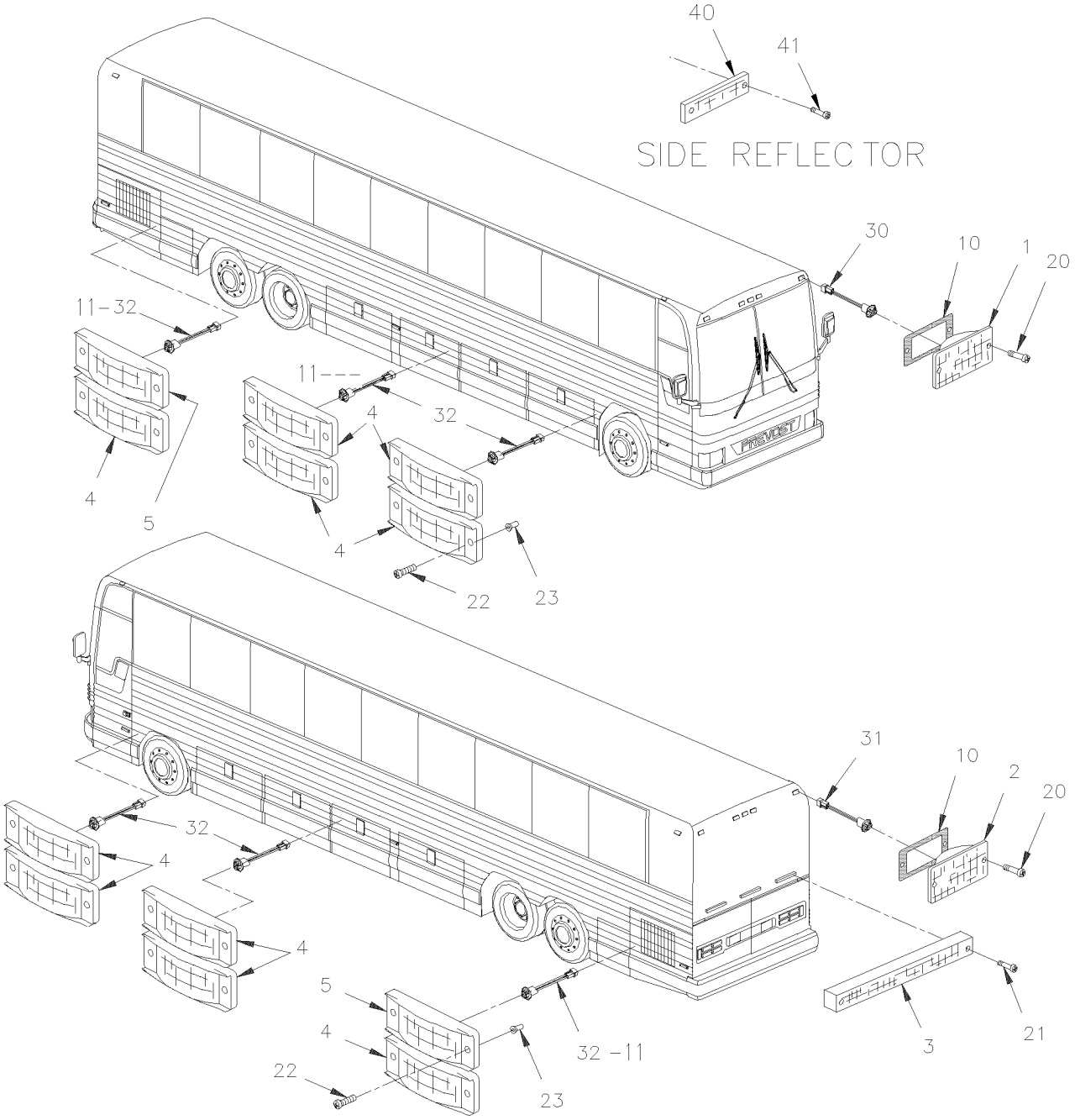

From Y-7046 Up to 8-9339	DATE: 01/2014	PAGE: Y2-0662-00

CLEARANCE & MARKER LIGHT

ITEM	PART	DESCRIPTION	XL45	MTH40	MTH45	MTH45S	NOTE
1	930337	LAMP ID & CLEAR -LED AMBER / 6 LEDS Up to 5-8407 / REPLACED BY: 930416	7	7	7	7	
1	930416	LAMP ID & CLEAR -LED AMBER / 3 LEDS Up to 5-8407	7	7	7	7	
1	066123	LAMP ID & CLEAR -6 LED AMBER / "JIFFI SPLICE" From 5-8408	7	7	7	7	
. NS	930337	. LAMP ID & CLEAR -LED AMBER / 6 LEDS From 5-8408 / REPLACED BY: 930416	1	1	1	1	
. NS	430630	. SEAL LAMP BLACK 1/8" THICK From 5-8408	1	1	1	1	
. NS	562286	. PIN TERMINAL / 18-16 / DEUTSCH 0460-202-16141 From 5-8408	1	1	1	1	
. NS	561608	. SOCKET TERMINAL / 18-16 / DEUTSCH 0462-201-16141 From 5-8408	1	1	1	1	
1	066527	LAMP ID & CLEAR -3 LED AMBER / "JIFFI SPLICE"	7	7	7	7	
. NS	930416	. LAMP ID & CLEAR -LED AMBER / 3 LEDS	1	1	1	1	
. NS	430630	. SEAL LAMP BLACK 1/8" THICK	1	1	1	1	
. NS	562286	. PIN TERMINAL / 18-16 / DEUTSCH 0460-202-16141	1	1	1	1	
. NS	561608	. SOCKET TERMINAL / 18-16 / DEUTSCH 0462-201-16141	1	1	1	1	
2	930334	LAMP ID & CLEAR -LED RED / 6 LEDS Up to 5-8407 / REPLACED BY: 930415	7	7	7	7	
2	930415	LAMP ID & CLEAR -LED RED / 3 LEDS Up to 5-8407	7	7	7	7	
2	066122	LAMP ID & CLEAR -6 LED RED / "JIFFI SPLICE" From 5-8408	7	7	7	7	
. NS	930334	. LAMP ID & CLEAR -LED RED / 6 LEDS From 5-8408 / REPLACED BY: 930415	1	1	1	1	
. NS	430630	. SEAL LAMP BLACK 1/8" THICK From 5-8408	1	1	1	1	
. NS	562286	. PIN TERMINAL / 18-16 / DEUTSCH 0460-202-16141 From 5-8408	1	1	1	1	
. NS	561608	. SOCKET TERMINAL / 18-16 / DEUTSCH 0462-201-16141 From 5-8408	1	1	1	1	
2	066526	LAMP ID & CLEAR -3 LED RED / "JIFFI SPLICE"	7	7	7	7	
. NS	930415	. LAMP ID & CLEAR -LED RED / 3 LEDS	1	1	1	1	
. NS	430630	. SEAL LAMP BLACK 1/8" THICK	1	1	1	1	
. NS	562286	. PIN TERMINAL / 18-16 / DEUTSCH 0460-202-16141	1	1	1	1	
. NS	561608	. SOCKET TERMINAL / 18-16 / DEUTSCH 0462-201-16141	1	1	1	1	
3	930330	CYCLOP LAMP	3	3	3	3	
. NS	930353	. CAP PLUG SCREW	2	2	2	2	
NS	506191	TAPE RUB ADH1 CC POL 1/8" x 1/4" x 50' / GREY 2520X	AR	AR	AR	AR	
4	930341	SIDE MARKER ASSY / AMBER / W/2 LED Up to 5-8700 / REPLACED BY: 930401	10	10	10	10	
4	930376	SIDE MARKER ASSY / AMBER / W/6 LED Up to 5-8700 / REPLACED BY: 930401	10				A
4	930401	SIDE MARKER ASSY / AMBER / W/6 LED W/REFLECTOR From 5-8701 / REPLACED BY: 930443	10				
4	930443	SIDE MARKER ASSY / AMBER / W/2 LED W/REFLECTOR From 5-8701	10				S
5	930340	SIDE MARKER ASSY / RED / W/2 LED Up to 5-8700 / REPLACED BY: 930400	2	2	2	2	
5	930380	SIDE MARKER ASSY / RED / W/6 LED Up to 5-8700 / REPLACED BY: 930400	2				A
5	930400	SIDE MARKER ASSY / RED / W/6 LED W/REFLECTOR From 5-8701 / REPLACED BY: 930444	2				
5	930444	SIDE MARKER ASSY / RED / W/2 LED W/REFLECTOR From 5-8701	2				S
10	930344	SEAL LAMP BLACK 1/8" THICK Up to 6-9021	14	14	14	14	
10	430630	SEAL LAMP BLACK 1/8" THICK From 6-9022		14	14	14	
11	064990	CABLE ASSY / SIDE MARKER LAMP FOR DOORS / REPLACED BY: 067207	1				
. NS	473832	. GROMMET 2 HOLESx1.6x11.0MMx2.0MMx8.0MMx16MM	1				
11	067207	CABLE ASSY / SIDE MARKER LAMP FOR DOORS	1				
. NS	473832	. GROMMET 2 HOLESx1.6x11.0MMx2.0MMx8.0MMx16MM	1				
20	5001364	SCREW PTR TR PH M4x20 ZP	2	2	2	2	
		A) OPTION "ORLEANS"					
		S) SERVICE					

From Y-7046 Up to 8-9339	DATE: 01/2014	PAGE: Y2-0662-00

CLEARANCE & MARKER LIGHT

ITEM	PART	DESCRIPTION	XL45	MTH40	MTH45	MTH45S	NOTE
21	502665	SCREW TP OV PH #6x3/4 SS EMN	2	2	2	2	
22	5001042	SCREW MA RND PH #10-32x1 1/4 SS	2	2	2	2	
23	502774	NUT WELL #10-32x.625	2	2	2	2	
30	064816	CABLE HARNESS / FRONT ROOF Up to 3-8130	1	1	1	1	
30	065761	CABLE HARNESS / FRONT ROOF From 3-8131 Up to 5-8407	1	1	1	1	
30	066116	CABLE HARNESS / FRONT ROOF From 5-8408	1	1	1	1	
31	064822	CABLE HARNESS / REAR ROOF Up to 5-8407	1	1	1	1	
31	066117	CABLE HARNESS / REAR ROOF From 5-8408	1	1	1	1	
32	064990	CABLE ASSY / SIDE MARKER LAMP FOR DOORS Up to 4-8358 / REPLACED BY: 067207	AR	AR	AR	AR	
. NS	473832	. GROMMET 2 HOLESx1.6x11.0MMx2.0MMx8.0MMx16MM Up to 4-8358	1	1	1	1	
40	930212	REFLECTOR AMBER 1 1/8" x 4 3/8"	AR				
41	500124	SCREW TP TR PH #8x1/2 SS	AR				

From Y-7046 Up to 8-9339	DATE: 01/2014	PAGE: Y2-0662-00

CLEARANCE & MARKER LIGHT

ITEM	PART	DESCRIPTION	XL45	MTH40	MTH45	MTH45S	NOTE

From Y-7046 Up to 8-9339	DATE: 01/2014	PAGE: Y2-0663-00
DOCK & CORNERING LIGHT		

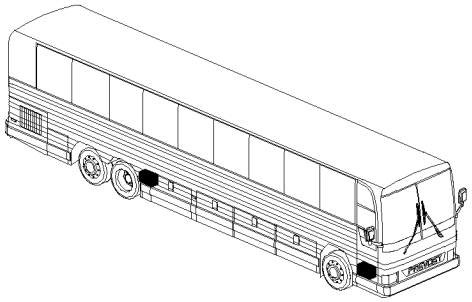

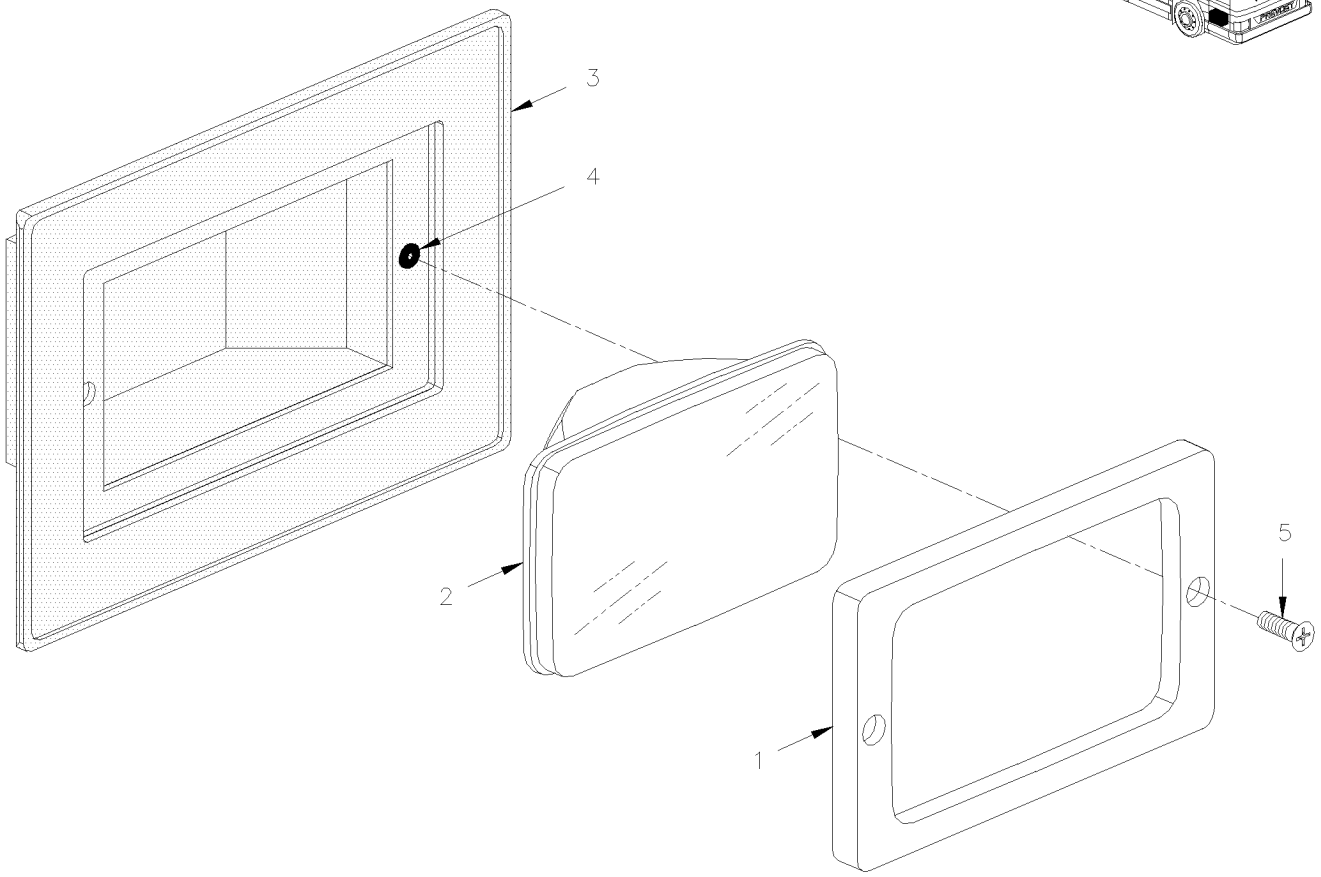

From Y-7046 Up to 8-9339	DATE: 01/2014	PAGE: Y2-0663-00

DOCK & CORNERING LIGHT

ITEM	PART	DESCRIPTION	XL45	MTH40	MTH45	MTH45S	NOTE
1	286400	FRAME	4	4	4	4	
1	473424	BEZEL	AR				A
NS	287147	SPACER ¼" / BLACK PLASTIC	AR				A
2	930319	SEAL BEAM / 37.5WATT-12V / SAE# H9415	4	4	4	4	
3	490879	BOX / FIXED ON REAR FENDER	1	1	1	1	
4	500589	. NUT WELL M4-0.7x13.5	2	2	2	2	
4	5001055	NUT WELL M4-0.7x14.5	1	1	1	1	
5	502530	SCREW MA OV PH M4-0.7x40 SS	AR	AR	AR	AR	
NS	065358	CABLE ASSY	1				A
NS	561707	RELAY 24V S.P.D.T. W/RESISTOR /	2				A
		A) THOSE ITEMS ARE USE WITH COACH CORNERING					
		LIGHT SEE DIAGRAM D060953 FOR MORE					
		INFORMATION					

From Y-7046 Up to 3-8164	DATE: 01/2014	PAGE: Y2-0664-00

REAR EXTERIOR LIGHTS & PLATE HOLDER

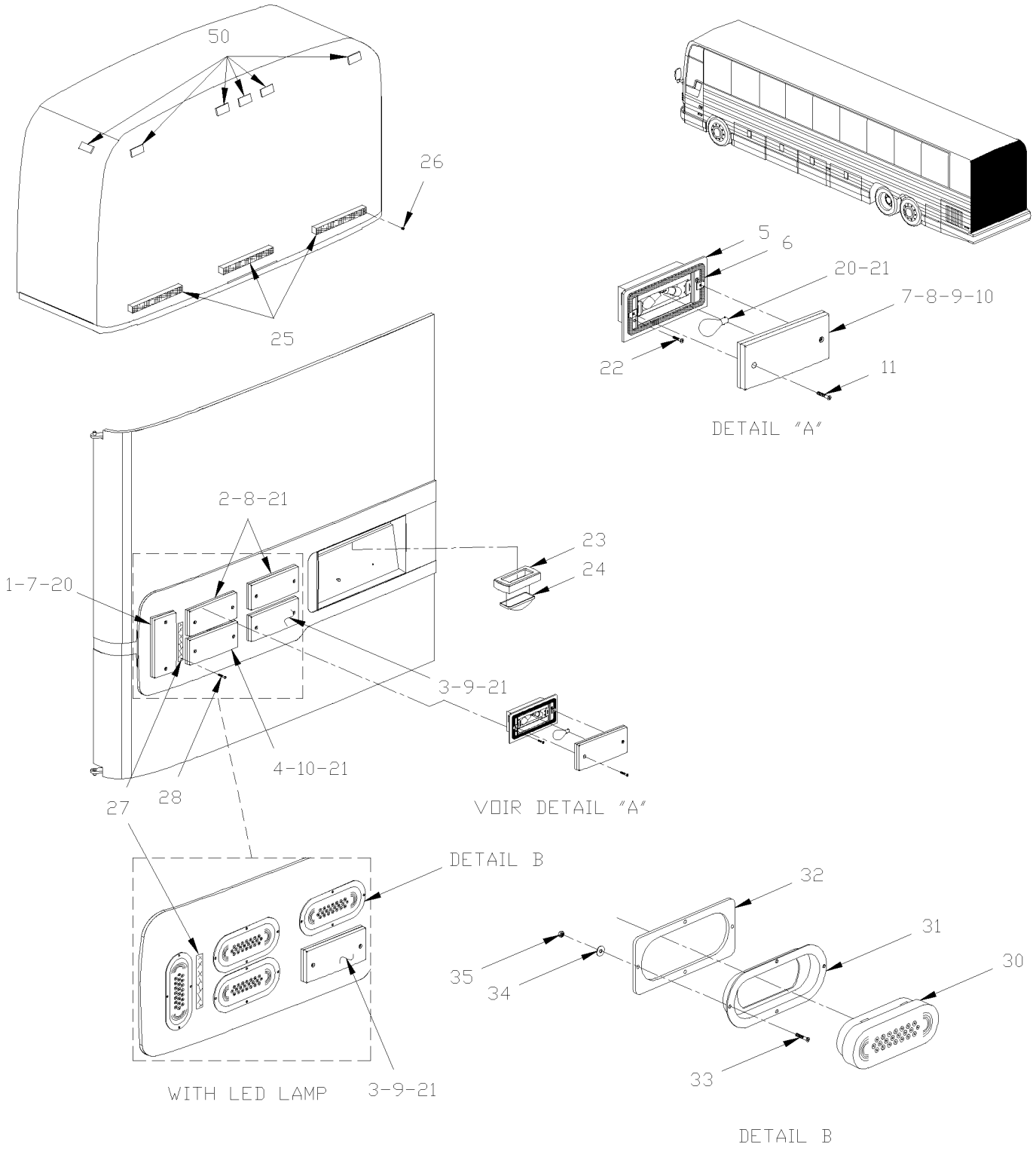

From Y-7046 Up to 3-8164	DATE: 01/2014	PAGE: Y2-0664-00

REAR EXTERIOR LIGHTS & PLATE HOLDER

ITEM	PART	DESCRIPTION	XL45	MTH40	MTH45	MTH45S	NOTE
1	930310	. LAMP ASSY TAIL	1	1	1	1	
2	930308	. LAMP ASSY / STOP	2	2	2	2	
3	930311	. LAMP ASSY BACK UP	1	1	1	1	
4	930309	. LAMP ASSY TURN SIGNAL	1	1	1	1	
5	N.S.S.	. . HOUSING	1	1	1	1	1
6	930300	. . GASKET / REPLACED BY: 930309	1	1	1	1	
7	930314	. . LENS / RED (TAIL) / REPLACED BY: 930310	AR	AR	AR	AR	
8	930312	. . LENS / RED (STOP) / REPLACED BY: 930308	AR	AR	AR	AR	
9	930315	. . LENS / CLEAR	AR	AR	AR	AR	
10	930313	. . LENS / AMBER	AR	AR	AR	AR	
11	N.P.N.	. . SCREW	2	2	2	2	4
20	560123	. BULB / 4WATT-12VOLTS / SAE# 67	4	4	4	4	
21	560589	. BULB / 32WATT-12VOLTS / SAE# 1156 / REPLACED BY: 563304	10	10	10	10	
NS	948702	TIE CABLE BK 85 X 2.5	1	1	1	1	
NS	064809	CABLE / ENGINE DOOR REAR LAMP W/BULB	1	1	1	1	
22	502698	SCREW MA PAN PH M4-0.7x16 SS EMN	2	2	2	2	
23	930208	GROMMET RUBBER RETAINER / LICENCE LAMP TL 15700	1	1	1	1	
24	930266	SEAL BULB / 2WATT - 12VOLTS / TL-15206	2	2	2	2	
24	930358	SEAL LEDS / LEDS - 12VOLTS	2				
25	930330	CYCLOP LAMP	3	3	3	3	
. NS	930353	. CAP PLUG SCREW	2	2	2	2	
26	502665	SCREW TP OV PH #6x3/4 SS EMN	2	2	2	2	
NS	506191	TAPE RUB ADH1 CC POL 1/8" x 1/4" x 50' / GREY 2520X	AR	AR	AR	AR	
27	930320	REFLECTOR RED 1 3/16" x 4 7/16"	1	1	1	1	
28	5001087	SCREW TP BDG PH #10x1/2 SS	2	2	2	2	
30	930377	LAMP ASSY RED "LED" / TAIL / STOP / DIRECT	2				L
30	191712	LAMP ASSY AMBER "LED" / DIRECT	2				L
31	430565	MOUNTING BRACKET	4				L
32	287376	ADAPTOR MOUNTING PLATE	4				L
33	5001027	SCREW MA PAN PH #10-32x1 SS EMN	16				L
34	5001137	WASHER FL .203x.438x.050 SS	16				L
35	500423	NUT HEX NYRT #10-32 SS	16				L
NS	065655	CABLE / ENGINE DOOR REAR LAMP W/LEDS	2				L
50	Y2-0662-00	**CLEARANCE & MARKER LIGHT**					
		1) NOT SOLD SEPARATELY					
		4) NO PARTS NUMBER					
		L) VEHICLE EQUIPED WITH "LED" LAMP ON DOOR					

From 4-8165 Up to 8-9339	DATE: 01/2014	PAGE: Y2-0664-01

REAR EXTERIOR LIGHTS & PLATE HOLDER

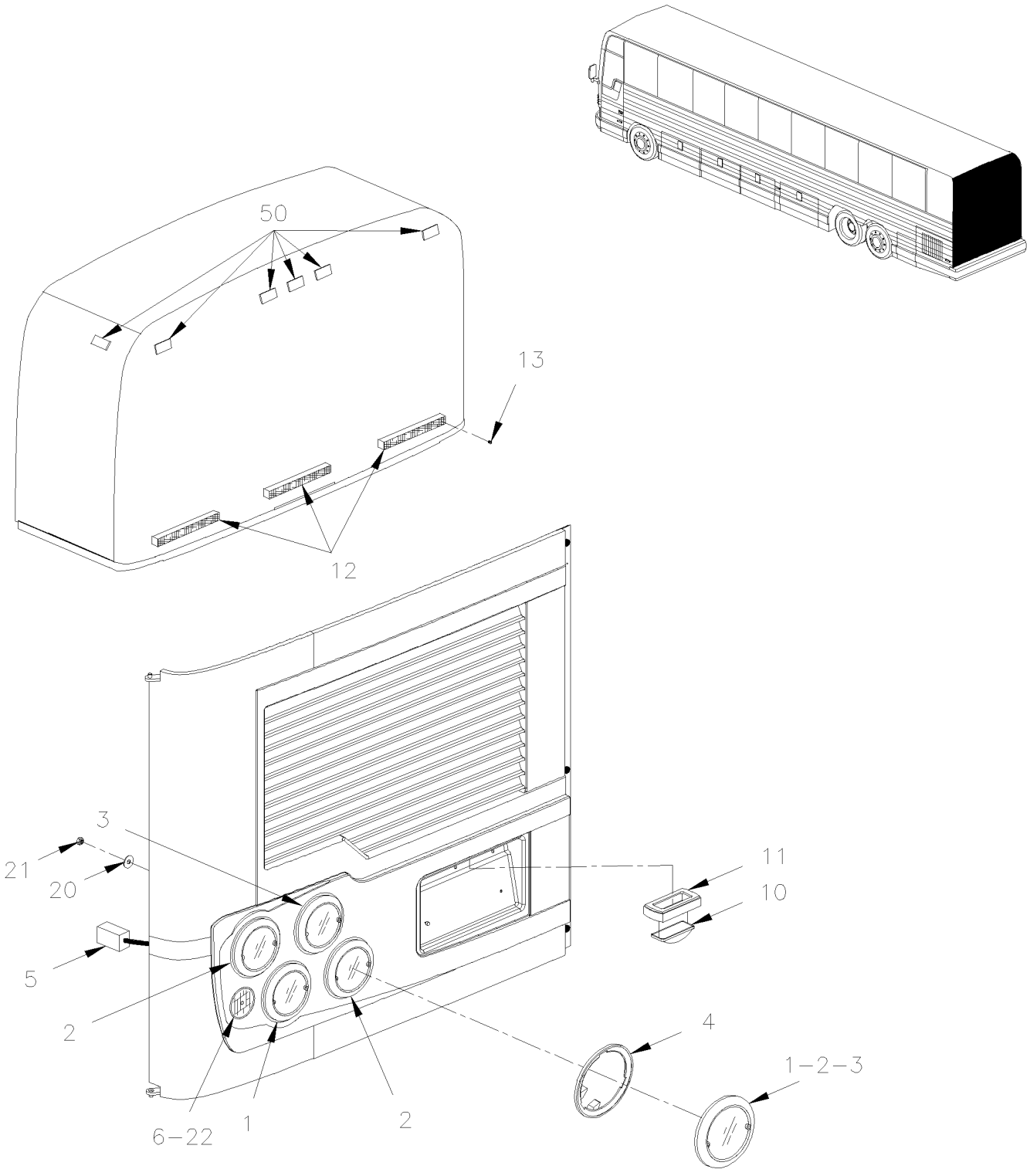

From 4-8165 Up to 8-9339	DATE: 01/2014	PAGE: Y2-0664-01

REAR EXTERIOR LIGHTS & PLATE HOLDER

ITEM	PART	DESCRIPTION	XL45	MTH40	MTH45	MTH45S	NOTE
1	930365	LED AMBER 4" / DIRECTIONAL / REAR 12Volt / 42L (PREVOST)	1				
2	930366	LED STOP & TAIL 4" 12Volt / 6L (PREVOST)	2				
3	930367	LAMP BACK-UP 4" 12Volt / Sealed	1				A
4	430554	SUPPORT LAMP	4				
5	065712	CABLE / ENGINE DOOR REAR LAMP W/LEDS Up to 7-9095	1				
5	066491	CABLE / ENGINE DOOR REAR LAMP W/LEDS From 7-9096			1	1	
5	066003	CABLE ADAPTOR / N.J. D.O.T / TAIL & STOP / SEPARATED TAIL & STOP	2				N
6	930384	REFLECTOR RED 3" O.D. / W/SCREW HOLE CENTER Up to 5-8473	1				
6	930391	REFLECTOR RED 3 3/16" O.D. / W/ADH From 5-8474	1				
10	930368	SEAL LEDS / W/CONNECTOR LEDS - 12VOLTS	1				
. NS	12015378	. CONNECTOR / WEATHER PACK / SH 2C / GRAY / PED 12015378	1				
. NS		. SEAL LEDS / W/CONNECTOR					
. NS	562348	. CONNECTOR / WEATHER PACK / PH 2C / GRAY / PED 12034074	1				
. NS	561786	. CABLE SEAL / GRAY / PED 12010293	2				
. NS	561568	. PIN TERMINAL / 16-14 / PED 12089305	2				
11	930208	GROMMET RUBBER RETAINER / LICENCE LAMP TL 15700	1				
11	930408	GROMMET RUBBER RETAINER / LICENCE LAMP TL 150702 SERVICE	1				
12	930330	CYCLOP LAMP	3				
. NS	930353	. CAP PLUG SCREW	2				
13	502665	SCREW TP OV PH #6x3/4 SS EMN	6				
20	5001547	SCREW PTR TR PH M4x20 DP	8				
21	504357	WASHER FL .187x.437x.050 SS	8				
22	500414	SCREW TP BDG PH #10x3/4 SS Up to 5-8473	1				
NS	192215	LED BACK-UP 4" / W/CABLE ADAPTOR & GROMMET 12Volt / 27L	1				
. A	194114	. LED BACK-UP 4" 12Volt / 27L	1				
. B	G1076517	. GROMMET 4" I.D, BLACK TL 40700	1				
. C		. LED BACK-UP 4" / W/CABLE ADAPTOR & GROMMET	1				
	G1093246	ADAPTOR HARNESS ASSY / 2 WIRES / TRUCK-LITE 94789	1				
. NS	562601	. CONNECTOR / SUPERSEAL 1.5 SERIES / SH 3C / AMP 282087-1	1				
NS	430040	KIT, HEAT SHIELD PROTECTOR 4" O.D. LAMP	AR				
. A	430041	. INSULATING PAD	1				
. B	430042	. PROTECTOR PLATE	1				
50	Y2-0662-00	**CLEARANCE & MARKER LIGHT**					
		A) FOR REPLACE BULB LAMP TO "LEDS" ASK FOR 1 x					
		192215 + 1 x G1093246					
		N) USE WITH "NEW JERSEY" DOT REGULATION					

From Y-7046 Up to 8-9339	DATE: 01/2014	PAGE: Y2-0665-00
ENGINE COMPARTMENT - ELECTRIC COMPONENTS		

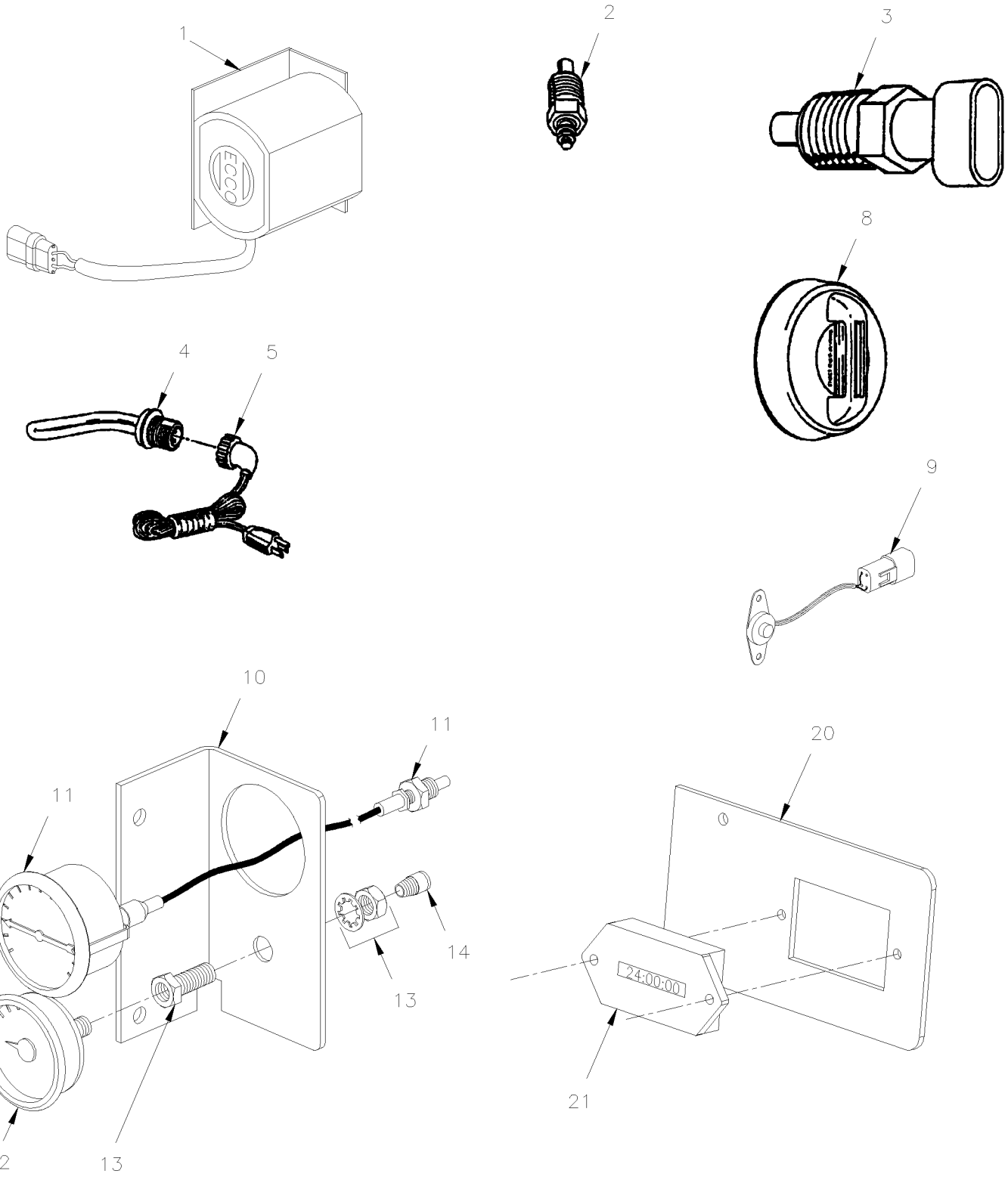

From Y-7046 Up to 8-9339	DATE: 01/2014	PAGE: Y2-0665-00

ENGINE COMPARTMENT - ELECTRIC COMPONENTS

ITEM	PART	DESCRIPTION	XL45	MTH40	MTH45	MTH45S	NOTE
1	563027	BACK-UP ALARM "ECCO" / 12-24vdc / 82-107db	1	1	1	1	
1	563199	BACK-UP ALARM "ECCO" / 12-36vdc / 107db From 2-7809	1	1	1	1	
2	562829	SENSOR / OIL TEMPERATURE / (DASHBOARD)	1				A
3	562395	SENSOR PROBE "LOW LEVEL COOLANT" / 1/4" NPT	1	1	1	1	
4	Y2-0666-00	**BLOCK HEATER RECEPTACLE**					
5	560410	BLOCK HEATER	1	1	1	1	
6	381216	BACK-UP ALARM ASSY / "DAP " Up to 2-7808 / REPLACED BY: 563199	1	1	1	1	
6	561488	. ALARM / "DAP" Up to 2-7808 / REPLACED BY: 563199	1	1	1	1	
6	561566	. CONNECTOR / WEATHER PACK / PH 2C / BLACK / PED 12010973 Up to 2-7808	1	1	1	1	
6	561568	. PIN TERMINAL / 16-14 / PED 12089305 Up to 2-7808	2	2	2	2	
6	561565	. CABLE SEAL / GREEN / PED 15324982 Up to 2-7808	2	2	2	2	
6	500163	. SCREW CAP HEX 1/4-20x3/4 G5 ZP Up to 2-7808	2	2	2	2	
6	560381	. PLASTIC TUBING / 3/16" / CLEAR Up to 2-7808	AR	AR	AR	AR	
6	065722	KIT, BACK-UP ALARM / SERIE "XL"	1	1	1	1	
. NS	IS-01155	. SEE INSTRUCTION SHEET	1	1	1	1	
8	562402	DETECTOR / FIRE Up to Y-7229 / REPLACED BY: 065290	2	2	2	2	
NS	065323	KIT, FIRE DETECTOR REPLACEMENT Up to Y-7229	AR	AR	AR	AR	
. NS	IS-99091	. SEE INSTRUCTION SHEET Up to Y-7229	1	1	1	1	
9	065290	HEAT DETECTOR "THERMO-DISK" From Y-7230	2	2	2	2	
10	011952	SUPPORT	AR	AR	AR	AR	
11	562331	GAUGE WATER TEMPERATURE / MECHANICAL (CURRENT)	AR	AR	AR	AR	
12	510481	GAUGE, OIL PRESSURE / MECHANICAL (CURRENT)	AR	AR	AR	AR	
13	501711	BULKHEAD COUPLING / PIPE FITTING / 1/4NPT-Fx1/4NPT-Fx1 1/2 BR	AR	AR	AR	AR	
14	501037	MALE ELBOW 90° / SAE 45° FITTING / #4FL-Mx1/4NPT-M BR	AR	AR	AR	AR	
NS	011617	HOSE ASSY TEFLON #4 2615MM	AR	AR	AR	AR	
20	011538	HOURMETER SUPPORT 93MM X 60MM / TOP MOUNT	1				
20	017328	HOURMETER SUPPORT 100MM X 54MM / SIDE MOUNT	1				
21	560366	HOURMETER 4-40VOLT DC	1				
		A) WITH "EATON" TRANSMISSION					

From Y-7046 Up to 8-9339	DATE: 01/2014	PAGE: Y2-0665-10

SWITCHES, LIGHTS, AJAR - UNDER FLOOR

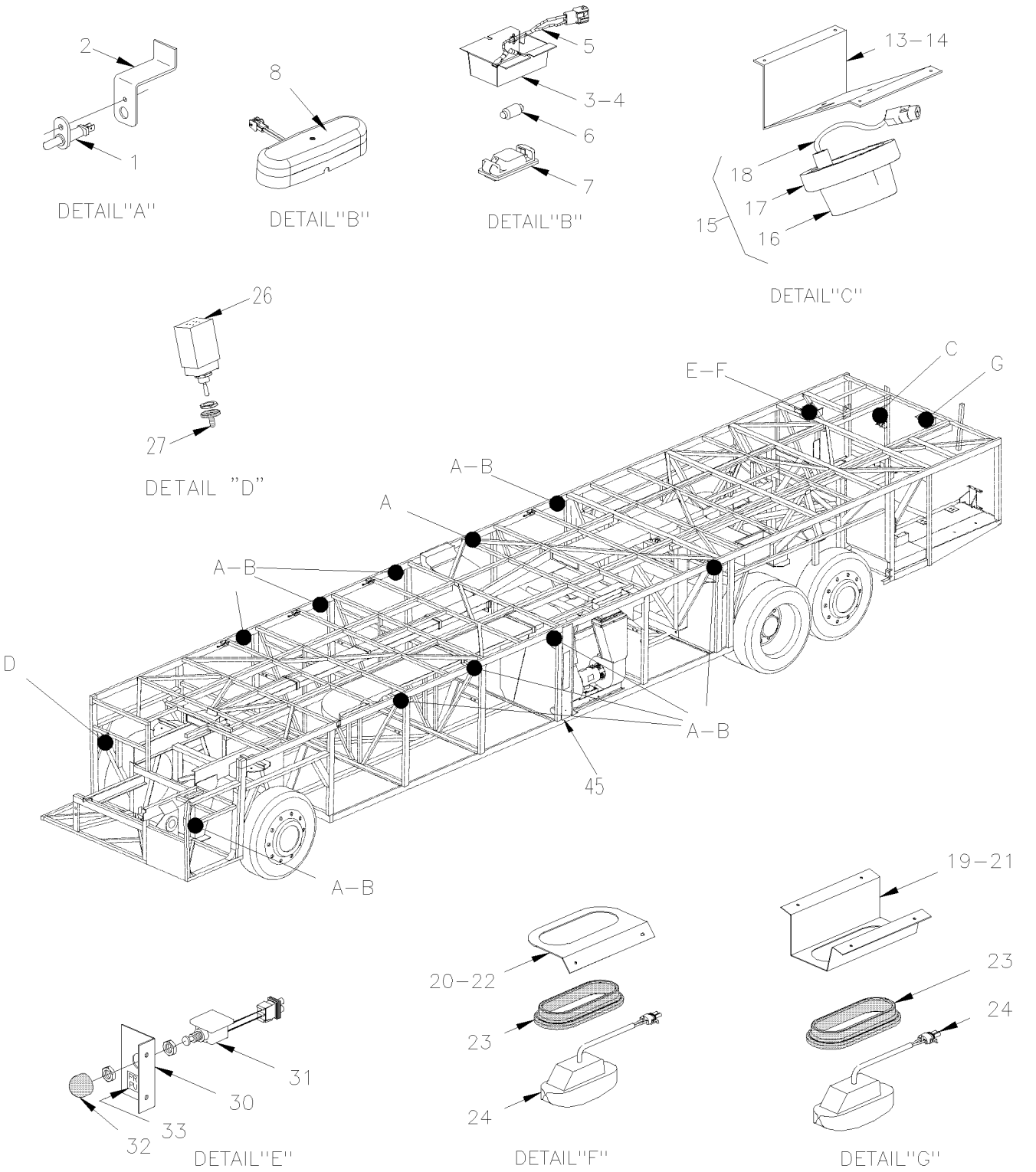

From Y-7046 Up to 8-9339	DATE: 01/2014	PAGE: Y2-0665-10

SWITCHES, LIGHTS, AJAR - UNDER FLOOR

ITEM	PART	DESCRIPTION	XL45	MTH40	MTH45	MTH45S	NOTE
1	562303	SWITCH / S.P.S.T. / N.C. Up to 5-8788	AR	AR	AR	AR	
1	563464	SWITCH / S.P.S.T. / N.C. / W/RUBBER BOOT From 5-8789	AR				
2	063434	SWITCH SUPPORT / W/BAGGAGE DOORS STD Up to 5-8788 / REPLACED BY: 066639	AR	AR	AR	AR	
NS	065192	SWITCH SUPPORT / BATTERIES COMPARTMENT DOOR Up to 5-8788	1				
NS	066586	SWITCH SUPPORT / BATTERIES COMPARTMENT DOOR From 5-8789	1				
NS	065728	SWITCH SUPPORT / W/BAGGAGE DOORS HINGED Up to 5-8788		1	1	1	
2	066535	SWITCH SUPPORT / W/BAGGAGE DOORS HINGED From 5-8789		1	1	1	
2	066639	SWITCH SUPPORT / W/BAGGAGE DOORS STD From 5-8789	1				
3	330268	LAMP ASSY 24V / BAGGAGE COMPARTMENT LAMP / W/ONE BULB 10W Up to 5-8421 / REPLACED BY: 330224					
3	330370	LAMP ASSY 24V / BAGGAGE COMPARTMENT LAMP / W/2 BULB 10W From 5-8422 Up to 5-8673 / REPLACED BY: 330224	AR				
3	330372	LAMP ASSY 24V / BAGGAGE COMPARTMENT LAMP W//2 BULBS 5W From 5-8674 Up to 7-9224 / REPLACED BY: 330224	AR				
4	330267	. SUPPORT / SS / TO FIX LAMP / W/ONE BULB Up to 5-8421 / REPLACED BY: 330224	1				
4	330369	. SUPPORT / SS / TO FIX LAMP / W/2 BULBS From 5-8422 Up to 7-9224	1				
5	063435	. CABLE ASSY / W/ONE BULB Up to 5-8421 / REPLACED BY: 330224	1				
5	066271	. CABLE ASSY / W/2 BULBS From 5-8422 Up to 7-9224	1				
6	562278	. BULB / 10WATT-24VOLTS / SAE# 6429 Up to 5-8421	AR	AR	AR	AR	
6	562411	. BULB / 5WATT-24VOLTS / SAE # 6424 From 5-8422 Up to 7-9224	2				
7	830139	. LAMP ASSY / W/ONE BULB Up to 5-8421	1				
7	830183	. LAMP ASSY / W/2 BULBS From 5-8422 Up to 7-9224	1				
8	330224	LAMP ASSY 24V / BAGGAGE COMPARTMENT LAMP W/2 BULBS G4-10W From 7-9225	AR				
. NS	330396	. BULB / 10 WATTS -28VOLTS / SAE# G4-28 From 7-9225	1				
13	430467	LAMP ASSY W/CONNECTOR Up to 3-8164	AR	AR	AR	AR	
14	430468	. SUPPORT Up to 3-8164	1	1	1	1	
15	930168	. LAMP ASSY BACK-UP Up to 3-8164	1	1	1	1	
16	930170	. . LENS Up to 3-8164	1	1	1	1	
17	930171	. . RING / CHROME Up to 3-8164	1	1	1	1	
17	560136	. BULB / 15WATT-12VOLTS / SAE# 1003 Up to 3-8164	1	1	1	1	
18	561605	. CONNECTOR / WEATHER PACK / PH 1C / BLACK / PED 12010996 Up to 3-8164	1	1	1	1	
18	561567	. PIN TERMINAL / 20-18 / PED 12089040 Up to 3-8164	2	2	2	2	
18	561565	. CABLE SEAL / GREEN / PED 15324982 Up to 3-8164	2	2	2	2	
NS	430534	SUPPORT LAMP / OVER REAR JUNCTION BOX	1	1	1	1	
19	430567	LAMP ASSY W/CONNECTOR / "U" SHAPE From 4-8165	AR	AR	AR	AR	
20	430568	LAMP ASSY W/CONNECTOR / "L" SHAPE From 4-8165 Up to 4-8229	AR				
21	052503	. SUPPORT LAMP / "U" SHAPE From 4-8165	1	1	1	1	
22	430456	. SUPPORT LAMP / "L" SHAPE From 4-8165 Up to 4-8229	1	1	1	1	
NS	506338	. RUBBER CHANNEL / 1/16" x 1/4" INT "U" SHAPE / ROUND C.T.L. From 4-8165	1	1	1	1	
23	930382	. GROMMET OBLONG, BLACK From 4-8165	1	1	1	1	
24	930383	. LAMP ASSY CLEAR SEALED / BACK-UP 12V From 4-8165	1	1	1	1	
26	562253	SWITCH / M/ON-OFF-M/ON / S.P.S.T. Up to Y-7396	1				C
		C) FOR PRODUCT IMPROVMENT ASK KIT #065380 FOR					
		VEHICULE Up to Y-7396					

From Y-7046 Up to 8-9339	DATE: 01/2014	PAGE: Y2-0665-10

SWITCHES, LIGHTS, AJAR - UNDER FLOOR

ITEM	PART	DESCRIPTION	XL45	MTH40	MTH45	MTH45S	NOTE
26	563047	SWITCH ASSY / WATERPROOF From Y-7397	1				
27	560241	RUBBER PROTECTOR, TOGGLE SWITCH	1				
30	064856	SUPPORT SWITCH	1				A
31	064554	SWITCH ASSY W/CONECTOR	1				A
31	562484	. SWITCH S.P.S.T. / N.C.	1				
NS	561690	. CONNECTOR / WEATHER PACK / SH 2C / BLACK / PED 12015792	1				
NS	561565	. CABLE SEAL / GREEN / PED 15324982	2				
NS	561578	. SOCKET TERMINAL / 16-14 / PED 12010182	2				
32	561891	. . CAP RUBBER	1				
33	064099	DECAL "PRIME PUMP"	1				
NS	064994	CABLE ASSY / FUEL PUMP ELECTRIC	1				
34	065466	DECAL / LAVATORY PUMP FLUSH ENG & FRENCH From 3-8021	1				B
34	066050	DECAL / LAVATORY PUMP FLUSH ENG & SPANISH	1				
34	067576	DECAL / LAVATORY PUMP FLUSH ENG & SPANISH	1				
45	505056	ANTISTATIC STRAP / UNDER STRUCTURE	1				
NS	065749	KIT SWITCH LAVATORY PUMP INSTALLATION	1				
. NS	IS-00141	. SEE INSTRUCTION SHEET	1				
57	065380	KIT ENTRANCE DOOR SWITCH Up to Y-7396	1				
NS	065757	KIT ENGINE COMPARTMENT LAMP	1	1	1	1	
. NS	IS-00090	. SEE INSTRUCTION SHEET	1	1	1	1	
		A) USE WITH FUEL PUMP AND LAVATORY PUMP					
		B) FOR PRODUCT IMPROVMENT ASK KIT #065749 FOR VEHICULE Up to 3-8020					

From Y-7046 Up to 8-9339	DATE: 01/2014	PAGE: Y2-0665-10

SWITCHES, LIGHTS, AJAR - UNDER FLOOR

ITEM	PART	DESCRIPTION	XL45	MTH40	MTH45	MTH45S	NOTE

From Y-7046 Up to 6-8906	DATE: 01/2014	PAGE: Y2-0665-20
CABLE TRAILER - INSTALLATION - BUS		

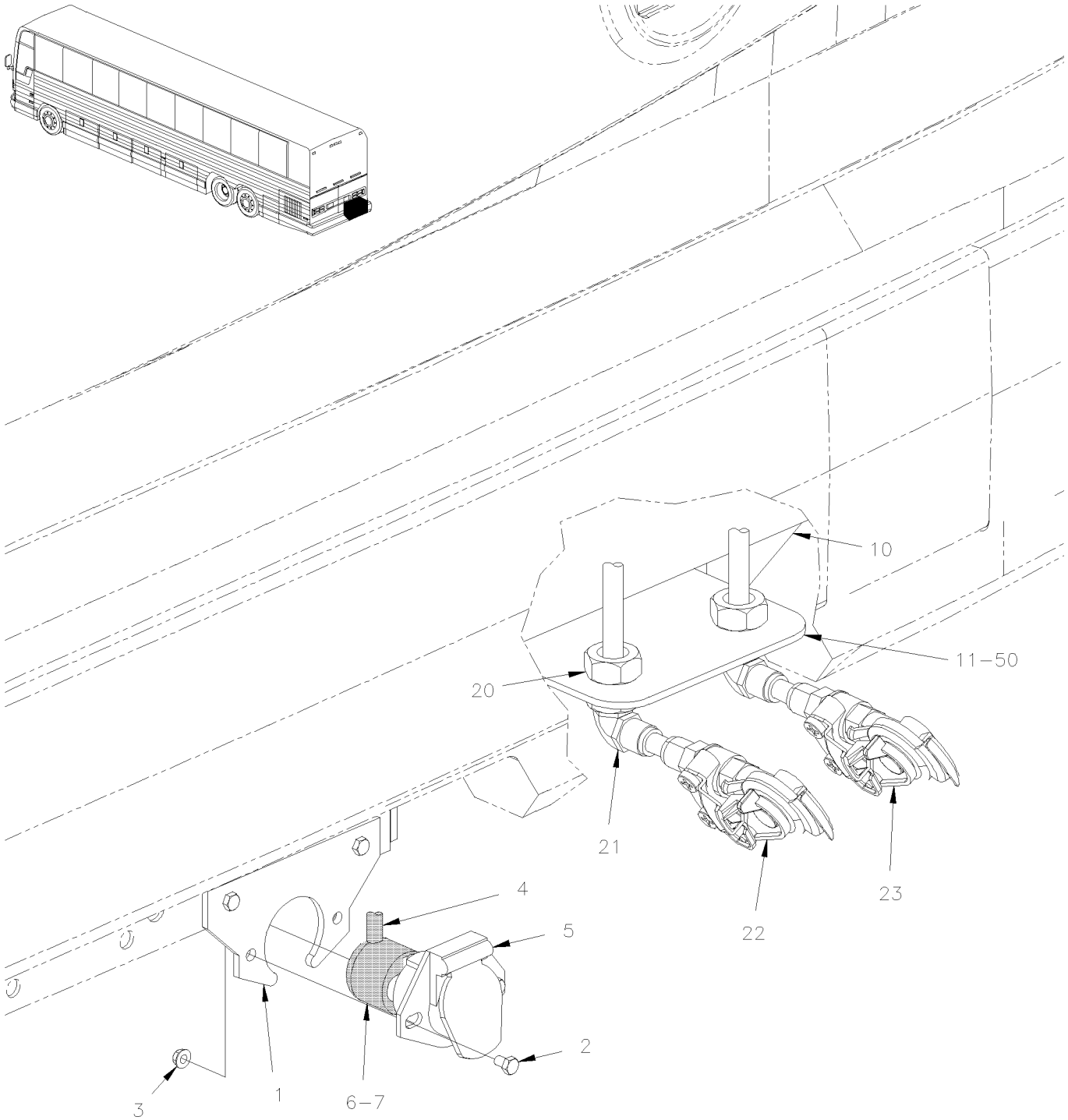

From Y-7046 Up to 6-8906	DATE: 01/2014	PAGE: Y2-0665-20

CABLE TRAILER - INSTALLATION - BUS

ITEM	PART	DESCRIPTION	XL45	MTH40	MTH45	MTH45S	NOTE
1	410998	SUPPORT ELECTRICAL CONECTOR	1				
2	502830	SCREW CAP HEX M6-1.0x20 G8.8 ZG603	4				
3	502681	NUT HEX NYRT M6-1.0 ZG603	4				
4	065831	CABLE ASSY / TRAILER CONNECTOR	1				
5	563352	CONNECTOR MALE 7C / POLLAK 11-723	1				
6	563353	BOOT PROTECTOR / POLLAK 11-761	1				
7	504637	CABLE TIE / 3/16" x 13"	AR				
10	410996	PROTECTOR VALVE CONNECTOR	1				
11	410997	SUPPORT QUICK CONNECT HOSE CONNECTOR	1				
20	501796	BULKHEAD COUPLING / PIPE FITTING / 1/2NPT-Fx1/2NPT-Fx1 1/2 BR	2				
21	501713	MALE ELBOW 90º / PIPE FITTING / 1/2NPT-Mx1/2NPT-M BR	2				
22	641938	GLANDHAND W/DUST COVER "RED"	1				
23	641939	GLANDHAND W/DUST COVER "BLUE"	1				
50	Y2-1220-50	**TRAILER VALVE INSTALLATION**					

From Y-7046 Up to 8-9339	DATE: 01/2014	PAGE: Y2-0666-00
BLOCK HEATER RECEPTACLE		

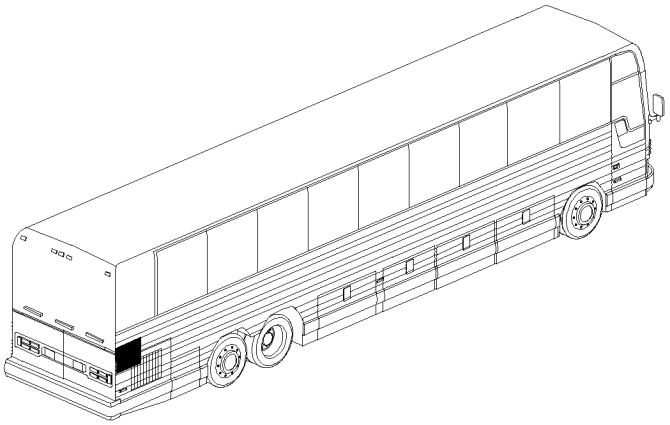

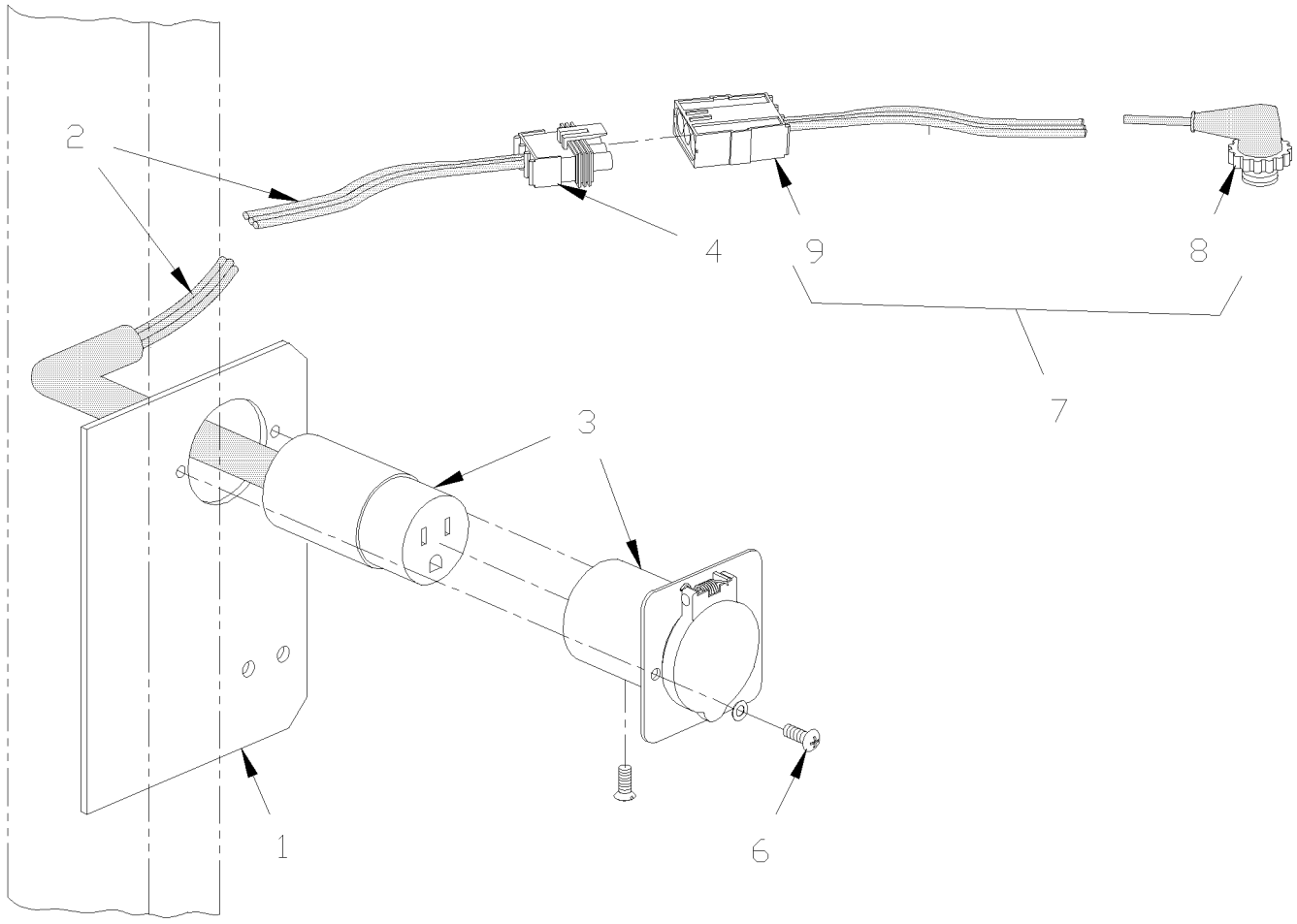

From Y-7046 Up to 8-9339	DATE: 01/2014	PAGE: Y2-0666-00

BLOCK HEATER RECEPTACLE

ITEM	PART	DESCRIPTION	XL45	MTH40	MTH45	MTH45S	NOTE
1	213957	SUPPORT BACK-UP ALARM / REPLACED BY: 214609	1	1	1	1	
2	065517	CABLE ASSY / 110V BLOCK HEATER	1	1	1	1	
3	561572	. RECEPTACLE ASSY W/CORD	1	1	1	1	
NS	561786	. CABLE SEAL / GRAY / PED 12010293	2	2	2	2	
4	561782	. CONNECTOR / WEATHER PACK / SH 3C / BLACK / PED 12015793	1	1	1	1	
NS	561578	. SOCKET TERMINAL / 16-14 / PED 12010182	3	3	3	3	
NS	561783	. SEAL PLUG CAVITY / GREEN / PED 12010300	2	2	2	2	
6	500654	SCREW TC BDG PH #8-32x1/2 ZP	2	2	2	2	
7	063295	CABLE ASSY / 110V BLOCK HEATER ENGINE SECTION	1	1	1	1	
8	560411	. HEATER PLUG ASSY	1	1	1	1	
NS	562028	. CONVOLUTED TUBING / .350" / UNSLIT / BLACK	AR	AR	AR	AR	
9	561781	. CONNECTOR / WEATHER PACK / PH 3C / BLACK / PED 12010717	1	1	1	1	
NS	561786	. CABLE SEAL / GRAY / PED 12010293	3	3	3	3	
NS	561568	. PIN TERMINAL / 16-14 / PED 12089305	3	3	3	3	
NS	560410	BLOCK HEATER	1	1	1	1	

From Y-7046 Up to 6-8906	DATE: 01/2014	PAGE: Y2-0670-10

BATTERIES CHARGER - INSTALLATION

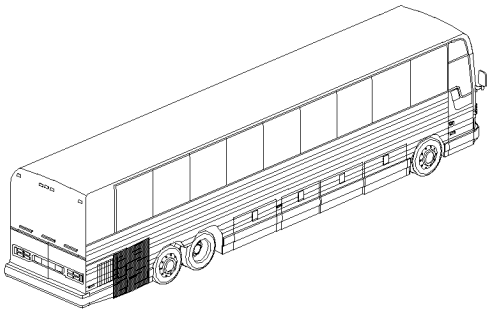

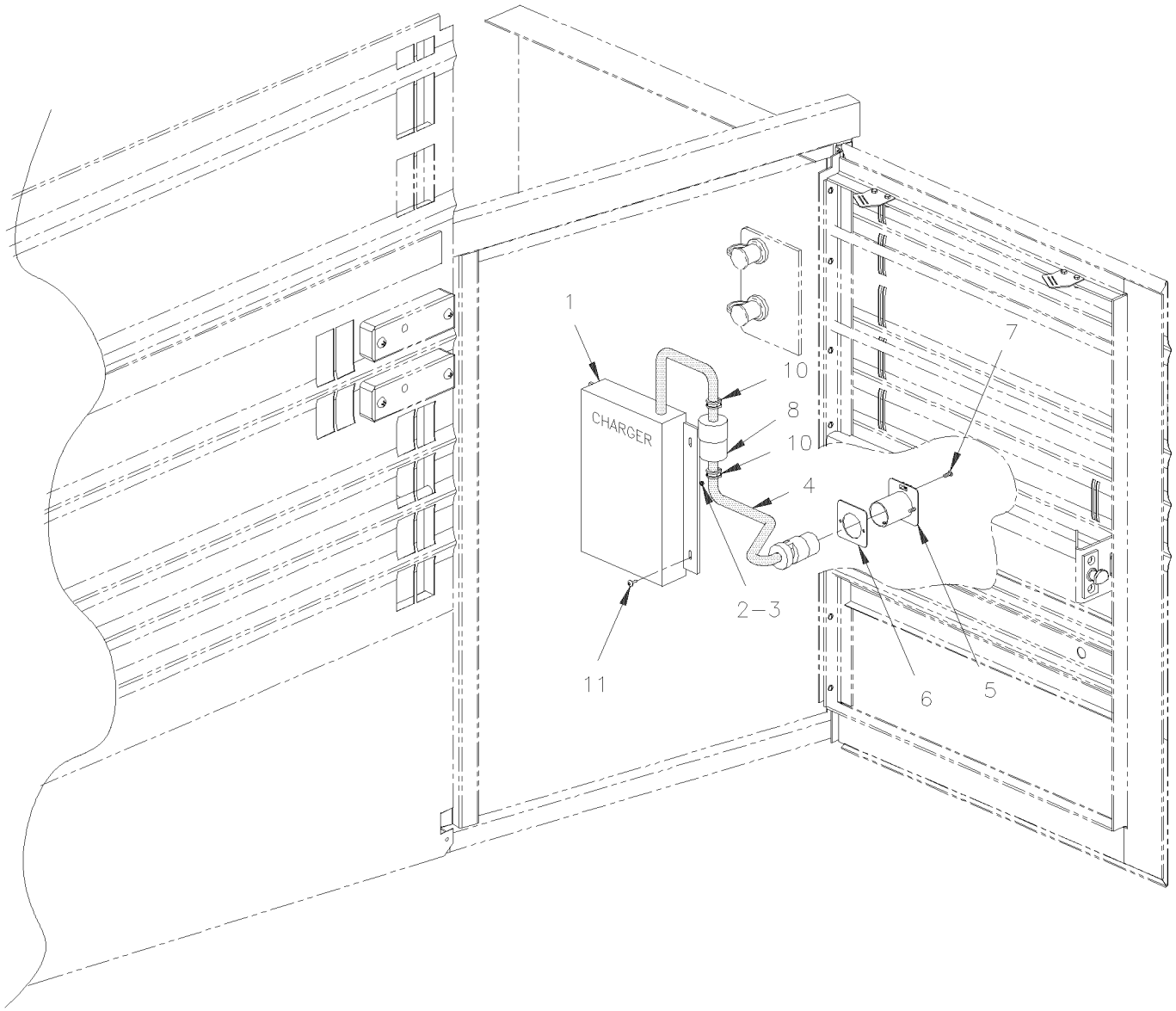

From Y-7046 Up to 6-8906	DATE: 01/2014	PAGE: Y2-0670-10

BATTERIES CHARGER - INSTALLATION

ITEM	PART	DESCRIPTION	XL45	MTH40	MTH45	MTH45S	NOTE
1	562967	BATTERY CHARGER 24V	1				
2	502565	NUT HEX M6-1.0 SS	4				
3	502570	WASHER LO SPT 6.1x11.8x1.6 SS	4				
4	065297	CABLE ASSY / 110V BATTERIES CHARGER	1				
4	065462	CABLE ASSY / 110V BATTERIES WARMER INSTALL	1				A
5	561572	. RECEPTACLE ASSY W/CORD	1				
6	064388	. FIXATION RING	1				
7	502677	. SCREW MA RND PH M4-0.7x25 SS	4				
8	561932	. CONNECTOR / 15 AMPS / HUBBELL 5269-C	1				
10	952631	CLAMP / 3/4" I.D. / REPLACED BY: 977742	2				
11	504637	CABLE TIE / 3/16" x 13"	2				
NS	065445	DECAL / BATTERY HEATING & WARMER 164MM x 30MM	1				A
		A) USE WITH BATTERIES WARMER					

From Y-7046 Up to 8-9339	DATE: 01/2014	PAGE: Y2-0675-00
SYSTEM - "VORAD"		

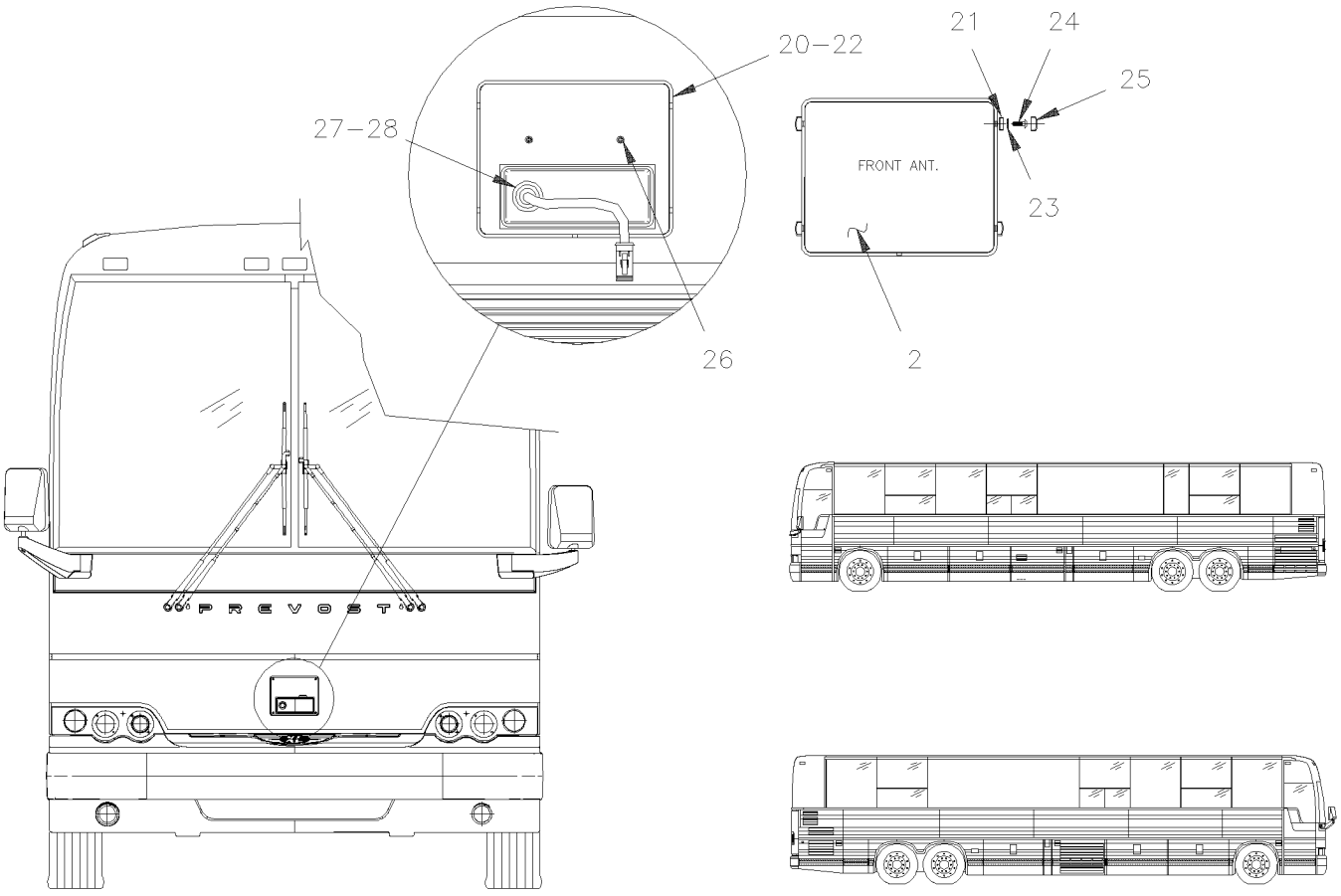

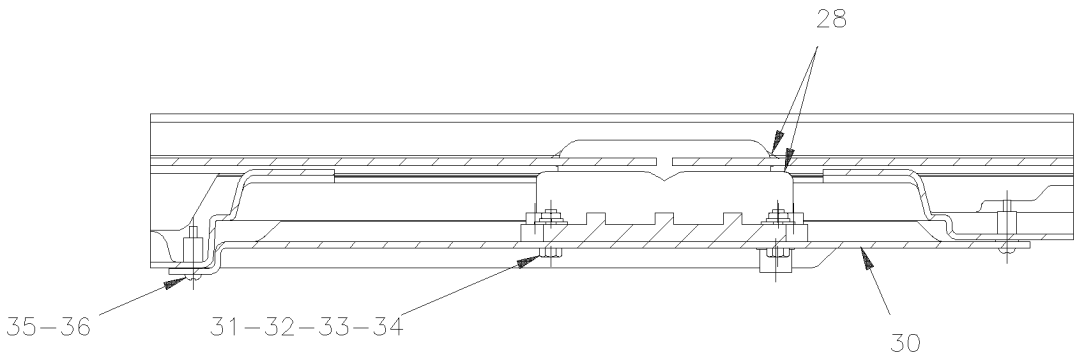

DETAIL A

From Y-7046 Up to 8-9339	DATE: 01/2014	PAGE: Y2-0675-00

SYSTEM - "VORAD"

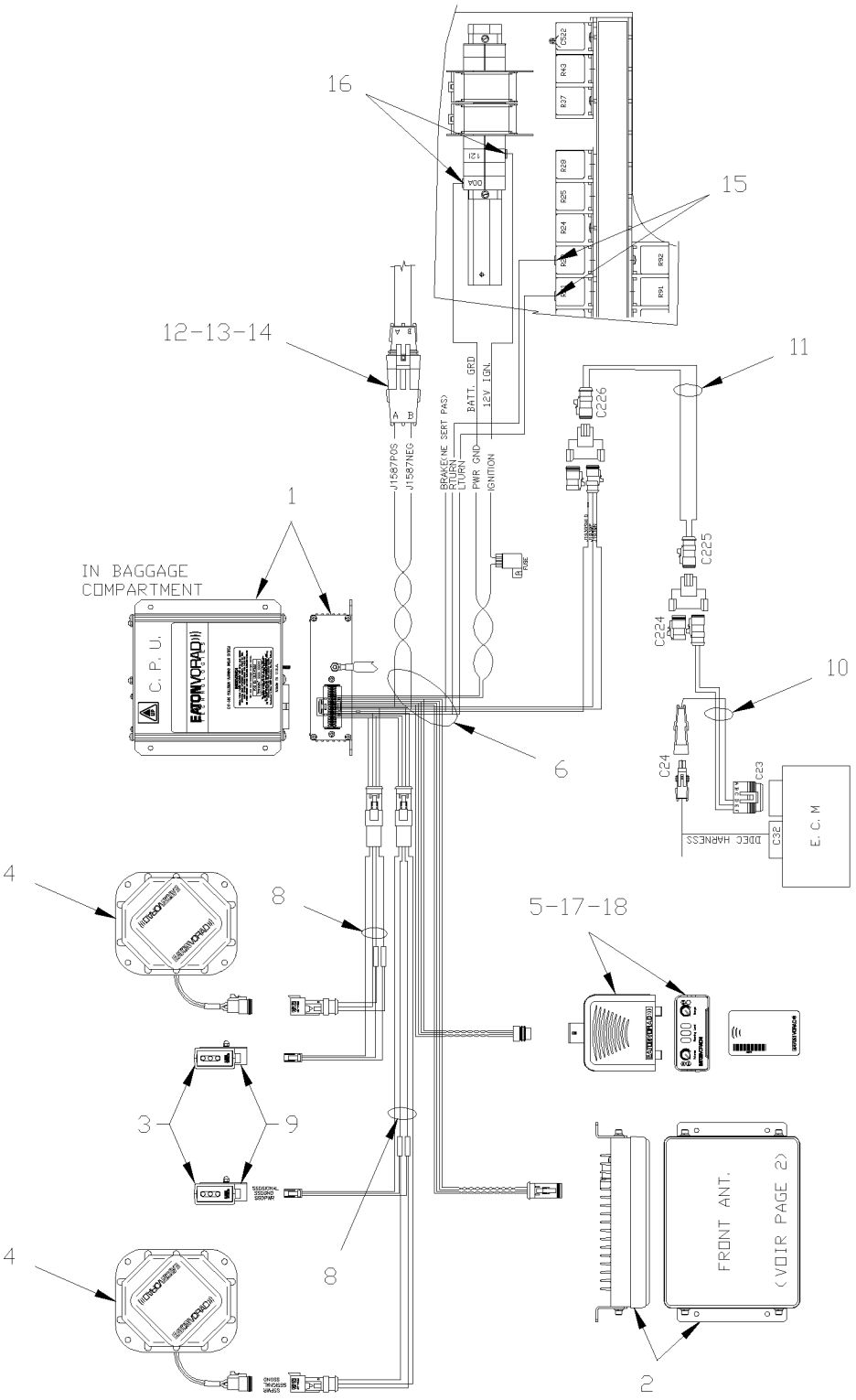

From Y-7046 Up to 8-9339	DATE: 01/2014	PAGE: Y2-0675-00

SYSTEM - "VORAD"

ITEM	PART	DESCRIPTION	XL45	MTH40	MTH45	MTH45S	NOTE
1	563192	MODULE CONTROL "VORAD"			1		
NS	382326	SUPPORT, MODULE CONTROL			1		
2	563188	FRONT SENSOR ANTENNA			1		
3	563189	FRONT SENSOR & DISPLAY			2		
4	563191	SIDE SENSOR ANTENNA			2		
5	563190	DRIVER`S DISPLAY			1		
6	065608	CABLE ASSY / MAIN			1		
8	065609	CABLE ASSY / SIDE ANTENNA			2		
9	563194	BRACKET FRONT SENSOR DISPLAY			2		
10	065988	CABLE ASSY / ECM			1		
11	065592	CABLE ASSY / J1939			1		
12	561566	CONNECTOR / WEATHER PACK / PH 2C / BLACK / PED 12010973			1		
13	561568	PIN TERMINAL / 16-14 / PED 12089305			2		
14	561565	CABLE SEAL / GREEN / PED 15324982			2		
15	561181	TAB RECEPTACLE TERMINAL / 12 / AMP 60508-2			2		
16	561700	SPRING SPADE TERMINAL #8 / 16-14 / AMP 52936			2		
17	382008	SUPPORT, DRIVER`S DISPLAY			1		
18	5001479	SCREW TP BDG PH #6x3/8 SS EMN			8		
20	382009	BOX , FRONT ANTENNA			1		
21	504399	WASHER RETAINER SNAP CAP #10			4		
22	506785	TAPE RUB ADH2 CC POL 1/16" x 1/4" x 200' / BLACK I1C-N-A			AR		
23	5001544	WASHER LO EXT .195x.410x.025 SS			4		
24	5001543	SCREW MA PAN PH #10-32x1/2 SS			4		
25	504403	SNAP CAP #8 FINISHING BLACK			4		
26	500952	SCREW TP BDG PH #8x1/2 SS			2		
27	504671	GROMMET / .687x1.000x.125x.437x1.312			1		
28	682462	ADHESIVE SIKA #252 / BLACK / 310ml CARTRIDGE			AR		
30	382325	SUPPORT, SIDE SENSOR ANTENNA			2		
31	502622	SCREW CAP HEX M6-1.0x20 SS EMN			12		
32	500411	WASHER FL .260x.697x.050 SS			8		
33	502570	WASHER LO SPT 6.1x11.8x1.6 SS			12		
34	502565	NUT HEX M6-1.0 SS			12		
35	500589	NUT WELL M4-0.7x13.5			8		
36	502677	SCREW MA RND PH M4-0.7x25 SS			8		
NS	563193	VDO CASSETTE DRIVER`S TRAINING "VORAD CRUISE"			AR		
NS	563213	DECAL "SMART CRUISE"			1		

From Y-7046 Up to 8-9339	DATE: 01/2014	PAGE: Y2-0675-00

SYSTEM - "VORAD"

ITEM	PART	DESCRIPTION	XL45	MTH40	MTH45	MTH45S	NOTE

From Y-7046 Up to 8-9339	DATE: 01/2014	PAGE: Y2-07
TRANSMISSION		

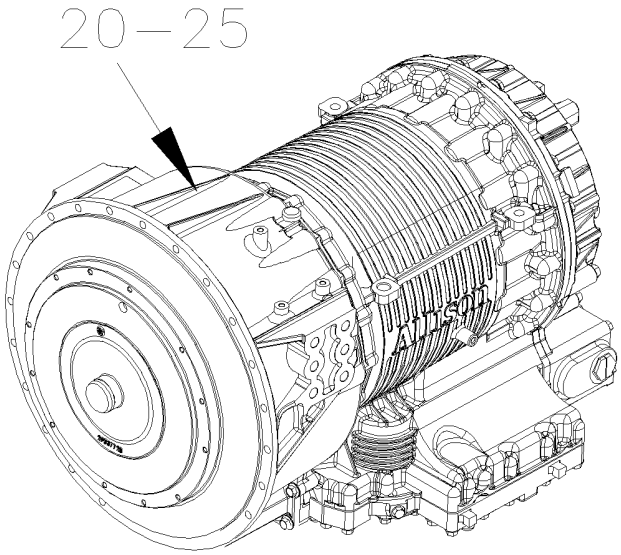

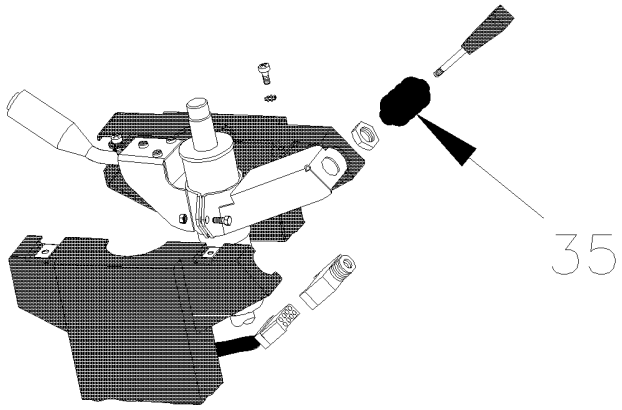

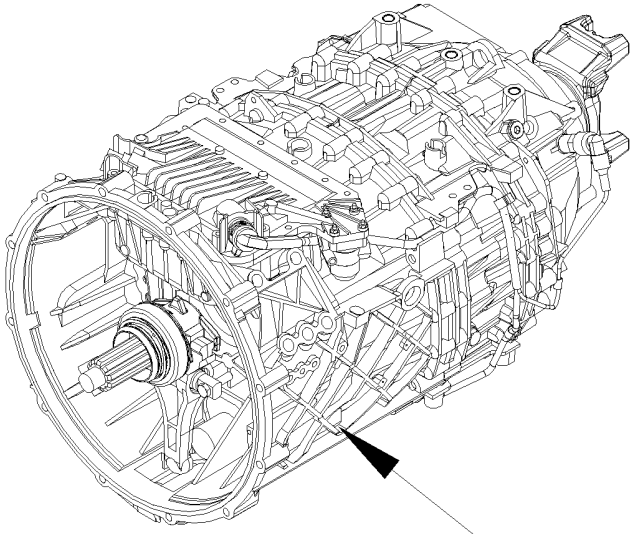

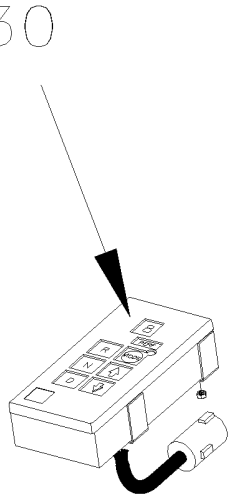

From Y-7046 Up to 8-9339	DATE: 01/2014	PAGE: Y2-07

TRANSMISSION

ITEM	PART	DESCRIPTION	XL45	MTH40	MTH45	MTH45S	NOTE
5	Y2-0700-00	**TRANSMISSION "EATON" - INSTALLATION From Y-7377 Up to Y-7461**					
5	Y2-0700-01	**TRANSMISSION "ZF" - INSTALLATION From Y-7462 Up to 6-8906**					
10	Y2-0700-05	**TRANSMISSION "ZF" - AIR SYSTEM From Y-7462 Up to 6-8906**					
15	Y2-0705-00	**TRANSMISSION "ZF-ASTRONIC" From Y-7462 Up to 6-8906**					
15	Y2-0705-05	**GEARBOX HOUSING From 4-8165 Up to 6-8906**					
15	Y2-0705-10	**INPUT SHAFT From 4-8165 Up to 6-8906**					
15	Y2-0705-15	**LAYSHAFT From 4-8165 Up to 6-8906**					
15	Y2-0705-20	**MAIN SHAFT From 4-8165 Up to 6-8906**					
15	Y2-0705-25	**REVERSE GEAR From 4-8165 Up to 6-8906**					
15	Y2-0705-30	**GEAR SHIFT SYSTEM From 4-8165 Up to 6-8906**					
15	Y2-0705-35	**OUTPUT HOUSING From 4-8165 Up to 6-8906**					
15	Y2-0705-40	**OUTPUT FLANGE & PLANETARY DRIVE From 4-8165 Up to 6-8906**					
15	Y2-0705-45	**SYNCHRONIZER ASSY From 4-8165 Up to 6-8906**					
20	Y2-0750-00	**AUTOMATIC TRANSMISSION - "WORLD" WITH DETROIT S-60 From Y-7046 Up to 3-8164**					
20	Y2-0750-01	**AUTOMATIC TRANSMISSION - "WORLD" WITH DETROIT S-60 From 4-8165 Up to 8-9339**					
30	Y2-0755-15	**SHIFTER ELECTRONIC - "WORLD" TRANSMISSION From Y-7046 Up to 8-9339**					
35	Y2-0760-00	**RETARDER SELECTOR SWITCH - "WORLD" From Y-7046 Up to 8-9339**					

From Y-7377 Up to Y-7461	DATE: 01/2014	PAGE: Y2-0700-00

TRANSMISSION "EATON" - INSTALLATION

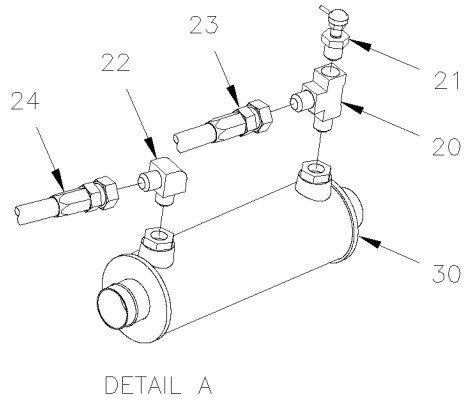

DETAIL A

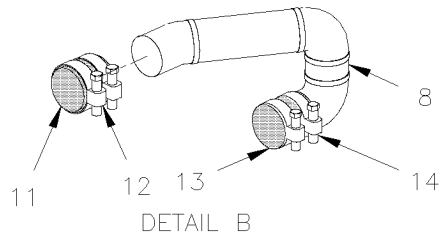

DETAIL B

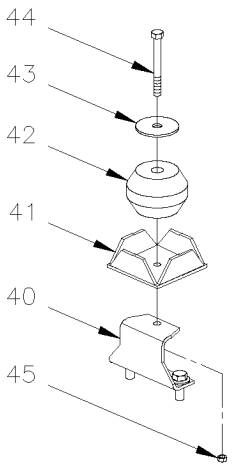

DETAIL C

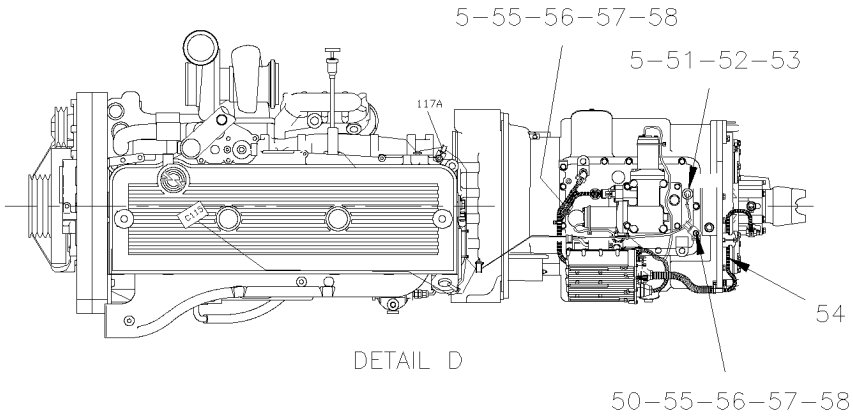

DETAIL D

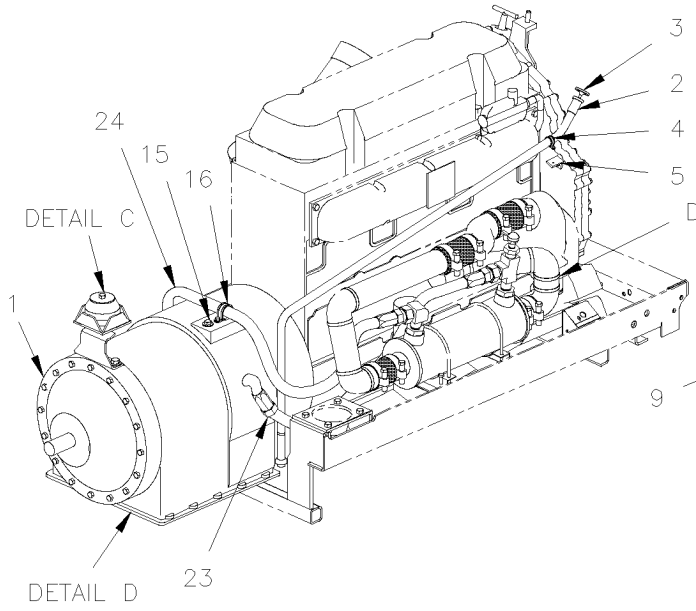

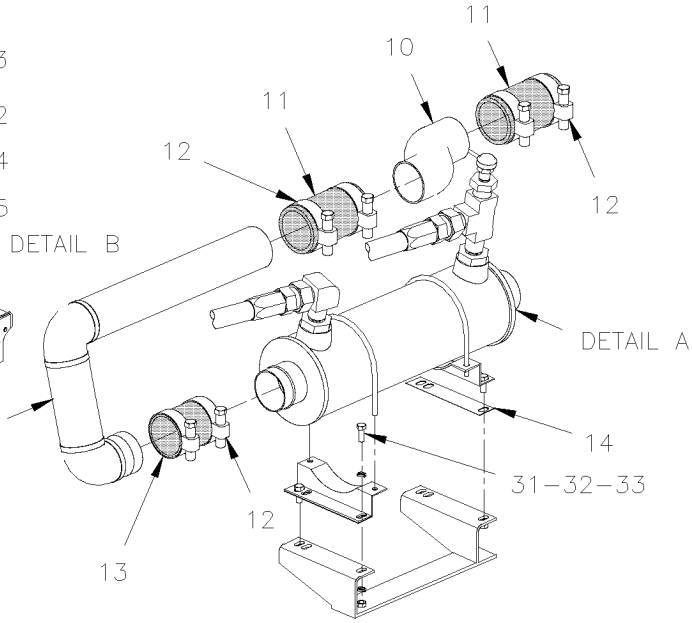

From Y-7377 Up to Y-7461	DATE: 01/2014	PAGE: Y2-0700-00

TRANSMISSION "EATON" - INSTALLATION

ITEM	PART	DESCRIPTION	XL45	MTH40	MTH45	MTH45S	NOTE
1	571758	TRANSMISSION "EATON" AST	1				
NS	571762	KIT DRIVE RING AST	1				
NS	684016	OIL TRANSYND TRANSMISSION "WORLD"	42				
NS	5001427	SCREW CAP HEX 7/16-14x1 3/8 G5 ZP	12				
NS	500853	WASHER LO EXT .437x.760x.036 ZP	12				
2	071210	OIL GAUGE TUBE	1				
NS	5011219	. SLEEVE / JIC 37° FITTING / #16 STL	1				
NS	5011220	. NUT / JIC 37° FITTING / #16JIC-F STL	1				
3	571764	TRANS DIPSTICK 2030.3MM	1				
4	952635	CLAMP / 1" I.D.	1				
5	070368	SUPPORT	1				
6	500069	SCREW CAP HEX M8-1.25x16 G10.9 DP	1				
NS	5001003	WASHER LO SPT 8.1x12.7x2.0 ZP	1				
8	070890	PIPE ASSY	1				
9	051854	PIPE ASSY	1				
10	N.S.P.	PIPE ASSY / WATER PUMP & COOLER / (23005899)	1				2
11	051604	HOSE 2 3/4" I.D. 130MM	2				
. NS	503395	. HOSE SILICONE 4 PLY 2 3/4" I.D. x 3'	AR				
12	504562	HOSE CLAMP / 2"3/4-3"5/8 / C.T. 350	2				
13	070969	HOSE 3" I.D. 140MM	1				
14	070892	SHIM / <> ENGINE CRADLE & OIL COOLER SUPPORT 26x166x1/4" / 140c/c	2				
15	060840	SUPPORT HARNESS	1				
NS	500270	WASHER FL .406x1.000x.063 SS	1				
16	952637	CLAMP / 1"1/16 I.D.	4				
16	952639	CLAMP / 1"1/4 I.D.	2				
NS	502677	SCREW MA RND PH M4-0.7x25 SS	4				
NS	502524	NUT HEX M4-0.7 NP	4				
NS	502636	WASHER LO SPT 4.1x7.6x0.9 ZP	6				
19	070968	HOSE 3" I.D. 185MM	2				
20	5011083	ADAPTER TEE / SAE 45º FITTING / #16FL-Mx1/2NPT-Fx#16ORB-M TO USED W/TEMP SENDER	1				
21	562829	SENSOR / OIL TEMPERATURE / (DASHBOARD)	1				
22	5011223	MALE ELBOW 90° / JIC 37° FITTING / #12JIC-Mx#16ORB-M STL	1				
23	071213	HOSE ASSY / #16 1118MM	1				
24	071214	HOSE ASSY / #12 1880MM	1				
30	550708	OIL COOLER W/1" NPT / (2950137)					
31	502589	SCREW CAP HEX M8-1.25x25 G8.8 ZP	4				
32	502543	NUT HEX M8-1.25 ZP	4				
33	5001003	WASHER LO SPT 8.1x12.7x2.0 ZP	8				
40	071212	SUPPORT	1				
41	070950	GUIDE REAR	1				
42	630118	RUBBER BUMPPER	1				
43	550642	WASHER	1				
		2) NOT SOLD BY PREVOST (SEE MANUFACTURING PART					
		NUMBER AT END OF DESCRIPTION LINE)					

From Y-7377 Up to Y-7461	DATE: 01/2014	PAGE: Y2-0700-00

TRANSMISSION "EATON" - INSTALLATION

ITEM	PART	DESCRIPTION	XL45	MTH40	MTH45	MTH45S	NOTE
44	500106	SCREW CAP HEX 1/2-20x6 G5 PT ZP	1				
45	500718	NUT HEX STO 1/2-20 ZP	1				
NS	500958	WASHER FL .531x1.062x.095 SS	1				
NS	065402	CABLE ASSY / <> ECU & FRONT SHIFTER	1				
50	061025	SUPPORT	1				
51	561012	PROTECTOR, TRANS. SWITCH	1				
52	064765	CABLE ASSY BACK-UP	1				
53	684013	RUBBER PROTECTOR / COLOR GUARD	AR				
54	065410	CABLE ASSY / SPEED SENSOR	1				
55	500574	SCREW MA TR PH #10-24x1 1/4 SS	2				
56	500786	NUT HEX #10-24 ZP	2				
57	500440	WASHER FL .250x.562x.065 ZP	2				
58	952631	CLAMP / 3/4" I.D. / REPLACED BY: 977742	2				

From Y-7377 Up to Y-7461	DATE: 01/2014	PAGE: Y2-0700-00

TRANSMISSION "EATON" - INSTALLATION

ITEM	PART	DESCRIPTION	XL45	MTH40	MTH45	MTH45S	NOTE

From Y-7462 Up to 6-8906	DATE: 01/2014	PAGE: Y2-0700-01

TRANSMISSION "ZF" - INSTALLATION

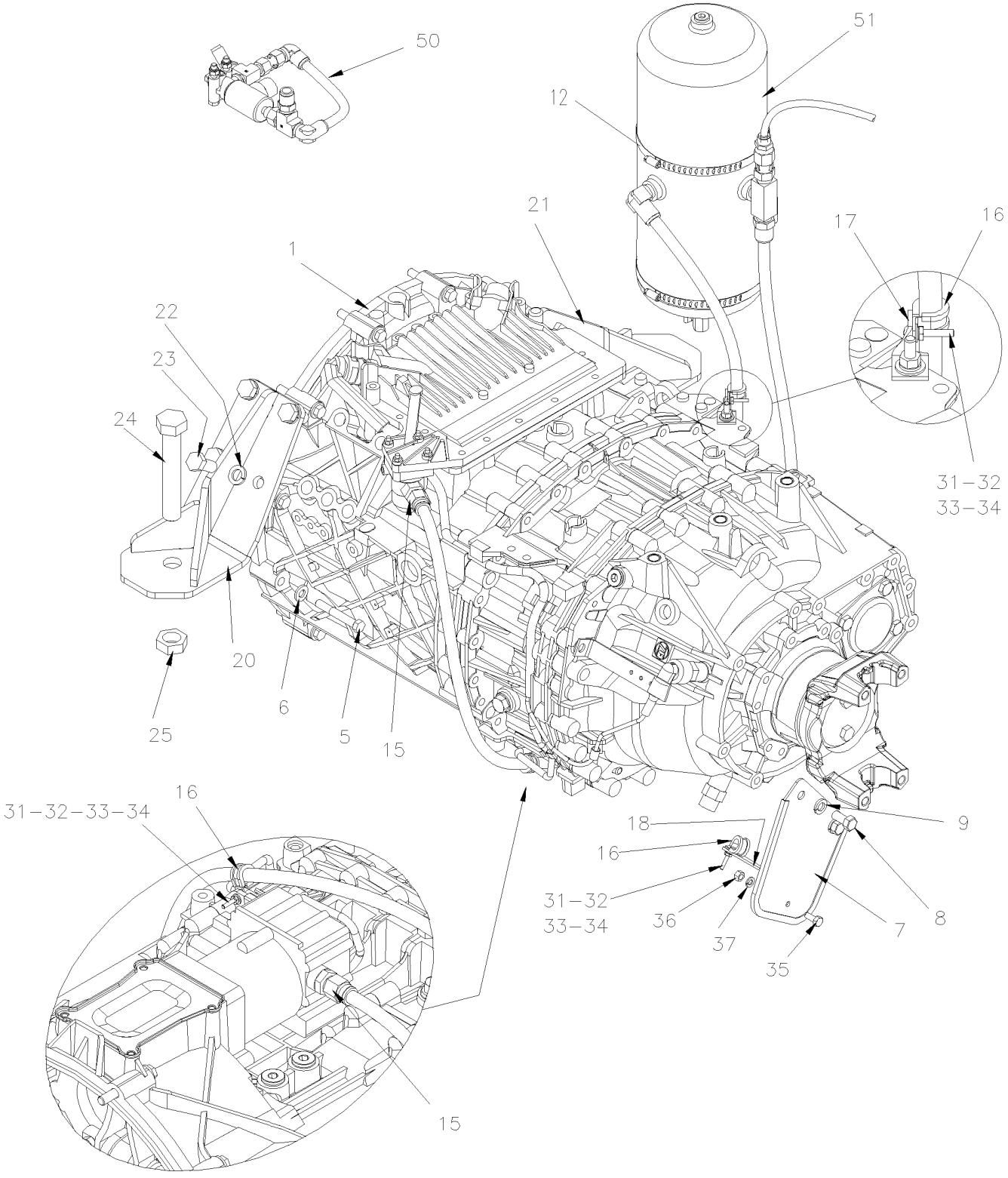

From Y-7462 Up to 6-8906	DATE: 01/2014	PAGE: Y2-0700-01

TRANSMISSION "ZF" - INSTALLATION

ITEM	PART	DESCRIPTION	XL45	MTH40	MTH45	MTH45S	NOTE
1	571772	TRANSMISSION "ZF" W/O INTARDER / W10 SPEEDS	1				
1	571775	CLUTCH ASSY	1				
1	571776	PRESSURE PLATE	1				
1	507113	BALL BEARING	1				
5	955554	SCREW CAP HEX 7/16-14x3 G8 ZP	24				
6	5001567	WASHER FL .474x.937x.112 CP STP	12				
7	071293	PROTECTOR CABLE RUBBER	1				
8	500850	SCREW CAP HEX M12-1.75X25 G8.8 ZP	2				
9	500482	WASHER LO SPT .506x.873x.125 ZP	2				
12	504649	HOSE CLAMP / 4"5/8-7"1/2 SS	1				
15	641977	MALE CONNECTOR / PUSH-IN FITTING / #4xM16NPT-M BR	1				
16	952629	CLAMP / 5/8" I.D.	3				
17	061027	SUPPORT 2"1/2 LG	2				
18	070368	SUPPORT	3				
20	012282	SUPPORT REAR R.H. W/"ZF" TRANS	1				
21	012278	SUPPORT REAR L.H. W/"ZF" TRANS	1				
22	502884	WASHER LO SPT 16.2x27.4x3.5 ZG603	8				
23	5001591	SCREW CAP HEX M16-1.5x35 G10.9 DP	8				
24	500571	SCREW CAP HEX M24-3.0x150 G10.9 ZG603	2				
25	500570	NUT HEX STO M24-3.0 GR.10 ZG603	2				
31	500574	SCREW MA TR PH #10-24x1 1/4 SS	3				
32	500786	NUT HEX #10-24 ZP	3				
33	500470	WASHER LO SPT .193x.334x.047 ZP	3				
34	500964	WASHER FL .203x.500x.047 ZP	3				
35	502862	SCREW CAP HEX M8-1.25x20 G8.8 ZG603	1				
36	502851	NUT HEX M8-1.25 ZG603	1				
37	500942	WASHER LO SPT .317x.586x.078 ZG603	1				
50	Y2-0700-05	**TRANSMISSION "ZF" - AIR SYSTEM**					
51	Y2-1203-01	**AIR TANK - INSTALLATION**					

From Y-7462 Up to 6-8906	DATE: 01/2014	PAGE: Y2-0700-05

TRANSMISSION "ZF" - AIR SYSTEM

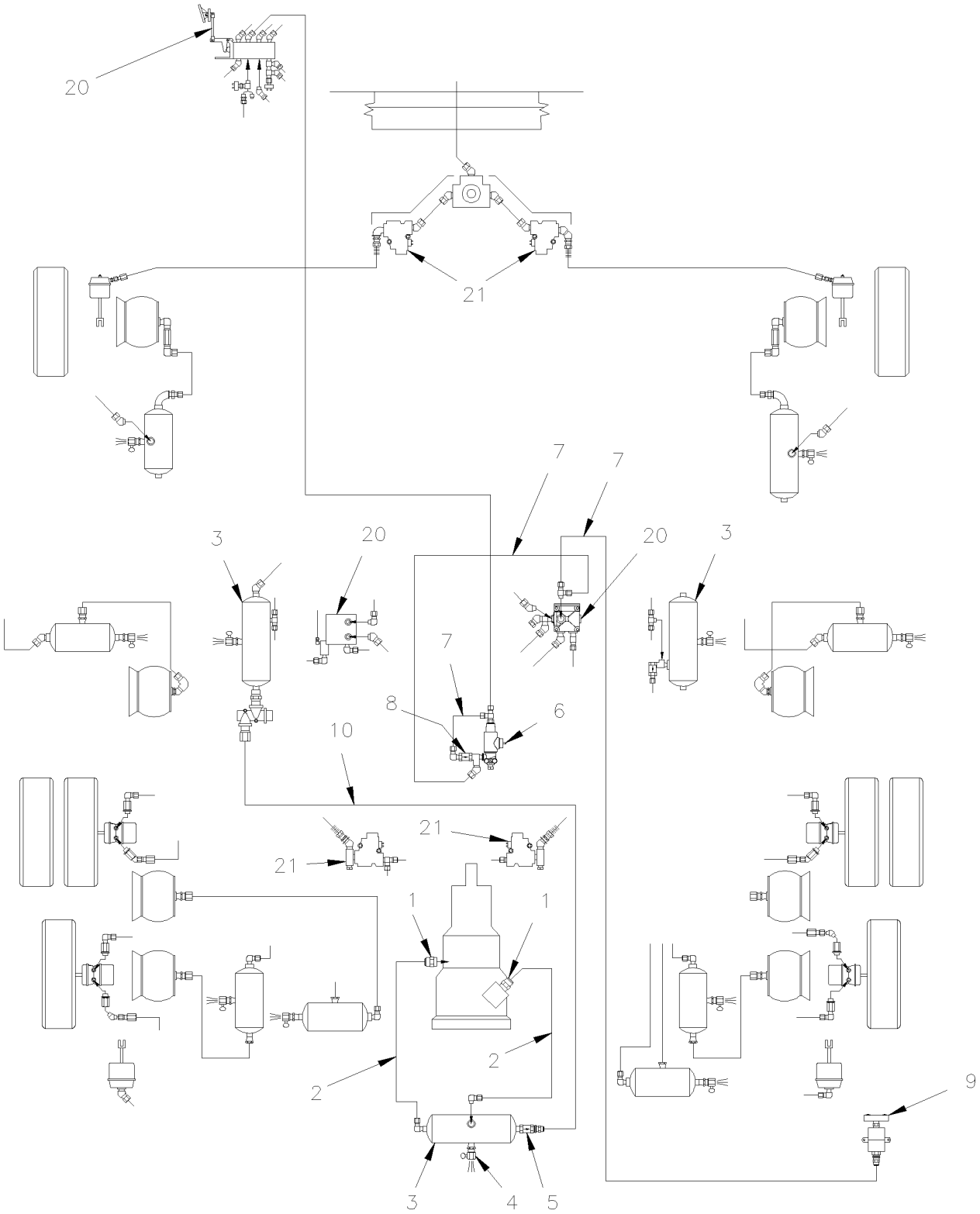

From Y-7462 Up to 6-8906	DATE: 01/2014	PAGE: Y2-0700-05

TRANSMISSION "ZF" - AIR SYSTEM

ITEM	PART	DESCRIPTION	XL45	MTH40	MTH45	MTH45S	NOTE
1	641977	MALE CONNECTOR / PUSH-IN FITTING / #4xM16NPT-M BR	2				
2	503540	TUBE, NYLON 5/8 O.D. / BLACK S.L.	AR				
3	Y2-1203-01	**AIR TANK - INSTALLATION**					
4	641043	DRAIN VALVE 1/4 NPT M	1				
5	640123	VALVE, CHECK 1/2 NPT SC-1 / REPLACED BY: 641401	1				
6	641950	VALVE, "ATC" 12VOLT	1				
7	503463	TUBE, NYLON 3/8 O.D. / GREEN S.L.	AR				
8	640135	VALVE, CHECK 1/4 NPT	1				
9	641462	PRESSURE SWITCH N.O. 4PSI / ¼NPT W/10-32 / SL-5 BRAKE	1				
10	503404	TUBE, NYLON 3/8 O.D. / BLACK S.L.	AR				
20	Y2-1220-10	**BRAKE PEDAL VALVE - "BENDIX"**					
21	Y2-1250-00	**ANTI-LOCK BRAKING SYSTEM**					

From Y-7462 Up to 6-8906	DATE: 01/2014	PAGE: Y2-0705-00
TRANSMISSION "ZF-ASTRONIC"		

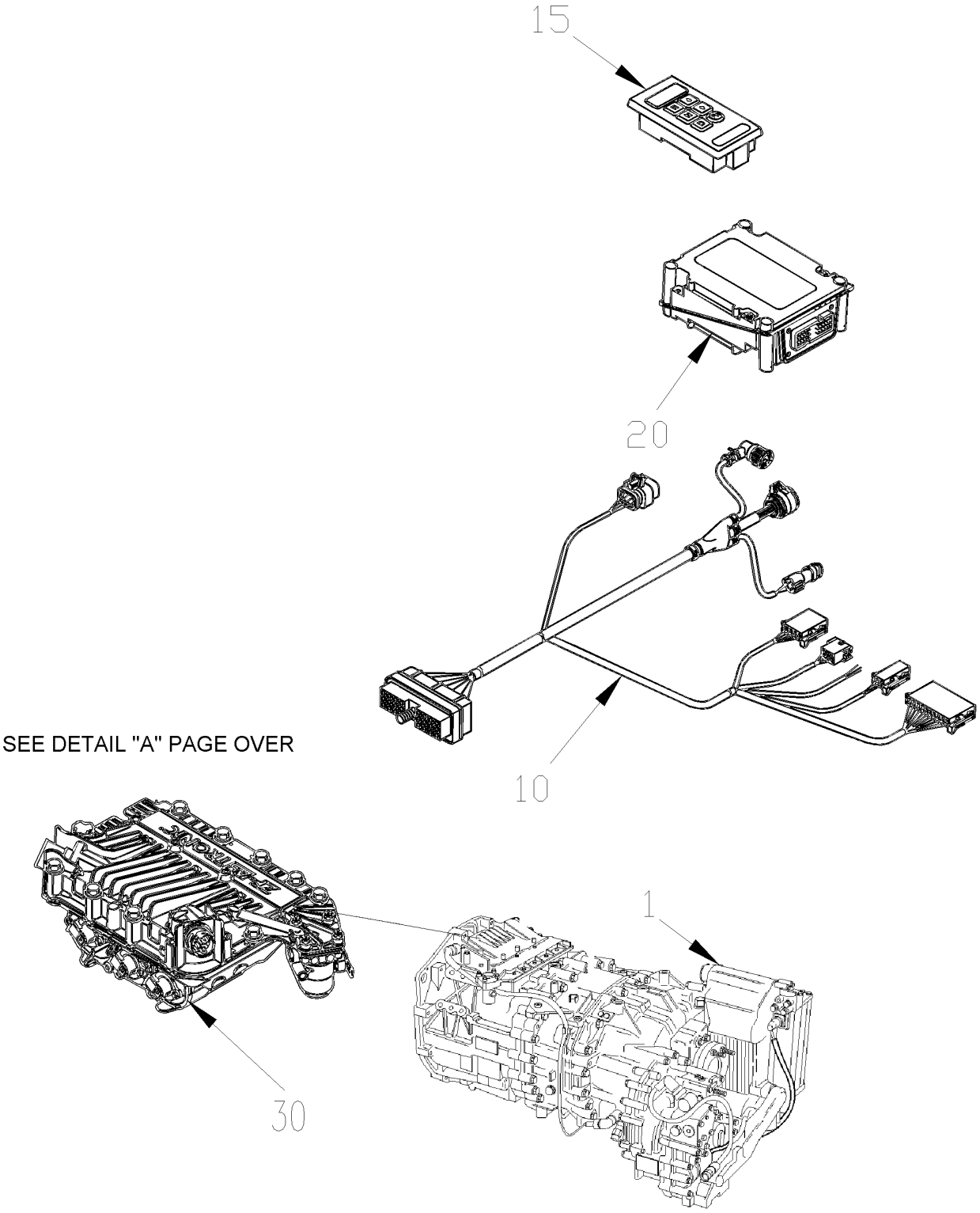

From Y-7462 Up to 6-8906	DATE: 01/2014	PAGE: Y2-0705-00
TRANSMISSION "ZF-ASTRONIC"		

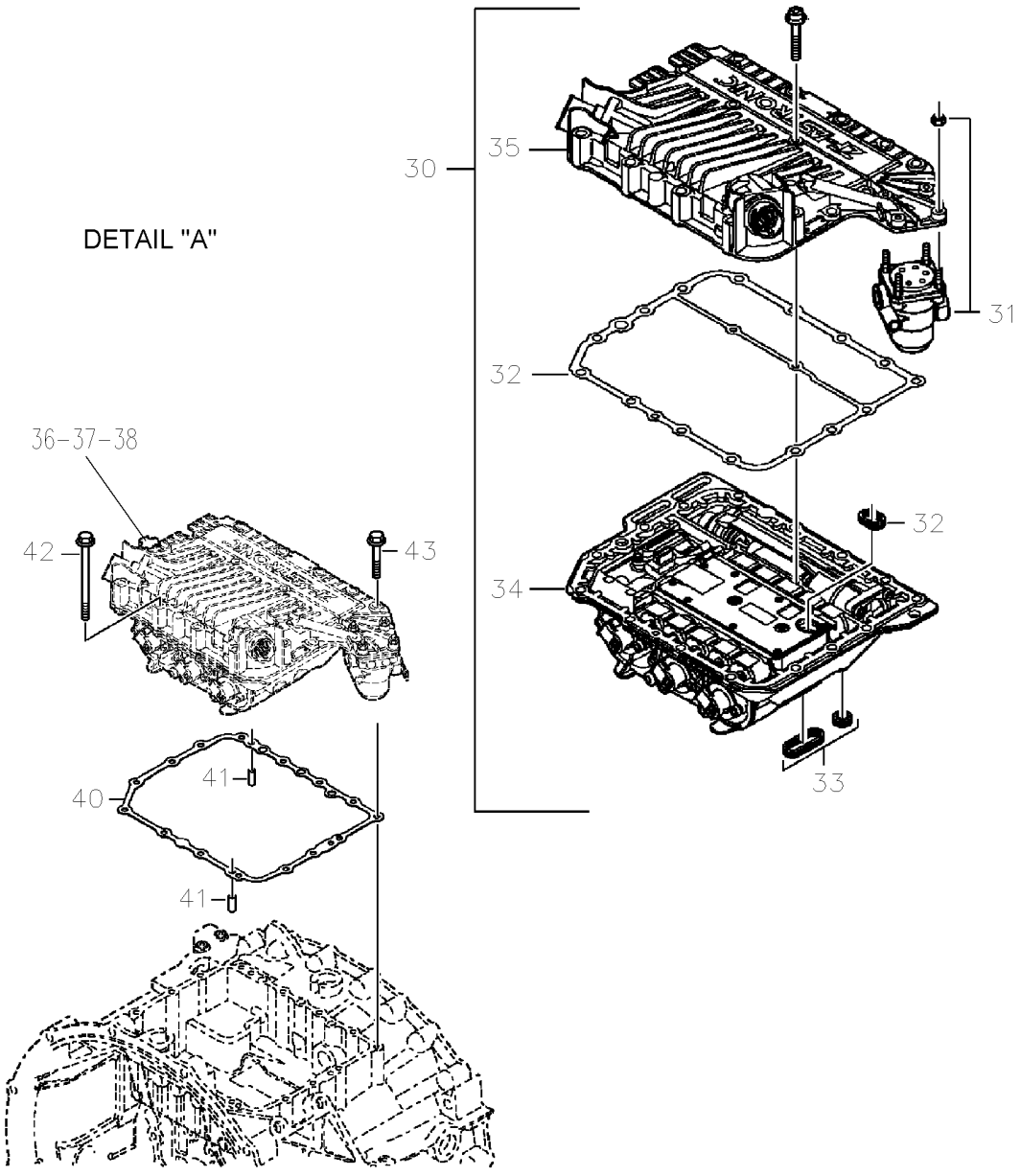

From Y-7462 Up to 6-8906	DATE: 01/2014	PAGE: Y2-0705-00

TRANSMISSION "ZF-ASTRONIC"

ITEM	PART	DESCRIPTION	XL45	MTH40	MTH45	MTH45S	NOTE
1	571772	TRANSMISSION "ZF" W/O INTARDER / W10 SPEEDS	1				
NS	684516	OIL TRANSYND TRANSMISSION "ZF" CASTROL / 75W/85 AP1 GL4 / (25 LITERS)	AR				
NS	684911	OIL TRANSYND TRANSMISSION "ZF" TOTAL EXON / 75W/80 AP1 GL4 / (20 LITERS)	AR				
10	572020	WIRING HARNESS ADAPTOR RETROFIT "XL SERIES" From 3-7962 Up to 3-7962 / REPLACED BY: 066636					
10	065833	CABLE ASSY / <> ECU & TRANS CONTROL "ZF" Up to 6-8753 / REPLACED BY: 066636	1				
10	066636	CABLE ASSY / FRT SELECTOR & RR "ZMTec" From 6-8754	1				
15	571773	SHIFTER SELECTOR "ZF"	1				
20	571774	MODULE "ZF" ZMTEC / W10 SPEEDS / REPLACED BY: 572027	1				
30	572022	. TRANSMISSION ACTUATOR GS 3 / 10 speeds	1				
31	19504975	. PRESSURE REDUCER VALVE	1				
32	N.S.P.	. SEAL KIT 0501.319.863	1				2
33	N.S.P.	. SEAL KIT 0501.319.864	1				2
34	N.S.P.	. BOTTOM ACTUATOR 6009.274.058	1				2
35	N.S.P.	. UPPER PART ACTUATOR 6009.397.074	1				2
36	572131	. BREATHER	1				
37	572132	. ELBOW 90°	1				
38	572133	. ADAPTOR	1				
40	572024	GASKET / <> TRANS ACTUATOR & HOUSING	1				
41	N.S.P.	CYLINDER PIN 0631.306.863	1				2
42	502797	SCREW CAP HEX M8-1.25x70 G10.9 DP	6				
43		SCREW CAP HEX M8-1.25x45 G10.9 DP	9				
44	N.S.P.	ANGLE PIECE 0501.315.796	1				2
		2) NOT SOLD BY PREVOST (SEE MANUFACTURING PART					
		NUMBER AT END OF DESCRIPTION LINE)					

From Y-7462 Up to 6-8906	DATE: 01/2014	PAGE: Y2-0705-00

TRANSMISSION "ZF-ASTRONIC"

ITEM	PART	DESCRIPTION	XL45	MTH400	MTH445	MTH455S	NOTE

From 4-8165 Up to 6-8906	DATE: 01/2014	PAGE: Y2-0705-05
GEARBOX HOUSING		

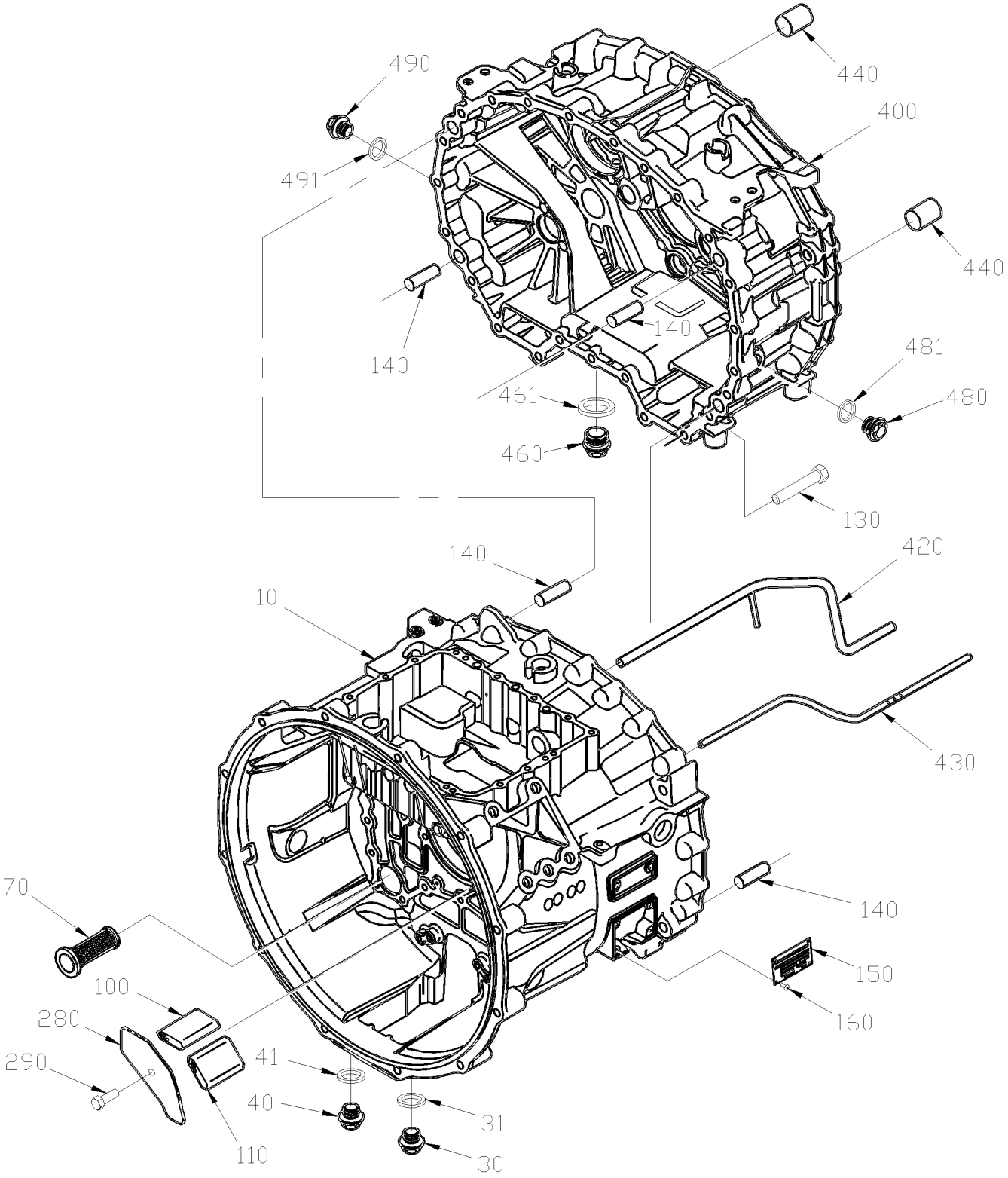

From 4-8165 Up to 6-8906	DATE: 01/2014	PAGE: Y2-0705-05

GEARBOX HOUSING

ITEM	PART	DESCRIPTION	XL45	MTH40	MTH45	MTH45S	NOTE
10	571787	HOUSING	1				
30	571788	SCREW PLUG M22x1.5 DIN 908	1				
31	571789	SEALING RING	1				
40	571788	SCREW PLUG M22x1.5 DIN 908	1				
41	571789	SEALING RING	1				
70	571790	SCREEN INSERT	1				
100	571791	BREATHER	1				
110	571791	BREATHER	1				
130	571792	SCREW CAP HEX M101.5x60 G10.9	24				
140	571793	CYLINDRICAL PIN	4				
150	571794	TYPE PLATE	1				
160	571795	BLIND RIVET	4				
280	571796	COVER	1				
290	502790	SCREW CAP HEX M8-1.25x20 G8.8 ZP	1				
400	571797	HOUSING	1				
420	571798	SPRAY TUBE	1				
430	571799	SPRAY TUBE	1				
440	571800	PIN	2				
460	571801	SCREW PLUG	1				
461	571802	SEALING RING	1				
480	571803	SCREW PLUG M24x1.5 DIN 910	1				
481	571802	SEALING RING	1				
490	571803	SCREW PLUG M24x1.5 DIN 910	1				
491	571802	SEALING RING	1				
NS	684516	OIL TRANSYND TRANSMISSION "ZF" CASTROL / 75W/85 AP1 GL4 / (25 LITERS)	AR				
NS	684911	OIL TRANSYND TRANSMISSION "ZF" TOTAL EXON / 75W/80 AP1 GL4 / (20 LITERS)	AR				

From 4-8165 Up to 6-8906	DATE: 01/2014	PAGE: Y2-0705-10

INPUT SHAFT

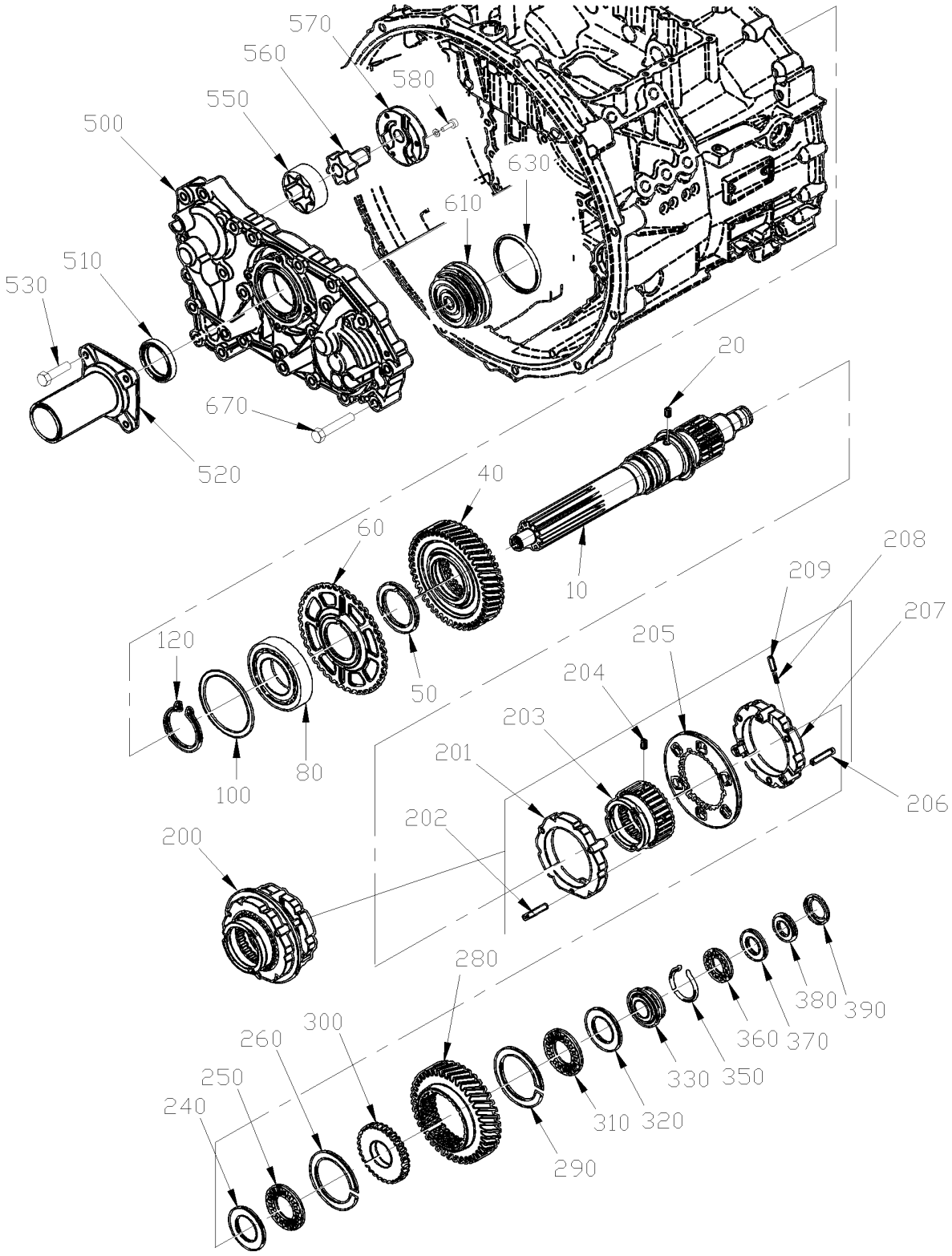

From 4-8165 Up to 6-8906	DATE: 01/2014	PAGE: Y2-0705-10

INPUT SHAFT

ITEM	PART	DESCRIPTION	XL45	MTH40	MTH45	MTH45S	NOTE
10	571804	INPUT SHAFT	1				
20	571805	PIN	1				
40	571806	HELICAL GEAR	1				
50	571807	THRUST WASHER	1				
60	571808	COUNTING RING	1				
80	571809	BALL BEARING	1				
100	571810	SHIM 1.40MM	AR				
100	571811	SHIM 1.45MM	AR				
100	571812	SHIM 1.50MM	AR				
100	571813	SHIM 1.55MM	AR				
100	571814	SHIM 1.60MM	AR				
100	571815	SHIM 1.65MM	AR				
100	571816	SHIM 1.70MM	AR				
100	571817	SHIM 1.75MM	AR				
100	571818	SHIM 1.80MM	AR				
100	571819	SHIM 1.85MM	AR				
100	571820	SHIM 1.90MM	AR				
100	571821	SHIM 1.95MM	AR				
100	571822	SHIM 2.00MM	AR				
120	571823	RETAINING RING 3.25MM	AR				
120	571824	RETAINING RING 3.30MM	AR				
120	571825	RETAINING RING 3.35MM	AR				
120	571826	RETAINING RING 3.40MM	AR				
120	571827	RETAINING RING 3.45MM	AR				
120	571828	RETAINING RING 3.50MM	AR				
120	571829	RETAINING RING 3.55MM	AR				
120	571830	RETAINING RING 3.60MM	AR				
120	571831	RETAINING RING 3.65MM	AR				
120	571832	RETAINING RING 3.70MM	AR				
120	571833	RETAINING RING 3.75MM	AR				
120	571834	RETAINING RING 3.80MM	AR				
120	571835	RETAINING RING 3.85MM	AR				
120	571836	RETAINING RING 3.90MM	AR				
120	571837	RETAINING RING 3.95MM	AR				
120	571838	RETAINING RING 4.00MM	AR				
200	571839	SYCHRONIZER ASSY	1				
201	571840	. SYCHRONIZER RING	1				
202	571841	. PIN	3				
203	571842	. GEAR SHIFT SLEEVE	1				
204	571805	. PIN	1				
205	571843	. PLATE	1				
206	571844	. PIN	3				
207	571845	. SYCHRONIZER RING	1				
208	571846	. COMPRESSION SPRING	3				

From 4-8165 Up to 6-8906	DATE: 01/2014	PAGE: Y2-0705-10

INPUT SHAFT

ITEM	PART	DESCRIPTION	XL45	MTH40	MTH45	MTH45S	NOTE
209	571847	. CYLINDER ROLLER 7X10 DIN 5402	3				
240	571848	WASHER	1				
250	571849	AXLE NEEDLE CAGE	1				
260	571850	SNAP RING	1				
280	571851	HELICAL GEAR	1				
290	571850	SNAP RING	1				
300	571852	BEARING DISC	1				
310	571849	AXLE NEEDLE CAGE	1				
320	571848	WASHER	1				
330	571853	BEARING RING	1				
350	571854	RETAINING RING	1				
360	571855	AXLE ROLLER CAGE	1				
370	571856	WASHER 5MM	1				
380	571857	SPLIT RING	1				
390	571858	RETAINING RING	1				
500	571859	CONNECTING PLATE	1				
510	571860	SHAFT SEAL	1				
520	571861	RELEASE FLANGE	1				
530	502589	SCREW CAP HEX M8-1.25x25 G8.8 ZP	4				
550	571862	ROTOR	1				
560	571863	PUMP SHAFT	1				
570	571864	PUMP COVER	1				
580	571865	SCREW CAP HEXS TORX M6-1.0x25	3				
610	571866	PISTON	1				
630	571867	U-RING	1				
670	571868	SCREW CAP HEX M10-1.5x60 G10.9	22				

From 4-8165 Up to 6-8906	DATE: 01/2014	PAGE: Y2-0705-10

INPUT SHAFT

ITEM	PART	DESCRIPTION	XL45	MTH40	MTH45	MTH45S	NOTE

From 4-8165 Up to 6-8906	DATE: 01/2014	PAGE: Y2-0705-15
LAYSHAFT		

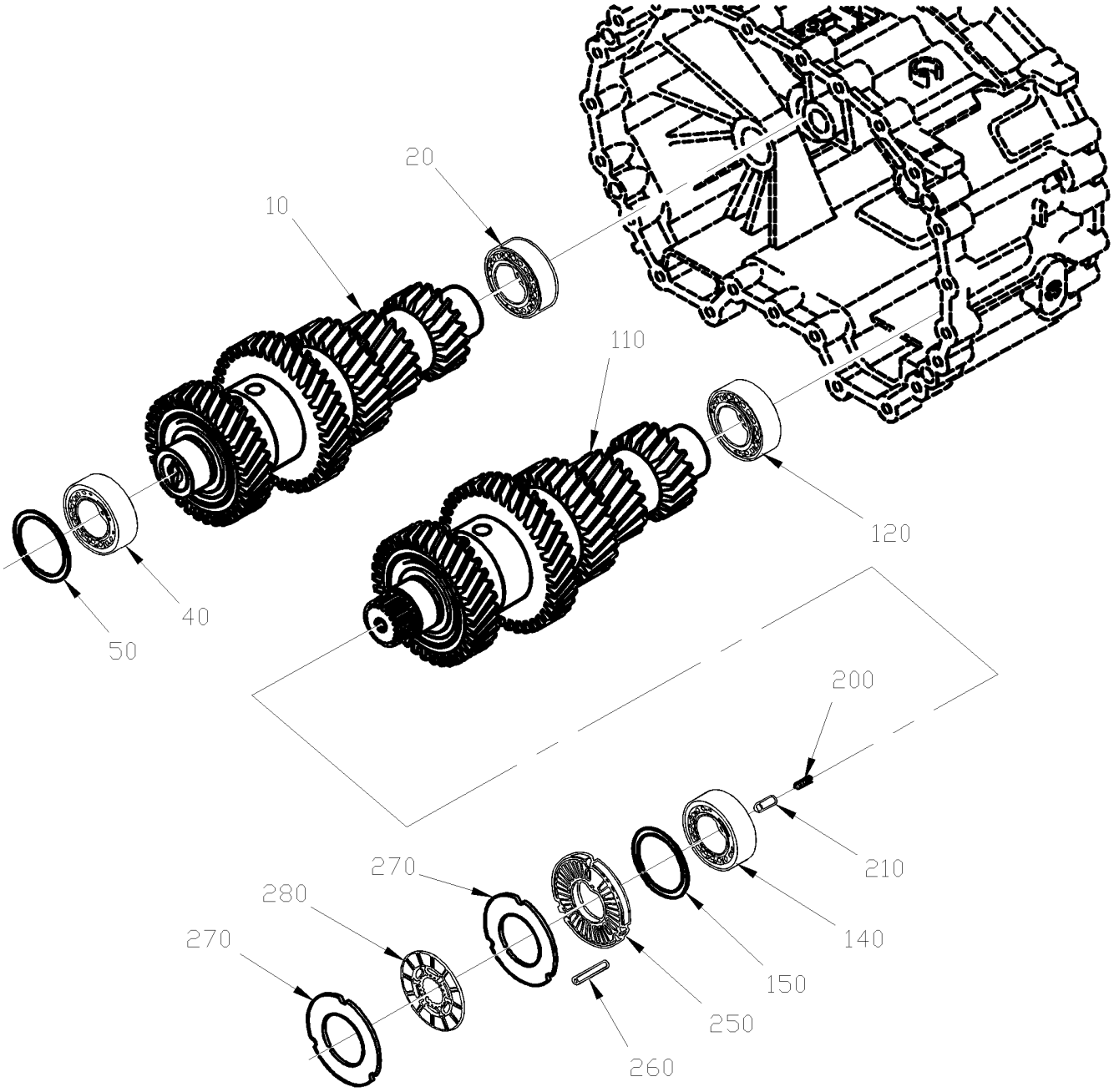

From 4-8165 Up to 6-8906	DATE: 01/2014	PAGE: Y2-0705-15

LAYSHAFT

ITEM	PART	DESCRIPTION	XL45	MTH40	MTH45	MTH45S	NOTE
10	571869	LAYSHAFT	1				
20	571870	ROLLER BEARING	1				
40	571870	ROLLER BEARING	1				
50	571871	SHIM 1.70MM	AR				
50	571872	SHIM 1.75MM	AR				
50	571873	SHIM 1.80MM	AR				
50	571874	SHIM 1.85MM	AR				
50	571875	SHIM 1.90MM	AR				
50	571876	SHIM 1.95MM	AR				
50	571877	SHIM 2.00MM	AR				
50	571878	SHIM 2.05MM	AR				
50	571879	SHIM 2.10MM	AR				
50	571880	SHIM 2.15MM	AR				
50	571881	SHIM 2.20MM	AR				
50	571882	SHIM 2.25MM	AR				
50	571883	SHIM 2.30MM	AR				
50	571884	SHIM 2.35MM	AR				
50	571885	SHIM 2.40MM	AR				
50	571886	SHIM 2.45MM	AR				
50	571887	SHIM 2.50MM	AR				
50	571888	SHIM 2.55MM	AR				
50	571889	SHIM 2.60MM	AR				
50	571890	SHIM 2.65MM	AR				
50	571891	SHIM 2.70MM	AR				
50	571892	SHIM 2.75MM	AR				
50	571893	SHIM 2.80MM	AR				
110	571894	LAYSHAFT	1				
120	571870	ROLLER BEARING	1				
140	571870	ROLLER BEARING	1				
150	571871	SHIM 1.70MM	AR				
150	571872	SHIM 1.75MM	AR				
150	571873	SHIM 1.80MM	AR				
150	571874	SHIM 1.85MM	AR				
150	571875	SHIM 1.90MM	AR				
150	571876	SHIM 1.95MM	AR				
150	571877	SHIM 2.00MM	AR				
150	571878	SHIM 2.05MM	AR				
150	571879	SHIM 2.10MM	AR				
150	571880	SHIM 2.15MM	AR				
150	571881	SHIM 2.20MM	AR				
150	571882	SHIM 2.25MM	AR				
150	571883	SHIM 2.30MM	AR				
150	571884	SHIM 2.35MM	AR				
150	571885	SHIM 2.40MM	AR				

From 4-8165 Up to 6-8906	DATE: 01/2014	PAGE: Y2-0705-15

LAYSHAFT

ITEM	PART	DESCRIPTION	XL45	MTH40	MTH45	MTH45S	NOTE
150	571886	SHIM 2.45MM	AR				
150	571887	SHIM 2.50MM	AR				
150	571888	SHIM 2.55MM	AR				
150	571889	SHIM 2.60MM	AR				
150	571890	SHIM 2.65MM	AR				
150	571891	SHIM 2.70MM	AR				
150	571892	SHIM 2.75MM	AR				
150	571893	SHIM 2.80MM	AR				
200	571895	COMPRESSION SPRING	1				
210	571896	DETENT PIN	1				
250	571897	BRAKE COVER	1				
260	571898	CYLINDRICAL PIN M6x50	3				
270	571899	OUT CLUTCH DISC	4				
280	571900	LINNIG CLUTCH DISC	2				

From 4-8165 Up to 6-8906	DATE: 01/2014	PAGE: Y2-0705-15

LAYSHAFT

ITEM	PART	DESCRIPTION	XL45	MTH40	MTH45	MTH45S	NOTE

From 4-8165 Up to 6-8906	DATE: 01/2014	PAGE: Y2-0705-20
MAIN SHAFT		

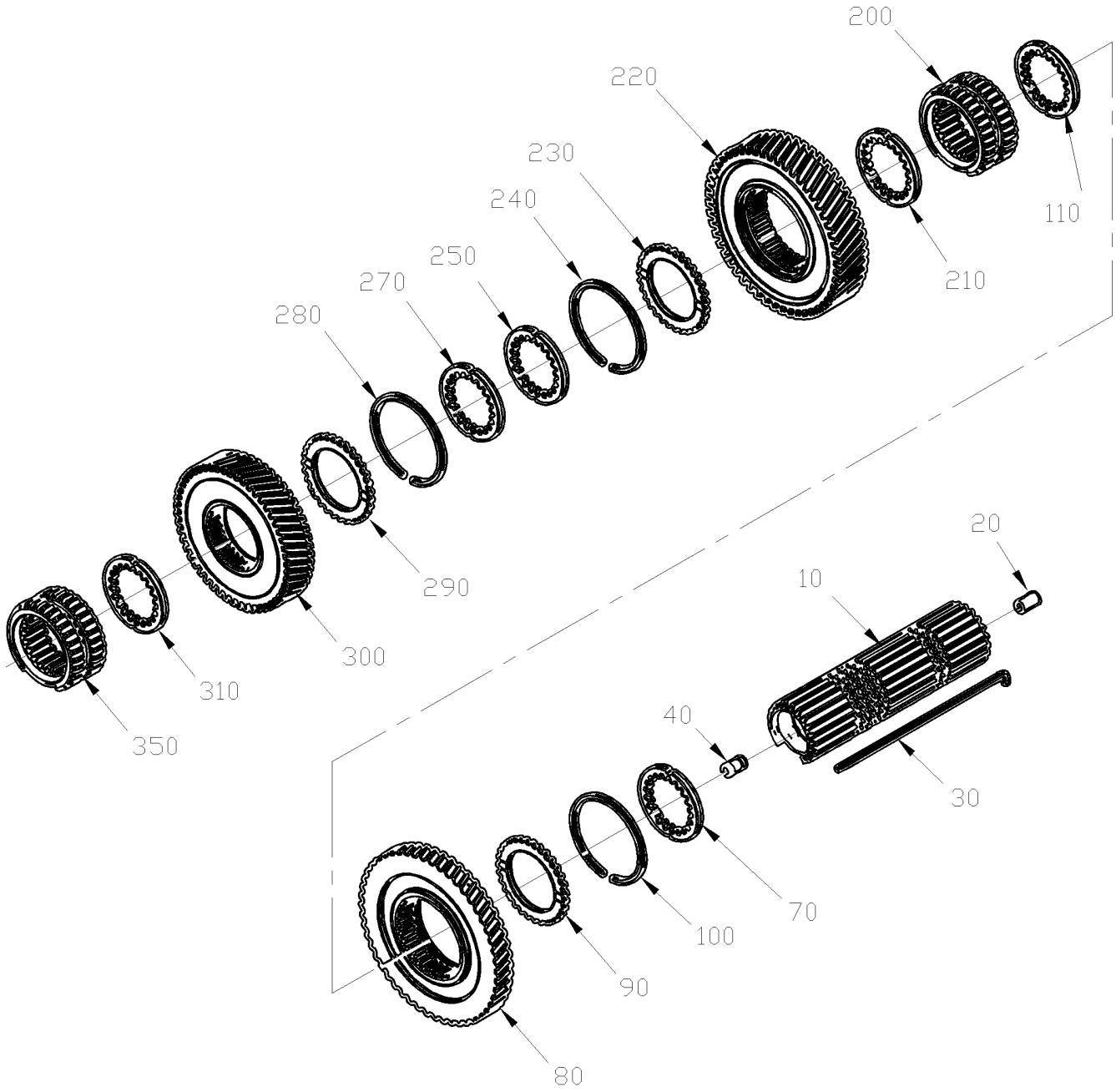

From 4-8165 Up to 6-8906	DATE: 01/2014	PAGE: Y2-0705-20

MAIN SHAFT

ITEM	PART	DESCRIPTION	XL45	MTH40	MTH45	MTH45S	NOTE
10	571901	MAIN SHAFT	1				
20	571902	OIL TUBE	1				
30	571903	KEY	1				
40	571904	OIL TUBE	1				
70	571905	WASHER	1				
80	571906	HELICAL GEAR	1				
90	571907	WASHER	1				
100	571850	SNAP RING	1				
110	571905	WASHER	1				
200	571908	SLIDING SLEEVE	1				
210	571905	WASHER	1				
220	571909	HELICAL GEAR	1				
230	571907	WASHER	1				
240	571850	SNAP RING	1				
250	571905	WASHER	1				
270	571905	WASHER	1				
280	571850	SNAP RING	1				
290	571907	WASHER	1				
300	571910	HELICAL GEAR	1				
310	571905	WASHER	1				
350	571908	SLIDING SLEEVE	1				

From 4-8165 Up to 6-8906	DATE: 01/2014	PAGE: Y2-0705-25
REVERSE GEAR		

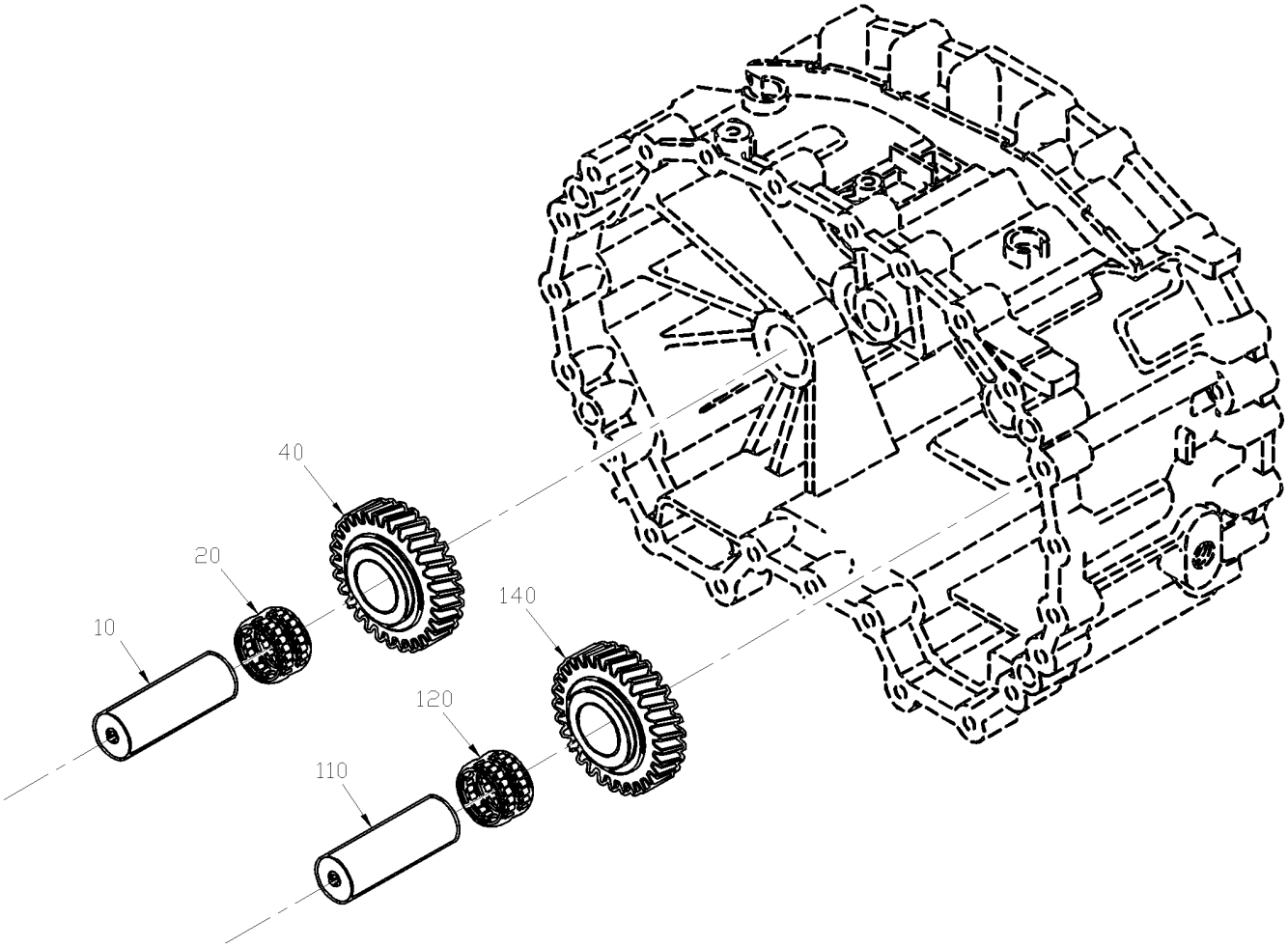

From 4-8165 Up to 6-8906	DATE: 01/2014	PAGE: Y2-0705-25

REVERSE GEAR

ITEM	PART	DESCRIPTION	XL45	MTH40	MTH45	MTH45S	NOTE
10	571911	REVERSE IDLER SHAFT	1				
20	571912	NEEDLE CAGE	1				
40	571913	HELICAL GEAR	1				
110	571911	REVERSE IDLER SHAFT	1				
120	571912	NEEDLE CAGE	1				
140	571913	HELICAL GEAR	1				

From 4-8165 Up to 6-8906	DATE: 01/2014	PAGE: Y2-0705-30
GEAR SHIFT SYSTEM		

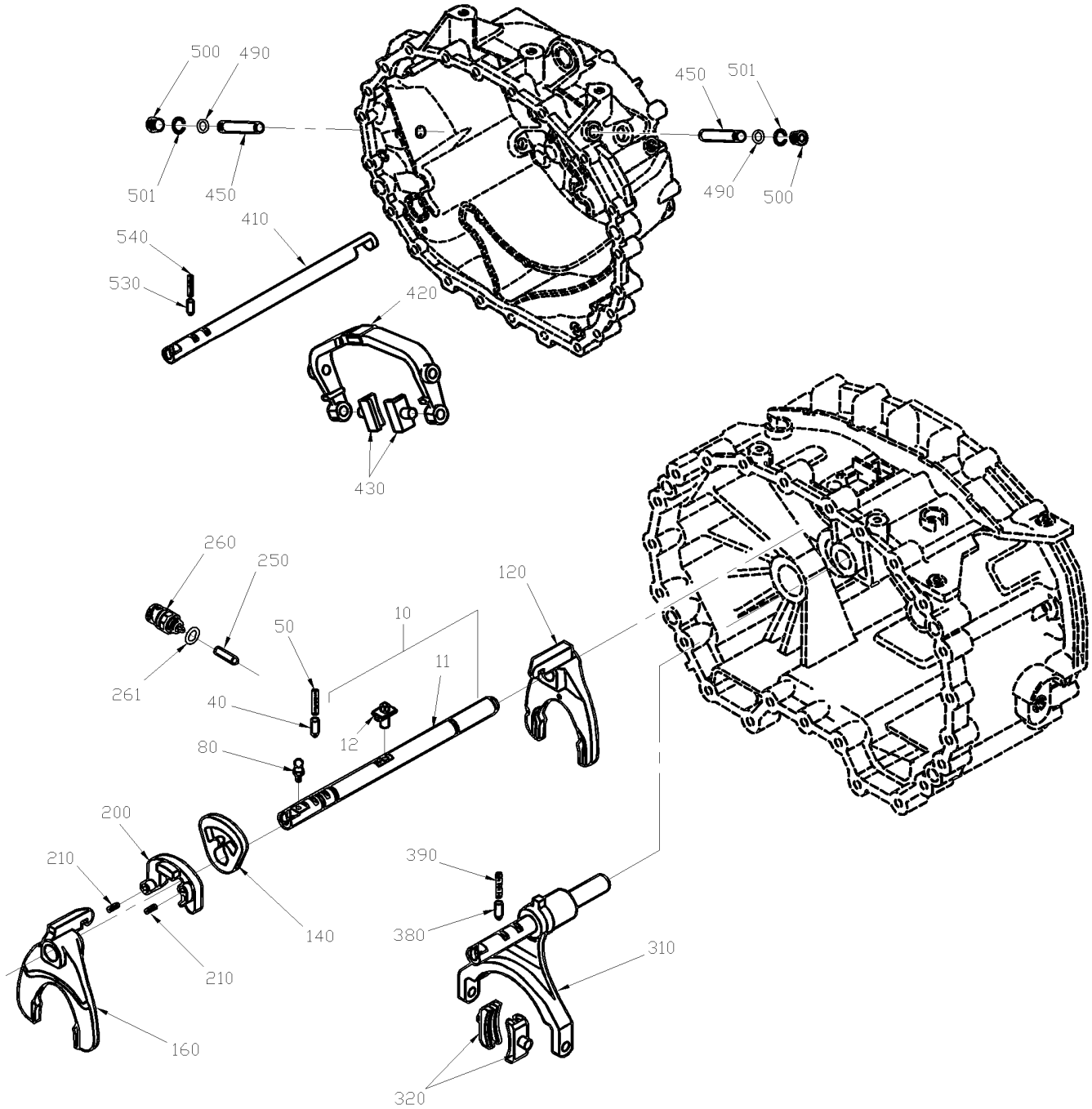

From 4-8165 Up to 6-8906	DATE: 01/2014	PAGE: Y2-0705-30

GEAR SHIFT SYSTEM

ITEM	PART	DESCRIPTION	XL45	MTH40	MTH45	MTH45S	NOTE
10	571914	GEAR SHIFT SHAFT ASSY	1				
11	571915	. GEAR SHIFT SHAFT	1				
12	571916	. GEAR SHIFT FINGER	1				
40	571896	DETENT PIN	1				
50	571895	COMPRESSION SPRING	1				
80	571917	BALL PIN	1				
120	571918	GEAR SHIFT FORK	1				
140	571919	INERTLOCK	1				
160	571920	GEAR SHIFT FORK	1				
200	571921	SPACER	1				
210	571922	SLOT PIN 6x18MM	2				
250	571923	PIN	1				
260	571925	SWITCH / NEUTRAL N.O. / W/"ZF"MANUAL TRANS	1				
261	571924	SEALING RING	1				
310	571926	GEAR SHIFT FORK	1				
320	571927	SLIDING PAD	2				
380	571896	DETENT PIN	1				
390	571895	COMPRESSION SPRING	1				
410	571998	GEAR SHIFT RAIL	1				
420	571999	GEAR SHIFT FORK	1				
430	572000	SLIDING PAD	2				
450	572001	JOINT PIN	2				
490	572002	SNAP RING	2				
500	572003	SCREW PLUG M20x1.5 DIN 908	2				
501	572004	SEALING RING	2				
530	571896	DETENT PIN	1				
540	571895	COMPRESSION SPRING	1				

From 4-8165 Up to 6-8906	DATE: 01/2014	PAGE: Y2-0705-35
OUTPUT HOUSING		

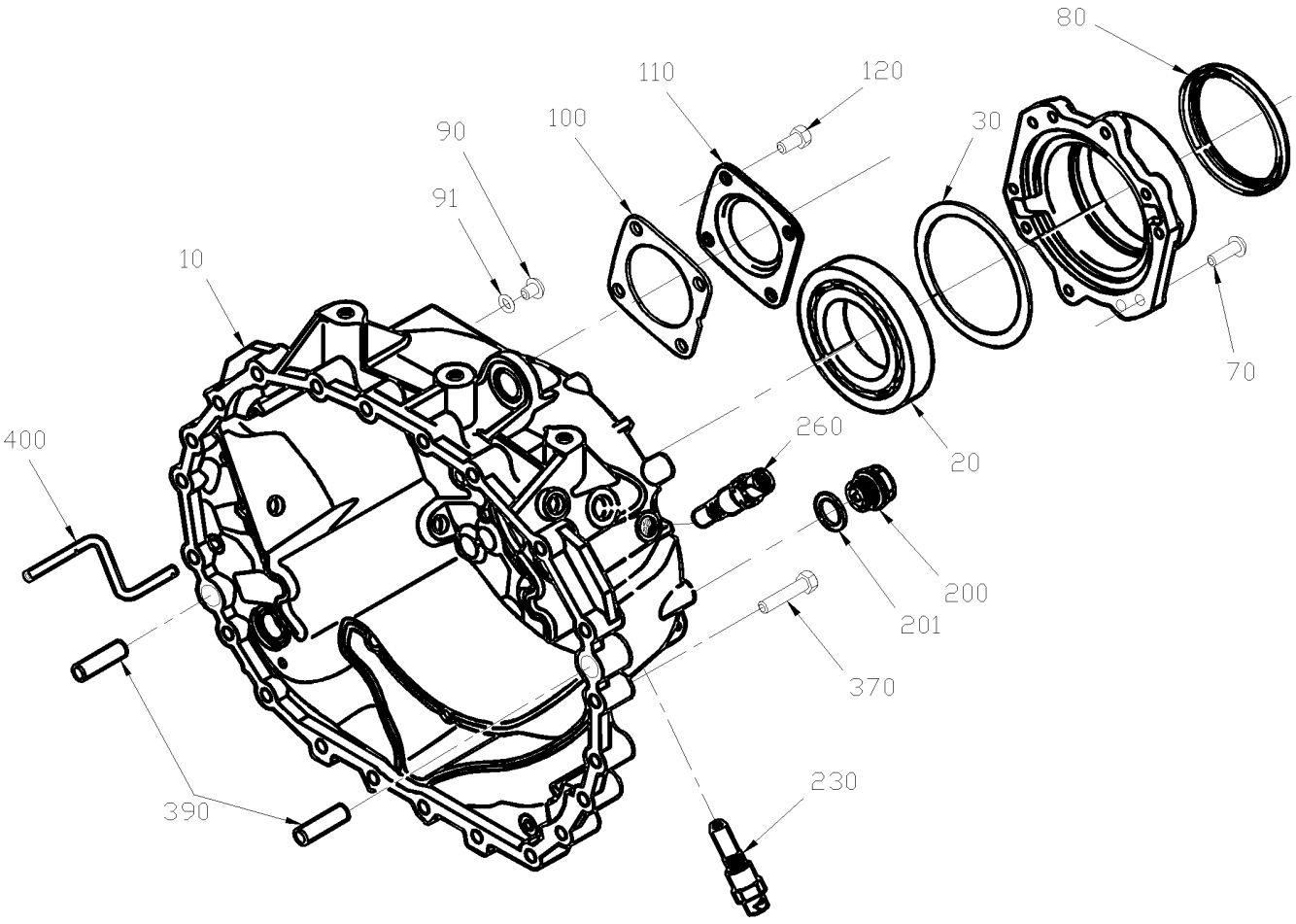

From 4-8165 Up to 6-8906	DATE: 01/2014	PAGE: Y2-0705-35

OUTPUT HOUSING

ITEM	PART	DESCRIPTION	XL45	MTH40	MTH45	MTH45S	NOTE
10	571928	HOUSING	1				
20	571929	BALL BEARING	1				
30	571930	SHIM 0.20MM	AR				
30	571931	SHIM 0.30MM	AR				
30	571932	SHIM 0.40MM	AR				
30	571933	SHIM 0.50MM	AR				
30	571934	SHIM 0.60MM	AR				
50	571935	COVER	1				
70	500829	SCREW CAP HEX M10-1.5x40 G8.8 ZP	10				
80	571936	SHAFT SEAL	1				
90	571937	SCREW PLUG M10x1.0 DIN 908	1				
91	571938	SEALING RING	1				
100	571939	GASKET	1				
110	571940	COVER	1				
120	500850	SCREW CAP HEX M12-1.75X25 G8.8 ZP	4				
200	571801	SCREW PLUG	1				
201	571802	SEALING RING	1				
230	571941	PULSE SENSOR	1				
260	571941	PULSE SENSOR	1				
370	571792	SCREW CAP HEX M101.5x60 G10.9	22				
390	571793	CYLINDRICAL PIN	2				
400	571942	SPRAY TUBE	1				

From 4-8165 Up to 6-8906	DATE: 01/2014	PAGE: Y2-0705-40
OUTPUT FLANGE & PLANETARY DRIVE		

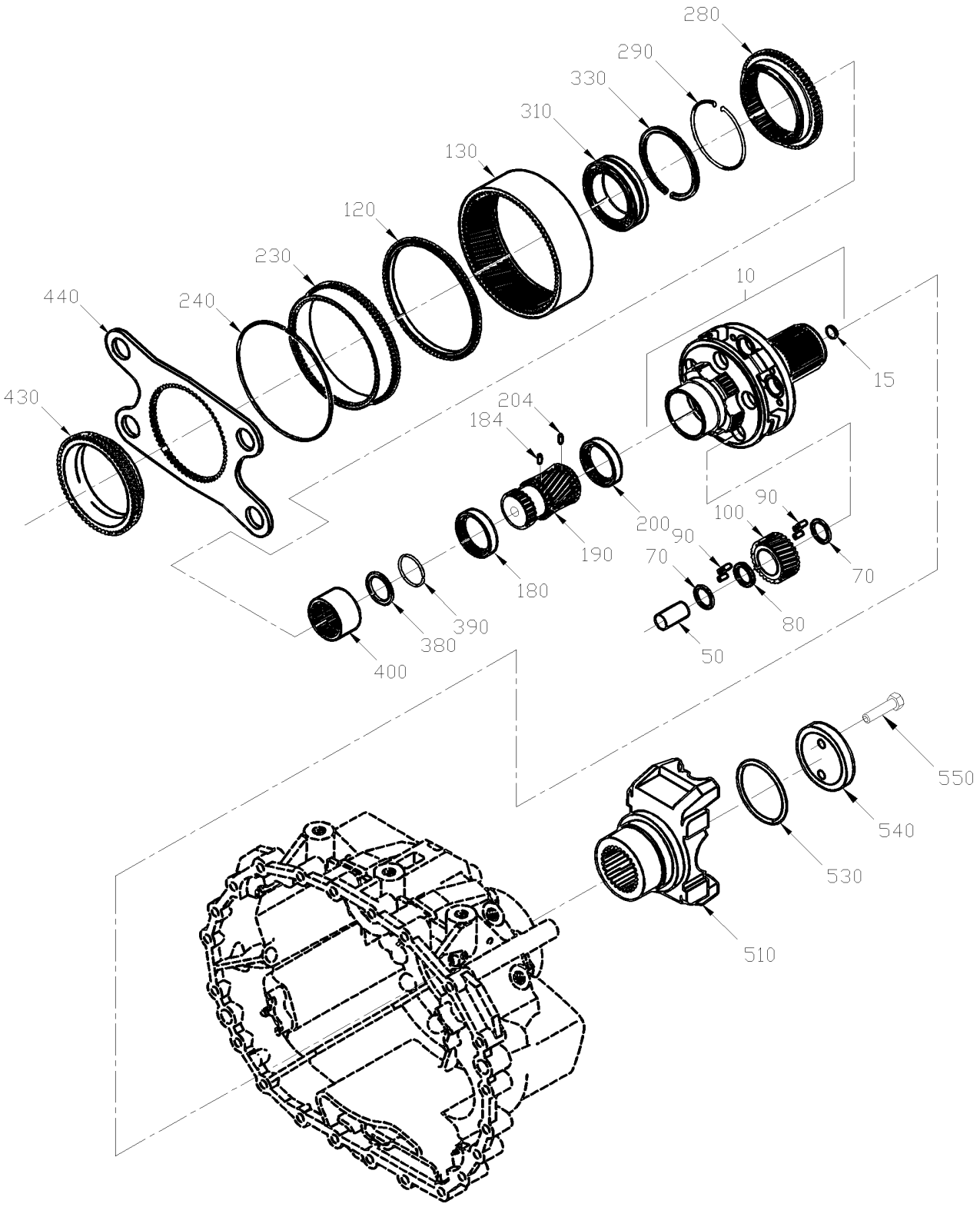

From 4-8165 Up to 6-8906	DATE: 01/2014	PAGE: Y2-0705-40

OUTPUT FLANGE & PLANETARY DRIVE

ITEM	PART	DESCRIPTION	XL45	MTH40	MTH45	MTH45S	NOTE
10	571943	PLANET CARRIER	1				
15	571944	. SEALING CAP	1				
50	571945	PLANET SHAFT	5				
70	571946	WASHER	10				
80	571947	WASHER	5				
90	571948	ROLLER	140				
100	571949	PLANET GEAR SET	1				
120	571950	THRUST RING	1				
130	571951	RING GEAR	1				
180	571952	PRESSURE DISC	1				
184	571953	DRIVING PIN	1				
190	571954	SUN GEAR	1				
200	571952	PRESSURE DISC	1				
204	571953	DRIVING PIN	1				
230	571955	RING GEAR CARRIER	1				
240	571956	LOCKING WIRE	1				
280	571957	CLUTCH BODY	1				
290	571958	RETAINING RING	1				
310	571959	CYLINDRICAL ROLLER BEARING	1				
330	571960	SNAP RING	1				
380	571961	SHIM 1.00MM	AR				
380	571962	SHIM 1.10MM	AR				
380	571963	SHIM 1.20MM	AR				
380	571964	SHIM 1.30MM	AR				
380	571965	SHIM 1.40MM	AR				
380	571966	SHIM 1.50MM	AR				
380	571967	SHIM 1.60MM	AR				
380	571968	SHIM 1.70MM	AR				
380	571969	SHIM 1.80MM	AR				
380	571970	SHIM 1.90MM	AR				
380	571971	SHIM 2.00MM	AR				
380	571972	SHIM 2.10MM	AR				
380	571973	SHIM 2.20MM	AR				
380	571974	SHIM 2.30MM	AR				
380	571975	SHIM 2.40MM	AR				
380	571976	SHIM 2.50MM	AR				
380	571977	SHIM 2.60MM	AR				
380	571978	SHIM 2.70MM	AR				
380	571979	SHIM 2.80MM	AR				
380	571980	SHIM 2.90MM	AR				
380	571981	SHIM 3.00MM	AR				
380	571982	SHIM 3.10MM	AR				
380	571983	SHIM 3.20MM	AR				
380	571984	SHIM 3.30MM	AR				

From 4-8165 Up to 6-8906	DATE: 01/2014	PAGE: Y2-0705-40

OUTPUT FLANGE & PLANETARY DRIVE

ITEM	PART	DESCRIPTION	XL45	MTH40	MTH45	MTH45S	NOTE
390	571985	RETAINING RING	1				
400	571986	SLEEVE	1				
430	571987	CLUTCH BODY	1				
440	571988	PLATE	1				
510	571989	YOKE (1810) HALF ROUND / "ZF" TRANS / REPLACED BY: 572086	1				
530	571990	O-RING	1				
540	571991	WASHER	1				
550	571992	SCREW CAP HEX M10-1.5x60 G10.9	2				

From 4-8165 Up to 6-8906	DATE: 01/2014	PAGE: Y2-0705-40

OUTPUT FLANGE & PLANETARY DRIVE

ITEM	PART	DESCRIPTION	XL45	MTH40	MTH45	MTH45S	NOTE

From 4-8165 Up to 6-8906	DATE: 01/2014	PAGE: Y2-0705-45
SYNCHRONIZER ASSY		

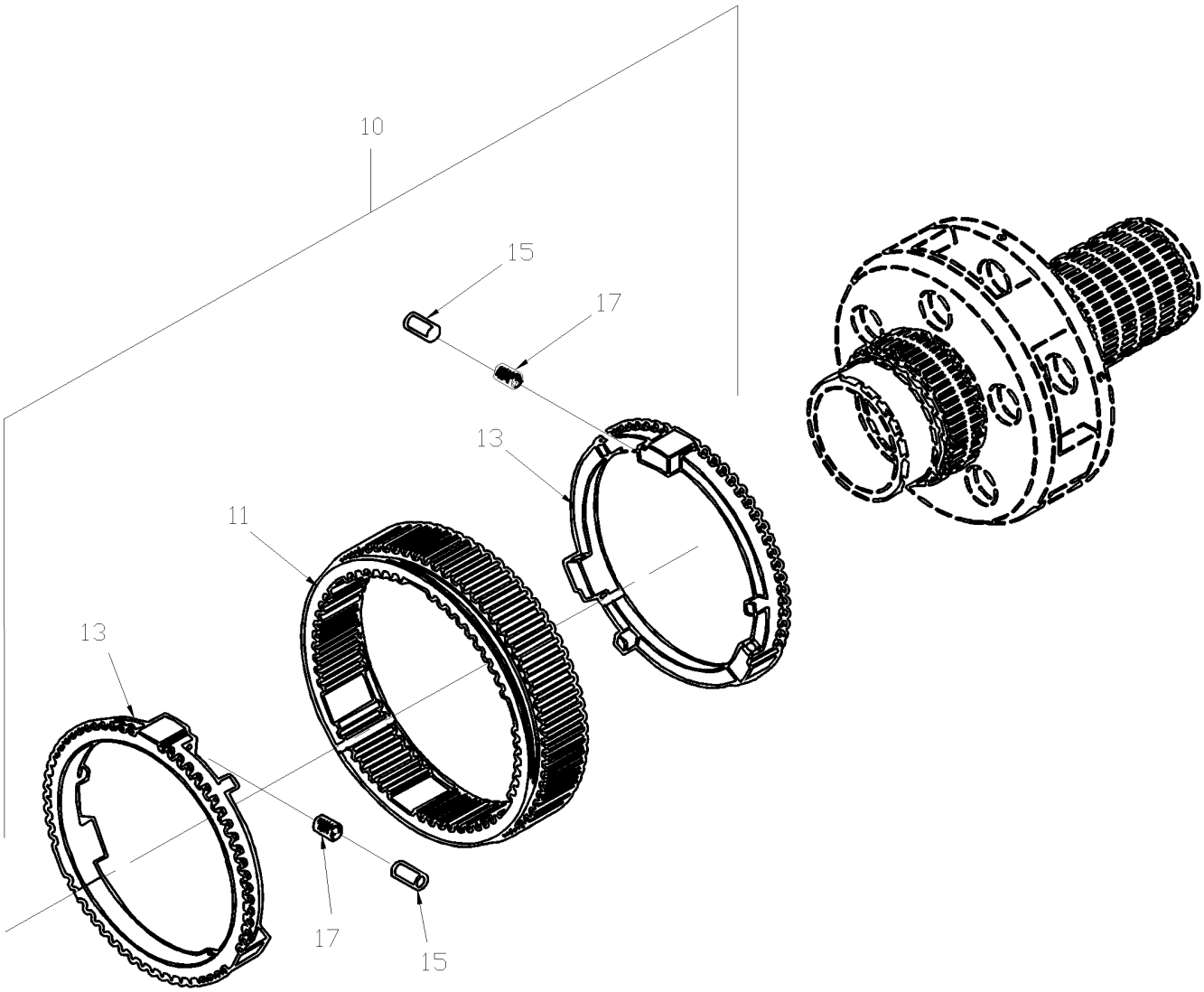

From 4-8165 Up to 6-8906	DATE: 01/2014	PAGE: Y2-0705-45

SYNCHRONIZER ASSY

ITEM	PART	DESCRIPTION	XL45	MTH40	MTH45	MTH45S	NOTE
10	571993	SYNCHRONIZER ASSY	1				
11	571994	. SLIDING SLEEVE	1				
13	571995	. SYCHRONIZER RING	2				
15	571996	. BUSHING	6				
17	571997	. COMPRESSION SPRING	6				

From Y-7046 Up to 3-8164	DATE: 01/2014	PAGE: Y2-0750-00

AUTOMATIC TRANSMISSION - "WORLD" WITH DETROIT S-60

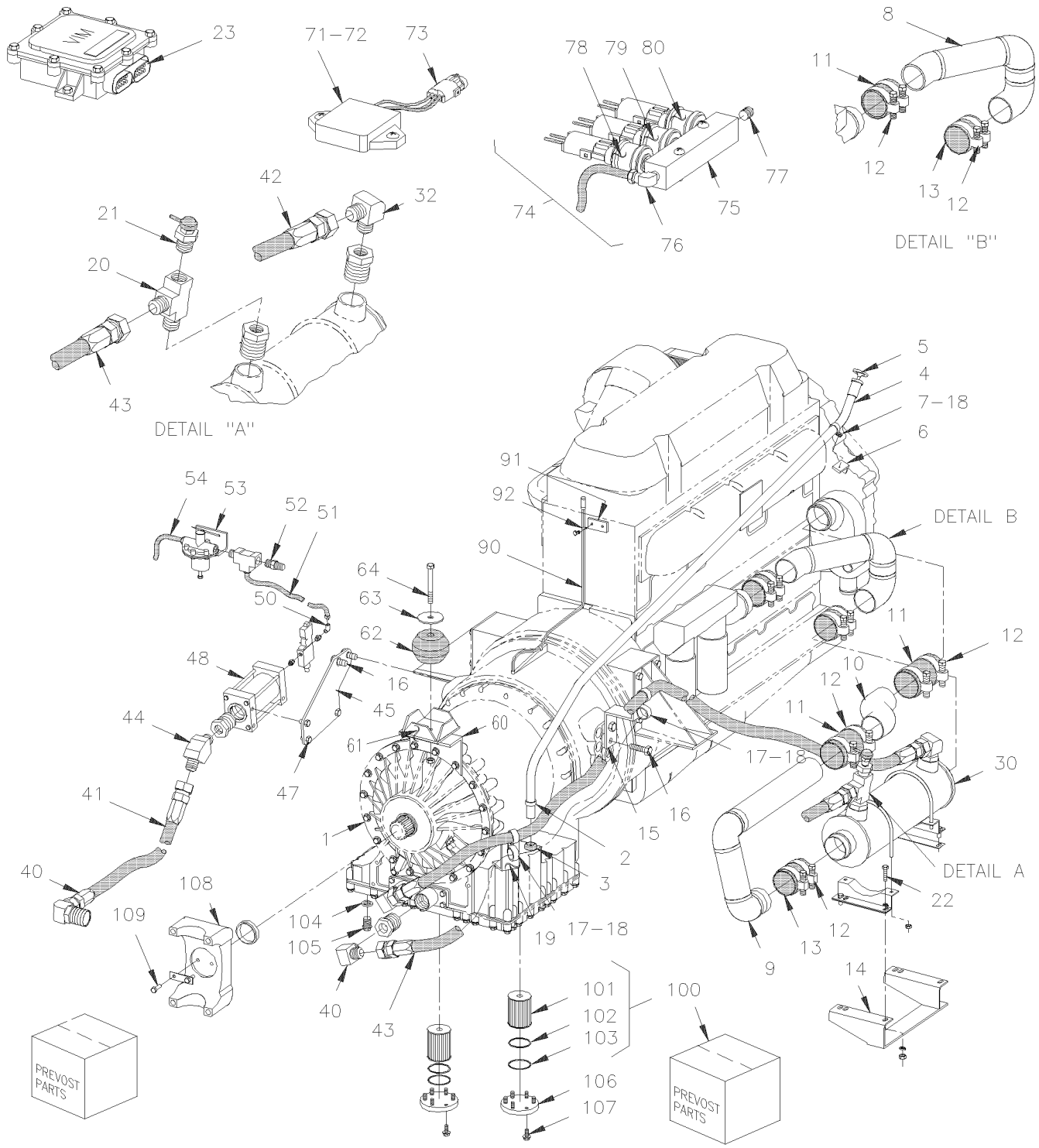

From Y-7046 Up to 3-8164	DATE: 01/2014	PAGE: Y2-0750-00

AUTOMATIC TRANSMISSION - "WORLD" WITH DETROIT S-60

ITEM	PART	DESCRIPTION	XL45	MTH40	MTH45	MTH45S	NOTE
		. . . . . "WARNING" - "WARNING" - "WARNING"					
		FROM VIN 3-7976 SOME VEHICLES HAVE "O.E.M." INSTALL					
		INSTALLATION AS SHOWN AT PAGE Y2-0750-99					
		THE NEXT FOLLOWING TRANSMISSION					
		ARE USED WITH 11.1 LITERS					
	571680	TRANSMISSION ASSY B500 / WTEC III	1				
	571742	E.C.U. B500 / WTEC III					
		THE NEXT FOLLOWING TRANSMISSION W/RETARDER					
		ARE USED WITH 11.1 LITERS					
	571720	TRANSMISSION ASSY B500R	1				
	571742	E.C.U. B500 / WTEC III					
		THE NEXT FOLLOWING TRANSMISSION					
		ARE USED WITH 12.7 LITERS					
	571702	TRANSMISSION ASSY B500 / WTEC III	1				
	571726	TRANSMISSION ASSY HD4060 Up to Y-7164 / REPLACED BY: 571756		1	1	1	
	571756	TRANSMISSION ASSY HD4060 / WTEC III From Y-7165		1	1	1	
	571743	E.C.U. HD4060R / WTEC III					
		THE NEXT FOLLOWING TRANSMISSION W/RETARDER					
		ARE USED WITH 12.7 LITERS					
	571719	TRANSMISSION ASSY B500R	1				
	571725	TRANSMISSION ASSY HD4060 Up to Y-7164		1	1	1	
	571757	TRANSMISSION ASSY HD4060 From Y-7165		1	1	1	
	571743	E.C.U. HD4060R / WTEC III	1	1	1	1	

From Y-7046 Up to 3-8164	DATE: 01/2014	PAGE: Y2-0750-00

AUTOMATIC TRANSMISSION - "WORLD" WITH DETROIT S-60

ITEM	PART	DESCRIPTION	XL45	MTH40	MTH45	MTH45S	NOTE
1		TRANSMISSION ASSY / SEE ABOVE					
2	504602	. CLAMP / 1" I.D. X .375 HOLE	1	1	1	1	
NS	502513	. SCREW TP CAP HEX 5/16x1 ZP	1	1	1	1	
3	571662	. GROMMET RUBBER / <> TUBE & TRANS	1	1	1	1	
4	070864	TUBE DIPSTICK	1	1	1	1	
5	571567	TRANS DIPSTICK 2134.9MM	1	1	1	1	
NS	070945	DECAL "DEXRON III OIL ONLY" Up to 2-7825	1	1	1	1	
NS	071249	DECAL "TranSynd OIL ONLY" ENG & FRANCAIS From 2-7826	1	1	1	1	
NS	071364	DECAL "TranSynd OIL ONLY" ENG & SPANISH From 2-7826	1	1	1	1	
6	061129	SUPPORT FLAT TWISTED / TUBE DIPSTICK	1	1	1	1	
6	070887	SUPPORT ANGLE / TUBE DIPSTICK / REPLACED BY: 070938	1	1	1	1	
6	070368	SUPPORT	1	1	1	1	
6	070938	SUPPORT	1	1	1	1	
NS	5001003	WASHER LO SPT 8.1x12.7x2.0 ZP	1	1	1	1	
NS	500069	SCREW CAP HEX M8-1.25x16 G10.9 DP	1	1	1	1	
7	560484	CLAMP / 1" I.D. / REPLACED BY: 952635	1	1	1	1	
8	070890	PIPE ASSY	1	1	1	1	
9	051854	PIPE ASSY	1	1	1	1	
10	N.S.P.	PIPE ASSY / <> WATER PUMP & PIPE / (23005899)	1	1	1	1	2
11	051604	HOSE 2 3/4" I.D. 130MM	2	2	2	2	
. NS	503395	. HOSE SILICONE 4 PLY 2 3/4" I.D. x 3'	AR	AR	AR	AR	
11	051094	HOSE 2 3/4" I.D. 3 1/8"	1	1	1	1	
. NS	503395	. HOSE SILICONE 4 PLY 2 3/4" I.D. x 3'	AR	AR	AR	AR	
11	503395	. HOSE SILICONE 4 PLY 2 3/4" I.D. x 3'	AR	AR	AR	AR	
12	504562	HOSE CLAMP / 2"3/4-3"5/8 / C.T. 350	AR	AR	AR	AR	
13	070968	HOSE 3" I.D. 185MM	1	1	1	1	
13	070969	HOSE 3" I.D. 140MM	1	1	1	1	
13	503396	. HOSE SILICONE 3" I.D. x 3'	AR	AR	AR	AR	
14	070892	SHIM / <> ENGINE CRADLE & OIL COOLER SUPPORT 26x166x1/4" / 140c/c	2	2	2	2	C
15	070884	SUPPORT "Z" SHAPE	1	1	1	1	
16	500813	SCREW CAP HEX M16-2.0x35 G8.8 ZP	3	3	3	3	
NS	500802	WASHER LO SPT 16.2x37.4x3.5 ZP	3	3	3	3	

2) NOT SOLD BY PREVOST (SEE MANUFACTURING PART NUMBER AT END OF DESCRIPTION LINE)

C) W/O RETARDER

From Y-7046 Up to 3-8164	DATE: 01/2014	PAGE: Y2-0750-00

AUTOMATIC TRANSMISSION - "WORLD" WITH DETROIT S-60

ITEM	PART	DESCRIPTION	XL45	MTH40	MTH45	MTH45S	NOTE
17	560912	CLAMP / 1"1/4 I.D. / REPLACED BY: 952639	4	4	4	4	
18	502698	SCREW MA PAN PH M4-0.7x16 SS EMN	3	3	3	3	
NS	500590	NUT HEX NYRT M4-0.7 ZP	3	3	3	3	
19	070944	SUPPORT / HOSES	1	1	1	1	
NS	502644	WASHER FL 10.5x30.0x2.5 ZP	1	1	1	1	
NS	502549	SCREW CAP HEX M10-1.5x35 G8.8 ZP	1	1	1	1	
20	5011083	ADAPTER TEE / SAE 45º FITTING / #16FL-Mx1/2NPT-Fx#16ORB-M TO USED W/TEMP SENDER	1	1	1	1	
20	5011074	ADAPTER TEE / SAE 45º FITTING / #20FL-Mx1/2NPT-Fx#20ORB-M TO USED W/TEMP SENDER	1	1	1	1	
21	561097	SENSOR, TEMPERATURE / WATER & OIL	1	1	1	1	
22	502559	SCREW CAP HEX M10-1.5x25 G8.8 ZP	4	4	4	4	
NS	500257	WASHER LO SPT 10.2x18.1x2.2 ZP	8	8	8	8	
NS	500256	NUT HEX M10-1.5 ZP	4	4	4	4	
NS	502589	SCREW CAP HEX M8-1.25x25 G8.8 ZP	4	4	4	4	C
NS	5001003	WASHER LO SPT 8.1x12.7x2.0 ZP	8	8	8	8	
NS	502543	NUT HEX M8-1.25 ZP	4	4	4	4	
23	571542	MODULE INTERFACE	1	1	1	1	
NS	064716	CABLE ASSY / <> TRANS & SPEED SWITCH Up to Y-7351 / REPLACED BY: 065330	1	1	1	1	E,A
23	065752	CABLE ASSY / <> TRANS & SPEED SWITCH / SERVICE Up to Y-7351	1	1	1	1	E
NS	065331	CABLE ASSY / <> TRANS & SPEED SWITCH / W/O RETARDER From Y-7352 Up to 3-7984 / REPLACED BY: 065751	1	1	1	1	C
23	065751	CABLE ASSY / <> TRANS & SPEED SWITCH / W/O RETARDER From 3-7985	1	1	1	1	C
NS	065330	CABLE ASSY / <> TRANS & SPEED SWITCH / W/RETARDER From Y-7365 Up to 3-7984 / REPLACED BY: 065750	1	1	1	1	E
23	065750	CABLE ASSY / <> TRANS & SPEED SWITCH / W/RETARDER From 3-7985	1	1	1	1	E
NS	071035	SUPPORT CABLE HARNESS / W/2 HOLES / WTEC III	1	1	1	1	
30	550708	OIL COOLER W/1" NPT / (2950137)	2	2	2	2	C
30	550795	OIL COOLER W/ #20 ORB (1" STRAIGHT THREAD) / REPLACED BY: 071269	1	1	1	1	E,F
. NS	550948	. SUPPORT	1	1	1	1	
. NS	550949	. SUPPORT	1	1	1	1	
. NS	550950	. U-BOLT 3/8-16	2	2	2	2	
. NS	502510	. WASHER FL .375x.875x.083	4	4	4	4	
. NS	500265	. NUT HEX STO 3/8-16 ZP	4	4	4	4	
30	Y2-0750-99	OIL COOLER "MODINE" - "RETROFIT"					
NS	550806	. CORE ASSY OIL COOLER	1	1	1	1	
		A) FOR PRODUCT IMPROVMENT USE CABLE #065752					
		C) W/O RETARDER					
		E) W/RETARDER					
		F) FOR PRODUCT IMPROVEMENT ASK FOR KIT #071269					

From Y-7046 Up to 3-8164	DATE: 01/2014	PAGE: Y2-0750-00

AUTOMATIC TRANSMISSION - "WORLD" WITH DETROIT S-60

ITEM	PART	DESCRIPTION	XL45	MTH40	MTH45	MTH45S	NOTE
NS	550807	. O-RING 5.859 DIA x .140	1	1	1	1	
NS	550808	. O-RING 6.234 DIA x .140	1	1	1	1	
32	5011065	MALE ELBOW 90° / JIC 37° FITTING / #20JIC-Mx#20ORB-M STL VITON	2	2	2	2	
NS	501523	MALE ELBOW 90° / JIC 37° FITTING / #16JIC-Mx#16ORB-M STL	2	2	2	2	
40	5011065	MALE ELBOW 90° / JIC 37° FITTING / #20JIC-Mx#20ORB-M STL VITON	4	4	4	4	
41	070880	HOSE ASSY / #20 310MM	1	1	1	1	
42	070965	HOSE ASSY / #16 1890MM	1	1	1	1	
NS	070885	HOSE ASSY / #20 2018MM Up to 1-7413	1	1	1	1	
42	071221	HOSE ASSY / #20 2018MM From 1-7414	1	1	1	1	
43	070939	HOSE ASSY / #16 1505MM	1	1	1	1	
NS	051688	HOSE ASSY / #20 1505MM Up to 1-7413 / REPLACED BY: 071220	1	1	1	1	
43	071220	HOSE ASSY / #20 1560MM From 1-7414	1	1	1	1	
NS	503423	. HOSE FC-300-16 / HYDRAULIC	AR	AR	AR	AR	
NS	501343	. FEMALE CONNECTOR SWIVEL / JIC 37° FITTING / #20JIC-Fx#20 ZP	2	2	2	2	
NS	503516	. HOSE FC-300-20 / HYDRAULIC	AR	AR	AR	AR	
NS	501608	. FEMALE CONNECTOR SWIVEL / JIC 37° FITTING / #16JIC-Fx#16 STL	2	2	2	2	
NS	071027	PROTECTOR RUBBER / FIXED END OF HOSE 204MM X 311MM	1	1	1	1	
NS	071096	PROTECTOR SUPPORT SS ANGLE SHAPE 61MM X 73MM Up to 7-9240	1	1	1	1	C
43	071440	PROTECTOR SUPPORT SS "V" SHAPE 80MM HIGH From 7-9241		1	1	1	C
NS	071097	PROTECTOR SUPPORT SS 102MM X 90MM	1	1	1	1	E
NS	502559	SCREW CAP HEX M10-1.5x25 G8.8 ZP	1	1	1	1	B
NS	502644	WASHER FL 10.5x30.0x2.5 ZP	1	1	1	1	B
44	501575	MALE CONNECTOR / JIC 37° FITTING / #20JIC-Mx#20ORB-M STL VITON	1	1	1	1	
44	507558	MALE ELBOW 45° / JIC 37° FITTING / #20JIC-Mx#20ORB-M STL VITON	1	1	1	1	
NS							
NS		FOLLOWING PARTS ARE RELATED WITH					
NS		TRANSMISSION WITH RETARDER ONLY					
NS							
45	071014	SUPPORT / <> TRANS & ACUMULATOR / WTEC III	1	1	1	1	
47	502790	SCREW CAP HEX M8-1.25x20 G8.8 ZP	4	4	4	4	
NS	5001003	WASHER LO SPT 8.1x12.7x2.0 ZP	3	3	3	3	
NS	502543	NUT HEX M8-1.25 ZP	4	4	4	4	
		B) TO FIX PROTECTOR					
		C) W/O RETARDER					
		E) W/RETARDER					

From Y-7046 Up to 3-8164	DATE: 01/2014	PAGE: Y2-0750-00

AUTOMATIC TRANSMISSION - "WORLD" WITH DETROIT S-60

ITEM	PART	DESCRIPTION	XL45	MTH40	MTH45	MTH45S	NOTE
48	571745	ACCUMULATOR & SOLENOID / WTEC III / REPLACED BY: K571745	1	1	1	1	
50	5011112	FEMALE ELBOW 90° / JIC 37° FITTING / #6JIC-Mx3/8NPT-F STL	1	1	1	1	
51	140376	HOSE ASSY TEFLON #6 686MM	1	1	1	1	
NS	070882	HOSE ASSY TEFLON #6 570MM	1	1	1	1	
NS	141787	HOSE ASSY TEFLON #6 902MM	1	1	1	1	
NS	503065	. HOSE TEFLON #6 / S.L.	AR	AR	AR	AR	
NS	501595	. FEMALE CONNECTOR SWIVEL / JIC 37° FITTING / TEFLON / #6JIC-Fx#6 STL	2	2	2	2	
52	640488	VALVE, AIR FILL 1/8" NPT	1	1	1	1	
. NS	650164	. CAP VALVE / CHROME	1	1	1	1	
NS	641437	AIR PRESSURE REGULATOR 1/4" NPT / PLASTIC / REPLACED BY: 641472	1	1	1	1	
54	503404	TUBE, NYLON 3/8 O.D. / BLACK S.L.	AR	AR	AR	AR	H
NS	560479	CLAMP / 3/8" I.D. / REPLACED BY: 952625	1	1	1	1	
NS	500613	SCREW TP PAN PH #10x1/2 ZP	1	1	1	1	
60	N.S.P.	SUPPORT REAR / (29507888)	1		1		2
NS	070964	SUPPORT REAR		1		1	
61	070950	GUIDE REAR	1	1	1	1	
62	630118	RUBBER BUMPPER	1	1	1	1	
63	550642	WASHER	1	1	1	1	
NS	571351	WASHER, 1/2" I.D. FLAT / REPLACED BY: 500958	1	1	1	1	
64	500106	SCREW CAP HEX 1/2-20x6 G5 PT ZP	1	1	1	1	
65	500718	NUT HEX STO 1/2-20 ZP	1	1	1	1	
71	562357	RESISTANCE MODULE	1	1	1	1	
72	562381	RESISTANCE MODULE	1	1	1	1	
73	063782	CABLE ASSY / <> RESISTANCE MODULE & SWITCH	1	1	1	1	
74	070902	PRESSURES SWITH ASSY W/MANIFOLD	1	1	1	1	
75	070903	. MANIFOLD	1	1	1	1	
76	640999	. MALE ELBOW 90º / NTA FITTING / #6x1/4NPT-M BR / REPLACED BY: 641372	1	1	1	1	
77	501304	. PLUG SQUARE HEAD / PIPE FITTING / 1/4NPT-M BR	1	1	1	1	
78	562358	. PRESSURE SWITCH N.O. 2PSI / 1/8NPT	1	1	1	1	
79	562384	. PRESSURE SWITCH N.O. 4PSI / 1/8NPT	1	1	1	1	
80	562385	. PRESSURE SWITCH N.O. 7PSI / 1/8NPT	1	1	1	1	
		2) NOT SOLD BY PREVOST (SEE MANUFACTURING PART NUMBER AT END OF DESCRIPTION LINE)					
		H) REGULATOR & MANIFOLD					

From Y-7046 Up to 3-8164	DATE: 01/2014	PAGE: Y2-0750-00

AUTOMATIC TRANSMISSION - "WORLD" WITH DETROIT S-60

ITEM	PART	DESCRIPTION	XL45	MTH40	MTH45	MTH45S	NOTE
90	071170	HOSE ASSY / #4 24"	1	1	1	1	
. A	071167	. FEMALE CONNECTOR / HOSE BARB @ METRIC /	1	1	1	1	
. B	071166	. MALE CONNECTOR / HOSE BARB @ METRIC /	1	1	1	1	
91	061025	SUPPORT	1	1	1	1	
NS	504601	CLAMP / 5/16" I.D. x 375 HOLE	1	1	1	1	
92	571763	BREATHER	1	1	1	1	
100	571709	TRANSMISSION FILTER / MAINTENANCE KIT / REPLACED BY: 572050	AR	AR	AR	AR	I
101	N.S.S.	. FILTER	2	2	2	2	1
102	571692	. O-RING / (LARGE SQUARE CUT)	2	2	2	2	
103	571693	. O-RING / (SMALL)	2	2	2	2	
104	571694	. O-RING / DRAIN PLUG	2	2	2	2	
105	571695	DRAIN PLUG ASSY W/O-RING	1	1	1	1	
NS	682507	OIL, DEXRON III / TRANS (VRAC) Up to 2-7825	1	1	1	1	
NS	684016	OIL TRANSYND TRANSMISSION "WORLD" From 2-7826	1	1	1	1	
106	N.S.P.	COVER FILTER / (29507434)	2	2	2	2	2
107	N.S.P.	BOLT M10 X 1.5 X 55MM / (29505617)	AR	AR	AR	AR	2
108	N.S.P.	YOKE (1810) HALF ROUND(29511516/6.5-4-4521-1)	1	1	1	1	2
NS	N.S.P.	STRAP LOCK PLATE	1	1	1	1	2
NS	N.S.P.	BOLT M10-1.5 X 30MM GR 10.9	2	2	2	2	2
NS	N.S.P.	SEAL OUTPUT / (29515621)	1	1	1	1	2
109	N.P.N.	BOLT M10-1.5 X 30MM GR10.9	1	1	1	1	4
NS	683904	TESTING FOR GLYCOL CONTAMINATION IN TRANSMISSION OIL	1	1	1	1	
. NS	IS-99901A	. SEE INSTRUCTION SHEET	1	1	1	1	
200	071269	**OIL COOLER " WORLD" TRANSMISION "MODINE" - / "RETROFIT" From Y-7046 Up to 3-8164**					
		1) NOT SOLD SEPARATELY					
		2) NOT SOLD BY PREVOST (SEE MANUFACTURING PART					
		NUMBER AT END OF DESCRIPTION LINE)					
		4) NO PARTS NUMBER					
		I) (29526899)					

From Y-7046 Up to 3-8164	DATE: 01/2014	PAGE: Y2-0750-00

AUTOMATIC TRANSMISSION - "WORLD" WITH DETROIT S-60

ITEM	PART	DESCRIPTION	XL45	MTH40	MTH45	MTH45S	NOTE

From Y-7046 Up to 3-8164	DATE: 01/2014	PAGE: 071269
OIL COOLER " WORLD" TRANSMISION "MODINE" - / "RETROFIT"		

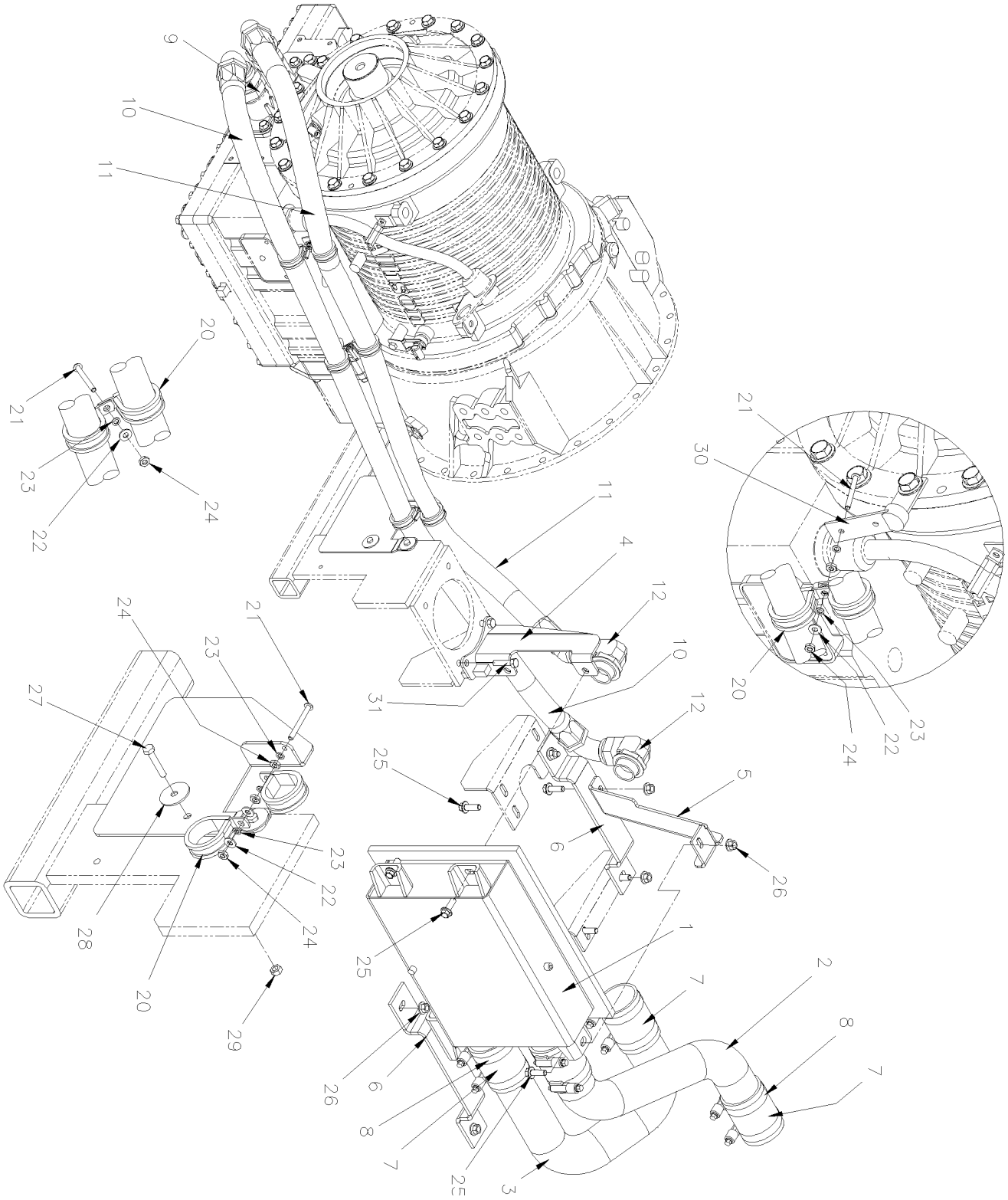

From Y-7046 Up to 3-8164	DATE: 01/2014	PAGE: 071269
OIL COOLER " WORLD" TRANSMISION "MODINE" - / "RETROFIT"		

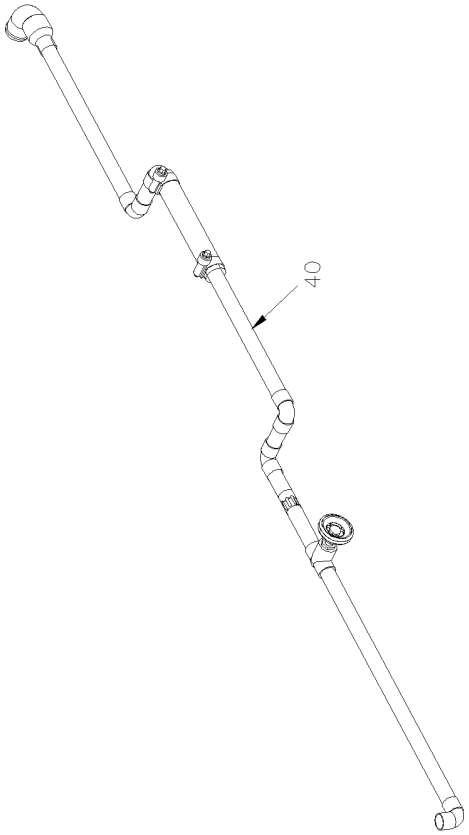

WITH MTH-45 WITH SMALL A/C
NOT INCLUDE WITH 071269

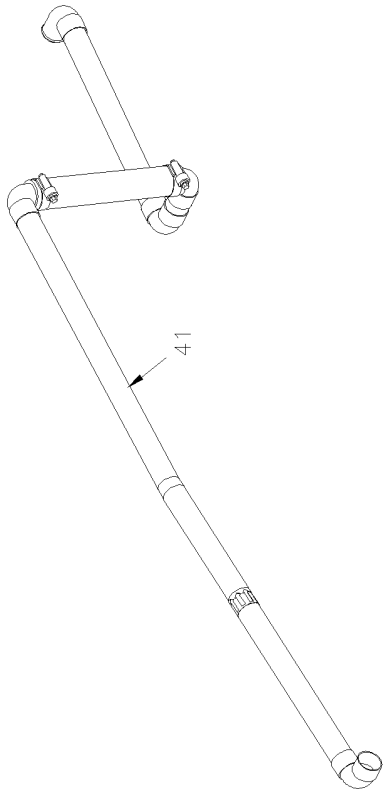

WITH MTH-45 & XL-45 WITH LARGE A/C
NOT INCLUDE WITH 071269

From Y-7046 Up to 3-8164	DATE: 01/2014	PAGE: 071269

OIL COOLER " WORLD" TRANSMISION "MODINE" - / "RETROFIT"

ITEM	PART	DESCRIPTION	XL45	MTH40	MTH45	MTH45S	NOTE
		PRODUCT IMPROVEMENT WITH TRANS WITH RETARDER					
1	571779	. OIL COOLER "MODINE" / SINGLE	1				
. NS	G1091499	_. GASKET	1				
. NS	G1091503	_. BOLTING BAR SHORT	2				
. NS	G1091502	_. BOLTING BAR LONG	2				
2	071256	. PIPE COOLER	1				
3	071255	. PIPE COOLER	1				
4	071258	. SUPPORT TRANS SIDE	1				
5	071254	. SUPPORT WATER PUMP SIDE	1				
6	071265	. ADAPTOR SUPPORT	2				
7	071250	. HOSE 2 3/4" I.D. X 100MM	4				
7	503395	. . HOSE SILICONE 4 PLY 2 3/4" I.D. x 3'	AR				
8	504562	. HOSE CLAMP / 2"3/4-3"5/8 / C.T. 350	8				
9	501575	. MALE CONNECTOR / JIC 37° FITTING / #20JIC-Mx#20ORB-M STL VITON	2				
10	071266	. HOSE ASSY / #20 1555MM	1				
11	071267	. HOSE ASSY / #20 1481MM	1				
12	5011065	. MALE ELBOW 90° / JIC 37° FITTING / #20JIC-Mx#20ORB-M STL VITON	2				
13	071260	. SUPPORT, HOSE	1				
20	952641	. CLAMP / 1 5/16" I.D.	4				
21	500579	. SCREW MA RND PH #10-24x1 3/4 ZP	2				
22	500470	. WASHER LO SPT .193x.334x.047 ZP	6				
23	500964	. WASHER FL .203x.500x.047 ZP	4				
24	500786	. NUT HEX #10-24 ZP	6				
25	946472	. SCREW CAP HEXF M10-1.5x30 G8.8 ZG603	9				
26	971098	. NUT HEXF STO M10-1.5 G8 ZP	2				
27	502818	. SCREW CAP HEX M6-1.0x35 G8.8 ZP	2				
28	500468	. WASHER FL .281x1.250x.065 ZP	2				
29	502621	. NUT HEX STO M6-1.0 ZP	2				
30	061129	. SUPPORT FLAT TWISTED / TUBE DIPSTICK	1				
31	500829	. SCREW CAP HEX M10-1.5x40 G8.8 ZP	2				
NS	373895	PIPE RETURN / ENGINE WATER PUMP		1		1	B
NS	373903	PIPE RETURN / ENGINE WATER PUMP				1	C

B) REQUIRE FOR BUS & MTH-45 WITH LARGE A/C SYSTEM AND IT NOT INCLUDE WITH KIT # 071269

C) USE ONLY WITH MTH-45 WITH SMALL AC SYSTEM WITH RETARDER AND IT NOT INCLUDE WITH KIT # 071269

From Y-7046 Up to 3-8164	DATE: 01/2014	PAGE: 071269

OIL COOLER " WORLD" TRANSMISION "MODINE" - / "RETROFIT"

ITEM	PART	DESCRIPTION	XL45	MTH40	MTH45	MTH45S	NOTE

From 4-8165 Up to 8-9339	DATE: 01/2014	PAGE: Y2-0750-01
AUTOMATIC TRANSMISSION - "WORLD" WITH DETROIT S-60		

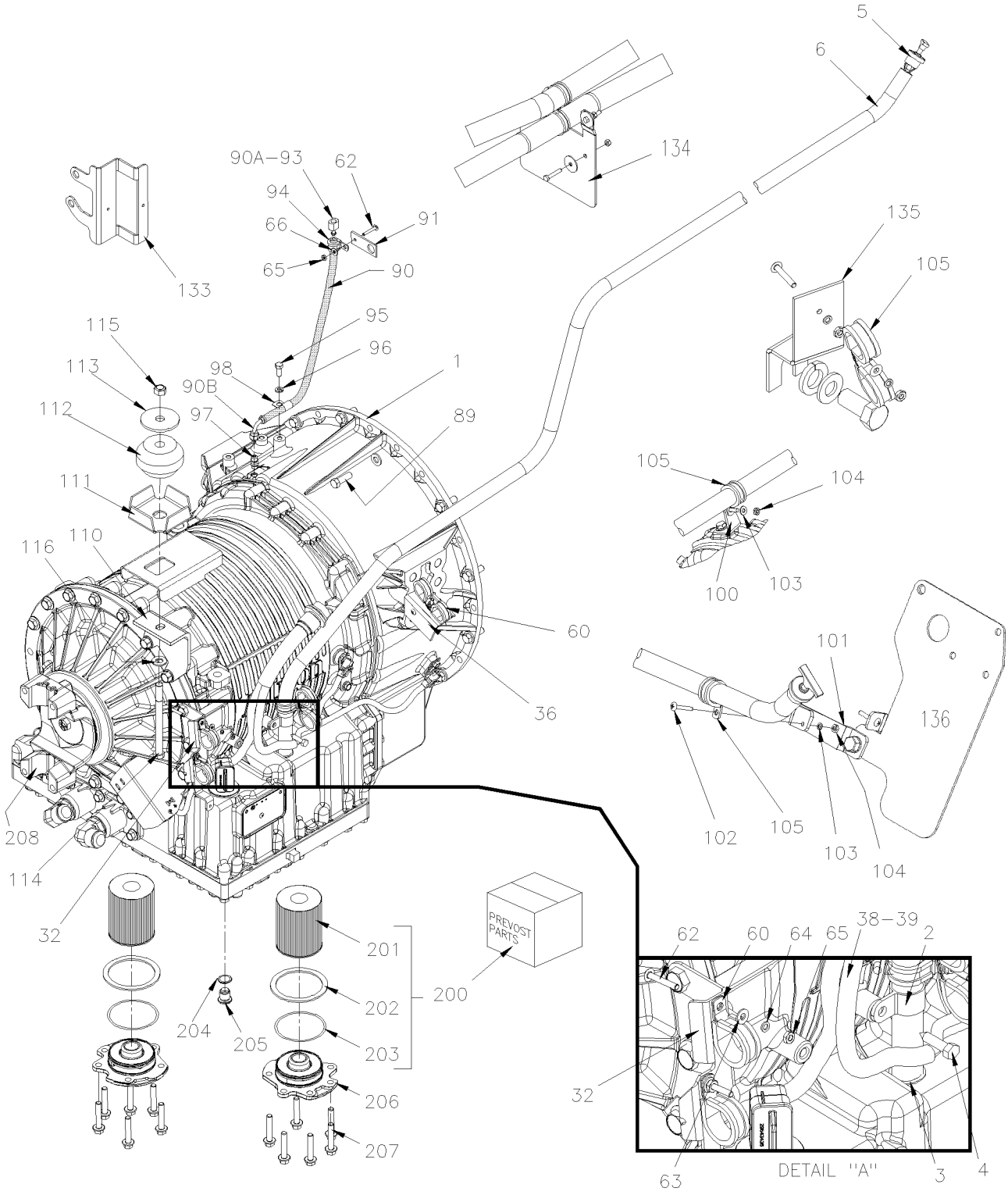

From 4-8165 Up to 8-9339	DATE: 01/2014	PAGE: Y2-0750-01
AUTOMATIC TRANSMISSION - "WORLD" WITH DETROIT S-60		

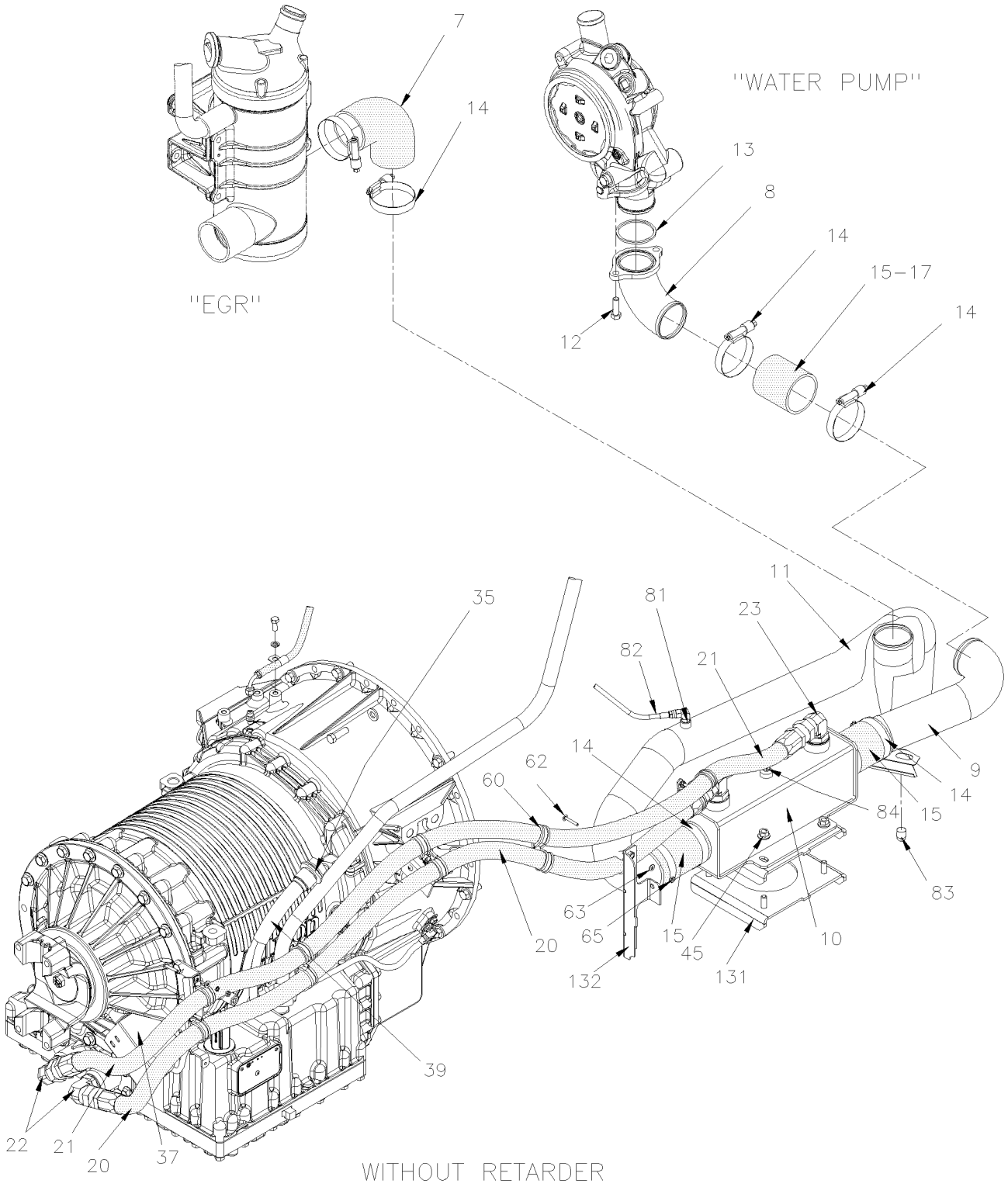

From 4-8165 Up to 8-9339	DATE: 01/2014	PAGE: Y2-0750-01

AUTOMATIC TRANSMISSION - "WORLD" WITH DETROIT S-60

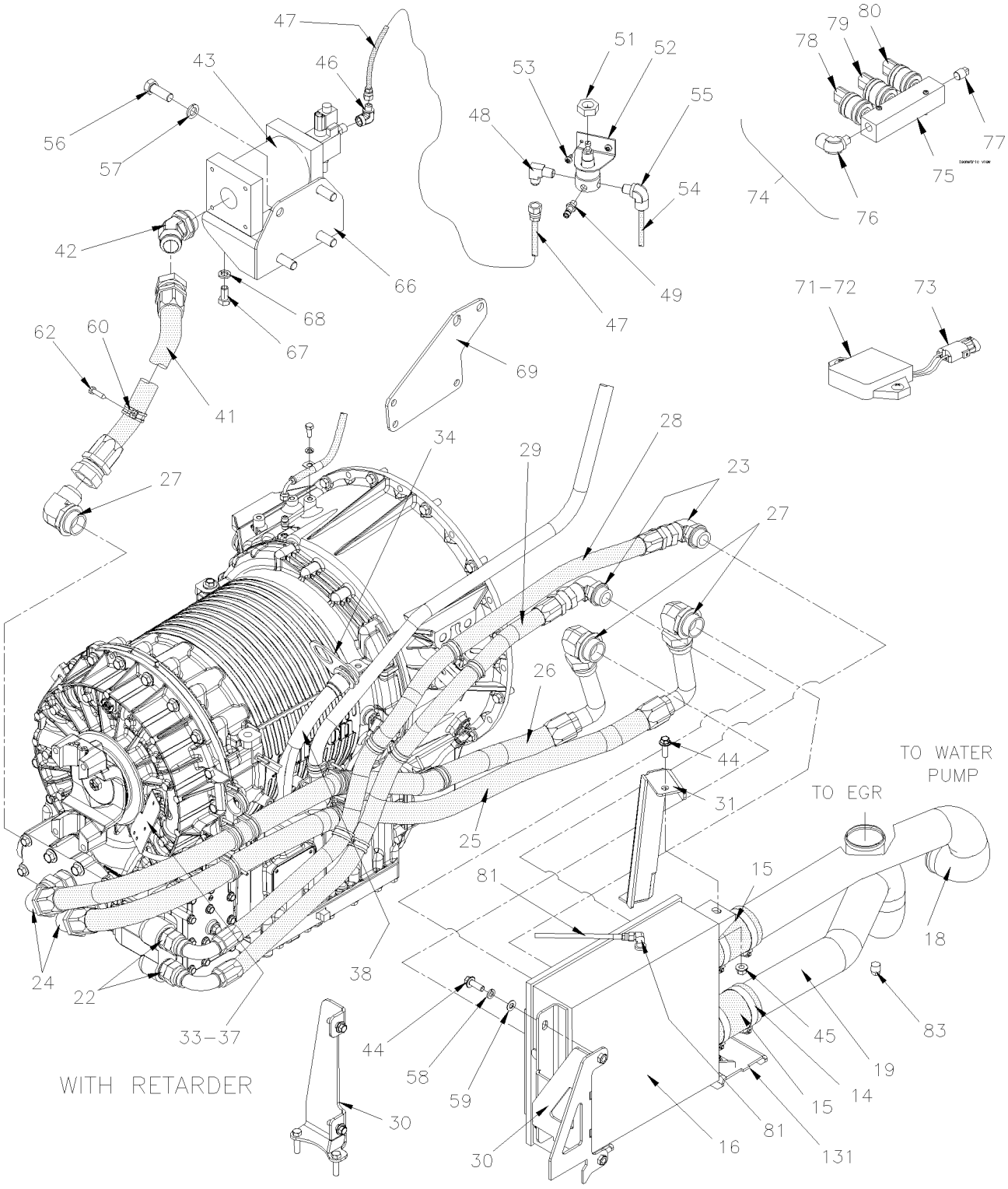

From 4-8165 Up to 8-9339	DATE: 01/2014	PAGE: Y2-0750-01

AUTOMATIC TRANSMISSION - "WORLD" WITH DETROIT S-60

ITEM	PART	DESCRIPTION	XL45	MTH40	MTH45	MTH45S	NOTE
		ARE USED WITH 12.7 LITERS / 350HP					
	571680	TRANSMISSION ASSY B500 / WTEC III Up to 6-8906	1				
	571742	E.C.U. B500 / WTEC III Up to 6-8906	1				
		THE NEXT FOLLOWING TRANSMISSION W/RETARDER					
		ARE USED WITH 12.7 LITERS / 350HP					
	571781	TRANSMISSION ASSY B500R / WTEC III Up to 6-8906	1				
	571742	E.C.U. B500 / WTEC III Up to 6-8906	1				
		THE NEXT FOLLOWING TRANSMISSION					
		ARE USED WITH 12.7 LITERS / 400HP					
	571702	TRANSMISSION ASSY B500 / WTEC III Up to 6-8906	1				
	571756	TRANSMISSION ASSY HD4060 / WTEC III Up to 7-9043		1	1	1	
	572033	TRANSMISSION ASSY 4000MH / GEN IV From 7-9044			1	1	
	571743	E.C.U. HD4060R / WTEC III Up to 7-9043	1				
	572037	E.C.U. HD4060R / GEN IV From 7-9044			1	1	
		THE NEXT FOLLOWING TRANSMISSION W/RETARDER					
		ARE USED WITH 12.7 LITERS / 400HP					
	571719	TRANSMISSION ASSY B500R Up to 6-8906	1				
	571780	TRANSMISSION ASSY B500R / WTEC III Up to 6-8906	1				
	571757	TRANSMISSION ASSY HD4060		1	1	1	
	571782	TRANSMISSION ASSY HD4060 / WTEC III Up to 7-9043		1	1	1	
	572034	TRANSMISSION ASSY 4000MH / GEN IV From 7-9044			1	1	
	571743	E.C.U. HD4060R / WTEC III Up to 7-9043	1				
	572037	E.C.U. HD4060R / GEN IV From 7-9044			1	1	

From 4-8165 Up to 8-9339	DATE: 01/2014	PAGE: Y2-0750-01

AUTOMATIC TRANSMISSION - "WORLD" WITH DETROIT S-60

ITEM	PART	DESCRIPTION	XL45	MTH40	MTH45	MTH45S	NOTE
1		TRANSMISSION ASSY / SEE ABOVE					
2	504602	CLAMP / 1" I.D. X .375 HOLE	1				
3	571662	GROMMET RUBBER / <> TUBE & TRANS	1				
4	5001473	SCREW CAP HEXS 5/16-18x3/4 NYRT	1				
5	571778	TRANS DIPSTICK 2211.7MM Up to 4-8267	1				
5	572023	TRANS DIPSTICK 2261.7MM From 4-8268	1				
6	071241	TUBE DIPSTICK Up to 4-8267	1				
6	071326	TUBE DIPSTICK From 4-8268	1				
7	052600	ELBOW 90° X 2 3/4" I.D. / 110MM x 110MM C/C / SILICONE Up to 8-9293 / REPLACED BY: 052898	1				
7	052898	ELBOW 90° X 2 3/4" I.D. / 110MM x 110MM C/C / SILICONE From 8-9294	1				
8	071231	ELBOW 90°	1				
9	071240	PIPE WATER PUMP TO OIL COOLER / W/O RETARDER	1				
10	571769	OIL COOLER "MODINE" / SINGLE	1				
11	071239	PIPE OIL COOLER TO EGR / W/O RETARDER / REPLACED BY: 071543	1				
11	071543	PIPE OIL COOLER TO EGR / SS / W/O RETARDER SERVICE	1				
12	510779	BOLT / TO FIX ELBOW	2				
13	510778	O-RING 2.612 I.D.	1				
14	504562	HOSE CLAMP / 2"3/4-3"5/8 / C.T. 350	8				
15	071250	HOSE 2 3/4" I.D. X 100MM	2				
15	503395	. HOSE SILICONE 4 PLY 2 3/4" I.D. x 3'	AR				
16	571770	OIL COOLER "MODINE" / DOUBLE / REPLACED BY: 572046	1				
17	071268	HOSE SILICONE 4 PLY 2 3/4" I.D X 84MM	1				
17	503395	. HOSE SILICONE 4 PLY 2 3/4" I.D. x 3'	AR				
18	071234	PIPE WATER PUMP TO OIL COOLER Up to 4-8345	1				
18	071338	PIPE WATER PUMP TO OIL COOLER From 4-8346	1				
19	071233	PIPE OIL COOLER TO EGR Up to 4-8345	1				
19	071541	PIPE OIL COOLER TO EGR / SS SERVICE Up to 4-8345	1				
19	071339	PIPE OIL COOLER TO EGR From 4-8346 / REPLACED BY: 071542	1				

From 4-8165 Up to 8-9339	DATE: 01/2014	PAGE: Y2-0750-01

AUTOMATIC TRANSMISSION - "WORLD" WITH DETROIT S-60

ITEM	PART	DESCRIPTION	XL45	MTH40	MTH45	MTH45S	NOTE
19	071542	PIPE OIL COOLER TO EGR / SS SERVICE From 4-8346	1				
20	071262	HOSE ASSY / #16 1480MM	1				C
20	079024	HOSE ASSY / #16 1520MM	1				
21	071261	HOSE ASSY / #16 1795MM	1				B
21	079023	HOSE ASSY / #16 1840MM	1				
22	501573	MALE CONNECTOR / JIC 37° FITTING / #16JIC-Mx#16ORB-M STL	2				O
22	501523	MALE ELBOW 90° / JIC 37° FITTING / #16JIC-Mx#16ORB-M STL	2				O
22	501573	MALE CONNECTOR / JIC 37° FITTING / #16JIC-Mx#16ORB-M STL	2				R
23	501523	MALE ELBOW 90° / JIC 37° FITTING / #16JIC-Mx#16ORB-M STL	2				
24	501575	MALE CONNECTOR / JIC 37° FITTING / #20JIC-Mx#20ORB-M STL VITON	2				
25	071246	HOSE ASSY / #20 1590MM Up to 4-8345	1				
25	071332	HOSE ASSY / #20 1385MM From 4-8346	1				
26	071245	HOSE ASSY / #20 1492MM Up to 4-8345	1				
26	071331	HOSE ASSY / #20 1287MM From 4-8346	1				
27	5011065	MALE ELBOW 90° / JIC 37° FITTING / #20JIC-Mx#20ORB-M STL VITON	2				
28	071247	HOSE ASSY / #16 1385MM Up to 4-8345	1				
28	071333	HOSE ASSY / #16 1240MM From 4-8346	1				
29	071248	HOSE ASSY / #16 1141MM Up to 4-8345	1				
29	071334	HOSE ASSY / #16 996MM From 4-8346	1				
30	071232	ATTACHMENT / 305MM HIGHT Up to 4-8345	1				
30	071343	ATTACHMENT / 255MM HIGHT From 4-8346	1				
31	071244	ATTACHMENT Up to 4-8345	1				
31	071328	ATTACHMENT From 4-8346	1				
32	071259	SUPPORT, HOSE Up to 7-9043	1				
32	071407	SUPPORT HOSE From 7-9044	1				
33	071096	PROTECTOR SUPPORT SS ANGLE SHAPE 61MM X 73MM Up to 7-9241	1				O,S
33	071097	PROTECTOR SUPPORT SS 102MM X 90MM Up to 7-9241	1				R,S
34	071035	SUPPORT CABLE HARNESS / W/2 HOLES / WTEC III Up to 7-9000	1				
35	071403	SUPPORT CABLE HARNESS / W/1 HOLE & 1 STUD / GEN IV From 7-9001	1				
36	070884	SUPPORT "Z" SHAPE Up to 4-8345	1				
		B) PRODUCT IMPROVEMENT CORRODING HOSE FITTING,					
		CHANGE FOR HOSE # 079023 WITH 1 FITTING #					
		501523					
		C) PRODUCT IMPROVEMENT CORRODING HOSE CHANGE FOR					
		HOSE # 079024 WITH 1 FITTING # 501523					
		O) WITHOUT RETARDER					
		R) WITH RETARDER					
		S) AS SHOWN					

From 4-8165 Up to 8-9339	DATE: 01/2014	PAGE: Y2-0750-01

AUTOMATIC TRANSMISSION - "WORLD" WITH DETROIT S-60

ITEM	PART	DESCRIPTION	XL45	MTH40	MTH45	MTH45S	NOTE
36	071305	SUPPORT "J" SHAPE From 4-8346	1				
37	071440	PROTECTOR SUPPORT SS "V" SHAPE 80MM HIGH From 7-9044	1				
37	079022	PROTECTOR SUPPORT SS "V" SHAPE 74MM HIGH From 7-9044	1				
38	066208	CABLE HARNESS / SENSOR WTEC W/RETARDER / MUX From 7-9096	1				
39	066209	CABLE HARNESS / SENSOR WTEC W/OUT RETARDER / MUX From 7-9096	1				
NS	061129	SUPPORT FLAT TWISTED / TUBE DIPSTICK Up to 7-9043	1				
39	071028	PROTECTOR RUBBER CABLE HARNESS / FIXED <> HOSE & TRANS Up to 4-8345	1				
NS	071341	PROTECTOR RUBBER CABLE HARNESS & HOSES From 4-8346 Up to 7-9043	1				
NS	071408	PROTECTOR RUBBER CABLE HARNESS & HOSES From 7-9044	1				O
NS	071404	PROTECTOR RUBBER CABLE HARNESS & HOSES From 7-9044	1				R
41	070880	HOSE ASSY / #20 310MM Up to 4-8345					
41	071335	HOSE ASSY / #20 770MM From 4-8346	1				
42	507558	MALE ELBOW 45º / JIC 37° FITTING / #20JIC-Mx#20ORB-M STL VITON	1				
43	571745	ACCUMULATOR & SOLENOID / WTEC III / REPLACED BY: K571745	1				
43	572030	ACCUMULATOR & SOLENOID / GEN IV	1				
43	571708	. VALVE SOLONOID 12V	1				
44	5001741	SCREW CAP HEXF M10-1.5x30 G8.8 ZG603	5				
45	5001760	NUT HEXF STO M10-1.5 G8 ZP / REPLACED BY: 5001727	5				
46	5011112	FEMALE ELBOW 90° / JIC 37° FITTING / #6JIC-Mx3/8NPT-F STL	1				
47	140376	HOSE ASSY TEFLON #6 686MM Up to 6-8906	1				
47	142486	HOSE ASSY TEFLON #6 610MM From 4-8346			1		
47	142483	HOSE ASSY TEFLON #6 450MM From 4-8346		1		1	
48	501687	MALE CONNECTOR / JIC 37° FITTING / #6JIC-Mx1/4NPT-M STL	1				
49	640488	VALVE, AIR FILL 1/8" NPT	1				
. NS	650164	. CAP VALVE / CHROME	1				
50	641472	AIR PRESSURE REGULATOR 1/4" NPT / COPPER	1				
51	500734	NUT HEX JAM 3/4-16 ZP	1				
52	142013	SUPPORT AIR REGULATOR / ANGLE 90DEG STYLE	1				
53	500535	SCREW TP CAP HEX #14x3/4 ZP	2				
NS	500473	WASHER LO SPT .262x.489x.062 ZP	2				
		O) WITHOUT RETARDER					
		R) WITH RETARDER					

From 4-8165 Up to 8-9339	DATE: 01/2014	PAGE: Y2-0750-01

AUTOMATIC TRANSMISSION - "WORLD" WITH DETROIT S-60

ITEM	PART	DESCRIPTION	XL45	MTH40	MTH45	MTH45S	NOTE
54	503404	TUBE, NYLON 3/8 O.D. / BLACK S.L.	AR				
55	641372	MALE ELBOW 90° NON-SWIVEL / PUSH-IN FITTING #6x1/4NPT-M BR	1				
56	500225	SCREW CAP HEX 5/8-11x1 G5 ZP	3				
56	500817	SCREW CAP HEX 5/8-11x1 3/4 G5 ZP	3				
57	500484	WASHER LO SPT .635x1.079x.156 ZP	3				
57	500802	WASHER LO SPT 16.2x37.4x3.5 ZP	3				
58	3852496	WASHER LO SPT 10.2x18.1x2.2 ZG603	2				
59	500832	WASHER FL .406x.812x.065 ZG603	2				
60	952637	CLAMP / 1"1/16 I.D.	AR				
60	952641	CLAMP / 1 5/16" I.D.	AR				
62	500574	SCREW MA TR PH #10-24x1 1/4 SS	AR				
63	500964	WASHER FL .203x.500x.047 ZP	AR				
64	500470	WASHER LO SPT .193x.334x.047 ZP	AR				
65	500786	NUT HEX #10-24 ZP	AR				
66	071329	SUPPORT / <> TRANS & ACUMULATOR / WTEC III (168mm c/c holes)	1				
66	071400	SUPPORT / <> TRANS & ACUMULATOR / GEN IV (155mm c/c holes)	1				
67	500213	SCREW CAP HEX 1/2-13x1 G5 ZP	4				
68	500482	WASHER LO SPT .506x.873x.125 ZP	4				
69	071014	SUPPORT / <> TRANS & ACUMULATOR / WTEC III Up to 4-8345	1				
71	562357	RESISTANCE MODULE	1				
72	562381	RESISTANCE MODULE	1				
73	063782	CABLE ASSY / <> RESISTANCE MODULE & SWITCH	1				
74	070902	PRESSURES SWITH ASSY W/MANIFOLD	1				
75	070903	MANIFOLD	1				
76	640999	MALE ELBOW 90º / NTA FITTING / #6x1/4NPT-M BR / REPLACED BY: 641372	1				
77	501304	PLUG SQUARE HEAD / PIPE FITTING / 1/4NPT-M BR	1				
78	562358	PRESSURE SWITCH N.O. 2PSI / 1/8NPT	1				
79	562384	PRESSURE SWITCH N.O. 4PSI / 1/8NPT	1				
80	562385	PRESSURE SWITCH N.O. 7PSI / 1/8NPT Up to A-9625	1				
81	501037	MALE ELBOW 90º / SAE 45º FITTING / #4FL-Mx1/4NPT-M BR	1				

From 4-8165 Up to 8-9339	DATE: 01/2014	PAGE: Y2-0750-01

AUTOMATIC TRANSMISSION - "WORLD" WITH DETROIT S-60

ITEM	PART	DESCRIPTION	XL45	MTH40	MTH45	MTH45S	NOTE
81	501027	MALE CONNECTOR / SAE 45º FITTING / #4FL-Mx1/4NPT-M BR	1				
NS	053532	HOSE ASSY TEFLON #4 1250MM	1				
NS	052509	HOSE ASSY TEFLON #4 1170MM	1				
83	501129	EXTERNAL SEAL DRAIN 1/4 NPT Up to 8-9293	1				
83	501449	PLUG HEXS / PIPE FITTING / 3/8NPT-M STL From 8-9294 Up to 9-9642	1				
83	501305	PLUG SQUARE HEAD / PIPE FITTING / 3/8NPT-M BR From 9-9643	1				
84	501304	PLUG SQUARE HEAD / PIPE FITTING / 1/4NPT-M BR	1				
85	061025	SUPPORT	1				
88	502719	SCREW CAP HEX M10-1.5x20 SS EMN	1				
89	5001427	SCREW CAP HEX 7/16-14x1 3/8 G5 ZP	12				A
NS	500853	WASHER LO EXT .437x.760x.036 ZP	12				A
90	071170	HOSE ASSY / #4 24"	1				
. A	071167	. FEMALE CONNECTOR / HOSE BARB @ METRIC /	1				
. B	071166	. MALE CONNECTOR / HOSE BARB @ METRIC /	1				
91	060840	SUPPORT HARNESS	1				
92	504601	CLAMP / 5/16" I.D. x 375 HOLE	1				
93	571763	BREATHER	1				
94	952627	CLAMP / 1/2" I.D.	1				
95	502862	SCREW CAP HEX M8-1.25x20 G8.8 ZG603	1				
96	500942	WASHER LO SPT .317x.586x.078 ZG603	1				
97	071166	MALE CONNECTOR / HOSE BARB @ METRIC / #4x M10-1.5-M BR	1				
97	071497	MALE CONNECTOR / SAE 45º @ METRIC / #4FL-Mx M10-1.5 M BR	1				
98	504601	CLAMP / 5/16" I.D. x 375 HOLE	1				
100	071392	SUPPORT / TUBE DIPSTICK / ANGLE W/STUD Up to 8-9276	1				
NS	071363	SUPPORT / TUBE DIPSTICK / "U" SHAPE 132MM Up to 8-9276	1				
NS	500574	SCREW MA TR PH #10-24x1 1/4 SS Up to 8-9276	1				
NS	500470	WASHER LO SPT .193x.334x.047 ZP Up to 8-9276	1				
NS	500786	NUT HEX #10-24 ZP Up to 8-9276	1				
105	952635	CLAMP / 1" I.D. Up to 8-9276	1				
110	N.S.P.	SUPPORT REAR / (29507888) Up to 4-8345	1				2
		2) NOT SOLD BY PREVOST (SEE MANUFACTURING PART					
		NUMBER AT END OF DESCRIPTION LINE)					
		A) TO FIX TRANSMISSION TO ENGINE					

From 4-8165 Up to 8-9339	DATE: 01/2014	PAGE: Y2-0750-01

AUTOMATIC TRANSMISSION - "WORLD" WITH DETROIT S-60

ITEM	PART	DESCRIPTION	XL45	MTH40	MTH45	MTH45S	NOTE
110	070964	SUPPORT REAR Up to 4-8345	1				
111	070950	GUIDE REAR Up to 4-8345	1				
112	630118	RUBBER BUMPPER Up to 4-8345	1				
113	550642	WASHER Up to 4-8345	1				
114	500106	SCREW CAP HEX 1/2-20x6 G5 PT ZP Up to 4-8345	1				
115	500718	NUT HEX STO 1/2-20 ZP	1				
116	500958	WASHER FL .531x1.062x.095 SS	1				
120	502830	SCREW CAP HEX M6-1.0x20 G8.8 ZG603	AR				
121	500877	WASHER FL .250x.562x.065 ZG603	AR				
122	952635	CLAMP / 1" I.D.	AR				
131	Y2-0150-00	**ENGINE CRADLE - WITH DETROIT S-60**					
133	071259	SUPPORT, HOSE From 3-7976 Up to 4-8345	1				
134	071260	SUPPORT, HOSE From 3-7976 Up to 4-8346	1				
135	070884	SUPPORT "Z" SHAPE Up to 3-7975	1				
136	052560	SUPPORT, COOLANT FILTER From 4-8268	1				
NS	683904	TESTING FOR GLYCOL CONTAMINATION IN TRANSMISSION OIL	1				
. NS	IS-99901A	. SEE INSTRUCTION SHEET	1				
200	571709	TRANSMISSION FILTER / MAINTENANCE KIT / REPLACED BY: 572050	1				
200	572050	TRANSMISSION FILTER / MAINTENANCE KIT	AR				
. NS	571692	. O-RING / (LARGE SQUARE CUT)	2				
. NS	571693	. O-RING / (SMALL)	2				
. NS	571694	. O-RING / DRAIN PLUG	2				
. NS	571695	. DRAIN PLUG ASSY W/O-RING	1				
201	N.S.S.	. FILTER	2				1
202	571692	. O-RING / (LARGE SQUARE CUT)	2				
203	571693	. O-RING / (SMALL)	2				
204	571694	. O-RING / DRAIN PLUG	2				
205	571695	DRAIN PLUG ASSY W/O-RING	1				
		1) NOT SOLD SEPARATELY					

From 4-8165 Up to 8-9339	DATE: 01/2014	PAGE: Y2-0750-01

AUTOMATIC TRANSMISSION - "WORLD" WITH DETROIT S-60

ITEM	PART	DESCRIPTION	XL45	MTH40	MTH45	MTH45S	NOTE
NS	071249	DECAL "TranSynd OIL ONLY" ENG & FRANCAIS	1				
NS	071364	DECAL "TranSynd OIL ONLY" ENG & SPANISH	1				
NS	684016	OIL TRANSYND TRANSMISSION "WORLD"	1				
206	N.S.P.	COVER FILTER / (29507434)	2				2
207	N.S.P.	BOLT M10 X 1.5 X 55MM / (29505617)	AR				2
208	N.S.P.	YOKE (1810) HALF ROUND(29511516/6.5-4-4521-1)	1				2
NS	N.S.P.	STRAP LOCK PLATE	1				2
NS	N.S.P.	BOLT M10-1.5 X 30MM GR 10.9	2				2
NS	N.S.P.	SEAL OUTPUT / (29515621)	1				2
NS	N.P.N.	BOLT M10-1.5 X 30MM GR10.9	1				4
		2) NOT SOLD BY PREVOST (SEE MANUFACTURING PART					
		NUMBER AT END OF DESCRIPTION LINE)					
		4) NO PARTS NUMBER					

From 4-8165 Up to 8-9339	DATE: 01/2014	PAGE: Y2-0750-01

AUTOMATIC TRANSMISSION - "WORLD" WITH DETROIT S-60

ITEM	PART	DESCRIPTION	XL45	MTH40	MTH45	MTH45S	NOTE

From Y-7046 Up to 8-9339	DATE: 01/2014	PAGE: Y2-0755-15
SHIFTER ELECTRONIC - "WORLD" TRANSMISSION		

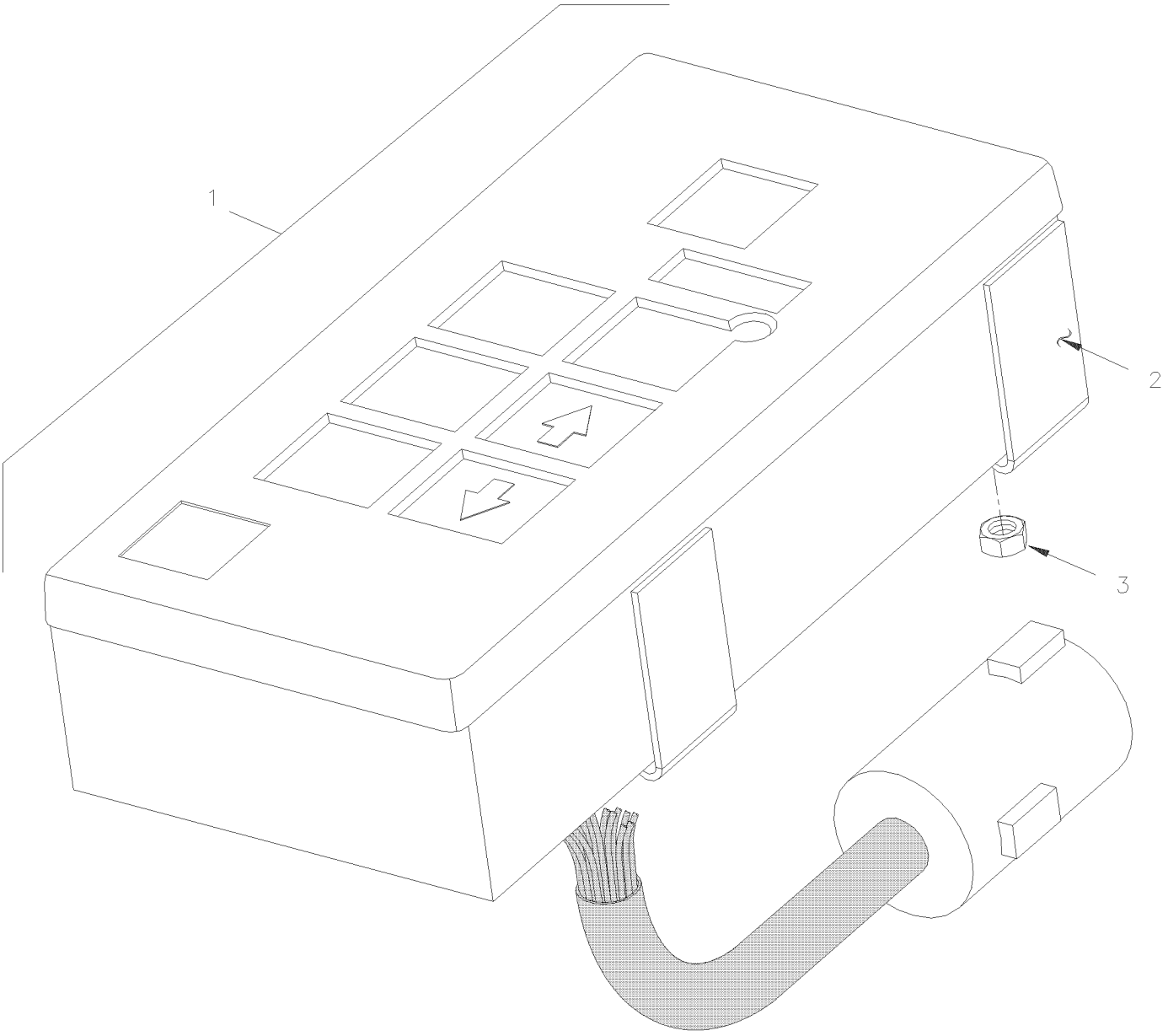

From Y-7046 Up to 8-9339	DATE: 01/2014	PAGE: Y2-0755-15

SHIFTER ELECTRONIC - "WORLD" TRANSMISSION

ITEM	PART	DESCRIPTION	XL45	MTH40	MTH45	MTH45S	NOTE
1	571718	SHIFTER, SELECTOR "WORLD" / WTEC III Up to 7-9000	1	1	1	1	
1	572031	SHIFTER, SELECTOR "WORLD" / GEN IV From 7-9001			1	1	
2	N.S.P.	. BRACKET	2	2	2	2	2
3	500423	. NUT HEX NYRT #10-32 SS	4	4	4	4	
		2) NOT SOLD BY PREVOST (SEE MANUFACTURING PART					
		NUMBER AT END OF DESCRIPTION LINE)					

From Y-7046 Up to 8-9339	DATE: 01/2014	PAGE: Y2-0760-00
RETARDER SELECTOR SWITCH - "WORLD"		

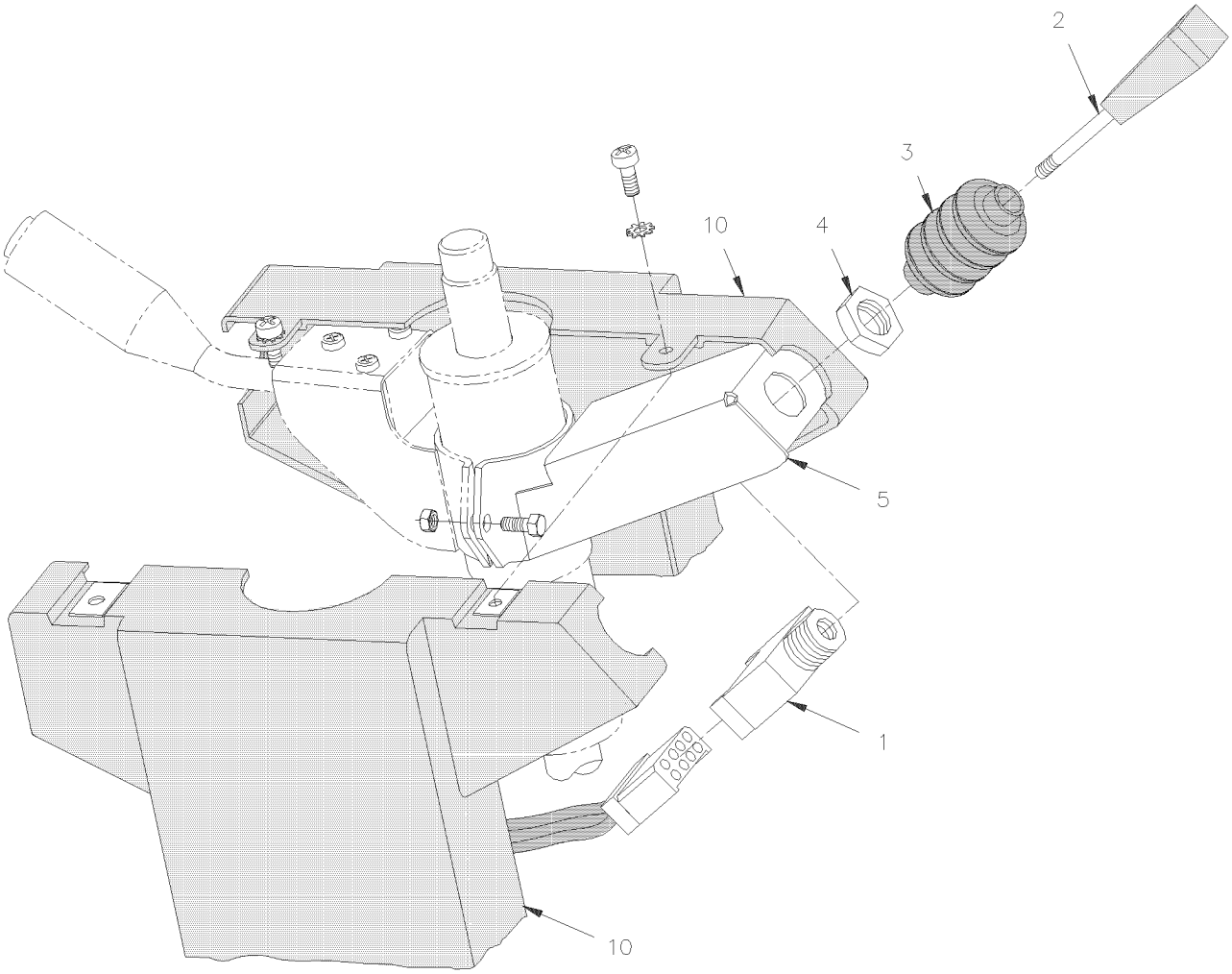

From Y-7046 Up to 8-9339	DATE: 01/2014	PAGE: Y2-0760-00

RETARDER SELECTOR SWITCH - "WORLD"

ITEM	PART	DESCRIPTION	XL45	MTH40	MTH45	MTH45S	NOTE
1	562356	SWITCH ASSY / W/LEVER & BOOT / 6 POSITIONS	1	1	1	1	
2	N.S.S.	. LEVER	1	1	1	1	1
3	N.S.S.	. BOOT	1	1	1	1	1
4	N.S.S.	. NUT JAM	1	1	1	1	1
5	N.P.N.	SUPPORT CONTROL SWITCH	1	1	1	1	4
10	Y2-1407-00	**STEERING COLUMN & COVER - INSTALLATION**					
		1) NOT SOLD SEPARATELY					
		4) NO PARTS NUMBER					

From Y-7046 Up to 8-9339	DATE: 01/2014	PAGE: Y2-09
PROPELLER SHAFT		

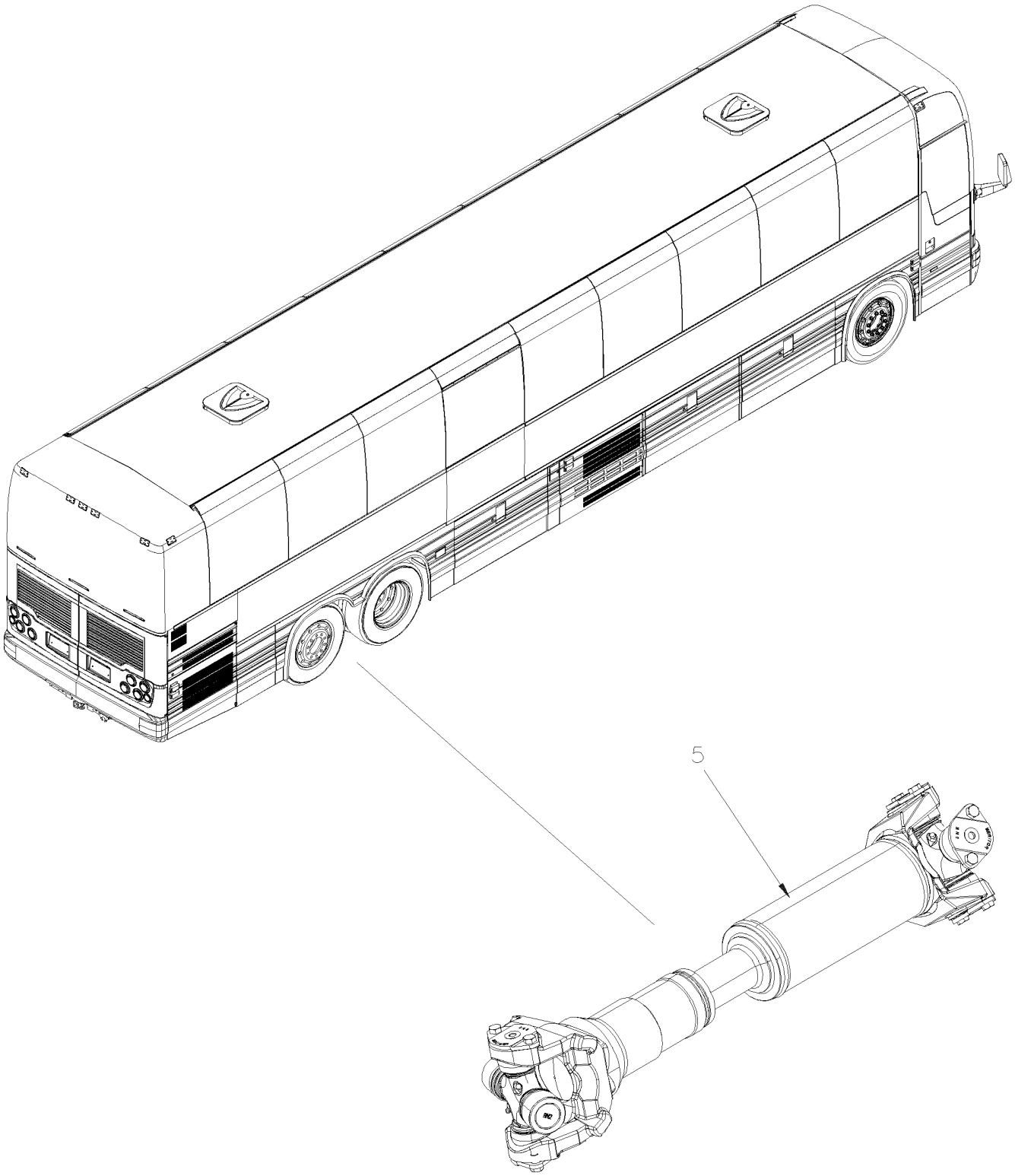

From Y-7046 Up to 8-9339	DATE: 01/2014	PAGE: Y2-09

PROPELLER SHAFT

ITEM	PART	DESCRIPTION	XL45	MTH40	MTH45	MTH45S	NOTE
5	Y2-0905-00	**PROPELLER SHAFT From Y-7046 Up to 8-9339**					

From Y-7046 Up to 8-9339	DATE: 01/2014	PAGE: Y2-0905-00
PROPELLER SHAFT		

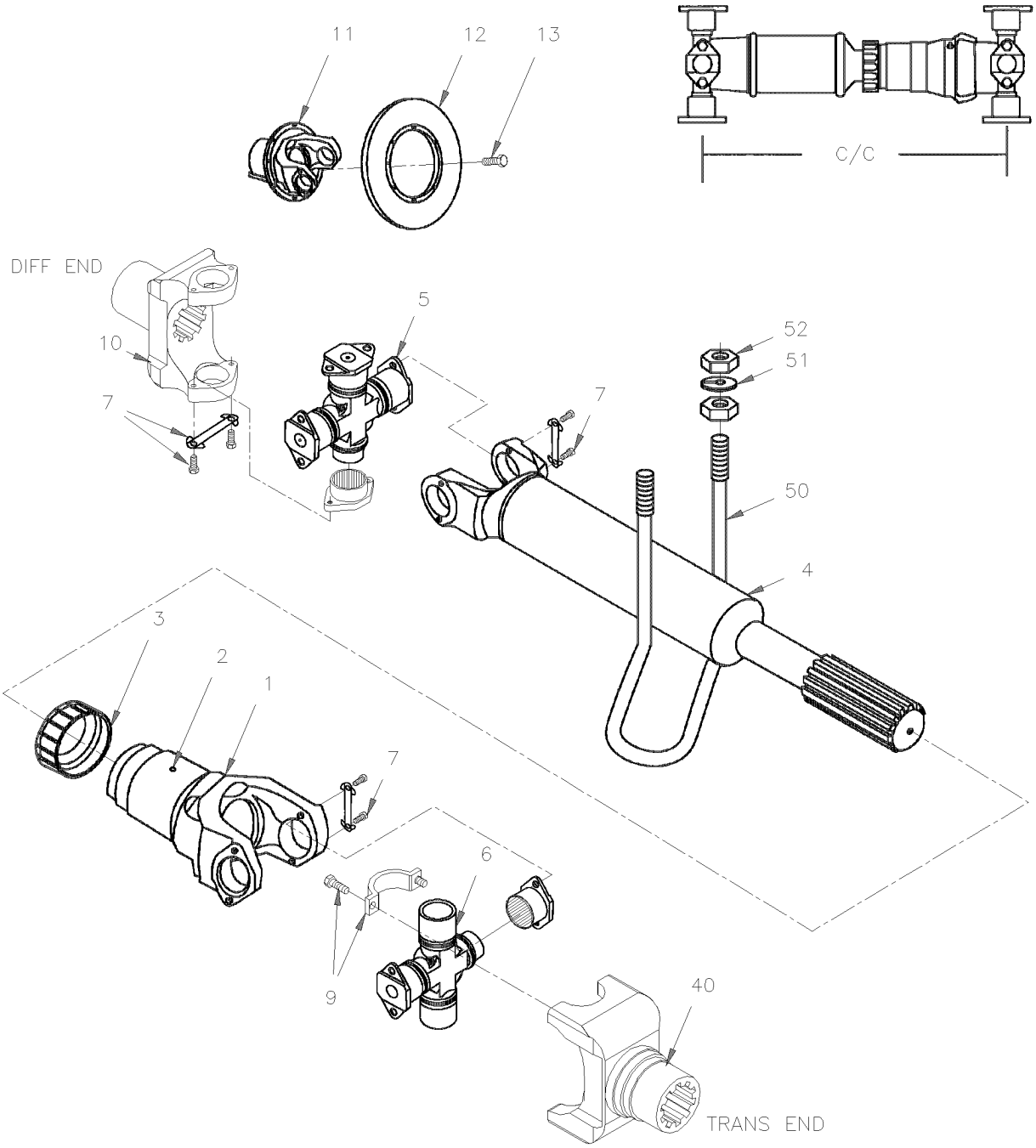

From Y-7046 Up to 8-9339	DATE: 01/2014	PAGE: Y2-0905-00

PROPELLER SHAFT

ITEM	PART	DESCRIPTION	XL45	MTH40	MTH45	MTH45S	NOTE
		MESURE FROM C/C OF BEARING CAP					
		W/MINIMUM COLLAPSED					
		PROPELLER SHAFT SERIES 1810					
		USED WITH SERIES 60 ENGINE					
NS	580070	SHAFT ASSY 39" C/C	1		1		
	580075	SHAFT ASSY 14" C/C Up to 7-9095		1		1	
	580083	SHAFT ASSY 17.937" C/C From 7-9096				1	
	580080	SHAFT ASSY 33" C/C W/MANUAL TRANSMISSION	1				M,Z
NS							
1	580065	. SLIP YOKE	1		1		A
. NS	580078	. . WELSH PLUG / PLASTIC BLUE 3 1/4" O.D. THIN	1		1		
1	580066	. SLIP YOKE		1		1	B
. NS	580084	. . WELSH PLUG / PLASTIC BLUE 3 1/4" O.D. DEEP		1		1	
2	501491	. . GREASE FITTING / 1/8 NPTx3/4"	1	1	1	1	
3	580052	. DUST CAP KIT / W/1800 SERIES	1	1	1	1	
5	580043	. KIT, CROSS & BEARING / W/1800 FULL ROUND		2		2	
5	580043	. KIT, CROSS & BEARING / W/1800 FULL ROUND	1		1		
6	580062	. KIT, CROSS & BEARING / W/1800 HALF ROUND	1	1	1	1	
NS	580067	. . BEARING END (1810) W/QUICK DISCONECT / REPLACED BY: 580062	2	2	2	2	
7	580071	. . SCREW CAP HEX 3/8-24 x 5/8 G8	4	4	4	4	
9	580063	KIT STRAP & BOLT	2	2	2	2	
. NS	N8893184	. SCREW CB 12POINT (SET OF 4)	4	4	4	4	
		NEXT FOLLOWING YOKE ARE PARTS OF					
		REAR AXLE					
10	621403	YOKE (1810) FULL ROUND (46 SPL)	1	1	1	1	
. NS	621501	. DEFLECTOR, OIL	1	1	1	1	
. NS	621492	. SPEEDY SLEEVE 3.250" I.D. / TO REPAIR OIL LEAK ON YOKE	1	1	1	1	
11	621507	YOKE (1810) FULL ROUND (46 SPL) W/FLYWHEEL ADAPTOR ONE PIECE / REPLACED BY: 621403					
. NS	621492	. SPEEDY SLEEVE 3.250" I.D. / TO REPAIR OIL LEAK ON YOKE	1				
12	121242	FLYWHEEL	1				
13	500074	SCREW CAP HEX 7/16-20x2 G5 ZP	8				
13	500714	NUT HEX STO 7/16-20 ZP	8				
		FOLLOWING YOKE ARE PARTS OF					
		A) WITH SHAFT ASSY #580070 & 580080					
		B) WITH SHAFT ASSY #580075					
		M) WITH MANUAL TRANSMISSON "EATON"					
		Z) WITH "ZF" TRANSMISSION					

From Y-7046 Up to 8-9339	DATE: 01/2014	PAGE: Y2-0905-00

PROPELLER SHAFT

ITEM	PART	DESCRIPTION	XL45	MTH40	MTH45	MTH45S	NOTE
		AUTOMATIC TRANSMISSION					
40	N.S.P.	YOKE (1810) HALF ROUND / W/"WORLD" TRANS (29511516)	1	1	1	1	2
40	571989	YOKE (1810) HALF ROUND / "ZF" TRANS / REPLACED BY: 572086	1				Z
50	121440	PROTECTOR GUARD PROPELLER SHAFT 424MM x 140MM	1	1	1	1	
51	500488	WASHER LO SPT .760x1.271x.188 ZP	2	2	2	2	
52	500733	NUT HEX 3/4-16 ZP	2	2	2	2	
		2) NOT SOLD BY PREVOST (SEE MANUFACTURING PART NUMBER AT END OF DESCRIPTION LINE)					
		Z) WITH "ZF" TRANSMISSION					

From Y-7046 Up to 8-9339	DATE: 01/2014	PAGE: Y2-0905-00

PROPELLER SHAFT

ITEM	PART	DESCRIPTION	XL45	MTH40	MTH45	MTH45S	NOTE

From Y-7046 Up to 8-9339	DATE: 01/2014	PAGE: Y2-10
FRONT AXLE		

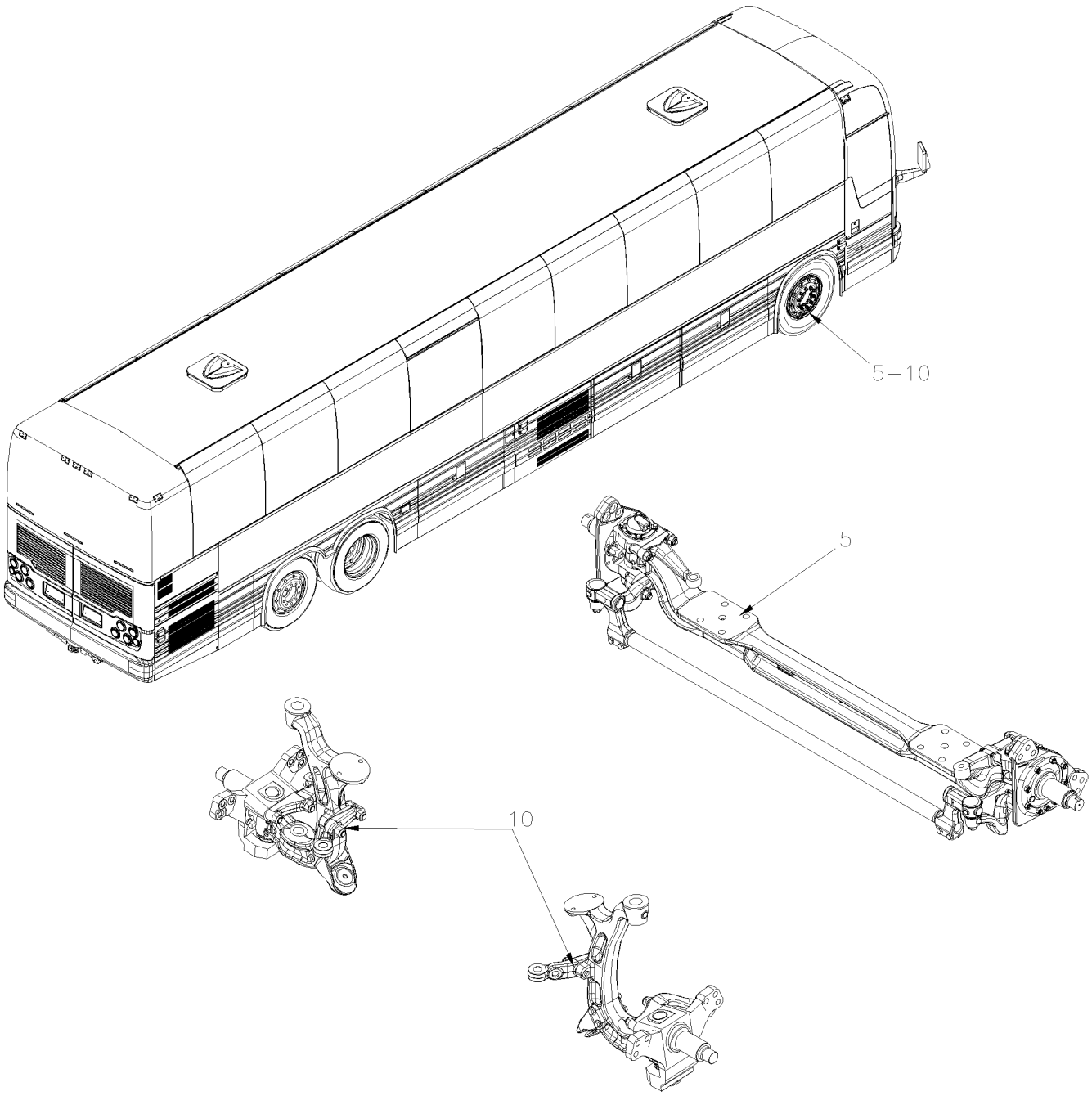

From Y-7046 Up to 8-9339	DATE: 01/2014	PAGE: Y2-10

FRONT AXLE

ITEM	PART	DESCRIPTION	XL45	MTH40	MTH45	MTH45S	NOTE
5	Y2-1005-00	**FRONT AXLE - I BEAM RIGID MODEL "S-84" From Y-7046 Up to 3-8164**					
5	Y2-1005-01	**FRONT AXLE - I BEAM RIGID MODEL "NSD80" From 1-7455 Up to 1-7455**					
5	Y2-1005-02	**FRONT AXLE - I BEAM RIGID MODEL "S84U" From 4-8165 Up to 6-8906**					
10	Y2-1005-50	**FRONT AXLE - INDEPENDENT MODEL "IS-84" / 16500LBS From Y-7046 Up to 3-8164**					
10	Y2-1005-51	**FRONT AXLE - INDEPENDENT MODEL "NDIFS80P" / 18000LBS From 4-8165 Up to 8-9339**					

From Y-7046 Up to 3-8164	DATE: 01/2014	PAGE: Y2-1005-00

FRONT AXLE - I BEAM RIGID MODEL "S-84"

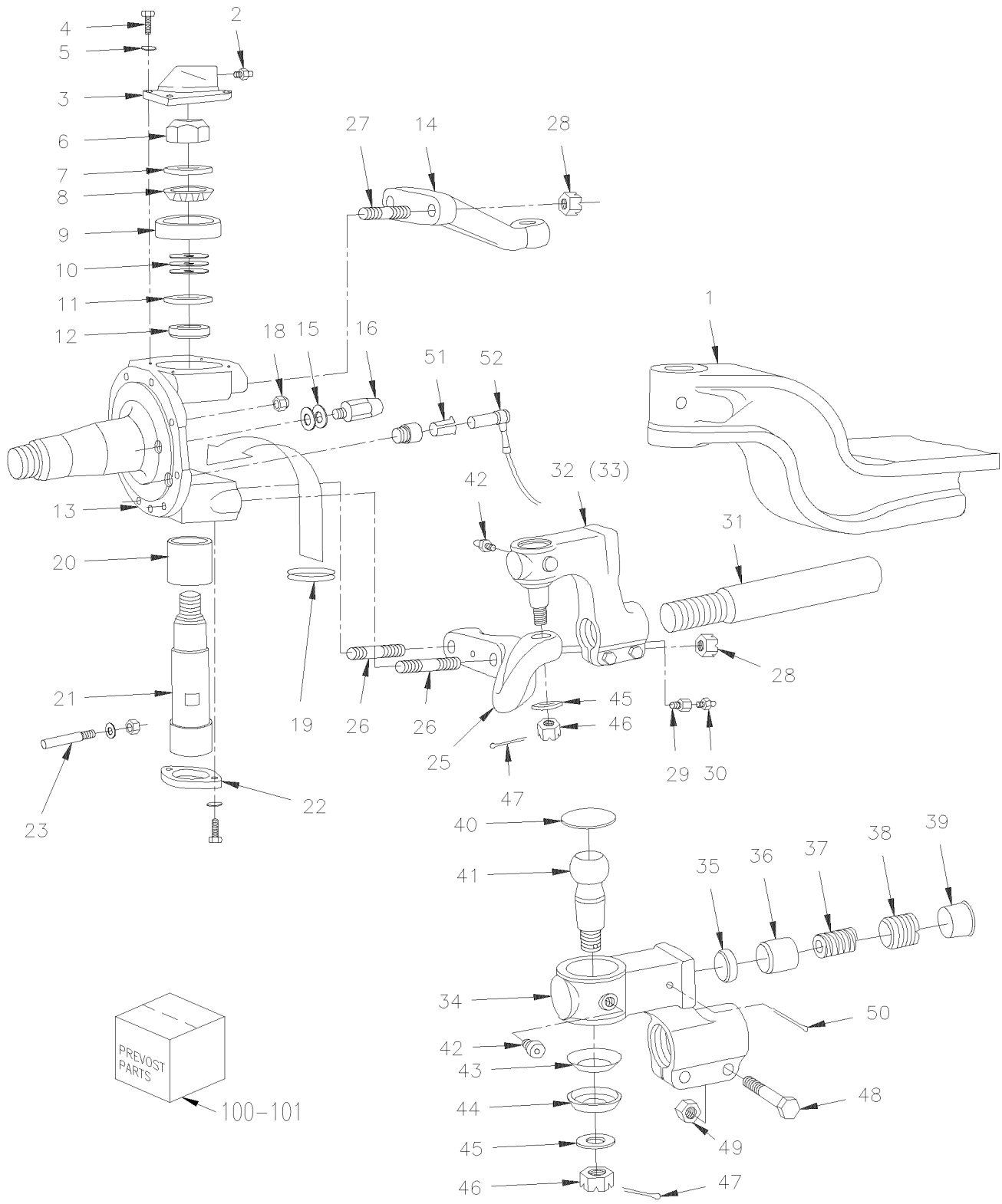

From Y-7046 Up to 3-8164	DATE: 01/2014	PAGE: Y2-1005-00

FRONT AXLE - I BEAM RIGID MODEL "S-84"

ITEM	PART	DESCRIPTION	XL45	MTH40	MTH45	MTH45S	NOTE
	611231	AXLE ASSY W/ABS Up to Y-7146 / REPLACED BY: K611231	1				
	611453	AXLE ASSY W/ABS From Y-7147 Up to Y-7338	1				
	611460	AXLE ASSY W/ABS From Y-7339 Up to 1-7806	1				
	611256	AXLE ASSY W/ABS From 1-7807	1				
1	611151	. AXLE BEAM Up to Y-7146 / REPLACED BY: K611151	1				
1	611454	. AXLE BEAM From Y-7147	1				
2	501491	. GREASE FITTING / 1/8 NPTx3/4"	2				
NS	504615	. RUBBER CAP / PROTECTOR	2				
3	611008	. CAP COVER	2				
4	500067	. SCREW CAP HEX 7/16-20x1 G5 ZP	4				
4	680404	. . CAP PLUG	1				
5	500447	. WASHER FL .562x1.375x.109 ZP	4				
6	611153	. NUT HEX STO 1" 3/8-12	2				
7	611010	. WASHER	2				
8	611011	. CONE BEARING	2				
9	611012	. CUP BEARING	2				
10	611017	. WASHER SHIM .015"	AR				
10	611016	. WASHER SHIM .010"	AR				
10	611015	. WASHER SHIM .008"	AR				
10	611014	. WASHER SHIM .006"	AR				
10	611013	. WASHER SHIM .005"	AR				
11	611145	. OIL SEAL	2				
12	611154	. SLEEVE	2				
13	611147	. KNUCKLE R.H.	1				
13	611146	. KNUCKLE L.H.	1				
13	611289	KNUCKLE L.H.	1				R
13	611290	KNUCKLE R.H.	1				R
14	611031	. STEERING ARM UPPER L.H. STREET SIDE	1				
14	161033	. STEERING ARM UPPER R.H. CURB SIDE	1				
15	611042	. WASHER SHIM 1/32" TH	AR				
15	611041	. WASHER SHIM 1/16" TH	AR				
15	611040	. WASHER SHIM 1/8" TH	AR				
16	611159	. SWIVEL STOP SCREW / REAR / 38MM	2				
NS	611149	. SWIVEL STOP SCREW / FRONT / 48MM	1				
NS	611150	. SWIVEL STOP SCREW / FRONT / 60MM	1				
18	5007001	. NUT HEX STO 1/2-20 ZP G "C"	16				
19	611020	. V-SEAL	2				
		R) USE ONLY WITH RETROFIT HUB "UNITISED" BEARING					
		# 611328 (PAGE Y2-1300-99)					

From Y-7046 Up to 3-8164	DATE: 01/2014	PAGE: Y2-1005-00

FRONT AXLE - I BEAM RIGID MODEL "S-84"

ITEM	PART	DESCRIPTION	XL45	MTH40	MTH45	MTH45S	NOTE
NS	611152	. SEAL RING	2				
20	611144	. BUSHING LOWER KING PIN	2				
21	611148	. KING PIN	2				
22	611155	. CAP LOWER / KING PIN	2				
NS	611156	. O-RING	1				
23	611258	. SWIVEL PIN LOCK	2				
25	611032	. STEERING ARM LOWER L.H. STREET SIDE	1				
NS	611033	. STEERING ARM LOWER R.H. CURB SIDE	1				
26	611028	. STUD 3/4-16 X 3"	2				
26	611029	. STUD / TO FIX LOWER ARM 3/4-16 X 3 5/8"	2				
27	611027	. STUD / TO FIX UPPER ARM 3/4-16 X 2 3/4"	4				
28	5001196	. NUT HEX SLT 3/4-16	8				
29	611062	. FITTING ADAPTOR	2				
30	501493	. GREASE FITTING 45º / 1/8 NPT	2				
NS	504615	. RUBBER CAP / PROTECTOR	2				
31	611026	. TIE ROD	1				
32	611024	. TIE ROD ASSY / 5" OFFSET / R.H. THREAD M48-2 CURB SIDE	1				
33	611025	. TIE ROD ASSY / 5" OFFSET / L.H. THREAD M48-2 STREET SIDE	1				
34	N.S.S.	. . HOUSING / OFFSET L.H. THREAD	1				1
34	N.S.S.	. . HOUSING / OFFSET R.H. THREAD	1				1
35	N.S.P.	. . RUBBING PAD / (7157/156)	1				2
36	N.S.P.	. . THRUST CUP / (7157/153)	1				2
37	N.S.P.	. . COMPRESSION SPRING / (5443/4)	1				2
38	N.S.P.	. . ADJUSTER PIECE / (5443/154)	1				2
39	680404	. . CAP PLUG	1				
40	N.S.P.	. . PLUG / (5247/155)	1				2
NS	N.S.P.	. . SNAP RING / (ML7544/55N)	1				2
41	N.S.P.	. . BALL STUD / (F4223/11)	1				2
42	501495	. . GREASE FITTING 90º / 1/8 NPT	2				
43	611056	. . DIRT SEAL PRESSING	1				
44	611057	. . RUBBER SEAL BOOT	1				
45	500420	. . WASHER FL .938x1.750x.134 ZP	1				
46	5001196	. . NUT HEX SLT 3/4-16	1				
47	502111	. . PIN, COTTER 1/8 x 1 1/2 SS	1				
48	5001861	. . SCREW CAP HEX M12-1.75x60 G10.9 N500	2				
49	500811	. . NUT HEX STO M12-1.75 DP	2				
50	502115	. . PIN, COTTER 3/16 x 2 1/2	1				
		1) NOT SOLD SEPARATELY					
		2) NOT SOLD BY PREVOST (SEE MANUFACTURING PART					
		NUMBER AT END OF DESCRIPTION LINE)					

From Y-7046 Up to 3-8164	DATE: 01/2014	PAGE: Y2-1005-00

FRONT AXLE - I BEAM RIGID MODEL "S-84"

ITEM	PART	DESCRIPTION	XL45	MTH40	MTH45	MTH45S	NOTE
51	641096	. CLIP, SPRING / TO FIX SENSOR	2				
52	641288	. SENSOR ABS (ON FRONT AXLE) 90° ANGLE	2				
100	611162	KIT REPAIR / STEERING KNUCKLE BUSHING (PARALE / (REQUIRES 2 KITS)	AR				B
101	611101	KIT REPAIR / TIE ROD END	2				A
		A) INCLUDING ITEMS #35 TO 50					
		B) INCLUDING ITEMS # 3 TO 12, 19 TO 23					

From 1-7455 Up to 1-7455	DATE: 01/2014	PAGE: Y2-1005-01

FRONT AXLE - I BEAM RIGID MODEL "NSD80"

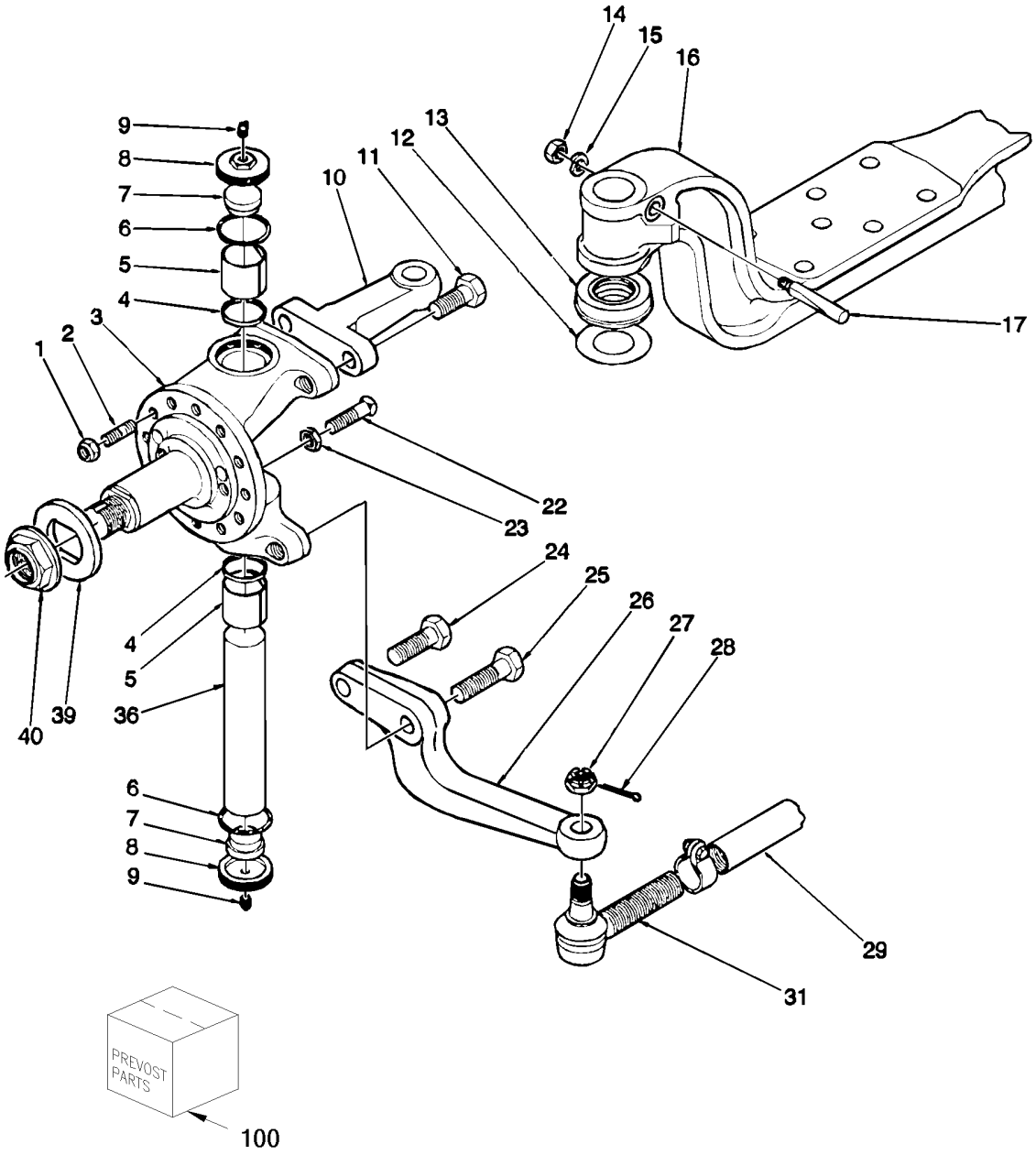

From 1-7455 Up to 1-7455	DATE: 01/2014	PAGE: Y2-1005-01

FRONT AXLE - I BEAM RIGID MODEL "NSD80"

ITEM	PART	DESCRIPTION	XL45	MTH40	MTH45	MTH45S	NOTE
	611466	AXLE ASSY / MODEL "NSD80"	1				
1	5007001	NUT HEX STO 1/2-20 ZP G "C"	10				
2	611030	STUD 1/2-20 X 1 11/16"	10				
3	611935	KNUCKEL L.H. & R.H.	2				
4	611936	OIL SEAL	2				
5	611937	BUSHING (STD)	2				
6	611938	O-RING	2				
7	611939	FOAM INSERT	2				
8	611940	CAP	2				
9	501490	GREASE FITTING / 1/8 NPT	2				
10	N.S.P.	TOP STEERING LEVER / F4872/9	1				2
11	N.P.N.	SCREW CAP HEX DP M14x50 G10.9 PT	2				4
11	5001328	SCREW CAP HEX M14-2.0x90 G10.9 DP	2				
12	611956	SHIM 0.013	1				
12	611957	SHIM 0.025	1				
12	611958	SHIM 0.050	1				
12	611959	SHIM 0.020	1				
13	611941	BEARING THRUST	1				
14	5007001	NUT HEX STO 1/2-20 ZP G "C"	1				
15	N.P.N.	LOCK WASHER / SL242/6	1				4
16	N.P.N.	AXLE BEAM / F4872/1	1				4
17	611942	PIN CUTTER	2				
22	611943	LOCKSTOP SCREW	2				
22	611944	LOCKSTOP SCREW	1				
23	N.P.N.	JAM NUT / SL244/8	3				4
24	N.P.N.	SCREW CAP HEX DP M14x65 G10.9	2				4
25	5001327	SCREW CAP HEX M14-2.0x80 G10.9 DP	2				
26	611945	STEERING ARM LOWER R.H.	1				
26	611946	STEERING ARM LOWER L.H.	1				
27	5001193	SCREW CAP HEX M20-2.5x65 G10.9 ZP	2				
28	502111	PIN, COTTER 1/8 x 1 1/2 SS	2				
29	N.P.N.	ROD / F4560/12	1				4
31	611024	TIE ROD ASSY / 5" OFFSET / R.H. THREAD M48-2 CURB SIDE	1				
31	611025	TIE ROD ASSY / 5" OFFSET / L.H. THREAD M48-2 STREET SIDE	1				
32	501490	GREASE FITTING / 1/8 NPT	2				
36	611947	KING PIN WITH SINGLE LOCK PIN	2				
36	N.P.N.	KEY DRAW	1				4
39	611948	THRUST WASHER	2				
40	611949	HUB NUT 1 3/4-8	2				
100	611962	KIT REPAIR / STEERING KNUCKLE BUSHING (STD) / (REQUIRE 2 KITS)	1				
		2) NOT SOLD BY PREVOST (SEE MANUFACTURING PART					
		NUMBER AT END OF DESCRIPTION LINE)					
		4) NO PARTS NUMBER					

From 4-8165 Up to 6-8906	DATE: 01/2014	PAGE: Y2-1005-02

FRONT AXLE - I BEAM RIGID MODEL "S84U"

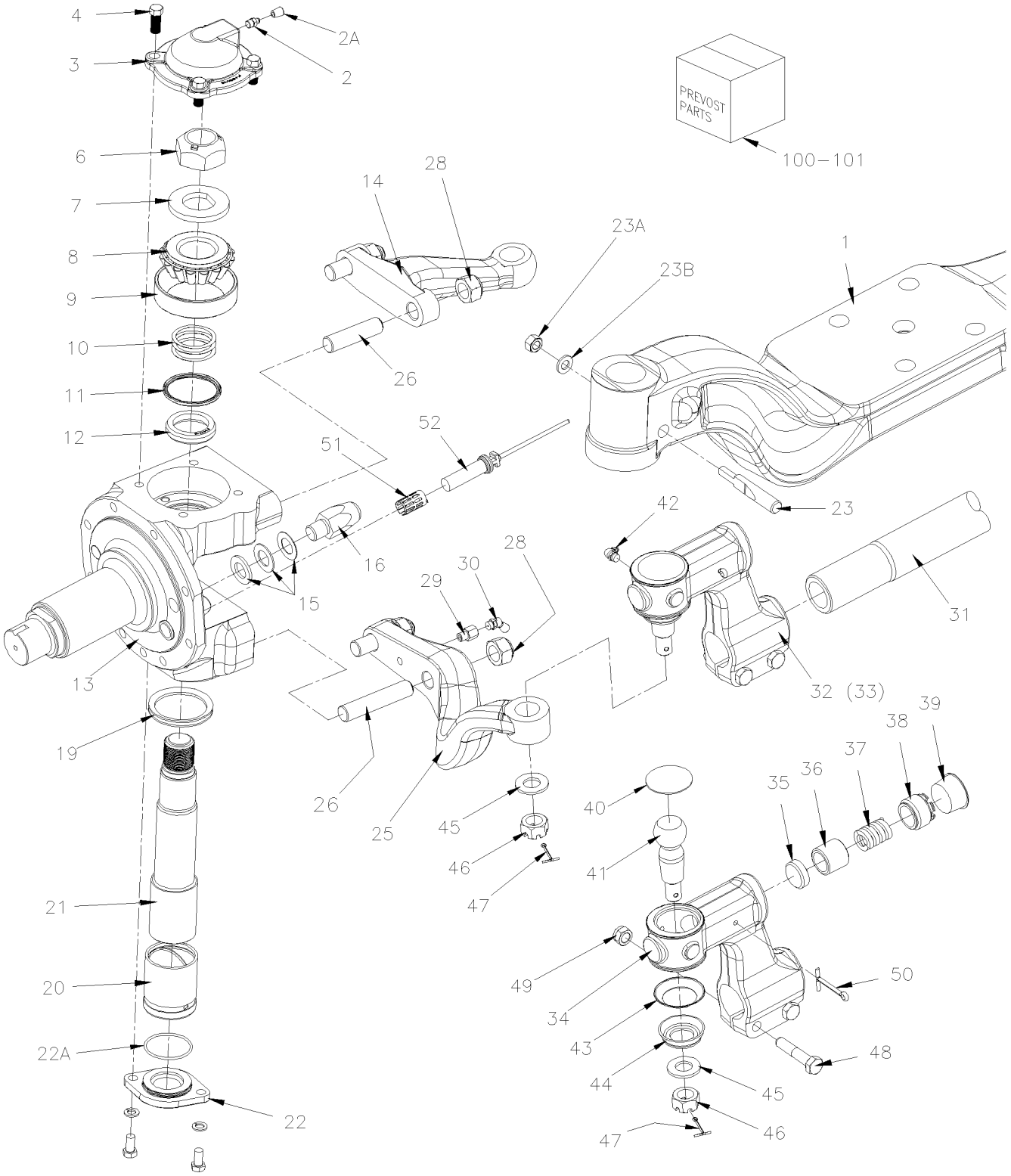

From 4-8165 Up to 6-8906	DATE: 01/2014	PAGE: Y2-1005-02

FRONT AXLE - I BEAM RIGID MODEL "S84U"

ITEM	PART	DESCRIPTION	XL45	MTH40	MTH45	MTH45S	NOTE
	611269	AXLE ASSY W/ABS / MODEL "S84U" W/TYPE 27 BOOSTER Up to 6-8906	1				
	612350	AXLE ASSY W/ABS / MODEL "S84U" W/TYPE 24 BOOSTER	1				
1	611454	. AXLE BEAM	1				
2	501491	. GREASE FITTING / 1/8 NPTx3/4"	2				
2A	504615	. RUBBER CAP / PROTECTOR	2				
3	611008	. CAP COVER	2				
4	500067	. SCREW CAP HEX 7/16-20x1 G5 ZP	4				
4	680404	. . CAP PLUG	1				
4	500447	. WASHER FL .562x1.375x.109 ZP	4				
6	611153	. NUT HEX STO 1" 3/8-12	2				
7	611010	. WASHER	2				
8	611011	. CONE BEARING	2				
9	611012	. CUP BEARING	2				
10	611017	. WASHER SHIM .015"	AR				
10	611016	. WASHER SHIM .010"	AR				
10	611015	. WASHER SHIM .008"	AR				
10	611014	. WASHER SHIM .006"	AR				
10	611013	. WASHER SHIM .005"	AR				
11	611145	. OIL SEAL	2				
12	611154	. SLEEVE	2				
13	611290	. KNUCKLE R.H.	1				
13	611289	. KNUCKLE L.H.	1				
14	611031	. STEERING ARM UPPER L.H. STREET SIDE	1				
14	161033	. STEERING ARM UPPER R.H. CURB SIDE	1				
15	611042	. WASHER SHIM 1/32" TH	AR				
15	611041	. WASHER SHIM 1/16" TH	AR				
15	611040	. WASHER SHIM 1/8" TH	AR				
16	611170	. SWIVEL STOP SCREW 43MM	2				
NS	611296	. SWIVEL STOP SCREW 54MM	2				
19	611020	. V-SEAL	2				
NS	611152	. SEAL RING	2				
20	611144	. BUSHING LOWER KING PIN	2				
21	611148	. KING PIN	2				
22	611155	. CAP LOWER / KING PIN	2				
22A	611156	. O-RING	1				
23	611258	. SWIVEL PIN LOCK	2				
23A	Call Order Desk	. NUT / (SL221/5)	1				P
		P) CALL ORDER DESK FOR SPECIFIC APPLICATION					
		(V.I.N.)					

From 4-8165 Up to 6-8906	DATE: 01/2014	PAGE: Y2-1005-02

FRONT AXLE - I BEAM RIGID MODEL "S84U"

ITEM	PART	DESCRIPTION	XL45	MTH40	MTH45	MTH45S	NOTE
23B	Call Order Desk	. WASHER FL / (SL241/5)	1				P
25	611032	. STEERING ARM LOWER L.H. STREET SIDE	1				
NS	611033	. STEERING ARM LOWER R.H. CURB SIDE	1				
26	611291	. STUD 3/4-16 X 4"	4				
26	611028	. STUD 3/4-16 X 3"	2				
26	611029	. STUD / TO FIX LOWER ARM 3/4-16 X 3 5/8"	2				
28	5001196	. NUT HEX SLT 3/4-16	8				
29	611062	. FITTING ADAPTOR	2				
30	501493	. GREASE FITTING 45º / 1/8 NPT	2				
NS	504615	. RUBBER CAP / PROTECTOR	2				
31	611292	. ROD	1				
32	611024	. TIE ROD ASSY / 5" OFFSET / R.H. THREAD M48-2 CURB SIDE	1				
33	611025	. TIE ROD ASSY / 5" OFFSET / L.H. THREAD M48-2 STREET SIDE	1				
34	N.S.S.	. . HOUSING / OFFSET L.H. THREAD	1				1
34	N.S.S.	. . HOUSING / OFFSET R.H. THREAD	1				1
35	N.S.P.	. . RUBBING PAD / (7157/156)	1				2
36	N.S.P.	. . THRUST CUP / (7157/153)	1				2
37	N.S.P.	. . COMPRESSION SPRING / (5443/4)	1				2
38	N.S.P.	. . ADJUSTER PIECE / (5443/154)	1				2
39	680404	. . CAP PLUG	1				
40	N.S.P.	. . PLUG / (5247/155)	1				2
NS	N.S.P.	. . SNAP RING / (ML7544/55N)	1				2
41	N.S.P.	. . BALL STUD / (F4223/11)	1				2
42	501495	. . GREASE FITTING 90º / 1/8 NPT	2				
43	611056	. . DIRT SEAL PRESSING	1				
44	611057	. . RUBBER SEAL BOOT	1				
45	500420	. . WASHER FL .938x1.750x.134 ZP	1				
46	5001196	. . NUT HEX SLT 3/4-16	1				
47	502111	. . PIN, COTTER 1/8 x 1 1/2 SS	1				
48	5001861	. . SCREW CAP HEX M12-1.75x60 G10.9 N500	2				
49	500811	. . NUT HEX STO M12-1.75 DP	2				
50	502115	. . PIN, COTTER 3/16 x 2 1/2	1				
51	641096	. CLIP, SPRING / TO FIX SENSOR	2				
52	641288	. SENSOR ABS (ON FRONT AXLE) 90° ANGLE	2				
NS							
100	611966	KIT REPAIR / STEERING KNUCKLE BUSHING (PARALLEL) / (REQUIRES 2 KITS)	AR				B
101	611101	KIT REPAIR / TIE ROD END	2				A
		1) NOT SOLD SEPARATELY					
		2) NOT SOLD BY PREVOST (SEE MANUFACTURING PART					
		NUMBER AT END OF DESCRIPTION LINE)					
		P) CALL ORDER DESK FOR SPECIFIC APPLICATION					
		(V.I.N.)					
		A) INCLUDING ITEMS #35 TO 50					
		B) INCLUDING ITEMS # 3 TO 12 & # 19 TO 23					

From 4-8165 Up to 6-8906	DATE: 01/2014	PAGE: Y2-1005-02

FRONT AXLE - I BEAM RIGID MODEL "S84U"

ITEM	PART	DESCRIPTION	XL45	MTH40	MTH45	MTH45S	NOTE

From Y-7046 Up to 3-8164	DATE: 01/2014	PAGE: Y2-1005-50
FRONT AXLE - INDEPENDENT MODEL "IS-84" / 16500LBS		

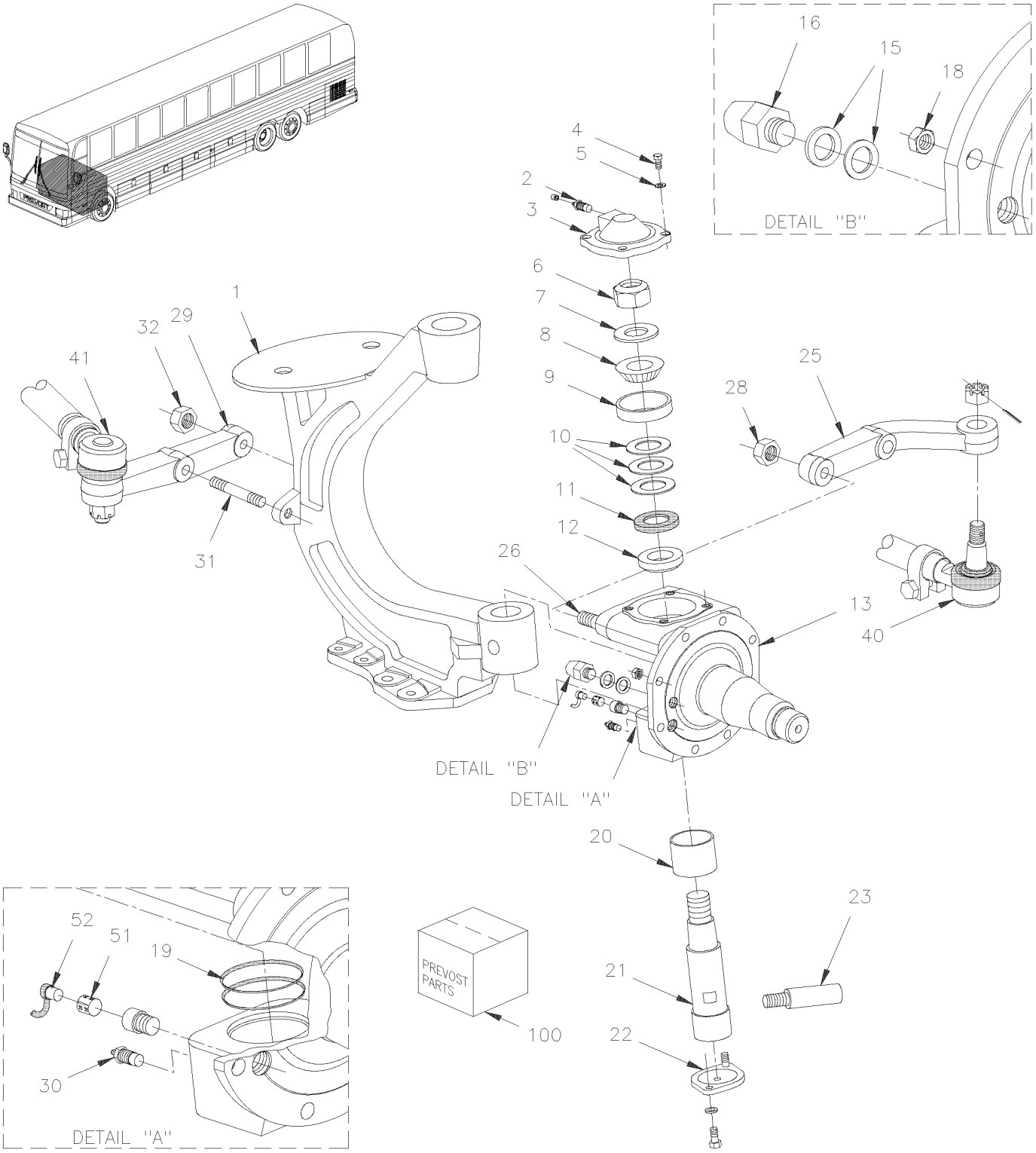

From Y-7046 Up to 3-8164	DATE: 01/2014	PAGE: Y2-1005-50

FRONT AXLE - INDEPENDENT MODEL "IS-84" / 16500LBS

ITEM	PART	DESCRIPTION	XL45	MTH40	MTH45	MTH45S	NOTE
	611209	AXLE ASSY L.H. & R.H. Up to Y-7373		1	1	1	
	611461	AXLE ASSY L.H. & R.H. From Y-7374 Up to 1-7806		1	1	1	
	611257	AXLE ASSY L.H. & R.H. From 1-7807 Up to 2-7851 / REPLACED BY: 611262		1	1	1	
	611262	AXLE ASSY L.H. & R.H. From 2-7852		1	1	1	D
1	611160	. AXLE L.H. / W/PARALLEL KING PIN & BELLOW From 1-7807 Up to 2-7851		1	1	1	
1	611161	. AXLE R.H. / W/PARALLEL KING PIN & BELLOW From 1-7807 Up to 2-7851		1	1	1	
1	611265	. AXLE L.H. / W/PARALLEL KING PIN & BELLOW From 2-7852		1	1	1	D
1	611266	. AXLE R.H. / W/PARALLEL KING PIN & BELLOW From 2-7852		1	1	1	D
2	501491	. GREASE FITTING / 1/8 NPTx3/4"		2	2	2	
NS	504615	. RUBBER CAP / PROTECTOR		2	2	2	
3	611008	. CAP COVER		2	2	2	
4	500067	. SCREW CAP HEX 7/16-20x1 G5 ZP		4	4	4	
5	500447	. WASHER FL .562x1.375x.109 ZP		4	4	4	
6	611153	. NUT HEX STO 1" 3/8-12		2	2	2	
7	611010	. WASHER		2	2	2	
8	611011	. CONE BEARING		2	2	2	B
9	611012	. CUP BEARING		2	2	2	B
10	611013	. WASHER SHIM .005"		AR	AR	AR	
10	611014	. WASHER SHIM .006"		AR	AR	AR	
10	611015	. WASHER SHIM .008"		AR	AR	AR	
10	611016	. WASHER SHIM .010"		AR	AR	AR	
10	611017	. WASHER SHIM .015"		AR	AR	AR	
11	611145	. OIL SEAL		2	2	2	
12	611154	. SLEEVE		2	2	2	
13	611157	. KNUCKLE L.H. / W/PARALLEL KING PIN		1	1	1	
13	611158	. KNUCKLE R.H. / W/PARALLEL KING PIN		1	1	1	
13	611334	KNUCKLE L.H. / W/PARALLEL KING PIN ONLY W/RETROFIT UNITISED		1	1	1	R
13	611335	KNUCKLE R.H. / W/PARALLEL KING PIN ONLY W/RETROFIT UNITISED		1	1	1	R
15	611042	. WASHER SHIM 1/32" TH		AR	AR	AR	
15	611041	. WASHER SHIM 1/16" TH		AR	AR	AR	
15	611040	. WASHER SHIM 1/8" TH		AR	AR	AR	
16	611159	. SWIVEL STOP SCREW / REAR / 38MM		2	2	2	
NS	611149	. SWIVEL STOP SCREW / FRONT / 48MM		1	1	1	
NS	611150	. SWIVEL STOP SCREW / FRONT / 60MM		1	1	1	
18	5007001	. NUT HEX STO 1/2-20 ZP G "C"		16	16	16	
NS	500091	. SCREW CAP HEX 1/2-20x1 3/4 G5 ZP		6	6	6	
19	611020	. V-SEAL		2	2	2	
NS	611152	. SEAL RING		2	2	2	
20	611144	. BUSHING LOWER KING PIN		2	2	2	

B) OUTER WHEEL BEARING

D) USE WITH AXLE 3° CASTER

R) USE ONLY WITH RETROFIT HUB "UNITISED" BEARING # 611329 (PAGE Y2-1300-99)

From Y-7046 Up to 3-8164	DATE: 01/2014	PAGE: Y2-1005-50

FRONT AXLE - INDEPENDENT MODEL "IS-84" / 16500LBS

ITEM	PART	DESCRIPTION	XL45	MTH40	MTH45	MTH45S	NOTE
21	611148	. KING PIN		2	2	2	
22	611155	. CAP LOWER / KING PIN		2	2	2	
NS	611156	. O-RING		2	2	2	
23	611258	. SWIVEL PIN LOCK		2	2	2	
25	611172	. STEERING ARM L.H.		1	1	1	
NS	611171	. STEERING ARM R.H.		1	1	1	
26	611167	. STUD 3/4-16 X 4 1/2"		2	2	2	
NS	611166	. STUD 3/4-16 X 3 1/4"		2	2	2	
NS	500735	. NUT HEX STO 3/4-16 ZP		8	8	8	
29	661072	. UPRIGHT ARM R.H. / W/56 Deg		1	1	1	
NS	661071	. UPRIGHT ARM L.H. / W/56 Deg		1	1	1	
30	501493	. GREASE FITTING 45º / 1/8 NPT		2	2	2	
NS	504615	. RUBBER CAP / PROTECTOR		2	2	2	
31	611248	. STUD M16		1	1	1	
31	611249	. STUD M16		1	1	1	
32	500781	. NUT HEX STO M16-2.0 DP		2	2	2	
40	Y2-1410-50	**STEERING RODS - INSTALLATION W/INDEPENDENT "IS-84" / 16500LBS**					
41	Y2-1605-50	**FRONT AXLE - INSTALL W/INDEPENDENT "IS-84" / 16500LBS**					
51	641096	CLIP, SPRING / TO FIX SENSOR		2	2	2	
52	641288	SENSOR ABS (ON FRONT AXLE) 90° ANGLE		2	2	2	
NS							
100	611162	KIT REPAIR / STEERING KNUCKLE BUSHING (PARALE / (REQUIRES 2 KITS)		AR	AR	AR	C
		C) INCLUDING ITEM # 3 TO 12, # 19 TO 23					

From Y-7046 Up to 3-8164	DATE: 01/2014	PAGE: Y2-1005-50

FRONT AXLE - INDEPENDENT MODEL "IS-84" / 16500LBS

ITEM	PART	DESCRIPTION	XL45	MTH40	MTH45	MTH45S	NOTE

From 4-8165 Up to 8-9339	DATE: 01/2014	PAGE: Y2-1005-51

FRONT AXLE - INDEPENDENT MODEL "NDIFS80P" / 18000LBS

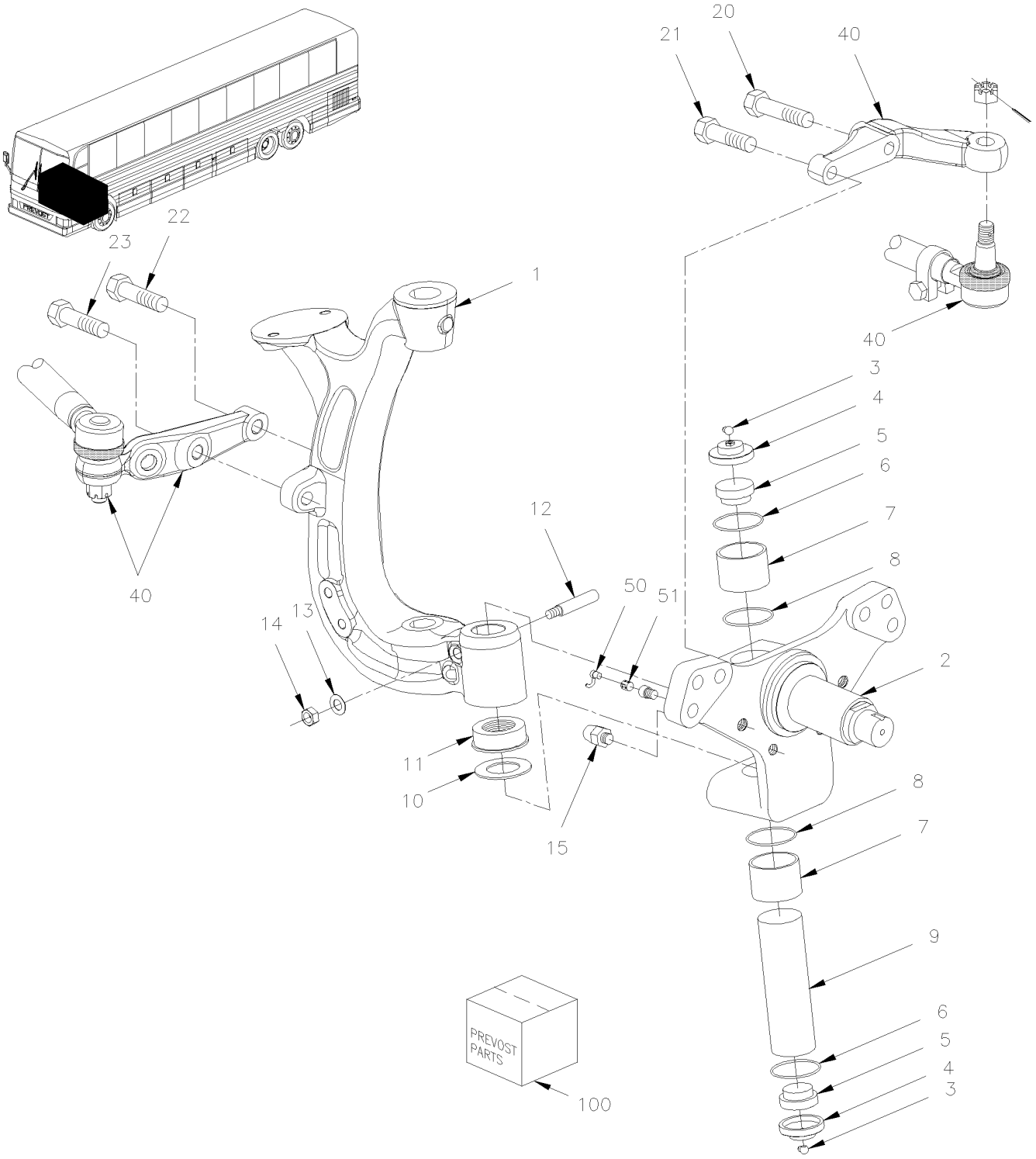

From 4-8165 Up to 8-9339	DATE: 01/2014	PAGE: Y2-1005-51

FRONT AXLE - INDEPENDENT MODEL "NDIFS80P" / 18000LBS

ITEM	PART	DESCRIPTION	XL45	MTH40	MTH45	MTH45S	NOTE
	611254	AXLE ASSY L.H. & R.H. / NDIFS80P / W/56 Deg Up to 6-8832		1	1	1	
	611345	AXLE ASSY L.H. & R.H. / NDIFS80P / W/58 Deg From 6-8833 Up to 7-9159			1	1	
	612351	AXLE ASSY L.H. & R.H. / NDIFS80P / W/58 Deg From 7-9160 Up to 8-9262			1	1	
	612355	AXLE ASSY L.H. & R.H. / NDIFS80P / W/58 Deg From 8-9263			1	1	
1	612325	. AXLE L.H. Up to 8-9262 / REPLACED BY: K612325		1	1	1	
1	612370	. AXLE L.H. / W/DOUBLE LOCK ON KING PIN From 8-9263			1	1	
1	612327	. AXLE R.H. Up to 8-9262 / REPLACED BY: K612327		1	1	1	
1	612369	. AXLE R.H. / W/DOUBLE LOCK ON KING PIN From 8-9263			1	1	
2	611280	. KNUCKEL L.H. & R.H.		2	2	2	
3	501490	. GREASE FITTING / 1/8 NPT		2	2	2	
4	611283	. CAP UPPER & LOWER		2	2	2	
5	611939	. FOAM INSERT		2	2	2	
6	611284	. SNAP RING, EXT 2400-55		2	2	2	
7	611937	. BUSHING (STD)		2	2	2	
8	611936	. OIL SEAL		2	2	2	
9	611947	. KING PIN WITH SINGLE LOCK PIN Up to 8-9262		1	1	1	
10	611956	. SHIM 0.013		AR	AR	AR	
10	611957	. SHIM 0.025		AR	AR	AR	
10	611958	. SHIM 0.050		AR	AR	AR	
10	611959	. SHIM 0.020		AR	AR	AR	
11	611941	. BEARING THRUST		1	1	1	
13	500446	. WASHER FL .531x1.250x.125 ZP		1	1	1	
14	500716	. NUT HEX 1/2-20 ZP		1	1	1	
15	611287	. LOCKSTOP SCREW FRONT		1	1	1	
NS	611288	. LOCKSTOP SCREW BACK		1	1	1	
20	611308	. SCREW CAP HEX M20-2.5x100 G12.9		1	1	1	
21	611306	. SCREW CAP HEX M20-2.5x65 G12.9		1	1	1	
22	611305	. SCREW CAP HEX M20-2.5x60 G12.9		1	1	1	
23	611307	. SCREW CAP HEX M20-2.5x80 G12.9		1	1	1	
40	Y2-1410-51	**STEERING RODS - INSTALLATION W/INDEPENDENT "NDIFS80P" / 18000LBS**					
50	641288	SENSOR ABS (ON FRONT AXLE) 90° ANGLE Up to 8-9278		1	1	1	
50	642084	SENSOR ABS 90° ANGLE From 8-9279		1	1	1	
51	641096	CLIP, SPRING / TO FIX SENSOR		1	1	1	
100	611962	KIT REPAIR / STEERING KNUCKLE BUSHING (STD) / (REQUIRE 2 KITS) Up to 8-9262		2	2	2	
100	611131	KIT REPAIR / STEERING KNUCKLE BUSHING (US) / (REQUIRE 2 KITS) From 8-9263			1	1	T
. NS	SB07_03	. NSDIFS80P - KINGPIN KITS From 8-9263			1	1	
100	611132	KIT REPAIR / STEERING KNUCKLE BUSHING (STD) / (REQUIRE 2 KITS) From 8-9263			1	1	
. NS	SB07_03	. NSDIFS80P - KINGPIN KITS From 8-9263			1	1	
		T) WITH THIS KITS YOU REQUIRE REAMER TOOL TO					
		REPAIR					

From Y-7046 Up to 8-9339	DATE: 01/2014	PAGE: Y2-11
REAR AXLE		

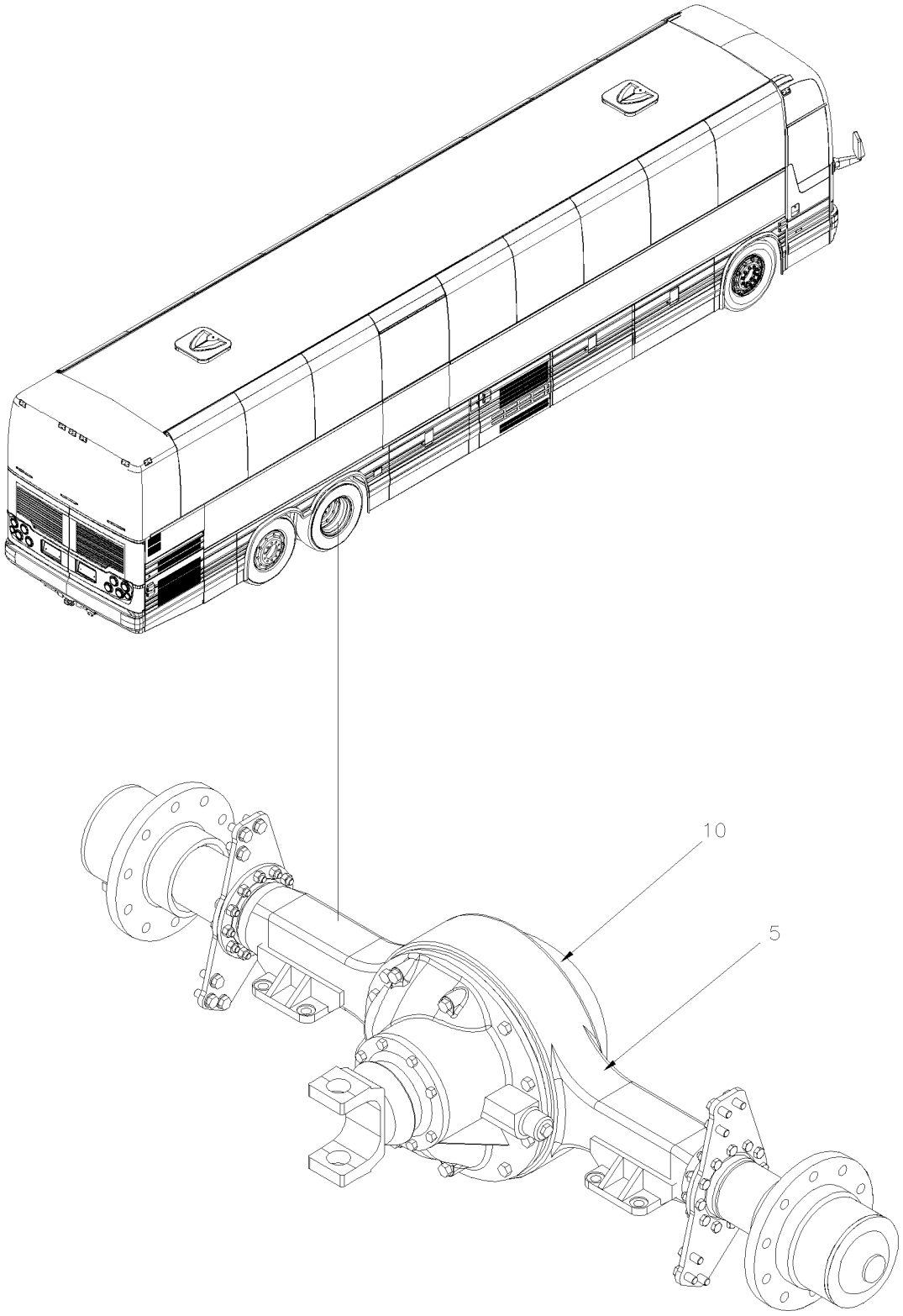

From Y-7046 Up to 8-9339	DATE: 01/2014	PAGE: Y2-11

REAR AXLE

ITEM	PART	DESCRIPTION	XL45	MTH40	MTH45	MTH45S	NOTE
5	Y2-1105-00	**REAR AXLE - MODEL "RC23160" From Y-7046 Up to 8-9339**					
10	Y2-1110-00	**CARRIER ASSY From Y-7046 Up to 8-9339**					

From Y-7046 Up to 8-9339	DATE: 01/2014	PAGE: Y2-1105-00
REAR AXLE - MODEL "RC23160"		

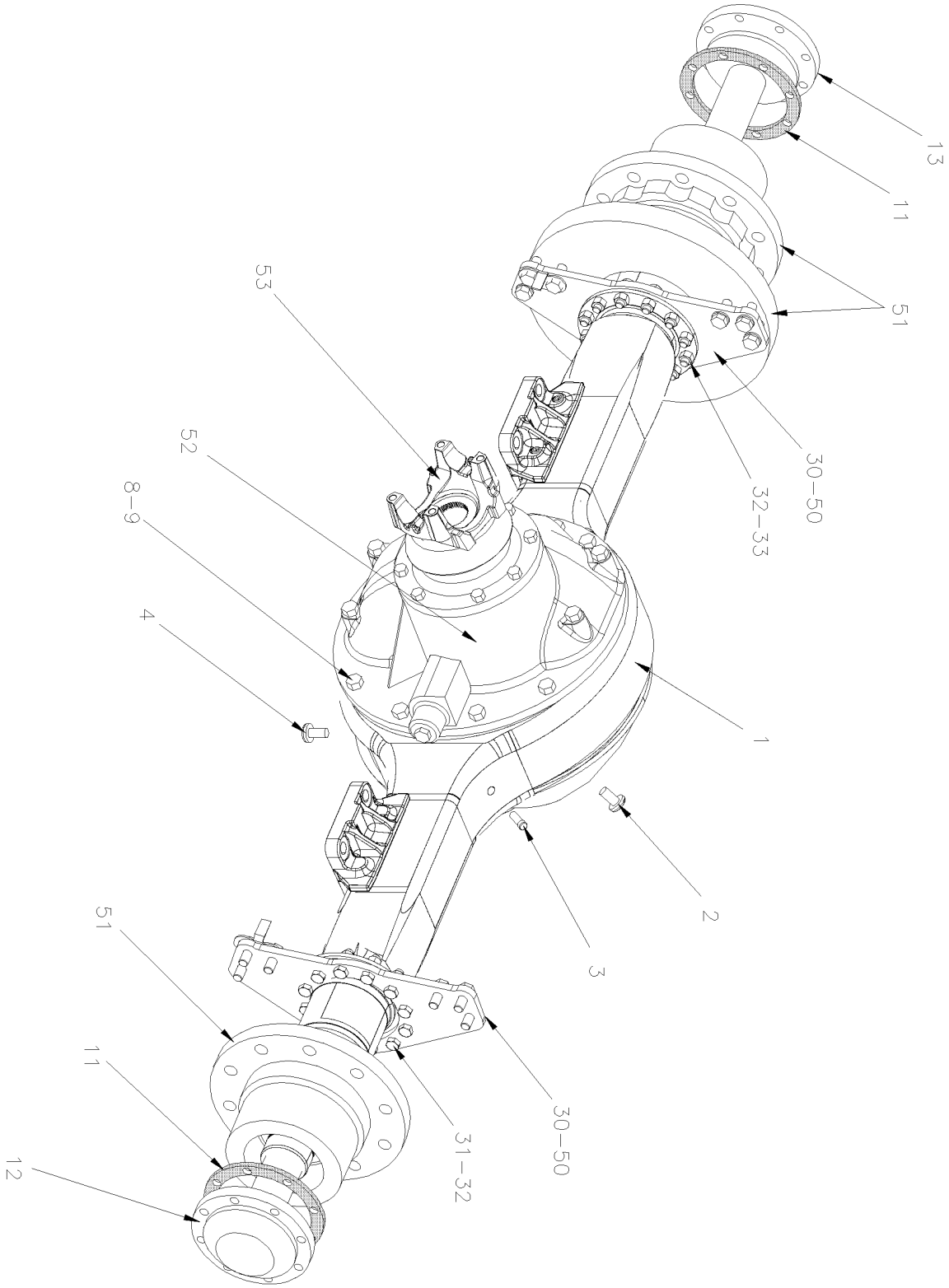

From Y-7046 Up to 8-9339	DATE: 01/2014	PAGE: Y2-1105-00

REAR AXLE - MODEL "RC23160"

ITEM	PART	DESCRIPTION	XL45	MTH40	MTH45	MTH45S	NOTE
		AXLE ASSY WITHOUT WHEELS STUD					
	621660	REAR AXLE ASSY / 3.07 RATIO Up to Y-7335	1	1	1	1	B
	621674	REAR AXLE ASSY / 3.07 RATIO From Y-7336 Up to 2-7822	1	1	1	1	C
	621661	REAR AXLE ASSY / 3.21 RATIO Up to Y-7335	1	1	1	1	B
	621675	REAR AXLE ASSY / 3.21 RATIO From Y-7336 Up to 2-7822	1	1	1	1	C
	621769	REAR AXLE ASSY / 3.42 RATIO From 5-8536 Up to 7-9160	1	1	1	1	
	621791	REAR AXLE ASSY / 3.42 RATIO From 7-9159	1	1	1	1	
	621770	REAR AXLE ASSY / 3.42 RATIO / SUPER SINGLE From 5-8536 Up to 7-9160	1	1	1	1	
	621792	REAR AXLE ASSY / 3.42 RATIO / SUPER SINGLE From 7-9159			1	1	
	621760	REAR AXLE ASSY / 3.58 RATIO From 5-8536 Up to 7-9160	1	1	1	1	
	621789	REAR AXLE ASSY / 3.58 RATIO From 7-9159			1	1	
	621768	REAR AXLE ASSY / 3.58 RATIO / SUPER SINGLE From 5-8536 Up to 7-9160	1	1	1	1	
	621790	REAR AXLE ASSY / 3.58 RATIO / SUPER SINGLE From 7-9159			1	1	
	621662	REAR AXLE ASSY / 3.73 RATIO Up to Y-7335	1	1	1	1	B
	621676	REAR AXLE ASSY / 3.73 RATIO From Y-7336 Up to 4-8176	1	1	1	1	C
	621708	REAR AXLE ASSY / 3.73 RATIO From 4-8177 Up to 4-8306	1	1	1	1	D
	621736	REAR AXLE ASSY / 3.73 RATIO From 4-8307 Up to 5-8535	1	1	1	1	
	621749	REAR AXLE ASSY / 3.73 RATIO From 5-8536 Up to 7-9160	1	1	1	1	
	621788	REAR AXLE ASSY / 3.73 RATIO From 7-9159			1	1	
	621742	REAR AXLE ASSY / 3.73 RATIO / SUPER SINGLE From 5-8536 Up to 7-9160	1	1	1	1	
	621782	REAR AXLE ASSY / 3.73 RATIO / SUPER SINGLE From 7-9159			1	1	
	621685	REAR AXLE ASSY / 4.10 RATIO From Y-7336 Up to 2-7822	1	1	1	1	
	621349	REAR AXLE ASSY / 4.10 RATIO From 2-7823 Up to 4-8176	1	1	1	1	
	621703	REAR AXLE ASSY / 4.10 RATIO From 4-8177 Up to 4-8306	1	1	1	1	D
	621732	REAR AXLE ASSY / 4.10 RATIO From 4-8307 Up to 5-8535	1	1	1	1	
	621744	REAR AXLE ASSY / 4.10 RATIO From 5-8536 Up to 7-9160	1	1	1	1	
	621784	REAR AXLE ASSY / 4.10 RATIO From 7-9159			1	1	
	621740	REAR AXLE ASSY / 4.10 RATIO / SUPER SINGLE From 5-8536 Up to 7-9160	1	1	1	1	
	621781	REAR AXLE ASSY / 4.10 RATIO / SUPER SINGLE From 7-9159			1	1	
	621663	REAR AXLE ASSY / 4.30 RATIO Up to Y-7335 / REPLACED BY: 621785	1	1	1	1	B
	621677	REAR AXLE ASSY / 4.30 RATIO From Y-7336 Up to 2-7822 / REPLACED BY: 621697	1	1	1	1	C
	621697	REAR AXLE ASSY / 4.30 RATIO From 2-7823 Up to 4-8176	1	1	1	1	
	621704	REAR AXLE ASSY / 4.30 RATIO From 4-8177 Up to 4-8306	1	1	1	1	D
	621733	REAR AXLE ASSY / 4.30 RATIO From 4-8307 Up to 5-8535	1	1	1	1	
	621745	REAR AXLE ASSY / 4.30 RATIO From 5-8536 Up to 7-9160	1	1	1	1	
	621785	REAR AXLE ASSY / 4.30 RATIO From 7-9159			1	1	
	621739	REAR AXLE ASSY / 4.30 RATIO / SUPER SINGLE From 5-8536 Up to 7-9160	1	1	1	1	
		B) W/ABS ON DRIVE WHEEL END / PLAIN DISC					
		C) W/ABS ON DRIVE WHEEL END / VENTED DISC					
		D) W/ABS PROTECTOR SHIELD					

From Y-7046 Up to 8-9339	DATE: 01/2014	PAGE: Y2-1105-00

REAR AXLE - MODEL "RC23160"

ITEM	PART	DESCRIPTION	XL45	MTH40	MTH45	MTH45S	NOTE
	621780	REAR AXLE ASSY / 4.30 RATIO / SUPER SINGLE From 7-9159			1	1	
	621690	REAR AXLE ASSY / 4.56 RATIO / W/DIFF LOCK From Y-7336 Up to 2-7822	1	1	1	1	
	621700	REAR AXLE ASSY / 4.56 RATIO / W/DIFF LOCK From Y-7823 Up to 4-8176	1	1	1	1	
	621707	REAR AXLE ASSY / 4.56 RATIO / W/DIFF LOCK From 4-8177 Up to 4-8306	1	1	1	1	D
	621737	REAR AXLE ASSY / 4.56 RATIO / W/DIFF LOCK From 4-8307 Up to 5-8535	1	1	1	1	
	621748	REAR AXLE ASSY / 4.56 RATIO / W/DIFF LOCK From 5-8536 Up to 7-9160	1	1	1	1	
	621741	REAR AXLE ASSY / 4.56 RATIO / W/DIFF LOCK & SUPER SINGLE From 5-8536 Up to 7-9160	1	1	1	1	
	621664	REAR AXLE ASSY / 4.56 RATIO Up to Y-7335	1	1	1	1	B
	621678	REAR AXLE ASSY / 4.56 RATIO From Y-7336 Up to 2-7822 / REPLACED BY: 621698	1	1	1	1	C
	621698	REAR AXLE ASSY / 4.56 RATIO From 2-7823 Up to 4-8176	1	1	1	1	
	621705	REAR AXLE ASSY / 4.56 RATIO From 4-8177 Up to 4-8306	1	1	1	1	D
	621734	REAR AXLE ASSY / 4.56 RATIO From 4-8307 Up to 5-8535	1	1	1	1	
	621746	REAR AXLE ASSY / 4.56 RATIO From 5-8536 Up to 7-9160	1	1	1	1	
	621786	REAR AXLE ASSY / 4.56 RATIO From 7-9159			1	1	
	621738	REAR AXLE ASSY / 4.56 RATIO / SUPER SINGLE From 5-8536 Up to 7-9160	1	1	1	1	
	621779	REAR AXLE ASSY / 4.56 RATIO / SUPER SINGLE From 7-9159			1	1	
	621665	REAR AXLE ASSY / 4.88 RATIO Up to Y-7335	1	1	1	1	B
	621679	REAR AXLE ASSY / 4.88 RATIO From Y-7336 Up to 2-7822 / REPLACED BY: 621699	1	1	1	1	C
	621699	REAR AXLE ASSY / 4.88 RATIO From 2-7823 Up to 4-8176	1	1	1	1	
	621706	REAR AXLE ASSY / 4.88 RATIO From 4-8177 Up to 4-8306	1	1	1	1	D
	621735	REAR AXLE ASSY / 4.88 RATIO From 4-8307 Up to 5-8535	1	1	1	1	
	621747	REAR AXLE ASSY / 4.88 RATIO From 5-8536 Up to 7-9160	1	1	1	1	
	621787	REAR AXLE ASSY / 4.88 RATIO From 7-9159			1	1	
	621743	REAR AXLE ASSY / 4.88 RATIO / SUPER SINGLE From 5-8536 Up to 7-9160	1	1	1	1	
	621783	REAR AXLE ASSY / 4.88 RATIO / SUPER SINGLE From 7-9159			1	1	
1	621614	HOUSING ASSY W/BRACKET WELDED Up to 5-8535	1	1	1	1	E
1	621754	HOUSING ASSY W/BRACKET WELDED From 5-8536	1	1	1	1	
1	621752	HOUSING ASSY W/BRACKET WELDED / SUPER SINGLE	1	1	1	1	
NS	680053	. SILICONE TUBE RVT103 / BLACK / 3 oz	2	2	2	2	
2	621142	. PLUG FILLER	1	1	1	1	
3	620442	. BREATHER / (CURRENT 1 PIECE)	2	2	2	2	
4	621615	. PLUG MAGNETIC	1	1	1	1	
8	5001422	. SCREW CAP HEX 5/8-11x2 1/2 G8 ZP	12	12	12	12	
8	5001423	. SCREW CAP HEX 5/8-11x4 G8 ZP	4	4	4	4	
9	620474	. WASHER HARDENED / 5/8" I.D. / REPLACED BY: 500484	18	18	18	18	
10	500742	. NUT HEX STO 7/8-14 ZP	18	18	18	18	
11	620351	. GASKET / AXLE SHAFT W/8 STUDS	2	2	2	2	
12	621626	. SHAFT, AXLE / L.H. / 42" (stp 1537)	1	1	1	1	E
		B) W/ABS ON DRIVE WHEEL END / PLAIN DISC					
		C) W/ABS ON DRIVE WHEEL END / VENTED DISC					
		D) W/ABS PROTECTOR SHIELD					
		E) WITH DOUBLE WHEEL ONLY					

From Y-7046 Up to 8-9339	DATE: 01/2014	PAGE: Y2-1105-00

REAR AXLE - MODEL "RC23160"

ITEM	PART	DESCRIPTION	XL45	MTH40	MTH45	MTH45S	NOTE
12	621756	. SHAFT, AXLE / R.H. / 44.37"(stp 1999) / SUPER SINGLE	1	1	1	1	F
12	621692	. SHAFT, AXLE / L.H. / (stp 9645) / W/DIFF LOCK	2	2	2	2	E
13	621625	. SHAFT, AXLE / R.H. / 40 1/8" (stp 1536)	1	1	1	1	E
13	621755	. SHAFT, AXLE / L.H. / 46.30" (stp 1998) / SUPER SINGLE	1	1	1	1	F
NS	689949	OIL DIFERENTIAL S.A.E. 140 GL5 85-140W (VRAC)	AR	AR	AR	AR	
		NEXT FOLLOWING ITEMS ARE RELATED					
		WITH "OPTION" DIFFERENTIAL LOCK					
NS	624216	DECAL "CAUTION" DIFFERENTIAL LOCK…"	1	1	1	1	
NS	562697	SWITCH / ON-ON / D.P.D.T. / CH-OVER / W/RED & GREEN LED	1	1	1	1	
NS	564013	CAP / DIFFERENTIAL LOCK	1	1	1	1	
NS	142198	HOSE ASSY / <> DIFF & STRUCTURE / #6 875MM	1	1	1	1	
NS	172589	SUPPORT HOSE / (WELDED TO STRUCTURE)	1	1	1	1	
NS	641937	VALVE, 3 WAYS, 2 POSITIONS N.C. / W/MAN OVERRIDE	1	1	1	1	
. NS	641929	. COIL 24V	1	1	1	1	
. NS	641385	. CONNECTOR / SOCKET HOUSING ASSY 3C / PNEUMAC 54934-01	1	1	1	1	
NS	641934	SILENCER / MUFFLER / 3/8NPT-M	1	1	1	1	
NS	260862	PANEL TO FIX VALVE AT REAR COMPARTMENT			1		
30	621636	SCREW CAP HEX 9/16-18 X 2 GR 8 / TO FIX BRACKET TO AXLE	2	2	2	2	
31	621365	WASHER (HARD) .59IDX.97ODX.09	12	12	12	12	
32	621365	WASHER (HARD) .59IDX.97ODX.09	24	24	24	24	
33	621638	NUT HEX 9/16-18 GR8	12	12	12	12	
50	Y2-1235-00	**BRAKE PARTS - DRIVE AXLE "MERITOR" W/DISCS / SB7 SERIES**					
50	Y2-1225-01	**BRAKE PARTS "KNORR-BREMSE" SN7 SERIES**					
51	Y2-1305-00	**HUB & ROTOR - DRIVE AXLE**					
52	Y2-1110-00	**CARRIER ASSY**					
53	Y2-0905-00	**PROPELLER SHAFT**					
		E) WITH DOUBLE WHEEL ONLY					
		F) WITH SUPER SINGLE ONLY					

From Y-7046 Up to 8-9339	DATE: 01/2014	PAGE: Y2-1110-00
CARRIER ASSY		

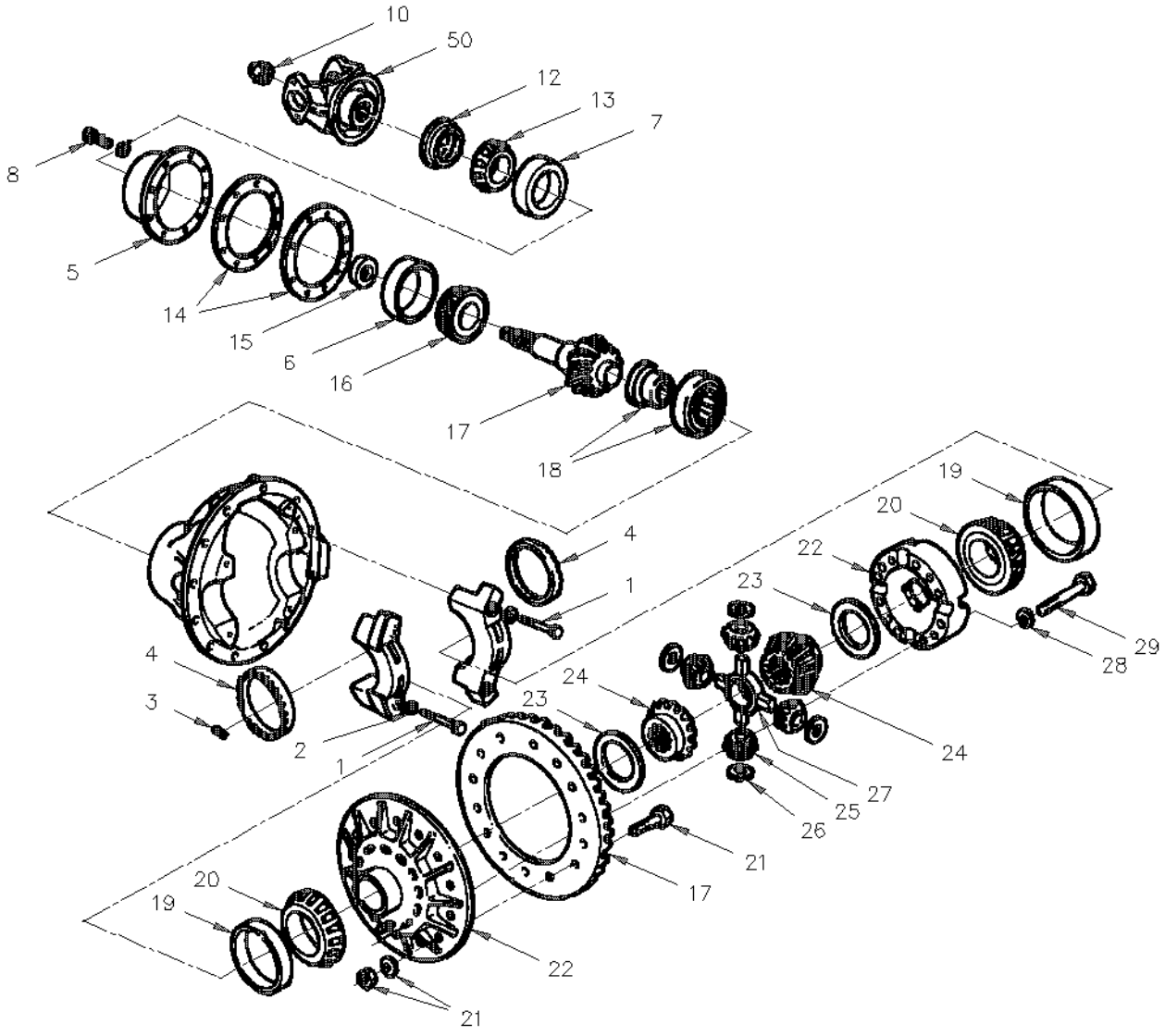

From Y-7046 Up to 8-9339	DATE: 01/2014	PAGE: Y2-1110-00

CARRIER ASSY

ITEM	PART	DESCRIPTION	XL45	MTH40	MTH45	MTH45S	NOTE
	621549	CARRIER ASSY / 3.07 RATIO Up to 2-7822 / REPLACED BY: 621714	1				
	621714	CARRIER ASSY / 3.07 RATIO From 2-7823	1				
	621550	CARRIER ASSY / 3.21 RATIO Up to 2-7822 / REPLACED BY: 621715	1				
	621715	CARRIER ASSY / 3.21 RATIO From 2-7823	1				
	621551	CARRIER ASSY / 3.42 RATIO Up to 2-7822 / REPLACED BY: 621722					
	621722	CARRIER ASSY / 3.42 RATIO From 2-7823	1	1	1	1	
	621547	CARRIER ASSY / 3.58 RATIO Up to 2-7822 / REPLACED BY: 621728	1	1	1	1	
	621728	CARRIER ASSY / 3.58 RATIO From 2-7823	1	1	1	1	
	621548	CARRIER ASSY / 3.73 RATIO Up to 2-7822 / REPLACED BY: 621723	1	1	1	1	
	621723	CARRIER ASSY / 3.73 RATIO From 2-7823	1	1	1	1	
	621552	CARRIER ASSY / 4.10 RATIO Up to 2-7822 / REPLACED BY: 621724	1	1	1	1	
	621724	CARRIER ASSY / 4.10 RATIO From 2-7823	1	1	1	1	
	621555	CARRIER ASSY / 4.30 RATIO Up to 2-7822 / REPLACED BY: 621725	1	1	1	1	
	621725	CARRIER ASSY / 4.30 RATIO From 2-7823	1	1	1	1	
	621553	CARRIER ASSY / 4.56 RATIO Up to 2-7822 / REPLACED BY: 621726	1	1	1	1	
	621726	CARRIER ASSY / 4.56 RATIO From 2-7823	1	1	1	1	
	621691	CARRIER ASSY / 4.56 RATIO Up to 2-7822	1	1	1	1	B
	621729	CARRIER ASSY / 4.56 RATIO From 2-7823	1	1	1	1	B
	621554	CARRIER ASSY / 4.89 RATIO Up to 2-7822 / REPLACED BY: 621727	1	1	1	1	
	621727	CARRIER ASSY / 4.89 RATIO From 2-7823	1	1	1	1	
	N.S.S.	. CASE CARRIER	1	1	1	1	1
1	621418	. . SCREW, CAP	2	2	2	2	
2	621417	. . WASHER	4	4	4	4	
3	505128	. SPRING, PIN 1/4 X 2	2	2	2	2	
4	621479	. RING, ADJUSTING / W/MODEL 3200-P-1706	2	2	2	2	
5	621419	. CASE & CUP ASSY / PINION BEARING	1	1	1	1	
6	621420	. . CUP BEARING / INNER BEARING	1	1	1	1	
7	621421	. . CUP BEARING / OUTER BEARING	1	1	1	1	
8	621439	. SCREW, CAP	8	8	8	8	
10	621418	. SCREW, CAP	4	4	4	4	
NS	621445	. NUT / DRIVE PINION	1	1	1	1	
12	621424	. SEAL, OIL	1	1	1	1	
NS	195671	SEAL INSTALLER TOOL / CARRIER DRIVE PINION (2731T1)	1				I
13	621423	. CONE BEARING / OUTER	1	1	1	1	
14	621438	. SHIM 0.020	AR	AR	AR	AR	
14	621437	. SHIM 0.008	AR	AR	AR	AR	
14	621436	. SHIM 0.005	AR	AR	AR	AR	
14	621435	. SHIM 0.003	AR	AR	AR	AR	
15	621434	. SPACER .263	AR	AR	AR	AR	
		1) NOT SOLD SEPARATELY					
		B) CARRIER WITH DIFFERENTIAL LOCK					
		I) THIS TOOL INSTALLER ARE USE WITH NEW SEAL					
		STAMPED A1205A2731					

From Y-7046 Up to 8-9339	DATE: 01/2014	PAGE: Y2-1110-00

CARRIER ASSY

ITEM	PART	DESCRIPTION	XL45	MTH40	MTH45	MTH45S	NOTE
15	621433	. SPACER .262	AR	AR	AR	AR	
15	621432	. SPACER .261	AR	AR	AR	AR	
15	621431	. SPACER .260	AR	AR	AR	AR	
15	621430	. SPACER .256	AR	AR	AR	AR	
15	621429	. SPACER .254	AR	AR	AR	AR	
15	621428	. SPACER .253	AR	AR	AR	AR	
15	621427	. SPACER .252	AR	AR	AR	AR	
15	621426	. SPACER .251	AR	AR	AR	AR	
15	621425	. SPACER .250	AR	AR	AR	AR	
16	621422	. CONE BEARING / INNER	1	1	1	1	
17	621485	. SET, GEAR DRIVE & PINION / 3.07 RATIO Up to 2-7822 / REPLACED BY: 621717	1	1	1	1	
17	621717	. SET, GEAR DRIVE & PINION / 3.07 RATIO From 2-7823	1	1	1	1	
17	621474	. SET, GEAR DRIVE & PINION / 3.21 RATIO Up to 2-7822 / REPLACED BY: 621721	1	1	1	1	
17	621721	. SET, GEAR DRIVE & PINION / 3.21 RATIO From 2-7823	1	1	1	1	
17	621472	. SET, GEAR DRIVE & PINION / 3.42 RATIO Up to 2-7822 / REPLACED BY: 621712	1	1	1	1	
17	621712	. SET, GEAR DRIVE & PINION / 3.42 RATIO From 2-7823	1	1	1	1	
17	621483	. SET, GEAR DRIVE & PINION / 3.58 RATIO Up to 2-7822 / REPLACED BY: 621718	1	1	1	1	
17	621718	. SET, GEAR DRIVE & PINION / 3.58 RATIO From 2-7823	1	1	1	1	
17	621484	. SET, GEAR DRIVE & PINION / 3.73 RATIO Up to 2-7822 / REPLACED BY: 621713	1	1	1	1	
17	621713	. SET, GEAR DRIVE & PINION / 3.73 RATIO From 2-7823	1	1	1	1	
17	621487	. SET, GEAR DRIVE & PINION / 4.10 RATIO Up to 2-7822 / REPLACED BY: 621710	1	1	1	1	
17	621710	. SET, GEAR DRIVE & PINION / 4.10 RATIO From 2-7823	1	1	1	1	
17	621646	. SET, GEAR DRIVE & PINION / 4.30 RATIO Up to 2-7822 / REPLACED BY: 621720	1	1	1	1	
17	621720	. SET, GEAR DRIVE & PINION / 4.30 RATIO From 2-7823	1	1	1	1	
17	621538	. SET, GEAR DRIVE & PINION / 4.56 RATIO Up to 2-7822 / REPLACED BY: 621716	1	1	1	1	
17	621716	. SET, GEAR DRIVE & PINION / 4.56 RATIO From 2-7823	1	1	1	1	
17	621541	. SET, GEAR DRIVE & PINION / 4.89 RATIO Up to 2-7822 / REPLACED BY: 621719	1	1	1	1	
17	621719	. SET, GEAR DRIVE & PINION / 4.89 RATIO From 2-7823	1	1	1	1	
18	621481	. BEARING SPIGOT / INNER & OUTER / W/3200-P-1706	1	1	1	1	
NS	621482	. RING, SNAP / TO FIX SPIGOT BEARING	1	1	1	1	
19	621210	. CUP BEARING	2	2	2	2	A
20	621209	. CONE BEARING	2	2	2	2	A
21	621444	. BOLT, NUT & WASHER / (KIT OF 12)	1	1	1	1	
22	621480	. CASE ASSY W/RATIO 3.07, 3.21, 3.42& 3.73	1	1	1	1	
22	621488	. CASE ASSY / W/RATIO 3.91, 4.10, 4.30 & 4.56	1	1	1	1	
22	621539	. CASE ASSY / W/RATIO 4.89	1	1	1	1	
23	621449	. . WASHER, THRUST / SIDE GEAR	2	2	2	2	
24	621450	. . GEAR, SIDE	2	2	2	2	
25	621452	. . GEAR, PINION	4	4	4	4	
		A) ALSO SOLD IN KIT #621653					

From Y-7046 Up to 8-9339	DATE: 01/2014	PAGE: Y2-1110-00

CARRIER ASSY

ITEM	PART	DESCRIPTION	XL45	MTH40	MTH45	MTH45S	NOTE
26	621453	. . WASHER, GEAR PINION	4	4	4	4	
27	621451	. . SPIDER	1	1	1	1	
28	621447	. . WASHER	12	12	12	12	
29	621448	. . SCREW, CAP	12	12	12	12	
NS	621653	KIT, CUP & CONE	1				A
50	621403	YOKE (1810) FULL ROUND (46 SPL)	1	1	1	1	
. NS	621501	. DEFLECTOR, OIL	1	1	1	1	
. NS	621492	. SPEEDY SLEEVE 3.250" I.D. / TO REPAIR OIL LEAK ON YOKE	1	1	1	1	
NS	621501	. DEFLECTOR, OIL	1	1	1	1	
NS	621492	SPEEDY SLEEVE 3.250" I.D. / TO REPAIR OIL LEAK ON YOKE	1	1	1	1	
		A) ALSO SOLD IN KIT #621653					

From Y-7046 Up to 8-9339	DATE: 01/2014	PAGE: Y2-12

BRAKE

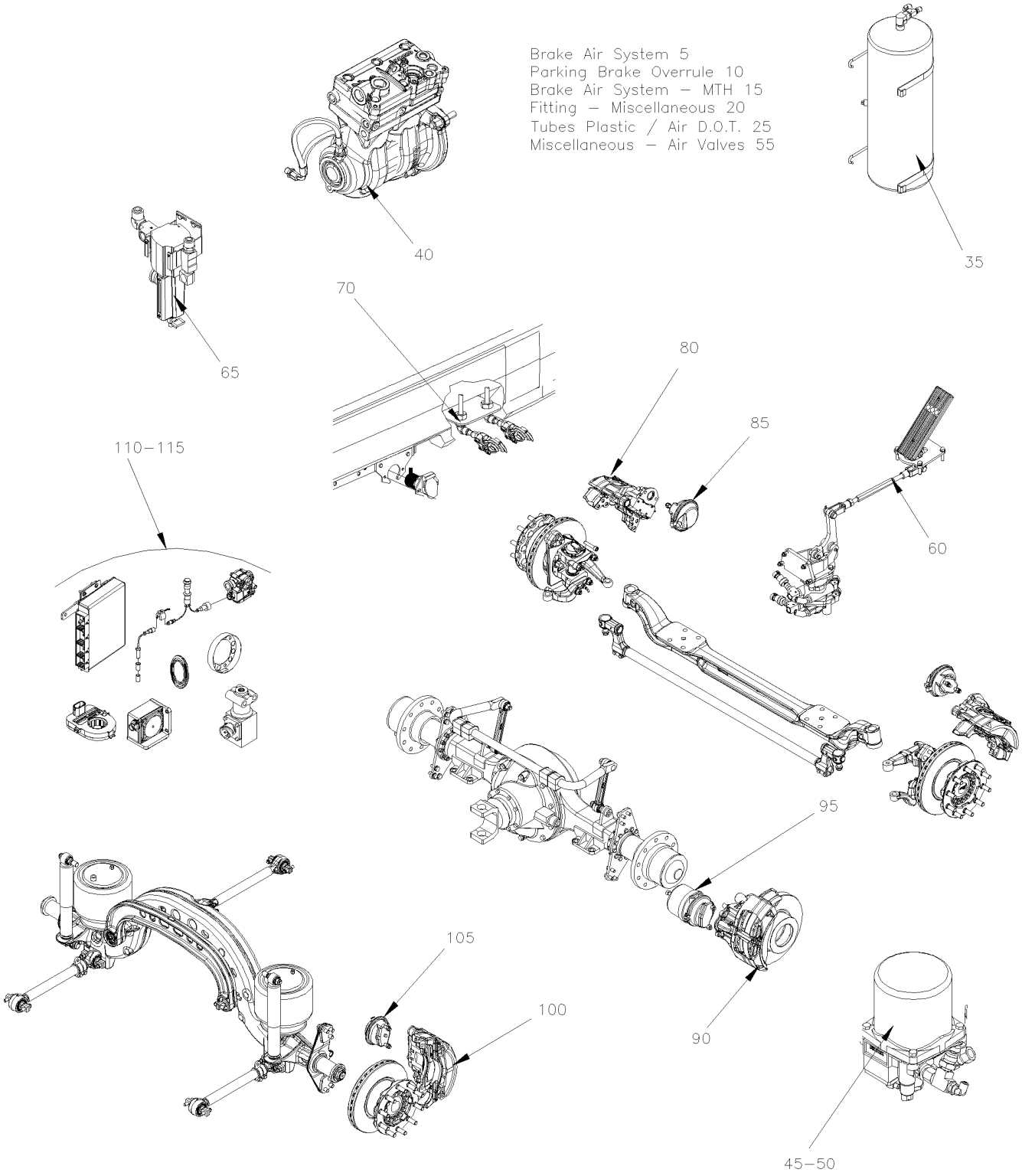

From Y-7046 Up to 8-9339	DATE: 01/2014	PAGE: Y2-12

BRAKE

ITEM	PART	DESCRIPTION	XL45	MTH40	MTH45	MTH45S	NOTE
5	Y2-1200-00	**BRAKE AIR SYSTEM From Y-7046 Up to 7-9095**					
10	Y2-1200-05	**PARKING BRAKE OVERRULE From Y-7046 Up to 6-8906**					
15	Y2-1200-50	**BRAKE AIR SYSTEM - MTH From 7-9096 Up to 8-9339**					
20	Y2-1201-00	**FITTING - MISCELLANEOUS From Y-7046 Up to 8-9339**					
25	Y2-1202-00	**TUBES PLASTIC / AIR D.O.T. From Y-7046 Up to 8-9339**					
35	Y2-1203-00	**AIR TANK - INSTALLATION From Y-7046 Up to 2-7799**					
35	Y2-1203-01	**AIR TANK - INSTALLATION From 2-7800 Up to 8-9339**					
40	Y2-1205-10	**AIR COMPRESSOR - "TU-FLO 750" - WITH DETROIT S-60 From Y-7046 Up to 3-8164**					
40	Y2-1205-11	**AIR COMPRESSOR - "BA921" - WITH DETROIT S-60 From 4-8165 Up to 8-9339**					
45	Y2-1215-00	**AIR DRYER - "BENDIX" AD-9 From Y-7046 Up to 2-7799**					
45	Y2-1215-01	**AIR DRYER - "ROCKWELL WABCO" From Y-7046 Up to 2-7799**					
45	Y2-1215-02	**AIR DRYER - "HALDEX" From 2-7800 Up to 3-7992**					
45	Y2-1215-03	**AIR DRYER - "ROCKWELL WABCO" From 3-7993 Up to 3-8164**					
45	Y2-1215-04	**AIR DRYER - "HALDEX" From 4-8165 Up to 8-9339**					
50	Y2-1215-10	**AIR DRYER - "HALDEX" - INSTALLATION From 2-7800 Up to 8-9339**					
50	Y2-1215-11	**AIR DRYER TUBE - INSTALLATION From 2-7800 Up to 3-8164**					
50	Y2-1215-12	**AIR DRYER - INSTALLATION From 4-8165 Up to 6-8906**					
50	Y2-1215-15	**CHECK VALVE INSTALLATION WITH "WABCO" & AD-9 From 4-8165 Up to 6-8906**					
55	Y2-1220-00	**MISCELLANEOUS AIR VALVE From Y-7046 Up to 8-9339**					
60	Y2-1220-10	**BRAKE PEDAL VALVE - "BENDIX" From Y-7046 Up to 8-9339**					
65	Y2-1220-15	**AIR FILTER - ACCESSORIES From Y-7046 Up to 8-9339**					
70	Y2-1220-50	**TRAILER VALVE INSTALLATION From Y-7046 Up to 8-9339**					
80	Y2-1225-00	**BRAKE PARTS - FRONT AXLE - W/"KNORR-BREMSE" / SB7 SERIES From Y-7046 Up to 7-9159**					
80	Y2-1225-01	**BRAKE PARTS "KNORR-BREMSE" SN7 SERIES From 7-9160 Up to 8-9339**					
80	Y2-1225-02	**BRAKE PARTS "KNORR-BREMSE" SN7 SERIES W/NEW SLIDE PINS From Y-7046 Up to 8-9339**					
85	Y2-1225-10	**BRAKE CHAMBER - FRONT AXLE TYPE 22 From Y-7046 Up to 3-8164**					
85	Y2-1225-11	**BRAKE CHAMBER - FRONT AXLE TYPE 24 From Y-7046 Up to 8-9339**					
85	Y2-1225-12	**BRAKE CHAMBER - FRONT AXLE TYPE 27 From 4-8165 Up to 8-9339**					
90	Y2-1235-00	**BRAKE PARTS - DRIVE AXLE "MERITOR" W/DISCS / SB7 SERIES From Y-7046 Up to 7-9159**					
95	Y2-1235-10	**BRAKE CHAMBER - DRIVE AXLE "KNORR-BREMSE" From Y-7046 Up to 8-9339**					
100	Y2-1245-00	**BRAKE PARTS - TAG AXLE - W/"KNORR-BREMSE" / SB7 SERIES From Y-7046 Up to 7-9159**					
105	Y2-1245-10	**BRAKE CHAMBER - TAG AXLE TYPE 16/16 From Y-7046 Up to 3-8164**					
105	Y2-1245-11	**BRAKE CHAMBER - TAG AXLE TYPE 14/16 From 4-8165 Up to 8-9278**					
105	Y2-1245-12	**BRAKE CHAMBER - TAG AXLE TYPE 14 & 16 From 8-9279 Up to 8-9339**					
110	Y2-1250-00	**ANTI-LOCK BRAKING SYSTEM From Y-7046 Up to 8-9278**					
115	Y2-1250-10	**ABS BRAKE VALVE INSTALLATION From 4-8165 Up to 8-9339**					

From Y-7046 Up to 7-9095	DATE: 01/2014	PAGE: Y2-1200-00

BRAKE AIR SYSTEM

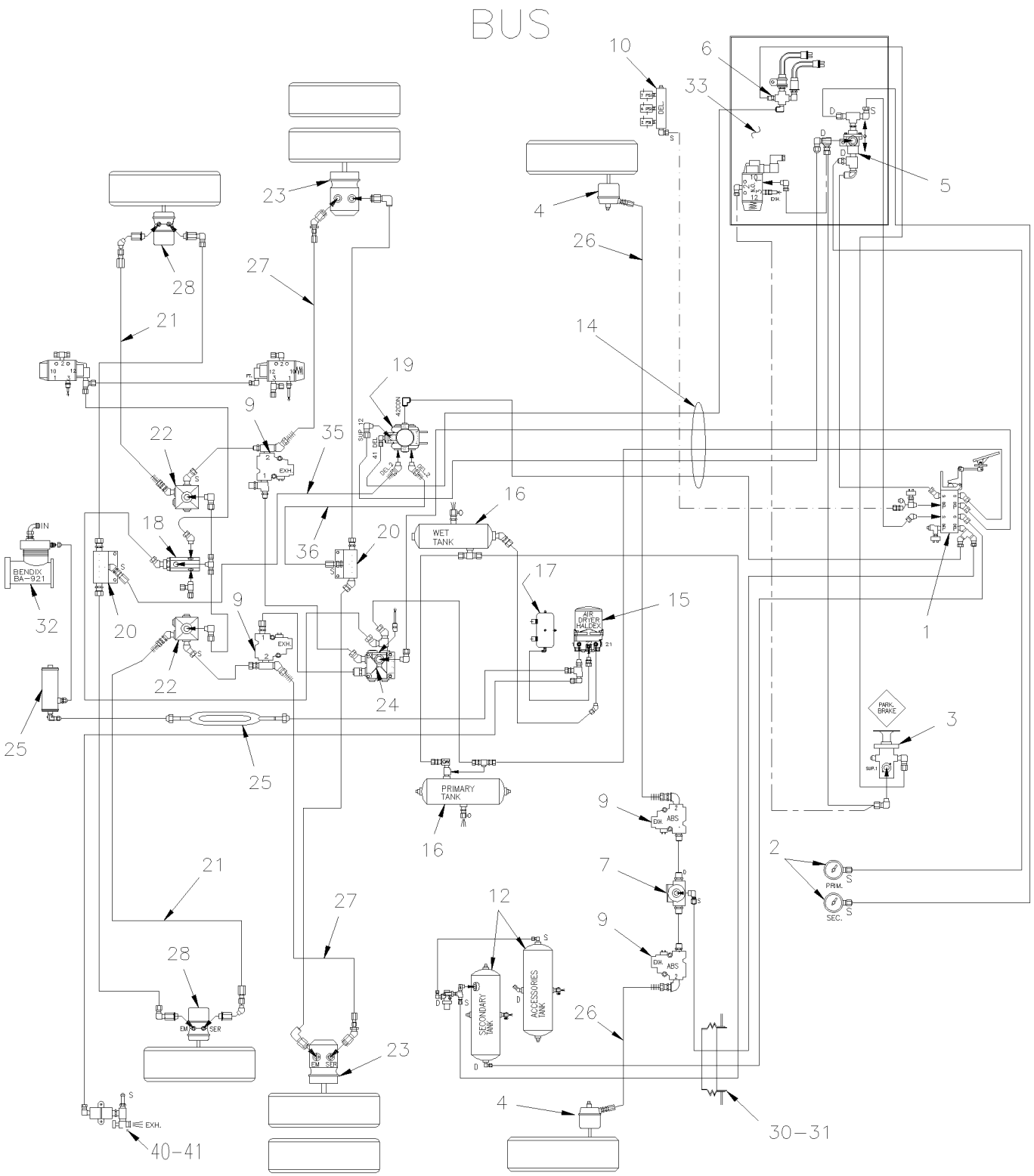

From Y-7046 Up to 7-9095	DATE: 01/2014	PAGE: Y2-1200-00

BRAKE AIR SYSTEM

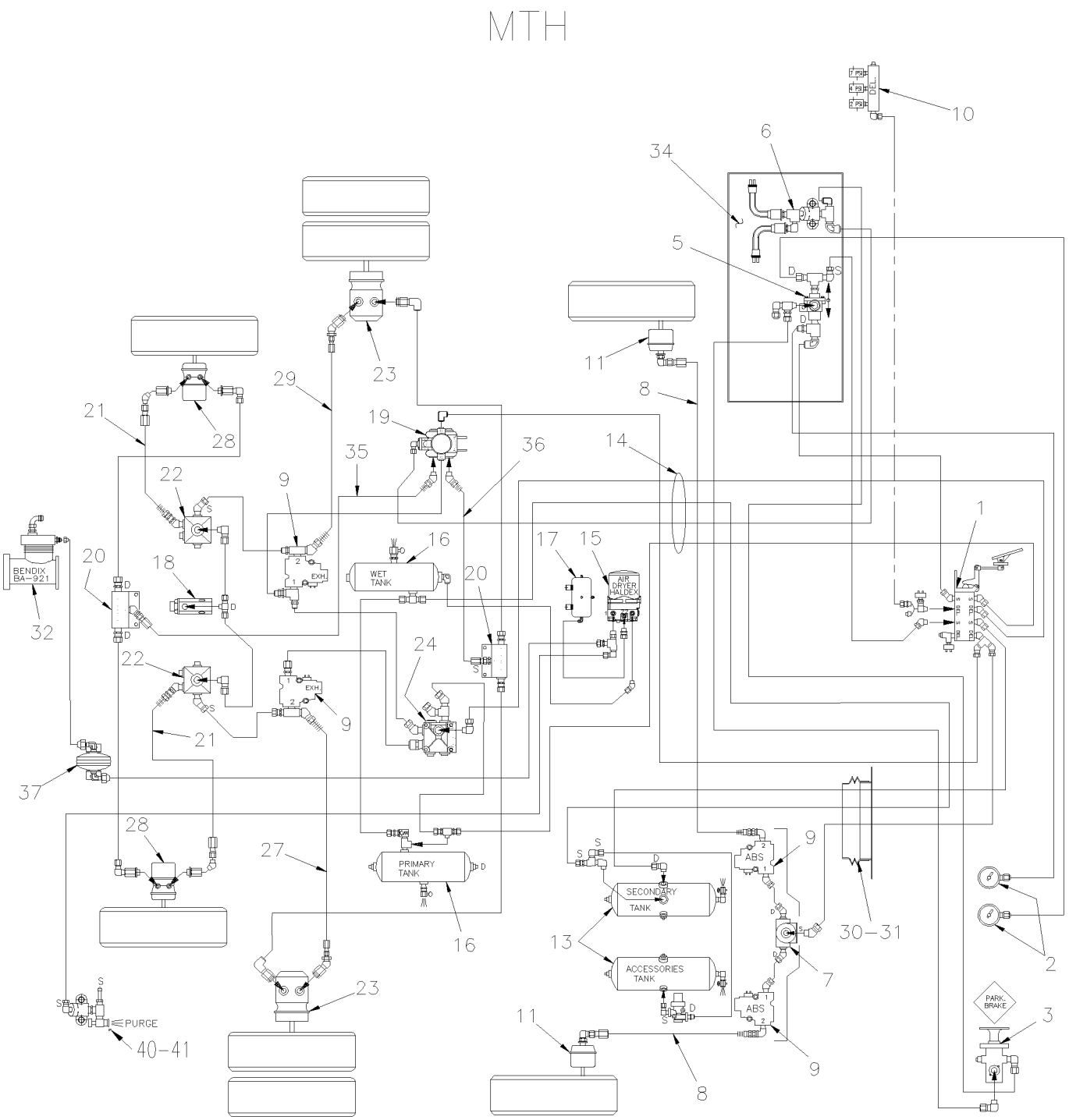

From Y-7046 Up to 7-9095	DATE: 01/2014	PAGE: Y2-1200-00

BRAKE AIR SYSTEM

ITEM	PART	DESCRIPTION	XL45	MTH40	MTH45	MTH45S	NOTE
1	Y2-1220-10	**BRAKE PEDAL VALVE - "BENDIX"**					
2	Y2-0645-20	**CENTER DASHBOARD PANEL**					
3	641128	VALVE, CONTROL VALVE PP-1 / 40PSI / REPLACED BY: 641571	1				
. NS	641154	. REPAIR KIT / PP-1 & RD-3 / (281126)	1				
4	Y2-1225-10	**BRAKE CHAMBER - FRONT AXLE TYPE 22**					
4	Y2-1225-11	**BRAKE CHAMBER - FRONT AXLE TYPE 24**					
4	Y2-1225-12	**BRAKE CHAMBER - FRONT AXLE TYPE 27**					
5	641564	VALVE, DOUBLE CHECK DC-4	1				
6	640870	VALVE / SPRING BRAKE SR-1 Up to 5-8358	1				
. NS	640921	. REPAIR KIT / SR-1 Up to 5-8358	1				
6	287234	PRESSURE SWITCH N.C. 30-10 20PS001AB030E010E From 5-8359	2				
7	641429	VALVE, QUICK RELEASE QR-1 / 3/8NPTx3/8NPTx3/8NPT	1				
. NS	640924	. REPAIR KIT / QR-1	1				
8	641903	HOSE BRAKE #8 1090MM (43")			2		
9	641951	VALVE, "ABS" 12VOLT	4				
10	Y2-0750-01	**AUTOMATIC TRANSMISSION - "WORLD" WITH DETROIT S-60**					
11	Y2-1225-11	**BRAKE CHAMBER - FRONT AXLE TYPE 24**					
11	Y2-1225-12	**BRAKE CHAMBER - FRONT AXLE TYPE 27**					
12	641583	AIR TANK / 1508 IN° / 9" 1/2 O.D. X 24"	2				
13	141834	AIR TANK / 1303 IN° / 8" O.D. X 27"1/2			2		
14	Y2-1202-00	**TUBES PLASTIC / AIR D.O.T.**					
15	Y2-1215-10	**AIR DRYER - "HALDEX" - INSTALLATION**					
16	140869	AIR TANK / 1791 IN° / 9 1/2" O.D. X 27"	2				
17	70307176	AIR TANK / 281 IN° / 6" O.D. X 12"	1				
18	640442	VALVE, INVERSION TR-2	1				
19	641120	VALVE, RELAY R-14 HORIZONTAL PORT Up to 5-8358 / REPLACED BY: 641570	1				
. NS	10508267	. KIT, REPAIR Up to 5-8358	1				
19	642015	VALVE / SPRING BRAKE SR-7 From 5-8359 / REPLACED BY: 642119	1				
19	643385	KIT CHECK VALVE CONVERSION SR-7	1				
19	643384	VALVE / SPRING BRAKE SR-7 / REPLACED BY: 642119	1				
. NS	642119	. VALVE / SPRING BRAKE SR-7 (K021558)	1				
20	641136	ANCHOR TEE / PIPE FITTING / 3/8NPT-Fx3/8NPT-Fx3/8NPT-F AL	2				
21	641903	HOSE BRAKE #8 1090MM (43")	2				
22	642067	VALVE, RELAY R-12 HORIZONTAL PORT	2				
23	Y2-1235-10	**BRAKE CHAMBER - DRIVE AXLE "KNORR-BREMSE"**					
24	642013	VALVE, RELAY R-12 DC Up to 5-8358	1				
24	641991	VALVE, RELAY R-14 "WABCO" From 5-8359	1				
25	Y2-1215-12	**AIR DRYER - INSTALLATION**					
26	641908	HOSE BRAKE #8 1300MM (51")	2				
27	641305	HOSE BRAKE #8 718MM (28 1/4")	1				
27	641305	HOSE BRAKE #8 718MM (28 1/4")			2		
28	Y2-1245-10	**BRAKE CHAMBER - TAG AXLE TYPE 16/16**					
29	641302	HOSE BRAKE #8 610MM (24")	1				
30	504499	CUFF END BELLOW / 2 7/8" I.D. x 3 5/8" x 4 7/16	1				

From Y-7046 Up to 7-9095	DATE: 01/2014	PAGE: Y2-1200-00

BRAKE AIR SYSTEM

ITEM	PART	DESCRIPTION	XL45	MTH40	MTH45	MTH45S	NOTE
31	141567	PROTECTOR RUBBER 100MM	1				
NS	509558	WEATHERSEAL SNAP-ON 1/8" / SINGLE LIP / WH / C.T.L.	AR				
32	Y2-1205-11	**AIR COMPRESSOR - "BA921" - WITH DETROIT S-60**					
33	Y2-1630-02	**FRONT KNEELING - CONTROL PANEL**					
33	Y2-1630-01	**FRONT KNEELING - CONTROL PANEL**					
33	Y2-1630-02	**FRONT KNEELING - CONTROL PANEL**					
34	Y2-1640-50	**LEVEL-LOW - CONTROL PANEL & VALVES**					
34	Y2-1640-51	**LEVEL-LOW - CONTROL PANEL & VALVES**					
34	Y2-1640-52	**LEVEL-LOW - CONTROL PANEL & VALVES**					
35	641303	HOSE BRAKE #8 914MM (36") Up to 5-8358	1				
35	642020	HOSE BRAKE #8 914MM (36") From 5-8359	1				
36	641305	HOSE BRAKE #8 718MM (28 1/4") Up to 5-8358	1				
36	642019	HOSE BRAKE #8 718MM (28 1/4") From 5-8359	1				
37	032428	AIR TANK / 61 IN° / 6" O.D. X 4"			1		
40	640488	VALVE, AIR FILL 1/8" NPT	1				
. NS	650164	. CAP VALVE / CHROME	1				
41	5011129	NEEDLE VALVE 1/4 NPT M x 1/4 NPT F	1				

From Y-7046 Up to 6-8906	DATE: 01/2014	PAGE: Y2-1200-05

PARKING BRAKE OVERRULE

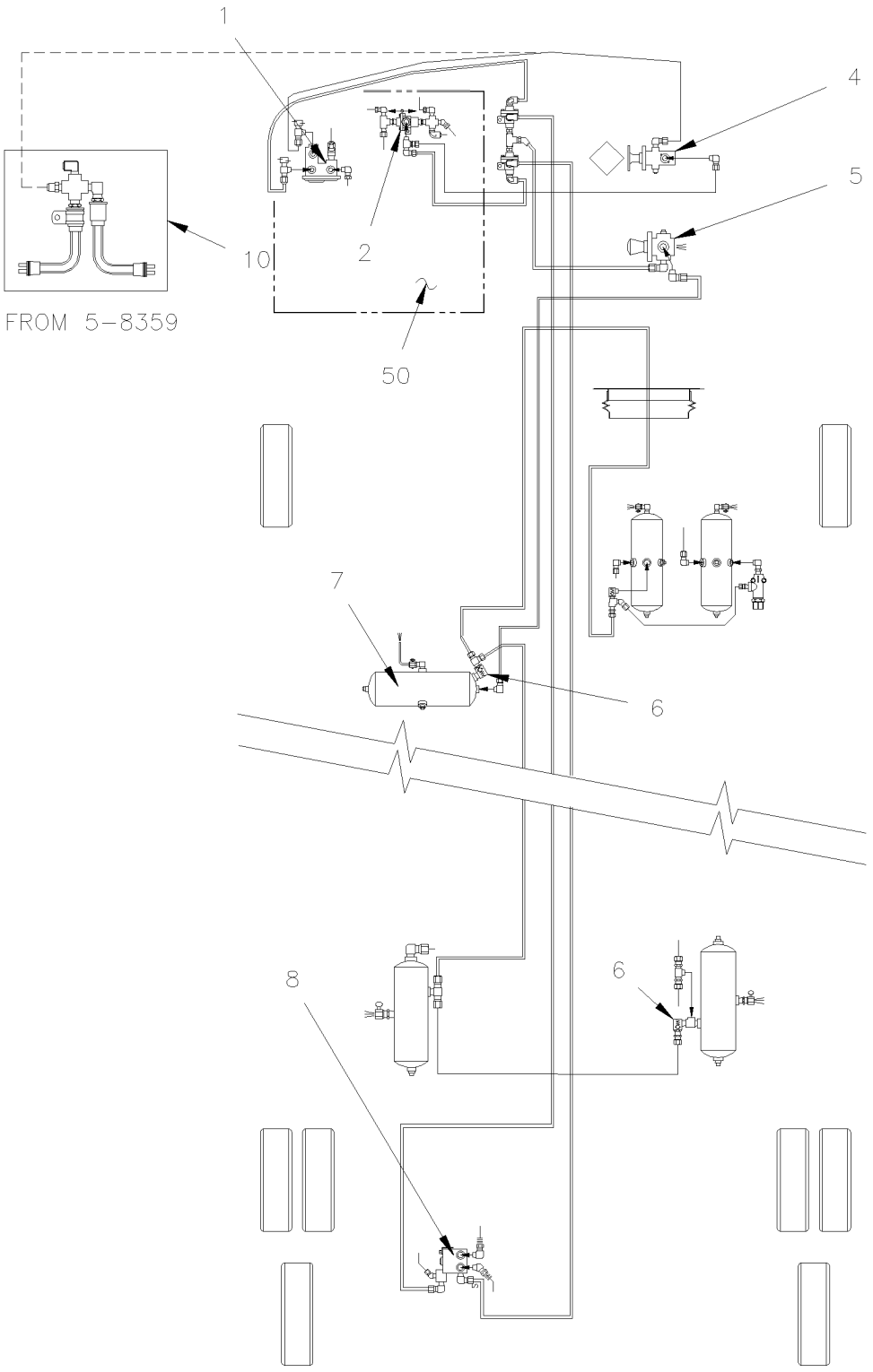

From Y-7046 Up to 6-8906	DATE: 01/2014	PAGE: Y2-1200-05

PARKING BRAKE OVERRULE

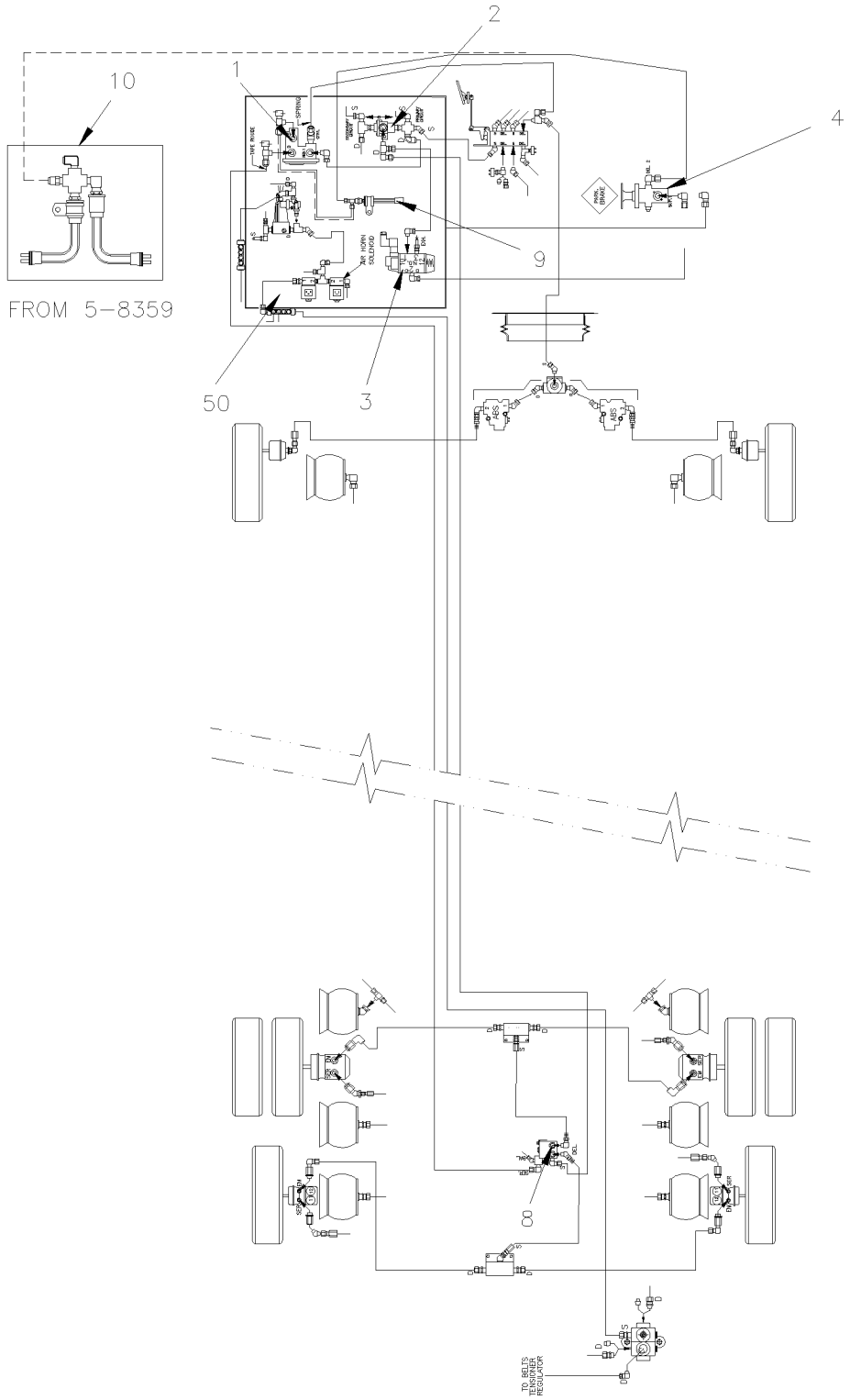

From Y-7046 Up to 6-8906	DATE: 01/2014	PAGE: Y2-1200-05

PARKING BRAKE OVERRULE

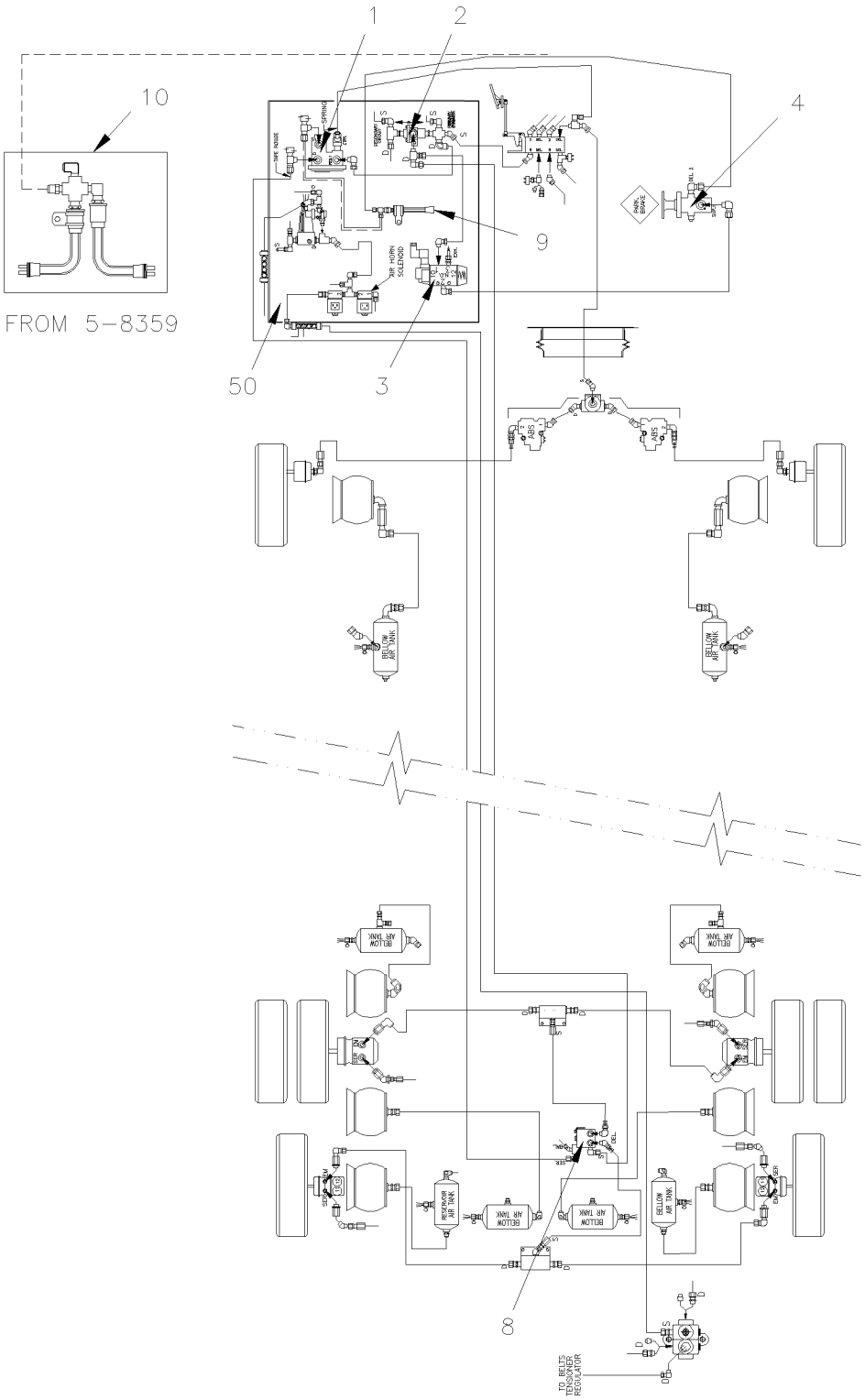

From Y-7046 Up to 6-8906	DATE: 01/2014	PAGE: Y2-1200-05

PARKING BRAKE OVERRULE

ITEM	PART	DESCRIPTION	XL45	MTH40	MTH45	MTH45S	NOTE
1	640870	VALVE / SPRING BRAKE SR-1 Up to 5-8358	1				
. NS	640921	. REPAIR KIT / SR-1 Up to 5-8358	1				
2	641564	VALVE, DOUBLE CHECK DC-4	1				
3	641528	VALVE, 3 WAYS, 2 POSITIONS N.O.	1				
. NS	641929	. COIL 24V	1				
. NS	641169	. SPOOL	1				
. NS	641385	. CONNECTOR / SOCKET HOUSING ASSY 3C	1				
4	641128	VALVE, CONTROL VALVE PP-1 / 40PSI / REPLACED BY: 641571	1				
. NS	641154	. REPAIR KIT / PP-1 & RD-3 / (281126)	1				
5	640472	VALVE, CONTROL / RD-3	1				
. NS	641154	. REPAIR KIT / PP-1 & RD-3	1				
6	641172	VALVE, CHECK ELBOW 90º 1/2 NPT	2				
7	641411	AIR TANK / 2370 IN° / 12" O.D. X 24"	1				
7	641583	AIR TANK / 1508 IN° / 9" 1/2 O.D. X 24"	1				
8	641120	VALVE, RELAY R-14 HORIZONTAL PORT Up to 5-8358 / REPLACED BY: 641570	1				
. NS	10508267	. KIT, REPAIR Up to 5-8358	1				
8	642015	VALVE / SPRING BRAKE SR-7 From 5-8359 / REPLACED BY: 642119	1				
8	643385	KIT CHECK VALVE CONVERSION SR-7	1				
8	643384	VALVE / SPRING BRAKE SR-7 / REPLACED BY: 642119	1				
. NS	642119	. VALVE / SPRING BRAKE SR-7 (K021558)	1				
9	452082	PRESSURE SWITCH N.O. 30-15 20SP001AA030C015C Up to 5-8358	1				
10	287234	PRESSURE SWITCH N.C. 30-10 20PS001AB030E010E From 5-8359	1				
50	Y2-1630-02	**FRONT KNEELING - CONTROL PANEL**					
50	Y2-1630-01	**FRONT KNEELING - CONTROL PANEL**					
50	Y2-1630-02	**FRONT KNEELING - CONTROL PANEL**					

From 7-9096 Up to 8-9339	DATE: 01/2014	PAGE: Y2-1200-50

BRAKE AIR SYSTEM - MTH

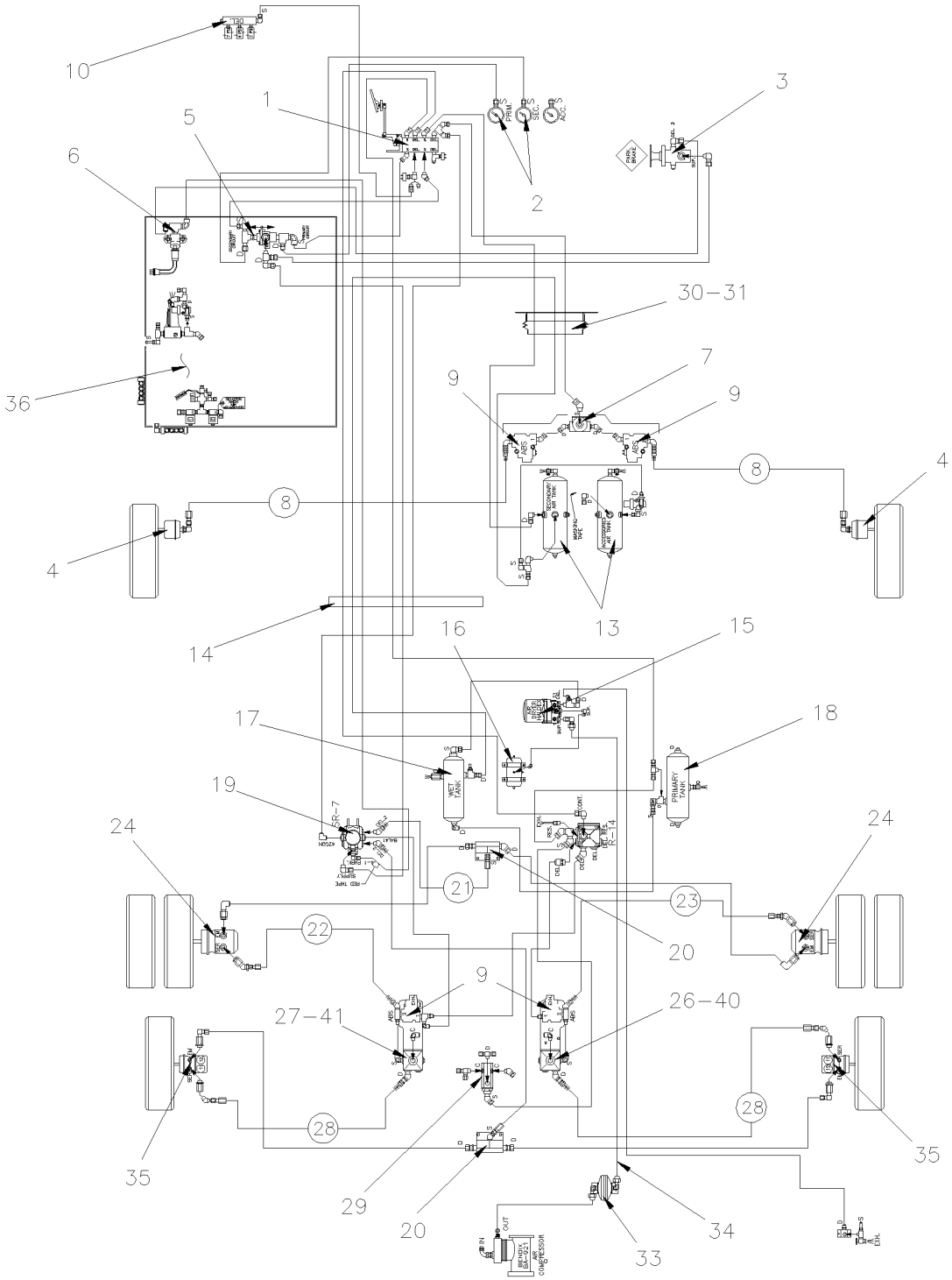

BUS SHELL WE & WO 2006 BRAKES SYSTEM

From 7-9096 Up to 8-9339	DATE: 01/2014	PAGE: Y2-1200-50

BRAKE AIR SYSTEM - MTH

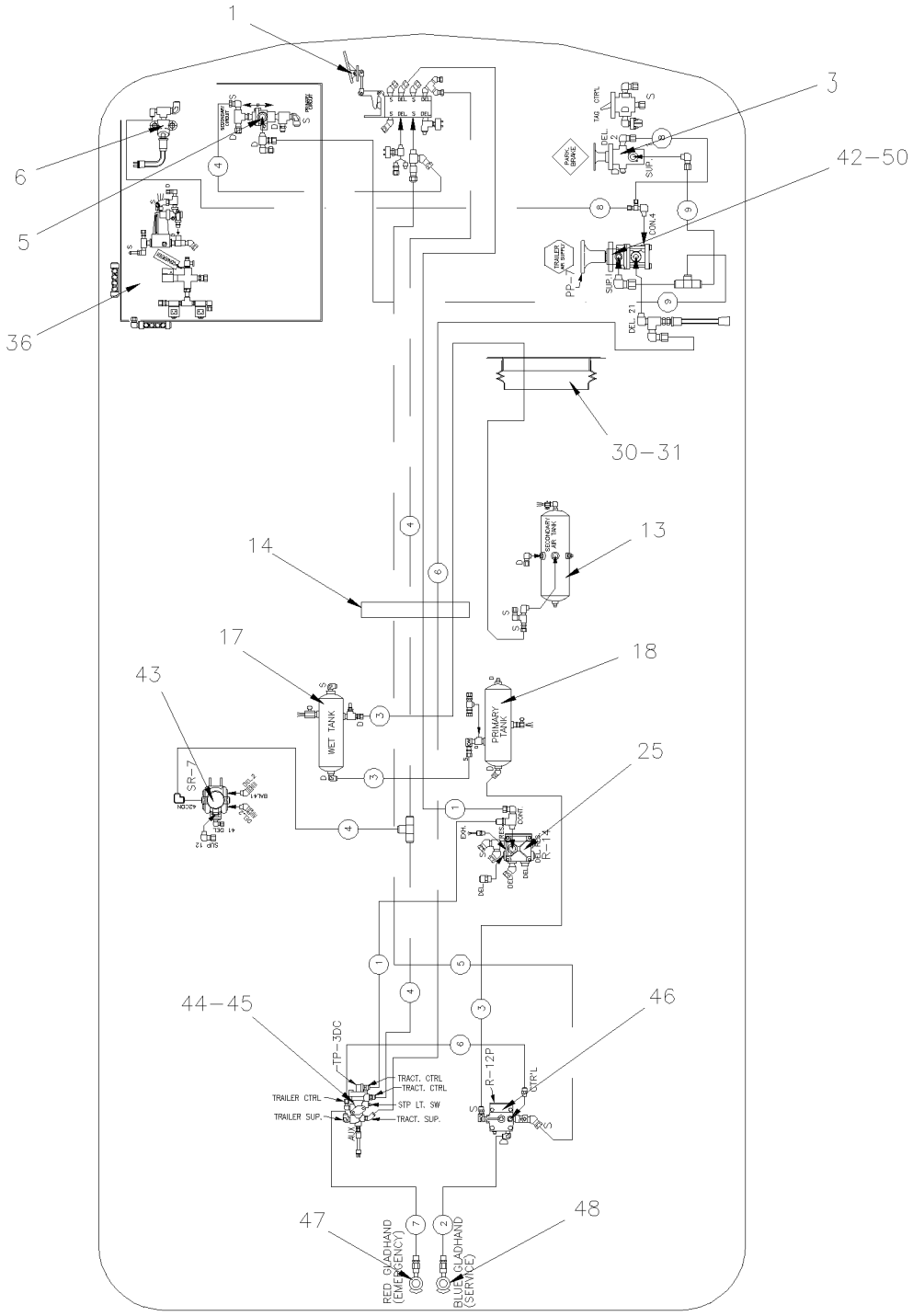

MTH–40' & MTH 45 ENT
WITH OPTION TRAILER HITCH AIR BRAKE

From 7-9096 Up to 8-9339	DATE: 01/2014	PAGE: Y2-1200-50

BRAKE AIR SYSTEM - MTH

ITEM	PART	DESCRIPTION	XL45	MTH40	MTH45	MTH45S	NOTE
1	Y2-1220-10	**BRAKE PEDAL VALVE - "BENDIX"**					
2	Y2-0645-20	**CENTER DASHBOARD PANEL**					
3	641128	VALVE, CONTROL VALVE PP-1 / 40PSI / REPLACED BY: 641571		1		1	
. NS	641154	. REPAIR KIT / PP-1 & RD-3 / (281126)		1		1	
4	Y2-1225-12	**BRAKE CHAMBER - FRONT AXLE TYPE 27**					
5	641564	VALVE, DOUBLE CHECK DC-4		1		1	
6	287234	PRESSURE SWITCH N.C. 30-10 20PS001AB030E010E		1		1	
7	641429	VALVE, QUICK RELEASE QR-1 / 3/8NPTx3/8NPTx3/8NPT		1		1	
. NS	640924	. REPAIR KIT / QR-1		1		1	
8	641903	HOSE BRAKE #8 1090MM (43")		2		2	
9	641951	VALVE, "ABS" 12VOLT		4		4	
10	Y2-0750-01	**AUTOMATIC TRANSMISSION - "WORLD" WITH DETROIT S-60**					
11	Y2-1225-12	**BRAKE CHAMBER - FRONT AXLE TYPE 27**					
12	641583	AIR TANK / 1508 IN° / 9" 1/2 O.D. X 24"		1		1	
13	141834	AIR TANK / 1303 IN° / 8" O.D. X 27"1/2		1		1	
14	Y2-1202-00	**TUBES PLASTIC / AIR D.O.T.**					
15	Y2-1215-10	**AIR DRYER - "HALDEX" - INSTALLATION**					
16	70307176	AIR TANK / 281 IN° / 6" O.D. X 12"		1		1	
17	144848	AIR TANK / 1791 IN° / 9 1/2" O.D. X 27"		1		1	
18	140869	AIR TANK / 1791 IN° / 9 1/2" O.D. X 27"		1		1	
19	642015	VALVE / SPRING BRAKE SR-7 / REPLACED BY: 642119		1		1	
19	643385	KIT CHECK VALVE CONVERSION SR-7		1		1	
192	643384	VALVE / SPRING BRAKE SR-7 / REPLACED BY: 642119		1		1	
. NS	642119	. VALVE / SPRING BRAKE SR-7 (K021558)		1		1	
20	641136	ANCHOR TEE / PIPE FITTING / 3/8NPT-Fx3/8NPT-Fx3/8NPT-F AL		1		1	
21	642019	HOSE BRAKE #8 718MM (28 1/4")		1		1	
22	641302	HOSE BRAKE #8 610MM (24")		1		1	
23	641305	HOSE BRAKE #8 718MM (28 1/4")		1		1	
24	Y2-1235-10	**BRAKE CHAMBER - DRIVE AXLE "KNORR-BREMSE"**					
25	641991	VALVE, RELAY R-14 "WABCO"		1		1	
26	641088	VALVE, RELAY R-12 HORIZONTAL PORT / REPLACED BY: 642067		1		1	
26	642067	VALVE, RELAY R-12 HORIZONTAL PORT		1		1	
27	642068	VALVE, RELAY R-12 HORIZONTAL PORT / W/OUT SUPPORT		1		1	
28	641902	HOSE BRAKE #8 737MM (29")		2		2	
29	640442	VALVE, INVERSION TR-2		1		1	
30	504499	CUFF END BELLOW / 2 7/8" I.D. x 3 5/8" x 4 7/16		1		1	
31	141567	PROTECTOR RUBBER 100MM		1		1	
32	Y2-1205-11	**AIR COMPRESSOR - "BA921" - WITH DETROIT S-60**					
33	032428	AIR TANK / 61 IN° / 6" O.D. X 4"		1		1	
34	142550	HOSE ASSY TEFLON #12 2593MM From VOIR	1				
35	Y2-1245-11	**BRAKE CHAMBER - TAG AXLE TYPE 14/16**					
35	Y2-1245-12	**BRAKE CHAMBER - TAG AXLE TYPE 14 & 16**					
36	Y2-1640-52	**LEVEL-LOW - CONTROL PANEL & VALVES**					
40	144861	SUPPORT R.H. / VALVE ABS & RELAY VALVE		1		1	

From 7-9096 Up to 8-9339	DATE: 01/2014	PAGE: Y2-1200-50

BRAKE AIR SYSTEM - MTH

ITEM	PART	DESCRIPTION	XL45	MTH40	MTH45	MTH45S	NOTE
41	144862	SUPPORT L.H. / VALVE ABS & RELAY VALVE		1		1	
42	641397	TRAILER SUPPLY VALVE PP-7		1		1	
43	642015	VALVE / SPRING BRAKE SR-7 / REPLACED BY: 642119		1		1	
43	643385	KIT CHECK VALVE CONVERSION SR-7		1		1	
43	643384	VALVE / SPRING BRAKE SR-7 / REPLACED BY: 642119		1		1	
. NS	642119	. VALVE / SPRING BRAKE SR-7 (K021558)		1		1	
44	641495	TRACTOR PROTECTION VALVE TP-3 DC		1		1	
45	950245	PRESSURE SWITCH N.C. 20-30 LO-UNLOAD W/WIRE BLACK		1		1	
46	641399	VALVE, RELAY R-12 P SUPPERSEEDED 642097 / REPLACED BY: 642097		1		1	
47	641938	GLANDHAND W/DUST COVER "RED"		1		1	
48	641939	GLANDHAND W/DUST COVER "BLUE"		1		1	
50	Y2-1806-10	**L.H. CONSOLE - BUS**					

From Y-7046 Up to 8-9339	DATE: 01/2014	PAGE: Y2-1201-00

FITTING - MISCELLANEOUS

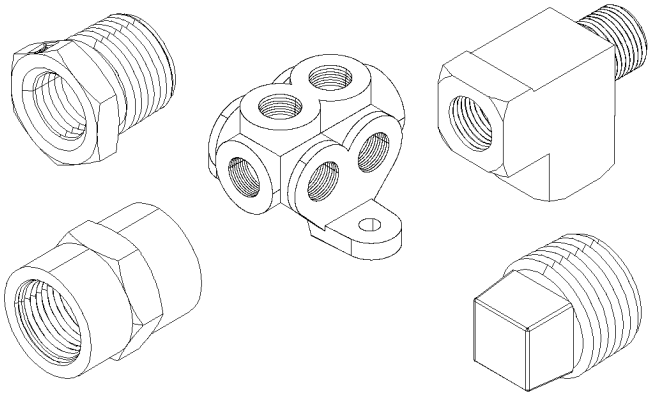

FITTING PIPE ''NPT''
1

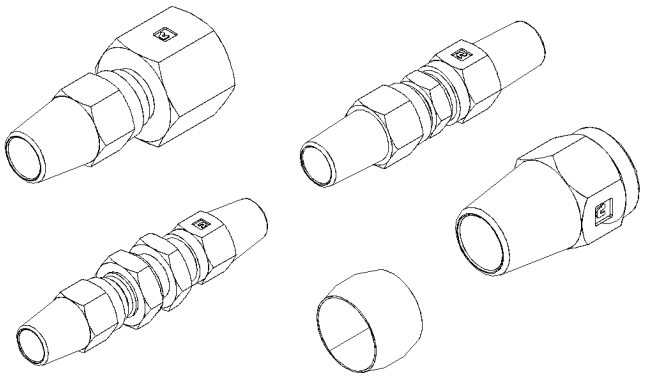

FITTING BRAKE ''AB''
2

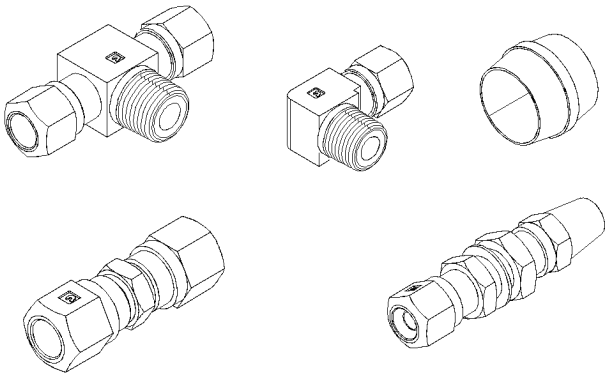

FITTING BRAKE ''NTA''
3

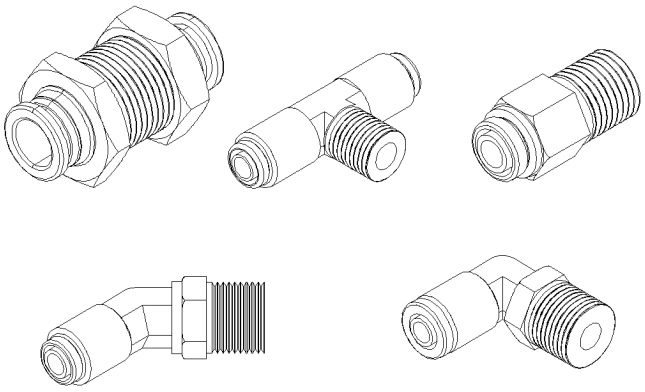

FITTING BRAKE ''PUSH–IN''
4

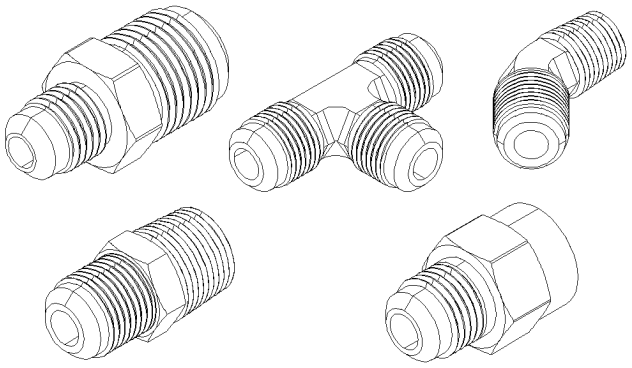

FITTING ''SAE 45°''
5

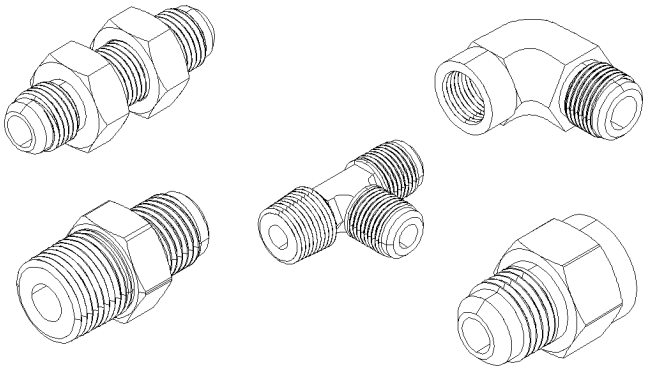

FITTING ''JIC 37°''
6

From Y-7046 Up to 8-9339	DATE: 01/2014	PAGE: Y2-1201-00

FITTING - MISCELLANEOUS

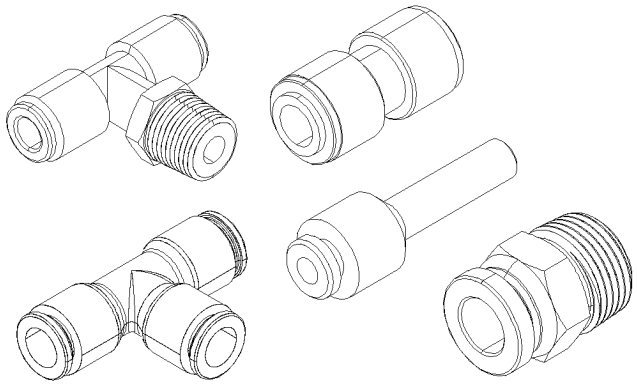

FITTING "PUSH-IN"
7

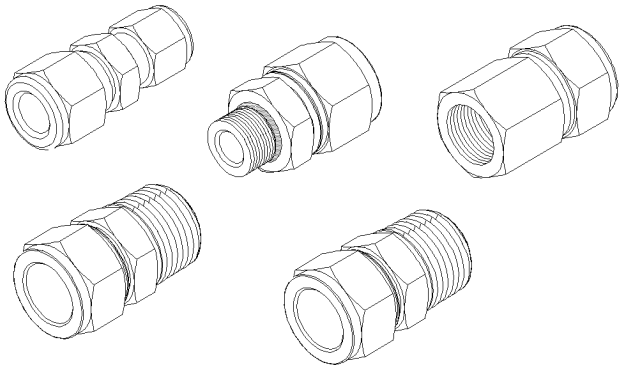

FITTING "A-LOK"
8

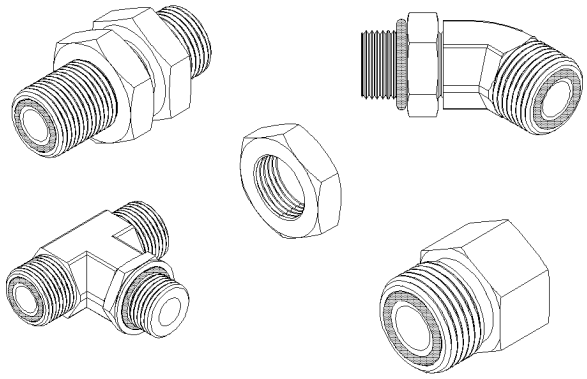

FITTING "ORS"
9

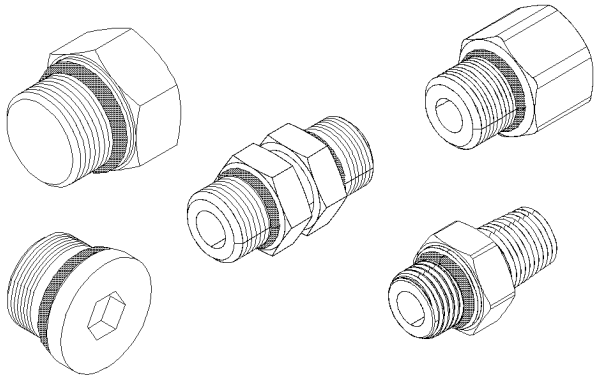

FITTING "ORB"
10

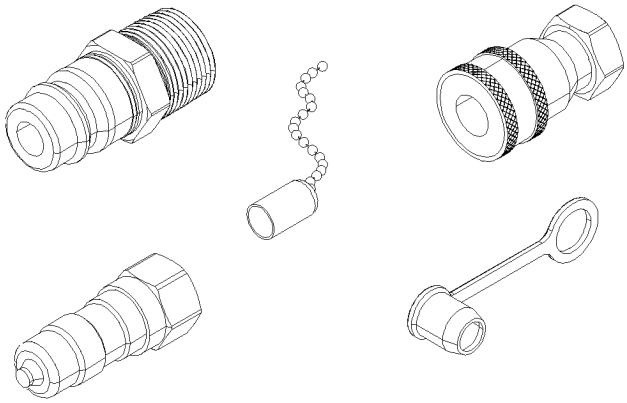

FITTING "QUICK DISCONNECT"
11

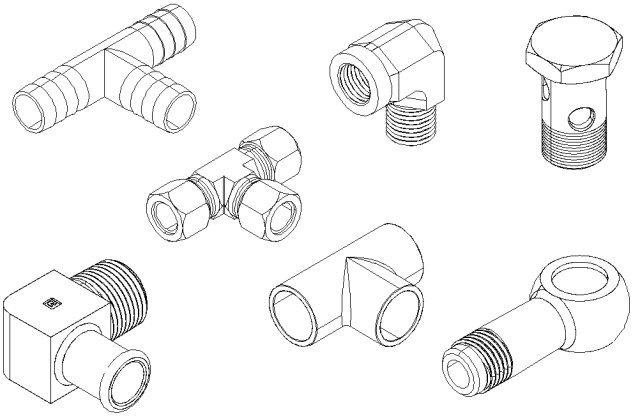

FITTING "MISCELANOUS"
12

From Y-7046 Up to 8-9339	DATE: 01/2014	PAGE: Y2-1201-00

FITTING - MISCELLANEOUS

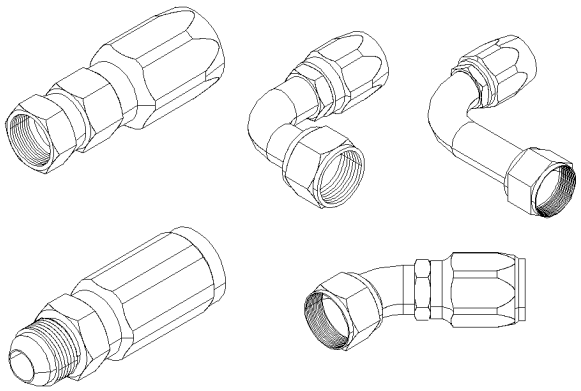

FITTING "HOSE END REUSABLE"
13

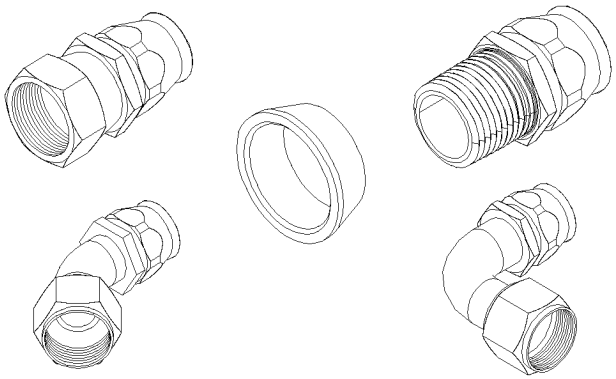

FITTING "HOSE END REUSABLE"
TEFLON
14

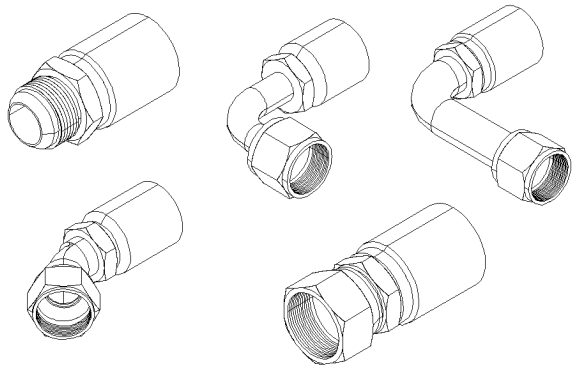

FITTING "HOSE END CRIMP"
15

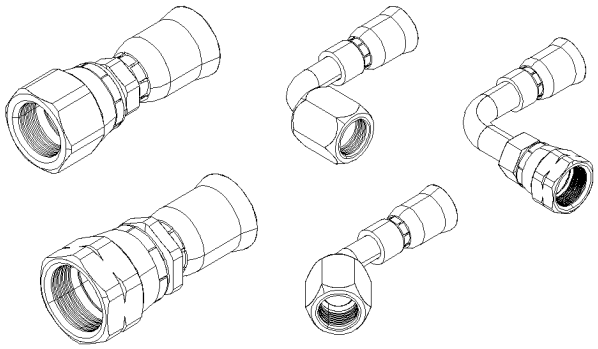

FITTING "HOSE END CRIMP"
TEFLON
16

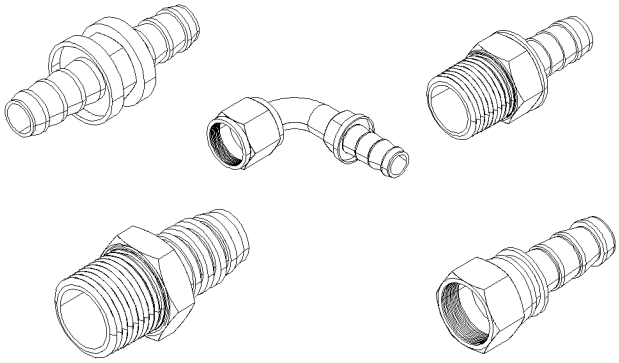

FITTING "HOSE END"
"PUSH-LOK & COLLAR"
17

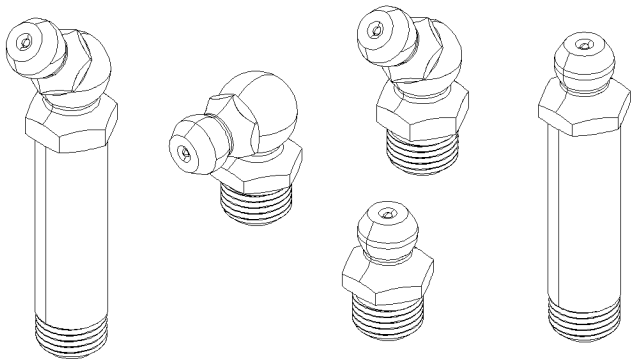

FITTING "GREASE"
30

From Y-7046 Up to 8-9339	DATE: 01/2014	PAGE: Y2-1201-00

FITTING - MISCELLANEOUS

ITEM	PART	DESCRIPTION	XL45	MTH40	MTH45	MTH45S	NOTE
		. . . . BRAKE					
1	FM-00FM-00	**FITTING NPT PIPE - MISCELANOUS**					
2	FM-00FM-01	**FITTING BRAKE "AB" - MISCELANOUS (D.O.T.)**					
3	FM-00FM-02	**FITTING BRAKE "NTA" - MISCELANOUS (D.O.T.)**					
4	FM-00FM-03	**FITTING BRAKE "PUSH-IN" - MISCELANOUS (D.O.T.)**					
		. . . . SAE & JIC					
5	FM-00FM-04	**FITTING "SAE 45º" - MISCELANOUS**					
6	FM-00FM-05	**FITTING "JIC 37º" - MISCELANOUS**					
7	FM-00FM-06	**FITTING "PUSH-IN" - MISCELANOUS**					
8	FM-00FM-07	**FITTING "A-LOK" - MISCELANOUS (SWAGLELOK)**					
		. . . . ORS & ORB					
9	FM-00FM-08	**FITTING "ORS" - MISCELANOUS**					
10	FM-00FM-09	**FITTING "ORB" - MISCELANOUS**					
		. . . . QUICK DISCONNECT					
11	FM-00FM-10	**FITTING "QUICK DISCONNECT" - MISCELANOUS**					
12	FM-00FM-11	**FITTING "MISCELANOUS"**					
		. . . . HOSE END FITTING					
13	FM-00FM-12	**FITTING "HOSE END REUSABLE" - MISCELANOUS**					
14	FM-00FM-13	**FITTING "HOSE END REUSABLE TEFLON" - MISCELANOUS**					
15	FM-00FM-14	**FITTING "HOSE END CRIMP" - MISCELANOUS**					
16	FM-00FM-15	**FITTING "HOSE END CRIMP TEFLON" - MISCELANOUS**					
17	FM-00FM-16	**FITTING "HOSE END" - "PUSH-LOK & COLLAR"**					
30	FM-00GF-00	**GREASE FITTING**					

From Y-7046 Up to 8-9339	DATE: 01/2014	PAGE: Y2-1202-00
TUBES PLASTIC / AIR D.O.T.		

ILLUSTRATION NOT AVAILABLE AT TIME OF PRINTING

From Y-7046 Up to 8-9339	DATE: 01/2014	PAGE: Y2-1202-00

TUBES PLASTIC / AIR D.O.T.

ITEM	PART	DESCRIPTION	XL45	MTH40	MTH45	MTH45S	NOTE
	503747	TUBE, NYLON 6MM O.D. / BLACK S.L.					
	503529	TUBE, NYLON 8MM O.D. / BLACK S.L.					
	503563	TUBE, NYLON 6MM O.D. / WHITE S.L.					
	503566	TUBE, NYLON 1/4 O.D. / BLUE S.L.					
	503471	TUBE, NYLON 3/8 O.D. / BLUE S.L.					
	503517	TUBE, NYLON 1/2 O.D. / BLUE S.L.					
	503536	TUBE, NYLON 1/8 O.D. / BLACK S.L.					
	503402	TUBE, NYLON 1/4 O.D. / BLACK S.L.					
	503404	TUBE, NYLON 3/8 O.D. / BLACK S.L.					
	503488	TUBE, NYLON 1/2 O.D. / BLACK S.L.					
	503540	TUBE, NYLON 5/8 O.D. / BLACK S.L.					
	503541	TUBE, NYLON 3/4" O.D. / BLACK S.L					
	503548	TUBE, NYLON 1/4 O.D. / YELLOW S.L.					
	503470	TUBE, NYLON 3/8 O.D. / YELLOW S.L.					
	503533	TUBE, NYLON 1/2 O.D. / YELLOW S.L.					
	503466	TUBE, NYLON 1/4 O.D. / RED S.L.					
	503467	TUBE, NYLON 3/8 O.D. / RED S.L.					
	503468	TUBE, NYLON 1/2 O.D. / RED S.L.					
	503469	TUBE, NYLON 5/8 O.D. / RED S.L.					
	503464	TUBE, NYLON 1/4 O.D. / GREEN S.L.					
	503463	TUBE, NYLON 3/8 O.D. / GREEN S.L.					
	503406	TUBE, NYLON 1/2 O.D. / GREEN S.L.					
	503408	TUBE, NYLON 5/8 O.D. / GREEN S.L.					
	503465	TUBE, NYLON 3/4 O.D. / GREEN S.L.					
	503472	TUBE, NYLON 3/8 O.D. / GREY S.L.					
	503638	TUBE, NYLON 1/2 O.D. / BROWN S.L.					
NS	683355	TOOL PLASTIC TUBE CUTTER / PLASTIC	1				
NS	681625	TOOL PLASTIC TUBE CUTTER / METAL	1				

From Y-7046 Up to 2-7799	DATE: 01/2014	PAGE: Y2-1203-00

AIR TANK - INSTALLATION

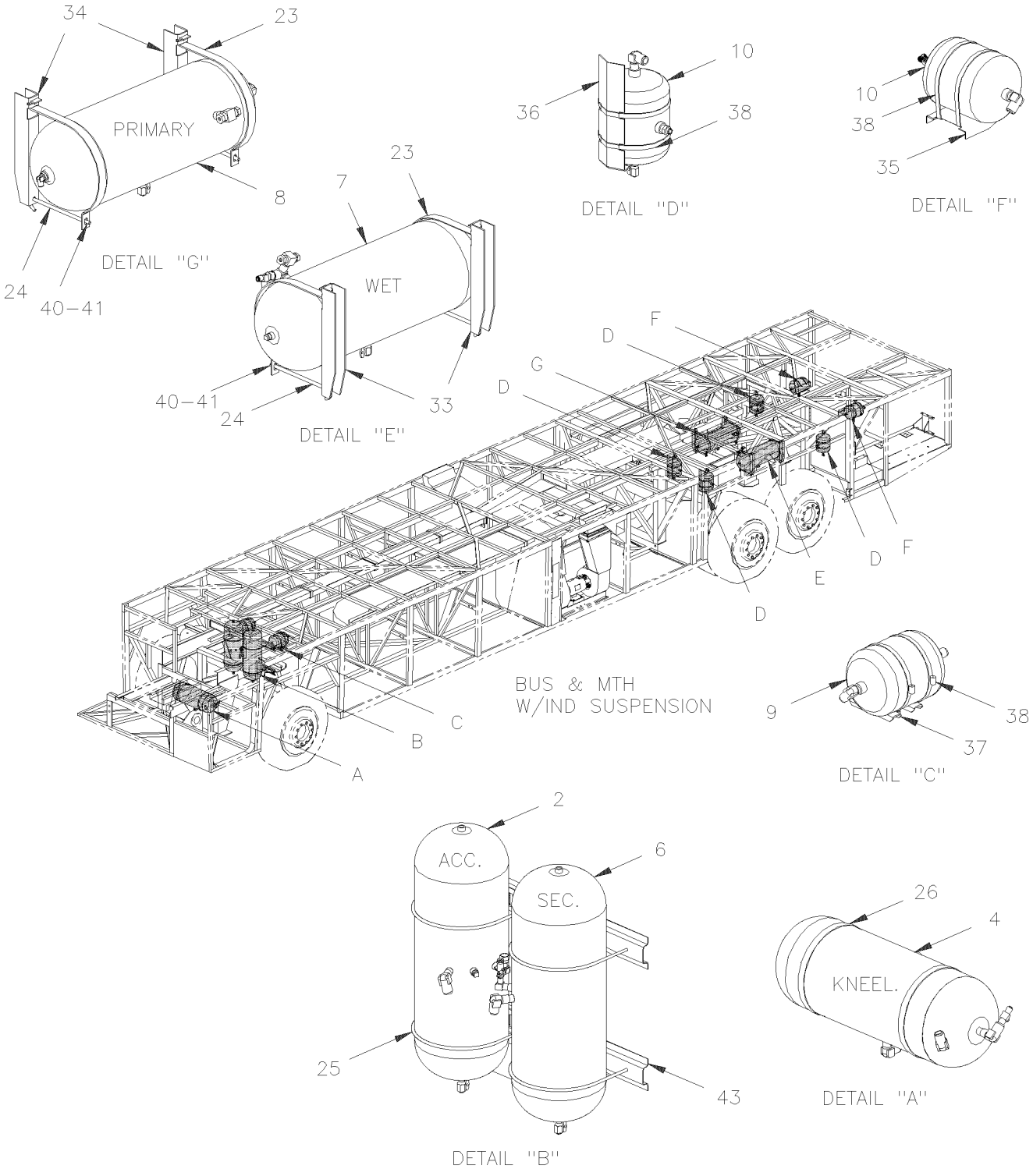

From Y-7046 Up to 2-7799	DATE: 01/2014	PAGE: Y2-1203-00

AIR TANK - INSTALLATION

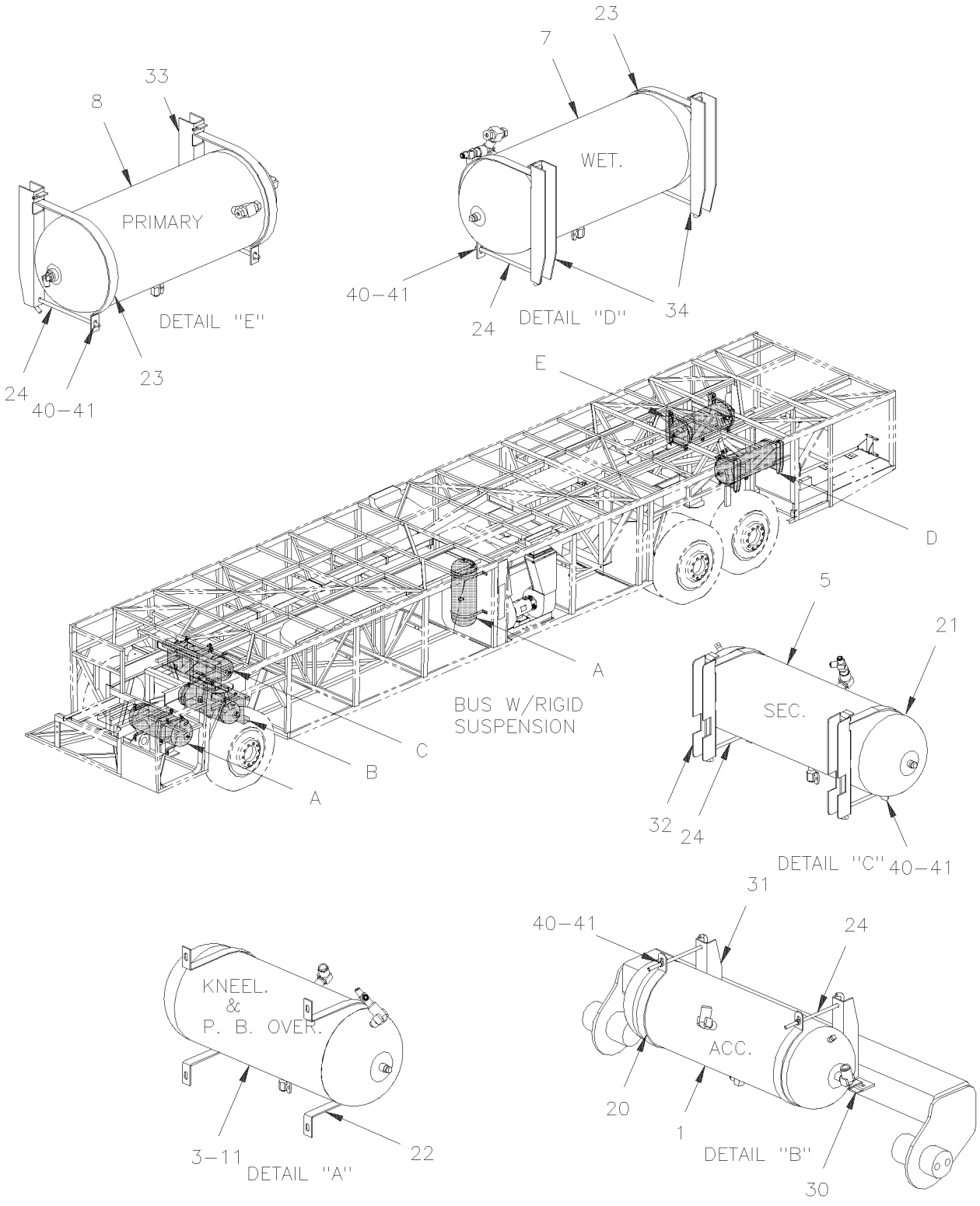

From Y-7046 Up to 2-7799	DATE: 01/2014	PAGE: Y2-1203-00

AIR TANK - INSTALLATION

ITEM	PART	DESCRIPTION	XL45	MTH40	MTH45	MTH45S	NOTE
		ACCESSORIES AIR TANK					
1	641583	AIR TANK / 1508 IN° / 9" 1/2 O.D. X 24"	1				
2	141834	AIR TANK / 1303 IN° / 8" O.D. X 27"1/2	1	1	1	1	
		KNEELING AIR TANK					
3	641411	AIR TANK / 2370 IN° / 12" O.D. X 24"	1				
4	140868	AIR TANK / W/END LOWER DRAIN 1228 IN° / 8" O.D. X 26" Up to Y-7235	1				
4	641583	AIR TANK / 1508 IN° / 9" 1/2 O.D. X 24" From Y-7236	1				
		SECONDARY AIR TANK					
5	641583	AIR TANK / 1508 IN° / 9" 1/2 O.D. X 24"	1				
6	141834	AIR TANK / 1303 IN° / 8" O.D. X 27"1/2	1	1	1	1	
		WET AIR TANK					
7	140869	AIR TANK / 1791 IN° / 9 1/2" O.D. X 27"	1	1	1	1	
		PRIMARY AIR TANK					
8	140869	AIR TANK / 1791 IN° / 9 1/2" O.D. X 27"	1	1	1	1	
		AIR BELLOW EXPANSION TANK					
9	131403	AIR TANK / 434 IN° / 7" O.D. X 13 1/4"	2	2	2	2	
10	641424	AIR TANK / 288 IN° / 7" O.D. X 9 1/4" / W/(3) 1/2" NPT		6	6	6	
		PARKING BRAKE OVERULE					
11	641583	AIR TANK / 1508 IN° / 9" 1/2 O.D. X 24"	1				
20	142100	STRAP / TO USE W/9" O.D. TANK / "J" SHAPE	2				
21	142029	STRAP / TO USE W/9"1/2 O.D. TANK / "J" SHAPE	2				
22	131590	STRAP / TO USE W/12" O.D. TANK / "U" SHAPE	2	2	2	2	
23	141816	STRAP / TO USE W/9"1/2 O.D. TANK / "J" SHAPE	4	4	4	4	
24	141409	J-HOOK / 220 MM M8-1.25 SS	4	4	4	4	
25	141835	ROD / TO USE W/8" O.D. TANK / "U" SHAPE	4				
26	131523	STRAP / TO USE W/8" O.D. TANK / "O" SHAPE Up to Y-7235	2				
26	131610	STRAP / TO USE W/9"1/2 O.D. TANK / "O" SHAPE From Y-7236	2				
30	141649	ATTACHMENT / (WELDED TO FRAME)	2				
31	172489	SUPPORT AIR TANK / WELDED TO STRUCTURE	2				
32	172478	SUPPORT / (WELDED TO FRAME)	2				

From Y-7046 Up to 2-7799	DATE: 01/2014	PAGE: Y2-1203-00

AIR TANK - INSTALLATION

ITEM	PART	DESCRIPTION	XL45	MTH40	MTH45	MTH45S	NOTE
33	172147	SUPPORT "U" 263MM / AIR TANK	2	2	2	2	
34	171600	SUPPORT "U" 250MM / AIR TANK	2	2	2	2	
35	171974	SUPPORT / (WELDED TO FRAME)	2	2	2	2	
36	171973	SUPPORT AIR TANK	2	2	2	2	
37	131378	SUPPORT / (WELDED TO FRAME)	2	2	2	2	
38	504649	HOSE CLAMP / 4"5/8-7"1/2 SS	4	4	4	4	
40	500868	NUT HEX NYRT M8-1.25 CP	2	2	2	2	
41	500874	WASHER FL 8.4x17.0x1.6 ZP	AR	AR	AR	AR	
42	502600	NUT HEX NYRT 5/16-18 ZP	AR	AR	AR	AR	
43	500778	NUT HEX 5/16-18 ZP	AR	AR	AR	AR	
44	500476	WASHER LO SPT .317x.586x.078 ZP	AR	AR	AR	AR	
45	5001319	SCREW CAP HEX M8-1.25x40 SS	2				

From 2-7800 Up to 8-9339	DATE: 01/2014	PAGE: Y2-1203-01

AIR TANK - INSTALLATION

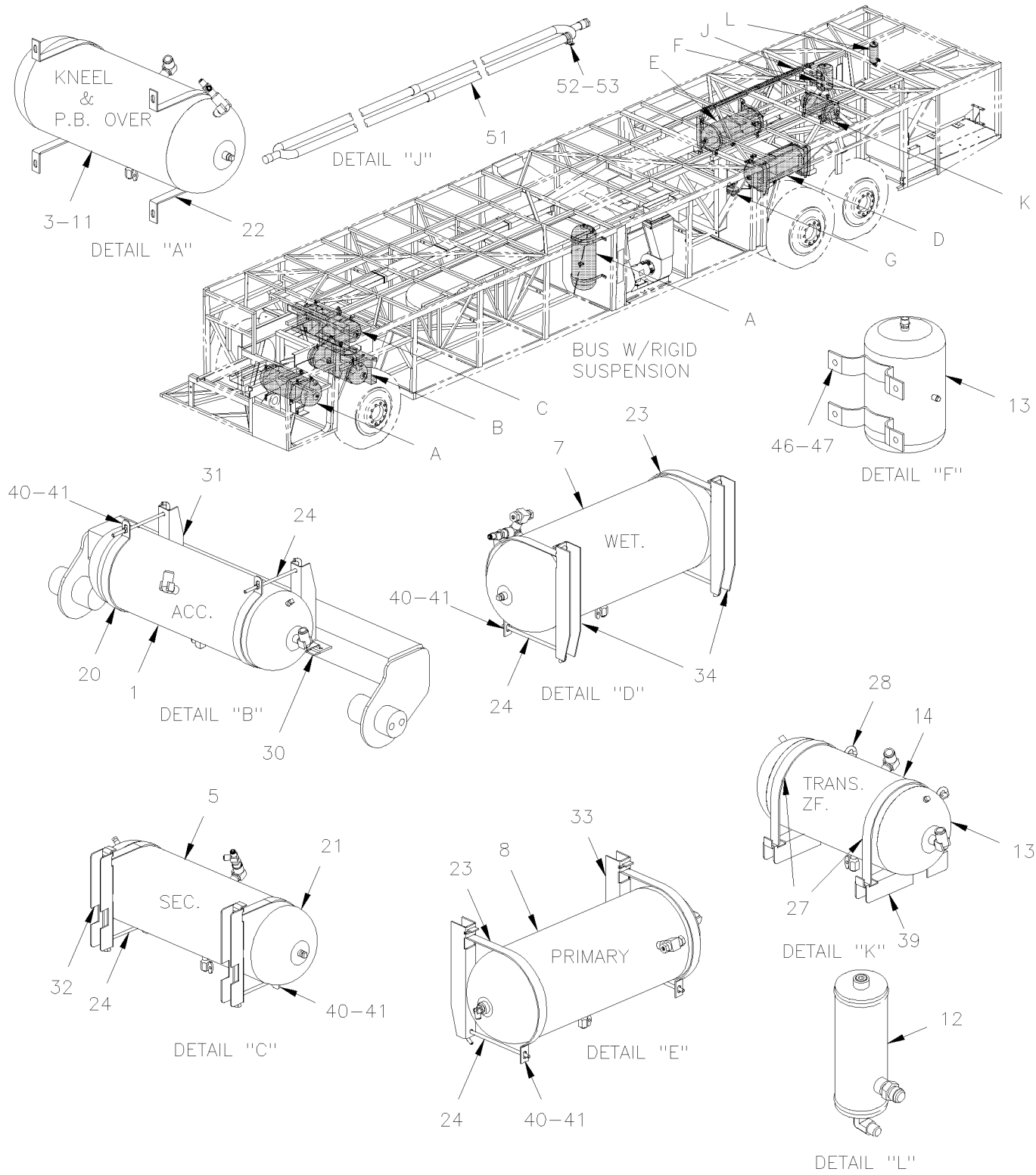

From 2-7800 Up to 8-9339	DATE: 01/2014	PAGE: Y2-1203-01

AIR TANK - INSTALLATION

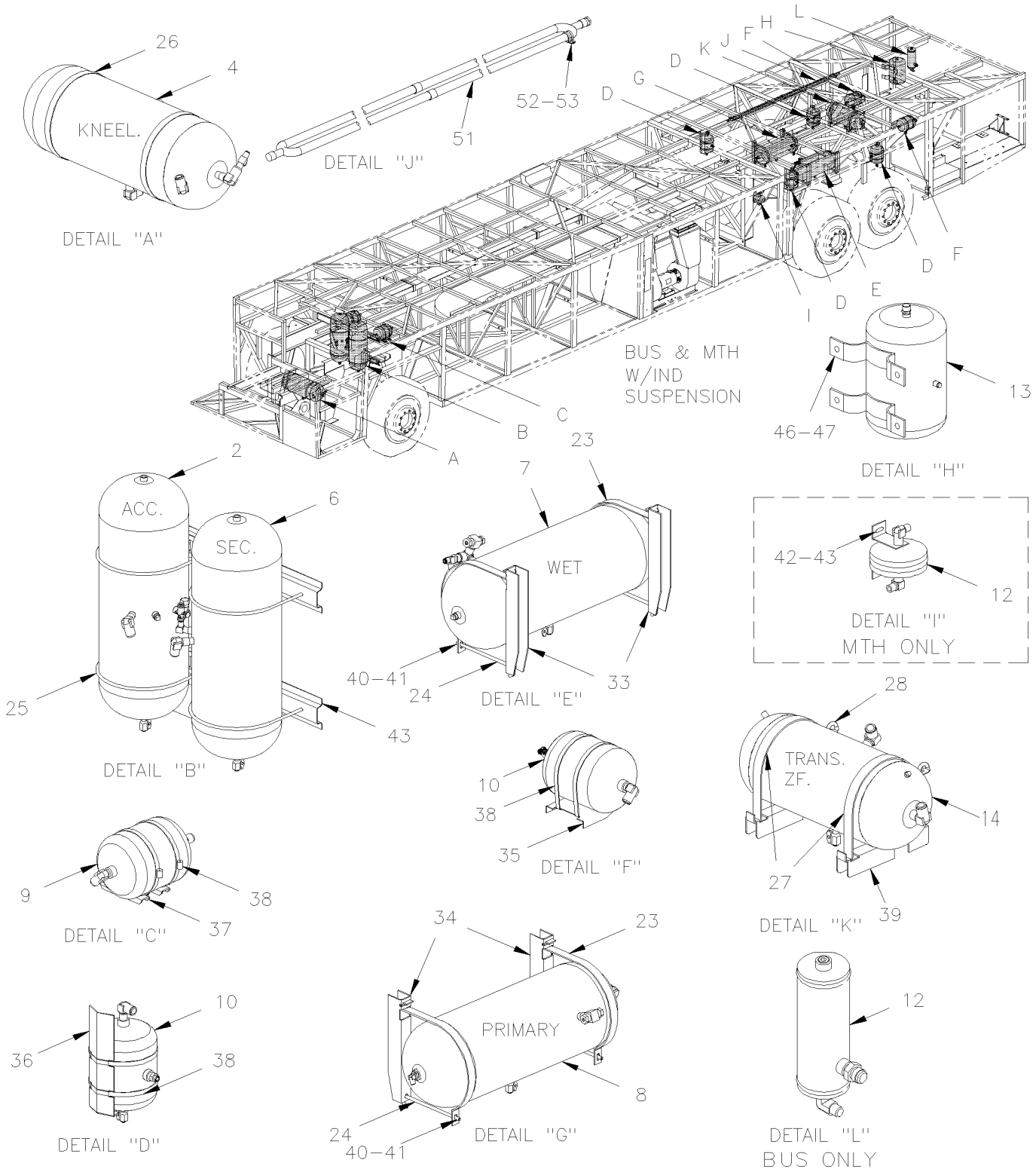

From 2-7800 Up to 8-9339	DATE: 01/2014	PAGE: Y2-1203-01

AIR TANK - INSTALLATION

ITEM	PART	DESCRIPTION	XL45	MTH40	MTH45	MTH45S	NOTE
1		ACCESSORIES AIR TANK					
1	641583	AIR TANK / 1508 IN° / 9" 1/2 O.D. X 24"	1				
2	141834	AIR TANK / 1303 IN° / 8" O.D. X 27"1/2	1				
3		KNEELING AIR TANK					
3	641411	AIR TANK / 2370 IN° / 12" O.D. X 24"	1				
4	641583	AIR TANK / 1508 IN° / 9" 1/2 O.D. X 24"	1				
5		SECONDARY AIR TANK					
5	641583	AIR TANK / 1508 IN° / 9" 1/2 O.D. X 24"	1				
6	141834	AIR TANK / 1303 IN° / 8" O.D. X 27"1/2	1				
7		WET AIR TANK					
7	140869	AIR TANK / 1791 IN° / 9 1/2" O.D. X 27"	1				
NS	642022	SAFETY VALVE 150 PSI X 3/8 NPT / ST-3	1				
8		PRIMARY AIR TANK					
8	140869	AIR TANK / 1791 IN° / 9 1/2" O.D. X 27"	1				
9		AIR BELLOW EXPANSION TANK					
9	131403	AIR TANK / 434 IN° / 7" O.D. X 13 1/4"	2				
10	641424	AIR TANK / 288 IN° / 7" O.D. X 9 1/4" / W/(3) 1/2" NPT		6	6	6	
10	642110	AIR TANK / 290 IN° / 6" O.D. X 12" / W/(3) 1/2" NPT From 7-9096				6	
11		PARKING BRAKE OVERULE					
11	641583	AIR TANK / 1508 IN° / 9" 1/2 O.D. X 24"	1				
12		PING AIR TANK					
12	032428	AIR TANK / 61 IN° / 6" O.D. X 4"		1	1	1	
NS	142221	HOSE ASSY TEFLON #12 1805MM			1		A
12	142222	HOSE ASSY TEFLON #12 1175MM		1		1	A
12	142277	HOSE ASSY TEFLON #12 970MM From 4-8165	1				A
12	641982	AIR TANK / 96 IN° / 3" 1/2 O.D. X 10" From 4-8165	1				
		A) TO AIR COMPRESSOR					

From 2-7800 Up to 8-9339	DATE: 01/2014	PAGE: Y2-1203-01

AIR TANK - INSTALLATION

ITEM	PART	DESCRIPTION	XL45	MTH40	MTH45	MTH45S	NOTE
13		PURGE TANK					
13	70307176	AIR TANK / 281 IN° / 6" O.D. X 12"	1				
NS	142195	HOSE ASSY TEFLON #12 3275MM	1				B
13	Y2-1215-10	**AIR DRYER - "HALDEX" - INSTALLATION**					
14		MANUAL TRANSMISSION "ZF" AIR TANK					
14	641978	AIR TANK / 610 IN° / 7" O.D.X 18"	1				
20	142100	STRAP / TO USE W/9" O.D. TANK / "J" SHAPE	2				
21	142029	STRAP / TO USE W/9"1/2 O.D. TANK / "J" SHAPE	2				
22	131590	STRAP / TO USE W/12" O.D. TANK / "U" SHAPE	2				
23	141816	STRAP / TO USE W/9"1/2 O.D. TANK / "J" SHAPE	4				
24	141409	J-HOOK / 220 MM M8-1.25 SS	4				
25	141835	ROD / TO USE W/8" O.D. TANK / "U" SHAPE	4				
26	131610	STRAP / TO USE W/9"1/2 O.D. TANK / "O" SHAPE	2				
27	141859	STRAP / TO USE W/8" O.D. TANK / "J" SHAPE	2				
28	141815	J-HOOK / 194 MM M8-1.25 SS	2				
30	141649	ATTACHMENT / (WELDED TO FRAME)	2				
31	172489	SUPPORT AIR TANK / WELDED TO STRUCTURE	2				
32	172478	SUPPORT / (WELDED TO FRAME)	2				
33	172147	SUPPORT "U" 263MM / AIR TANK	2				
34	171600	SUPPORT "U" 250MM / AIR TANK	2				
35	171974	SUPPORT / (WELDED TO FRAME)		2	2	2	
36	171973	SUPPORT AIR TANK		2	2	2	
37	131378	SUPPORT / (WELDED TO FRAME) Up to 3-8164		2	2	2	
37	131746	SUPPORT AIR TANK / BELLOW From 4-8165 Up to 5-8805		2	2	2	
37	132028	SUPPORT From 5-8806		1	1	1	
37	132029	SUPPORT From 5-8806		1	1	1	
38	504649	HOSE CLAMP / 4"5/8-7"1/2 SS		4	4	4	
38	504324	HOSE CLAMP / 4"1/2-6"1/2 SS / HS-96 From 7-9096				4	
39	172727	SUPPORT / (WELDED TO FRAME) Up to 5-8369	2				
39	172976	SUPPORT / (WELDED TO FRAME) From 5-8370	2				
40	500868	NUT HEX NYRT M8-1.25 CP	2				
41	500874	WASHER FL 8.4x17.0x1.6 ZP	AR				
42	502600	NUT HEX NYRT 5/16-18 ZP	AR				
43	500778	NUT HEX 5/16-18 ZP	AR				
44	500476	WASHER LO SPT .317x.586x.078 ZP	AR				
45	5001319	SCREW CAP HEX M8-1.25x40 SS	2				
46	500476	WASHER LO SPT .317x.586x.078 ZP	4				
		B) BETWEEN PING & PURGE TANK					

From 2-7800 Up to 8-9339	DATE: 01/2014	PAGE: Y2-1203-01

AIR TANK - INSTALLATION

ITEM	PART	DESCRIPTION	XL45	MTH40	MTH45	MTH45S	NOTE
47	500778	NUT HEX 5/16-18 ZP	4				
NS	5001164	WASHER FL 8.4x25.0x2.0 ZP	4				
51	142279P	AIR DRYER TUBE ASSY Up to 3-8164	1				
51	142342P	AIR DRYER TUBE ASSY From 4-8165	1				
52	500613	SCREW TP PAN PH #10x1/2 ZP	AR				
53	952633	CLAMP / 7/8" I.D.	6				
60	Y2-1215-10	**AIR DRYER - "HALDEX" - INSTALLATION**					

From 2-7800 Up to 8-9339	DATE: 01/2014	PAGE: Y2-1203-01

AIR TANK - INSTALLATION

ITEM	PART	DESCRIPTION	XL45	MTH40	MTH45	MTH45S	NOTE

From Y-7046 Up to 3-8164	DATE: 01/2014	PAGE: Y2-1205-10
AIR COMPRESSOR - "TU-FLO 750" - WITH DETROIT S-60		

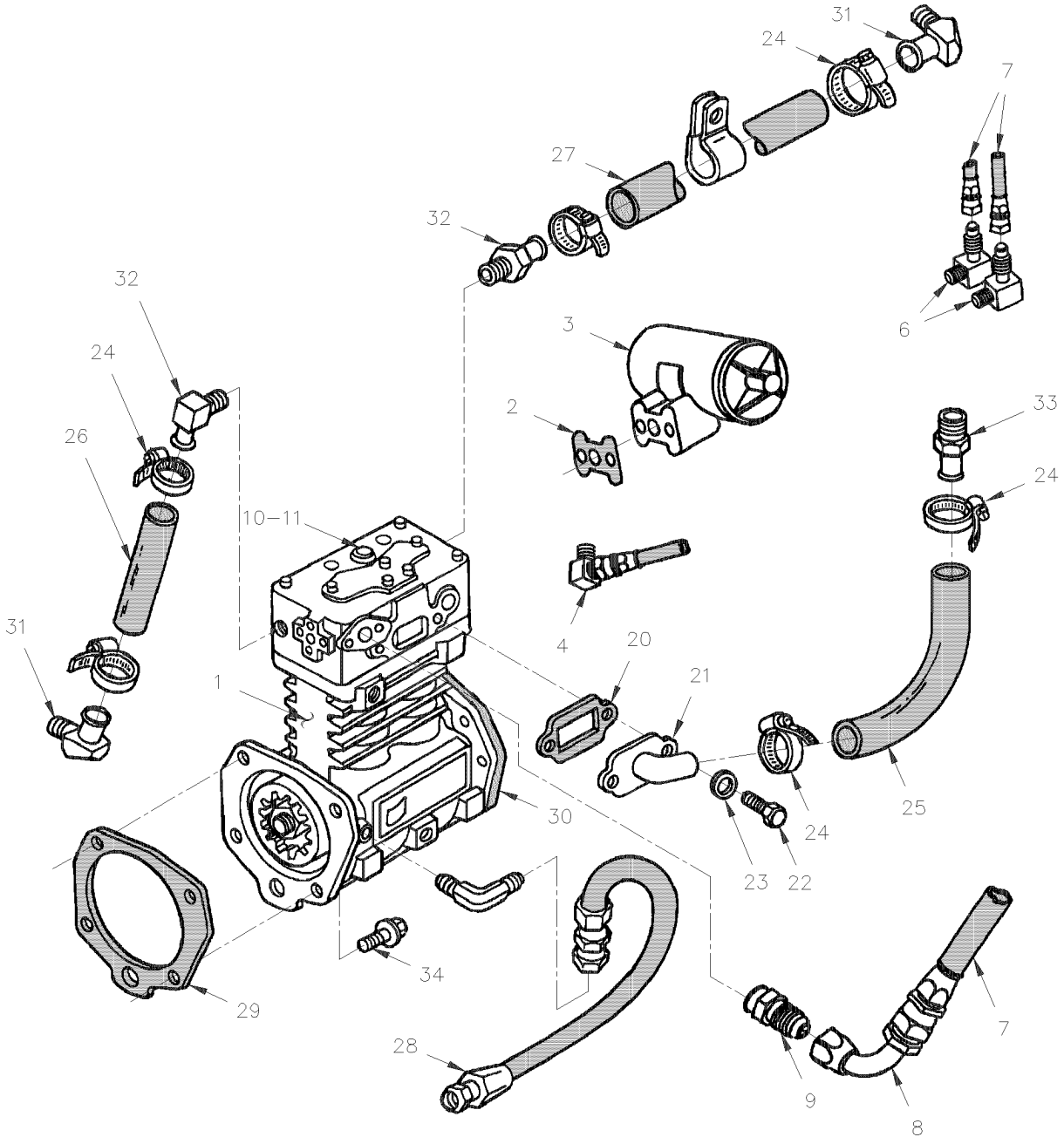

From Y-7046 Up to 3-8164	DATE: 01/2014	PAGE: Y2-1205-10

AIR COMPRESSOR - "TU-FLO 750" - WITH DETROIT S-60

ITEM	PART	DESCRIPTION	XL45	MTH40	MTH45	MTH45S	NOTE
1	641362	COMPRESSOR, AIR (SUPPLY W/ENGINE) / REPLACED BY: 641941	1	1	1	1	
NS	641335	KIT REPAIR, UNLOADER	1	1	1	1	
2	640638	GASKET, AIR GOVERNOR	1	1	1	1	
3	640964	GOVERNOR, AIR / D-2 / (105/125PSI)	1				
. NS	640965	. REPAIR KIT / GOVERNOR D-2 / (280915)	1				
. NS	640638	. GASKET, AIR GOVERNOR	1				
. NS	500187	. SCREW CAP HEX 5/16-18x3 G5 ZP	2				
. NS	500942	. WASHER LO SPT .317x.586x.078 ZG603	2				
3	641933	GOVERNOR, AIR / D-2 / (110/130PSI)		1	1	1	
. NS	640965	. REPAIR KIT / GOVERNOR D-2 / (280915)		1	1	1	
. NS	640638	. GASKET, AIR GOVERNOR		1	1	1	
. NS	500187	. SCREW CAP HEX 5/16-18x3 G5 ZP		2	2	2	
. NS	500942	. WASHER LO SPT .317x.586x.078 ZG603		2	2	2	
NS	640965	REPAIR KIT / GOVERNOR D-2	1	1	1	1	
NS	500187	SCREW CAP HEX 5/16-18x3 G5 ZP	2	2	2	2	
NS	500476	WASHER LO SPT .317x.586x.078 ZP	2	2	2	2	
4	640996	MALE ELBOW 90º / NTA FITTING / #4x1/8NPT-M BR	1	1	1	1	
6	501036	MALE ELBOW 90º / SAE 45º FITTING / #4FL-Mx1/8NPT-M BR	2	2	2	2	
7	Y2-1215-00	**AIR DRYER - "BENDIX" AD-9**					
7	Y2-1215-01	**AIR DRYER - "ROCKWELL WABCO"**					
8	507544	SWIVEL NUT ELBOW 90º SHORT / JIC 37° FITTING/ #12JIC-Fx#12JIC-Mx1.82 STL	1	1	1	1	
9	501600	MALE CONNECTOR / JIC 37° FITTING / #12JIC-Mx1/2NPT-M STL	1	1	1	1	
10	501316	BUSHING REDUCER / PIPE FITTING / 1/2NPT-Mx1/4NPT-F BR	1	1	1	1	
11	501037	MALE ELBOW 90º / SAE 45º FITTING / #4FL-Mx1/4NPT-M BR	1	1	1	1	
20	640256	GASKET, ADAPTOR AIR INLET	1	1	1	1	A
21	N.S.P.	ADAPTOR AIR INLET / (23506346)	1	1	1	1	2 A
22	500179	SCREW CAP HEX 5/16-18x3/4 G5 ZP	2	2	2	2	A
23	500476	WASHER LO SPT .317x.586x.078 ZP	2	2	2	2	A
24	504019	HOSE CLAMP / 9/16"-1"1/16 SS / HS-10	6	6	6	6	A
25	N.S.P.	HOSE SILICONE 75MM X 18" / (23508340)	1	1	1	1	2 A
26	N.S.P.	HOSE SILICONE 3/4" X 3.1/2" / (8929764)	1	1	1	1	2 A
27	N.S.P.	HOSE SILICONE 3/4" X 28" / (23509550)	1	1	1	1	2 A
NS	503523	HOSE SILICONE 1PLY 3/4" I.D. x 100' / S.L.	AR	AR	AR	AR	A
28	N.S.P.	HOSE ASSY 14 7/8" / OIL FEED FROM GALLERY / (23505202)	1	1	1	1	2 A
NS	N.S.P.	HOSE ASSY TEFLON / OIL TO ALTERNATOR / (23504343)	1	1	1	1	2 A
29	510615	GASKET COMPRESSOR	1	1	1	1	A
30	N.S.P.	GASKET / <> COMPRESSOR & FUEL PUMP / (23505248)	1	1	1	1	2 A
31	N.S.P.	ELBOW 45° 3/4" HOSE / (23505202)	2	2	2	2	2 A
32	N.S.P.	ELBOW 90° 3/4 TUBE 1/2" NPT / (8929749)	2	2	2	2	2 A
		2) NOT SOLD BY PREVOST (SEE MANUFACTURING PART					
		NUMBER AT END OF DESCRIPTION LINE)					
		A) THOSE ITEMS ARE SUPPLIED WITH ENGINE ASSY SEE					
		YOUR DETROIT DIESEL DEALER FOR INFORMATIONS.					

From Y-7046 Up to 3-8164	DATE: 01/2014	PAGE: Y2-1205-10

AIR COMPRESSOR - "TU-FLO 750" - WITH DETROIT S-60

ITEM	PART	DESCRIPTION	XL45	MTH40	MTH45	MTH45S	NOTE
33	N.S.P.	CONNECTOR / (23506345)	1	1	1	1	2 A
34	N.S.P.	BOLT M12-1.75 X 47MM FLANGE HEAD	4	4	4	4	2 A
		2) NOT SOLD BY PREVOST (SEE MANUFACTURING PART					
		NUMBER AT END OF DESCRIPTION LINE)					
		A) THOSE ITEMS ARE SUPPLIED WITH ENGINE ASSY SEE					
		YOUR DETROIT DIESEL DEALER FOR INFORMATIONS.					

From Y-7046 Up to 3-8164	DATE: 01/2014	PAGE: Y2-1205-10

AIR COMPRESSOR - "TU-FLO 750" - WITH DETROIT S-60

ITEM	PART	DESCRIPTION	XL45	MTH40	MTH45	MTH45S	NOTE

From 4-8165 Up to 8-9339	DATE: 01/2014	PAGE: Y2-1205-11
AIR COMPRESSOR - "BA921" - WITH DETROIT S-60		

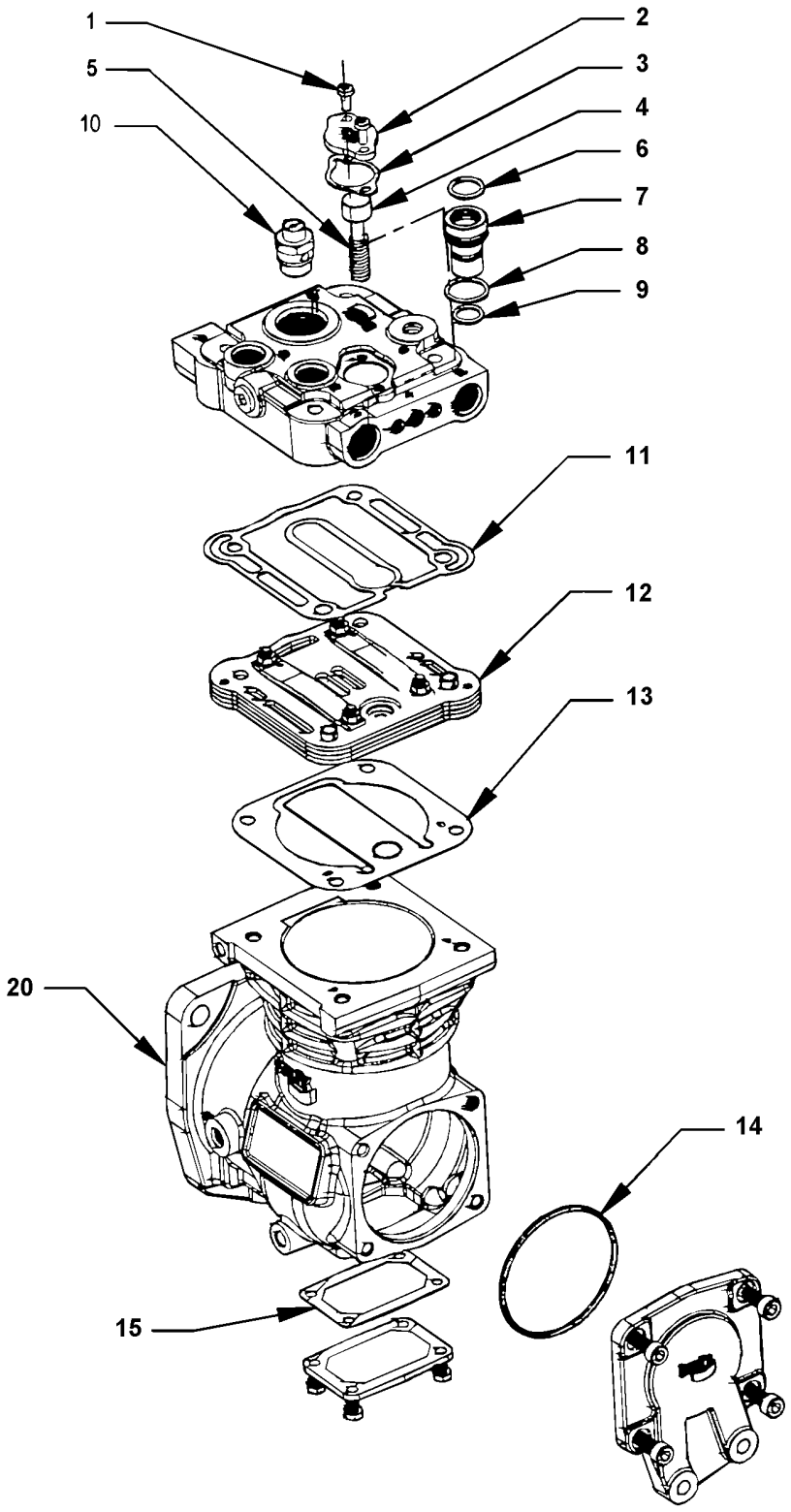

From 4-8165 Up to 8-9339	DATE: 01/2014	PAGE: Y2-1205-11

AIR COMPRESSOR - "BA921" - WITH DETROIT S-60

ITEM	PART	DESCRIPTION	XL45	MTH40	MTH45	MTH45S	NOTE
1	641990	COMPRESSOR, AIR (SUPPLY W/ENGINE)	1	1	1	1	
2	N.S.S.	. COVER	1	1	1	1	1 A
3	N.S.S.	. GASKET	1	1	1	1	1 A
4	N.S.S.	. BALANCE PISTON	1	1	1	1	1 A
5	N.S.S.	. SPRING	1	1	1	1	1 A
6	N.S.S.	. O-RING	1	1	1	1	1 A
7	N.S.S.	. PISTON	1	1	1	1	1 A
8	N.S.S.	. O-RING	1	1	1	1	1 A
9	N.S.S.	. O-RING	1	1	1	1	1 A
10	641989	. SAFETY VALVE ST-A / M16x1.5	1	1	1	1	
11	641986	. CYLINER HEAD SEAL KIT	1	1	1	1	B
12		. REED VALVE ASSY	1	1	1	1	
13		. INLET REED VALVE GASKET	1	1	1	1	
14	641987	. COMPRESSOR SEAL KIT	1	1	1	1	C
15		. BOTTOM COVER	1	1	1	1	
20	641988	. ENGINE INTERFACE SEAL KIT	1	1	1	1	D
		1) NOT SOLD SEPARATELY					
		A) NOT REQUIRE WITH AIR DRYER "HALDEX"					
		B) INCLUDES ITEMS# 11 & 13					
		C) INCLUDES ITEMS# 14 & 20					
		D)					

From Y-7046 Up to 2-7799	DATE: 01/2014	PAGE: Y2-1215-00
AIR DRYER - "BENDIX" AD-9		

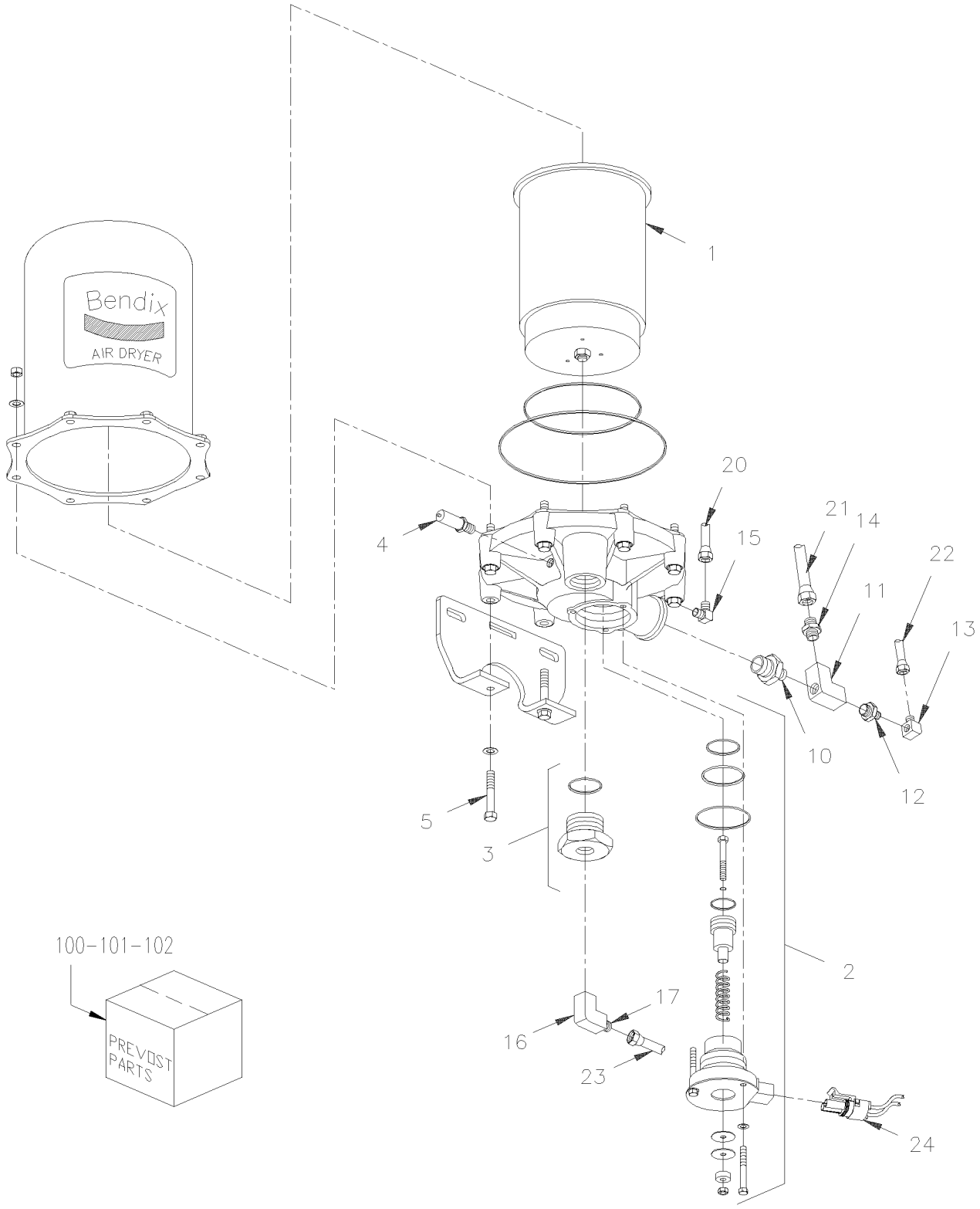

From Y-7046 Up to 2-7799	DATE: 01/2014	PAGE: Y2-1215-00

AIR DRYER - "BENDIX" AD-9

ITEM	PART	DESCRIPTION	XL45	MTH40	MTH45	MTH45S	NOTE
	641243	AIR DRYER ASSY AD-9 24 VOLTS	1				
1	641244	. DESICANT CARTRIDGE / "BENDIX" AD-9	1				
. NS	MI04-12	. . SEE MAINTENANCE INFORMATION	1				
2	641245	. PURGE VALVE ASSY W/HEATER / REPLACED BY: 641464	1				
3	641246	. CHECK VALVE MAINTENANCE KIT 3/4 NPT	1				
4	N.S.P.	. SAFETY VALVE (285849)	1				2
5	5001173	. SCREW CAP HEX 5/16-18x4 1/2 G8 ZP	2				
10	501462	BUSHING REDUCER / PIPE FITTING / 3/4NTP-Mx1/2NPT-F BR	1				
11	507556	MALE BRANCHE TEE / PIPE FITTING / 1/2NPT-Fx1/2NPT-Fx1/2NPT-M BR	1				
12	501316	BUSHING REDUCER / PIPE FITTING / 1/2NPT-Mx1/4NPT-F BR	1				
13	641371	MALE ELBOW 90° NON-SWIVEL / PUSH-IN FITTING #4x1/4NPT-M BR	1				
14	501600	MALE CONNECTOR / JIC 37° FITTING / #12JIC-Mx1/2NPT-M STL	1				
15	501037	MALE ELBOW 90º / SAE 45º FITTING / #4FL-Mx1/4NPT-M BR	1				
16	507339	STREET ELBOW 90º / PIPE FITTING / 3/4NPT-Mx3/4NPT-F BR	1				
17	641029	MALE CONNECTOR / NTA FITTING / #12x3/4NPT-M BR	1				
20	141888	HOSE ASSY TEFLON #4 4431MM	1				A
21	141830	HOSE ASSY TEFLON #12 4157MM	1				C
22	503402	TUBE, NYLON 1/4 O.D. / BLACK S.L.	AR				
23	503465	TUBE, NYLON 3/4 O.D. / GREEN S.L.	AR				
24	562251	CONNECTOR / METRI-PACK 280 / SH 2C / PED 12020599	1				
NS	562287	SECONDARY LOCK / METRI-PACK 280 / 2C / BLACK / PED 12034446	1				
NS	562101	SOCKET TERMINAL / 16-14 / PED 12077412	2				
NS	562106	CABLE SEAL / BLACK / PED 12048370	2				
100	641464	PURGE VALVE ASSY W/HEATER 24V	1				
. NS	109579	. HEATER ELEMENT 24V (109578)	1				
101	109579	HEATER ELEMENT 24V -109579	1				
102	641358	KIT REPAIR / PURGE VALVE	1				
		2) NOT SOLD BY PREVOST (SEE MANUFACTURING PART					
		NUMBER AT END OF DESCRIPTION LINE)					
		A) <> DRYER & GOVERNOR					
		C) <> DRYER & COMPRESSOR					

From Y-7046 Up to 2-7799	DATE: 01/2014	PAGE: Y2-1215-01
AIR DRYER - "ROCKWELL WABCO"		

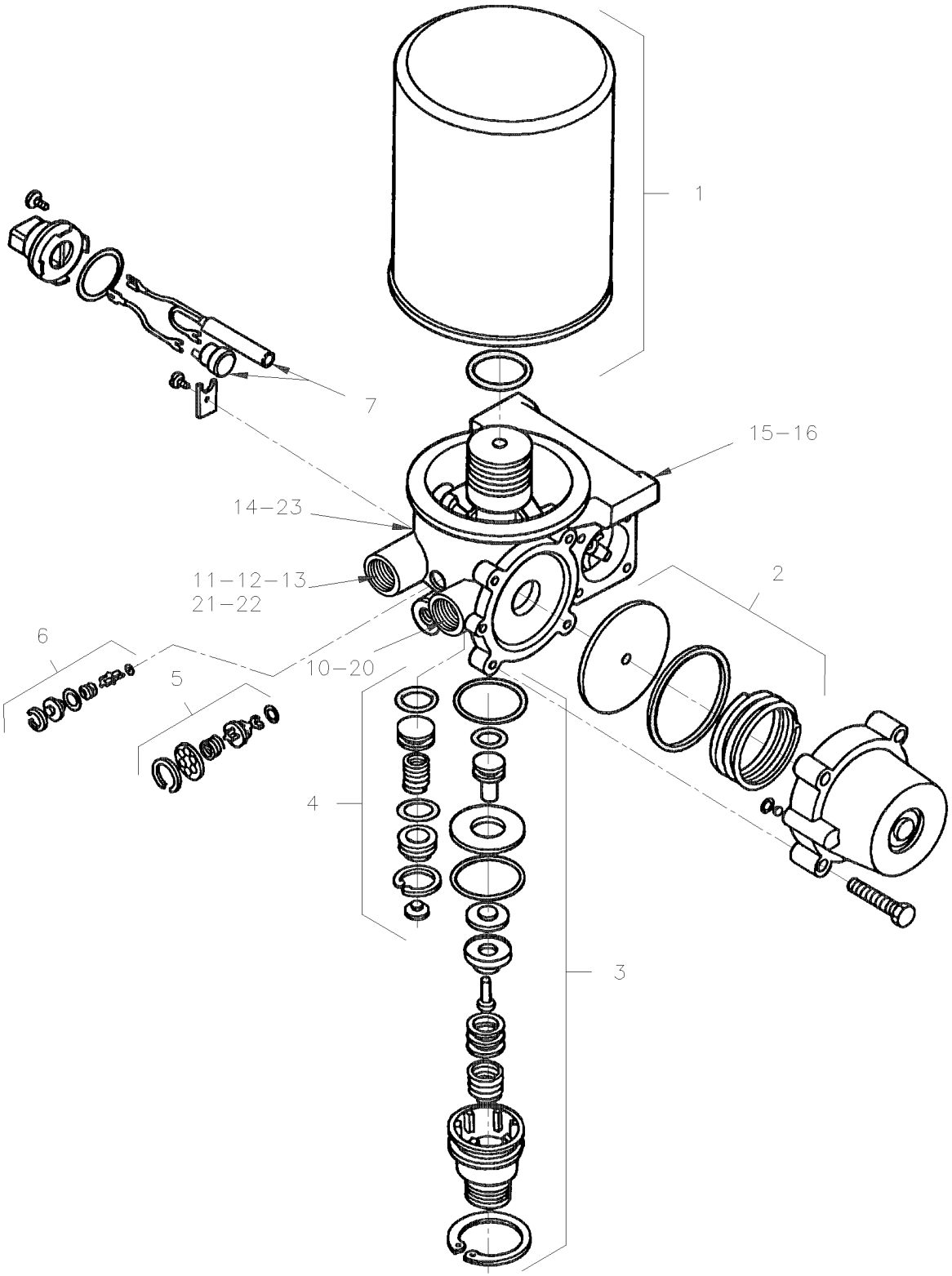

From Y-7046 Up to 2-7799	DATE: 01/2014	PAGE: Y2-1215-01

AIR DRYER - "ROCKWELL WABCO"

ITEM	PART	DESCRIPTION	XL45	MTH40	MTH45	MTH45S	NOTE
	641337	AIR DRYER "WABCO" / S-1200 / 24V HEATER		1	1	1	
1	641278	. DESICANT CARTRIDGE / "WABCO"		1	1	1	
. NS	MI04-12	. . SEE MAINTENANCE INFORMATION		1	1	1	
2	641284	. REGENERATION VALVE KIT		1	1	1	
3	641283	. PURGE VALVE KIT		1	1	1	
4	641282	. TURBO CUT-OFF VALVE KIT		1	1	1	
5	641281	. OUTLET CHECK VALVE KIT		1	1	1	
6	641280	. BYPASS VALVE KIT		1	1	1	
7	641279	. HEATER ASSY KIT 24 VOLTS		1	1	1	
10	641134	MALE ELBOW 90° / NTA FITTING / #12x1/2NPT-M BR		1	1	1	
11	507556	MALE BRANCHE TEE / PIPE FITTING / 1/2NPT-Fx1/2NPT-Fx1/2NPT-M BR		1	1	1	
12	501600	MALE CONNECTOR / JIC 37° FITTING / #12JIC-Mx1/2NPT-M STL		1	1	1	
NS	501316	BUSHING REDUCER / PIPE FITTING / 1/2NPT-Mx1/4NPT-F BR		1	1	1	
13	641371	MALE ELBOW 90° NON-SWIVEL / PUSH-IN FITTING #4x1/4NPT-M BR		1	1	1	
14	501037	MALE ELBOW 90° / SAE 45° FITTING / #4FL-Mx1/4NPT-M BR		1	1	1	
15	500214	SCREW CAP HEX 1/2-13x1 1/4 G5 ZP		3	3	3	
NS	500482	WASHER LO SPT .506x.873x.125 ZP		3	3	3	
16	141877	SUPPORT AIR DRYER "WABCO"		1	1	1	
20	503465	TUBE, NYLON 3/4 O.D. / GREEN S.L.		AR	AR	AR	
21	503402	TUBE, NYLON 1/4 O.D. / BLACK S.L.		AR	AR	AR	
22	141889	HOSE ASSY TEFLON /<>DRYER&COMPRESSOR / #12 5698MM			1		
22	141891	HOSE ASSY TEFLON /<>DRYER&COMPRESSOR / #12 5013MM		1		1	
23	141890	HOSE ASSY TEFLON #4 5875MM			1		
23	141892	HOSE ASSY TEFLON #4 5190MM		1		1	
NS	141888	HOSE ASSY TEFLON #4 4431MM			1		A
NS	141887	HOSE ASSY TEFLON #4 3607MM		1		1	A
		A) BETWEEN GOVERNOR & WET TANK					

From 2-7800 Up to 3-7992	DATE: 01/2014	PAGE: Y2-1215-02
AIR DRYER - "HALDEX"		

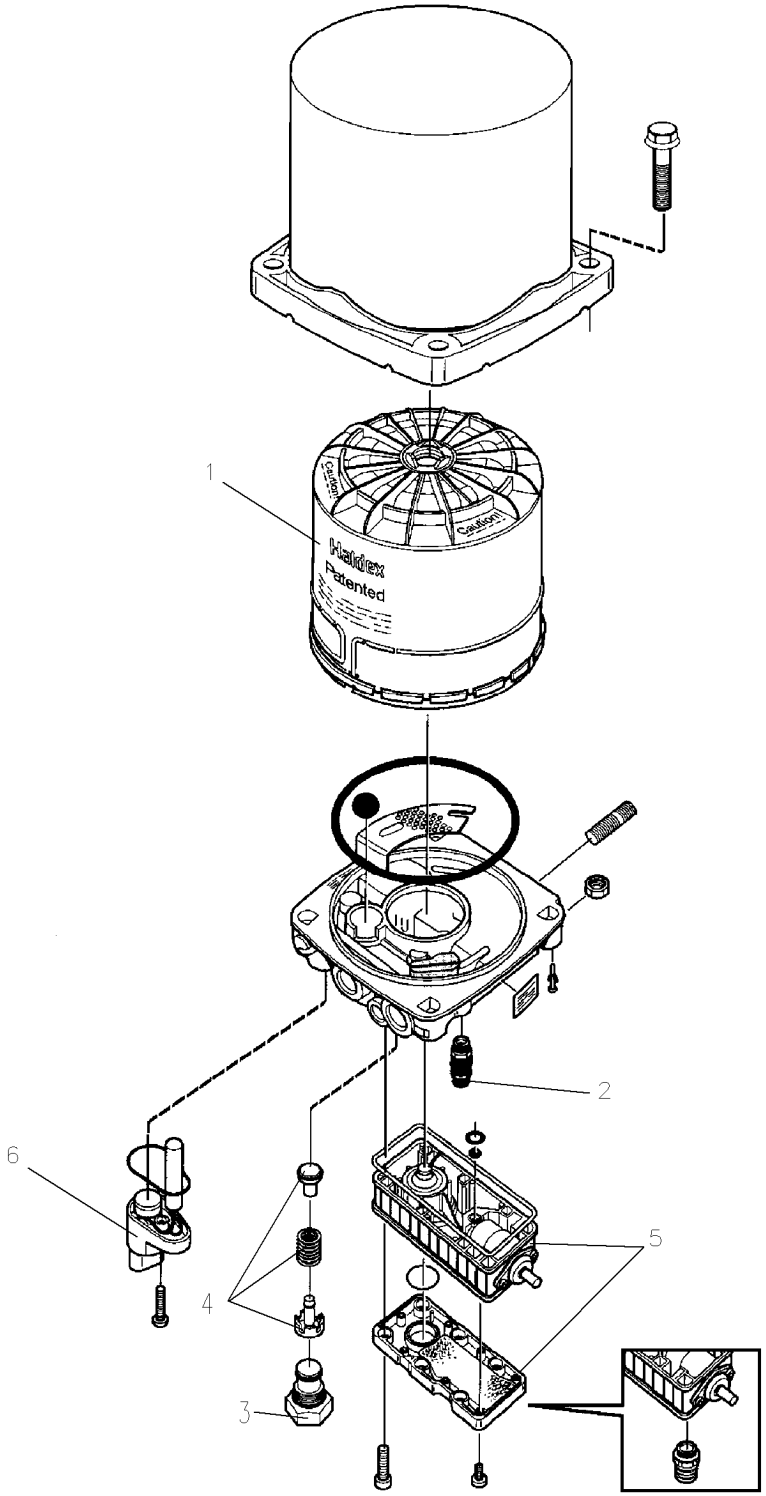

From 2-7800 Up to 3-7992	DATE: 01/2014	PAGE: Y2-1215-02

AIR DRYER - "HALDEX"

ITEM	PART	DESCRIPTION	XL45	MTH40	MTH45	MTH45S	NOTE
	70303498	AIR DRYER "HALDEX" / WITH GOVERNOR	1	1	1	1	A
	642001	AIR DRYER "HALDEX" / WITH GOVERNOR / 24V HEATER	1	1	1	1	
1	3097369	. DESICANT CARTRIDGE / "HALDEX"	1	1	1	1	
. NS	MI04-12	. . SEE MAINTENANCE INFORMATION	1	1	1	1	
2	641953	. SAFETY VALVE	1	1	1	1	
3	N8894694	. INTEGRATED TURBO PROTECTION VALVE / INTEGRATED	1	1	1	1	
4	N8800309	. . KIT CHECK VALVE	1	1	1	1	
5	641954	. VALVE PACK / W/INTEGRATED GOVERNOR 8.5BAR / REPLACED BY: 642017	1	1	1	1	
6	N8882161	HEATER ELEMENT 24VOLT / W/ PIG TAIL CONNECTOR	1	1	1	1	C
NS	141949	KIT, RETROFIT "HALDEX" / "XL-II" SERIES	1		1		
. NS	WB04-01	. SEE WARRANTY BULLETIN	1		1		
NS	141950	KIT, RETROFIT "HALDEX" / "XL-II" SERIES		1		1	
. NS	WB04-01	. SEE WARRANTY BULLETIN		1		1	
NS	141951	. HOSE ASSY TEFLON #4 5100MM		1		1	B
NS	141952	. HOSE ASSY TEFLON #4 5500MM	1		1		B
		A) FOR PRODUCT IMPROVEMENT SEE KIT 141949 &					
		141950					
		B) USE ONLY WITH KIT 141949 OR 141950					
		C) USE ONLY WITH 642001					

From 3-7993 Up to 3-8164	DATE: 01/2014	PAGE: Y2-1215-03
AIR DRYER - "ROCKWELL WABCO"		

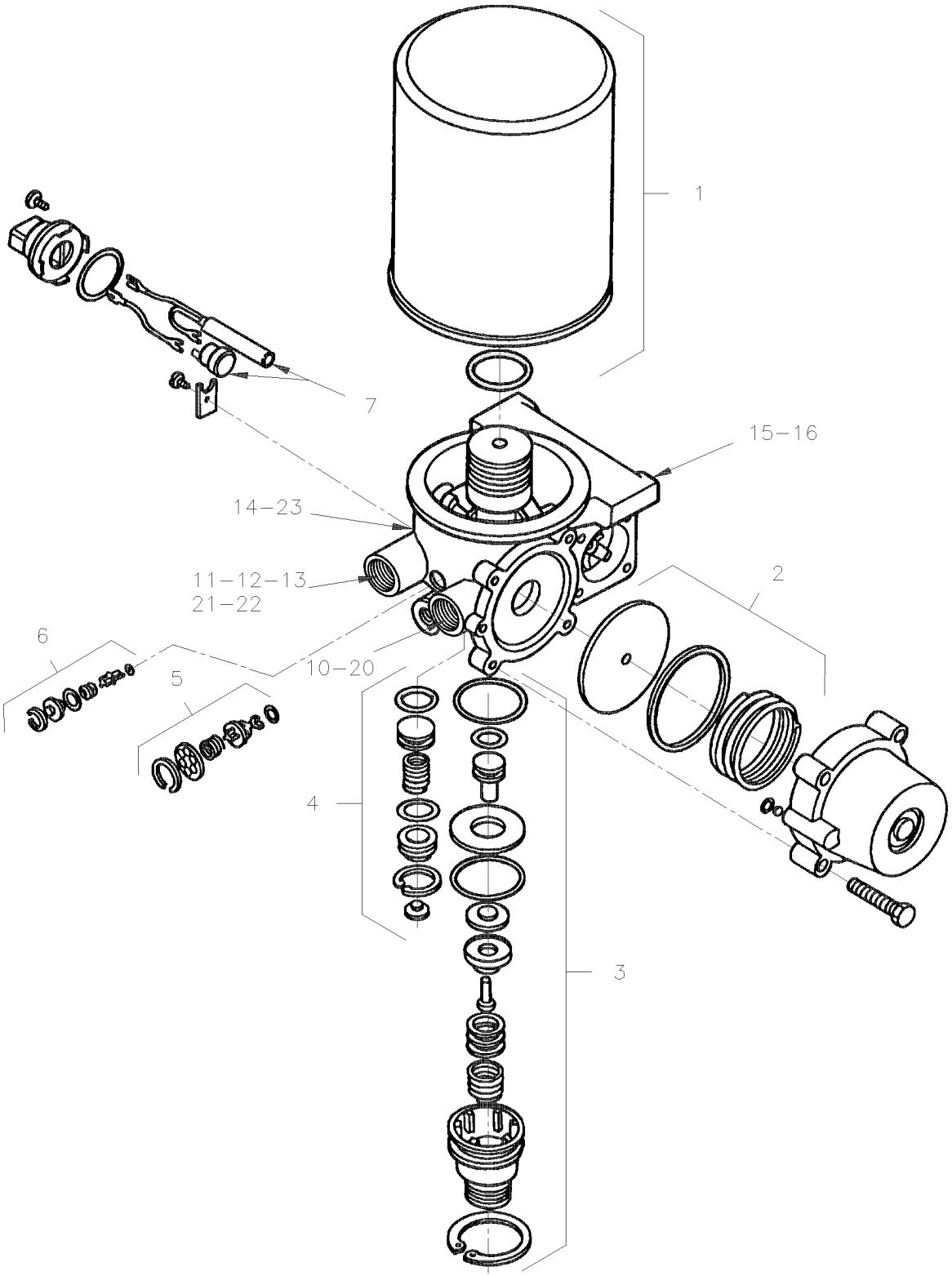

From 3-7993 Up to 3-8164	DATE: 01/2014	PAGE: Y2-1215-03

AIR DRYER - "ROCKWELL WABCO"

ITEM	PART	DESCRIPTION	XL45	MTH40	MTH45	MTH45S	NOTE
	641337	AIR DRYER "WABCO" / S-1200 / 24V HEATER	1	1	1	1	
1	641278	. DESICANT CARTRIDGE / "WABCO"	1	1	1	1	
. NS	MI04-12	. . SEE MAINTENANCE INFORMATION	1	1	1	1	
2	641284	. REGENERATION VALVE KIT	1	1	1	1	
3	641283	. PURGE VALVE KIT	1	1	1	1	
4	641282	. TURBO CUT-OFF VALVE KIT	1	1	1	1	
5	641281	. OUTLET CHECK VALVE KIT	1	1	1	1	
6	641280	. BYPASS VALVE KIT	1	1	1	1	
7	641279	. HEATER ASSY KIT 24 VOLTS	1	1	1	1	
NS	641319	SNUBBLER AIR DISCHARGE / BLACK PLASTIC	1	1	1	1	
10	641134	MALE ELBOW 90º / NTA FITTING / #12x1/2NPT-M BR	1	1	1	1	
NS	501473	MALE RUN TEE / PIPE FITTING / 1/2NPT-Mx1/2NPT-Fx1/2NPT-F BR	1	1	1	1	
11	507556	MALE BRANCHE TEE / PIPE FITTING / 1/2NPT-Fx1/2NPT-Fx1/2NPT-M BR		1	1	1	
12	501600	MALE CONNECTOR / JIC 37° FITTING / #12JIC-Mx1/2NPT-M STL	1	1	1	1	
NS	501316	BUSHING REDUCER / PIPE FITTING / 1/2NPT-Mx1/4NPT-F BR		1	1	1	
13	641371	MALE ELBOW 90° NON-SWIVEL / PUSH-IN FITTING #4x1/4NPT-M BR		1	1	1	
14	501037	MALE ELBOW 90º / SAE 45º FITTING / #4FL-Mx1/4NPT-M BR		1	1	1	
15	500214	SCREW CAP HEX 1/2-13x1 1/4 G5 ZP	3	3	3	3	
NS	500482	WASHER LO SPT .506x.873x.125 ZP	3	3	3	3	
16	141877	SUPPORT AIR DRYER "WABCO"		1	1	1	
NS	500086	SCREW CAP HEX 1/2-20x1 1/4 G5 ZP	2	2	2	2	
NS	500718	NUT HEX STO 1/2-20 ZP	2	2	2	2	
20	503465	TUBE, NYLON 3/4 O.D. / GREEN S.L.		AR	AR	AR	
21	503404	TUBE, NYLON 3/8 O.D. / BLACK S.L.		AR	AR	AR	
22	141889	HOSE ASSY TEFLON /<>DRYER&COMPRESSOR / #12 5698MM			1		
22	141891	HOSE ASSY TEFLON /<>DRYER&COMPRESSOR / #12 5013MM		1		1	
NS	142277	HOSE ASSY TEFLON #12 970MM	1				O
NS	142278	HOSE ASSY / <> DRYER TUBE & AIR DRYER / #12 1050MM	1				O
NS	142279P	AIR DRYER TUBE ASSY	1				O
23	141890	HOSE ASSY TEFLON #4 5875MM	1		1		
23	141892	HOSE ASSY TEFLON #4 5190MM		1		1	
NS	141888	HOSE ASSY TEFLON #4 4431MM	1		1		
NS	141887	HOSE ASSY TEFLON #4 3607MM		1		1	
		O) "OPTION"					

From 4-8165 Up to 8-9339	DATE: 01/2014	PAGE: Y2-1215-04
AIR DRYER - "HALDEX"		

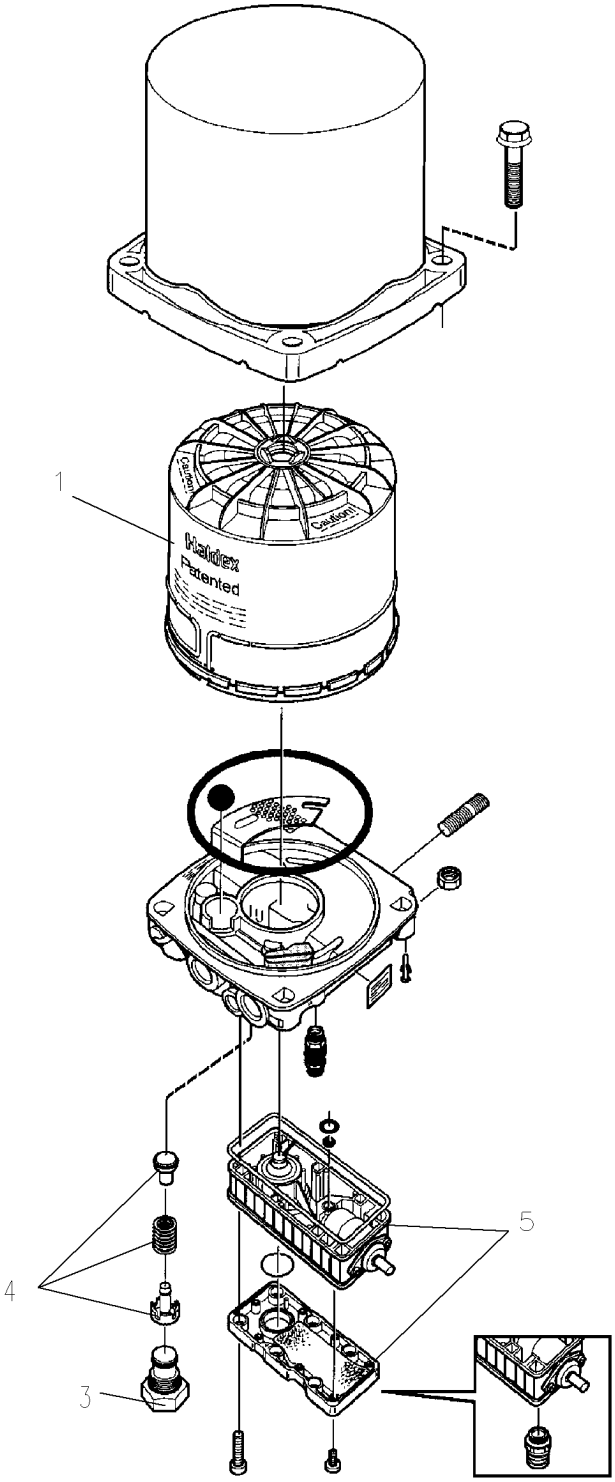

From 4-8165 Up to 8-9339	DATE: 01/2014	PAGE: Y2-1215-04

AIR DRYER - "HALDEX"

ITEM	PART	DESCRIPTION	XL45	MTH40	MTH45	MTH45S	NOTE
	70303498	AIR DRYER "HALDEX" / WITH GOVERNOR Up to 5-8435	1	1	1	1	
	642016	AIR DRYER "HALDEX" / WITH GOVERNOR 8.5 Bar From 5-8436 Up to 7-9032 / REPLACED BY: 642070			1	1	
	642070	AIR DRYER "HALDEX" / WITH GOVERNOR 9.0 Bar From 7-9033			1	1	
1	3097369	. DESICANT CARTRIDGE / "HALDEX"	1	1	1	1	
. NS	MI04-12	. . SEE MAINTENANCE INFORMATION	1	1	1	1	
3	N8894694	. INTEGRATED TURBO PROTECTION VALVE / INTEGRATED	1	1	1	1	
4	N8800309	. . KIT CHECK VALVE	1	1	1	1	
5	641954	. VALVE PACK / W/INTEGRATED GOVERNOR 8.5BAR Up to 5-8435 / REPLACED BY: 642017	1	1	1	1	
5	642017	. VALVE PACK / W/INTEGRATED GOVERNOR 8.5BAR From 5-8436	1	1	1	1	
5	642071	. VALVE PACK / W/INTEGRATED GOVERNOR 9.0BAR	1				

From 2-7800 Up to 8-9339	DATE: 01/2014	PAGE: Y2-1215-10

AIR DRYER - "HALDEX" - INSTALLATION

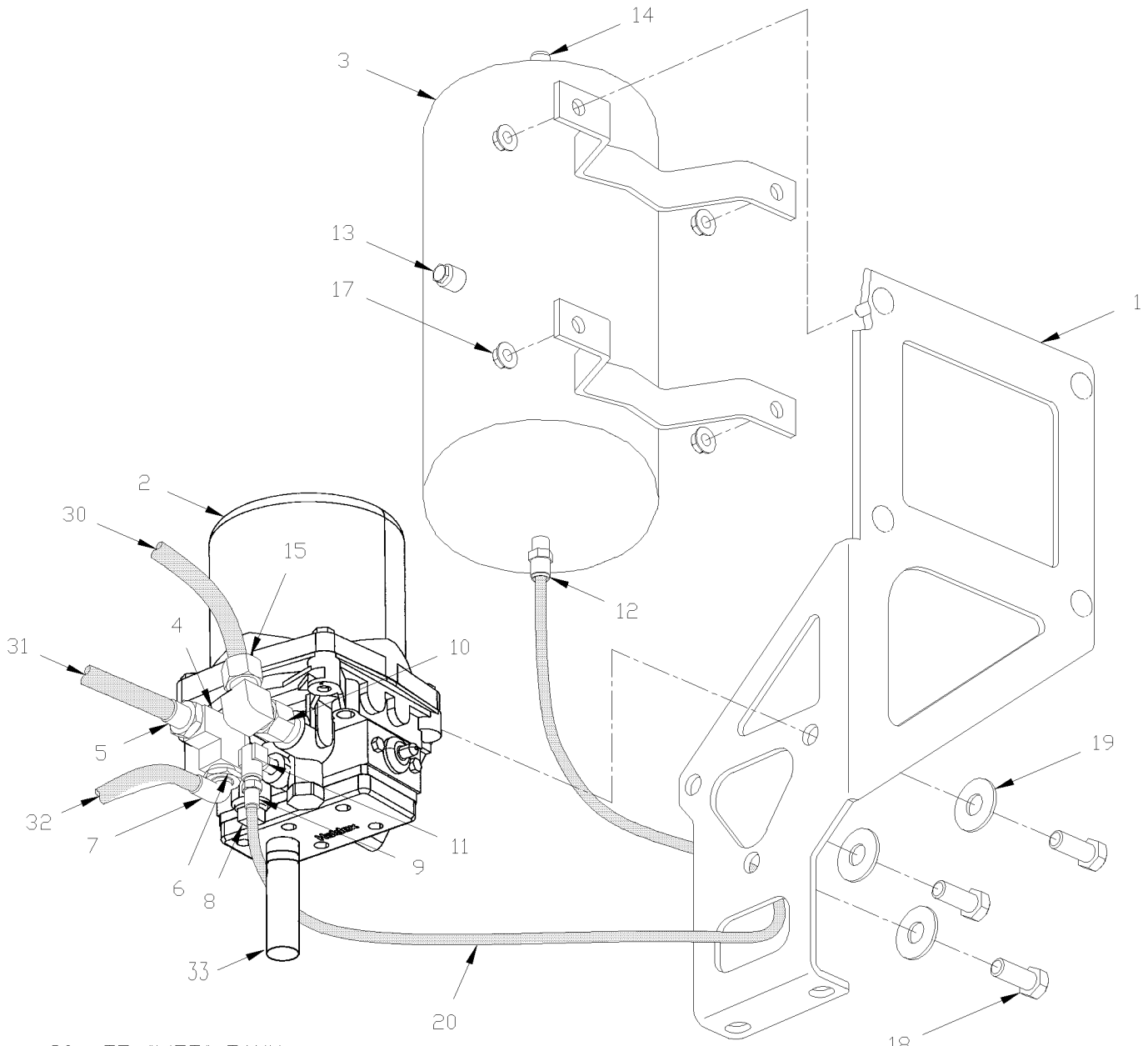

30= TO "WET" TANK
31= FROM "PING" TANK
32= FROM "FILL VALVE"

From 2-7800 Up to 8-9339	DATE: 01/2014	PAGE: Y2-1215-10

AIR DRYER - "HALDEX" - INSTALLATION

ITEM	PART	DESCRIPTION	XL45	MTH40	MTH45	MTH45S	NOTE
1	142188	SUPPORT, AIR DRYER	1	1	1	1	
2	Y2-1215-02	**AIR DRYER - "HALDEX"**					
2	Y2-1215-04	**AIR DRYER - "HALDEX"**					
3	70307176	AIR TANK / 281 IN° / 6" O.D. X 12"	1	1	1	1	
4	501473	MALE RUN TEE / PIPE FITTING / 1/2NPT-Mx1/2NPT-Fx1/2NPT-F BR	1	1	1	1	
5	501600	MALE CONNECTOR / JIC 37° FITTING / #12JIC-Mx1/2NPT-M STL	1	1	1	1	
6	501316	BUSHING REDUCER / PIPE FITTING / 1/2NPT-Mx1/4NPT-F BR	1	1	1	1	
7	641371	MALE ELBOW 90° NON-SWIVEL / PUSH-IN FITTING #4x1/4NPT-M BR	1	1	1	1	
8	501517	PLUG SQUARE HEAD / PIPE FITTING / 3/4NPT-M BR	1	1	1	1	
9	641366	MALE ELBOW 45° NON-SWIVEL / PUSH-IN FITTING / #6x1/4NPT-M BR	1	1	1	1	
10	5011119	ADAPTER / PIPE FITTING / 1/2NPT-Fx1/2NPT-M BR	1	1	1	1	
11	501332	STREET ELBOW 90º / PIPE FITTING / 1/4NPT-Mx1/4NPT-F BR	1	1	1	1	
12	641331	MALE CONNECTOR / PUSH-IN FITTING / #6x1/4NPT-M BR	1	1	1	1	
13	501800	PLUG HEXS / PIPE FITTING / 1/4NPT-M STL	2	2	2	2	
14	501449	PLUG HEXS / PIPE FITTING / 3/8NPT-M STL	1	1	1	1	
15	641134	MALE ELBOW 90º / NTA FITTING / #12x1/2NPT-M BR	1	1	1	1	
17	5001083	NUT HEXF NYRT 5/16-18 ZP	2	2	2	2	
18	500850	SCREW CAP HEX M12-1.75X25 G8.8 ZP	3	3	3	3	
19	500482	WASHER LO SPT .506x.873x.125 ZP	3	3	3	3	
20	503472	TUBE, NYLON 3/8 O.D. / GREY S.L.	AR	AR	AR	AR	
30	503465	TUBE, NYLON 3/4 O.D. / GREEN S.L.	AR	AR	AR	AR	
31	142271	HOSE ASSY / W/COIL / #12 3275MM Up to 3-8164	1				
31	142271	HOSE ASSY / W/COIL / #12 3275MM Up to 7-9095			1		
31	144868	HOSE ASSY / W/COIL / #12 3275MM From 7-9096			1		
NS	142221	HOSE ASSY TEFLON #12 1805MM	1		1		A
NS	142222	HOSE ASSY TEFLON #12 1175MM		1		1	A
32	503402	TUBE, NYLON 1/4 O.D. / BLACK S.L.	AR	AR	AR	AR	
33	503523	HOSE SILICONE 1PLY 3/4" I.D. x 100' / S.L. From 5-8415	AR	AR	AR	AR	B
NS	504018	HOSE CLAMP / 7/16"-1" SS / HS-8 From 5-8415	1	1	1	1	B
		A) FROM "PING TANK" TO COMPRESSOR					
		B) FIXED AT "EXHAUST"					

From 2-7800 Up to 3-8164	DATE: 01/2014	PAGE: Y2-1215-11
AIR DRYER TUBE - INSTALLATION		

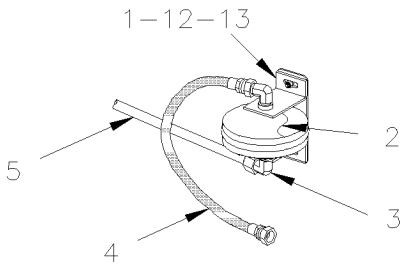

DETAIL B

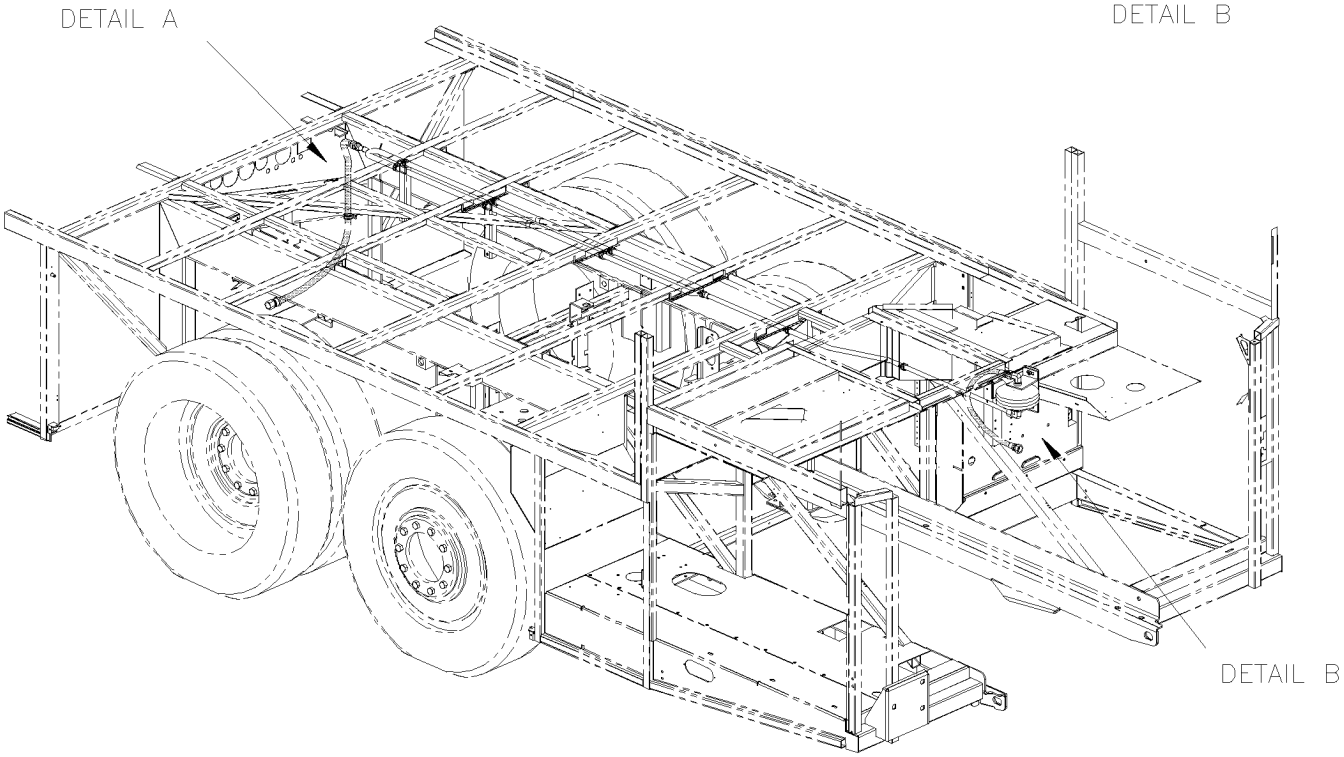

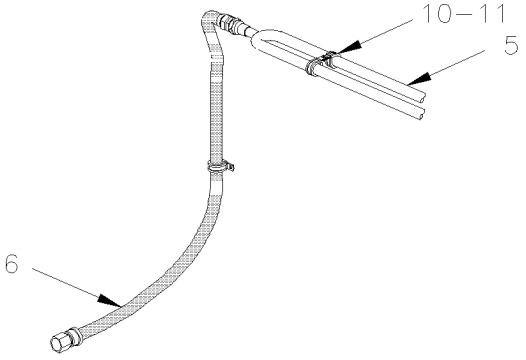

DETAIL A

From 2-7800 Up to 3-8164	DATE: 01/2014	PAGE: Y2-1215-11

AIR DRYER TUBE - INSTALLATION

ITEM	PART	DESCRIPTION	XL45	MTH40	MTH45	MTH45S	NOTE
1	142280	SUPPORT PING AIR TANK Up to 3-8164	1				O
1	142280	SUPPORT PING AIR TANK		1	1	1	
2	032428	AIR TANK / 61 IN° / 6" O.D. X 4" Up to 3-8164	1				O
2	032428	AIR TANK / 61 IN° / 6" O.D. X 4"		1	1	1	
3	5011233	MALE ELBOW 90° / JIC 37° FITTING / #12JIC-Mx1/2NPT-M SS Up to 3-8164	2				O
3	5011233	MALE ELBOW 90° / JIC 37° FITTING / #12JIC-Mx1/2NPT-M SS		1	1	1	
4	142277	HOSE ASSY TEFLON #12 970MM	1				O
4	142221	HOSE ASSY TEFLON #12 1805MM From 2-7800 Up to 3-7992	1		1		
4	142222	HOSE ASSY TEFLON #12 1175MM From 2-7800 Up to 3-7992		1		1	
4	142221	HOSE ASSY TEFLON #12 1805MM From 4-8165			1		
4	142222	HOSE ASSY TEFLON #12 1175MM From 4-8165		1		1	
5	142279P	AIR DRYER TUBE ASSY Up to 3-8164	1				O
5	142271	HOSE ASSY / W/COIL / #12 3275MM From 2-7800 Up to 3-7992		1	1	1	
6	142278	HOSE ASSY / <> DRYER TUBE & AIR DRYER / #12 1050MM Up to 3-8164	1				O
6	142300	HOSE ASSY / #12 1390MM	1				
10	952631	CLAMP / 3/4" I.D. / REPLACED BY: 977742	AR				
10	952633	CLAMP / 7/8" I.D.	AR				
11	500613	SCREW TP PAN PH #10x1/2 ZP	AR				
NS	500964	WASHER FL .203x.500x.047 ZP	AR				
12	5001083	NUT HEXF NYRT 5/16-18 ZP	2				
13	5011215	WASHER FL .328x.875x.062 ZP	2				
		O) OPTION SPECIAL ON BUS					

From 4-8165 Up to 6-8906	DATE: 01/2014	PAGE: Y2-1215-12

AIR DRYER - INSTALLATION

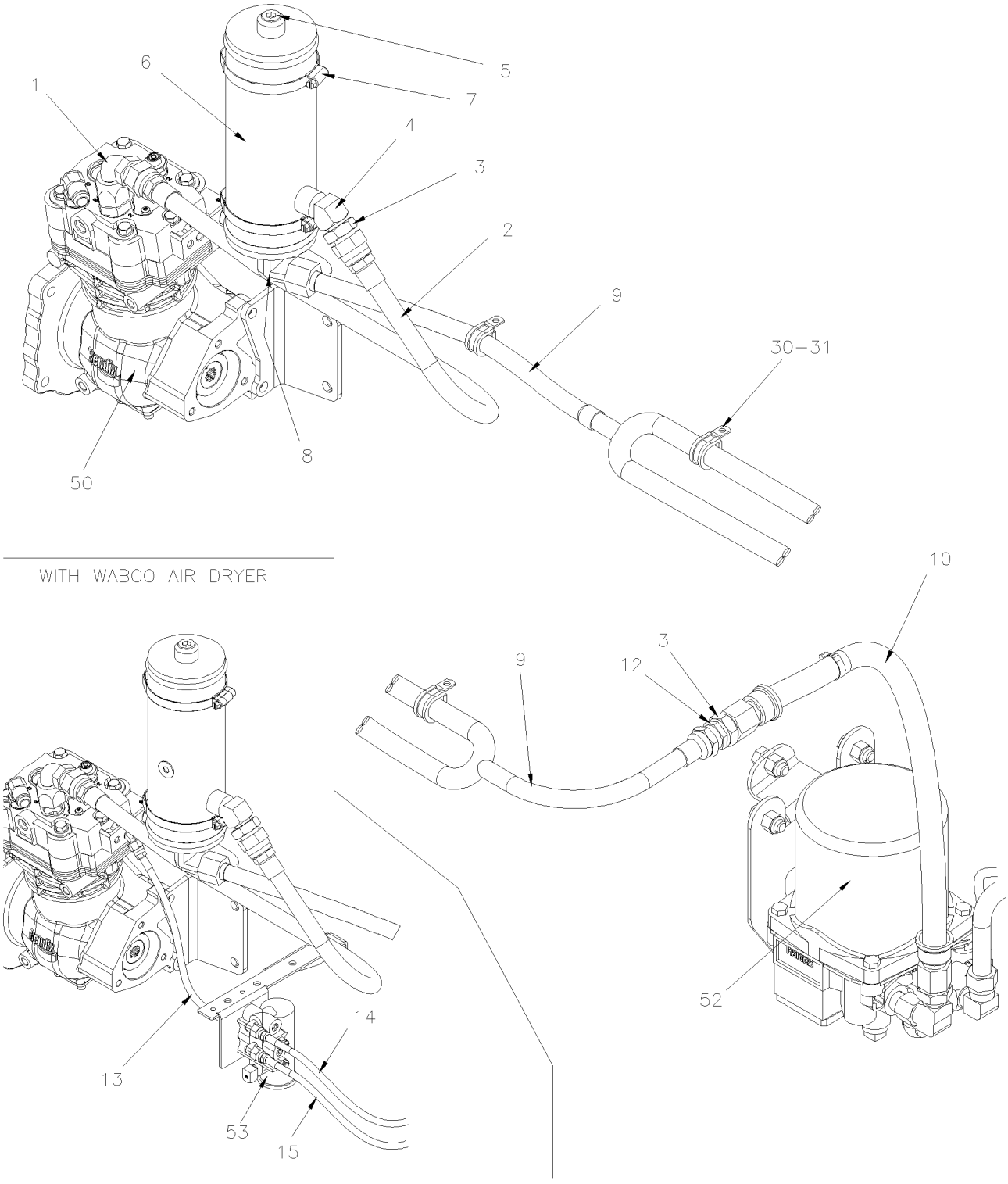

From 4-8165 Up to 6-8906	DATE: 01/2014	PAGE: Y2-1215-12

AIR DRYER - INSTALLATION

ITEM	PART	DESCRIPTION	XL45	MTH40	MTH45	MTH45S	NOTE
1	5011257	MALE CONNECTOR / JIC 37° FITTING / #12JIC-MxM22-1.5-M STL	1				
. NS	N.P.N.	. O-RING M22	1				4
. NS	507341	. WASHER RET M22x1.5	1				
2	142277	HOSE ASSY TEFLON #12 970MM	1				
3	501600	MALE CONNECTOR / JIC 37° FITTING / #12JIC-Mx1/2NPT-M STL	2				
4	501528	STREET ELBOW 45º / PIPE FITTING / 1/2NPT-Mx1/2NPT-F BR	1				
5	501966	PLUG HEXS / PIPE FITTING / 1/2NPT-M STL	1				
6	641982	AIR TANK / 96 IN° / 3" 1/2 O.D. X 10"	1				
7	504235	HOSE CLAMP / 3"9/16"-4"1/2 SS / HS-64	2				
9	142342P	AIR DRYER TUBE ASSY	1				
10	142278	HOSE ASSY / <> DRYER TUBE & AIR DRYER / #12 1050MM	1				
13	148039	HOSE ASSY TEFLON #4 290MM					
14	141890	HOSE ASSY TEFLON #4 5875MM	1				
15	141888	HOSE ASSY TEFLON #4 4431MM	1				
30	952631	CLAMP / 3/4" I.D. / REPLACED BY: 977742	3				
30	952633	CLAMP / 7/8" I.D.	6				
31	500613	SCREW TP PAN PH #10x1/2 ZP	AR				
50	Y2-1205-11	**AIR COMPRESSOR - "BA921" - WITH DETROIT S-60**					
52	Y2-1215-04	**AIR DRYER - "HALDEX"**					
52	Y2-1215-10	**AIR DRYER - "HALDEX" - INSTALLATION**					
		4) NO PARTS NUMBER					

From 4-8165 Up to 6-8906	DATE: 01/2014	PAGE: Y2-1215-15
CHECK VALVE INSTALLATION WITH "WABCO" & AD-9		

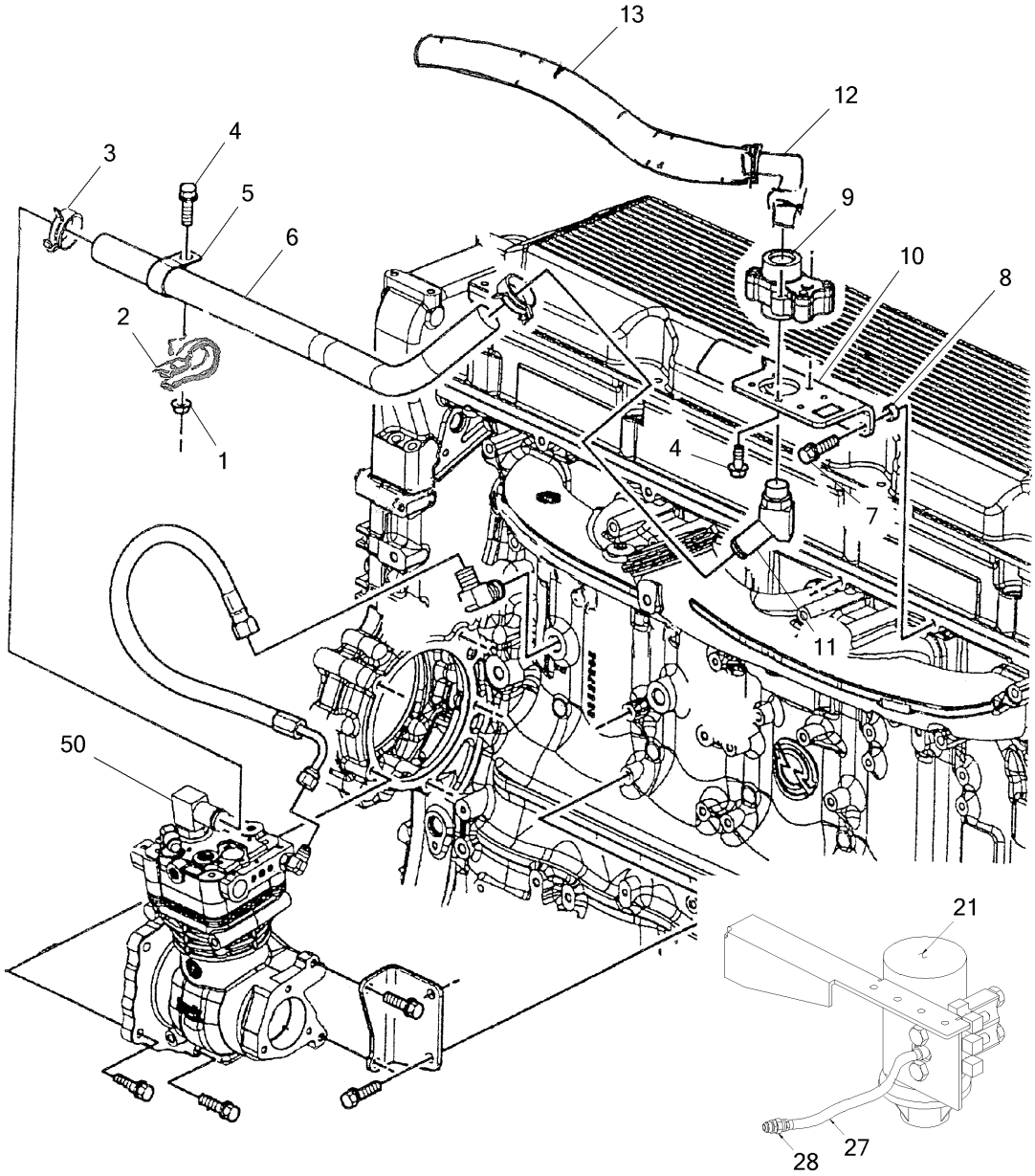

From 4-8165 Up to 6-8906	DATE: 01/2014	PAGE: Y2-1215-15
CHECK VALVE INSTALLATION WITH "WABCO" & AD-9		

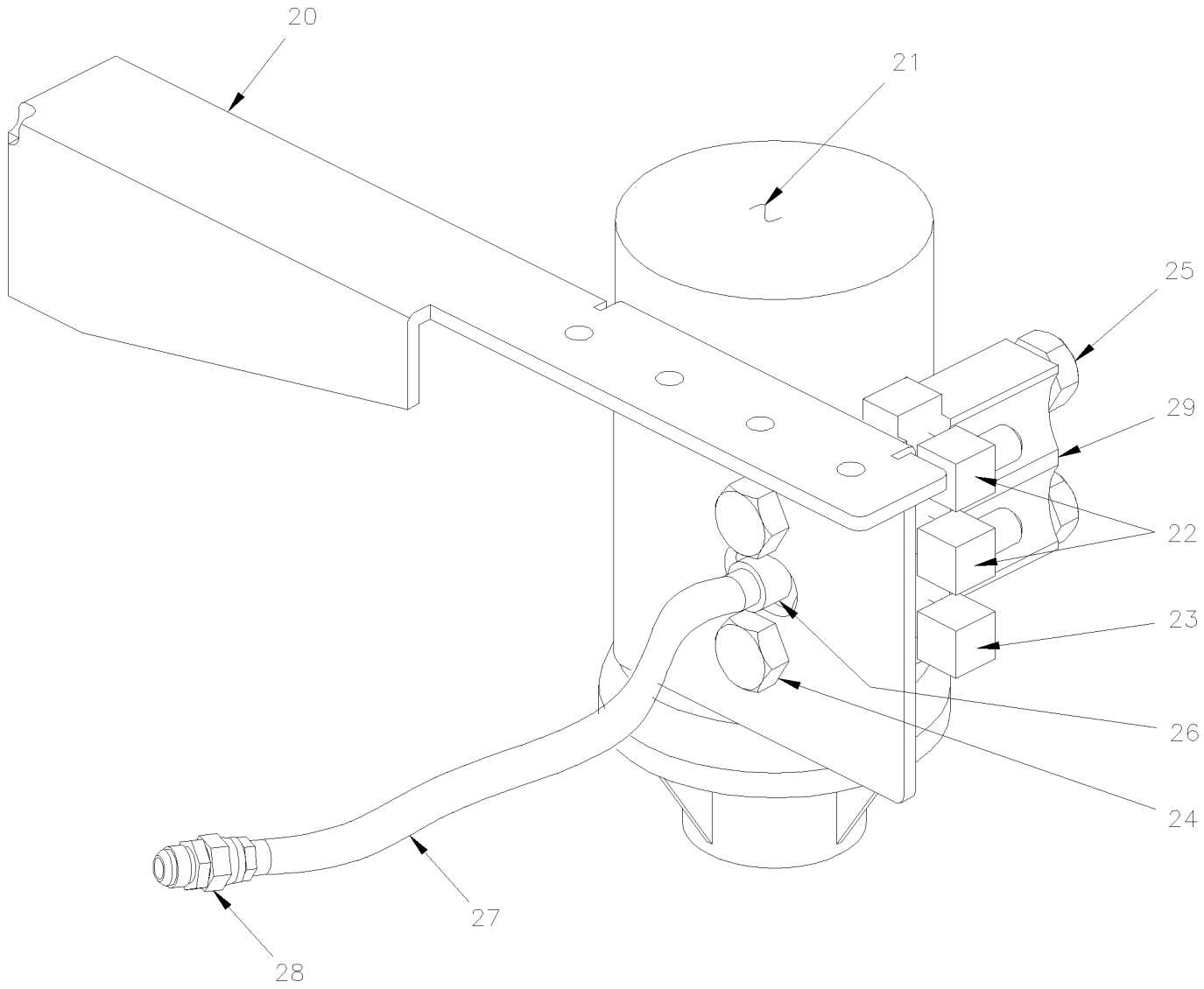

From 4-8165 Up to 6-8906	DATE: 01/2014	PAGE: Y2-1215-15

CHECK VALVE INSTALLATION WITH "WABCO" & AD-9

ITEM	PART	DESCRIPTION	XL45	MTH40	MTH45	MTH45S	NOTE
1	507636	NUT HEXF M8-1.25	1				
2	952625	CLAMP / 3/8" I.D.	1				
3	504319	HOSE CLAMP / 1"-1"1/2 SS / E.T. 16	1				
4	507637	SCREW CAP HEXF M8-1.25x20 G10.9 PHC	3				
5	507638	CLAMP 1"1/4 I.D. X .531	1				
6	510870	HOSE 1" I.D. X 29.38"	1				
7	507639	SCREW CAP HEXF M8-1.25x30 G10.9 PHC	2				
8	507640	SPACER 13/32" I.D. X 7/8" O.D. X 1/4"	2				
9	510866	INTAKE CHECK VALVE	1				
10	510867	SUPPORT CHECK VALVE	1				
11	510868	HOSE ADAPTOR 45 DEG M27 X 1"	1				
12	510869	HOSE ADAPTOR 90 DEG M27 X 1"	1				
13	142290	HOSE / (SUCTION AIR COMPRESSOR) / #16 870MM	1				
20	066059	SUPPORT / AIR GOUVERNOR D-2	1				A
21	641933	GOVERNOR, AIR / D-2 / (110/130PSI)	1				A
. NS	640965	. REPAIR KIT / GOVERNOR D-2 / (280915)	1				
. NS	640638	. GASKET, AIR GOVERNOR	1				
. NS	500187	. SCREW CAP HEX 5/16-18x3 G5 ZP	2				
. NS	500942	. WASHER LO SPT .317x.586x.078 ZG603	2				
22	501036	MALE ELBOW 90º / SAE 45º FITTING / #4FL-Mx1/8NPT-M BR	2				A
23	501331	STREET ELBOW 90º / PIPE FITTING / 1/8NPT-Mx1/8NPT-F BR	1				A
24	502258	SCREW CAP HEX M8-1.25x75 G8.8 FT ZP	2				A
25	966171	NUT HEX NYRT M8x1.25 SS	2				A
26	501026	MALE CONNECTOR / SAE 45º FITTING / #4FL-Mx1/8NPT-M BR	1				A
27	148039	HOSE ASSY TEFLON #4 290MM	1				A
28	501808	MALE ELBOW 45º / SAE 45º FITTING / #4FL-Mx1/8NPT-M BR	1				A,B
29	501072	PLUG HEXS / PIPE FITTING / 1/8NPT-M STL	2				A
50	Y2-1205-11	**AIR COMPRESSOR - "BA921" - WITH DETROIT S-60**					
		A) WITH "WABCO" OPTION					
		B) WITH "WABCO" OPTION					

From 4-8165 Up to 6-8906	DATE: 01/2014	PAGE: Y2-1215-15

CHECK VALVE INSTALLATION WITH "WABCO" & AD-9

ITEM	PART	DESCRIPTION	XL45	MTH40	MTH45	MTH45S	NOTE

From Y-7046 Up to 8-9339	DATE: 01/2014	PAGE: Y2-1220-00

MISCELLANEOUS AIR VALVE

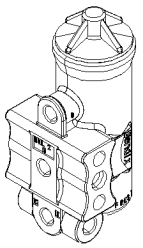

5

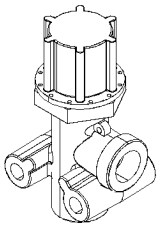

10

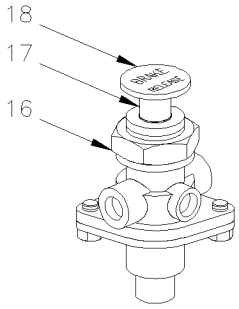

15

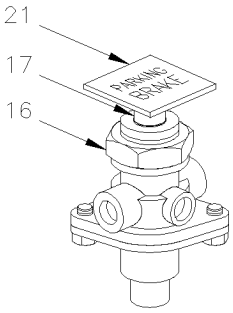

20

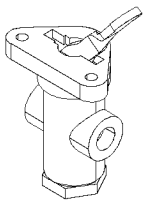

25

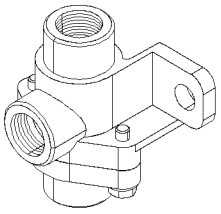

30

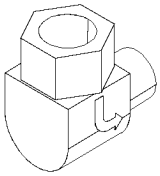

35

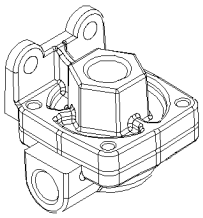

40

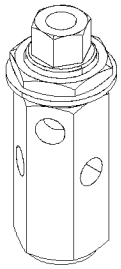

45

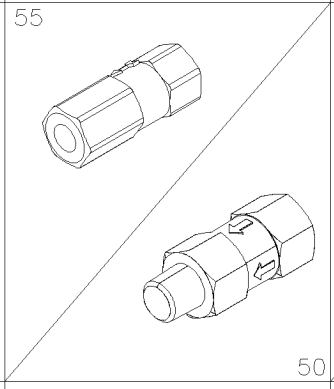

50

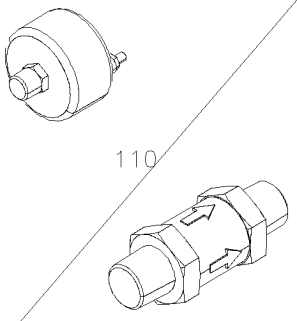

60

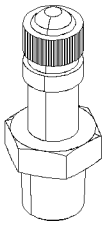

70

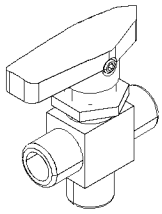

75

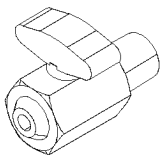

90

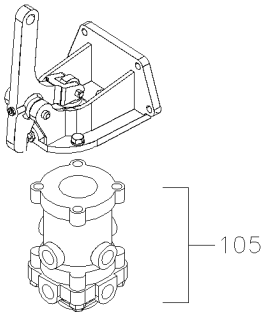

100

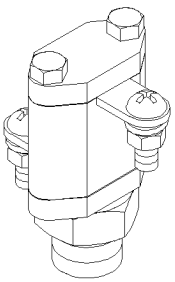

85

From Y-7046 Up to 8-9339	DATE: 01/2014	PAGE: Y2-1220-00

MISCELLANEOUS AIR VALVE

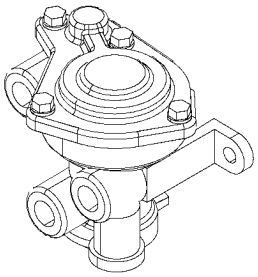

140

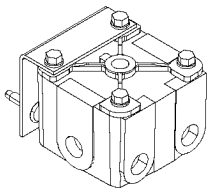

125

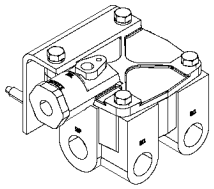

130

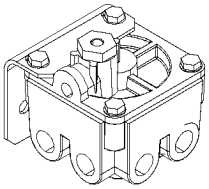

135

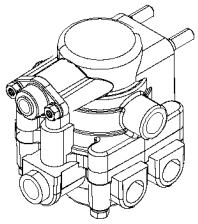

145

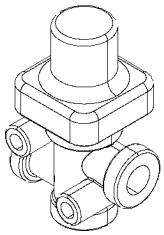

150

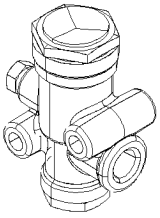

155

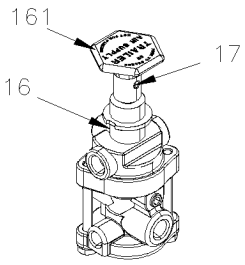

160

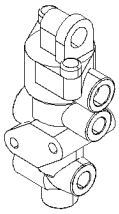

170

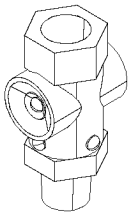

175

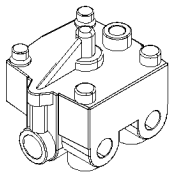

180

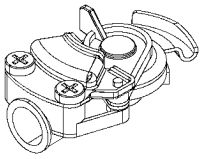

185

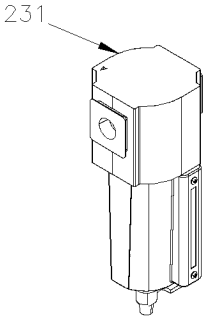

230

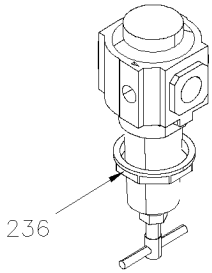

235

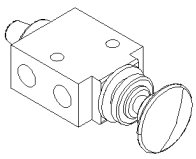

240

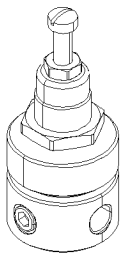

245

From Y-7046 Up to 8-9339	DATE: 01/2014	PAGE: Y2-1220-00
MISCELLANEOUS AIR VALVE		

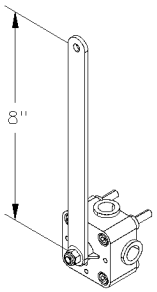

350

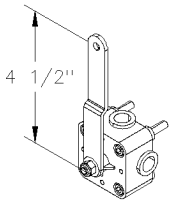

355

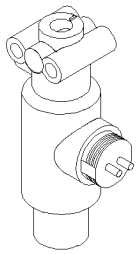

305

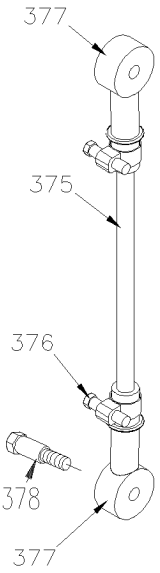

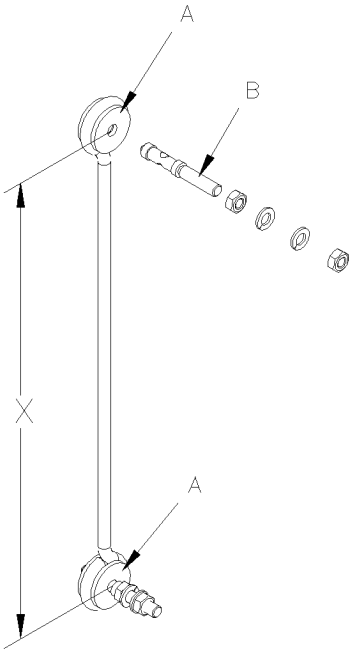

385

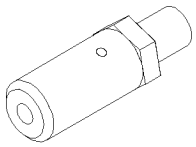

250

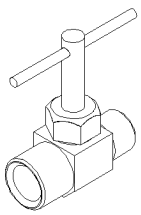

260

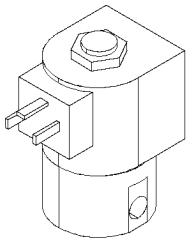

275

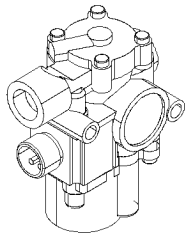

300

From Y-7046 Up to 8-9339	DATE: 01/2014	PAGE: Y2-1220-00

MISCELLANEOUS AIR VALVE

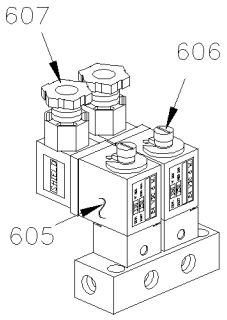

600

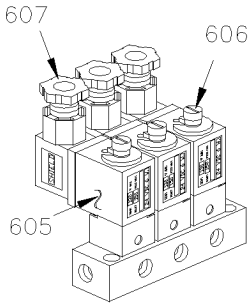

601

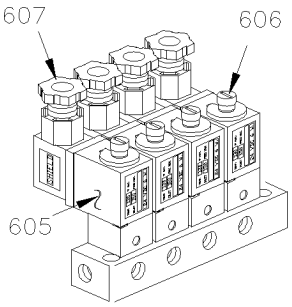

602

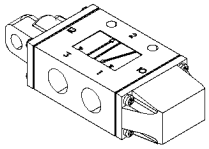

610

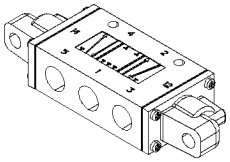

615

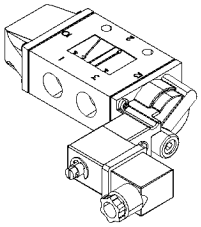

620

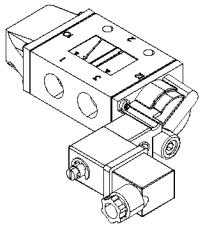

625

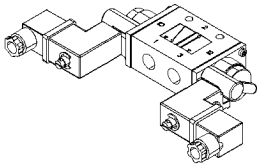

630

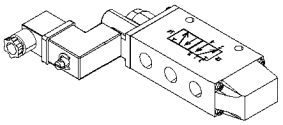

635

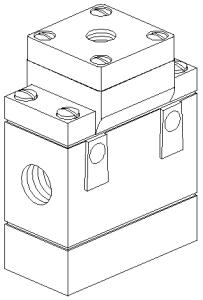

640

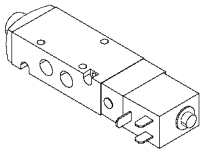

650

From Y-7046 Up to 8-9339	DATE: 01/2014	PAGE: Y2-1220-00

MISCELLANEOUS AIR VALVE

ITEM	PART	DESCRIPTION	XL45	MTH40	MTH45	MTH45S	NOTE
5	641933	GOVERNOR, AIR / D-2 / (110/130PSI)	1				
. NS	640965	. REPAIR KIT / GOVERNOR D-2 / (280915)	1				
. NS	640638	. GASKET, AIR GOVERNOR	1				
. NS	500187	. SCREW CAP HEX 5/16-18x3 G5 ZP	2				
. NS	500942	. WASHER LO SPT .317x.586x.078 ZG603	2				
10	640439	VALVE, PRESSURE PROTECTION / PR-2 75PSI	1				
15	640472	VALVE, CONTROL / RD-3	1				
. NS	641154	. REPAIR KIT / PP-1 & RD-3	1				
16	640297	NUT	1				
17	640286	PIN ROLLER	1				
18	641155	BUTTON, OVERRULE ROUND BLACK	1				
NS	640394	BUTTON, PARKING BRAKE ROUND BLACK 1"	1				
20	641128	VALVE, CONTROL VALVE PP-1 / 40PSI / REPLACED BY: 641571	1				
. NS	641154	. REPAIR KIT / PP-1 & RD-3 / (281126)	1				
21	641149	BUTTON, PARKING BRAKE DIAMOND YELLOW / 1"	1				
25	640136	VALVE, CONTROL TW-1	1				
. NS	641156	. REPAIR KIT / TW-1	1				
30	641015	VALVE, DOUBLE CHECK DC-4 / REPLACED BY: 641564	1				
30	641564	VALVE, DOUBLE CHECK DC-4	1				
35	641172	VALVE, CHECK ELBOW 90º 1/2 NPT	1				
40	641429	VALVE, QUICK RELEASE QR-1 / 3/8NPTx3/8NPTx3/8NPT	1				
. NS	640924	. REPAIR KIT / QR-1	1				
45	640442	VALVE, INVERSION TR-2	1				
50	640135	VALVE, CHECK 1/4 NPT	1				
55	640123	VALVE, CHECK 1/2 NPT SC-1 / REPLACED BY: 641401	1				
55	641401	VALVE, CHECK 1/2 NPT SC-1	1				
60	530175	VALVE, CHECK 1/8 NPT	1				
70	640488	VALVE, AIR FILL 1/8" NPT	1				
. NS	650164	. CAP VALVE / CHROME	1				
75	641417	VALVE, 3 WAYS 1/8NPT-Fx1/8NPT-Fx1/8NPT-F BR / REPLACED BY: 642161	1				
. NS	642014	. HANDLE / RED	1				
75	642161	VALVE, 3 WAYS 1/8NPT-Fx1/8NPT-Fx1/8NPT-F BR / SERVICE	1				
85	640975	PRESSURE SWITCH N.C. 66PSI / ¼NPT LP-3	1				
85	641174	PRESSURE SWITCH N.C. 30PSI / ¼NPT LP-2	1				
90	641043	DRAIN VALVE 1/4 NPT M	1				
100	641856	BRAKE VALVE ASSY W/BRACKET / MODEL E-10P / REPLACED BY: 641925	1				
. NS	2359226	. BOOT PLUNGER	1				
. NS	2222120	. MOUNTING BRACKET COUPLING D-1	1				
105	641925	. VALVE SUB ASSY / MODEL E-10P	1				
110	641462	PRESSURE SWITCH N.O. 4PSI / ¼NPT W/10-32 / SL-5 BRAKE	1				
125	641088	VALVE, RELAY R-12 HORIZONTAL PORT / REPLACED BY: 642067	1				
125	642068	VALVE, RELAY R-12 HORIZONTAL PORT / W/OUT SUPPORT	1				

From Y-7046 Up to 8-9339	DATE: 01/2014	PAGE: Y2-1220-00

MISCELLANEOUS AIR VALVE

ITEM	PART	DESCRIPTION	XL45	MTH40	MTH45	MTH45S	NOTE
130	641120	VALVE, RELAY R-14 HORIZONTAL PORT 4psi Crack / REPLACED BY: 641570	1				
. NS	10508267	. KIT, REPAIR	1				
135	641991	VALVE, RELAY R-14 "WABCO"	1				
140	640870	VALVE / SPRING BRAKE SR-1	1				
. NS	640921	. REPAIR KIT / SR-1	1				
145	642015	VALVE / SPRING BRAKE SR-7 / REPLACED BY: 642119	1				
145	643384	VALVE / SPRING BRAKE SR-7 / REPLACED BY: 642119	1				
. NS	642119	. VALVE / SPRING BRAKE SR-7 (K021558)	1				
150	641137	VALVE, PRESSURE PROTECTION TYPE PR-4 70PSI	1				
155	640471	VALVE, INVERSION TR-3 25-40LBS	1				
160	641397	TRAILER SUPPLY VALVE PP-7	1				
161	641935	BUTTON RED / FOR TRAILER VALVE PP-7	1				
170	641495	TRACTOR PROTECTION VALVE TP-3 DC	1				
175	642088	VALVE, QUICK RELEASE QR-L / IN LINE	1				
180	641399	VALVE, RELAY R-12 P SUPPERSEEDED 642097 / REPLACED BY: 642097	1				
185	641939	GLANDHAND W/DUST COVER "BLUE"	1				
185	641938	GLANDHAND W/DUST COVER "RED"	1				
230	641338	AIR FILTER ASSY	1				
231	641339	SUPPORT / AIR FILTER	1				
235	641352	AIR PRESSURE REGULATOR 1/2" NPT	1				
236	641506	NUT RING / AIR REGULATOR RETAINING	1				
NS	142025	SUPPORT / AIR REGULATOR	1				A
240	641445	VALVE, 3 WAYS, 2 POSITIONS MECHANICAL	1				
. NS	641992	. KNOB	1				
245	641472	AIR PRESSURE REGULATOR 1/4" NPT / COPPER	1				
250	642022	SAFETY VALVE 150 PSI X 3/8 NPT / ST-3	1				
260	501354	NEEDLE VALVE 1/8 NPT M x 1/8 NPT F	1				
275	562804	VALVE, 2 WAYS N.C.	1				
300	641537	VALVE, "ABS" 24VOLT Up to 2-7832	1				
300	641951	VALVE, "ABS" 12VOLT From 2-7833	1				
305	641460	VALVE, "ATC" 24VOLT Up to 2-7832	1				
305	641950	VALVE, "ATC" 12VOLT From 2-7833	1				
350	630156	VALVE, HEIGHT CONTROL "BARKSDALE" 8"	1				
355	630157	VALVE, HEIGHT CONTROL "BARKSDALE" / FRONT 4½" / REPLACED BY: 630237	1				
355	630237	VALVE, HEIGHT CONTROL "BARKSDALE" / FRONT 4½"	1				
375	131351	ROD LINK / 140MM	1				
376	504014	HOSE CLAMP / 1/4"-5/8" SS / HM-4	AR				
377	630117	ROD END / BLACK RUBBER 5/16" I.D.	AR				
378	630137	SCREW SHR CAP HEX 5/16" I.D. x 1/4-20	AR				
385	630231	LINK ASSY 185MM C/C 7 1/4"	1				
. A	N8889244	. GROMMET / LINK	2				
. C	630250	. STUD RETAINER 1/4-20 X 1"	2				
		A) LOCATED IN SPARE COMPARTMENT NEAR DRIVER'S FLOOR					

From Y-7046 Up to 8-9339	DATE: 01/2014	PAGE: Y2-1220-00

MISCELLANEOUS AIR VALVE

ITEM	PART	DESCRIPTION	XL45	MTH40	MTH45	MTH45S	NOTE
. NS	500769	. NUT HEX 1/4-20 ZP	4				
. NS	500473	. WASHER LO SPT .262x.489x.062 ZP	4				
385	630232	LINK ASSY 265MM C/C 10 1/2"	1				
. A	N8889244	. GROMMET / LINK	2				
. B	630250	. STUD RETAINER 1/4-20 X 1"	2				
. NS	500479	. WASHER LO INT .448x.789x.040 ZP	4				
. NS	500473	. WASHER LO SPT .262x.489x.062 ZP	4				
385	630263	LINK ASSY 317MM C/C 11 1/2"	1				
. A	N8889244	. GROMMET / LINK	2				
. B	630250	. STUD RETAINER 1/4-20 X 1"	2				
. NS	500769	. NUT HEX 1/4-20 ZP	4				
. NS	500473	. WASHER LO SPT .262x.489x.062 ZP	4				
600	641130	MANIFOLD VALVE / W/2 SOLENOID / REPLACED BY: 641385	1				
600	641412	MANIFOLD VALVE / W/2 SOLENOID	1				
601	641180	MANIFOLD VALVE / W/3 SOLENOID	1				
602	641906	MANIFOLD VALVE / W/4 SOLENOID	1				
. NS	641927	. KIT, MANIFOLD REPAIR / N.O.	1				
. NS	641928	. KIT, MANIFOLD REPAIR / N.C.	1				
. NS	641929	. COIL 24V	1				
. NS	642167	. MALE ELBOW 90° SWIVEL / PUSH-IN FITTING /	1				
. NS	990143	. MALE CONNECTOR / PUSH-IN FITTING / W/O-RING /	1				
. NS	641385	. CONNECTOR / SOCKET HOUSING ASSY 3C	1				
. NS	641455	. REDUCER STEM / PUSH-IN FITTING / / BLACK PLASTIC	1				
605	641107	. COIL 24V / REPLACED BY: 641929	AR				
606	641353	. PLUNGER REPAIR KIT / MANIFOLD VALVE (1) / REPLACED BY: 641928	AR				
607	641385	. CONNECTOR / SOCKET HOUSING ASSY 3C / PNEUMAC 54934-01	AR				
610	641274	VALVE, 3 WAYS, 2 POSITIONS N.C.	1				
615	641531	VALVE, 5 WAYS, 3 POSITIONS	1				
. NS	641186	. SPOOL	1				
620	641937	VALVE, 3 WAYS, 2 POSITIONS N.C. / W/MAN OVERRIDE	1				
. NS	641929	. COIL 24V	1				
. NS	641385	. CONNECTOR / SOCKET HOUSING ASSY 3C / PNEUMAC 54934-01	1				
625	641528	VALVE, 3 WAYS, 2 POSITIONS N.O.	1				
. NS	641929	. COIL 24V	1				
. NS	641169	. SPOOL	1				
. NS	641385	. CONNECTOR / SOCKET HOUSING ASSY 3C	1				
630	641530	VALVE, 3 WAYS, 2 POSITIONS / 2 SOLONOIDS	1				
. NS	641929	. COIL 24V	1				
. NS	641169	. SPOOL	1				
. NS	641385	. CONNECTOR / SOCKET HOUSING ASSY 3C	1				
635	641527	VALVE, 4 WAYS, 2 POSITIONS	1				
. NS	641929	. COIL 24V	1				

From Y-7046 Up to 8-9339	DATE: 01/2014	PAGE: Y2-1220-00

MISCELLANEOUS AIR VALVE

ITEM	PART	DESCRIPTION	XL45	MTH40	MTH45	MTH45S	NOTE
. NS	641186	. SPOOL	1				
. NS	641385	. CONNECTOR / SOCKET HOUSING ASSY 3C	1				
640	641357	VALVE, 3 WAYS, 2 POSITIONS N.C. / W/SPRING	1				
640	641356	VALVE, 3 WAYS, 2 POSITIONS N.O. / W/SPRING	1				
650	642023	VALVE, 5 WAYS, 2 POSITIONS 24V / MODEL V19	1				
. NS	641385	. CONNECTOR / SOCKET HOUSING ASSY 3C	1				

From Y-7046 Up to 8-9339	DATE: 01/2014	PAGE: Y2-1220-10

BRAKE PEDAL VALVE - "BENDIX"

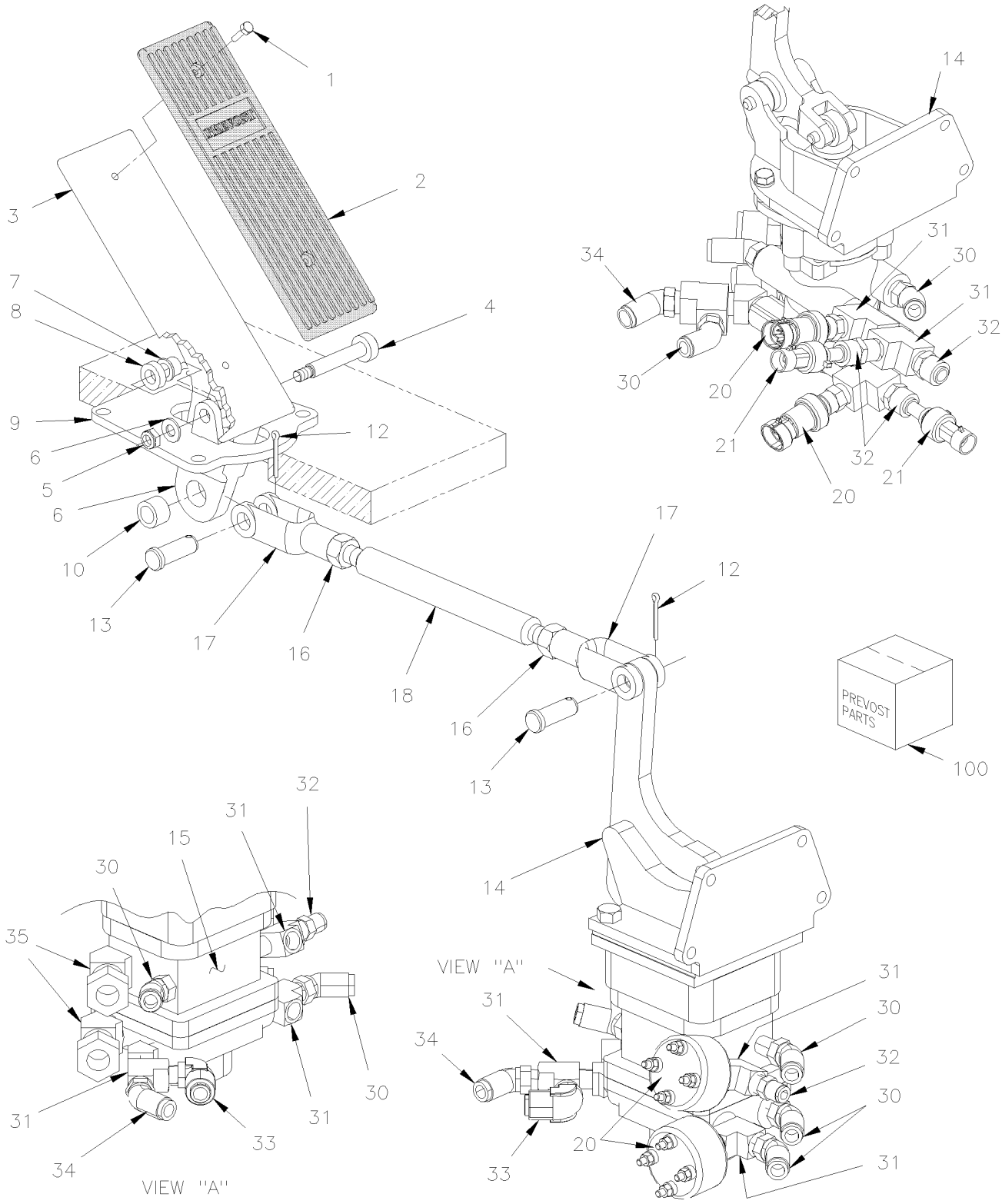

From Y-7046 Up to 8-9339	DATE: 01/2014	PAGE: Y2-1220-10

BRAKE PEDAL VALVE - "BENDIX"

ITEM	PART	DESCRIPTION	XL45	MTH40	MTH45	MTH45S	NOTE
1	500416	. SCREW MA BDG PH #10-32x1/2 BK	2	2	2	2	
2	141212	. THREADLE COVER / W/STEEL BACKING	1	1	1	1	
3	141207	. PEDAL BRAKE	1	1	1	1	
4	502575	. SCREW SHR HEXS 10x50 {M8-1.25	1	1	1	1	
5	500868	. NUT HEX NYRT M8-1.25 CP	1	1	1	1	
6	500874	. WASHER FL 8.4x17.0x1.6 ZP	1	1	1	1	
7	507297	. FLANGE BUSHING	2	2	2	2	
8	141211	. SPACER	1	1	1	1	
9	141996	. SUPPORT ASSY / TO FIX BRAKE PEDAL	1	1	1	1	
10	507307	. BUSHING OIL 1/2 I.D. X 3/4 O.D. X 1/2	1	1	1	1	
12	502102	PIN, COTTER 1/8 x 1	1	1	1	1	
13	502035	PIN, CLEVIS 1/2 x 1 3/8 BZC	1	1	1	1	
14	641257	BRAKE VALVE ASSY W/BRACKET / MODEL E-15 / REPLACED BY: 641925	1	1	1	1	
. NS	2359226	. BOOT PLUNGER	1	1	1	1	
. NS	2222120	. MOUNTING BRACKET COUPLING D-1	1	1	1	1	
14	641439	BRAKE VALVE ASSY W/BRACKET / MODEL E-12 / REPLACED BY: 641925	1	1	1	1	
. NS	2222120	. MOUNTING BRACKET COUPLING D-1	1	1	1	1	
14	641856	BRAKE VALVE ASSY W/BRACKET / MODEL E-10P / REPLACED BY: 641925	1	1	1	1	
. NS	2359226	. BOOT PLUNGER	1	1	1	1	
. NS	2222120	. MOUNTING BRACKET COUPLING D-1	1	1	1	1	
15	641925	. VALVE SUB ASSY / MODEL E-10P	1	1	1	1	
15	641440	. VALVE SUB ASSY / MODEL E-12 / REPLACED BY: K641440	1	1	1	1	
15	641403	. VALVE SUB ASSY / MODEL E-15 / REPLACED BY: K641403	1	1	1	1	
16	500716	NUT HEX 1/2-20 ZP	2	2	2	2	
17	020317	YOKE 1/2-20x1 15/16 C/Lx9/16Wx1/2	2	2	2	2	
18	141178	SHAFT THREADED W/R.H. THREAD 260MM	1	1	1	1	
20	641462	PRESSURE SWITCH N.O. 4PSI / ¼NPT W/10-32 / SL-5 BRAKE	2	2	2	2	
31	501699	MALE RUN TEE / PIPE FITTING / 3/8NPT-Mx3/8NPT-Fx3/8NPT-F BR	AR	AR	AR	AR	
32	641330	MALE CONNECTOR / PUSH-IN FITTING / #6x3/8NPT-M BR	AR	AR	AR	AR	
33	641375	MALE ELBOW 90° NON-SWIVEL / PUSH-IN FITTING #6x3/8NPT-M BR	AR	AR	AR	AR	
34	641368	MALE ELBOW 45° NON-SWIVEL / PUSH-IN FITTING / #8x3/8NPT-M BR	AR	AR	AR	AR	
35	641602	MALE CONNECTOR / PUSH-IN FITTING / #10x3/8NPT-M BR	AR	AR	AR	AR	
36	501330	STREET ELBOW 45º / PIPE FITTING / 3/8NPT-Mx3/8NPT-F BR	AR	AR	AR	AR	
37	501305	PLUG SQUARE HEAD / PIPE FITTING / 3/8NPT-M BR	1				
100	641404	REPAIR KIT/ MAJOR/ (MINOR, PISTON & DIAPHRAM) / REPLACED BY: 641442	1	1	1	1	
100	641442	REPAIR KIT / MAJOR / (MINOR, PISTON & DIAPHRAM)	1	1	1	1	
100	641405	REPAIR KIT / MINOR / (O-RING & SEAL) / REPLACED BY: 641441	1	1	1	1	
100	641441	REPAIR KIT / MINOR / (O-RING & SEAL) /	1	1	1	1	
100	640949	KIT, REPAIR / BRAKE VALVE E-10	1	1	1	1	

From Y-7046 Up to 8-9339	DATE: 01/2014	PAGE: Y2-1220-15

AIR FILTER - ACCESSORIES

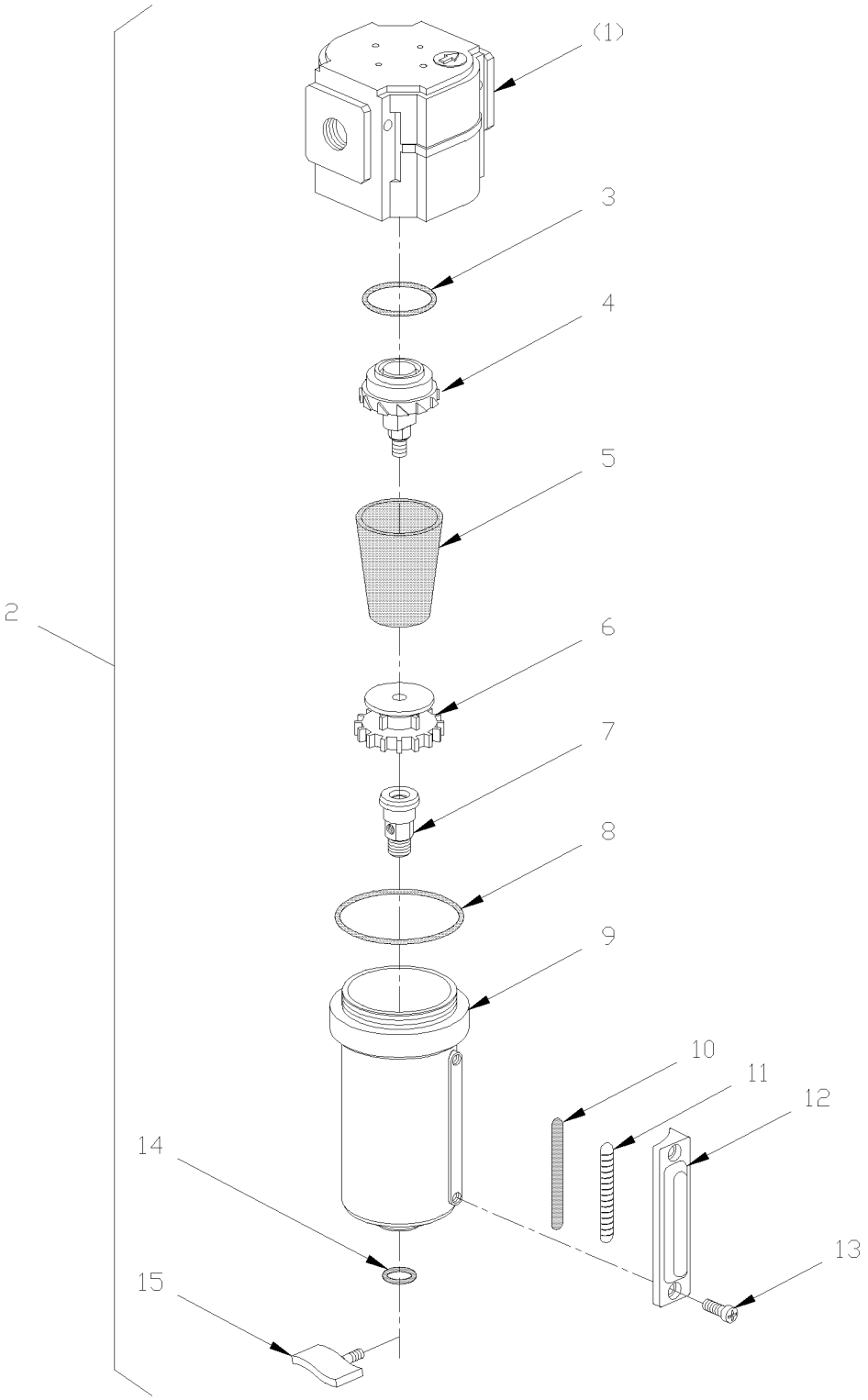

From Y-7046 Up to 8-9339	DATE: 01/2014	PAGE: Y2-1220-15

AIR FILTER - ACCESSORIES

ITEM	PART	DESCRIPTION	XL45	MTH40	MTH45	MTH45S	NOTE
1	641339	SUPPORT / AIR FILTER	1				
2	641338	AIR FILTER ASSY	1				
3	N.S.S.	. O-RING / UPPER CENTER POST	1				1
4	641969	. CENTER POST	1				
5	641340	. FILTER ELEMENT	1				
6	641970	. SCREW BAFFLE	1				
7	641971	. DRAIN VALVE BODY	1				
8	N.S.S.	. O-RING / UPPER BOWL	1				1
9	N.S.S.	. BOWL METAL	1				1
10	N.S.S.	. INDICATOR FILTER	1				1
11	N.S.S.	. GLASS / INDICATOR	1				1
12	N.S.S.	. RETAINER / GLASS	1				1
13	N.S.S.	. SCREW / TO FIX RETAINER	2				1
14	N.S.S.	. O-RING / LOWER BOWL	1				1
15	641972	. DRAIN VALVE	1				
16	N.S.S.	. NUT RETAINER / DRAIN VALVE	1				1
16	641354	KIT, O-RING	AR				A
16	641355	KIT, LEVEL INDICATOR	AR				B
		1) NOT SOLD SEPARATELY					
		A) INCLUDE ITEMS #3,8 & 14					
		B) INCLUDE ITEMS #8,10,11 & 13					

From Y-7046 Up to 8-9339	DATE: 01/2014	PAGE: Y2-1220-50

TRAILER VALVE INSTALLATION

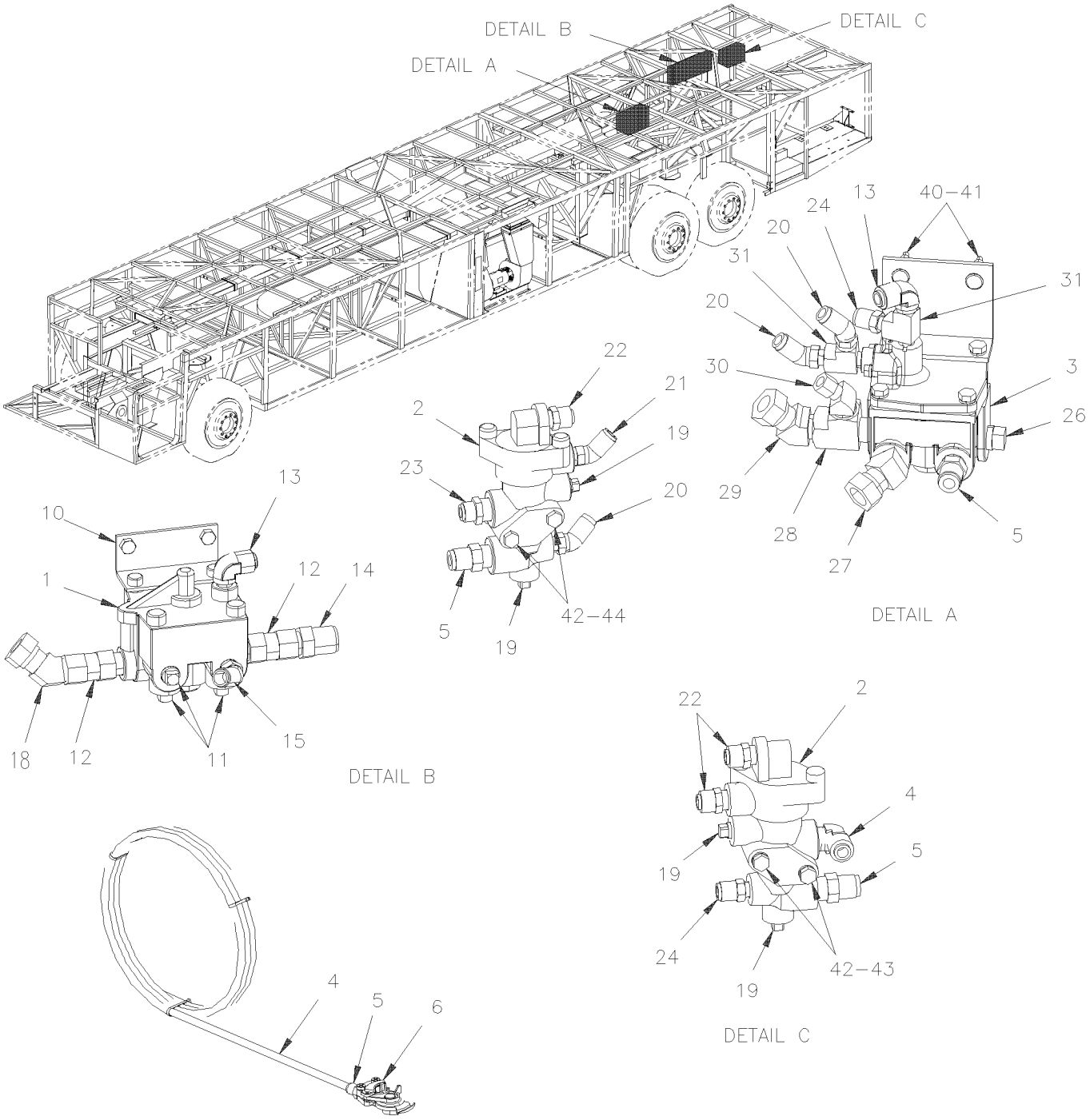

From Y-7046 Up to 8-9339	DATE: 01/2014	PAGE: Y2-1220-50

TRAILER VALVE INSTALLATION

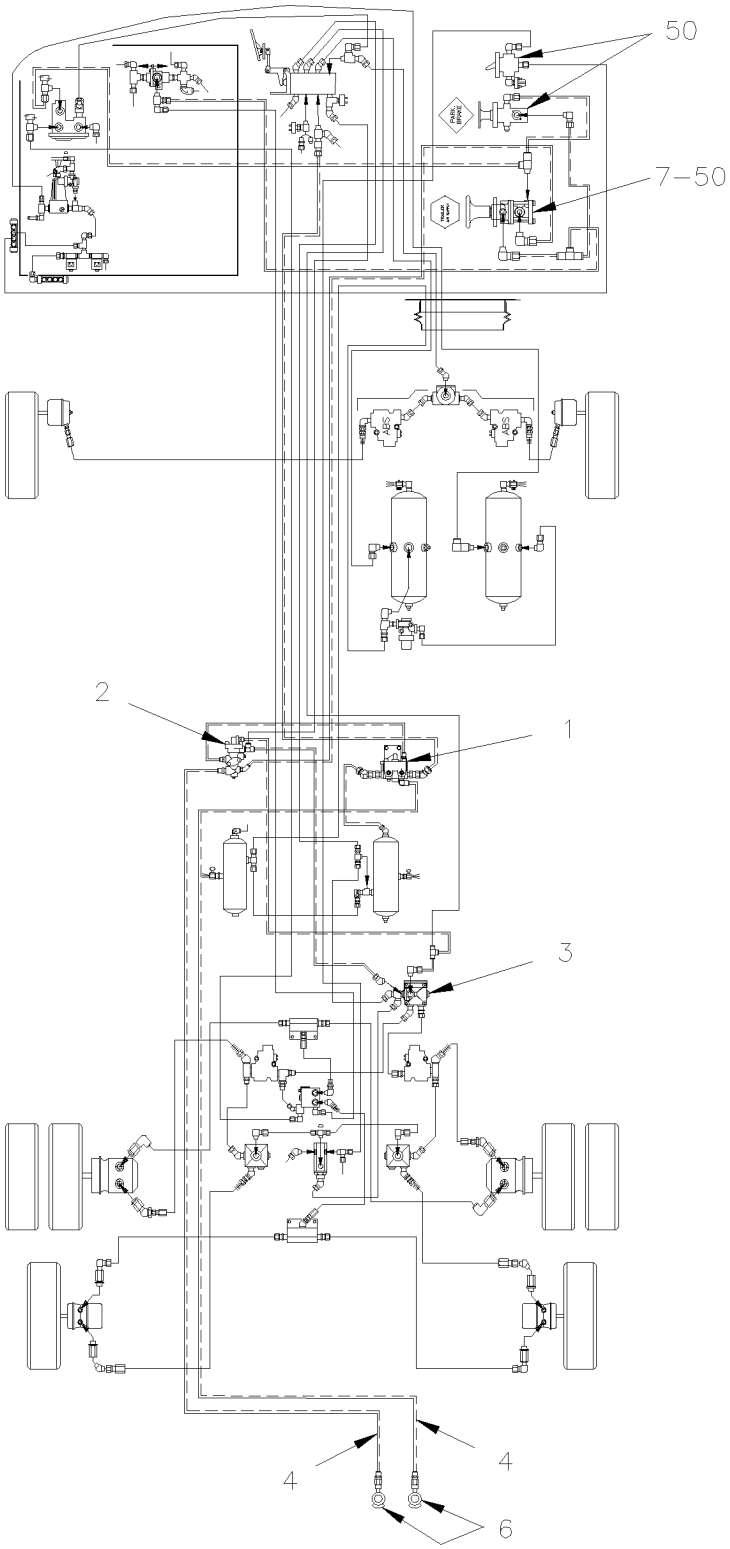

From Y-7046 Up to 8-9339	DATE: 01/2014	PAGE: Y2-1220-50

TRAILER VALVE INSTALLATION

ITEM	PART	DESCRIPTION	XL45	MTH40	MTH45	MTH45S	NOTE
1	641399	VALVE, RELAY R-12 P SUPPERSEEDED 642097 / REPLACED BY: 642097	1				
2	641495	TRACTOR PROTECTION VALVE TP-3 DC	1				
3	642013	VALVE, RELAY R-12 DC	1				
4	503638	TUBE, NYLON 1/2 O.D. / BROWN S.L.	AR				
4	503406	TUBE, NYLON 1/2 O.D. / GREEN S.L.	AR				
5	640992	MALE CONNECTOR / NTA FITTING / #8x1/2NPT-M BR	AR				
6	641938	GLANDHAND W/DUST COVER "RED"	1				
6	641939	GLANDHAND W/DUST COVER "BLUE"	1				
7	641397	TRAILER SUPPLY VALVE PP-7	1				
10	142312	SUPPORT VALVE R-12P "XL-II OPTION"	1				A
10	142164	SUPPORT VALVE R-12P		1	1	1	
11	501305	PLUG SQUARE HEAD / PIPE FITTING / 3/8NPT-M BR	3				
12	641401	VALVE, CHECK 1/2 NPT SC-1	2				
13	641372	MALE ELBOW 90° NON-SWIVEL / PUSH-IN FITTING #6x1/4NPT-M BR	AR				
14	641384	MALE CONNECTOR / PUSH-IN FITTING / #10x1/2NPT-M BR	AR				
15	641368	MALE ELBOW 45° NON-SWIVEL / PUSH-IN FITTING / #8x3/8NPT-M BR	AR				
16	641376	MALE ELBOW 90° NON-SWIVEL / PUSH-IN FITTING / #8x3/8NPT-M BR	AR				
17	507557	STREET ELBOW 90º / PIPE FITTING / 1/2NPT-Mx1/2NPT-F BR	AR				
18	641027	MALE ELBOW 45º / NTA FITTING / #10x1/2NPT-M BR	1				
19	501304	PLUG SQUARE HEAD / PIPE FITTING / 1/4NPT-M BR	AR				
NS	950245	PRESSURE SWITCH N.C. 20-30 LO-UNLOAD W/WIRE BLACK	AR				
20	641366	MALE ELBOW 45° NON-SWIVEL / PUSH-IN FITTING / #6x1/4NPT-M BR	AR				
21	641367	MALE ELBOW 45° NON-SWIVEL / PUSH-IN FITTING / #6x3/8NPT-M BR	AR				
22	641330	MALE CONNECTOR / PUSH-IN FITTING / #6x3/8NPT-M BR	AR				
23	641382	MALE CONNECTOR / PUSH-IN FITTING / #6x1/2NPT-M BR	AR				
24	641331	MALE CONNECTOR / PUSH-IN FITTING / #6x1/4NPT-M BR	AR				
25	641175	MALE ELBOW 90º / NTA FITTING / #6x1/2NPT-M BR	AR				
26	501306	PLUG SQUARE HEAD / PIPE FITTING / 1/2NPT-M BR	AR				
27	641089	MALE ELBOW 45º / NTA FITTING / #8x1/2NPT-M BR	AR				
28	501473	MALE RUN TEE / PIPE FITTING / 1/2NPT-Mx1/2NPT-Fx1/2NPT-F BR	AR				
29	641027	MALE ELBOW 45º / NTA FITTING / #10x1/2NPT-M BR	AR				
30	641119	MALE ELBOW 45º / NTA FITTING / #6x1/2NPT-M BR	AR				
31	501338	MALE RUN TEE / PIPE FITTING / 1/4NPT-Mx1/4NPT-Fx1/4NPT-F BR	AR				
40	500778	NUT HEX 5/16-18 ZP	AR				
41	500476	WASHER LO SPT .317x.586x.078 ZP	AR				
42	502650	SCREW CAP HEX M8-1.25x80 G8.8 ZP	2				
43	502507	WASHER LO SPT 8.1x14.8x2.0 CJ	2				
44	500069	SCREW CAP HEX M8-1.25x16 G10.9 DP	2				
50	Y2-1806-10	**L.H. CONSOLE - BUS**					
		A) WITH VALVE LOCATED SIDE OF AIR DRYER					

From Y-7046 Up to 8-9339	DATE: 01/2014	PAGE: Y2-1220-50

TRAILER VALVE INSTALLATION

ITEM	PART	DESCRIPTION	XL45	MTH400	MTH445	MTH445S	NOTE

From Y-7046 Up to 7-9159	DATE: 01/2014	PAGE: Y2-1225-00

BRAKE PARTS - FRONT AXLE - W/"KNORR-BREMSE" / SB7 SERIES

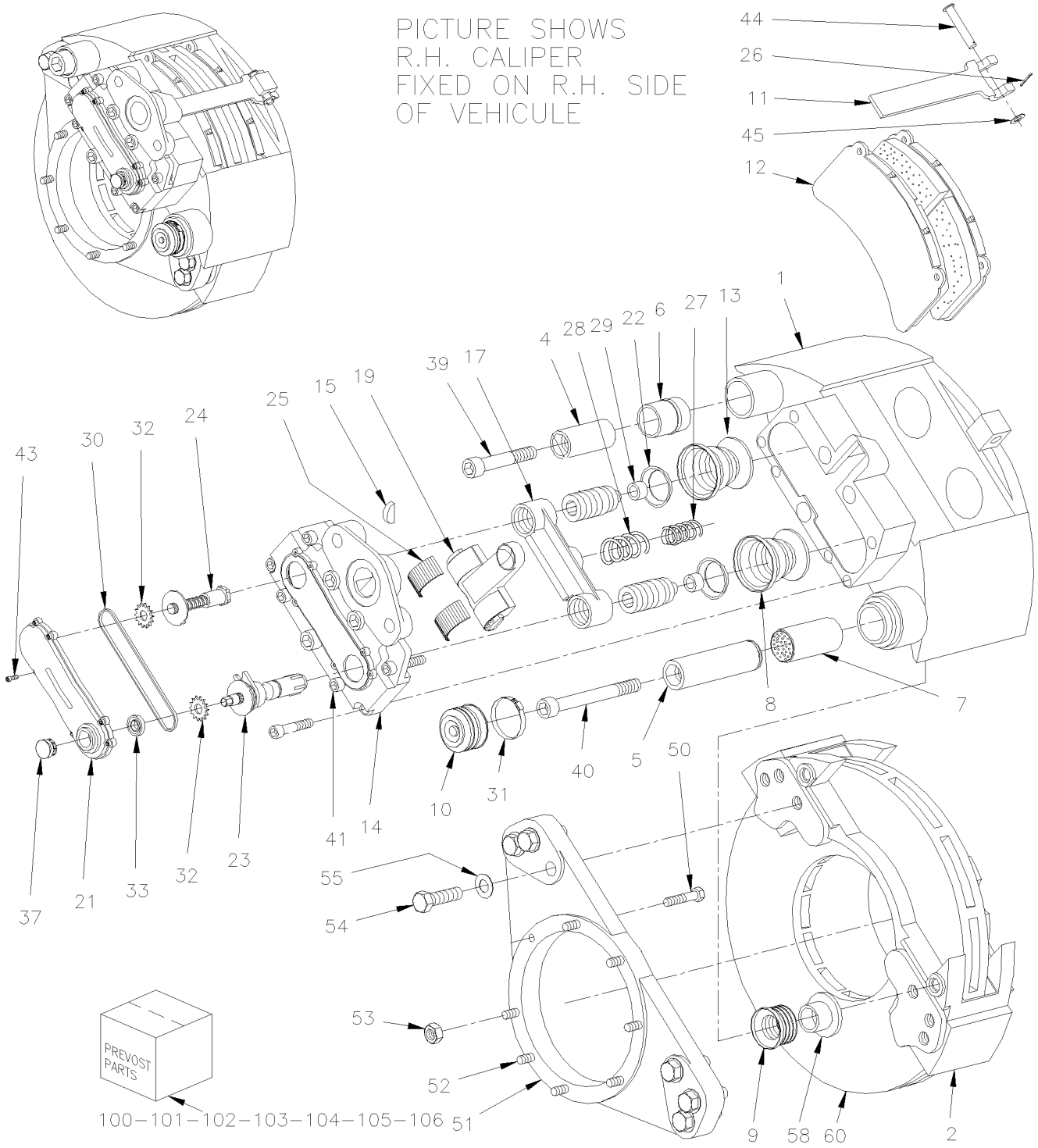

From Y-7046 Up to 7-9159	DATE: 01/2014	PAGE: Y2-1225-00

BRAKE PARTS - FRONT AXLE - W/"KNORR-BREMSE" / SB7 SERIES

ITEM	PART	DESCRIPTION	XL45	MTH40	MTH45	MTH45S	NOTE
	N.S.A.	CALIPER ASSY R.H. / W/BOOSTER TYPE 24 / (SB7703)	1	1	1	1	3
NS	N.S.A.	CALIPER ASSY L.H. / W/BOOSTER TYPE 24 / (SB7713)	1	1	1	1	3
NS	611184	. CALIPER ASSY R.H. / W/O BOOSTER / SB7 / REPLACED BY: 611341	1	1	1	1	A
NS	611185	. CALIPER ASSY L.H. / W/O BOOSTER / SB7 / REPLACED BY: 611342	1	1	1	1	A
1	N.S.S.	. . CALIPER HOUSING	1	1	1	1	1
2	611340	. . BRAKE CARRIER / W/6 HOLES BOLT RETAINERS M20-2.5	1	1	1	1	
4	N.S.S.	. . GUIDE BUSHING / SHORT	1	1	1	1	1
5	N.S.S.	. . GUIDE BUSHING / LONG	1	1	1	1	1
6	611245	. . GUIDE SLEEVE / RUBBER SB 7 SERIES / REPLACED BY: 611246	1	1	1	1	
7	611107	. . BUSHING / BRASS / REPLACED BY: 611168	1	1	1	1	
8	N.S.S.	. . BOOT RUBBER / WHITE	2	2	2	2	1
9	N.S.S.	. . BELLOW GUIDE BUSHING / RED	1	1	1	1	1
10	641421	. . BELLOW CAP / RUBBER	1	1	1	1	
11	N.S.S.	. . BRAKE PAD BRACKET	1	1	1	1	1
12	611049	. . LINING SET STD /	1	1	1	1	B
13	N.S.S.	. . THRUST MEMBER / INCLUDED ITEM #8	2	2	2	2	1
14	N.S.S.	. . SYNCHRONIZING HOUSING	1	1	1	1	1
15	N.S.S.	. . PLUG HALF / RUBBER	1	1	1	1	1
17	N.S.S.	. . BEAM	1	1	1	1	1
18	N.S.S.	. . O-RING	1	1	1	1	1
19	N.S.S.	. . LEVER	1	1	1	1	1
21	N.S.S.	. . COVER SYNCHRONIZING HOUSING	1	1	1	1	1
22	N.S.S.	. . BOOT	2	2	2	2	1

1) NOT SOLD SEPARATELY

3) NOT SOLD ASSEMBLY

A) INCLUDES ITEM #2 BUT NOT ITEM # 12

B) INCLUDES ITEMS #11, 26, 37, 44, 45 & 61

From Y-7046 Up to 7-9159	DATE: 01/2014	PAGE: Y2-1225-00

BRAKE PARTS - FRONT AXLE - W/"KNORR-BREMSE" / SB7 SERIES

ITEM	PART	DESCRIPTION	XL45	MTH40	MTH45	MTH45S	NOTE
23	N.S.S.	. . CLEARANCE ADJUSTER	1	1	1	1	1
24	N.S.S.	. . DRIVER	1	1	1	1	1
25	N.S.S.	. . LEVER BEARING	1	1	1	1	1
26	N.S.S.	. . SPRING SPLINT PIN	1	1	1	1	1
27	N.S.S.	. . COMPRESSION SPRING	1	1	1	1	1
28	N.S.S.	. . COMPRESSION SPRING	1	1	1	1	1
29	N.S.S.	. . RING RETAINING	2	2	2	2	1
30	N.S.S.	. . ROLLER CHAIN	1	1	1	1	1
31	641420	. . PERFORATED CLIP	1	1	1	1	
32	N.S.S.	. . CHAIN DRIVE WHEEL	2	2	2	2	1
33	N.S.S.	. . SHAFT SEALING RING	1	1	1	1	1
37	641313	. . PLUG CAP / ADJUSTING DEVICE / PLASTIC INTERIOR GRIP / REPLACED BY: 642034	1	1	1	1	
38	N.S.S.	. . DOWEL	4	4	4	4	1
39	N.S.S.	. . SCREW CAP HEXS M16-1.5x140 G10.9 ZP	1	1	1	1	1
40	N.S.S.	. . SCREW CAP HEXS M16-1.5x90 G10.9 ZP	1	1	1	1	1
41	N.S.S.	. . SOCKET HEAD CAP SCREW M14 X 60MM GR 12.9	3	3	3	3	1
43	N.S.S.	. . SOCKET HEAD CAP SCREW M5 X 12MM	8	8	8	8	1
44	N.S.S.	. . CLEVIS PIN	1	1	1	1	1
45	N.S.S.	. . WASHER	1	1	1	1	1
50	500091	SCREW CAP HEX 1/2-20x1 3/4 G5 ZP Up to 3-8164	3	3	3	3	O
51	611097	CALIPER MOUNTING BRACKET L.H. Up to 3-8164	1	1	1	1	
NS	611098	CALIPER MOUNTING BRACKET R.H. Up to 3-8164	1	1	1	1	
51	Y2-1005-02	**FRONT AXLE - I BEAM RIGID MODEL "S84U"**					
		1) NOT SOLD SEPARATELY					
		O) TO FIX SPIDER					

From Y-7046 Up to 7-9159	DATE: 01/2014	PAGE: Y2-1225-00

BRAKE PARTS - FRONT AXLE - W/"KNORR-BREMSE" / SB7 SERIES

ITEM	PART	DESCRIPTION	XL45	MTH40	MTH45	MTH45S	NOTE
51	Y2-1005-51	**FRONT AXLE - INDEPENDENT MODEL "NDIFS80P" / 18000LBS**					
52	611030	STUD 1/2-20 X 1 11/16" Up to 3-8164	5	5	5	5	O
53	500718	NUT HEX STO 1/2-20 ZP Up to 3-8164	8	8	8	8	O
54	5001193	SCREW CAP HEX M20-2.5x65 G10.9 ZP	6	6	6	6	
54	611309	SCREW CAP HEX M20-2.5x60 G10.9 DP From 4-8165		2	2	2	
55	502558	WASHER FL 21.0x37.0x3.0 G500	6	6	6	6	
58	N.S.P.	BOOT RETAINER	1	1	1	1	2
60	Y2-1300-00	**HUB & ROTOR - FRONT AXLE MODEL "S-84" & "IS84"**					
60	Y2-1300-01	**HUB & ROTOR - FRONT AXLE MODEL "NSD80"**					
70	110786	BRAKE WEAR INDICATOR MECHANICAL	AR	AR	AR	AR	
99	FMBS-0BPK-10	**BRAKE PARTS - "KNORR-BREMSE" / SB7 & SN7 "AFTERMARKET"**					
100	611054	KIT, TAPPET W/BOOT	AR	AR	AR	AR	D
101	611168	KIT, GUIDANCE PINS & BELLOW	AR	AR	AR	AR	E
102	611177	KIT, BOOT PROTECTOR & TAPPET	AR	AR	AR	AR	F
103	611179	KIT, CARRIER & GUIDING PIN	AR	AR	AR	AR	G
104	641402	KIT, PAD HOLDER	AR	AR	AR	AR	H
105	611199	KIT, BOOT & SEAL / REPLACED BY: 611168	AR	AR	AR	AR	I
105	683344	GREASE GREEN / 5GR	AR	AR	AR	AR	J
105	641931	GREASE GREEN / 500GR	AR	AR	AR	AR	J
105	683345	GREASE WHITE / 5GR	AR	AR	AR	AR	K
105	641930	GREASE WHITE / 500GR	AR	AR	AR	AR	K
105	641321	TOOL / THRUST MEMBER W/BELLOW	AR	AR	AR	AR	L
105	641322	TOOL / CALIPER INNER BELLOW	AR	AR	AR	AR	M
		2) NOT SOLD BY PREVOST (SEE MANUFACTURING PART					
		NUMBER AT END OF DESCRIPTION LINE)					
		D) INCLUDE 2 OF ITEMS #8 & 13					
		E) INCLUDE ITEMS #4,5,6,7,9,10,31,39,40 & 58					
		F) INCLUDE ITEMS #8,13 & 29					
		G) INCLUDE ITEMS #2,4,5,39 & 40					
		H) INCLUDE ITEMS #2,4,5,39 & 40					
		I) INCLUDE ITEMS #9,10,31,37 & 58					
		J) FOR ITEM #4 & 6					
		K) FOR ITEMS #5 & 7					
		L) TO USE W/ITEMS #8 & 13					
		M) TO USE W/ITEM #9					
		O) TO FIX SPIDER					

From Y-7046 Up to 7-9159	DATE: 01/2014	PAGE: Y2-1225-00

BRAKE PARTS - FRONT AXLE - W/"KNORR-BREMSE" / SB7 SERIES

ITEM	PART	DESCRIPTION	XL45	MTH40	MTH45	MTH45S	NOTE
105	641323	TOOL / BUSHING INSTALLER / SERIES SB	AR	AR	AR	AR	N
105	641444	TOOL / GROOVING BUSHING	AR	AR	AR	AR	N
105	641435	TOOL / FORK (FOR BELLOW CAP)	AR	AR	AR	AR	L
106	611246	KIT,GUIDANCE PIN & RUBBER BUSHING / SHORT PIN	AR	AR	AR	AR	C
107	641427	KIT BOOT & CLIP	AR	AR	AR	AR	P
		C) INCLUDE ITEMS #4,6 & 39					
		L) TO USE W/ITEMS #8 & 13					
		N) TO USE W/ITEM #7					
		P) INCLUDE ITEM #10 & 31					

From Y-7046 Up to 7-9159	DATE: 01/2014	PAGE: Y2-1225-00

BRAKE PARTS - FRONT AXLE - W/"KNORR-BREMSE" / SB7 SERIES

ITEM	PART	DESCRIPTION	XL45	MTH40	MTH45	MTH45S	NOTE

From 7-9160 Up to 8-9339	DATE: 01/2014	PAGE: Y2-1225-01
BRAKE PARTS "KNORR-BREMSE" SN7 SERIES		

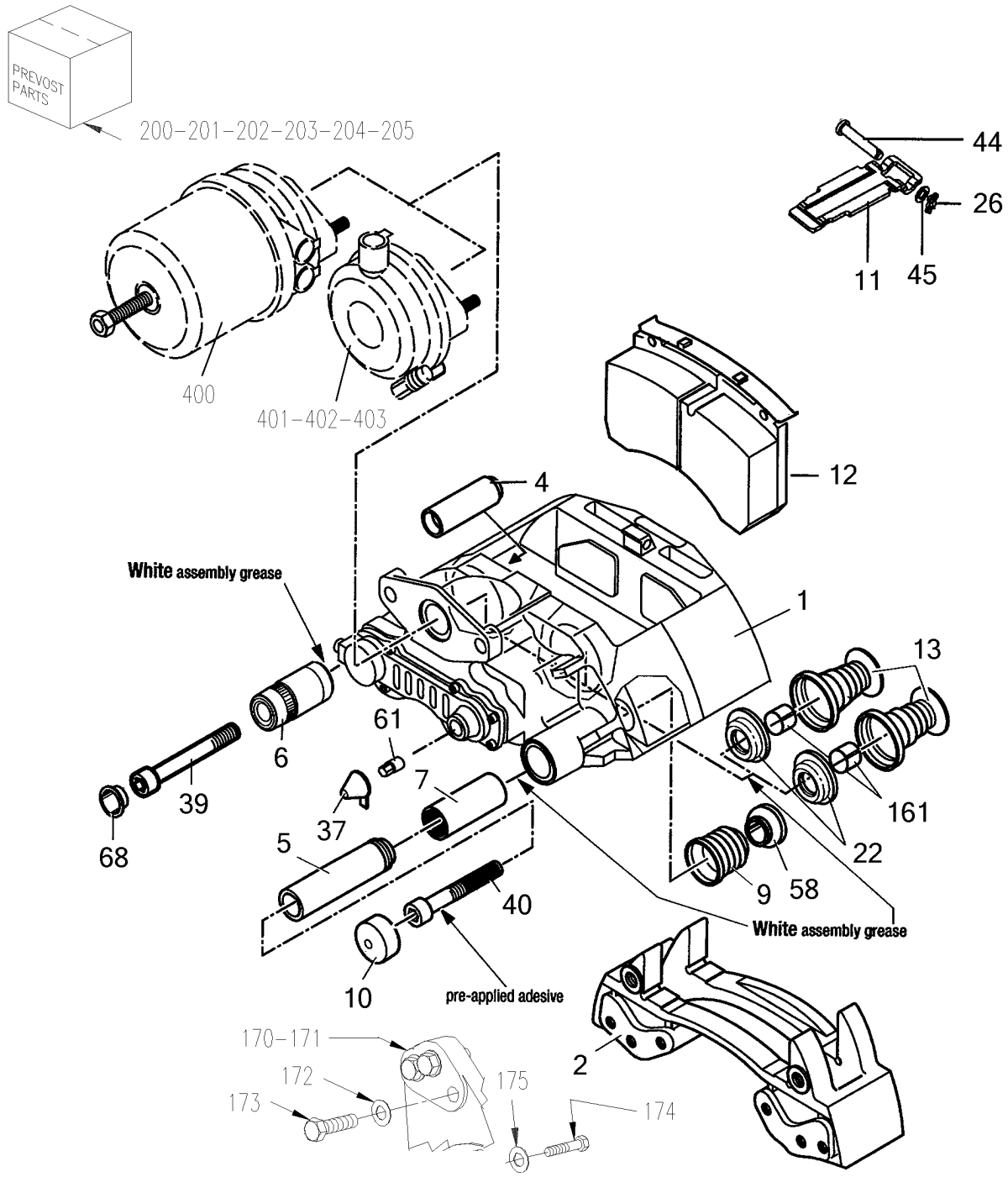

From 7-9160 Up to 8-9339	DATE: 01/2014	PAGE: Y2-1225-01

BRAKE PARTS "KNORR-BREMSE" SN7 SERIES

ITEM	PART	DESCRIPTION	XL45	MTH40	MTH45	MTH45S	NOTE
	611341	CALIPER ASSY R.H. / W/O BOOSTER & CARRIER / SN7	1				A
	611342	CALIPER ASSY L.H. / W/O BOOSTER & CARRIER / SN7	1				A
1	N.S.S.	. CALIPER HOUSING	1				1
2	611960	. BRAKE CARRIER / W/6 HOLES BOLT RETAINERS M20-1.5	1				
4	N.S.S.	. . GUIDE BUSHING / SHORT	1				1
5	N.S.S.	. . GUIDE BUSHING / LONG	1				1
6	N.S.S.	. . GUIDE SLEEVE	1				1
7	611107	. . BUSHING / BRASS / REPLACED BY: 611168	1				
8	N.S.S.	. . BOOT RUBBER / WHITE	2				1
9	N.S.S.	. . BELLOW GUIDE BUSHING / RED	1				1
10	N.S.S.	. . STEEL CAP	1				1
11	N.S.S.	. . BRAKE PAD BRACKET	1				1
12	611049	. . LINING SET STD /	1				B
13	N.S.S.	. . TAPPET WITH BOOT ASSY	2				1
22	N.S.S.	. . BOOT	2				1
26	N.S.S.	. . SPRING SPLINT PIN	1				1
37	N.S.S.	. . PLUG CAP / ADJUSTING DEVICE	1				1
39	N.S.S.	. . SCREW CAP HEXS ZP M16-1.5 GR10.9	1				1
40	N.S.S.	. . SCREW CAP HEXS ZP M16-1.5 GR10.9	1				1
44	N.S.S.	. . CLEVIS PIN	1				1
45	N.S.S.	. . WASHER	1				1
58	N.S.S.	. . RING	1				1
61	N.S.S.	. . SHEAR ADAPTER	1				1
68	N.S.S.	. . CAP	1				1
70	110786	BRAKE WEAR INDICATOR MECHANICAL	AR				
99	FMBS-0BPK-10	**BRAKE PARTS - "KNORR-BREMSE" / SB7 & SN7 "AFTERMARKET"**					
161	N.S.S.	. RING RETAINING	2				1
170	Y2-1005-00	**FRONT AXLE - I BEAM RIGID MODEL "S-84"**					
		1) NOT SOLD SEPARATELY					
		A) DO NOT INCLUDE ITEM #2 & #12					
		B) INCLUDES ITEMS #11, 26, 37, 44, 45 & 61					

From 7-9160 Up to 8-9339	DATE: 01/2014	PAGE: Y2-1225-01

BRAKE PARTS "KNORR-BREMSE" SN7 SERIES

ITEM	PART	DESCRIPTION	XL45	MTH40	MTH45	MTH45S	NOTE
170	Y2-1005-01	**FRONT AXLE - I BEAM RIGID MODEL "NSD80"**	1				
170	Y2-1005-50	**FRONT AXLE - INDEPENDENT MODEL "IS-84" / 16500LBS**	1				
170	Y2-1005-51	**FRONT AXLE - INDEPENDENT MODEL "NDIFS80P" / 18000LBS**	1				
170	Y2-1105-00	**REAR AXLE - MODEL "RC23160"**	1				
170	Y2-1615-00	**TAG AXLE - INSTALL SUSPENSION**	1				
171	621709	CALIPER MOUNTING BRACKET L.H. & R.H. W/OUT BUSHING	1				D
172	502558	WASHER FL 21.0x37.0x3.0 G500	6				
173	5001529	SCREW CAP HEX M20-1.5x60 G10.9 ZP	6				
174	621636	SCREW CAP HEX 9/16-18 X 2 GR 8 / TO FIX BRACKET TO AXLE	24				D
175	621365	WASHER (HARD) .59IDX.97ODX.09	24				D
200	642032	KIT, TAPPET W/BOOT	AR				C
201	642031	KIT, GUIDANCE PINS & BELLOW / SN W/39MM BUSHING END	AR				E
202	642034	KIT, PLUG CAP W/AJUSTING DEVICE (PACK of 10x #37, #37a & 61)	AR				S
203	641402	KIT, PAD HOLDER	AR				H
205	683345	GREASE WHITE / 5GR	AR				K
205	641930	GREASE WHITE / 500GR	AR				K
NS	641321	TOOL / THRUST MEMBER W/BELLOW	AR				L
NS	641322	TOOL / CALIPER INNER BELLOW	AR				M
NS	642074	TOOL / BUSHING INSTALLER / SERIES SN	AR				N
NS	641435	TOOL / FORK (FOR BELLOW CAP)	AR				L
NS	641993	TOOL / PRESS IN COVER	AR				X
NS	641994	TOOL / BUSHING - INSTALLER	AR				Y
NS	641998	TOOL / RUBBER BUSHING - INSTALLER	AR				Z
NS	642035	KIT TOOL BOX "KNORR BREMSE" SERIE SN7	AR				
400	Y2-1235-10	**BRAKE CHAMBER - DRIVE AXLE "KNORR-BREMSE"**					
401	Y2-1225-11	**BRAKE CHAMBER - FRONT AXLE TYPE 24**					
402	Y2-1245-12	**BRAKE CHAMBER - TAG AXLE TYPE 14 & 16**					
500	Y006471_000_EN	MAINTENANCE MANUAL / ENGLISH KNORR-BREMSE					

C) INCLUDES 2 OF ITEMS #13, 22 & 161

D) ON DRIVE AXLE ONLY

E) INCLUDES ITEMS #4, 5, 6, 7, 9, 10, 39, 40, 58 & 68

H) INCLUDES ITEMS #11,26,44 & 45

K) FOR ITEMS #5 & 7

L) TO USE W/ITEMS #13

M) TO USE W/ITEM #9

N) TO USE W/ITEM #7

S) INCLUDES 10 ITEMS #37 AND 61

X) TO USE WITH ITEM #10

Y) TO USE WITH ITEM 6

Z) TO USE WITH ITEM #68

From 7-9160 Up to 8-9339	DATE: 01/2014	PAGE: Y2-1225-01

BRAKE PARTS "KNORR-BREMSE" SN7 SERIES

ITEM	PART	DESCRIPTION	XL45	MTH40	MTH45	MTH45S	NOTE
NS	Y006471_000_HW	MANUEL D'ENTRETIEN / FRANÇAIS KNORR-BREMSE					

From Y-7046 Up to 8-9339	DATE: 01/2014	PAGE: Y2-1225-02

BRAKE PARTS "KNORR-BREMSE" SN7 SERIES W/NEW SLIDE PINS

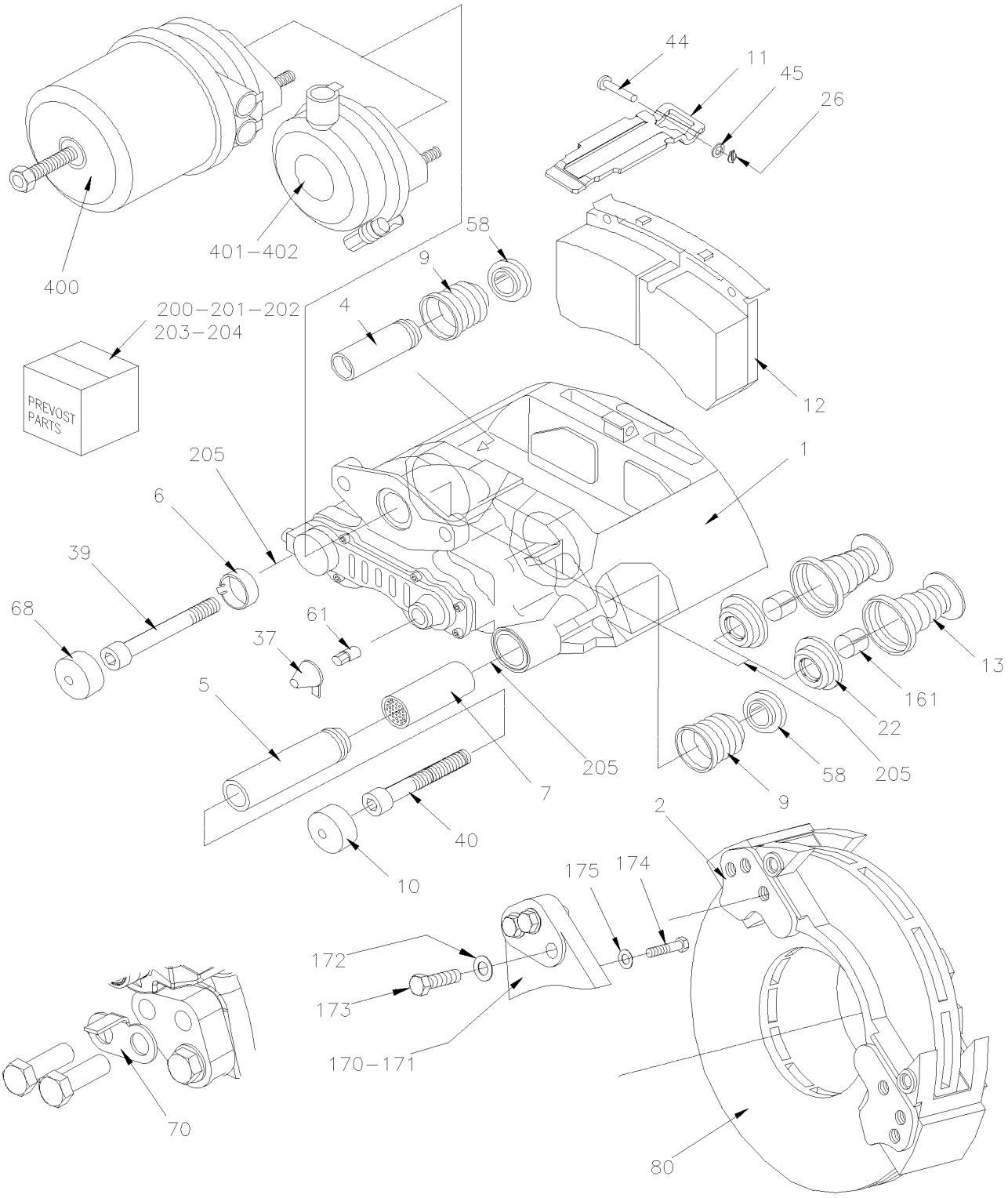

From Y-7046 Up to 8-9339	DATE: 01/2014	PAGE: Y2-1225-02

BRAKE PARTS "KNORR-BREMSE" SN7 SERIES W/NEW SLIDE PINS

ITEM	PART	DESCRIPTION	XL45	MTH40	MTH45	MTH45S	NOTE
	642134	CALIPER ASSY R.H. / W/O BOOSTER SN7 / REPLACED BY: 642186	1				
	642139	CALIPER ASSY L.H. / W/O BOOSTER SN7 / REPLACED BY: 642187	1				
1	N.S.S.	. CALIPER HOUSING	1				1
2	611960	. BRAKE CARRIER / W/6 HOLES BOLT RETAINERS M20-1.5	1				
4	N.S.S.	. . GUIDE BUSHING / SHORT	1				1
5	N.S.S.	. . GUIDE BUSHING / LONG	1				1
6	N.S.S.	. . GUIDE BUSHING / DU	1				1
7		. . BUSHING / BRASS	1				
8	N.S.S.	. . BOOT RUBBER / WHITE	2				1
9	N.S.S.	. . BELLOW GUIDE BUSHING / RED	2				1
10	N.S.S.	. . STEEL CAP	1				1
11	N.S.S.	. . BRAKE PAD BRACKET	1				1
12	611049	. . LINING SET STD /	1				B
13	N.S.S.	. . TAPPET WITH BOOT ASSY	2				1
22	N.S.S.	. . BOOT	2				1
26	N.S.S.	. . SPRING SPLINT PIN	1				1
37	N.S.S.	. . PLUG CAP / ADJUSTING DEVICE	1				1
39	N.S.S.	. . SCREW CAP HEXS ZP M16-1.5 GR10.9	1				1
40	N.S.S.	. . SCREW CAP HEXS ZP M16-1.5 GR10.9	1				1
44	N.S.S.	. . CLEVIS PIN	1				1
45	N.S.S.	. . WASHER	1				1
58	N.S.S.	. . RING	2				1
61	N.S.S.	. . SHEAR ADAPTER	1				1
68	N.S.S.	. . CAP	1				1
70	110786	BRAKE WEAR INDICATOR MECHANICAL	AR				
80	Y2-1300-00	**HUB & ROTOR - FRONT AXLE MODEL "S-84" & "IS84" From Y-7046 Up to 3-8164**					
80	Y2-1300-01	**HUB & ROTOR - FRONT AXLE MODEL "NSD80" From 1-7455 Up to 1-7455**					
80	Y2-1300-02	**HUB & ROTOR - FRONT AXLE MODEL "S84U" & "NDIFS80P" From 4-8165 Up to 8-9339**					
		1) NOT SOLD SEPARATELY					
		B) INCLUDES ITEMS #11, 26, 37, 44, 45 & 61					

From Y-7046 Up to 8-9339	DATE: 01/2014	PAGE: Y2-1225-02

BRAKE PARTS "KNORR-BREMSE" SN7 SERIES W/NEW SLIDE PINS

ITEM	PART	DESCRIPTION	XL45	MTH40	MTH45	MTH45S	NOTE
80	Y2-1305-00	**HUB & ROTOR - DRIVE AXLE**					
80	Y2-1310-00	**HUB & ROTOR - TAG AXLE TYPE TS6**					
161	N.S.S.	. RING RETAINING	2				1
170	Y2-1005-00	**FRONT AXLE - I BEAM RIGID MODEL "S-84"**					
170	Y2-1005-01	**FRONT AXLE - I BEAM RIGID MODEL "NSD80"**					
170	Y2-1005-50	**FRONT AXLE - INDEPENDENT MODEL "IS-84" / 16500LBS**					
170	Y2-1005-51	**FRONT AXLE - INDEPENDENT MODEL "NDIFS80P" / 18000LBS**					
170	Y2-1105-00	**REAR AXLE - MODEL "RC23160"**					
170	Y2-1615-00	**TAG AXLE - INSTALL SUSPENSION**					
171	621709	CALIPER MOUNTING BRACKET L.H. & R.H. W/OUT BUSHING	1				D
172	502558	WASHER FL 21.0x37.0x3.0 G500	6				
173	5001529	SCREW CAP HEX M20-1.5x60 G10.9 ZP	6				
174	621636	SCREW CAP HEX 9/16-18 X 2 GR 8 / TO FIX BRACKET TO AXLE	24				D
175	621365	WASHER (HARD) .59IDX.97ODX.09	24				D
200	642032	KIT, TAPPET W/BOOT	AR				C
201	642141	KIT, GUIDANCE PINS & BELLOW / SN W/ GUIDE SLEEVE BUSHING END	AR				E
202	642034	KIT, PLUG CAP W/AJUSTING DEVICE (PACK of 10x #37, #37a & 61)	AR				S
203	641402	KIT, PAD HOLDER	AR				H
205	683345	GREASE WHITE / 5GR	AR				K
205	641930	GREASE WHITE / 500GR	AR				K
NS	641321	TOOL / THRUST MEMBER W/BELLOW	AR				L
NS	641322	TOOL / CALIPER INNER BELLOW	AR				M
NS	19400416	TOOL / PUSH-IN INNER BOOT (9) / Z004357	AR				M
NS	642074	TOOL / BUSHING INSTALLER / SERIES SN	AR				N
NS	641435	TOOL / FORK (FOR BELLOW CAP)	AR				L
NS	N.P.N.	TOOL / PRESS IN COVER / K015825	AR				4 X
NS	N.P.N.	TOOL / BUSHING - INSTALLER & REMOVER KIT / K005986	AR				4 Y
		1) NOT SOLD SEPARATELY					
		4) NO PARTS NUMBER					
		C) INCLUDES 2 OF ITEMS #13, 22 & 161					
		D) ON DRIVE AXLE ONLY					
		E) INCLUDES ITEMS #4, 5, 6, 7, 9, 10, 39, 40, 58					
		& 68					
		H) INCLUDES ITEMS #11,26,44 & 45					
		K) FOR ITEMS #5 & 7					
		L) TO USE W/ITEMS #13					
		M) TO USE W/ITEM #9					
		N) TO USE W/ITEM #7					
		S) INCLUDES 10 ITEMS #37 AND 61					
		X) TO USE WITH ITEM #10					
		Y) TO USE WITH ITEM 6					

From Y-7046 Up to 8-9339	DATE: 01/2014	PAGE: Y2-1225-02

BRAKE PARTS "KNORR-BREMSE" SN7 SERIES W/NEW SLIDE PINS

ITEM	PART	DESCRIPTION	XL45	MTH40	MTH45	MTH45S	NOTE
NS	N.P.N.	TOOL / RUBBER BUSHING - INSTALLER / K016743	AR				4 Z
NS	642035	KIT TOOL BOX "KNORR BREMSE" SERIE SN7	AR				
400	Y2-1235-10	**BRAKE CHAMBER - DRIVE AXLE "KNORR-BREMSE"**					
401	Y2-1225-10	**BRAKE CHAMBER - FRONT AXLE TYPE 22 From Y-7046 Up to 3-8164**					
401	Y2-1225-11	**BRAKE CHAMBER - FRONT AXLE TYPE 24 From Y-7046 Up to 8-9339**					
401	Y2-1225-12	**BRAKE CHAMBER - FRONT AXLE TYPE 27 From 4-8165 Up to 8-9339**					
402	Y2-1245-10	**BRAKE CHAMBER - TAG AXLE TYPE 16/16 From Y-7046 Up to 3-8164**					
402	Y2-1245-11	**BRAKE CHAMBER - TAG AXLE TYPE 14/16 From 4-8165 Up to 8-9278**					
402	Y2-1245-12	**BRAKE CHAMBER - TAG AXLE TYPE 14 & 16 From 8-9279 Up to 8-9339**					
500	Y006471_000_EN	MAINTENANCE MANUAL / ENGLISH KNORR-BREMSE					
NS	Y006471_000_FR	MANUEL D'ENTRETIEN / FRANÇAIS KNORR-BREMSE					
		4) NO PARTS NUMBER					
		Z) TO USE WITH ITEM #68					

From Y-7046 Up to 3-8164	DATE: 01/2014	PAGE: Y2-1225-10

BRAKE CHAMBER - FRONT AXLE TYPE 22

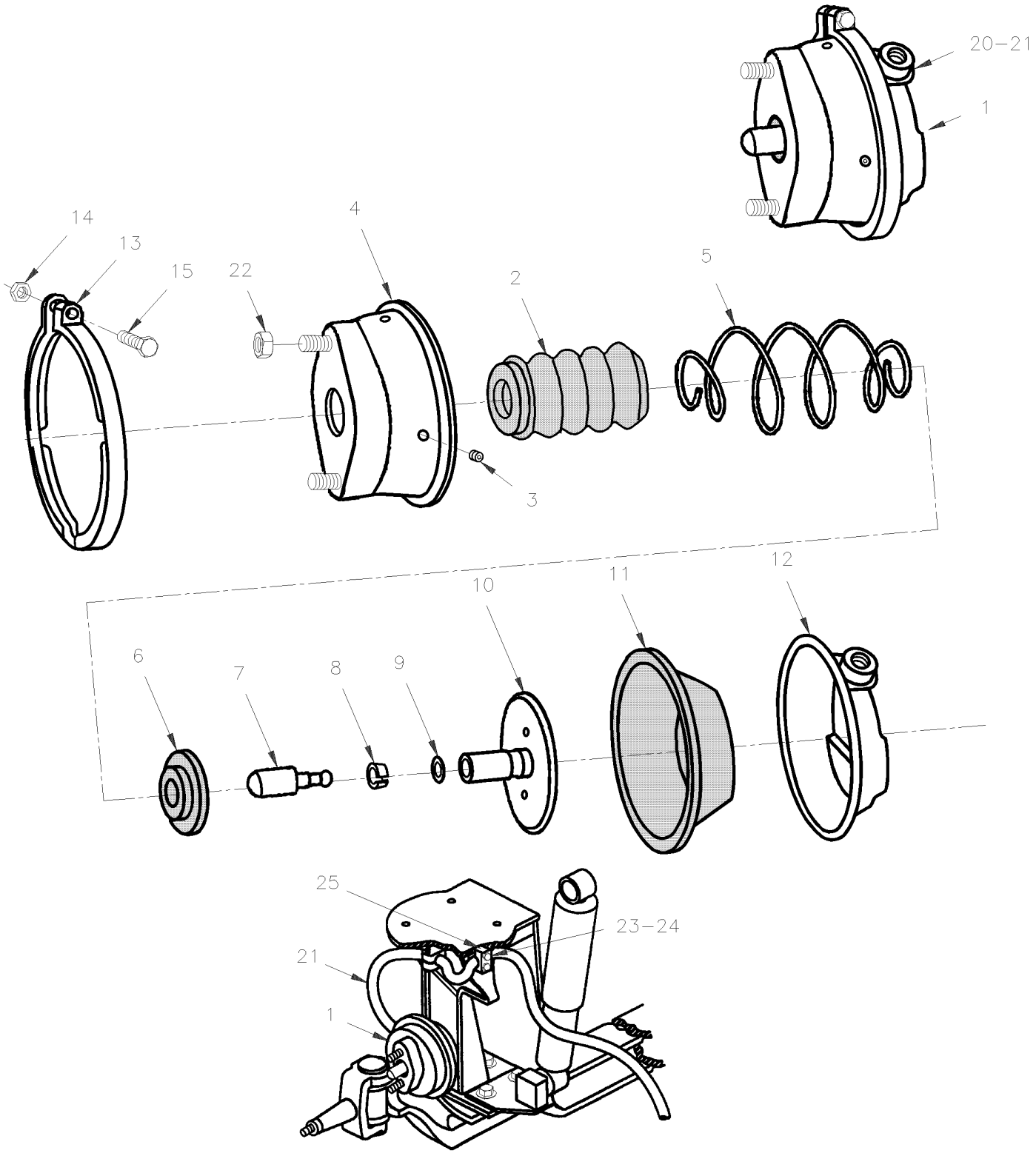

From Y-7046 Up to 3-8164	DATE: 01/2014	PAGE: Y2-1225-10

BRAKE CHAMBER - FRONT AXLE TYPE 22

ITEM	PART	DESCRIPTION	XL45	MTH40	MTH45	MTH45S	NOTE
1	641414	BRAKE CHAMBER ASSY R.H. / TYPE 22	1				
NS	641413	BRAKE CHAMBER ASSY L.H. / TYPE 22	1				
2	N.S.S.	. BOOT	1				1
3	N.S.S.	. HOLE PLUG	1				1
4	N.S.S.	. CHAMBER , NO-PRESSURE	1				1
5	N.S.S.	. SPRING	1				1
6	N.S.S.	. SPRING SEAT	1				1
7	N.S.S.	. PUSH ROD END	1				1
8	N.S.S.	. RETAINER	1				1
9	N.S.S.	. RING	1				1
10	N.S.S.	. PUSH ROD	1				1
11	N.S.S.	. DIAPHRAMG / TYPE 22	1				1
12	N.S.S.	. CHAMBER PRESSURE PLATE	1				1
13	N.S.S.	. CLAMP W/BOLT & NUT	1				1
14	502543	. . NUT HEX M8-1.25 ZP	1				
15	5001021	. . SCREW CAP HEXS M8-1.25x60 G8.8 PT ZP	1				
NS	641423	KIT REPAIR / TYPE 22	1				
20	641294	MALE CONNECTOR / JIC 37° FITTING / #8JIC-MxM16-1.5-M STL	AR				
. NS	641297	. O-RING 13.1MM I.D. X 2.6 TH	1				
. NS	641298	. FLAT WASHER 17MM I.D x 22MM O.D. x 1.5MM TH	1				
21	641908	HOSE BRAKE #8 1300MM (51")	2				
22	5001253	NUT HEX STO M16-1.5 DP	1				
23	504612	COLLAR 13/16" I.D. / TO FIX HOSE	2				
24	504614	PLATE RETAINING / COLLAR	2				
25	110738	HOSE SUPPORT L.H. & R.H. / FIXED AT SHOCK END	2				
		1) NOT SOLD SEPARATELY					

From Y-7046 Up to 8-9339	DATE: 01/2014	PAGE: Y2-1225-11

BRAKE CHAMBER - FRONT AXLE TYPE 24

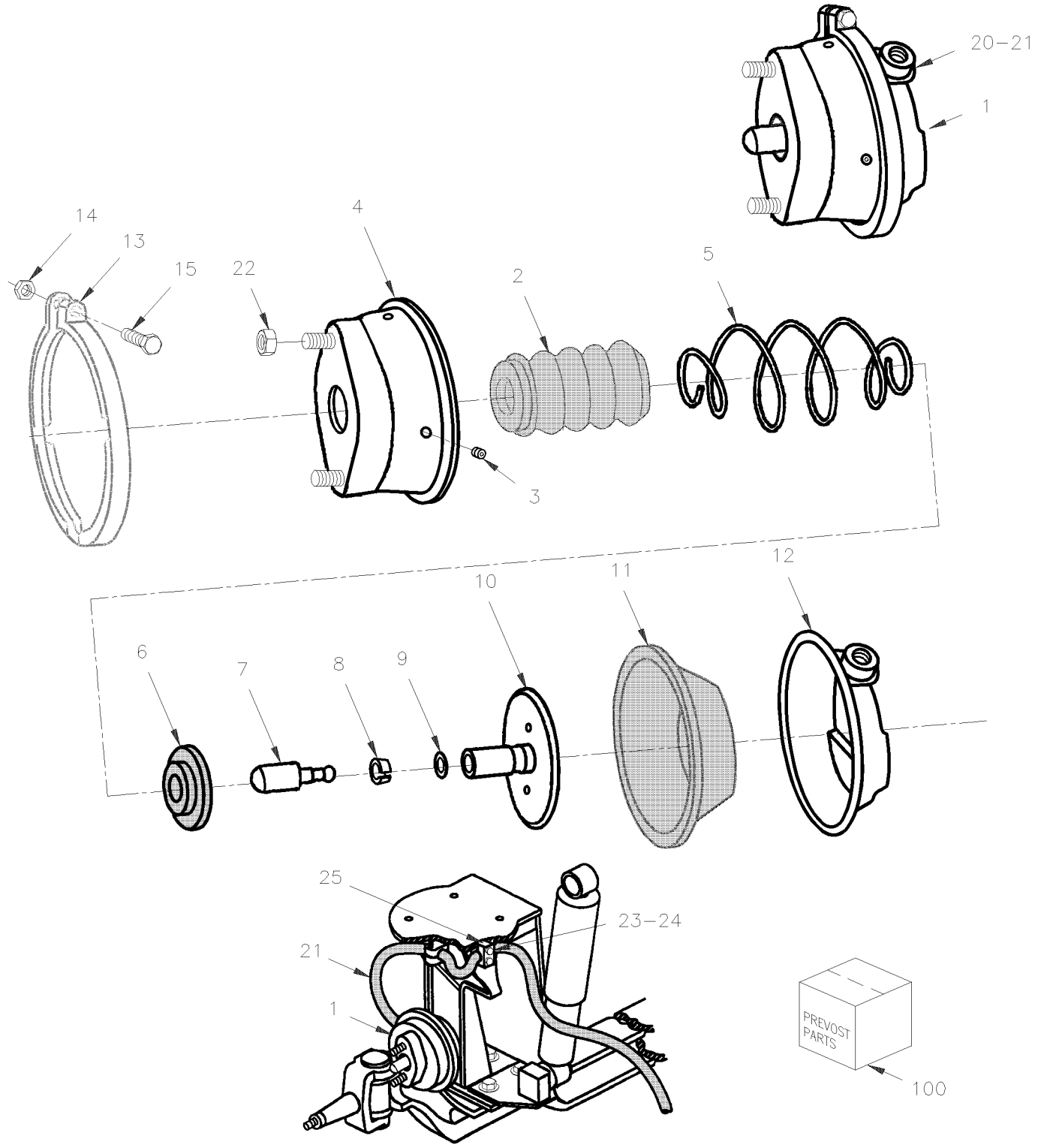

From Y-7046 Up to 8-9339	DATE: 01/2014	PAGE: Y2-1225-11

BRAKE CHAMBER - FRONT AXLE TYPE 24

ITEM	PART	DESCRIPTION	XL45	MTH40	MTH45	MTH45S	NOTE
1	641309	BRAKE CHAMBER ASSY R.H. / TYPE 24 Up to 3-8164		1	1	1	C
NS	641312	BRAKE CHAMBER ASSY L.H. / TYPE 24 Up to 3-8164		1	1	1	C
1	641309	BRAKE CHAMBER ASSY R.H. / TYPE 24 From 4-8165 Up to 8-9278	1				B
1	641312	BRAKE CHAMBER ASSY L.H. / TYPE 24 From 4-8165 Up to 8-9278	1				B
1	612353	BRAKE CHAMBER ASSY R.H. / TYPE 24 From 8-9279		1	1	1	
1	612354	BRAKE CHAMBER ASSY L.H. / TYPE 24 From 8-9279 / REPLACED BY: 641312		1	1	1	
2	N.S.S.	. BOOT	1	1	1	1	1
3	N.S.S.	. HOLE PLUG	1	1	1	1	1
4	N.S.S.	. CHAMBER , NO-PRESSURE	1	1	1	1	1
5	640231	. SPRING, COMP.	1	1	1	1	
6	N.S.S.	. SPRING SEAT	1	1	1	1	1
7	N.S.S.	. PUSH ROD END	1	1	1	1	1
8	N.S.S.	. RETAINER	1	1	1	1	1
9	N.S.S.	. RING	1	1	1	1	1
10	N.S.S.	. PUSH ROD	1	1	1	1	1
11	640229	. DIAPHRAGM / TYPE 24	1	1	1	1	
12	N.S.S.	. CHAMBER PRESSURE PLATE	1	1	1	1	1
13	N.S.S.	. CLAMP W/BOLT & NUT	1	1	1	1	1
14	502543	. . NUT HEX M8-1.25 ZP	1	1	1	1	
15	5001021	. . SCREW CAP HEXS M8-1.25x60 G8.8 PT ZP	1	1	1	1	
20	641294	MALE CONNECTOR / JIC 37° FITTING / #8JIC-MxM16-1.5-M STL Up to 3-8164	1	1	1	1	
. NS	641297	. O-RING 13.1MM I.D. X 2.6 TH Up to 3-8164	1	1	1	1	
. NS	641298	. FLAT WASHER 17MM I.D x 22MM O.D. x 1.5MM TH Up to 3-8164	1	1	1	1	
20	660914	MALE ELBOW 90° / JIC 37° FITTING / #8JIC-MxM16-1.5-M STL From 3-8165	1				
. NS	641297	. O-RING 13.1MM I.D. X 2.6 TH From 3-8165	1				
. NS	641298	. FLAT WASHER 17MM I.D x 22MM O.D. x 1.5MM TH From 3-8165	1				
21	641908	HOSE BRAKE #8 1300MM (51")	1				B
21	141836	HOSE BRAKE #8 864MM (34") Up to Y-7220 / REPLACED BY: 641905	1	1	1	1	C
21	641905	HOSE BRAKE #8 952MM (37 1/2") From Y-7221 Up to 3-8164	1	1	1	1	C
22	5001253	NUT HEX STO M16-1.5 DP	2	2	2	2	
23	504612	COLLAR 13/16" I.D. / TO FIX HOSE	2	2	2	2	
24	504614	PLATE RETAINING / COLLAR	2	2	2	2	
25	110765	HOSE SUPPORT L.H. & R.H. / FIXED AT SHOCK END	2	2	2	2	B
NS	500169	SCREW CAP HEX 1/4-20x1 1/2 G5 PT ZP	4	4	4	4	B
25	141837	HOSE SUPPORT L.H. Up to 3-8164	1	1	1	1	C
NS	502656	SCREW CAP HEX M6-1.0x50 SS Up to 3-8164	4	4	4	4	C
25	141845	HOSE SUPPORT R.H. Up to 3-8164	1	1	1	1	C
NS	502570	WASHER LO SPT 6.1x11.8x1.6 SS Up to 3-8164	4	4	4	4	C
NS	502565	NUT HEX M6-1.0 SS Up to 3-8164	4	4	4	4	C
100	641422	KIT REPAIR / TYPE 24	1	1	1	1	A
		1) NOT SOLD SEPARATELY					
		A) INCLUDED ITEMS #2,3,6,8,9 & 11					
		B) WITH I BEAM RIGID SUSPENSION					
		C) WITH INDEPENDANTE SUSPENSION					

From 4-8165 Up to 8-9339	DATE: 01/2014	PAGE: Y2-1225-12

BRAKE CHAMBER - FRONT AXLE TYPE 27

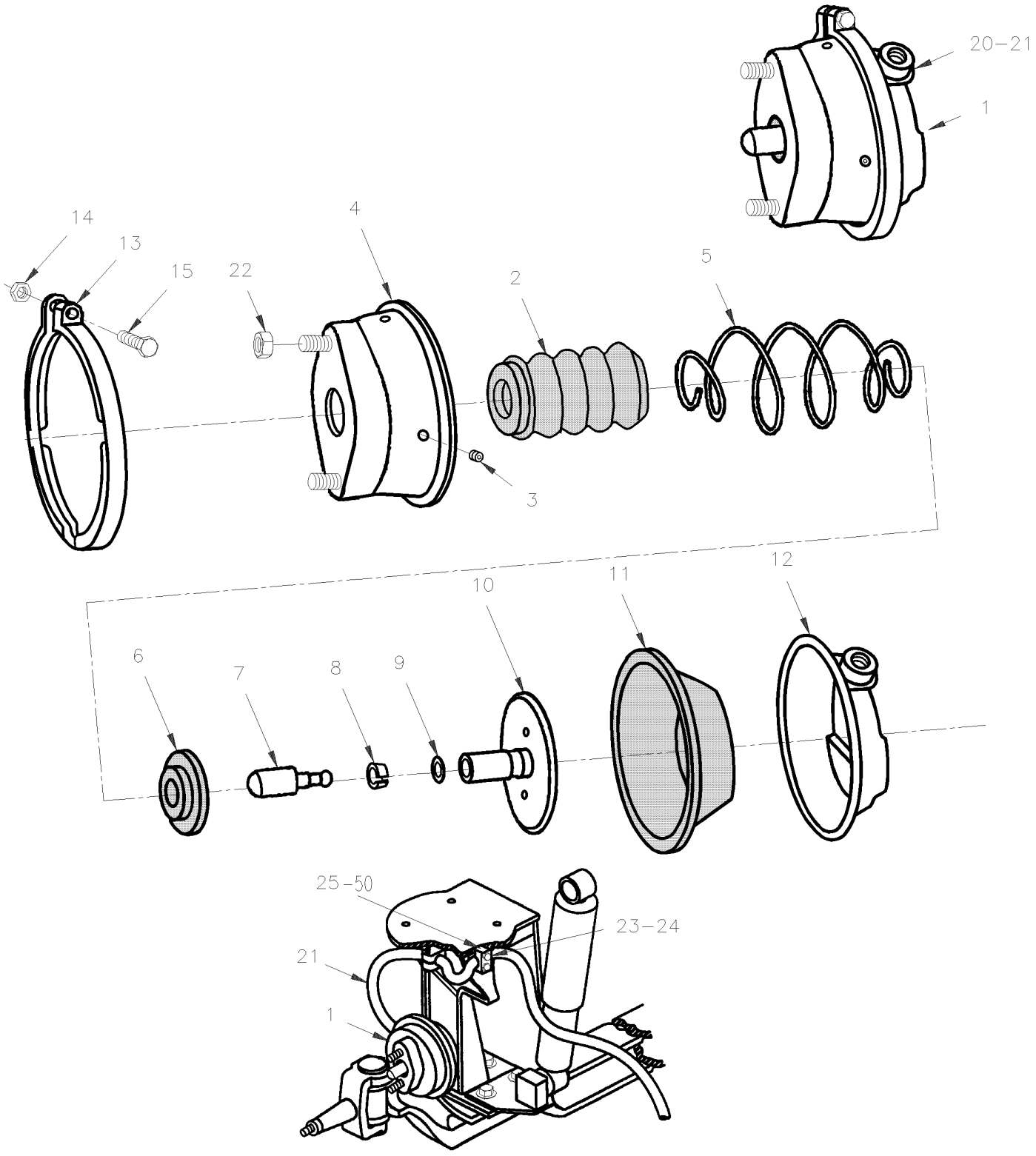

From 4-8165 Up to 8-9339	DATE: 01/2014	PAGE: Y2-1225-12

BRAKE CHAMBER - FRONT AXLE TYPE 27

ITEM	PART	DESCRIPTION	XL45	MTH40	MTH45	MTH45S	NOTE
1	611276	BRAKE CHAMBER ASSY R.H. / TYPE 27		1	1	1	
NS	611277	BRAKE CHAMBER ASSY L.H. / TYPE 27		1	1	1	
2	N.S.S.	. BOOT		1	1	1	1
3	N.S.S.	. HOLE PLUG		1	1	1	1
4	N.S.S.	. CHAMBER , NO-PRESSURE		1	1	1	1
5	N.S.S.	. SPRING		1	1	1	1
6	N.S.S.	. SPRING SEAT		1	1	1	1
7	N.S.S.	. PUSH ROD END		1	1	1	1
8	N.S.S.	. RETAINER		1	1	1	1
9	N.S.S.	. RING		1	1	1	1
10	N.S.S.	. PUSH ROD		1	1	1	1
11	N.S.S.	. DIAPHRAMG / TYPE 27		1	1	1	1
12	N.S.S.	. CHAMBER PRESSURE PLATE		1	1	1	1
13	N.S.S.	. CLAMP W/BOLT & NUT		1	1	1	1
14	502543	. . NUT HEX M8-1.25 ZP		1	1	1	
15	5001021	. . SCREW CAP HEXS M8-1.25x60 G8.8 PT ZP		1	1	1	
NS	N.S.S.	KIT REPAIR / TYPE 27		1	1	1	1
20	660914	MALE ELBOW 90° / JIC 37° FITTING / #8JIC-MxM16-1.5-M STL		AR	AR	AR	
. NS	641297	. O-RING 13.1MM I.D. X 2.6 TH		1	1	1	
. NS	641298	. FLAT WASHER 17MM I.D x 22MM O.D. x 1.5MM TH		1	1	1	
21	641903	HOSE BRAKE #8 1090MM (43")		2	2	2	
22	5001253	NUT HEX STO M16-1.5 DP		1	1	1	
23	504612	COLLAR 13/16" I.D. / TO FIX HOSE		2	2	2	
24	504614	PLATE RETAINING / COLLAR		2	2	2	
25	142305	HOSE SUPPORT L.H. Up to 4-8193 / REPLACED BY: 142353		1	1	1	
25	142306	HOSE SUPPORT R.H. Up to 4-8193 / REPLACED BY: 142352		1	1	1	
25	142352	HOSE SUPPORT R.H. From 4-8194		1	1	1	
25	142353	HOSE SUPPORT L.H. From 4-8194		1	1	1	
50	Y2-1250-10	**ABS BRAKE VALVE INSTALLATION**					
		1) NOT SOLD SEPARATELY					

From Y-7046 Up to 9-9159	DATE: 01/2014	PAGE: Y2-1235-00

BRAKE PARTS - DRIVE AXLE "MERITOR" W/DISCS / SB7 SERIES

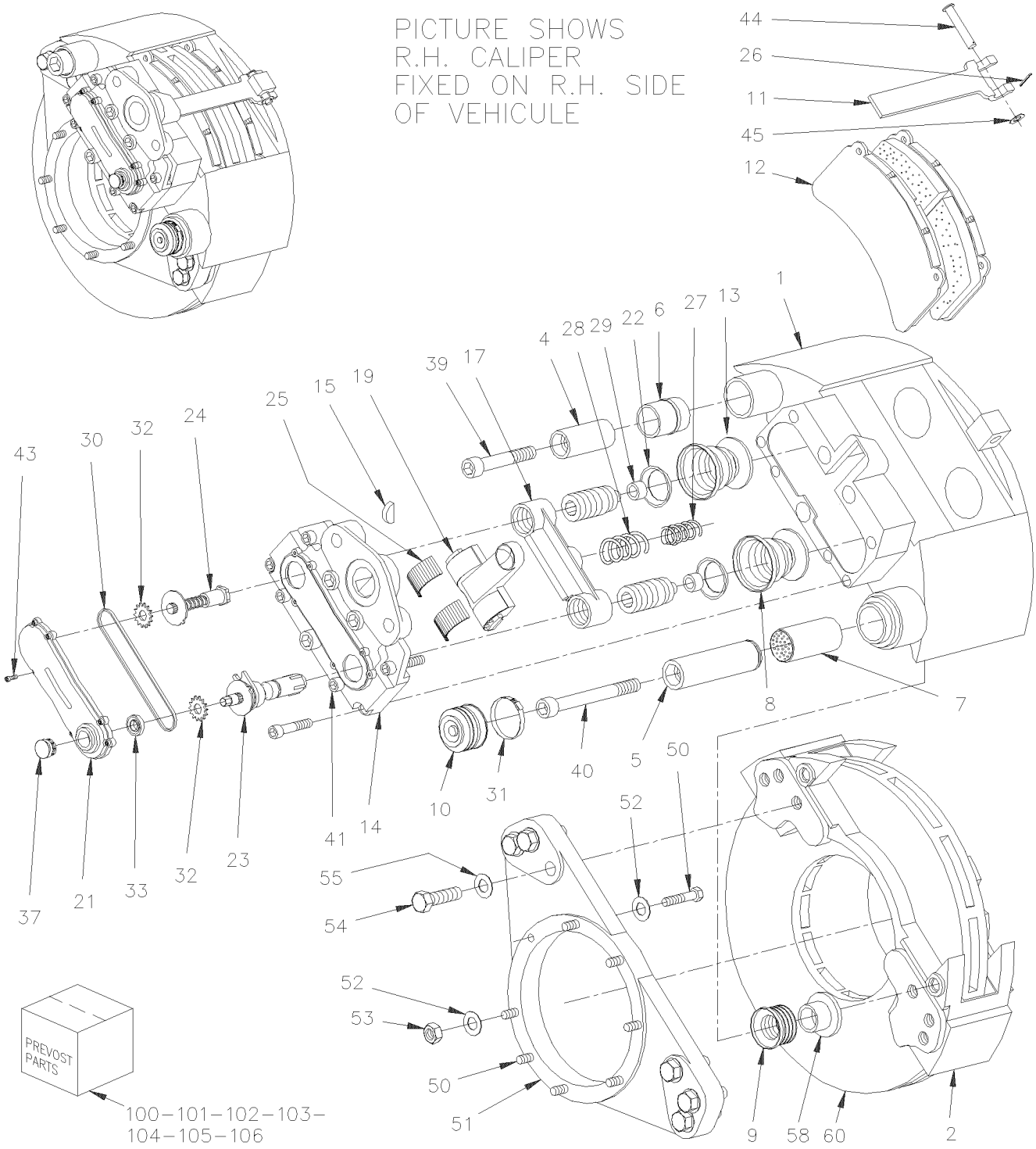

From Y-7046 Up to 9-9159	DATE: 01/2014	PAGE: Y2-1235-00

BRAKE PARTS - DRIVE AXLE "MERITOR" W/DISCS / SB7 SERIES

ITEM	PART	DESCRIPTION	XL45	MTH40	MTH45	MTH45S	NOTE
	621631	CALIPER ASSY R.H. / W/BOOSTER TYPE 24/24 / SB7 / REPLACED BY: 611184	1	1	1	1	
	621630	CALIPER ASSY L.H. / W/BOOSTER TYPE 24/24 / SB7 / REPLACED BY: 611185	1	1	1	1	
	611184	. CALIPER ASSY R.H. / W/O BOOSTER / SB7 / REPLACED BY: 611341	1	1	1	1	A
	611185	. CALIPER ASSY L.H. / W/O BOOSTER / SB7 / REPLACED BY: 611342	1	1	1	1	A
1	N.S.S.	. . CALIPER HOUSING	1	1	1	1	1
2	611340	. . BRAKE CARRIER / W/6 HOLES BOLT RETAINERS M20-2.5	1	1	1	1	
4	N.S.S.	. . GUIDE BUSHING / SHORT	1	1	1	1	1
5	N.S.S.	. . GUIDE BUSHING / LONG	1	1	1	1	1
6	611245	. . GUIDE SLEEVE / RUBBER SB 7 SERIES / REPLACED BY: 611246	1	1	1	1	
7	611107	. . BUSHING / BRASS / REPLACED BY: 611168	1	1	1	1	
8	N.S.S.	. . BOOT RUBBER / WHITE	2	2	2	2	1
9	N.S.S.	. . BELLOW GUIDE BUSHING / RED	1	1	1	1	1
10	641421	. . BELLOW CAP / RUBBER	1	1	1	1	
11	N.S.S.	. . BRAKE PAD BRACKET	1	1	1	1	1
12	611105	. . LINING SET STD / (FERODO) / REPLACED BY: 611049	1	1	1	1	B
12	611049	. . LINING SET STD /	1	1	1	1	B
13	N.S.S.	. . TAPPET	2	2	2	2	1
14	N.S.S.	. . SYNCHRONIZING HOUSING	1	1	1	1	1
15	N.S.S.	. . PLUG HALF / RUBBER	1	1	1	1	1
17	N.S.S.	. . BEAM	1	1	1	1	1
18	N.S.S.	. . O-RING	1	1	1	1	1
19	N.S.S.	. . LEVER	1	1	1	1	1
21	N.S.S.	. . COVER SYNCHRONIZING HOUSING	1	1	1	1	1
22	N.S.S.	. . BOOT	2	2	2	2	1
23	N.S.S.	. . CLEARANCE ADJUSTER	1	1	1	1	1
24	N.S.S.	. . DRIVER	1	1	1	1	1
		1) NOT SOLD SEPARATELY					
		A) INCLUDES ITEM #2 BUT NOT ITEM # 12					
		B) INCLUDES ITEMS #11, 26, 37, 44, 45 & 61					

From Y-7046 Up to 9-9159	DATE: 01/2014	PAGE: Y2-1235-00

BRAKE PARTS - DRIVE AXLE "MERITOR" W/DISCS / SB7 SERIES

ITEM	PART	DESCRIPTION	XL45	MTH40	MTH45	MTH45S	NOTE
25	N.S.S.	. . LEVER BEARING	2	2	2	2	1
26	N.S.S.	. . SPRING SPLINT PIN	1	1	1	1	1
27	N.S.S.	. . COMPRESSION SPRING	1	1	1	1	1
28	N.S.S.	. . COMPRESSION SPRING	1	1	1	1	1
29	N.S.S.	. . RING RETAINING / TAPPET	2	2	2	2	1
30	N.S.S.	. . ROLLER CHAIN	1	1	1	1	1
31	641420	. . PERFORATED CLIP	1	1	1	1	
32	N.S.S.	. . CHAIN DRIVE WHEEL	2	2	2	2	1
33	N.S.S.	. . SHAFT SEALING RING	1	1	1	1	1
37	641313	. . PLUG CAP / ADJUSTING DEVICE / PLASTIC INTERIOR GRIP / REPLACED BY: 642034	1	1	1	1	
38	N.S.S.	. . DOWEL	4	4	4	4	1
39	N.S.S.	. . SCREW CAP HEXS M16-1.5x140 G10.9 ZP	1	1	1	1	1
40	N.S.S.	. . SCREW CAP HEXS M16-1.5x90 G10.9 ZP	1	1	1	1	1
41	N.S.S.	. . SOCKET HEAD CAP SCREW M14 X 60MM GR 12.9	3	3	3	3	1
43	N.S.S.	. . SOCKET HEAD CAP SCREW M5 X 12MM	8	8	8	8	1
44	N.S.S.	. . CLEVIS PIN	1	1	1	1	1
45	N.S.S.	. . WASHER	1	1	1	1	1
NS	Y2-1235-10	**. BRAKE CHAMBER - DRIVE AXLE "KNORR-BREMSE"**					
50	621636	SCREW CAP HEX 9/16-18 X 2 GR 8 / TO FIX BRACKET TO AXLE	12	12	12	12	
51	621669	CALIPER MOUNTING BRACKET L.H. & R.H.	2	2	2	2	
. NS	621709	. CALIPER MOUNTING BRACKET L.H. & R.H. W/OUT BUSHING	1	1	1	1	
. NS	621684	. BUSHING ABS SENSOR MOUNTING DRIVE AXLE	1	1	1	1	
52	621365	WASHER (HARD) .59IDX.97ODX.09	24	24	24	24	
53	621638	NUT HEX 9/16-18 GR8	12	12	12	12	
54	5001358	SCREW CAP HEX M20-2.5x50 G10.9 ZP	6	6	6	6	
55	N8889049	WASHER	6	6	6	6	
		1) NOT SOLD SEPARATELY					

From Y-7046 Up to 9-9159	DATE: 01/2014	PAGE: Y2-1235-00

BRAKE PARTS - DRIVE AXLE "MERITOR" W/DISCS / SB7 SERIES

ITEM	PART	DESCRIPTION	XL45	MTH40	MTH45	MTH45S	NOTE
58	N.S.S.	PLASTIC RING, BOOT RETAINER	1	1	1	1	1
60	Y2-1305-00	**HUB & ROTOR - DRIVE AXLE**					
70	110786	BRAKE WEAR INDICATOR MECHANICAL	AR	AR	AR	AR	
99	FMBS-0BPK-10	**BRAKE PARTS - "KNORR-BREMSE" / SB7 & SN7 "AFTERMARKET"**					
100	611054	KIT, TAPPET W/BOOT	AR	AR	AR	AR	C
101	611168	KIT, GUIDANCE PINS & BELLOW	AR	AR	AR	AR	D
102	611177	KIT, BOOT PROTECTOR & TAPPET	AR	AR	AR	AR	E
103	611179	KIT, CARRIER & GUIDING PIN	AR	AR	AR	AR	F
104	641402	KIT, PAD HOLDER	AR	AR	AR	AR	G
104	641444	TOOL / GROOVING BUSHING	AR	AR	AR	AR	M
105	611199	KIT, BOOT & SEAL / REPLACED BY: 611168	AR	AR	AR	AR	H
105	683344	GREASE GREEN / 5GR	AR	AR	AR	AR	I
105	641931	GREASE GREEN / 500GR	AR	AR	AR	AR	I
105	683345	GREASE WHITE / 5GR	AR	AR	AR	AR	J
105	641930	GREASE WHITE / 500GR	AR	AR	AR	AR	J
105	641321	TOOL / THRUST MEMBER W/BELLOW	AR	AR	AR	AR	K
105	641322	TOOL / CALIPER INNER BELLOW	AR	AR	AR	AR	L
105	641323	TOOL / BUSHING INSTALLER / SERIES SB	AR	AR	AR	AR	M
105	641435	TOOL / FORK (FOR BELLOW CAP)	AR	AR	AR	AR	N
106	611246	KIT,GUIDANCE PIN & RUBBER BUSHING / SHORT PIN	AR	AR	AR	AR	O
107	641427	KIT BOOT & CLIP	AR	AR	AR	AR	P

1) NOT SOLD SEPARATELY

C) INCLUDES 2 OF ITEMS #8 & 13

D) INCLUDES ITEMS #4,5,6,7,9,10,31,39,40 & 58

E) INCLUDES ITEMS #8,13 & 29

F) INCLUDES ITEMS #2,4,5,39 & 40

G) INCLUDES ITEMS #11,26,44 & 45

H) INCLUDES ITEMS 39,10,31,37 & 58

I) FOR ITEMS #4 & 6

J) FOR ITEMS #5 & 7

K) TO USE W/ITEMS #8 & 13

L) TO USE W/ITEM #9

M) TO USE W/ITEM #7

N) TO USE W/ITEMS #8 & 13

O) INCLUDES ITEMS #4,6 & 39

P) INCLUDES ITEM #10 & 31

From Y-7046 Up to 8-9339	DATE: 01/2014	PAGE: Y2-1235-10
BRAKE CHAMBER - DRIVE AXLE "KNORR-BREMSE"		

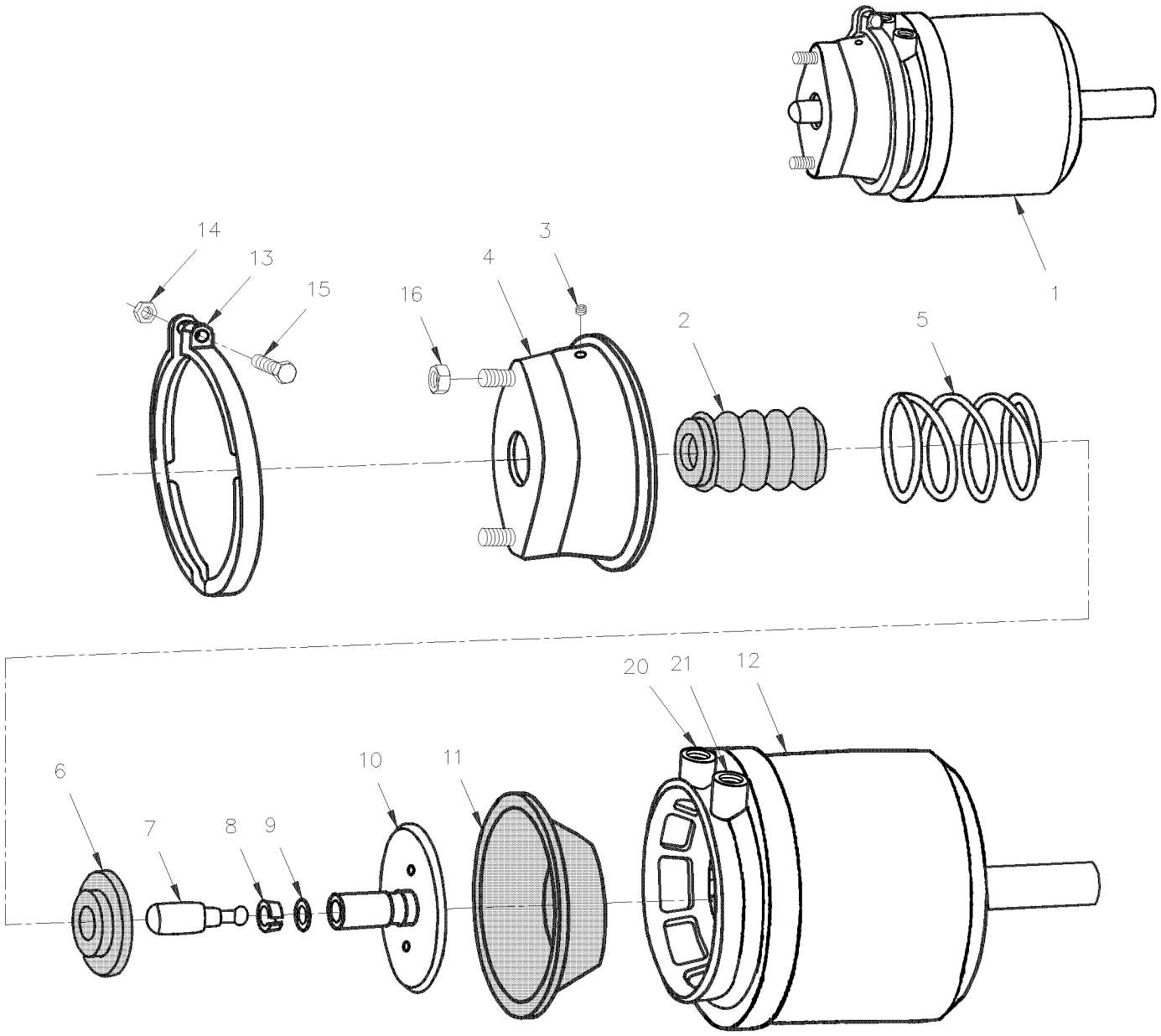

From Y-7046 Up to 8-9339	DATE: 01/2014	PAGE: Y2-1235-10

BRAKE CHAMBER - DRIVE AXLE "KNORR-BREMSE"

ITEM	PART	DESCRIPTION	XL45	MTH40	MTH45	MTH45S	NOTE
1	641432	BRAKE CHAMBER ASSY L.H. & R.H. / TYPE 24/24 Up to 7-9159	2	2	2	2	
1	642057	BRAKE CHAMBER ASSY L.H. / TYPE 24/24 (SEALED) From 7-9160			1	1	
1	642058	BRAKE CHAMBER ASSY R.H. / TYPE 24/24 (SEALED) From 7-9160			1	1	
2	N.S.S.	. BOOT	1	1	1	1	1
3	N.S.S.	. HOLE PLUG	1	1	1	1	1
4	N.S.S.	. CHAMBER , NO-PRESSURE	1	1	1	1	1
5	N.S.S.	. SPRING	1	1	1	1	1
6	N.S.S.	. SPRING SEAT	1	1	1	1	1
7	N.S.S.	. PUSH ROD END	1	1	1	1	1
8	N.S.S.	. RETAINER	1	1	1	1	1
9	N.S.S.	. RING	1	1	1	1	1
10	N.S.S.	. PUSH ROD	1	1	1	1	1
11	640229	. DIAPHRAGM / TYPE 24 Up to 7-9159	1	1	1	1	
12	641433	. CHAMBER SUB ASSY / TYPE 24/24 Up to 7-9159	1	1	1	1	
13	N.S.S.	. CLAMP W/BOLT & NUT Up to 7-9159	1	1	1	1	1
14	502543	. . NUT HEX M8-1.25 ZP Up to 7-9159	1	1	1	1	
15	5001021	. . SCREW CAP HEXS M8-1.25x60 G8.8 PT ZP Up to 7-9159	1	1	1	1	
16	5001253	NUT HEX STO M16-1.5 DP	2	2	2	2	
NS							
NS	641443	KIT REPAIR / TYPE 24/24 Up to 7-9159 / REPLACED BY: 641422	AR	AR	AR	AR	B
NS							
NS		HOSE SERVICE BRAKE					
NS							
20	641303	HOSE BRAKE #8 914MM (36")	2	2	2	2	A
NS	501842	ADAPTER / AIR BRAKE HOSE FITTING / 3/4-20-Mx3/8NPT-M BR	1	1	1	1	
NS	501330	STREET ELBOW 45º / PIPE FITTING / 3/8NPT-Mx3/8NPT-F BR	1	1	1	1	
NS							
NS		HOSE EMERGENCY BRAKE					
NS							
21	503488	TUBE, NYLON 1/2 O.D. / BLACK S.L.	AR	AR	AR	AR	
NS	641010	MALE ELBOW 45º / NTA FITTING / #8x3/8NPT-M BR / REPLACED BY: 641368	1	1	1	1	
NS	141804	HOSE BRAKE #8 895MM Up to Y-7220 / REPLACED BY: 641901	1	1	1	1	
21	641901	HOSE BRAKE #8 952MM (37 1/2") From Y-7221	1	1	1	1	
NS	5011205	FEMALE CONNECTOR / PIPE @ METRIC / 3/8NPT-FxM16-1.5-M ZP	2	2	2	2	
. NS	641297	. O-RING 13.1MM I.D. X 2.6 TH	1	1	1	1	
. NS	641298	. FLAT WASHER 17MM I.D x 22MM O.D. x 1.5MM TH	1	1	1	1	
NS	641297	O-RING 13.1MM I.D. X 2.6 TH	2	2	2	2	
NS	641298	FLAT WASHER 17MM I.D x 22MM O.D. x 1.5MM TH	2	2	2	2	
		1) NOT SOLD SEPARATELY					
		A) L.H. & R.H.					
		B) INCLUDING ITEM 2,4,6,8,9 & 11					

From Y-7046 Up to 7-9159	DATE: 01/2014	PAGE: Y2-1245-00

BRAKE PARTS - TAG AXLE - W/"KNORR-BREMSE" / SB7 SERIES

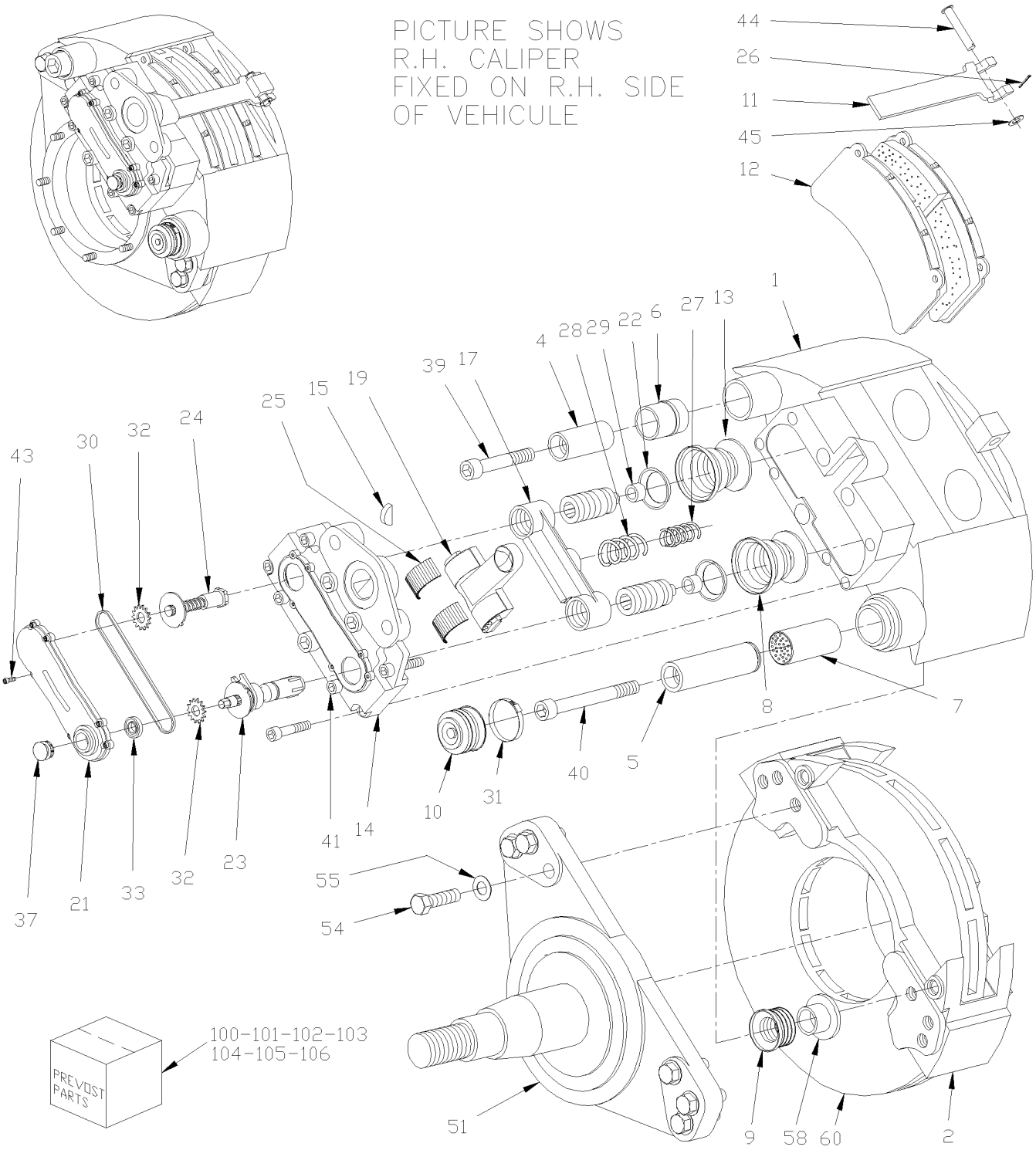

From Y-7046 Up to 7-9159	DATE: 01/2014	PAGE: Y2-1245-00

BRAKE PARTS - TAG AXLE - W/"KNORR-BREMSE" / SB7 SERIES

ITEM	PART	DESCRIPTION	XL45	MTH40	MTH45	MTH45S	NOTE
	N.S.A.	CALIPER ASSY R.H. / W/BOOSTER TYPE 16/16 / (SB7704)	1	1	1	1	3
NS	N.S.A.	CALIPER ASSY L.H. / W/BOOSTER TYPE 16/16 / (SB7714)	1	1	1	1	3
NS	611184	. CALIPER ASSY R.H. / W/O BOOSTER / SB7 / REPLACED BY: 611341	1	1	1	1	A
NS	611185	. CALIPER ASSY L.H. / W/O BOOSTER / SB7 / REPLACED BY: 611342	1	1	1	1	A
1	N.S.S.	. . CALIPER HOUSING	1	1	1	1	1
2	611340	. . BRAKE CARRIER / W/6 HOLES BOLT RETAINERS M20-2.5	1	1	1	1	
4	N.S.S.	. . GUIDE BUSHING / SHORT	1	1	1	1	1
5	N.S.S.	. . GUIDE BUSHING / LONG	1	1	1	1	1
6	611245	. . GUIDE SLEEVE / RUBBER SB 7 SERIES / REPLACED BY: 611246	1	1	1	1	
7	611107	. . BUSHING / BRASS / REPLACED BY: 611168	1	1	1	1	
8	N.S.S.	. . BOOT RUBBER / WHITE	2	2	2	2	1
9	N.S.S.	. . BELLOW GUIDE BUSHING / RUBBER RED	1	1	1	1	1
10	641421	. . BELLOW CAP / RUBBER	1	1	1	1	
11	N.S.S.	. . BRAKE PAD BRACKET	1	1	1	1	1
12	611049	. . LINING SET STD /	1	1	1	1	B
13	N.S.S.	. . TAPPET	2	2	2	2	1
14	N.S.S.	. . SYNCHRONIZING HOUSING	1	1	1	1	1
15	N.S.S.	. . PLUG HALF / RUBBER	1	1	1	1	1
17	N.S.S.	. . BEAM	1	1	1	1	1
18	N.S.S.	. . O-RING	1	1	1	1	1
19	N.S.S.	. . LEVER	1	1	1	1	1
21	N.S.S.	. . COVER SYNCHRONIZING HOUSING	1	1	1	1	1
22	N.S.S.	. . BOOT	2	2	2	2	1
23	N.S.S.	. . CLEARANCE ADJUSTER	1	1	1	1	1
24	N.S.S.	. . DRIVER	1	1	1	1	1
		1) NOT SOLD SEPARATELY					
		3) NOT SOLD ASSEMBLY					
		A) INCLUDES ITEM #2 BUT NOT ITEM # 12					
		B) INCLUDES ITEMS #11, 26, 37, 44, 45 & 61					

From Y-7046 Up to 7-9159	DATE: 01/2014	PAGE: Y2-1245-00

BRAKE PARTS - TAG AXLE - W/"KNORR-BREMSE" / SB7 SERIES

ITEM	PART	DESCRIPTION	XL45	MTH40	MTH45	MTH45S	NOTE
25	N.S.S.	. . LEVER BEARING	2	2	2	2	1
26	N.S.S.	. . SPRING SPLINT PIN	1	1	1	1	1
27	N.S.S.	. . COMPRESSION SPRING	1	1	1	1	1
28	N.S.S.	. . COMPRESSION SPRING	1	1	1	1	1
29	N.S.S.	. . RING RETAINING / TAPPET	2	2	2	2	1
30	N.S.S.	. . ROLLER CHAIN	1	1	1	1	1
31	641420	. . PERFORATED CLIP	1	1	1	1	
32	N.S.S.	. . CHAIN DRIVE WHEEL	2	2	2	2	1
33	N.S.S.	. . SHAFT SEALING RING	1	1	1	1	1
37	641313	. . PLUG CAP / ADJUSTING DEVICE / PLASTIC INTERIOR GRIP / REPLACED BY: 642034	1	1	1	1	
38	N.S.S.	. . DOWEL	4	4	4	4	1
39	N.S.S.	. . SCREW CAP HEXS M16-1.5x140 G10.9 ZP	1	1	1	1	1
40	N.S.S.	. . SCREW CAP HEXS M16-1.5x90 G10.9 ZP	1	1	1	1	1
41	N.S.S.	. . SOCKET HEAD CAP SCREW M14 X 60MM GR 12.9	3	3	3	3	1
43	N.S.S.	. . SOCKET HEAD CAP SCREW M5 X 12MM	8	8	8	8	1
44	N.S.S.	. . CLEVIS PIN	1	1	1	1	1
45	N.S.S.	. . WASHER	1	1	1	1	1
51	611216	SPINDLE / WITH MODEL "G.K.N." (TS6) Up to 3-8164	2	2	2	2	
51	611302	SPINDLE / WITH MODEL "G.K.N." (TS8U UNITISED) From 4-8165	2	2	2	2	
NS	611048	STUD / M16-2.0 x 60MM	8	8	8	8	
54	5001193	SCREW CAP HEX M20-2.5x65 G10.9 ZP	6	6	6	6	
55	502558	WASHER FL 21.0x37.0x3.0 G500	6	6	6	6	
58	N.S.S.	PLASTIC RING, BOOT RETAINER	1	1	1	1	1
60	Y2-1310-00	**HUB & ROTOR - TAG AXLE TYPE TS6**					
		1) NOT SOLD SEPARATELY					

From Y-7046 Up to 7-9159	DATE: 01/2014	PAGE: Y2-1245-00

BRAKE PARTS - TAG AXLE - W/"KNORR-BREMSE" / SB7 SERIES

ITEM	PART	DESCRIPTION	XL45	MTH40	MTH45	MTH45S	NOTE
70	110786	BRAKE WEAR INDICATOR MECHANICAL	AR	AR	AR	AR	
99	FMBS-0BPK-10	**BRAKE PARTS - "KNORR-BREMSE" / SB7 & SN7 "AFTERMARKET"**					
100	611054	KIT, TAPPET W/BOOT	AR	AR	AR	AR	C
101	611168	KIT, GUIDANCE PINS & BELLOW	AR	AR	AR	AR	D
102	611177	KIT, BOOT PROTECTOR & TAPPET	AR	AR	AR	AR	E
103	611179	KIT, CARRIER & GUIDING PIN	AR	AR	AR	AR	F
104	641402	KIT, PAD HOLDER	AR	AR	AR	AR	G
105	611199	KIT, BOOT & SEAL / REPLACED BY: 611168	AR	AR	AR	AR	H
105	683344	GREASE GREEN / 5GR	AR	AR	AR	AR	I
105	641931	GREASE GREEN / 500GR	AR	AR	AR	AR	I
105	683345	GREASE WHITE / 5GR	AR	AR	AR	AR	J
105	641930	GREASE WHITE / 500GR	AR	AR	AR	AR	J
105	641321	TOOL / THRUST MEMBER W/BELLOW	AR	AR	AR	AR	K
105	641322	TOOL / CALIPER INNER BELLOW	AR	AR	AR	AR	L
105	641323	TOOL / BUSHING INSTALLER / SERIES SB	AR	AR	AR	AR	N
105	641435	TOOL / FORK (FOR BELLOW CAP)	AR	AR	AR	AR	O
105	641444	TOOL / GROOVING BUSHING	AR	AR	AR	AR	N
106	611246	KIT,GUIDANCE PIN & RUBBER BUSHING / SHORT PIN	AR	AR	AR	AR	P
107	641427	KIT BOOT & CLIP	AR	AR	AR	AR	Q
		C) INCLUDE 2 ITEMS OF #8 & 13					
		D) INCLUDE ITEMS #4,5,6,7,9,10,31,39,40 & 58					
		E) INCLUDE ITEMS #8, 13 & 29					
		F) INCLUDE ITEMS #2,4,5,39,40 & 58					
		G) INCLUDE ITEMS #11,26,44 & 45					
		H) INCLUDE ITEMS #9,10,31,37 & 58					
		I) FOR ITEMS #4 & 6					
		J) FOR ITEMS #5 & 7					
		K) TO USE W/ITEMS #8 & 13					
		L) TO USE W/ITEMS #9					
		N) TO USE W/ITEM #7					
		O) TO USE WITH ITEMS #8 & 13					
		P) INCLUDE ITEMS #4,6 & 39					
		Q) INCLUDE ITEM #10 & 31					

From Y-7046 Up to 3-8164	DATE: 01/2014	PAGE: Y2-1245-10

BRAKE CHAMBER - TAG AXLE TYPE 16/16

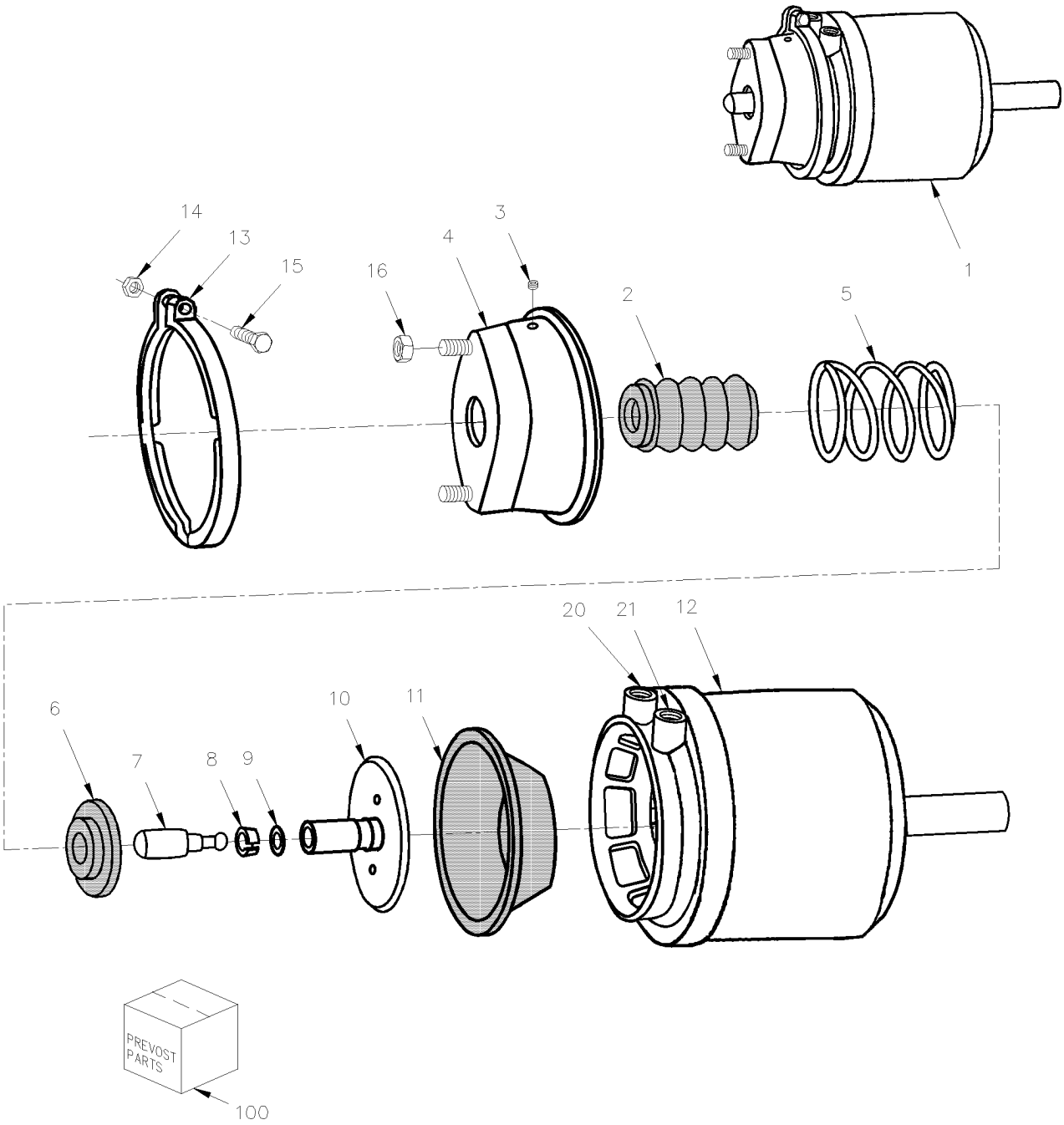

From Y-7046 Up to 3-8164	DATE: 01/2014	PAGE: Y2-1245-10

BRAKE CHAMBER - TAG AXLE TYPE 16/16

ITEM	PART	DESCRIPTION	XL45	MTH40	MTH45	MTH45S	NOTE
1	641308	BRAKE CHAMBER ASSY L.H. & R.H / TYPE 16/16	2	2	2	2	
2	N.S.S.	. BOOT	1	1	1	1	1
3	N.S.S.	. HOLE PLUG	1	1	1	1	1
4	N.S.S.	. CHAMBER , NO-PRESSURE	1	1	1	1	1
5	N.S.S.	. SPRING	1	1	1	1	1
6	N.S.S.	. SPRING SEAT	1	1	1	1	1
7	N.S.S.	. PUSH ROD END	1	1	1	1	1
8	N.S.S.	. RETAINER	1	1	1	1	1
9	N.S.S.	. RING	1	1	1	1	1
10	N.S.S.	. PUSH ROD	1	1	1	1	1
11	641046	. DIAPHRAGM / TYPE 16	1	1	1	1	
12	641431	. CHAMBER SUB ASSY / TYPE 16/16 / REPLACED BY: 641308	1	1	1	1	
13	N.S.S.	. CLAMP W/BOLT & NUT	1	1	1	1	1
14	502543	. NUT HEX M8-1.25 ZP	1	1	1	1	
15	5001021	. SCREW CAP HEXS M8-1.25x60 G8.8 PT ZP	1	1	1	1	
16	5001253	NUT HEX STO M16-1.5 DP	2	2	2	2	
		HOSE SERVICE BRAKE					
20	141812	HOSE BRAKE #8 1012MM (40") Up to Y-7220 / REPLACED BY: 641903	1	1	1	1	A
20	641903	HOSE BRAKE #8 1090MM (43") From Y-7221	1	1	1	1	
NS	501291	MALE ELBOW 45º / JIC 37° FITTING / #8JIC-Mx3/8NPT-M STL	1	1	1	1	A
		HOSE EMERGENCY BRAKE					
21	503488	TUBE, NYLON 1/2 O.D. / BLACK S.L.	AR	AR	AR	AR	
NS	641381	MALE CONNECTOR / PUSH-IN FITTING / #8x3/8NPT-M BR	1	1	1	1	
NS	141804	HOSE BRAKE #8 895MM Up to Y-7220 / REPLACED BY: 641901	1	1	1	1	
21	641901	HOSE BRAKE #8 952MM (37 1/2") From Y-7221	1	1	1	1	
NS	5011205	FEMALE CONNECTOR / PIPE @ METRIC / 3/8NPT-FxM16-1.5-M ZP	2	2	2	2	
. NS	641297	. O-RING 13.1MM I.D. X 2.6 TH	1	1	1	1	
. NS	641298	. FLAT WASHER 17MM I.D x 22MM O.D. x 1.5MM TH	1	1	1	1	
NS	641297	O-RING 13.1MM I.D. X 2.6 TH	2	2	2	2	B
NS	641298	FLAT WASHER 17MM I.D x 22MM O.D. x 1.5MM TH	2	2	2	2	B
NS							
100	641430	KIT REPAIR	1	1	1	1	C
		1) NOT SOLD SEPARATELY					
		A) SERVICE					
		B) SERVICE & EMERGENCY					
		C) INCLUDING ITEMS #2,3,6,8,9 & 11					

From 4-8165 Up to 8-9278	DATE: 01/2014	PAGE: Y2-1245-11

BRAKE CHAMBER - TAG AXLE TYPE 14/16

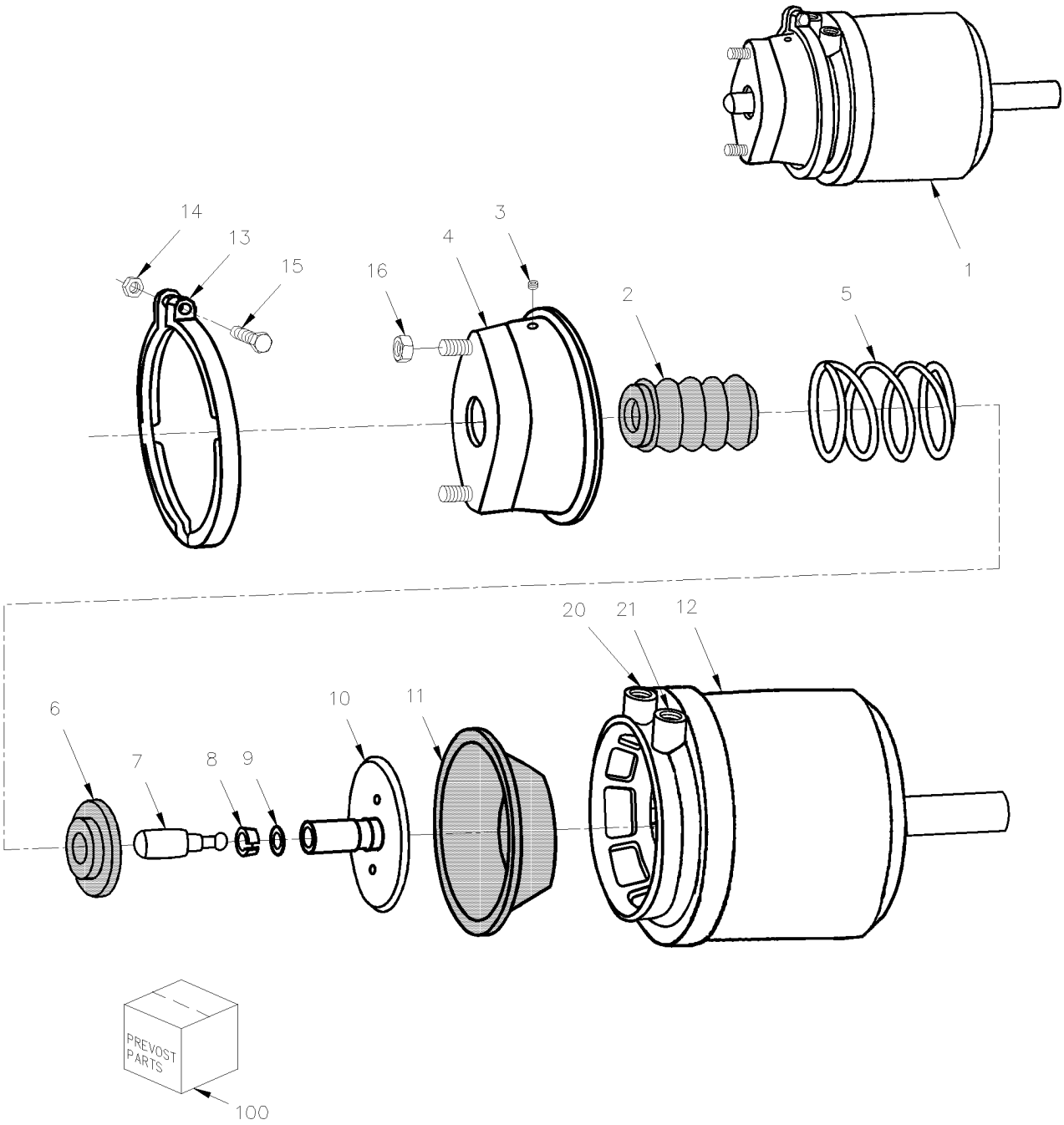

From 4-8165 Up to 8-9278	DATE: 01/2014	PAGE: Y2-1245-11

BRAKE CHAMBER - TAG AXLE TYPE 14/16

ITEM	PART	DESCRIPTION	XL45	MTH40	MTH45	MTH45S	NOTE
1	641980	BRAKE CHAMBER ASSY L.H. & R.H / TYPE 14/16	2	2	2	2	
2	N.S.S.	. BOOT	1	1	1	1	1
3	N.S.S.	. HOLE PLUG	1	1	1	1	1
4	N.S.S.	. CHAMBER , NO-PRESSURE	1	1	1	1	1
5	N.S.S.	. SPRING	1	1	1	1	1
6	N.S.S.	. SPRING SEAT	1	1	1	1	1
7	N.S.S.	. PUSH ROD END	1	1	1	1	1
8	N.S.S.	. RETAINER	1	1	1	1	1
9	N.S.S.	. RING	1	1	1	1	1
10	N.S.S.	. PUSH ROD	1	1	1	1	1
11	N.P.N.	. DIAPHRAGM / TYPE 14	1	1	1	1	4
12	N.P.N.	. CHAMBER SUB ASSY / TYPE 14/16	1	1	1	1	4
13	N.S.S.	. CLAMP W/BOLT & NUT	1	1	1	1	1
14	502543	. NUT HEX M8-1.25 ZP	1	1	1	1	
15	5001021	. SCREW CAP HEXS M8-1.25x60 G8.8 PT ZP	1	1	1	1	
16	5001253	NUT HEX STO M16-1.5 DP	2	2	2	2	
		HOSE SERVICE BRAKE					
20	641903	HOSE BRAKE #8 1090MM (43")	1	1	1	1	
NS	501291	MALE ELBOW 45º / JIC 37° FITTING / #8JIC-Mx3/8NPT-M STL	1	1	1	1	A
		HOSE EMERGENCY BRAKE					
21	503488	TUBE, NYLON 1/2 O.D. / BLACK S.L.	AR	AR	AR	AR	
NS	641381	MALE CONNECTOR / PUSH-IN FITTING / #8x3/8NPT-M BR	1	1	1	1	
21	641901	HOSE BRAKE #8 952MM (37 1/2")	1	1	1	1	
NS	5011205	FEMALE CONNECTOR / PIPE @ METRIC / 3/8NPT-FxM16-1.5-M ZP	2	2	2	2	
. NS	641297	. O-RING 13.1MM I.D. X 2.6 TH	1	1	1	1	
. NS	641298	. FLAT WASHER 17MM I.D x 22MM O.D. x 1.5MM TH	1	1	1	1	
NS	641297	O-RING 13.1MM I.D. X 2.6 TH	2	2	2	2	B
NS	641298	FLAT WASHER 17MM I.D x 22MM O.D. x 1.5MM TH	2	2	2	2	B
		1) NOT SOLD SEPARATELY					
		4) NO PARTS NUMBER					
		A) SERVICE					
		B) SERVICE & EMERGENCY					

From 8-9279 Up to 8-9339	DATE: 01/2014	PAGE: Y2-1245-12

BRAKE CHAMBER - TAG AXLE TYPE 14 & 16

SEALED TYPE NO SERVICING PART AVALIABLE

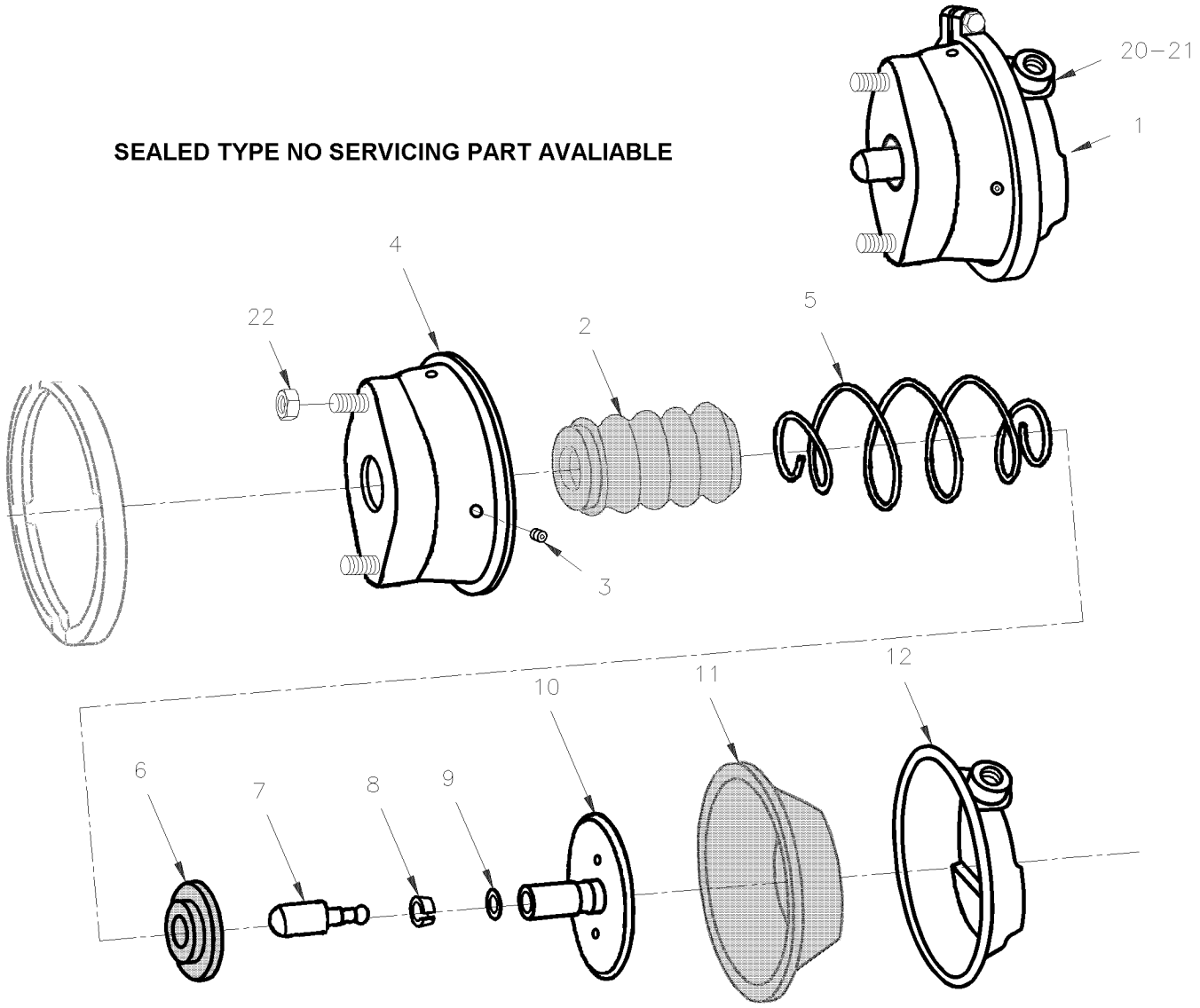

From 8-9279 Up to 8-9339	DATE: 01/2014	PAGE: Y2-1245-12

BRAKE CHAMBER - TAG AXLE TYPE 14 & 16

ITEM	PART	DESCRIPTION	XL45	MTH40	MTH45	MTH45S	NOTE
1	642087	BRAKE CHAMBER ASSY / TYPE 14 / SEALED			2	2	
1	642086	BRAKE CHAMBER ASSY / TYPE 16 / SEALED			2	2	
2	N.S.S.	. BOOT			1	1	1
3	N.S.S.	. HOLE PLUG			1	1	1
4	N.S.S.	. CHAMBER , NO-PRESSURE			1	1	1
5	N.S.S.	. SPRING, COMP.			1	1	1
6	N.S.S.	. SPRING SEAT			1	1	1
7	N.S.S.	. PUSH ROD END			1	1	1
8	N.S.S.	. RETAINER			1	1	1
9	N.S.S.	. RING			1	1	1
10	N.S.S.	. PUSH ROD			1	1	1
11	N.S.S.	. DIAPHRAGM / TYPE 16			1	1	1
12	N.S.S.	. CHAMBER PRESSURE PLATE			1	1	1
13	N.S.S.	. CLAMP W/BOLT & NUT			1	1	1
20	660914	MALE ELBOW 90° / JIC 37° FITTING / #8JIC-MxM16-1.5-M STL			1	1	
. NS	641297	. O-RING 13.1MM I.D. X 2.6 TH			1	1	
. NS	641298	. FLAT WASHER 17MM I.D x 22MM O.D. x 1.5MM TH			1	1	
21	641903	HOSE BRAKE #8 1090MM (43")			1	1	
22	5001253	NUT HEX STO M16-1.5 DP			2	2	
		1) NOT SOLD SEPARATELY					

From Y-7046 Up to 8-9278	DATE: 01/2014	PAGE: Y2-1250-00
ANTI-LOCK BRAKING SYSTEM		

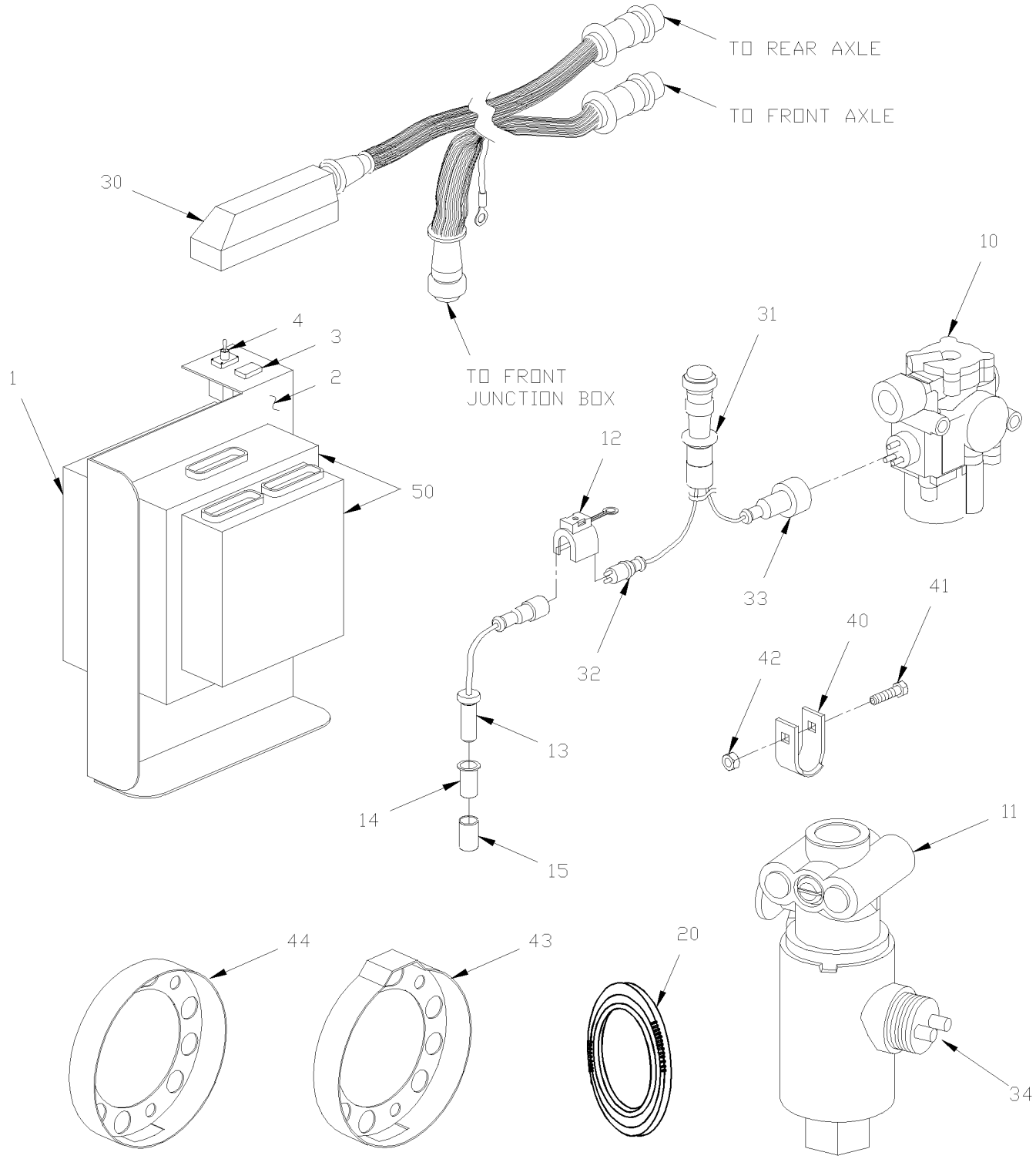

From Y-7046 Up to 8-9278	DATE: 01/2014	PAGE: Y2-1250-00

ANTI-LOCK BRAKING SYSTEM

ITEM	PART	DESCRIPTION	XL45	MTH40	MTH45	MTH45S	NOTE
1	641446	CONTROL UNIT 24V / ABS 4 CH /J-1922 Up to 1-7648	1	1	1	1	
1	641940	CONTROL UNIT 24V / ABS 4 CH /J-1939 From 1-7649 Up to 2-7832 / REPLACED BY: 642164	1	1	1	1	
1	642164	CONTROL UNIT 24V / ABS 4 CH /J-1939 Up to 2-7832	1	1	1	1	
1	641948	CONTROL UNIT 12V / ABS 4 CH From 2-7833	1	1	1	1	
1	641947	CONTROL UNIT 12V / ABS 4 CH From 2-7833	AR				C
1	641947	CONTROL UNIT 12V / ABS 4 CH From 2-7833		1	1	1	C
1	502511	NUT HEX NYRT M6-1.0 ZP	7	7	7	7	
1	502573	WASHER FL 6.4x12.5x1.6 SS	7	7	7	7	
2	064891	SUPPORT / MODULE Up to 1-7722 / REPLACED BY: 065573	1	1	1	1	
2	065573	SUPPORT / MODULE From 1-7723 Up to 2-7738	1	1	1	1	
2	065584	SUPPORT / MODULE From 2-7739 Up to 2-7832	1	1	1	1	
2	065650	SUPPORT / MODULE From 2-7833 Up to 3-8164	1	1	1	1	
2	065852	SUPPORT / MODULE From 4-8165 Up to 7-9043	1	1	1	1	
2	066839	SUPPORT / MODULE From 7-9044		1	1	1	
3	562113	TELLTALE ASSY / 24V SHORT Up to 2-7738	1	1	1	1	
NS	391672	INSERT / RED / "ABS" Up to 2-7738	1	1	1	1	
4	560254	SWITCH / OFF-M/ON / S.P.S.T.	1	1	1	1	
NS	063373	DECAL ABS SYSTEM / REPLACED BY: 063890	1	1	1	1	
10	641537	VALVE, "ABS" 24VOLT Up to 2-7832	4	4	4	4	
10	641951	VALVE, "ABS" 12VOLT From 2-7833	4	4	4	4	
11	641460	VALVE, "ATC" 24VOLT Up to 2-7832	2	2	2	2	
11	641950	VALVE, "ATC" 12VOLT From 2-7833	2	2	2	2	
12	561115	CLAMP W/ 3 & 4 / ITT CANNON 029-0262-000	4	4	4	4	
13	641095	SENSOR ABS (ON FRONT & DRIVE AXLE) Up to 2-7832	2	2	2	2	
13	641099	SENSOR ABS (ON FRONT & DRIVE AXLE) From 2-7833 Up to 3-8164	2	2	2	2	R
13	641099	SENSOR ABS (ON FRONT & DRIVE AXLE) From 3-8165	2				I
13	641288	SENSOR ABS (ON FRONT AXLE) 90° ANGLE Up to 2-7832	2	2	2	2	
13	641946	SENSOR ABS (ON FRONT AXLE) 90° ANGLE From 2-7833 Up to 3-8164 / REPLACED BY: 642084	2	2	2	2	
13	641946	SENSOR ABS (ON FRONT AXLE) 90° ANGLE From 4-8165 / REPLACED BY: 642084	2				R
14	641096	CLIP, SPRING / TO FIX SENSOR	2	2	2	2	
15	621684	BUSHING ABS SENSOR MOUNTING DRIVE AXLE	1	1	1	1	A
20	611255	TOOTH WHEEL / FRONT AXLE W/DISC "G.K.N." Up to 3-8164	2	2	2	2	
20	611304	TOOTH WHEEL / FRONT AXLE W/ "TIMKEN" 138.89MM I.D. From 4-8165		1	1	1	I
20	611473	TOOTH WHEEL / FRONT AXLE & TAG W/ "FAG" 143.90MM I.D. SERVICE	1				I,D
NS	611457	ROTOR VENTED (W/TOOTH WHEEL / DRIVE AXLE)	1	1	1	1	
NS	562279	TOOL / BOX CONNECTOR 54 PINS	1	1	1	1	
31	064640	CABLE ASSY / FRONT "ABS" SENSOR & VALVE Up to 2-7832	1	1	1	1	
		A) DRIVE AXLE ONLY					
		C) USE WITH "ATC" VALVE OR WITH TRAILER EQUIPPED					
		WITH "ABS"					
		D) WITH HUB "FAG" ONLY					
		I) WITH INDEPENDANT FRONT AXLE					
		R) WITH I BEAM RIGID FRONT AXLE					

From Y-7046 Up to 8-9278	DATE: 01/2014	PAGE: Y2-1250-00

ANTI-LOCK BRAKING SYSTEM

ITEM	PART	DESCRIPTION	XL45	MTH40	MTH45	MTH45S	NOTE
31	065632	CABLE ASSY / FRONT "ABS" SENSOR & VALVE From 2-7833	1	1	1	1	
31	064876	CABLE ASSY / REAR "ABS" SENSOR & VALVE Up to 2-7832	1	1	1	1	
31	065634	CABLE ASSY / REAR "ABS" SENSOR & VALVE From 2-7833	1	1	1	1	
32	641132	. CONNECTOR / MALE W2 WIRES x 3 METER / WABCO 8945900102	AR	AR	AR	AR	
33	641098	. CONNECTOR / FEMALE W3 WIRES x 3 METER / WABCO 8946010102	AR	AR	AR	AR	
34	641461	CONNECTOR / FEMALE W2 WIRES x 15 METER / WABCO 4495211500 Up to 2-7832	AR	AR	AR	AR	C
NS	140412	DUST PROTECTOR SENSOR KIT Up to 4-8172	1	1	1	1	
40	140409	. PROTECTOR "U" SHAPE / SS Up to 4-8172	2	2	2	2	
41	5001539	. SCREW CRG 1/4-20x1 1/2 SS Up to 4-8172	2	2	2	2	
42	5001105	. NUT HEXF 1/4-20 ZP Up to 4-8172	2	2	2	2	
43	148977	. ABS SHIELD PROTECTOR W/BULGE Up to 4-8172	1				B
44	621711	. ABS SHIELD PROTECTOR From 4-8173	1				
50	Y2-0750-00	**AUTOMATIC TRANSMISSION - "WORLD" WITH DETROIT S-60**					
52	Y2-0750-01	**AUTOMATIC TRANSMISSION - "WORLD" WITH DETROIT S-60**					
		B) OPTION "ORLEANS"					
		C) USE WITH "ATC" VALVE OR WITH TRAILER EQUIPPED					
		WITH "ABS"					

From Y-7046 Up to 8-9278	DATE: 01/2014	PAGE: Y2-1250-00

ANTI-LOCK BRAKING SYSTEM

ITEM	PART	DESCRIPTION	XL45	MTH40	MTH45	MTH45S	NOTE

From 4-8165 Up to 8-9339	DATE: 01/2014	PAGE: Y2-1250-10

ABS BRAKE VALVE INSTALLATION

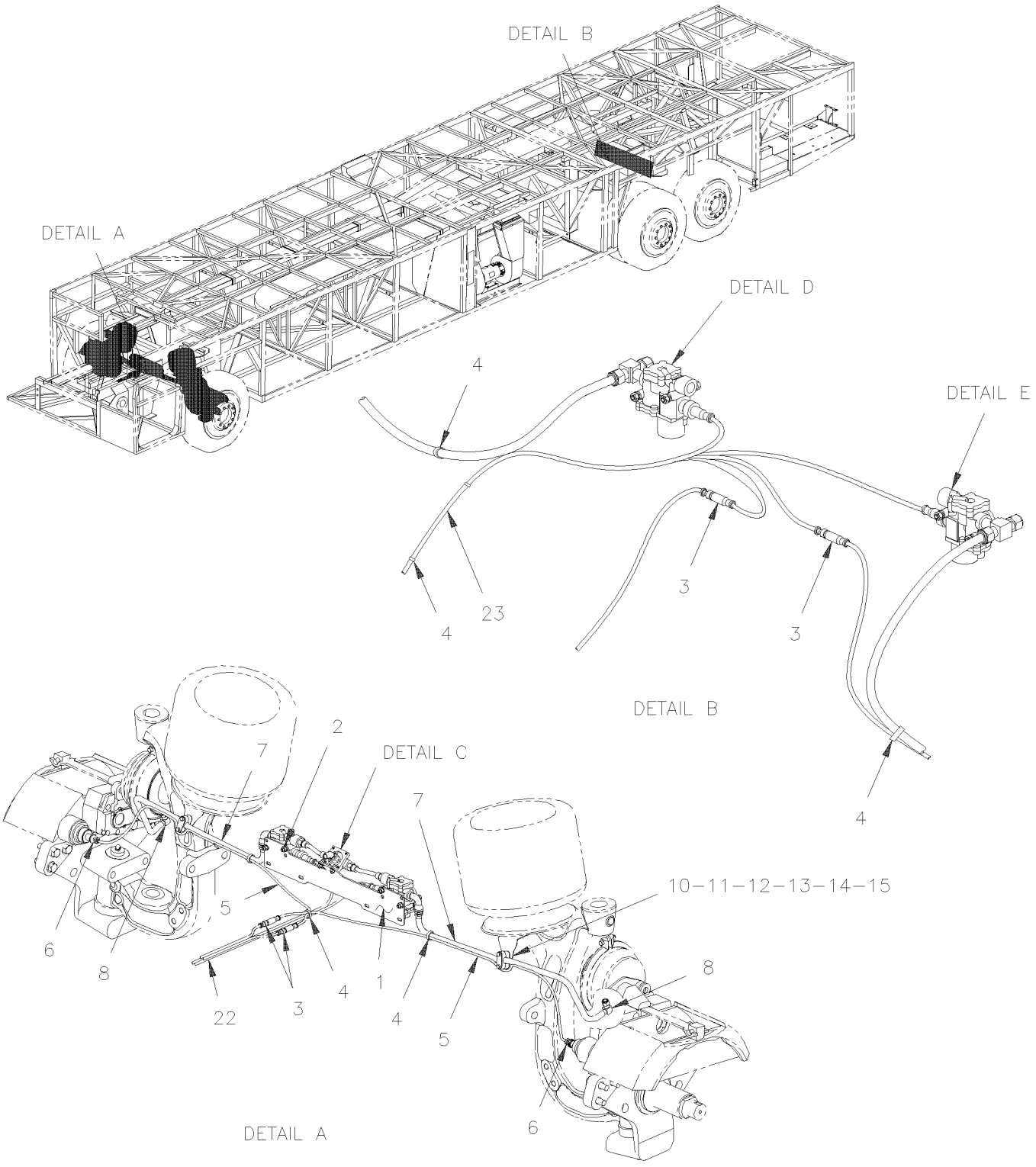

From 4-8165 Up to 8-9339	DATE: 01/2014	PAGE: Y2-1250-10

ABS BRAKE VALVE INSTALLATION

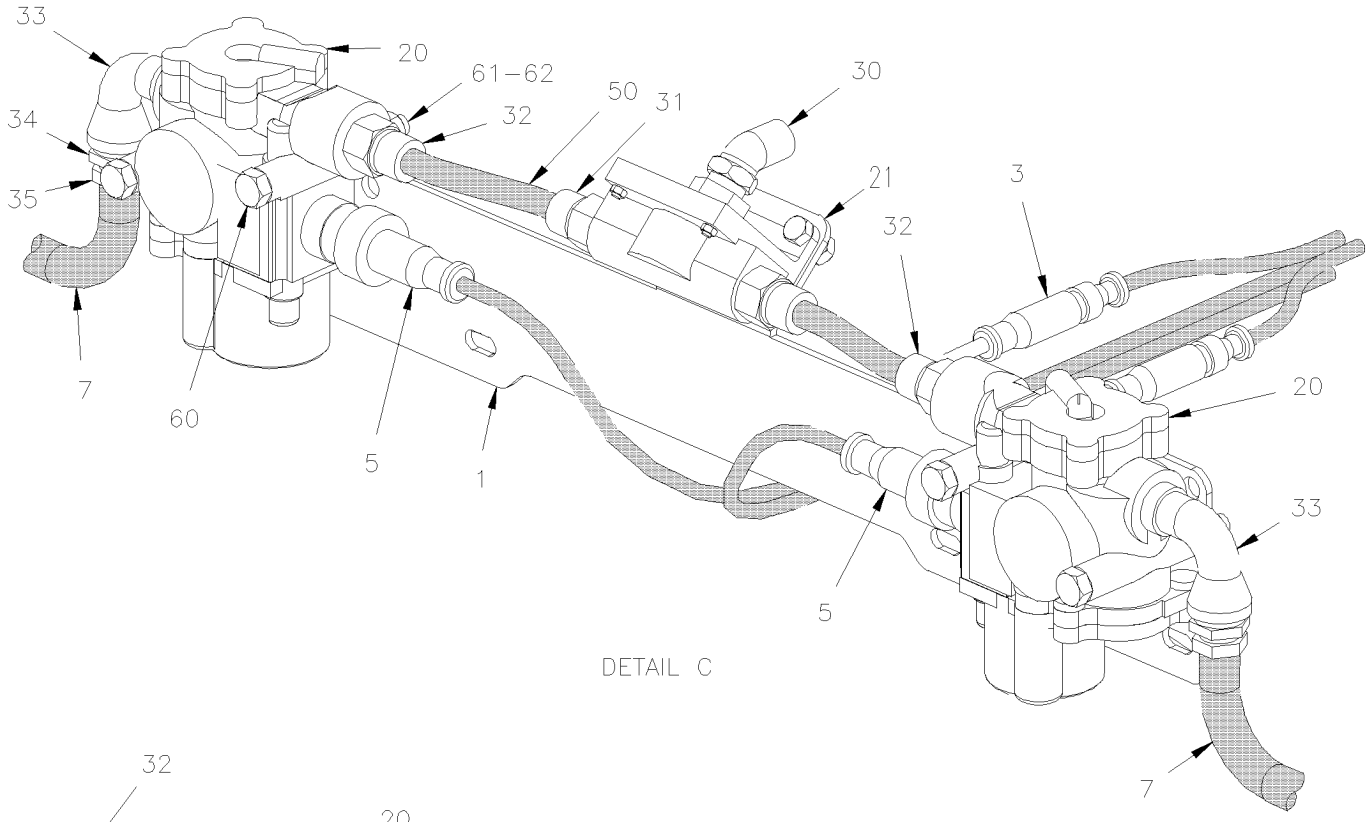

DETAIL C

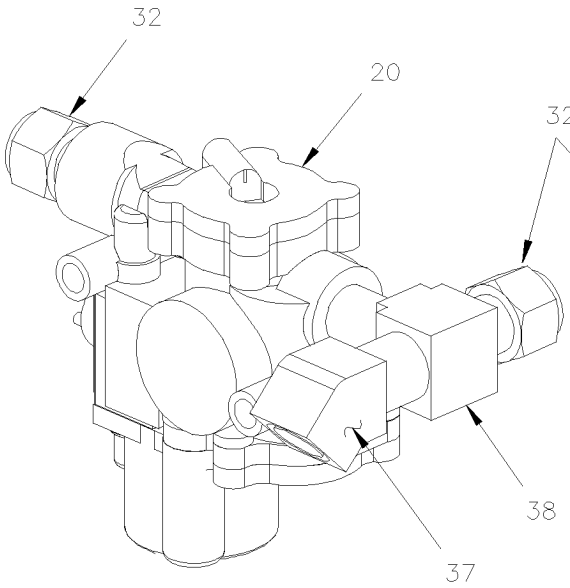

DETAIL D

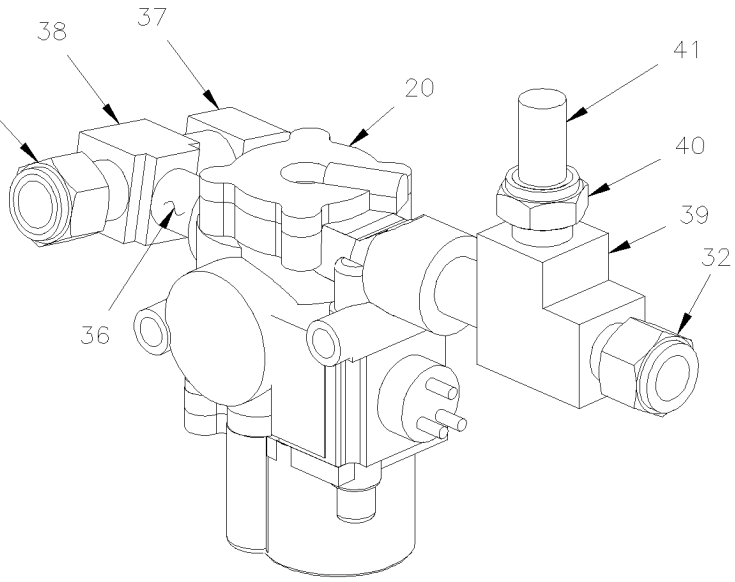

DETAIL E

From 4-8165 Up to 8-9339	DATE: 01/2014	PAGE: Y2-1250-10

ABS BRAKE VALVE INSTALLATION

ITEM	PART	DESCRIPTION	XL45	MTH40	MTH45	MTH45S	NOTE
1	142303	SUPPORT		1	1	1	
2	502565	NUT HEX M6-1.0 SS		4	4	4	
NS	502570	WASHER LO SPT 6.1x11.8x1.6 SS		4	4	4	
NS	502573	WASHER FL 6.4x12.5x1.6 SS		4	4	4	
3	561115	CLAMP W/ 3 & 4 / ITT CANNON 029-0262-000		4	4	4	
4	504637	CABLE TIE / 3/16" x 13"		AR	AR	AR	
5	641099	SENSOR ABS (ON FRONT & DRIVE AXLE) Up to 8-9278		2	2	2	
5	642085	SENSOR ABS From 8-9279			2	2	
5	642184	SENSOR ABS	2				
6	641096	CLIP, SPRING / TO FIX SENSOR		4	4	4	
7	641903	HOSE BRAKE #8 1090MM (43")		2	2	2	
8	660914	MALE ELBOW 90° / JIC 37° FITTING / #8JIC-MxM16-1.5-M STL		2	2	2	
. NS	641297	. O-RING 13.1MM I.D. X 2.6 TH		1	1	1	
. NS	641298	. FLAT WASHER 17MM I.D x 22MM O.D. x 1.5MM TH		1	1	1	
10	142352	HOSE SUPPORT R.H.		1	1	1	
10	142353	HOSE SUPPORT L.H.		1	1	1	
11	504612	COLLAR 13/16" I.D. / TO FIX HOSE		4	4	4	
12	504614	PLATE RETAINING / COLLAR		4	4	4	
13	502656	SCREW CAP HEX M6-1.0x50 SS		4	4	4	
14	502570	WASHER LO SPT 6.1x11.8x1.6 SS		4	4	4	
15	502565	NUT HEX M6-1.0 SS		4	4	4	
20	641951	VALVE, "ABS" 12VOLT	4	4	4	4	
21	641429	VALVE, QUICK RELEASE QR-1 / 3/8NPTx3/8NPTx3/8NPT	4	4	4	4	
. NS	640924	. REPAIR KIT / QR-1	1	1	1	1	
22	064640	CABLE ASSY / FRONT "ABS" SENSOR & VALVE Up to 2-7832		1	1	1	
22	065632	CABLE ASSY / FRONT "ABS" SENSOR & VALVE From 2-7833	1	1	1	1	
23	064876	CABLE ASSY / REAR "ABS" SENSOR & VALVE Up to 2-7832		1	1	1	
23	065634	CABLE ASSY / REAR "ABS" SENSOR & VALVE From 2-7833	1	1	1	1	
30	641368	MALE ELBOW 45° NON-SWIVEL / PUSH-IN FITTING / #8x3/8NPT-M BR		1	1	1	
31	641381	MALE CONNECTOR / PUSH-IN FITTING / #8x3/8NPT-M BR		2	2	2	
32	641383	MALE CONNECTOR / PUSH-IN FITTING / #8x1/2NPT-M BR	2	2	2	2	
33	501406	STREET ELBOW 90º / PIPE FITTING / 1/2NPT-Mx1/2NPT-F BR		2	2	2	
34	501534	BUSHING REDUCER / PIPE FITTING / 1/2NPT-Mx3/8NPT-F BR		2	2	2	
35	501842	ADAPTER / AIR BRAKE HOSE FITTING / 3/4-20-Mx3/8NPT-M BR		2	2	2	
36	5011067	NIPPLE HEX / PIPE FITTING / 1/2NPT-Mx1/2NPT-Mx1 13/16 BR		2	2	2	
37	501528	STREET ELBOW 45º / PIPE FITTING / 1/2NPT-Mx1/2NPT-F BR		2	2	2	
38	501472	FEMALE UNION TEE / PIPE FITTING / 1/2NPT-Fx1/2NPT-Fx1/2NPT-F BR		2	2	2	
39	501473	MALE RUN TEE / PIPE FITTING / 1/2NPT-Mx1/2NPT-Fx1/2NPT-F BR		1	1	1	
40	501316	BUSHING REDUCER / PIPE FITTING / 1/2NPT-Mx1/4NPT-F BR		1	1	1	
41	641332	MALE CONNECTOR / PUSH-IN FITTING / #4x1/4NPT-M BR		1	1	1	
50	Y2-1202-00	**TUBES PLASTIC / AIR D.O.T.**					
60	500187	SCREW CAP HEX 5/16-18x3 G5 ZP		AR	AR	AR	
61	500476	WASHER LO SPT .317x.586x.078 ZP		AR	AR	AR	
62	500778	NUT HEX 5/16-18 ZP		AR	AR	AR	

From 4-8165 Up to 8-9339	DATE: 01/2014	PAGE: Y2-1250-10

ABS BRAKE VALVE INSTALLATION

ITEM	PART	DESCRIPTION	XL45	MTH40	MTH45	MTH45S	NOTE

From Y-7046 Up to 8-9339	DATE: 01/2014	PAGE: Y2-13
WHEELS, HUBS & TIRES		

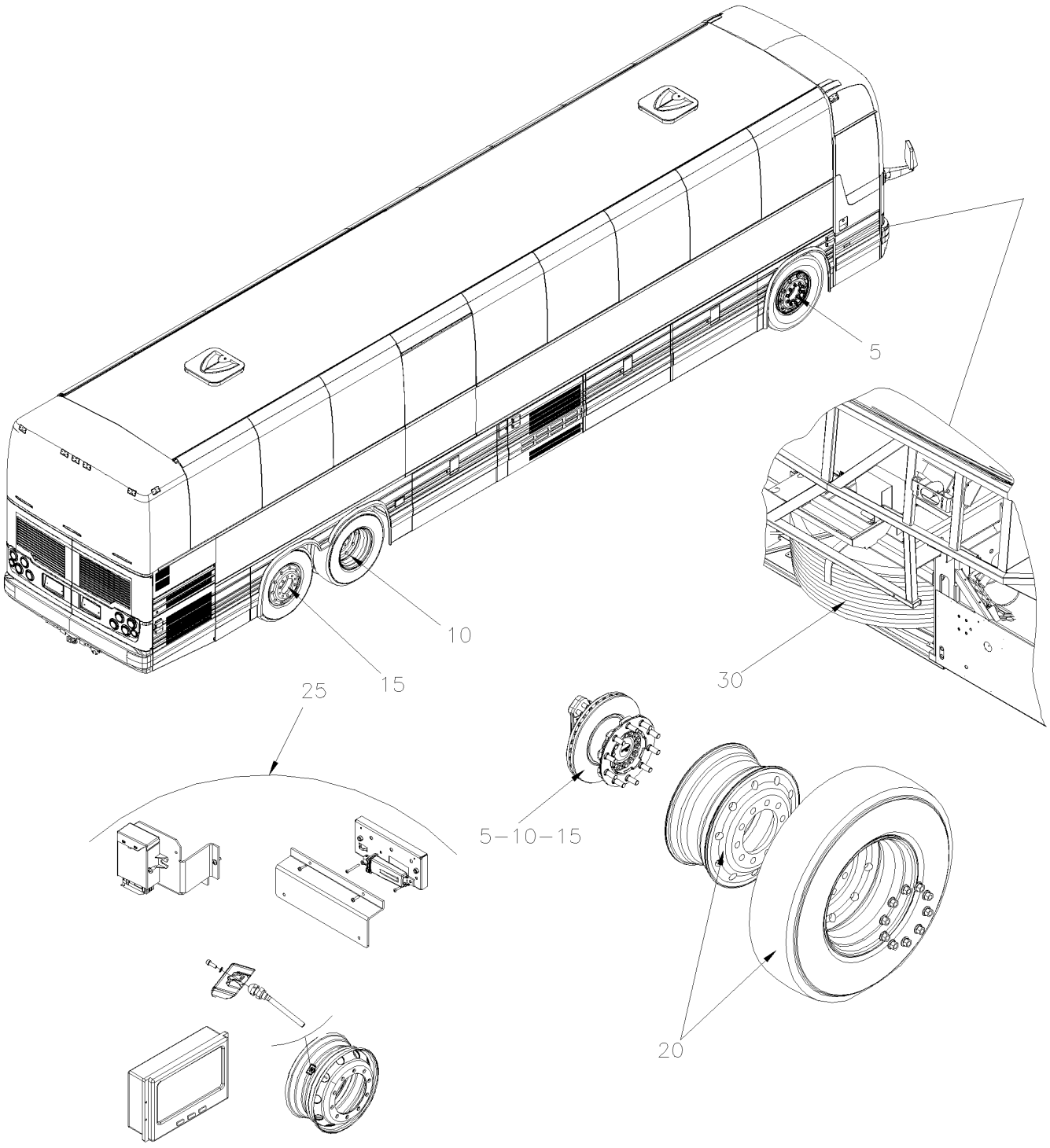

From Y-7046 Up to 8-9339	DATE: 01/2014	PAGE: Y2-13

WHEELS, HUBS & TIRES

ITEM	PART	DESCRIPTION	XL45	MTH40	MTH45	MTH45S	NOTE
5	Y2-1300-00	**HUB & ROTOR - FRONT AXLE MODEL "S-84" & "IS84" From Y-7046 Up to 3-8164**					
5	Y2-1300-01	**HUB & ROTOR - FRONT AXLE MODEL "NSD80" From 1-7455 Up to 1-7455**					
5	Y2-1300-02	**HUB & ROTOR - FRONT AXLE MODEL "S84U" & "NDIFS80P" From 4-8165 Up to 8-9339**					
5	Y2-1300-99	**HUB & ROTOR - FRONT AXLE MODEL "S84U" & "NDIFS80P" From Y-7046 Up to 3-8164**					
10	Y2-1305-00	**HUB & ROTOR - DRIVE AXLE From Y-7046 Up to 8-9339**					
10	Y2-1305-99	**ROTOR (SPLINED DISC) PRODUCT IMPROVMENT From Y-7046 Up to 8-9339**					
15	Y2-1310-00	**HUB & ROTOR - TAG AXLE TYPE TS6 From Y-7046 Up to 3-8164**					
15	Y2-1310-01	**HUB & ROTOR - TAG AXLE TYPE TS8U From 4-8165 Up to 8-9339**					
15	Y2-1310-99	**HUB & ROTOR - TAG AXLE TYPE TS8U RETROFIT "UNITISED" BEARING From Y-7046 Up to 3-8164**					
20	Y2-1318-00	**WHEELS & COMPONENTS - BUS MOUNT (STANDARD) From Y-7046 Up to 2-7766**					
20	Y2-1318-01	**WHEELS & COMPONENTS - TRUCK MOUNT (METRIC) From 2-7767 Up to 8-9339**					
25	Y2-1318-99	**TIRE MONITOR - PRESSURE & TEMPERATURE / "RETROFIT" From Y-7046**					
30	Y2-1325-00	**SPARE WHEEL - INSTALLATION From Y-7046 Up to 8-9339**					

From Y-7046 Up to 3-8164	DATE: 01/2014	PAGE: Y2-1300-00
HUB & ROTOR - FRONT AXLE MODEL "S-84" & "IS84"		

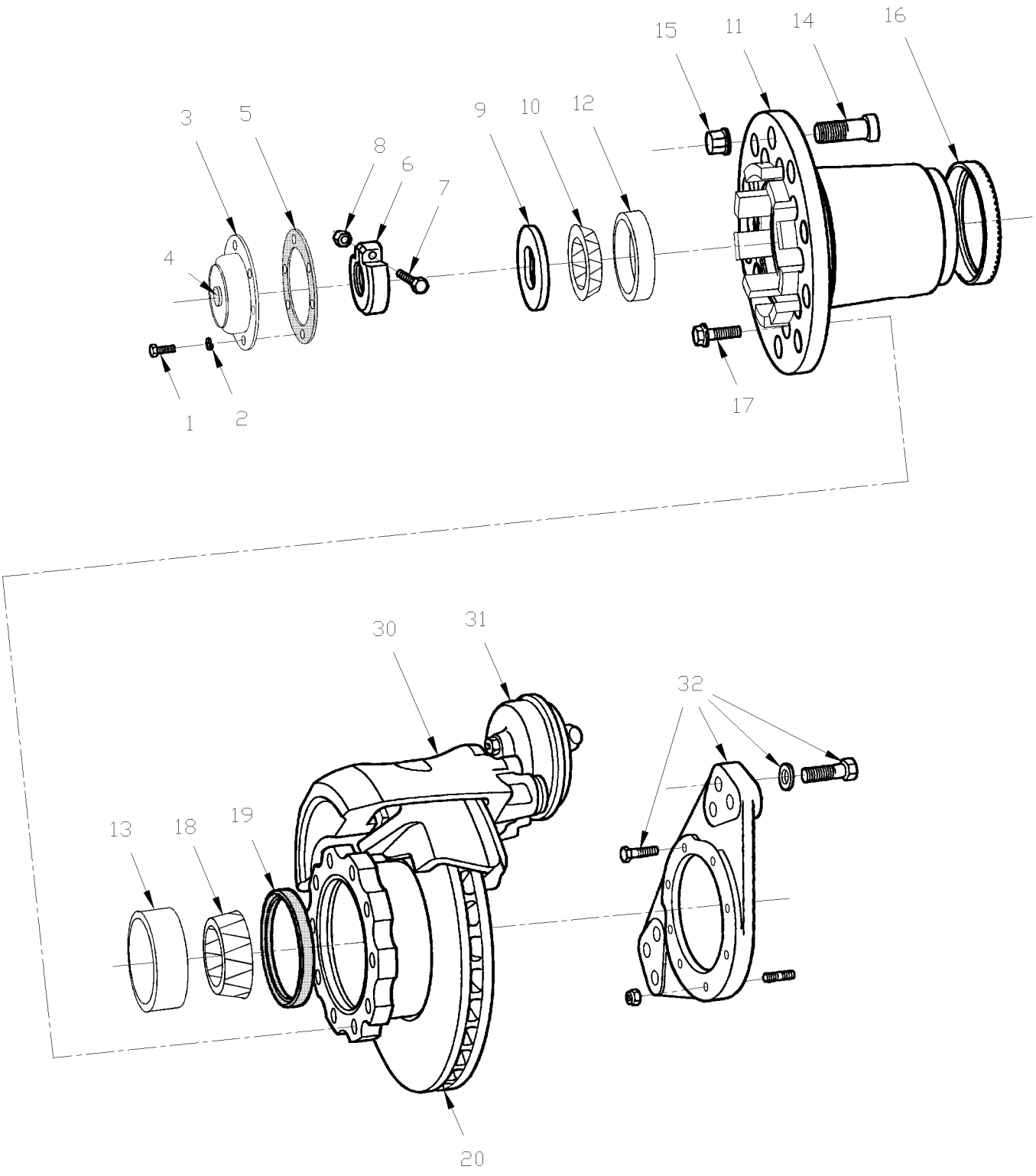

From Y-7046 Up to 3-8164	DATE: 01/2014	PAGE: Y2-1300-00

HUB & ROTOR - FRONT AXLE MODEL "S-84" & "IS84"

ITEM	PART	DESCRIPTION	XL45	MTH40	MTH45	MTH45S	NOTE
1	502790	SCREW CAP HEX M8-1.25x20 G8.8 ZP	6	6	6	6	
2	5001003	WASHER LO SPT 8.1x12.7x2.0 ZP	6	6	6	6	
3	611243	HUB CAP / W/GREASE ONLY	1				
3	611210	HUB CAP / ALUMINUM / "STEMCO" / REPLACED BY: 611250	1	1	1	1	
. NS	MI07-04	. SEE MAINTENANCE INFORMATION	1	1	1	1	
4	611211	. KIT, HUB CAP WINDOW	1	1	1	1	
NS	611242	. PLUG VENT / RED / W/ALU HUB CAP "STEMCO"	1				
5	611261	. GASKET HUB CAP / "STEMCO"	1				
6	611004	NUT ADJUSTING M45-2	1				
. NS	490845	. TOOL / NUT WHEEL BEARING ADJUSTMENT	1				
. NS	684735	. TOOL / NUT WHEEL BEARING ADJUSTMENT / TORQUE	1				
. NS	MI03-24	. SEE MAINTENANCE INFORMATION	1				
7	500054	SCREW CAP HEX 3/8-24x2 1/2 G5 ZP	1				
8	500704	NUT HEX STO 3/8-24 ZP	1				
9	611003	LOCK PLATE	1				
10	610126	CONE BEARING / OUTER WHEEL BEARING	1				
11	611202	HUB WHEEL / W/STANDARD WHEEL Up to 2-7766 / REPLACED BY: 611259	1				
11	611259	HUB WHEEL / W/METRIC WHEEL From 2-7767	1				
12	610125	CUP BEARING / OUTER WHEEL BEARING	1				
13	610997	CUP BEARING / INNER WHEEL BEARING	1				
14	610995	STUD / L.H. / W/STUD-MOUNT WHEEL	10				
NS	610996	STUD / R.H. / W/STUD-MOUNT WHEEL	10				
14	611207	STUD / R.H. / W/HUB-MOUNT WHEEL M22-1.5 x 81MM	10				
NS	611208	STUD / R.H. / W/HUB-MOUNT WHEEL 7/8-14	10				C
15	610175	NUT L.H. 1 1/8-16 / STUD MOUNT WHEEL	10				
NS	610176	NUT R.H. 1 1/8-16 / STUD MOUNT WHEEL	10				
NS	611189	NUT R.H. / W/HUB-MOUNT WHEEL M22-1.5 / 30MM TH Up to 3-8128 / REPLACED BY: 20434082	10				
15	20434082	NUT R.H. / W/HUB-MOUNT WHEEL M22-1.5 / 27MM TH From 3-8129	10				
NS	610773	NUT R.H. / W/HUB-MOUNT WHEEL 7/8-14	10				C
16	Y2-1250-00	**ANTI-LOCK BRAKING SYSTEM**					
17	611007	SCREW CAP HEXF SERR M16-1.5x50 G10.9	10				
18	611087	CONE BEARING / INNER WHEEL BEARING	1				
19	611081	SEAL ASSY/ WHEEL BEARING W/OIL	1				
19	611247	SEAL ASSY/ WHEEL BEARING W/OIL	1				
19	611174	SEAL ASSY / W/OIL / "SCOTT-SEAL PLUS"	AR				
20	611188	ROTOR SOLID / REPLACED BY: 611456	1				
20	611456	ROTOR VENTED	1				
30	Y2-1225-00	**BRAKE PARTS - FRONT AXLE - W/"KNORR-BREMSE" / SB7 SERIES**					
31	Y2-1225-10	**BRAKE CHAMBER - FRONT AXLE TYPE 22**					
31	Y2-1225-11	**BRAKE CHAMBER - FRONT AXLE TYPE 24**					
32	Y2-1225-00	**BRAKE PARTS - FRONT AXLE - W/"KNORR-BREMSE" / SB7 SERIES**					
NS	684644	SEAL INSTALLER TOOL / FRT & TAG TS-5	1				
41	611328	KIT, RETROFIT RIGID FRONT AXLE / UNITISED Up to 3-8164	1				
		C) CUSTOMMER SPECIAL "OPTION"					

From Y-7046 Up to 3-8164	DATE: 01/2014	PAGE: Y2-1300-00

HUB & ROTOR - FRONT AXLE MODEL "S-84" & "IS84"

ITEM	PART	DESCRIPTION	XL45	MTH40	MTH45	MTH45S	NOTE
42	611329	KIT, RETROFIT INDE FRONT AXLE / UNITISED Up to 3-8164	1				

From Y-7046 Up to 3-8164	DATE: 01/2014	PAGE: Y2-1300-00

HUB & ROTOR - FRONT AXLE MODEL "S-84" & "IS84"

ITEM	PART	DESCRIPTION	XL45	MTH40	MTH45	MTH45S	NOTE

From 1-7455 Up to 1-7455	DATE: 01/2014	PAGE: Y2-1300-01

HUB & ROTOR - FRONT AXLE MODEL "NSD80"

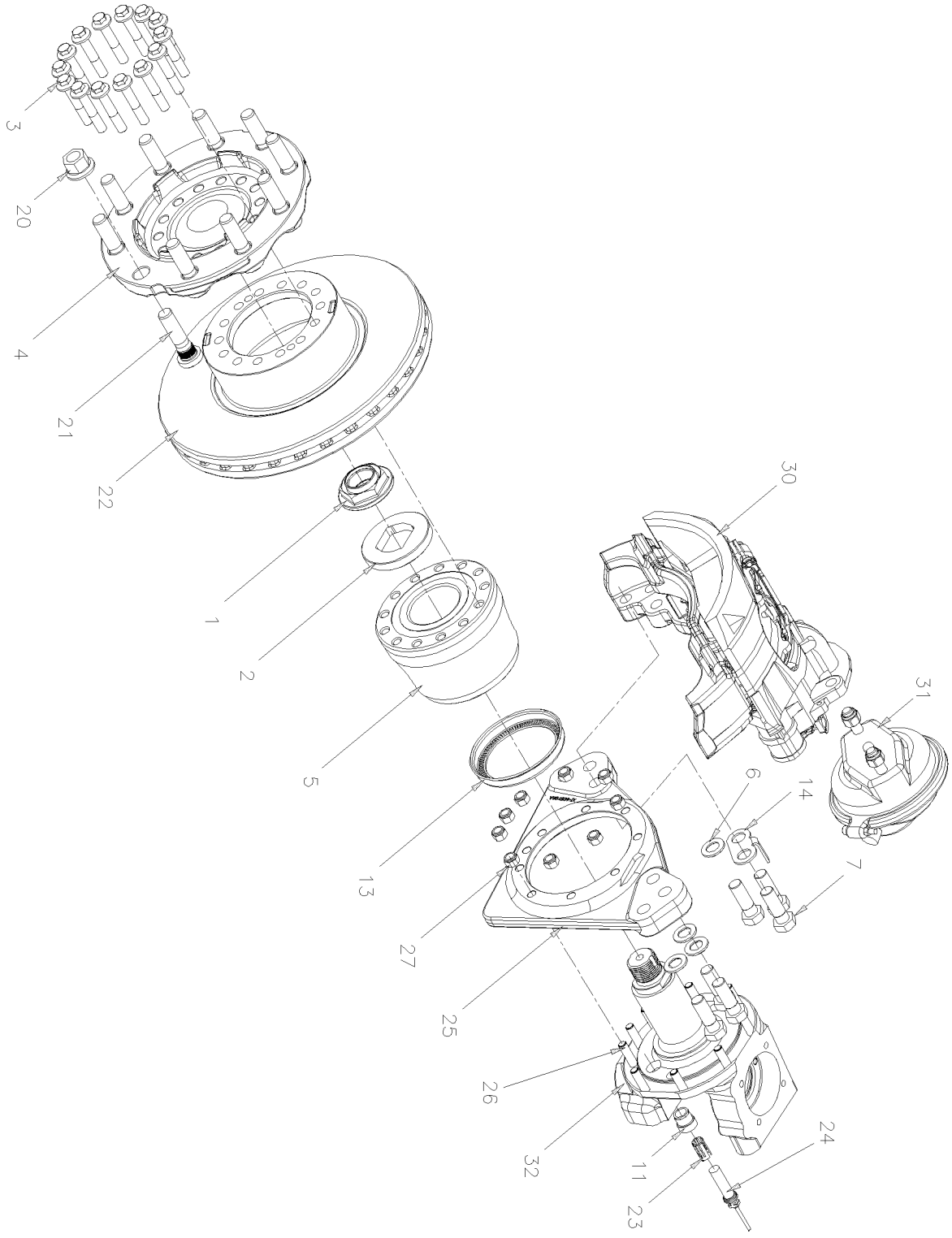

From 1-7455 Up to 1-7455	DATE: 01/2014	PAGE: Y2-1300-01

HUB & ROTOR - FRONT AXLE MODEL "NSD80"

ITEM	PART	DESCRIPTION	XL45	MTH40	MTH45	MTH45S	NOTE
1	611949	HUB NUT 1 3/4-8	1				
2	611948	THRUST WASHER	1				
3	611955	SCREW CAP HEXF M14-1.5x80 G12.9 N500	14				
4	611950	HUB FLANGE	1				
5	611953	HUB ASSY / UNITISED L.H. & R.H. "TIMKEN" / REPLACED BY: 611471	1				R
5	611471	HUB ASSY / UNITISED L.H. & R.H. "FAG" ASSY W/"ABS" RING	1				R
NS	491115	TOOL, HUB INSTALLER W/UNITISED BEARING	1				
. NS	NDS8	. MAINTENANCE INSTRUCTION	1				
6	611044	WASHER FL HARD 21.0x37.0x3.0 N500	6				
7	611308	SCREW CAP HEX M20-2.5x100 G12.9	4				
7	5001193	SCREW CAP HEX M20-2.5x65 G10.9 ZP	2				
7	5001529	SCREW CAP HEX M20-1.5x60 G10.9 ZP	6				
13	N.S.S.	TOOTH WHEEL / FRONT AXLE RIGID INCLUDE WITH ITEM #5	1				1 R
14	110786	BRAKE WEAR INDICATOR MECHANICAL	AR				
20	610175	NUT L.H. 1 1/8-16 / STUD MOUNT WHEEL	10				
20	610176	NUT R.H. 1 1/8-16 / STUD MOUNT WHEEL	10				
20	610773	NUT R.H. / W/HUB-MOUNT WHEEL 7/8-14	10				
20	20434082	NUT R.H. / W/HUB-MOUNT WHEEL M22-1.5 / 27MM TH	10				
21	610995	STUD / L.H. / W/STUD-MOUNT WHEEL	10				
21	610996	STUD / R.H. / W/STUD-MOUNT WHEEL	10				
21	610994	STUD / R.H. / W/HUB-MOUNT WHEEL 7/8-14 / REPLACED BY: 611208	10				
21	611208	STUD / R.H. / W/HUB-MOUNT WHEEL 7/8-14	10				
22	611954	ROTOR VENTED	1				
23	641096	CLIP, SPRING / TO FIX SENSOR	1				
24	Y2-1250-00	**ANTI-LOCK BRAKING SYSTEM**	1				
25	611951	CALIPER MOUNTING BRACKET R.H.	1				
25	611952	CALIPER MOUNTING BRACKET L.H.	1				
26	611030	STUD 1/2-20 X 1 11/16"	AR				
27	5007001	NUT HEX STO 1/2-20 ZP G "C"	AR				
30	Y2-1225-00	**BRAKE PARTS - FRONT AXLE - W/"KNORR-BREMSE" / SB7 SERIES**					
30	Y2-1225-01	**BRAKE PARTS "KNORR-BREMSE" SN7 SERIES**					
30	Y2-1225-02	**BRAKE PARTS "KNORR-BREMSE" SN7 SERIES W/NEW SLIDE PINS**	1				
31	Y2-1225-10	**BRAKE CHAMBER - FRONT AXLE TYPE 22**					
31	Y2-1225-11	**BRAKE CHAMBER - FRONT AXLE TYPE 24**					
32	Y2-1005-01	**FRONT AXLE - I BEAM RIGID MODEL "NSD80"**					
NS	MI08-04	SEE MAINTENANCE INFORMATION	1				
		1) NOT SOLD SEPARATELY					
		R) WITH I BEAM RIGID SUSPENSION					

From 4-8165 Up to 8-9339	DATE: 01/2014	PAGE: Y2-1300-02

HUB & ROTOR - FRONT AXLE MODEL "S84U" & "NDIFS80P"

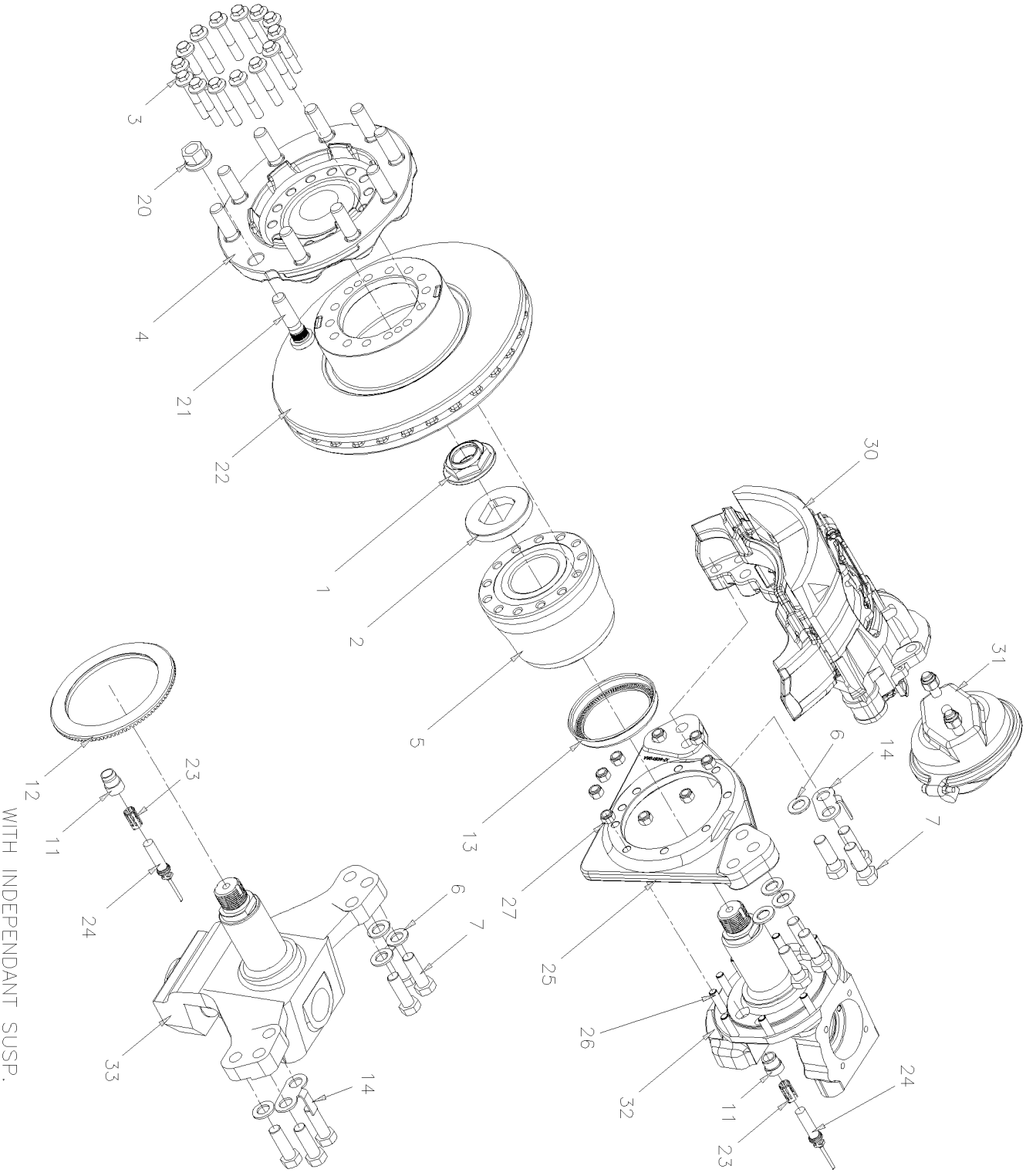

From 4-8165 Up to 8-9339	DATE: 01/2014	PAGE: Y2-1300-02

HUB & ROTOR - FRONT AXLE MODEL "S84U" & "NDIFS80P"

ITEM	PART	DESCRIPTION	XL45	MTH40	MTH45	MTH45S	NOTE
1	611949	HUB NUT 1 3/4-8	1				
2	611948	THRUST WASHER	1				
3	611955	SCREW CAP HEXF M14-1.5x80 G12.9 N500	14				
4	611301	HUB FLANGE	1				
5	611953	HUB ASSY / UNITISED L.H. & R.H. "TIMKEN" / REPLACED BY: 611471	1				R
5	611471	HUB ASSY / UNITISED L.H. & R.H. "FAG" ASSY W/"ABS" RING	1				R
5	611303	HUB ASSY / UNITISED L.H. & R.H. "TIMKEN" / REPLACED BY: 611474		1	1	1	I
5	611474	HUB ASSY / UNITISED L.H. & R.H. "FAG" ASSY W/"ABS" RING		1	1	1	I
. NS	611472	. HUB ASSY / UNITISED L.H. & R.H. "FAG"		1	1	1	
. NS	611473	. TOOTH WHEEL / FRONT AXLE & TAG W/ "FAG"		1	1	1	
NS	491115	TOOL, HUB INSTALLER W/UNITISED BEARING	1				
. NS	NDS8	. MAINTENANCE INSTRUCTION	1				
6	611044	WASHER FL HARD 21.0x37.0x3.0 N500	6				
7	611308	SCREW CAP HEX M20-2.5x100 G12.9 Up to 7-0869	4				
7	5001193	SCREW CAP HEX M20-2.5x65 G10.9 ZP Up to 7-0869	2				
7	5001529	SCREW CAP HEX M20-1.5x60 G10.9 ZP From 7-0870	6				
11	612384	BUSHING / ABS SENSOR	1				
12	611304	TOOTH WHEEL / FRONT AXLE W/ "TIMKEN" 138.89MM I.D.		1	1	1	I
12	611473	TOOTH WHEEL / FRONT AXLE & TAG W/ "FAG" 143.90MM I.D.		1	1	1	I,D
13	N.S.S.	TOOTH WHEEL / FRONT AXLE RIGID INCLUDE WITH ITEM #5	1				1 R
14	110786	BRAKE WEAR INDICATOR MECHANICAL	1				
20	20434082	NUT R.H. / W/HUB-MOUNT WHEEL M22-1.5 / 27MM TH	10				
21	611207	STUD / R.H. / W/HUB-MOUNT WHEEL M22-1.5 x 81MM	10				
22	611300	ROTOR VENTED	1				
23	641096	CLIP, SPRING / TO FIX SENSOR	1				
24	642084	SENSOR ABS 90° ANGLE	1				
24	642085	SENSOR ABS	1				
24	642184	SENSOR ABS	1				
25	611039	CALIPER MOUNTING BRACKET L.H. & R.H.	1				
26	611030	STUD 1/2-20 X 1 11/16"	AR				
27	5007001	NUT HEX STO 1/2-20 ZP G "C"	AR				
30	Y2-1225-00	**BRAKE PARTS - FRONT AXLE - W/"KNORR-BREMSE" / SB7 SERIES**					
30	Y2-1225-01	**BRAKE PARTS "KNORR-BREMSE" SN7 SERIES**					
30	Y2-1225-02	**BRAKE PARTS "KNORR-BREMSE" SN7 SERIES W/NEW SLIDE PINS**	1				
31	Y2-1225-10	**BRAKE CHAMBER - FRONT AXLE TYPE 22**					
31	Y2-1225-11	**BRAKE CHAMBER - FRONT AXLE TYPE 24**					
32	Y2-1005-00	**FRONT AXLE - I BEAM RIGID MODEL "S-84"**					
33	Y2-1005-50	**FRONT AXLE - INDEPENDENT MODEL "IS-84" / 16500LBS**					
NS	MI08-04	SEE MAINTENANCE INFORMATION	1				
		1) NOT SOLD SEPARATELY					
		D) WITH HUB "FAG" ONLY					
		I) WITH INDEPENDENT SUSPENSION					
		R) WITH I BEAM RIGID SUSPENSION					

From Y-7046 Up to 3-8164	DATE: 01/2014	PAGE: Y2-1300-99

HUB & ROTOR - FRONT AXLE MODEL "S84U" & "NDIFS80P"

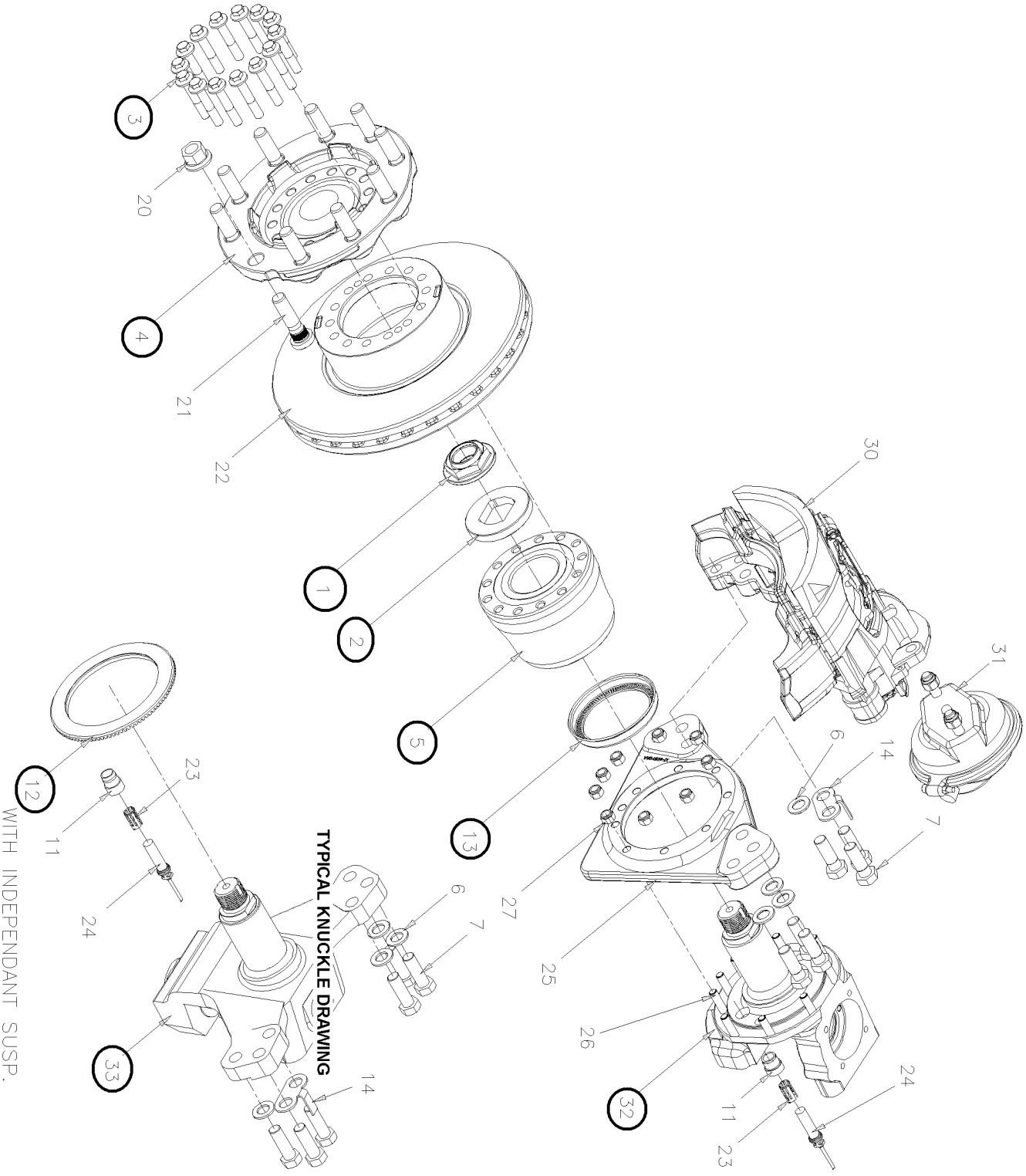

From Y-7046 Up to 3-8164	DATE: 01/2014	PAGE: Y2-1300-99

HUB & ROTOR - FRONT AXLE MODEL "S84U" & "NDIFS80P"

ITEM	PART	DESCRIPTION	XL45	MTH40	MTH45	MTH45S	NOTE
		. . . . . "WARNING" - "WARNING" - "WARNING"					
		THIS KIT DO NOT INCLUDE CALIPERS & BRAKE CHAMBER					
		KIT INCLUDE PARTS W/GREEN SPOT W/CIRCLE					
	611328	KIT, RETROFIT RIGID FRONT AXLE / UNITISED	1				
	611329	KIT, RETROFIT INDE FRONT AXLE / UNITISED		1	1	1	
1	611949	HUB NUT 1 3/4-8	2				
2	611948	THRUST WASHER	2				
3	611955	SCREW CAP HEXF M14-1.5x80 G12.9 N500	28				
4	611301	HUB FLANGE	2				
5	611953	HUB ASSY / UNITISED L.H. & R.H. "TIMKEN" / REPLACED BY: 611471	2				R
5	611471	HUB ASSY / UNITISED L.H. & R.H. "FAG" ASSY W/"ABS" RING	2				R
5	611303	HUB ASSY / UNITISED L.H. & R.H. "TIMKEN" / REPLACED BY: 611474		2	2	2	I
5	611474	HUB ASSY / UNITISED L.H. & R.H. "FAG" ASSY W/"ABS" RING		2	2	2	I
. NS	611472	. HUB ASSY / UNITISED L.H. & R.H. "FAG"		1	1	1	
. NS	611473	. TOOTH WHEEL / FRONT AXLE & TAG W/ "FAG"		1	1	1	
NS	491115	TOOL, HUB INSTALLER W/UNITISED BEARING	AR				
. NS	NDS8	. MAINTENANCE INSTRUCTION	1				
6	611044	WASHER FL HARD 21.0x37.0x3.0 N500	12				
7	5001529	SCREW CAP HEX M20-1.5x60 G10.9 ZP	12				
11	612384	BUSHING / ABS SENSOR	1				
12	611304	TOOTH WHEEL / FRONT AXLE W/ "TIMKEN" 138.89MM I.D.		1	1	1	I
12	611473	TOOTH WHEEL / FRONT AXLE & TAG W/ "FAG" 143.90MM I.D.		1	1	1	I,D
13	N.S.S.	TOOTH WHEEL / FRONT AXLE RIGID INCLUDE WITH ITEM #5	1				1 R
14	110786	BRAKE WEAR INDICATOR MECHANICAL	AR				
20	20434082	NUT R.H. / W/HUB-MOUNT WHEEL M22-1.5 / 27MM TH	10				
21	611207	STUD / R.H. / W/HUB-MOUNT WHEEL M22-1.5 x 81MM	10				
22	611300	ROTOR VENTED	2				
23	641096	CLIP, SPRING / TO FIX SENSOR	1				
24		REMOVED FROM YOUR VEHICLE					
25	611039	CALIPER MOUNTING BRACKET L.H. & R.H.	1				
26	611030	STUD 1/2-20 X 1 11/16"	AR				
27	5007001	NUT HEX STO 1/2-20 ZP G "C"	AR				
30	Y2-1225-00	**BRAKE PARTS - FRONT AXLE - W/"KNORR-BREMSE" / SB7 SERIES**					
30	Y2-1225-01	**BRAKE PARTS "KNORR-BREMSE" SN7 SERIES**					
30	Y2-1225-02	**BRAKE PARTS "KNORR-BREMSE" SN7 SERIES W/NEW SLIDE PINS**					
31	Y2-1225-10	**BRAKE CHAMBER - FRONT AXLE TYPE 22**					
31	Y2-1225-11	**BRAKE CHAMBER - FRONT AXLE TYPE 24**					
32	611289	KNUCKLE L.H.	1				R
		1) NOT SOLD SEPARATELY					
		D) WITH HUB "FAG" ONLY					
		I) WITH INDEPENDENT SUSPENSION					
		R) WITH I BEAM RIGID SUSPENSION					

From Y-7046 Up to 3-8164	DATE: 01/2014	PAGE: Y2-1300-99

HUB & ROTOR - FRONT AXLE MODEL "S84U" & "NDIFS80P"

ITEM	PART	DESCRIPTION	XL45	MTH40	MTH45	MTH45S	NOTE
32	611290	KNUCKLE R.H.	1				R
33	611334	KNUCKLE L.H. / W/PARALLEL KING PIN ONLY W/RETROFIT UNITISED		1	1	1	I
33	611335	KNUCKLE R.H. / W/PARALLEL KING PIN ONLY W/RETROFIT UNITISED		1	1	1	I
NS	MI08-04	SEE MAINTENANCE INFORMATION	1				
		I) WITH INDEPENDENT SUSPENSION					
		R) WITH I BEAM RIGID SUSPENSION					

From Y-7046 Up to 3-8164	DATE: 01/2014	PAGE: Y2-1300-99

HUB & ROTOR - FRONT AXLE MODEL "S84U" & "NDIFS80P"

ITEM	PART	DESCRIPTION	XL45	MTH40	MTH45	MTH45S	NOTE

From Y-7046 Up to 8-9339	DATE: 01/2014	PAGE: Y2-1305-00

HUB & ROTOR - DRIVE AXLE

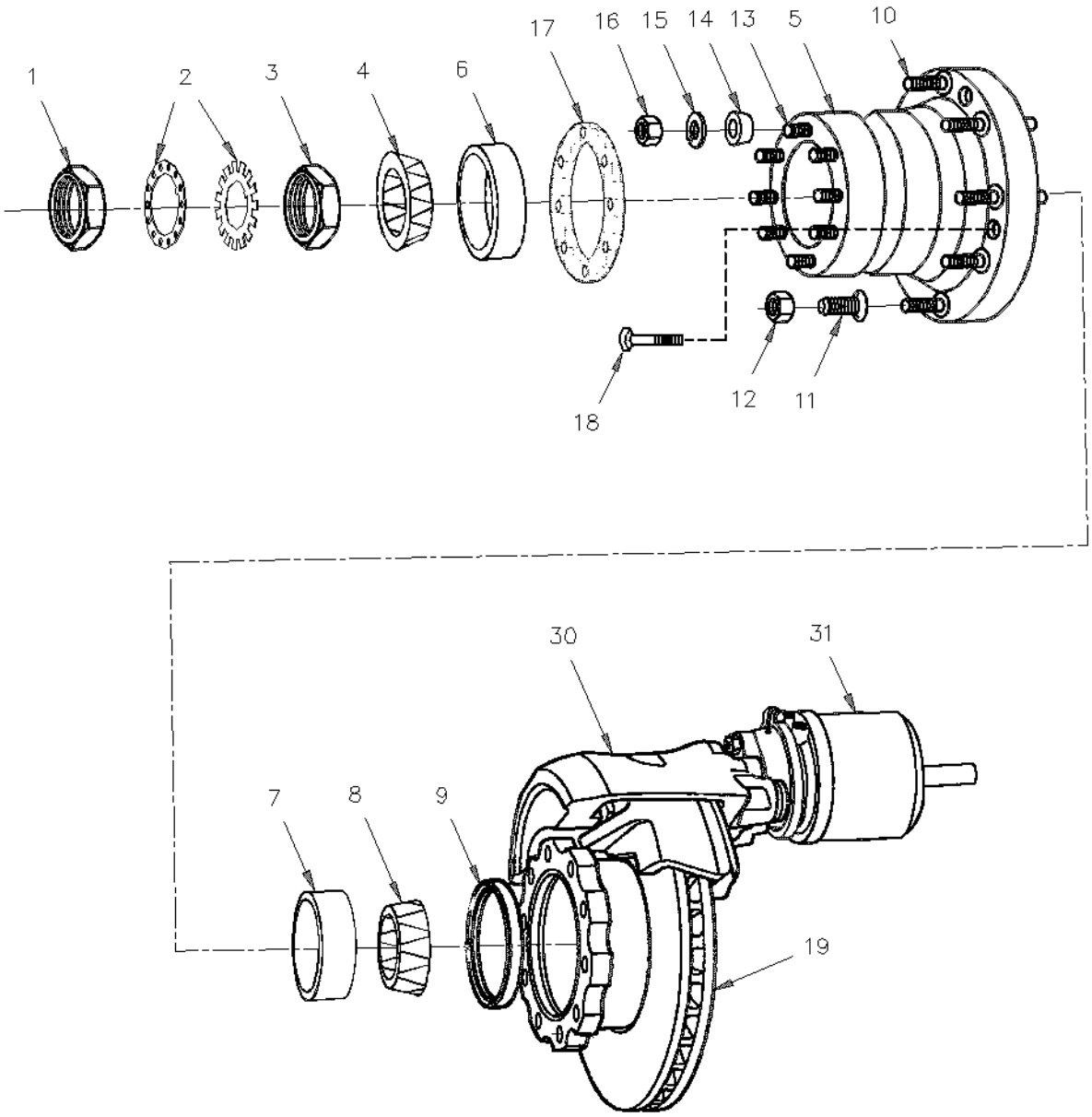

From Y-7046 Up to 8-9339	DATE: 01/2014	PAGE: Y2-1305-00

HUB & ROTOR - DRIVE AXLE

ITEM	PART	DESCRIPTION	XL45	MTH40	MTH45	MTH45S	NOTE
1	620275	NUT OUTER / WHEEL BEARING	1	1	1	1	
2	621624	WASHER LOCK / KIT	1	1	1	1	
3	620279	NUT INNER / WHEEL BEARING	1	1	1	1	
4	620034	CONE BEARING / OUTER WHEEL BEARING	1	1	1	1	A
5	621617	HUB & CUPS ASSY	2	2	2	2	
6	620032	. CUP BEARING	1	1	1	1	A
7	621210	. CUP BEARING	1	1	1	1	B
8	621209	CONE BEARING	1	1	1	1	B
9	621623	SEAL OIL	1	1	1	1	
10	621634	STUD / L.H. / W/STUD-MOUNT WHEEL	10	10	10	10	
10	621633	STUD / R.H. / W/STUD-MOUNT WHEEL	10	10	10	10	
10	621645	STUD / R.H. / W/HUB-MOUNT WHEEL M22-1.5 x 100MM	10	10	10	10	
10	621686	STUD / R.H. / W/HUB-MOUNT WHEEL M22-1.5 x 110MM	AR	AR	AR	AR	D
10	621689	STUD / R.H. / W/HUB-MOUNT WHEEL 7/8-14x4.32"	AR	AR	AR	AR	C
11	610961	NUT R.H. INNER / W/STEEL INSIDE & ALUM. OUTSI	10	10	10	10	
11	610962	NUT L.H. INNER / W/STEEL INSIDE & ALUM. OUTSI	10	10	10	10	
11	611192	NUT R.H. INNER / W/2 ALUMINUM WHEEL	10	10	10	10	
11	611191	NUT L.H. INNER / W/2 ALUMINUM WHEEL	10	10	10	10	
11	620250	NUT R.H. INNER / W/2 STEEL WHEEL	10	10	10	10	
11	620251	NUT L.H. INNER / W/2 STEEL WHEEL	10	10	10	10	
12	610175	NUT L.H. 1 1/8-16 / STUD MOUNT WHEEL	10	10	10	10	
12	610176	NUT R.H. 1 1/8-16 / STUD MOUNT WHEEL	10	10	10	10	
12	611189	NUT R.H. / W/HUB-MOUNT WHEEL M22-1.5 / 30MM TH Up to 3-8128 / REPLACED BY: 20434082	10	10	10	10	
12	20434082	NUT R.H. / W/HUB-MOUNT WHEEL M22-1.5 / 27MM TH From 3-8129	10	10	10	10	
12	610774	NUT R.H. / W/HUB-MOUNT WHEEL 7/8-14	AR	AR	AR	AR	C
13	621730	STUD / 5/8-11x 5/8-18 x 2 7/8"	8	8	8	8	
14	621627	DOWEL 5/8" I.D.	8	8	8	8	
15	5001518	WASHER LO EXT .625x1.070x.055 ZP	8	8	8	8	
16	500723	NUT HEX 5/8-18 ZP	8	8	8	8	
17	620351	GASKET / AXLE SHAFT W/8 STUDS	AR	AR	AR	AR	
18	621628	SCREW CAP HEXS 5/8-18x1 3/4 GR8	10	10	10	10	
19	621672	ROTOR SOLID (W/TOOTH WHEEL / DRIVE AXLE) / REPLACED BY: 611457	1	1	1	1	
19	611457	ROTOR VENTED (W/TOOTH WHEEL / DRIVE AXLE)	1	1	1	1	
30	Y2-1235-00	**BRAKE PARTS - DRIVE AXLE "MERITOR" W/DISCS / SB7 SERIES Up to 9-9159**					
30	Y2-1225-01	**BRAKE PARTS "KNORR-BREMSE" SN7 SERIES From 9-9160**					
31	Y2-1235-10	**BRAKE CHAMBER - DRIVE AXLE "KNORR-BREMSE"**					
32	Y2-1235-00	**BRAKE PARTS - DRIVE AXLE "MERITOR" W/DISCS / SB7 SERIES**					
NS	621652	KIT, CUP & CONE	1	1	1	1	
NS	621653	KIT, CUP & CONE	1	1	1	1	
NS	684646	SEAL INSTALLER TOOL / DRIVE W/DISC	1	1	1	1	
		A) ALSO AVAILABLE IN KIT #621652					
		B) ALSO AVAILABLE IN KIT #621653					
		C) CUSTOMMER SPECIAL "OPTION"					
		D) WITH 2 ALUMINUM WHEELS					

From Y-7046 Up to 8-9339	DATE: 01/2014	PAGE: Y2-1305-00

HUB & ROTOR - DRIVE AXLE

ITEM	PART	DESCRIPTION	XL45	MTH40	MTH45	MTH45S	NOTE
NS	Y2-1305-99	**ROTOR (SPLINED DISC) PRODUCT IMPROVMENT**					

From Y-7046 Up to 8-9339	DATE: 01/2014	PAGE: Y2-1305-00

HUB & ROTOR - DRIVE AXLE

ITEM	PART	DESCRIPTION	XL45	MTH40	MTH45	MTH45S	NOTE

From Y-7046 Up to 8-9339	DATE: 01/2014	PAGE: Y2-1305-99
ROTOR (SPLINED DISC) PRODUCT IMPROVMENT		

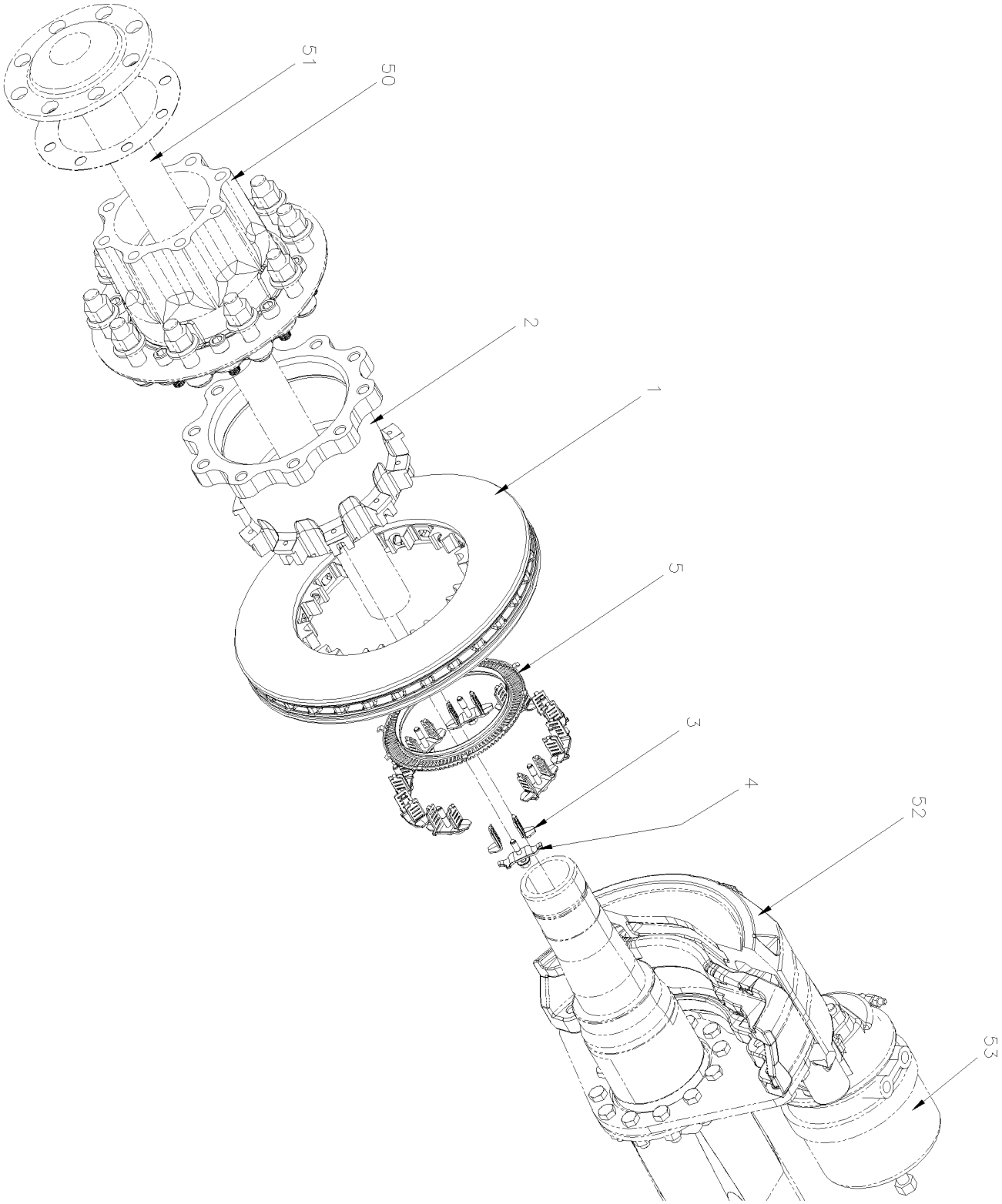

From Y-7046 Up to 8-9339	DATE: 01/2014	PAGE: Y2-1305-99

ROTOR (SPLINED DISC) PRODUCT IMPROVMENT

ITEM	PART	DESCRIPTION	XL45	MTH40	MTH45	MTH45S	NOTE
	144982	KIT SPLINED BRAKE DISC ON DRIVE AXLE	1	1	1	1	
. NS	IS-09085	. SEE INSTRUCTION SHEET	1	1	1	1	
1	144984	. ROTOR / "SPLINED DISC"	1	1	1	1	
2	144983	. ROTOR ADAPTOR / "SPLINED DISC"	1	1	1	1	
3	144986	. PIECE INTERMEDIATE / "SPLINED DISC"	20	20	20	20	
4	144985	. SPRING ELEMENT / "SPLINED DISC"	10	10	10	10	
5	124921	. TOOTH WHEEL / DRIVE AXLE / "SPLINED DISC"	1	1	1	1	
50	Y2-1305-00	**HUB & ROTOR - DRIVE AXLE**					
51	Y2-1105-00	**REAR AXLE - MODEL "RC23160"**					
52	Y2-1235-00	**BRAKE PARTS - DRIVE AXLE "MERITOR" W/DISCS / SB7 SERIES**					
52	Y2-1225-01	**BRAKE PARTS "KNORR-BREMSE" SN7 SERIES**	1				
53	Y2-1235-10	**BRAKE CHAMBER - DRIVE AXLE "KNORR-BREMSE"**					

From Y-7046 Up to 3-8164	DATE: 01/2014	PAGE: Y2-1310-00

HUB & ROTOR - TAG AXLE TYPE TS6

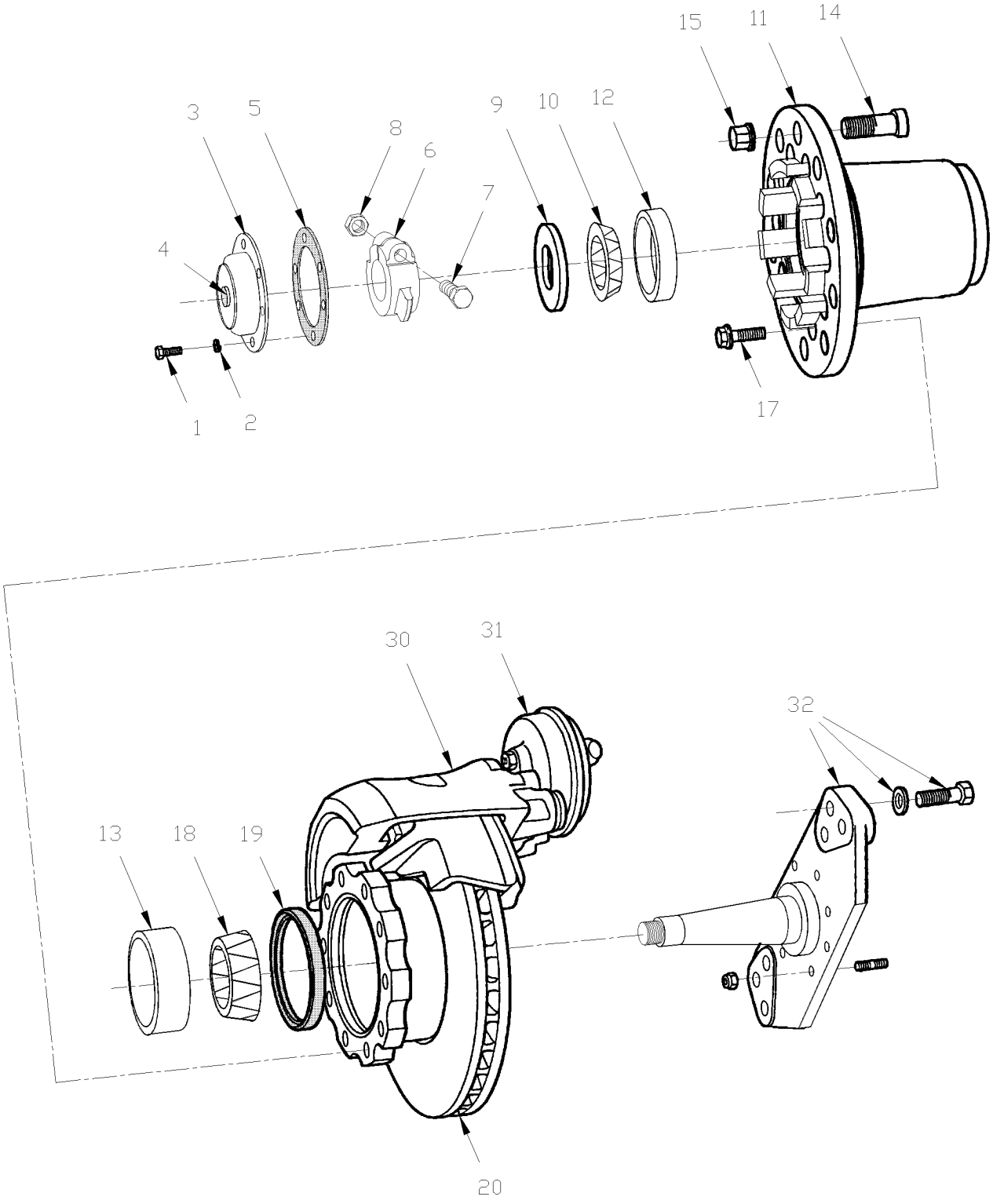

From Y-7046 Up to 3-8164	DATE: 01/2014	PAGE: Y2-1310-00

HUB & ROTOR - TAG AXLE TYPE TS6

ITEM	PART	DESCRIPTION	XL45	MTH40	MTH45	MTH45S	NOTE
1	502790	SCREW CAP HEX M8-1.25x20 G8.8 ZP	6				
2	5001003	WASHER LO SPT 8.1x12.7x2.0 ZP	6				
3	611243	HUB CAP / W/GREASE ONLY	1				
3	611210	HUB CAP / ALUMINUM / "STEMCO" / REPLACED BY: 611250	1				
. NS	MI07-04	. SEE MAINTENANCE INFORMATION	1				
4	611211	. KIT, HUB CAP WINDOW	1				
4	611242	. PLUG VENT / RED / W/ALU HUB CAP "STEMCO"	1				
5	611261	. GASKET HUB CAP / "STEMCO"	1				
6	611217	NUT ADJUSTING / 1"3/8-12	1				
. NS	490912	. TOOL / NUT WHEEL BEARING ADJUSTMENT	1				
. NS	684734	. TOOL / NUT WHEEL BEARING ADJUSTMENT / TORQUE	1				
. NS	MI03-24	. SEE MAINTENANCE INFORMATION	1				
7	500052	SCREW CAP HEX 3/8-24x2 G5 ZP	1				
8	500704	NUT HEX STO 3/8-24 ZP	1				
9	611218	WASHER / "D" BEARING	1				
10	611219	CONE BEARING / OUTER WHEEL BEARING	1				A
11	611215	HUB WHEEL / W/STANDARD WHEEL Up to 2-7766	1				
11	611260	HUB WHEEL / W/METRIC WHEEL From 2-7767	1				
12	611221	CUP BEARING / OUTER WHEEL BEARING	1				A
13	611220	CUP BEARING / INNER WHEEL BEARING	1				B
14	610996	STUD / R.H. / W/STUD-MOUNT WHEEL	10				
14	610995	STUD / L.H. / W/STUD-MOUNT WHEEL	10				
14	611207	STUD / R.H. / W/HUB-MOUNT WHEEL M22-1.5 x 81MM	10				
14	611208	STUD / R.H. / W/HUB-MOUNT WHEEL 7/8-14	10				C
15	610175	NUT L.H. 1 1/8-16 / STUD MOUNT WHEEL	10				
15	610176	NUT R.H. 1 1/8-16 / STUD MOUNT WHEEL	10				
15	611189	NUT R.H. / W/HUB-MOUNT WHEEL M22-1.5 / 30MM TH Up to 3-8128 / REPLACED BY: 20434082	10				
15	20434082	NUT R.H. / W/HUB-MOUNT WHEEL M22-1.5 / 27MM TH From 3-8129	10				
15	610773	NUT R.H. / W/HUB-MOUNT WHEEL 7/8-14	10				C
17	611007	SCREW CAP HEXF SERR M16-1.5x50 G10.9	10				
18	611222	CONE BEARING / INNER WHEEL BEARING	1				B
19	611081	SEAL ASSY/ WHEEL BEARING W/OIL	1				
19	611247	SEAL ASSY/ WHEEL BEARING W/OIL	1				
19	611174	SEAL ASSY / W/OIL / "SCOTT-SEAL PLUS"	AR				
20	611188	ROTOR SOLID / REPLACED BY: 611456	1				
20	611456	ROTOR VENTED	1				
30	Y2-1245-00	**BRAKE PARTS - TAG AXLE - W/"KNORR-BREMSE" / SB7 SERIES**					
31	Y2-1245-10	**BRAKE CHAMBER - TAG AXLE TYPE 16/16**					
32	Y2-1245-00	**BRAKE PARTS - TAG AXLE - W/"KNORR-BREMSE" / SB7 SERIES**					
NS	684645	SEAL INSTALLER TOOL / TAG TS-6	1				
41	611327	KIT, RETROFIT TAG AXLE / UNITISED TS8U Up to 3-8164	1				
		A) THIS CUP & CONE SOLD ONLY IN KIT #611228					
		B) THIS CUP & CONE SOLD ONLY IN KIT #611227					
		C) CUSTOM SPECIAL "OPTION"					

From 4-8165 Up to 8-9339	DATE: 01/2014	PAGE: Y2-1310-01
HUB & ROTOR - TAG AXLE TYPE TS8U		

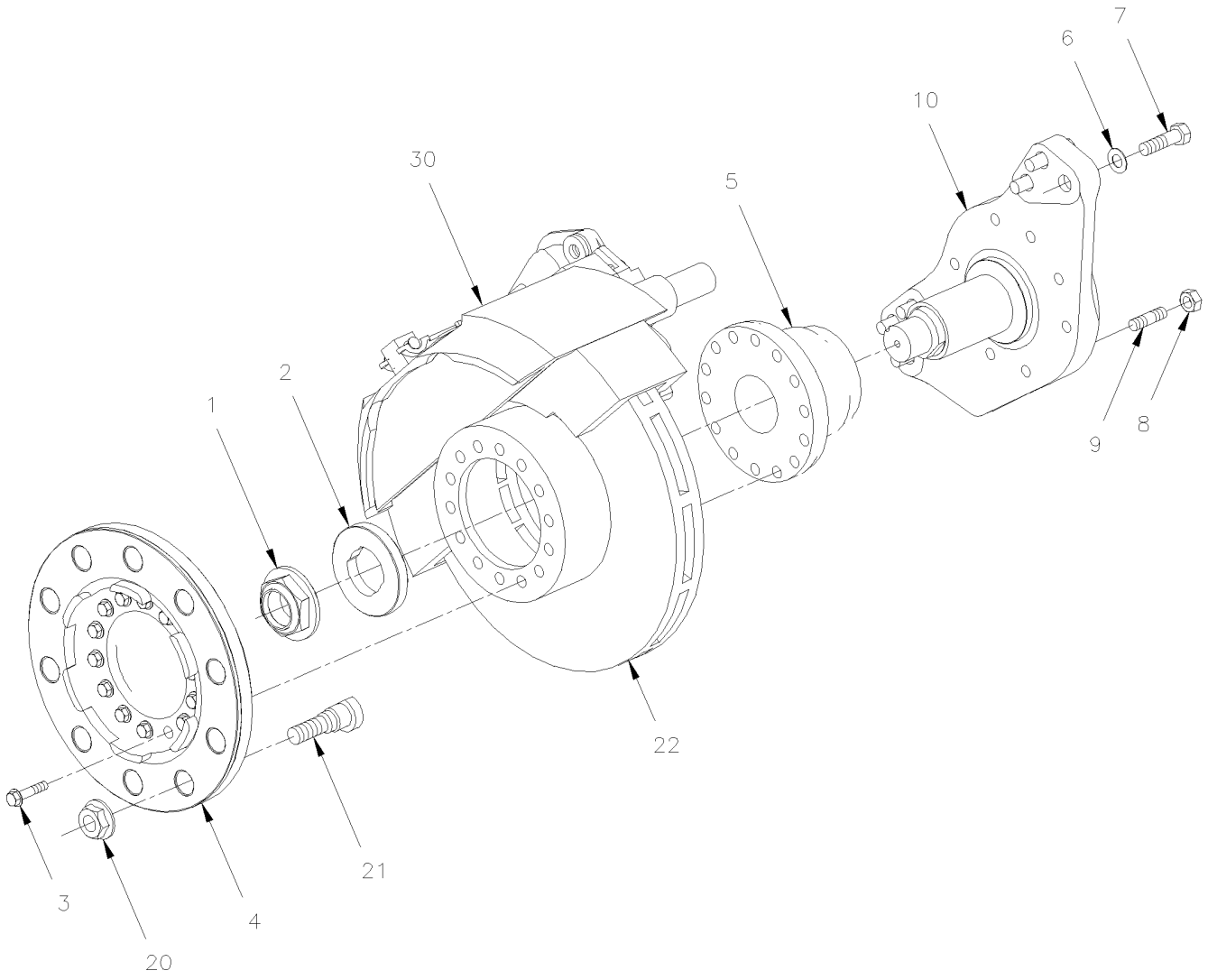

From 4-8165 Up to 8-9339	DATE: 01/2014	PAGE: Y2-1310-01

HUB & ROTOR - TAG AXLE TYPE TS8U

ITEM	PART	DESCRIPTION	XL45	MTH40	MTH45	MTH45S	NOTE
1	611949	HUB NUT 1 3/4-8	1	1	1	1	
2	611948	THRUST WASHER	1	1	1	1	
3	611955	SCREW CAP HEXF M14-1.5x80 G12.9 N500	14	14	14	14	
4	611301	HUB FLANGE	1	1	1	1	
5	611953	HUB ASSY / UNITISED L.H. & R.H. "TIMKEN" / REPLACED BY: 611471	1	1	1	1	
5	611471	HUB ASSY / UNITISED L.H. & R.H. "FAG" ASSY W/"ABS" RING SERVICE	1	1	1	1	
NS	491115	TOOL, HUB INSTALLER W/UNITISED BEARING	1	1	1	1	
. NS	NDS8	. MAINTENANCE INSTRUCTION	1	1	1	1	
6	611044	WASHER FL HARD 21.0x37.0x3.0 N500	1	1	1	1	
7	5001193	SCREW CAP HEX M20-2.5x65 G10.9 ZP Up to 7-9159	6	6	6	6	
8	502588	NUT HEX M16-2.0 ZP	8	8	8	8	
NS	502584	WASHER LO SERR 8.2x26.3x1.8 ZP	8	8	8	8	
9	611048	STUD / M16-2.0 x 60MM	8	8	8	8	
10	611302	SPINDLE / WITH MODEL "G.K.N." (TS8U UNITISED)	1	1	1	1	
20	20434082	NUT R.H. / W/HUB-MOUNT WHEEL M22-1.5 / 27MM TH	10	10	10	10	
21	611207	STUD / R.H. / W/HUB-MOUNT WHEEL M22-1.5 x 81MM	10	10	10	10	
22	611300	ROTOR VENTED	10	10	10	10	
30	Y2-1245-00	**BRAKE PARTS - TAG AXLE - W/"KNORR-BREMSE" / SB7 SERIES Up to 7-9159**					
30	Y2-1225-01	**BRAKE PARTS "KNORR-BREMSE" SN7 SERIES From 7-9160**					
30	Y2-1225-02	**BRAKE PARTS "KNORR-BREMSE" SN7 SERIES W/NEW SLIDE PINS**					
NS	MI08-04	SEE MAINTENANCE INFORMATION	1				

From Y-7046 Up to 3-8164	DATE: 01/2014	PAGE: Y2-1310-99

HUB & ROTOR - TAG AXLE TYPE TS8U RETROFIT "UNITISED" BEARING

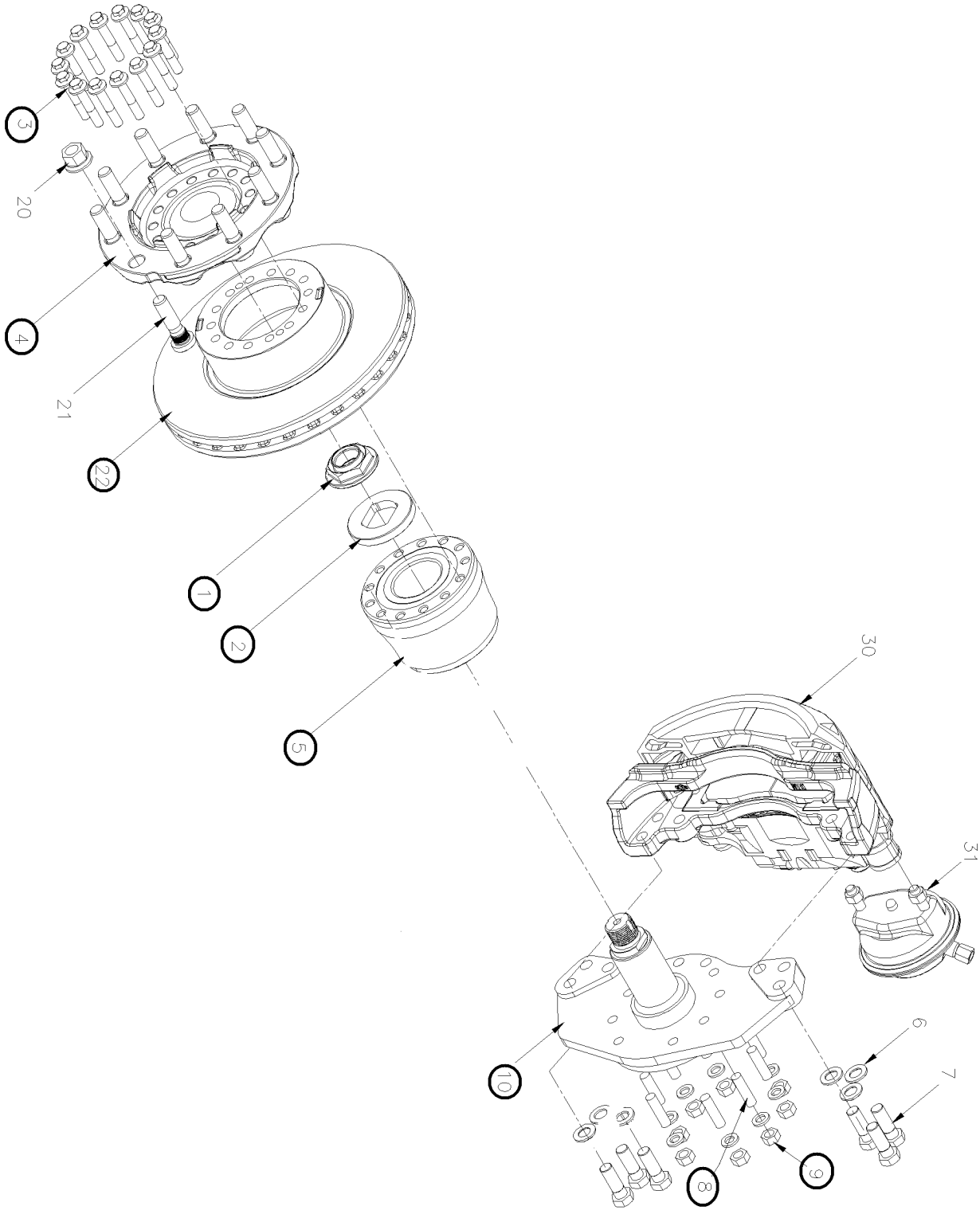

From Y-7046 Up to 3-8164	DATE: 01/2014	PAGE: Y2-1310-99

HUB & ROTOR - TAG AXLE TYPE TS8U RETROFIT "UNITISED" BEARING

ITEM	PART	DESCRIPTION	XL45	MTH40	MTH45	MTH45S	NOTE
		. . . . . "WARNING" - "WARNING" - "WARNING"					
		THIS KIT DO NOT INCLUDE CALIPERS & BRAKE CHAMBER					
		KIT INCLUDE PARTS W/GREEN SPOT W/CIRCLE					
	611327	KIT, RETROFIT TAG AXLE / UNITISED TS8U	1				
1	611949	HUB NUT 1 3/4-8	2				
2	611948	THRUST WASHER	2				
3	611955	SCREW CAP HEXF M14-1.5x80 G12.9 N500	28				
4	611301	HUB FLANGE	2				
5	611953	HUB ASSY / UNITISED L.H. & R.H. "TIMKEN" / REPLACED BY: 611471	2				
5	611471	HUB ASSY / UNITISED L.H. & R.H. "FAG" ASSY W/"ABS" RING	2				
6	611044	WASHER FL HARD 21.0x37.0x3.0 N500	12				
7	5001193	SCREW CAP HEX M20-2.5x65 G10.9 ZP	12				
8	611048	STUD / M16-2.0 x 60MM	16				
NS	502884	WASHER LO SPT 16.2x27.4x3.5 ZG603	16				
9	502588	NUT HEX M16-2.0 ZP	16				
10	611302	SPINDLE / WITH MODEL "G.K.N." (TS8U UNITISED)	2				
NS	491115	TOOL, HUB INSTALLER W/UNITISED BEARING	AR				
. NS	NDS8	. MAINTENANCE INSTRUCTION	1				
20	20434082	NUT R.H. / W/HUB-MOUNT WHEEL M22-1.5 / 27MM TH	10				
21	611207	STUD / R.H. / W/HUB-MOUNT WHEEL M22-1.5 x 81MM	10				
22	611300	ROTOR VENTED	2				
30	Y2-1245-00	**BRAKE PARTS - TAG AXLE - W/"KNORR-BREMSE" / SB7 SERIES**					
30	Y2-1225-01	**BRAKE PARTS "KNORR-BREMSE" SN7 SERIES**					
30	Y2-1225-02	**BRAKE PARTS "KNORR-BREMSE" SN7 SERIES W/NEW SLIDE PINS**					
31	Y2-1245-10	**BRAKE CHAMBER - TAG AXLE TYPE 16/16**					
NS	MI08-04	SEE MAINTENANCE INFORMATION	1				

From Y-7046 Up to 2-7766	DATE: 01/2014	PAGE: Y2-1318-00
WHEELS & COMPONENTS - BUS MOUNT (STANDARD)		

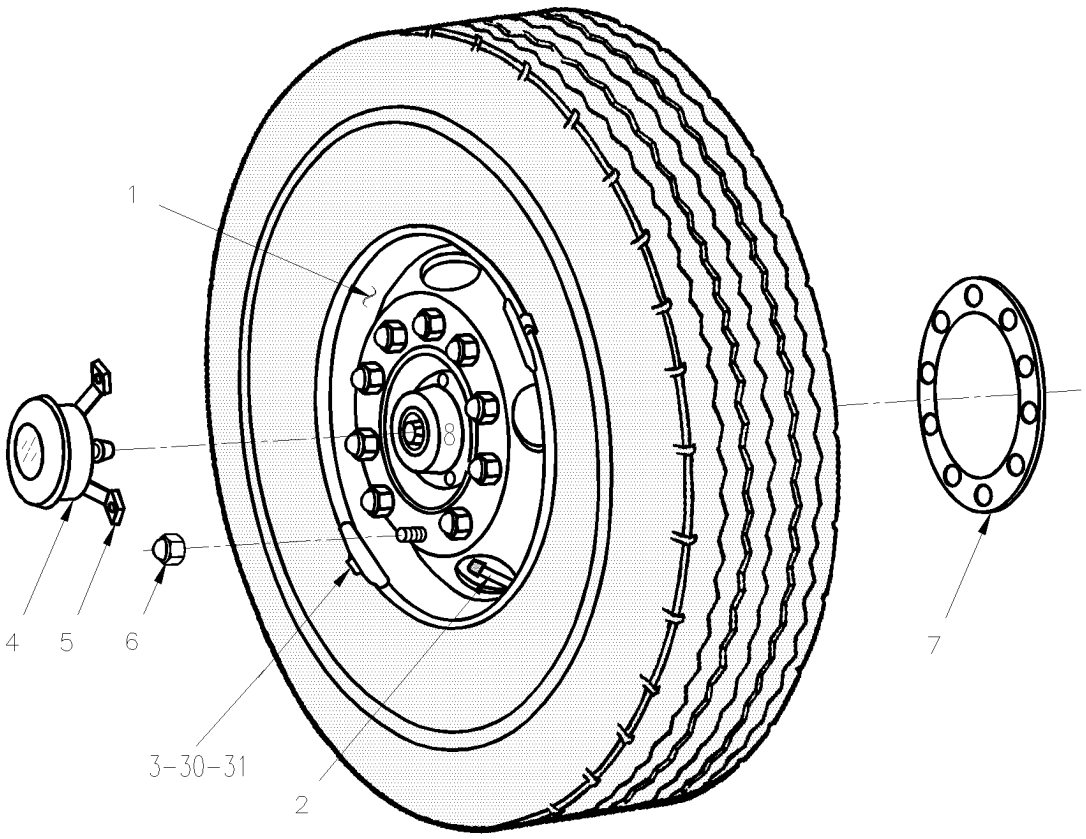

From Y-7046 Up to 2-7766	DATE: 01/2014	PAGE: Y2-1318-00
WHEELS & COMPONENTS - BUS MOUNT (STANDARD)		

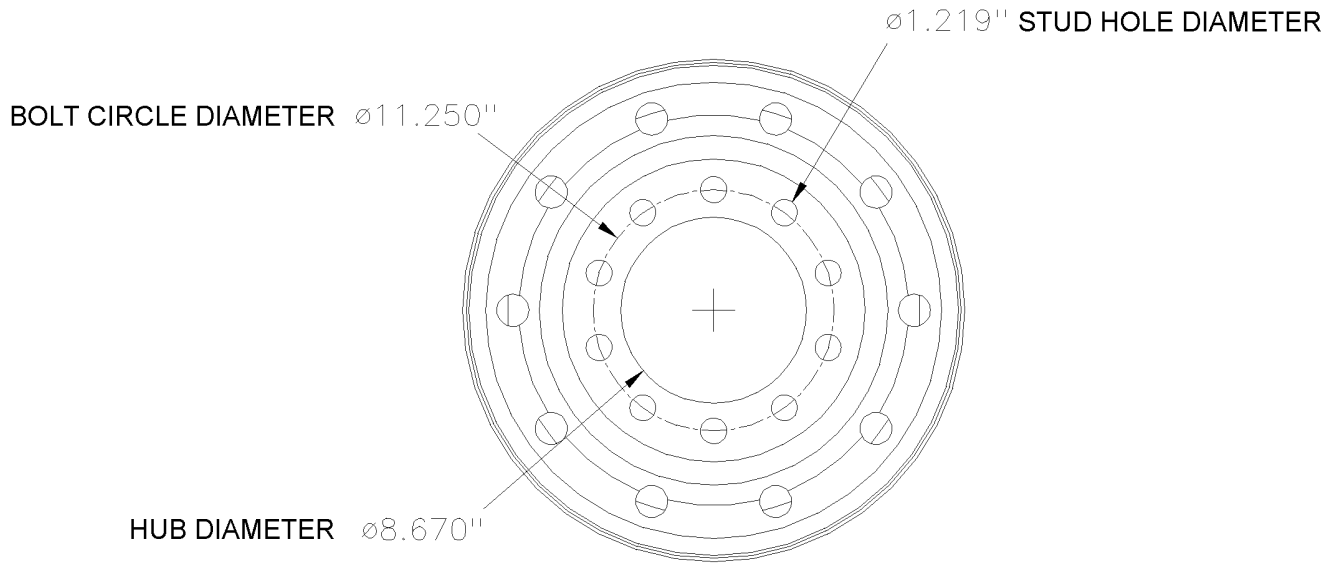

BUS MOUNT STANDARD

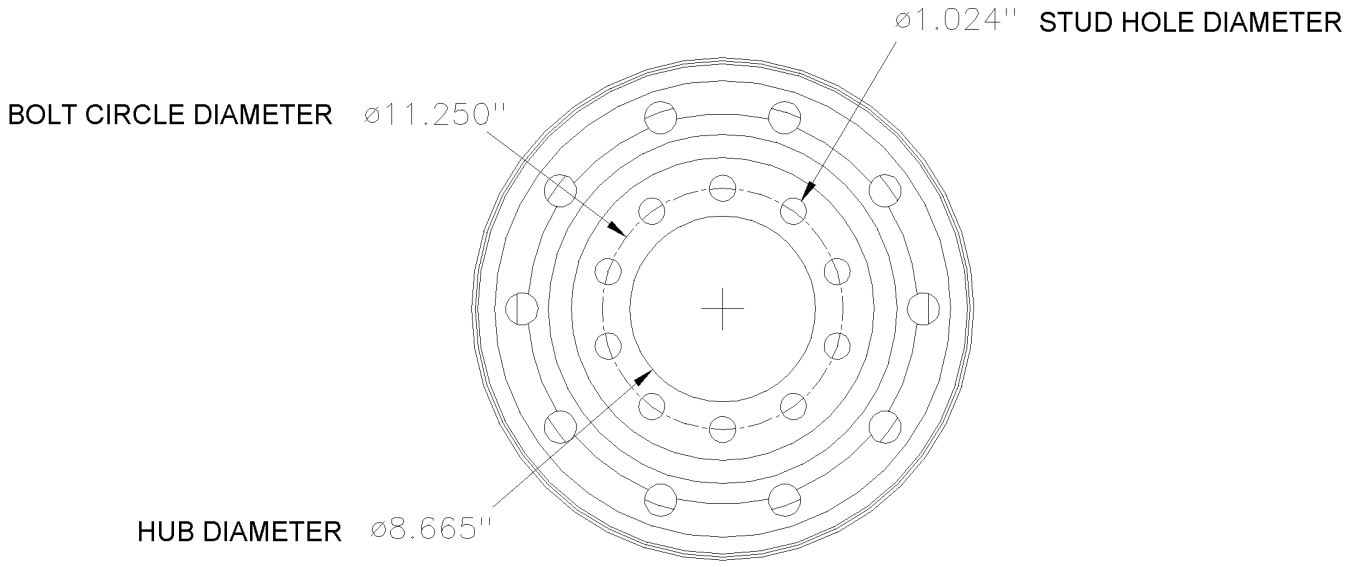

TRUCK MOUNT METRIC

From Y-7046 Up to 2-7766	DATE: 01/2014	PAGE: Y2-1318-00

WHEELS & COMPONENTS - BUS MOUNT (STANDARD)

ITEM	PART	DESCRIPTION	XL45	MTH40	MTH45	MTH45S	NOTE
		STEEL WHEELS / STUD MOUNTED					
1	650170	WHEEL, STEEL STUD 22.5 X 8.25 / WHITE	AR	AR	AR	AR	
1	650372	WHEEL, STEEL STUD 22.5 X 8.25 / GREY / POWDER COAT	AR	AR	AR	AR	
1	650162	WHEEL, STEEL STUD 22.5 X 9.00 / WHITE / 2 HAND HOLE PC	AR	AR	AR	AR	
		STEEL WHELLS / HUB-MOUNTED					
1	650169	WHEEL, STEEL HUB 22.5 X 8.25 / WHITE	AR	AR	AR	AR	
1	650373	WHEEL, STEEL HUB 22.5 X 8.25 / GREY / POWDER COAT	AR	AR	AR	AR	
1	650179	WHEEL, STEEL HUB 22.5 X 9.00 / WHITE	AR	AR	AR	AR	
		ALUMINUM WHELLS / STUD-MOUNTED					
1	650163	WHEEL, ALU. STUD 22.5 X 9.00 / BOTH SIDE POLISH / REPLACED BY: 650638	AR	AR	AR	AR	
1	650190	WHEEL, ALU. STUD 22.5 X 9.00 / INSIDE POLISH / REPLACED BY: 650666	AR	AR	AR	AR	
1	650191	WHEEL, ALU. STUD 22.5 X 9.00 / OUTSIDE POLISH	AR	AR	AR	AR	
		ALUMINUM WHELLS / HUB-MOUNTED					
1	650185	WHEEL, ALU. HUB 22.5 X 9.00 / INSIDE POLISH / REPLACED BY: 650222	AR	AR	AR	AR	
1	650186	WHEEL, ALU. HUB 22.5 X 9.00 / OUTISIDE POLISH / REPLACED BY: 650222	AR	AR	AR	AR	
NS							
		VALVES - VALVE EXTENTION & HOLDER					
2	150293	VALVE / W/STEEL WHEEL / "KNORR-BREMSE " BRAKE -	AR	AR	AR	AR	A
2	650154	VALVE / W/ALUMINUM WHEEL / 2.60" LG W/60 deg	AR	AR	AR	AR	
NS	650194	VALVE / W/ALUMINUM WHEEL / 1.38" LG W/60 deg	AR	AR	AR	AR	C
NS	650164	. CAP VALVE / CHROME	AR	AR	AR	AR	
NS	650151	. CAP VALVE / STD	AR	AR	AR	AR	
NS	650008	. SPRING VALVE	AR	AR	AR	AR	
NS	650205	. SPRING VALVE 21116	AR				
NS	650201	EXTENSION VALVE 2" LG	AR	AR	AR	AR	
NS	650188	EXTENSION VALVE / 7" LG	AR	AR	AR	AR	
NS	650178	RUBBER HOLDER / 1.5" O.D. / EXTENSION VALVE	AR	AR	AR	AR	
		A) USE THIS VALVE W/ALLS STEEL WHEELS, MOUNTED W/"KNORR-BREMSE" BRAKE SYSTEM					
		C) TO USE WITH NUT 3/8"X 1"½ THICK (610774) DRIVE AXLE					

From Y-7046 Up to 2-7766	DATE: 01/2014	PAGE: Y2-1318-00

WHEELS & COMPONENTS - BUS MOUNT (STANDARD)

ITEM	PART	DESCRIPTION	XL45	MTH40	MTH45	MTH45S	NOTE
		WEIGHTS					
3	650233	WEIGHT BALANCING / W/STEEL WHEEL / 2 OZ	AR	AR	AR	AR	
3	650232	WEIGHT BALANCING / W/STEEL WHEEL / 3 OZ	AR	AR	AR	AR	
3	650234	WEIGHT BALANCING / W/STEEL WHEEL / 4 OZ	AR	AR	AR	AR	
3	650235	WEIGHT BALANCING / W/STEEL WHEEL / 6 OZ	AR	AR	AR	AR	
3	650236	WEIGHT BALANCING / W/STEEL WHEEL / 8 OZ	AR	AR	AR	AR	
3	650237	WEIGHT BALANCING / W/STEEL WHEEL / 10 OZ	AR	AR	AR	AR	
3	650238	WEIGHT BALANCING / W/STEEL WHEEL / 12 OZ	AR	AR	AR	AR	
3	650175	WEIGHT BALANCING / W/ALUMINUM WHEEL / INT. &	AR	AR	AR	AR	
3	650109	WEIGHT BALANCING / W/ALUMINUM WHEEL / INT. &	AR	AR	AR	AR	
3	650110	WEIGHT BALANCING / W/ALUMINUM WHEEL / EXT. ON	AR	AR	AR	AR	
3	650114	WEIGHT BALANCING / W/ALUMINUM WHEEL / INT. ON	AR	AR	AR	AR	
3	650111	WEIGHT BALANCING / W/ALUMINUM WHEEL / EXT. ON	AR	AR	AR	AR	
3	650115	WEIGHT BALANCING / W/ALUMINUM WHEEL / INT. ON	AR	AR	AR	AR	
3	650112	WEIGHT BALANCING / W/ALUMINUM WHEEL / EXT. ON	AR	AR	AR	AR	
3	650116	WEIGHT BALANCING / W/ALUMINUM WHEEL / INT. ON	AR	AR	AR	AR	
3	650192	WEIGHT BALANCING / W/ALUMINUM WHEEL / W/ADHES	AR	AR	AR	AR	
3	650206	WEIGHT BALANCING / POWDER (12 OZ BAG)	AR	AR	AR	AR	
		HUBODOMETER					
4	650002	HUBODOMETER, COMPLETE 11 X 20 & 12 X 22.5 MPH	AR				
4	650117	HUBODOMETER, COMPLETE 11 X 20 & 12 X 22.5 KMH	AR				
4	590216	HUBODOMETER, COMPLETE 11 X 20 & 12 X 22.5 KMH	AR				
4	650174	HUBODOMETER, COMPLETE / FOR 295/80 KMH	AR				
5	650145	HUBODOMETER BRACKET / W/8 STUDS AXLE SHAFT	AR				
		OTHERS					
6	502823	CAP, PLASTIC CHROME / WHEEL NUT / STUD MOUNT	AR	AR	AR	AR	
6	502223	CAP, PLASTIC WHITE / WHEEL NUT / STUD MOUNT	AR	AR	AR	AR	
6	5001339	CAP, PLASTIC CHROME / WHEEL NUT / HUB MOUNT	AR	AR	AR	AR	
6	502221	CAP, PLASTIC CHROME / WHEEL NUT / HUB MOUNT	20	20	20	20	C
6	5001301	CAP, PLASTIC CHROME / WHEEL NUT / HUB MOUNT	40	40	40	40	D
		C) TO USE WITH NUT 3/8"X 1"½ THICK (610774)					
		DRIVE AXLE					
		D) TO USE WITH NUT 29/32" X 1"½ THICK (610773) /					
		FRONT & TAG AXLE					

From Y-7046 Up to 2-7766	DATE: 01/2014	PAGE: Y2-1318-00

WHEELS & COMPONENTS - BUS MOUNT (STANDARD)

ITEM	PART	DESCRIPTION	XL45	MTH40	MTH45	MTH45S	NOTE
7	650134	WHEEL GUARD MYLAR / <> WHEEL & HUB	AR	AR	AR	AR	
8	650224	HUB CAP PLASTIC CHROME W/NUT / STUD MOUNT	4	4	4	4	F
8	650225	HUB CAP PLASTIC CHROME W/NUT / STUD MOUNT	2	2	2	2	G
8	621683	HUB CAP PLASTIC CHROME W/NUT / HUB MOUNT	2	2	2	2	G
8	621673	HUB CAP PLASTIC CHROME W/NUT / STUD MOUNT	2				
NS	683529	CLEANER "ALUMINUM WHEEL" / SPRAY 22 OZ.	AR	AR	AR	AR	
NS	683527	SEALANT "ALLUMINUM WHEEL" / SPRAY 13 OZ.	AR	AR	AR	AR	
NS	683528	POLISH "ALLUMINUM WHEEL" / WAX 16 OZ.	AR	AR	AR	AR	
		VALVES - WITH TIRE PRESSURE SENSOR					
30	651090	DECAL / "REMOVE TIRE WITH CARE....." ENG	AR				
30	651091	DECAL / "REMOVE TIRE WITH CARE....." FR/ENG	AR				
31	Y2-1318-99	**TIRE MONITOR - PRESSURE & TEMPERATURE / "RETROFIT"**					
NS	MI03-26A	SEE MAINTENANCE INFORMATION	1				
		F) TO USE WITH FRONT & TAG WHEEL					
		G) TO USE WITH DRIVE AXLE WHEEL					

From Y-7046 Up to 2-7766	DATE: 01/2014	PAGE: Y2-1318-00

WHEELS & COMPONENTS - BUS MOUNT (STANDARD)

ITEM	PART	DESCRIPTION	XL45	MTH40	MTH45	MTH45S	NOTE

From 2-7767 Up to 8-9339	DATE: 01/2014	PAGE: Y2-1318-01
WHEELS & COMPONENTS - TRUCK MOUNT (METRIC)		

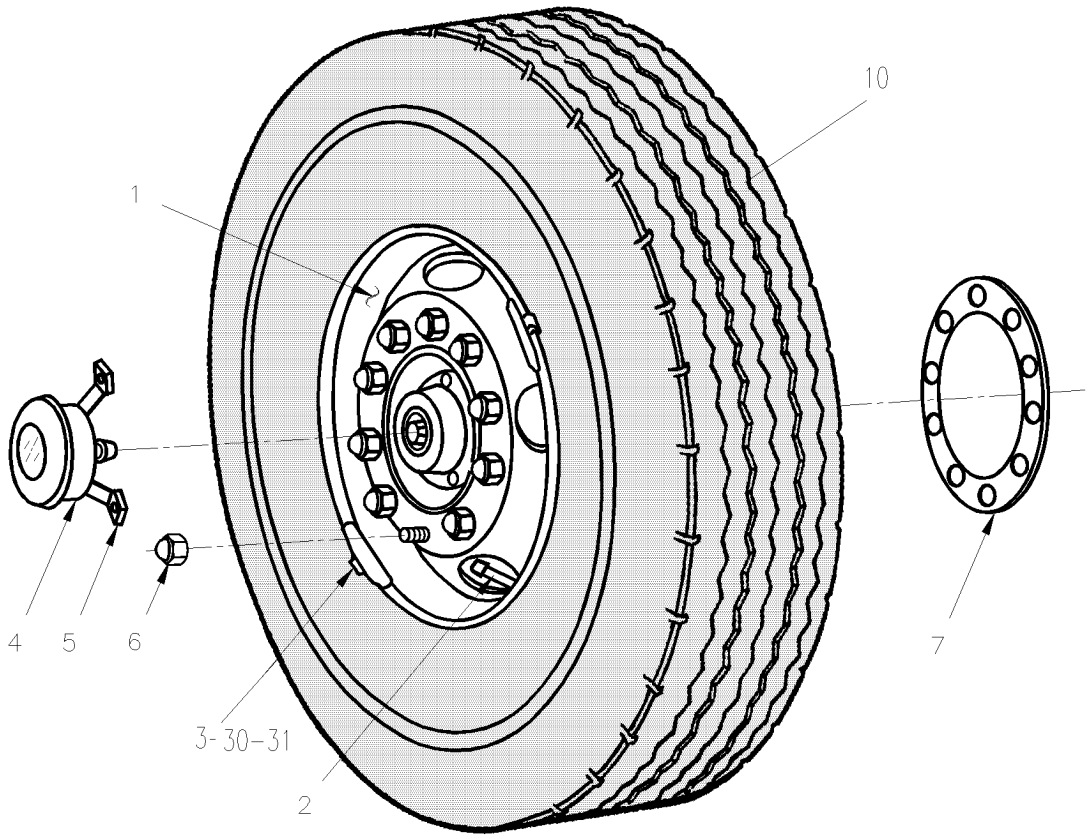

From 2-7767 Up to 8-9339	DATE: 01/2014	PAGE: Y2-1318-01
WHEELS & COMPONENTS - TRUCK MOUNT (METRIC)		

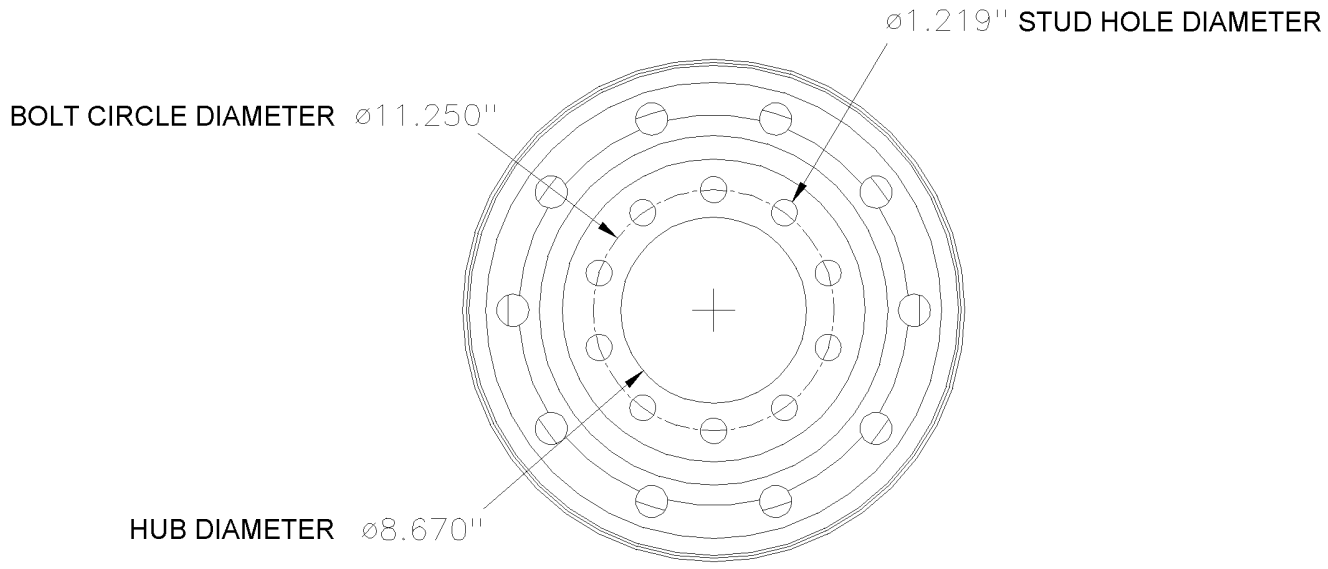

BUS MOUNT STANDARD

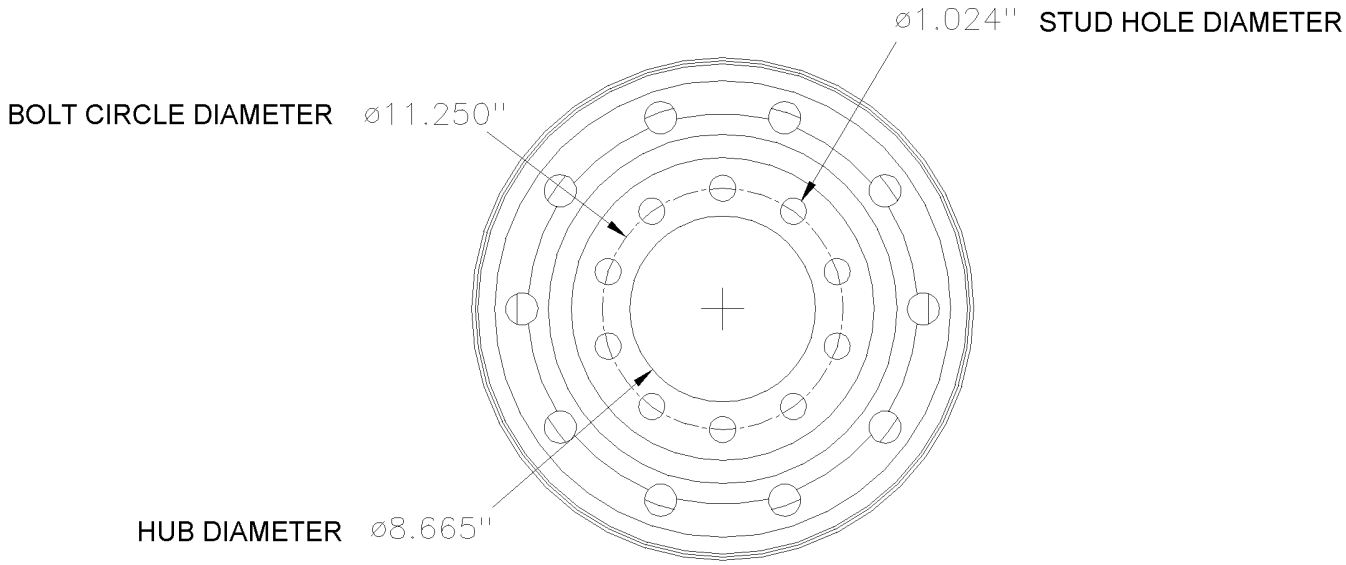

TRUCK MOUNT METRIC

From 2-7767 Up to 8-9339	DATE: 01/2014	PAGE: Y2-1318-01

WHEELS & COMPONENTS - TRUCK MOUNT (METRIC)

ITEM	PART	DESCRIPTION	XL45	MTH40	MTH45	MTH45S	NOTE
		STEEL WHEELS / HUB-MOUNTED					
1	650484	WHEEL, STEEL HUB 22.5 X 8.25 / WHITE / POWDER COAT	AR				
1	650486	WHEEL, STEEL HUB 22.5 X 9.00 / SILVER / POWDER COAT	AR				
1	650485	WHEEL, STEEL HUB 22.5 X 9.00 / WHITE / POWDER COAT	AR				
1	650487	WHEEL, STEEL HUB 22.5 X 8.25 / SILVER / POWDER COAT	AR				
1	650492	WHEEL, STEEL HUB 24.5 X 8.25 / SILVER / POWDER COAT	AR				
		ALUMINUM WHEELS / HUB-MOUNTED					
1	650488	WHEEL, ALU. HUB 22.5 X 9.00 / INSIDE POLISH / REPLACED BY: 650989	AR				C
1	650489	WHEEL, ALU. HUB 22.5 X 9.00 / OUTISIDE POLISH / REPLACED BY: 650959	AR				C
1	650490	WHEEL, ALU. HUB 22.5 X 9.00 / BOTH SIDE POLISH / REPLACED BY: 651021	AR				C
1	650491	WHEEL, ALU. HUB 22.5 X 9.00 / BOTH SIDE MACHINED	AR				C
1	650587	WHEEL, ALU. HUB 22.5 X 9.00 / BOTH SIDE DURA-BRIGHT / REPLACED BY: 651038	AR				C
1	650601	WHEEL, ALU. HUB 22.5 X 9.00 / INSIDE DURA BRIGHT	AR				C
1	650602	WHEEL, ALU. HUB 22.5 X 9.00 / OUTSIDE DURA-BRIGHT / REPLACED BY: 650976	AR				C
1	650662	WHEEL, ALU. HUB 22.5 X 10.5 / BOTH SIDE DURA-BRIGHT	AR				C
1	650483	WHEEL, ALU. HUB 24.5 X 8.25 / BOTH SIDE POLISH	AR				C
1	650443	WHEEL, ALU. HUB 22.5 X 10.5 / OUTSIDE POLISH	AR				C
1	650958	WHEEL, ALU. HUB 22.5 X 9.00 / BOTH SIDE MACHINED	AR				H
1	650959	WHEEL, ALU. HUB 22.5 X 9.00 / OUTISIDE POLISH	AR				H
1	650976	WHEEL, ALU. HUB 22.5 X 9.00 / OUTSIDE DURA-BRIGHT	AR				H
1	650989	WHEEL, ALU. HUB 22.5 X 9.00 / INSIDE POLISH	AR				H
1	651007	WHEEL, ALU. HUB 22.5 X 9.00 / INSIDE DURA BRIGHT	AR				H
1	651021	WHEEL, ALU. HUB 22.5 X 9.00 / BOTH SIDE POLISH	AR				H
1	651038	WHEEL, ALU. HUB 22.5 X 9.00 / BOTH SIDE DURA-BRIGHT	AR				H
1	650728	WHEEL, ALU. HUB 22.5 X 14.00 / OUTSIDE POLISH / REPLACED BY: 651548	AR				S
1	651548	WHEEL, ALU. HUB 22.5 X 14.00 / OUTSIDE POLISH	AR				S
1	650729	WHEEL, ALU. HUB 22.5 X 14.00 / INSIDE DURA BRIGHT / REPLACED BY: 651549	AR				S
1	651549	WHEEL, ALU. HUB 22.5 X 14.00 / INSIDE DURA BRIGHT	AR				S
		C) USE WITH 650178 RUBBER HOLDER					
		H) USE WITH 651064 RUBBER HOLDER					
		S) USE ONLY WITH SUPER SINGLE TIRE (650447)					

From 2-7767 Up to 8-9339	DATE: 01/2014	PAGE: Y2-1318-01

WHEELS & COMPONENTS - TRUCK MOUNT (METRIC)

ITEM	PART	DESCRIPTION	XL45	MTH40	MTH45	MTH45S	NOTE
		WHEELS / STUD MOUNTED					
1	650638	WHEEL, ALU. STUD 22.5 X 9.00 / BOTH SIDE DURA-BRIGHT	AR				
1	650666	WHEEL, ALU. STUD 22.5 X 9.00 / INSIDE DURA BRIGHT	AR				
1	650667	WHEEL, ALU. STUD 22.5 X 9.00 / OUTSIDE DURA-BRIGHT / REPLACED BY: 650191	AR				
		VALVES - VALVE EXTENTION & HOLDER					
2	150293	VALVE / W/STEEL WHEEL / "KNORR-BREMSE " BRAKE -	AR				A
2	650194	VALVE / W/ALUMINUM WHEEL / 1.38" LG W/60 deg	AR				
2	650744	VALVE / W/ALUMINUM WHEEL / 1.26" LG	AR				
2	651078	VALVE / W/ALUMINUM WHEEL / 2.31" LG	AR				
2	651114	VALVE / W/ALUMINUM WHEEL / 2.60" LG W/60 deg	AR				
NS	650164	. CAP VALVE / CHROME	AR				
NS	650151	. CAP VALVE / STD	AR				
NS	650008	. SPRING VALVE	AR				
NS	650205	. SPRING VALVE 21116	AR				B
2	650201	EXTENSION VALVE 2" LG	AR				
NS	650188	EXTENSION VALVE / 7" LG	AR				
NS	650178	RUBBER HOLDER / 1.5" O.D. / EXTENSION VALVE Up to 5-8771	AR				
2	651064	RUBBER HOLDER / 2" O.D. / EXTENSION VALVE From 5-8772	AR				
		WEIGHTS					
3	650062	WEIGHT BALANCING / W/STEEL WHEEL / 2 OZ / REPLACED BY: 650233	AR				
3	650063	WEIGHT BALANCING / W/STEEL WHEEL / 3 OZ / REPLACED BY: 650232	AR				
3	650064	WEIGHT BALANCING / W/STEEL WHEEL / 4 OZ / REPLACED BY: 650234	AR				
3	650065	WEIGHT BALANCING / W/STEEL WHEEL / 6 OZ / REPLACED BY: 650235	AR				
3	650066	WEIGHT BALANCING / W/STEEL WHEEL / 8 OZ / REPLACED BY: 650236	AR				
3	650067	WEIGHT BALANCING / W/STEEL WHEEL / 10 OZ / REPLACED BY: 650237	AR				
3	650068	WEIGHT BALANCING / W/STEEL WHEEL / 12 OZ / REPLACED BY: 650238	AR				
3	650069	WEIGHT BALANCING / W/STEEL WHEEL / 14 OZ	AR				
3	650070	WEIGHT BALANCING / W/STEEL WHEEL / 16 OZ	AR				
		A) USE THIS VALVE WITH ALLS STEEL WHEELS MOUNTED					
		WITH "KNORR-BREMSE" BRAKE SYSTEM					
		B) USE THIS EXTENSION WITH POWDER BALANCING					
		WEIGHT					

From 2-7767 Up to 8-9339	DATE: 01/2014	PAGE: Y2-1318-01

WHEELS & COMPONENTS - TRUCK MOUNT (METRIC)

ITEM	PART	DESCRIPTION	XL45	MTH40	MTH45	MTH45S	NOTE
3	650175	WEIGHT BALANCING / W/ALUMINUM WHEEL / INT. &	AR				
3	650109	WEIGHT BALANCING / W/ALUMINUM WHEEL / INT. &	AR				
3	650110	WEIGHT BALANCING / W/ALUMINUM WHEEL / EXT. ON	AR				
3	650114	WEIGHT BALANCING / W/ALUMINUM WHEEL / INT. ON	AR				
3	650111	WEIGHT BALANCING / W/ALUMINUM WHEEL / EXT. ON	AR				
3	650115	WEIGHT BALANCING / W/ALUMINUM WHEEL / INT. ON	AR				
3	650112	WEIGHT BALANCING / W/ALUMINUM WHEEL / EXT. ON	AR				
3	650116	WEIGHT BALANCING / W/ALUMINUM WHEEL / INT. ON	AR				
3	650192	WEIGHT BALANCING / W/ALUMINUM WHEEL / W/ADHES	AR				
3	650206	WEIGHT BALANCING / POWDER (12 OZ BAG)	AR				
		HUBODOMETER					
4	650002	HUBODOMETER, COMPLETE 11 X 20 & 12 X 22.5 MPH	AR				
4	650117	HUBODOMETER, COMPLETE 11 X 20 & 12 X 22.5 KMH	AR				
4	590216	HUBODOMETER, COMPLETE 11 X 20 & 12 X 22.5 KMH	AR				
4	650174	HUBODOMETER, COMPLETE / FOR 295/80 KMH	AR				
5	650145	HUBODOMETER BRACKET / W/8 STUDS AXLE SHAFT	AR				
		OTHERS					
6	5001339	CAP, PLASTIC CHROME / WHEEL NUT / HUB MOUNT	60				E
7	650134	WHEEL GUARD MYLAR / <> WHEEL & HUB	AR				
8	621753	HUB CAP PLASTIC CHROME W/NUT / HUB MOUNT / METRIC	2				G
. NS	624215	. CAP NUT COVER WRENCH	1				
8	611339	HUB CAP PLASTIC CHROME W/NUT / HUB MOUNT / METRIC	2				F
. NS	611470	. HUB CAP PLASTIC CHROME W/NUT / HUB MOUNT / METRIC	2				
. NS	624215	. . CAP NUT COVER WRENCH 000600	1				
10	650447	TIRE MICHELIN 455/55 R22.5 X-ONE-XTE SUMMER TIRE / REPLACED BY: 651120	1				
10	652630	TIRE MICHELIN 455/55 R22.5 X ONE XDA-HT PLUS SUMMER TIRE / REPLACED BY: 651120	1				
10	651120	TIRE MICHELIN 455/55 R22.5 X ONE XONE XDA-ENERGY SUMMER TIRE	1				
10	651099	TIRE MICHELIN 455/55 R22.5 XD-N2 WINTER TIRE	1				
NS	683529	CLEANER "ALUMINUM WHEEL" / SPRAY 22 OZ.	AR				
		E) TO USE WITH NUT 22MM X 33MM THICK (611189)					
		F) TO USE WITH FRONT AND TAG WHEEL					
		G) TO USE WITH DRIVE AXLE WHEEL					

From 2-7767 Up to 8-9339	DATE: 01/2014	PAGE: Y2-1318-01

WHEELS & COMPONENTS - TRUCK MOUNT (METRIC)

ITEM	PART	DESCRIPTION	XL45	MTH40	MTH45	MTH45S	NOTE
NS	683527	SEALANT "ALLUMINUM WHEEL" / SPRAY 13 OZ.	AR				
NS	683528	POLISH "ALLUMINUM WHEEL" / WAX 16 OZ.	AR				
		VALVES - WITH TIRE PRESSURE SENSOR					
30	651090	DECAL / "REMOVE TIRE WITH CARE....." ENG	AR				
30	651091	DECAL / "REMOVE TIRE WITH CARE....." FR/ENG	AR				
31	Y2-1318-99	**TIRE MONITOR - PRESSURE & TEMPERATURE / "RETROFIT"**					
NS	MI02-17	SEE MAINTENANCE INFORMATION	1				
NS	MI03-26A	SEE MAINTENANCE INFORMATION	1				

From Y-7046	DATE: 01/2014	PAGE: Y2-1318-99

TIRE MONITOR - PRESSURE & TEMPERATURE / "RETROFIT"

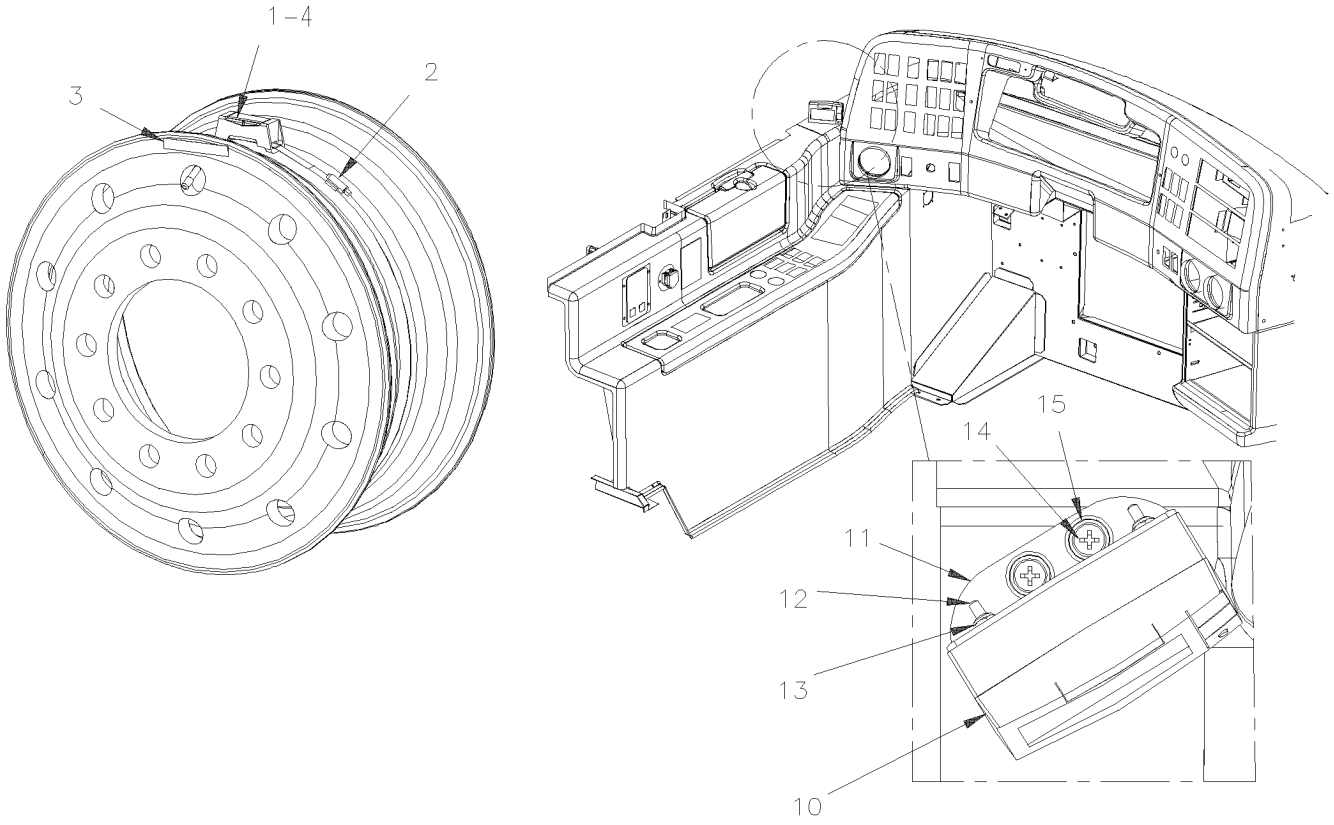

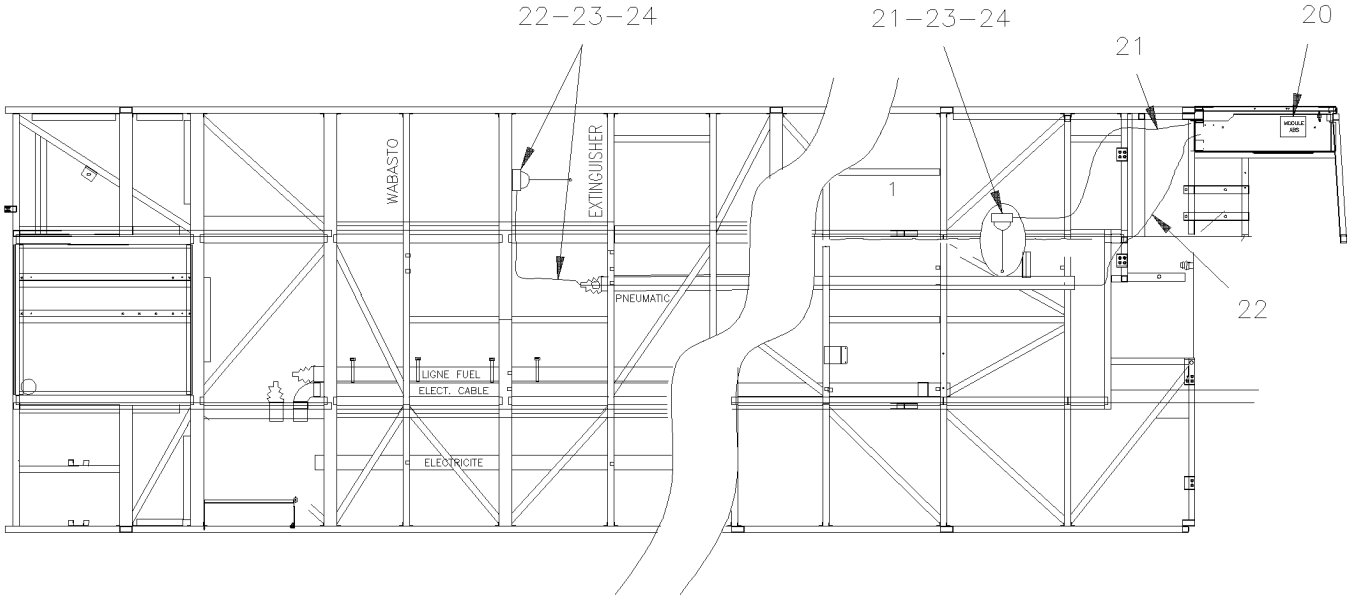

From Y-7046	DATE: 01/2014	PAGE: Y2-1318-99

TIRE MONITOR - PRESSURE & TEMPERATURE / "RETROFIT"

ITEM	PART	DESCRIPTION	XL45	MTH40	MTH45	MTH45S	NOTE
1	382333	DETECTOR PRESSURE & TEMPERATURE	AR		AR	AR	
2	507643	CLAMP DETECTOR PRESSURE / INSIDE OF WHEEL	AR		AR	AR	
3	066445	DECAL / "WARNING DETECTOR INSIDE" / ENGLISH	AR		AR	AR	
4	651068	CRADLE BOX / SENSOR	1		1	1	
10	382332	DISPLAY MONITOR TIRE / FULL PROGRAMATION	1		1	1	
11	382340	SUPPORT DISPLAY	1		1	1	
12	5001454	SCREW MA BDG PH #4-40x1/2 SS	2		2	2	
13	500425	NUT HEX NYRT #4-40 SS	2		2	2	
14	500353	SCREW TP FL PH #8x3/4 BK	2		2	2	
15	500345	WASHER FN CKF .187x.500x.090 BR BK	2		2	2	
20	382334	RECEIVER TIRE MONITOR / ASSY W/CONECTOR	1		1	1	
. NS	382355	. RECEIVER TIRE MONITOR	1		1	1	
21	382331	ANTENNA TIRE MONITOR / FRONT	1		1	1	
22	382335	ANTENNA TIRE MONITOR / REAR	1		1	1	
22	382358	SUPPORT ANTENNA TIRE MONITOR	2		2	2	
23	500623	SCREW TC PAN PH #10-24x3/4 ZG603	6		6	6	
24	500470	WASHER LO SPT .193x.334x.047 ZP	6		6	6	
NS	563611	INITIALER TIRE SMART CONTROLER / CUSTOMER USE ONLY TO START S	1		1	1	
NS	060910	KIT, COMPLET MODULE TIRE PSI DETECTOR / W/OUT MUX	1				
. NS	IS-04084A	. SEE INSTRUCTION SHEET	1				
NS	060910	KIT, COMPLET MODULE TIRE PSI DETECTOR / W/OUT MUX Up to 7-9095			1	1	
. NS	IS-04084A	. SEE INSTRUCTION SHEET Up to 7-9095			1	1	
NS	060906	KIT, COMPLET MODULE TIRE PSI DETECTOR / W/MUX From 7-9096			1	1	
. NS	IS-04084A	. SEE INSTRUCTION SHEET From 7-9096			1	1	

From Y-7046 Up to 8-9339	DATE: 01/2014	PAGE: Y2-1325-00

SPARE WHEEL - INSTALLATION

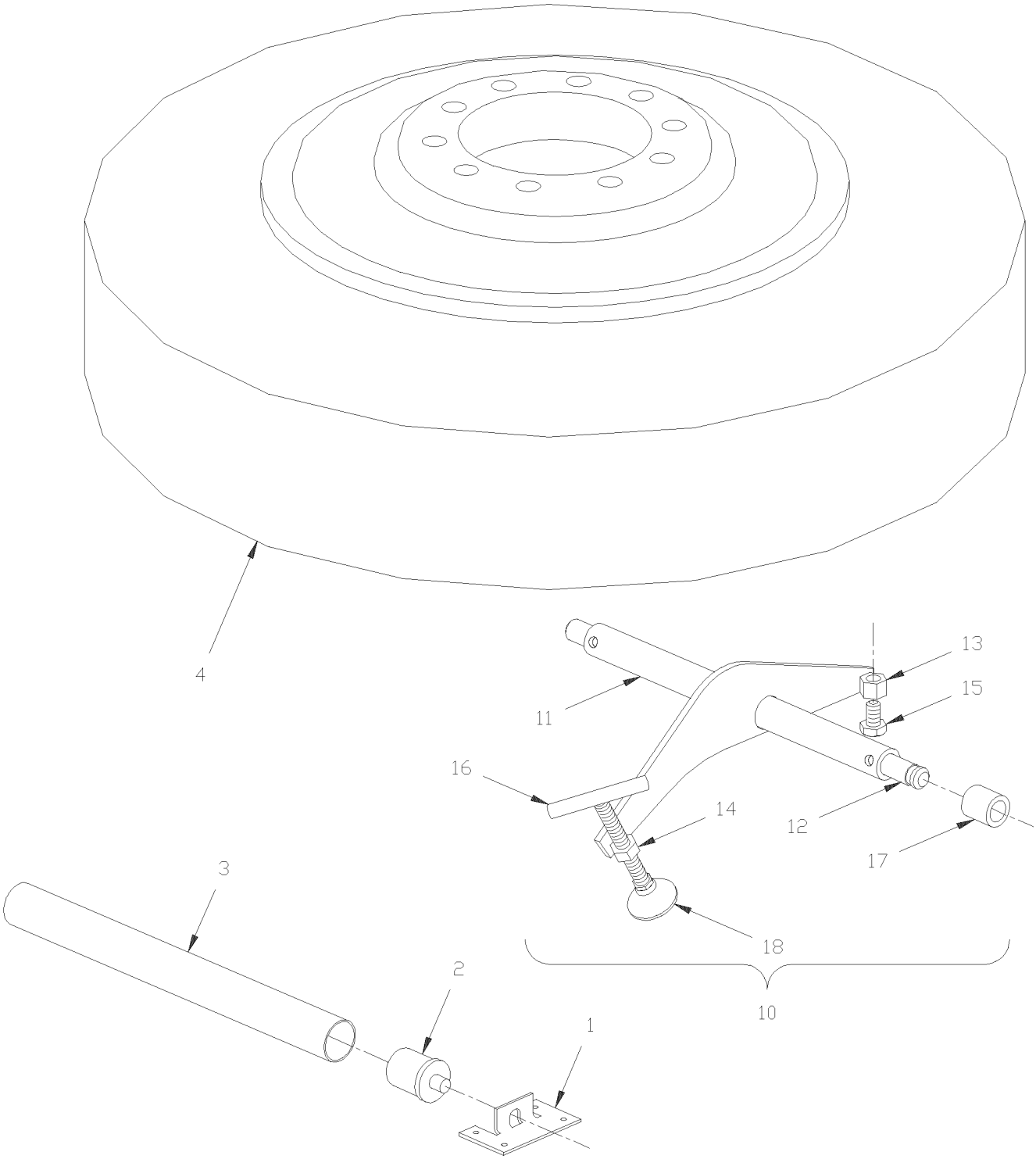

From Y-7046 Up to 8-9339	DATE: 01/2014	PAGE: Y2-1325-00

SPARE WHEEL - INSTALLATION

ITEM	PART	DESCRIPTION	XL45	MTH40	MTH45	MTH45S	NOTE
1	150313	ANGLE SUPPORT	4			4	
2	150314	AXLE SHAFT	4			4	
3	150318	TUBE	2			2	
4	150128	COVER SPARE WHEEL	1			1	
10	150768	ATTACHMENT SPARE TIRE RETAINER ASSY / COMPLETE	1			1	
10	150670	ATTACHMENT SPARE TIRE RETAINER ASSY / COMPLETE / REPLACED BY: 150788	1			1	
11	150769	. ATTACHMENT ASSY	1			1	
11	150669	. ATTACHMENT ASSY	1			1	
12	150771	. . ATTACHMENT RETAINER ASSY	1			1	
13	500792	. . NUT HEX 5/8-11 ZP	1			1	
14	500789	. . NUT HEX 1/2-13 ZP	1			1	
15	500225	. SCREW CAP HEX 5/8-11x1 G5 ZP	1			1	
16	150223	. HANDLE ASSY	1			1	
17	150767	SPACER	1			1	
18	5001001	NUT SW 1/2-13	1			1	

From Y-7046 Up to 8-9339	DATE: 01/2014	PAGE: Y2-14
STEERING		

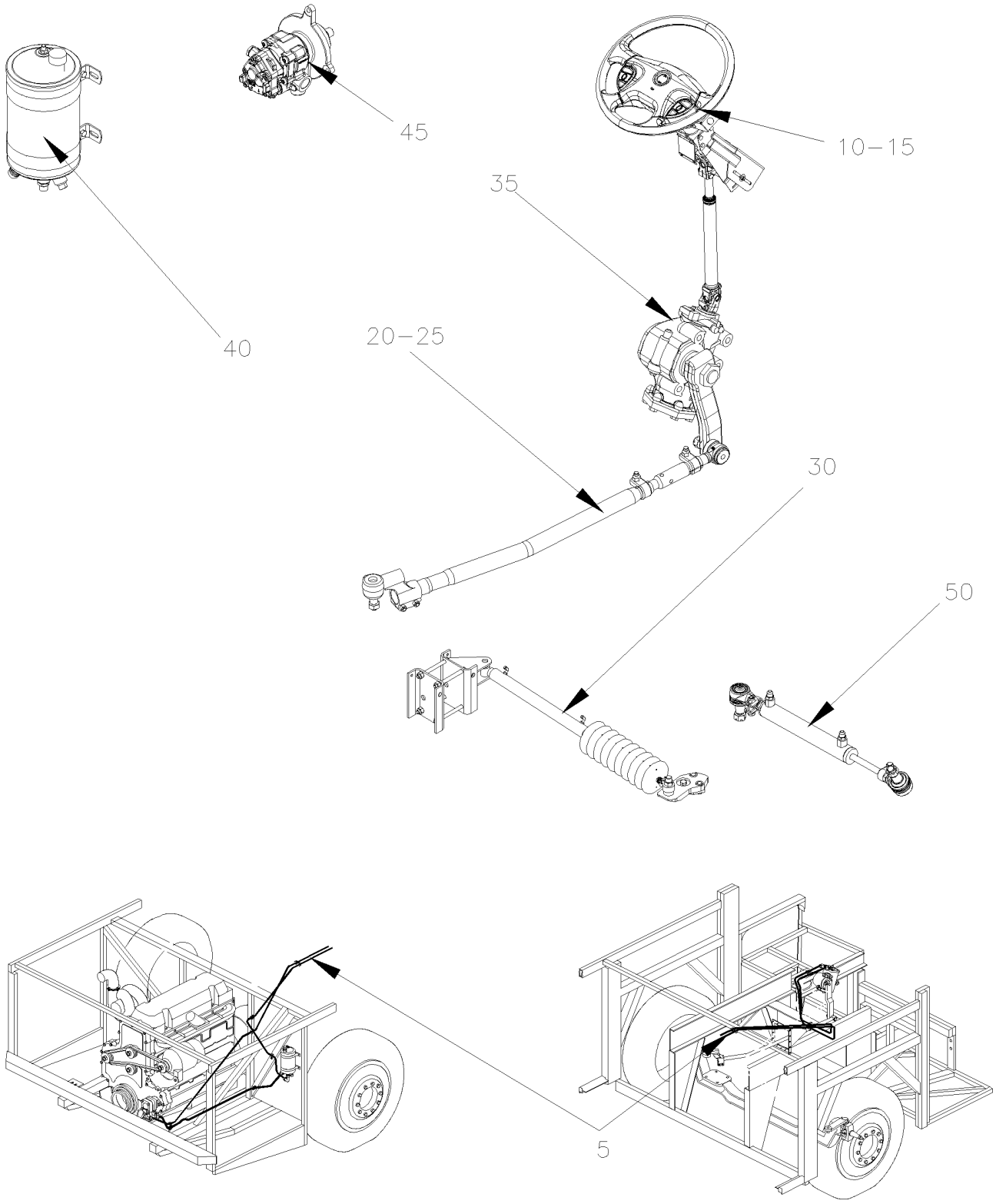

From Y-7046 Up to 8-9339	DATE: 01/2014	PAGE: Y2-14

STEERING

ITEM	PART	DESCRIPTION	XL45	MTH40	MTH45	MTH45S	NOTE
5	Y2-1400-00	**POWER STEERING HOSE INSTALLATION From Y-7046 Up to 8-9339**					
10	Y2-1405-00	**STEERING WHEEL & COLUMN ASSY From Y-7046 Up to 8-9339**					
15	Y2-1407-00	**STEERING COLUMN & COVER - INSTALLATION From Y-7046 Up to 8-9339**					
20	Y2-1410-00	**STEERING GEAR BOX & DRAG LINK INSTALL From Y-7046 Up to 6-8906**					
25	Y2-1410-50	**STEERING RODS - INSTALLATION W/INDEPENDENT "IS-84" / 16500LBS From Y-7046 Up to 3-8164**					
25	Y2-1410-51	**STEERING RODS - INSTALLATION W/INDEPENDENT "NDIFS80P" / 18000LBS From 4-8165 Up to 8-9339**					
30	Y2-1412-00	**STEERING DAMPER From Y-7046 Up to 6-8906**					
35	Y2-1415-00	**STEERING GEARBOX - "ZF" From Y-7046 Up to 8-9339**					
40	Y2-1420-00	**POWER STEERING TANK - 4 QT U.S. From Y-7046 Up to 8-9339**					
45	Y2-1427-00	**POWER STEERING PUMP - "TRW" From Y-7046 Up to 8-9339**					
50	Y2-1430-50	**CYLINDER POWER STEERING From 4-8165 Up to 8-9339**					

From Y-7046 Up to 8-9339	DATE: 01/2014	PAGE: Y2-1400-00

POWER STEERING HOSE INSTALLATION

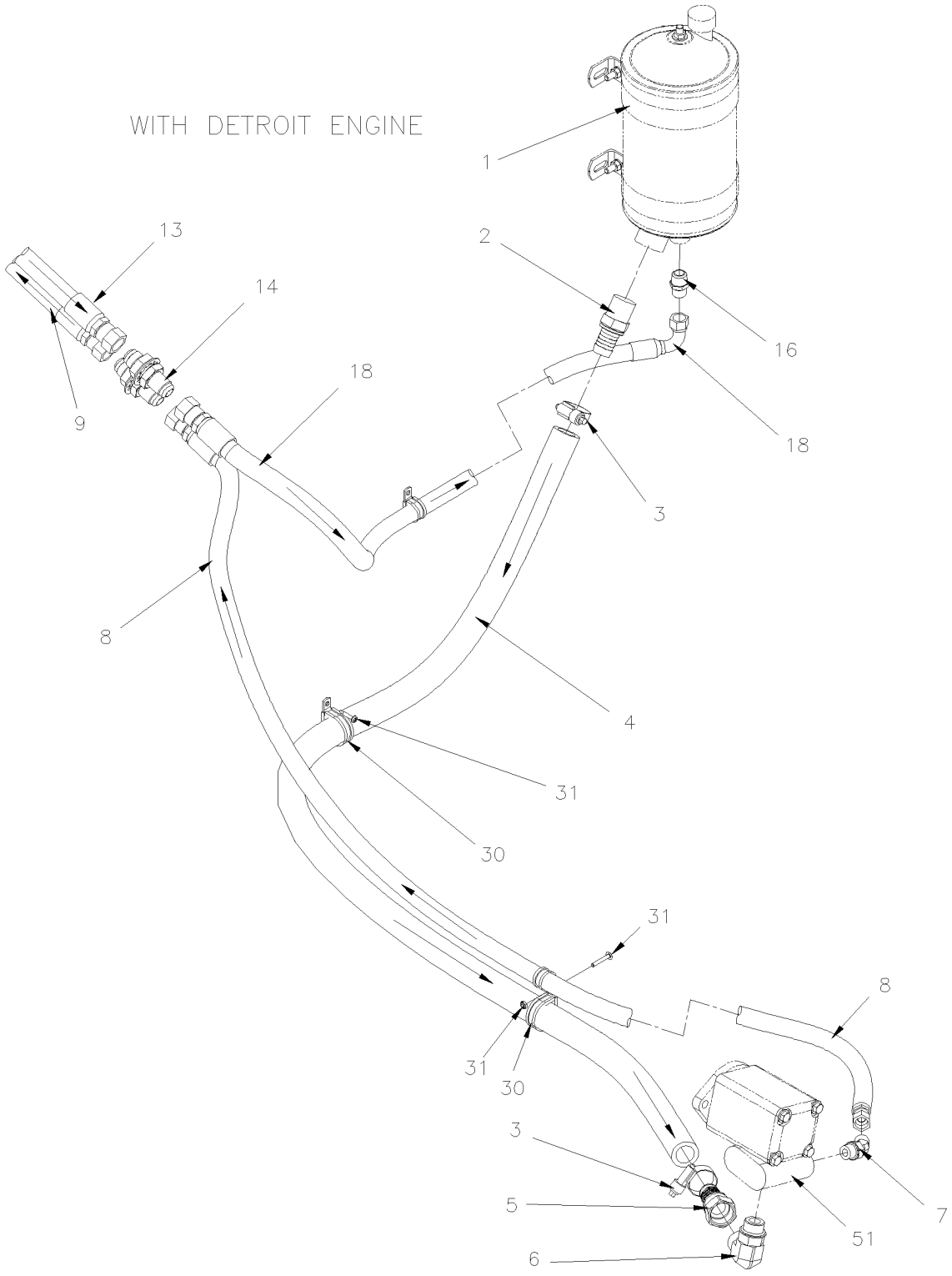

From Y-7046 Up to 8-9339	DATE: 01/2014	PAGE: Y2-1400-00

POWER STEERING HOSE INSTALLATION

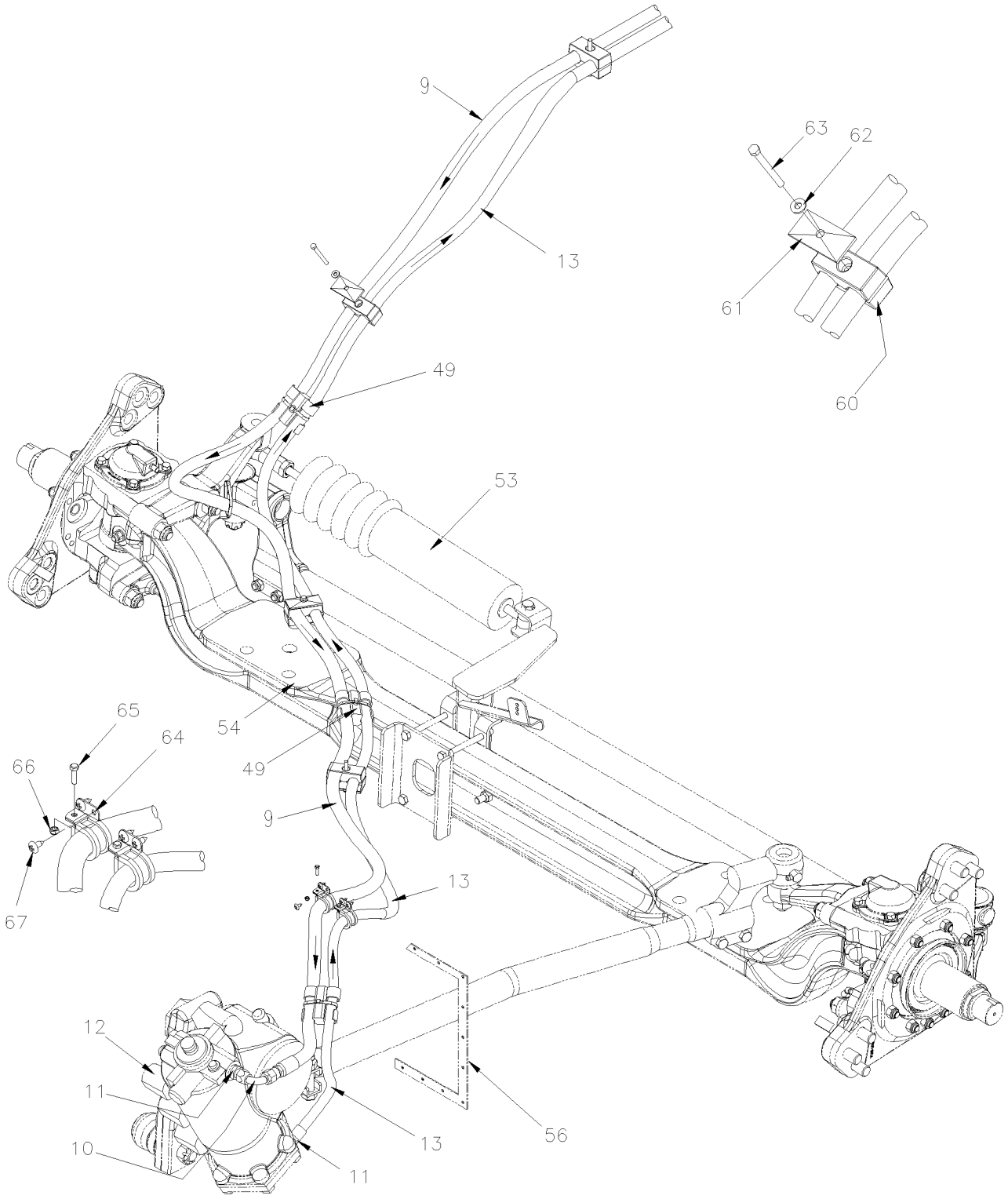

From Y-7046 Up to 8-9339	DATE: 01/2014	PAGE: Y2-1400-00

POWER STEERING HOSE INSTALLATION

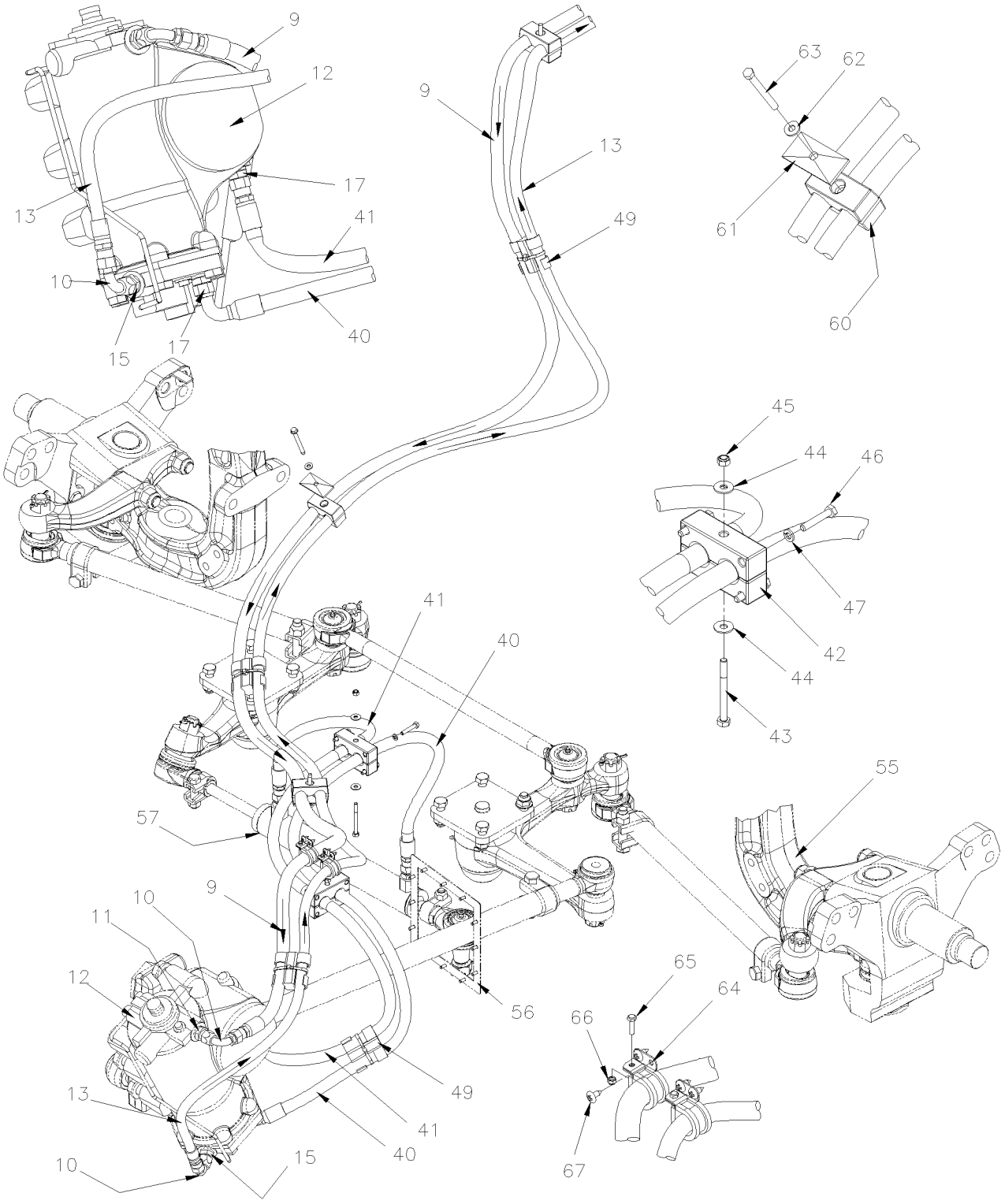

From Y-7046 Up to 8-9339	DATE: 01/2014	PAGE: Y2-1400-00

POWER STEERING HOSE INSTALLATION

ITEM	PART	DESCRIPTION	XL45	MTH40	MTH45	MTH45S	NOTE
1	Y2-1420-00	**POWER STEERING TANK - 4 QT U.S.**					
2	5011086	MALE CONNECTOR / PUSH-LOK FITTING / 1NPT-Mx#16 STL	1				
3	504291	HOSE CLAMP / 1"1/8-1"3/4 SS / E.T. 20	AR				
4	160995	HOSE #16 1200MM	1		1		
4	161131	HOSE #16 1350MM		1		1	
4	163483	HOSE #16 1450MM			1		
4	503577	. HOSE #16 250' / S.L.	AR				
5	5011147	FEMALE CONNECTOR SWIVEL / COLLAR FITTING / #16JIC-Fx#16 STL	1				
6	5011148	MALE ELBOW 90° / JIC 37° FITTING / #16JIC-Mx#12ORB-M STL	1				
7	5011167	MALE ELBOW 45º / JIC 37° FITTING / #8JIC-Mx#8ORB-M STL	1				
8	161028	HOSE ASSY / #8 5033MM Up to 1-7427 / REPLACED BY: 161137	1				
8	161028	HOSE ASSY / #8 5033MM Up to 1-7427 / REPLACED BY: 161137			1		
8	161137	HOSE ASSY / #8 5033MM From 1-7428 Up to 7-9095			1		
8	161027	HOSE ASSY / #8 4520MM Up to 4-8345		1		1	
8	161193	HOSE ASSY / #8 4620MM From 4-8346 Up to 7-9095				1	
8	163473	HOSE ASSY / #8 2750MM From 7-9096			1	1	
NS	505110	. COIL PROTECTOR / PLASTIC / #12 Up to 5-8516	AR				
NS	505181	. COIL PROTECTOR / PLASTIC / #8 From 5-8517	AR				
9	161023	HOSE ASSY / #8 9165MM / REPLACED BY: 161136	1				A
9	161023	HOSE ASSY / #8 9165MM Up to 1-7427 / REPLACED BY: 161136			1		
9	161136	HOSE ASSY / #8 9195MM From 1-7428 Up to 7-9095			1		A
9	161022	HOSE ASSY / #8 8306MM Up to 7-9095		1			A
9	161021	HOSE ASSY / #8 9830MM Up to 7-9095				1	A
9	163479	HOSE ASSY / #8 11570MM (W5) From 7-9096			1		A
9	163474	HOSE ASSY / #8 11570MM (X3/WE) From 7-9096				1	A
9	161197	KIT, HOSE REPAIR / FRONT SECTION STEERING / X SERIES	1				
. NS	WB04-10A	. SEE WARRANTY BULLETIN	1				
. NS	161195	. HOSE ASSY / #8 1570MM	1				
. NS	501456	. MALE CONNECTOR / JIC 37° FITTING / #8JIC-Mx#8 STL	1				
NS	505110	. COIL PROTECTOR / PLASTIC / #12 Up to 5-8516	AR				
NS	505181	. COIL PROTECTOR / PLASTIC / #8 From 5-8517	AR				
10	501845	SWIVEL NUT ELBOW 90º LONG / JIC 37° FITTING / #8JIC-Fx#8JIC-Mx1.86 STL	2				
11	5011192	MALE CONNECTOR / JIC 37° FITTING / #8JIC-MxM18-1.5-M STL	2				
		4) NO PARTS NUMBER					
		A) FOR SERVICE, IT'S POSSIBLE TO REPAIR THIS HOSE IN FRONT SERVICE COMPARTMENT WITH KIT #161197					

From Y-7046 Up to 8-9339	DATE: 01/2014	PAGE: Y2-1400-00

POWER STEERING HOSE INSTALLATION

ITEM	PART	DESCRIPTION	XL45	MTH40	MTH45	MTH45S	NOTE
NS	688910	THREAD LOCKER LOCTITE #262 / RED / 250ml	AR				
12	Y2-1415-00	**STEERING GEARBOX - "ZF"**	1				
13	161129	HOSE ASSY / #8 9525MM	1				A
13	161130	HOSE ASSY / #8 8636MM Up to 7-9095		1			A
13	161129	HOSE ASSY / #8 9525MM Up to 7-9095			1		A
13	161128	HOSE ASSY / #8 10160MM Up to 7-9095				1	A
13	163475	HOSE ASSY / #8 11900MM From 7-9096			1	1	A
13	161197	KIT, HOSE REPAIR / FRONT SECTION STEERING / X SERIES	1				
. NS	WB04-10A	. SEE WARRANTY BULLETIN	1				
. NS	161195	. HOSE ASSY / #8 1570MM	1				
. NS	501456	. MALE CONNECTOR / JIC 37° FITTING / #8JIC-Mx#8 STL	1				
NS	505110	. COIL PROTECTOR / PLASTIC / #12 Up to 5-8516	AR				
NS	505181	. COIL PROTECTOR / PLASTIC / #8 From 5-8517	AR				
14	501815	BULKHEAD UNION / JIC 37° FITTING / #8JIC-Mx#8JIC-M STL	2				
NS	500858	WASHER LO INT .769x1.245x.055 ZP	2				
15	5011192	MALE CONNECTOR / JIC 37° FITTING / #8JIC-MxM18-1.5-M STL		2	2	2	
. NS	N.P.N.	. O-RING M18		1	1	1	4
. NS	N.P.N.	. WASHER RET M18		1	1	1	4
16	501739	MALE CONNECTOR / JIC 37° FITTING / #8JIC-Mx1/2NPT-M STL	1				
17	5011192	MALE CONNECTOR / JIC 37° FITTING / #8JIC-MxM18-1.5-M STL		1	1	1	
. NS	N.P.N.	. O-RING M18		1	1	1	4
. NS	N.P.N.	. WASHER RET M18		1	1	1	4
18	161048	HOSE ASSY / #8 4215MM Up to 6-8906	1				
18	161043	HOSE ASSY / #8 4630MM Up to 7-9095			1		
18	163481	HOSE ASSY / #8 2250MM From 7-9096			1		
18	161026	HOSE ASSY / #8 3988MM Up to 4-8345		1		1	
18	161188	HOSE ASSY / #8 4133MM From 4-8346 Up to 5-8471		1		1	
18	161026	HOSE ASSY / #8 3988MM From 5-8472		1		1	
30	952631	CLAMP / 3/4" I.D. / REPLACED BY: 977742	AR				
30	952634	CLAMP / 15/16" I.D.	AR				
31	500613	SCREW TP PAN PH #10x1/2 ZP	AR				
32	952641	CLAMP / 1 5/16" I.D.	AR				
33	500574	SCREW MA TR PH #10-24x1 1/4 SS	AR				
		4) NO PARTS NUMBER					
		A) FOR SERVICE, IT'S POSSIBLE TO REPAIR THIS HOSE IN FRONT SERVICE COMPARTMENT WITH KIT #161197					

From Y-7046 Up to 8-9339	DATE: 01/2014	PAGE: Y2-1400-00

POWER STEERING HOSE INSTALLATION

ITEM	PART	DESCRIPTION	XL45	MTH40	MTH45	MTH45S	NOTE
34	500767	NUT HEX #10-24 ZP	AR				
35	562036	CLAMP / 7/8" I.D. X 90°	AR				
36	500657	SCREW TC TR PH #10-24x1/2 ZP	AR				
40	161185	HOSE SET ASSY / CYLINDER POWER STEERING		1	1	1	
40	163470	. HOSE ASSY / #8 1648MM		1	1	1	
41	163469	. HOSE ASSY / #8 1648MM		1	1	1	
42	161177	. HOSE RETAINER BLOCK CLAMP		4	4	4	B
42	160033	. HOSE RETAINER BLOCK CLAMP		4	4	4	
43	502541	. SCREW CAP HEX M6-1.0x65 G8.8 ZP		1	1	1	
44	500411	. WASHER FL .260x.697x.050 SS		2	2	2	
45	5001182	. NUT HEX NYRT M6-1.0 SS		1	1	1	
45	160034	KIT, HOSE SUPPORT / FRONT SECTION		1	1	1	
. NS	160033	. HOSE RETAINER BLOCK CLAMP		1	1	1	
. NS	163459	. HOSE ASSY / #8 2600MM		1	1	1	
. NS	500177	. SCREW CAP HEX 1/4-20x1 G8 ZP		1	1	1	
. NS	504727	. CLAMP DOUBLE ASS / 1/2 I.D.		1	1	1	
. NS	504728	. PLATE RETAINER		1	1	1	
. NS	501005	. FEMALE CONNECTOR SWIVEL / JIC 37° FITTING /		1	1	1	
46	502888	SCREW CAP HEX M6-1.0x35 G8.8 ZG603		4	4	4	
46	502769	SCREW CAP HEX M6-1.0x70 G10.9 DP		4	4	4	
47	502570	WASHER LO SPT 6.1x11.8x1.6 SS		4	4	4	
49	504634	T-CLIP / 7/8" - 1"		AR	AR	AR	
NS	504637	CABLE TIE / 3/16" x 13"		AR	AR	AR	
NS	500620	SCREW TP FL PH #10x1 1/2 ZP		AR	AR	AR	
51	Y2-1427-00	**POWER STEERING PUMP - "TRW"**					
53	Y2-1412-00	**STEERING DAMPER**					
54	Y2-1005-00	**FRONT AXLE - I BEAM RIGID MODEL "S-84"**					
55	Y2-1005-50	**FRONT AXLE - INDEPENDENT MODEL "IS-84" / 16500LBS**					
56	Y2-1410-00	**STEERING GEAR BOX & DRAG LINK INSTALL**					
57	Y2-1430-50	**CYLINDER POWER STEERING**					
60	504727	CLAMP DOUBLE ASS / 1/2 I.D.	AR				
61	504728	PLATE RETAINER	AR				
		B) FOR SERVICE, IT'S POSSIBLE TO REPAIR THIS					
		BLOCK IN FRONT SERVICE COMPARTMENT WITH KIT					
		#160034					

From Y-7046 Up to 8-9339	DATE: 01/2014	PAGE: Y2-1400-00

POWER STEERING HOSE INSTALLATION

ITEM	PART	DESCRIPTION	XL45	MTH40	MTH45	MTH45S	NOTE
62	500440	WASHER FL .250x.562x.065 ZP	AR				
63	500107	SCREW TC CAP HEX 1/4-20x2 1/2 ZP	AR				
64	562036	CLAMP / 7/8" I.D. X 90°	AR				
65	502550	SCREW CAP HEX M4-0.7x16 G8.8 ZP	AR				
66	500590	NUT HEX NYRT M4-0.7 ZP	AR				
67	500657	SCREW TC TR PH #10-24x1/2 ZP	AR				

From Y-7046 Up to 8-9339	DATE: 01/2014	PAGE: Y2-1400-00

POWER STEERING HOSE INSTALLATION

ITEM	PART	DESCRIPTION	XL45	MTH40	MTH45	MTH45S	NOTE

From Y-7046 Up to 8-9339	DATE: 01/2014	PAGE: Y2-1405-00

STEERING WHEEL & COLUMN ASSY

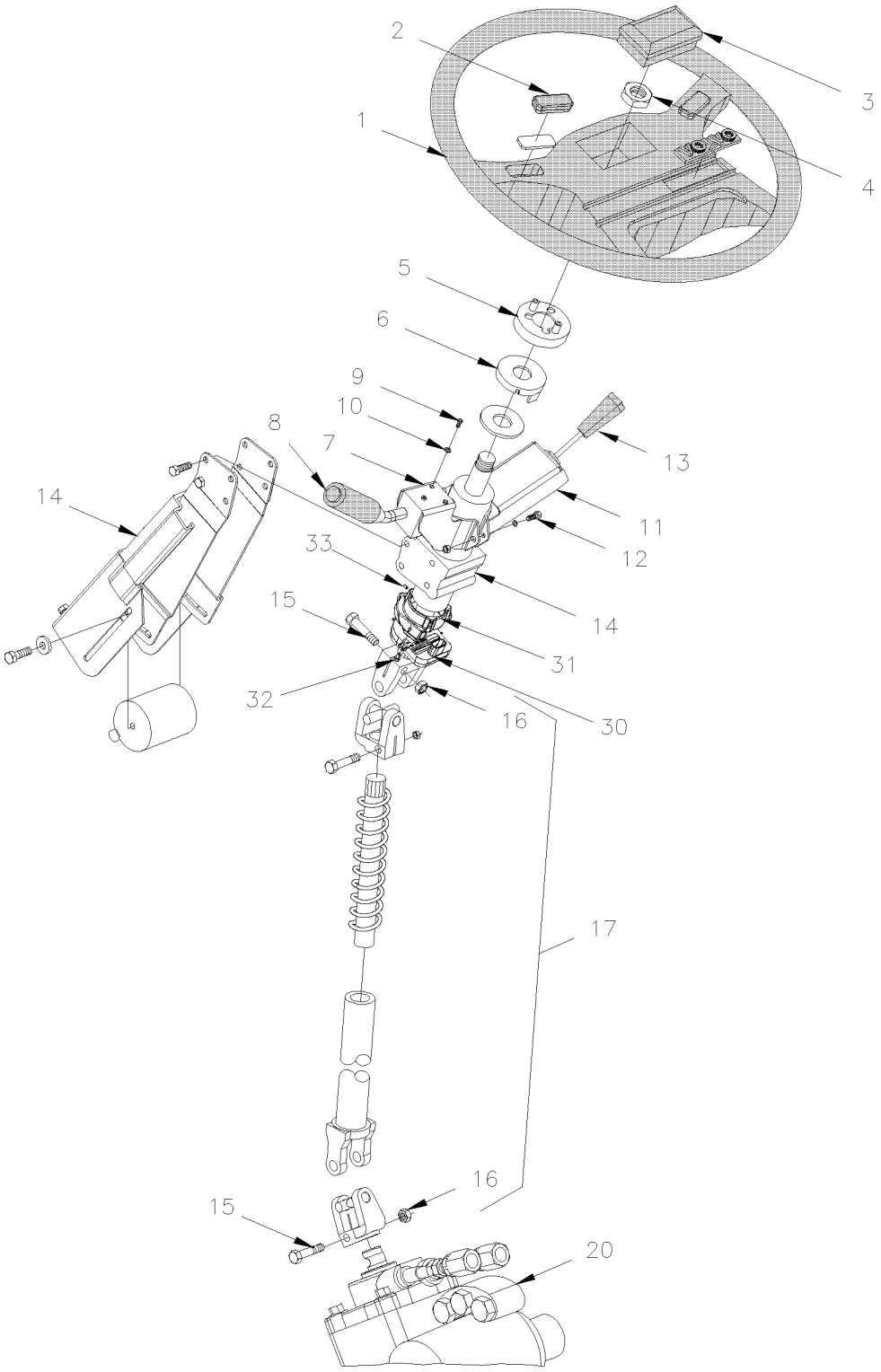

From Y-7046 Up to 8-9339	DATE: 01/2014	PAGE: Y2-1405-00

STEERING WHEEL & COLUMN ASSY

ITEM	PART	DESCRIPTION	XL45	MTH40	MTH45	MTH45S	NOTE
1	661032	STEERING WHEEL	1	1	1	1	
. NS	661061	. BRUSH ASSY SPOKE CONTACT	1	1	1	1	
. NS	661062	. BRUSH ASSY CENTRAL CONTACT	1	1	1	1	
. NS	661063	. GROUNDING CABLE ASSY	1	1	1	1	
. NS	661064	. INSULATOR	1	1	1	1	
2	661052	. HORN BUTTON / ELECTRICAL LH	1	1	1	1	
2	661053	. HORN BUTTON / ELECTRICAL RH	1	1	1	1	
NS	661058	. CONTACT PLATE	2	2	2	2	
3	661033	HORN BUTTON / AIR Up to 1-7743 / REPLACED BY: 661085	1	1	1	1	
3	661085	HORN BUTTON / AIR From 1-7744	1	1	1	1	
4	661051	NUT	1	1	1	1	
5	661035	RING TURN SIGNAL CANCELING	1	1	1	1	
5	504669	RIVET DRV BDG .187x.609 NYL From 1-7435	2	2	2	2	
6	661034	HORN CONTACT RING	1	1	1	1	
7	161062	SUPPORT, DIRECTIONAL SWITCH Up to 1-7434 / REPLACED BY: 161149	1	1	1	1	A
7	161149	SUPPORT, DIRECTIONAL SWITCH From 1-7435	1	1	1	1	
NS	161150	KIT, FLASHER SUPPORT Up to 1-7434	AR	AR	AR	AR	
. NS	IS-00134	. SEE INSTRUCTION SHEET Up to 1-7434	1	1	1	1	
8	661037	LEVER ASSY / MULTIFONCTINAL Up to 1-7703 / REPLACED BY: 661075	1	1	1	1	
. NS	660781	. CAP PLEATED RUBBER Up to 1-7703	1	1	1	1	
8	661075	LEVER ASSY / MULTIFONCTINAL From 1-7704	1	1	1	1	
. NS	660781	. CAP PLEATED RUBBER From 1-7704	1	1	1	1	
9	5001377	SCREW MA PAN PH M5-0.8x8 SS	3	3	3	3	
10	5001378	WASHER LO EXT 5.3x10x0.6 ZP	3	3	3	3	
11	161058	COLLAR / W/O RETARDER	1	1	1	1	
11	161060	COLLAR W/SWITCH SUPPORT	1	1	1	1	
12	502631	SCREW CAP HEX M6-1.0x20 G8.8 ZP	2	2	2	2	
13	562356	SWITCH ASSY / W/LEVER & BOOT / 6 POSITIONS	1	1	1	1	
14	661041	STEERING COLUMN ASSY 36SPL / 79SPL LOWER Up to 8-9278	1	1	1	1	
14	661122	STEERING COLUMN ASSY W/E.C.S. 36SPL / 66SPL LOWER From 8-9279			1	1	E
NS	641242	MALE CONNECTOR / PUSH-IN FITTING / #4x1/8NPT-M BR	1	1	1	1	
15	661095	SCREW CAP HEX "SPECIAL" STEERING SHAFT "ZF"	2	2	2	2	
16	661096	NUT "SPECIAL" STEERING SHAFT "ZF"	2	2	2	2	
17	661048	SHAFT ASSY STEERING 79SPL / 79SPL LOWER Up to 8-9278	1	1	1	1	
17	661123	SHAFT ASSY STEERING W/E.C.S. 66SPL / 79SPL LOWER From 8-9279 / REPLACED BY: 661179			1	1	E
NS	161220	DECAL "WARNING" STREERING SYSTEM CALIBRA.." From 8-9279			1	1	E
20	Y2-1415-00	**STEERING GEARBOX - "ZF"**					
30	661148	SENSOR ANGLE POSITION DETECTOR From 8-9279			1	1	E
31	161265	SUPPORT SENSOR ANGLE POSITION STEERING From 8-9279			1	1	E
32	5001670	SCREW MA PAN PH M4-0.7x8 SS From 8-9279			3	3	E
33	500587	SCREW SET HEXS CUP M4-0.7x6 From 8-9279			3	3	E
		A) FOR PRODUCT IMPROVMENT USE KIT #161150					
		E) WITH OPTION "ELECTRONIC CONTROL STABILITY"					

From Y-7046 Up to 8-9339	DATE: 01/2014	PAGE: Y2-1407-00

STEERING COLUMN & COVER - INSTALLATION

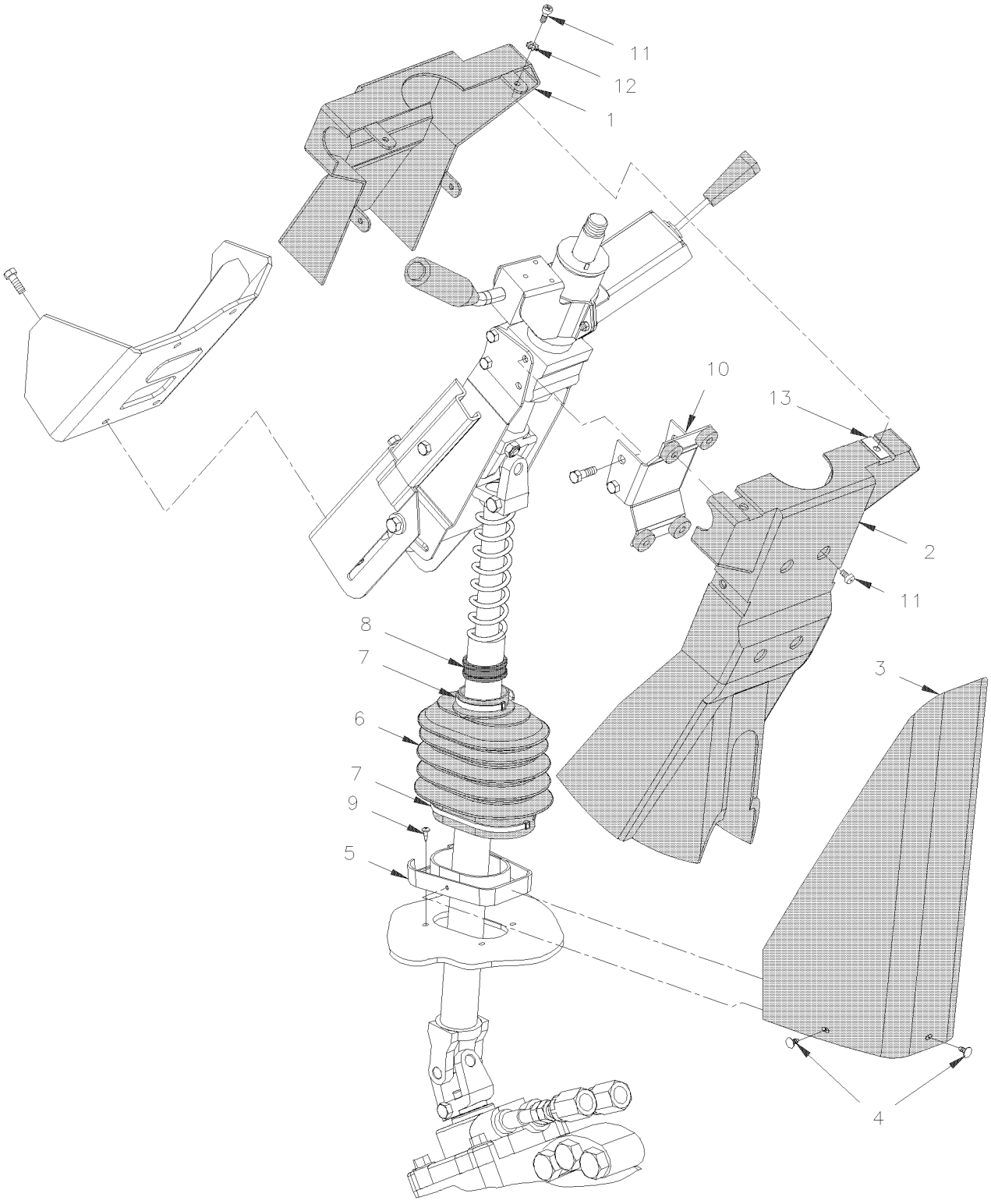

From Y-7046 Up to 8-9339	DATE: 01/2014	PAGE: Y2-1407-00

STEERING COLUMN & COVER - INSTALLATION

ITEM	PART	DESCRIPTION	XL45	MTH40	MTH45	MTH45S	NOTE
1	161086	COVER / W/RETARDER / BLACK	1	1	1	1	
1	161087	COVER / W/O RETARDER / BLACK	1	1	1	1	
2	161084	COVER / W/RETARDER / BLACK	1	1	1	1	
2	161085	COVER / W/O RETARDER / BLACK	1	1	1	1	
3	161066	COVER, LOWER / BLACK / REPLACED BY: 161152	1	1	1	1	
4	504619	CLIP CHRISTMAS TREE / BLACK 7/32"O.D.x1/2" HOLE 3/16	3	3	3	3	
5	391974	PLATE SUPPORT	1	1	1	1	
6	660981	BELLOW	1	1	1	1	
7	504637	CABLE TIE / 3/16" x 13"	2	2	2	2	
8	391930	COLLAR	1	1	1	1	
9	500583	SCREW TP BDG PH #6x1/2 ZP	4	4	4	4	
10	161068	ATTACHMENT	1	1	1	1	
11	502569	SCREW MA PAN PH M6-1.0x16 EMN	8	8	8	8	
12	500472	WASHER LO INT .256x.478x.028 ZP	8	8	8	8	
13	502738	NUT SPR U M6-1.0 0.6-4.0	2	2	2	2	
13	504669	RIVET DRV BDG .187x.609 NYL	2	2	2	2	

From Y-7046 Up to 6-8906	DATE: 01/2014	PAGE: Y2-1410-00

STEERING GEAR BOX & DRAG LINK INSTALL

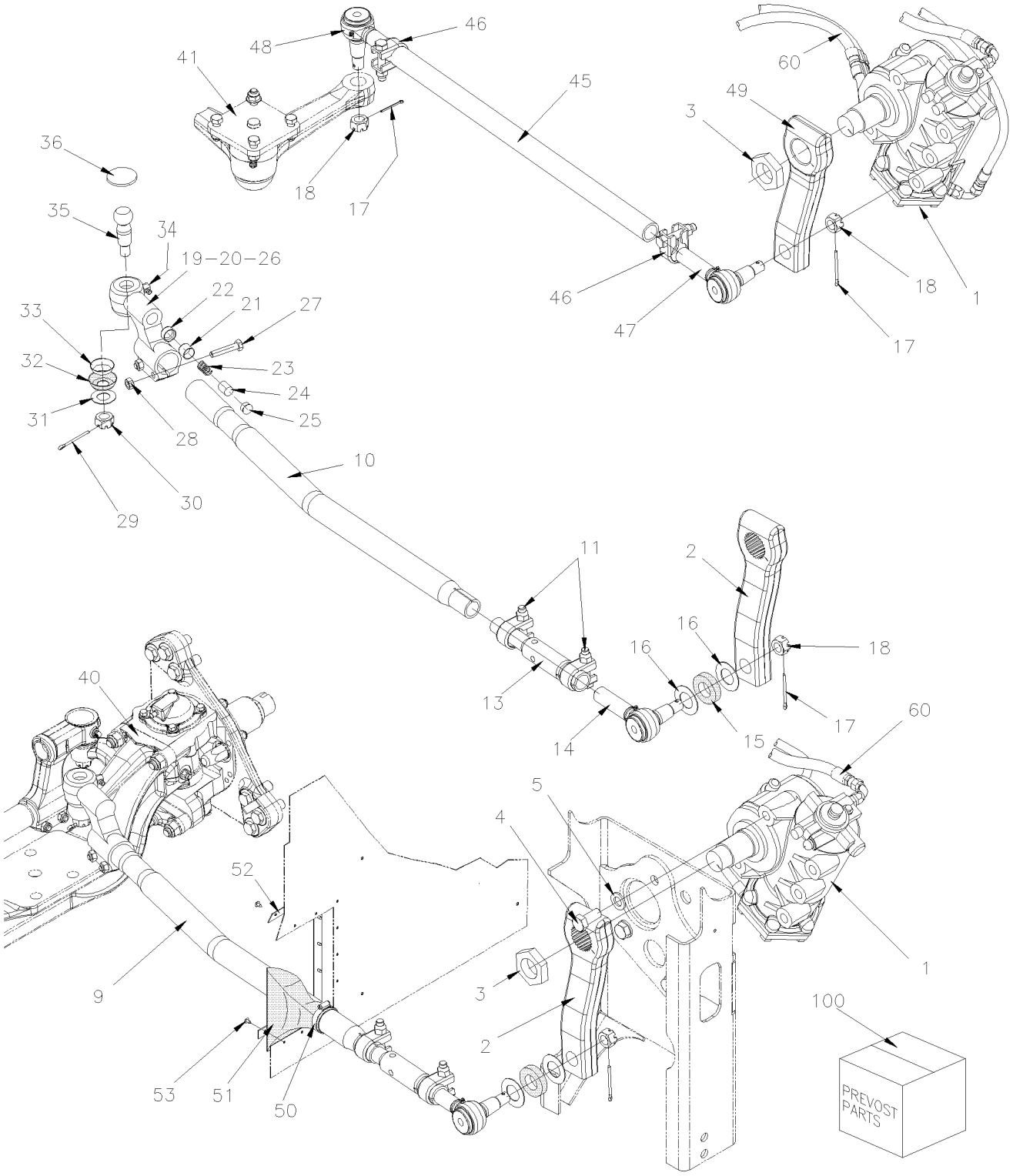

From Y-7046 Up to 6-8906	DATE: 01/2014	PAGE: Y2-1410-00
STEERING GEAR BOX & DRAG LINK INSTALL		

From Y-7046 Up to 6-8906	DATE: 01/2014	PAGE: Y2-1410-00

STEERING GEAR BOX & DRAG LINK INSTALL

ITEM	PART	DESCRIPTION	XL45	MTH40	MTH45	MTH45S	NOTE
1	Y2-1415-00	**STEERING GEARBOX - "ZF"**					
2	661046	ARM, PITMAN 270MM C/C 116.5° MARK INDEX	1	1	1	1	
3	661050	LOCKNUT M45x1.5 GEARBOX ZF	1	1	1	1	
4	5001494	SCREW CAP HEX M20-1.5x45 G10.9 ZP	5	5	5	5	
5	5001495	WASHER FL 21.0x37.0x4.0 ZP	5	5	5	5	
9	160959	DRAG LINK ASSY / 1329.5MM C/C	1				
10	160960	. ROD 975MM / W/ONE CURVE	1				
11	661133	. COLLAR ASSY / W/BOLT & NUT & STOPPER 1 5/8" I.D.	2				
. NS	500231	. . SCREW CAP HEX 5/8-11x3 G5 ZP	1				
. NS	500683	. . NUT HEX STO 5/8-11 ZP	1				
13	160932	. TURNBUCKLE 275MM	1				
14	661150	. TIE ROD END L.H. THREAD 1 1/4-12	1				
15	661135	. . RUBBER WASHER SEAL	1				
16	161989	. . WASHER FL 34.9x63.5x16GA SS	1				
17	502115	. . PIN, COTTER 3/16 x 2 1/2	2				
18	5001345	. . NUT HEX CSL THN 7/8-14	1				
19	610991	. TIE ROD ASSY / 3" OFFSET / L.H. THREAD M48-2	1				
20	N.S.P.	. . HOUSING / OFFSET L.H. THREAD M48-2	1				2
21	N.S.S.	. . RUBBING PAD / (7157/156)	1				1
22	N.S.S.	. . THRUST CUP / (7157/153)	1				1
23	N.S.S.	. . COMPRESSION SPRING / (5443/4)	1				1
24	N.S.S.	. . ADJUSTER PIECE / (5443/154)	1				1
25	680404	. . CAP PLUG	1				
26	502115	. . PIN, COTTER 3/16 x 2 1/2	1				
27	5001177	. . SCREW CAP HEX M12-1.75x60 G8.8 ZP	2				
28	500811	. . NUT HEX STO M12-1.75 DP	2				
29	502114	. . PIN, COTTER 5/32 x 2 1/2					
30	5001196	. . NUT HEX SLT 3/4-16	1				
31	161989	. . WASHER FL 34.9x63.5x16GA SS	2				
32	611057	. . RUBBER SEAL BOOT	1				
33	611056	. . DIRT SEAL PRESSING	1				
34	501495	. . GREASE FITTING 90º / 1/8 NPT	2				
35	N.S.S.	. . BALL STUD / (F4223/11)	1				1
36	N.S.S.	. . PLUG / (5247/155)	1				1
NS	N.S.S.	. . SNAP RING / (ML7544/55N)	1				1
		1) NOT SOLD SEPARATELY					
		2) NOT SOLD BY PREVOST (SEE MANUFACTURING PART NUMBER AT END OF DESCRIPTION LINE)					

From Y-7046 Up to 6-8906	DATE: 01/2014	PAGE: Y2-1410-00

STEERING GEAR BOX & DRAG LINK INSTALL

ITEM	PART	DESCRIPTION	XL45	MTH40	MTH45	MTH45S	NOTE
40	611031	STEERING ARM UPPER L.H. STREET SIDE	1				
		WITH INDEPENDENT FRONT SUSPENSION					
41	Y2-1410-50	**STEERING RODS - INSTALLATION W/INDEPENDENT "IS-84" / 16500LBS**					
41	Y2-1410-51	**STEERING RODS - INSTALLATION W/INDEPENDENT "NDIFS80P" / 18000LBS**	1				
45	661039	DRAG LINK ASSY / 970 MM C/C Up to Y-7386 / REPLACED BY: 661153	1	1	1	1	
45	661067	DRAG LINK ASSY / 970 MM C/C From Y-7387 Up to 8-9301 / REPLACED BY: 661153	1	1	1	1	
45	661134	DRAG LINK ASSY / 970 MM C/C WITH LONG NECK TIE ROD END From 8-9302 Up to 9-9596 / REPLACED BY: 661153	1	1	1	1	L
45	661153	DRAG LINK ASSY / 970 MM C/C WITH LONG NECK TIE ROD END From 9-9597	1	1	1	1	L
45	N.P.N.	. ROD	1	1	1	1	4
46	660978	. COLLAR ASSY / W/BOLT & NUT 1 5/8" I.D. Up to 8-9301	1	1	1	1	
. NS	500231	. . SCREW CAP HEX 5/8-11x3 G5 ZP Up to 8-9301	1	1	1	1	
. NS	500683	. . NUT HEX STO 5/8-11 ZP Up to 8-9301	1	1	1	1	
46	661133	. COLLAR ASSY / W/BOLT & NUT & STOPPER 1 5/8" I.D. From 8-9302	2	2	2	2	
. NS	500231	. . SCREW CAP HEX 5/8-11x3 G5 ZP From 8-9302	1	1	1	1	
. NS	500683	. . NUT HEX STO 5/8-11 ZP From 8-9302	1	1	1	1	
47	611070	. TIE ROD END R.H. THREAD 1 1/4-12 Up to Y-7386	1	1	1	1	
47	611458	. TIE ROD END R.H. THREAD 1 1/4-12 From Y-7387	1	1	1	1	
47	N8892657	. TIE ROD END R.H. THREAD 1 1/4-12	1	1	1	1	S
47	661138	. TIE ROD END R.H. THREAD 1 1/4-12 From 8-9302 Up to 9-9596	1	1	1	1	
47	661152	. TIE ROD END R.H. THREAD 1 1/4-12 W/LONG NECK TIE ROD From 9-9597	1	1	1	1	LL
48	611071	. TIE ROD END L.H. THREAD 1 1/4-12 Up to Y-7386	1	1	1	1	
48	611459	. TIE ROD END L.H. THREAD 1 1/4-12 From Y-7387 Up to 8-9301 / REPLACED BY: 661150	1	1	1	1	
48	661150	. TIE ROD END L.H. THREAD 1 1/4-12	1	1	1	1	S
48	661139	. TIE ROD END L.H. THREAD 1 1/4-12 From 8-9302 Up to 9-9596	1	1	1	1	
48	661151	. TIE ROD END L.H. THREAD 1 1/4-12 W/LONG NECK TIE ROD From 9-9597	1	1	1	1	LL
49	661047	ARM, PITMAN Up to 3-8464	1	1	1	1	
49	661760	ARM, PITMAN 9" / (PAINTED BLACK) From 4-8165	1	1	1	1	
50	504024	HOSE CLAMP / 1"13/16"-2"3/4 SS / HS-36	1	1	1	1	
51	160931	SHIELD RUBBER	1				
51	161009	SHIELD RUBBER	1	1	1	1	I
52	160961	COLLAR SHIELD RETAINER / "O" FORM OPEN ONE PIECE	1				
52	160994	COLLAR SHIELD RETAINER / "O" FORM CLOSED	1	1	1	1	I
		4) NO PARTS NUMBER					
		I) ITEMS 21 TO 36					
		L) ITEMS 21 TO 36					
		LL) ITEMS 21 TO 36					
		S) ITEMS 21 TO 36					

From Y-7046 Up to 6-8906	DATE: 01/2014	PAGE: Y2-1410-00

STEERING GEAR BOX & DRAG LINK INSTALL

ITEM	PART	DESCRIPTION	XL45	MTH40	MTH45	MTH45S	NOTE
53	500657	SCREW TC TR PH #10-24x1/2 ZP	16	16	16	16	
60	Y2-1400-00	**POWER STEERING HOSE INSTALLATION**					
100	611101	KIT REPAIR / TIE ROD END USE KIT 161458	AR				A
100	161458	DRAG LINK ZF / SERVICE KIT	1				
		A) ITEMS 21 TO 36					

From Y-7046 Up to 6-8906	DATE: 01/2014	PAGE: Y2-1410-00

STEERING GEAR BOX & DRAG LINK INSTALL

ITEM	PART	DESCRIPTION	XL45	MTH40	MTH45	MTH45S	NOTE

From Y-7046 Up to 3-8164	DATE: 01/2014	PAGE: Y2-1410-50

STEERING RODS - INSTALLATION W/INDEPENDENT "IS-84" / 16500LBS

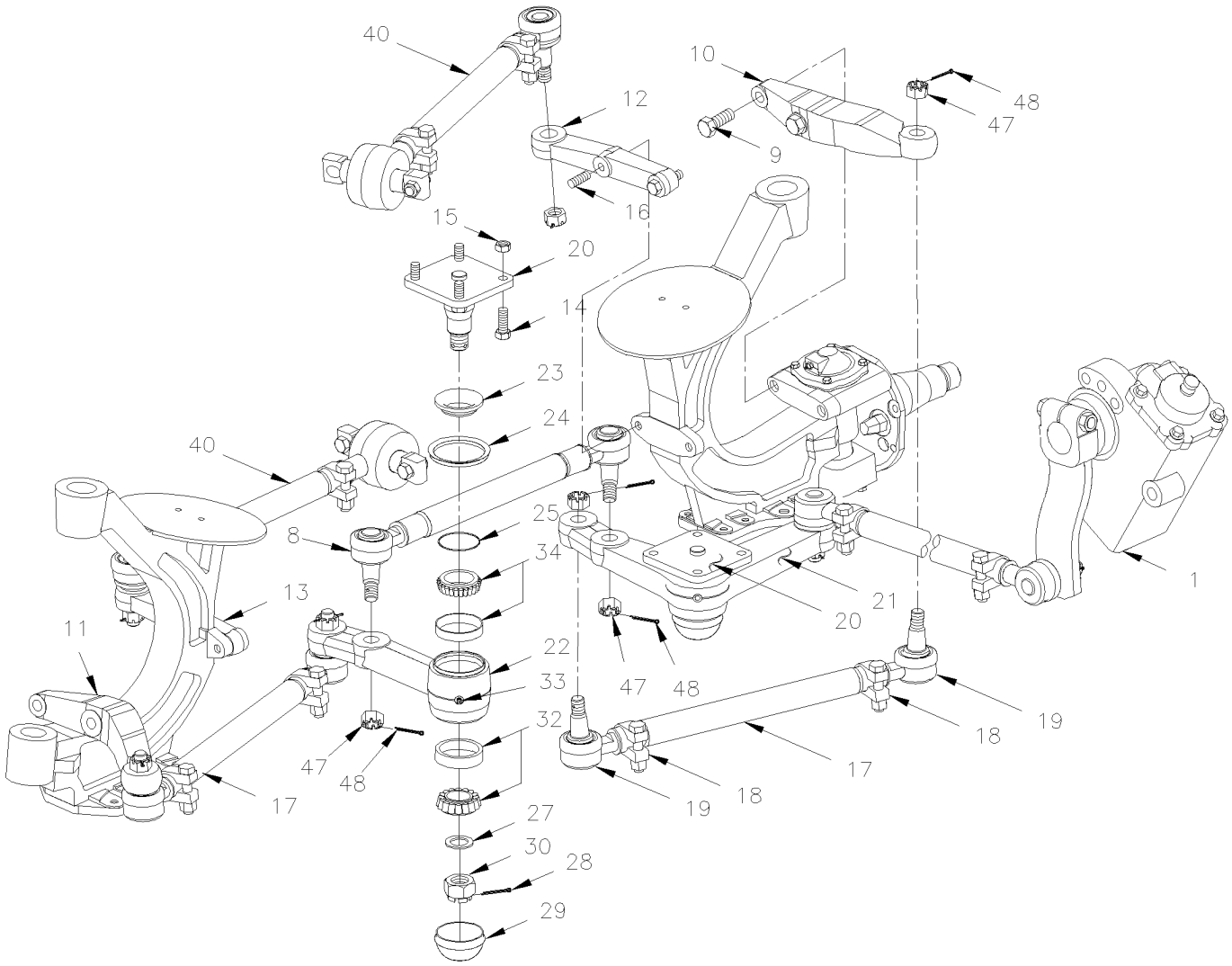

From Y-7046 Up to 3-8164	DATE: 01/2014	PAGE: Y2-1410-50

STEERING RODS - INSTALLATION W/INDEPENDENT "IS-84" / 16500LBS

From Y-7046 Up to 3-8164	DATE: 01/2014	PAGE: Y2-1410-50

STEERING RODS - INSTALLATION W/INDEPENDENT "IS-84" / 16500LBS

ITEM	PART	DESCRIPTION	XL45	MTH40	MTH45	MTH45S	NOTE
1	Y2-1415-00	**STEERING GEARBOX - "ZF"**					
8	661015	ROD ASSY / 569MM C/C CENTER Up to 1-7625 / REPLACED BY: 661131		1	1	1	
8	661077	ROD ASSY / 569MM C/C CENTER From 1-7626 / REPLACED BY: 661131		1	1	1	
8	661131	ROD ASSY / 569MM C/C CENTER		1	1	1	
9	5001326	SCREW CAP HEX M14-2.0x70 G10.9 DP		1	1	1	
9	5001327	SCREW CAP HEX M14-2.0x80 G10.9 DP		1	1	1	
10	611124	STEERING ARM R.H. Up to 2-7851		1	1	1	
10	611264	STEERING ARM R.H. From 2-7852		1	1	1	A
11	611123	STEERING ARM L.H. Up to 2-7851 / REPLACED BY: 611171		1	1	1	
11	611263	STEERING ARM L.H. From 2-7852		1	1	1	A
12	661071	UPRIGHT ARM L.H. / W/56 Deg		1	1	1	
13	661072	UPRIGHT ARM R.H. / W/56 Deg		1	1	1	
14	5001476	SCREW CAP HEX M14-2.0x45 G8.8 ZP		8	8	8	
15	502538	NUT HEX STO M14-2.0 ZP		8	8	8	
16	611248	STUD M16		1	1	1	
16	611249	STUD M16		1	1	1	
NS	500781	NUT HEX STO M16-2.0 DP		2	2	2	
17	661024	ROD ASSY / 657MM C/C / REPLACED BY: 661129		2	2	2	
17	661129	ROD ASSY / 657MM C/C WITH LONG NECK TIE ROD END		1	1	1	R
17	N.P.N.	. ROD		1	1	1	4
18	660978	. COLLAR ASSY / W/BOLT & NUT 1 5/8" I.D.		2	2	2	
. NS	500231	. . SCREW CAP HEX 5/8-11x3 G5 ZP		1	1	1	
. NS	500683	. . NUT HEX STO 5/8-11 ZP		1	1	1	
18	661133	. COLLAR ASSY / W/BOLT & NUT & STOPPER 1 5/8" I.D.		2	2	2	
. NS	500231	. . SCREW CAP HEX 5/8-11x3 G5 ZP		1	1	1	
. NS	500683	. . NUT HEX STO 5/8-11 ZP		1	1	1	
19	611070	. TIE ROD END R.H. THREAD 1 1/4-12		1	1	1	
19	2005362	. TIE ROD END R.H. THREAD 1 1/4-12 SERVICE		1	1	1	S
19	661138	. TIE ROD END R.H. THREAD 1 1/4-12		1	1	1	RR
19	611071	. TIE ROD END L.H. THREAD 1 1/4-12		1	1	1	
19	2005363	. TIE ROD END L.H. THREAD 1 1/4-12 SERVICE		1	1	1	S
19	661139	. TIE ROD END L.H. THREAD 1 1/4-12		1	1	1	RR
20	160983	SPINDLE SHAFT		1	1	1	
NS	161005	SHIM 26GAGE 105mm C/C x 14mm slot		AR	AR	AR	
20	161006	SHIM 20GAGE 105mm C/C x 14mm slot		AR	AR	AR	
21	161020	LEVER L.H.		1	1	1	
22	161019	LEVER R.H.		1	1	1	
23	160984	SLEEVE WIPER 63.5MM O.D.		1	1	1	
		4) NO PARTS NUMBER					
		A) USE WITH AXLE 3° CASTER					
		R) THIS ASSY USE ONLY LONG NECK TIE ROD END # 661138 & # 661139					
		RR) USE ONLY WITH ASSY # 661129					
		S) SERVICE ON SHORT FORMER MODEL					

From Y-7046 Up to 3-8164	DATE: 01/2014	PAGE: Y2-1410-50

STEERING RODS - INSTALLATION W/INDEPENDENT "IS-84" / 16500LBS

ITEM	PART	DESCRIPTION	XL45	MTH40	MTH45	MTH45S	NOTE
24	507351	DUST SEAL 3.270 I.D. X 3.085 O.D.		1	1	1	
25	507350	OIL SEAL		1	1	1	
27	5001227	WASHER FL .453x.875x.090		1	1	1	
28	502115	PIN, COTTER 3/16 x 2 1/2		1	1	1	
29	661014	COVER		1	1	1	
30	5001218	NUT HEX CSL M30-1.5		1	1	1	
32	507354	KIT, CUP & CONE BEARING		2	2	2	
33	501490	GREASE FITTING / 1/8 NPT		1	1	1	
34	507353	KIT, CUP & CONE BEARING		2	2	2	
40	Y2-1605-50	**FRONT AXLE - INSTALL W/INDEPENDENT "IS-84" / 16500LBS**					
47	5001345	NUT HEX CSL THN 7/8-14		1	1	1	
48	502115	PIN, COTTER 3/16 x 2 1/2		1	1	1	
NS	161009	SHIELD RUBBER		1	1	1	
NS	160994	COLLAR SHIELD RETAINER / "O" FORM CLOSED		1	1	1	
NS	500657	SCREW TC TR PH #10-24x1/2 ZP		12	12	12	
NS	504024	HOSE CLAMP / 1"13/16"-2"3/4 SS / HS-36		1	1	1	

From 4-8165 Up to 8-9339	DATE: 01/2014	PAGE: Y2-1410-51
STEERING RODS - INSTALLATION W/INDEPENDENT "NDIFS80P" / 18000LBS		

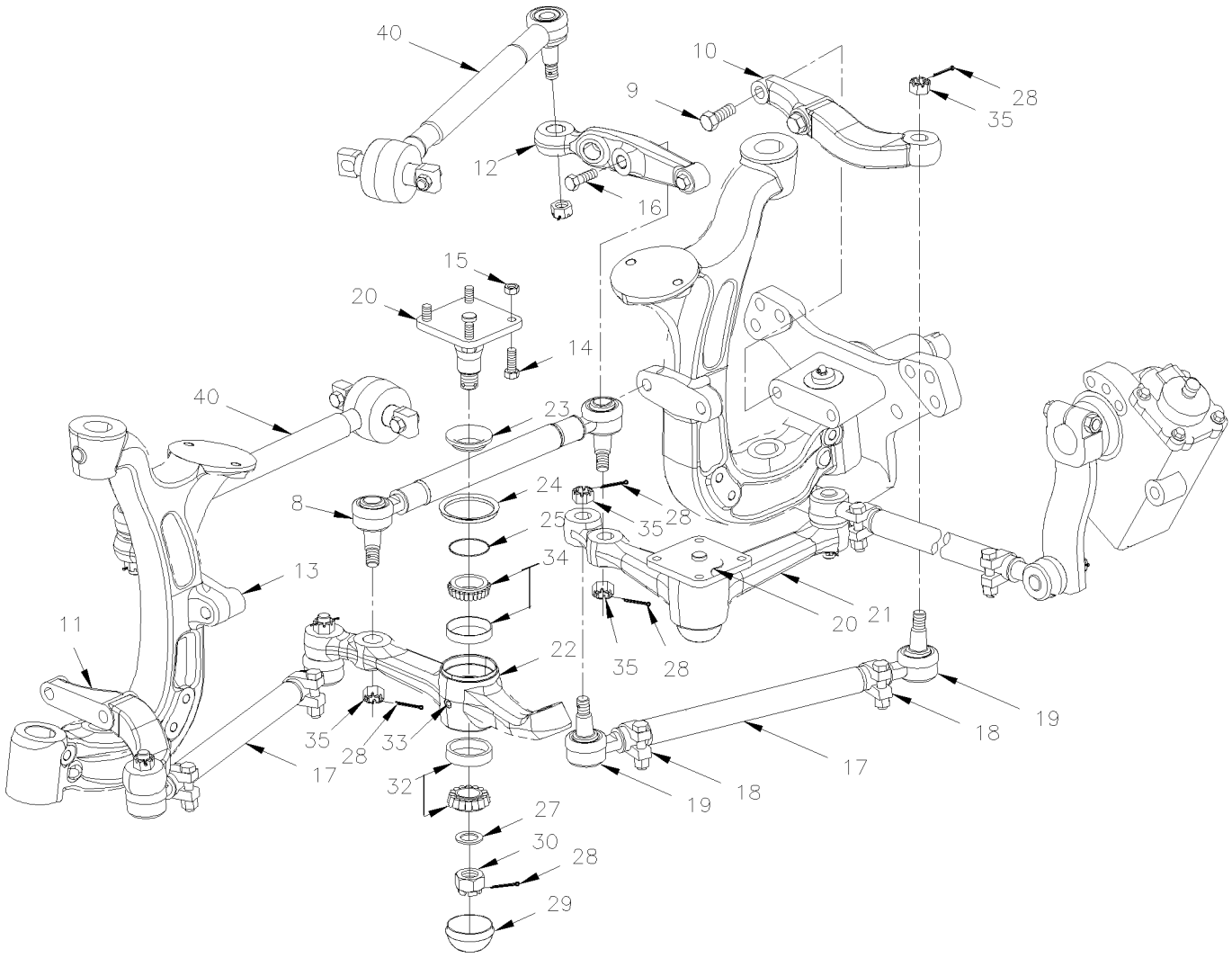

Tie Rods Identification
Standard
2005362 & 2005363 = Fitting Under
661150 & N8892657 = Fitting Side

Tie Rods Identification
With Long Neck
661138 & 661139 = Fitting Under
661151 & 661152 = Fitting Side

From 4-8165 Up to 8-9339	DATE: 01/2014	PAGE: Y2-1410-51

STEERING RODS - INSTALLATION W/INDEPENDENT "NDIFS80P" / 18000LBS

ITEM	PART	DESCRIPTION	XL45	MTH40	MTH45	MTH45S	NOTE
1	Y2-1415-00	**STEERING GEARBOX - "ZF"**					
8	661083	ROD ASSY / 591.8MM C/C CENTER Up to 8-9301 / REPLACED BY: 661132		1	1	1	
8	661132	ROD ASSY / 591.8MM C/C CENTER From 8-9302			1	1	
9	5001326	SCREW CAP HEX M14-2.0x70 G10.9 DP		1	1	1	
NS	5001327	SCREW CAP HEX M14-2.0x80 G10.9 DP		1	1	1	
10	163246	STEERING ARM R.H.		1	1	1	
10	612084	STEERING ARM R.H.		1	1	1	
11	163468	STEERING ARM L.H.		1	1	1	
11	612085	STEERING ARM L.H.		1	1	1	
12	661080	UPRIGHT ARM L.H / W/56 Deg Up to 6-8832		1	1	1	
12	661113	UPRIGHT ARM L.H / W/58 Deg From 6-8833			1	1	
13	661081	UPRIGHT ARM R.H / W/56 Deg Up to 6-8832		1	1	1	
13	661114	UPRIGHT ARM R.H / W/58 Deg From 6-8833			1	1	
14	5001476	SCREW CAP HEX M14-2.0x45 G8.8 ZP		8	8	8	
15	502538	NUT HEX STO M14-2.0 ZP		8	8	8	
16	611305	SCREW CAP HEX M20-2.5x60 G12.9		1	1	1	
16	611307	SCREW CAP HEX M20-2.5x80 G12.9		1	1	1	
17	661024	ROD ASSY / 657MM C/C Up to 8-9301 / REPLACED BY: 661129		2	2	2	
17	661129	ROD ASSY / 657MM C/C WITH LONG NECK TIE ROD END From 8-9302			2	2	R
17	N.P.N.	. ROD		1	1	1	4
18	660978	. COLLAR ASSY / W/BOLT & NUT 1 5/8" I.D. Up to 8-9301		2	2	2	
. NS	500231	. . SCREW CAP HEX 5/8-11x3 G5 ZP Up to 8-9301		1	1	1	
. NS	500683	. . NUT HEX STO 5/8-11 ZP Up to 8-9301		1	1	1	
18	661133	. COLLAR ASSY / W/BOLT & NUT & STOPPER 1 5/8" I.D. From 8-9302			2	2	
. NS	500231	. . SCREW CAP HEX 5/8-11x3 G5 ZP From 8-9302			1	1	
. NS	500683	. . NUT HEX STO 5/8-11 ZP From 8-9302			1	1	
19	611070	. TIE ROD END R.H. THREAD 1 1/4-12 Up to 8-9301		1	1	1	
19	2005362	. TIE ROD END R.H. THREAD 1 1/4-12 SERVICE			1	1	S
19	661138	. TIE ROD END R.H. THREAD 1 1/4-12 From 8-9302			1	1	RR
19	611071	. TIE ROD END L.H. THREAD 1 1/4-12 Up to 8-9301		1	1	1	
19	661139	. TIE ROD END L.H. THREAD 1 1/4-12 From 8-9302			1	1	RR
19	2005363	. TIE ROD END L.H. THREAD 1 1/4-12 SERVICE			1	1	S
20	160983	SPINDLE SHAFT		1	1	1	
NS	161005	SHIM 26GAGE 105mm C/C x 14mm slot		AR	AR	AR	
NS	161006	SHIM 20GAGE 105mm C/C x 14mm slot		AR	AR	AR	
21	161169	LEVER L.H.		1	1	1	
22	161170	LEVER R.H.		1	1	1	
23	160984	SLEEVE WIPER 63.5MM O.D.		1	1	1	
24	507351	DUST SEAL 3.270 I.D. X 3.085 O.D.		1	1	1	
		4) NO PARTS NUMBER					
		R) THIS ASSY USE ONLY LONG NECK TIE ROD END #					
		661138 & # 661139					
		RR) USE ONLY WITH ASSY # 661129					
		S) SERVICE ON SHORT FORMER MODEL					

From 4-8165 Up to 8-9339	DATE: 01/2014	PAGE: Y2-1410-51

STEERING RODS - INSTALLATION W/INDEPENDENT "NDIFS80P" / 18000LBS

ITEM	PART	DESCRIPTION	XL45	MTH40	MTH45	MTH45S	NOTE
25	507350	OIL SEAL		1	1	1	
27	5001227	WASHER FL .453x.875x.090		1	1	1	
28	502115	PIN, COTTER 3/16 x 2 1/2		1	1	1	
29	661014	COVER		1	1	1	
30	5001218	NUT HEX CSL M30-1.5		1	1	1	
32	507354	KIT, CUP & CONE BEARING		2	2	2	
33	501490	GREASE FITTING / 1/8 NPT		1	1	1	
34	507353	KIT, CUP & CONE BEARING		2	2	2	
35	5001345	NUT HEX CSL THN 7/8-14		1	1	1	
40	Y2-1605-51	**FRONT AXLE - INSTALL W/INDEPENDENT "NDIFS80P" / 18000LBS**					
NS	161009	SHIELD RUBBER		1	1	1	
NS	160994	COLLAR SHIELD RETAINER / "O" FORM CLOSED		1	1	1	
NS	500657	SCREW TC TR PH #10-24x1/2 ZP		12	12	12	
NS	504024	HOSE CLAMP / 1"13/16"-2"3/4 SS / HS-36		1	1	1	

From Y-7046 Up to 6-8906	DATE: 01/2014	PAGE: Y2-1412-00
STEERING DAMPER		

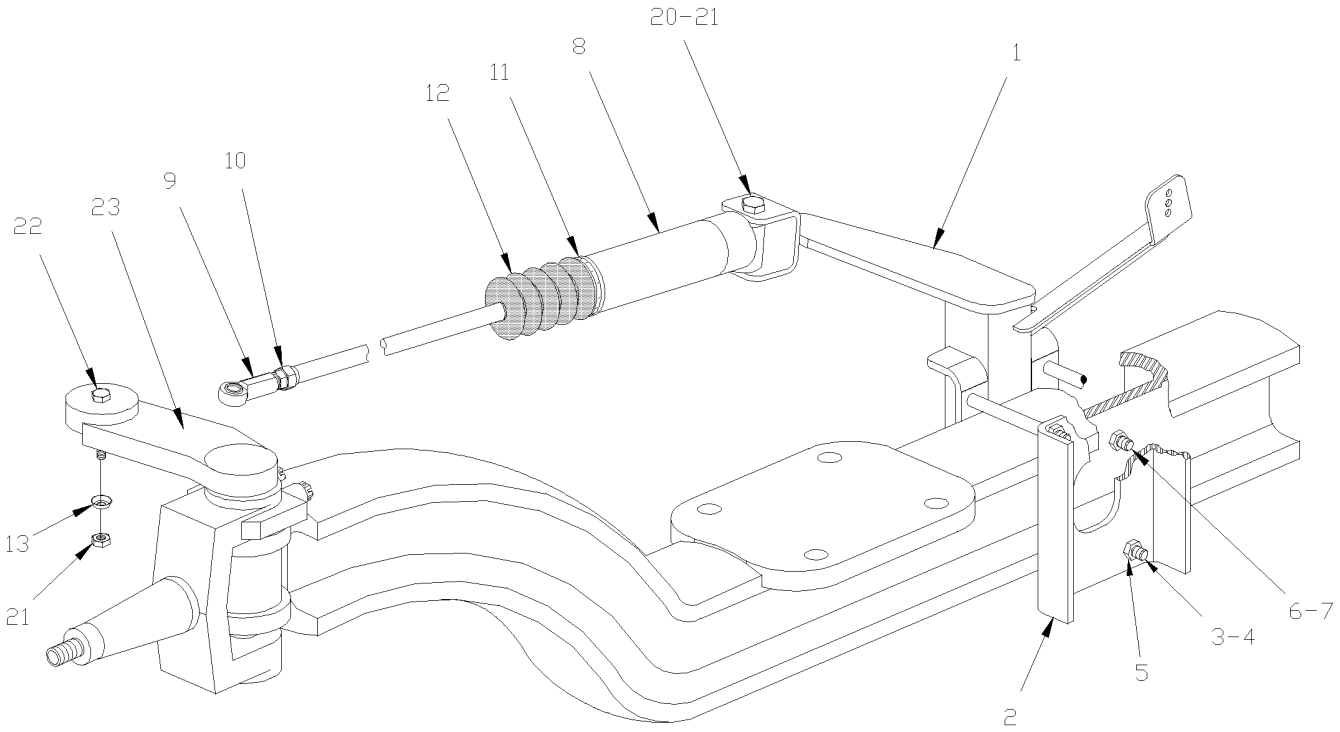

From Y-7046 Up to 6-8906	DATE: 01/2014	PAGE: Y2-1412-00

STEERING DAMPER

ITEM	PART	DESCRIPTION	XL45	MTH40	MTH45	MTH45S	NOTE
1	110741	ATTACHMENT CYLINDER	1				
2	110749	ATTACHMENT PLATE	1				
3	5001500	SCREW CAP HEX M10-1.5x120 G8.8 ZP	4				
4	500444	WASHER FL .406x.812x.065 ZP	8				
5	500680	NUT HEX STO M10-1.5 ZP	4				
6	502731	SCREW CAP HEX M12-1.75x40 G8.8 ZP	1				
7	500811	NUT HEX STO M12-1.75 DP	1				
8	660979	DAMPER SHOCK	1				
9	660884	. ROD END FEMALE ¾"-16 / 3/4 I.D.	1				
9	501497	. . GREASE FITTING / 1/4-28	1				
10	500734	. NUT HEX JAM 3/4-16 ZP	1				
11	504023	HOSE CLAMP / 1"5/16-2"1/4 SS / HS-28	1				
12	661007	BOOT PROTECTOR	1				
13	660980	COVER ROD END / RUBBER	2				
20	500509	SCREW CAP HEX 3/4-16x3 G5 ZP	1				
21	500735	NUT HEX STO 3/4-16 ZP	1				
22	500145	SCREW CAP HEX 3/4-16x3 1/2 G5 ZP	1				
23	161033	STEERING ARM UPPER R.H. CURB SIDE	1				

From Y-7046 Up to 8-9339	DATE: 01/2014	PAGE: Y2-1415-00
STEERING GEARBOX - "ZF"		

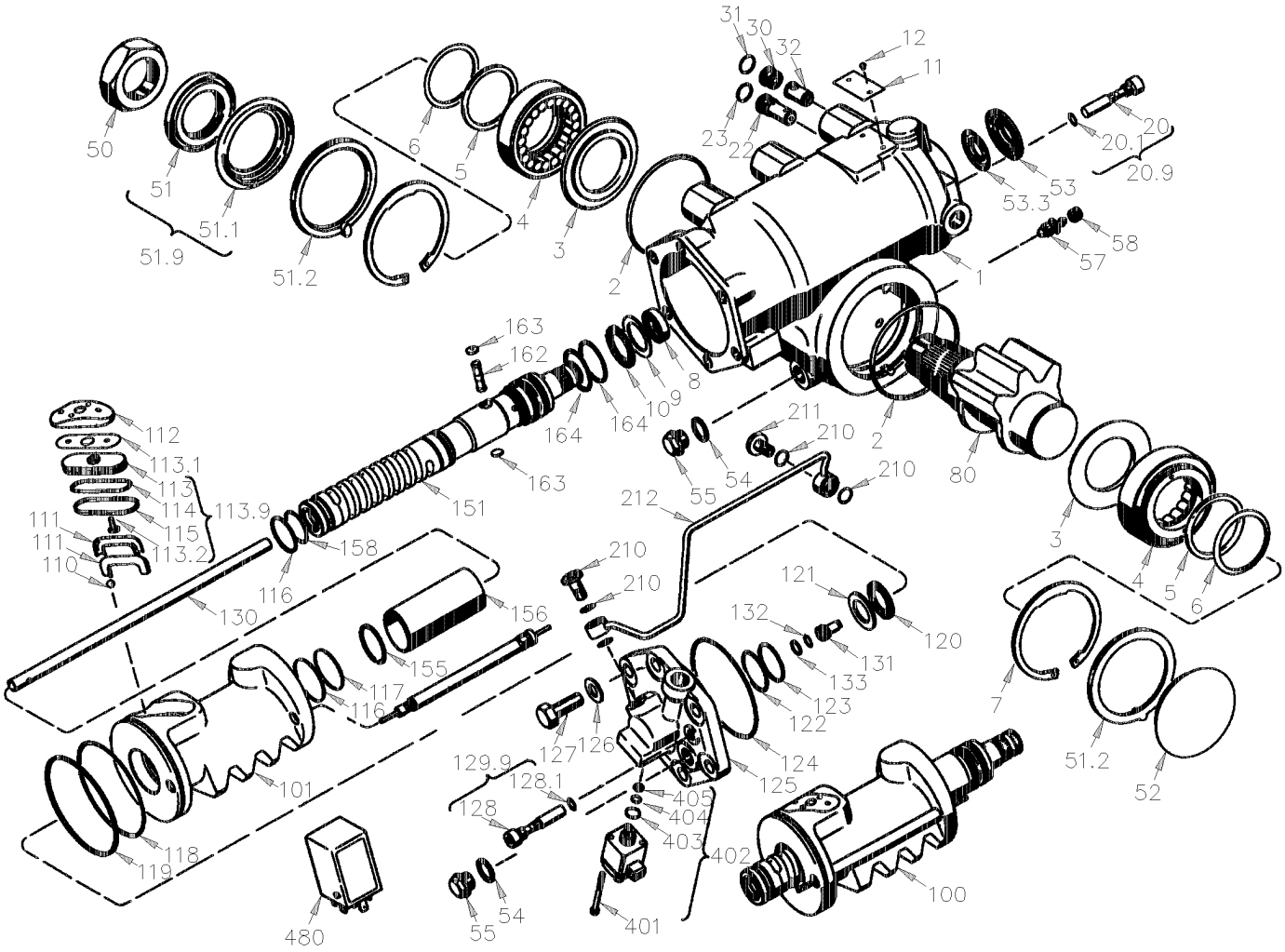

MODEL "ZF" – SERVOCOMTRONIC

From Y-7046 Up to 8-9339	DATE: 01/2014	PAGE: Y2-1415-00
STEERING GEARBOX - "ZF"		

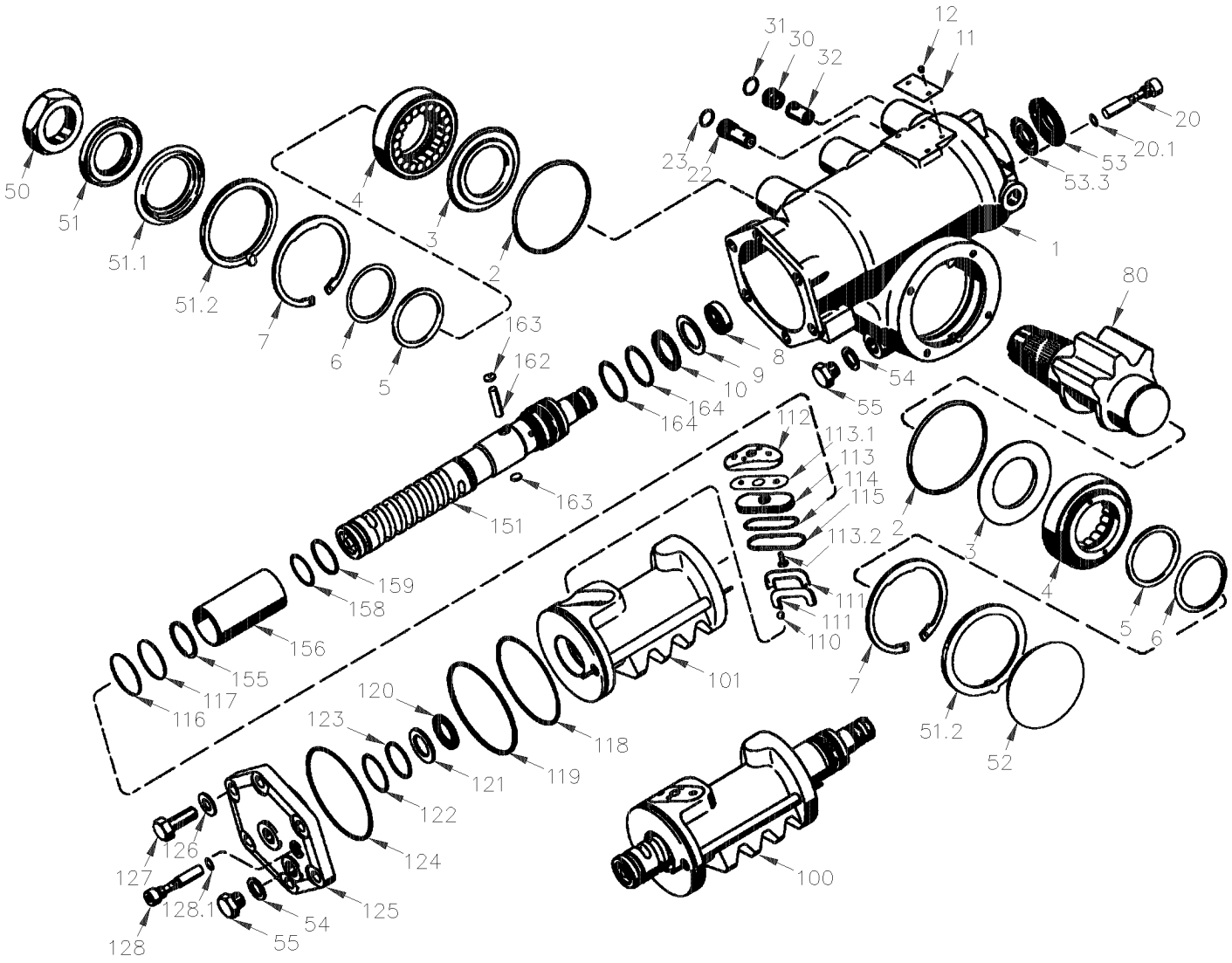

MODEL "ZF" – SEVOCOM

From Y-7046 Up to 8-9339	DATE: 01/2014	PAGE: Y2-1415-00

STEERING GEARBOX - "ZF"

ITEM	PART	DESCRIPTION	XL45	MTH40	MTH45	MTH45S	NOTE
	661044	GEARBOX STEERING "ZF"® / W/SERVOCOMTRONIC	1				
	661045	GEARBOX STEERING "ZF"®	1				
1	N.P.N.	. HOUSING	1				4
2	N.P.N.	. O-RING	1				4
3	N.P.N.	. WASHER	1				4
4	N.P.N.	. HOUSING COVER	1				4
5	N.P.N.	. GASKET	1				4
6	N.P.N.	. SUPPORT RING	1				4
7	N.P.N.	. RETAINING RING	1				4
8	N.P.N.	. SHAFT SEAL	1				4
9	N.P.N.	. AXIAL-, WASHER	1				4
10	N.P.N.	. NEEDLE CAGE	1				4
11	N.P.N.	. TYPE PLATE	1				4
12	N.P.N.	. GROOVED STUD	1				4
20	N.P.N.	. SET SCREW / ADJUSTING SCREW / SCREW	1				4
20	N.P.N.	. O-RING	1				4
21	N.P.N.	. COLLAR NUT	1				4
22	N.P.N.	. VALVE INSERT	1				4
23	N.P.N.	. O-RING	1				4
30	N.P.N.	. SCREW	1				4
31	N.P.N.	. O-RING	1				4
32	N.P.N.	. VALVE INSERT	1				4
50	661050	. LOCKNUT M45x1.5 GEARBOX ZF	1				
51	N.P.N.	. DUST SEAL	1				4
51	N.P.N.	. STOP-RING	1				4
51	N.P.N.	. GASKET	1				4
51	N.P.N.	. DUST SEAL	1				4
52	N.P.N.	. PLUG	1				4
53	N.P.N.	. PROTECTING CAP	1				4
53	N.P.N.	. GASKET	1				4
54	N.P.N.	. SEALING RING	1				4
55	N.P.N.	. SCREW PLUG	1				4
56	N.P.N.	. PROTECTING SLEEVE	1				4
57	N.P.N.	. BREATHER	1				4
58	N.P.N.	. PROTECTING CAP	1				4
80	661102	. SECTOR SHAFT	1				
100	661103	. PISTON	1				
100	661104	. PISTON		1	1	1	
101	N.P.N.	. PISTON	1				4
110	N.P.N.	. BALL SET	1				4
111	N.P.N.	. RECIRCULATING HALF TUBE	1				4
		4) NO PARTS NUMBER					

From Y-7046 Up to 8-9339	DATE: 01/2014	PAGE: Y2-1415-00

STEERING GEARBOX - "ZF"

ITEM	PART	DESCRIPTION	XL45	MTH40	MTH45	MTH45S	NOTE
112	N.P.N.	. GASKET / PLUG	1				4
113	N.P.N.	. GASKET	1				4
113	N.P.N.	. COMPENSATING PLATE	1				4
113	N.P.N.	. PIN	1				4
114	N.P.N.	. O-RING	1				4
115	N.P.N.	. SEALING RING	1				4
116	N.P.N.	. SEALING RING	1				4
117	N.P.N.	. SEALING RING	1				4
118	N.P.N.	. O-RING	1				4
119	N.P.N.	. GASKET	1				4
120	N.P.N.	. NEEDLE CAGE	1				4
121	N.P.N.	. WASHER	1				4
122	N.P.N.	. O-RING	1				4
123	N.P.N.	. SEALING RING	1				4
124	N.P.N.	. O-RING	1				4
125	N.P.N.	. CYLINDER COVER	1				4
126	N.P.N.	. WASHER	1				4
127	N.P.N.	. HEXAGON SCREW	1				4
128	N.P.N.	. SET SCREW / SCREW	1				4
128	N.P.N.	. O-RING	1				4
129	N.P.N.	. COLLAR NUT	1				4
130	N.P.N.	. PIPE	1				4
131	N.P.N.	. REACTION PISTON	1	1	1	1	4
132	N.P.N.	. O-RING	1				4
133	N.P.N.	. SEALING RING	1				4
151	N.P.N.	. WORM	1				4
155	N.P.N.	. SNAP RING	1				4
156	N.P.N.	. SLIDING TUBE	1				4
158	N.P.N.	. O-RING	1				4
159	N.P.N.	. SEALING RING	1				4
162	N.P.N.	. PIN	1				4
163	N.P.N.	. PLUG	1				4
164	N.P.N.	. SEALING RING	1				4
210	661105	. O-RING		1	1	1	
211	661106	. UNION SCREW		1	1	1	
212	661107	. PIPE		1	1	1	
401	N.P.N.	. CAP SCREW	1				4 B
402	661108	. CONVERTER		1	1	1	B
403	N.P.N.	. O-RING	1				4 B
404	N.P.N.	. O-RING	1				4 B
405	N.P.N.	. OIL SCREEN	1				4 B
		4) NO PARTS NUMBER					
		B) USE WITH #661044					

From Y-7046 Up to 8-9339	DATE: 01/2014	PAGE: Y2-1415-00

STEERING GEARBOX - "ZF"

ITEM	PART	DESCRIPTION	XL45	MTH40	MTH45	MTH45S	NOTE
480	563033	. E.C.U. / W/STEERING ASSIST (STP 272 or 330) ((77//125))	1				B
480	563465	. E.C.U. / W/STEERING ASSIST W/"ZF" TRANS ONLY (STP 146)	1				B
NS	661109	KIT, SEAL REPAIR MAJOR	1				A
NS	661110	KIT, SEAL REPAIR MAJOR / W/SERVOCOMTRONIC		1	1	1	B
		A) USE WITH #661045					
		B) USE WITH #661044					

From Y-7046 Up to 8-9339	DATE: 01/2014	PAGE: Y2-1415-00

STEERING GEARBOX - "ZF"

ITEM	PART	DESCRIPTION	XL45	MTH400	MTH445	MTH455S	NOTE

From Y-7046 Up to 8-9339	DATE: 01/2014	PAGE: Y2-1420-00
POWER STEERING TANK - 4 QT U.S.		

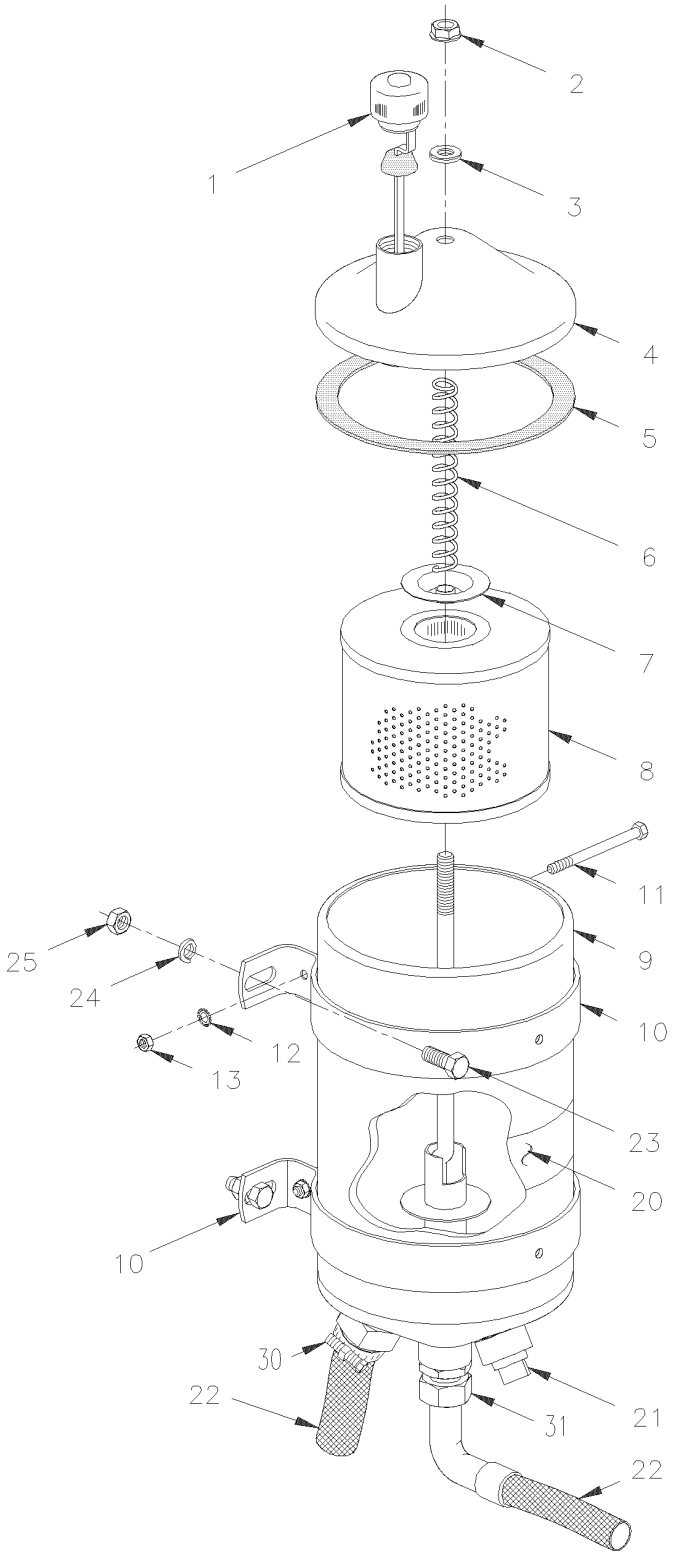

From Y-7046 Up to 8-9339	DATE: 01/2014	PAGE: Y2-1420-00

POWER STEERING TANK - 4 QT U.S.

ITEM	PART	DESCRIPTION	XL45	MTH40	MTH45	MTH45S	NOTE
	660982	TANK ASSY 4QT U.S.	1	1	1	1	
	661060	TANK ASSY 4QT US / WITH SIGHT GLASS	1	1	1	1	
1	660985	. DIPSTICK	1	1	1	1	
2	N.S.P.	. WING NUT 3/8-16	1	1	1	1	2
3	N.S.P.	. GASKET	1	1	1	1	2
4	660989	. COVER ASSY	1	1	1	1	
5	660986	. GASKET	1	1	1	1	
6	660991	. SPRING, COMP.	1	1	1	1	
7	N8886469	. WASHER, RETAINER	1	1	1	1	
8	660987	. ELEMENT FILTER	1	1	1	1	
9		. TANK	1	1	1	1	
10	660988	. ATTACHMENT SUPPORT	2	2	2	2	
20	160370	DECAL "OIL DEXTRON"	1	1	1	1	
21	501306	PLUG SQUARE HEAD / PIPE FITTING / 1/2NPT-M BR	1	1	1	1	
22	Y2-1400-00	**POWER STEERING HOSE INSTALLATION**					
23	502559	SCREW CAP HEX M10-1.5x25 G8.8 ZP	4	4	4	4	
24	502644	WASHER FL 10.5x30.0x2.5 ZP	4	4	4	4	
NS	500257	WASHER LO SPT 10.2x18.1x2.2 ZP	4	4	4	4	
25	500256	NUT HEX M10-1.5 ZP	4	4	4	4	
30	5011086	MALE CONNECTOR / PUSH-LOK FITTING / 1NPT-Mx#16 STL	1	1	1	1	
31	501739	MALE CONNECTOR / JIC 37° FITTING / #8JIC-Mx1/2NPT-M STL	1	1	1	1	
		2) NOT SOLD BY PREVOST (SEE MANUFACTURING PART					
		NUMBER AT END OF DESCRIPTION LINE)					

From Y-7046 Up to 8-9339	DATE: 01/2014	PAGE: Y2-1427-00

POWER STEERING PUMP - "TRW"

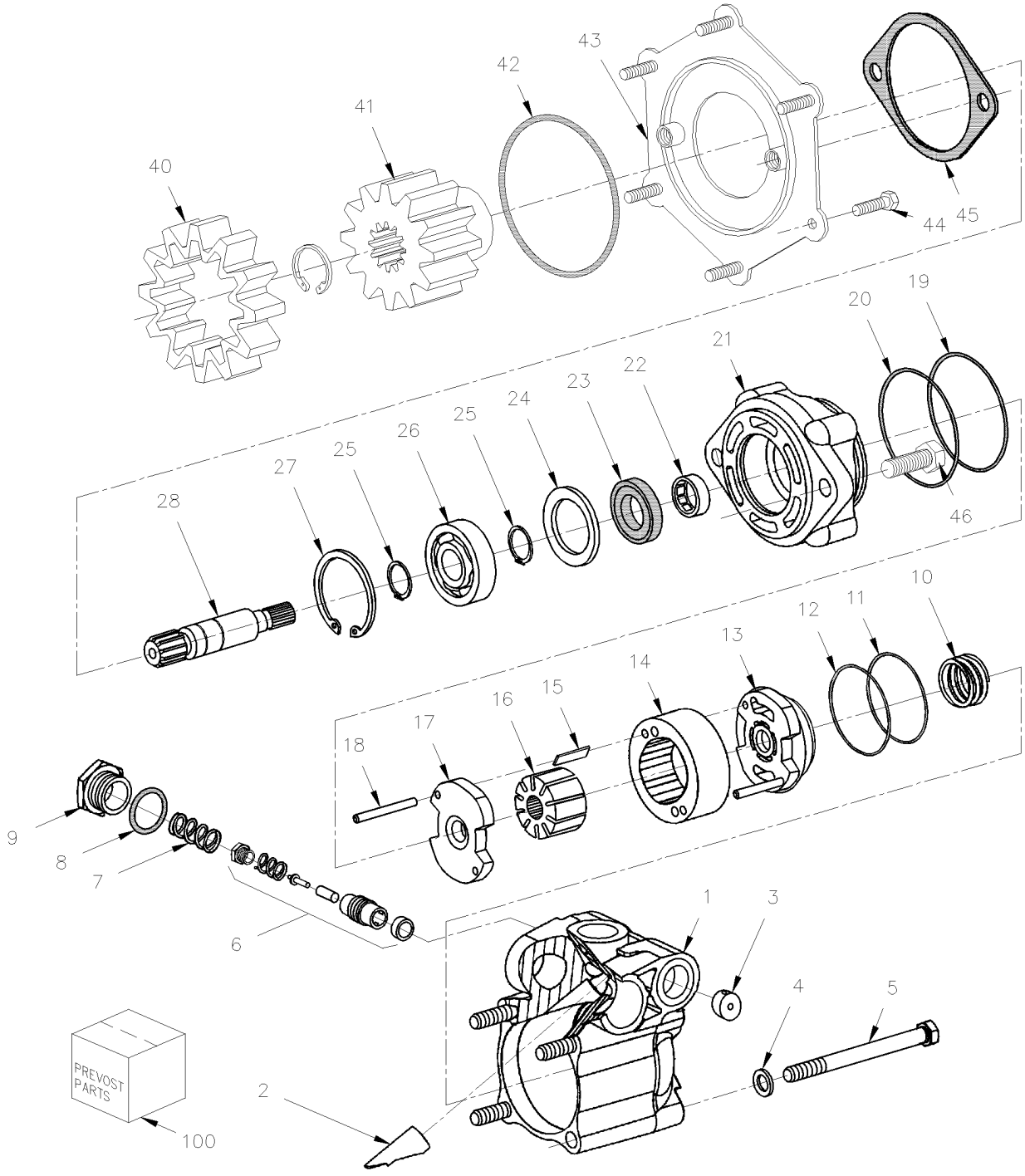

From Y-7046 Up to 8-9339	DATE: 01/2014	PAGE: Y2-1427-00

POWER STEERING PUMP - "TRW"

ITEM	PART	DESCRIPTION	XL45	MTH40	MTH45	MTH45S	NOTE
	661009	PUMP ASSY	1				
	661070	PUMP ASSY Up to 3-8164		1	1	1	
	661092	PUMP ASSY From 4-8165		1	1	1	
1	N.S.S.	. HOUSING	1	1	1	1	1
2	N.S.S.	. BOOST TUBE	1	1	1	1	1
3	N.S.S.	. ORIFICE	1	1	1	1	1
4	N.S.S.	. BOLTS	1	1	1	1	1
5	N.S.S.	. WASHERS	1	1	1	1	1
6	N.S.S.	. VALVE SPOOL ASSY	1	1	1	1	1
6	N.S.S.	. . SPOOL	1	1	1	1	1
6	N.S.S.	. . SPRING	1	1	1	1	1
6	N.S.S.	. . POPPET	1	1	1	1	1
6	N.S.S.	. . SHIMS	1	1	1	1	1
6	N.S.S.	. . RELIEF VALVE SEAT ASSY	1	1	1	1	1
7	N.S.S.	. SPRING	1	1	1	1	1
8	N.S.S.	. O-RING	1	1	1	1	1
9	N.S.S.	. PLUG	1	1	1	1	1
10	N.S.S.	. SPRING	1	1	1	1	1
11	N.S.S.	. O-RING	1	1	1	1	1
12	N.S.S.	. BACKUP RING	1	1	1	1	1
13	N.S.S.	. TOP PLATE	1	1	1	1	1
14	N.S.S.	. CAM RING	1	1	1	1	1
15	N.S.S.	. VANES	1	1	1	1	1
16	N.S.S.	. ROTOR	1	1	1	1	1
17	N.S.S.	. BOTTOM PLATE	1	1	1	1	1
18	N.S.S.	. LOCATING PINS	1	1	1	1	1
19	N.S.S.	. O-RING	1	1	1	1	1
20	N.S.S.	. O-RING	1	1	1	1	1
21	N.S.S.	. COVER	1	1	1	1	1
22	N.S.S.	. NEEDLE BEARING	1	1	1	1	1
23	N.S.S.	. SHAFT SEAL	1	1	1	1	1
24	N.S.S.	. SPACER	1	1	1	1	1
25	N.S.S.	. RETAINING RING	2	2	2	2	1
26	N.S.S.	. BALL BEARING	1	1	1	1	1
27	N.S.S.	. RETAINING RING	1	1	1	1	1
28	661011	. INPUT SHAFT	1	1	1	1	
40	510438	COUPLING DRIVE	1	1	1	1	
41	510437	SPROCKET ASSY W/SNAP-RING	1	1	1	1	
42	N.S.P.	O-RING / (08929289)	1	1	1	1	2
43	N.S.P.	ADAPTOR COVER / (11514329)	1	1	1	1	2
		1) NOT SOLD SEPARATELY					
		2) NOT SOLD BY PREVOST (SEE MANUFACTURING PART					
		NUMBER AT END OF DESCRIPTION LINE)					

From Y-7046 Up to 8-9339	DATE: 01/2014	PAGE: Y2-1427-00

POWER STEERING PUMP - "TRW"

ITEM	PART	DESCRIPTION	XL45	MTH40	MTH45	MTH45S	NOTE
44	N.S.P.	SCREW M8-1.25 X 30MM / (11514329) 500544	5	5	5	5	2
44	N.S.P.	SCREW M8-1.25 X 30MM / (11505299)	1	1	1	1	2
45	510488	GASKET	1	1	1	1	
NS							
100	661012	KIT REPAIR	AR	AR	AR	AR	A
		2) NOT SOLD BY PREVOST (SEE MANUFACTURING PART					
		NUMBER AT END OF DESCRIPTION LINE)					
		A) INCLUDE ITEMS #8,11,12,19,20 & 23					

From Y-7046 Up to 8-9339	DATE: 01/2014	PAGE: Y2-1427-00

POWER STEERING PUMP - "TRW"

ITEM	PART	DESCRIPTION	XL45	MTH400	MTH445	MTH445S	NOTE

From 4-8165 Up to 8-9339	DATE: 01/2014	PAGE: Y2-1430-50
CYLINDER POWER STEERING		

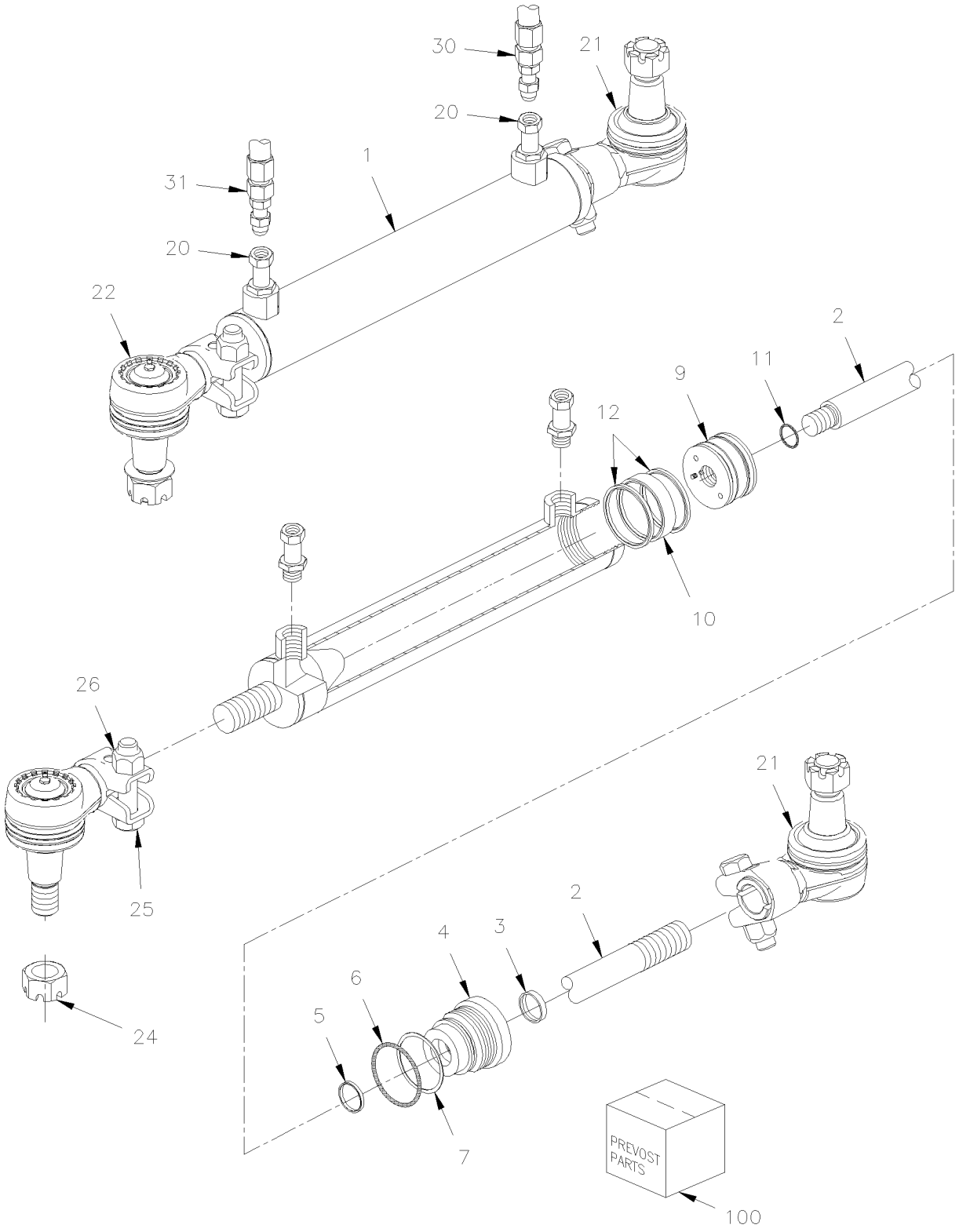

From 4-8165 Up to 8-9339	DATE: 01/2014	PAGE: Y2-1430-50

CYLINDER POWER STEERING

ITEM	PART	DESCRIPTION	XL45	MTH40	MTH45	MTH45S	NOTE
1	661076	CYLINDER ASSY PRESSURE 160bar		1	1	1	
2	N.S.S.	. TUBE		1	1	1	1
3	661098	. HEAD		1	1	1	
4	661097	. ROD		1	1	1	
5	N.S.S.	. WIPER		1	1	1	1
7	N.S.S.	. BACK-UP		1	1	1	1
8	N.S.S.	. O-RING		1	1	1	1
9	N.S.S.	. O-RING		1	1	1	1
10	N.S.S.	. SEAL		2	2	2	1
11	661099	. PISTON		1	1	1	
20	501593	MALE CONNECTOR / JIC 37° FITTING / #8JIC-Mx#8ORB-M STL		2	2	2	
21	611275	END ASSY / STRUCTURE SIDE		1	1	1	
22	611469	END ASSY / ROD SIDE		1	1	1	
24	5001345	NUT HEX CSL THN 7/8-14		1	1	1	
25	N.P.N.	SCREW CAP HEX ZP 1/2-20X2.25 G8		2	2	2	4
26	N.P.N.	NUT HEX 1/2-20 G8		2	2	2	4
30	163470	HOSE ASSY / #8 1648MM		1	1	1	
31	163469	HOSE ASSY / #8 1648MM		1	1	1	
31	Y2-2400-00	POWER STEERING HOSE - INST WITH DETROIT S-60					
NS	161177	HOSE RETAINER BLOCK CLAMP		2	2	2	
32	160033	HOSE RETAINER BLOCK CLAMP		1	1	1	
NS	160034	KIT, HOSE SUPPORT / FRONT SECTION		1	1	1	
. NS	160033	. HOSE RETAINER BLOCK CLAMP		1	1	1	
. NS	163459	. HOSE ASSY / #8 2600MM		1	1	1	
. NS	500177	. SCREW CAP HEX 1/4-20x1 G8 ZP		1	1	1	
. NS	504727	. CLAMP DOUBLE ASS / 1/2 I.D.		1	1	1	
. NS	504728	. PLATE RETAINER		1	1	1	
. NS	501005	. FEMALE CONNECTOR SWIVEL / JIC 37° FITTING /		1	1	1	
NS	502541	SCREW CAP HEX M6-1.0x65 G8.8 ZP		1	1	1	
NS	500411	WASHER FL .260x.697x.050 SS		2	2	2	
NS	5001182	NUT HEX NYRT M6-1.0 SS		1	1	1	
NS	504634	T-CLIP / 7/8" - 1"		1	1	1	
100	661100	KIT, REPAIR		1	1	1	A
		1) NOT SOLD SEPARATELY					
		4) NO PARTS NUMBER					
		A) INCLUDES ITEMS 3, 5, 6, 7, 10, 11 & 12					

From Y-7046 Up to 8-9339	DATE: 01/2014	PAGE: Y2-16
SUSPENSION		

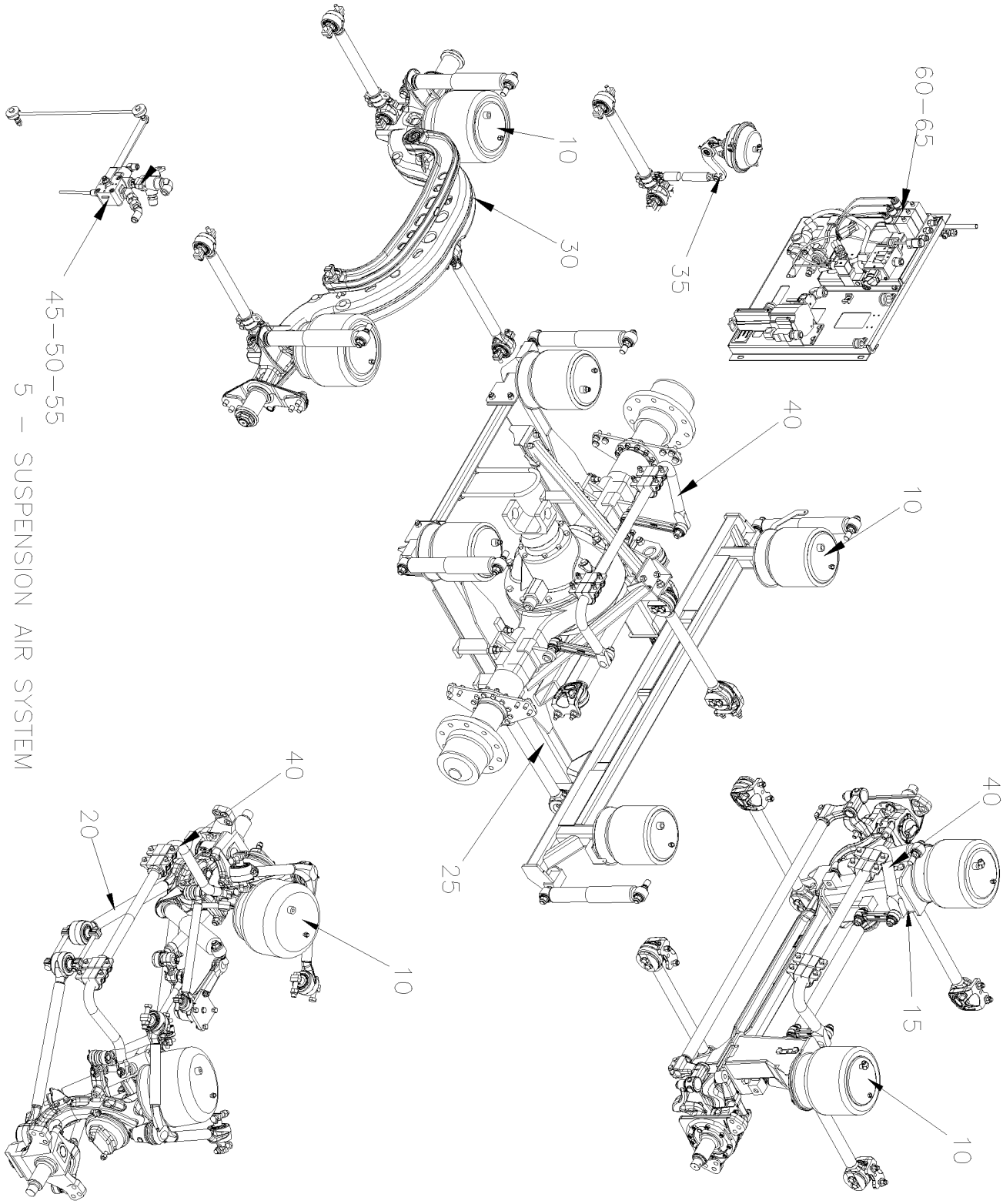

From Y-7046 Up to 8-9339	DATE: 01/2014	PAGE: Y2-16

SUSPENSION

ITEM	PART	DESCRIPTION	XL45	MTH40	MTH45	MTH45S	NOTE
5	Y2-1600-00	**SUSPENSION AIR SYSTEM From Y-7046 Up to 7-9095**					
5	Y2-1600-50	**SUSPENSION AIR SYSTEM - MTH From 7-9096 Up to 8-9339**					
10	Y2-1601-00	**BELLOWS - AIR SUSPENSION From Y-7046 Up to 8-9339**					
15	Y2-1605-00	**FRONT AXLE - INSTALL W/ I BEAM RIGID From Y-7046 Up to 6-8906**					
20	Y2-1605-50	**FRONT AXLE - INSTALL W/INDEPENDENT "IS-84" / 16500LBS From Y-7046 Up to 3-8164**					
20	Y2-1605-51	**FRONT AXLE - INSTALL W/INDEPENDENT "NDIFS80P" / 18000LBS From 4-8165 Up to 8-9339**					
25	Y2-1610-00	**REAR AXLE - INSTALL SUSPENSION From Y-7046 Up to 8-9339**					
30	Y2-1615-00	**TAG AXLE - INSTALL SUSPENSION From Y-7046 Up to 8-9339**					
35	Y2-1615-10	**TAG AXLE - LIFTING From Y-7046 Up to 8-9339**					
40	Y2-1616-00	**SWAY BAR From Y-7046 Up to 8-9339**					
45	Y2-1620-00	**HEIGHT CONTROL VALVE From Y-7046 Up to 6-8906**					
50	Y2-1620-10	**HIGH- BUOY, LOW BUOY & "KNEELING" VALVE From Y-7046 Up to 6-8906**					
55	Y2-1620-50	**HEIGHT CONTROL VALVE - MTH From Y-7046 Up to 8-9339**					
60	Y2-1630-00	**FRONT KNEELING - CONTROL PANEL From Y-7046 Up to 2-7799**					
60	Y2-1630-01	**FRONT KNEELING - CONTROL PANEL From 2-7800 Up to 5-8558**					
60	Y2-1630-02	**FRONT KNEELING - CONTROL PANEL From 5-8559 Up to 6-8906**					
65	Y2-1640-50	**LEVEL-LOW - CONTROL PANEL & VALVES From Y-7046 Up to 2-7799**					
65	Y2-1640-51	**LEVEL-LOW - CONTROL PANEL & VALVES From 2-7800 Up to 5-8558**					
65	Y2-1640-52	**LEVEL-LOW - CONTROL PANEL & VALVES From 5-8559**					

From Y-7046 Up to 7-9095	DATE: 01/2014	PAGE: Y2-1600-00

SUSPENSION AIR SYSTEM

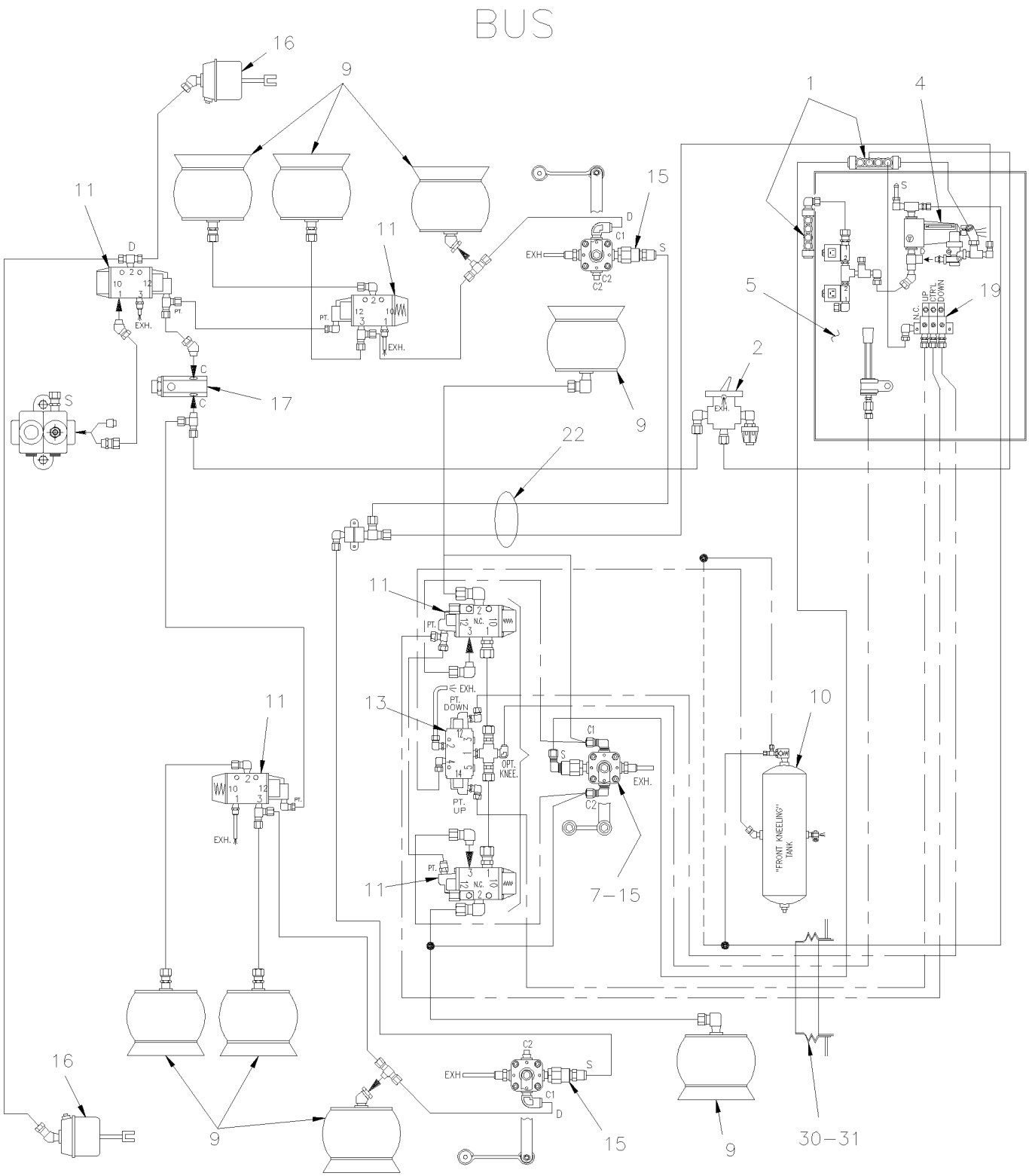

From Y-7046 Up to 7-9095	DATE: 01/2014	PAGE: Y2-1600-00

SUSPENSION AIR SYSTEM

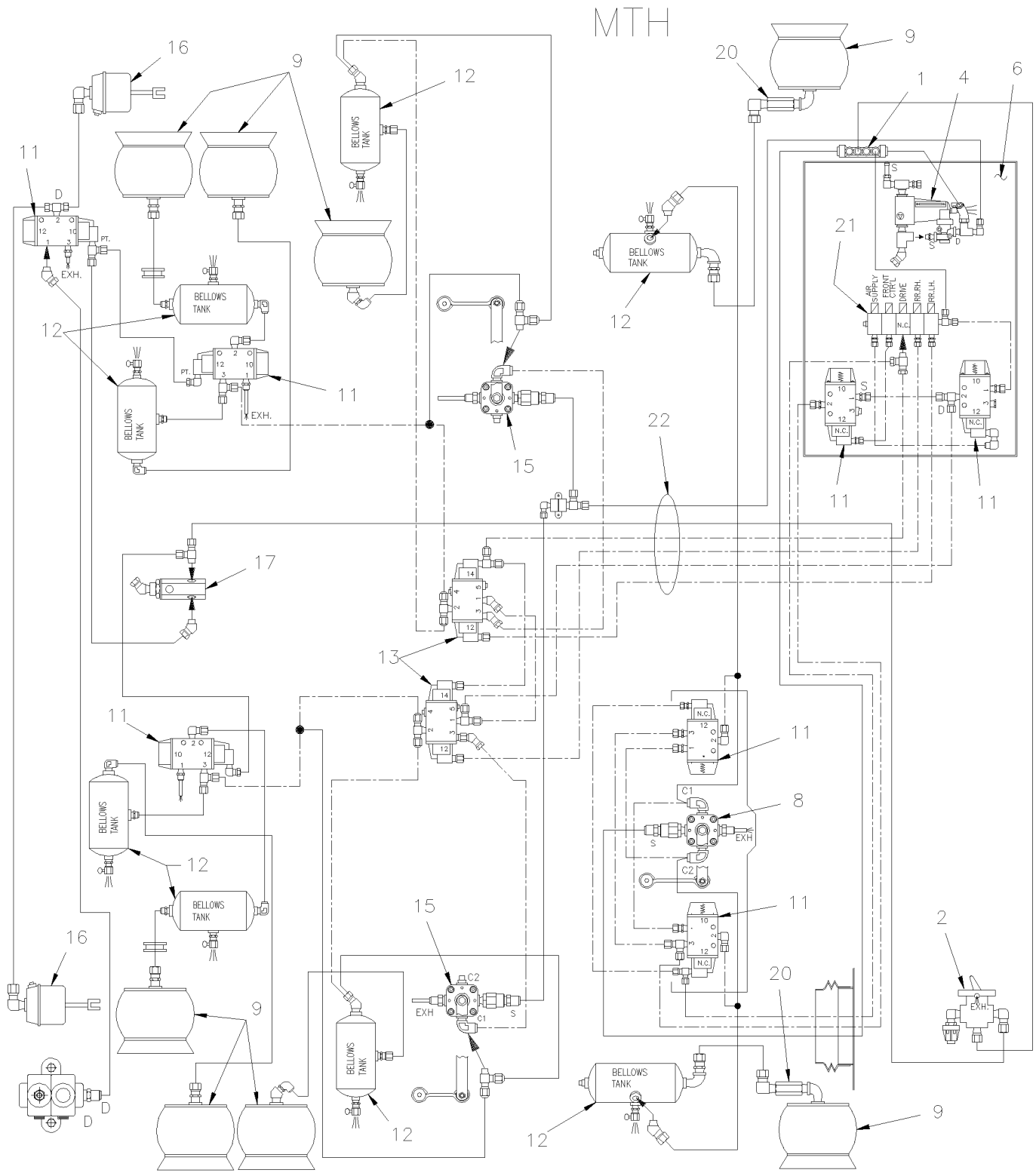

From Y-7046 Up to 7-9095	DATE: 01/2014	PAGE: Y2-1600-00

SUSPENSION AIR SYSTEM

ITEM	PART	DESCRIPTION	XL45	MTH40	MTH45	MTH45S	NOTE
1	641415	MANIFOLD / PUSH-IN FITTING / 2x#6 / 4x#4 PLAS Up to 6-8906 / REPLACED BY: 641897	2				
1	641415	MANIFOLD / PUSH-IN FITTING / 2x#6 / 4x#4 PLAS / REPLACED BY: 641897		1	1	1	
2	640136	VALVE, CONTROL TW-1	1				
. NS	641156	. REPAIR KIT / TW-1	1				
4	Y2-1220-15	**AIR FILTER - ACCESSORIES**					
5	Y2-1630-02	**FRONT KNEELING - CONTROL PANEL**					
5	Y2-1630-01	**FRONT KNEELING - CONTROL PANEL**					
5	Y2-1630-02	**FRONT KNEELING - CONTROL PANEL**					
6	Y2-1640-50	**LEVEL-LOW - CONTROL PANEL & VALVES**					
6	Y2-1640-51	**LEVEL-LOW - CONTROL PANEL & VALVES**					
6	Y2-1640-52	**LEVEL-LOW - CONTROL PANEL & VALVES**					
7	Y2-1620-00	**HEIGHT CONTROL VALVE**					
8	Y2-1620-50	**HEIGHT CONTROL VALVE - MTH**					
9	Y2-1601-00	**BELLOWS - AIR SUSPENSION**					
10	641411	AIR TANK / 2370 IN° / 12" O.D. X 24" Up to 6-8906	1				
11	641274	VALVE, 3 WAYS, 2 POSITIONS N.C.	1				
12	Y2-1203-01	**AIR TANK - INSTALLATION**					
13	641531	VALVE, 5 WAYS, 3 POSITIONS	2				
. NS	641186	. SPOOL	1				
15	630156	VALVE, HEIGHT CONTROL "BARKSDALE" Up to 6-8906	3				
15	630156	VALVE, HEIGHT CONTROL "BARKSDALE"		2	2	2	
16	Y2-1615-10	**TAG AXLE - LIFTING**					
17	640442	VALVE, INVERSION TR-2	1				
19	641180	MANIFOLD VALVE / W/3 SOLENOID Up to 6-8906	1				
20	131737	MALE CONNECTOR 123.8MM 1/2 NPT		2	2	2	
21	641205	MANIFOLD VALVE / W/5 SOLENOID		1	1	1	
22	Y2-1202-00	**TUBES PLASTIC / AIR D.O.T.**					
30	504499	CUFF END BELLOW / 2 7/8" I.D. x 3 5/8" x 4 7/16	1				
31	141567	PROTECTOR RUBBER 100MM	1				
31	509558	WEATHERSEAL SNAP-ON 1/8" / SINGLE LIP / WH / C.T.L.	AR				

From Y-7046 Up to 7-9095	DATE: 01/2014	PAGE: Y2-1600-00

SUSPENSION AIR SYSTEM

ITEM	PART	DESCRIPTION	XL45	MTH400	MTH445	MTH445S	NOTE

From 7-9096 Up to 8-9339	DATE: 01/2014	PAGE: Y2-1600-50

SUSPENSION AIR SYSTEM - MTH

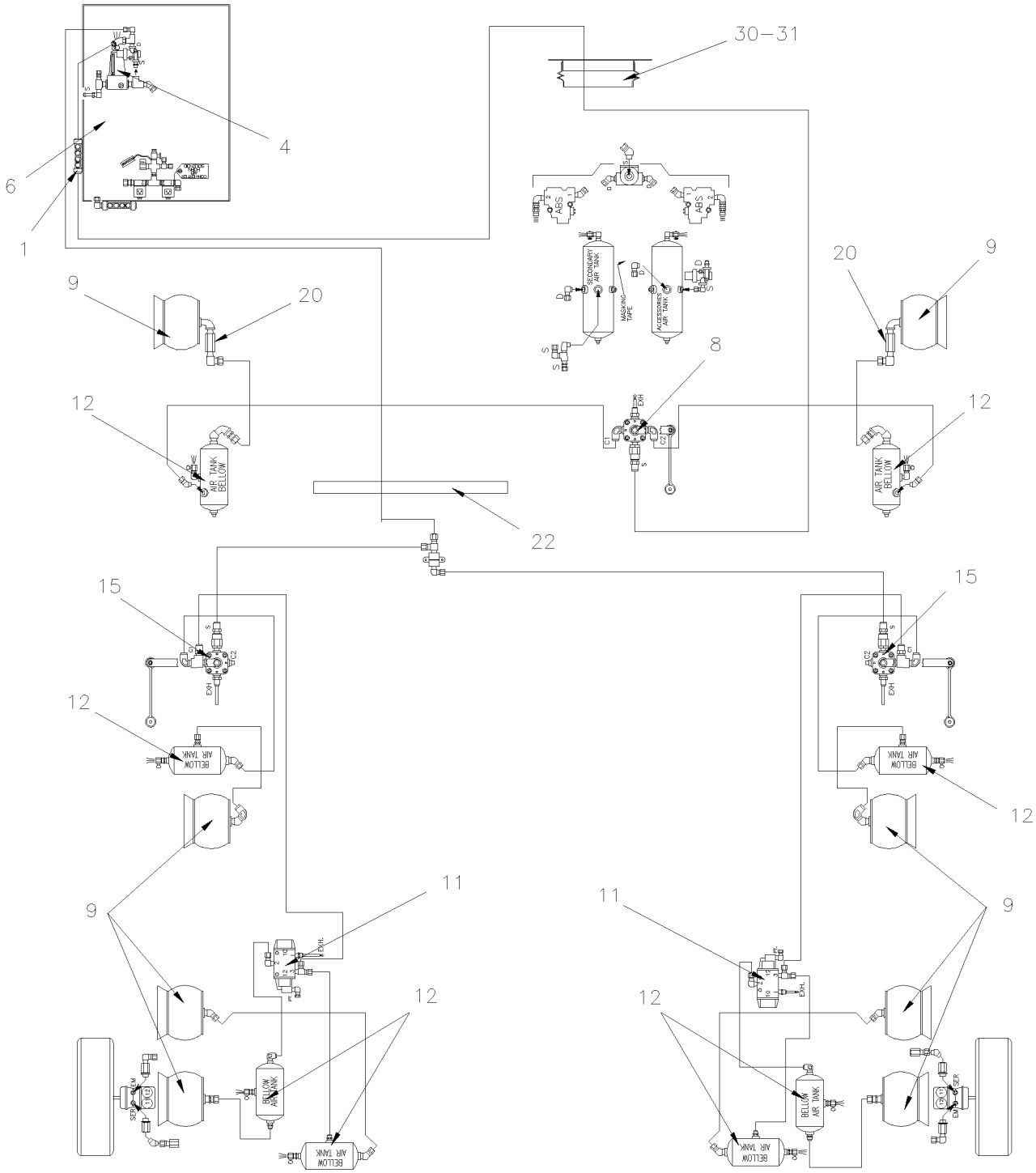

MTH-40' & MTH-45 ENT STANDARD SUSPENSION

From 7-9096 Up to 8-9339	DATE: 01/2014	PAGE: Y2-1600-50

SUSPENSION AIR SYSTEM - MTH

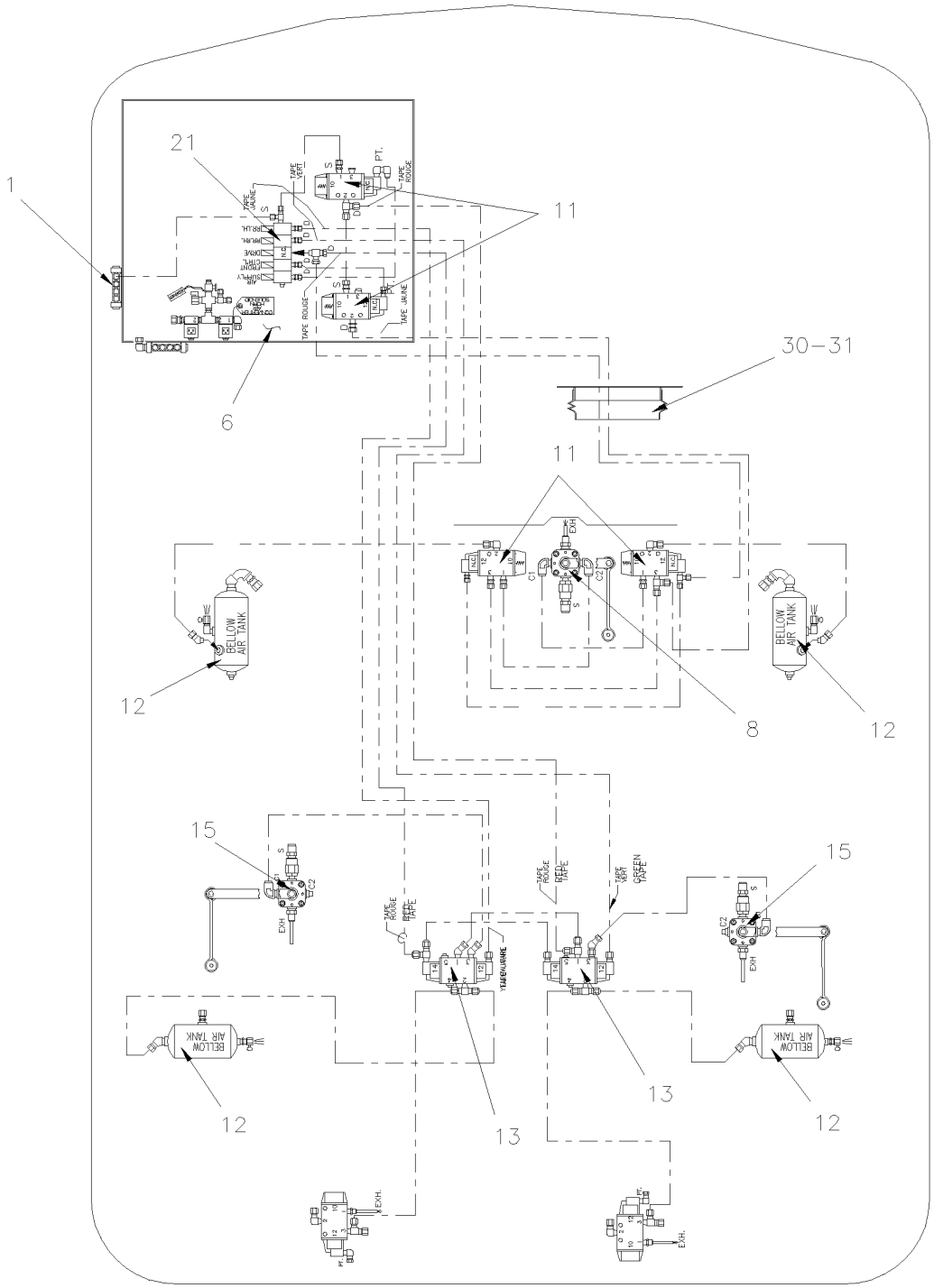

MTH-40' & MTH-45' ENT
WITH OPTION LEVEL LOW

From 7-9096 Up to 8-9339	DATE: 01/2014	PAGE: Y2-1600-50

SUSPENSION AIR SYSTEM - MTH

ITEM	PART	DESCRIPTION	XL45	MTH40	MTH45	MTH45S	NOTE
1	641415	MANIFOLD / PUSH-IN FITTING / 2x#6 / 4x#4 PLAS / REPLACED BY: 641897		1	1	1	
4	Y2-1220-15	**AIR FILTER - ACCESSORIES**					
6	Y2-1640-52	**LEVEL-LOW - CONTROL PANEL & VALVES**					
8	630237	VALVE, HEIGHT CONTROL "BARKSDALE" / FRONT		1	1	1	
9	Y2-1601-00	**BELLOWS - AIR SUSPENSION**					
11	641274	VALVE, 3 WAYS, 2 POSITIONS N.C.		AR	AR	AR	
12	Y2-1203-01	**AIR TANK - INSTALLATION**					
13	641531	VALVE, 5 WAYS, 3 POSITIONS		2	2	2	
. NS	641186	. SPOOL		1	1	1	
15	630156	VALVE, HEIGHT CONTROL "BARKSDALE"		2	2	2	
20	131737	MALE CONNECTOR 123.8MM 1/2 NPT		2	2	2	
21	641205	MANIFOLD VALVE / W/5 SOLENOID		1	1	1	
22	Y2-1202-00	**TUBES PLASTIC / AIR D.O.T.**					
30	504499	CUFF END BELLOW / 2 7/8" I.D. x 3 5/8" x 4 7/16		1	1	1	
31	141567	PROTECTOR RUBBER 100MM		1	1	1	

From 7-9096 Up to 8-9339	DATE: 01/2014	PAGE: Y2-1600-50

SUSPENSION AIR SYSTEM - MTH

ITEM	PART	DESCRIPTION	XL45	MTH400	MTH445	MTH445S	NOTE

From Y-7046 Up to 8-9339	DATE: 01/2014	PAGE: Y2-1601-00

BELLOWS - AIR SUSPENSION

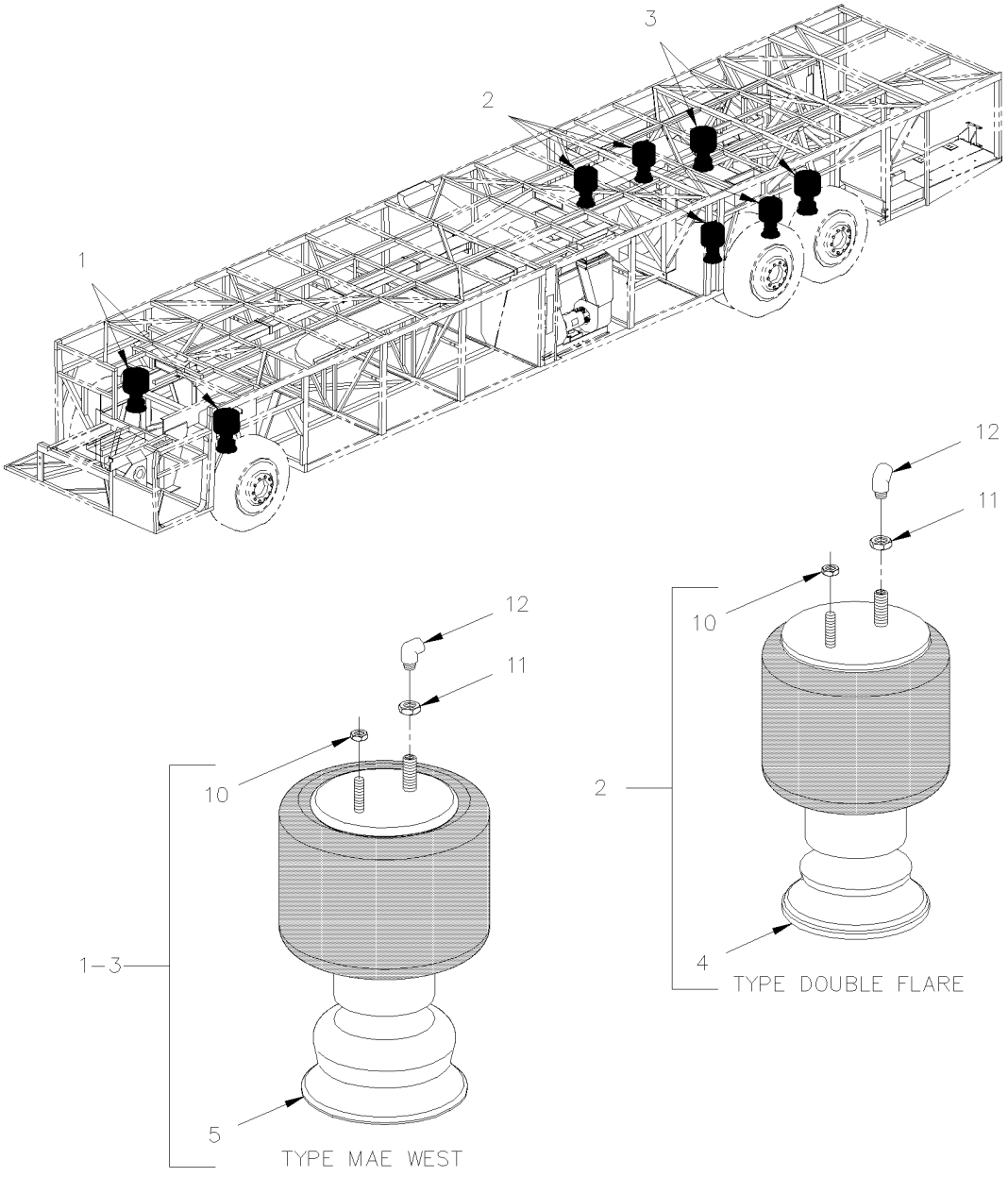

From Y-7046 Up to 8-9339	DATE: 01/2014	PAGE: Y2-1601-00

BELLOWS - AIR SUSPENSION

ITEM	PART	DESCRIPTION	XL45	MTH40	MTH45	MTH45S	NOTE
		. . . . FRONT AXLE BELLOW					
1	630151	BELLOW ASSY / MODEL 1200 M.W. Up to 6-8906	2				
1	630151	BELLOW ASSY / MODEL 1200 M.W. Up to 3-8164		2	2	2	
1	630223	. BELLOW ASSY W/O PISTON Up to 3-8164	1	1	1	1	
1	630239	BELLOW ASSY / MODEL 1400 M.W. From 4-8165		2	2	2	A
		. . . . DRIVE AXLE BELLOW					
2	630105	BELLOW ASSY / MODEL 1100 D.F. Up to 5-8697 / REPLACED BY: 5001599	4	4	4	4	
2	630109	. BELLOW ASSY W/O PISTON Up to 5-8697	1	1	1	1	
2	630260	BELLOW ASSY / MODEL 1100 D.F. From 5-8698	1	1	1	1	
		. . . . TAG AXLE BELLOW					
3	630126	BELLOW ASSY / MODEL 1100 M.W. Up to 5-8735 / REPLACED BY: K630126	2	2		2	
3	630128	. BELLOW ASSY W/O PISTON Up to 5-8735	1	1		1	
3	630259	BELLOW ASSY / MODEL 1100 M.W. From 5-8736	2			2	
3	630126	BELLOW ASSY / MODEL 1100 M.W. Up to 2-7855 / REPLACED BY: K630126			2		
3	630128	. BELLOW ASSY W/O PISTON Up to 2-7855			1		
3	630151	BELLOW ASSY / MODEL 1200 M.W. From 2-7856 Up to 5-8735			2		
3	630223	. BELLOW ASSY W/O PISTON From 2-7856 Up to 5-8736			1		
3	630162	BELLOW ASSY / MODEL 1200 M.W. From 5-8736			2		
4	630071	. PISTON / TYPE DOUBLE FLARE / REPLACED BY: 630260	AR	AR	AR	AR	
5	630036	. PISTON / TYPE MAY WEST	AR	AR	AR	AR	
10	500717	NUT HEX NYRT 1/2-20 ZP / REPLACED BY: 500718	AR	AR	AR	AR	
10	5001599	NUT HEX NYRT THN 1/2-13 ZP	AR				
10	500968	NUT HEX STO 1/2-13 ZP	AR				
10	502595	NUT HEX NYRT 1/2-13 ZP	AR				
11	502831	NUT HEX THN 1 1/4-12x1/2 / REPLACED BY: 5001041	AR	AR	AR	AR	
11	5001041	NUT HEX THN 1 1/4-12x1/2 Up to 6-8906	AR				
12	501406	STREET ELBOW 90º / PIPE FITTING / 1/2NPT-Mx1/2NPT-F BR Up to 6-8906	1				
12	5011170	STREET ELBOW 90º / PIPE FITTING / 1/2NPT-Mx1/2NPT-F GAL	2	2	2	2	
12	641410	MALE ELBOW 90° NON-SWIVEL / PUSH-IN FITTING / #12x1/2NPT-M BR	2	2	2	2	
NS	131388	MALE CONNECTOR 114MM 1/2 NPT Up to 3-8164	1	1	1	1	A
NS	131737	MALE CONNECTOR 123.8MM 1/2 NPT From 4-8165	1	1	1	1	A
		A) WITH INDEPENDANT SUSPENSION					

From Y-7046 Up to 6-8906	DATE: 01/2014	PAGE: Y2-1605-00

FRONT AXLE - INSTALL W/ I BEAM RIGID

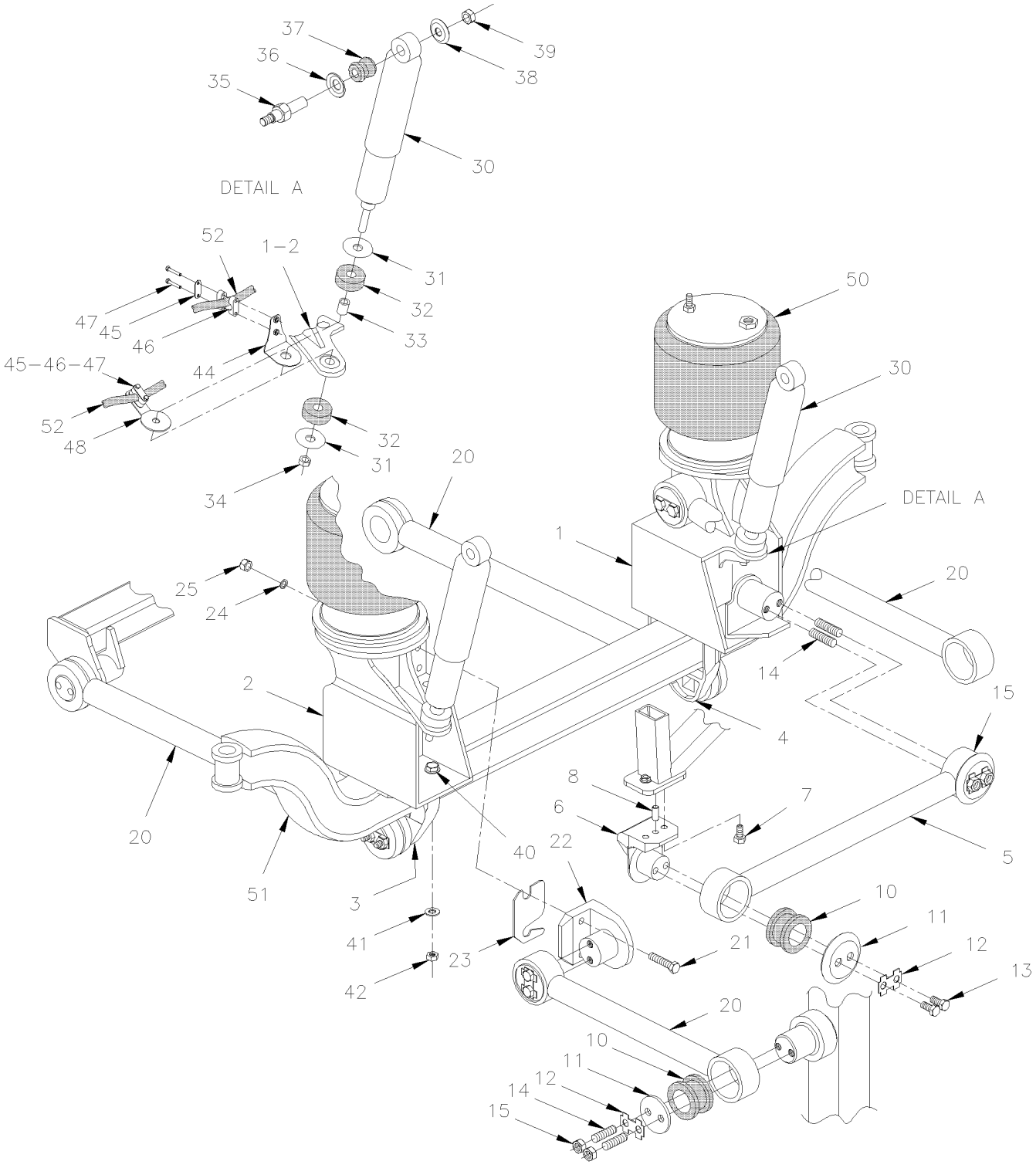

From Y-7046 Up to 6-8906	DATE: 01/2014	PAGE: Y2-1605-00

FRONT AXLE - INSTALL W/ I BEAM RIGID

ITEM	PART	DESCRIPTION	XL45	MTH40	MTH45	MTH45S	NOTE
1	110713	SUPPORT ASSY L.H. BELLOW	1				
2	110712	SUPPORT ASSY R.H. BELLOW	1				
NS	110762	SPACER WASHER 1" I.D. X 1 1/2" O.D. X 16GA Up to 2-7929	1				A
3	110740	SUPPORT RADIUS ROD R.H.	1				
4	110739	SUPPORT RADIUS ROD L.H.	1				
5	110648	ROD ASSY / 34 13/16" C/C (885MM)	1				
6	131544	SUPPORT / ROD / W/2 M16-2 HOLES & DOWEL PIN / 95MM C/C // 150MM SHORT Up to 5-8461 / REPLACED BY: 132912	1				
6	131686	SUPPORT / ROD / W/2 M16-2 HOLES & DOWEL PIN / 95MM C/C // 150MM SHORT From 5-8462 Up to 6-8950 / REPLACED BY: 13					
6	132912	SUPPORT / ROD / W/2 M16-2 HOLES & DOWEL PIN / 95MM C/C // 150MM SHORT SERVICE From 6-8951	1				
6	121890	TORQUE PLATE / W/2HOLES 17MM I.D. X 90MM C/C	1				
7	5001224	SCREW CAP HEX M16-2.0x60 G10.9 DP	2				
7	5001372	SCREW CAP HEX M16-2.0x50 G10.9 DP SERVICE	2				
8	502164	PIN DOWEL M16 X 40MM	1				
10	630021	RUBBER BUSHING "PREVOST"	10				
11	110681	RETAINER PLATE / IRON 110MM OD W/16.7 @ 38C/C	10				
12	110340	TAB LOCK / W/2 HOLES 18MM I.D. X 38MM C/C W/4 TABS / REPLACED BY: 110788	10				
13	502544	SCREW CAP HEX M16-2.0x40 G8.8 ZP Up to 6-8844	2				
13	500813	SCREW CAP HEX M16-2.0x35 G8.8 ZP From 6-8845	2				
14	130963	STUD 70MM X M16-2.0	2				
15	502588	NUT HEX M16-2.0 ZP	2				
20	131560	ROD ASSY / 24 1/16" C/C (611MM)	3				
21	5001512	SCREW CAP HEX M16-2.0x100 G10.9 ZP Up to 6-8950	2				
21	5001501	SCREW CAP HEX M16-2.0x90 G10.9 ZP SERVICE From 6-8951	2				
22	131065	SUPPORT / ROD / W/2 M16-2 HOLES / 95MM C/C // 150MM SHORT Up to 5-8461 / REPLACED BY: 132914	1				
22	131753	SUPPORT / ROD / W/2 M16-2 HOLES / 95MM C/C // 150MM SHORT From 5-8462 Up to 6-8950 / REPLACED BY: 132914					
22	132914	SUPPORT / ROD / W/2 M16-2 HOLES / 95MM C/C // 150MM SHORT SERVICE From 6-8951	1				
. NS	121890	. TORQUE PLATE / W/2HOLES 17MM I.D. X 90MM C/C From 6-8951	AR				
23	110732	SHIM 0.125	AR				
24	5001046	WASHER FL .656x1.500x.187	2				
25	5001662	NUT HEX NYRT M16-2.0 G10 ZM	2				
30	630228	SHOCK ABSORBER / WHITE Up to 3-8164 / REPLACED BY: 630254	2				
30	630254	SHOCK ABSORBER / SACHS / 206 From 4-8165	2				
. NS	630255	. KIT WASHER & RUBBER BUSHING From 4-8165	1				
31	630155	. BUSHING KIT / LOWER SHOCK Up to 2-7816 / REPLACED BY: 630249	1				
31	630249	. KIT WASHER & RUBBER BUSHING From 2-7817 Up to 3-8164	AR				
31	630255	. KIT WASHER & RUBBER BUSHING From 4-8165	AR				
31	630153	. . WASHER STEEL Up to 2-7816 / REPLACED BY: 110756	2				
31	110756	. . WASHER CONCAVE 75MM O,D. X 16.5MM I.D From 2-7817 Up to 3-8164	2				
32	630152	. . BUSHING / RUBBER Up to 3-8164	2				
33	630154	. . SPACER SLEEVE / STEEL Up to 3-8164 / REPLACED BY: 630249	2				
34	500725	. . NUT HEX STO 5/8-18 ZP Up to 3-8164	2				
34	963121	. . NUT HEX NYRT M16-1.5 ZP From 4-8165	2				
35	131424	PIN W/TAPER ATTACHMENT M20-2.5	2				
		A) BETWEEN LINK AND SUPPORT					

From Y-7046 Up to 6-8906	DATE: 01/2014	PAGE: Y2-1605-00

FRONT AXLE - INSTALL W/ I BEAM RIGID

ITEM	PART	DESCRIPTION	XL45	MTH40	MTH45	MTH45S	NOTE
36	5001153	WASHER CON 25.5x50.0x4.5 ZP	2				
37	630257	BUSHING / RUBBER / (TWO PIECES) 1" x 1.005" I.D.	2				
38	5001152	WASHER CON 21.0x50.0x4.5 ZP	2				
39	500809	NUT HEX STO M20-2.5 ZP	2				
40	5001510	SCREW CAP HEX M22-2.5x85 G8.8 ZP	9				
41	5001509	WASHER FL 23.0x39.0x4.0 ZP	9				
42	5001176	NUT HEX STO M22-2.5 ZP	9				
44	110738	HOSE SUPPORT L.H. & R.H. / FIXED AT SHOCK END	2				
45	504614	PLATE RETAINING / COLLAR	2				
46	504612	COLLAR 13/16" I.D. / TO FIX HOSE	4				
47	502656	SCREW CAP HEX M6-1.0x50 SS	4				
48	110765	HOSE SUPPORT L.H. & R.H. / FIXED AT SHOCK END	2				
50	Y2-1601-00	**BELLOWS - AIR SUSPENSION**					
51	Y2-1005-00	**FRONT AXLE - I BEAM RIGID MODEL "S-84"**					
52	Y2-1225-10	**BRAKE CHAMBER - FRONT AXLE TYPE 22**					
52	Y2-1225-11	**BRAKE CHAMBER - FRONT AXLE TYPE 24**					
52	Y2-1225-12	**BRAKE CHAMBER - FRONT AXLE TYPE 27**					

From Y-7046 Up to 6-8906	DATE: 01/2014	PAGE: Y2-1605-00

FRONT AXLE - INSTALL W/ I BEAM RIGID

ITEM	PART	DESCRIPTION	XL45	MTH40	MTH45	MTH45S	NOTE

From Y-7046 Up to 3-8164	DATE: 01/2014	PAGE: Y2-1605-50

FRONT AXLE - INSTALL W/INDEPENDENT "IS-84" / 16500LBS

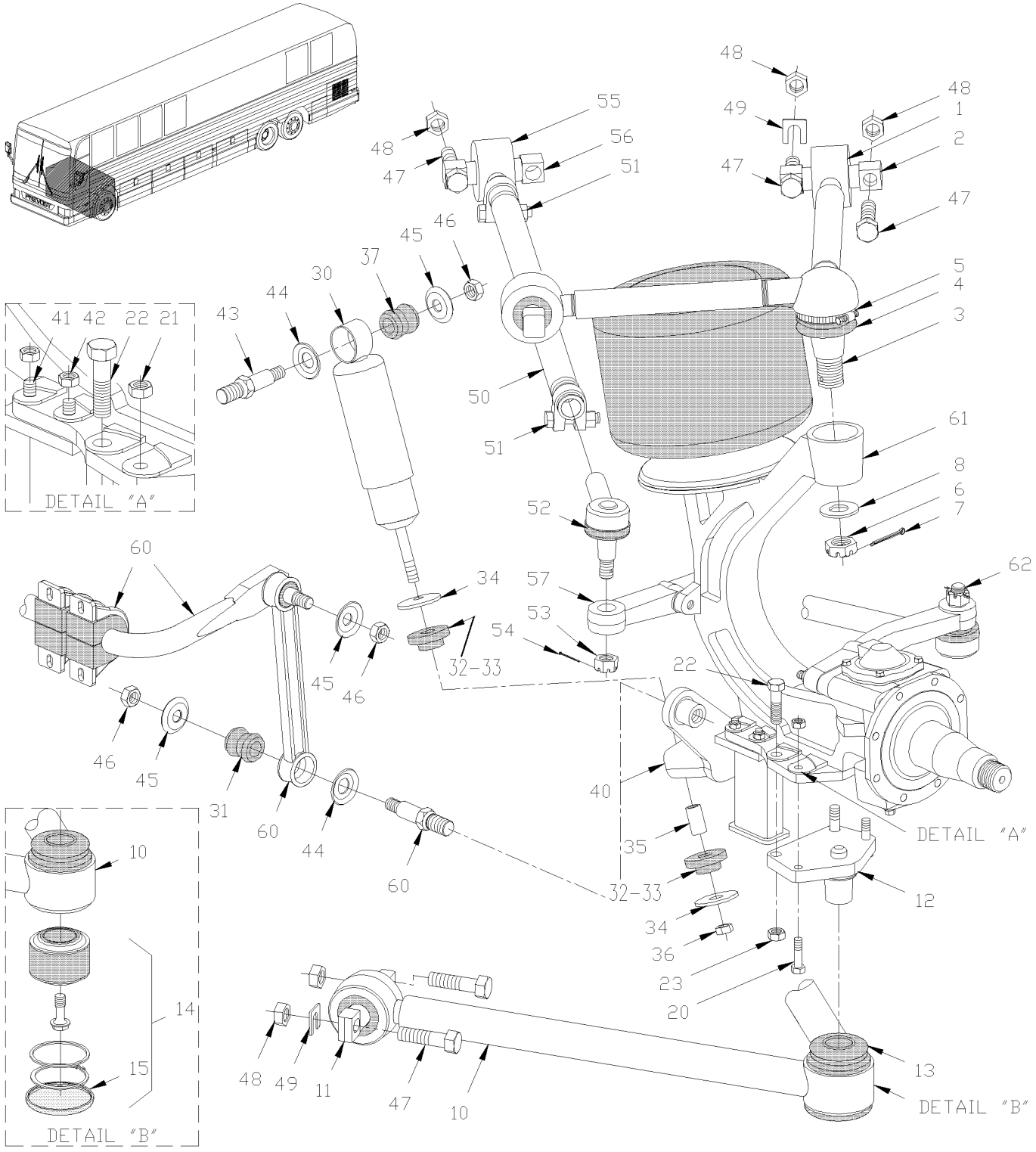

From Y-7046 Up to 3-8164	DATE: 01/2014	PAGE: Y2-1605-50

FRONT AXLE - INSTALL W/INDEPENDENT "IS-84" / 16500LBS

ITEM	PART	DESCRIPTION	XL45	MTH40	MTH45	MTH45S	NOTE
1	611203	UPPER ARM ASSY / L.H. & R.H. / REPLACED BY: 611347		2	2	2	
1	611347	UPPER ARM ASSY / L.H. & R.H. / SERVICE		1	1	1	
2	611135	. BUSHING BAR PIN / 20mm 130mm c/c 75MM O.D. x 52MM wide		1	1	1	
. NS	683108	. . TOOL MOUNTING / MATRICE / 56543-126.2/B		1	1	1	
. NS	683109	. . TOOL MOUNTING / TAPER RING / 100.5MM O.D. / 55531-126.1/D		1	1	1	
. NS	683110	. . TOOL MOUNTING / STABILISATION / 51323-126.1/E		1	1	1	
NS	N.S.S.	. . LOCK RING		1	1	1	1
NS	N.S.S.	. . SPACER RING		1	1	1	1
3	611108	. BALL STUD / REPAIR KIT / W/611203 ONLY		1	1	1	C
NS	N.S.S.	. . BEARING RACE		1	1	1	1
NS	N.S.S.	. . BEARING RETAINER		1	1	1	1
4	611109	. SEALING BOOT KIT / W/611203 ONLY		1	1	1	
5	611110	. . RING 96mm / RETAINER BOOT		1	1	1	
6	5001321	. NUT HEX CSL M30-1.5 17TH CJ		1	1	1	
7	502105	. PIN, COTTER 3/16 x 2 / REPLACED BY: 502115		1	1	1	
8	5001255	WASHER FL 31.75x54.77x3.175		2	2	2	
10	611072	LOWER ARM ASSY / R.H.		1	1	1	
NS	611078	LOWER ARM ASSY / L.H.		1	1	1	
11	611114	. BUSHING BAR PIN / 20x25mm 130mm c/c 85MM O.D. x 55MM wide		1	1	1	
. NS	683111	. . TOOL MOUNTING / MATRICE / STAMPED 226 698		1	1	1	
. NS	683112	. . TOOL MOUNTING / TAPER RING / 106.5MM O.D. / STAMPED 264 680-05		1	1	1	
. NS	683113	. . TOOL MOUNTING / STABILISATION / 52575-126.1/B		1	1	1	
NS	N.S.S.	. . LOCK RING		1	1	1	1
NS	N.S.S.	. . SPACER RING		1	1	1	1
12	611117	. MOUNTING BRACKET / TOP OF LOWER ARM W/4 HOL		1	1	1	
13	611115	. SEALING BOOT ASSY / ARM MOUNTING BRACKET		1	1	1	
NS	611116	. . RING 113mm / RETAINER BOOT		1	1	1	
14	611112	. LOWER BEARING BALL ASSY / REPAIR KIT		1	1	1	
. NS	683114	. . TOOL MOUNTING / MATRICE / STAMPED 038627		1	1	1	
. NS	683115	. . TOOL MOUNTING / TAPER RING / 101.5MM O.D. / STAMPED 284 679-05		1	1	1	
. NS	683116	. . TOOL MOUNTING / STABILISATION / STAMPED 284 445		1	1	1	
. NS	683117	. . TOOL MOUNTING / MATRICE / STAMPED 284 441		1	1	1	
. NS	683118	. . TOOL MOUNTING / HANDLE / STAMPED 211.12.40.024		1	1	1	
. NS	683119	. . TOOL MOUNTING / MATRICE / 50331-126.2		1	1	1	
. NS	683120	. . TOOL MOUNTING RING POSITIONING / 56968-126.1		1	1	1	
NS	N.S.S.	. . . BEARING ELEMENT RING		2	2	2	1
NS	N.S.S.	. . . BEARING SPACER RING		2	2	2	1
NS	N.S.S.	. . . SCR CAP HEX M14-1.5 X 30MM SPECIAL		1	1	1	1
15	611113	. . . CLOSING CAP, LOWER		1	1	1	
		1) NOT SOLD SEPARATELY					
		C) USE TOOL #683121					

From Y-7046 Up to 3-8164	DATE: 01/2014	PAGE: Y2-1605-50

FRONT AXLE - INSTALL W/INDEPENDENT "IS-84" / 16500LBS

ITEM	PART	DESCRIPTION	XL45	MTH40	MTH45	MTH45S	NOTE
20	5001322	SCREW CAP HEX M16-1.5x60 G10.9 ZP		2	2	2	
NS	5001224	SCREW CAP HEX M16-2.0x60 G10.9 DP		AR	AR	AR	
21	5001253	NUT HEX STO M16-1.5 DP		4	4	4	
NS	5001254	NUT HEX STO M16-2.0 DP / REPLACED BY: 500781		AR	AR	AR	A
30	630136	SHOCK ABSORBER / BLACK		2	2	2	
30	630235	SHOCK ABSORBER / "KONI" (ORANGE)		AR	AR	AR	O
31	630062	. BUSHING / RUBBER / (ONE PIECE) 2" x 1.005" I.D. Up to 2-7816		2	2	2	
32	630249	. KIT WASHER & RUBBER BUSHING From 2-7817		2	2	2	
33	630152	. . BUSHING / RUBBER		2	2	2	
34	630153	. . WASHER STEEL Up to 2-7816 / REPLACED BY: 110756		2	2	2	
34	110756	. . WASHER CONCAVE 75MM O,D. X 16.5MM I.D From 2-7817		2	2	2	
35	630154	. . SPACER SLEEVE / STEEL / REPLACED BY: 630249		1	1	1	
36	500725	. . NUT HEX STO 5/8-18 ZP		1	1	1	
37	630257	. BUSHING / RUBBER / (TWO PIECES) 1" x 1.005" I.D.		2	2	2	
40	110674	SUPPORT R.H. / LOWER SHOCK & SWAY BAR		1	1	1	
NS	110675	SUPPORT L.H. / LOWER SHOCK & SWAY BAR		1	1	1	
41	5001043	SCREW CAP HEX M12-1.75x50 G8.8 ZP		8	8	8	
42	500811	NUT HEX STO M12-1.75 DP		8	8	8	B
NS	131424	PIN W/TAPER ATTACHMENT M20-2.5		2	2	2	
44	5001153	WASHER CON 25.5x50.0x4.5 ZP		2	2	2	
45	5001152	WASHER CON 21.0x50.0x4.5 ZP		6	6	6	
46	500809	NUT HEX STO M20-2.5 ZP		1	1	1	
47	5001225	SCREW CAP HEX M20-2.5x80 G10.9 DP		16	16	16	
48	5001252	NUT HEX STO M20-2.5 DP		16	16	16	
49	160992	SHIM "U" 6.35 39.5mm x 38mm x 20 i.d.		8	8	8	
NS	160993	SHIM "U" 3.175 39.5mm x 38mm x 20 i.d.		4	4	4	
50	161001	ROD ASSY / 5TH		2	2	2	
51	611129	. COLLAR ASSY / W/BOLT & NUT 37MM I.D.		2	2	2	
. NS	N17588	_. SCREW CAP HEX M12-1.75x70 G10.9 DP		1	1	1	
. NS	500811	. . NUT HEX STO M12-1.75 DP		1	1	1	
52	611128	. TIE ROD END R.H. THREAD M30-1.5		1	1	1	
. NS	N20571	_. RUBBER SEAL BOOT		1	1	1	
. NS	N8884429	_. NUT HEX CSL M24-1.5 15TH CJ		1	1	1	
53	5001325	. . NUT HEX CSL M24-1.5 15TH CJ / REPLACED BY: N8884429		1	1	1	
54	502104	. . PIN, COTTER 5/32 x 2		1	1	1	
55	611130	. BALL PIN BUSHING ASSY		1	1	1	
56	611127	. . BUSHING BAR PIN / 15mm 90mm c/c 55MM O.D. x 50MM wide		1	1	1	
57	661071	UPRIGHT ARM L.H. / W/56 Deg		1	1	1	
NS	661072	UPRIGHT ARM R.H. / W/56 Deg		1	1	1	
		A) TO FIX ARM					
		B) TO FIX SUPPORT					
		O) "OPTION" SPECIAL					

From Y-7046 Up to 3-8164	DATE: 01/2014	PAGE: Y2-1605-50

FRONT AXLE - INSTALL W/INDEPENDENT "IS-84" / 16500LBS

ITEM	PART	DESCRIPTION	XL45	MTH40	MTH45	MTH45S	NOTE
60	Y2-1616-00	**SWAY BAR**					
61	Y2-1005-50	**FRONT AXLE - INDEPENDENT MODEL "IS-84" / 16500LBS**					
62	Y2-1410-50	**STEERING RODS - INSTALLATION W/INDEPENDENT "IS-84" / 16500LBS**					
70	630151	BELLOW ASSY / MODEL 1200 M.W.		2	2	2	
71	501406	STREET ELBOW 90º / PIPE FITTING / 1/2NPT-Mx1/2NPT-F BR		1	1	1	
73	131388	MALE CONNECTOR 114MM 1/2 NPT		1	1	1	
74	5001041	NUT HEX THN 1 1/4-12x1/2		1	1	1	

From 4-8165 Up to 8-9339	DATE: 01/2014	PAGE: Y2-1605-51
FRONT AXLE - INSTALL W/INDEPENDENT "NDIFS80P" / 18000LBS		

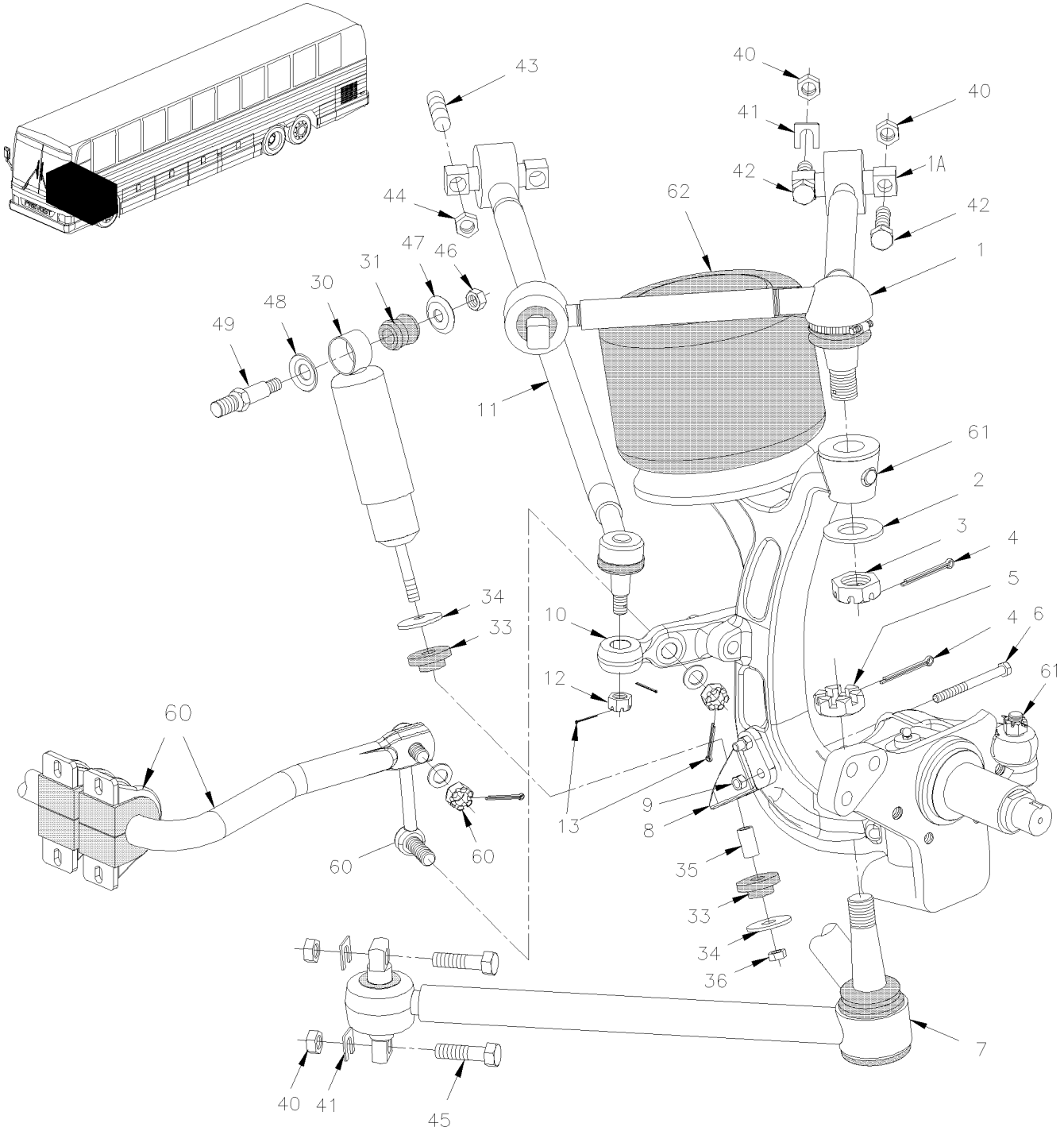

From 4-8165 Up to 8-9339	DATE: 01/2014	PAGE: Y2-1605-51

FRONT AXLE - INSTALL W/INDEPENDENT "NDIFS80P" / 18000LBS

ITEM	PART	DESCRIPTION	XL45	MTH40	MTH45	MTH45S	NOTE
1	611270	UPPER ARM ASSY / L.H. & R.H.		2	2	2	
. A	611346	. BUSHING BAR PIN / 20mm 150mm c/c / UPPER ARM		2	2	2	
2	5001255	WASHER FL 31.75x54.77x3.175		1	1	1	
3	5001321	NUT HEX CSL M30-1.5 17TH CJ		1	1	1	
4	502115	PIN, COTTER 3/16 x 2 1/2		2	2	2	
5	5001333	NUT HEX CSL M36-1.5 17TH CJ		1	1	1	
6	611273	SCREW CAP HEX ZP M14-2.0x135 G8.8		2	2	2	
7	611271	LOWER ARM ASSY / R.H. / W/56 Deg Up to 6-8832		1	1	1	
. NS	611325	. LOWER BEARING BALL ASSY / REPAIR KIT Up to 6-8832		1	1	1	
. NS	611326	. BUSHING BAR PIN / 20mm 150mm c/c / LOWER ARM Up to 6-8832		1	1	1	
7	611344	LOWER ARM ASSY / R.H / W/58 Deg From 6-8833			1	1	
. NS	611325	. LOWER BEARING BALL ASSY / REPAIR KIT From 6-8833			1	1	
. NS	611326	. BUSHING BAR PIN / 20mm 150mm c/c / LOWER ARM From 6-8833			1	1	
7	611272	LOWER ARM ASSY / L.H. / W/56 Deg Up to 6-8832		1	1	1	
. NS	611325	. LOWER BEARING BALL ASSY / REPAIR KIT Up to 6-8832		1	1	1	
. NS	611326	. BUSHING BAR PIN / 20mm 150mm c/c / LOWER ARM Up to 6-8832		1	1	1	
7	611343	LOWER ARM ASSY / L.H / W/58 Deg From 6-8833			1	1	
. NS	611325	. LOWER BEARING BALL ASSY / REPAIR KIT From 6-8833			1	1	
. NS	611326	. BUSHING BAR PIN / 20mm 150mm c/c / LOWER ARM From 6-8833			1	1	
8	116454	ATTACHMENT / SHOCK ABSORBER		1	1	1	
9	502538	NUT HEX STO M14-2.0 ZP		2	2	2	
10	661080	UPRIGHT ARM L.H / W/56 Deg Up to 6-8832		1	1	1	
10	661113	UPRIGHT ARM L.H / W/58 Deg From 6-8833			1	1	
10	661081	UPRIGHT ARM R.H / W/56 Deg Up to 6-8832		1	1	1	
10	661114	UPRIGHT ARM R.H / W/58 Deg From 6-8833			1	1	
11	661093	ROD ASSY / 5TH / W/56 Deg Up to 6-8832		1	1	1	
11	661111	ROD ASSY / 5TH / W/58 Deg From 6-8833			1	1	
12	5001325	NUT HEX CSL M24-1.5 15TH CJ / REPLACED BY: N8884429		1	1	1	
13	502104	PIN, COTTER 5/32 x 2		2	2	2	
30	630240	SHOCK ABSORBER / SACHS / 475		2	2	2	
. NS	630255	. KIT WASHER & RUBBER BUSHING		1	1	1	
. NS	630257	. BUSHING / RUBBER / (TWO PIECES) 1" x 1.005" I.D.		1	1	1	
30	630136	SHOCK ABSORBER / BLACK Up to 6-8906	2				A
31	630257	. BUSHING / RUBBER / (TWO PIECES) 1" x 1.005" I.D.		2	2	2	
33	630249	KIT WASHER & RUBBER BUSHING Up to 6-8906	2				A
34	110756	. WASHER CONCAVE 75MM O,D. X 16.5MM I.D Up to 6-8906	2				A
35	110756	. WASHER CONCAVE 75MM O,D. X 16.5MM I.D Up to 6-8906	2				A
36	5001579	NUT HEX NYRT M16-1.5 ZP		1	1	1	
36	500725	. NUT HEX STO 5/8-18 ZP Up to 6-8906	2				A
40	5001252	NUT HEX STO M20-2.5 DP		4	4	4	
41	160992	SHIM "U" 6.35 39.5mm x 38mm x 20 i.d.		AR	AR	AR	
41	160993	SHIM "U" 3.175 39.5mm x 38mm x 20 i.d.		AR	AR	AR	
		A) USE ONLY WITH BUS WITH INDEPENDANT SUSPENSION					

From 4-8165 Up to 8-9339	DATE: 01/2014	PAGE: Y2-1605-51

FRONT AXLE - INSTALL W/INDEPENDENT "NDIFS80P" / 18000LBS

ITEM	PART	DESCRIPTION	XL45	MTH40	MTH45	MTH45S	NOTE
41	661094	SHIM "U" 4.76 39.5mm x 38mm x 20 i.d.		AR	AR	AR	
42	983296	SCREW CAP HEX M20-2.5x90 G10.9 ZP		4	4	4	
42	5001525	SCREW CAP HEX M20-2.5x100 G10.9 ZP		4	4	4	
43	130963	STUD 70MM X M16-2.0		2	2	2	
44	502588	NUT HEX M16-2.0 ZP		2	2	2	
45	5001561	SCREW CAP HEX M20-2.5x250 G10.9 ZP		4	4	4	
46	500809	NUT HEX STO M20-2.5 ZP		1	1	1	
47	5001152	WASHER CON 21.0x50.0x4.5 ZP		1	1	1	
48	5001153	WASHER CON 25.5x50.0x4.5 ZP		1	1	1	
49	131424	PIN W/TAPER ATTACHMENT M20-2.5		1	1	1	
60	Y2-1616-00	**SWAY BAR**					
61	Y2-1005-51	**FRONT AXLE - INDEPENDENT MODEL "NDIFS80P" / 18000LBS**					
62	Y2-1601-00	**BELLOWS - AIR SUSPENSION**					

From 4-8165 Up to 8-9339	DATE: 01/2014	PAGE: Y2-1605-51

FRONT AXLE - INSTALL W/INDEPENDENT "NDIFS80P" / 18000LBS

ITEM	PART	DESCRIPTION	XL45	MTH40	MTH45	MTH45S	NOTE

From Y-7046 Up to 8-9339	DATE: 01/2014	PAGE: Y2-1610-00

REAR AXLE - INSTALL SUSPENSION

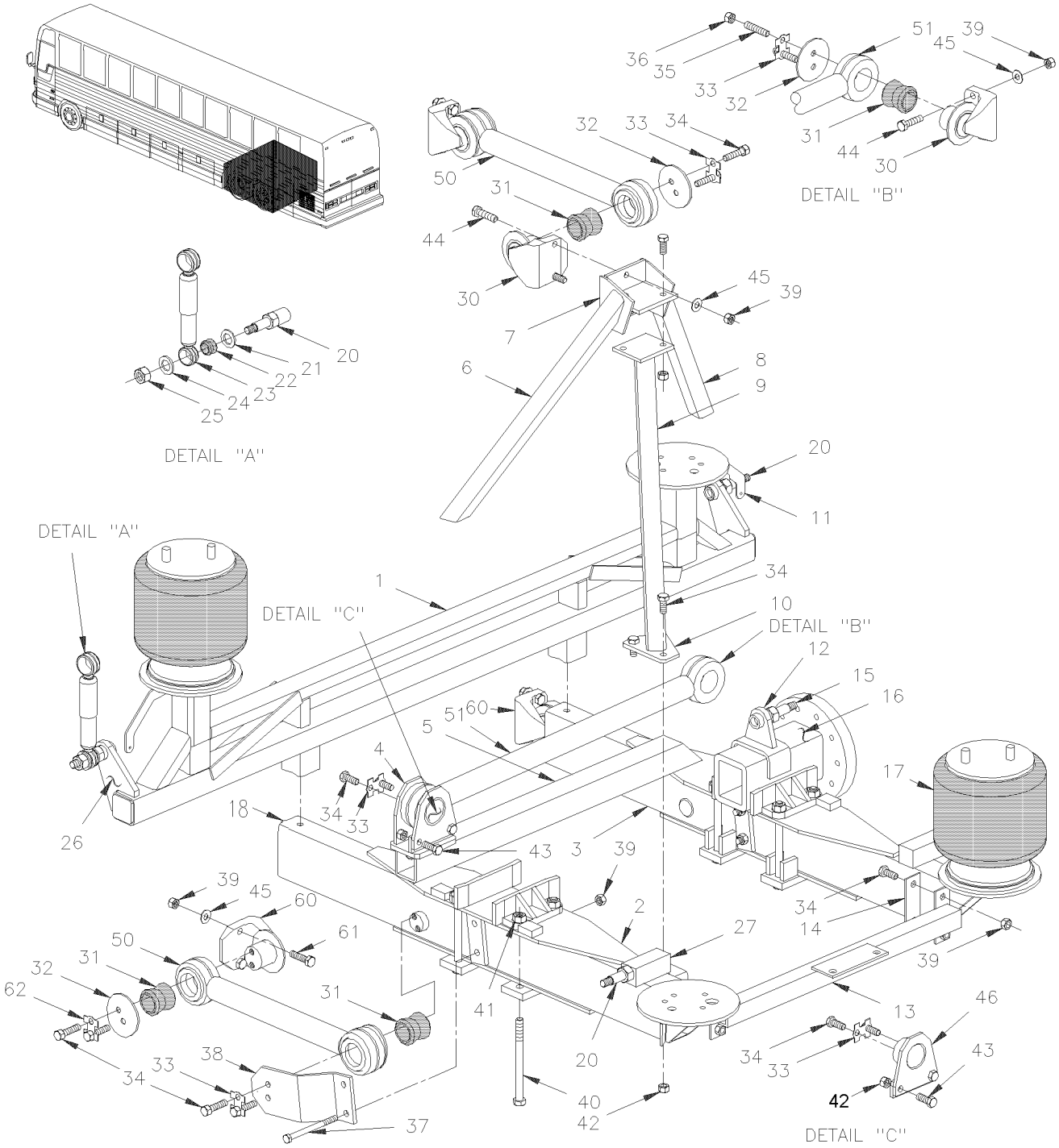

From Y-7046 Up to 8-9339	DATE: 01/2014	PAGE: Y2-1610-00

REAR AXLE - INSTALL SUSPENSION

ITEM	PART	DESCRIPTION	XL45	MTH40	MTH45	MTH45S	NOTE
1	121563P	. FRONT FRAME ASSY / W/AXLE WITH DISC BRAKE	1		1		
1	121563P	. FRONT FRAME ASSY / W/AXLE WITH DISC BRAKE Up to 7-9095		1		1	
1	121790P	. FRONT FRAME ASSY / W/AXLE WITH DISC BRAKE From 7-9096				1	
2	Call Order Desk	. BEAM ASSY / L.H. Up to 5-8395	1	1	1	1	P
2	Call Order Desk	. BEAM ASSY / L.H. From 5-8396 Up to 5-8535	1	1	1	1	P
2	121651P	. BEAM ASSY / L.H. From 5-8536	1		1		
2	121651P	. BEAM ASSY / L.H. From 5-8536 Up to 7-9095		1		1	
2	121788P	. BEAM ASSY / L.H. From 7-9096				1	
3	Call Order Desk	. BEAM ASSY / R.H. Up to 5-8395	1	1	1	1	P
3	Call Order Desk	. BEAM ASSY / R.H. From 5-8396 Up to 5-8535	1	1	1	1	P
3	121652P	. BEAM ASSY / R.H. From 5-8536	1		1		
3	121652P	. BEAM ASSY / R.H. From 5-8536 Up to 7-9095		1		1	
3	121789P	. BEAM ASSY / R.H. From 7-9096				1	
4	131297	SUPPORT ASSY / (WELDED) Up to 1-7484	1	1	1	1	
4	131691	SUPPORT ASSY / (WELDED) From 1-7485 Up to 6-8844 / REPLACED BY: 131785	1	1	1	1	
4	131785	SUPPORT ASSY / (WELDED) From 6-8845	1	1	1	1	
5	121433	TUBE / (WELDED) UNDER	1		1		
5	121433	TUBE / (WELDED) UNDER Up to 7-9095		1		1	
5	121773	TUBE / (WELDED) UNDER From 7-9096				1	
6	121098	BRACE / FRONT L.H.	1	1	1	1	
7	121558	ATTACHMENT / CENTRAL Up to 1-7499	1	1	1	1	
7	121577P	PLATE TOP TRIPOD ASSY WELDED From 1-7500	1	1	1	1	
8	121099	BRACE / FRONT R.H.	1	1	1	1	
9	121555	TRIPOD ASSY WELDED Up to 1-7499	1	1	1	1	
9	Call Order Desk	TRIPOD ASSY WELDED From 1-7500 Up to 5-8395	1	1	1	1	P
9	121610P	TRIPOD ASSY WELDED From 5-8396	1	1	1	1	
10	121554	PLATE SUPPORT	1	1	1	1	
11	121561	ACTUATOR / TO FIX LINK / (WELDED)	2	2	2	2	
12	121467	ATTACHMENT PIN SWAY BAR / (WELDED TO HOUSING)	2	2	2	2	
13	121342	BAR Up to 1-7499	1	1	1	1	
13	121575	BAR ASSY From 1-7500	1	1	1	1	
14	121442	ATTACHMENT PLATE	2	2	2	2	
15	131522	PIN W/TAPER ATTACHMENT M20-2.5 / SWAY-BAR	2	2	2	2	
16	Y2-1105-00	**REAR AXLE - MODEL "RC23160"**					
17	Y2-1601-00	**BELLOWS - AIR SUSPENSION**					
18	121693	CLOSING END / BEAM / (WELDED) From 7-9096				2	
20	131424	PIN W/TAPER ATTACHMENT M20-2.5	4	4	4	4	
21	5001153	WASHER CON 25.5x50.0x4.5 ZP	8	8	8	8	
22	630062	BUSHING / RUBBER / (ONE PIECE) 2" x 1.005" I.D.	8	8	8	8	
23	630127	SHOCK ABSORBER / BLACK W/GAZ Up to 3-8164 / REPLACED BY: 630161	4	4	4	4	
23	630161	SHOCK ABSORBER / YELLOW W/GAZ Up to 3-8164	4	4	4	4	
		P) CALL ORDER DESK FOR SPECIFIC APPLICATION					
		(V.I.N.)					

From Y-7046 Up to 8-9339	DATE: 01/2014	PAGE: Y2-1610-00

REAR AXLE - INSTALL SUSPENSION

ITEM	PART	DESCRIPTION	XL45	MTH40	MTH45	MTH45S	NOTE
23	630134	SHOCK ABSORBER / WHITE Up to 3-8164	AR	AR	AR	AR	
23	630253	SHOCK ABSORBER / SACHS / 209 From 4-8165	4	4	4	4	
23	630236	SHOCK ABSORBER / "KONI" (ORANGE)	4	4	4	4	O
. NS	630062	. BUSHING / RUBBER / (ONE PIECE) 2" x 1.005" I.D.	1	1	1	1	
. NS	630255	. KIT WASHER & RUBBER BUSHING	1	1	1	1	
24	5001152	WASHER CON 21.0x50.0x4.5 ZP	8	8	8	8	
25	500809	NUT HEX STO M20-2.5 ZP	4	4	4	4	
26	171676	RETAINER R.H. / (WELDED)	1	1	1	1	
26	171677	RETAINER L.H. / (WELDED)	1	1	1	1	
27	121157	ATTACHMENT PIN 1"-14 / SHOCK ABSORBER / 126MM LONG W/OFFSET CENTER	2		2		
27	121157	ATTACHMENT PIN 1"-14 / SHOCK ABSORBER / 126MM LONG W/OFFSET CENTER Up to 7-9095		2		2	
27	171032	ATTACHMENT PIN 1"-14 / SHOCK ABSORBER / 55MM From 7-9096				2	
30	131065	SUPPORT / ROD / W/2 M16-2 HOLES / 95MM C/C // 150MM SHORT Up to 5-8461 / REPLACED BY: 132914	3	3	3	3	
30	131753	SUPPORT / ROD / W/2 M16-2 HOLES / 95MM C/C // 150MM SHORT From 5-8462 Up to 6-8950 / REPLACED BY: 132914	3	3	3	3	
30	132914	SUPPORT / ROD / W/2 M16-2 HOLES / 95MM C/C // 150MM SHORT From 6-8951	3	3	3	3	
. NS	121890	. TORQUE PLATE / W/2HOLES 17MM I.D. X 90MM C/C From 6-8951	AR	AR	AR	AR	
30	121267	SHIM 26GAGE	AR	AR	AR	AR	
NS	121039	SHIM 20GAGE / REPLACED BY: 121418	AR	AR	AR	AR	
NS	131068	SHIM 14GAGE	AR	AR	AR	AR	
NS	121419	SHIM "U" 14GA SS 133mm x 62mm x 18 i.d.	AR	AR	AR	AR	
NS	121418	SHIM "U" 26 GA SS 133mm x 62mm x 18 i.d.	AR	AR	AR	AR	
31	630021	RUBBER BUSHING "PREVOST"	8	8	8	8	
32	110681	RETAINER PLATE / IRON 110MM OD W/16.7 @ 38C/C	6	6	6	6	
33	110340	TAB LOCK / W/2 HOLES 18MM I.D. X 38MM C/C W/4 TABS / REPLACED BY: 110788	6	6	6	6	
34	502544	SCREW CAP HEX M16-2.0x40 G8.8 ZP Up to 6-8844	AR	AR	AR	AR	
34	500813	SCREW CAP HEX M16-2.0x35 G8.8 ZP From 6-8845	AR	AR	AR	AR	
35	130963	STUD 70MM X M16-2.0	2	2	2	2	
36	502588	NUT HEX M16-2.0 ZP	2	2	2	2	
37	502766	SCREW CAP HEX M16-2.0x140 G8.8 ZP Up to 5-8395	4	4	4	4	
38	121091	PLATE ATTACHMENT Up to 5-8395	2	2	2	2	
38	110681	RETAINER PLATE / IRON 110MM OD W/16.7 @ 38C/C From 5-8396	2	2	2	2	
39	500781	NUT HEX STO M16-2.0 DP Up to 8-9187	AR	AR	AR	AR	
39	5001662	NUT HEX NYRT M16-2.0 G10 ZM From 8-9188	AR	AR	AR	AR	
40	5001472	SCREW CAP HEX 3/4-16x9 1/2 G5 ZP	8	8	8	8	
41	500735	NUT HEX STO 3/4-16 ZP	8	8	8	8	
42	500725	NUT HEX STO 5/8-18 ZP Up to 1-7484	2	2	2	2	
42	5001252	NUT HEX STO M20-2.5 DP From 1-7485	2	2	2	2	
43	500880	SCREW CAP HEX 5/8-18x1 3/4 G5 ZP Up to 1-7484	2	2	2	2	
43	955385	SCREW CAP HEX M20-2.5x45 G8.8 ZP From 1-7485	2	2	2	2	
44	5001369	SCREW CAP HEX M16-2.0x70 G10.9 DP Up to 5-8395	2	2	2	2	
44	5001224	SCREW CAP HEX M16-2.0x60 G10.9 DP From 5-8396 Up to 6-8844	2	2	2	2	
		O) OPTION					

From Y-7046 Up to 8-9339	DATE: 01/2014	PAGE: Y2-1610-00

REAR AXLE - INSTALL SUSPENSION

ITEM	PART	DESCRIPTION	XL45	MTH40	MTH45	MTH45S	NOTE
44	5001372	SCREW CAP HEX M16-2.0x50 G10.9 DP From 6-8845	2	2	2	2	
45	5001046	WASHER FL .656x1.500x.187	AR	AR	AR	AR	
46	131420	ATTACHMENT Up to 1-7484	1	1	1	1	
46	131690	ATTACHMENT From 1-7485 Up to 6-8844 / REPLACED BY: 131784	1	1	1	1	
46	131784	ATTACHMENT From 6-8845	1	1	1	1	
50	120868	ROD ASSY / 23 3/8" C/C (593MM)	3		3		
50	120868	ROD ASSY / 23 3/8" C/C (593MM) Up to 7-9095		3		3	
50	121697	ROD ASSY / 21 1/8" C/C (536.5MM) From 7-9096				3	
51	110648	ROD ASSY / 34 13/16" C/C (885MM) From 1-7485	1	1	1	1	
60	131600	SUPPORT / ROD / W/2 M16-2 HOLES (WELDED) / 114MM C/C // 169MM LONG Up to 4-8196 / REPLACED BY: 131807	2	2	2	2	
60	131693	SUPPORT / ROD / W/2 M16-2 HOLES / 114MM C/C // 169MM LONG From 4-8197 Up to 6-8950 / REPLACED BY: 131807	2	2	2	2	
60	131807	SUPPORT / ROD / W/2 M16-2 HOLES / 144MM C/C // 169MM LONG From 6-8951	2	2	2	2	
61	5001492	SCREW CAP HEX M16-2.0x55 G10.9 ZP Up to 4-8196 / REPLACED BY: 5001372	4	4	4	4	
61	5001224	SCREW CAP HEX M16-2.0x60 G10.9 DP From 4-8197	4	4	4	4	
62	121562	TAB LOCK / W/2HOLES 17MM I.D. X 90MM C/C Up to 4-8196 / REPLACED BY: 121578	2	2	2	2	
62	121578	TAB LOCK / W/2HOLES 17MM I.D. X 90MM C/C From 4-8197	2	2	2	2	

From Y-7046 Up to 8-9339	DATE: 01/2014	PAGE: Y2-1615-00

TAG AXLE - INSTALL SUSPENSION

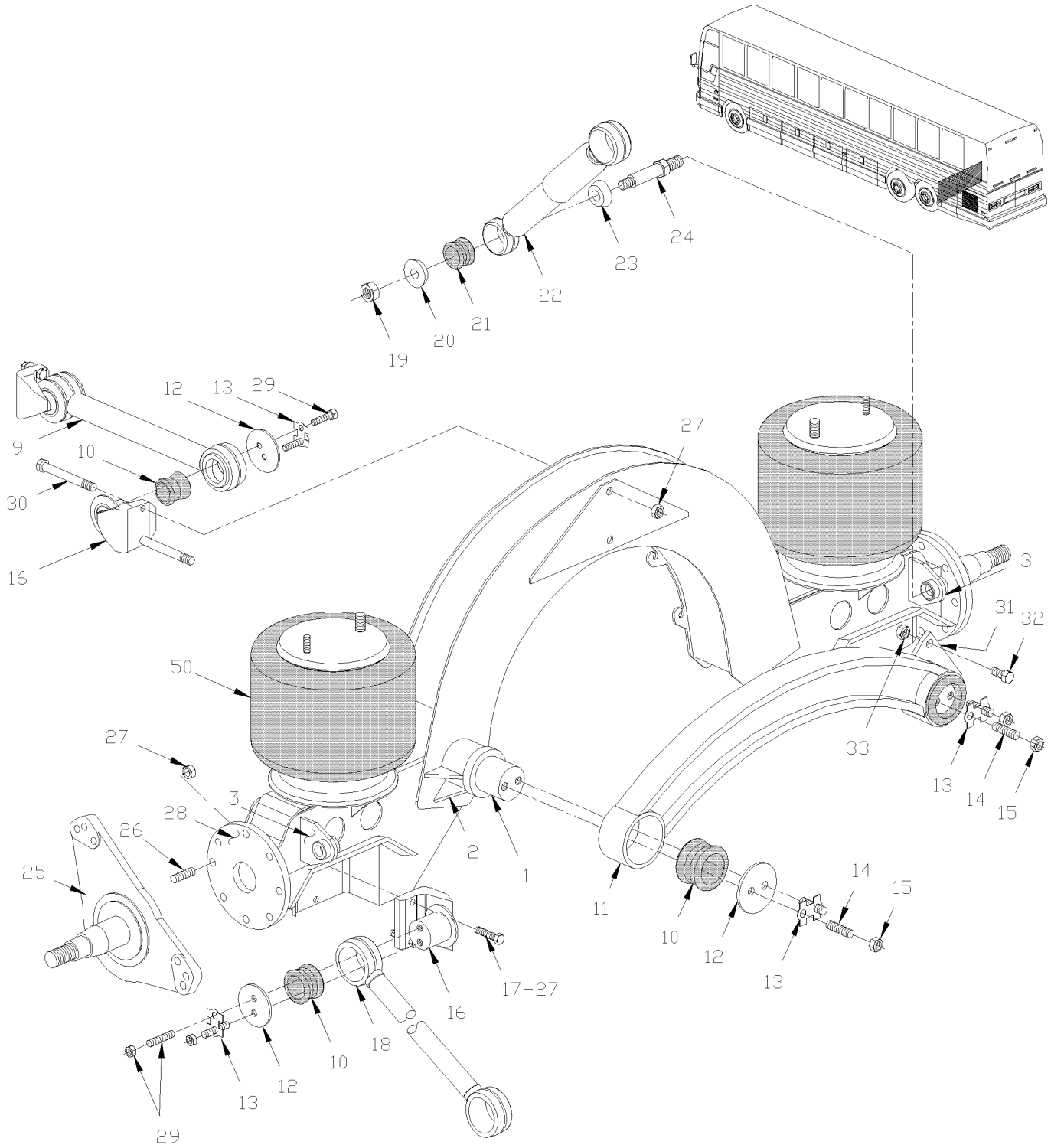

From Y-7046 Up to 8-9339	DATE: 01/2014	PAGE: Y2-1615-00

TAG AXLE - INSTALL SUSPENSION

ITEM	PART	DESCRIPTION	XL45	MTH40	MTH45	MTH45S	NOTE
	121544P	AXLE ASSY W/AUTOMATIC TRANSMISSION	1				
	121544P	AXLE ASSY W/AUTOMATIC TRANSMISSION Up to 2-7855			1		
	121547P	AXLE ASSY W/AUTOMATIC TRANSMISSION From 2-7856			1		
	121544P	AXLE ASSY W/AUTOMATIC TRANSMISSION Up to 7-9095		1		1	
	121677P	AXLE ASSY W/AUTOMATIC TRANSMISSION From 7-9096				1	
1	121341	. SHAFT / TO FIX LATERAL ROD W/AXLE	1		1		
1	121341	. SHAFT / TO FIX LATERAL ROD W/AXLE Up to 7-9095		1		1	
1	121680	. SHAFT / TO FIX LATERAL ROD W/AXLE From 7-9096				1	
2	121268	. PLATE REINFORCEMENT (WELDED)	1		1		
2	121268	. PLATE REINFORCEMENT (WELDED) Up to 7-9095		1		1	
2	121682	. PLATE REINFORCEMENT (WELDED) From 7-9096				1	
NS	121706	. PLATE REINFORCEMENT (WELDED)		1		1	
3	121545	. ATTACHMENT / SHOCK ABSORBER PIN Up to 1-7594 / REPLACED BY: 121580	2	2	2	2	
3	121580	. ATTACHMENT / SHOCK ABSORBER PIN From 1-7595	2	2	2	2	
. NS	171032	. . ATTACHMENT PIN 1"-14 / SHOCK ABSORBER / 55MM LONG From 1-7595	1	1	1	1	
9	120868	ROD ASSY / 23 3/8" C/C (593MM)	1	1	1	1	
10	630021	RUBBER BUSHING "PREVOST"	6	6	6	6	
11	131370	ROD ASSY / 35" C/C (889MM) / CASTING		1		1	
11	131282	ROD ASSY / 35" C/C (889MM) / CASTING Up to 3-8164 / REPLACED BY: 131749	1		1		
11	131749	ROD ASSY / 35" C/C (889MM) / CASTING From 4-8165	1		1		
11	131370	ROD ASSY / 35" C/C (889MM) / CASTING	1				A
12	110681	RETAINER PLATE / IRON 110MM OD W/16.7 @ 38C/C	6	6	6	6	
13	110340	TAB LOCK / W/2 HOLES 18MM I.D. X 38MM C/C W/4 TABS / REPLACED BY: 110788	6	6	6	6	
14	130963	STUD 70MM X M16-2.0	12	12	12	12	
15	500781	NUT HEX STO M16-2.0 DP Up to 8-9187	18	18	18	18	
15	5001662	NUT HEX NYRT M16-2.0 G10 ZM From 8-9188	18	18	18	18	
16	131065	SUPPORT / ROD / W/2 M16-2 HOLES / 95MM C/C // 150MM SHORT Up to 5-8461 / REPLACED BY: 132914	3	3	3	3	
16	131753	SUPPORT / ROD / W/2 M16-2 HOLES / 95MM C/C // 150MM SHORT From 5-8462 Up to 6-8950 / REPLACED BY: 132914	3	3	3	3	
16	132914	SUPPORT / ROD / W/2 M16-2 HOLES / 95MM C/C // 150MM SHORT From 6-8951	3	3	3	3	
. NS	121890	. TORQUE PLATE / W/2HOLES 17MM I.D. X 90MM C/C From 6-8951	AR	AR	AR	AR	
17	5001369	SCREW CAP HEX M16-2.0x70 G10.9 DP Up to 6-8950	4	4	4	4	
17	5001224	SCREW CAP HEX M16-2.0x60 G10.9 DP From 6-8951	4	4	4	4	
18	121358	ROD ASSY W/CHAIN HOOK / 23 3/8" C/C (593MM)	2	2	2	2	
19	500809	NUT HEX STO M20-2.5 ZP	4	4	4	4	
20	5001152	WASHER CON 21.0x50.0x4.5 ZP	4	4	4	4	
21	630062	BUSHING / RUBBER / (ONE PIECE) 2" x 1.005" I.D.	4	4	4	4	
22	630127	SHOCK ABSORBER / BLACK W/GAZ Up to 3-8164 / REPLACED BY: 630161	2	2	2	2	
22	630161	SHOCK ABSORBER / YELLOW W/GAZ Up to 3-8164	2	2	2	2	
22	630253	SHOCK ABSORBER / SACHS / 209 From 4-8165	2	2	2	2	
22	630236	SHOCK ABSORBER / "KONI" (ORANGE)	2	2	2	2	O
. NS	630062	. BUSHING / RUBBER / (ONE PIECE) 2" x 1.005" I.D.	1	1	1	1	
		A) USE WITH "EATON" TRANSMISSION & "ZF"					
		TRANSMISSION					
		O) OPTION					

From Y-7046 Up to 8-9339	DATE: 01/2014	PAGE: Y2-1615-00

TAG AXLE - INSTALL SUSPENSION

ITEM	PART	DESCRIPTION	XL45	MTH40	MTH45	MTH45S	NOTE
. NS	630255	. KIT WASHER & RUBBER BUSHING	1	1	1	1	
23	500833	WASHER CON 25.5x60.0x2.5 ZP / REPLACED BY: 5001153	4	4	4	4	
NS	5001153	WASHER CON 25.5x50.0x4.5 ZP	4	4	4	4	
24	131424	PIN W/TAPER ATTACHMENT M20-2.5	4	4	4	4	
25	611216	SPINDLE / WITH MODEL "G.K.N." (TS6) Up to 3-8164	2	2	2	2	
25	611302	SPINDLE / WITH MODEL "G.K.N." (TS8U UNITISED) From 4-8165	8	8	8	8	
26	611048	STUD / M16-2.0 x 60MM	8	8	8	8	
27	502588	NUT HEX M16-2.0 ZP	8	8	8	8	
NS	502884	WASHER LO SPT 16.2x27.4x3.5 ZG603	8	8	8	8	
28	121203	SHIM / CAMBER ADJUSTMENT 0.117 DEGRES / <> SPINDLE & AXLE	AR	AR	AR	AR	
NS	121240	SHIM / CAMBER ADJUSTMENT 0.250 DEGRES / <> SPINDLE & AXLE	AR	AR	AR	AR	
29	502544	SCREW CAP HEX M16-2.0x40 G8.8 ZP Up to 6-8844	4	4	4	4	
29	500813	SCREW CAP HEX M16-2.0x35 G8.8 ZP From 6-8845	4	4	4	4	
30	5001370	SCREW CAP HEX M16-2.0x180 G10.9 DP	2	2	2	2	
31	131420	ATTACHMENT Up to 1-7484	1	1	1	1	
31	131690	ATTACHMENT From 1-7485 Up to 6-8844 / REPLACED BY: 131784	1	1	1	1	
31	131784	ATTACHMENT From 6-8845	1	1	1	1	
32	500880	SCREW CAP HEX 5/8-18x1 3/4 G5 ZP Up to 1-7484	2	2	2	2	
32	955385	SCREW CAP HEX M20-2.5x45 G8.8 ZP From 1-7485	2	2	2	2	
33	500725	NUT HEX STO 5/8-18 ZP Up to 1-7484	2	2	2	2	
33	5001252	NUT HEX STO M20-2.5 DP From 1-7485	2	2	2	2	
40	130940	ATTACHMENT KIT	AR	AR	AR	AR	
40	130846	. ATTACHMENT ASSY W/STUD	1	1	1	1	
41	130760	. . STUD 2 3/4" X 1 1/4-12 BOTH END	1	1	1	1	
42	131158	. TAB LOCK / W/1 HOLE 1.265" I.D.	1	1	1	1	
43	500280	. NUT HEX 1 1/4-12x1 1/16 ZP	1	1	1	1	
44	500725	. NUT HEX STO 5/8-18 ZP	2	2	2	2	
45	500880	. SCREW CAP HEX 5/8-18x1 3/4 G5 ZP	2	2	2	2	
50	Y2-1601-00	**BELLOWS - AIR SUSPENSION**					

From Y-7046 Up to 8-9339	DATE: 01/2014	PAGE: Y2-1615-00

TAG AXLE - INSTALL SUSPENSION

ITEM	PART	DESCRIPTION	XL45	MTH40	MTH45	MTH45S	NOTE

From Y-7046 Up to 8-9339	DATE: 01/2014	PAGE: Y2-1615-10
TAG AXLE - LIFTING		

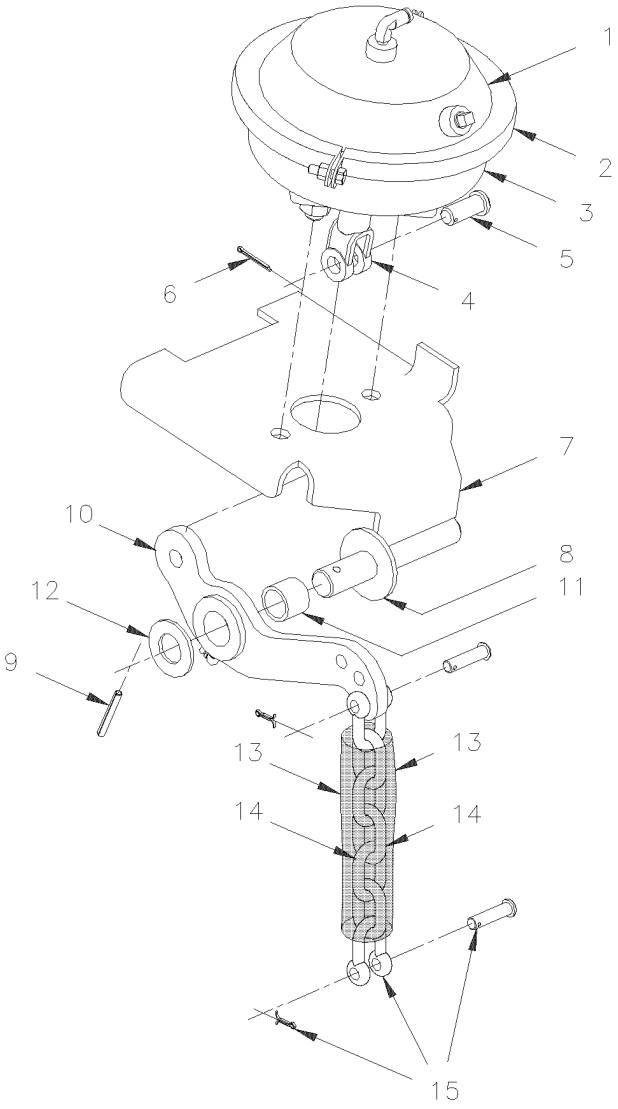

From Y-7046 Up to 8-9339	DATE: 01/2014	PAGE: Y2-1615-10

TAG AXLE - LIFTING

ITEM	PART	DESCRIPTION	XL45	MTH40	MTH45	MTH45S	NOTE
1	641425	BRAKE CHAMBER ASSY / TYPE 36	2	2	2	2	
2	641067	. CLAMP TYPE 36	1	1	1	1	
3	640979	. DIAPHRAGM / TYPE 36	1	1	1	1	
3	641066	. BOOT RUBBER	1	1	1	1	
4	640130	. YOKE 5/8-18x1 3/8 C/Lx9/16Wx5/8	1	1	1	1	
5	502028	. . PIN, CLEVIS 5/8 x 3/4 BZC	1	1	1	1	
6	502102	. . PIN, COTTER 1/8 x 1	1	1	1	1	
NS	641426	. SHIELD, ROD CENTER HOLE	1	1	1	1	
7	172277P	BRACKET / R.H. Up to 7-9094	1	1		1	
7	172277P	BRACKET / R.H.			1		
7	173154	BRACKET / R.H. From 7-9095				1	
7	172278P	BRACKET / L.H. Up to 7-9094	1	1		1	
7	172278P	BRACKET / L.H.			1		
7	173155P	BRACKET / L.H. From 7-9095				1	
8	120551	. PIN / WELDED Up to 1-7610 / REPLACED BY: 121590	1	1	1	1	
8	121590	. PIN SS / WELDED From 1-7611	1	1	1	1	
9	502106	PIN, COTTER 1/14 x 2	1	1	1	1	
10	131313	LEVER ASSY Up to 1-7610 / REPLACED BY: 131701	2	2	2	2	
10	131701	LEVER ASSY From 1-7611	2	2	2	2	
11	507055	. BUSHING OIL 1 1/4 O.D. X 1 I.D. X 1 LG	1	1	1	1	
11	131699	. BUSHING BRASS / W/GROOVE INSIDE 31.94 O.D. x 25.5 I.D. x 25.4	1	1	1	1	
12	500456	WASHER FL 1.062x2.000x.134 ZP	1	1	1	1	
13	121123	TUBE COVERING CHAIN 290MM	1	1	1	1	
. NS	503546	. TUBE CLEAR 1 1/4 I.D./ S.L.	AR	AR	AR	AR	
14	121122	CHAIN / 340MM / REPLACED BY: 121359	1	1	1	1	
15	505064	SHACKLE CHAIN 3/8	2	2	2	2	

From Y-7046 Up to 8-9339	DATE: 01/2014	PAGE: Y2-1616-00
SWAY BAR		

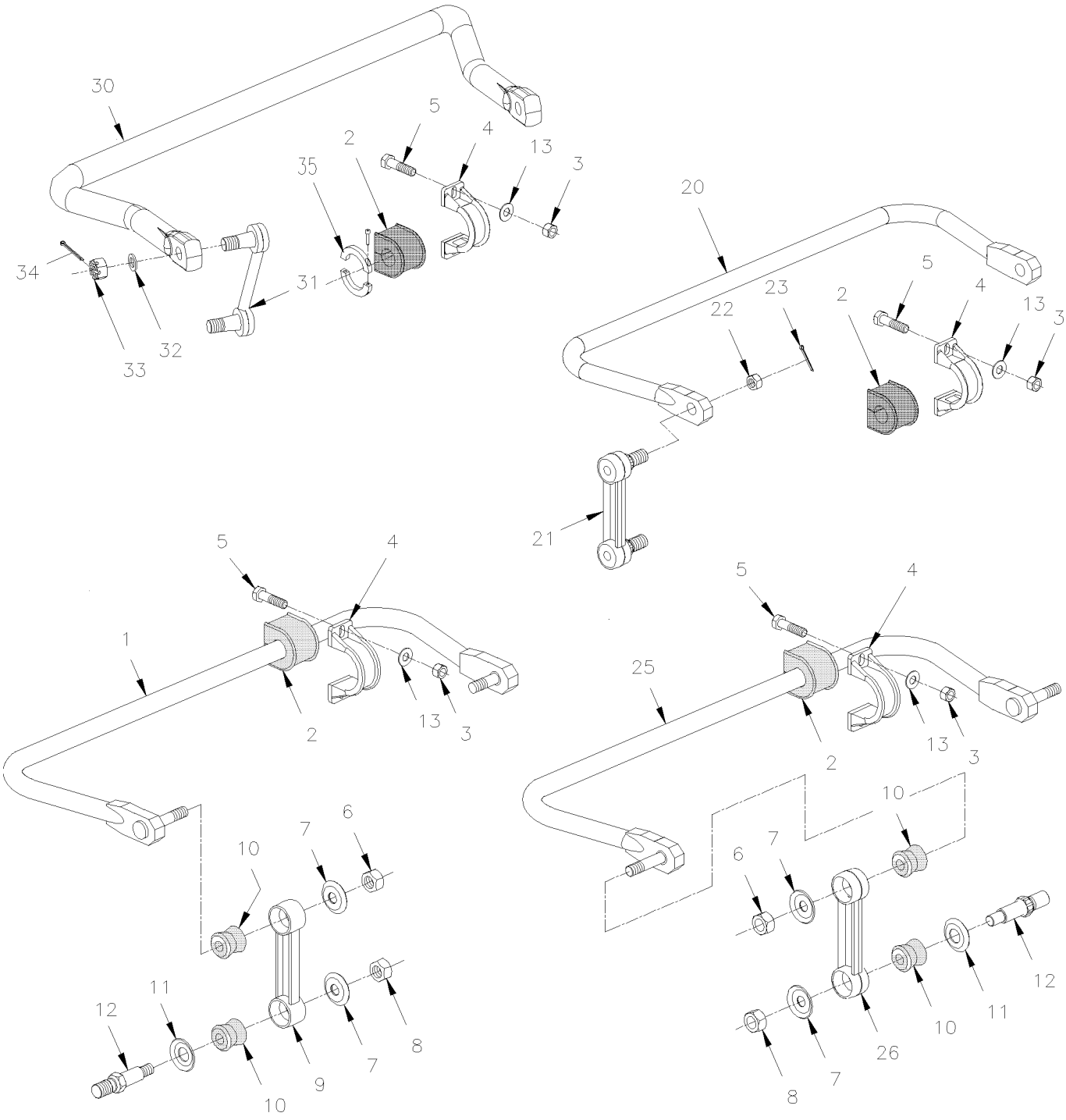

From Y-7046 Up to 8-9339	DATE: 01/2014	PAGE: Y2-1616-00

SWAY BAR

ITEM	PART	DESCRIPTION	XL45	MTH40	MTH45	MTH45S	NOTE
1	131019	SWAY BAR ASSY / 1 1/2" O.D. X 848MM		1	1	1	R
. A	131520	. STUD 1 1/4" O.D.		2	2	2	
NS	131520	. STUD 1 1/4" O.D.	2	2	2	2	R
2	630020	BUSHING / RUBBER 1 3/4" I.D.	4	4	4	4	
2	130953	BUSHING / RUBBER 1 1/2" I.D.		4	4	4	
3	500811	NUT HEX STO M12-1.75 DP	8	8	8	8	
4	630145	COLLAR / IRON / 2x.472" HOLE 4 5/8 C/C	4	4	4	4	
5	500806	SCREW CAP HEX M12-1.75X35 G10.9	8	8	8	8	
6	500809	NUT HEX STO M20-2.5 ZP	2	2	2	2	
7	5001152	WASHER CON 21.0x50.0x4.5 ZP	4	4	4	4	
8	500809	NUT HEX STO M20-2.5 ZP	2	2	2	2	
9	630146	LINK ASSY / 7" C/C / IRON	1	1	1	1	
10	506678	BUSHING / POLYURETHANE / (TWO PIECES) ORANGE 1" x 1.005" I.D.	4	4	4	4	
11	5001153	WASHER CON 25.5x50.0x4.5 ZP	4	4	4	4	
12	131522	PIN W/TAPER ATTACHMENT M20-2.5 / SWAY-BAR	2	2	2	2	B
13	955897	WASHER FL 13.0x24.0x2.0 ZP	4	4	4	4	
20	131570	SWAY BAR ASSY / 1 3/4" O.D. X 1090MM Up to 6-8906	1				
21	630230	LINK SWAY BAR / 4" / 101.60MM C/C Up to 5-8360 / REPLACED BY: 630267	2				
21	630248	LINK SWAY BAR / 4" C/C From 5-8361 / REPLACED BY: 630267	2				
21	630267	LINK SWAY BAR / 4" / 101.60MM C/C	1				
21	110762	SPACER WASHER 1" I.D. X 1 1/2" O.D. X 16GA Up to 2-7929	2				C
22	500736	NUT HEX SLT 3/4-16 Up to 6-8906	2				
22	5001553	NUT HEX CSL M20-1.5 CJ	2				
23	502111	PIN, COTTER 1/8 x 1 1/2 SS Up to 6-8906	1				
25	131386P	SWAY BAR ASSY / 1 3/4" O.D. X 1050MM Up to 3-8164	1	1	1	1	A
. NS	131520	. STUD Up to 3-8164	2	2	2	2	
26	630147	LINK ASSY / 12 1/2" C/C / IRON Up to 3-8164	2	2	2	2	
30	138550	SWAY BAR 1 3/4" O.D. 1186.5MM / W/18000LBS / W/56 Deg From 4-8165 Up to 6-8832	1	1	1	1	
30	131755	SWAY BAR 1 3/4" O.D. 1175MM / / W/58 Deg From 6-8833	1	1	1	1	
31	630246	LINK ASSY / 150MM C/C / W/18000LBS From 4-8165	2	2	2	2	
32	502558	WASHER FL 21.0x37.0x3.0 G500 From 4-8165	4	4	4	4	
33	5001553	NUT HEX CSL M20-1.5 CJ From 4-8165	4	4	4	4	
34	502104	PIN, COTTER 5/32 x 2 From 4-8165	4	4	4	4	
NS	563042	COLLAR 1 3/4" I.D. From 4-8165	2	2	2	2	D
		A) MOUNTED WITH EXTERIOR STUD, ON INDEPENDANT					
		SUSPENSION					
		B) THIS PIN IS 3MM SHORTER ON BUSHING SIDE AND					
		BLACK PAINTED FOR EASY IDENTIFICATION					
		C) BETWEEN LINK AND BELLOWS SUPPORT					
		D) SIDE OF RUBBER BUSHING WITH ITEMS # 20 WITH I					
		BEAM RIGID SUSPENSION AND ITEM # 30					
		INDEPENDENT SUSPENSION					
		R) REAR SUSPENSION					

From Y-7046 Up to 8-9339	DATE: 01/2014	PAGE: Y2-1616-00

SWAY BAR

ITEM	PART	DESCRIPTION	XL45	MTH40	MTH45	MTH45S	NOTE
NS	MI03-12	SEE MAINTENANCE INFORMATION	1				
NS	MI03-13	SEE MAINTENANCE INFORMATION	1				

From Y-7046 Up to 8-9339	DATE: 01/2014	PAGE: Y2-1616-00

SWAY BAR

ITEM	PART	DESCRIPTION	XL45	MTH400	MTH445	MTH445S	NOTE

From Y-7046 Up to 6-8906	DATE: 01/2014	PAGE: Y2-1620-00
HEIGHT CONTROL VALVE		

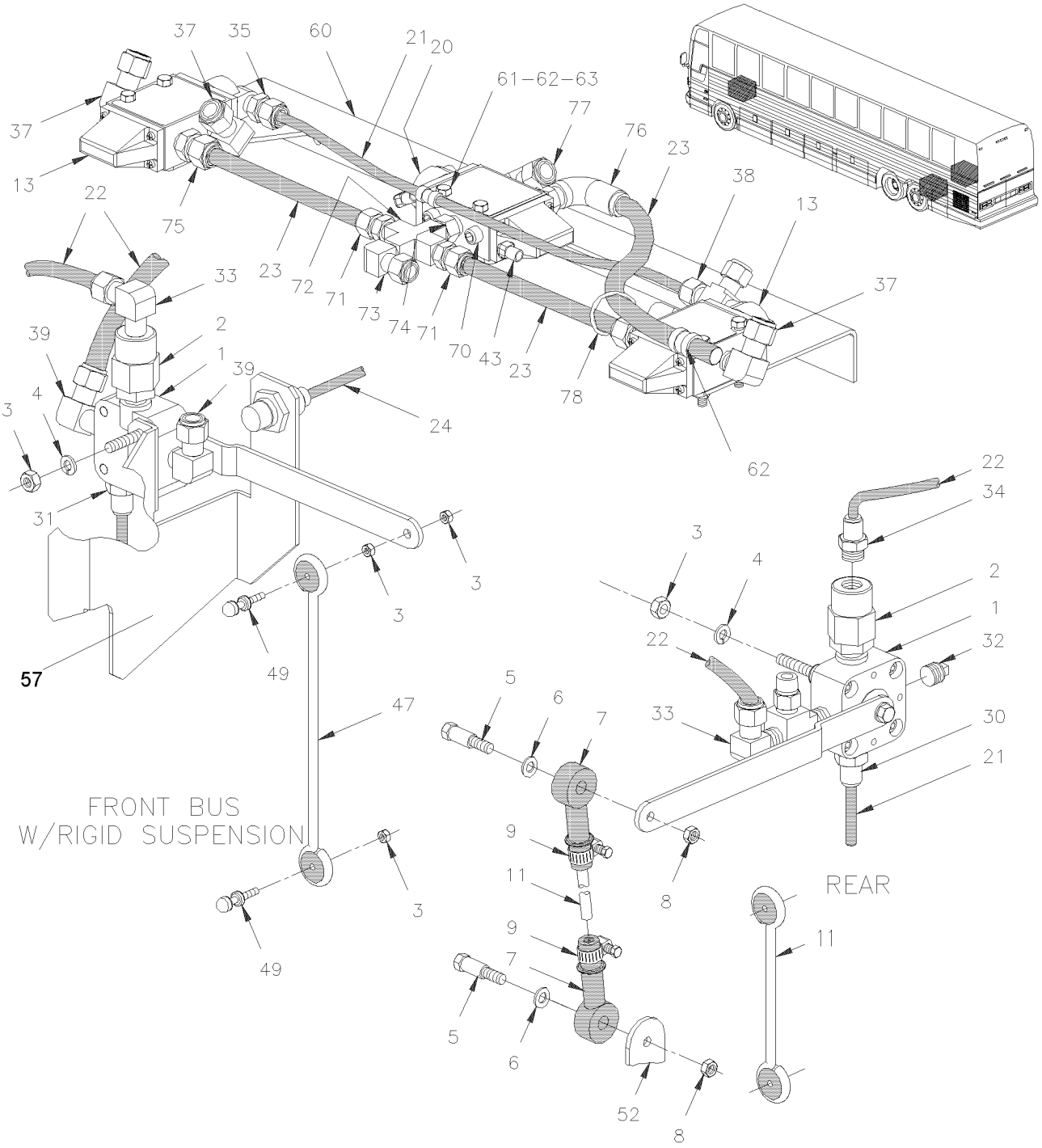

From Y-7046 Up to 6-8906	DATE: 01/2014	PAGE: Y2-1620-00

HEIGHT CONTROL VALVE

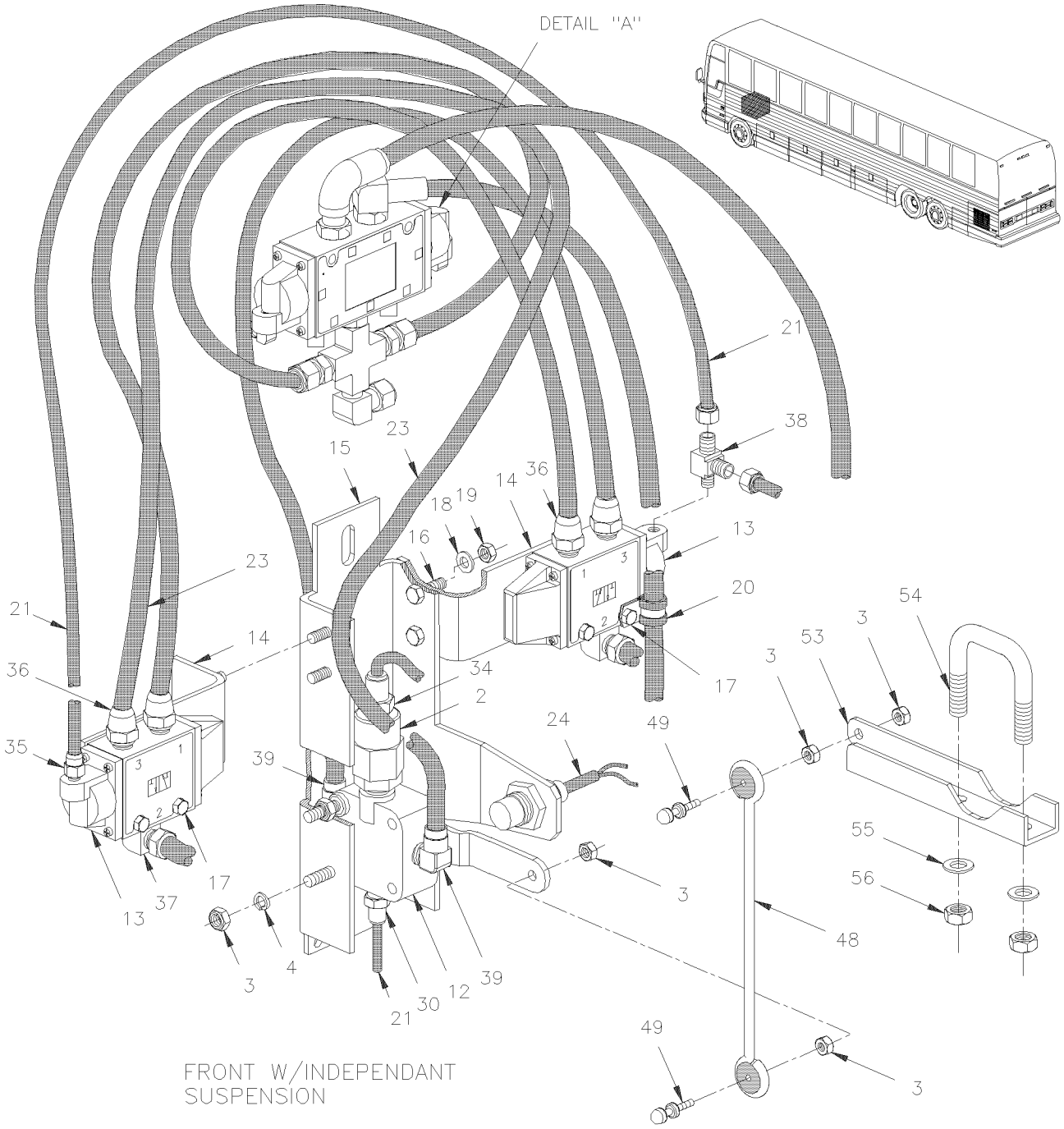

From Y-7046 Up to 6-8906	DATE: 01/2014	PAGE: Y2-1620-00
HEIGHT CONTROL VALVE		

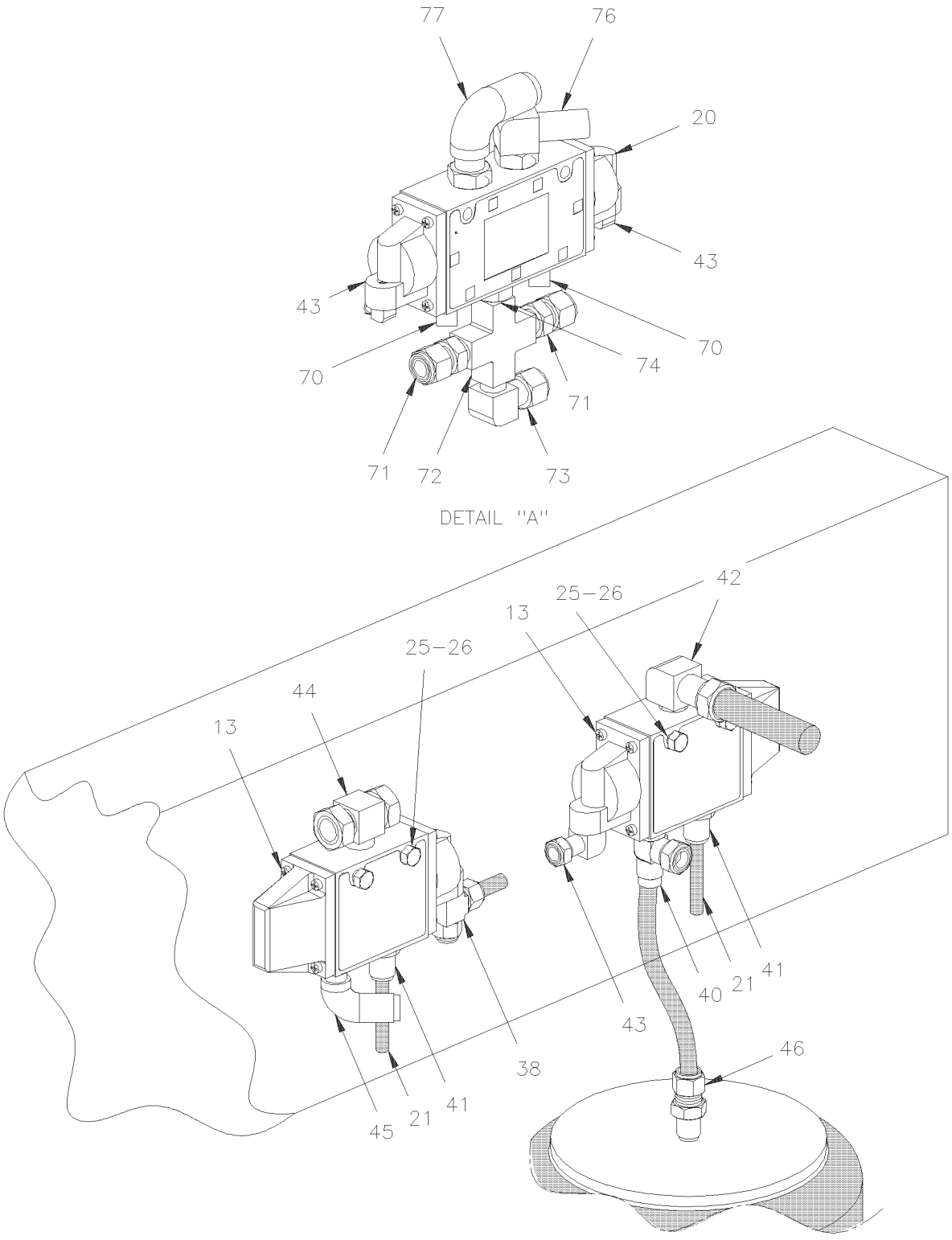

From Y-7046 Up to 6-8906	DATE: 01/2014	PAGE: Y2-1620-00

HEIGHT CONTROL VALVE

ITEM	PART	DESCRIPTION	XL45	MTH40	MTH45	MTH45S	NOTE
1	630156	VALVE, HEIGHT CONTROL "BARKSDALE"	2				
2	640135	VALVE, CHECK 1/4 NPT	1				
3	500769	NUT HEX 1/4-20 ZP	2				
4	500473	WASHER LO SPT .262x.489x.062 ZP	2				
5	630137	SCREW SHR CAP HEX 5/16" I.D. x 1/4-20	2				
6	500441	WASHER FL .312x.734x.065 ZP	2				
7	630117	ROD END / BLACK RUBBER 5/16" I.D.	2				
8	502716	NUT HEX NYRT 1/4-20 / REPLACED BY: 5001123	2				
9	504014	HOSE CLAMP / 1/4"-5/8" SS / HM-4	2				
11	131351	ROD LINK / 140MM	2				
11	630263	LINK ASSY 317MM C/C 11 1/2"	AR				
. A	N8889244	. GROMMET / LINK	2				
. B	630250	. STUD RETAINER 1/4-20 X 1"	2				
. NS	500769	. NUT HEX 1/4-20 ZP	4				
. NS	500473	. WASHER LO SPT .262x.489x.062 ZP	4				
12	630157	VALVE, HEIGHT CONTROL "BARKSDALE" / FRONT Up to 1-7418 / REPLACED BY: 630237	1				A
12	630237	VALVE, HEIGHT CONTROL "BARKSDALE" / FRONT From 1-7419	1				A
13	641274	VALVE, 3 WAYS, 2 POSITIONS N.C.	2				
14	131319	SUPPORT VALVE	2				
15	131468	SUPPORT HEIGHT CONTROL VALVE Up to 1-7418	1				
15	131621	SUPPORT HEIGHT CONTROL VALVE / WHITOUT "KNEELING" From 1-7419	1				
15	131507	SUPPORT HEIGHT CONTROL VALVE / W/KNEELING (AS SHOWN) Up to 1-7418	1				
15	131613	SUPPORT HEIGHT CONTROL VALVE / W/KNEELING From 1-7419	1				
16	502622	SCREW CAP HEX M6-1.0x20 SS EMN	4				
17	502656	SCREW CAP HEX M6-1.0x50 SS	4				
18	502570	WASHER LO SPT 6.1x11.8x1.6 SS	8				
19	502565	NUT HEX M6-1.0 SS	8				
20	641531	VALVE, 5 WAYS, 3 POSITIONS	1				
. NS	641186	. SPOOL	1				
21	503402	TUBE, NYLON 1/4 O.D. / BLACK S.L.	AR				
22	503471	TUBE, NYLON 3/8 O.D. / BLUE S.L.	AR				
23	503517	TUBE, NYLON 1/2 O.D. / BLUE S.L.	AR				
24	131535	SWITCH PROXIMITY ASSY 1520MM	1				
25	500625	SCREW TC CAP HEXW 1/4-20x2 ZP	AR				
26	500440	WASHER FL .250x.562x.065 ZP	AR				
30	641332	MALE CONNECTOR / PUSH-IN FITTING / #4x1/4NPT-M BR	1				
31	641926	SILENCER / MUFFLER / 1/4NPT-M	1				
32	501304	PLUG SQUARE HEAD / PIPE FITTING / 1/4NPT-M BR	1				
33	641372	MALE ELBOW 90° NON-SWIVEL / PUSH-IN FITTING #6x1/4NPT-M BR	1				
34	641331	MALE CONNECTOR / PUSH-IN FITTING / #6x1/4NPT-M BR	1				
35	641242	MALE CONNECTOR / PUSH-IN FITTING / #4x1/8NPT-M BR	1				
36	641381	MALE CONNECTOR / PUSH-IN FITTING / #8x3/8NPT-M BR	4				
37	641040	MALE ELBOW 90º / NTA FITTING / #8x3/8NPT-M BR	2				
		A) W/INDEPENDANT SUSPENSION SYSTEM					

From Y-7046 Up to 6-8906	DATE: 01/2014	PAGE: Y2-1620-00

HEIGHT CONTROL VALVE

ITEM	PART	DESCRIPTION	XL45	MTH40	MTH45	MTH45S	NOTE
38	641002	MALE RUN TEE / NTA FITTING / #4x#4x1/8NPT-M BR	1				
39	641373	MALE ELBOW 90° NON-SWIVEL / PUSH-IN FITTING / #8x1/4NPT-M BR	2				
40	641388	MALE RUN TEE NON-SWIVEL / PUSH-IN FITTING / #6x#6x3/8NPT-M BR	1				
41	641347	MALE CONNECTOR / PUSH-IN FITTING / #4x3/8NPT-M BR	3				
42	641375	MALE ELBOW 90° NON-SWIVEL / PUSH-IN FITTING #6x3/8NPT-M BR	1				
43	641369	MALE ELBOW 90° NON-SWIVEL / PUSH-IN FITTING #4x1/8NPT-M BR	2				
44	641008	MALE BRANCH TEE / NTA FITTING / #6x#6x3/8NPT-M BR	1				
45	641367	MALE ELBOW 45° NON-SWIVEL / PUSH-IN FITTING / #6x3/8NPT-M BR	1				
46	641384	MALE CONNECTOR / PUSH-IN FITTING / #10x1/2NPT-M BR	1				A
46	641382	MALE CONNECTOR / PUSH-IN FITTING / #6x1/2NPT-M BR	1				
47	630232	LINK ASSY 265MM C/C 10 1/2"	1				
. A	N8889244	. GROMMET / LINK	2				
. B	630250	. STUD RETAINER 1/4-20 X 1"	2				
. NS	500479	. WASHER LO INT .448x.789x.040 ZP	4				
. NS	500473	. WASHER LO SPT .262x.489x.062 ZP	4				
48	630231	LINK ASSY 185MM C/C 7 1/4"	1				
. A	N8889244	. GROMMET / LINK	2				
. C	630250	. STUD RETAINER 1/4-20 X 1"	2				
. NS	500769	. NUT HEX 1/4-20 ZP	4				
. NS	500473	. WASHER LO SPT .262x.489x.062 ZP	4				
49	630250	. STUD RETAINER 1/4-20 X 1"	2				
50	172114	SUPPORT / FRONT HEIGHT CONTROL VALVE	1				
51	110594	PLATE, RETAINER	1				
52	121561	ACTUATOR / TO FIX LINK / (WELDED)	2				
53	110679	ACTUATOR LEVER	1				
54	504635	U-BOLT 1 3/4" I.D. x 2 3/4" x 5/16-18	1				
55	500476	WASHER LO SPT .317x.586x.078 ZP	2				
56	500778	NUT HEX 5/16-18 ZP	2				
57	172493	SUPPORT HEIGHT CONTROL VALVE (WELDED)	1				
60	131591	SUPPORT VALVE	1				
61	952625	CLAMP / 3/8" I.D.	1				
62	952627	CLAMP / 1/2" I.D.	1				
63	502793	SCREW CAP HEX M6-1.0x45 G8.8 ZP	6				
64	502573	WASHER FL 6.4x12.5x1.6 SS	6				
65	502511	NUT HEX NYRT M6-1.0 ZP	6				
66	500440	WASHER FL .250x.562x.065 ZP	1				
70	501305	PLUG SQUARE HEAD / PIPE FITTING / 3/8NPT-M BR	2				
70	501449	PLUG HEXS / PIPE FITTING / 3/8NPT-M STL	2				
71	641173	MALE CONNECTOR / NTA FITTING / #8x1/4NPT-M BR	1				
72	501902	CROSS / PIPE FITTING / 1/4NPT-Fx1/4NPT-Fx 1/4NPT-Fx1/4NPT-F BR	1				
73	641371	MALE ELBOW 90° NON-SWIVEL / PUSH-IN FITTING #4x1/4NPT-M BR	1				
74	501749	NIPPLE REDUCER HEX / PIPE FITTING / 3/8NPT-Mx1/4NPT-Mx1 13/32 BR	1				
75	640991	MALE CONNECTOR / NTA FITTING / #8x3/8NPT-M BR	1				
		A) W/INDEPENDANT SUSPENSION SYSTEM					

From Y-7046 Up to 6-8906	DATE: 01/2014	PAGE: Y2-1620-00

HEIGHT CONTROL VALVE

ITEM	PART	DESCRIPTION	XL45	MTH40	MTH45	MTH45S	NOTE
76	641428	MALE ELBOW 90° SWIVEL / PUSH-IN FITTING / #8x3/8NPT-M BR	1				
77	641368	MALE ELBOW 45° NON-SWIVEL / PUSH-IN FITTING / #8x3/8NPT-M BR	1				
78	504637	CABLE TIE / 3/16" x 13"	AR				

From Y-7046 Up to 6-8906	DATE: 01/2014	PAGE: Y2-1620-10

HIGH- BUOY, LOW BUOY & "KNEELING" VALVE

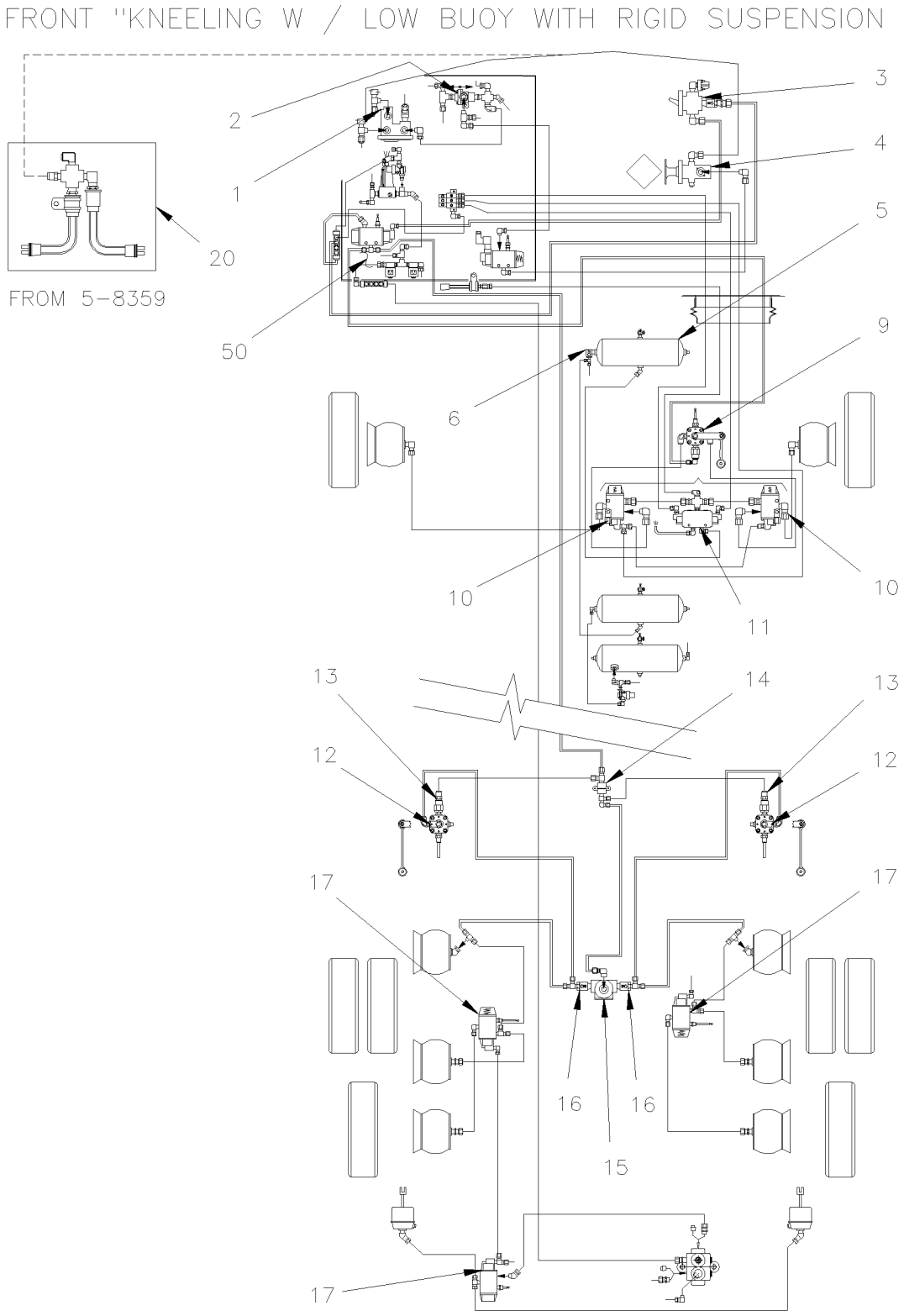

From Y-7046 Up to 6-8906	DATE: 01/2014	PAGE: Y2-1620-10

HIGH- BUOY, LOW BUOY & "KNEELING" VALVE

FRONT "KNEELING" W / LOW BUOY & HIGH BUOY WITH RIGID SUSPENSION

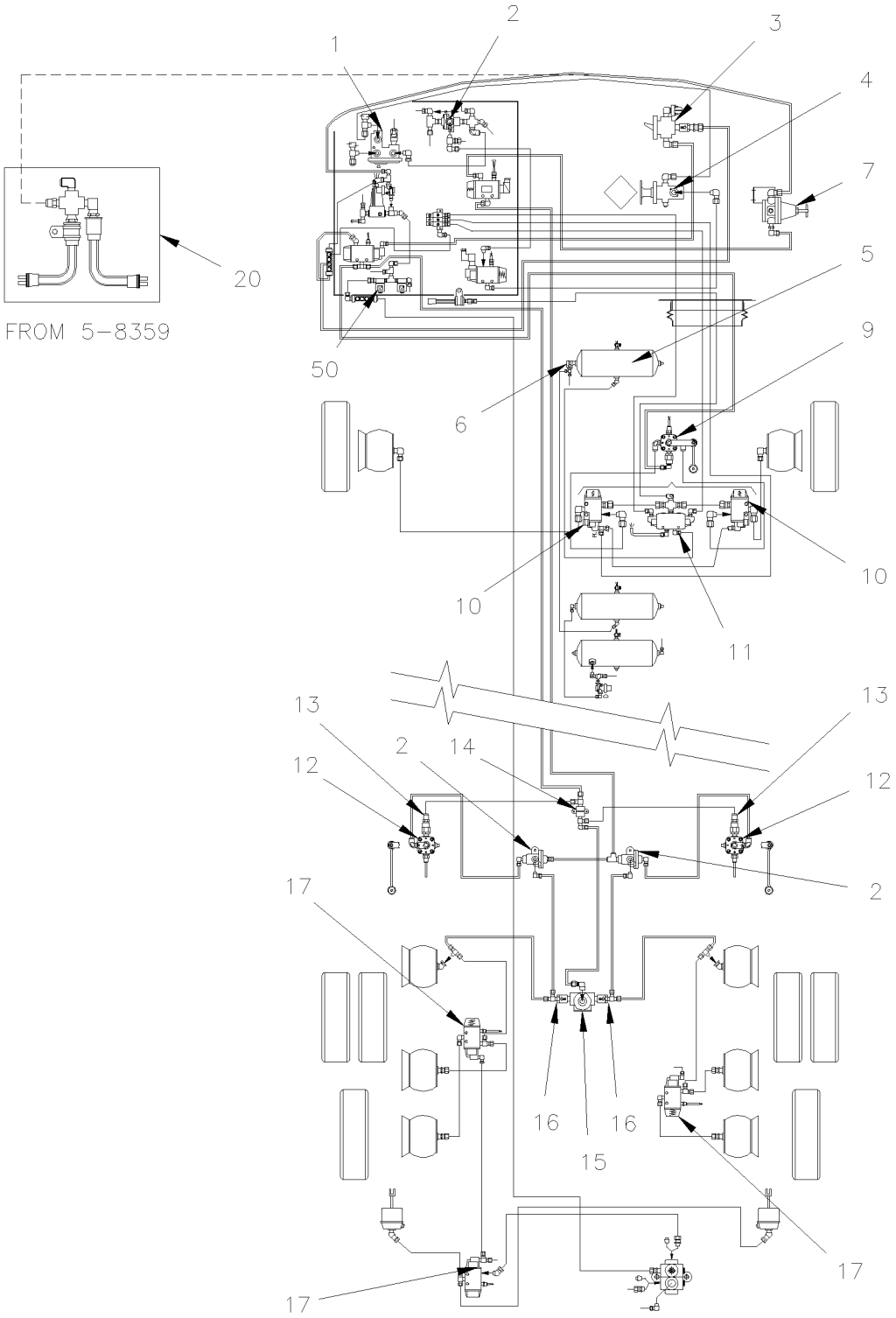

From Y-7046 Up to 6-8906	DATE: 01/2014	PAGE: Y2-1620-10

HIGH- BUOY, LOW BUOY & "KNEELING" VALVE

FRONT ''KNEELING'' W / LOW BUOY & HIGH BUOY WITH INDEPENDANT SUSPENSION

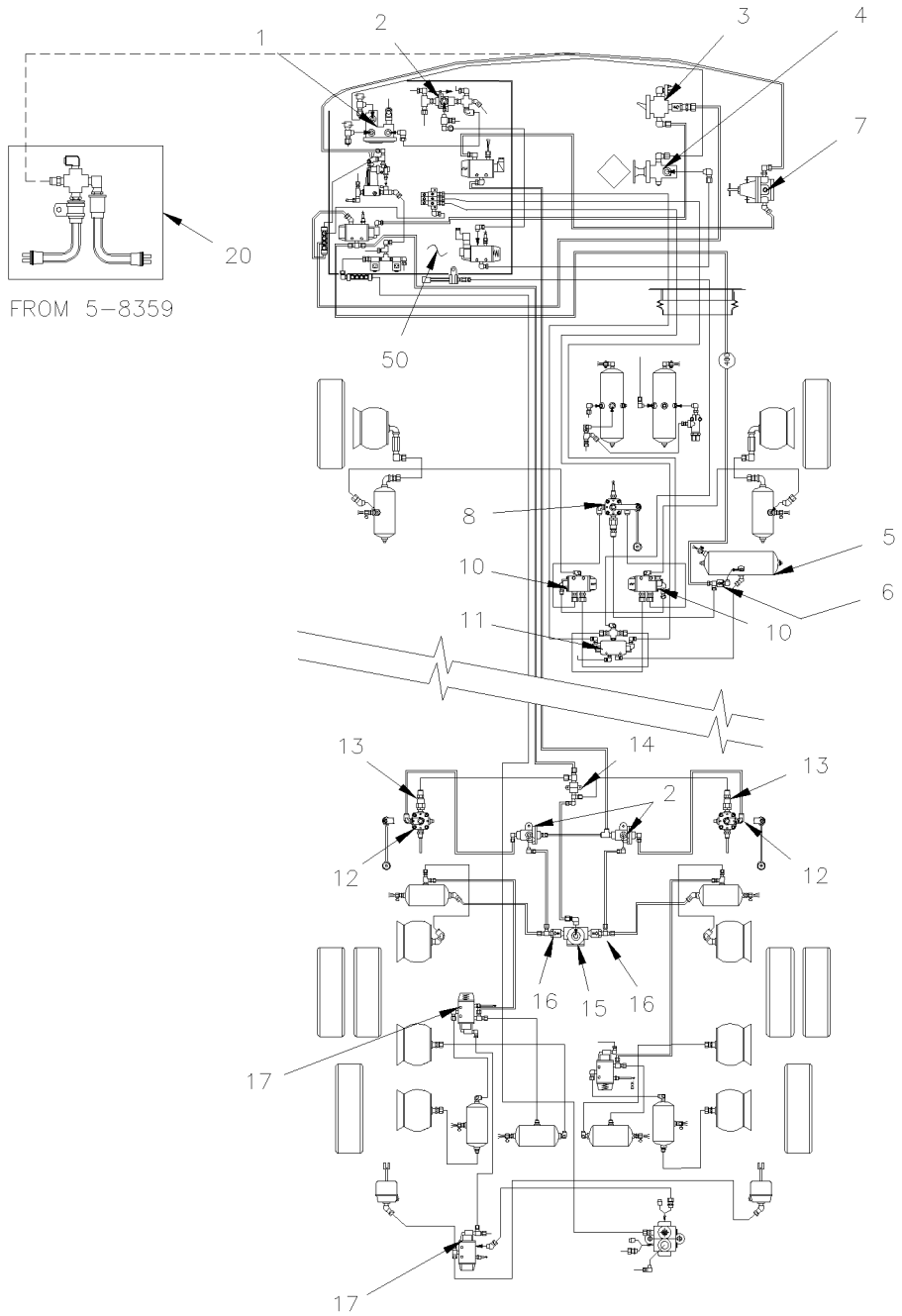

From Y-7046 Up to 6-8906	DATE: 01/2014	PAGE: Y2-1620-10

HIGH- BUOY, LOW BUOY & "KNEELING" VALVE

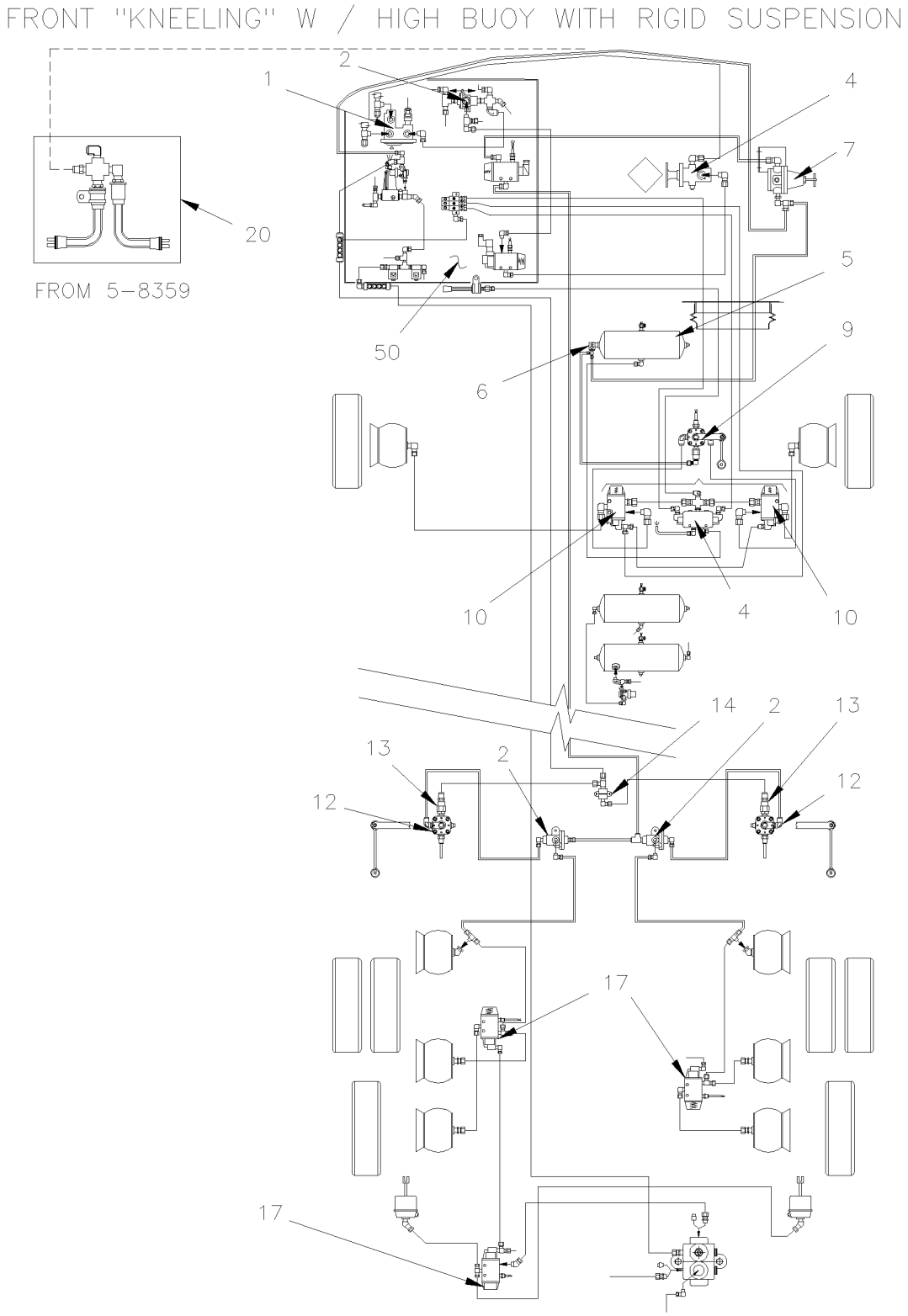

From Y-7046 Up to 6-8906	DATE: 01/2014	PAGE: Y2-1620-10

HIGH- BUOY, LOW BUOY & "KNEELING" VALVE

FRONT "KNEELING" W/HIGH BUOY WITH INDEPENDENT SUSPENSION

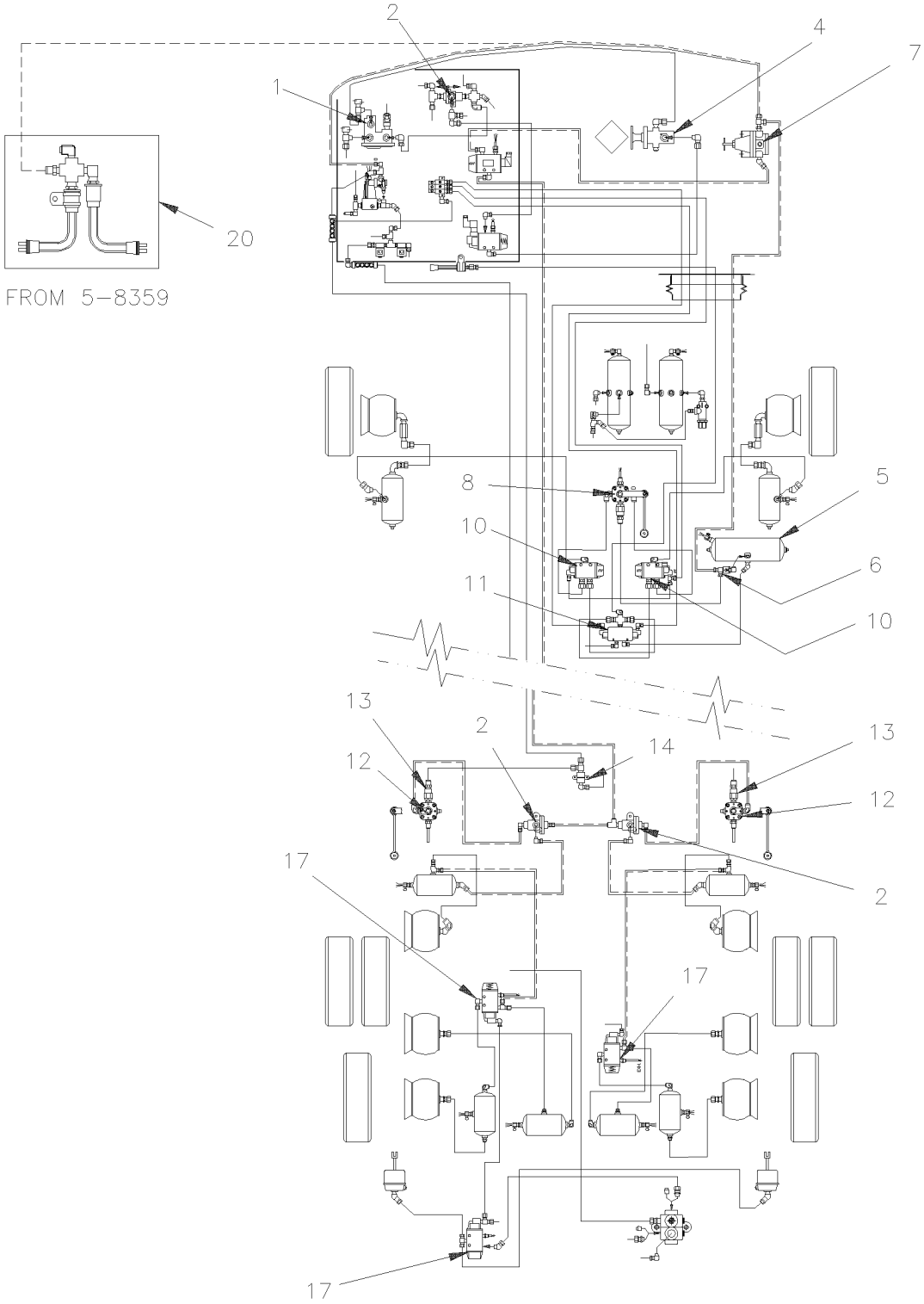

From Y-7046 Up to 6-8906	DATE: 01/2014	PAGE: Y2-1620-10

HIGH- BUOY, LOW BUOY & "KNEELING" VALVE

FRONT "KNEELING" W/LOW BUOY WITH INDEPENDENT SUSPENSION

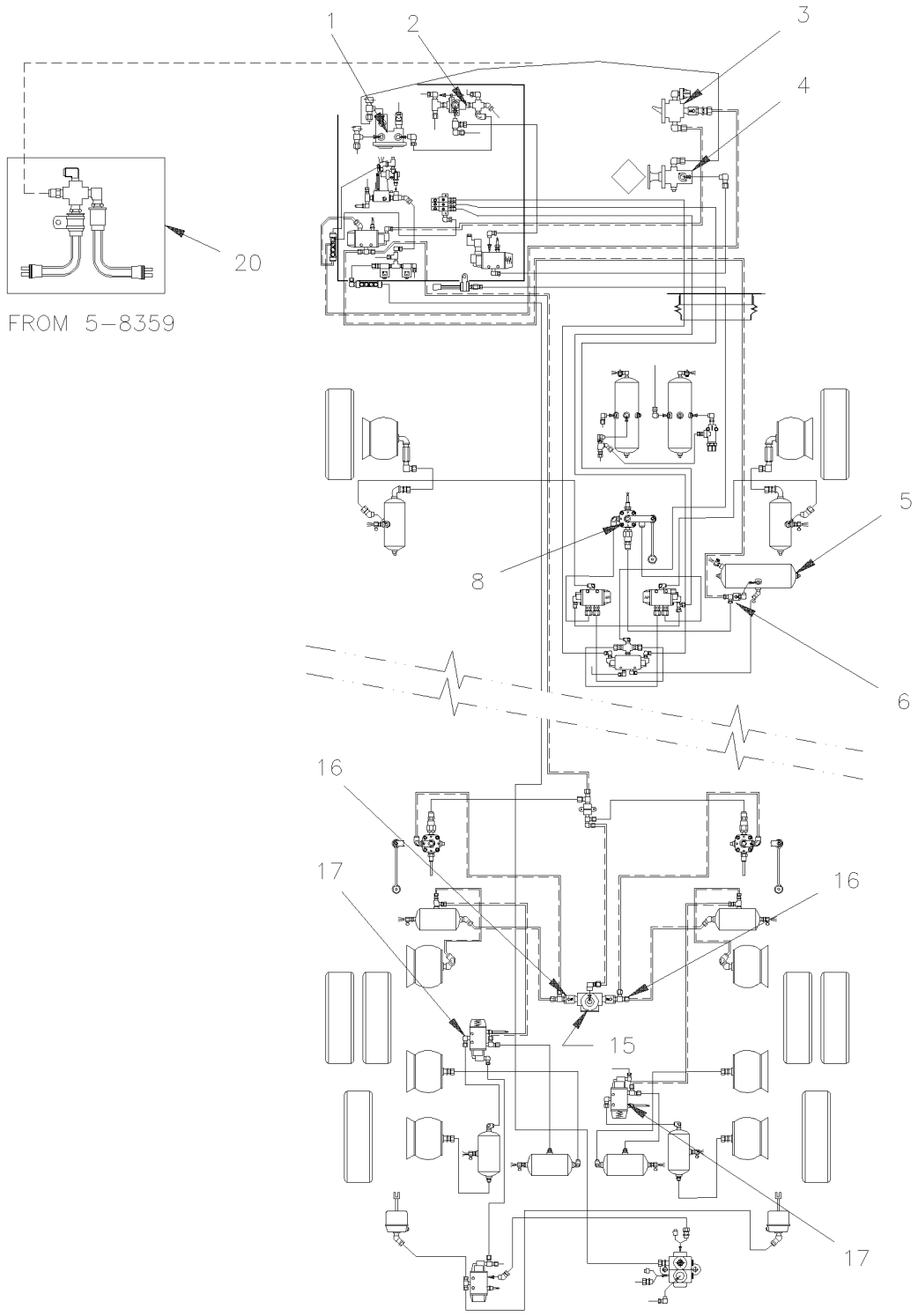

From Y-7046 Up to 6-8906	DATE: 01/2014	PAGE: Y2-1620-10

HIGH- BUOY, LOW BUOY & "KNEELING" VALVE

ITEM	PART	DESCRIPTION	XL45	MTH40	MTH45	MTH45S	NOTE
1	640870	VALVE / SPRING BRAKE SR-1 Up to 5-8358	1				
. NS	640921	. REPAIR KIT / SR-1 Up to 5-8358	1				
2	641015	VALVE, DOUBLE CHECK DC-4 Up to 3-8008 / REPLACED BY: 641564	AR				
2	641564	VALVE, DOUBLE CHECK DC-4 From 3-8009	AR				
3	640136	VALVE, CONTROL TW-1	1				
. NS	641156	. REPAIR KIT / TW-1	1				
4	641128	VALVE, CONTROL VALVE PP-1 / 40PSI / REPLACED BY: 641571	1				
. NS	641154	. REPAIR KIT / PP-1 & RD-3 / (281126)	1				
5	641411	AIR TANK / 2370 IN° / 12" O.D. X 24"	1				R
5	140868	AIR TANK / W/END LOWER DRAIN 1228 IN° / 8" O.D. X 26" Up to Y-7235	1				I
5	641583	AIR TANK / 1508 IN° / 9" 1/2 O.D. X 24"	1				I
5	Y2-1203-00	**AIR TANK - INSTALLATION**					
5	Y2-1203-01	**AIR TANK - INSTALLATION**					
6	641172	VALVE, CHECK ELBOW 90º 1/2 NPT	1				
7	641352	AIR PRESSURE REGULATOR 1/2" NPT	1				A
7	142025	SUPPORT / AIR REGULATOR	1				A
8	630157	VALVE, HEIGHT CONTROL "BARKSDALE" / FRONT Up to 1-7417 / REPLACED BY: 630237	1				I
8	630237	VALVE, HEIGHT CONTROL "BARKSDALE" / FRONT From 1-7418	1				I
9	630156	VALVE, HEIGHT CONTROL "BARKSDALE"	1				R
10	641274	VALVE, 3 WAYS, 2 POSITIONS N.C.	2				
11	641531	VALVE, 5 WAYS, 3 POSITIONS	1				
. NS	641186	. SPOOL	1				
12	630156	VALVE, HEIGHT CONTROL "BARKSDALE"	2				
13	640135	VALVE, CHECK 1/4 NPT	2				
14	640643	ANCHOR ELBOW / PIPE FITTING / 1/4NPT-Fx1/4NPT-F STL	1				
15	641429	VALVE, QUICK RELEASE QR-1 / 3/8NPTx3/8NPTx3/8NPT	1				
. NS	640924	. REPAIR KIT / QR-1	1				
16	640135	VALVE, CHECK 1/4 NPT	2				
17	641274	VALVE, 3 WAYS, 2 POSITIONS N.C.	2				
20	287234	PRESSURE SWITCH N.C. 30-10 20PS001AB030E010E From 5-8359	2				
50	Y2-1630-02	**FRONT KNEELING - CONTROL PANEL**					
50	Y2-1630-01	**FRONT KNEELING - CONTROL PANEL**					
50	Y2-1630-02	**FRONT KNEELING - CONTROL PANEL**					
		A) INSTALLED IN SPARE COMPARTMENT					
		I) WITH INDEPENDANT SUSPENSION					
		R) WITH I BEAM RIGID SUSPENSION					

From Y-7046 Up to 6-8906	DATE: 01/2014	PAGE: Y2-1620-10

HIGH- BUOY, LOW BUOY & "KNEELING" VALVE

ITEM	PART	DESCRIPTION	XL45	MTH40	MTH45	MTH45S	NOTE

From Y-7046 Up to 8-9339	DATE: 01/2014	PAGE: Y2-1620-50

HEIGHT CONTROL VALVE - MTH

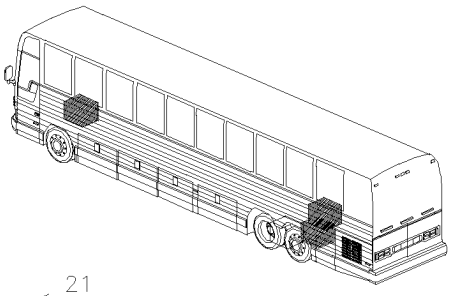

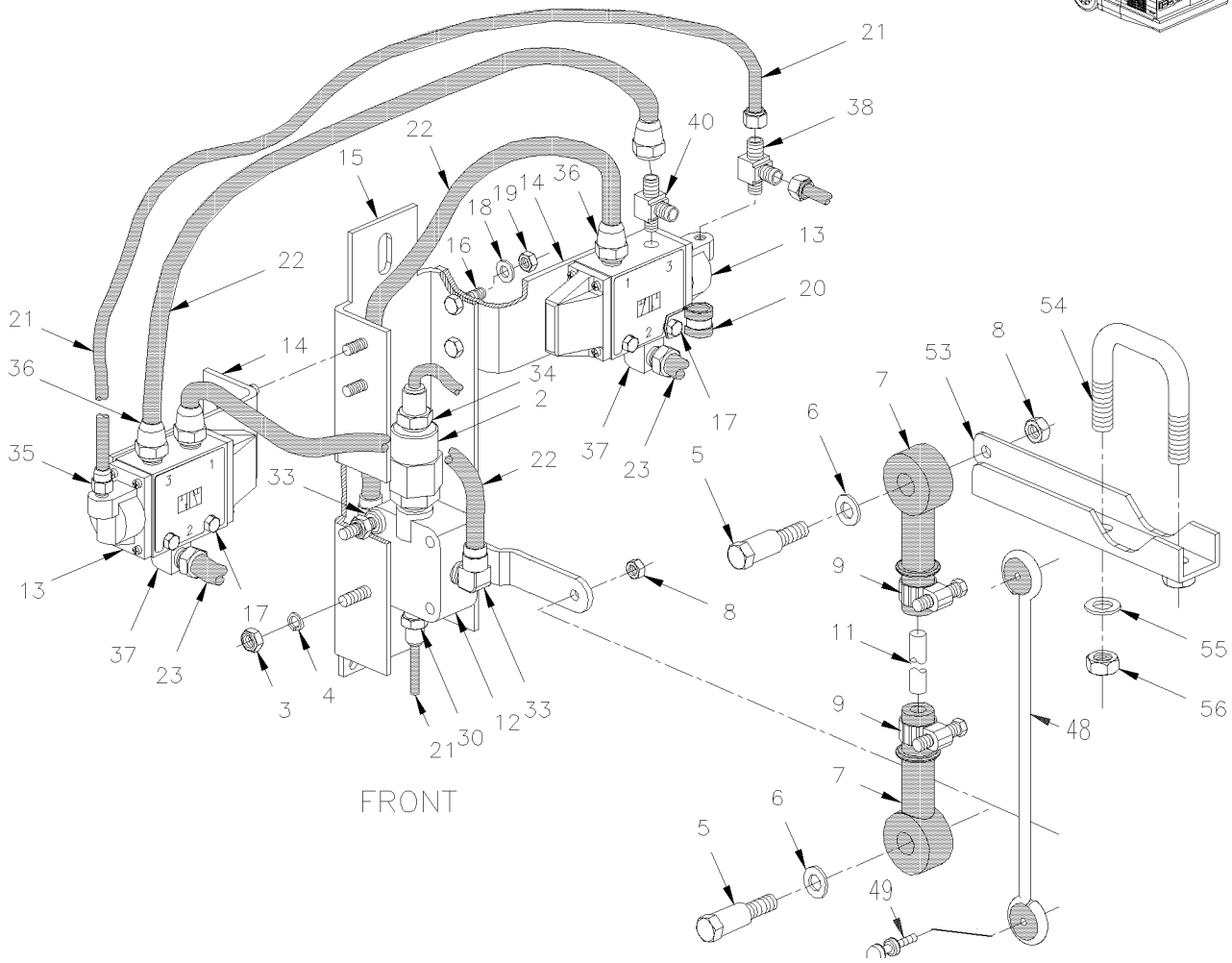

From Y-7046 Up to 8-9339	DATE: 01/2014	PAGE: Y2-1620-50
HEIGHT CONTROL VALVE - MTH		

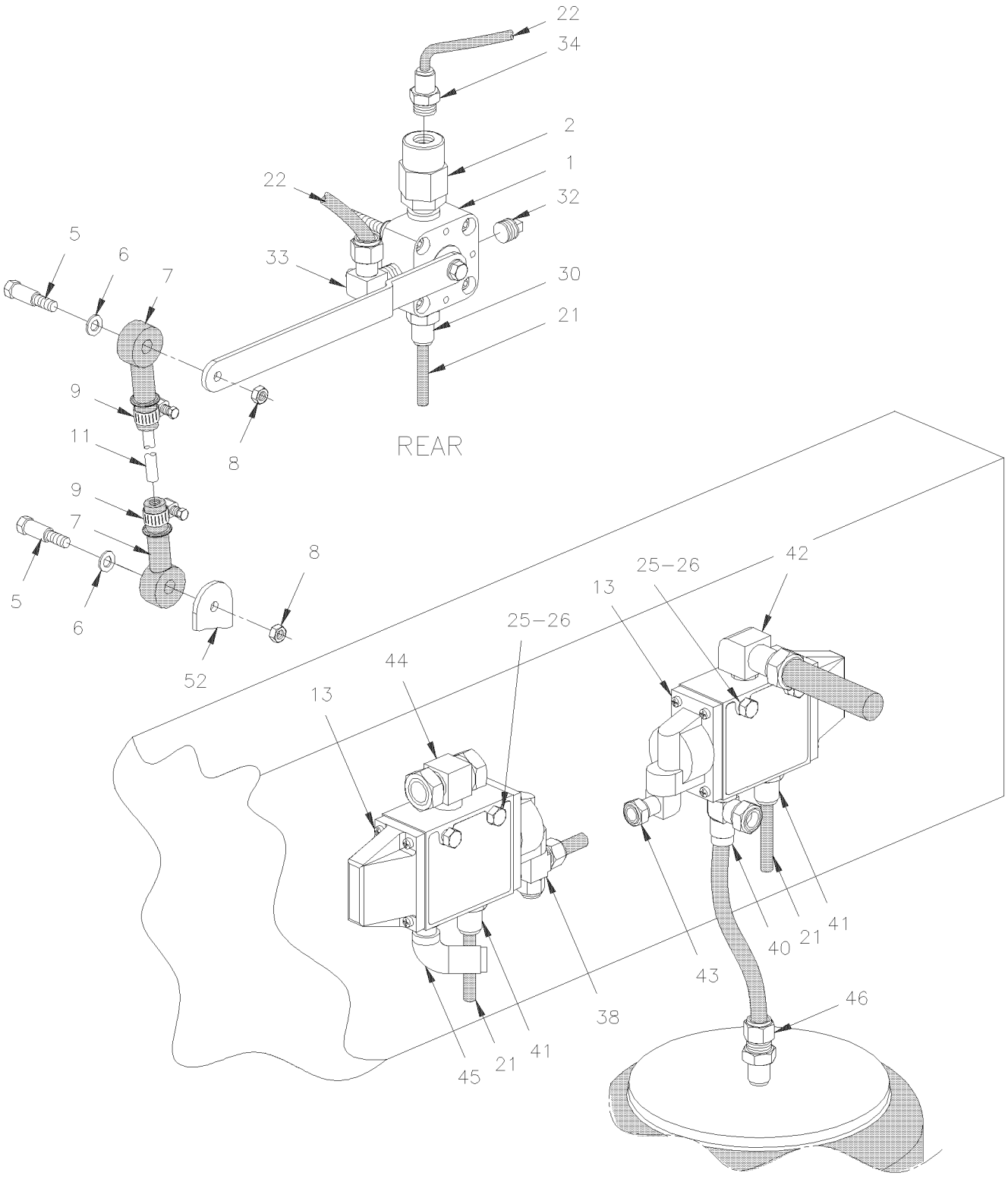

From Y-7046 Up to 8-9339	DATE: 01/2014	PAGE: Y2-1620-50

HEIGHT CONTROL VALVE - MTH

ITEM	PART	DESCRIPTION	XL45	MTH40	MTH45	MTH45S	NOTE
1	630156	VALVE, HEIGHT CONTROL "BARKSDALE"		2	2	2	
2	640135	VALVE, CHECK 1/4 NPT		1	1	1	
3	500769	NUT HEX 1/4-20 ZP		2	2	2	
4	500473	WASHER LO SPT .262x.489x.062 ZP		2	2	2	
5	630137	SCREW SHR CAP HEX 5/16" I.D. x 1/4-20 Up to 1-7417		2	2	2	
6	500441	WASHER FL .312x.734x.065 ZP		2	2	2	
7	630117	ROD END / BLACK RUBBER 5/16" I.D. Up to 1-7417		2	2	2	
8	502716	NUT HEX NYRT 1/4-20 / REPLACED BY: 5001123		2	2	2	
9	504014	HOSE CLAMP / 1/4"-5/8" SS / HM-4 Up to 1-7417		2	2	2	
11	131351	ROD LINK / 140MM Up to 1-7417		3	3	3	
12	630157	VALVE, HEIGHT CONTROL "BARKSDALE" / FRONT Up to 1-7417 / REPLACED BY: 630237		1	1	1	
12	630237	VALVE, HEIGHT CONTROL "BARKSDALE" / FRONT From 1-7418		1	1	1	
13	641274	VALVE, 3 WAYS, 2 POSITIONS N.C.		3	3	3	
14	131319	SUPPORT VALVE		2	2	2	
15	131468	SUPPORT HEIGHT CONTROL VALVE Up to 1-7417		1	1	1	
15	131621	SUPPORT HEIGHT CONTROL VALVE / WHITOUT "KNEELING" From 1-7418		1	1	1	
16	502622	SCREW CAP HEX M6-1.0x20 SS EMN		4	4	4	
17	502656	SCREW CAP HEX M6-1.0x50 SS		4	4	4	
18	502570	WASHER LO SPT 6.1x11.8x1.6 SS		8	8	8	
19	502565	NUT HEX M6-1.0 SS		8	8	8	
20	560480	CLAMP / 1/2" I.D. / REPLACED BY: 952627		1	1	1	
21	503402	TUBE, NYLON 1/4 O.D. / BLACK S.L.		AR	AR	AR	
22	503471	TUBE, NYLON 3/8 O.D. / BLUE S.L.		AR	AR	AR	
23	503517	TUBE, NYLON 1/2 O.D. / BLUE S.L.		AR	AR	AR	
25	500625	SCREW TC CAP HEXW 1/4-20x2 ZP		4	4	4	
26	500440	WASHER FL .250x.562x.065 ZP		4	4	4	
30	641332	MALE CONNECTOR / PUSH-IN FITTING / #4x1/4NPT-M BR		1	1	1	
31	641336	FEMALE ELBOW 90º / NTA FITTING / #6x3/8NPT-F BR		1	1	1	
32	501800	PLUG HEXS / PIPE FITTING / 1/4NPT-M STL		1	1	1	
NS	501304	PLUG SQUARE HEAD / PIPE FITTING / 1/4NPT-M BR		1	1	1	
33	641372	MALE ELBOW 90° NON-SWIVEL / PUSH-IN FITTING #6x1/4NPT-M BR		1	1	1	
34	641331	MALE CONNECTOR / PUSH-IN FITTING / #6x1/4NPT-M BR		1	1	1	
35	641242	MALE CONNECTOR / PUSH-IN FITTING / #4x1/8NPT-M BR		1	1	1	
36	641313	PLUG CAP / ADJUSTING DEVICE / PLASTIC INTERIOR GRIP / REPLACED BY: 642034		3	3	3	
37	641040	MALE ELBOW 90º / NTA FITTING / #8x3/8NPT-M BR		2	2	2	
38	641002	MALE RUN TEE / NTA FITTING / #4x#4x1/8NPT-M BR		1	1	1	
39	641373	MALE ELBOW 90° NON-SWIVEL / PUSH-IN FITTING / #8x1/4NPT-M BR		2	2	2	
40	641388	MALE RUN TEE NON-SWIVEL / PUSH-IN FITTING / #6x#6x3/8NPT-M BR		1	1	1	
41	641347	MALE CONNECTOR / PUSH-IN FITTING / #4x3/8NPT-M BR		1	1	1	
42	641375	MALE ELBOW 90° NON-SWIVEL / PUSH-IN FITTING #6x3/8NPT-M BR		1	1	1	
43	641369	MALE ELBOW 90° NON-SWIVEL / PUSH-IN FITTING #4x1/8NPT-M BR		1	1	1	

From Y-7046 Up to 8-9339	DATE: 01/2014	PAGE: Y2-1620-50

HEIGHT CONTROL VALVE - MTH

ITEM	PART	DESCRIPTION	XL45	MTH40	MTH45	MTH45S	NOTE
44	641008	MALE BRANCH TEE / NTA FITTING / #6x#6x3/8NPT-M BR		1	1	1	
45	641367	MALE ELBOW 45° NON-SWIVEL / PUSH-IN FITTING / #6x3/8NPT-M BR		1	1	1	
46	641384	MALE CONNECTOR / PUSH-IN FITTING / #10x1/2NPT-M BR		1	1	1	
48	630231	LINK ASSY 185MM C/C 7 1/4" From 1-7418		1	1	1	
. A	N8889244	. GROMMET / LINK From 1-7418		2	2	2	
. C	630250	. STUD RETAINER 1/4-20 X 1" From 1-7418		2	2	2	
. NS	500769	. NUT HEX 1/4-20 ZP From 1-7418		4	4	4	
. NS	500473	. WASHER LO SPT .262x.489x.062 ZP From 1-7418		4	4	4	
49	N.S.S.	STUD RETAINER From 1-7418		2	2	2	1
52	121561	ACTUATOR / TO FIX LINK / (WELDED)		2	2	2	
NS	110594	PLATE, RETAINER		1	1	1	B
53	110679	ACTUATOR LEVER		1	1	1	C
54	504635	U-BOLT 1 3/4" I.D. x 2 3/4" x 5/16-18		1	1	1	
55	500476	WASHER LO SPT .317x.586x.078 ZP		2	2	2	
56	500778	NUT HEX 5/16-18 ZP		2	2	2	
		1) NOT SOLD SEPARATELY					
		B) TO FIX AXLE HOUSING					
		C) FIXED AT FRONT STABILISATOR BAR					

From Y-7046 Up to 2-7799	DATE: 01/2014	PAGE: Y2-1630-00
FRONT KNEELING - CONTROL PANEL		

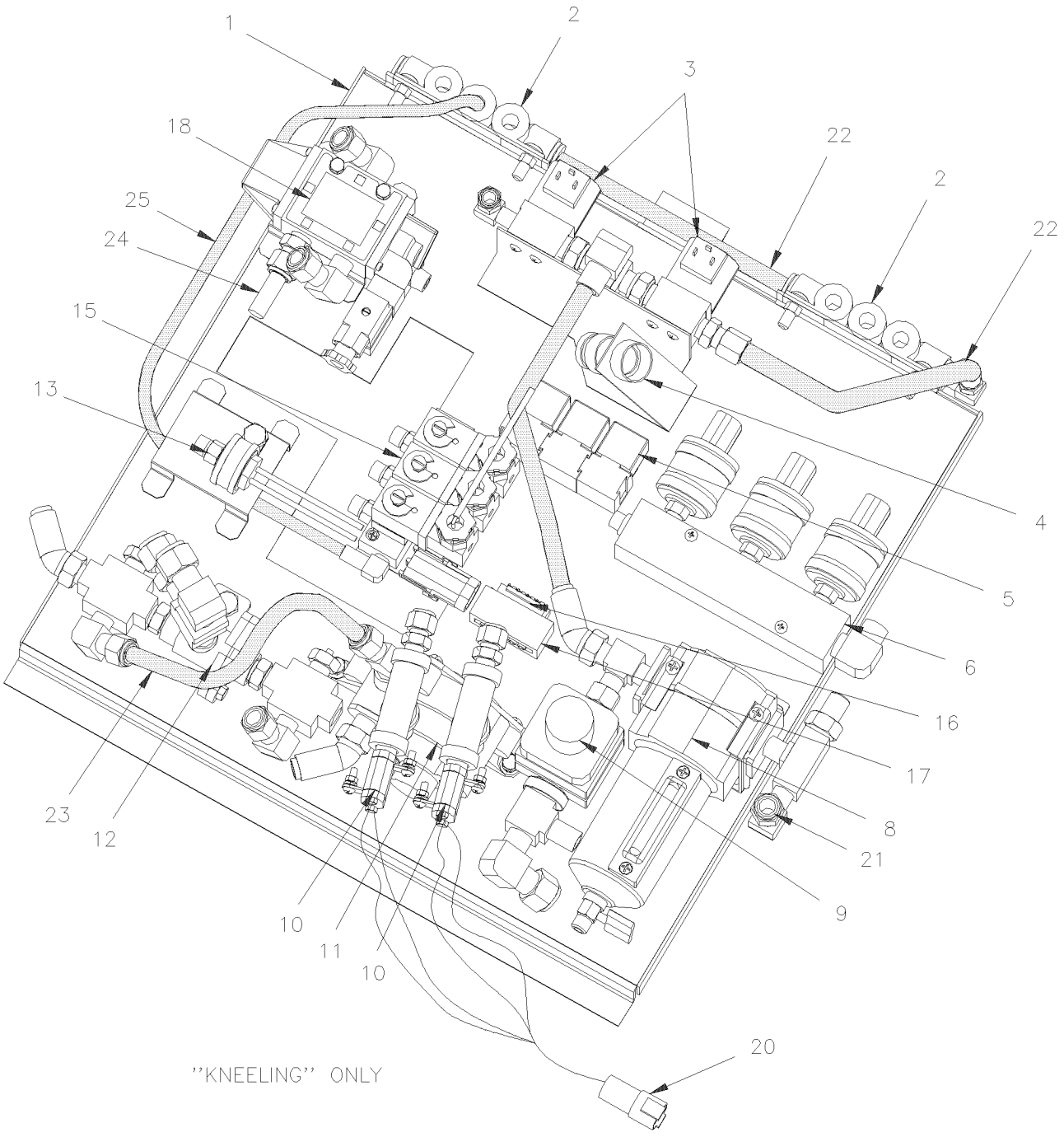

From Y-7046 Up to 2-7799	DATE: 01/2014	PAGE: Y2-1630-00

FRONT KNEELING - CONTROL PANEL

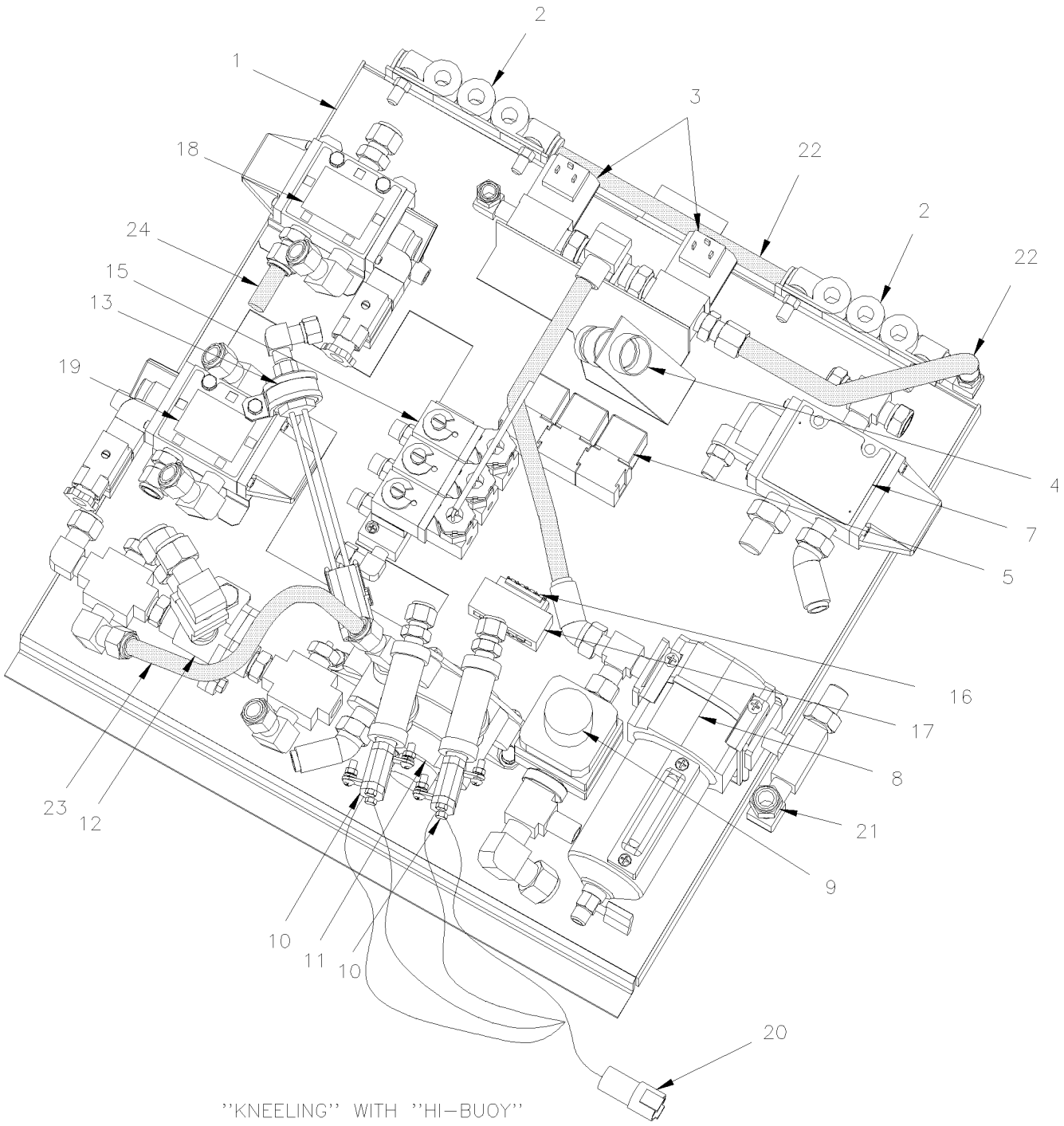

From Y-7046 Up to 2-7799	DATE: 01/2014	PAGE: Y2-1630-00

FRONT KNEELING - CONTROL PANEL

ITEM	PART	DESCRIPTION	XL45	MTH40	MTH45	MTH45S	NOTE
1	142092	VALVES SUPPORT ASSY	1				
2	641508	MANIFOLD / PUSH-IN FITTING / 2x#6 / 4x#4 PLAS Up to Y-7085 / REPLACED BY: 641897	2				
2	641897	MANIFOLD / PUSH-IN FITTING / 2x#6 / 4x#4 PLAS From Y-7086	1				
3	562804	VALVE, 2 WAYS N.C.	2				
4	065117	CABLE ASSY / "KNEELING PANEL" Up to Y-7310	1				
4	065349	CABLE ASSY / "KNEELING PANEL" From Y-7311	1				
5	561707	RELAY 24V S.P.D.T. W/RESISTOR / Up to 5-8577	3				
5	563332	RELAY 24V S.P.D.T. W/RESISTOR / "VOLVO" (20374662) From 5-8578	3				
6	Y2-0750-00	**AUTOMATIC TRANSMISSION - "WORLD" WITH DETROIT S-60**					
7	641274	VALVE, 3 WAYS, 2 POSITIONS N.C.	1				
8	Y2-1220-15	**AIR FILTER - ACCESSORIES**					
9	641137	VALVE, PRESSURE PROTECTION TYPE PR-4 70PSI	1				
10	641174	PRESSURE SWITCH N.C. 30PSI / ¼NPT LP-2 Up to 3-7957	2				
10	287234	PRESSURE SWITCH N.C. 30-10 20PS001AB030E010E From 3-7958	2				
11	640870	VALVE / SPRING BRAKE SR-1	1				
. NS	640921	. REPAIR KIT / SR-1	1				
11	140227	DECAL / ACC AIR FILTER DRAIN ENG & FRENCH	1				
11	142368	DECAL / ACC AIR FILTER DRAIN ENG & SPANISH	1				
12	641015	VALVE, DOUBLE CHECK DC-4 / REPLACED BY: 641564	1				
13	452082	PRESSURE SWITCH N.O. 30-15 20SP001AA030C015C	1				
14	952633	CLAMP / 7/8" I.D.	1				
15	641180	MANIFOLD VALVE / W/3 SOLENOID	1				
NS	641242	MALE CONNECTOR / PUSH-IN FITTING / #4x1/8NPT-M BR	3				
16	381145	DIODE ASSY / W/5 3AMPS	1				
17	381518	SUPPORT / FOR 10 PINS CONNECTOR	1				
18	641528	VALVE, 3 WAYS, 2 POSITIONS N.O.	1				
. NS	641929	. COIL 24V	1				
. NS	641169	. SPOOL	1				
. NS	641385	. CONNECTOR / SOCKET HOUSING ASSY 3C	1				
19	641529	VALVE, 3 WAYS, 2 POSITIONS N.C. Up to 1-7535 / REPLACED BY: 641937	1				
. NS	641929	. COIL 24V Up to 1-7535	1				
. NS	641169	. SPOOL Up to 1-7535	1				
. NS	641385	. CONNECTOR / SOCKET HOUSING ASSY 3C Up to 1-7535	1				
19	641937	VALVE, 3 WAYS, 2 POSITIONS N.C. / W/MAN OVERRIDE From 1-7535	1				
. NS	641929	. COIL 24V From 1-7535	1				
. NS	641385	. CONNECTOR / SOCKET HOUSING ASSY 3C / PNEUMAC 54934-01 From 1-7535	1				
NS	641934	SILENCER / MUFFLER / 3/8NPT-M	1				
20	065222	CABLE ASSY / PARKING BRAKE PRESSURE	1				
NS	065479	CABLE ASSY / SAFETY SW./PARKING BRAKE (BETWEN SWITCH & RELAY) / REPLACED BY: 065951					A
21	640488	VALVE, AIR FILL 1/8" NPT	1				
. NS	650164	. CAP VALVE / CHROME	1				
22	503404	TUBE, NYLON 3/8 O.D. / BLACK S.L.	AR				
		A) WITH "OPTION" SAFETY PARKING BRAKE SWITCH ON					
		DASHBOARD					

From Y-7046 Up to 2-7799	DATE: 01/2014	PAGE: Y2-1630-00

FRONT KNEELING - CONTROL PANEL

ITEM	PART	DESCRIPTION	XL45	MTH40	MTH45	MTH45S	NOTE
23	503463	TUBE, NYLON 3/8 O.D. / GREEN S.L.	AR				
24	503470	TUBE, NYLON 3/8 O.D. / YELLOW S.L.	AR				
25	503402	TUBE, NYLON 1/4 O.D. / BLACK S.L.	AR				

From 2-7800 Up to 5-8558	DATE: 01/2014	PAGE: Y2-1630-01
FRONT KNEELING - CONTROL PANEL		

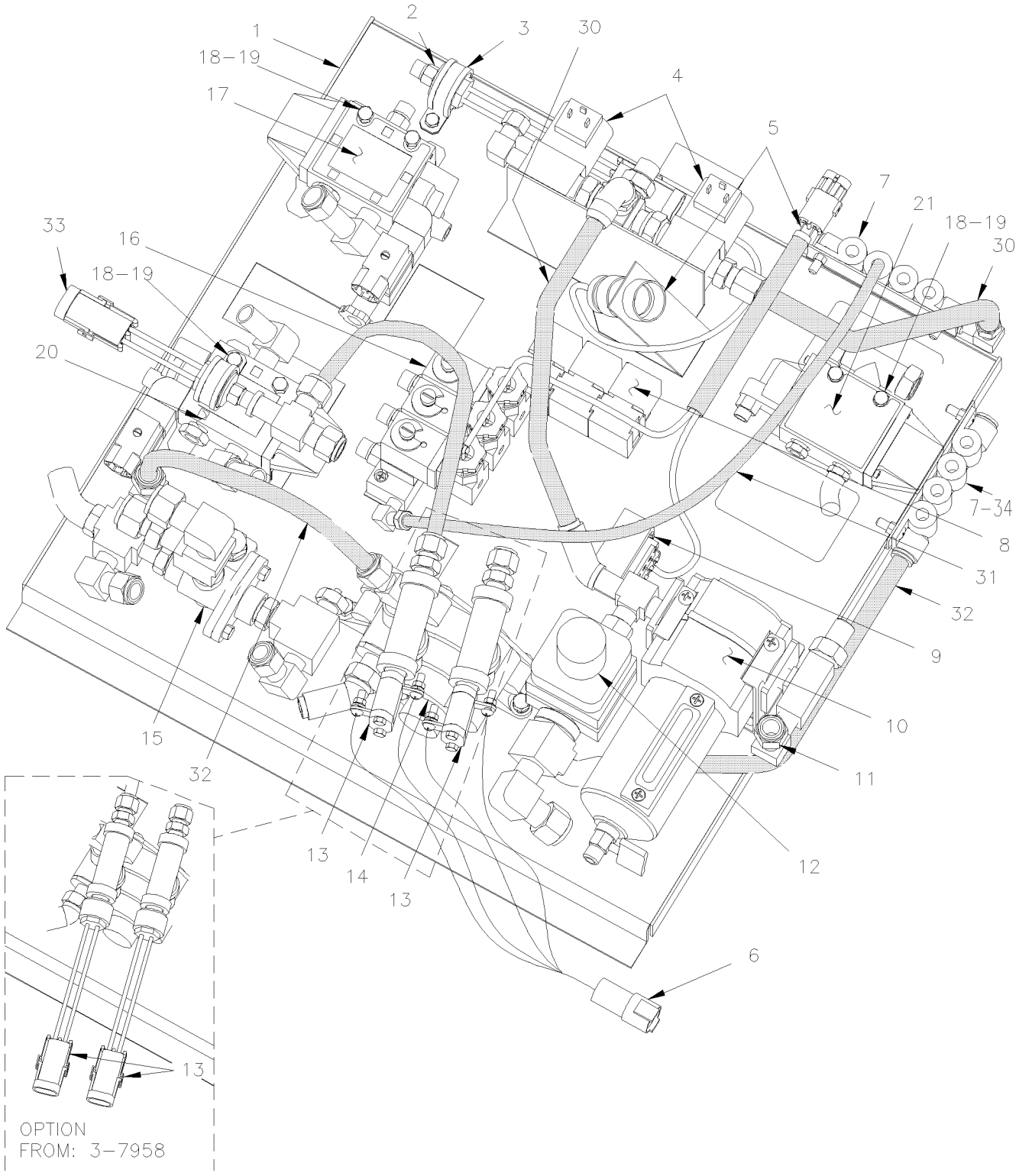

From 2-7800 Up to 5-8558	DATE: 01/2014	PAGE: Y2-1630-01

FRONT KNEELING - CONTROL PANEL

ITEM	PART	DESCRIPTION	XL45	MTH40	MTH45	MTH45S	NOTE
1	142215	VALVE SUPPORT ASSY	1				
1	142366	VALVE SUPPORT ASSY	1				
2	452082	PRESSURE SWITCH N.O. 30-15 20SP001AA030C015C	1				
3	952633	CLAMP / 7/8" I.D.	1				
4	562804	VALVE, 2 WAYS N.C.	2				
5	065349	CABLE ASSY / "KNEELING PANEL" Up to 4-8358	1				
5	066092	CABLE ASSY / "KNEELING PANEL" From 4-8359 Up to 5-8469	1				
5	066225	CABLE ASSY / "KNEELING PANEL" From 5-8470	1				
6	065222	CABLE ASSY / PARKING BRAKE PRESSURE	1				
NS	065479	CABLE ASSY / SAFETY SW./PARKING BRAKE (BETWEN SWITCH & RELAY) Up to 4-8180 / REPLACED BY: 065950	1				A
NS	065950	CABLE ASSY / SAFETY SW./PARKING BRAKE (BETWEN SWITCH & RELAY) From 4-8181	1				A
7	641897	MANIFOLD / PUSH-IN FITTING / 2x#6 / 4x#4 PLAS	2				
NS	500574	SCREW MA TR PH #10-24x1 1/4 SS	4				
8	561706	RELAY 12V S.P.D.T. W/DIODE /	3				
9	381145	DIODE ASSY / W/5 3AMPS	1				
NS	381518	SUPPORT / FOR 10 PINS CONNECTOR	1				
10	Y2-1220-15	**AIR FILTER - ACCESSORIES**					
11	640488	VALVE, AIR FILL 1/8" NPT	1				
. NS	650164	. CAP VALVE / CHROME	1				
12	641137	VALVE, PRESSURE PROTECTION TYPE PR-4 70PSI	1				
13	641174	PRESSURE SWITCH N.C. 30PSI / ¼NPT LP-2 Up to 3-7957	2				
13	287234	PRESSURE SWITCH N.C. 30-10 20PS001AB030E010E From 3-7958 Up to 5-8358	2				
14	640870	VALVE / SPRING BRAKE SR-1	1				
. NS	640921	. REPAIR KIT / SR-1	1				
15	641015	VALVE, DOUBLE CHECK DC-4 Up to 3-8008 / REPLACED BY: 641564	1				
15	641564	VALVE, DOUBLE CHECK DC-4 From 3-8009	1				
16	641180	MANIFOLD VALVE / W/3 SOLENOID	1				
NS	641242	MALE CONNECTOR / PUSH-IN FITTING / #4x1/8NPT-M BR	3				
17	641528	VALVE, 3 WAYS, 2 POSITIONS N.O.	1				
. NS	641929	. COIL 24V	1				
. NS	641169	. SPOOL	1				
. NS	641385	. CONNECTOR / SOCKET HOUSING ASSY 3C	1				
18	500994	SCREW CAP HEX 1/4-20x1 3/4 G5 PT ZP	2				
19	500473	WASHER LO SPT .262x.489x.062 ZP	AR				
20	641937	VALVE, 3 WAYS, 2 POSITIONS N.C. / W/MAN OVERRIDE	AR				
. NS	641929	. COIL 24V	1				
. NS	641385	. CONNECTOR / SOCKET HOUSING ASSY 3C / PNEUMAC 54934-01	1				
21	641274	VALVE, 3 WAYS, 2 POSITIONS N.C.	1				
30	503404	TUBE, NYLON 3/8 O.D. / BLACK S.L.	AR				
31	503402	TUBE, NYLON 1/4 O.D. / BLACK S.L.	AR				
32	503463	TUBE, NYLON 3/8 O.D. / GREEN S.L.	AR				
33	452082	PRESSURE SWITCH N.O. 30-15 20SP001AA030C015C	1				
		A) WITH "OPTION" SAFETY PARKING BRAKE SWITCH ON					
		DASHBOARD					

From 2-7800 Up to 5-8558	DATE: 01/2014	PAGE: Y2-1630-01

FRONT KNEELING - CONTROL PANEL

ITEM	PART	DESCRIPTION	XL45	MTH40	MTH45	MTH45S	NOTE
34	641416	PLUG STEM / PUSH-IN FITTING / #4 PLAS	2				

From 2-7800 Up to 5-8558	DATE: 01/2014	PAGE: Y2-1630-01

FRONT KNEELING - CONTROL PANEL

ITEM	PART	DESCRIPTION	XL45	MTH40	MTH45	MTH45S	NOTE

From 5-8559 Up to 6-8906	DATE: 01/2014	PAGE: Y2-1630-02
FRONT KNEELING - CONTROL PANEL		

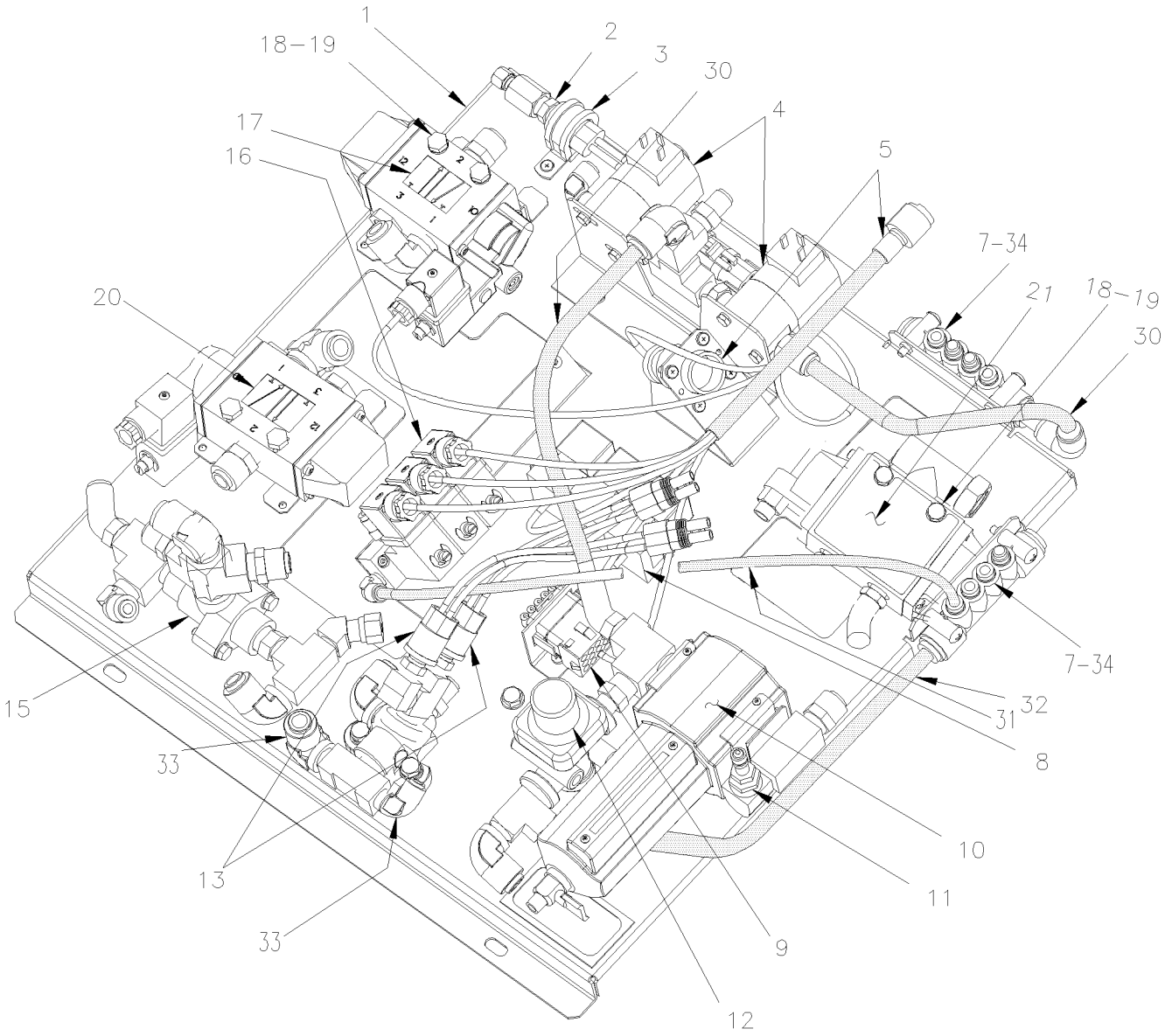

From 5-8559 Up to 6-8906	DATE: 01/2014	PAGE: Y2-1630-02

FRONT KNEELING - CONTROL PANEL

ITEM	PART	DESCRIPTION	XL45	MTH40	MTH45	MTH45S	NOTE
1	142366	VALVE SUPPORT ASSY	1				
2	452082	PRESSURE SWITCH N.O. 30-15 20SP001AA030C015C	1				
3	952633	CLAMP / 7/8" I.D.	1				
4	562804	VALVE, 2 WAYS N.C.	2				
5	066225	CABLE ASSY / "KNEELING PANEL"	1				
NS	065950	CABLE ASSY / SAFETY SW./PARKING BRAKE (BETWEN SWITCH & RELAY)	1				A
7	641897	MANIFOLD / PUSH-IN FITTING / 2x#6 / 4x#4 PLAS	2				
NS	500574	SCREW MA TR PH #10-24x1 1/4 SS	4				
8	561706	RELAY 12V S.P.D.T. W/DIODE /	3				
9	381145	DIODE ASSY / W/5 3AMPS	1				
NS	381518	SUPPORT / FOR 10 PINS CONNECTOR	1				
10	Y2-1220-15	**AIR FILTER - ACCESSORIES**					
11	640488	VALVE, AIR FILL 1/8" NPT	1				
. NS	650164	. CAP VALVE / CHROME	1				
12	641137	VALVE, PRESSURE PROTECTION TYPE PR-4 70PSI	1				
13	287234	PRESSURE SWITCH N.C. 30-10 20PS001AB030E010E	2				
15	641564	VALVE, DOUBLE CHECK DC-4	1				
16	641180	MANIFOLD VALVE / W/3 SOLENOID	1				
NS	641242	MALE CONNECTOR / PUSH-IN FITTING / #4x1/8NPT-M BR	3				
17	641528	VALVE, 3 WAYS, 2 POSITIONS N.O.	1				
. NS	641929	. COIL 24V	1				
. NS	641169	. SPOOL	1				
. NS	641385	. CONNECTOR / SOCKET HOUSING ASSY 3C	1				
18	500994	SCREW CAP HEX 1/4-20x1 3/4 G5 PT ZP	2				
19	500473	WASHER LO SPT .262x.489x.062 ZP	AR				
20	641937	VALVE, 3 WAYS, 2 POSITIONS N.C. / W/MAN OVERRIDE	AR				
. NS	641929	. COIL 24V	1				
. NS	641385	. CONNECTOR / SOCKET HOUSING ASSY 3C / PNEUMAC 54934-01	1				
21	641274	VALVE, 3 WAYS, 2 POSITIONS N.C.	1				
30	503404	TUBE, NYLON 3/8 O.D. / BLACK S.L.	AR				
31	503402	TUBE, NYLON 1/4 O.D. / BLACK S.L.	AR				
32	503463	TUBE, NYLON 3/8 O.D. / GREEN S.L.	AR				
33	Y2-1201-00	**FITTING - MISCELLANEOUS**	1				
34	641416	PLUG STEM / PUSH-IN FITTING / #4 PLAS	2				
		A) WITH "OPTION" SAFETY PARKING BRAKE SWITCH ON					
		DASHBOARD					

From Y-7046 Up to 2-7799	DATE: 01/2014	PAGE: Y2-1640-50

LEVEL-LOW - CONTROL PANEL & VALVES

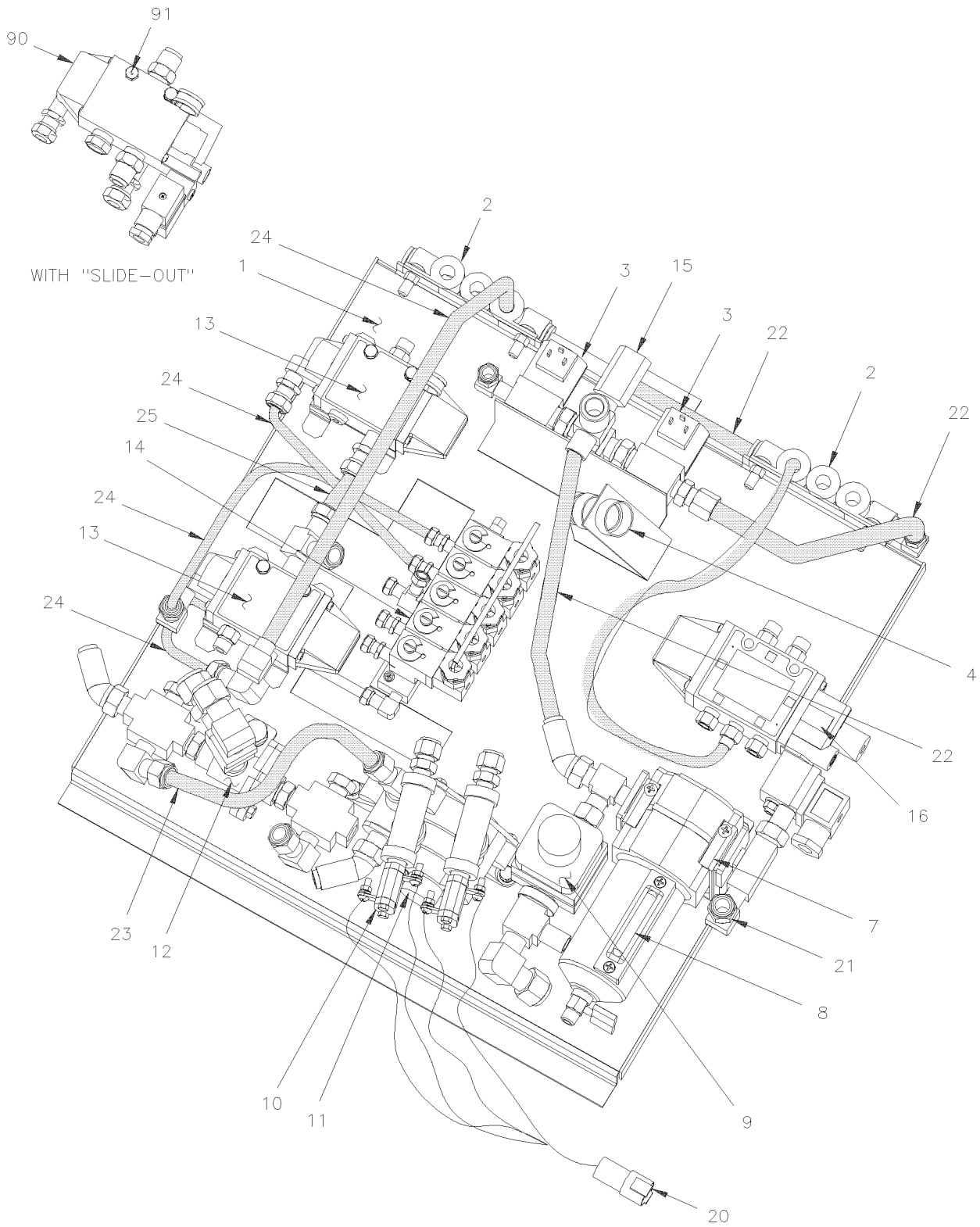

From Y-7046 Up to 2-7799	DATE: 01/2014	PAGE: Y2-1640-50

LEVEL-LOW - CONTROL PANEL & VALVES

ITEM	PART	DESCRIPTION	XL45	MTH40	MTH45	MTH45S	NOTE
1	142023	VALVE SUPPORT ASSY		1	1	1	
2	641508	MANIFOLD / PUSH-IN FITTING / 2x#6 / 4x#4 PLAS Up to Y-7085 / REPLACED BY: 641897		2	2	2	
2	641897	MANIFOLD / PUSH-IN FITTING / 2x#6 / 4x#4 PLAS From Y-7086		2	2	2	
3	562804	VALVE, 2 WAYS N.C.		2	2	2	
NS	391812	IDENTIFICATION PLATE (CONVERTER)		1	1	1	
NS	142042	PLATE CONVERTER AIR HORN SOLENOID		1	1	1	
4	064177	CABLE ASSY / VALVE "LEVEL-LOW" Up to 1-7407 / REPLACED BY: 065429		1	1	1	
4	065429	CABLE ASSY / VALVE "LEVEL-LOW" From 1-7408		1	1	1	
7	641339	SUPPORT / AIR FILTER		2	2	2	
8	Y2-1220-15	**AIR FILTER - ACCESSORIES**					
9	641137	VALVE, PRESSURE PROTECTION TYPE PR-4 70PSI		1	1	1	
10	641174	PRESSURE SWITCH N.C. 30PSI / ¼NPT LP-2 Up to 3-7957		1	1	1	
10	287234	PRESSURE SWITCH N.C. 30-10 20PS001AB030E010E From 3-7958		1	1	1	
11	640870	VALVE / SPRING BRAKE SR-1		1	1	1	
. NS	640921	. REPAIR KIT / SR-1		1	1	1	
12	641015	VALVE, DOUBLE CHECK DC-4 / REPLACED BY: 641564		1	1	1	
13	641274	VALVE, 3 WAYS, 2 POSITIONS N.C.		2	2	2	
14	641205	MANIFOLD VALVE / W/5 SOLENOID		1	1	1	
15	5011129	NEEDLE VALVE 1/4 NPT M x 1/4 NPT F		1	1	1	
15	501902	CROSS / PIPE FITTING / 1/4NPT-Fx1/4NPT-Fx 1/4NPT-Fx1/4NPT-F BR		1	1	1	
16	641528	VALVE, 3 WAYS, 2 POSITIONS N.O.		1	1	1	
. NS	641929	. COIL 24V		1	1	1	
. NS	641169	. SPOOL		1	1	1	
. NS	641385	. CONNECTOR / SOCKET HOUSING ASSY 3C		1	1	1	
20	065222	CABLE ASSY / PARKING BRAKE PRESSURE		1	1	1	
21	640488	VALVE, AIR FILL 1/8" NPT		1	1	1	
. NS	650164	. CAP VALVE / CHROME		1	1	1	
22	503404	TUBE, NYLON 3/8 O.D. / BLACK S.L.		AR	AR	AR	
23	503463	TUBE, NYLON 3/8 O.D. / GREEN S.L.		AR	AR	AR	
24	503402	TUBE, NYLON 1/4 O.D. / BLACK S.L.		AR	AR	AR	
25	503471	TUBE, NYLON 3/8 O.D. / BLUE S.L.		AR	AR	AR	
90	641528	VALVE, 3 WAYS, 2 POSITIONS N.O.			1		
. NS	641929	. COIL 24V			1		
. NS	641169	. SPOOL			1		
. NS	641385	. CONNECTOR / SOCKET HOUSING ASSY 3C			1		
91	500174	SCREW CAP HEX 1/4-20x3 G5 PT ZP			2		

From 2-7800 Up to 5-8558	DATE: 01/2014	PAGE: Y2-1640-51
LEVEL-LOW - CONTROL PANEL & VALVES		

From 2-7800 Up to 5-8558	DATE: 01/2014	PAGE: Y2-1640-51

LEVEL-LOW - CONTROL PANEL & VALVES

ITEM	PART	DESCRIPTION	XL45	MTH40	MTH45	MTH45S	NOTE
1	142215	VALVE SUPPORT ASSY		1	1	1	
2	641897	MANIFOLD / PUSH-IN FITTING / 2x#6 / 4x#4 PLAS		2	2	2	
NS	500574	SCREW MA TR PH #10-24x1 1/4 SS		4	4	4	
3	562804	VALVE, 2 WAYS N.C.		2	2	2	
4	065429	CABLE ASSY / VALVE "LEVEL-LOW"		1	1	1	
7	641371	MALE ELBOW 90° NON-SWIVEL / PUSH-IN FITTING #4x1/4NPT-M BR		1	1	1	
8	Y2-1220-15	**AIR FILTER - ACCESSORIES**					
NS	140227	DECAL / ACC AIR FILTER DRAIN ENG & FRENCH		1	1	1	
NS	142368	DECAL / ACC AIR FILTER DRAIN ENG & SPANISH		1	1	1	
9	641137	VALVE, PRESSURE PROTECTION TYPE PR-4 70PSI		1	1	1	
10	641174	PRESSURE SWITCH N.C. 30PSI / ¼NPT LP-2 Up to 3-7957		2	2	2	
10	287234	PRESSURE SWITCH N.C. 30-10 20PS001AB030E010E From 3-7958		2	2	2	
11	640870	VALVE / SPRING BRAKE SR-1		1	1	1	
. NS	640921	. REPAIR KIT / SR-1		1	1	1	
12	641015	VALVE, DOUBLE CHECK DC-4 Up to 3-8008 / REPLACED BY: 641564		1	1	1	
12	641564	VALVE, DOUBLE CHECK DC-4 From 3-8009		1	1	1	
13	641274	VALVE, 3 WAYS, 2 POSITIONS N.C.		2	2	2	
14	641205	MANIFOLD VALVE / W/5 SOLENOID		1	1	1	
15	142042	PLATE CONVERTER AIR HORN SOLENOID		1	1	1	
16	641528	VALVE, 3 WAYS, 2 POSITIONS N.O.		1	1	1	
. NS	641929	. COIL 24V		1	1	1	
. NS	641169	. SPOOL		1	1	1	
. NS	641385	. CONNECTOR / SOCKET HOUSING ASSY 3C		1	1	1	
17	641934	SILENCER / MUFFLER / 3/8NPT-M		1	1	1	
20	065222	CABLE ASSY / PARKING BRAKE PRESSURE		1	1	1	
21	640488	VALVE, AIR FILL 1/8" NPT		1	1	1	
. NS	650164	. CAP VALVE / CHROME		1	1	1	
22	503404	TUBE, NYLON 3/8 O.D. / BLACK S.L.		AR	AR	AR	
23	503572	CRS TUBE ROUND 60W 4 1/2" O.D. X 1" X 240		AR	AR	AR	
24	503402	TUBE, NYLON 1/4 O.D. / BLACK S.L.		AR	AR	AR	
25	503471	TUBE, NYLON 3/8 O.D. / BLUE S.L.		AR	AR	AR	
26	503470	TUBE, NYLON 3/8 O.D. / YELLOW S.L.		AR	AR	AR	
30	641416	PLUG STEM / PUSH-IN FITTING / #4 PLAS		AR	AR	AR	
31	641936	BALL VALVE 1/4 NPT M x 1/4 NPT F		1	1	1	
90	641937	VALVE, 3 WAYS, 2 POSITIONS N.C. / W/MAN OVERRIDE		1	1	1	
. NS	641929	. COIL 24V		1	1	1	
. NS	641385	. CONNECTOR / SOCKET HOUSING ASSY 3C / PNEUMAC 54934-01		1	1	1	
91	500174	SCREW CAP HEX 1/4-20x3 G5 PT ZP		2	2	2	

From 5-8559	DATE: 01/2014	PAGE: Y2-1640-52
LEVEL-LOW - CONTROL PANEL & VALVES		

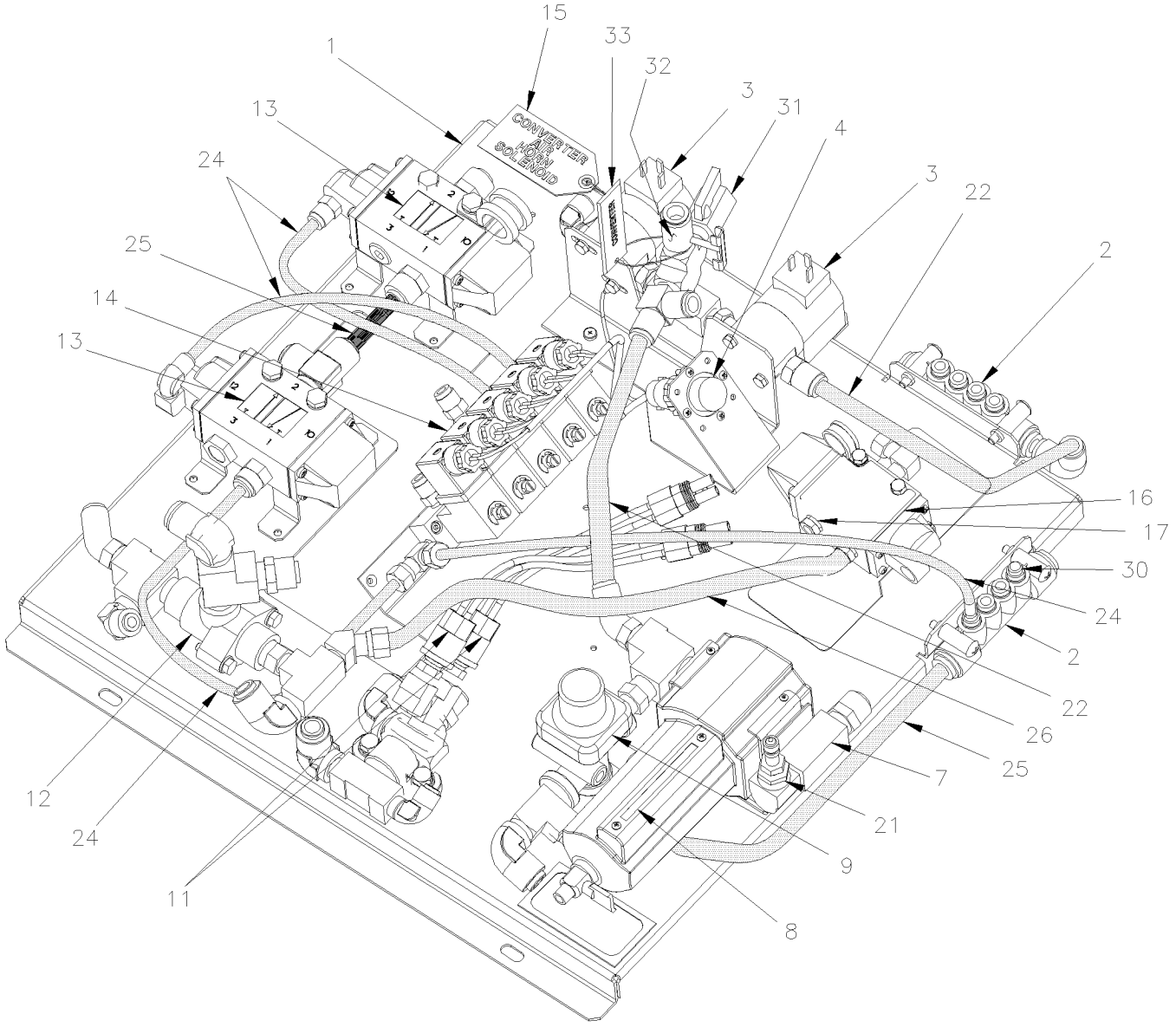

From 5-8559	DATE: 01/2014	PAGE: Y2-1640-52

LEVEL-LOW - CONTROL PANEL & VALVES

ITEM	PART	DESCRIPTION	XL45	MTH40	MTH45	MTH45S	NOTE
1	142366	VALVE SUPPORT ASSY		1	1	1	
2	641897	MANIFOLD / PUSH-IN FITTING / 2x#6 / 4x#4 PLAS		2	2	2	
NS	500574	SCREW MA TR PH #10-24x1 1/4 SS		4	4	4	
3	562804	VALVE, 2 WAYS N.C.		2	2	2	
4	065429	CABLE ASSY / VALVE "LEVEL-LOW"		1	1	1	
7	641371	MALE ELBOW 90° NON-SWIVEL / PUSH-IN FITTING #4x1/4NPT-M BR		1	1	1	
8	Y2-1220-15	**AIR FILTER - ACCESSORIES**					
NS	140227	DECAL / ACC AIR FILTER DRAIN ENG & FRENCH		1	1	1	
NS	142368	DECAL / ACC AIR FILTER DRAIN ENG & SPANISH		1	1	1	
9	641137	VALVE, PRESSURE PROTECTION TYPE PR-4 70PSI		1	1	1	
11	287234	PRESSURE SWITCH N.C. 30-10 20PS001AB030E010E		2	2	2	
12	641564	VALVE, DOUBLE CHECK DC-4		1	1	1	
13	641274	VALVE, 3 WAYS, 2 POSITIONS N.C.		2	2	2	
14	641205	MANIFOLD VALVE / W/5 SOLENOID		1	1	1	
15	142042	PLATE CONVERTER AIR HORN SOLENOID		1	1	1	
16	641528	VALVE, 3 WAYS, 2 POSITIONS N.O.		1	1	1	
. NS	641929	. COIL 24V		1	1	1	
. NS	641169	. SPOOL		1	1	1	
. NS	641385	. CONNECTOR / SOCKET HOUSING ASSY 3C		1	1	1	
17	641934	SILENCER / MUFFLER / 3/8NPT-M		1	1	1	
21	640488	VALVE, AIR FILL 1/8" NPT		1	1	1	
. NS	650164	. CAP VALVE / CHROME		1	1	1	
22	503404	TUBE, NYLON 3/8 O.D. / BLACK S.L.		AR	AR	AR	
23	503572	CRS TUBE ROUND 60W 4 1/2" O.D. X 1" X 240		AR	AR	AR	
24	503402	TUBE, NYLON 1/4 O.D. / BLACK S.L.		AR	AR	AR	
25	503471	TUBE, NYLON 3/8 O.D. / BLUE S.L.		AR	AR	AR	
26	503470	TUBE, NYLON 3/8 O.D. / YELLOW S.L.		AR	AR	AR	
30	641416	PLUG STEM / PUSH-IN FITTING / #4 PLAS		AR	AR	AR	
31	641936	BALL VALVE 1/4 NPT M x 1/4 NPT F		1	1	1	
32	5011129	NEEDLE VALVE 1/4 NPT M x 1/4 NPT F		1	1	1	
33	391812	IDENTIFICATION PLATE (CONVERTER)		1	1	1	

From Y-7046 Up to 8-9339	DATE: 01/2014	PAGE: Y2-18
BODY		

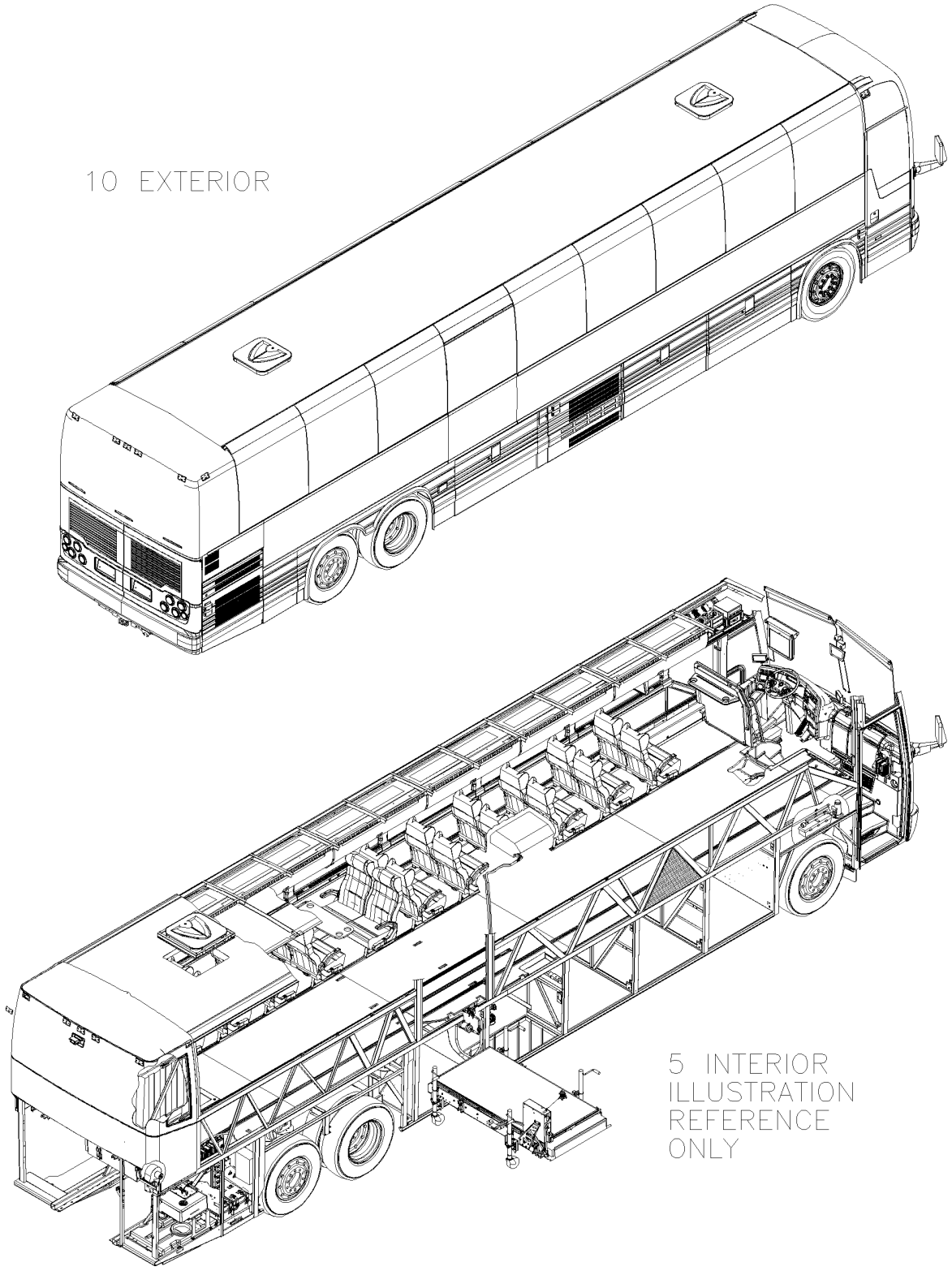

From Y-7046 Up to 8-9339	DATE: 01/2014	PAGE: Y2-18

BODY

ITEM	PART	DESCRIPTION	XL45	MTH400	MTH445	MTH445S	NOTE
5	Y2-18-INT	**BODY INTERIOR**					
10	Y2-18-EXT	**BODY EXTERIOR**					

	DATE: 01/2014	PAGE: Y2-18-INT
BODY INTERIOR		

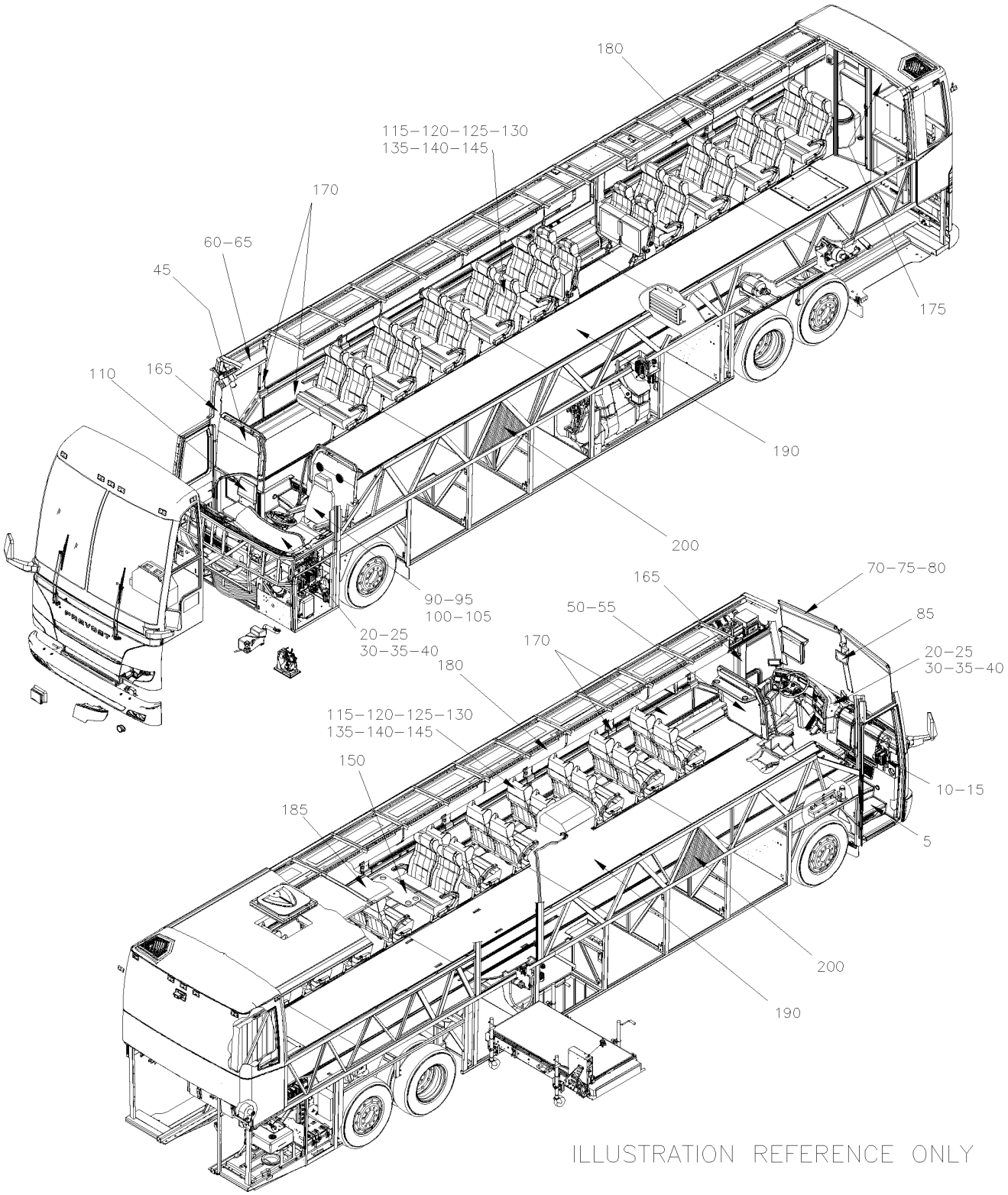

	DATE: 01/2014	PAGE: **Y2-18-INT**

BODY INTERIOR

ITEM	PART	DESCRIPTION	XL45	MTH40	MTH45	MTH45S	NOTE
5	Y2-1800-00	**FRONT STEPWELL - BUS From Y-7046 Up to 6-8906**					
5	Y2-1800-50	**FRONT STEPWELL - MTH From Y-7046 Up to 8-9339**					
10	Y2-1802-00	**ENTRANCE DOOR CONTROL From Y-7046 Up to 6-8906**					
15	Y2-1804-00	**ENTRANCE DOOR LOCK From Y-7046 Up to 6-8906**					
15	Y2-1804-50	**ENTRANCE DOOR - VALVE - MTH From 2-7800 Up to 8-9339**					
20	Y2-1806-00	**CENTRAL DASHBOARD PANEL From Y-7046 Up to 8-9339**					
25	Y2-1806-10	**L.H. CONSOLE - BUS From Y-7046 Up to 6-8906**					
30	Y2-1806-15	**DASHBOARD - ASSY From Y-7046 Up to 8-9339**					
35	Y2-1806-20	**DASHBOARD PANEL From Y-7046 Up to 8-9339**					
40	Y2-1806-50	**L.H. CONSOLE - MTH From Y-7046 Up to 8-9339**					
45	Y2-1810-00	**MODESTY PANEL R.H. From Y-7046 Up to 6-8906**					
50	Y2-1811-00	**MODESTY PLEXIGLASS From Y-7046 Up to 6-8906**					
55	Y2-1812-00	**MODESTY PANEL L.H. From Y-7046 Up to 6-8906**					
60	Y2-1814-01	**DESTINATION SIGN - ELECTRICAL From Y-7046 Up to 6-8906**					
60	Y2-1814-02	**DESTINATION SIGN - "POCATEC" From Y-7046 Up to 6-8906**					
65	Y2-1814-05	**DESTINATION SIGN - INSTALLATION From Y-7046 Up to 6-8906**					
70	Y2-1816-00	**ROLLER BLIND - DRIVER' S & WINDSHIELD From Y-7046 Up to 8-9339**					
70	Y2-1816-01	**ROLLER BLIND - WINDSHIELD W/ELECTRICAL From Y-7046 Up to 8-9339**					
75	Y2-1816-10	**SUN SHADE - PASSENGER'S WINDOW From Y-7046 Up to 6-8906**					
80	Y2-1817-00	**SUN VISOR - "LE MIRAGE" From Y-7046 Up to 8-9339**					
85	Y2-1820-00	**MIRROR - INTERIOR From Y-7046 Up to 8-9339**					
90	Y2-1821-01	**DRIVER'S SEAT "NATIONAL SEATING" - MODEL 93B From Y-7046 Up to 6-8906**					
95	Y2-1822-00	**DRIVER'S SEAT - "ISRI" - 6800/338 From Y-7046 Up to 8-9339**					
95	Y2-1822-10	**DRIVER'S SEAT - "ISRI" - 6000/515 & 6500/515 From Y-7046 Up to 8-9339**					
95	Y2-1822-50	**DRIVER'S SEAT "ISRI" ASSY From Y-7046 Up to 8-9339**					
100	Y2-1823-00	**DRIVER'S SEAT - "RECARO" - ERGO-COACH From Y-7046 Up to 6-8906**					
100	Y2-1823-10	**BACKREST ASSY - "RECARO" - ERGO-COACH From Y-7046 Up to 6-8906**					
100	Y2-1823-15	**SEAT COVER & FOAM - "RECARO" - ERGO-COACH From Y-7046 Up to 6-8906**					
100	Y2-1823-20	**SUSPENSION & RISER - "RECARO" - ERGO-COACH From Y-7046 Up to 6-8906**					
100	Y2-1823-25	**SEAT CUSHION FRAME - "RECARO" - ERGO-COACH From Y-7046 Up to 6-8906**					
100	Y2-1823-30	**ARMREST - "RECARO" - ERGO-COACH From Y-7046 Up to 6-8906**					
105	Y2-1823-50	**DRIVER'S SEAT - "USSC" - 9100ALX3 From Y-7046 Up to 6-8906**					
105	Y2-1823-60	**SEAT ASSY - "USSC" - 9100ALX3 From Y-7046 Up to 6-8906**					
105	Y2-1823-70	**SUSPENSION ASSY - "USSC" - 9100ALX3 From Y-7046 Up to 6-8906**					
105	Y2-1823-80	**BASE ASSY - "USSC" - 9100ALX3 From Y-7046 Up to 6-8906**					
110	Y2-1824-00	**HOSTESS SEAT ASSY From Y-7046 Up to 6-8906**					
115	Y2-1824-30	**PASSENGER'S SEAT - "AMAYA" IDENTIFICATION "MODEL" From Y-7046 Up to 6-8906**					
120	Y2-1825-02	**PASSENGER'S SEAT - "AMERICAN" - W6695 From Y-7046 Up to 6-8906**					
120	Y2-1825-03	**PASSENGER'S SEAT - "AMERICAN" - W6696 & W7696 From Y-7046 Up to 6-8906**					
120	Y2-1825-05	**PASSENGER'S SEAT - "AMERICAN" - FRAME From Y-7046 Up to 6-8906**					
120	Y2-1825-06	**PASSENGER'S SEAT - "AMERICAN" SERIES 2000 & MORE From Y-7046 Up to 6-8906**					
120	Y2-1825-10	**PASSENGER'S SEAT - "AMERICAN" - FRAME ROTATIN From Y-7046 Up to 6-8906**					
120	Y2-1825-20	**PASSENGER'S SEAT - "AMERICAN" - CUSHION From Y-7046 Up to 6-8906**					
120	Y2-1825-31	**PASSENGER'S SEAT - "AMERICAN" - BACKREST WX69 From Y-7046 Up to 6-8906**					

DATE: 01/2014 | PAGE: **Y2-18-INT**

BODY INTERIOR

ITEM	PART	DESCRIPTION	XL45	MTH40	MTH45	MTH45S	NOTE
120	Y2-1825-40	**PASSENGER'S SEAT - "AMERICAN" - FOOTREST From Y-7046 Up to 6-8906**					
120	Y2-1825-50	**PASSENGER'S SEAT - "AMERICAN" - ARMREST From Y-7046 Up to 6-8906**					
120	Y2-1825-51	**PASSENGER'S SEAT - "AMERICAN" SERIES 2000 & MORE From Y-7046 Up to 6-8906**					
120	Y2-1825-60	**PASSENGER'S SEAT - "AMERICAN" - BACK & ACCESS From Y-7046 Up to 6-8906**					
125	Y2-1826-00	**PASSENGER'S SEAT - "NATIONAL" - 4209 & 4210 From Y-7046 Up to 6-8906**					
130	Y2-1826-05	**PASSENGER'S SEAT - "AMAYA" "EUROTECH" From Y-7046 Up to 6-8906**					
130	Y2-1826-06	**PASSENGER'S SEAT - "AMAYA" "BRASIL" From Y-7046 Up to 6-8906**					
130	Y2-1826-07	**PASSENGER'S SEAT - "AMAYA" "SIGLIUM" TORO & TORINO From Y-7046 Up to 6-8906**					
130	Y2-1826-08	**PASSENGER'S SEAT - "AMAYA" "GAUDI" From Y-7046 Up to 6-8906**					
130	Y2-1826-40	**PASSENGER'S SEAT - "AMAYA" - FOOTREST & PEDESTAL From Y-7046 Up to 6-8906**					
130	Y2-1826-50	**ARMREST PASSENGER'S SEAT - "AMAYA" WITH "EUROTECH" From Y-7046 Up to 6-8906**					
130	Y2-1826-51	**ARMREST PASSENGER'S SEAT - "AMAYA" WITH "BRASIL" From Y-7046 Up to 6-8906**					
130	Y2-1826-52	**ARMREST PASSENGER'S SEAT - "AMAYA" WITH "GAUDI" From Y-7046 Up to 6-8906**					
130	Y2-1826-53	**ARMREST PASSENGER'S SEAT - "AMAYA" WITH "SIGLIUM" TORO & TORINO From Y-7046 Up to 6-8906**					
130	Y2-1826-60	**ACCESSORIES PASSENGER'S SEAT - "AMAYA" From Y-7046 Up to 6-8906**					
130	Y2-1826-71	**PASSENGER'S SEAT - "AMAYA" - FLIP-UP "GAUDI" HR & SC - W/ W.C.L. From Y-7046 Up to 6-8906**					
135	Y2-1827-02	**PASSENGER'S SEAT - "ULTRA" From Y-7046 Up to 6-8906**					
135	Y2-1827-11	**PASSENGER'S SEAT - ROTATING "PREVOST From Y-7046 Up to 6-8906**					
135	Y2-1827-52	**ARMREST PASSENGER'S SEAT - "PREVOST" From Y-7046 Up to 6-8906**					
135	Y2-1827-70	**PASSENGER'S SEAT - "TOURISMO II" - FLIP-UP W/W.C.L. From Y-7046 Up to 6-8906**					
140	Y2-1828-01	**PASSENGER'S SEAT - "TOURISMO II" From Y-7046 Up to 6-8906**					
145	Y2-1828-05	**PASSENGER'S SEAT - "MULTINA" From 5-8579 Up to 6-8906**					
145	Y2-1828-10	**PASSENGER'S SEAT - "MULTINA" From 5-8579 Up to 6-8906**					
145	Y2-1828-50	**ARMREST PASSENGER'S SEAT- "MULTINA" From 5-8579 Up to 6-8906**					
145	Y2-1828-60	**ACCESSORIES PASSENGER'S SEAT - "MULTINA" From 5-8579 Up to 6-8906**					
150	Y2-1829-00	**ACCESSORIES PASSENGER'S SEAT - "PREVOST" From Y-7046 Up to 6-8906**					
165	Y2-1832-00	**FRONT FINISHING CAP - BUS From Y-7046 Up to 6-8906**					
165	Y2-1832-50	**FRONT FINISHING CAP - MTH From Y-7046 Up to 8-9339**					
170	Y2-1833-00	**WINDOW FINISHING CAP & WALL From Y-7046 Up to 6-8906**					
175	Y2-1834-00	**REAR FINISHING CAP From Y-7046 Up to 8-9339**					
180	Y2-1836-00	**PARCEL RACK From Y-7046 Up to 6-8906**					
185	Y2-1837-00	**CEILING PANELS & MOULDING - BUS From Y-7046 Up to 6-8906**					
185	Y2-1837-50	**CEILING PANELS & MOULDING - MTH From Y-7046 Up to 8-9339**					
190	Y2-1838-00	**FLOOR - BUS From Y-7046 Up to 6-8906**					
190	Y2-1838-05	**FLOOR & COVERING - "R.C.A." From Y-7046 Up to 6-8906**					
190	Y2-1838-10	**FLOOR COVERING - "TARAFLEX" From Y-7046 Up to 6-8906**					
190	Y2-1838-50	**FLOOR - MTH From Y-7046 Up to 8-9276**					
190	Y2-1838-51	**FLOOR - MTH From 8-9279 Up to 8-9339**					
200	Y2-1839-00	**INSULATING SIDE WALL - LOWER PANEL - BUS From Y-7046 Up to 2-7702**					
200	Y2-1839-01	**INSULATING SIDE WALL - LOWER PANEL - BUS From 2-7703 Up to 6-8906**					
200	Y2-1839-05	**INSULATING FRONT - BUS From Y-7046 Up to 6-8906**					
200	Y2-1839-10	**INSULATING FLOOR REAR AXLE From Y-7046 Up to 8-9339**					
200	Y2-1839-15	**INSULATING FRONT - SUBFRAME From Y-7046 Up to 8-9339**					
200	Y2-1839-20	**INSULATING FLOOR & REAR - BUS From Y-7046 Up to 6-8906**					

	DATE: 01/2014	PAGE: **Y2-18-INT**

BODY INTERIOR

ITEM	PART	DESCRIPTION	XL45	MTH40	MTH45	MTH45S	NOTE
200	Y2-1839-25	**INSULATING - REAR DPF FILTER From 8-9279 Up to 8-9339**					
200	Y2-1839-30	**INSULATING ROOF PANELS From Y-7046 Up to 8-9339**					
200	Y2-1839-50	**INSULATING SIDE WALL - LOWER PANEL - MTH From Y-7046 Up to 2-7702**					
200	Y2-1839-51	**INSULATING SIDE WALL - LOWER PANEL - MTH From 2-7703 Up to 8-9339**					
200	Y2-1839-55	**INSULATING FRONT - MTH From Y-7046 Up to 8-9339**					
200	Y2-1839-60	**INSULATING SIDE WALL - UPPER From Y-7046 Up to 8-9339**					
200	Y2-1839-70	**INSULATING REAR END INSIDE OVER ENGINE From Y-7046 Up to 7-9095**					
200	Y2-1839-71	**INSULATING REAR END INSIDE OVER ENGINE From 7-9096 Up to 8-9339**					
200	Y2-1839-90	**INSULATING - "SLIDE-OUT" From Y-7046 Up to 8-9339**					

From Y-7046 Up to 6-8906	DATE: 01/2014	PAGE: Y2-1800-00
FRONT STEPWELL - BUS		

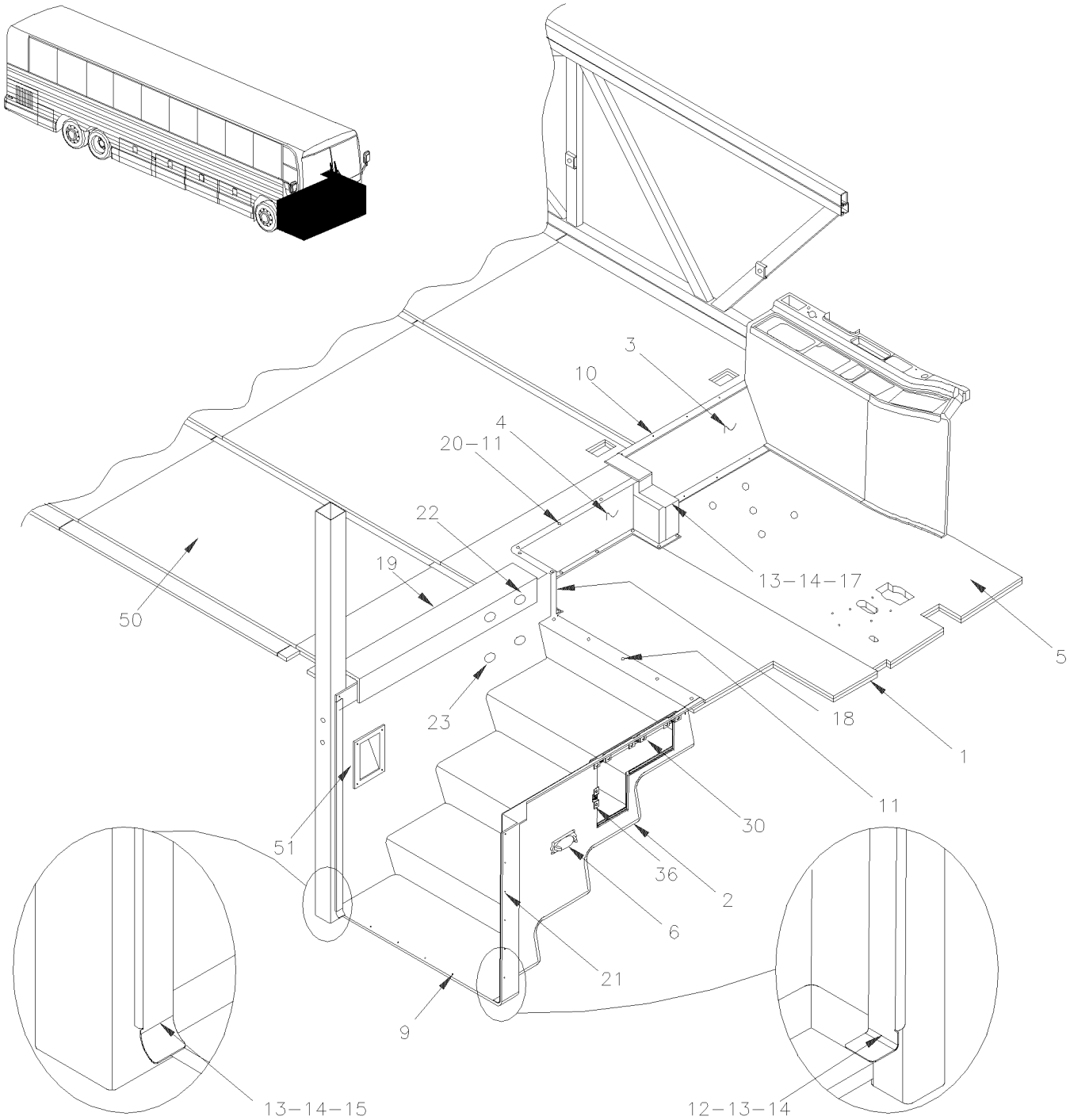

From Y-7046 Up to 6-8906	DATE: 01/2014	PAGE: Y2-1800-00

FRONT STEPWELL - BUS

ITEM	PART	DESCRIPTION	XL45	MTH40	MTH45	MTH45S	NOTE
1	326850	DRIVER'S FLOOR Up to Y-7349	1				
1	328862	DRIVER`S FLOOR From Y-7350 Up to 4-8173	1				
1	328044	DRIVER`S FLOOR "UNDER SEAT" From 4-8174 / REPLACED BY: 3200158	1				
2	326793	STEPWELL BUS / REPLACED BY: 3200091	1				
2	3200091	STEPWELL BUS	1				
3	326944	FINISHING PLATE / DRIVER'S FLOOR Up to 2-7850	1				
3	327744	FINISHING PLATE / DRIVER'S FLOOR From 2-7851 Up to 4-8173	1				
3	328043	FINISHING PLATE / DRIVER'S FLOOR From 4-8174	1				
4	326861	AISLE STEP / REPLACED BY: 3200092	1				
4	3200092	AISLE STEP	1				
5	328863	DRIVER`S FLOOR "STEPWELL SIDE" From Y-7350	1				
NS	5001143	SCREW DR WF TORX #12x2 CP / REPLACED BY: 5001532	40				
6	Y2-0655-00	**INTERIOR LIGHTING**					
9	504339	RIVET POP DOME OE 1/8x3/8 SS	22				
NS	351262	INSULATING PANEL / BACKWARD / UNDER STEPWELL	1				A
NS	351263	INSULATING PANEL / FORWARD / UNDER STEPWELL	1				A
NS	503549	ANCHOR SELF-STICK 1"	3				
NS	500748	WASHER INSU G.10x1.125x1.250 GAL	3				
10	500640	SCREW TP BDG PH #6x3/4 ZP	8				
11	500844	SCREW TC FL PH #10-32x1 1/4 ZP	20				
12	327216	FINISHING MOULDING ENTRANCE STEP	1				
13	500345	WASHER FN CKF .187x.500x.090 BR BK	10				
14	500333	SCREW TP OV PH #6x3/4 BK	10				
15	327217	FINISHING MOULDING ENTRANCE STEP	1				
17	326992	FINISHING R.H. CONSOLE Up to 3-8164	1				I
17	328042	FINISHING R.H. CONSOLE From 4-8165	1				I
18	327323	FINISHING ANGLE STEP	1				
19	327324	FIXATION ANGLE STEP 1132MM	1				
NS	500640	SCREW TP BDG PH #6x3/4 ZP	3				
20	327325	ANGLE 770MM	1				
21	504416	RIVET POP DOME OE 3/16x5/8 SS	5				
22	504078	PLUG BUTTON / 1.000 O.D. / NICKEL & BRASS / REPLACED BY: 504373	2				
23	504638	HOLE PLUG BUTTON / 1.000 O.D. BLACK	2				
30	453428	GRILL AIR / FRONT STEPWELL / RETURN / 309MM X 424MM	1				
30	504681	. STUD 6MM (DZUS)	4				
30	504604	. FASTENER	4				
30	681283	. TAPE RUB ADH2 ACRYLIC .045" x 1/2" x 108' / WHITE 4945	AR				
30	453110	. REINFORCEMENT "Z" SHAPE 210MM	1				
30	453429	. REINFORCEMENT "Z" SHAPE 140MM	1				
36	504605	RECEPTACLE 6 MM	4				
NS	326869	INSERT RECEPTACLE RETAINER	4				
50	Y2-1838-00	**FLOOR - BUS**					
		A) UNDER STEPWELL					
		I) WITH INDEPENDANT SUSPENSION					

From Y-7046 Up to 6-8906	DATE: 01/2014	PAGE: Y2-1800-00

FRONT STEPWELL - BUS

ITEM	PART	DESCRIPTION	XL45	MTH40	MTH45	MTH45S	NOTE
51	Y2-2221-20	**ENTRANCE STEP DE-ICER**					

From Y-7046 Up to 6-8906	DATE: 01/2014	PAGE: Y2-1800-00

FRONT STEPWELL - BUS

ITEM	PART	DESCRIPTION	XL45	MTH40	MTH45	MTH45S	NOTE

From Y-7046 Up to 8-9339	DATE: 01/2014	PAGE: Y2-1800-50
FRONT STEPWELL - MTH		

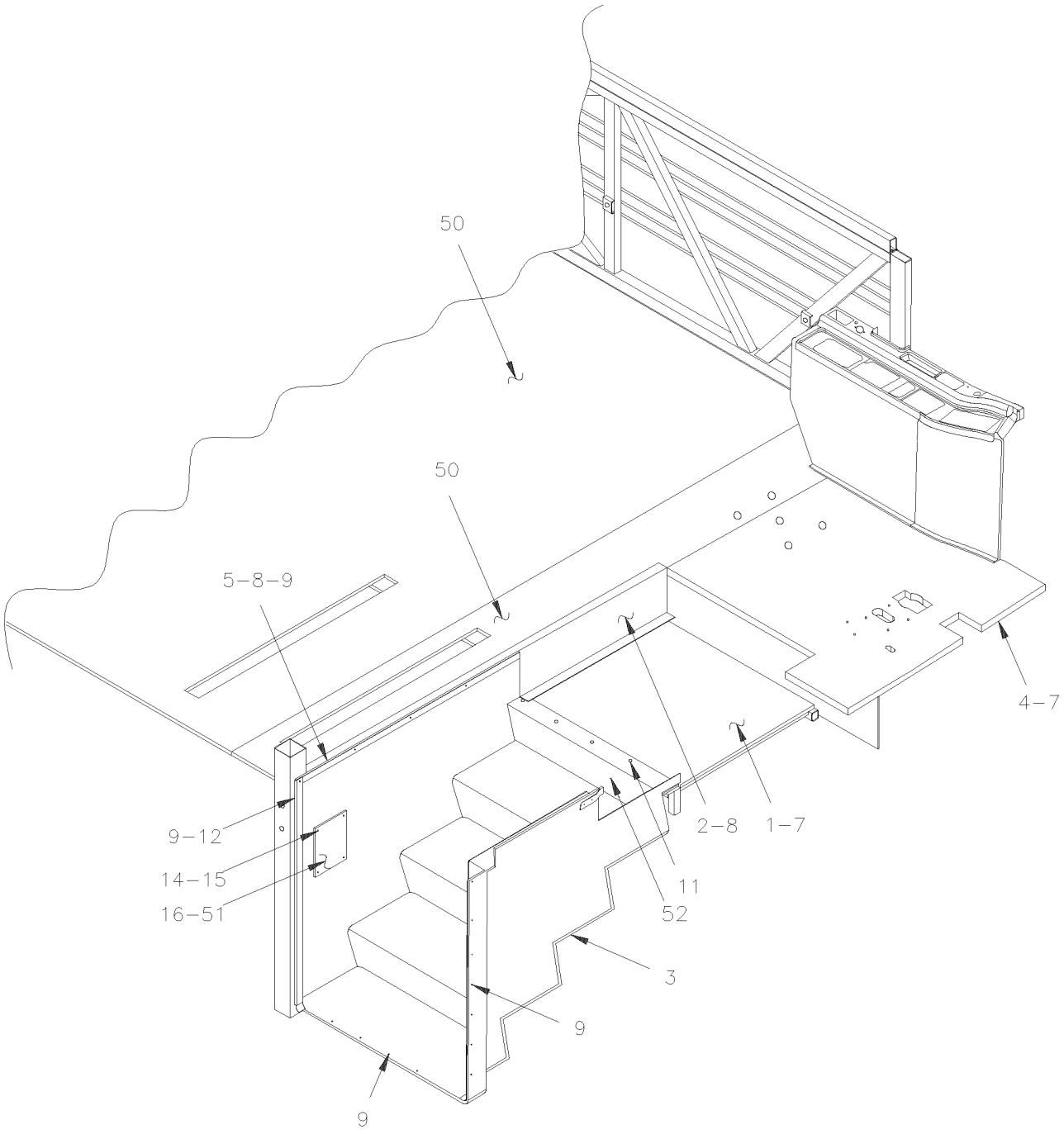

From Y-7046 Up to 8-9339	DATE: 01/2014	PAGE: Y2-1800-50

FRONT STEPWELL - MTH

ITEM	PART	DESCRIPTION	XL45	MTH40	MTH45	MTH45S	NOTE
1	326677	STEPWELL FLOOR		1	1	1	
2	326681	FINISHING PANEL STEPWELL		1	1	1	
3	326434	STEPWELL MTH		1	1	1	
4	326459	DRIVER`S FLOOR / REPLACED BY: 3200159		1	1	1	
5	326679	MOULDING FINISHING		1	1	1	
7	5001532	SCREW DR WF RO #14x1 3/4 ZP		50	50	50	
8	500640	SCREW TP BDG PH #6x3/4 ZP		20	20	20	
9	504339	RIVET POP DOME OE 1/8x3/8 SS		6	6	6	
NS	680096	SEALANT BUTYL ALUM / GREY / 310ml CARTRIDGE		AR	AR	AR	
11	500844	SCREW TC FL PH #10-32x1 1/4 ZP		6	6	6	
12	326703	FINISHING MOULDING		1	1	1	
14	502774	NUT WELL #10-32x.625		4	4	4	
15	5001042	SCREW MA RND PH #10-32x1 1/4 SS		4	4	4	
16	327352	CLOSING PANEL		1	1	1	
50	Y2-1838-50	**FLOOR - MTH**					
51	Y2-2221-20	**ENTRANCE STEP DE-ICER**					
52	Y2-2230-00	**DEFROSTER - INSTALLATION**					

From Y-7046 Up to 6-8906	DATE: 01/2014	PAGE: Y2-1802-00

ENTRANCE DOOR CONTROL

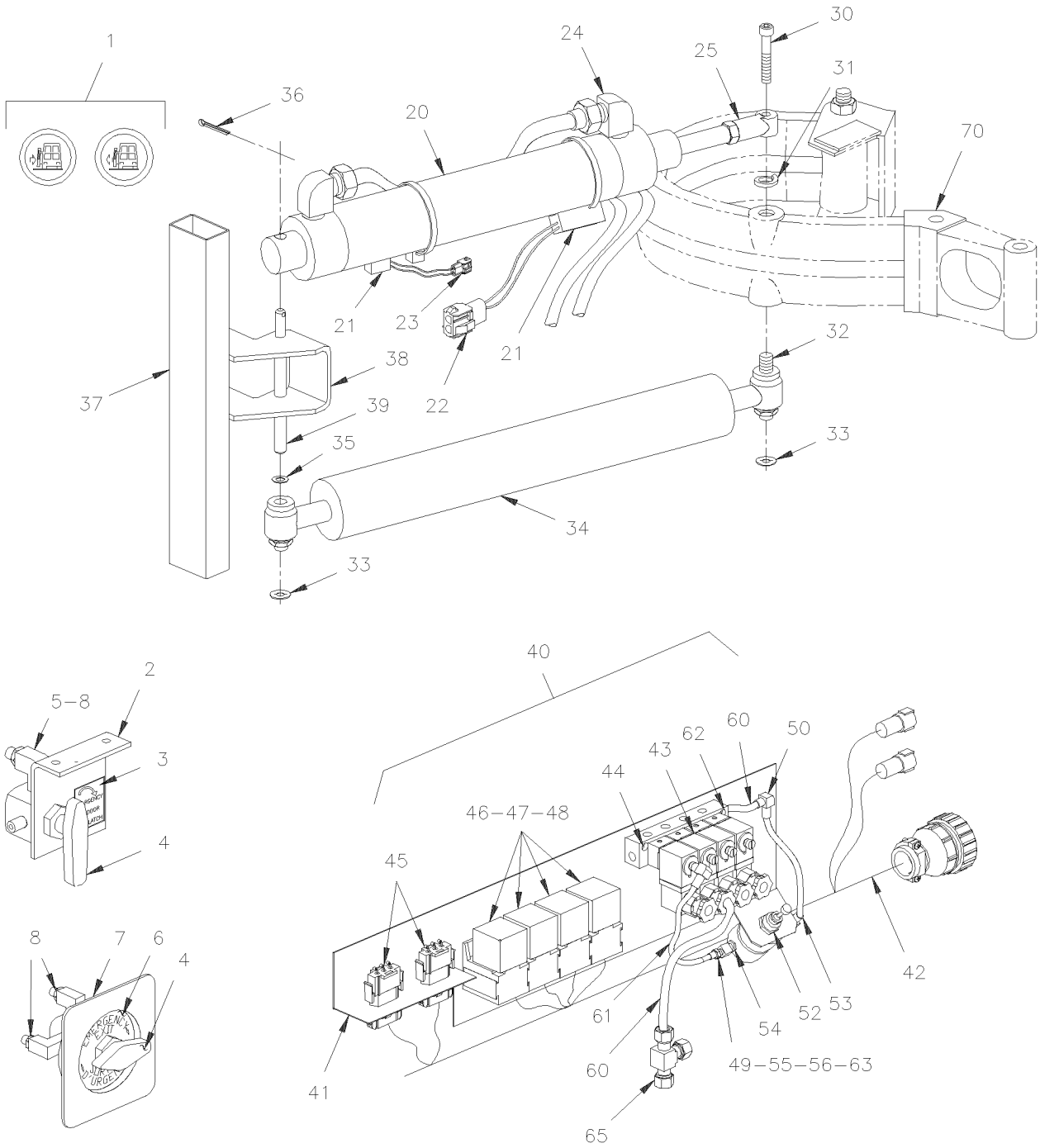

From Y-7046 Up to 6-8906	DATE: 01/2014	PAGE: Y2-1802-00

ENTRANCE DOOR CONTROL

ITEM	PART	DESCRIPTION	XL45	MTH40	MTH45	MTH45S	NOTE
1	Y2-0645-30	**R.H. DASHBOARD PANEL**					
2	285537	SUPPORT	1				
3	283989	DECAL "EMERGENCY DOOR VALVE" / IN STEERING COMPARTMENT	1				
4	641417	VALVE, 3 WAYS 1/8NPT-Fx1/8NPT-Fx1/8NPT-F BR / REPLACED BY: 642161	1				
. NS	642014	. HANDLE / RED	1				
4	642161	VALVE, 3 WAYS 1/8NPT-Fx1/8NPT-Fx1/8NPT-F BR / SERVICE	1				
5	641369	MALE ELBOW 90° NON-SWIVEL / PUSH-IN FITTING #4x1/8NPT-M BR	2				
NS	507589	MALE BRANCHE TEE / PIPE FITTING / 1/8NPT-Fx1/8NPT-Fx1/8NPT-M BR	1				
6	284057	LEXAN "EMERGENCY" VALVE ENG & FRENCH	1				
7	Y2-1806-20	**DASHBOARD PANEL**	1				
8	641242	MALE CONNECTOR / PUSH-IN FITTING / #4x1/8NPT-M BR	1				
20	780595	CYLINDER 2" / REPLACED BY: 780813	1				B
21	780594	LIMITING REED SWITCH ASSY S.P.S.T. N.O. / W/ 2" CYLINDER	2				
22	560900	CONNECTOR / COM. MATE-N-LOCK / PH 2C / AMP 1-480319-0	1				
22	560853	PIN TERMINAL / 24-18 / AMP 60618-1	2				
23	560898	CONNECTOR / COM. MATE-N-LOCK / SH 2C / AMP 1-480318-0	1				
23	560899	SOCKET TERMINAL / 20-14 / AMP 60619-1	2				
24	641371	MALE ELBOW 90° NON-SWIVEL / PUSH-IN FITTING #4x1/4NPT-M BR	2				
25	502196	ROD END FEMALE 1/2-20 / 1/2 I.D.	1				
30	5001075	SCREW CAP BUT HEXS 1/2-13x2 ZP	1				
31	500482	WASHER LO SPT .506x.873x.125 ZP	1				
32	285433	PIVOT STUD 7/16-14 X 80MM LG	1				
33	502601	NUT SPR PO RND 7/16	2				
34	780565	SHOCK DAMPER "KONI" Up to 5-8392 / REPLACED BY: 780714	1				
34	780714	SHOCK DAMPER "KONI" From 5-8393	1				
35	500445	WASHER FL .437x1.000x.083 ZP	1				
36	502102	PIN, COTTER 1/8 x 1	1				
37	251179	TUBE ASSY / W/CYLINDER SUPPORT	1				
37	251031	. TUBE	1				
38	251190	. SUPPORT / CYLINDER	1				
39	251191	. PIVOT PIN	1				
40	286573	SEDAN DOOR MODULE ASSY Up to 1-7479	1				
40	287233	SEDAN DOOR MODULE ASSY From 1-7480	1				
41	286574	. SUPPORT	1				
42	065114	. CABLE ASSY / ENTRANCE DOOR CONTROL PANEL	1				
43	641906	. MANIFOLD VALVE / W/4 SOLENOID	1				
. NS	641927	. . KIT, MANIFOLD REPAIR / N.O.	1				
. NS	641928	. . KIT, MANIFOLD REPAIR / N.C.	1				
. NS	641929	. . COIL 24V	1				
		B) THIS CYLINDER MAY BE SUPPERSEEDED BY 780418					
		WITH REMOVED DAMPER SHOCK ITEM # 34					

From Y-7046 Up to 6-8906	DATE: 01/2014	PAGE: Y2-1802-00

ENTRANCE DOOR CONTROL

ITEM	PART	DESCRIPTION	XL45	MTH40	MTH45	MTH45S	NOTE
. NS	642167	. . MALE ELBOW 90° SWIVEL / PUSH-IN FITTING /	1				
. NS	990143	. . MALE CONNECTOR / PUSH-IN FITTING / W/O-RING /	1				
. NS	641385	. . CONNECTOR / SOCKET HOUSING ASSY 3C	1				
. NS	641455	. . REDUCER STEM / PUSH-IN FITTING / / BLACK PLASTIC	1				
44	500495	. SCREW TP BDG PH #6x1 ZP	1				
45	062588	. DIODE ASSY / W/3 3AMPS	1				
46	561707	. RELAY 24V S.P.D.T. W/RESISTOR / Up to 5-8577	1				
46	563332	. RELAY 24V S.P.D.T. W/RESISTOR / "VOLVO" (20374662) From 5-8578	1				
47	500417	. SCREW TP BDG PH #6x3/8 ZP	1				
48	502630	. WASHER FL .156x.375x.049 ZP	1				
49	641242	. MALE CONNECTOR / PUSH-IN FITTING / #4x1/8NPT-M BR	1				
50	641447	. UNION ELBOW 90° / PUSH-IN FITTING / #4x#4 BR	1				
51	641472	. AIR PRESSURE REGULATOR 1/4" NPT / COPPER	1				
52	500734	. NUT HEX JAM 3/4-16 ZP	1				
53	641371	. MALE ELBOW 90° NON-SWIVEL / PUSH-IN FITTING #4x1/4NPT-M BR	1				
54	501312	. BUSHING REDUCER / PIPE FITTING / 1/4NTP-Mx1/8NPT-F BR	1				
55	501354	. NEEDLE VALVE 1/8 NPT M x 1/8 NPT F	1				
56	641126	. MALE CONNECTOR / PUSH-IN FITTING / #2x1/8NPT-M BR	1				
58	640488	. VALVE, AIR FILL 1/8" NPT	1				
. NS	650164	. . CAP VALVE / CHROME	1				
59	501303	. PLUG SQUARE HEAD / PIPE FITTING / 1/8NPT-M BR	1				
60	503402	. TUBE, NYLON 1/4 O.D. / BLACK S.L.	1				
61	503536	. TUBE, NYLON 1/8 O.D. / BLACK S.L.	1				
63	501653	. MALE RUN TEE / PIPE FITTING / 1/8NPT-Mx1/8NPT-Fx1/8NPT-F BR	1				
65	641092	. UNION TEE / NTA FITTING / #4x#4x#4 BR From 1-7480	1				A
NS	287243	KIT ENTRANCE DOOR Up to 1-7249	1				
. NS	IS-00117	. SEE INSTRUCTION SHEET Up to 1-7249	1				
70	Y2-1862-60	**ENTRANCE DOOR FRAME - INSTALLATION**	1				
		A) FOR PRODUCT IMPROVMENT UP TO 1-7480 ASK FOR					
		KIT #287243					

From Y-7046 Up to 6-8906	DATE: 01/2014	PAGE: Y2-1802-00

ENTRANCE DOOR CONTROL

ITEM	PART	DESCRIPTION	XL45	MTH40	MTH45	MTH45S	NOTE

From Y-7046 Up to 6-8906	DATE: 01/2014	PAGE: Y2-1804-00

ENTRANCE DOOR LOCK

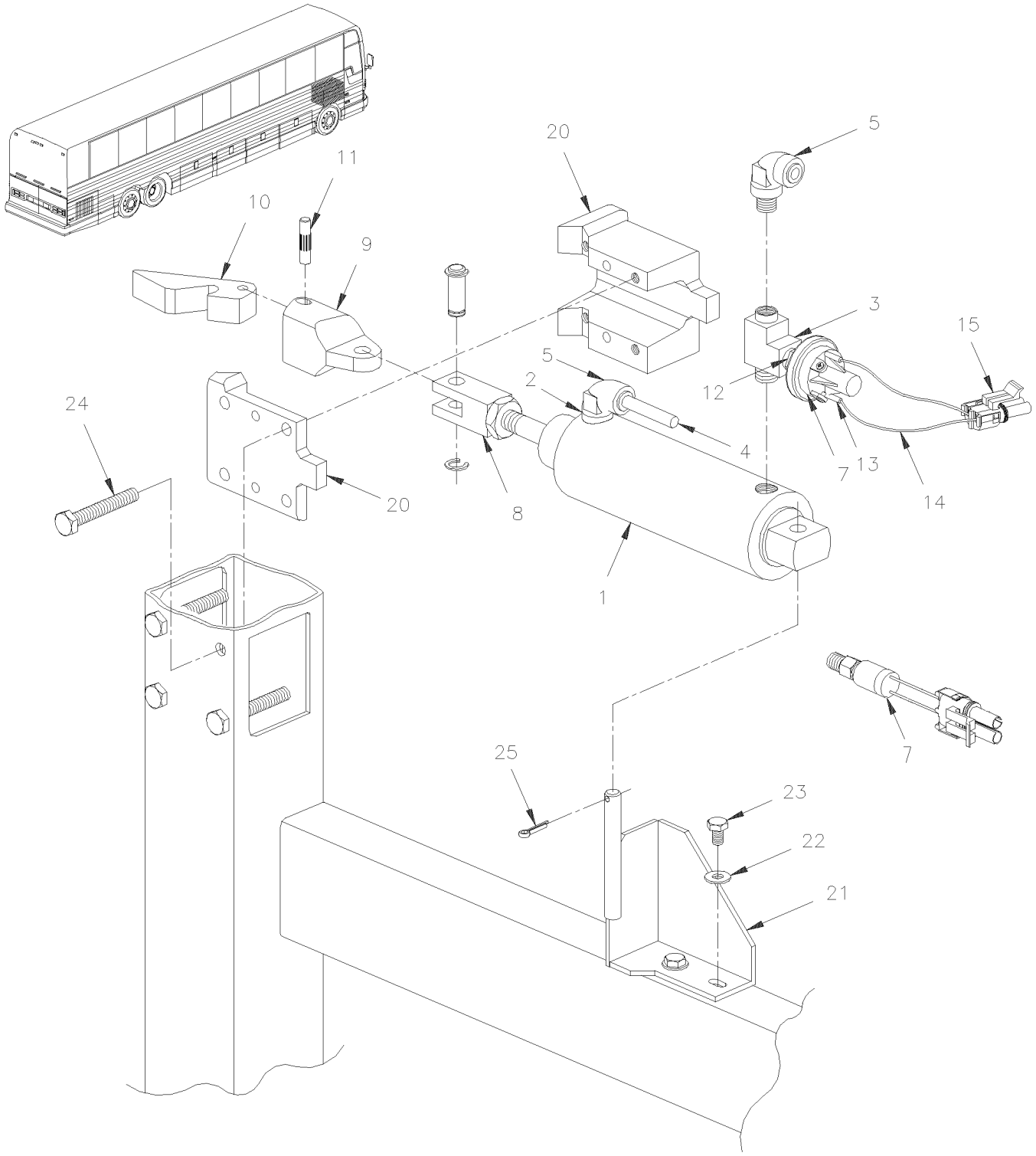

From Y-7046 Up to 6-8906	DATE: 01/2014	PAGE: Y2-1804-00

ENTRANCE DOOR LOCK

ITEM	PART	DESCRIPTION	XL45	MTH40	MTH45	MTH45S	NOTE
1	780623	CYLINDER 2"1/2 X- 1"1/2 STROKE Up to 4-8242 / REPLACED BY: 641985	1				
1	641985	CYLINDER 2"1/2 X- 1"1/2 STROKE From 4-8243	1				
NS	680098	THREAD SEALANT LOCTITE #567 / WHITE / 250ml	AR				
3	501338	MALE RUN TEE / PIPE FITTING / 1/4NPT-Mx1/4NPT-Fx1/4NPT-F BR	1				
4	503402	TUBE, NYLON 1/4 O.D. / BLACK S.L.	AR				
5	641371	MALE ELBOW 90° NON-SWIVEL / PUSH-IN FITTING #4x1/4NPT-M BR	2				
7	560816	PRESSURE SWITCH N.C. 3PSI / 1/8NPT W/2 SCREWS Up to 1-7479	1				A
7	287234	PRESSURE SWITCH N.C. 30-10 20PS001AB030E010E From 1-7480	1				
NS	287243	KIT ENTRANCE DOOR Up to 1-7479	AR				
. NS	IS-00117	. SEE INSTRUCTION SHEET Up to 1-7479	1				
8	641216	YOKE	1				
9	286696	DOOR LOCK GUIDE	1				
10	286695	DOOR LOCK	1				
11	286694	ENTRANCE DOOR PIN	1				
12	501312	BUSHING REDUCER / PIPE FITTING / 1/4NTP-Mx1/8NPT-F BR	1				
13	560082	RING TERMINAL #10 / 16-14 / INSULATED / AMP 626033-2	2				
14	562590	WIRE CABLE 18 / RED / TXL	AR				
14	562587	WIRE CABLE 18 / BLACK / TXL	AR				
15	561689	SOCKET TERMINAL / 20-18 / PED 12089188	2				
NS	561565	CABLE SEAL / GREEN / PED 15324982	2				
NS	561690	CONNECTOR / WEATHER PACK / SH 2C / BLACK / PED 12015792	1				
20	286724	GUIDING BLOCK	1				
21	286700	SUPPORT ASSY W/PIN / BOLTED TO STRUCTURE Up to 1-7530	1				
21	287952	SUPPORT ASSY W/PIN / (WELDED TO STRUCTURE) From 1-7531	1				
. NS	286698	. PIN 3/8" O.D. X 78MM From 1-7531	1				
22	500473	WASHER LO SPT .262x.489x.062 ZP	4				
23	500923	SCREW TC CAP HEX 1/4-20x3/4 ZP / REPLACED BY: 5001515	2				
24	500167	SCREW CAP HEX 1/4-20x1 1/4 G5 PT ZP	2				
24	500994	SCREW CAP HEX 1/4-20x1 3/4 G5 PT ZP	2				
NS	500473	WASHER LO SPT .262x.489x.062 ZP	4				
25	502102	PIN, COTTER 1/8 x 1 Up to 1-7479	1				
25	502180	PIN HITCH CLIP .042 X 3/8 ZP From 1-7480	1				
		A) AS SHOWN AND FOR PRODUCT IMPROVMENT ASK FOR					
		KIT #287243 UP TO 1-7479					

From 2-7800 Up to 8-9339	DATE: 01/2014	PAGE: Y2-1804-50

ENTRANCE DOOR - VALVE - MTH

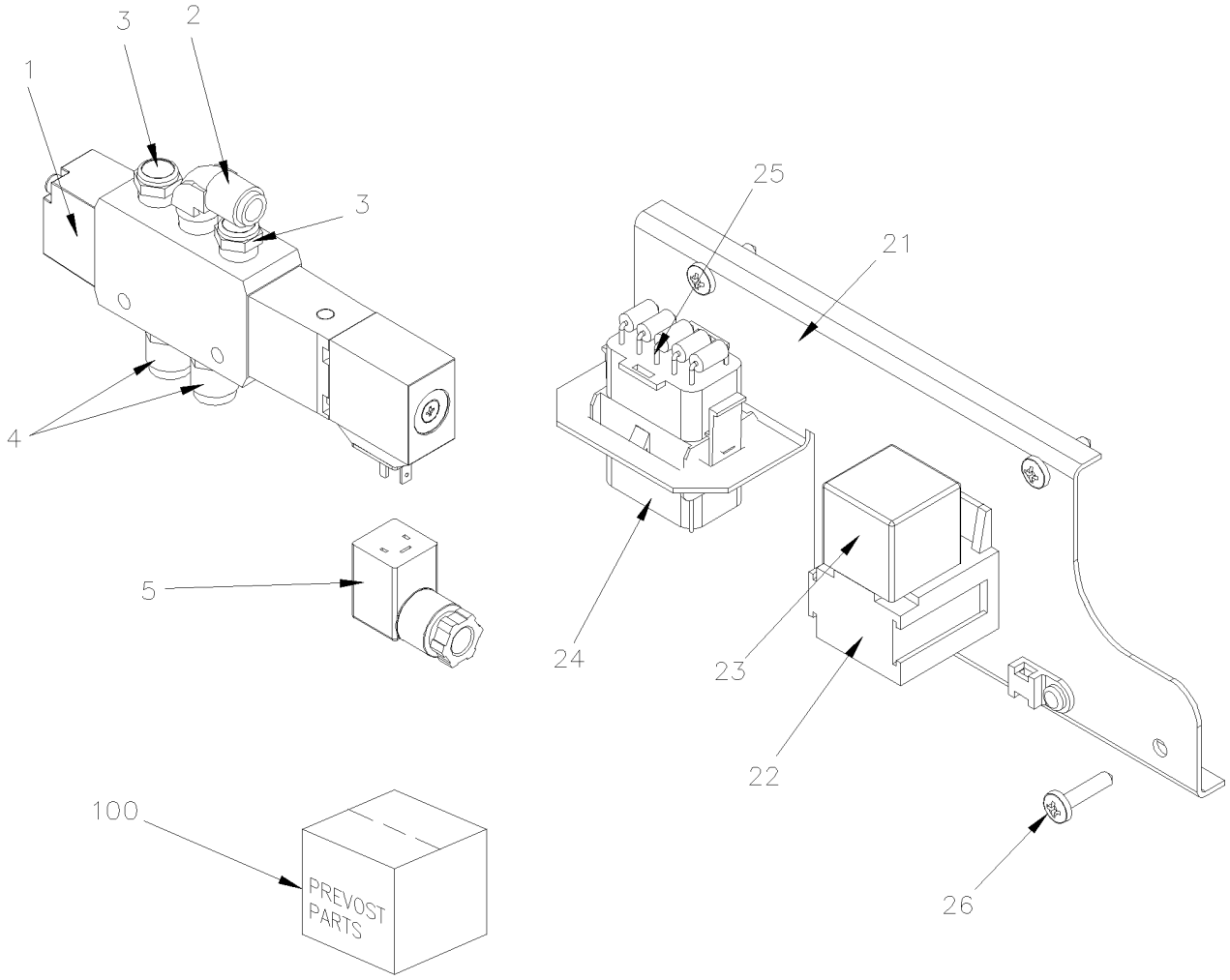

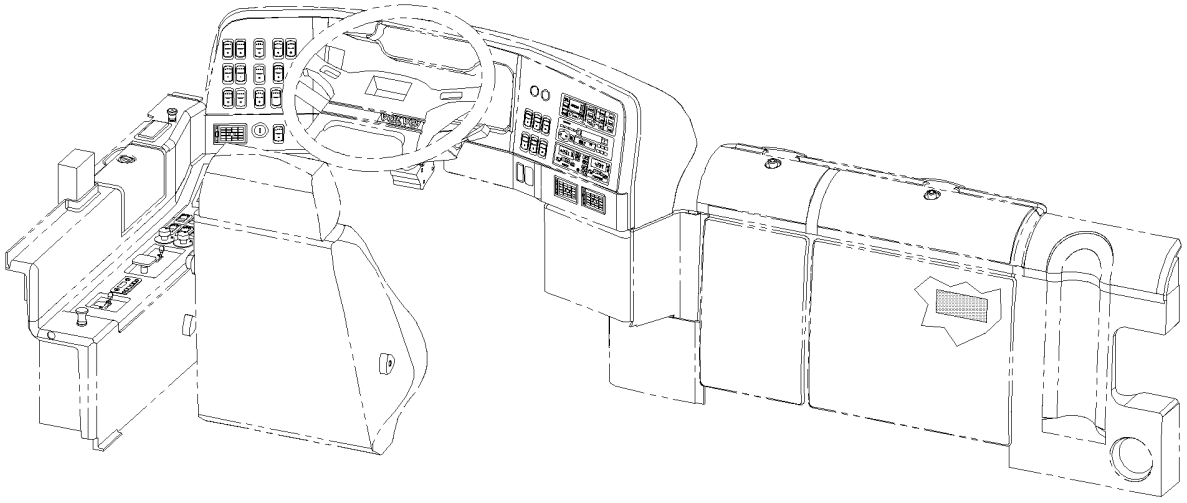

From 2-7800 Up to 8-9339	DATE: 01/2014	PAGE: Y2-1804-50

ENTRANCE DOOR - VALVE - MTH

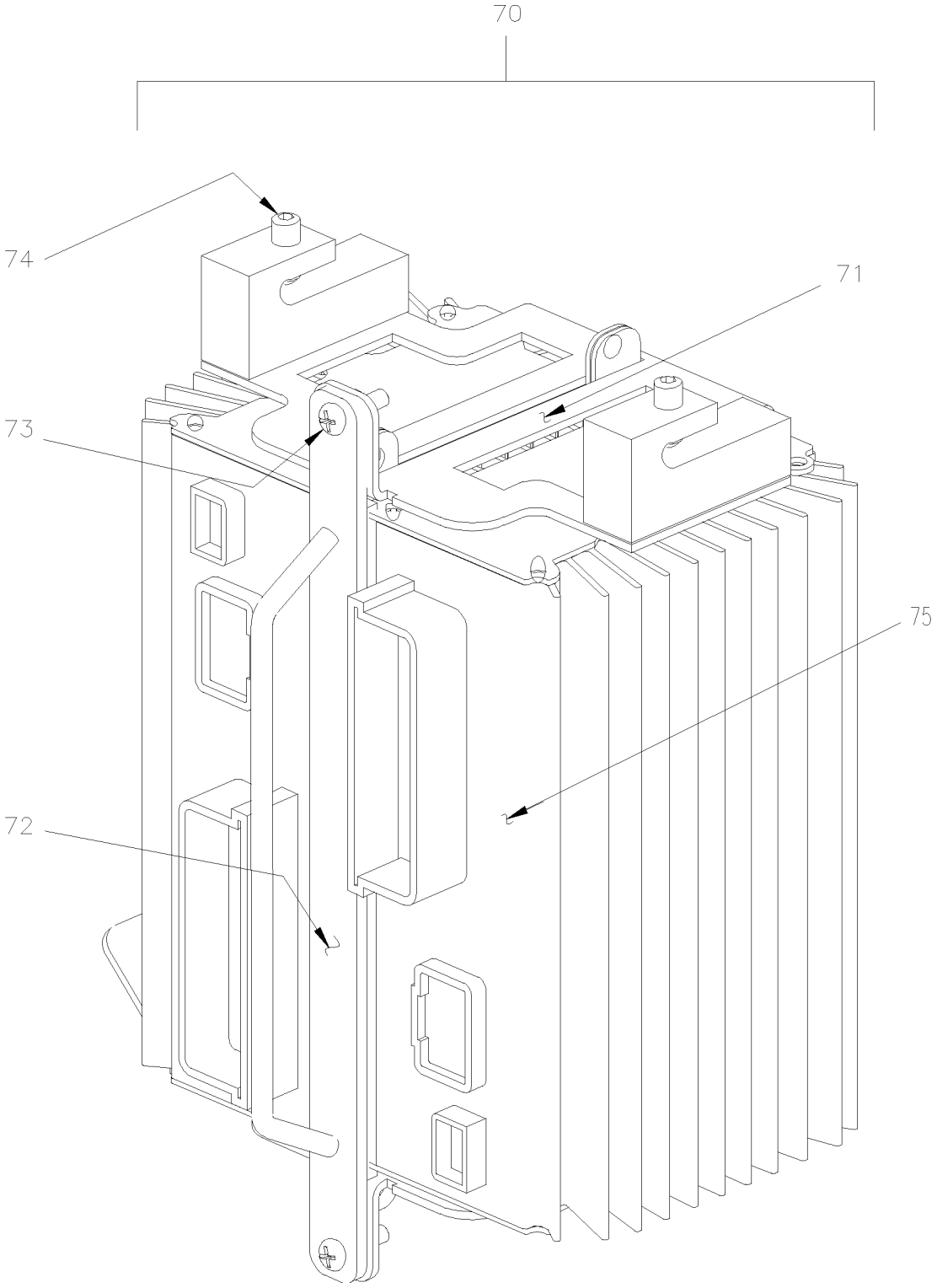

From 2-7800 Up to 8-9339	DATE: 01/2014	PAGE: Y2-1804-50

ENTRANCE DOOR - VALVE - MTH

ITEM	PART	DESCRIPTION	XL45	MTH40	MTH45	MTH45S	NOTE
1	641942	VALVE, 5 WAYS, 2 POSITIONS 24V / MODEL V60 Up to 5-8609 / REPLACED BY: 142489		1	1	1	A
. NS	641944	. KIT REPAIR Up to 5-8609		1	1	1	
. NS	641945	. COIL 24V Up to 5-8609		1	1	1	
. NS	563147	. CONNECTOR / SOCKET HOUSING ASSY 3C Up to 5-8609		1	1	1	
1	642023	VALVE, 5 WAYS, 2 POSITIONS 24V / MODEL V19 From 5-8610		1	1	1	
. NS	641385	. CONNECTOR / SOCKET HOUSING ASSY 3C From 5-8610		1	1	1	
2	641369	MALE ELBOW 90° NON-SWIVEL / PUSH-IN FITTING #4x1/8NPT-M BR		1	1	1	
3	641943	SILENCER / MUFFLER / 1/8NPT-M		2	2	2	
4	641242	MALE CONNECTOR / PUSH-IN FITTING / #4x1/8NPT-M BR		2	2	2	
5	563147	CONNECTOR / SOCKET HOUSING ASSY 3C / PNEUTECH C052-09-N-22		1	1	1	
21	288821	SUPPORT & RELAY ASSY		1	1	1	
22	561183	RELAY BASE / TAB TERMINAL / BOSCH 3334485008		1	1	1	
23	563332	RELAY 24V S.P.D.T. W/RESISTOR / "VOLVO" (20374662)		1	1	1	
24	561987	CONNECTOR / UNIVERSAL MATE-N-LOK / PH 15C / AMP 1-480711-0 / NATURAL		1	1	1	
25	381145	DIODE ASSY / W/5 3AMPS		1	1	1	
26	500641	SCREW TP BDG PH #8x3/4 ZP		3	3	3	
70	Call Order Desk	I/O B-MODULE VOLVO MULTIPLEX ASSY From 7-9096			1	1	P
71	382132	SUPPORT REAR I/O B MODULE From 7-9096					
72	382172	SUPPORT FRONT I/O B MODULE From 7-9096			1	1	
NS	506228	TAPE RUB ADH1 CC POL 1/4" x 1/2" x 37.5' / GREY 2520X From 7-9096			AR	AR	
73	502698	SCREW MA PAN PH M4-0.7x16 SS EMN From 7-9096			1	1	
74	5001252	NUT HEX STO M20-2.5 DP From 7-9096			1	1	
75	563273	I/O B-MODULE VOLVO MULTIPLEX / ALLUMINUM From 7-9096 Up to 7-9116			1	1	
75	565865	I/O B-MODULE VOLVO MULTIPLEX / ALLUMINUM From 7-9117 / REPLACED BY: 564075			1	1	
100	142489	KIT, ENTRANCE DOOR VALVE REPLACEMENT / V19 TO V60 Up to 5-8609		1	1	1	
. NS	IS-04066	. SEE INSTRUCTION SHEET Up to 5-8609		1	1	1	
		P) CALL ORDER DESK FOR SPECIFIC APPLICATION					
		(V.I.N.)					
		A) THIS VALVE IS SUPERSEEDED BY KIT #142489					

From 2-7800 Up to 8-9339	DATE: 01/2014	PAGE: Y2-1804-50

ENTRANCE DOOR - VALVE - MTH

ITEM	PART	DESCRIPTION	XL45	MTH40	MTH45	MTH45S	NOTE

From Y-7046 Up to 8-9339	DATE: 01/2014	PAGE: Y2-1806-00

CENTRAL DASHBOARD PANEL

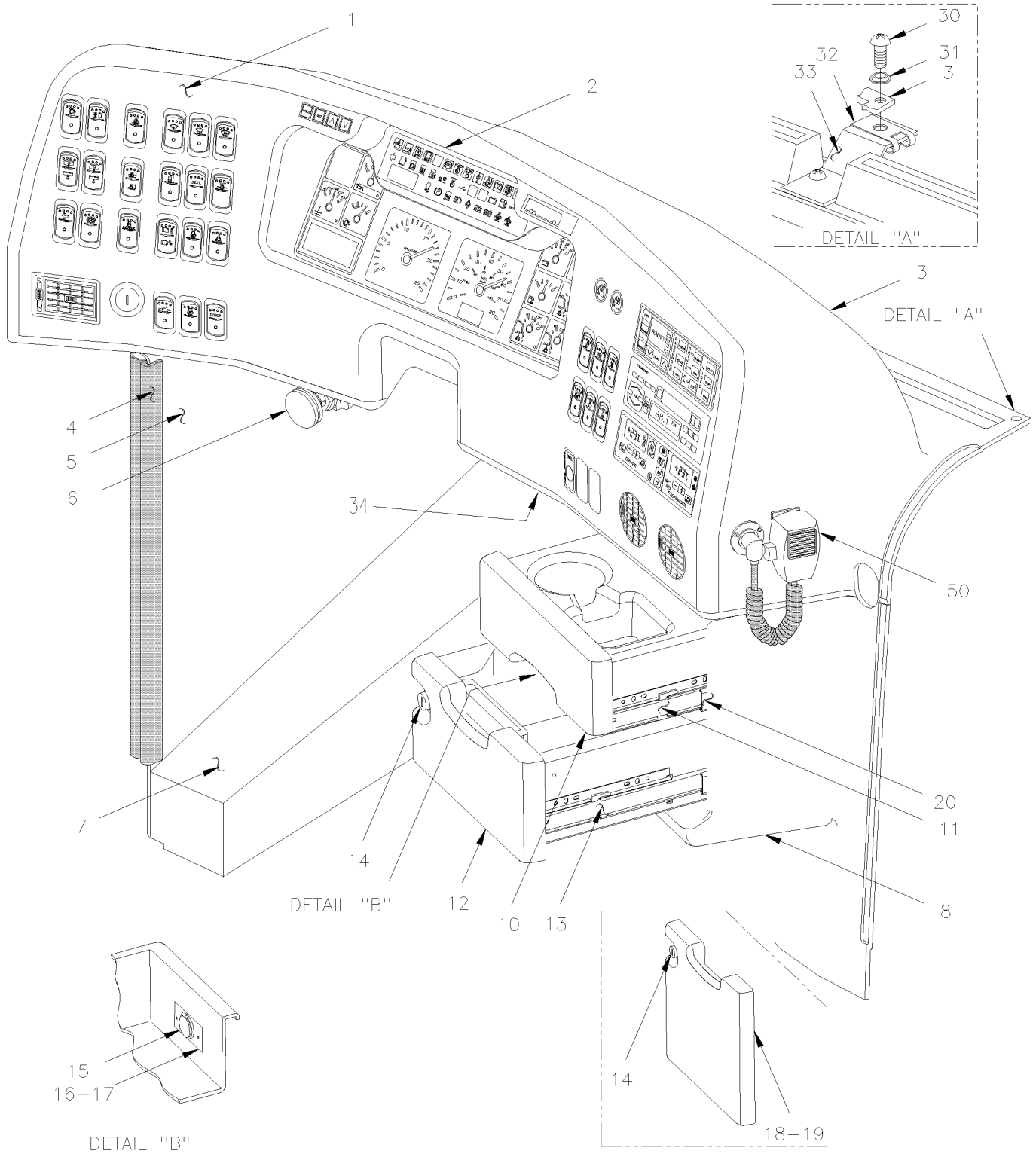

From Y-7046 Up to 8-9339	DATE: 01/2014	PAGE: Y2-1806-00

CENTRAL DASHBOARD PANEL

ITEM	PART	DESCRIPTION	XL45	MTH40	MTH45	MTH45S	NOTE
1	392110	PANEL / FRONT INSTRUMENTATION Up to 2-7864 / REPLACED BY: 392227	1				S
1	392219	PANEL / FRONT INSTRUMENTATION From 2-7865 Up to 6-8906	1				R
1	392304	PANEL / FRONT INSTRUMENTATION	1				K
1	392025	PANEL / FRONT INSTRUMENTATION Up to 2-7864 / REPLACED BY: 392228		1	1	1	T
1	392221	PANEL / FRONT INSTRUMENTATION From 2-7865 Up to 4-8212		1	1	1	R
1	392243	PANEL / FRONT INSTRUMENTATION From 4-8213 Up to 6-8956		1	1	1	
1	392314	PANEL / FRONT INSTRUMENTATION From 6-8957 Up to 7-9073		1	1	1	U
1	392243	PANEL / FRONT INSTRUMENTATION From 7-9074		1	1	1	
1	5001411	SCREW MA FL PH M4-0.7x20 EMN Up to 2-7864	AR	AR	AR	AR	
1	500345	WASHER FN CKF .187x.500x.090 BR BK Up to 2-7864	AR	AR	AR	AR	
2	Y2-0645-10	**L.H. DASHBOARD PANEL**					
2	Y2-0645-20	**CENTER DASHBOARD PANEL**					
2	Y2-0645-30	**R.H. DASHBOARD PANEL**					
NS	063070	HARNESS ASSY / ALARM Up to 7-9095	1	1	1	1	
NS	404571	CABLE ASSY / <> DASH & PARCEL RACK Up to 6-8797	1				
2	409149	CABLE ASSY / <> DASH & PARCEL RACK / AUDIO From 6-8798 Up to 6-8906	1				
		K) THIS PART ARE INCLUDE IN RETROFIT KIT# 405844					
		"VOLVO" AUDIO SOUND SYSTEM					
		R) PANEL WITH ROUND LOUVERS					
		S) PANEL WITH RECTANGULAR LOUVERS ARE					
		SUPERSEEDED BY KIT #392227					
		T) PANEL WITH RECTANGULAR LOUVERS ARE					
		SUPERSEEDED BY KIT #392228					
		U) THIS PANEL HAVE HVAC CONTROL UPPER POSITION					

From Y-7046 Up to 8-9339	DATE: 01/2014	PAGE: Y2-1806-00

CENTRAL DASHBOARD PANEL

ITEM	PART	DESCRIPTION	XL45	MTH40	MTH45	MTH45S	NOTE
NS	065108	WIRING HARNESS DASHBOARD CENTRAL MODULE Up to Y-7267	1				
NS	065325	WIRING HARNESS DASHBOARD CENTRAL MODULE From Y-7268 Up to 2-7763	1				
NS	065561	WIRING HARNESS DASHBOARD CENTRAL MODULE From 2-7764 Up to 4-8212	1				
NS	065763	WIRING HARNESS DASHBOARD CENTRAL MODULE From 4-8213 Up to 4-8358	1				
NS	066093	WIRING HARNESS DASHBOARD CENTRAL MODULE From 4-8359 Up to 5-8469	1				
NS	066096	WIRING HARNESS DASHBOARD CENTRAL MODULE From 5-8470 Up to 5-8644	1				
NS	066437	WIRING HARNESS DASHBOARD CENTRAL MODULE From 5-8645 Up to 6-8906	1				
NS	064849	WIRING HARNESS DASHBOARD CENTRAL MODULE Up to Y-7267		1	1	1	
NS	065324	WIRING HARNESS DASHBOARD CENTRAL MODULE From Y-7268 Up to 1-7411		1	1	1	
NS	065428	WIRING HARNESS DASHBOARD CENTRAL MODULE From 1-7412 Up to 2-7763		1	1	1	
NS	065563	WIRING HARNESS DASHBOARD CENTRAL MODULE From 2-7764 Up to 3-8130		1	1	1	
NS	065765	WIRING HARNESS DASHBOARD CENTRAL MODULE From 3-8131 Up to 4-8212		1	1	1	
NS	065855	WIRING HARNESS DASHBOARD CENTRAL MODULE From 4-8213 Up to 5-8469		1	1	1	
NS	066098	WIRING HARNESS DASHBOARD CENTRAL MODULE From 5-8470 Up to 5-8644		1	1	1	
2	066339	WIRING HARNESS DASHBOARD CENTRAL MODULE From 5-8645		1	1	1	
2	066386	WIRING HARNESS DASHBOARD CENTRAL MODULE From 6-8806 Up to 7-9095		1	1	1	

From Y-7046 Up to 8-9339	DATE: 01/2014	PAGE: Y2-1806-00

CENTRAL DASHBOARD PANEL

ITEM	PART	DESCRIPTION	XL45	MTH40	MTH45	MTH45S	NOTE
2	066774	WIRING HARNESS DASHBOARD CENTRAL MODULE From 7-9096		1	1	1	
3	392112	COVER, DASHBOARD PANEL / BUS Up to 6-8906	1				
3	392027	COVER, DASHBOARD PANEL / MTH		1	1	1	C
3	392179	COVER, DASHBOARD PANEL / MTH 89"		1	1	1	A
3	392144	COVER, DASHBOARD PANEL / MTH 89"				1	
4	504675	RUBBER EXTRUSION TRIM SEAL / GRIP .040/.070 / 5/8" HOLLOW BULB C.T.L.	AR	AR	AR	AR	
5	392109	STRUCTURE / L.H. Up to 2-7864 / REPLACED BY: 392218	1				
5	392218	STRUCTURE / L.H. From 2-7865 Up to 6-8906	1				
5	392312	PARTIAL STRUCTURE TO FIT "VOLVO" AUDIO SOUND Up to 6-8906	1				K
5	392305	ADAPTOR RADIO TO STRUCTURE Up to 6-8906	1				K
5	392024	STRUCTURE / L.H. Up to 2-7864		1	1	1	C
5	392218	STRUCTURE / L.H. From 2-7865 Up to 6-8956		1	1	1	C
5	392302	STRUCTURE / L.H. From 6-8957		1	1	1	C
5	392180	STRUCTURE / L.H. Up to 2-7864		1	1	1	A
5	392220	STRUCTURE / L.H. From 2-7865 Up to 6-8956		1	1	1	A
5	392316	STRUCTURE / L.H. From 6-8957		1	1	1	A
		A) USE WITHOUT HANDRAIL					
		C) USE WITH HANDRAIL					
		K) THIS PART ARE INCLUDE IN RETROFIT KIT# 405844					
		"VOLVO" AUDIO SOUND SYSTEM					

From Y-7046 Up to 8-9339	DATE: 01/2014	PAGE: Y2-1806-00

CENTRAL DASHBOARD PANEL

ITEM	PART	DESCRIPTION	XL45	MTH40	MTH45	MTH45S	NOTE
5	392320	ADAPTOR TO CONVERT UPPER HVAC TO LOWER / "W " SHAPE SS From 6-8957		1	1	1	V
NS	562361	PROTECTIVE CAP / HD10 SERIES / 6C / DEUTSCH HDC16-6-BLACK	1	1	1	1	F
NS	562492	TYPE A COUPLING	1	1	1	1	F
NS	562493	CHAIN / C.T.L.	1	1	1	1	F
NS	562494	RING / ATTACHMENT END	1	1	1	1	F
6	641445	VALVE, 3 WAYS, 2 POSITIONS MECHANICAL	1	1	1	1	
. NS	641992	. KNOB	1	1	1	1	
NS	5001403	SCREW MA CHE PH M5-0.8x40 ZP	2	2	2	2	
NS	500964	WASHER FL .203x.500x.047 ZP	2	2	2	2	
NS	502782	NUT HEX NYRT M5-0.8 CP	2	2	2	2	
NS	392073	ACCESS PANEL / FOR WIPER REPAIR	1	1	1	1	
7	392013	FOOT REST / SUPPORT	1	1	1	1	
NS	5001036	SCREW MA PAN PH M4-0.7x10 ZP	4	4	4	4	
8	392111	UNDER DASH PANEL Up to 6-8906	1				
8	392026	UNDER DASH PANEL / REPLACED BY: 392181		1	1	1	
8	392181	UNDER DASH PANEL		1	1		B
		B) USE WITHOUT HANDRAIL & WITHOUT DRAWER					
		F) ITEMS ARE RELATED WITH CONNECTOR FOR DIAGNOSTIC "DDEC"					
		V) THIS PART ARE REQUIRE TO CONVERT UPPER HVAC TO LOWER HVAC ON STRUCTURE # 392302 & 392316					

From Y-7046 Up to 8-9339	DATE: 01/2014	PAGE: Y2-1806-00

CENTRAL DASHBOARD PANEL

ITEM	PART	DESCRIPTION	XL45	MTH40	MTH45	MTH45S	NOTE
8	392182	UNDER DASH PANEL		1	1	1	G
8	392068	UNDER DASH PANEL		1	1	1	E
8	Call Order Desk	UNDER DASH PANEL		1	1	1	P J
8	392199	UNDER DASH PANEL / BLACK		1	1	1	D
8	392028	UNDER DASH PANEL ASSY W/FLIP-UP BOX		1	1	1	J
. NS	901217	. LATCH GRABBER CATCH / 44N		1	1	1	
10	391932	DRAWER, UPPER / BLACK From 2-7721	1	1	1	1	
. NS	392237	. SUPPORT MAGNETIC LOCK / UPPER DRAWER From 2-7721	1	1	1	1	
. NS	392241	. CATCH MAGNETIC LOCK LOWER DRAWER From 2-7721	1	1	1	1	
. NS	504733	. KIT SLIDE TRACK / FIXED AT DRAWER From 2-7721	1	1	1	1	
NS	066888	CABLE ASSY 12' / W/3.5MM / "I POD" Up to 6-8906	1				I
11	504677	. RAIL ASSY 8" / (SET) From 2-7721	1	1	1	1	
NS	504673	CATCH MAGNETIC From 2-7721	2	2	2	2	
12	391933	DRAWER, LOWER / BLACK From 2-7721	1	1	1	1	
. NS	392238	. SUPPORT MAGNETIC LOCK / LOWER DRAWER From 2-7721	1	1	1	1	
. NS	392240	. CATCH MAGNETIC LOCK LOWER DRAWER From 2-7721	1	1	1	1	
		P) CALL ORDER DESK FOR SPECIFIC APPLICATION					
		(V.I.N.)					
		D) USE WITHOUT HANDRAIL & WITH DRAWER					
		E) USE WITH HANDRAIL WITHOUT DRAWER & WITHOUT					
		FLIP-UP BOX					
		G) USE WITHOUT HANDRAIL & WITH FLIP-UP BOX					
		I) REQUIRE "VOLVO" SOUND SYSTEM SEE NOTE "K" &					
		"L"					
		J) USE WITH HANDRAIL & WITH FLIP-UP BOX					

From Y-7046 Up to 8-9339	DATE: 01/2014	PAGE: Y2-1806-00

CENTRAL DASHBOARD PANEL

ITEM	PART	DESCRIPTION	XL45	MTH40	MTH45	MTH45S	NOTE
. NS	504733	. KIT SLIDE TRACK / FIXED AT DRAWER From 2-7721	1	1	1	1	
13	504678	. RAIL ASSY 10" / (SET) From 2-7721	1	1	1	1	
NS	504673	CATCH MAGNETIC From 2-7721	2	2	2	2	
14	504672	LATCH ASSY W/2 KEYS	1	1	1	1	
. NS	810084	. KEY / (CH751)	1	1	1	1	
14	810084	. KEY / (CH751)	2	2	2	2	
15	562796	12 VOLTS POWER OUTLET	1	1	1	1	
16	500343	SCREW MA FL PH M4-0.7x16 ZP	2	2	2	2	
NS	500590	NUT HEX NYRT M4-0.7 ZP	2	2	2	2	
18	392028	UNDER DASH PANEL ASSY W/FLIP-UP BOX	1	1	1	1	
. NS	901217	. LATCH GRABBER CATCH / 44N	1	1	1	1	
19	392205	. COVER ONLY / W/OUT BOX OR DRAWER	1	1	1	1	
NS	504673	CATCH MAGNETIC	2	2	2	2	
NS	392239	SUPPORT MAGNET FLIP-UP BOX	1	1	1	1	
20	392012	MOUNTING PLATE / DRAWER	4	4	4	4	
NS	5001413	SCREW MA FL PH M4-0.7x20 ZP	AR	AR	AR	AR	

From Y-7046 Up to 8-9339	DATE: 01/2014	PAGE: Y2-1806-00

CENTRAL DASHBOARD PANEL

ITEM	PART	DESCRIPTION	XL45	MTH40	MTH45	MTH45S	NOTE
30	5001411	SCREW MA FL PH M4-0.7x20 EMN	AR	AR	AR	AR	
30	392144	COVER, DASHBOARD PANEL / MTH 89"				1	
31	500345	WASHER FN CKF .187x.500x.090 BR BK	AR	AR	AR	AR	
32	5001406	NUT SPR U M4-0.7 0.8-4.0x13.5	AR	AR	AR	AR	
33	Y2-2230-00	**DEFROSTER - INSTALLATION**					
34	563063	SENSOR THERMISTOR ASSY ("DELPHI")	1				
50	Y2-2315-00	**SOUND SYSTEM & ACCESSORIES - "R.E.I."**					
NS	392227	KIT, PANEL / FRONT INSTRUMENTATION / BUS SERIES "XL-II" Up to 2-7864	1				
NS	392228	KIT, PANEL / FRONT INSTRUMENTATION / MTH SERIES "XL-II" Up to 2-7864		1	1	1	
NS	405844	KIT, RETROFIT "VOLVO" SOUND SYSTEM "XL" Up to 6-8906	AR				L
		L) FOR DETAIL SEE PAGES Y2-2315-99 & Y2-2317-99					

From Y-7046 Up to 6-8906	DATE: 01/2014	PAGE: Y2-1806-10

L.H. CONSOLE - BUS

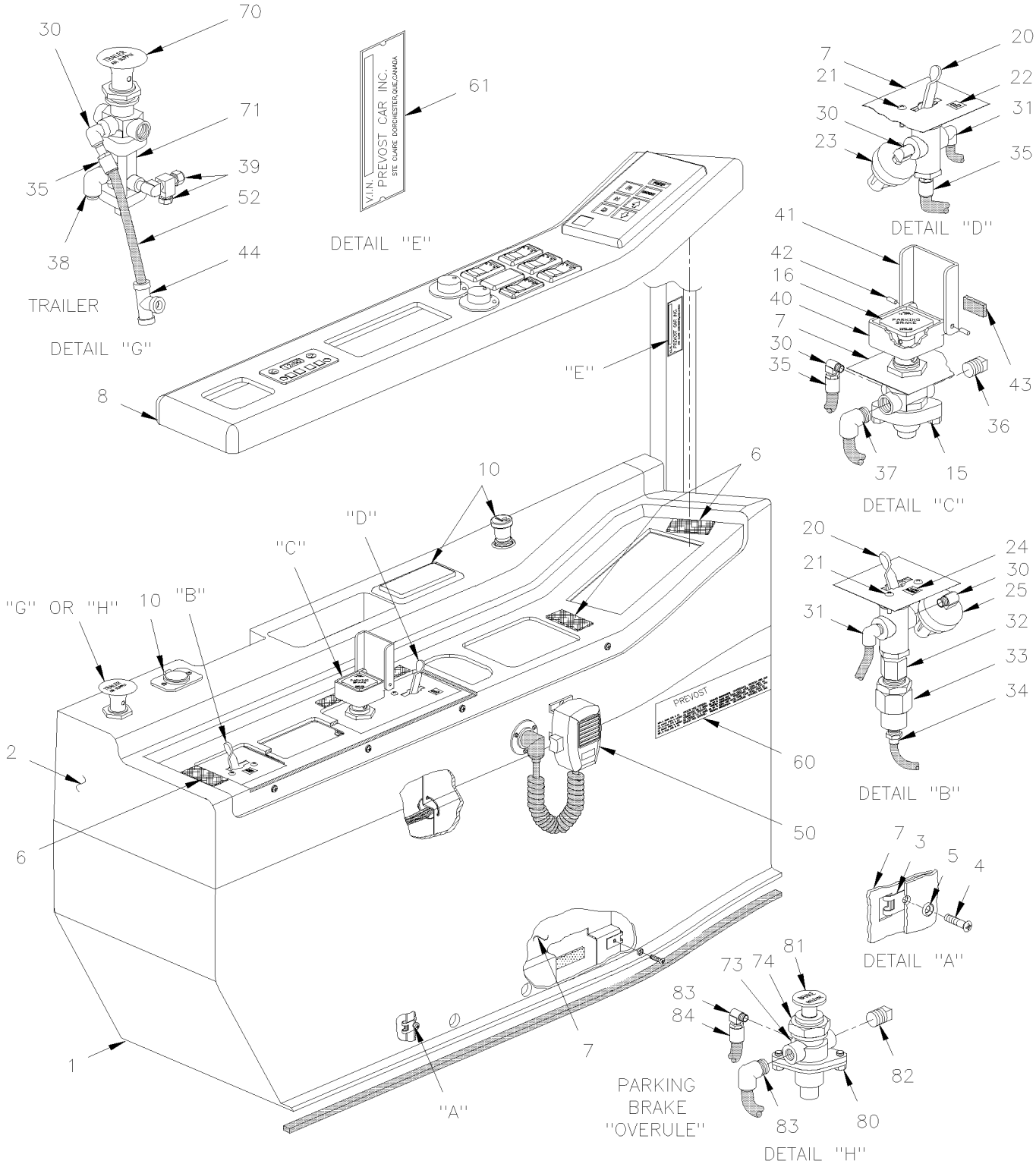

From Y-7046 Up to 6-8906	DATE: 01/2014	PAGE: Y2-1806-10

L.H. CONSOLE - BUS

ITEM	PART	DESCRIPTION	XL45	MTH40	MTH45	MTH45S	NOTE
1	392042	CONSOLE / LOWER	1				
2	392114	CONSOLE / W/ASHTRAY & LIGHTER	1				
2	392115	CONSOLE / W/O ASHTRAY & W/O LIGHTER	1				
2	392143	CONSOLE / W/LIGHTER	1				
2	392171	CONSOLE / W/ASHTRAY & LIGHTER	1				E
2	392172	CONSOLE / W/O ASHTRAY & W/O LIGHTER	1				E
2	392173	CONSOLE / W/LIGHTER	1				E
3	5001405	NUT SPR U M4-.7 0.8-4.0x9.5	10				
4	5001414	SCREW MA FL PH M4-0.7x16 EMN	10				
5	500345	WASHER FN CKF .187x.500x.090 BR BK	10				
6	506493	TAPE DUAL LOCK 1/2" x 150' / BLACK SJ3541	AR				
7	392039	STRUCTURE ASSY	1				
8	392118	PANEL / W/AUTOMATIC TRANSMISSION "WORLD"	1				
8	392119	PANEL / W/AUTOMATIC TRANSMISSION "WORLD"	1				
8	392166	PANEL / W/TIMER	1				E
8	392165	PANEL / W/O TIMER	1				E
10	Y2-0645-00	**SWITCHES L.H. CONSOLE - BUS**					
15	641128	VALVE, CONTROL VALVE PP-1 / 40PSI / REPLACED BY: 641571	1				
. NS	641154	. REPAIR KIT / PP-1 & RD-3 / (281126)	1				
NS	640297	. NUT	1				
15	640286	. PIN ROLLER	1				
16	641149	. BUTTON, PARKING BRAKE DIAMOND YELLOW / 1"	1				
20	640136	VALVE, CONTROL TW-1	1				
. NS	641156	. REPAIR KIT / TW-1	1				
21	500572	SCREW MA TR PH #10-24x1/2 SS EMN	2				
22	391952	DECAL "TAG"	1				
23	562518	PRESSURE SWITCH N.O. 4PSI / 1/8NPT W/2 SCREWS / TAG	1				
NS	063892	WIRE ASSY / W/LOW BUOY	1				
24	391951	DECAL "LOW BUOY"	1				
25	560816	PRESSURE SWITCH N.C. 3PSI / 1/8NPT W/2 SCREWS	1				
30	501331	STREET ELBOW 90º / PIPE FITTING / 1/8NPT-Mx1/8NPT-F BR	3				
31	641369	MALE ELBOW 90° NON-SWIVEL / PUSH-IN FITTING #4x1/8NPT-M BR	3				
32	501310	ADAPTER / PIPE FITTING / 1/4NPT-Fx1/8NPT-M BR	1				
33	640135	VALVE, CHECK 1/4 NPT	1				
34	641332	MALE CONNECTOR / PUSH-IN FITTING / #4x1/4NPT-M BR	1				
35	641349	MALE CONNECTOR / PUSH-IN FITTING / #6x1/8NPT-M BR	1				
36	501304	PLUG SQUARE HEAD / PIPE FITTING / 1/4NPT-M BR	1				
37	641371	MALE ELBOW 90° NON-SWIVEL / PUSH-IN FITTING #4x1/4NPT-M BR	1				
38	641372	MALE ELBOW 90° NON-SWIVEL / PUSH-IN FITTING #6x1/4NPT-M BR	1				
39	641002	MALE RUN TEE / NTA FITTING / #4x#4x1/8NPT-M BR	1				
40	391727	PROTECTOR BOX ASSY / OVER PARKING BRAKE VALVE	1				
40	391725	. BOX	1				
41	391726	. COVER / CLEAR PLASTIC	1				
		E) WITH TRANSMISSION "EATON"					

From Y-7046 Up to 6-8906	DATE: 01/2014	PAGE: Y2-1806-10

L.H. CONSOLE - BUS

ITEM	PART	DESCRIPTION	XL45	MTH40	MTH45	MTH45S	NOTE
42	505221	. SPRING, PIN 1/8 X 3/8	1				
43	506035	. TAPE RUB ADH1 NEO 1/2" x 1" x 15' / BLACK 1220X	1				
44	641922	UNION TEE / PUSH-IN FITTING / #6x#6x#6 BR	1				
50	Y2-2315-00	**SOUND SYSTEM & ACCESSORIES - "R.E.I."**					
60	405090	PLATE / V.I.N.	1				
61	400640	PLATE / V.I.N.	1				
NS	504107	RIVET POP DOME OE 1/8x5/16 AL	2				
70	641935	BUTTON RED / FOR TRAILER VALVE PP-7	1				
71	641397	TRAILER SUPPLY VALVE PP-7	1				
NS	452043	PRESSURE SWITCH N.O. 60-35 20SP001AA060E035E	1				
73	640297	NUT	1				
74	640286	PIN ROLLER	1				
80	640472	VALVE, CONTROL / RD-3	1				
. NS	641154	. REPAIR KIT / PP-1 & RD-3	1				
81	641155	BUTTON, OVERRULE ROUND BLACK	1				
82	501303	PLUG SQUARE HEAD / PIPE FITTING / 1/8NPT-M BR	1				
83	641370	MALE ELBOW 90° NON-SWIVEL / PUSH-IN FITTING / #6x1/8NPT-M BR	2				
84	641242	MALE CONNECTOR / PUSH-IN FITTING / #4x1/8NPT-M BR	1				
NS	405158	CARD HOLDER SS / 8 3/4" x 11" x 1" TH	1				
NS	500649	SCREW TP BDG PH #6x3/4 BK / REPLACED BY: 500640	6				

From Y-7046 Up to 6-8906	DATE: 01/2014	PAGE: Y2-1806-10

L.H. CONSOLE - BUS

ITEM	PART	DESCRIPTION	XL45	MTH40	MTH45	MTH45S	NOTE

From Y-7046 Up to 8-9339	DATE: 01/2014	PAGE: Y2-1806-15

DASHBOARD - ASSY

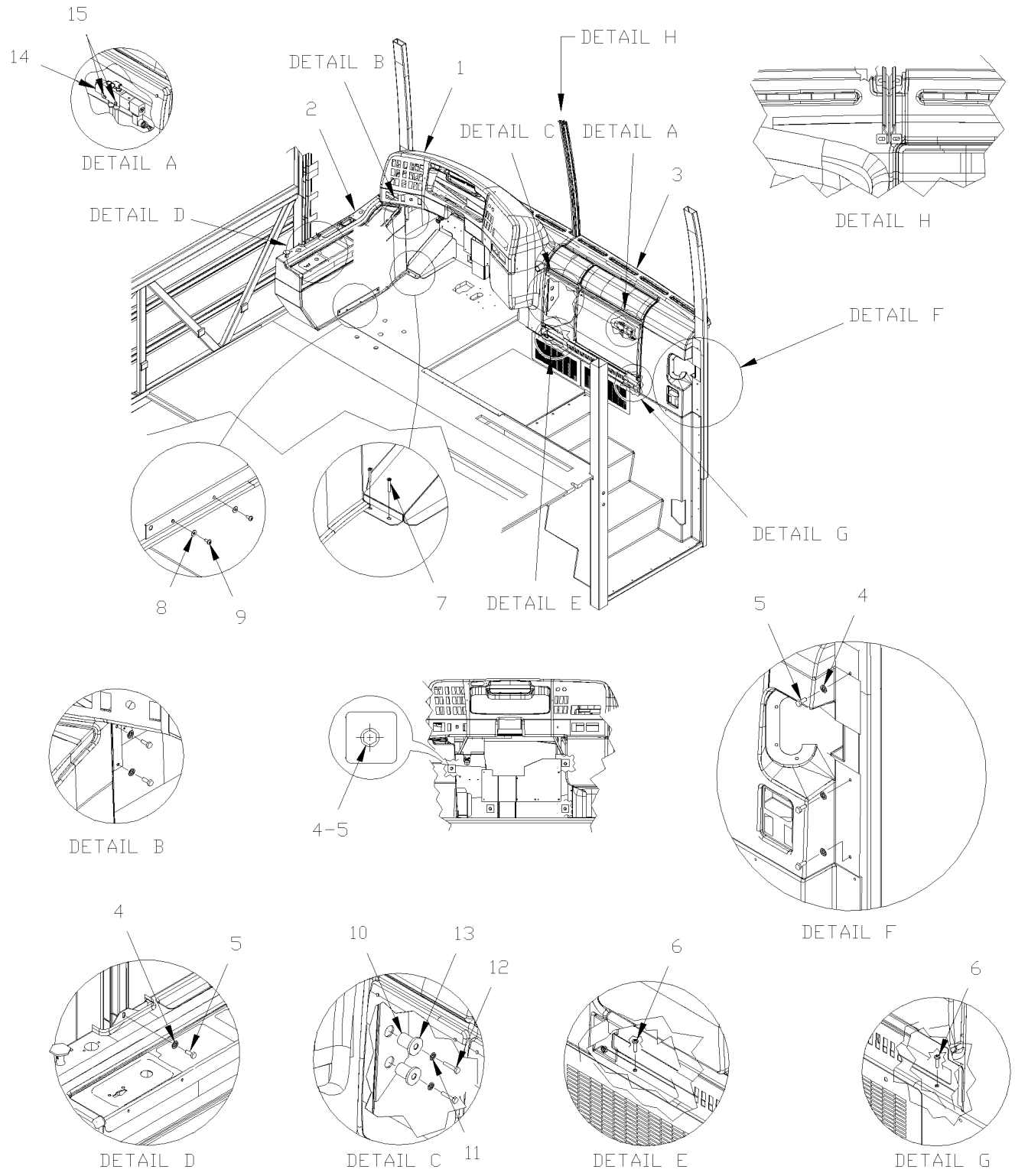

From Y-7046 Up to 8-9339	DATE: 01/2014	PAGE: Y2-1806-15

DASHBOARD - ASSY

ITEM	PART	DESCRIPTION	XL45	MTH40	MTH45	MTH45S	NOTE
1	Y2-1806-00	**CENTRAL DASHBOARD PANEL**					
2	Y2-1806-10	**L.H. CONSOLE - BUS Up to 6-8906**					
2	Y2-1806-50	**L.H. CONSOLE - MTH**					
3	Y2-1806-20	**DASHBOARD PANEL**					
4	502582	WASHER LO SERR 6.1x16.2x0.9 ZP	6	6	6	6	
5	500923	SCREW TC CAP HEX 1/4-20x3/4 ZP / REPLACED BY: 5001515	6	6	6	6	
6	500641	SCREW TP BDG PH #8x3/4 ZP	3	3	3	3	
7	5001531	SCREW TP FL PH #10x1 SS410	2	2	2	2	
8	500964	WASHER FL .203x.500x.047 ZP	2	2	2	2	
9	500613	SCREW TP PAN PH #10x1/2 ZP	2	2	2	2	
10	890007	UNION TUBE	2	2	2	2	
11	502507	WASHER LO SPT 8.1x14.8x2.0 CJ	2	2	2	2	
12	502797	SCREW CAP HEX M8-1.25x70 G10.9 DP	2	2	2	2	
13	5001164	WASHER FL 8.4x25.0x2.0 ZP	2	2	2	2	
14	Y2-1804-50	**ENTRANCE DOOR - VALVE - MTH**					
15	5001074	SCREW CAP HEX M4-0.7x30 G8.8 ZP		2	2	2	

From Y-7046 Up to 8-9339	DATE: 01/2014	PAGE: Y2-1806-20
DASHBOARD PANEL		

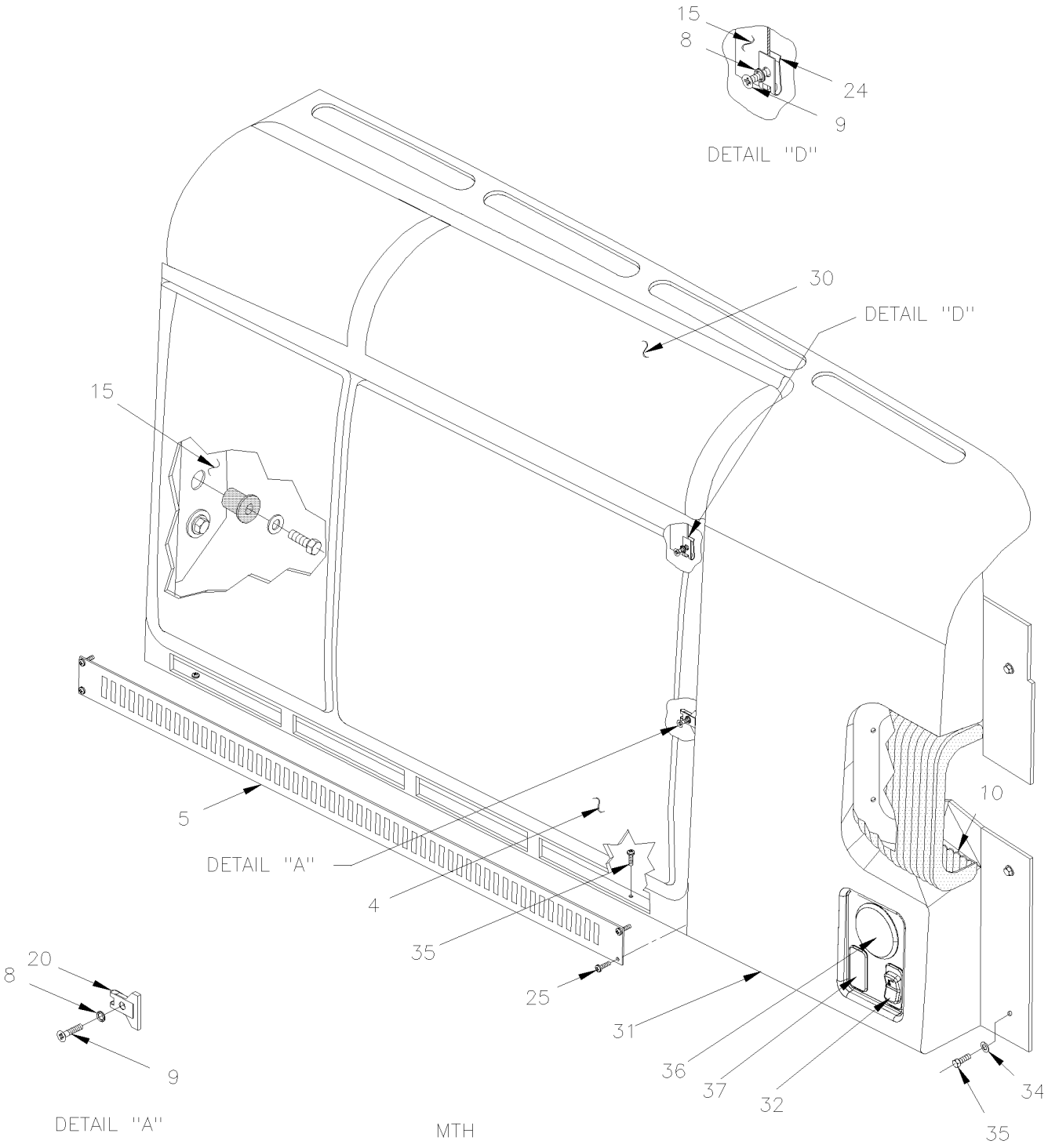

From Y-7046 Up to 8-9339	DATE: 01/2014	PAGE: Y2-1806-20

DASHBOARD PANEL

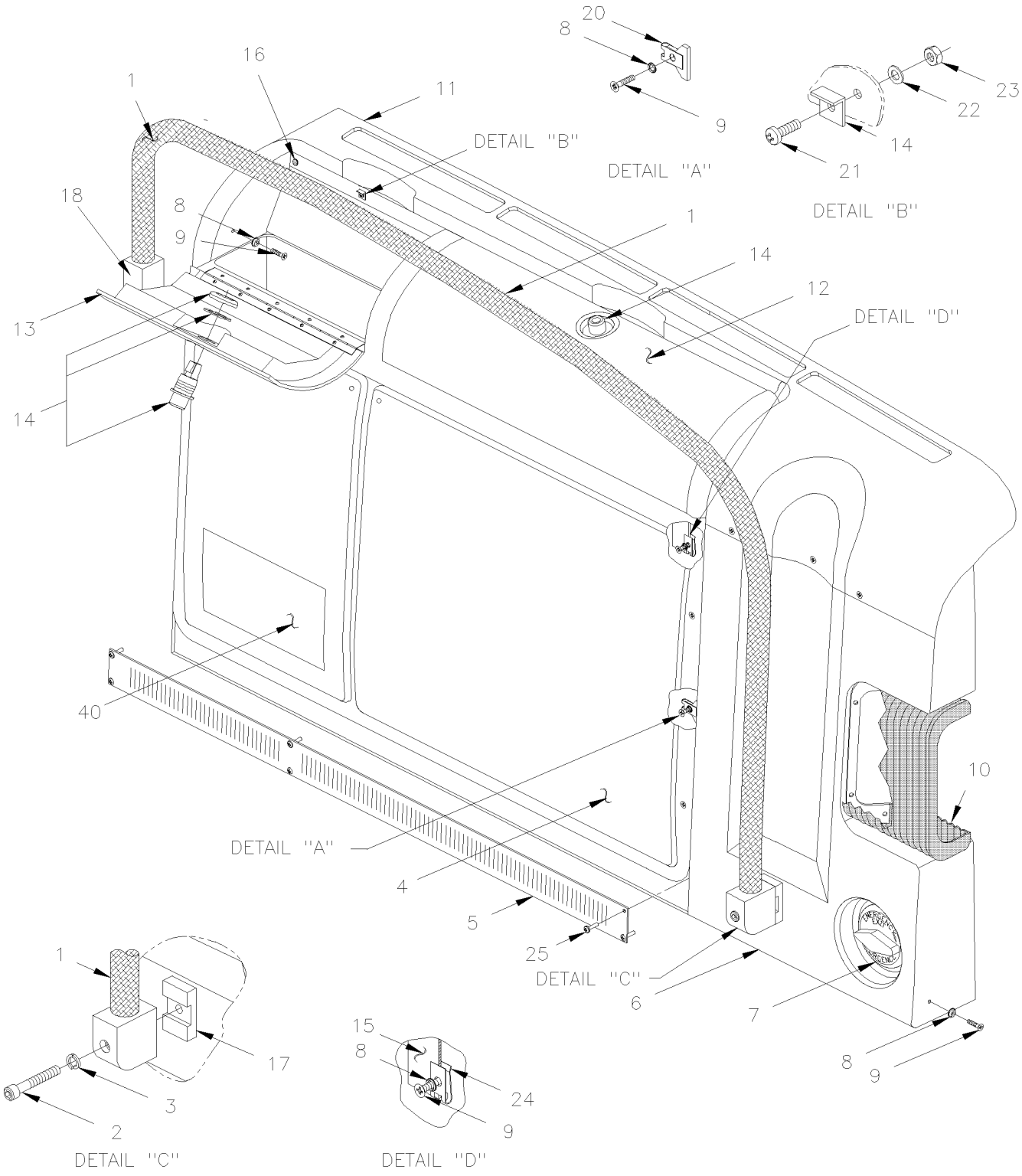

From Y-7046 Up to 8-9339	DATE: 01/2014	PAGE: Y2-1806-20

DASHBOARD PANEL

ITEM	PART	DESCRIPTION	XL45	MTH40	MTH45	MTH45S	NOTE
1	391971	HAND RAIL Up to 5-8422 / REPLACED BY: K391971	1				
1	392266	HAND RAIL / BLACK From 5-8423	1				
1	392494	HAND RAIL / YELLOW From 5-8423	1				
2	5001379	SCREW CAP HEXS M8-1.25x50 SS Up to 5-8422	1				
2	5001598	SCREW CAP HEXS M8-1.25x30 SS EMN From 5-8423	1				
3	5001380	SCREW CAP HEXS M8-1.25x100 SS	2				
4	392007	PANEL / SERVICING	1				
5	392194	GRILLE / LOWER	1	1	1	1	
6	392120	COVER / ENTRANCE DOOR MECHANISM	1				
7	Y2-1802-00	**ENTRANCE DOOR CONTROL**					
8	500345	WASHER FN CKF .187x.500x.090 BR BK	AR	AR	AR	AR	
9	5001413	SCREW MA FL PH M4-0.7x20 ZP	AR	AR	AR	AR	
9	5001429	SCREW MA FL PH M4-0.7x25 EMN	AR	AR	AR	AR	
10	Y2-1862-60	**ENTRANCE DOOR FRAME - INSTALLATION**	1	1	1	1	
11	392117	PANEL R.H. / TOP W/2 BOX	1				
11	392121	PANEL R.H. / TOP W/O BOX	1				
11	392052	PANEL R.H. / TOP W/2 BOX		1	1	1	
11	392146	PANEL R.H. / TOP W/2 BOX MTH 89"				1	
12	391954	COVER R.H. / BLACK	1	1	1	1	
13	391955	COVER L.H. / BLACK	1	1	1	1	
13	504676	STRAP RETAINER	1	1	1	1	
14	504672	LATCH ASSY W/2 KEYS	AR	AR	AR	AR	
. NS	810084	. KEY / (CH751)	1	1	1	1	
NS	810084	. KEY / (CH751)	2	2	2	2	
15	392054	STRUCTURE / R.H.	1				B
15	392176	STRUCTURE / R.H.		1	1		A
15	392148	STRUCTURE / R.H. MTH 89"				1	
16	504674	RUBBER BUMPER / REPLACED BY: 504498	4	4	4	4	
17	392489	RAMP BLOCK SUPPORT WELD TO DASH STRUCTURE	1	1	1	1	
18	392116	RAMP SUPPORT WELD TO DASH STRUCTURE	1	1	1	1	
20	5001406	NUT SPR U M4-0.7 0.8-4.0x13.5	4	4	4	4	
21	5001398	SCREW MA CHE PH M3-0.5x10 SS	1	1	1	1	
22	N.P.N.	WASHER	4	4	4	4	4
23	5001408	NUT HEX STO M3-0.5 ZP	4	4	4	4	
24	5001405	NUT SPR U M4-.7 0.8-4.0x9.5	14	14	14	14	
25	5001410	SCREW MA CHE PH M4-0.7x16 SS	6	6	6	6	
30	392052	PANEL R.H. / TOP W/2 BOX		1	1	1	
30	392053	PANEL R.H. / TOP W/O BOX		1	1	1	
30	392146	PANEL R.H. / TOP W/2 BOX MTH 89"				1	
30	392147	PANEL R.H. / TOP W/O BOX MTH 89"				1	
31	392133	COVER / ENTRANCE DOOR MECHANISM / MTH 89"				1	
		4) NO PARTS NUMBER					
		A) USE WITHOUT HANDRAIL					
		B) WITH HANDRAIL					

From Y-7046 Up to 8-9339	DATE: 01/2014	PAGE: Y2-1806-20

DASHBOARD PANEL

ITEM	PART	DESCRIPTION	XL45	MTH40	MTH45	MTH45S	NOTE
31	392132	COVER / ENTRANCE DOOR MECHANISM / MTH 83"		1	1		
31	392050	COVER / ENTRANCE DOOR MECHANISM / MTH 86" Up to 2-7864		1	1		
31	392222	COVER / ENTRANCE DOOR MECHANISM / MTH 86" From 2-7865		1	1	1	
31	392178	COVER / ENTRANCE DOOR MECHANISM / MTH 83"		1	1		A
31	392177	COVER / ENTRANCE DOOR MECHANISM / MTH 86" Up to 2-7864		1	1		A
31	392224	COVER / ENTRANCE DOOR MECHANISM / MTH 86" From 2-7865		1	1	1	A
32	562697	SWITCH / ON-ON / D.P.D.T. / CH-OVER / W/RED & GREEN LED		1	1	1	
NS	562716	CAP / DRIVER'S LAMP		1	1	1	
33	500923	SCREW TC CAP HEX 1/4-20x3/4 ZP / REPLACED BY: 5001515	AR	AR	AR	AR	
34	502582	WASHER LO SERR 6.1x16.2x0.9 ZP	AR	AR	AR	AR	
35	500641	SCREW TP BDG PH #8x3/4 ZP	AR	AR	AR	AR	
36	871315	LOUVER, ADJUSTABLE / ROUND 2 1/8" O.D. From 2-7865		1	1	1	
36	871314	LOUVER, ADJUSTABLE / ROUND 2 5/8" O.D. From 2-7865		1	1	1	A
NS	392134	HOSE 3" I.D. X 900MM From 2-7865		1	1	1	
37	562773	SWITCH / "DUMMY" / PLUG		1	1	1	
40	404625	DECAL "POUR LA SECURITE… BLANCHE" / ASM FRANÇAIS	1				
. NS	404623	. DECAL "POUR LA SECURITE… BLANCHE" FRANÇAIS	1				
. NS	404624	. PLATE SUPPORT DECAL 232MM x 119MM	1				
40	404626	DECAL "FOR PASSENGER SAFETY....WHITE" / ASSY ENGLISH	1				
. NS	404622	. DECAL "FOR PASSENGER SAFETY....WHITE" ENGLISH	1				
. NS	404624	. PLATE SUPPORT DECAL 232MM x 119MM	1				
40	406150	DECAL "FOR PASSENGER SAFETY....WHITE" / ASSY ENG & SPANISH	1				
. NS	405647	. DECAL "FOR PASSENGER SAFETY....WHITE" / ASSY ENG & SPANISH	1				
. NS	406148	. PLATE SUPPORT DECAL 242MM x 290MM	1				
40	400099	DECAL "FOR PASSENGER SAFETY....YELLOW" / ASSY ENG & SPANISH	1				
. NS	400098	. DECAL "FOR PASSENGER SAFETY....YELLOW" / ENG & SPANISH	1				
. NS	406148	. PLATE SUPPORT DECAL 242MM x 290MM	1				
		A) USE WITHOUT HANDRAIL					

From Y-7046 Up to 8-9339	DATE: 01/2014	PAGE: Y2-1806-50

L.H. CONSOLE - MTH

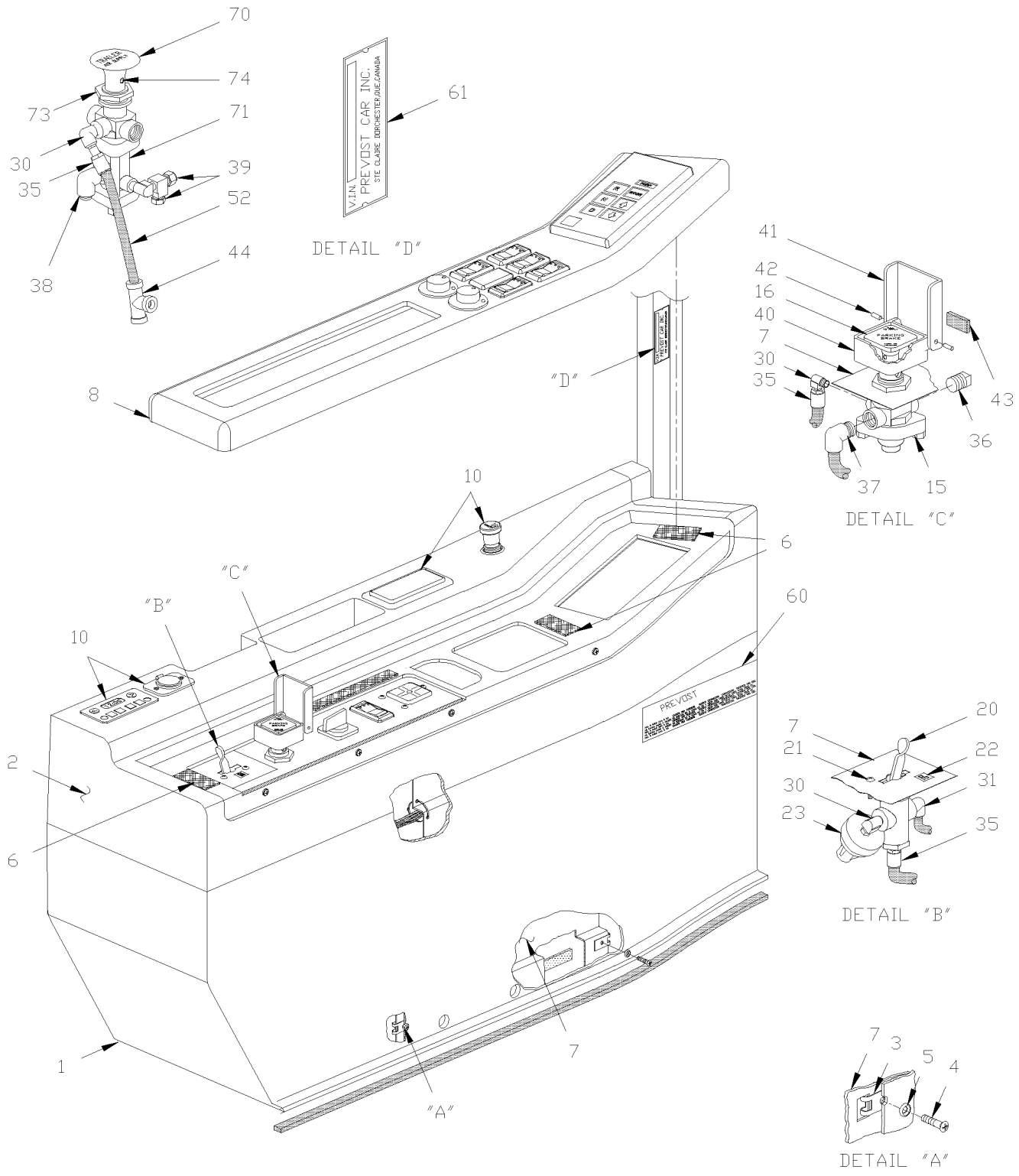

From Y-7046 Up to 8-9339	DATE: 01/2014	PAGE: Y2-1806-50

L.H. CONSOLE - MTH

ITEM	PART	DESCRIPTION	XL45	MTH40	MTH45	MTH45S	NOTE
1	392042	CONSOLE / LOWER		1	1	1	
2	392037	CONSOLE / UPPER		1	1	1	
3	5001405	NUT SPR U M4-.7 0.8-4.0x9.5		10	10	10	
4	5001414	SCREW MA FL PH M4-0.7x16 EMN		10	10	10	
5	500345	WASHER FN CKF .187x.500x.090 BR BK		10	10	10	
6	506493	TAPE DUAL LOCK 1/2" x 150' / BLACK SJ3541		AR	AR	AR	
7	392039	STRUCTURE ASSY		1	1	1	
8	392038	PANEL / W/AUTOMATIC TRANSMISSION		1	1	1	
10	Y2-0645-05	**SWITCHES L.H. CONSOLE - MTH**					
10	392043	DUMMY PLUG LIGHTER		1	1	1	
15	641128	VALVE, CONTROL VALVE PP-1 / 40PSI / REPLACED BY: 641571		1	1	1	
. NS	641154	. REPAIR KIT / PP-1 & RD-3 / (281126)		1	1	1	
16	641149	. BUTTON, PARKING BRAKE DIAMOND YELLOW / 1"		1	1	1	
20	640136	VALVE, CONTROL TW-1		1	1	1	
. NS	641156	. REPAIR KIT / TW-1		1	1	1	
21	500572	SCREW MA TR PH #10-24x1/2 SS EMN		2	2	2	
22	391992	DECAL "TAG"		1	1	1	
23	562518	PRESSURE SWITCH N.O. 4PSI / 1/8NPT W/2 SCREWS / TAG		1	1	1	
24	391994	DECAL "LEVEL LOW"		1	1	1	
30	501331	STREET ELBOW 90º / PIPE FITTING / 1/8NPT-Mx1/8NPT-F BR		3	3	3	
31	641369	MALE ELBOW 90° NON-SWIVEL / PUSH-IN FITTING #4x1/8NPT-M BR		3	3	3	
35	641349	MALE CONNECTOR / PUSH-IN FITTING / #6x1/8NPT-M BR		1	1	1	
36	501304	PLUG SQUARE HEAD / PIPE FITTING / 1/4NPT-M BR		1	1	1	
37	641371	MALE ELBOW 90° NON-SWIVEL / PUSH-IN FITTING #4x1/4NPT-M BR		1	1	1	
38	641372	MALE ELBOW 90° NON-SWIVEL / PUSH-IN FITTING #6x1/4NPT-M BR		1	1	1	
39	641002	MALE RUN TEE / NTA FITTING / #4x#4x1/8NPT-M BR		1	1	1	
40	391727	PROTECTOR BOX ASSY / OVER PARKING BRAKE VALVE		1	1	1	
40	391725	. BOX		1	1	1	
41	391726	. COVER / CLEAR PLASTIC		1	1	1	
42	505221	. SPRING, PIN 1/8 X 3/8		1	1	1	
43	506035	. TAPE RUB ADH1 NEO 1/2" x 1" x 15' / BLACK 1220X		1	1	1	
44	641922	UNION TEE / PUSH-IN FITTING / #6x#6x#6 BR		1	1	1	
52	Y2-1202-00	**TUBES PLASTIC / AIR D.O.T.**					
60	404984	PLATE / V.I.N. / W/IND. SUSPENSION FRONT		1	1	1	
60	405163	PLATE / V.I.N. / W/IND. SUSPENSION FRONT		1	1	1	
61	400640	PLATE / V.I.N.		1	1	1	
NS	504107	RIVET POP DOME OE 1/8x5/16 AL		6	6	6	
70	641935	BUTTON RED / FOR TRAILER VALVE PP-7		1	1	1	
71	641397	TRAILER SUPPLY VALVE PP-7		1	1	1	
NS	452043	PRESSURE SWITCH N.O. 60-35 20SP001AA060E035E		1	1	1	
73	640297	NUT		1	1	1	
74	640286	PIN ROLLER		1	1	1	

From Y-7046 Up to 6-8906	DATE: 01/2014	PAGE: Y2-1810-00
MODESTY PANEL R.H.		

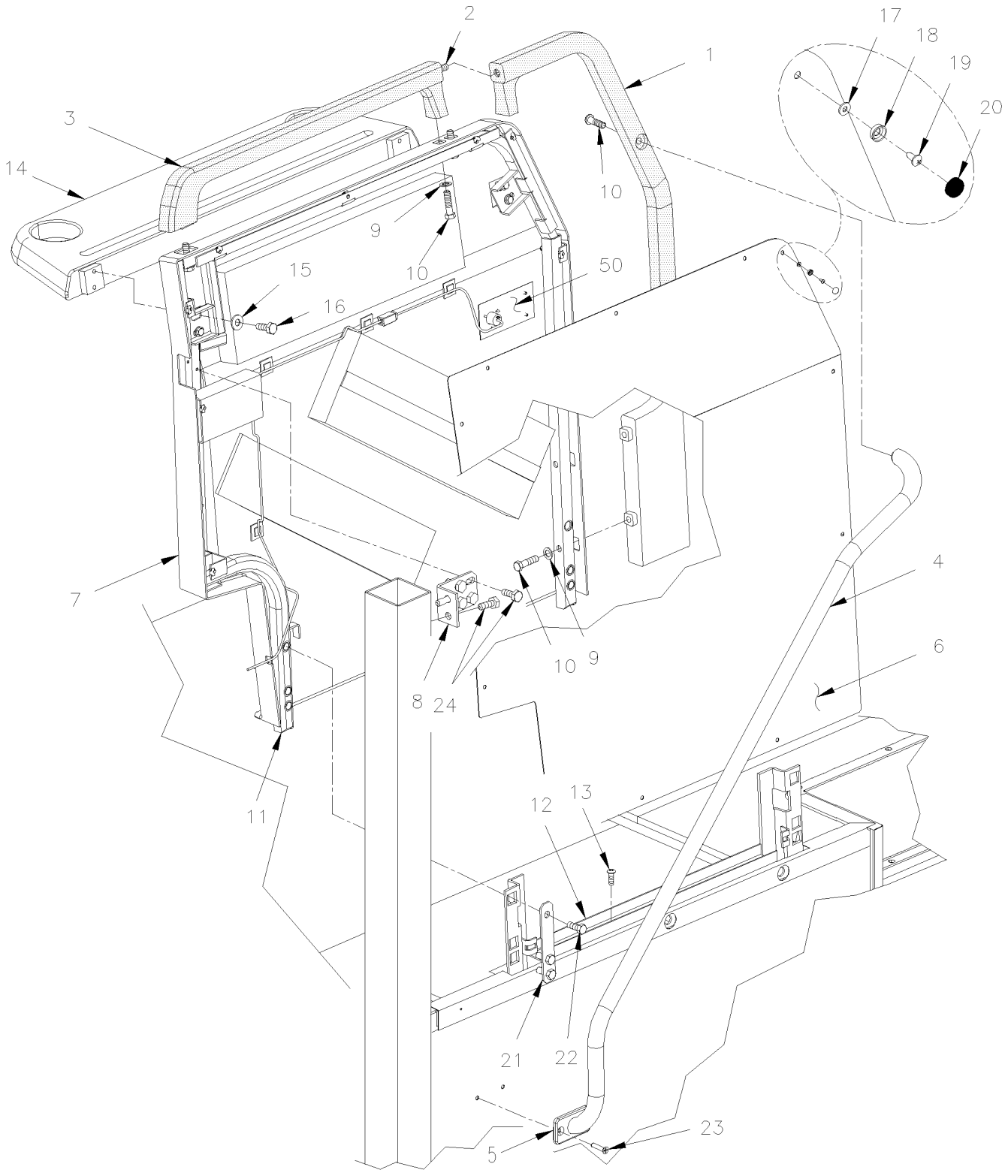

From Y-7046 Up to 6-8906	DATE: 01/2014	PAGE: Y2-1810-00

MODESTY PANEL R.H.

ITEM	PART	DESCRIPTION	XL45	MTH40	MTH45	MTH45S	NOTE
	327189	MODESTY PANEL R.H. ASSY	1				
	327188	MODESTY PANEL R.H. ASSY	1				A
	327248	MODESTY PANEL R.H. ASSY	1				B
	327247	MODESTY PANEL R.H. ASSY	1				
1	327197	HANDLE R.H.	1				
1	327250	HANDLE R.H.	1				B
2	5001513	SCREW CAP BUT HEXS 3/8x1 1/2 SS	1				
3	327196	HANDLE TOP	1				
4	327193	HANDRAIL CURBSIDE / BLACK	1				
4	3200538	HANDRAIL CURBSIDE / YELLOW	1				
4	327365	HANDRAIL CURBSIDE	1				B
5	327253	PLATE WALL CONNECTOR	1				
6	327260P	PANEL FRONT ASSY W/COVERING	1				
6	327261	. ALUMINUM PANEL	1				
NS	326962P	COVERING MODESTY PANEL "TISSUS" W/"LOGO" / EMBROIDERED	AR				
7	327200	PANEL REAR / PLASTIC	1				
7	327199	PANEL REAR / PLASTIC	1				A
NS	500803	NUT SPR J #10A .035-.050	9				
8	327321	ANGLE	1				
9	502510	WASHER FL .375x.875x.083	5				
10	500193	SCREW CAP HEX 3/8-16x1 1/2 G5 ZP	5				
11	327195	STRUCTURE ASSY R.H. MODESTY	1				
12	327353	CHANNEL 520MM / REPLACED BY: 320686	1				
13	500642	SCREW TP BDG PH #10x3/4 ZP	4				
14	327198	SHELF	1				
15	500440	WASHER FL .250x.562x.065 ZP	9				
16	500316	SCREW MA FL PH 1/4-28x3/4 SS	4				
17	500438	WASHER FL .187x.437x.050 ZP	4				
18	504399	WASHER RETAINER SNAP CAP #10	AR				
19	500613	SCREW TP PAN PH #10x1/2 ZP	AR				
20	504400	SNAP CAP #10 FINISHING BLACK	AR				
21	327478	PLATE RETAINER	AR				
22	500191	SCREW CAP HEX 3/8-16x1 G5 ZP	6				
23	502748	SCREW TP FL PH #14x1 1/4 EMN	2				
24	500923	SCREW TC CAP HEX 1/4-20x3/4 ZP / REPLACED BY: 5001515	4				
50	Y2-2315-00	**SOUND SYSTEM & ACCESSORIES - "R.E.I."**					
NS	320939	CUSHION PAD / 3" X 23" / KNEE GUARD	1				C
NS	500641	SCREW TP BDG PH #8x3/4 ZP	6				C
NS	500989	WASHER FL .219x.875x.062 ZP	6				
		A) TO USE WITH SHELF					
		B) TO USE WITH HOSTESS SEAT					
		C) WITH "OPTION"					

From Y-7046 Up to 6-8906	DATE: 01/2014	PAGE: Y2-1811-00
MODESTY PLEXIGLASS		

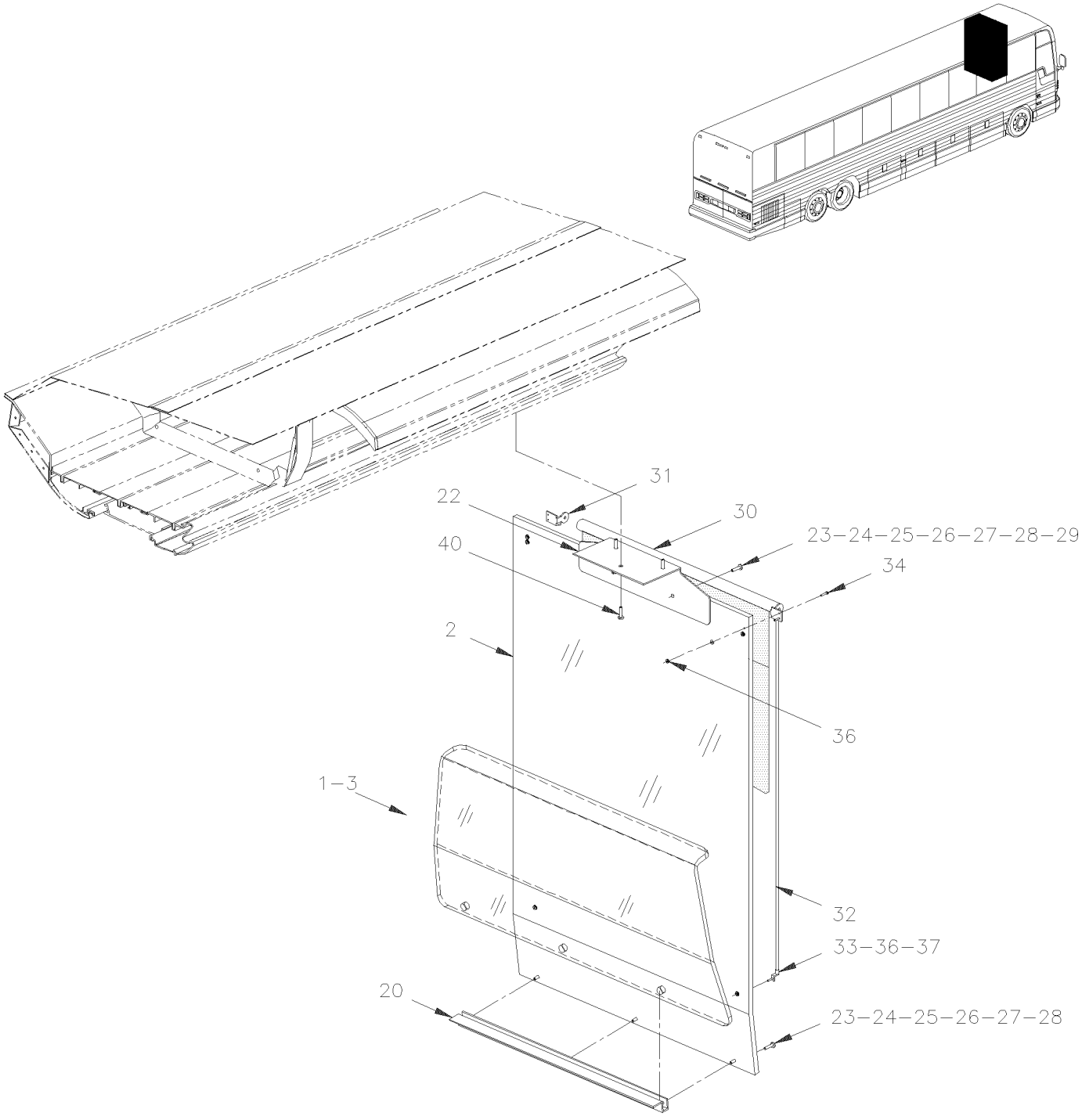

From Y-7046 Up to 6-8906	DATE: 01/2014	PAGE: Y2-1811-00

MODESTY PLEXIGLASS

ITEM	PART	DESCRIPTION	XL45	MTH40	MTH45	MTH45S	NOTE
1	328925	PLEXIGLASS / TINTED STREETSIDE / (233MM APROX	1				
1	326286	PLEXIGLASS / CLEAR STREETSIDE / (233MM APROX)	1				
2	327359	PLEXIGLASS / CLEAR STREETSIDE / (831MM APROX)	1				
2	327358	PLEXIGLASS / TINTED STREETSIDE / (831MM APROX	1				
3	328852	PLEXIGLASS / CLEAR CURBSIDE / (333MM APROX)	1				
3	320133	PLEXIGLASS / CLEAR CURBSIDE / (233MM APROX)	1				
3	328926	PLEXIGLASS / TINTED CURBSIDE / (233MM APROX)	1				
10	500632	SCREW TP OV PH #8x1 1/2 ZP	7				
13	5001168	BUMPER RUBBER / .750 OD x .562 TH x .187 HOLE	4				
20	Y2-1810-00	**MODESTY PANEL R.H.**					
20	Y2-1812-00	**MODESTY PANEL L.H.**					
22	326355	BRACKET ANGLE	1				
22	320061	BRACKET ANGLE / LIGHT GREY / "OPTION"	2				O
22	506002	TAPE RUB ADH1 CC POL 3/16" x 1/2" x 40' / GREY 2520	AR				O
23	504399	WASHER RETAINER SNAP CAP #10	5				
24	504400	SNAP CAP #10 FINISHING BLACK	5				
25	900251	BUSHING, RUBBER	6				
26	400380	SPACER 5/16 O.D. x 17/32" x 18GA / REPLACED BY: 505539	5				
26	505539	SPACER 5/16 O.D. x 17/32" x 18GA	5				
27	500989	WASHER FL .219x.875x.062 ZP	5				
27	5001378	WASHER LO EXT 5.3x10x0.6 ZP	2				O
28	5001317	SCREW MA PAN PH #8-32x1 SS	5				
NS	500574	SCREW MA TR PH #10-24x1 1/4 SS	2				O
29	500764	NUT HEX #8-32 ZP	5				
NS	500891	NUT HEX CAP #10-24 ZP	2				O
30	900596	BLIND ROLLER / 600MM CHARCOAL Up to 2-7768 / REPLACED BY: 901042	1				
30	901042	BLIND ROLLER / 600MM CHARCOAL From 2-7769	1				
31	900478	BEARING HOLDER / R.H. / BLACK CASTING	1				
32	401901	ROD, 26" / BACKWARD	2				
33	900476	ROD HOLDER 90° / BLACK PLASTIC 30MM C/L	2				
34	502666	SCREW MA FL PH #6-32x3/4 SS EMN	2				
36	500689	NUT HEX #6-32 ZP	6				
37	5001303	SCREW MA BDG PH #6-32x1 ZP EMN	2				
40	500626	SCREW TP OV PH #8x3/4 ZP	2				
40	500463	WASHER FN CKF .187x.500x.090 BR NP	2				
		O) LOCATED EACH SIDE OF PLEXIGLASS / "OPTION"					

From Y-7046 Up to 6-8906	DATE: 01/2014	PAGE: Y2-1812-00
MODESTY PANEL L.H.		

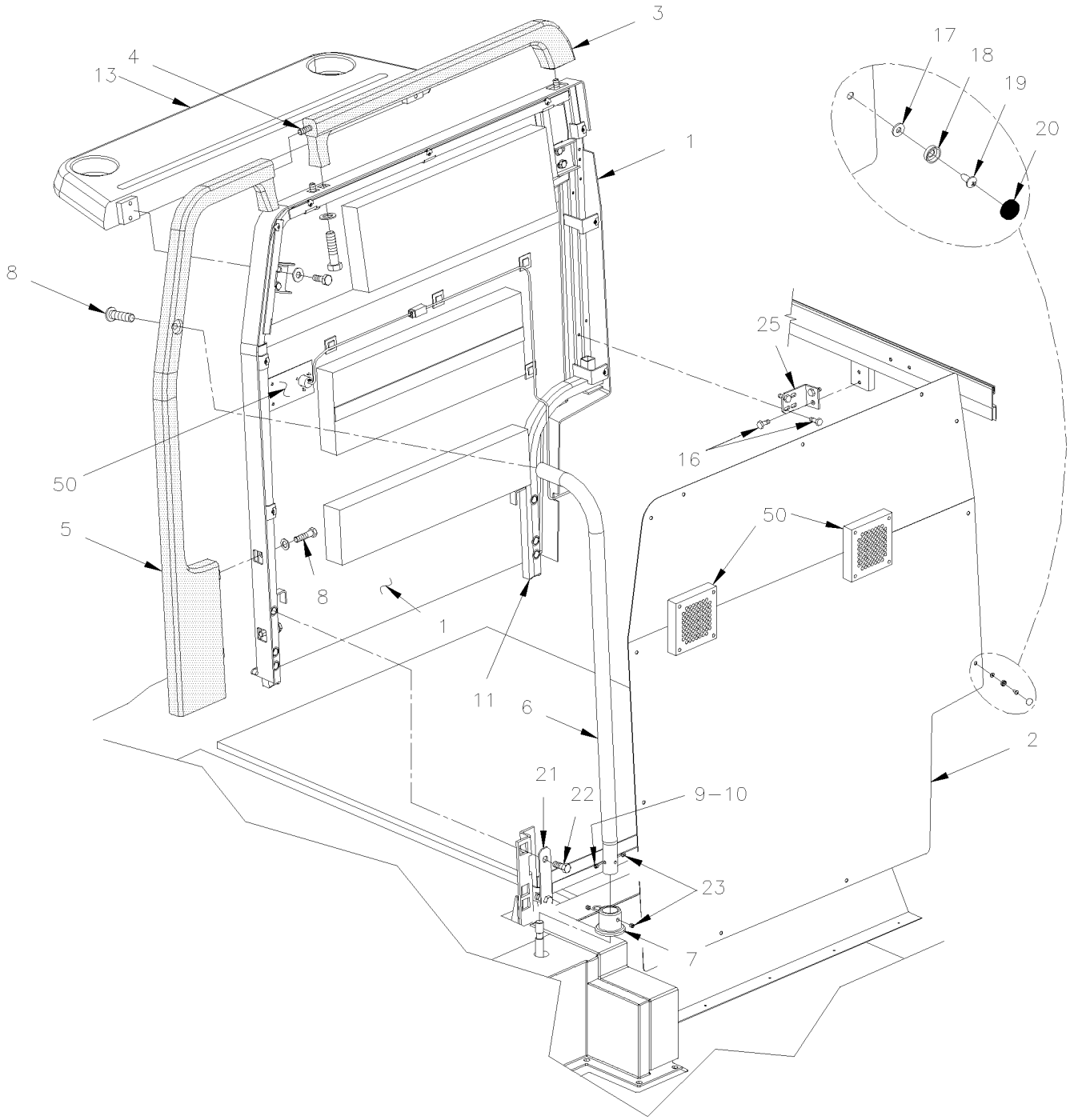

From Y-7046 Up to 6-8906	DATE: 01/2014	PAGE: Y2-1812-00

MODESTY PANEL L.H.

ITEM	PART	DESCRIPTION	XL45	MTH40	MTH45	MTH45S	NOTE
	327190	MODESTY PANEL R.H. ASSY	1				
	327191	MODESTY PANEL L.H. ASSY	1				
1	327205	PANEL REAR / PLASTIC	1				
1	327204	PANEL REAR / PLASTIC	1				A
1	327202	STRUCTURE ASSY L.H. MODESTY	1				
NS	500803	NUT SPR J #10A .035-.050	9				
2	327368P	PANEL FRONT ASSY W/COVERING S.C.C. / USE W/SPEAKER Up to 1-7428	1				
2	328884P	PANEL FRONT ASSY W/COVERING S.C.C. / USE W/SPEAKER Up to 1-7428	1				B
2	327792P	PANEL FRONT ASSY W/COVERING S.C.C. From 1-7429	1				
2	327261	. ALUMINUM PANEL Up to 1-7428	1				
2	327225	. ALUMINUM PANEL / USE W/SPEAKER 92MM O.D. / UPPER PANEL From 1-7429	1				
2	327259	. ALUMINUM PANEL / W/OUT SPEAKER	1				
3	327196	HANDLE TOP	1				
4	5001513	SCREW CAP BUT HEXS 3/8x1 1/2 SS	1				
5	327203	HANDLE L.H.	1				
6	327194	HANDRAIL STREETSIDE / BLACK	1				
6	3200535	HANDRAIL STREETSIDE / YELLOW	1				
7	327254	COLLAR	1				
8	500193	SCREW CAP HEX 3/8-16x1 1/2 G5 ZP	5				
9	327353	CHANNEL 520MM / REPLACED BY: 320686	1				
10	500642	SCREW TP BDG PH #10x3/4 ZP	1				
11	327202	STRUCTURE ASSY L.H. MODESTY	1				
12	500923	SCREW TC CAP HEX 1/4-20x3/4 ZP / REPLACED BY: 5001515	1				
13	327198	SHELF	1				
14	500440	WASHER FL .250x.562x.065 ZP	4				
15	500316	SCREW MA FL PH 1/4-28x3/4 SS	4				
16	500923	SCREW TC CAP HEX 1/4-20x3/4 ZP / REPLACED BY: 5001515	4				
17	500438	WASHER FL .187x.437x.050 ZP	AR				
18	504399	WASHER RETAINER SNAP CAP #10	AR				
19	500613	SCREW TP PAN PH #10x1/2 ZP	AR				
20	504400	SNAP CAP #10 FINISHING BLACK	AR				
21	327478	PLATE RETAINER	1				
22	500191	SCREW CAP HEX 3/8-16x1 G5 ZP	3				
23	500306	. SCREW SET HEXS CUP 1/4-20x1/4	1				
25	327321	ANGLE	1				
50	Y2-2315-00	**SOUND SYSTEM & ACCESSORIES - "R.E.I."**					
		A) TO USE WITH SHELF					
		B) SERVICE ONLY					

From Y-7046 Up to 6-8906	DATE: 01/2014	PAGE: Y2-1814-01

DESTINATION SIGN - ELECTRICAL

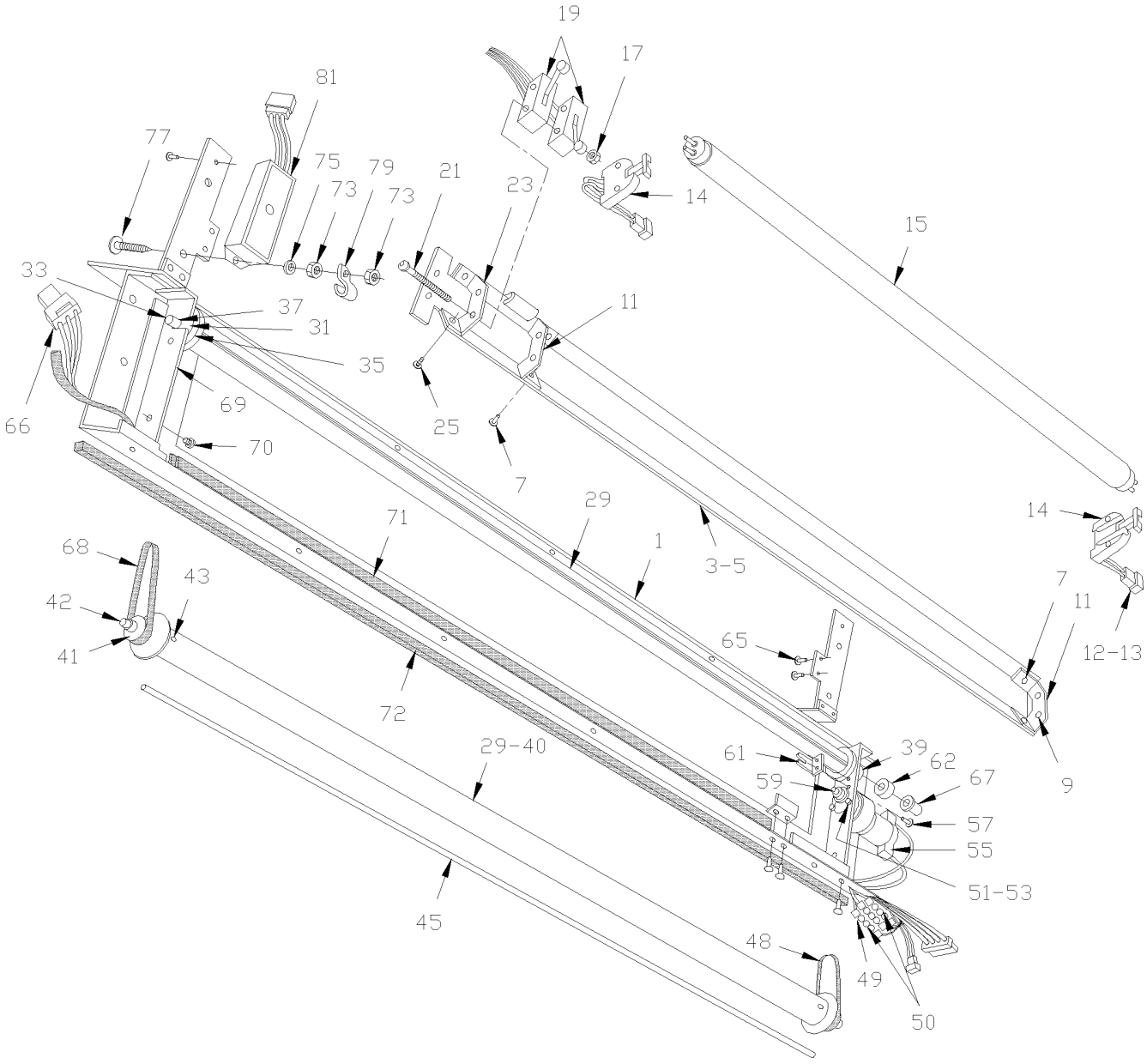

From Y-7046 Up to 6-8906	DATE: 01/2014	PAGE: Y2-1814-01

DESTINATION SIGN - ELECTRICAL

ITEM	PART	DESCRIPTION	XL45	MTH40	MTH45	MTH45S	NOTE
	Call Order Desk	DESTINATION SIGN ASSY	1				P
1	440330	. FRAME ASSY	1				
3	440237	. SUPPORT ASSY / TO FIX FLUORESCENT TUBE & ACCESSORIES	1				
5	440240	. . REFLECTOR	1				
7	504114	. . RIVET POP DOME OE 3/16x1/4 AL	4				
9	500518	. . SCREW MA BDG PH #4-40x1/2 ZP	4				
11	440227	. . BRACKET / TO FIX BIPIN HOLDER	2				
12	560900	. . CONNECTOR / COM. MATE-N-LOCK / PH 2C / AMP 1-480319-0	2				
13	560853	. . PIN TERMINAL / 24-18 / AMP 60618-1	4				
14	830101	. . SOCKET / BIPIN HOLDER	2				
15	830120	. . TUBE / 30WATT / F30T8CW4 - 30"/ G13 MED BIPIN	1				
17	502717	. . NUT HEX NYRT #6-32 ZP	4				
19	561109	. . MICRO SWITCH	2				
21	502718	. . SCREW MA PAN PH #6-32x2 ZP	2				
23	440236	. . BRACKET / TO FIX MICROSWITCH	1				
25	500148	. . SCREW MA RND PH #6-32x1/2 SS	2				
NS	506338	. . RUBBER CHANNEL / 1/16" x 1/4" INT "U" SHAPE / ROUND C.T.L.	AR				
NS	440238	. ROLLER ASSY	1				
29	440195	. . ROLLER	1				
31	940030	. . PULLEY	1				
33	440225	. . ROD	1				
NS	440252	. . SPRING EXTENSION / .500 O.D. x 10.562 x .054	1				
NS	505407	. . SPRING, PIN 1/8 x 1/2 SS	1				
35	440255	. . GUIDE ASSY	1				
37	500440	. . WASHER FL .250x.562x.065 ZP	1				
39	440254	. . GUIDE ASSY	1				
NS	504006	. . RIVET POP CK OE 1/8x5/16 AL	2				
NS	440239	. ROLLER ASSY	1				
40	440195	. . ROLLER	1				
41	940030	. . PULLEY	2				
42	440254	. . GUIDE ASSY	2				
43	504006	. . RIVET POP CK OE 1/8x5/16 AL	2				
45	440213	. ROD / TO FIX CURTAIN	2				
NS	440250P	. CURTAIN / TO PRINT NAMES / SPECIFIED NAMES	1				A
NS	940023	. . CURTAIN WHITE / S.L.	AR				
48	940033	. BELT / 80TH	1				
49	062807	. RESISTOR ASSY 82 OHMS 2 W	1				
49	562108	. . RESISTOR / 82 OHMS / 2 W	2				
49	561539	. . TAB RECEPTACLE TERMINAL INSUL. NYLON / 16 / AMP 3-520141-2	2				
49	561761	. . SHRINK TUBING / .750" - .375" / BLACK / ALPHA FIT-221-3/4-4B	AR				
50	062339	. DIODE ASSY	2				
		P) CALL ORDER DESK FOR SPECIFIC APPLICATION					
		(V.I.N.)					
		A) NOT INCLUDE IN ASSY #440241P					

From Y-7046 Up to 6-8906	DATE: 01/2014	PAGE: Y2-1814-01

DESTINATION SIGN - ELECTRICAL

ITEM	PART	DESCRIPTION	XL45	MTH40	MTH45	MTH45S	NOTE
50	561904	. . TAB TERMINAL INSULATION NYLON / 22-18 / AMP 2-520103-2	1				
50	560931	. . DIODE / 3AMPS	1				
50	561626	. . TAB RECEPTACLE TERMINAL INSUL. NYLON / 22 / AMP 2-520264-4	1				
50	560785	. . SHRINK TUBING / .375" - .187" / BLACK / ALPHA FIT-300-3/8-4B	AR				
51	502724	. SCREW CAP HEX #10-32x1/4 BZC	2				
53	500240	. WASHER LO EXT .195x.410x.025 ZP	2				
55	940031	. MOTOR	1				
57	504103	. RIVET POP DOME OE 1/8x1/8 AL	2				
59	440249	. PULLEY MOTOR	1				
61	440224	. BRACKET	1				
62	440220	. SPACER	1				
65	504114	. RIVET POP DOME OE 3/16x1/4 AL	4				
66	062810	. CABLE / FROM DESTINATION SIGN TO HARNESS	1				
67	507138	. BUSHING, NYLINER W/SHOULDER (4-L-4-F)	4				
68	940032	. BELT / 128TH	1				
69	440222	. PLATE	1				
70	500417	. SCREW TP BDG PH #6x3/8 ZP	2				
71	506071	. TAPE RUB ADH1 CC POL 1/8" x 1/2" x 50' / GREY 2520X	AR				
72	506268	. TAPE RUB ADH1 URE 3/8" x 1/2" x 25' / GREY 1820	AR				
73	500786	. NUT HEX #10-24 ZP	3				
75	500964	. WASHER FL .203x.500x.047 ZP	2				
77	500387	. SCREW MA RND PH #10-24x3/4 ZP	2				
79	560479	. CLAMP / 3/8" I.D. / REPLACED BY: 952625	1				
81	330236	. BALLAST ASSY / 24 VOLTS / REPLACED BY: 830121	1				
81	830121	. . BALLAST / 24 VOLTS	1				
81	561667	. . CONNECTOR / UNIVERSAL MATE-N-LOK / PH 3C / AMP 1-480701-0	1				
81	561513	. . PIN TERMINAL / 20-14 / AMP 350538-3	3				
81	504273	. CABLE TIE / 1/8" X 3"1/2	AR				

From Y-7046 Up to 6-8906	DATE: 01/2014	PAGE: Y2-1814-01

DESTINATION SIGN - ELECTRICAL

ITEM	PART	DESCRIPTION	XL45	MTH40	MTH45	MTH45S	NOTE

From Y-7046 Up to 6-8906	DATE: 01/2014	PAGE: Y2-1814-02
DESTINATION SIGN - "POCATEC"		

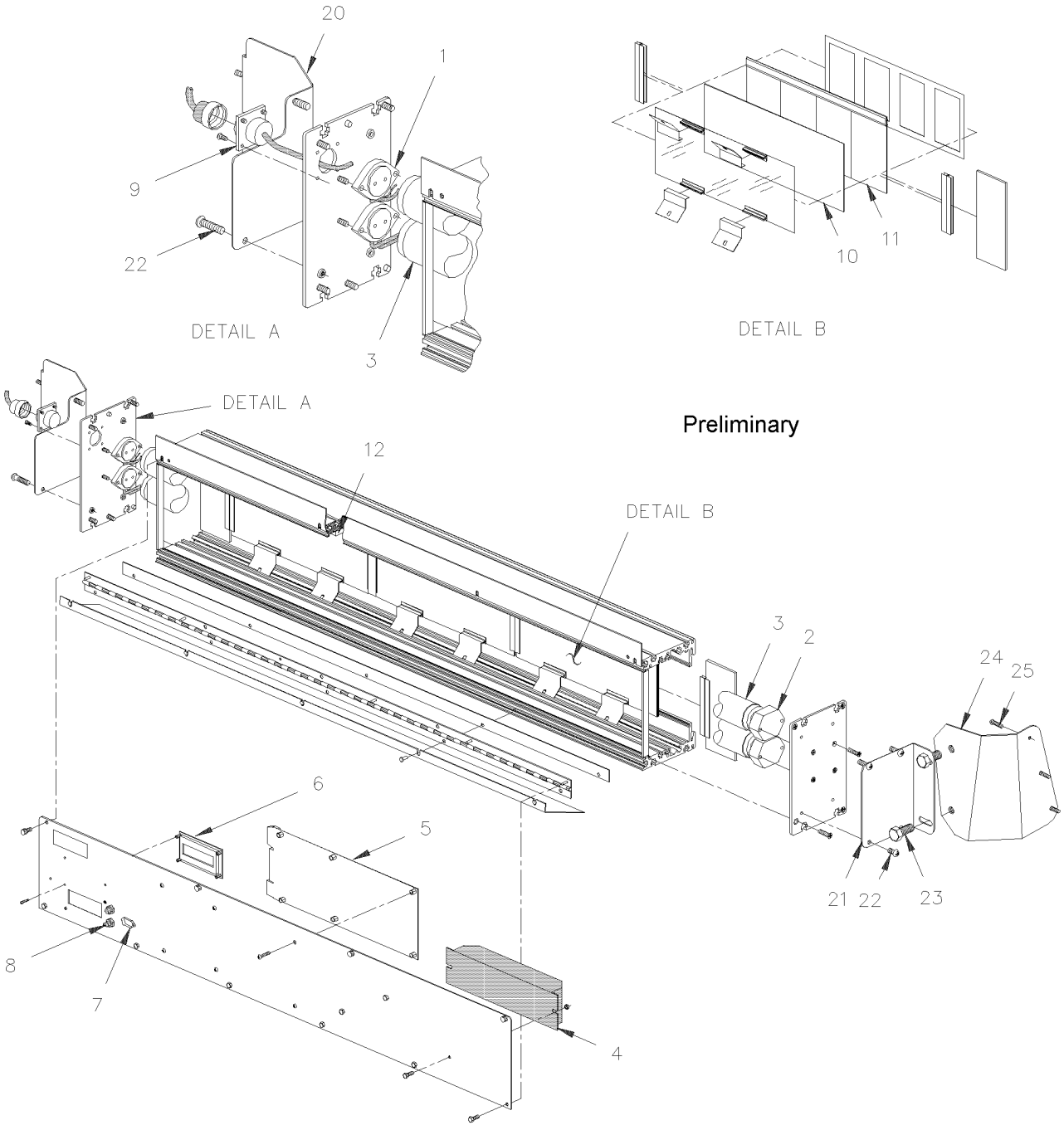

From Y-7046 Up to 6-8906	DATE: 01/2014	PAGE: Y2-1814-02

DESTINATION SIGN - "POCATEC"

ITEM	PART	DESCRIPTION	XL45	MTH40	MTH45	MTH45S	NOTE
	940050	FRONT DESTINATION SIGN "POCATEC"	1				
1	830162	. FLUORESCENT SOCKET NON RETRACTABLE	2				
2	830163	. FLUORESCENT SOCKET RETRACTABLE	2				
3	830161	. TUBE / 30WATT / F30T12/CW/RS -36"/G13MED BIPIN	2				
4	940052	. BALLAST	1				
5	940044	. CONTROL BOARD	1				
NS	562309	. . FUSE / 2 AMPS / 2A	1				
6	940045	. REAR CD DISPLAY	1				
7	N.S.P.	. SERIAL LINK CONNECTOR / (205203-1)	1				2
NS	N.S.P.	. SOCKET, SERIAL LINK CONNECTOR CONTACT / (5-66504-9)	AR				2
8	940046	. ROUTE SELECTOR BUTTON	2				
9	561635	. CONNECTOR / CPC SERIES 1 / PH 9C / AMP 206705-1	1				
NS	N.S.P.	. PIN, SIGN CONNECTOR CONTACT / (66361-2)	AR				2
10	940047	. FRONT LEXAN WINDOW	3				
11	940048	. 4 CHARACTERS GLASS ASSY	3				
12	940053	. INTERFACE BOARD	1				
20	440312	SUPPORT L.H. / W/DIGITAL	1				
21	440313	SUPPORT R.H. / W/DIGITAL	1				
22	500873	SCREW MA RND PH #8-32x3/4 SS EMN	6				
NS	500163	SCREW CAP HEX 1/4-20x3/4 G5 ZP	2				
23	500440	WASHER FL .250x.562x.065 ZP	2				
NS	500478	WASHER LO SPT .380x.683x.094 ZP	2				
24	440314	SUPPORT R.H. / W/DIGITAL	1				
25	500333	SCREW TP OV PH #6x3/4 BK	6				
NS	500345	WASHER FN CKF .187x.500x.090 BR BK	6				
NS	440309	COVER / WDIGITAL	1				
NS	940051	CABLE ADAPTOR / INTERFACE / W/CD PC TO DESTINATION SING	1				
		2) NOT SOLD BY PREVOST (SEE MANUFACTURING PART					
		NUMBER AT END OF DESCRIPTION LINE)					

From Y-7046 Up to 6-8906	DATE: 01/2014	PAGE: Y2-1814-05

DESTINATION SIGN - INSTALLATION

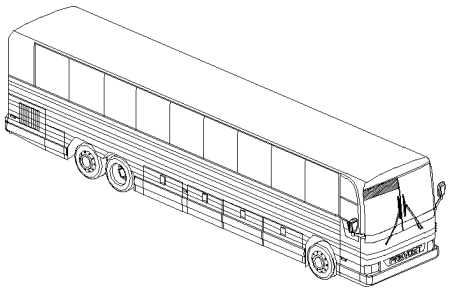

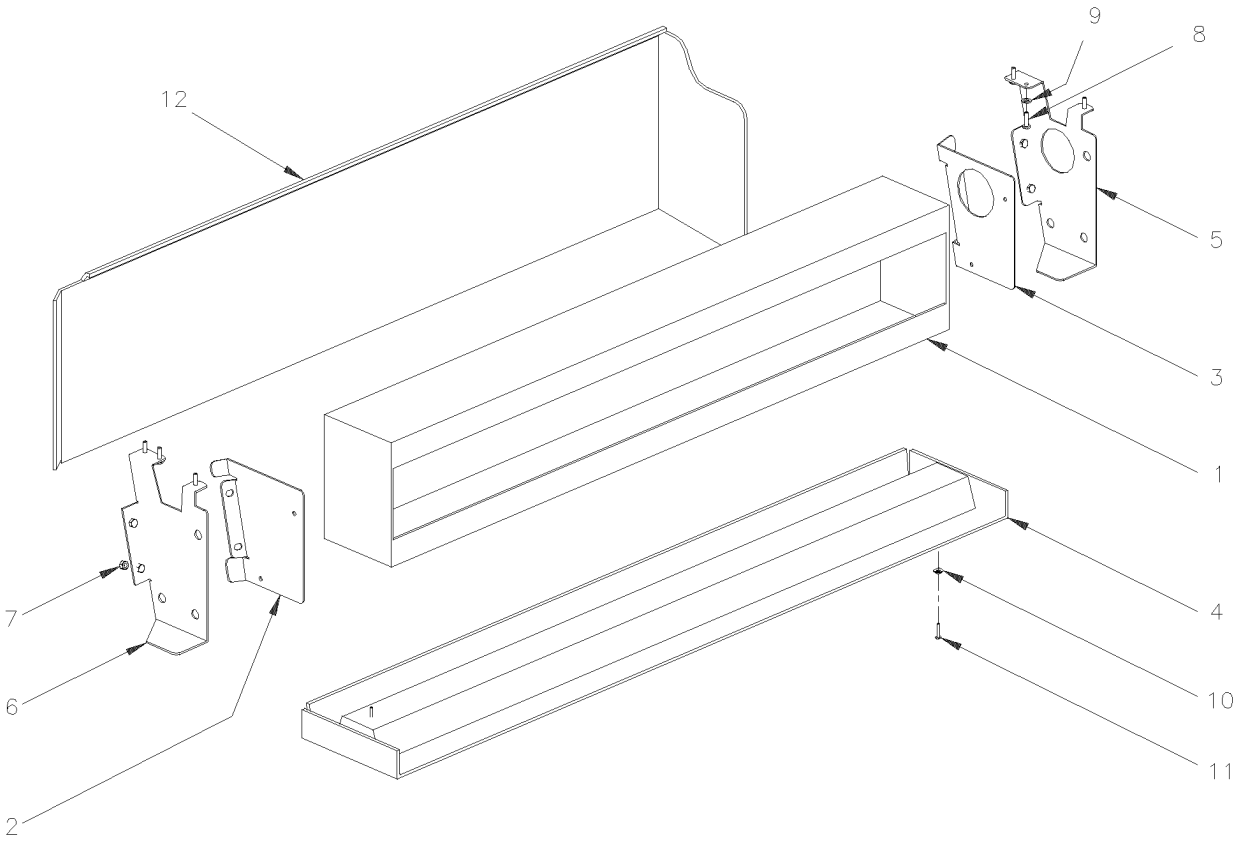

From Y-7046 Up to 6-8906	DATE: 01/2014	PAGE: Y2-1814-05

DESTINATION SIGN - INSTALLATION

ITEM	PART	DESCRIPTION	XL45	MTH40	MTH45	MTH45S	NOTE
1	940050	FRONT DESTINATION SIGN "POCATEC"	1				
2	440364	SUPPORT R.H. / W/"POCATEC"	1				
3	440363	SUPPORT L.H. / W/"POCATEC"	1				
4	440361	COVER UNDER	1				
5	440359	SUPPORT L.H. / W/DIGITAL Up to 3-7991 / REPLACED BY: 440372	1				
5	440372	SUPPORT L.H. / W/"POCATEC From 3-7992	1				
6	440362	SUPPORT R.H. / W/"POCATEC" Up to 3-7991 / REPLACED BY: 440371	1				
6	440371	SUPPORT R.H. / W/"POCATEC" From 3-7992	1				
7	502511	NUT HEX NYRT M6-1.0 ZP	4				
8	500658	SCREW TC PAN PH #10-24x3/4 ZP	6				
9	500473	WASHER LO SPT .262x.489x.062 ZP	6				
10	500463	WASHER FN CKF .187x.500x.090 BR NP	10				
11	500552	SCREW TP OV PH #6x3/4 ZP	10				
12	440360	COVER REAR / W"POCATEC"	1				
NS	500260	SCREW TC FL PH #8-32x3/4 BK	6				
20	400638	MOULDING / 11" / "U" SHAPE DRIVER'S NAME HO	1				
21	400636	PLATE / STAMPED "NOM DU CONDUCTEUR"	1				
21	400637	PLATE / STAMPED "DRIVER'S NAME" / REAR	1				
21	400601	PLATE (BLANK) / FOR DRIVER'S NAME / SPECIFY NAME	1				

From Y-7046 Up to 8-9339	DATE: 01/2014	PAGE: Y2-1816-00

ROLLER BLIND - DRIVER' S & WINDSHIELD

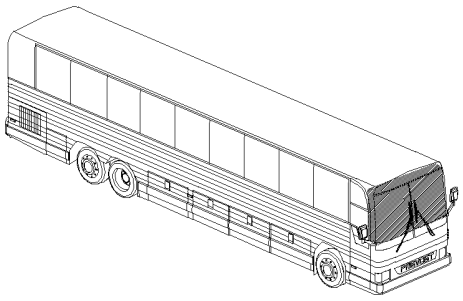

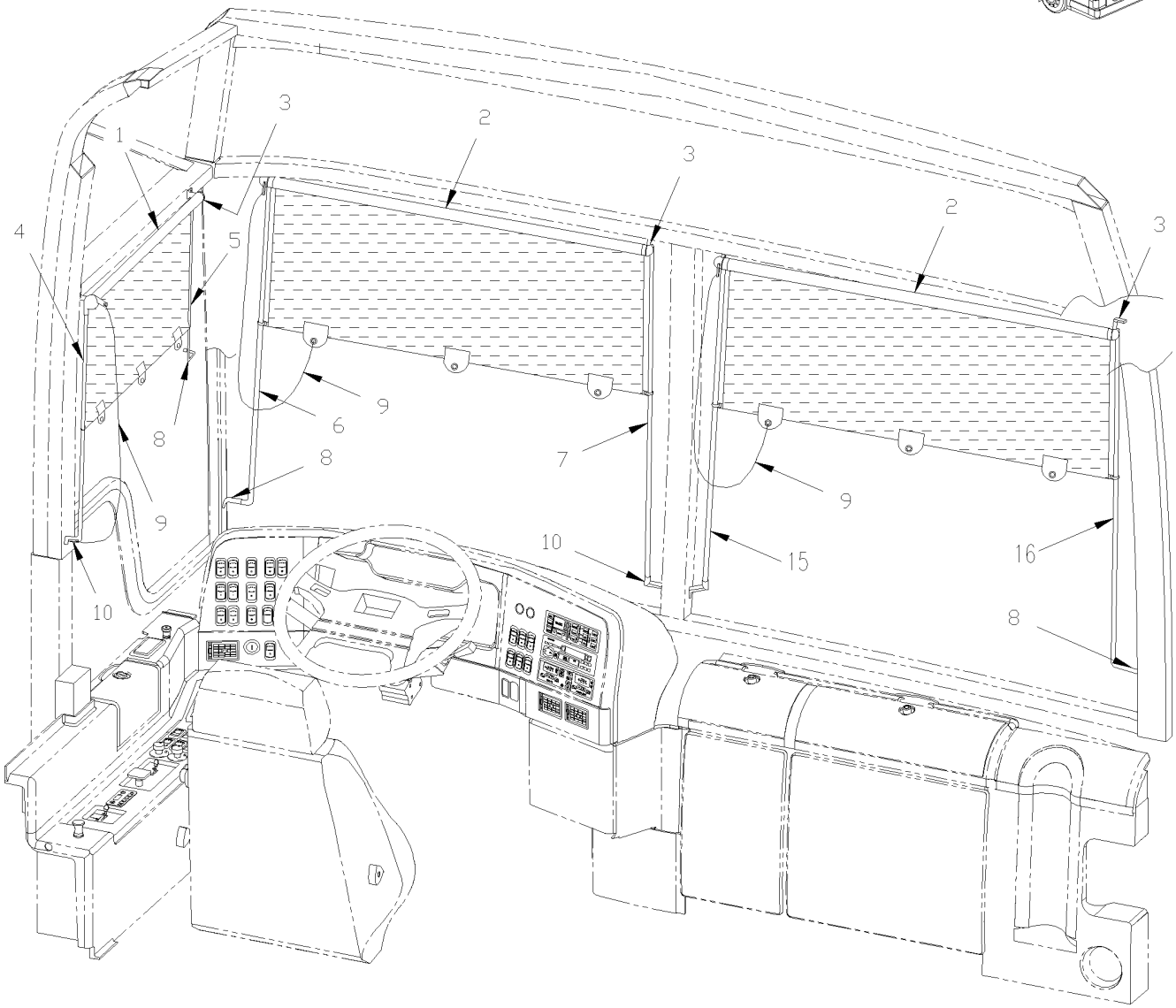

From Y-7046 Up to 8-9339	DATE: 01/2014	PAGE: Y2-1816-00

ROLLER BLIND - DRIVER' S & WINDSHIELD

ITEM	PART	DESCRIPTION	XL45	MTH40	MTH45	MTH45S	NOTE
1	900596	BLIND ROLLER / 600MM CHARCOAL Up to 2-7768 / REPLACED BY: 901042	1	1	1	1	
1	901042	BLIND ROLLER / 600MM CHARCOAL From 2-7769	1	1	1	1	
NS	900597	. GUIDING PLUG / EACH END OF BLIND	2	2	2	2	
2	900486	BLIND ROLLER / 996MM CHARCOAL Up to 2-7768 / REPLACED BY: 901043	1	1	1	1	
2	901043	BLIND ROLLER / 996MM CHARCOAL From 2-7769	1	1	1	1	
NS	900597	. GUIDING PLUG / EACH END OF BLIND	2	2	2	2	
3	900478	BEARING HOLDER / R.H. / BLACK CASTING	1	1	1	1	
NS	500333	SCREW TP OV PH #6x3/4 BK	AR	AR	AR	AR	
4	405069	ROD, 640MM X 25MM / BACKWARD	1	1	1		B
4	405129	ROD, 720MM X 25MM / BACKWARD		1	1	1	C
5	405192	ROD, 481MM X 130MM / FORWARD	1	1	1		B
5	405193	ROD, 670MM X 126MM / FORWARD		1	1	1	C
6	405071	ROD, 718MM X 107MM / L.H. STREET SIDE	1	1	1	1	
7	405070	ROD, 710MM X 20MM / R.H. STREET SIDE	1	1	1	1	
8	403570	ROD HOLDER / BLACK / STEEL Up to 8-9212 / REPLACED BY: 901263	3	3	3	3	
8	901263	ROD HOLDER / BLACK / PLASTIC 50MM From 8-9213		3	3	3	
NS	5001091	SCREW TC PAN PH #4-40x1/4 BK	AR	AR	AR	AR	
NS	500864	SCREW CAP HEX 1/2-13x3/4 G5 ZP	4	4	4	4	
9	900482	CORD, 1700MM W/BUTTON / BLACK	1	1	1	1	
NS	500333	SCREW TP OV PH #6x3/4 BK	AR	AR	AR	AR	
NS	500814	SCREW TP BDG PH #6x3/4 BK	AR	AR	AR	AR	
10	900476	ROD HOLDER 90° / BLACK PLASTIC 30MM C/L	AR	AR	AR	AR	
NS	500814	SCREW TP BDG PH #6x3/4 BK	AR	AR	AR	AR	
NS	5001091	SCREW TC PAN PH #4-40x1/4 BK	AR	AR	AR	AR	
15	405077	ROD, 710MM X 20MM / L.H. CURBSIDE	1	1	1	1	
15	405138	ROD, 478MM X 22MM / L.H. CURBSIDE	1				A
16	405072	ROD, 718MM X 107MM / R.H. CURBSIDE	1	1	1	1	
16	405137	ROD, 445MM X 79MM / R.H. CURBSIDE	1				A
		FOLLOWING ITEMS ARE USED ONLY FOR DELIVERY					
NS	405934	ROD RH 746MM		1	1	1	
NS	405935	ROD LH 755MM		1	1	1	
NS	405936	SUN VISOR 395MM X 1054MM		1	1	1	
NS	504273	CABLE TIE / 1/8" X 3"1/2		4	4	4	
NS	952622	WIRE CLAMP / 5/32" I.D.		2	2	2	
		A) BUS WITH DESTINATION SIGN					
		B) BUS & MTH 83"					
		C) MTH 86" & 89"					

From Y-7046 Up to 8-9339	DATE: 01/2014	PAGE: Y2-1816-01

ROLLER BLIND - WINDSHIELD W/ELECTRICAL

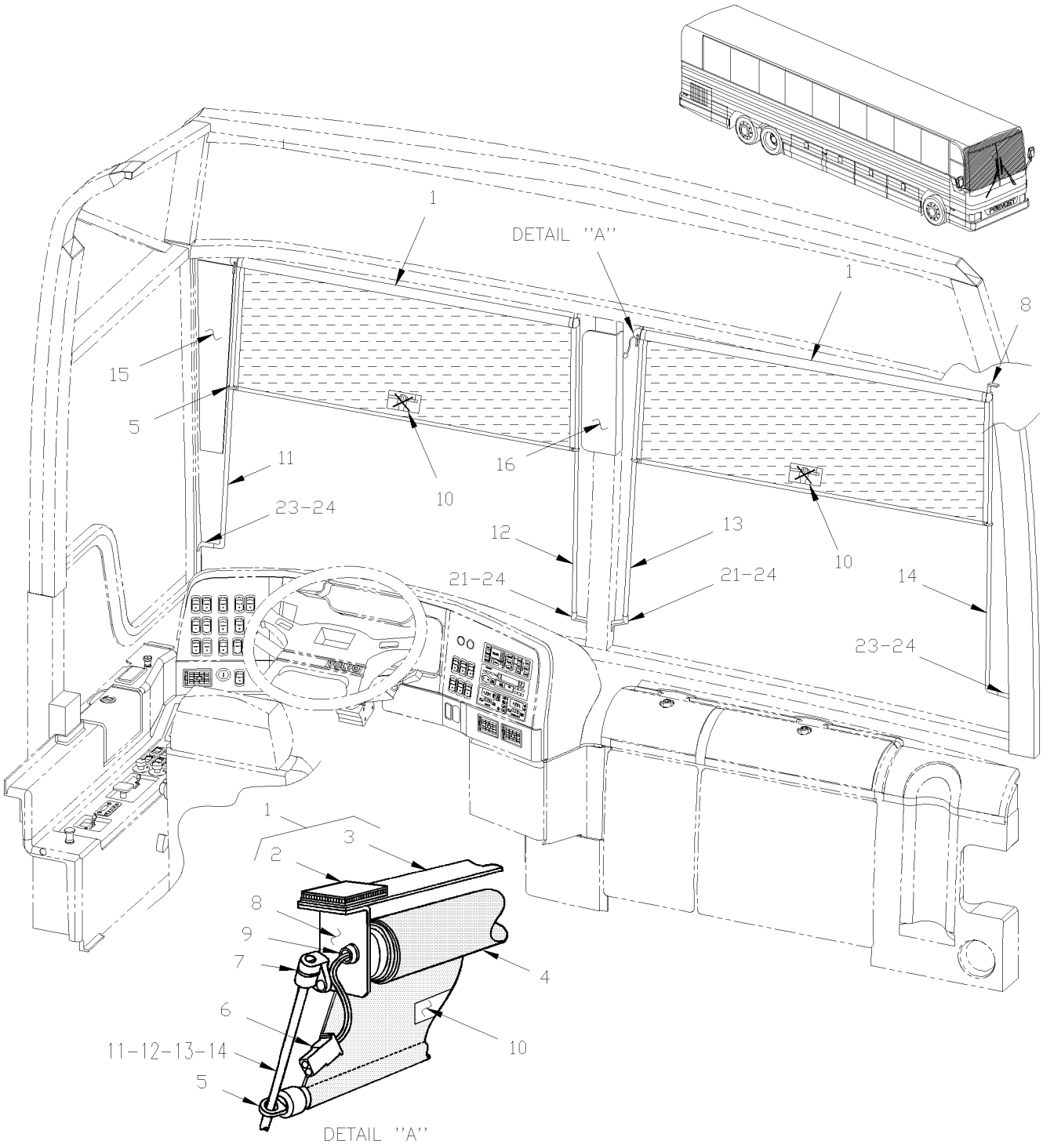

From Y-7046 Up to 8-9339	DATE: 01/2014	PAGE: Y2-1816-01

ROLLER BLIND - WINDSHIELD W/ELECTRICAL

ITEM	PART	DESCRIPTION	XL45	MTH40	MTH45	MTH45S	NOTE
1	402950	ROLLER BLIND ASSY / ELECTRIC Up to 2-7768 / REPLACED BY: 901121	1				
2	506318	. TAPE DUAL LOCK 1" x 150' / BLACK SJ3541 Up to 2-7768	AR				
3	402948	. BRACKET Up to 2-7768	1				
4	900590	. ROLLER BLIND ELECTRIC Up to 1-7641 / REPLACED BY: 900986	1				
4	901040	. ROLLER BLIND ELECTRIC From 1-7642 Up to 2-7768 / REPLACED BY: 901121	1				
4	900986	. ROLLER BLIND ASSY / ELECTRIC From 2-7769 Up to 5-8535 / REPLACED BY: 901121	1				
4	901121	. ROLLER BLIND ASSY / ELECTRIC From 5-8536	1				
5	900597	. . GUIDING PLUG / EACH END OF BLIND	1				
6	500898	. SCREW CAP HEX 7/16-14x1 3/4 G5 ZP	1				
6	560854	. SOCKET TERMINAL / 24-18 / AMP 60617-1	2				
7	900594	. BRACKET KIT ASSY R.H. Up to 2-7768 / REPLACED BY: 901048					A
7	900554	. BRACKET KIT ASSY L.H. Up to 2-7768 / REPLACED BY: 901048	1				C
7	504106	. RIVET POP DOME OE 1/8x1/4 AL Up to 2-7768	2				
7	901048	. KIT BRACKET L.H. & R.H. From 2-7769	1				
8	402949	. BRACKET / L.H. Up to 2-7768	1				
8	402972	. BRACKET / R.H. Up to 2-7768	1				
8	504105	. RIVET POP DOME OE 1/8x3/16 AL Up to 2-7768	4				
9	507309	. BUSHING NYLINED .312x.375x.078x.500 Up to 2-7768	1				
NS	500437	. WASHER FL .125x.375x.040 ZP Up to 2-7768	2				
NS	502564	. WASHER LO SPT 6.1x11.8x1.6 ZP Up to 2-7768	1				
10	402952	. DECAL	1				
11	404990	ROD, 730MM X 70MM Up to 3-7973	1				
11	405373	ROD, 730MM X 70MM / STREET SIDE / 10 DEG BEND From 3-7974	1				
11	404990	ROD, 730MM X 70MM Up to 3-8018		1	1	1	
11	405373	ROD, 730MM X 70MM / STREET SIDE / 10 DEG BEND From 3-8019		1	1	1	
11	405255	ROD, 882MM X 70MM / L.H. STREETSIDE	1				B
12	401898	ROD, 29" Up to 3-7973	1				
12	405374	ROD, 737MM / CURBSIDE / 10 DEG BEND From 3-7974	1				
12	401898	ROD, 29" Up to 3-8018		1	1	1	
12	405374	ROD, 737MM / CURBSIDE / 10 DEG BEND From 3-8019		1	1	1	
12	405256	ROD, 888MM / L.H. CURBSIDE	1				B
13	401898	ROD, 29" Up to 3-7973	1				
13	405374	ROD, 737MM / CURBSIDE / 10 DEG BEND From 3-7974	1				
13	401898	ROD, 29" Up to 3-8018		1	1	1	
13	405374	ROD, 737MM / CURBSIDE / 10 DEG BEND From 3-8019		1	1	1	
13	405253	ROD, 625MM / L.H. CURBSIDE	1				B
13	409093	ROD, 467MM / L.H. CURBSIDE Up to 3-7973	1				D
13	405376	ROD, 467MM / L.H. CURBSIDE From 3-7974	1				D
		A) INCLUDE ROD HOLDER, ADJUSTING NUT, LOCK					
		WASHER & NUT SOLD ONLY ASSY					
		B) WITH DESTINATION SIGN "POCATEC" (ORLEANS)					
		C) INCLUDE ROD HOLDER					
		D) BUS WITH DESTINATION SIGN					

From Y-7046 Up to 8-9339	DATE: 01/2014	PAGE: Y2-1816-01

ROLLER BLIND - WINDSHIELD W/ELECTRICAL

ITEM	PART	DESCRIPTION	XL45	MTH40	MTH45	MTH45S	NOTE
14	404990	ROD, 730MM X 70MM Up to 3-7973	1				
14	405375	ROD, 730MM X 70MM / CURBSIDE / 10 DEG BEND From 3-7974	1				
14	404990	ROD, 730MM X 70MM Up to 3-8018		1	1	1	
14	405375	ROD, 730MM X 70MM / CURBSIDE / 10 DEG BEND From 3-8019		1	1	1	
14	405254	ROD, 625MM X 83MM / R.H. CURBSIDE	1				B
14	409094	ROD, 453MM X 83MM / R.H. CURBSIDE Up to 3-7973	1				D
14	405377	ROD, 460MM X 70MM / R.H. CURBSIDE / 10 DEG BEND From 3-7973	1				D
15	327564	PLEXIGLASS TINTED L.H. STREET SIDE 647MM	1				B
16	327565	PLEXIGLASS TINTED L.H. CURBSIDE 418MM	1				B
NS	500950	WASHER FL .187x.625x.094 RUB	5				B
NS	500345	WASHER FN CKF .187x.500x.090 BR BK	5				B
NS	500333	SCREW TP OV PH #6x3/4 BK	3				B
NS	5001298	SCREW TP BDG PH #6x1 1/2 BK	2				B
21	900476	ROD HOLDER 90° / BLACK PLASTIC 30MM C/L Up to 8-9212	2				
23	403570	ROD HOLDER / BLACK / STEEL From 8-9213 / REPLACED BY: 901263	2				
23	901263	ROD HOLDER / BLACK / PLASTIC 50MM	2				
24	500409	SCREW TP PAN PH #8x1/2 BK	4				
24	500814	SCREW TP BDG PH #6x3/4 BK	4				
100	405409	KIT, ELECTRIC ROLLER BLIND	1				
. NS	IS-01043	. SEE INSTRUCTION SHEET	1				
		B) WITH DESTINATION SIGN "POCATEC" (ORLEANS)					
		D) BUS WITH DESTINATION SIGN					

From Y-7046 Up to 8-9339	DATE: 01/2014	PAGE: Y2-1816-01

ROLLER BLIND - WINDSHIELD W/ELECTRICAL

ITEM	PART	DESCRIPTION	XL45	MTH40	MTH45	MTH45S	NOTE

From Y-7046 Up to 6-8906	DATE: 01/2014	PAGE: Y2-1816-10

SUN SHADE - PASSENGER'S WINDOW

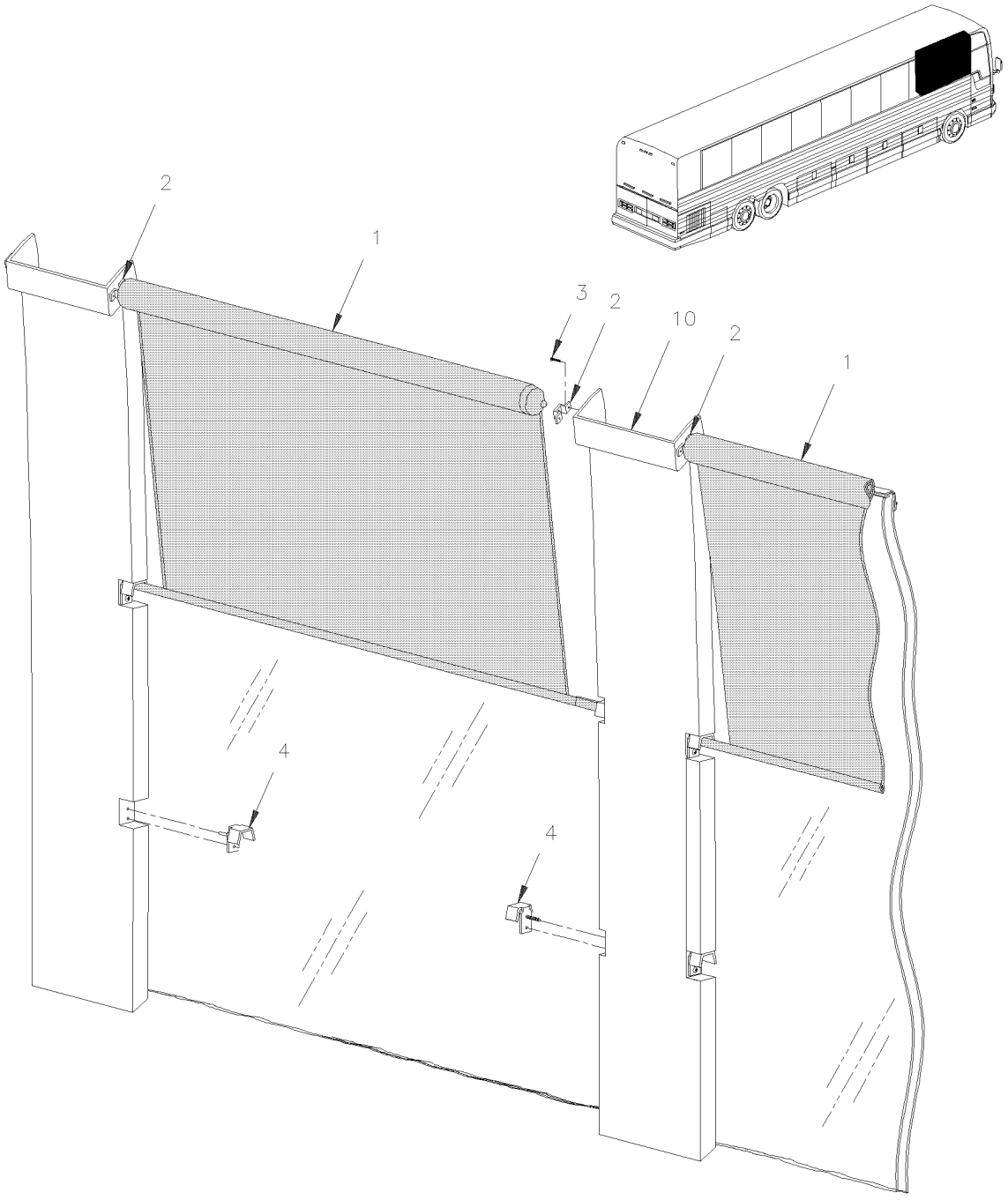

From Y-7046 Up to 6-8906	DATE: 01/2014	PAGE: Y2-1816-10

SUN SHADE - PASSENGER'S WINDOW

ITEM	PART	DESCRIPTION	XL45	MTH40	MTH45	MTH45S	NOTE
1	900977	SUN SHADE, 1140MM ROD WIDE / REPLACED BY: 901363	17				
1	901004	SUN SHADE, 1035MM ROD WIDE / W.C.L. / REPLACED BY: 901364	1				
1	901005	SUN SHADE, 1071MM ROD WIDE / W.C.L. / REPLACED BY: 901365	1				
2	900979	ATTACHMENT CLIP-ON	34				
3	504107	RIVET POP DOME OE 1/8x5/16 AL	2				
3	502578	WASHER FL 3.2x7.0x0.5 ZP	2				
4	404609	HOOK SINGLE W/1 SCREW HOLE LIGHT GREY / REPLACED BY: 903227	4				
4	409091	BRACKET, R.H. "O"	AR				
4	409090	BRACKET, L.H. "D"	AR				
10	Y2-1833-00	**WINDOW FINISHING CAP & WALL**					

From Y-7046 Up to 8-9339	DATE: 01/2014	PAGE: Y2-1817-00
SUN VISOR - "LE MIRAGE"		

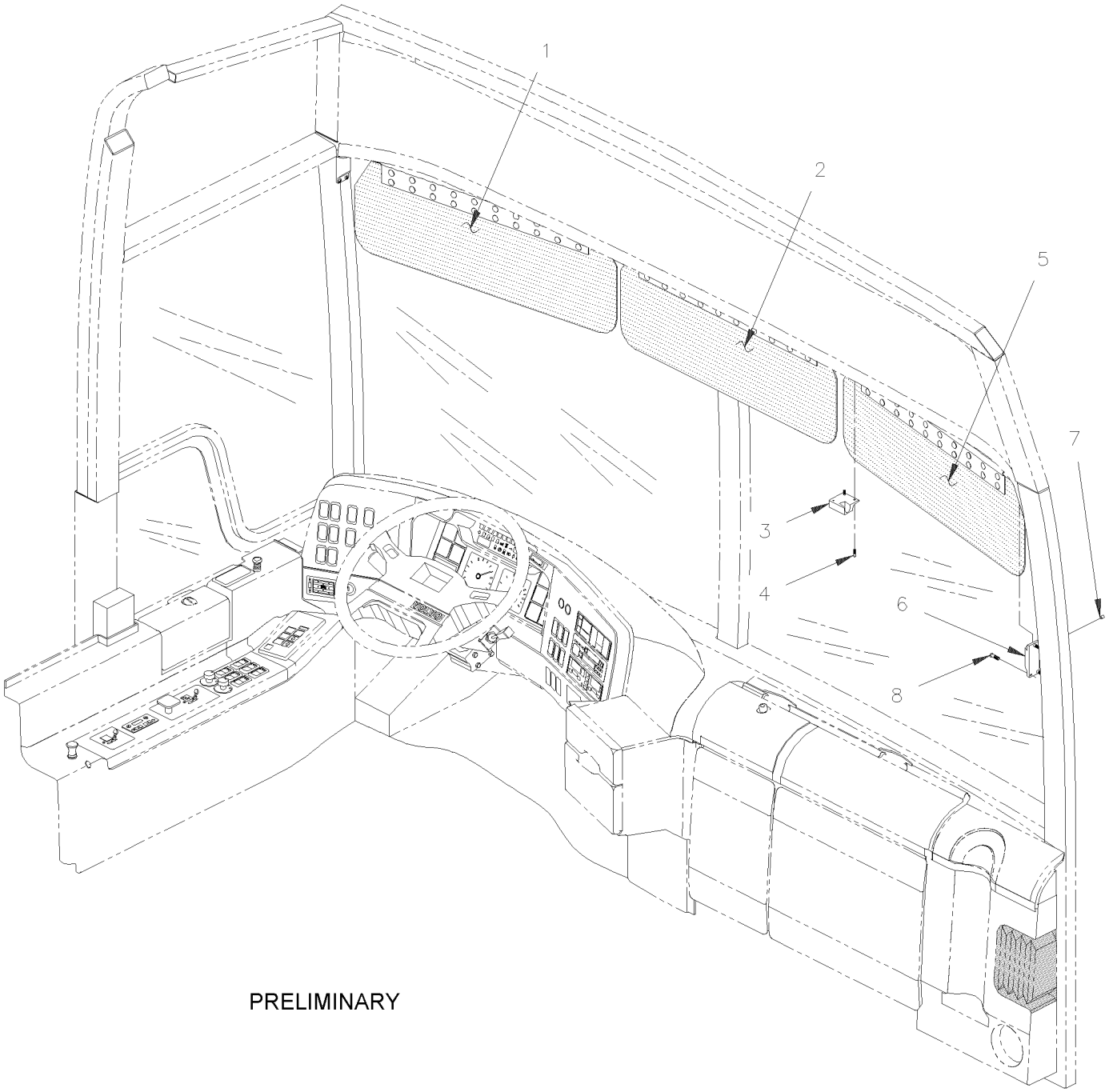

PRELIMINARY

From Y-7046 Up to 8-9339	DATE: 01/2014	PAGE: Y2-1817-00

SUN VISOR - "LE MIRAGE"

ITEM	PART	DESCRIPTION	XL45	MTH40	MTH45	MTH45S	NOTE
1	404741	SUN VISOR ASSY / L.H. W/COVERING (BLACK)		1	1	1	
1	404724	. SUN VISOR ASSY / L.H. W/O COVERING		1	1	1	
2	404740	SUN VISOR ASSY / CENTRAL W/COVERING (BLACK)		1	1	1	
2	404726	. SUN VISOR ASSY / CENTRAL W/O COVERING		1	1	1	
3	401586	ATTACHMENT, R.H. / CENTRAL SUN VISOR		1	1	1	
3	401585	ATTACHMENT, L.H. / CENTRAL SUN VISOR		1	1	1	
NS	401535	HOOK, RETAINING / L.H. SUN VISOR W/O CENTRAL & R.H. SUNVISOR / REPLACED BY: 400198		1	1	1	
3	505173	SPRING, PIN 1/8 X 3/4		2	2	2	
NS	500409	SCREW TP PAN PH #8x1/2 BK		4	4	4	
NS	500263	SCREW TP PAN PH #8x3/8 BK		4	4	4	
5	404739	SUN VISOR ASSY / R.H. W/COVERING (BLACK)		1	1	1	
5	404725	. SUN VISOR ASSY / R.H. W/O COVERING		1	1	1	
5	404706	. . PLATE, SUN VISOR LH & RH		2	2	2	
5	404722	. . PLATE, SUN VISOR CENTRAL		2	2	2	
5	404727	. . PRESSURE PLATE		2	2	2	
5	504117	. . RIVET POP DOME CLE 3/16x3/8 AL		20	20	20	
5	500438	. . WASHER FL .187x.437x.050 ZP		20	20	20	
5	401708	. . ROD, SUN VISOR CENTRAL		1	1	1	
5	404709	. . ROD, SUN VISOR LH & RH		1	1	1	
5	560171	SLEEVE INSULATING		1	1	1	
6	401465	ATTACHMENT, PIVOT L.H. & R.H. CHARCOAL		2	2	2	
7	500303	SCREW SET HEXS CUP #10-24x3/16		2	2	2	
8	500630	SCREW TP OV PH #10x1 ZP		6	6	6	

From Y-7046 Up to 8-9339	DATE: 01/2014	PAGE: Y2-1820-00
MIRROR - INTERIOR		

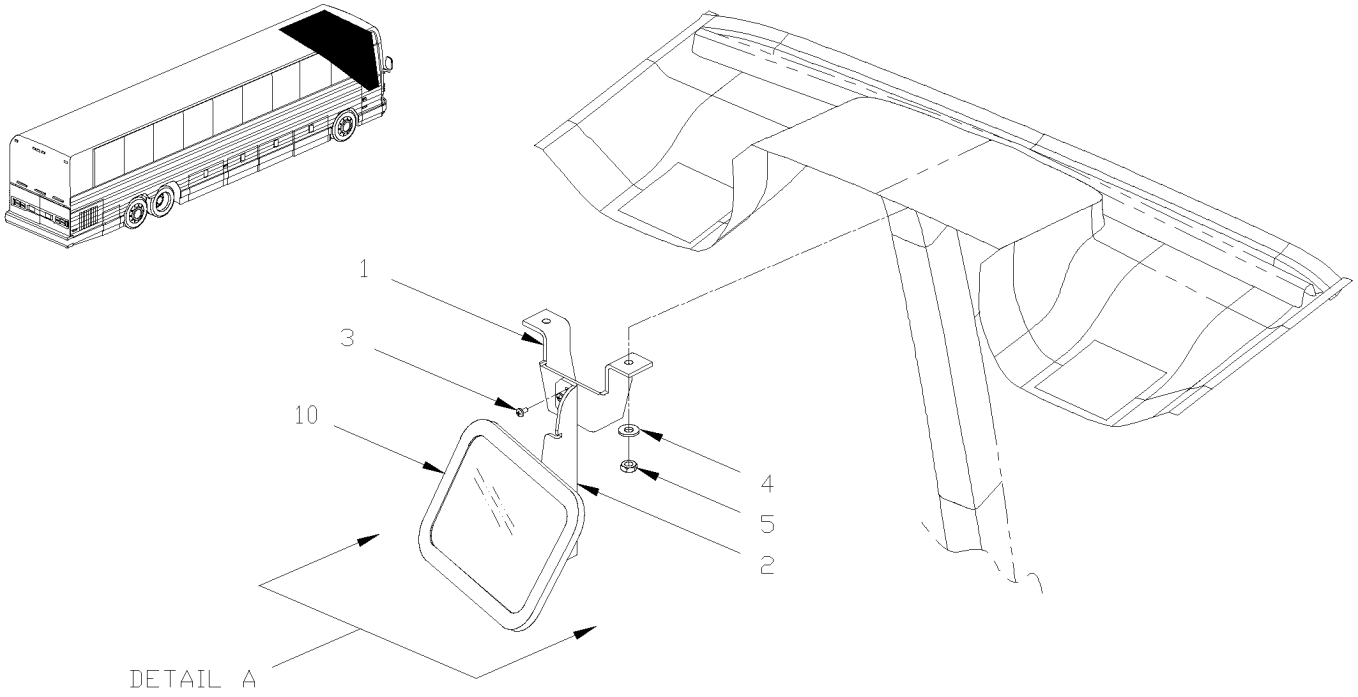

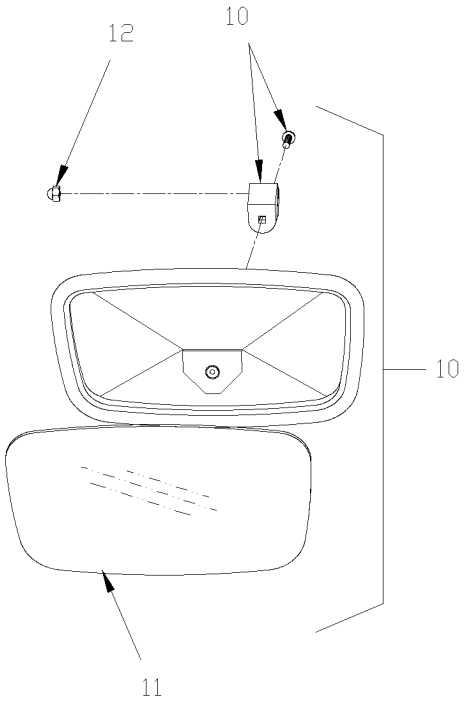

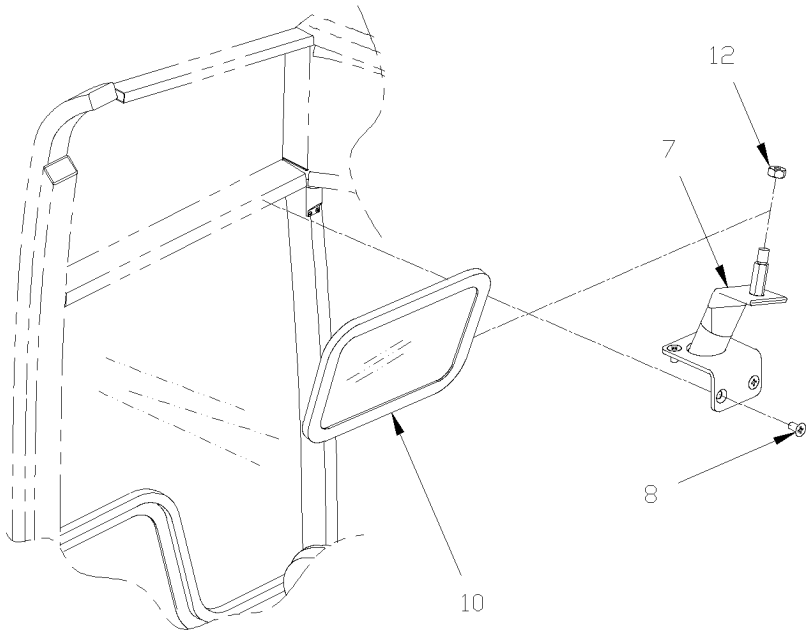

From Y-7046 Up to 8-9339	DATE: 01/2014	PAGE: Y2-1820-00

MIRROR - INTERIOR

ITEM	PART	DESCRIPTION	XL45	MTH40	MTH45	MTH45S	NOTE
1	408099	MIRROR SUPPORT / CENTER WINDSHIELD	1	1	1	1	
2	405136	SUPPORT CENTRAL ASSY, MIRROR	1	1	1	1	
3	502569	SCREW MA PAN PH M6-1.0x16 EMN	3	3	3	3	
4	500411	WASHER FL .260x.697x.050 SS	2	2	2	2	
5	5001353	NUT HEX NYRT M6-1.0 SS	2	2	2	2	
7	405301	MIRROR SUPPORT / L.H. DRIVER`S WINDOW	1				
8	5001198	SCREW MA FL PH M6-1.0x16 ZP	4				
10	900438	MIRROR ASSY SAFETY	1	1	1	1	
11	900440	GLASS / SAFETY	1	1	1	1	
12	500780	NUT HEX CAP 5/16-18 NP	1	1	1	1	

From Y-7046 Up to 6-8906	DATE: 01/2014	PAGE: Y2-1821-01
DRIVER'S SEAT "NATIONAL SEATING" - MODEL 93B		

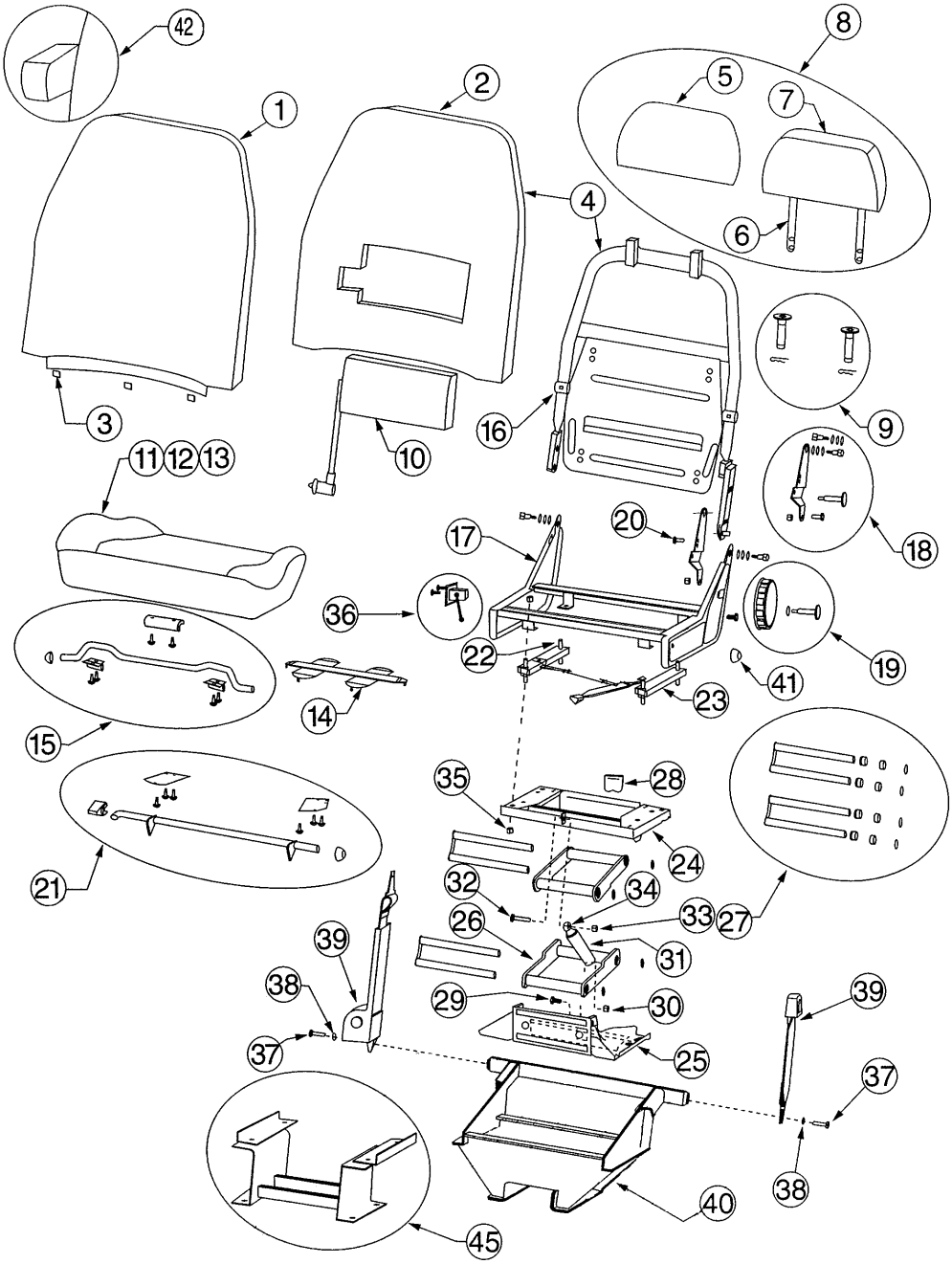

From Y-7046 Up to 6-8906	DATE: 01/2014	PAGE: Y2-1821-01
DRIVER'S SEAT "NATIONAL SEATING" - MODEL 93B		

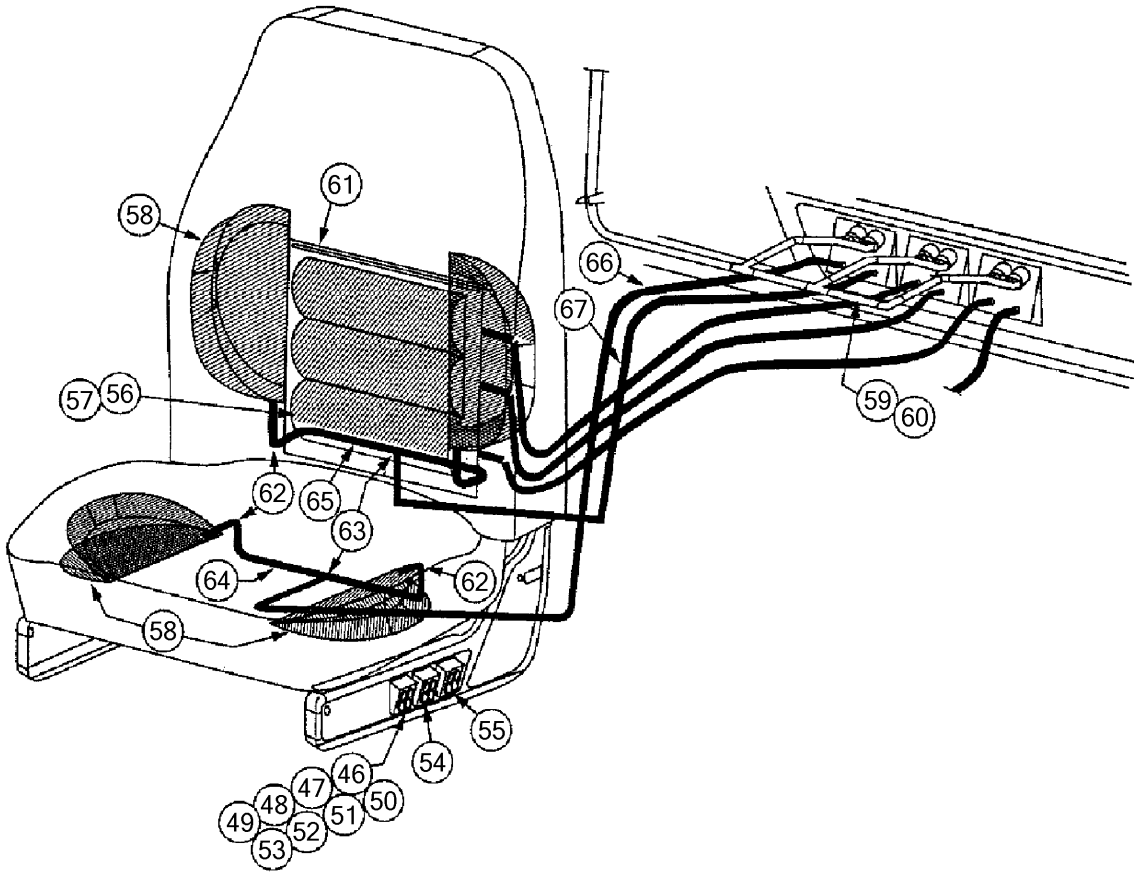

From Y-7046 Up to 6-8906	DATE: 01/2014	PAGE: Y2-1821-01

DRIVER'S SEAT "NATIONAL SEATING" - MODEL 93B

ITEM	PART	DESCRIPTION	XL45	MTH40	MTH45	MTH45S	NOTE
	861848	DRIVER'S SEAT ASSY / MODEL 93B From 2-7377 Up to 2-7715	1				
	862164	DRIVER'S SEAT ASSY / MODEL 93B From 2-7741 Up to 2-7763	1				
	862344	DRIVER'S SEAT ASSY / MODEL 93B	1				
	862487	DRIVER'S SEAT ASSY / MODEL 93B From 4-8398 Up to 4-8570	1				
1	Call Order Desk	BACK COVER / 20"	1				P
2	Call Order Desk	BACK POLY / 20" STANDARD	1				P
3	Call Order Desk	"U" CLIP	3				P
4	Call Order Desk	BACK ASSY / 20"	1				P
5	Call Order Desk	HEADREST COVER	1				P
6	Call Order Desk	FIXED HEADREST FRAME ASSY	1				P
7	Call Order Desk	HEADREST POLY	1				P
8	Call Order Desk	HEADREST ASSY	1				P
9	Call Order Desk	BUSHING KIT	1				P
10	192188	PASSIVE AIR LUMBAR BAG	1				
11	Call Order Desk	CUSHION COVER / 20"	1				P
12	Call Order Desk	CUSHION POLY / 20" STANDARD	1				P
13	Call Order Desk	CUSHION ASSY / 20"	1				P
14	Call Order Desk	WEBBING	3				P
15	Call Order Desk	FRONT CUSHION ADJUSTER	1				P
16	Call Order Desk	BACK FRAME ASSY	1				P
17	Call Order Desk	LOWER FRAME ASSY	1				P
18	Call Order Desk	KIT BRACKET BACK TO LOWER FRAME	1				P
19	Call Order Desk	KNOB KIT - BACK INCLINE	1				P
20	Call Order Desk	RECLINE LIMIT BOLT	1				P
21	Call Order Desk	REAR CUSHION ADJUSTER	1				P
22	Call Order Desk	TRACK STUD	4				P
23	Call Order Desk	TRACK KIT	1				P
24	Call Order Desk	UPPER BASE ASSY	1				P
25	Call Order Desk	LOWER BASE ASSY	1				P
26	Call Order Desk	UPPER ARM ASSY W/BUSHINGS - 96 BASE MODEL	2				P
27	860652	KIT REPAIR, SHAFT & BUSHING / W/AIR SUSPENSION	1				
28	Call Order Desk	BUMPER	1				P
29	500190	SCREW CAP HEX 3/8-16x3/4 G5 ZP	1				
30	500265	NUT HEX STO 3/8-16 ZP	1				
31	Call Order Desk	BLOCK-O-LIFT	1				P
32	500183	SCREW CAP HEX 5/16-18x1 1/2 G5 PT ZP	1				
33	500685	NUT HEX NYRT 5/16-18 SS	1				
34	Call Order Desk	RELEASE MECHANISM	1				P
35	Call Order Desk	NUT,TRACK ATTACHMENT	8				P
36	19508592	CABLE ASSY	1				
		P) CALL ORDER DESK FOR SPECIFIC APPLICATION					
		(V.I.N.)					

From Y-7046 Up to 6-8906	DATE: 01/2014	PAGE: Y2-1821-01

DRIVER'S SEAT "NATIONAL SEATING" - MODEL 93B

ITEM	PART	DESCRIPTION	XL45	MTH40	MTH45	MTH45S	NOTE
37	500067	SCREW CAP HEX 7/16-20x1 G5 ZP	1				
38	Call Order Desk	WASHER 1/2	2				P
39	19503838	RETRACTOR & BUCKLE	1				
40	Call Order Desk	RISER ASSY - "D" COACH	1				P
NS	363952	ANCHOR R.H. / DRIVE'R S SEAT / W/"NATIONAL SEATING" Up to 4-8397	1				A
NS	363953	ANCHOR L.H. / DRIVE'R S SEAT / W/"NATIONAL SEATING" Up to 4-8397	1				A
NS	363993	ADAPTOR SAFETY BELT / "Z" SHAPE / W/"NATIONAL SEATING" From 1-7745 Up to 4-8397	1				A
NS	5001117	SCREW CAP HEX M12-1.75x70 BK	4				B
NS	5001365	SCREW CAP HEX M12-1.75x30 G10.9 DP Up to 4-8397	3				
NS	500810	WASHER LO SPT 12.2x21.1x2.5 ZP	6				
NS	500958	WASHER FL .531x1.062x.095 SS	6				
41	Call Order Desk	CAP,CUSHION ADJUSTER ROD	2				P
42	Call Order Desk	ARMREST ASSY / L.H.	1				P
42	Call Order Desk	ARMREST ASSY / R.H.	1				P
45	Call Order Desk	RISER ASSY	1				P
46	Call Order Desk	VALVE HI/LO F/SINGLE CHAMBER	1				P
47	Call Order Desk	VALVE HI/LO F/TRIPLE CHAMBER	1				P
48	Call Order Desk	VALVE HI/LO F/BOLSTERS	1				P
49	Call Order Desk	VALVE BLANK/LO F/SINGLE CHAMBER	1				P
50	Call Order Desk	VALVE BLANK/LO F/TRIPLE CHAMBER	1				P
51	Call Order Desk	VALVE BLANK/LO F/BOLSTERS	1				P
52	Call Order Desk	VALVE HI/BLANK F/BASE	1				P
53	Call Order Desk	VALVE LO/LO F/SINGLE CHAMBER	1				P
54	Call Order Desk	VALVE LO/LO F/TRIPLE CHAMBER	1				P
55	Call Order Desk	VALVE LO/LO F/BOLSTERS	1				P
56	865265	SINGLE CHAMBER LUMBAR BAG	1				
57	865266	TRIPLE CHAMBER LUMBAR BAG	1				
58	Call Order Desk	AIR BOLSTER	1				P
59	Call Order Desk	MANIFOLD ASSY TRIPLE CHAMBER	1				P
60	Call Order Desk	MANIFOLD ASSY TRIPLE CHAMBER & BOLSTERS	1				P
61	Call Order Desk	WIRE LUMBAR BAG	1				P
62	Call Order Desk	ELBOW,PLASTICFITTING	1				P
63	Call Order Desk	FITTING 1/8”	1				P
64	Call Order Desk	CLEAR TUBING / 4.5"	1				P
65	Call Order Desk	GREEN TUBING / 4.5"	1				P
66	Call Order Desk	TUBING, CLEAR, 2.83FEET	1				P
67	Call Order Desk	TUBING, GREEN, 2.67FEET	1				P
		P) CALL ORDER DESK FOR SPECIFIC APPLICATION					
		(V.I.N.)					
		A) USE BETWEEN SEAT AND STRUCTURE					
		B) TO FIX SEAT ON FLOOR					

From Y-7046 Up to 8-9339	DATE: 01/2014	PAGE: Y2-1822-00

DRIVER'S SEAT - "ISRI" - 6800/338

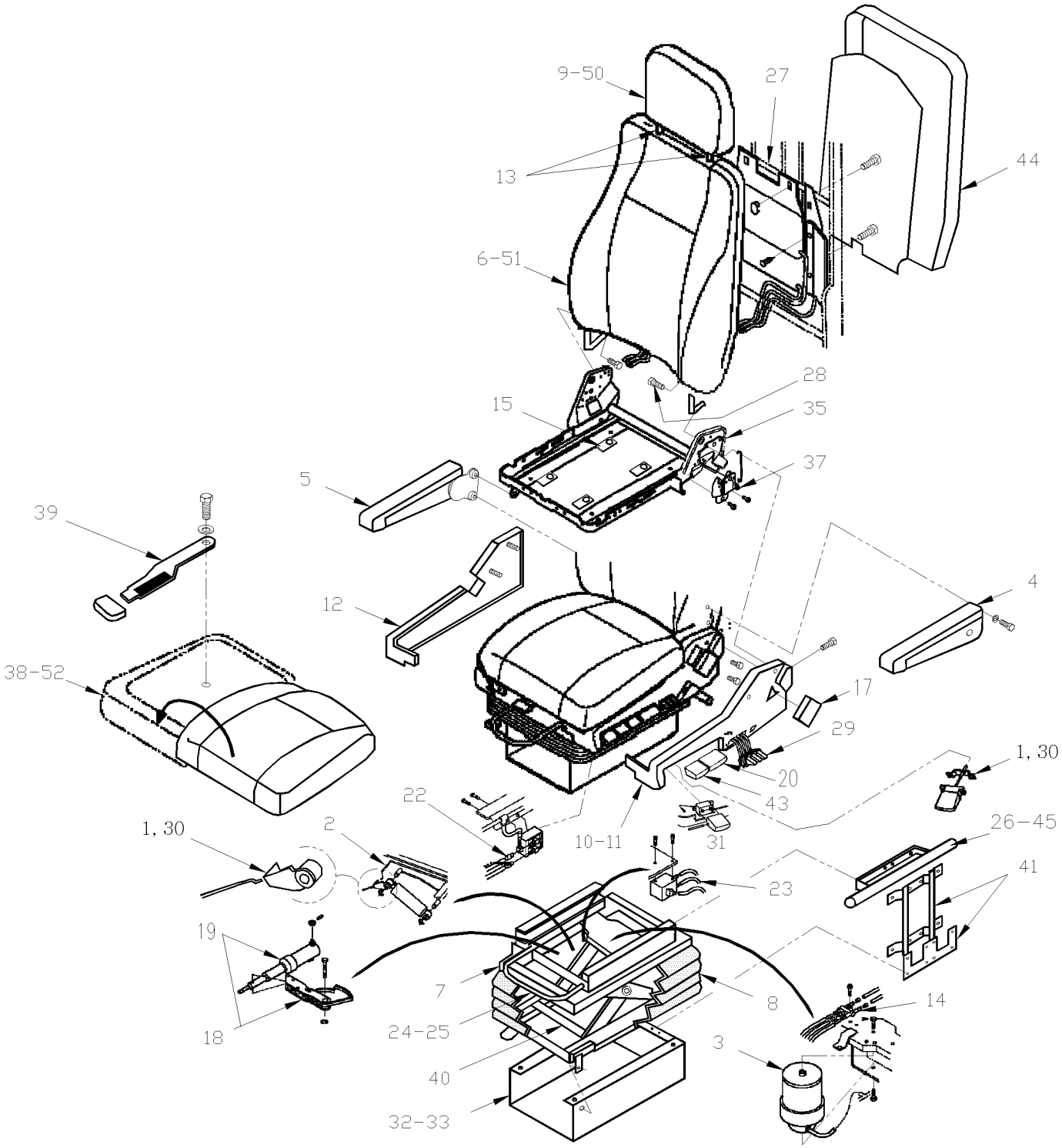

From Y-7046 Up to 8-9339	DATE: 01/2014	PAGE: Y2-1822-00

DRIVER'S SEAT - "ISRI" - 6800/338

ITEM	PART	DESCRIPTION	XL45	MTH40	MTH45	MTH45S	NOTE
	364108	DRIVER'S SEAT ASSY W/COVERING / SPECYFIED COLOR CODE	1				F
	861373	DRIVER`S SEAT ASSY / W/R.H. CONTROL	1				A
	861374	DRIVER`S SEAT ASSY / W/R.H. CONTROL BLACK / NOIR		1	1	1	B
NS	862420	. LEVER RETAINING CLIP	1	1	1	1	
NS	862421	. NUT PLASTIC WHITE	1	1	1	1	
NS	862422	. RETAINING CLIP	1	1	1	1	
NS	862423	. SCREW FOR RETAINING CLIP	1	1	1	1	
1	861638	. ADJUSTABLE SHOCK ABSORBER CABLE KIT	1	1	1	1	
2	861639	. ADJUSTABLE SHOCK ABSORBER KIT	1	1	1	1	
3	861640	. AIR SPRING KIT	1	1	1	1	
4	861641	. ARMREST KIT - LH / W/OUT COVERING / REPLACED BY: 861377		1	1	1	
4	861377	. ARMREST KIT - LH / W/POLYURETHANE PAD	1				
5	861642	. ARMREST KIT - RH / W/OUT COVERING / REPLACED BY: 861378		1	1	1	
5	861378	. ARMREST KIT - RH POLYURETHANE PAD	1				
6	861643	. BACKREST ASSY / NUDE	1	1	1	1	
. NS	864557	. . FOAM / BACKREST	1	1	1	1	
7	861644	. BOOT ADAPTER PLATE	1	1	1	1	
8	861645	. BOOT KIT	1	1	1	1	
9	861646	. HEADREST ASSEMBLY - NUDE	1	1	1	1	
10	861648	. COVER KIT CONTROL - LH	1	1	1	1	
11	861649	. COVER KIT CONTROL - RH	1	1	1	1	
12	861650	. COVER KIT NON-CONTROL - LH	1	1	1	1	
13	861647	. HEADREST BOOT (2PCS)	1	1	1	1	
14	861651	. DISTRIBUTION VALVE KIT	1	1	1	1	
15	861652	. GLIDE - SEAT PAN	1	1	1	1	
16	861653	. HANDLE KIT - SEAT FRAME - LH	1	1	1	1	
17	861654	. HANDLE KIT - SEAT FRAME - RH	1	1	1	1	D
18	864140	. KIT, CYLINDER & CAM ADJUSTEMENT KIT	1	1	1	1	
. 18	861655	. . HEIGHT ADJUSTMENT CAM KIT / REPLACED BY: 864140	1	1	1	1	
. 19	861656	. . HEIGHT ADJUSTMENT CYLINDER KIT / REPLACED BY: 864140	1	1	1	1	
18	864245	. KIT, CAM ADJUSTEMENT KIT	1	1	1	1	
NS	863741	. KIT SLIDING TRACK PLASTIC OBLONG	1	1	1	1	
20	862203	. AIR HEIGHT ADJUST HANDLE KIT RH	1	1	1	1	
		A) THIS SEAT IS WITHOUT COVERING & ARMREST					
		B) THIS SEAT HAS BLACK COVERING, LARGE ARMREST &					
		HEADREST FOR FACTORY DELIVERY					
		D) INCLUDE ALL KNOB FOR ITEM # 17, 20, 29, & 39					
		F) INCLUDE ITEMS # 50, 51 & 52					

From Y-7046 Up to 8-9339	DATE: 01/2014	PAGE: Y2-1822-00

DRIVER'S SEAT - "ISRI" - 6800/338

ITEM	PART	DESCRIPTION	XL45	MTH40	MTH45	MTH45S	NOTE
22	861657	. HEIGHT ADJUSTMENT VALVE KIT - RH	1	1	1	1	
23	861658	. HEIGHT ADJUSTMENT VALVE KIT - SUSPENSION	1	1	1	1	
24	861659	. HORIZONTAL ADJUSTMENT SLIDE HANDLE	1	1	1	1	
25	861660	. HORIZONTAL ADJUSTMENT SLIDE SET	1	1	1	1	
26	862205	. SEAT BELT KIT	1	1	1	1	
27	861661	. LUMBAR/BOLSTER KIT OLD STYLE Up to 5-8471	1	1	1	1	
27	864242	. LUMBAR/BOLSTER KIT NEW STYLE From 5-8472	1	1	1	1	
28	862204	. BACKREST BOLT	2	2	2	2	
29	861662	. LUMBAR/BOLSTER VALVE RH	1	1	1	1	
30	862424	. HANDLE FOR ADJUSTMENT SHOCK	1	1	1	1	
NS	862425	. SHORT PIN ADJUSTMENT HANDLE	1	1	1	1	
NS	862426	. LONG PIN ADJUSTMENT HANDLE / REPLACED BY: 861638	1	1	1	1	
NS	862956	. HANDLE SUPPORT / PLASTIC BLACK	1	1	1	1	
31	861663	. QUICK AIR RELEASE VALVE AND HANDLE KIT - RH	1	1	1	1	
33	861664	. RISER KIT - 76MM	1	1	1	1	
35	861665	. SEAT FRAME - RH	1	1	1	1	
37	861666	. SEAT FRAME TOOTH PLATE KIT RH	1	1	1	1	
38	861667	. SEAT PAN ASSEMBLY - NUDE OLD STYLE Up to 5-8471	1	1	1	1	
. NS	864556	. . FOAM / CUSHION Up to 5-8471	1	1	1	1	
38	864243	. SEAT PAN ASSEMBLY - NUDE NEW STYLE From 5-8472	1	1	1	1	
. NS	864237	. . CUSHHION FOAM NEW PATERN From 5-8472	1	1	1	1	
39	861668	. SEAT PAN ASSEMBLY LEVER AND HANDLE KIT	1	1	1	1	
40	861669	. SUSPENSION	1	1	1	1	
NS	864244	. . KIT , SUSPENSION HARDWARE REPAIR	1	1	1	1	
41	861670	. TETHER AND TETHER PLATE KIT	1	1	1	1	
43	861671	. TILT HANDLE KIT - RH	1	1	1	1	
44	861672	. BACKREST PANEL	1	1	1	1	
NS	363705	INTERFACE COPILOTE ISRI 6800		1	1	1	C
NS	363937	ANCHORAGE CO-PILOTE SEAT ASSY W/BOLT		4	4	4	C
. NS	326831	. ANCHORAGE "U" FORM 48mm x 38mm x 112mm		1	1	1	
. NS	500958	. WASHER FL .531x1.062x.095 SS		1	1	1	
. NS	500482	. WASHER LO SPT .506x.873x.125 ZP		1	1	1	
. NS	500806	. SCREW CAP HEX		1	1	1	
		C) USE WITH CO-PILOTE SEAT INSTALLATION					

From Y-7046 Up to 8-9339	DATE: 01/2014	PAGE: Y2-1822-00

DRIVER'S SEAT - "ISRI" - 6800/338

ITEM	PART	DESCRIPTION	XL45	MTH40	MTH45	MTH45S	NOTE
NS	362056	ANCHOR PLATE ASSY W/7/16-14x1" USE W/CURBSIDE SEAT 32mmx89mm		2	2	2	C
NS	362521	ANCHOR PLATE ASSY W/7/16-14x2" USE W/CURBSIDE SEAT 32mmx89mm		2	2	2	C
45	364128	DRIVER'S SAFETY BELT EXTENSION R.H.	1	1	1	1	E
45	364129	DRIVER'S SAFETY BELT EXTENSION L.H.	1	1	1	1	E
NS	500071	SCREW CAP HEX 7/16-20x1 1/2 G5 ZP	2	2	2	2	E
NS	500709	NUT HEX 7/16-20 ZP	2	2	2	2	E
NS	500810	WASHER LO SPT 12.2x21.1x2.5 ZP	4	4	4	4	E
NS	500860	NUT HEX M12-1.75 ZP	2	2	2	2	E
NS	502731	SCREW CAP HEX M12-1.75x40 G8.8 ZP	2	2	2	2	E
50	363740P	COVERING HEADREST ASSY / S.C.C. / DRIVER'S "ISRI" / 6800	1				
51	363738P	COVERING BACKREST ASSY / S.C.C. / DRIVER'S "ISRI" / 6800 Up to 5-8471	1				
51	364168P	COVERING BACKREST ASSY / S.C.C. / DRIVER'S "ISRI" / 6800 From 5-8472	1				
52	363739P	COVERING SEATREST ASSY / S.C.C. OLD STYLE / DRIVER'S "ISRI" / 6800 Up to 5-8471	1				
52	364071P	COVERING SEATREST ASSY / S.C.C. NEW STYLE / DRIVER'S "ISRI" / 6800 From 5-8472	1				
NS	864709	TUBE PLASTIC 6MM O.D. CHARCOAL W/RED LINE	AR	AR	AR	AR	
NS	864710	TUBE PLASTIC 6MM O.D. CHARCOAL W/GREY LINE	AR	AR	AR	AR	
NS	864711	TUBE PLASTIC 6MM O.D. CHARCOAL	AR	AR	AR	AR	
NS	641507	UNION / PUSH-IN FITTING / #4 x 6mm NP	1				
NS	641092	UNION TEE / NTA FITTING / #4x#4x#4 BR	1				
		.					
NS	5001117	SCREW CAP HEX M12-1.75x70 BK	4				G
NS	500958	WASHER FL .531x1.062x.095 SS	4				G,H
NS	500810	WASHER LO SPT 12.2x21.1x2.5 ZP	6				G,H
NS	362549	SPACER 1 1/4" / <> STRUCTURE & BASE	4				G
NS	361677	JOINT / W/AIR SUSPENSION / W/2 HOLES .344 O / 3 1/8" x W/2" C/C	2				H
NS	363410	JOINT / W/AIR SUSPENSION / W/2 HOLES .562 O.D / 3 1/8" x W/2 1/8 C/C"	2				H
NS	364155	JOINT / W/AIR SUSPENSION / W/2 HOLES .344 O / 4 3/8" x W/3 1/4" C/C	1				H
NS	500860	NUT HEX M12-1.75 ZP	2				H
NS	5001365	SCREW CAP HEX M12-1.75x30 G10.9 DP	2				H

C) USE WITH CO-PILOTE SEAT INSTALLATION

E) YOU REQUIRE THOSES COMPONENTS TO EXTEND DRIVER'S SAFETY BELT

G) TO FIX SEAT TO FLOOR

H) TO FIX SAFETY BELT

From Y-7046 Up to 8-9339	DATE: 01/2014	PAGE: Y2-1822-10
DRIVER'S SEAT - "ISRI" - 6000/515 & 6500/515		

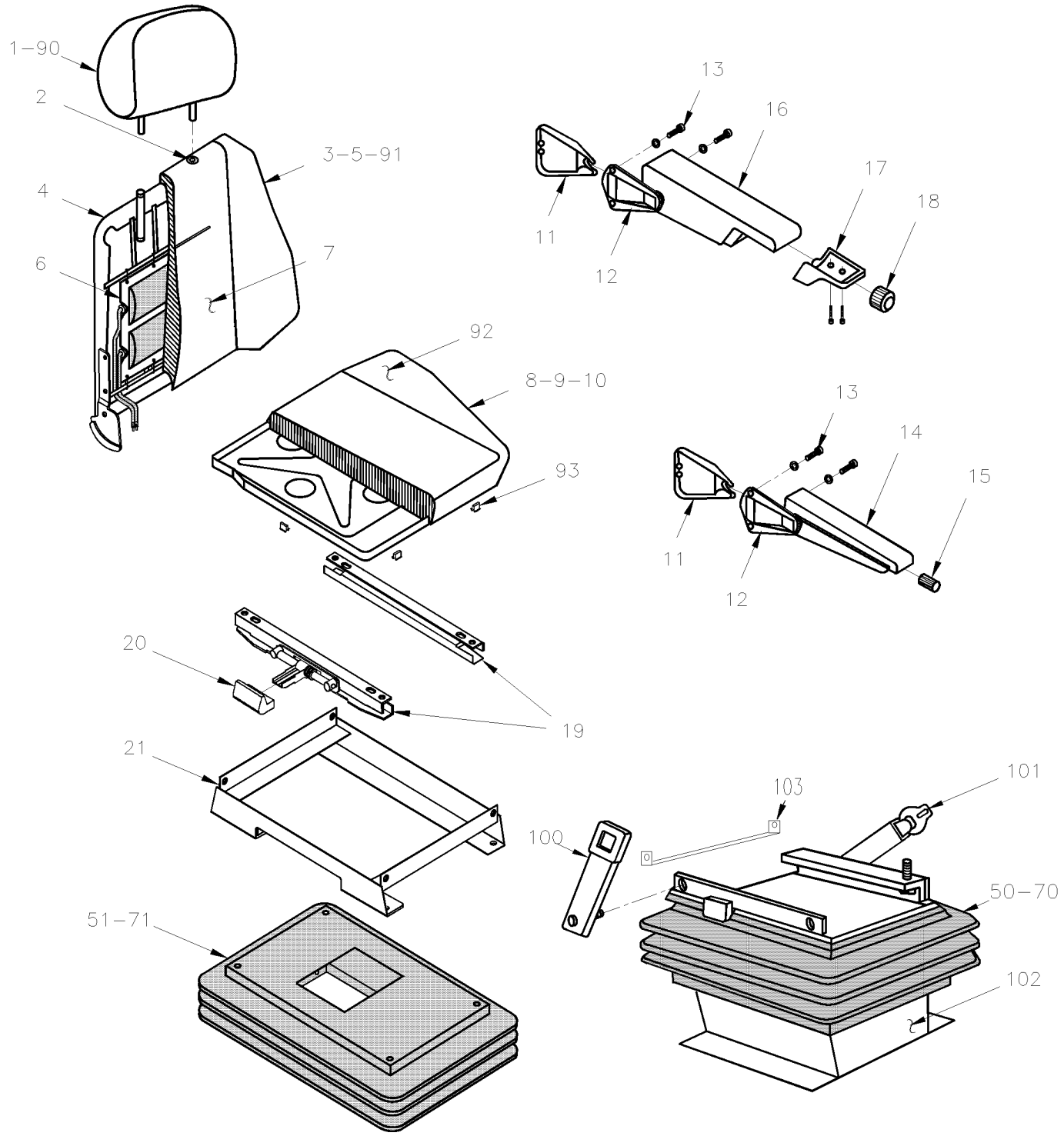

From Y-7046 Up to 8-9339	DATE: 01/2014	PAGE: Y2-1822-10
DRIVER'S SEAT - "ISRI" - 6000/515 & 6500/515		

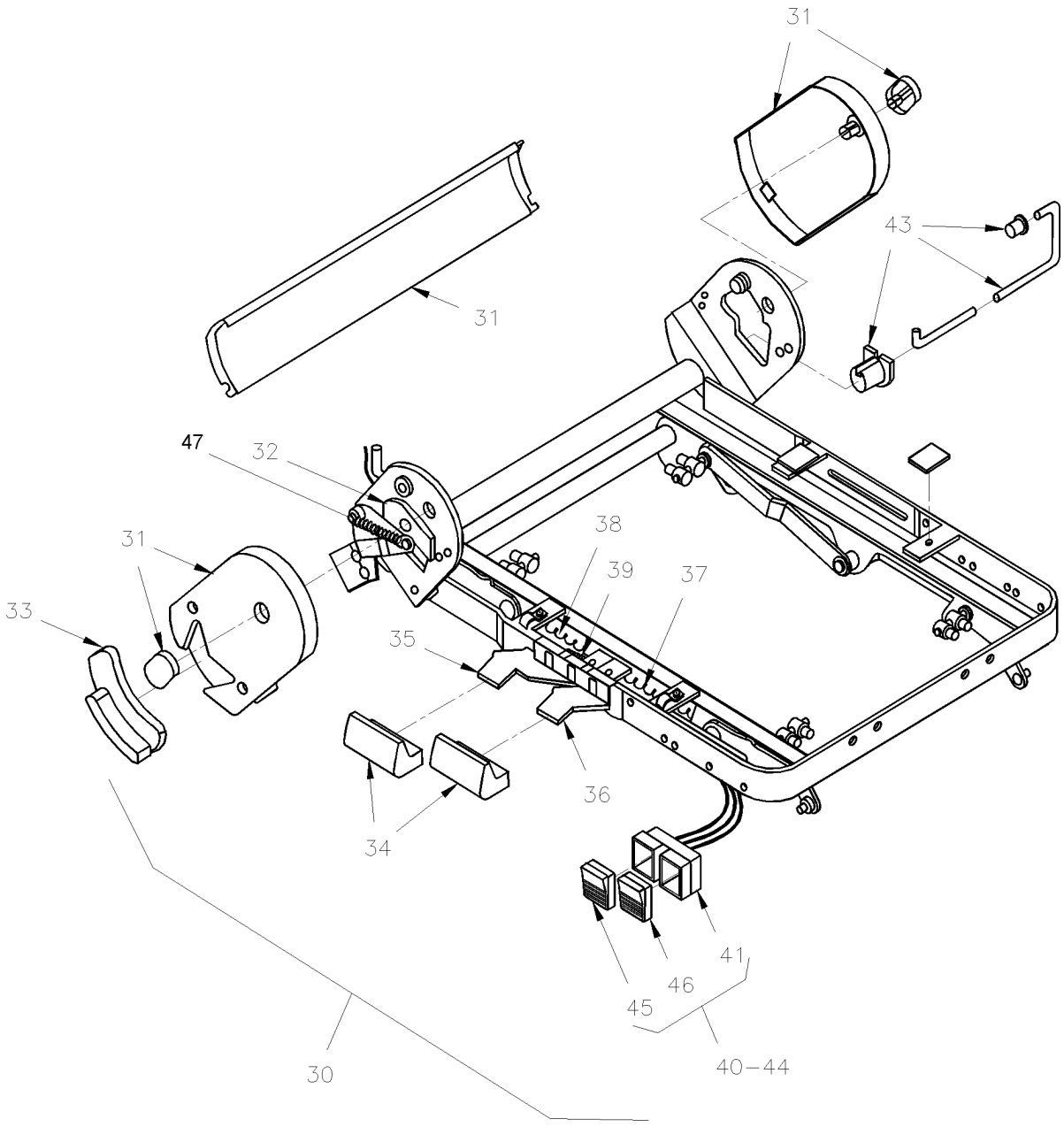

From Y-7046 Up to 8-9339	DATE: 01/2014	PAGE: Y2-1822-10
DRIVER'S SEAT - "ISRI" - 6000/515 & 6500/515		

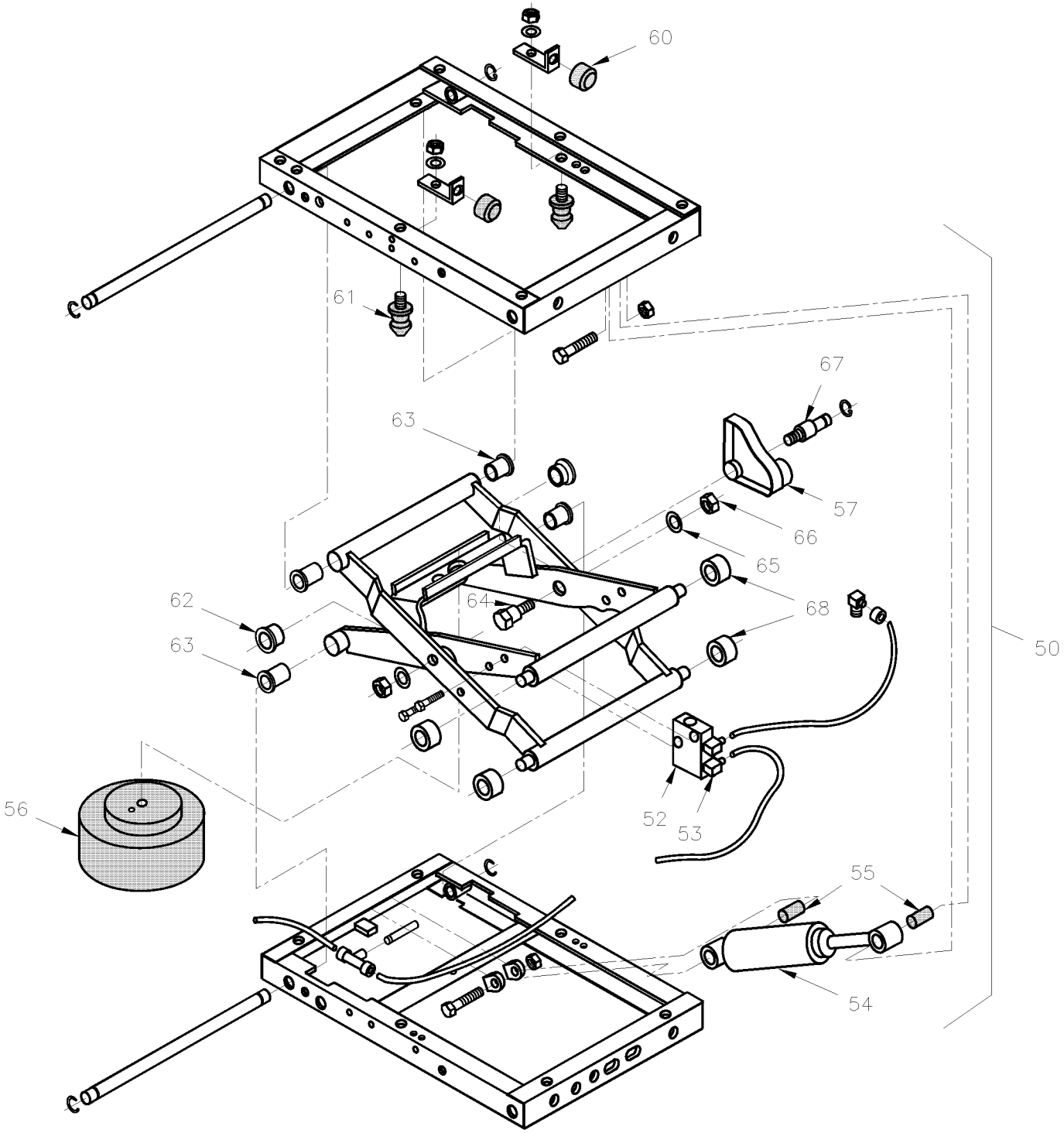

From Y-7046 Up to 8-9339	DATE: 01/2014	PAGE: Y2-1822-10

DRIVER'S SEAT - "ISRI" - 6000/515 & 6500/515

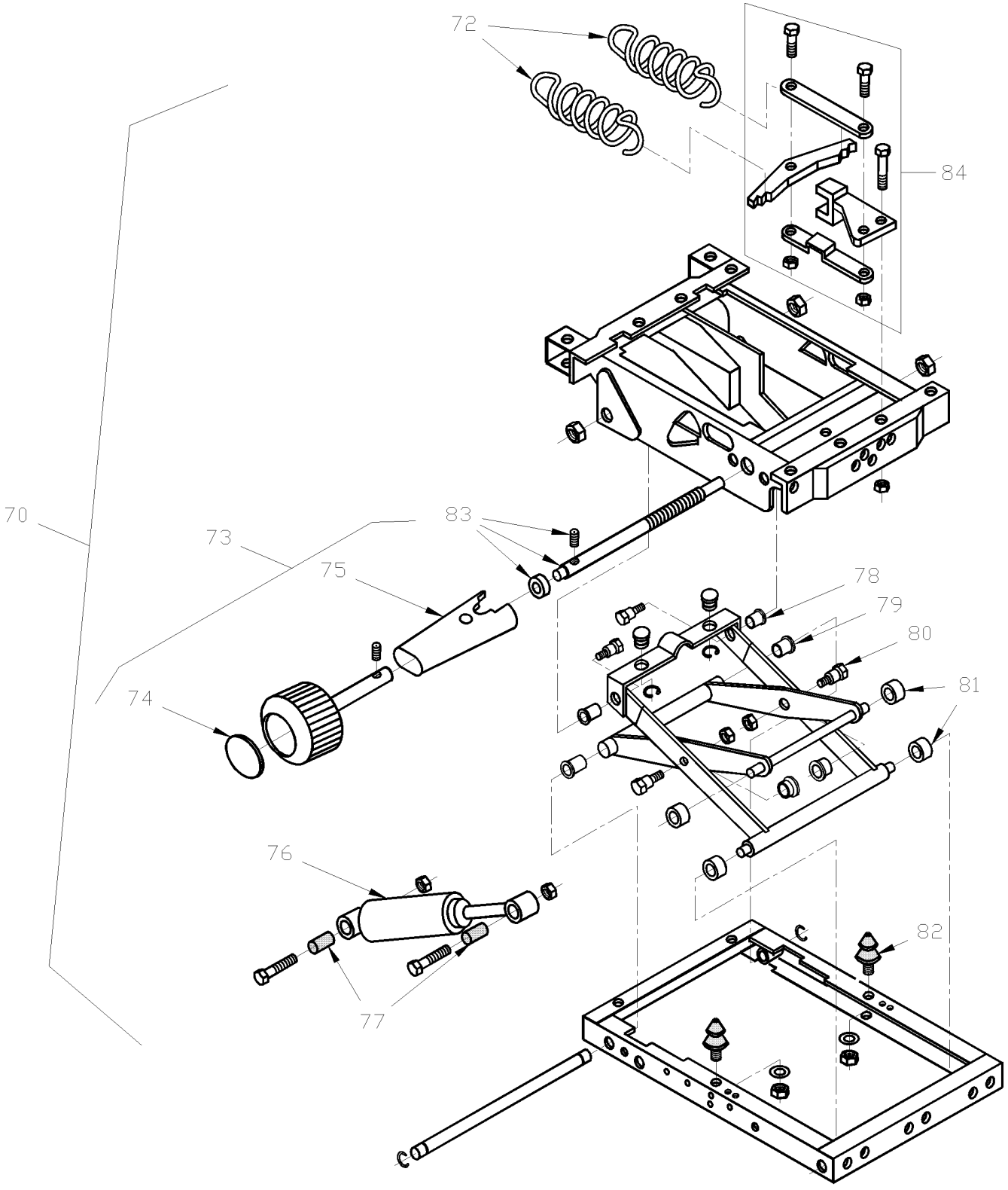

From Y-7046 Up to 8-9339	DATE: 01/2014	PAGE: Y2-1822-10

DRIVER'S SEAT - "ISRI" - 6000/515 & 6500/515

ITEM	PART	DESCRIPTION	XL45	MTH40	MTH45	MTH45S	NOTE
	362833	SEAT ASSY MECHANIC / R.H. CONTROL W/COVERING	1				E
	860433	. SEAT ASSY MECHANIC / R.H. CONTROL / REPLACED BY: 860852	1				
	362834	SEAT ASSY MECHANIC / R.H. CONTROL & AIR LUMBAR W/COVERING	1				E
	860852	. SEAT ASSY MECHANIC / R.H. CONTROL & AIR LUMBAR	1				
1	860441	HEADREST	1	1	1	1	
2	860483	GROMMET	2	2	2	2	
3	860508	BACKREST ASSY / R.H. CONTROL / REPLACED BY: 860509	1	1	1	1	
4	860509	. FRAME / R.H. CONTROL	1	1	1	1	
NS	860600	. FRAME / L.H. CONTROL		1	1	1	
5	860507	. FOAM	1	1	1	1	
6	860494	AIR BAG / LOMBAR	1	1	1	1	
7	860548	HEATING PAD / BACK	1	1	1	1	
8	860510	PAN SEAT SUBASSY	1	1	1	1	
9	860511	. FOAM / SEAT	1	1	1	1	
10	860547	HEATING PAD / SEAT	1	1	1	1	
11	860532	COVER	2	2	2	2	
12	N.S.S.	BRACKET / ARMREST	1	1	1	1	1
13	500544	SCREW CAP HEX M8-1.25x30 G8.8 ZP	2	2	2	2	
14	860440	ARMREST L.H. ADJUSTABLE	1	1	1	1	
NS	860442	ARMREST R.H. ADJUSTABLE	1	1	1	1	
15	860725	. KNOB	1	1	1	1	
16	860721	ARMREST ASSY L.H. / W/O COVERING		1	1	1	
NS	860722	ARMREST ASSY R.H. / W/O COVERING		1	1	1	
NS	N.S.S.	COVERING		1	1	1	1
17	860723	. COVER KIT ARMREST		1	1	1	
18	860724	. KNOB		1	1	1	
19	861085	SLIDE MASTER / HANDLE & SLAVE / R.H. CONTROL	1	1	1	1	
20	861086	. HANDLE R.H.	1	1	1	1	
NS	861084	SLIDE SET "C" STYLE / HANDLE & SLAVE / W/SEAT #860852	1				
21	861100	SPACER STATIC /W/FOLLOWING SEAT NUMBER 860432 433,449,450,543,544,545 & 546	1	1	1	1	A
NS	861102	SPACER STATIC	1	1	1	1	B
30	861083	FRAME ASSY SEAT / R.H. CONTROL (AS SHOWN)	1				
NS	861081	FRAME ASSY SEAT / W/O MEMORY ELECTRICAL SEAT		1	1	1	
NS	861082	FRAME ASSY SEAT / W/MEMORY ELECTRICAL SEAT		1	1	1	
		1) NOT SOLD SEPARATELY					
		A) W/SEAT #860433					
		B) W/860853, 860854, 860912 & 860913					
		E) THIS SEAT IS COMPLETLY ASSY W/COVERING,					
		ARMREST, HEATING PAD & SAFETY BELT (SPECIFY					
		COLOR)					

From Y-7046 Up to 8-9339	DATE: 01/2014	PAGE: Y2-1822-10

DRIVER'S SEAT - "ISRI" - 6000/515 & 6500/515

ITEM	PART	DESCRIPTION	XL45	MTH40	MTH45	MTH45S	NOTE
31	861090	. SIDE PLATE ASSY / KIT FOR R.H. CONTROL (AS SHOWN)	1	1	1	1	
32	861790	. TOOTH LEVER / R.H. SIDE (AS SHOWN)	1	1	1	1	
32	861789	. TOOTH LEVER / L.H. SIDE	1	1	1	1	
33	860493	. HANDLE / R.H. CONTROL (AS SHOWN)	1	1	1	1	
33	861089	. HANDLE / R.H. CONTROL (AS SHOWN)	1	1	1	1	
NS	860589	. HANDLE / L.H. CONTROL		1	1	1	
34	861087	. HANDLE HEIGHT TILT / FRONT	1	1	1	1	
NS	861088	. HANDLE HEIGHT TILT / REAR	1	1	1	1	
35	860587	. LEVER HEIGHT REAR	1	1	1	1	
36	860588	. LEVER HEIGHT FOWARD	1	1	1	1	
37	860690	. LEVER ADJUSTMENT KEY / R.H. FRONT & L.H. RE	1	1	1	1	
38	860689	. LEVER ADJUSTMENT KEY / R.H. REAR & L.H. FRO	1	1	1	1	
39	860513	. KIT SPRING (2 LARGES & 3 SMALL)	1	1	1	1	
43	861091	. TORSION BAR KIT	1	1	1	1	
44	861092	. KIT VALVE LOMBAR SUPPORTS	1	1	1	1	C
NS	860887	. . KIT VALVE LUMBAR SUPPORTS / W/SEAT W/R.H. CONTROL					D
45	861093	. . . BUTTON AIR LOMBAR UPPER SECTION	1	1	1	1	
46	861094	. . . BUTTON AIR LOMBAR LOWER SECTION	1	1	1	1	
47	862217	. SPRING	1	1	1	1	
50	860518	SUSPENSION ASSY AIR		1	1	1	
51	860523	. COVER		1	1	1	
52	860719	. VALVE AIR		1	1	1	
53	860533	. ELBOW PLASTIC		1	1	1	
54	860521	. ABSORBER 99 POUNDS /		1	1	1	
NS	860602	. ABSORBER 120 POUNDS /		1	1	1	
55	860586	. . BUSHING / ABSORBER		2	2	2	
56	860522	. BELLOW		1	1	1	
57	860515	. CAM		1	1	1	
NS	860693	. KIT REPAIR / AIR SUSPENSION		AR	AR	AR	
60	N.S.S.	. . BUMPER RUBBER		2	2	2	1
61	N.S.S.	. . BUMPER RUBBER		2	2	2	1
62	N.S.S.	. . BUSHING SPLIT FLANGE		2	2	2	1
63	N.S.S.	. . BUSHING FLANGE		4	4	4	1
64	N.S.S.	. . SCREW		1	1	1	1
		1) NOT SOLD SEPARATELY					
		C) W/HOSE & HARDWARE					
		D) W/BUTTON					

From Y-7046 Up to 8-9339	DATE: 01/2014	PAGE: Y2-1822-10

DRIVER'S SEAT - "ISRI" - 6000/515 & 6500/515

ITEM	PART	DESCRIPTION	XL45	MTH40	MTH45	MTH45S	NOTE
65	N.S.S.	. . WASHER		2	2	2	1
66	N.S.S.	. . NUT		2	2	2	1
67	N.S.S.	. . BOLT		1	1	1	1
68	N.S.S.	. . ROLLER		4	4	4	1
70	860685	SUSPENSION ASSY MECHANICAL / R.H. CONTROL	1	1	1	1	
71	860526	. COVER	1	1	1	1	
72	860525	. SPRING EXTENSION / 1.800 O.D. x 6.75 x .340 FORMER / REPLACED BY: 862913	2	2	2	2	
72	862913	. SPRING EXTENSION / KIT OF 2 1.800 O.D. x 6.75 x .340 SERVICE	1	1	1	1	
73	860658	. HANDWHEEL / R.H. CONTROL (AS SHOWN)	1	1	1	1	
74	860549	. . CAP PLASTIC	1	1	1	1	
75	860594	. . CAP SHAFT COVER	1	1	1	1	
76	860521	. ABSORBER 99 POUNDS /	1	1	1	1	
NS	860602	. ABSORBER 120 POUNDS /	1	1	1	1	
77	860586	. . BUSHING / ABSORBER	2	2	2	2	
NS	860692	. KIT REPAIR / MECHANICAL SUSPENSION	AR	AR	AR	AR	
78	N.S.S.	. . BUSHING SPLIT FLANGE	2	2	2	2	1
79	N.S.S.	. . BUSHING FLANGE	2	2	2	2	1
80	N.S.S.	. . BOLT	2	2	2	2	1
81	N.S.S.	. . ROLLER	4	4	4	4	1
82	N.S.S.	. . BUMPER	2	2	2	2	1
83	860864	SPINDLE KIT	1	1	1	1	
84	861746	. KIT WEIGHT ADJUSTMENT	1	1	1	1	
90	362201P	COVERING HEADREST ASSY / S.C.C. / DRIVER'S "ISRI" 6000 & 6500	1				
91	362204P	COVERING BACKREST ASSY / S.C.C. / DRIVER'S "ISRI" 6000 & 6500	1				
92	362203P	COVERING SEATREST ASSY / S.C.C. / DRIVER'S "ISRI" 6000 & 6500	1				
93	860527	CLIP	8	8	8	8	
NS	860484	SEW STRIP NYLON 10 MM	AR	AR	AR	AR	
NS	860485	SEW STRIP NYLON 15 MM	AR	AR	AR	AR	
NS	864709	TUBE PLASTIC 6MM O.D. CHARCOAL W/RED LINE	AR	AR	AR	AR	
NS	864710	TUBE PLASTIC 6MM O.D. CHARCOAL W/GREY LINE	AR	AR	AR	AR	
NS	864711	TUBE PLASTIC 6MM O.D. CHARCOAL	AR	AR	AR	AR	
100	362188	KIT BELT	1				
100	860607	. STIFF BUCKLE IN BOOT	1	1	1	1	
101	860977	. BELT SEAT	1	1	1	1	
		1) NOT SOLD SEPARATELY					

From Y-7046 Up to 8-9339	DATE: 01/2014	PAGE: Y2-1822-10

DRIVER'S SEAT - "ISRI" - 6000/515 & 6500/515

ITEM	PART	DESCRIPTION	XL45	MTH40	MTH45	MTH45S	NOTE
101	860553	. BELT TETHER / <> BODY & SUSPENSION / (SET OF 2)	1				
102	361800	BASE DRIVER'S SEAT / 76.2MM HEIGHT / 3" / W "ISRI"	1	1	1	1	
NS	5001117	SCREW CAP HEX M12-1.75x70 BK	4				F
NS	500958	WASHER FL .531x1.062x.095 SS	4				F
NS	500810	WASHER LO SPT 12.2x21.1x2.5 ZP	4				F
NS	362549	SPACER 1 1/4" / <> STRUCTURE & BASE	4				F
NS	363104	BAR ICP / W/SEAT MODEL 6500/ELECTRIC Up to Y-7232		1	1	1	G
NS	363275	BAR ICP / W/SEAT MODEL 6801 / CURBSIDE Up to Y-7232		1	1	1	G
103	363945	BAR ICP / W/SEAT MODEL 6500 From Y-7233		1	1	1	G
NS	500179	SCREW CAP HEX 5/16-18x3/4 G5 ZP	2				G
NS	500777	NUT HEX STO 5/16-18 ZP	2				G
NS	361677	JOINT / W/AIR SUSPENSION / W/2 HOLES .344 O / 3 1/8" x W/2" C/C	2				G
NS	364155	JOINT / W/AIR SUSPENSION / W/2 HOLES .344 O / 4 3/8" x W/3 1/4" C/C From SERVICE	1				G
NS	500810	WASHER LO SPT 12.2x21.1x2.5 ZP	2				G
NS	500480	WASHER LO SPT .443x.779x.109 ZP	2				G
NS	500445	WASHER FL .437x1.000x.083 ZP	2				G
NS	5001365	SCREW CAP HEX M12-1.75x30 G10.9 DP	2				G
NS	641507	UNION / PUSH-IN FITTING / #4 x 6mm NP	1				
NS	641092	UNION TEE / NTA FITTING / #4x#4x#4 BR	1				
		F) TO FIX BASE TO FLOOR					
		G) TO FIX SAFETY BELT TO SEAT					

From Y-7046 Up to 8-9339	DATE: 01/2014	PAGE: Y2-1822-50
DRIVER'S SEAT "ISRI" ASSY		

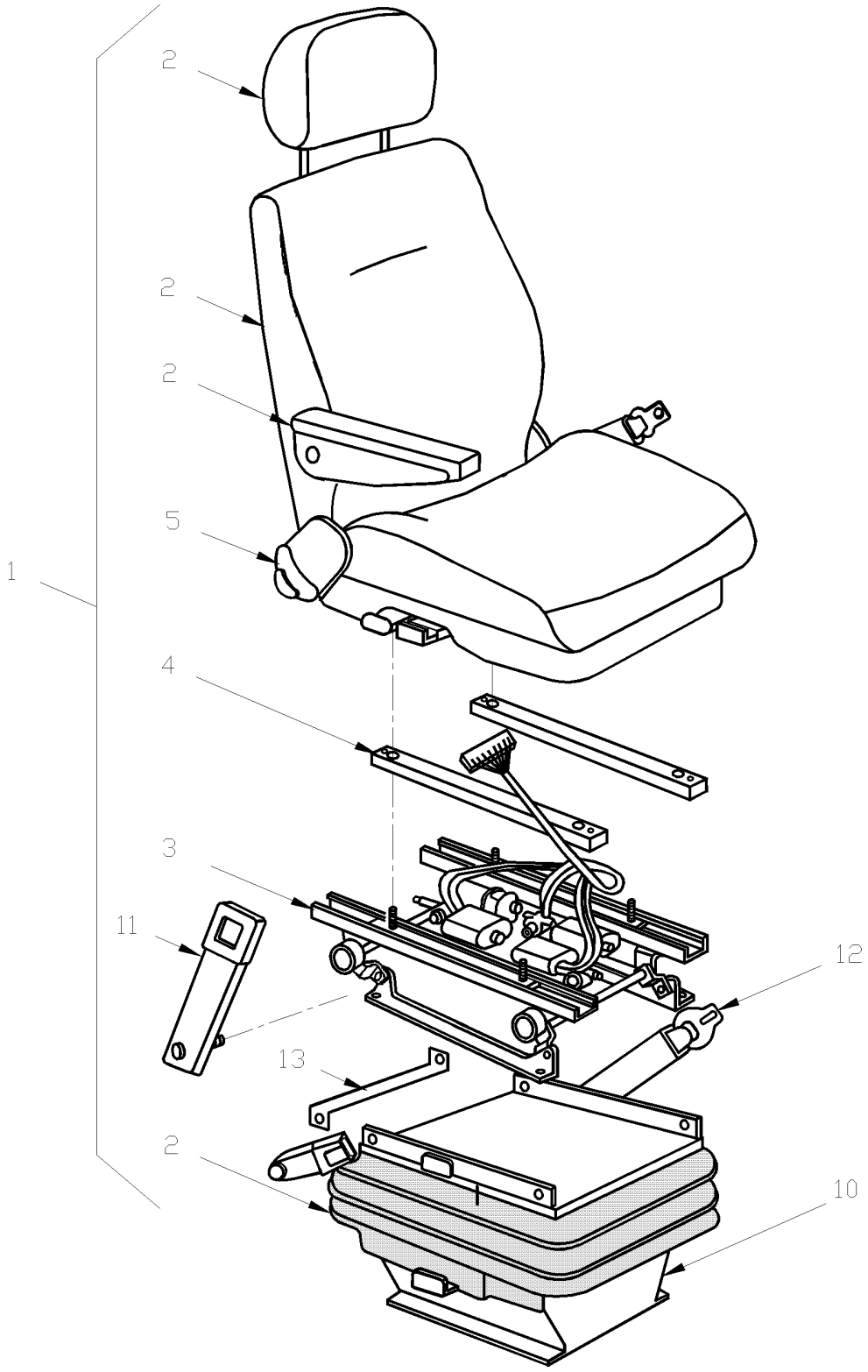

From Y-7046 Up to 8-9339	DATE: 01/2014	PAGE: Y2-1822-50

DRIVER'S SEAT "ISRI" ASSY

ITEM	PART	DESCRIPTION	XL45	MTH40	MTH45	MTH45S	NOTE
1	862319	SEAT ASSY ELECTRIC / AIR SUSPENSION / R.H. CONTROL & LUMBAR SUPPORTS		1	1	1	C
1	860855	SEAT ASSY ELECTRIC / AIR SUSPENSION / R.H. CONTROL & LUMBAR SUPPORTS		1	1	1	B
2	Y2-1822-10	**DRIVER'S SEAT - "ISRI" - 6000/515 & 6500/515**					
3	860728	BASE ELECTRICAL ASSY		1	1	1	
4	860727	TUBE ADAPTOR		2	2	2	
5	861081	FRAME ASSY SEAT / W/O MEMORY ELECTRICAL SEAT		1	1	1	
10	363422	BASE DRIVER'S SEAT / 25.4MM HEIGHT / 1" / W "ISRI" ELECTRIC Up to 2-7914 / REPLACED BY: K363422				1	
10	364018	BASE 1" / W/ELECTRICAL SEAT ONLY From 2-7915		1	1	1	
10	363454	PLATE SEAT ADAPTOR 54MM X 242MM From 2-7915		1	1	1	
NS	362549	SPACER 1 1/4" / <> STRUCTURE & BASE		4	4	4	
11	860607	STIFF BUCKLE IN BOOT		1	1	1	
11	861115	SLEEVE COVERING		1	1	1	
12	860977	BELT SEAT		1	1	1	
13	363104	BAR ICP / W/SEAT MODEL 6500/ELECTRIC Up to Y-7232		1	1	1	
13	363944	BAR ICP / W/SEAT MODEL 6500 From Y-7233		1	1	1	
NS	Call Order Desk	LOWER SEAT BACK		1	1	1	P
NS	363410	JOINT / W/AIR SUSPENSION / W/2 HOLES .562 O.D / 3 1/8" x W/2 1/8 C/C"		1	1	1	A
14	641507	UNION / PUSH-IN FITTING / #4 x 6mm NP	1				
14	641092	UNION TEE / NTA FITTING / #4x#4x#4 BR	1				

P) CALL ORDER DESK FOR SPECIFIC APPLICATION
(V.I.N.)

A) USE WITH CO-PILOTE SEAT CURBSIDE INSTALLATION

B) THOSE SEATS ARE COMPLETE ASSY W/BLACK COVERING, LARGE ARMREST & HEADREST FOR FACTORY DELIVERY.

C) WITHOUT COVERING

From Y-7046 Up to 6-8906	DATE: 01/2014	PAGE: Y2-1823-00
DRIVER'S SEAT - "RECARO" - ERGO-COACH		

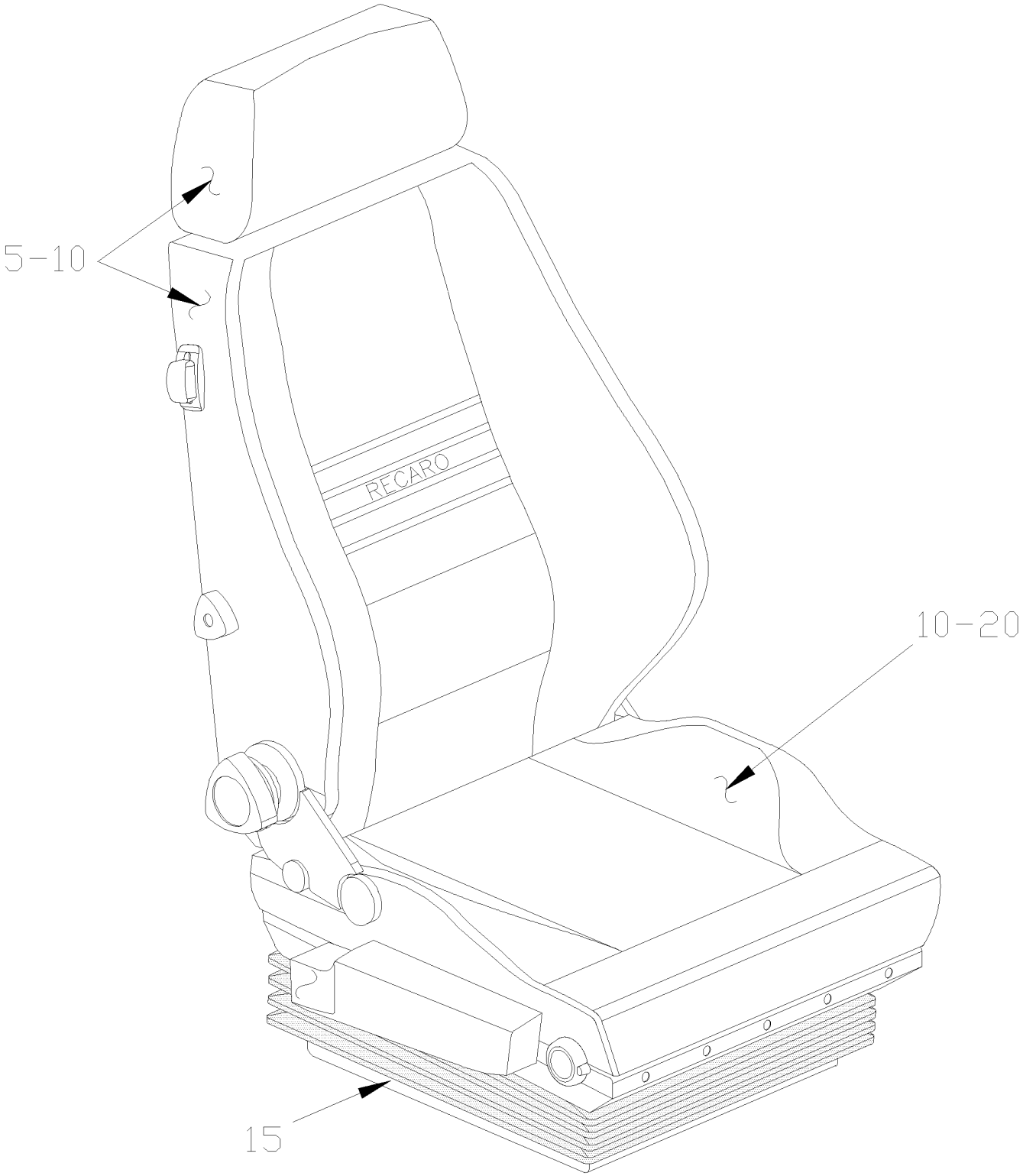

From Y-7046 Up to 6-8906	DATE: 01/2014	PAGE: Y2-1823-00

DRIVER'S SEAT - "RECARO" - ERGO-COACH

ITEM	PART	DESCRIPTION	XL45	MTH40	MTH45	MTH45S	NOTE
	861936	DRIVER'S SEAT - "RECARO" - COACH-ERGO	1				
5	Y2-1823-10	**. BACKREST ASSY - "RECARO" - ERGO-COACH**					
10	Y2-1823-15	**. SEAT COVER & FOAM - "RECARO" - ERGO-COACH**					
15	Y2-1823-20	**. SUSPENSION & RISER - "RECARO" - ERGO-COACH**					
20	Y2-1823-25	**. SEAT CUSHION FRAME - "RECARO" - ERGO-COACH**					
25	Y2-1823-30	**. ARMREST - "RECARO" - ERGO-COACH**					

From Y-7046 Up to 6-8906	DATE: 01/2014	PAGE: Y2-1823-10
BACKREST ASSY - "RECARO" - ERGO-COACH		

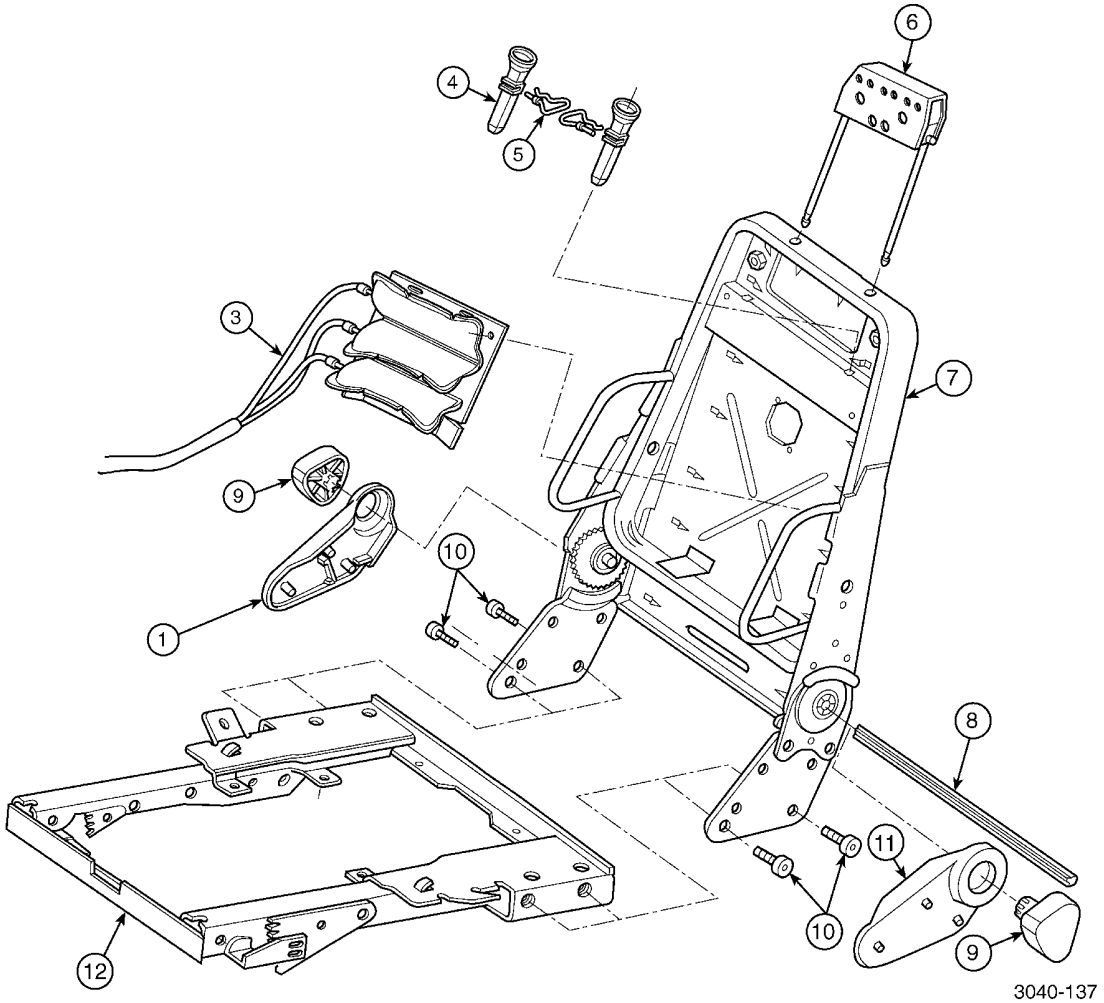

From Y-7046 Up to 6-8906	DATE: 01/2014	PAGE: Y2-1823-10
BACKREST ASSY - "RECARO" - ERGO-COACH		

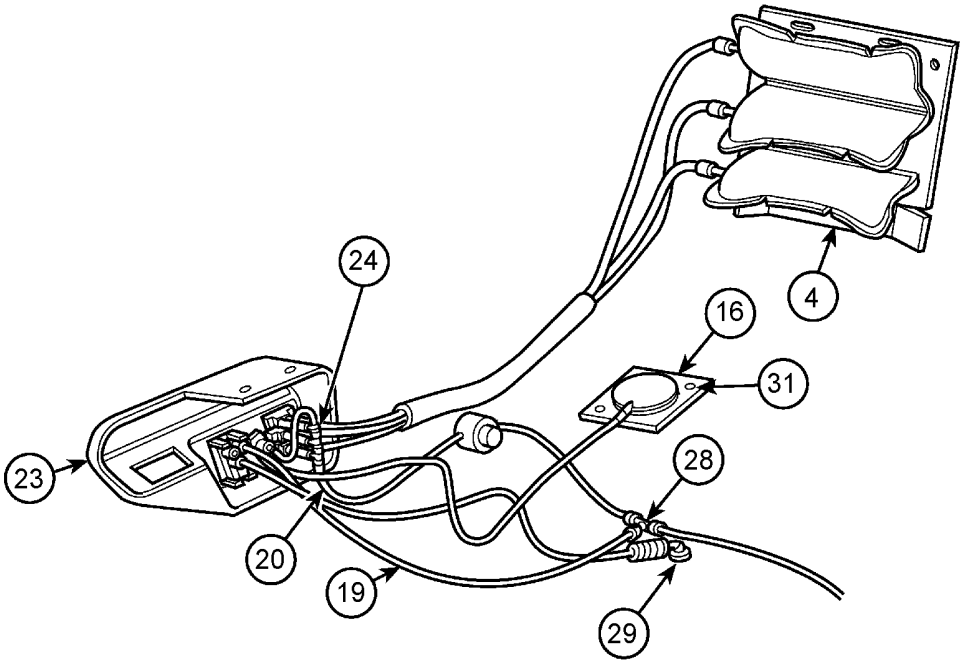

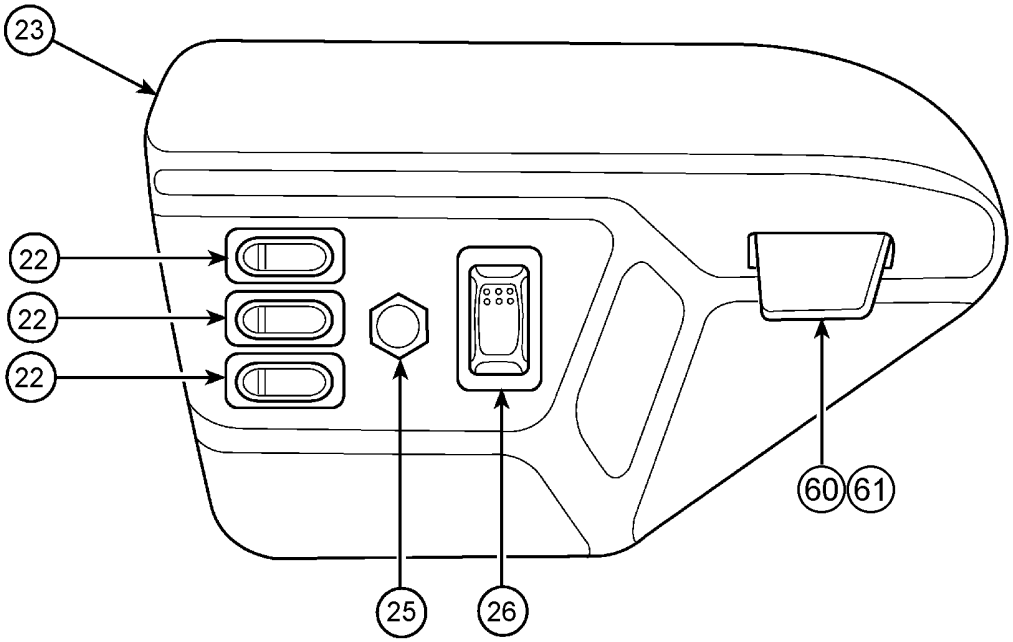

From Y-7046 Up to 6-8906	DATE: 01/2014	PAGE: Y2-1823-10

BACKREST ASSY - "RECARO" - ERGO-COACH

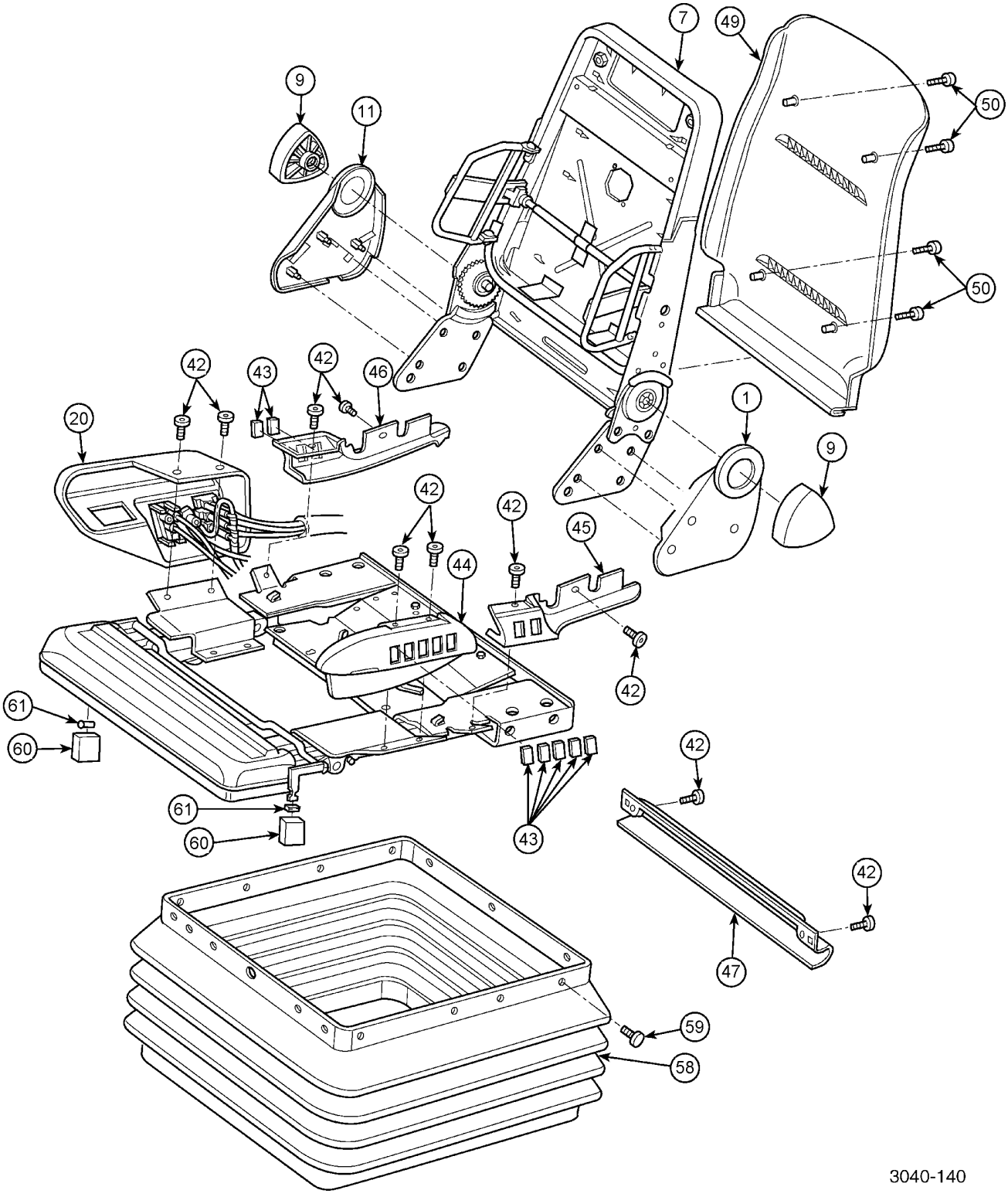

From Y-7046 Up to 6-8906	DATE: 01/2014	PAGE: Y2-1823-10

BACKREST ASSY - "RECARO" - ERGO-COACH

ITEM	PART	DESCRIPTION	XL45	MTH40	MTH45	MTH45S	NOTE
1	Call Order Desk	COVER MANUAL RECLINE L.H.	1				P
3	N8890742	3 CELL LUMBAR	1				
4	Call Order Desk	HEADREST ASSY	1				P
4	Call Order Desk	. FRAME HEADREST	1				P
	Call Order Desk	. BUSHING HEADREST ROD PLASTIC	4				P
	Call Order Desk	. HEADREST ROD 307MM	2				P
4	Call Order Desk	. HEADREST COVER ASSY	1				P
	N8891971	. RETAINING STRIP	2				
	Call Order Desk	. BOLT M8X25	2				P
	N8882304	. NUT, LOCK	2				
5	N8886938	. TORSION SPRING	2				
5	N8886939	. SLEEVE	2				
6	N8886937	. GUIDE TUBE	2				
6	Call Order Desk	RETAINING CLIP, LOCK WASHER	2				P
7	Call Order Desk	BACK FRAME ASSY	1				P
8	Call Order Desk	ROD CONNECTING RECLINER	1				P
	Call Order Desk	BRACKET RECLINER STOP 12/25 DEG	1				P
	Call Order Desk	BOLT M8	2				P
9	Call Order Desk	HANDWHEEL	2				P
10	N8882373	SCREW M6-1.0x20	4				
11	Call Order Desk	COVER MANUAL RECLINE R.H.	1				P
12	Call Order Desk	RETAINING CLIP, LOCK WASHER	2				P
16	N8890756	ACTUATOR: AUTO BLADDER-CONTROL	1				
19	N8890744	TUBING 1/4" OD	1				
20	N8890740	CONTROL PANEL ASSY R.H.	1				
20	Call Order Desk	. TUBING RUBBER 1/4" OD	AR				P
22	N8891008	. SWITCH PNEUMATIC LUMBAR	3				
23	N8890743	. CONTROL PANEL	1				
24	Call Order Desk	. AIR FITTING 1/8"	1				P
25	N8891010	. SWITCH HIGH PRESSURE	1				
26	N8891009	. SWITCH AUTO ACTUATOR	1				
28	Call Order Desk	AIR FITTING 1/4"	1				P
29	N8890745	AIRSPRING FITTING	1				
31	N8890747	RETAINER	2				
	G1090493	FITTING 1/4"X1/4" UNION	1				
41	N8890720	CONTROL ASSY FRONT RH	1				
42	N8887256	SCREW	8				
43	N8887257	COVER PLATE SWITCH	9				
44	N8887260	CONTROL PANEL / FRONT L.H.	1				
45	N8800437	CONTROL PANEL / REAR L.H. / REPLACED BY: N8890721	1				
46	N8800438	CONTROL PANEL / REAR R.H.	1				
		P) CALL ORDER DESK FOR SPECIFIC APPLICATION					
		(V.I.N.)					

From Y-7046 Up to 6-8906	DATE: 01/2014	PAGE: Y2-1823-10

BACKREST ASSY - "RECARO" - ERGO-COACH

ITEM	PART	DESCRIPTION	XL45	MTH40	MTH45	MTH45S	NOTE
47	N8887262	CABLE HOUSING REAR	1				
49	N8890725	BACKREST COVER KIT	1				
49	Call Order Desk	. COVER BACK PANEL	1				P
50	Call Order Desk	. SCREW BACK PANEL	1				P
58	N8890714	BOOT ASSY SUSPENSION	1				
. NS	N8882340	. PLASTIC RIVET	QR				
59	N8882340	PLASTIC RIVET	23				
60	N8890746	KNOB KIT	1				
. NS	N8882395	. CLIP	2				
. NS	N8887258	. KNOB	2				
60	N8882395	. CLIP	2				
61	N8887258	. KNOB	2				
NS							
NS							
	N8890741	PNEUMATIC ASSY KIT	1				
	N8887345	. TIE STRAP / REPLACED BY: N8800542	2				
	N8880620	. VINYL EDGE PROTECTOR	AR				
	G1090493	. FITTING 1/4"X1/4" UNION	1				
	N8890744	. TUBING 1/4" OD	1				
	Call Order Desk	. TUBING RUBBER 1/4" OD	AR				P
	Call Order Desk	. REGULATOR MONNIER 10PSI	1				P
	Call Order Desk	. AIR FITTING 1/4"	1				P
	N8890748	. AIR FITTING 10-32 THREAD	1				
	Call Order Desk	. AIR FITTING 10-32 THREAD	1				P
	N8887306	. SCREW M5-0.8x10	1				
	Call Order Desk	. TUBING NYLON 12 BLACK	AR				P
	Call Order Desk	. ERGO AIRLINE ROUTING	1				P
	Call Order Desk	. INSTALLATION INSTRUCTION AIR LINE	1				P
	Call Order Desk	STICKER RECARO LOGO	1				P
	N8890749	KIT BACKREST ASSY	1				A
	N8890750	KIT RECLINING STOP ASM	1				
	Call Order Desk	. BRACKET RECLINER STOP 12/25 DEG	1				P
	Call Order Desk	. BOLT M8	2				P
		P) CALL ORDER DESK FOR SPECIFIC APPLICATION					
		(V.I.N.)					
		A) INCLUDE ITEMS #5, 6, 7, 8 & 10					

From Y-7046 Up to 6-8906	DATE: 01/2014	PAGE: Y2-1823-10

BACKREST ASSY - "RECARO" - ERGO-COACH

ITEM	PART	DESCRIPTION	XL45	MTH40	MTH45	MTH45S	NOTE

From Y-7046 Up to 6-8906	DATE: 01/2014	PAGE: Y2-1823-15
SEAT COVER & FOAM - "RECARO" - ERGO-COACH		

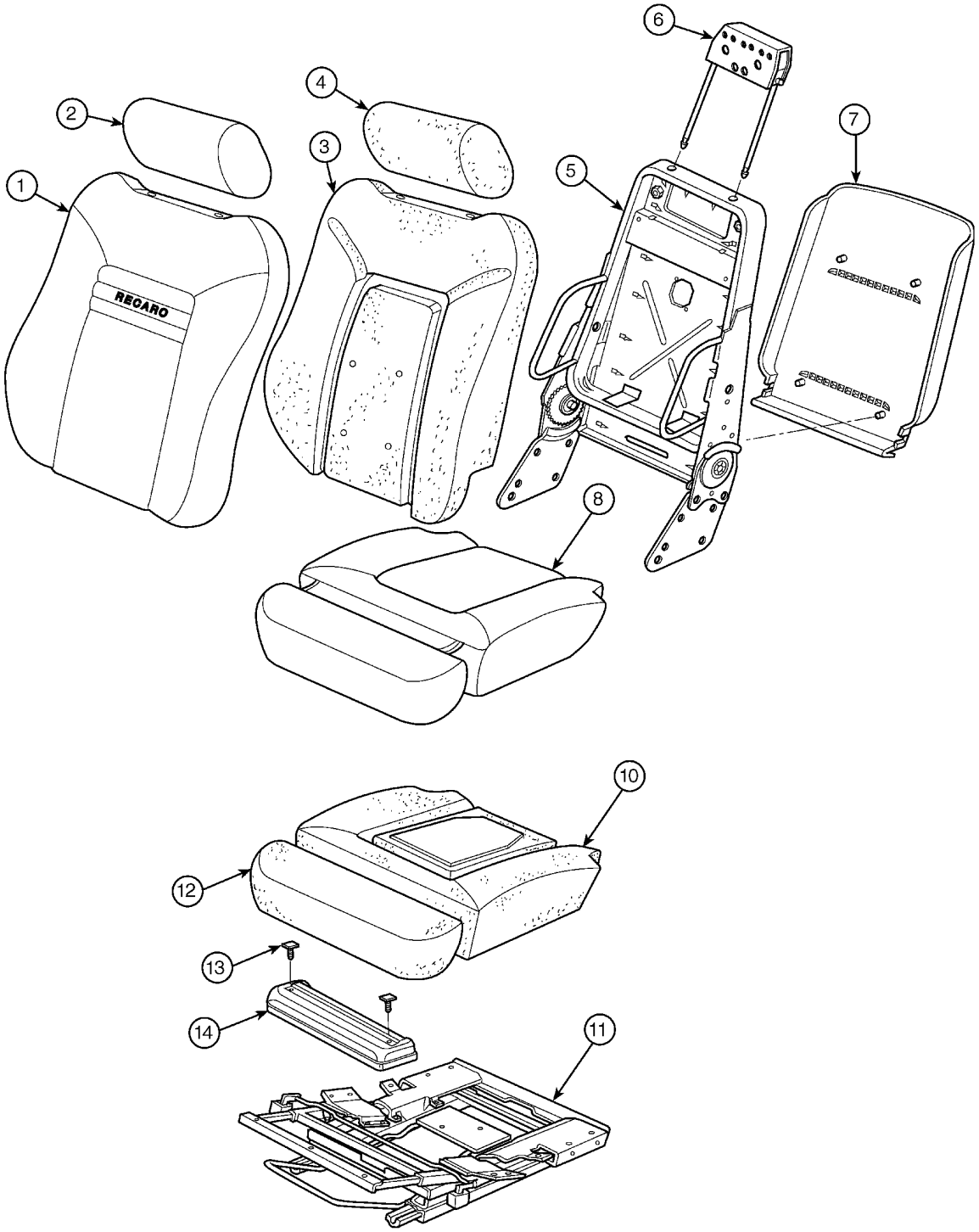

From Y-7046 Up to 6-8906	DATE: 01/2014	PAGE: Y2-1823-15

SEAT COVER & FOAM - "RECARO" - ERGO-COACH

ITEM	PART	DESCRIPTION	XL45	MTH40	MTH45	MTH45S	NOTE
1	Call Order Desk	SEATBACK COVER ASSY	1				P
2	Call Order Desk	HEADREST COVER ASSY	1				P
3	N8891359	FOAM BACKREST	1				
4	Call Order Desk	FOAM HEADREST	1				P
5	Y2-1823-10	**BACKREST ASSY - "RECARO" - ERGO-COACH**					
6	Y2-1823-25	**SEAT CUSHION FRAME - "RECARO" - ERGO-COACH**					
8	Call Order Desk	SEAT CUSHION COVER ASSY	1				P
10	Call Order Desk	FOAM SEAT CUSHION	1				P
12	Call Order Desk	THIGH FOAM SUPPORT	1				P
13	N8887357	FRAME TIGH EXTENSION	1				
14	N8887358	WASHER BOLT	2				
		P) CALL ORDER DESK FOR SPECIFIC APPLICATION					
		(V.I.N.)					

From Y-7046 Up to 6-8906	DATE: 01/2014	PAGE: Y2-1823-20

SUSPENSION & RISER - "RECARO" - ERGO-COACH

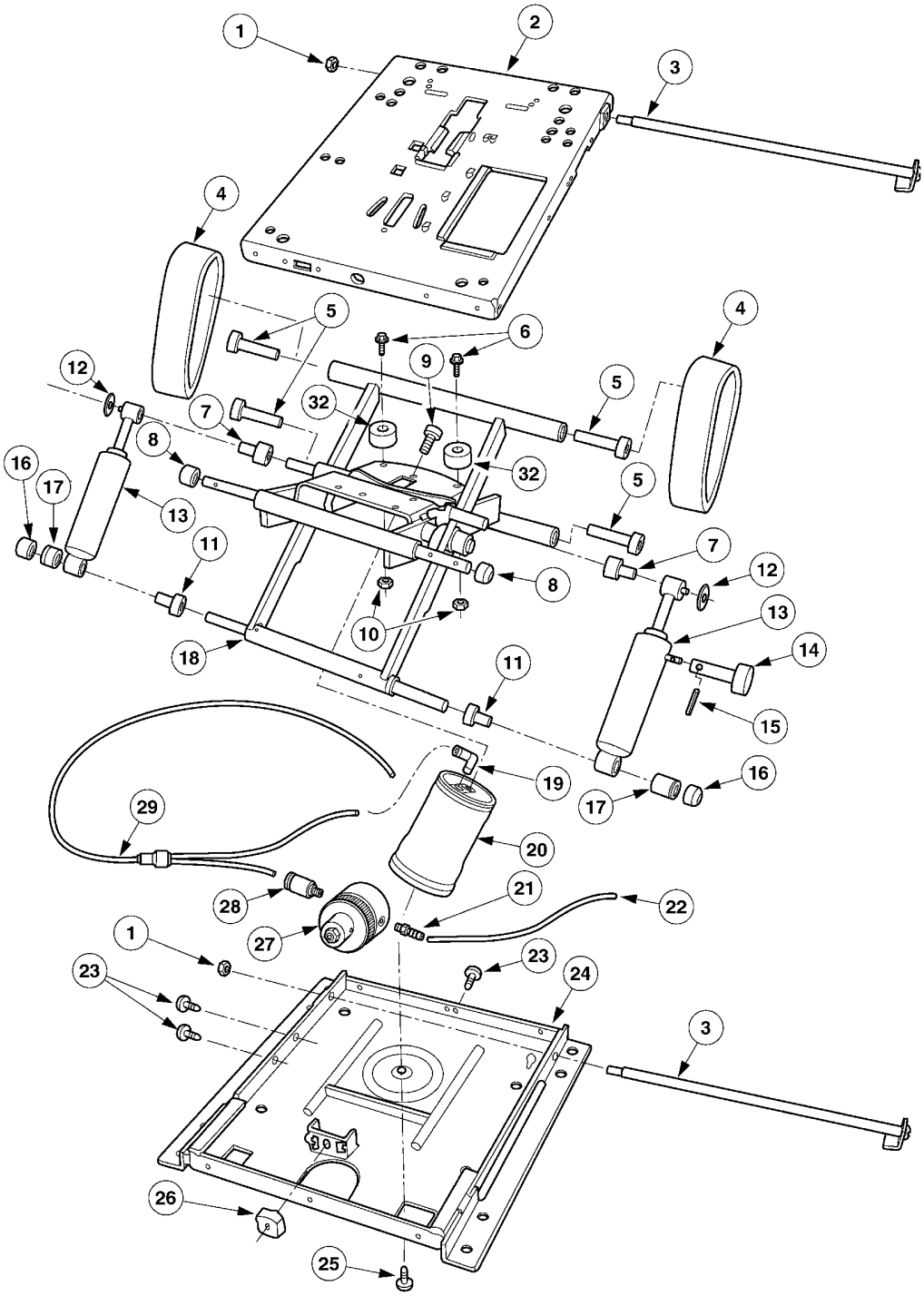

From Y-7046 Up to 6-8906	DATE: 01/2014	PAGE: Y2-1823-20
SUSPENSION & RISER - "RECARO" - ERGO-COACH		

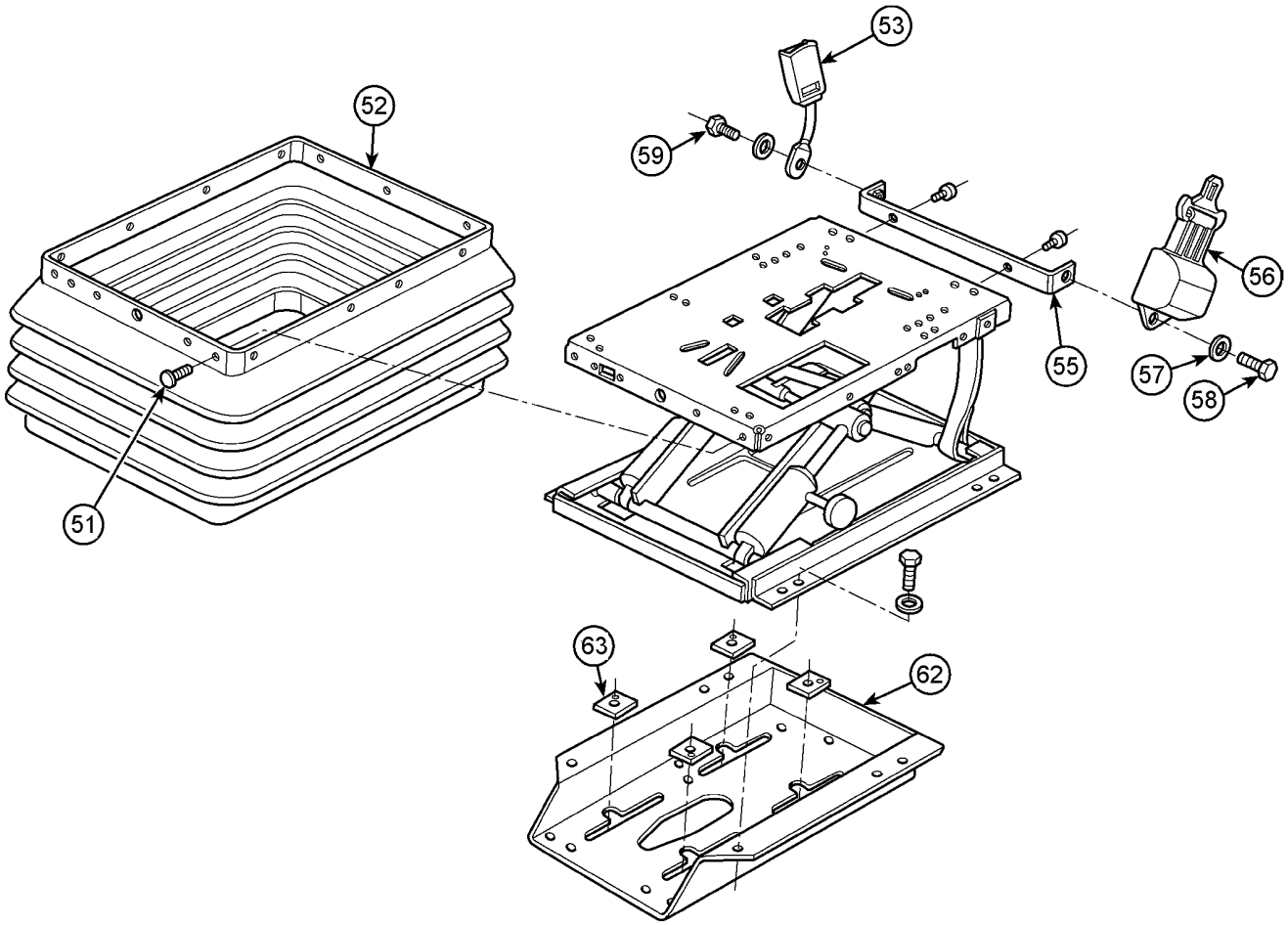

From Y-7046 Up to 6-8906	DATE: 01/2014	PAGE: Y2-1823-20

SUSPENSION & RISER - "RECARO" - ERGO-COACH

ITEM	PART	DESCRIPTION	XL45	MTH40	MTH45	MTH45S	NOTE
1	N.P.N.	NUT HEX 3/8-16 CENTER LOCK	2				4
2	N8890734	UPPER HOUSING KIT	1				
3	N8890738	WELDMENT SHAFT	2				
4	N8890736	TETHER	2				
5	Call Order Desk	TUBE BEARING	4				P
6	Call Order Desk	SCREW MA 1/4-20x5/8	1				P
7	Call Order Desk	BEARING UPPER SHOCK	2				P
8	Call Order Desk	ROLLER	2				P
9	Call Order Desk	SCREW CAP HEX 3/8-16x1/2	1				P
10	Call Order Desk	NUT HEX SLO 1/4-20	1				P
11	Call Order Desk	BEARING LOWERR SHOCK	2				P
12	Call Order Desk	PUSHNUT .5 STUD	2				P
13	N.P.N.	SHOCK FIXED SUSPENSION	1				4
14	Call Order Desk	KNOB AJUSTEMENT	1				P
15	Call Order Desk	PIN ROLL 1/8x5/8	1				P
16	Call Order Desk	ROLLER	2				P
17	Call Order Desk	SPACER SHORT	1				P
17	Call Order Desk	SPACER LONG	1				P
18	Call Order Desk	SCISSOR	1				P
19	N8890745	AIRSPRING FITTING	1				
20	Call Order Desk	AIR SPRING SUSPENSION	1				P
21	N8890748	AIR FITTING 10-32 THREAD	1				
22	Call Order Desk	TUBING NYLON 12 BLACK	AR				P
23	N.P.N.	CLIP	1				4
24	N8890735	LOWER HOUSING KIT	1				
25	Call Order Desk	SCREW 3/8-16x3/4	1				P
26	Call Order Desk	BUMPER LOWER HOUSING	1				P
27	Call Order Desk	REGULATOR MONNIER 10PSI	1				P
28	Call Order Desk	AIR FITTING 10-32 THREAD	1				P
29	N8890744	TUBING 1/4" OD	AR				
32	Call Order Desk	BUMPER	1				P
51	N8890714	BOOT ASSY SUSPENSION	1				
. NS	N8882340	. PLASTIC RIVET	QR				
52	N8882340	. PLASTIC RIVET	23				
53	N8891356	2 PT RH SEATBELT ASM	1				
		4) NO PARTS NUMBER					
		P) CALL ORDER DESK FOR SPECIFIC APPLICATION					
		(V.I.N.)					

From Y-7046 Up to 6-8906	DATE: 01/2014	PAGE: Y2-1823-20

SUSPENSION & RISER - "RECARO" - ERGO-COACH

ITEM	PART	DESCRIPTION	XL45	MTH40	MTH45	MTH45S	NOTE
53	Call Order Desk	. BUCKLE ASSY	1				P
55	N8890713	. SUPPORT KIT 2PT SEAT BELT ATTACHMENT	1				
56	Call Order Desk	. SEAT BELT	1				P
57	Call Order Desk	. WASHER FL 23.5x12x1.7	2				P
58	Call Order Desk	. SCREW SHR CAP HEX 7/16-20x1 3/4	1				P
59	Call Order Desk	. SCREW CAP HEX 7/16-20x1 1/2	1				P
	Call Order Desk	. BRACKET-SWIVEL	1				P
	Call Order Desk	. WASHER FL 7/16 ID x 1.5 OD .437x1.500	1				P
62	Call Order Desk	RISER 3" CRS KIT	1				P
62	Call Order Desk	. RISER 3" ASSY	1				P
	Call Order Desk	. LOOSE PARTS PACKAGE	1				P
63	Call Order Desk	. WASHER FL SQ 3.000	1				P
70	N8890730	AIR SPRING KIT	1				A
71	N8890732	FIXED SHOCK ASM KIT	1				B
72	N8890733	SHAFT SPACER BEARING SUSPENSION	1				C
73	N8890737	SCISSORS ASM KIT	1				D
74	N8890739	AIR LINE ABRASION KIT	1				
		P) CALL ORDER DESK FOR SPECIFIC APPLICATION					
		(V.I.N.)					
		A) INCLUDE ITEMS #9, 19, 20 & 25					
		B) INCLUDE ITEMS #1, 7, 11, 12, 13, 14 & 15					
		C) INCLUDE ITEMS #1, 3, 5, 7, 8, 11, 12, 16 & 17					
		D) INCLUDE ITEMS #1, 3, 5, 6, 7, 8, 10, 11, 12,					
		16, 17, 18 & 32					

From Y-7046 Up to 6-8906	DATE: 01/2014	PAGE: Y2-1823-25

SEAT CUSHION FRAME - "RECARO" - ERGO-COACH

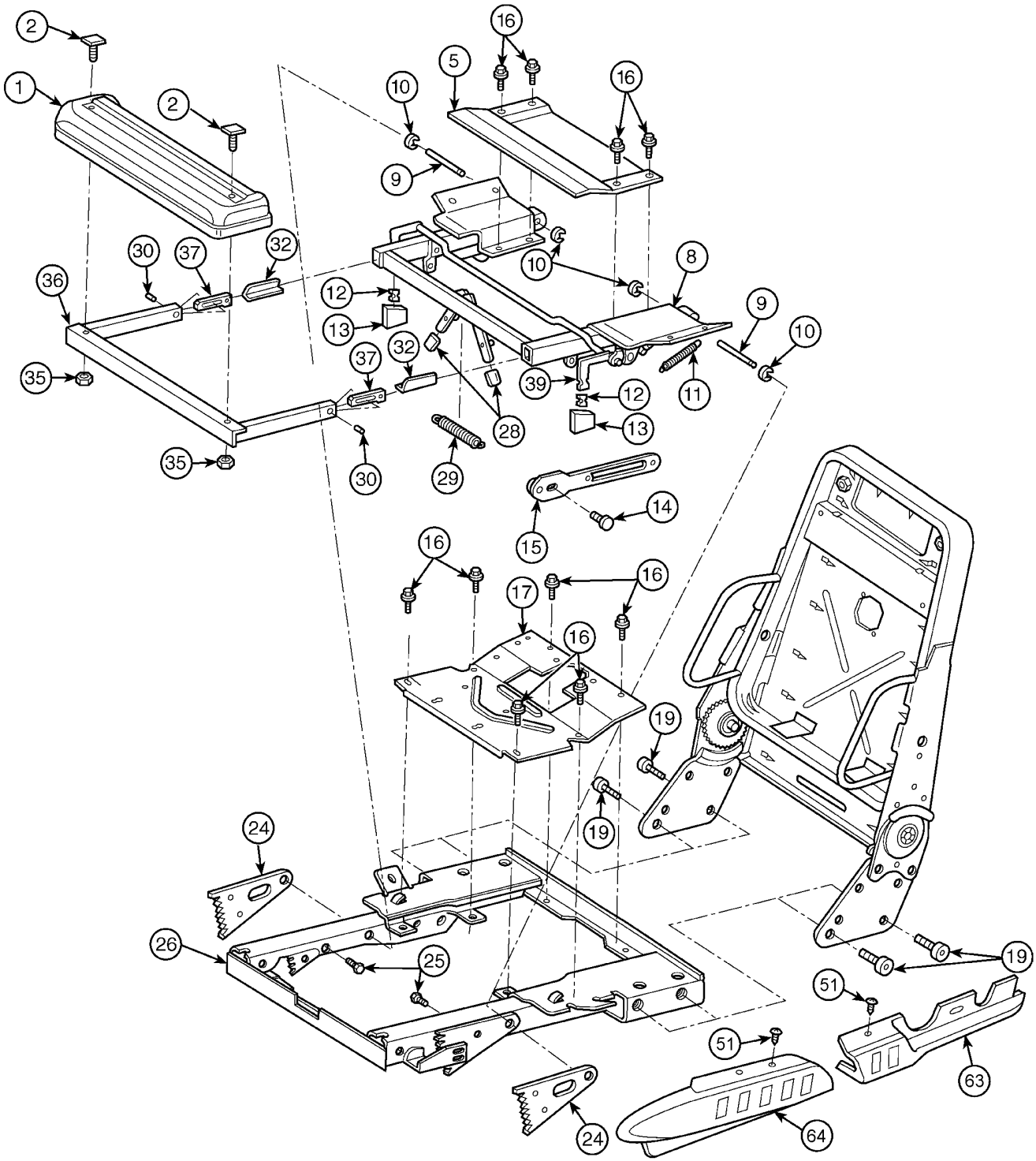

From Y-7046 Up to 6-8906	DATE: 01/2014	PAGE: Y2-1823-25

SEAT CUSHION FRAME - "RECARO" - ERGO-COACH

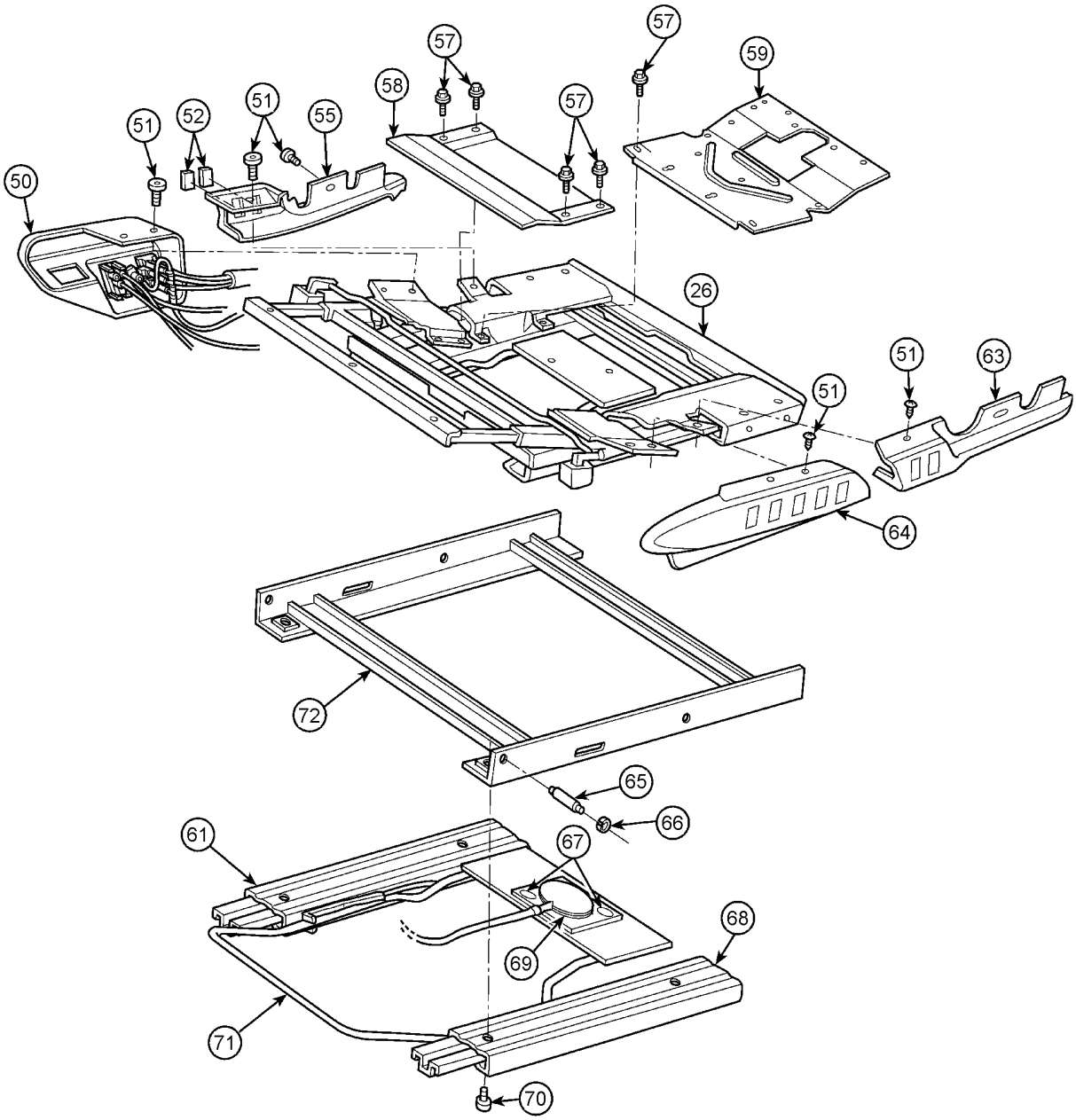

From Y-7046 Up to 6-8906	DATE: 01/2014	PAGE: Y2-1823-25

SEAT CUSHION FRAME - "RECARO" - ERGO-COACH

ITEM	PART	DESCRIPTION	XL45	MTH40	MTH45	MTH45S	NOTE
	N8890717	FRAME ASM CUSHION	1				
. A	N8887306	. SCREW M5 x 10	12				
. B	N8890718	. FRT CUSHION PAN	1				
. C	N8890719	. CUSHION PAN RR	1				
1	N8887357	. FRAME TIGH EXTENSION	1				
2	N8887358	. WASHER BOLT	2				
5	N8800400	. CUSHION PAN FRONT / REPLACED BY: N8890718	1				
8	N8887365	. PLATE	1				
9	N8887375	. BOLT	2				
10	N8882381	. CLIP RETAINER	8				
11	N8887368	. SPRING	2				
12	N8882395	. CLIP	2				
13	N8887258	. KNOB	2				
14	N8887367	. SCREW	2				
15	N8887366	. RELEASE PLATE	2				
16	N8887306	. SCREW M5-0.8x10	12				
17	N8800399	. SEAT CUSHION PAN REAR	1				
19	N8882373	. SCREW M6-1.0x20	4				
24	N8887362	. PIVOT PLATE	2				
25	N8887363	. SCREW	2				
26	Call Order Desk	. FRAME CUSHION ASSY	1				P
28	N8887369	. PLASTIC CAP	2				
29	N8887370	. SPRING	1				
30	N8887374	. BOLT	2				
32	N8887372	. GLIDING PART	2				
35	N8887359	. NUT M6	2				
36	N8887371	. TIGH EXTENSION	1				
37	N8887373	. PLASTIC GUIDE	2				
39	Call Order Desk	. LEVER, RAKE ADJUSTMENT	2				P
	Call Order Desk	. VELCRO LOOP	AR				P
	Call Order Desk	. PIN ATTACH 38.6MM	4				P
	N8887356	REPAIR KIT LENGHT ADJUSTMENT	1				A
50	Y2-1823-10	**BACKREST ASSY - "RECARO" - ERGO-COACH**					
51	N8887256	SCREW	8				
52	N8887257	COVER PLATE SWITCH	9				
55	N8890722	CONTROL PANEL / REAR R.H.	1				
57	N8887306	SCREW M5-0.8x10	12				
58	N8800400	CUSHION PAN FRONT / REPLACED BY: N8890718	1				
59	N8890719	CUSHION PAN RR	1				
61	N8887269	TRACK RIGHT	1				
63	N8890721	CONTROL PANEL / REAR L.H.	1				
		P) CALL ORDER DESK FOR SPECIFIC APPLICATION					
		(V.I.N.)					
		A) INCLUDE ITEMS #1, 2, 35					

From Y-7046 Up to 6-8906	DATE: 01/2014	PAGE: Y2-1823-25

SEAT CUSHION FRAME - "RECARO" - ERGO-COACH

ITEM	PART	DESCRIPTION	XL45	MTH40	MTH45	MTH45S	NOTE
64	N8887260	CONTROL PANEL / FRONT L.H.	1				
65	Call Order Desk	PIN ATTACH 38.6MM	4				P
66	N8882381	CLIP RETAINER	8				
67	N8890747	RETAINER	2				
68	N8887268	TRACK LEFT	1				
69	N8890756	ACTUATOR: AUTO BLADDER-CONTROL	1				
70	Call Order Desk	SCREW CAP HEXS M8-1.25x20 8.8	8				P
	N8882349	NUT M8 / REPLACED BY: N8880628	4				
	N8880629	WASHER 5/16 / REPLACED BY: N8882350	4				
71	N8890726	CENTER TRACK ACTUATOR	1				
72	N8890729	COUSHION FRAME ADAPTER KIT	1				
72	Call Order Desk	. BRACKET CUSHION FRONT ADAPTER L.H.	1				P
72	Call Order Desk	. BRACKET CUSHION FRONT ADAPTER R.H.	1				P
72	N8882381	. CLIP RETAINER	8				
72	Call Order Desk	. PIN ATTACH 38.6MM	4				P
		P) CALL ORDER DESK FOR SPECIFIC APPLICATION					
		(V.I.N.)					

From Y-7046 Up to 6-8906	DATE: 01/2014	PAGE: Y2-1823-30
ARMREST - "RECARO" - ERGO-COACH		

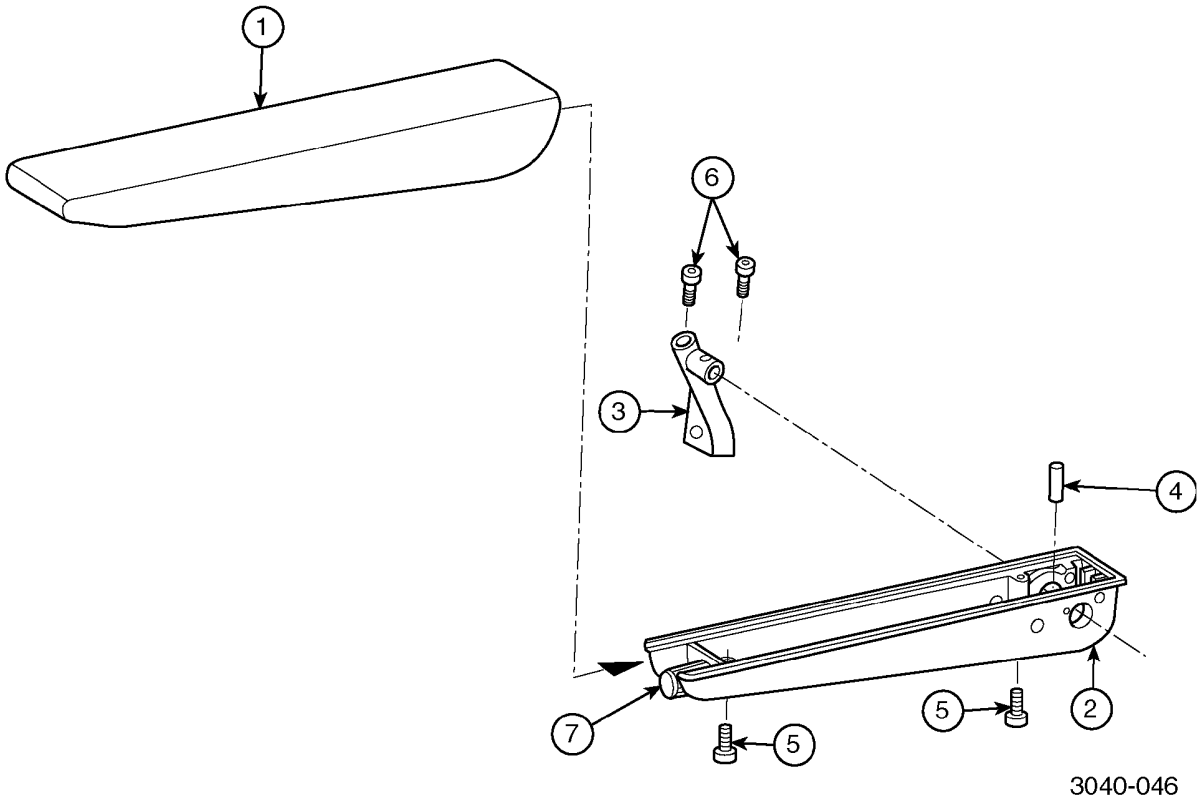

From Y-7046 Up to 6-8906	DATE: 01/2014	PAGE: Y2-1823-30

ARMREST - "RECARO" - ERGO-COACH

ITEM	PART	DESCRIPTION	XL45	MTH40	MTH45	MTH45S	NOTE
	N8891363	ARMREST ASSY L.H.	1				
	N8891364	ARMREST ASSY R.H.	1				
1	N8891365	. FOAM ARMREST	1				
2	N8800125	. ARMREST FRAME / REPLACED BY: N8891366	1				
3	N8891367	. BRACKET L.H.	1				
3	N8891368	. BRACKET R.H.	1				
4	N8800461	. RETAINING PIN DIN7343 10X40 / REPLACED BY: N8891369	1				
5	N8800462	. SCREW M4X16 DIN7085 / REPLACED BY: N8891370	2				
6	N8891371	. BOLT	2				
7	N8800468	. PLASTIC END KNOB / REPLACED BY: N8891372	1				
8	N8891863	. SPACER	2				

From Y-7046 Up to 6-8906	DATE: 01/2014	PAGE: Y2-1823-50
DRIVER'S SEAT - "USSC" - 9100ALX3		

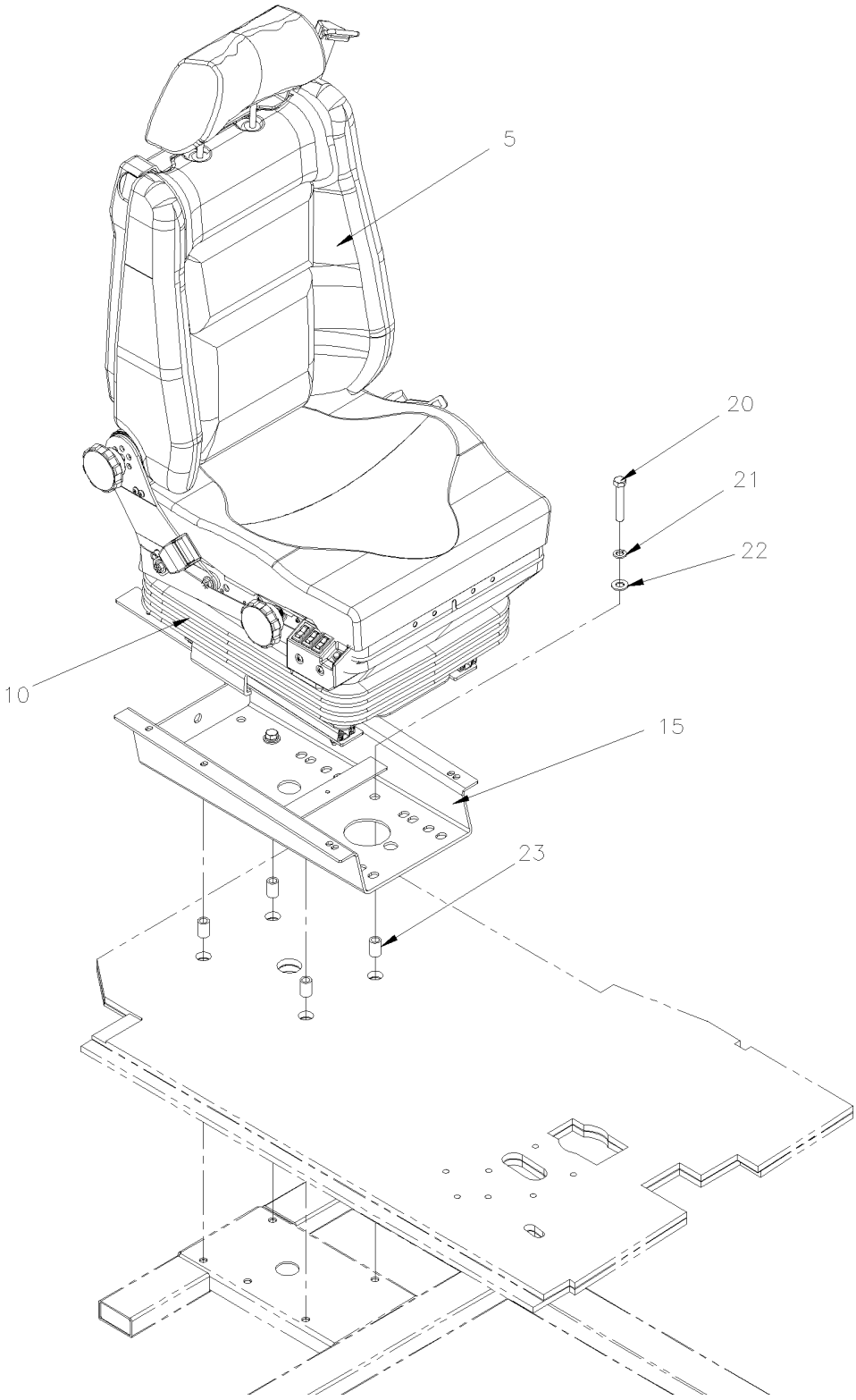

From Y-7046 Up to 6-8906	DATE: 01/2014	PAGE: Y2-1823-50

DRIVER'S SEAT - "USSC" - 9100ALX3

ITEM	PART	DESCRIPTION	XL45	MTH40	MTH45	MTH45S	NOTE
	861553	DRIVER'S SEAT - "USSC" - MODEL 9100 ALX3	1				
	861739	DRIVER'S SEAT - "USSC" - MODEL 9100 ALX3	1				
	861821	DRIVER'S SEAT - "USSC" - MODEL 9100 ALX3	1				
	861832	DRIVER'S SEAT - "USSC" - MODEL 9100 ALX3	1				
	862077	DRIVER'S SEAT - "USSC" - MODEL 9100 ALX3	1				
	862098	DRIVER'S SEAT - "USSC" - MODEL 9100 ALX3	1				
5	Y2-1823-60	**. SEAT ASSY - "USSC" - 9100ALX3**					
10	Y2-1823-70	**. SUSPENSION ASSY - "USSC" - 9100ALX3**					
15	Y2-1823-80	**. BASE ASSY - "USSC" - 9100ALX3**					
20	5001862	SCREW CAP HEX M12-1.75x70 G10.9 N500	4				
21	500747	WASHER LO SPT 12.2x21.1x2.5 ZG603	4				
22	500958	WASHER FL .531x1.062x.095 SS	4				
23	362549	SPACER 1 1/4" / <> STRUCTURE & BASE	4				

From Y-7046 Up to 6-8906	DATE: 01/2014	PAGE: Y2-1823-60
SEAT ASSY - "USSC" - 9100ALX3		

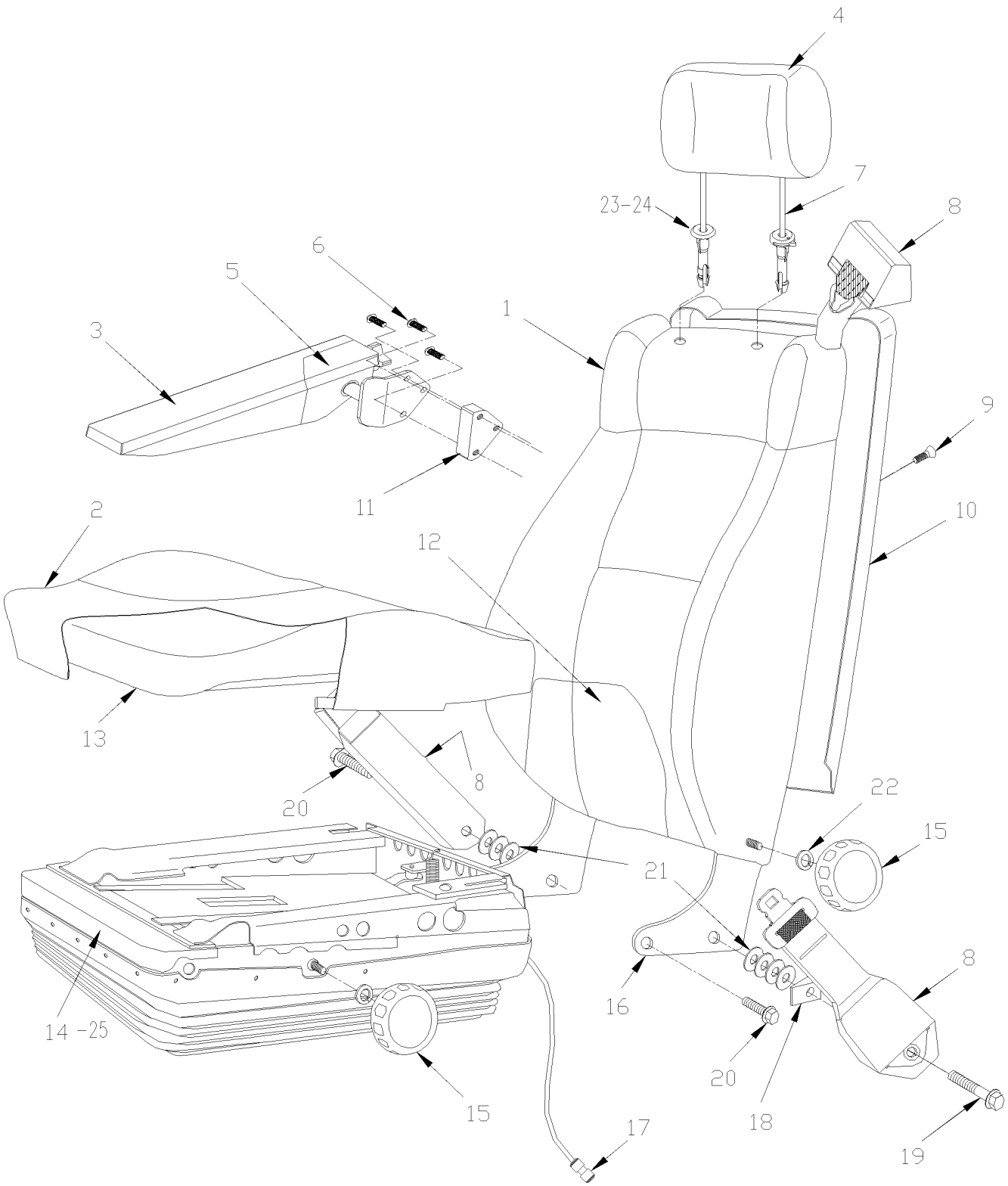

From Y-7046 Up to 6-8906	DATE: 01/2014	PAGE: Y2-1823-60

SEAT ASSY - "USSC" - 9100ALX3

ITEM	PART	DESCRIPTION	XL45	MTH40	MTH45	MTH45S	NOTE
1	Call Order Desk	COVER BACKREST	1				P
1	Call Order Desk	BACKREST COVERING / S.C.C.	1				P
2	Call Order Desk	COVER CUSHION	1				P
2	Call Order Desk	CUSHION SEAT COVERING / S.C.C	1				P
3	Call Order Desk	COVER ARMREST	1				P
3	Call Order Desk	ARMREST PAD COVERING S.C.C.	2				P
4	Call Order Desk	COVER HEADREST	1				P
4	Call Order Desk	HEADREST COVERING / S.C.C.	1				P
5	Call Order Desk	ARMREST FRONT L.H. W/OUT COVERING	1				P
5	Call Order Desk	ARMREST FRONT R.H. W/OUT COVERING	1				P
6	N8893510	SCREW M8-1.25x35	3				
7	N8887203	HEADREST ASSY	1				
7	Call Order Desk	HEADREST W/OUT COVERING	1				P
8	N8891957	BELT 3PT ASS	1				
8	864095	. BELT 3PT / SHOULDER RETRACTOR	1				
8	864096	. BELT 3PT / LAP RETRACTOR	1				
8	864097	. BELT 3PT / BUCKLE RECEPTOR 4 3/4	1				
9	N8887219	SCREW 1/4-20x3/4	2				
10	N8891951	BACKSHELL W/LOGO	1				
11	N8893511	ARMREST SHIM	2				
12	N8882987	FOAM BACKREST	1				
13	N8887209	CUSHION FOAM	1				
14	N8891953	SUSPENSION BASE ASSY W/FORMER VALVE	1				
14	Call Order Desk	SUSPENSION BASE ASSY W/CURRENT VALVE	1				P
15	N8882989	KNOB SEAT ADJUSTMENT W/FORMER VALVE	2				
16	N8891949	BACK BOLSTER	1				
17	N8882997	CONNECTOR	2				
18	N8887857	SPACER 1/2x1-1/8x5/8	2				
19	N8882962	SCREW CAP HEX 7/16-20X2.25	2				
20	N8882960	SCREW CAP HEX /7/16-20X1.5"	2				
21	N8882992	WASHER FLAT 7/16	7				
22	N8882967	WASHER, LOCK M10	2				
22	N8882988	NUT JAM M10X1.5	2				
23	N8893445	HEADREST PLUG	2				
24	Call Order Desk	PIN HAIR - HEADREST .0725 DIA	2				P
25	Y2-1823-70	**SUSPENSION ASSY - "USSC" - 9100ALX3**					
		P) CALL ORDER DESK FOR SPECIFIC APPLICATION					
		(V.I.N.)					

From Y-7046 Up to 6-8906	DATE: 01/2014	PAGE: Y2-1823-70
SUSPENSION ASSY - "USSC" - 9100ALX3		

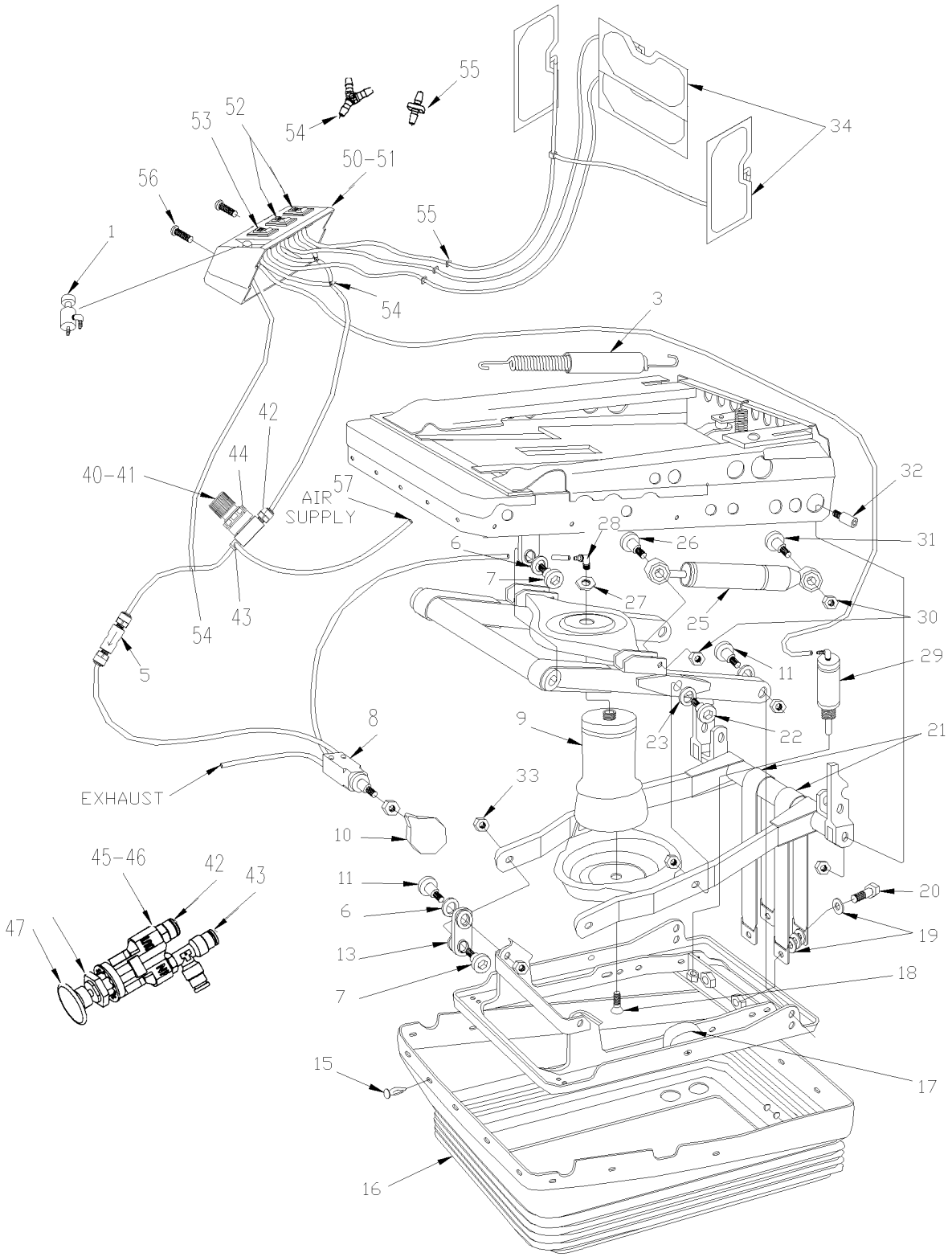

From Y-7046 Up to 6-8906	DATE: 01/2014	PAGE: Y2-1823-70

SUSPENSION ASSY - "USSC" - 9100ALX3

ITEM	PART	DESCRIPTION	XL45	MTH40	MTH45	MTH45S	NOTE
1	N8887215	SLIDE BUTTON ASSY	1				
3	N8882994	SPRING	2				
5	N8887214	ONE WAY AIR VALVE	1				
6	N8883024	WASHER	1				
7	N8883022	BOLT	6				
8	N8883028	AIR VALVE ASSY W/FITTING HEIGHT CONTROL / FORMER	1				
9	N8883029	AIR BAG KIT	1				A
9	N8893448	. AIR BAG ONLY	1				
10	N8883026	KNOB ADJ / HEIGHT CONTROL / FORMER / REPLACED BY: N8800549	1				
11	N8883025	BOLT	4				
13	N8883023	BUSHING	12				
15	N8883021	RIVET	30				
16	N8883020	BELLOW	1				
17	N8883018	RUBBER BUMPER	2				
18	N8883019	SCREW M10-1.5x16	1				
19	N8887858	WASHER 7/16	6				
20	N8882961	SCREW 7/16-20x1 1/4	2				
21	N8883017	STRAP 15"	2				
22	N8887205	BOLT	2				
23	N8887206	BUSHING 18MM	2				
25	Call Order Desk	SHOCK ABSORBER, FIRM	1				P
	N8882305	BUSHING SHOCK ABSORBER	4				
26	N8882303	BOLT, HEX SHOCK M8 X 40	2				
27	N8883031	NUT	1				
28	N8883010	AIR BAG NIPPLE	1				
29	N8887216	SLIDE CYLINDER ASSY	1				
30	N8883015	NUT LOCK M8-1.25/GRD10/CZ	2				
31	N8883013	BOLT, M8 X 40	2				
32	N8883012	BOLT REAR BEARING	2				
33	N8883030	LOCK NUT 10M	1				
34	N8883036	LUMBAR AIR BAG ASSY	3				
34	N8891961	RIVET	6				
40	N8890644	AIR LUMBAR REGULATOR ASSY W/FITTING / W/AIR SLIDE CYLINDER	1				
40	N8887856	AIR LUMBAR REGULATOR ASSY W/FITTING / REPLACED BY: N8890644	1				
41	N8883033	. AIR REGULATOR / REPLACED BY: N8887856	1				
42	N8892738	. CONNECTOR 1/8 NPT	1				
43	N8893451	. MALE RUN TEE 1/8 NPT	1				
44	N8893452	. NUT RETAINER REGULATOR	1				
45	N8893439	AIR VALVE ASSY W/FITTING / HEIGHT CONTROL / CURRENT	1				
46	N8893450	. AIR VALVE / HEIGHT CONTROL / CURRENT	1				
47	N8891954	. KNOB ADJ / HEIGHT CONTROL / CURRENT	1				
		P) CALL ORDER DESK FOR SPECIFIC APPLICATION					
		(V.I.N.)					
		A) INCLUDE ITEMS # 18, 27 AND 28					

From Y-7046 Up to 6-8906	DATE: 01/2014	PAGE: Y2-1823-70

SUSPENSION ASSY - "USSC" - 9100ALX3

ITEM	PART	DESCRIPTION	XL45	MTH40	MTH45	MTH45S	NOTE
50	N8887212	AIR BOX ASSY W3 AIR SWITCH	1				
51	N8883035	. SWITCH BOX	1				
52	N8892491	. AIR SWITCH / LUMBAR	2				
53	N8892492	. AIR SWICH / BOLSTER	1				
54	N8893453	. Y CONNECTOR 1/8"	3				
55	N8893454	. UNION CONNECTOR 1/8"	3				
56	N8882986	. SCREW 1/4-20x1 3/4	2				
57	N8893455	AIR TUBE 1/4"	AR				

From Y-7046 Up to 6-8906	DATE: 01/2014	PAGE: Y2-1823-70

SUSPENSION ASSY - "USSC" - 9100ALX3

ITEM	PART	DESCRIPTION	XL45	MTH40	MTH45	MTH45S	NOTE

From Y-7046 Up to 6-8906	DATE: 01/2014	PAGE: Y2-1823-80
BASE ASSY - "USSC" - 9100ALX3		

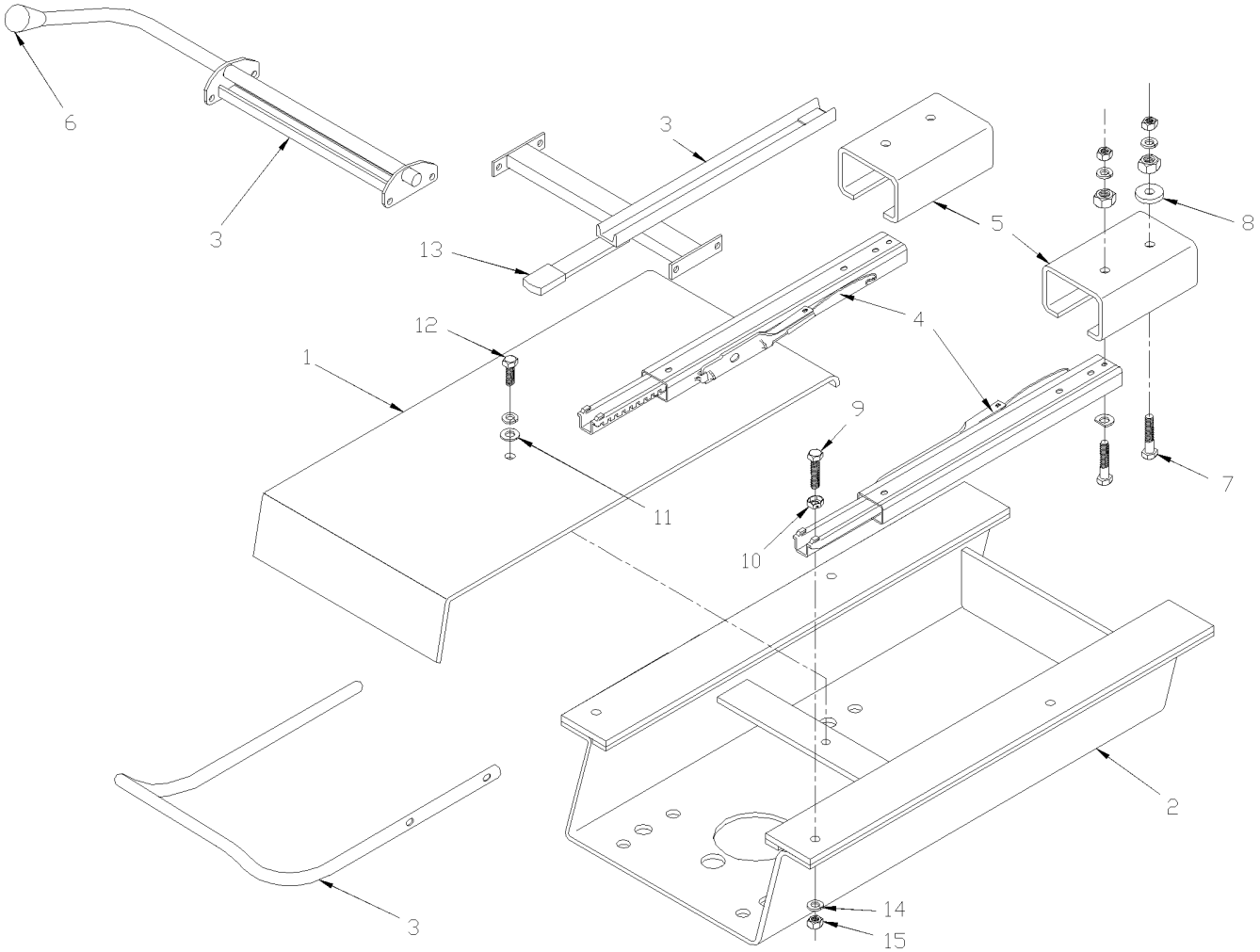

From Y-7046 Up to 6-8906	DATE: 01/2014	PAGE: Y2-1823-80

BASE ASSY - "USSC" - 9100ALX3

ITEM	PART	DESCRIPTION	XL45	MTH40	MTH45	MTH45S	NOTE
1	N8891960	COVER	1				
2	N8891958	BASE ASSY 4"	1				
3	N8891955	RELEASE HANDLE ASM	1				
4	N8883008	SLIDE SET 9.45"	1				
4	N8890626	SPRING 10"	1				A
5	N8891959	BRACKET SLIDE REINFORCMENT	2				
6	N8892036	KNOB 1 1/8" DIA.	1				
7	N8882965	SCREW 5/16-18x1 1/2	6				
8	N8883004	SPACER SLIDE	8				
9	N8882964	SCREW 5/16-18x1 1/4	4				
10	N8883007	NUT 3/8	4				
11	N8882966	WASHER, LOCK 7/16	2				
12	N8882962	SCREW CAP HEX 7/16-20X2.25	2				
13	N8883002	COVER LIMITOR	1				
14	N8882968	WASHER, LOCK 5/16	4				
	N8883006	NUT 5/16-18 GR8ZX	4				
		A) BETWEEN TWO SLIDES					

From Y-7046 Up to 6-8906	DATE: 01/2014	PAGE: Y2-1824-00
HOSTESS SEAT ASSY		

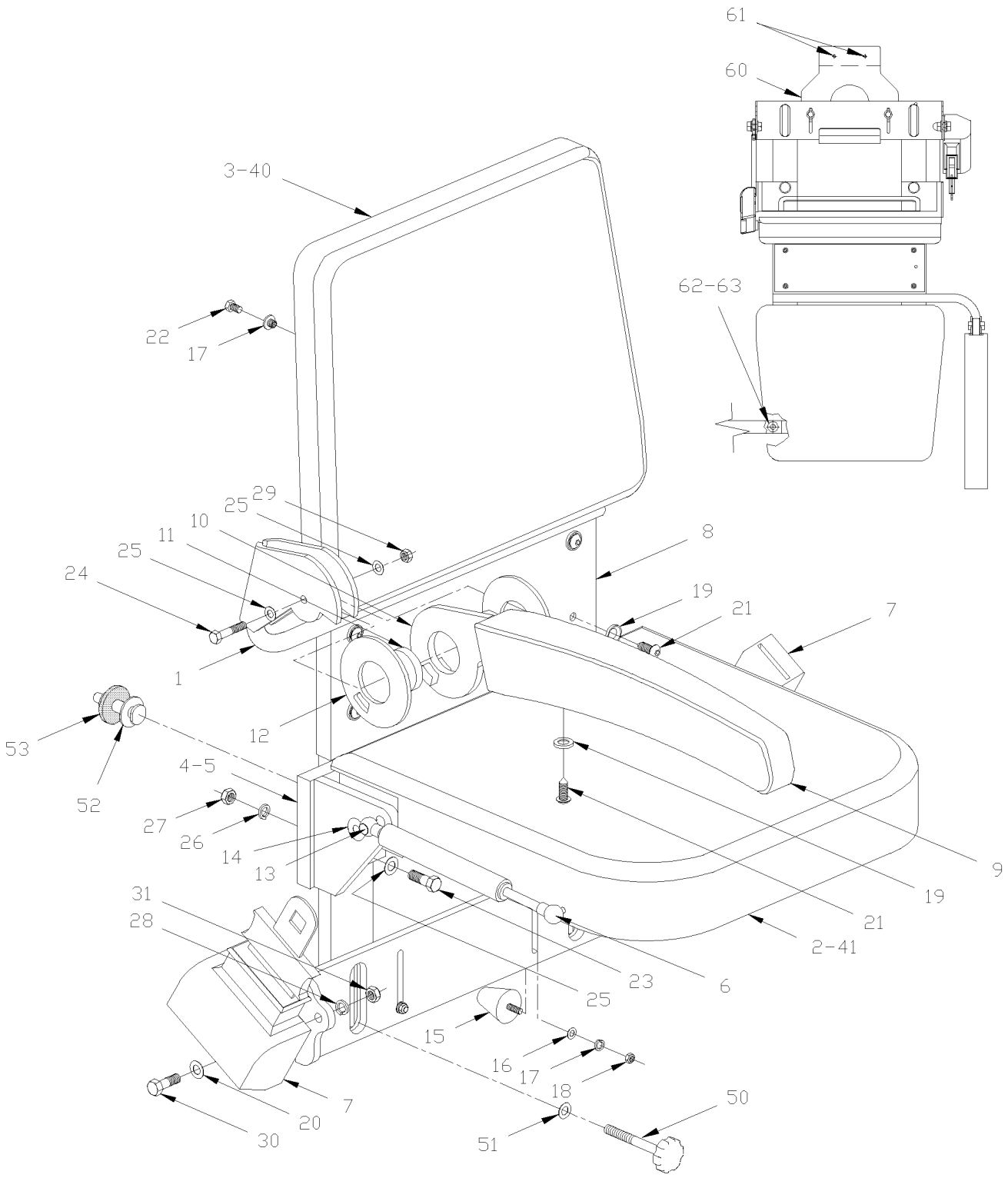

From Y-7046 Up to 6-8906	DATE: 01/2014	PAGE: Y2-1824-00

HOSTESS SEAT ASSY

ITEM	PART	DESCRIPTION	XL45	MTH40	MTH45	MTH45S	NOTE
	363326P	HOSTESS SEAT ASSY Up to 2-7732	1				
	363900P	HOSTESS SEAT ASSY From 2-7733 Up to 2-7879	1				
	364013P	HOSTESS SEAT ASSY From 2-7880	1				E
1	363627	. FRAME ASSY Up to 2-7879	1				
1	364107	. FRAME ASSY From 2-7880	1				
2	363050	. SEAT BASE, ASSY Up to 2-7879	1				
2	364008	. SEAT BASE, ASSY From 2-7880	1				
NS	363040	. CUSHION FOAM	1				
3	Call Order Desk	. BACKREST PANEL ASSY W/FOAM & COVERING /S.C.	1				P
3	363014	. LOWER BACKREST PANEL	1				
NS	363041	. BACK REST FOAM	1				
3	500453	. NUT TEE 1/4-20	1				
4	363061	. R.H. SUPPORT ASSY Up to 2-7732 / REPLACED BY: 363995	1				A
4	363995	. R.H. SUPPORT ASSY From 2-7733 Up to 2-7879	1				B
4	364002	. R.H. SUPPORT ASSY From 2-7880	1				
5	363062	. L.H. SUPPORT ASSY Up to 2-7732 / REPLACED BY: 363996	1				A
5	363996	. L.H. SUPPORT ASSY From 2-7733 Up to 2-7879	1				
5	364004	. L.H. SUPPORT ASSY From 2-7880	1				
6	980020	. CYLINDER GAZ / 244/164MM C/C / 35LBS	1				
NS	980015	. BALL STUD / W/10MM X M8-1.25 / 29.18MM	1				
NS	5001063	. RIVET NUT FL OKS M8-1.25 11.0-1.5	1				
7	860695	. SEAT BELT / KIT	1				
8	Call Order Desk	. FINISHING FABRIC	AR				P
9	363624	. COVERING ARMREST / LONG Up to 2-7879	1				
10	362939	. ARMREST / LONG Up to 2-7879	1				
11	363067	. SPACER Up to 2-7879	1				
12	362877	. SPACER PLASTIC / FRICTION DISK Up to 2-7879 / REPLACED BY: 363575	2				
13	980015	. BALL STUD / W/10MM X M8-1.25 / 29.18MM	1				
14	507260	. BUSHING NYLINER W/SHOULDER .375x.437x.375x.594	2				
15	504600	. RUBBER BUMPER BOLT 1/2- 5/8 X 1"	2				
16	500440	. WASHER FL .250x.562x.065 ZP	2				
17	500473	. WASHER LO SPT .262x.489x.062 ZP	8				
18	500995	. NUT HEX CAP #10-32 ZP	2				
19	500345	. WASHER FN CKF .187x.500x.090 BR BK	5				
20	500444	. WASHER FL .406x.812x.065 ZP	8				
		P) CALL ORDER DESK FOR SPECIFIC APPLICATION					
		(V.I.N.)					
		A) FOR PRODUCT IMPROVEMENT YOU REQUIRE KIT					
		#363997					
		B) THOSE ITEMS ARE INCLUDED IN KIT #363997					
		E) THIS SEAT ASSY DO NOT HAVE ARMREST					

From Y-7046 Up to 6-8906	DATE: 01/2014	PAGE: Y2-1824-00

HOSTESS SEAT ASSY

ITEM	PART	DESCRIPTION	XL45	MTH40	MTH45	MTH45S	NOTE
21	500686	. SCREW TP OV PH #6x1/2 BK	5				
22	500554	. SCREW MA RND SLT 1/4-20x1/2 SS	6				
23	500565	. SCREW MA RND PH 5/16-18x3/4 SS	4				
23	500069	. SCREW CAP HEX M8-1.25x16 G10.9 DP	2				
24	500182	. SCREW CAP HEX 5/16-18x1 1/4 G5 PT ZP Up to 2-7879	1				
25	500441	. WASHER FL .312x.734x.065 ZP From 2-7880	6				
26	500476	. WASHER LO SPT .317x.586x.078 ZP	4				
27	500778	. NUT HEX 5/16-18 ZP	4				
28	500478	. WASHER LO SPT .380x.683x.094 ZP	2				
29	500777	. NUT HEX STO 5/16-18 ZP Up to 2-7879	1				
30	500191	. SCREW CAP HEX 3/8-16x1 G5 ZP From 2-7880	2				
31	5001060	. NUT HEX CAP 3/8-16 NP	2				
40	363345P	. COVERING ASSY, BACKREST / S.C.C.	1				
41	363346P	. COVERING ASSY, SEATREST / S.C.C.	1				
NS	363997	KIT / "REPOSITIONING SEAT" Up to 2-7879	1				
. NS	IS-01045	. SEE INSTRUCTION SHEET Up to 2-7879	1				
NS	362918	. CUSHION 46MM O.D. / PLASTIC Up to 2-7879	1				B
NS	363992	. CAP TENSIONER 71MM O.D. / ALUMINUM Up to 2-7879	1				B
NS	520169	. SPRING Up to 2-7879	1				B
NS	507260	. BUSHING NYLINER W/SHOULDER .375x.437x.375x.594 Up to 2-7879	1				B
NS	500069	. SCREW CAP HEX M8-1.25x16 G10.9 DP Up to 2-7879	2				B
NS	502744	. NUT HEX STO M8-1.25 ZP Up to 2-7879	1				B
50	363938	SPECIAL BOLT ASSY / 97MM / TO FIX HOSTESS SEAT	1				C
NS	363070	SPECIAL BOLT ASSY / 126MM / TO FIX HOSTESS SEAT	1				C
NS	504500	SNAP BUSHING / .766x1.125x.453	2				C
51	500444	WASHER FL .406x.812x.065 ZP	2				C
52	363939	FASTENER / UPPER / TO FIX HOSTESS SEAT 38MM X M12-1.75	2				C
53	363363	WASHER RUB 42MM O.D. x 13MM I.D. x 3/16"	2				C
60	363933	HOOK	1				D
61	504416	RIVET POP DOME OE 3/16x5/8 SS	3				D
62	363547	BELT 485MM LG	1				D
63	5001168	BUMPER RUBBER / .750 OD x .562 TH x .187 HOLE	2				D
		B) THOSE ITEMS ARE INCLUDED IN KIT #363997					
		C) THOSE ITEMS ARE USED TO FIX HOSTESS SEAT					
		D) THOSE ITEMS ARE USED TO FIX HOSTESS SEAT IN THE BAGGAGE CASE					

From Y-7046 Up to 6-8906	DATE: 01/2014	PAGE: Y2-1824-00

HOSTESS SEAT ASSY

ITEM	PART	DESCRIPTION	XL45	MTH400	MTH445	MTH445S	NOTE

From Y-7046 Up to 6-8906	DATE: 01/2014	PAGE: Y2-1824-30
PASSENGER'S SEAT - "AMAYA" IDENTIFICATION "MODEL"		

GAUDI

BRAZIL

2 + 1

TORINO

TORINO VIP

SIGLIUM

PATRIOT

PATRIOT BRASIL

PATRIOT VIP

From Y-7046 Up to 6-8906	DATE: 01/2014	PAGE: Y2-1824-30

PASSENGER'S SEAT - "AMAYA" IDENTIFICATION "MODEL"

ITEM	PART	DESCRIPTION	XL45	MTH40	MTH45	MTH45S	NOTE
5		PASSENGER'S SEAT - "GAUDI" MODEL					
6	Y2-1826-08	**PASSENGER'S SEAT - "AMAYA" "GAUDI"**					
10		PASSENGER'S SEAT - "BRASIL" MODEL					
11	Y2-1826-06	**PASSENGER'S SEAT - "AMAYA" "BRASIL"**					
12	Y2-1826-51	**ARMREST PASSENGER'S SEAT - "AMAYA" WITH "BRASIL"**					
15		PASSENGER'S SEAT - "2 + 1" MODEL					
16	Y2-1826-05	**PASSENGER'S SEAT - "AMAYA" "EUROTECH"**					
17	Y2-1826-50	**ARMREST PASSENGER'S SEAT - "AMAYA" WITH "EUROTECH"**					
20		PASSENGER'S SEAT - "TORINO" MODEL					
21	Y2-1826-07	**PASSENGER'S SEAT - "AMAYA" "SIGLIUM" TORO & TORINO**					
25		PASSENGER'S SEAT - "TORINO" VIP MODEL					
30		PASSENGER'S SEAT - "SIGLIUM" MODEL					
35		PASSENGER'S SEAT - "PATRIOT" MODEL					
40		PASSENGER'S SEAT - "PATRIOT BRASIL" MODEL					
45		PASSENGER'S SEAT - "PATRIOT VIP" MODEL					

From Y-7046 Up to 6-8906	DATE: 01/2014	PAGE: Y2-1825-02
PASSENGER'S SEAT - "AMERICAN" - W6695		

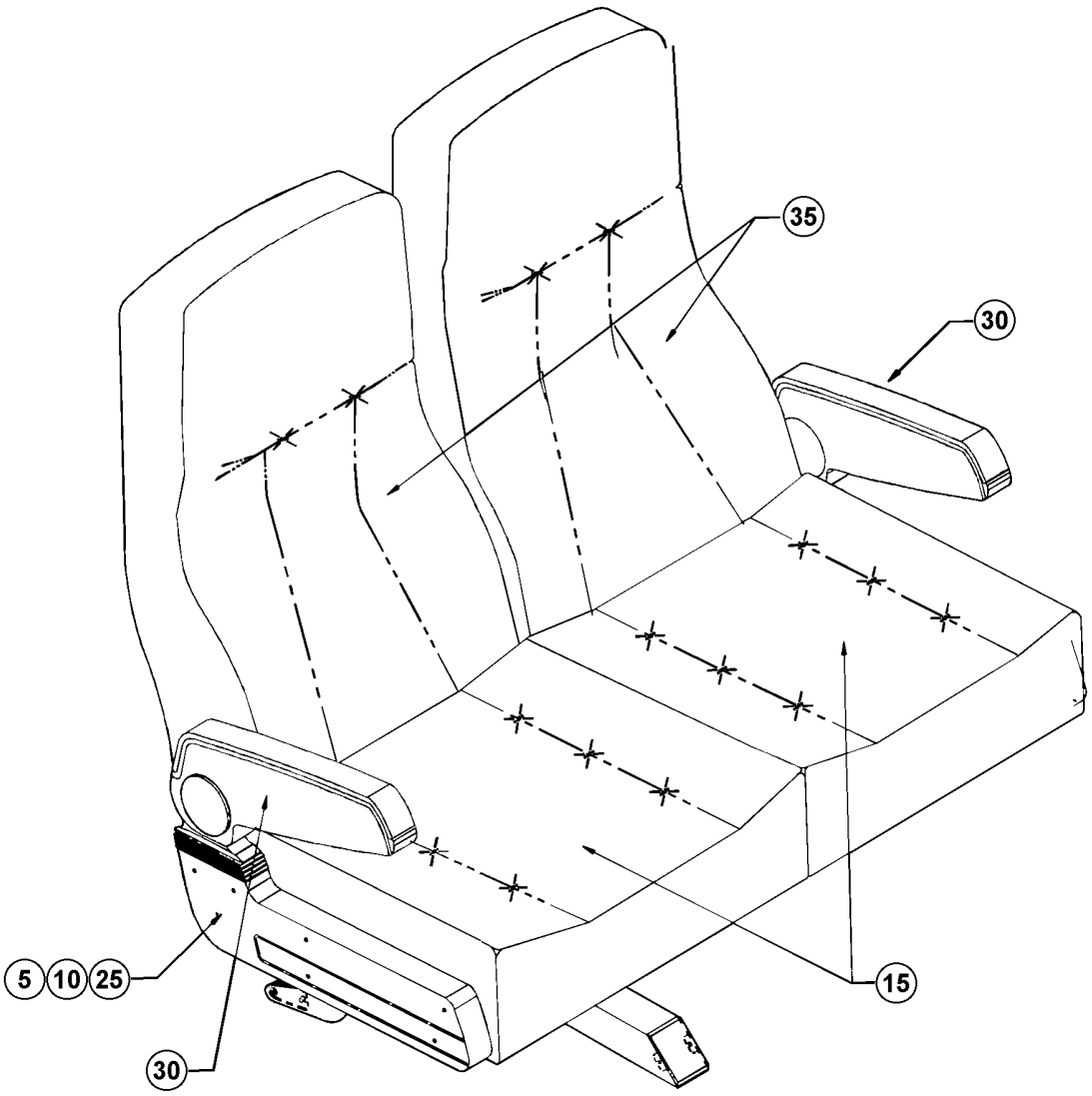

From Y-7046 Up to 6-8906	DATE: 01/2014	PAGE: Y2-1825-02
PASSENGER'S SEAT - "AMERICAN" - W6695		

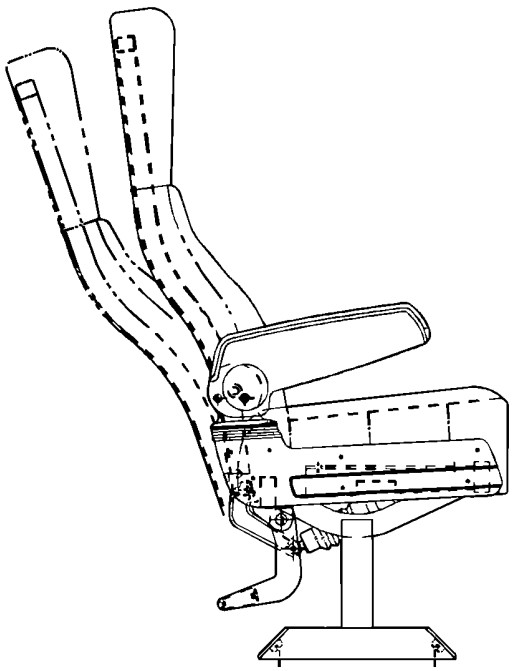

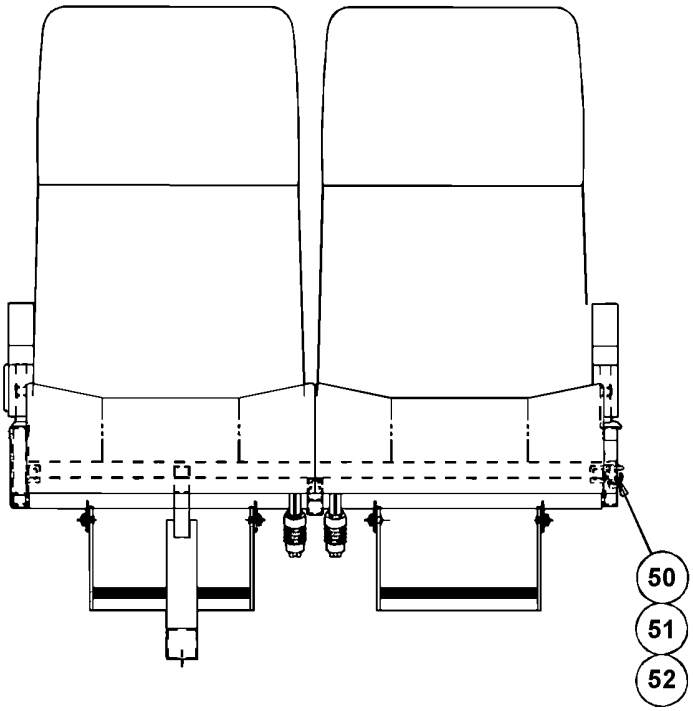

From Y-7046 Up to 6-8906	DATE: 01/2014	PAGE: Y2-1825-02

PASSENGER'S SEAT - "AMERICAN" - W6695

ITEM	PART	DESCRIPTION	XL45	MTH40	MTH45	MTH45S	NOTE
		IMPORTANT NOTE:					
		TO ORDER COMPLETE PASSENGER'S SEAT KIT #,					
		SEE THE FINAL VEHICLE RECORD.					
5	Y2-1825-05	**. PASSENGER'S SEAT - "AMERICAN" - FRAME**					
10	Y2-1825-10	**. PASSENGER'S SEAT - "AMERICAN" - FRAME ROTATIN**					
15	Y2-1825-20	**. PASSENGER'S SEAT - "AMERICAN" - CUSHION**					
25	Y2-1825-40	**. PASSENGER'S SEAT - "AMERICAN" - FOOTREST**					
30	Y2-1825-50	**. PASSENGER'S SEAT - "AMERICAN" - ARMREST**					
35	Y2-1825-60	**. PASSENGER'S SEAT - "AMERICAN" - BACK & ACCESS**					
50	Call Order Desk	SCREW - WALL ATTACHING	2				P
51	Call Order Desk	CHANNEL WALL ATTACHING	2				P
52	Call Order Desk	WASHER	2				P
		P) CALL ORDER DESK FOR SPECIFIC APPLICATION					
		(V.I.N.)					

From Y-7046 Up to 6-8906	DATE: 01/2014	PAGE: Y2-1825-02

PASSENGER'S SEAT - "AMERICAN" - W6695

ITEM	PART	DESCRIPTION	XL45	MTH40	MTH45	MTH45S	NOTE

From Y-7046 Up to 6-8906	DATE: 01/2014	PAGE: Y2-1825-03
PASSENGER'S SEAT - "AMERICAN" - W6696 & W7696		

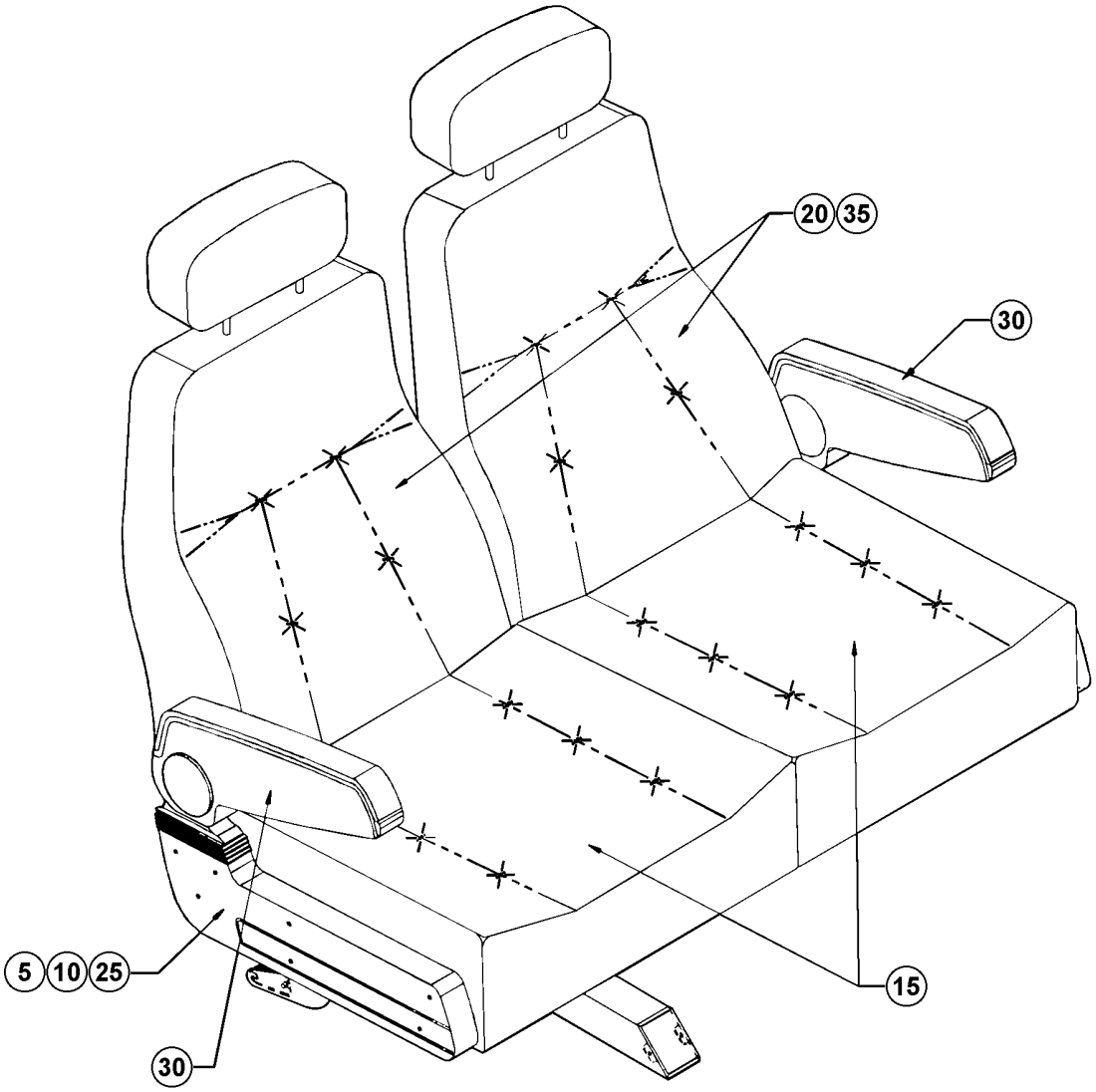

From Y-7046 Up to 6-8906	DATE: 01/2014	PAGE: Y2-1825-03
PASSENGER'S SEAT - "AMERICAN" - W6696 & W7696		

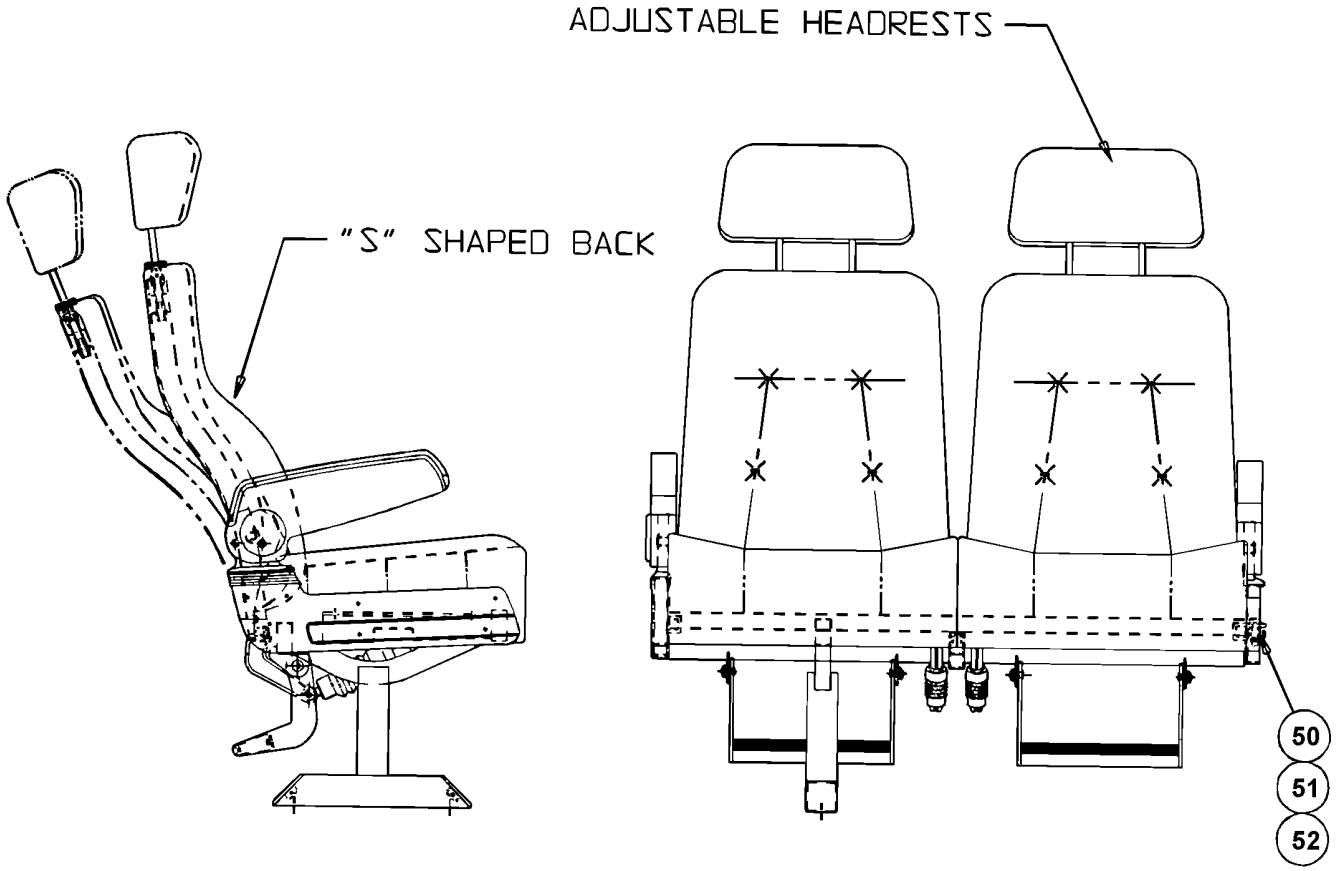

From Y-7046 Up to 6-8906	DATE: 01/2014	PAGE: Y2-1825-03

PASSENGER'S SEAT - "AMERICAN" - W6696 & W7696

ITEM	PART	DESCRIPTION	XL45	MTH40	MTH45	MTH45S	NOTE
		IMPORTANT NOTE:					
		TO ORDER COMPLETE PASSENGER'S SEAT KIT #,					
		SEE THE FINAL VEHICLE RECORD.					
5	Y2-1825-05	**. PASSENGER'S SEAT - "AMERICAN" - FRAME**					
10	Y2-1825-10	**. PASSENGER'S SEAT - "AMERICAN" - FRAME ROTATIN**					
15	Y2-1825-20	**. PASSENGER'S SEAT - "AMERICAN" - CUSHION**					
20	Y2-1825-31	**. PASSENGER'S SEAT - "AMERICAN" - BACKREST WX69**					
25	Y2-1825-40	**. PASSENGER'S SEAT - "AMERICAN" - FOOTREST**					
30	Y2-1825-50	**. PASSENGER'S SEAT - "AMERICAN" - ARMREST**					
35	Y2-1825-60	**. PASSENGER'S SEAT - "AMERICAN" - BACK & ACCESS**					
50	Call Order Desk	SCREW - WALL ATTACHING	2				P
51	Call Order Desk	CHANNEL WALL ATTACHING	2				P
52	Call Order Desk	WASHER	2				P
		P) CALL ORDER DESK FOR SPECIFIC APPLICATION					
		(V.I.N.)					

From Y-7046 Up to 6-8906	DATE: 01/2014	PAGE: Y2-1825-03

PASSENGER'S SEAT - "AMERICAN" - W6696 & W7696

ITEM	PART	DESCRIPTION	XL45	MTH400	MTH445	MTH445S	NOTE

From Y-7046 Up to 6-8906	DATE: 01/2014	PAGE: Y2-1825-05

PASSENGER'S SEAT - "AMERICAN" - FRAME

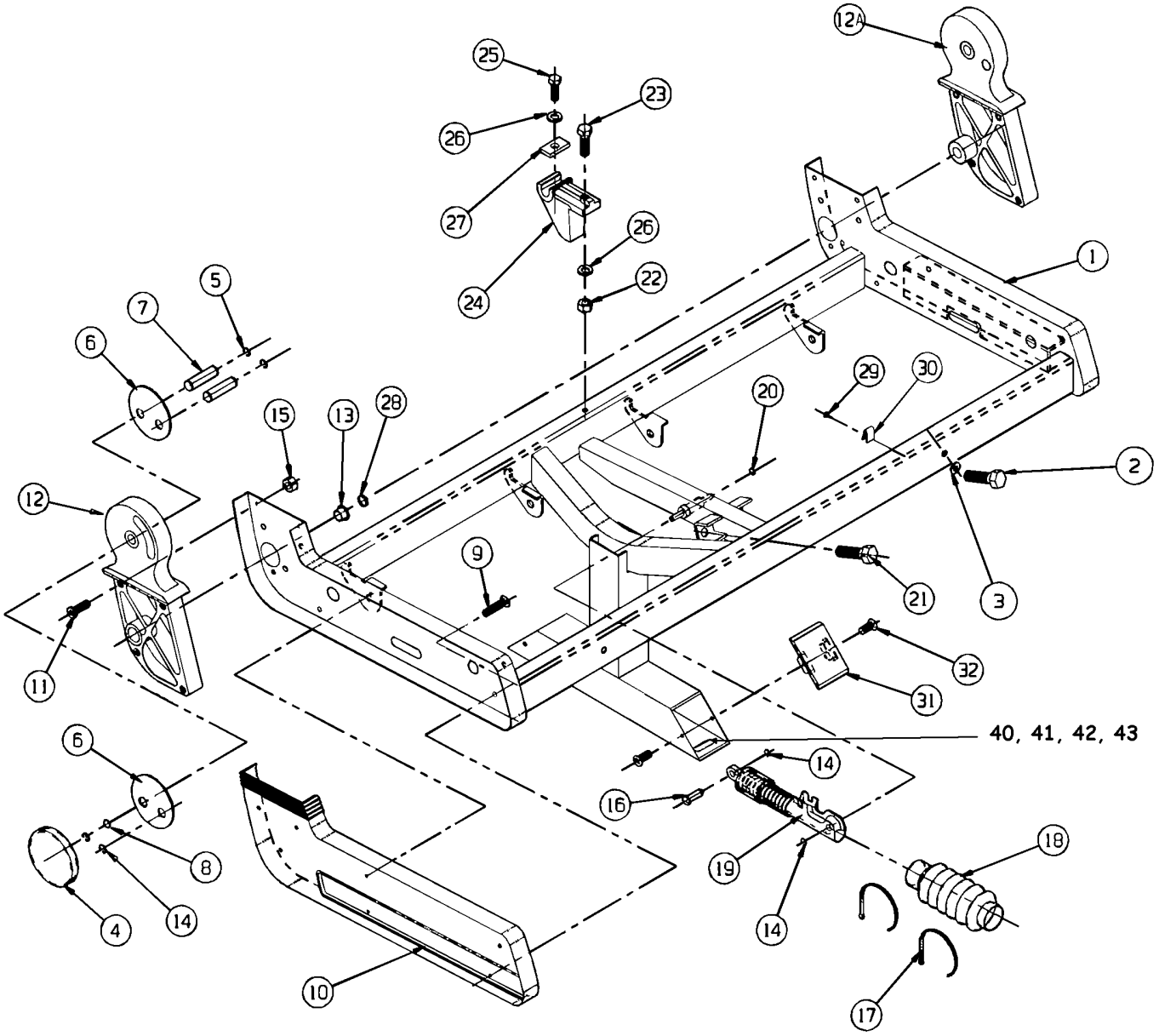

LH FRAME ASSEMBLY (SHOWN)
RH FRAME ASSEMBLY (OPPOSSITE HAND)

From Y-7046 Up to 6-8906	DATE: 01/2014	PAGE: Y2-1825-05

PASSENGER'S SEAT - "AMERICAN" - FRAME

ITEM	PART	DESCRIPTION	XL45	MTH40	MTH45	MTH45S	NOTE
1	Call Order Desk	FRAME ASSY RH W/FOOTREST	1				P
1	Call Order Desk	FRAME ASSY LH W/FOOTREST	1				P
1	Call Order Desk	FRAME ASSY RH W/O FOOTREST	1				P
	Call Order Desk	FRAME ASSY LH W/O FOOTREST	1				P
1	Call Order Desk	FRAME ASSY LH REAR CROSS	1				P
2	Call Order Desk	SCREW CAP HEX 5/16-18x2 3/4	2				P
3	500476	WASHER LO SPT .317x.586x.078 ZP	2				
4	Call Order Desk	COVER DECORATIVE ASSY	1				P
5	Call Order Desk	RETAINER RING	8				P
6	Call Order Desk	PLATE REINFORCEMENT	4				P
7	Call Order Desk	PIN ARM PIVOT	4				P
8	Call Order Desk	WASHER SPR WAVE	1				P
9	Call Order Desk	SCREW SIDE TRIM #8 X 5/8"	7				P
10	862901	TRIM PANEL SIDE L.H.	1				
10	863776	TRIM PANEL SIDE R.H.	1				
11	Call Order Desk	SCREW MA PAN PH #10-32 X 5/8	8				P
12	Call Order Desk	CASTING PIVOT (AISLE SIDE)	1				P
	Call Order Desk	CASTING PIVOT (AISLE SIDE)	1				P
	Call Order Desk	CASTING PIVOT (WALL SIDE)	1				P
12	Call Order Desk	CASTING PIVOT (WALL SIDE)	1				P
13	Call Order Desk	PIVOT BEARING	2				P
14	Call Order Desk	SNAP RING	4				P
15	500423	NUT HEX NYRT #10-32 SS	8				
16	Call Order Desk	PIN CONNECTOR LINK	2				P
17	504273	CABLE TIE / 1/8" X 3"1/2	2				
18	Call Order Desk	COVER MECHLOK	2				P
19	864135	CYLINDER R.H.	1				
19	864268	CYLINDER L.H.	1				
NS	861486	CLIP / WIRE RETAINER	2				
20	502523	RIVET NUT FL OKS 5/16-18 .059-.119	1				
21	500052	SCREW CAP HEX 3/8-24x2 G5 ZP	2				
23	502694	SCREW CAP HEX 3/8-16x3 1/4 G5 ZP	1				
24	864857	CASTING - CENTER	1				
25	500192	SCREW CAP HEX 3/8-16x1 1/4 G5 ZP	1				
26	500480	WASHER LO SPT .443x.779x.109 ZP	2				
27	Call Order Desk	PLATE RETAINER	1				P
28	Call Order Desk	WASHER FL NYL	4				P
29	Call Order Desk	RIVET POP 1/8" SS L FLANGE	3				P
30	Call Order Desk	CLAMP	3				P
31	N8881678	CAP - END	2				
32	500952	SCREW TP BDG PH #8x1/2 SS	4				
40	500305	SCREW CAP HEX 3/8-16x7/8 G5 ZP	2				
		P) CALL ORDER DESK FOR SPECIFIC APPLICATION					
		(V.I.N.)					

From Y-7046 Up to 6-8906	DATE: 01/2014	PAGE: Y2-1825-05

PASSENGER'S SEAT - "AMERICAN" - FRAME

ITEM	PART	DESCRIPTION	XL45	MTH40	MTH45	MTH45S	NOTE
41	500478	WASHER LO SPT .380x.683x.094 ZP	2				
42	500270	WASHER FL .406x1.000x.063 SS	2				
43	362627	PLATE ANCHOR / 3/8-16 BOLT INSIDE TRACK / 1 1/4" X 1 1/4"	2				

From Y-7046 Up to 6-8906	DATE: 01/2014	PAGE: Y2-1825-05

PASSENGER'S SEAT - "AMERICAN" - FRAME

ITEM	PART	DESCRIPTION	XL45	MTH400	MTH445	MTH455S	NOTE

From Y-7046 Up to 6-8906	DATE: 01/2014	PAGE: Y2-1825-06
PASSENGER'S SEAT - "AMERICAN" SERIES 2000 & MORE		

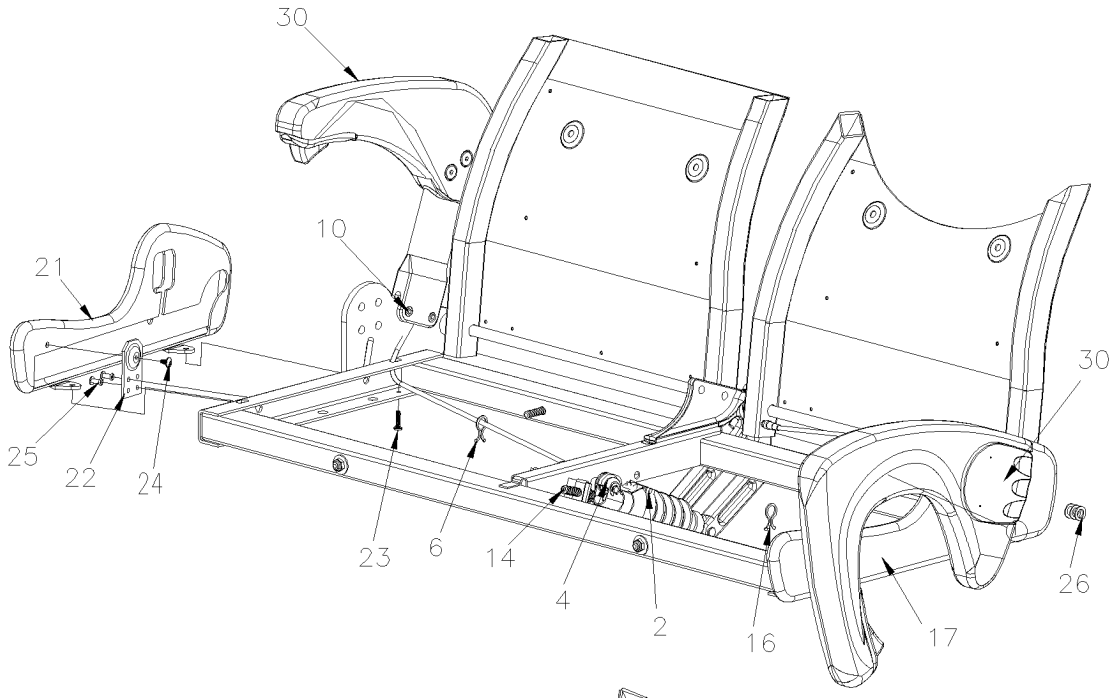

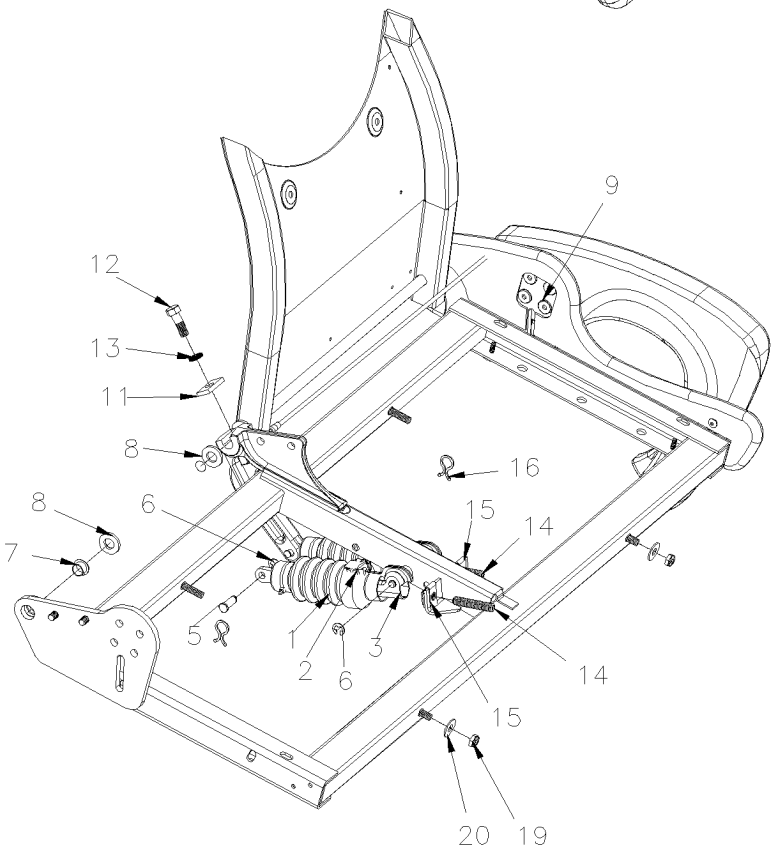

From Y-7046 Up to 6-8906	DATE: 01/2014	PAGE: Y2-1825-06

PASSENGER'S SEAT - "AMERICAN" SERIES 2000 & MORE

ITEM	PART	DESCRIPTION	XL45	MTH40	MTH45	MTH45S	NOTE
1	Call Order Desk	BOOT COVERRING CYLINDER	2				P
2	Call Order Desk	ATTACHMENT FITTING	2				P
2	504012	CABLE TIE / 3/16" X 6"1/2 / REPLACED BY: 504637	2				
3	Call Order Desk	CYLINDER R.H.	1				P
4	864268	CYLINDER L.H.	1				
NS	861486	CLIP / WIRE RETAINER	2				
5	Call Order Desk	PIN CONNECTOR LINK	2				P
6	Call Order Desk	PORTER RETAINING RING	4				P
7	Call Order Desk	BEARING PIVOT	2				P
8	Call Order Desk	WASHER PLAIN NYLON 1/2" x 1" x 1/8"	4				P
9	Call Order Desk	NUT JCN-CAP 1/4-20	4				P
10	Call Order Desk	SCREW CAP HEX 5/16-18x	2				P
11	864857	CASTING - CENTER	1				
12	Call Order Desk	SCREW CAP HEX 3/8-16x1 1/8	1				P
13	Call Order Desk	WASHER NDL 3/8	1				P
14	Call Order Desk	SCREW RECLINE ADJUSTEMENT	2				P
15	Call Order Desk	U-NUT	2				P
16	Call Order Desk	BALL END PURSE LOCK	2				P
17	Call Order Desk	TRIM PANEL PKG L.H.	1				P
19	Call Order Desk	NUT HEX	2				P
20	Call Order Desk	WASHER FL 5/16x7/8x16GA	2				P
21	Call Order Desk	PANEL AISLE TRIM	1				P
22	Call Order Desk	PANEL TRIM SUPPORT	1				P
23	19509680	SCREW SRB 40M #10-24x3/4"	2				
24	Call Order Desk	SCREW SRT 41F #10-24x3/8"	1				P
25	Call Order Desk	RIVET DOME HEAD ST 3/16"x9/16"	2				P
26	N8882739	WASHER FL 3/85/8x16GA	3				
30	Y2-1825-51	**PASSENGER'S SEAT - "AMERICAN" SERIES 2000 & MORE**					
		P) CALL ORDER DESK FOR SPECIFIC APPLICATION					
		(V.I.N.)					

From Y-7046 Up to 6-8906	DATE: 01/2014	PAGE: Y2-1825-10

PASSENGER'S SEAT - "AMERICAN" - FRAME ROTATIN

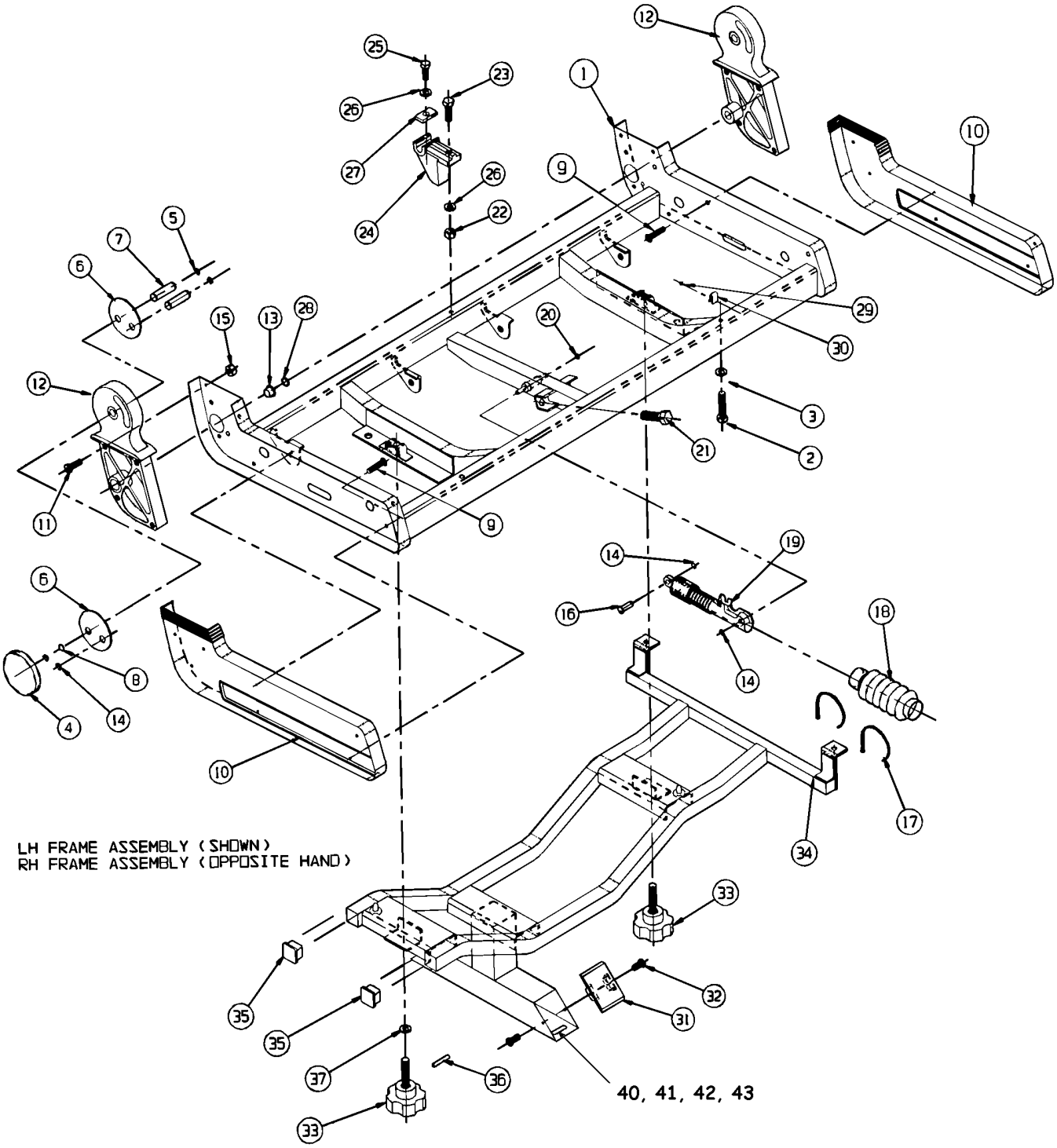

From Y-7046 Up to 6-8906	DATE: 01/2014	PAGE: Y2-1825-10

PASSENGER'S SEAT - "AMERICAN" - FRAME ROTATIN

ITEM	PART	DESCRIPTION	XL45	MTH40	MTH45	MTH45S	NOTE
1	Call Order Desk	FRAME ASSY UPPER W/FOOTREST	1				P
2	Call Order Desk	SCREW CAP HEX 5/16-18x2 3/4	2				P
3	500476	WASHER LO SPT .317x.586x.078 ZP	2				
4	Call Order Desk	COVER DECORATIVE ASSY	1				P
5	Call Order Desk	RETAINER RING	8				P
6	Call Order Desk	PLATE REINFORCEMENT	4				P
7	Call Order Desk	PIN ARM PIVOT	4				P
8	Call Order Desk	WASHER SPR WAVE	1				P
9	Call Order Desk	SCREW SIDE TRIM #8 X 5/8"	14				P
10	862901	TRIM PANEL SIDE L.H.	1				
10	863776	TRIM PANEL SIDE R.H.	1				
11	Call Order Desk	SCREW MA PAN PH #10-32 X 5/8	8				P
12	Call Order Desk	CASTING PIVOT (AISLE SIDE)	1				P
12	Call Order Desk	CASTING PIVOT (AISLE SIDE)	1				P
13	Call Order Desk	PIVOT BEARING	2				P
14	Call Order Desk	SNAP RING	4				P
15	500423	NUT HEX NYRT #10-32 SS	8				
16	Call Order Desk	PIN CONNECTOR LINK	2				P
17	504273	CABLE TIE / 1/8" X 3"1/2	2				
18	Call Order Desk	COVER MECHLOK	2				P
19	864135	CYLINDER R.H.	1				
19	864268	CYLINDER L.H.	1				
NS	861486	CLIP / WIRE RETAINER	2				
20	Call Order Desk	PIN PORTER RETAINER	1				P
21	500052	SCREW CAP HEX 3/8-24x2 G5 ZP	2				
23	502694	SCREW CAP HEX 3/8-16x3 1/4 G5 ZP	1				
24	864857	CASTING - CENTER	1				
25	500192	SCREW CAP HEX 3/8-16x1 1/4 G5 ZP	1				
26	500480	WASHER LO SPT .443x.779x.109 ZP	2				
27	Call Order Desk	PLATE RETAINER	1				P
28	Call Order Desk	WASHER FL NYL	4				P
29	Call Order Desk	RIVET POP 1/8" SS L FLANGE	3				P
30	Call Order Desk	CLAMP	3				P
31	N8881678	CAP - END	1				
32	Call Order Desk	SCREW #8x1/2	4				P
33	864807	KNOB RETAINER	2				
34	Call Order Desk	FRAME ASSY - LOWER	1				P
35	Call Order Desk	CAP - PLUG	2				P
36	Call Order Desk	PIN ROLL	2				P
37	Call Order Desk	WASHER LO SPT	1				P
40	500305	SCREW CAP HEX 3/8-16x7/8 G5 ZP	2				
41	500478	WASHER LO SPT .380x.683x.094 ZP	2				
		P) CALL ORDER DESK FOR SPECIFIC APPLICATION					
		(V.I.N.)					

From Y-7046 Up to 6-8906	DATE: 01/2014	PAGE: Y2-1825-10

PASSENGER'S SEAT - "AMERICAN" - FRAME ROTATIN

ITEM	PART	DESCRIPTION	XL45	MTH40	MTH45	MTH45S	NOTE
42	500270	WASHER FL .406x1.000x.063 SS	2				
43	362627	PLATE ANCHOR / 3/8-16 BOLT INSIDE TRACK / 1 1/4" X 1 1/4"	2				

From Y-7046 Up to 6-8906	DATE: 01/2014	PAGE: Y2-1825-10

PASSENGER'S SEAT - "AMERICAN" - FRAME ROTATIN

ITEM	PART	DESCRIPTION	XL45	MTH40	MTH45	MTH45S	NOTE

From Y-7046 Up to 6-8906	DATE: 01/2014	PAGE: Y2-1825-20
PASSENGER'S SEAT - "AMERICAN" - CUSHION		

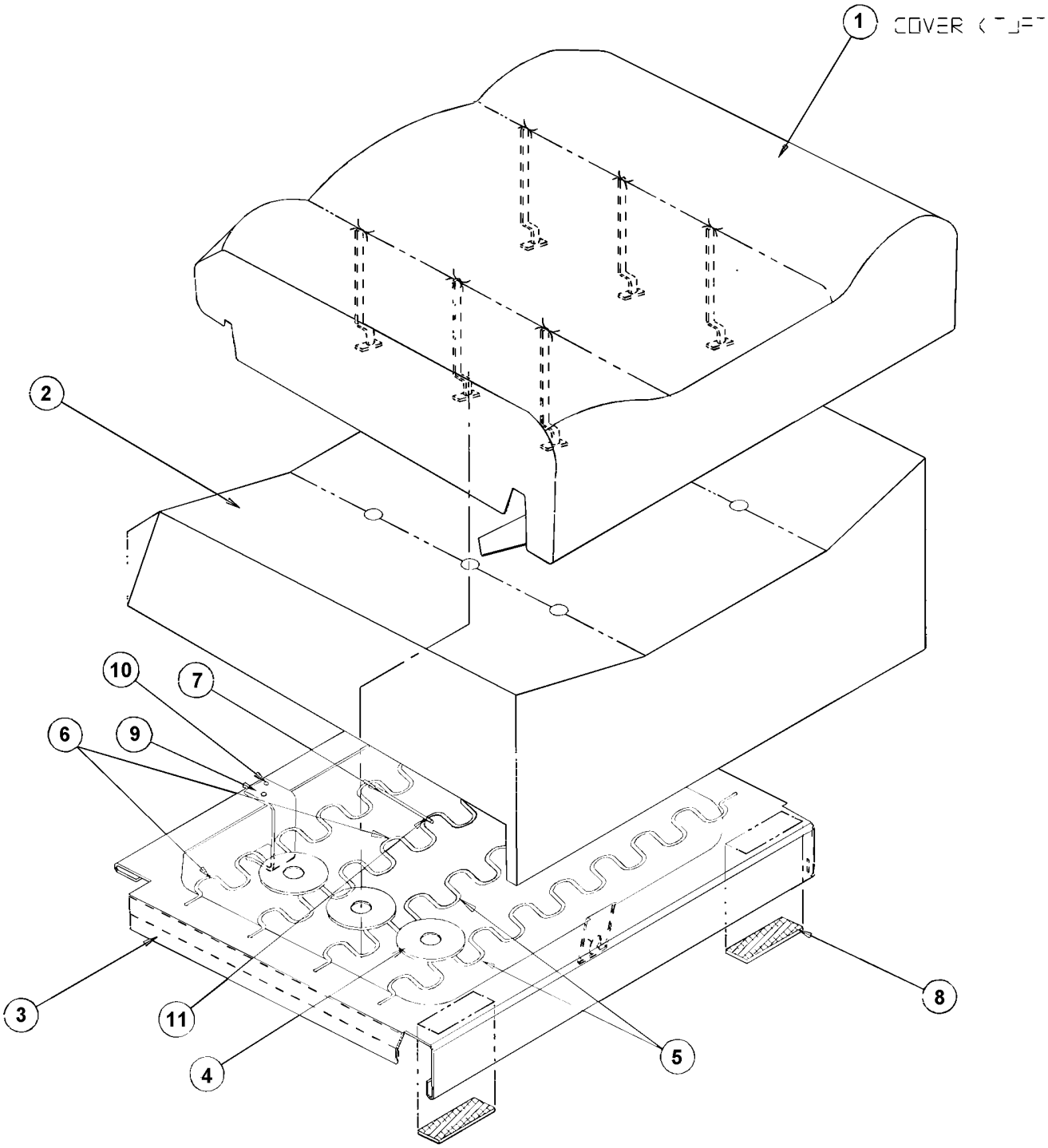

From Y-7046 Up to 6-8906	DATE: 01/2014	PAGE: Y2-1825-20
PASSENGER'S SEAT - "AMERICAN" - CUSHION		

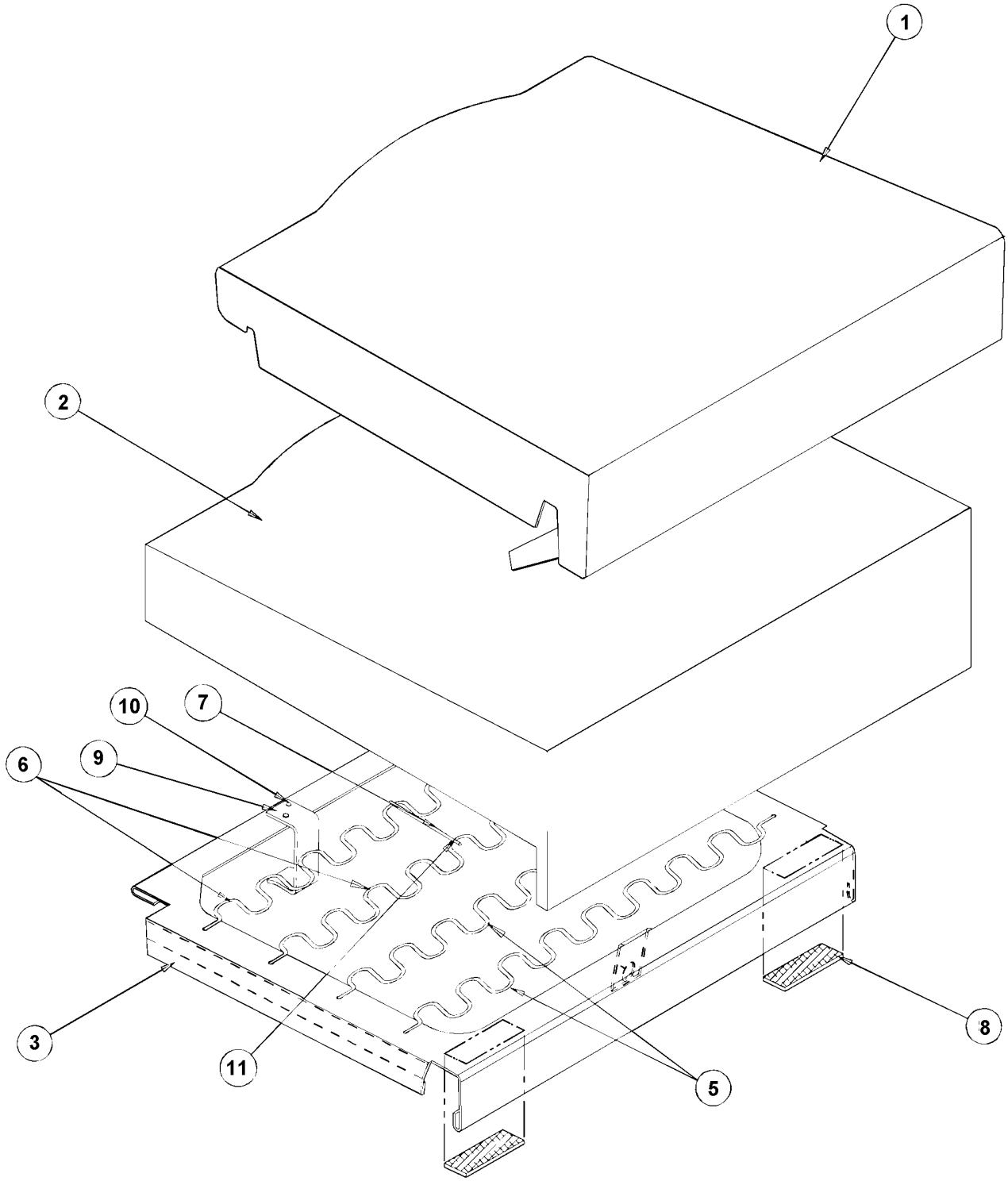

From Y-7046 Up to 6-8906	DATE: 01/2014	PAGE: Y2-1825-20

PASSENGER'S SEAT - "AMERICAN" - CUSHION

ITEM	PART	DESCRIPTION	XL45	MTH40	MTH45	MTH45S	NOTE
	N.P.N.	CUSHION ASSY - TUFTED	1				4 A
	N.P.N.	CUSHION ASSY - NON-TUFTED	1				4 B
1	N.P.N.	. COVER CUSHION	1				4
2	Call Order Desk	. FOAM - CUSHION TUFTED - POLY	1				P A
2	Call Order Desk	. FOAM - CUSHION TUFTED - LOW SMOKE FOAM	1				P A
2	Call Order Desk	. FOAM - CUSHION NON-TUFTED - POLY	1				P B
2	Call Order Desk	. FOAM - CUSHION NON-TUFTED - LOW SMOKE FOAM	1				P B
3	Call Order Desk	. FRAME ASSY	1				P
4	Call Order Desk	. WASHER (PULL TAB)	6				P A
5	Call Order Desk	. SPRING - NO SAG (FLAT)	2				P
6	Call Order Desk	. SPRING - NO SAG (CROWNED)	2				P
7	Call Order Desk	. WIRE 5"	1				P
8	Call Order Desk	. VELCRO	2				P
9	Call Order Desk	. RETAINER - REAR	1				P
10	Call Order Desk	. POP RIVET	1				P
11	Call Order Desk	. HARTCO-CLIP	1				P
		4) NO PARTS NUMBER					
		P) CALL ORDER DESK FOR SPECIFIC APPLICATION					
		(V.I.N.)					
		A) TUFTED CUSHION					
		B) NON-TUFTED CUSHION					

From Y-7046 Up to 6-8906	DATE: 01/2014	PAGE: Y2-1825-20

PASSENGER'S SEAT - "AMERICAN" - CUSHION

ITEM	PART	DESCRIPTION	XL45	MTH40	MTH45	MTH45S	NOTE

From Y-7046 Up to 6-8906	DATE: 01/2014	PAGE: Y2-1825-31

PASSENGER'S SEAT - "AMERICAN" - BACKREST WX69

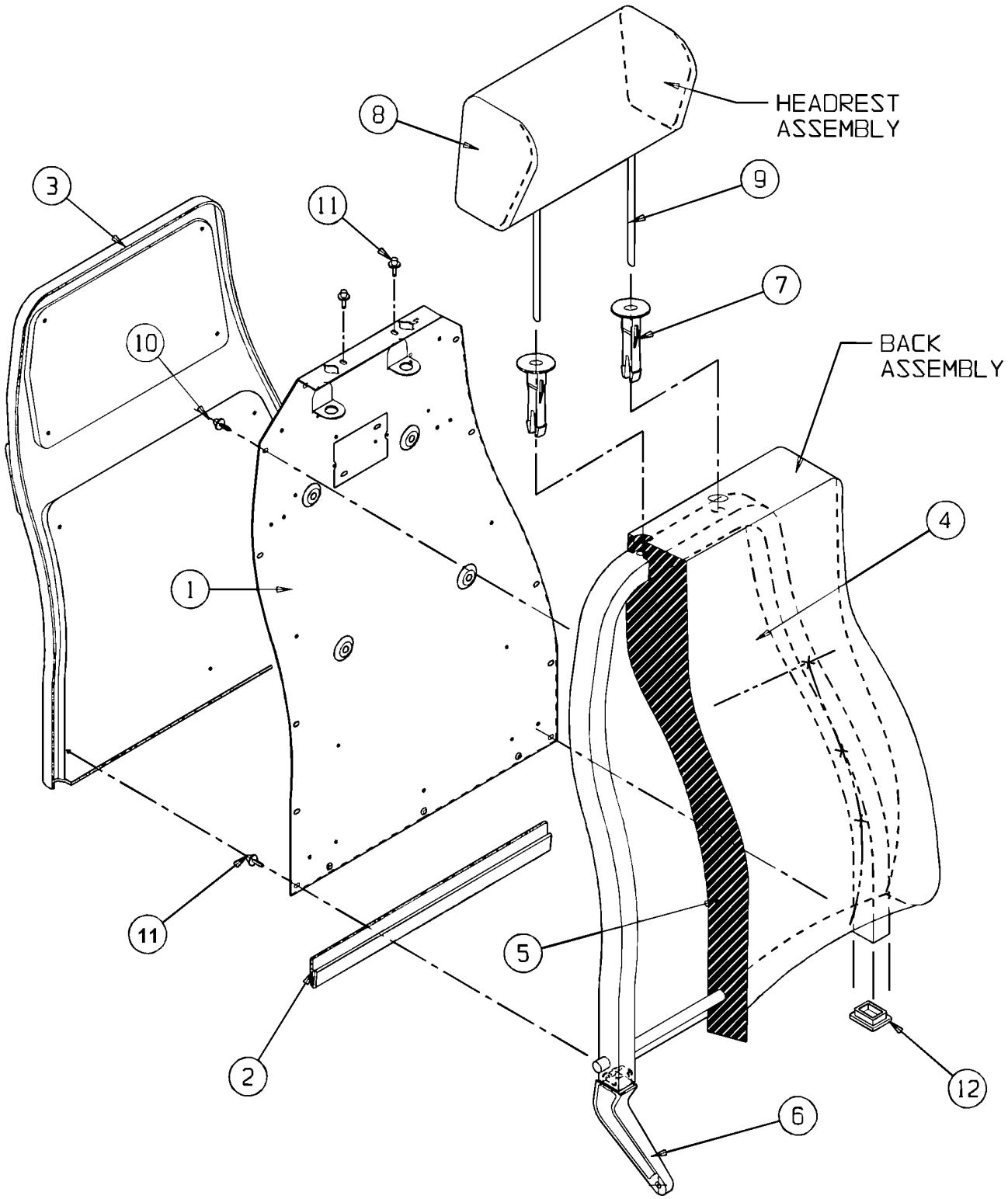

From Y-7046 Up to 6-8906	DATE: 01/2014	PAGE: Y2-1825-31
PASSENGER'S SEAT - "AMERICAN" - BACKREST WX69		

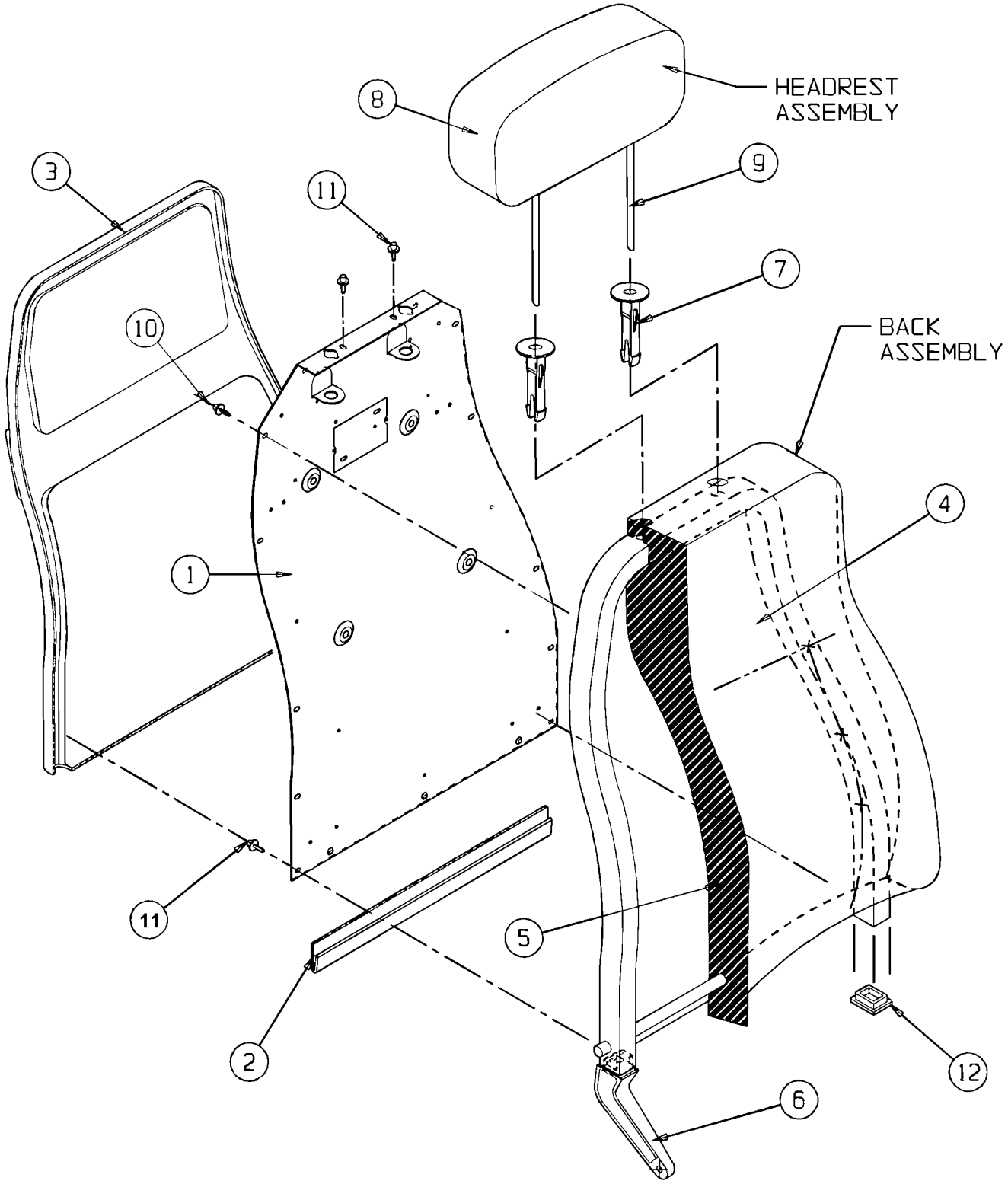

From Y-7046 Up to 6-8906	DATE: 01/2014	PAGE: Y2-1825-31

PASSENGER'S SEAT - "AMERICAN" - BACKREST WX69

ITEM	PART	DESCRIPTION	XL45	MTH40	MTH45	MTH45S	NOTE
1	Call Order Desk	PANEL METAL INNER	1				P
2	Call Order Desk	EXTRUSION VINYL	1				P
3	Y2-1825-60	**PASSENGER'S SEAT - "AMERICAN" - BACK & ACCESS**					
4	N.P.N.	COVER BACK UPHOLSTERY	1				4P
5	Call Order Desk	FOAM BACK - POLY FOAM	1				P A
5	Call Order Desk	FOAM BACK - POLY FOAM	1				P B
5	Call Order Desk	FOAM BACK - LOW SMOKE FOAM	1				P B
5	Call Order Desk	FOAM BACK - POLY FOAM	1				P C
5	Call Order Desk	FOAM BACK - LOW SMOKE FOAM	1				P C
5	Call Order Desk	FOAM BACK - POLY FOAM	1				P D
5	Call Order Desk	FOAM BACK - LOW SMOKE FOAM	1				P D
6	Call Order Desk	BACK FRAME & FOAM RH	1				P
6	Call Order Desk	BACK FRAME & FOAM LH	1				P
7	863800	BUSHING GUIDE	2				
8	N.P.N.	COVER HEADREST UPHOLSTERY	1				4P
9	Call Order Desk	HEADREST ASSY - POLY FOAM	1				P E
9	Call Order Desk	HEADREST ASSY - POLY FOAM	1				P F
9	Call Order Desk	HEADREST ASSY - LOW SMOKE FOAM	1				P E
9	Call Order Desk	HEADREST ASSY - LOW SMOKE FOAM	1				P F
10	Call Order Desk	RIVET POP	12				P
11	Call Order Desk	RIVET POP	2				P
12	Call Order Desk	PLUG CAP	1				P
		4) NO PARTS NUMBER					
		P) CALL ORDER DESK FOR SPECIFIC APPLICATION					
		(V.I.N.)					
		A) WITH SEAT MODEL W6694					
		B) WITH SEAT MODEL W6696					
		C) WITH SEAT MODEL W7694					
		D) WITH SEAT MODEL W7696					
		E) WITH SEAT MODEL W6694 & W6696					
		F) WITH SEAT MODEL W7694 & W7696					

From Y-7046 Up to 6-8906	DATE: 01/2014	PAGE: Y2-1825-31

PASSENGER'S SEAT - "AMERICAN" - BACKREST WX69

ITEM	PART	DESCRIPTION	XL45	MTH40	MTH45	MTH45S	NOTE

From Y-7046 Up to 6-8906	DATE: 01/2014	PAGE: Y2-1825-40
PASSENGER'S SEAT - "AMERICAN" - FOOTREST		

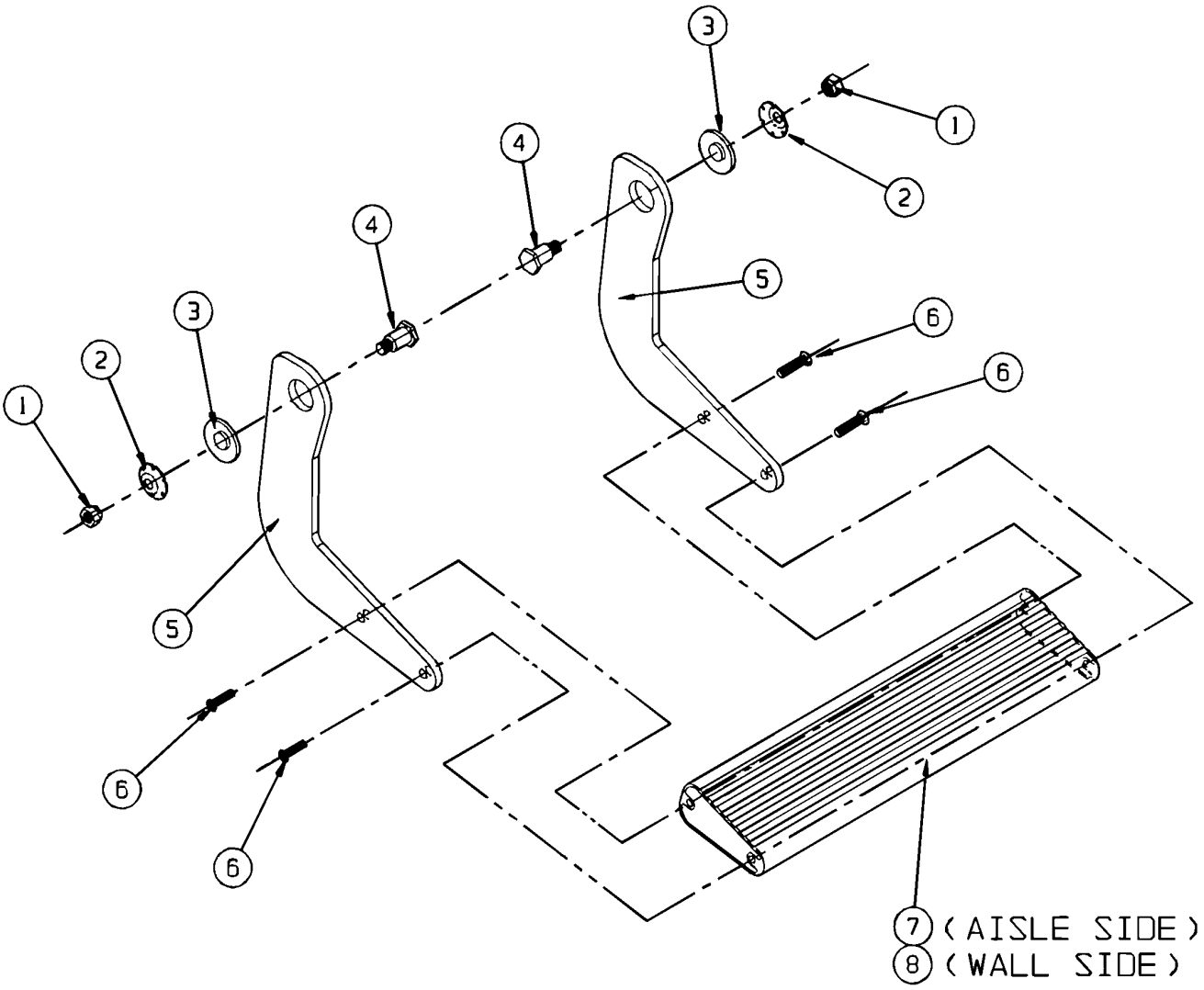

From Y-7046 Up to 6-8906	DATE: 01/2014	PAGE: Y2-1825-40

PASSENGER'S SEAT - "AMERICAN" - FOOTREST

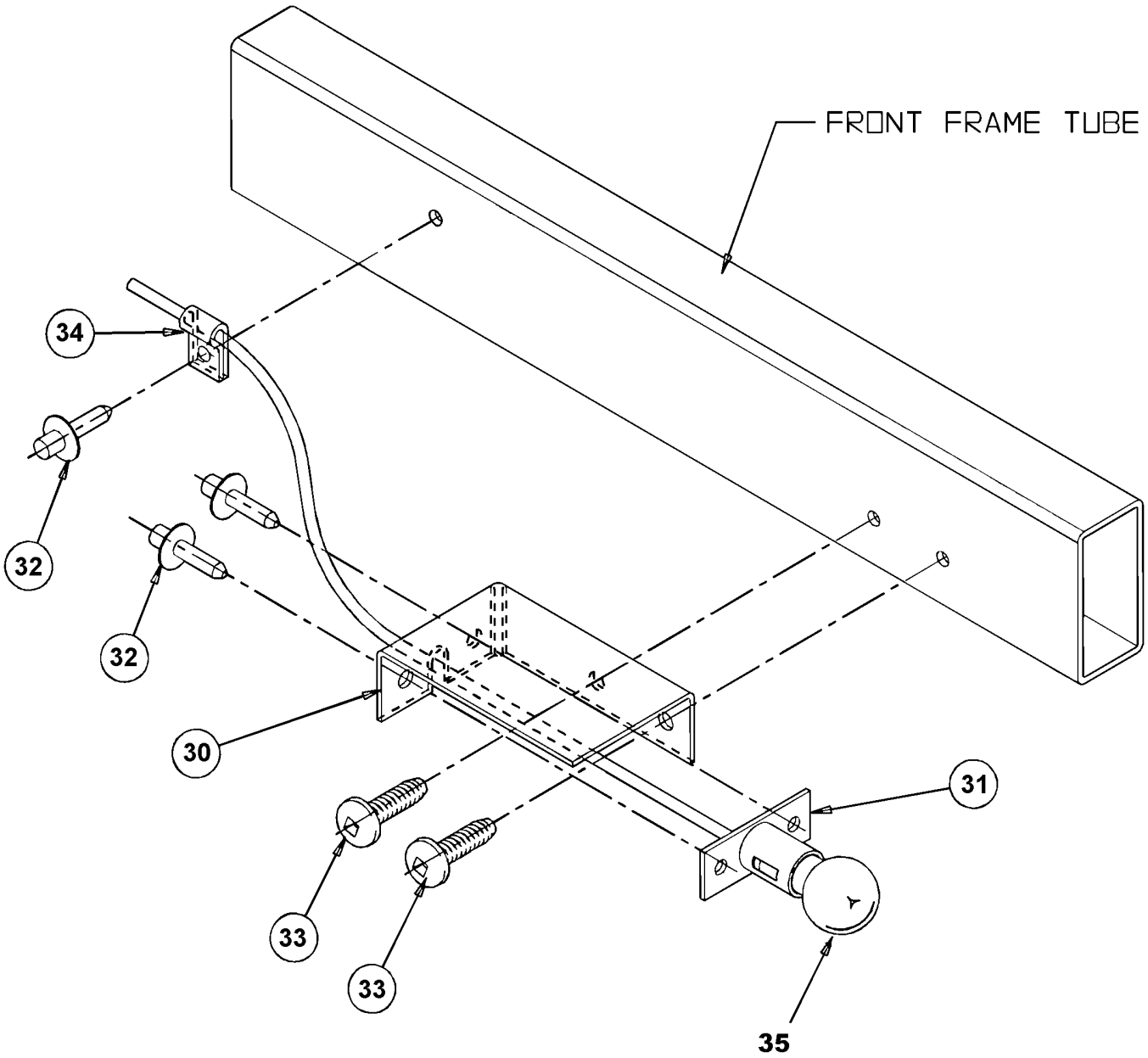

From Y-7046 Up to 6-8906	DATE: 01/2014	PAGE: Y2-1825-40

PASSENGER'S SEAT - "AMERICAN" - FOOTREST

ITEM	PART	DESCRIPTION	XL45	MTH40	MTH45	MTH45S	NOTE
	864788	FOOTREST ASSY (AISLE SIDE)	1				
	Call Order Desk	FOOTREST ASSY (WALL SIDE)	1				P
1	Call Order Desk	. NUT HEX SLO 1/4-28	2				P
2	862724	. WASHER TENSIONER	2				
3	862723	. WASHER FL NYLON	2				
4	862722	. PIN PIVOT	2				
5	865126	. PLATE HANGER	2				
6	Call Order Desk	. SCREW MA PAN PH #10-24x3/4	4				P
7	Call Order Desk	. EXTRUSION FOOTREST (AISLE SIDE)	1				P
8	Call Order Desk	. EXTRUSION FOOTREST (WALL SIDE)	1				P
30	Call Order Desk	ASILE LITE ASSEMBLY	1				P
30	Call Order Desk	ASILE LITE ASSEMBLY (REVERSIBLE)	1				P A
30	Call Order Desk	. HOUSING ASILE LITE	1				P
30	Call Order Desk	. HOUSING ASILE LITE (REVERSIBLE)	1				P A
31	Call Order Desk	. LAMP SOCKET ASSEMBLY	1				P
32	504105	. RIVET POP DOME OE 1/8x3/16 AL	7				
33	Call Order Desk	. SCREW MA BUT SQ #6-32x1/2	2				P
34	Call Order Desk	. CLAMP	5				P
35	560141	. BULB / 3WATT-24VOLTS / SAE# 1251	AR				
35	563546	BULB / 7 LEDS BLUE / UNDER SEAT / #B607-2PB-028W / REPLACED BY: 564100	AR				
35	564100	BULB / 7 LEDS BLUE / UNDER SEAT / #270015	AR				
		P) CALL ORDER DESK FOR SPECIFIC APPLICATION					
		(V.I.N.)					
		A) WITH REVERSIBLE SEAT					

From Y-7046 Up to 6-8906	DATE: 01/2014	PAGE: Y2-1825-40

PASSENGER'S SEAT - "AMERICAN" - FOOTREST

ITEM	PART	DESCRIPTION	XL45	MTH40	MTH45	MTH45S	NOTE

From Y-7046 Up to 6-8906	DATE: 01/2014	PAGE: Y2-1825-50

PASSENGER'S SEAT - "AMERICAN" - ARMREST

CENTER ARM PACKAGE

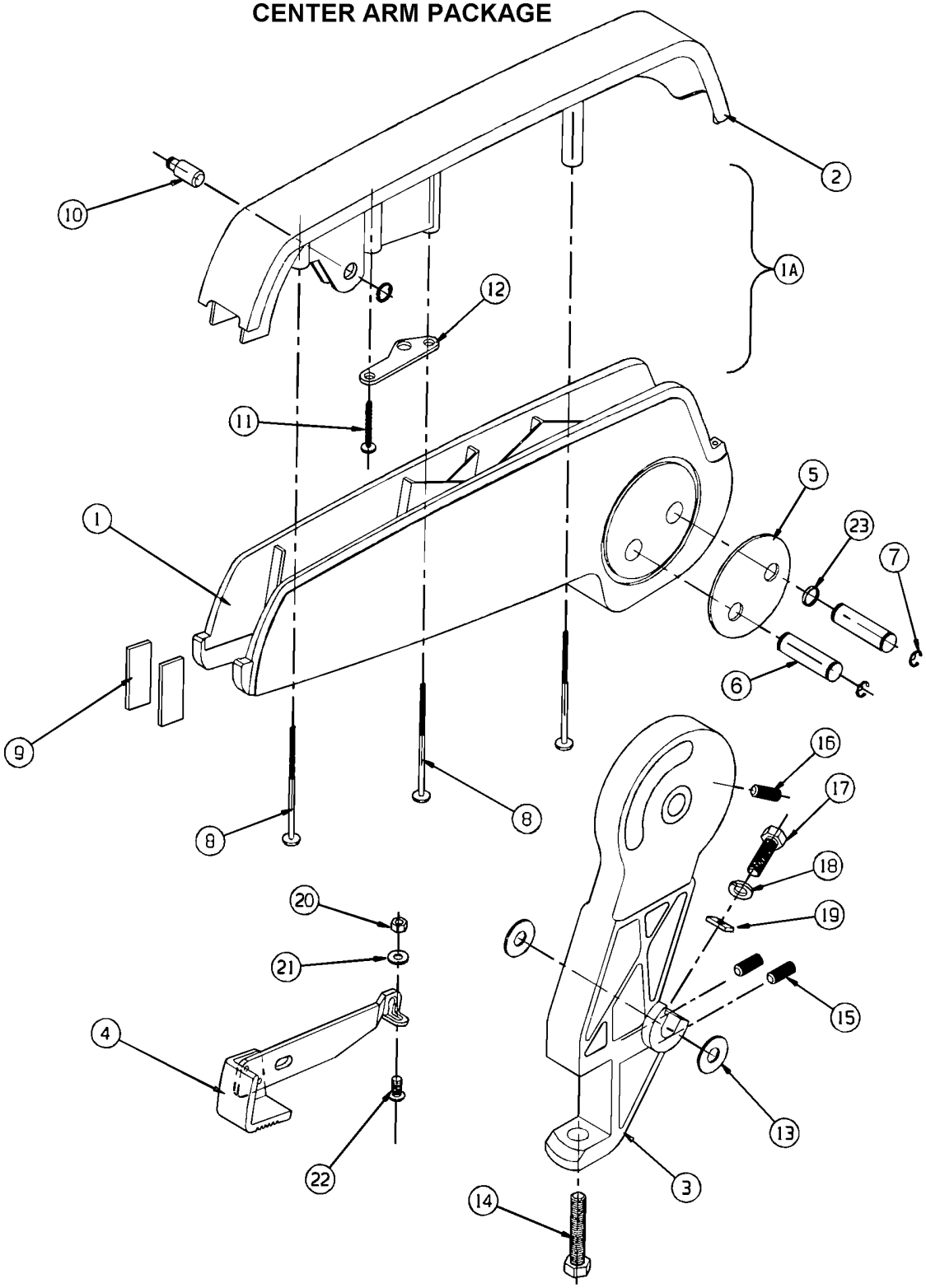

From Y-7046 Up to 6-8906	DATE: 01/2014	PAGE: Y2-1825-50

PASSENGER'S SEAT - "AMERICAN" - ARMREST

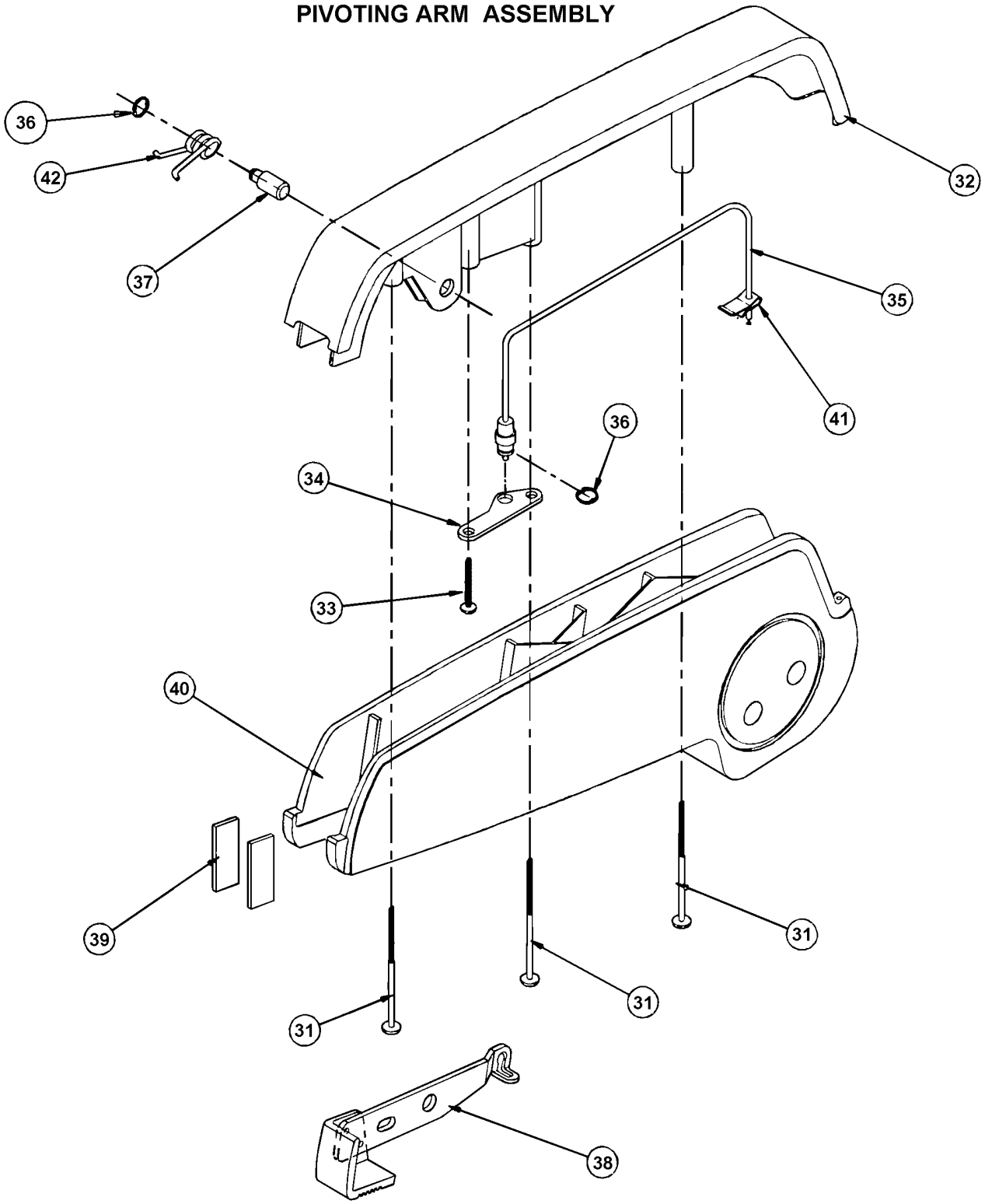

From Y-7046 Up to 6-8906	DATE: 01/2014	PAGE: Y2-1825-50

PASSENGER'S SEAT - "AMERICAN" - ARMREST

ITEM	PART	DESCRIPTION	XL45	MTH40	MTH45	MTH45S	NOTE
	Call Order Desk	CENTER ARM PACKAGE	1				P
1	Call Order Desk	. ARM BASE	1				P
2	Call Order Desk	. CAP - ARM	1				P
3	Call Order Desk	. CASTING SUPPORT	1				P
4	Call Order Desk	. LEVER ASSY RECLINE	1				P
5	Call Order Desk	. PLATE REINFORCEMENT	2				P
6	Call Order Desk	. PIN - PIVOT	2				P
7	Call Order Desk	. RETAINER RING	4				P
8	Call Order Desk	. SCREW #10x2 1/4	3				P
9	Call Order Desk	. SOUND ABSORBER	2				P
10	Call Order Desk	. PIN - PIVOT RECLINE	1				P
11	Call Order Desk	. SCREW MA PAN PH #10-32	1				P
12	Call Order Desk	. PLATE - CABLE RETAINER	1				P
13	Call Order Desk	. WASHER FL NYL	2				P
14	Call Order Desk	. SCREW CAP HEX 3/8-16x2 1/2	1				P
15	Call Order Desk	. SCREW - SET 1/4-20	2				P
16	Call Order Desk	. SCREW - SET	1				P
17	Call Order Desk	. SCREW CAP HEX 3/8-16x1 1/8	1				P
18	Call Order Desk	. WASHER LO SPT	1				P
19	Call Order Desk	. PLATE RETAINER	1				P
20	Call Order Desk	. NUT HEX #6-32	1				P
21	Call Order Desk	. WASHER FL	1				P
22	Call Order Desk	. SCREW CAP HEX #6-32x1/2	1				P
23	Call Order Desk	. WASHER SPR WAVE	1				P
	Call Order Desk	ARM ASSY	1				P A
30	Call Order Desk	PIVOTING ARM ASSY	1				P
31	Call Order Desk	. SCREW #10x2 1/4	3				P
32	Call Order Desk	. CAP - ARM	1				P
33	Call Order Desk	. SCREW MA PAN PH #10-32	1				P
34	Call Order Desk	. PLATE - CABLE RETAINER	1				P
35	864192	. CABLE PORTER RELEASE	1				
36	Call Order Desk	. E-RING - BOWED	2				P
37	Call Order Desk	. PIN - PIVOT RECLINE	1				P
38	Call Order Desk	. LEVER ASSY RECLINE	1				P
39	Call Order Desk	. SOUND ABSORBER	2				P
40	Call Order Desk	. ARM BASE	1				P
41	861486	. CLIP / WIRE RETAINER	1				
42	Call Order Desk	. SPRING RETURN	1				P
		P) CALL ORDER DESK FOR SPECIFIC APPLICATION					
		(V.I.N.)					
		A) INCLUDE ITEMS 1 & 3					

From Y-7046 Up to 6-8906	DATE: 01/2014	PAGE: Y2-1825-50

PASSENGER'S SEAT - "AMERICAN" - ARMREST

ITEM	PART	DESCRIPTION	XL45	MTH40	MTH45	MTH45S	NOTE

From Y-7046 Up to 6-8906	DATE: 01/2014	PAGE: Y2-1825-51

PASSENGER'S SEAT - "AMERICAN" SERIES 2000 & MORE

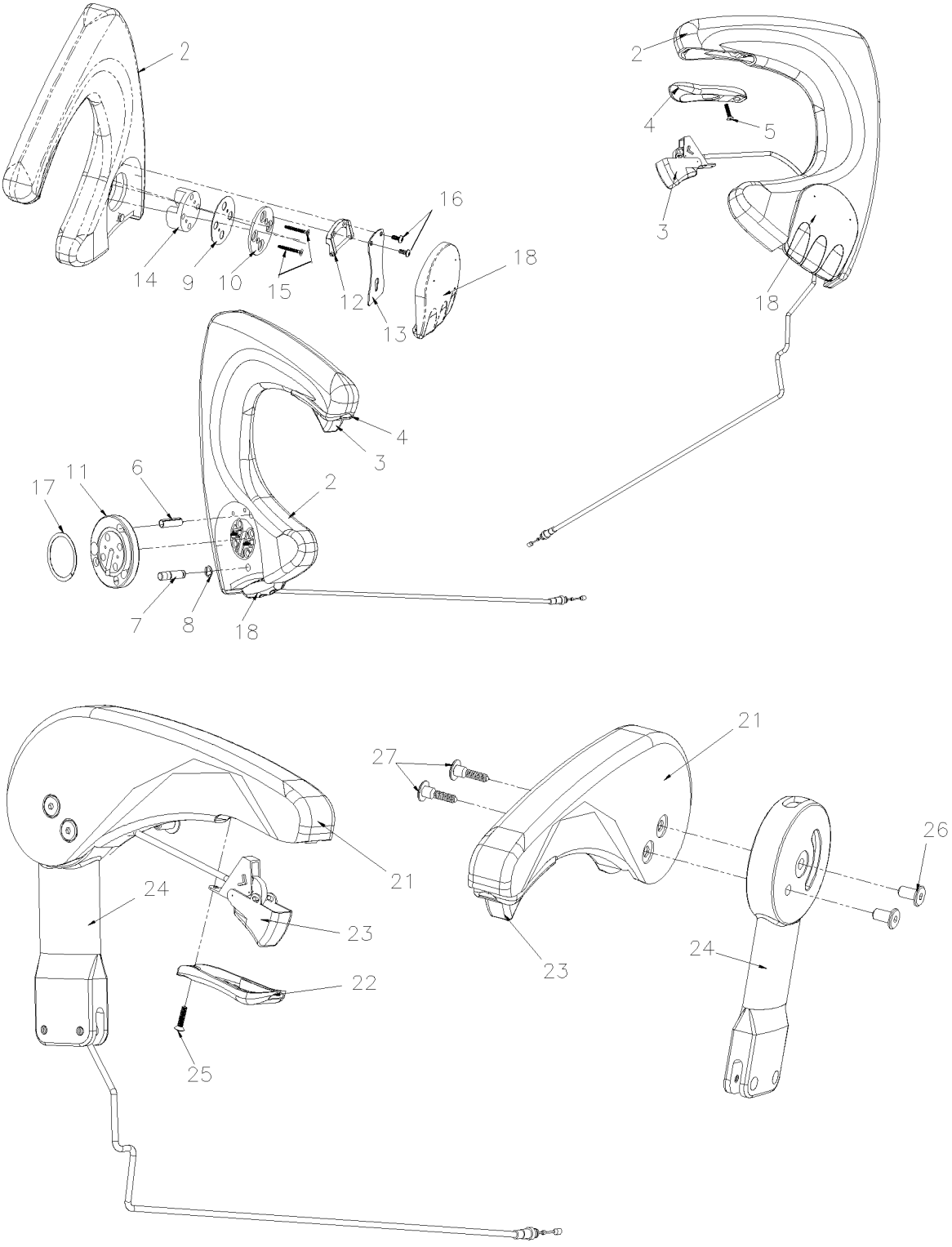

From Y-7046 Up to 6-8906	DATE: 01/2014	PAGE: Y2-1825-51

PASSENGER'S SEAT - "AMERICAN" SERIES 2000 & MORE

ITEM	PART	DESCRIPTION	XL45	MTH40	MTH45	MTH45S	NOTE
1	Call Order Desk	ARM ASSY L.H. (FOLD-DOWN)	1				P
1	Call Order Desk	. ARM WELDMENT AISLE	1				P
2	Call Order Desk	. ARM AISLE	1				P
3	196436	. CABLE ASSY RELEASE	1				
4	Call Order Desk	. BEZEL	1				P
5	Call Order Desk	. SCREW #8x7/8 CRO	1				P
6	Call Order Desk	. PIN SLOTTER 5/16"x1 1/4"	1				P
7	Call Order Desk	. LOCK PIN	1				P
8	Call Order Desk	. E-RING	1				P
9	Call Order Desk	. PLATE END WASHER	1				P
10	Call Order Desk	. PLATE END	1				P
11	Call Order Desk	. PLATE INDEX	1				P
12	Call Order Desk	. BRACKET ARMREST PIVOT	1				P
13	Call Order Desk	. SPRING HANDLE	1				P
14	Call Order Desk	. HUB	1				P
15	Call Order Desk	. SCREW #10-24x3/4 SR P	2				P
16	Call Order Desk	. SCREW BUT HEAD #8x7/8" CRO	2				P
17	Call Order Desk	. WASHER, WAVE	1				P
18	864092	. HANDLE PIVOT	1				
20	Call Order Desk	ARM ASSY STATIONARY WALL SIDE	1				P
21	Call Order Desk	. ARM AISLE	1				P
22	Call Order Desk	. BEZEL	1				P
23	196436	. CABLE ASSY RELEASE	1				
24	Call Order Desk	. CASING ARM EXTENTION R.H.	1				P
25	Call Order Desk	. SCREW #8x7/8 CRO	1				P
26	Call Order Desk	. NUT JCN-CAP 1/4-20	2				P
27	Call Order Desk	. BOLT LOW PROFIOLE 1/4-20	2				P
		P) CALL ORDER DESK FOR SPECIFIC APPLICATION					
		(V.I.N.)					

From Y-7046 Up to 6-8906	DATE: 01/2014	PAGE: Y2-1825-60

PASSENGER'S SEAT - "AMERICAN" - BACK & ACCESS

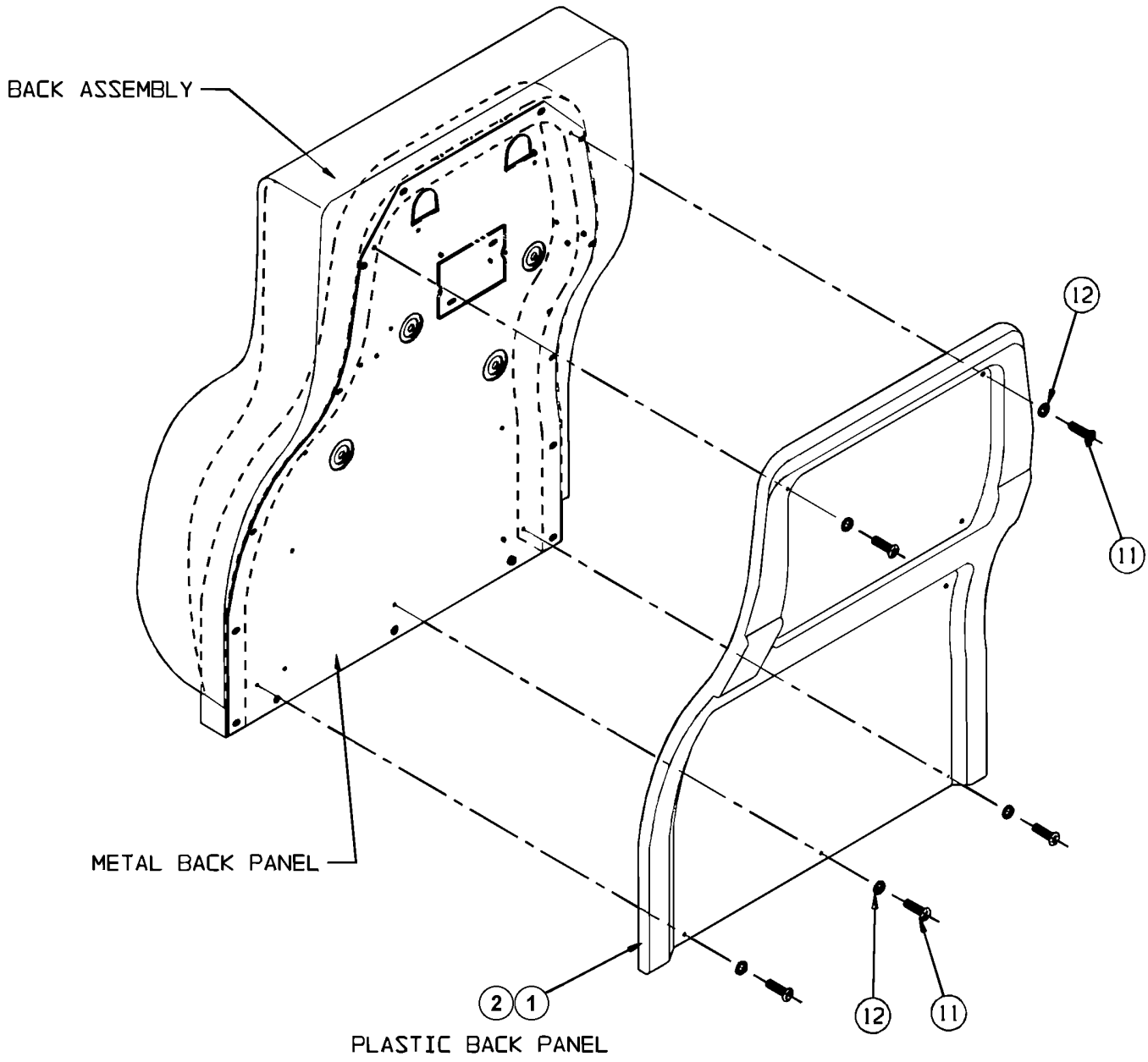

From Y-7046 Up to 6-8906	DATE: 01/2014	PAGE: Y2-1825-60
PASSENGER'S SEAT - "AMERICAN" - BACK & ACCESS		

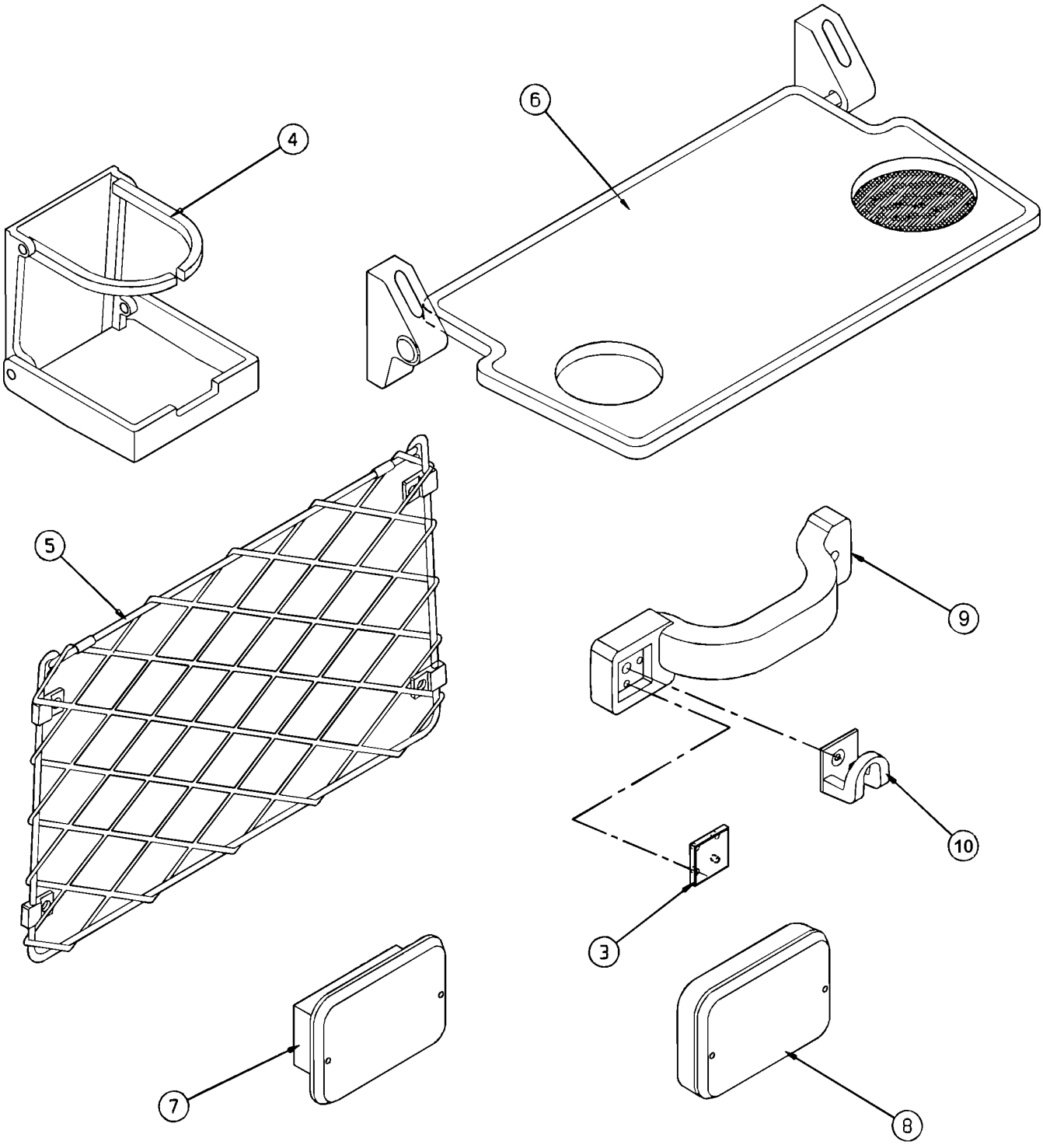

From Y-7046 Up to 6-8906	DATE: 01/2014	PAGE: Y2-1825-60

PASSENGER'S SEAT - "AMERICAN" - BACK & ACCESS

ITEM	PART	DESCRIPTION	XL45	MTH40	MTH45	MTH45S	NOTE
1	Call Order Desk	PANEL W/O OPTIONS - CHARCOAL	1				P A
1	Call Order Desk	PANEL W/O OPTIONS - RED	1				P A
1	Call Order Desk	PANEL W/O OPTIONS - BLUE	1				P A
1	Call Order Desk	PANEL W/O OPTIONS - BROWN	1				P A
1	Call Order Desk	PANEL W/GRABHANDLE & COAT HOOK - CHARCOAL	1				P A
1	Call Order Desk	PANEL W/GRABHANDLE & COAT HOOK - RED	1				P A
1	Call Order Desk	PANEL W/GRABHANDLE & COAT HOOK - BLUE	1				P A
1	Call Order Desk	PANEL W/GRABHANDLE & COAT HOOK - BROWN	1				P A
1	Call Order Desk	PANEL W/MAGAZINE POCKET - CHARCOAL	1				P A
1	Call Order Desk	PANEL W/MAGAZINE POCKET - RED	1				P A
1	Call Order Desk	PANEL W/MAGAZINE POCKET - BLUE	1				P A
1	Call Order Desk	PANEL W/MAGAZINE POCKET - BROWN	1				P A
1	Call Order Desk	PANEL W/MAGAZINE POCKET & CUP HOLDER - CHARCOAL	1				P A
1	Call Order Desk	PANEL W/MAGAZINE POCKET & CUP HOLDER - RED	1				P A
1	Call Order Desk	PANEL W/MAGAZINE POCKET & CUP HOLDER - BLUE	1				P A
1	Call Order Desk	PANEL W/MAGAZINE POCKET & CUP HOLDER - BROWN	1				P A
1	Call Order Desk	PANEL W/MAGAZINE POCKET & GRABHANDLE - CHARCOAL	1				P A
1	Call Order Desk	PANEL W/MAGAZINE POCKET & GRABHANDLE - RED	1				P A
1	Call Order Desk	PANEL W/MAGAZINE POCKET & GRABHANDLE - BLUE	1				P A
1	Call Order Desk	PANEL W/MAGAZINE POCKET & GRABHANDLE - BROWN	1				P A
1	Call Order Desk	PANEL W/MAGAZINE POCKET & RECESSED ASHTRAY - CHARCOAL	1				P A
1	Call Order Desk	PANEL W/MAGAZINE POCKET & RECESSED ASHTRAY - RED	1				P A
1	Call Order Desk	PANEL W/MAGAZINE POCKET & RECESSED ASHTRAY - BLUE	1				P A
1	Call Order Desk	PANEL W/MAGAZINE POCKET & RECESSED ASHTRAY - BROWN	1				P A
1	Call Order Desk	PANEL W/MAGAZINE POCKET & SNACK TRAYS - CHARCOAL	1				P A
1	Call Order Desk	PANEL W/MAGAZINE POCKET & SNACK TRAYS - RED	1				P A
1	Call Order Desk	PANEL W/MAGAZINE POCKET & SNACK TRAYS - BLUE	1				P A
1	Call Order Desk	PANEL W/MAGAZINE POCKET & SNACK TRAYS - BROWN	1				P A
1	Call Order Desk	PANEL W/RECESSED ASHTRAY - CHARCOAL	1				P A
1	Call Order Desk	PANEL W/RECESSED ASHTRAY - RED	1				P A
1	Call Order Desk	PANEL W/RECESSED ASHTRAY - BLUE	1				P A
1	Call Order Desk	PANEL W/RECESSED ASHTRAY - BROWN	1				P A
1	Call Order Desk	PANEL W/SNACK TRAYS - CHARCOAL	1				P A
1	Call Order Desk	PANEL W/SNACK TRAYS - RED	1				P A
1	Call Order Desk	PANEL W/SNACK TRAYS - BLUE	1				P A
1	Call Order Desk	PANEL W/SNACK TRAYS - BROWN	1				P A
2	Call Order Desk	PANEL W/O OPTIONS - CHARCOAL	1				P B
2	Call Order Desk	PANEL W/O OPTIONS - RED	1				P B
		P) CALL ORDER DESK FOR SPECIFIC APPLICATION					
		(V.I.N.)					
		A) WITH SEAT MODEL W6693 & W7693					
		B) WITH SEAT MODEL W6694, W7694, W6696 & W7696					

From Y-7046 Up to 6-8906	DATE: 01/2014	PAGE: Y2-1825-60

PASSENGER'S SEAT - "AMERICAN" - BACK & ACCESS

ITEM	PART	DESCRIPTION	XL45	MTH40	MTH45	MTH45S	NOTE
2	Call Order Desk	PANEL W/O OPTIONS - BLUE	1				P B
2	Call Order Desk	PANEL W/O OPTIONS - BROWN	1				P B
2	Call Order Desk	PANEL W/COAT HOOK - CHARCOAL	1				P B
2	Call Order Desk	PANEL W/COAT HOOK - RED	1				P B
2	Call Order Desk	PANEL W/COAT HOOK - BLUE	1				P B
2	Call Order Desk	PANEL W/COAT HOOK - BROWN	1				P B
2	Call Order Desk	PANEL W/CUP HOLDER - CHARCOAL	1				P B
2	Call Order Desk	PANEL W/CUP HOLDER - RED	1				P B
2	Call Order Desk	PANEL W/CUP HOLDER - BLUE	1				P B
2	Call Order Desk	PANEL W/CUP HOLDER - BROWN	1				P B
2	Call Order Desk	PANEL W/GRABHANDLE & COAT HOOK - CHARCOAL	1				P B
2	Call Order Desk	PANEL W/GRABHANDLE & COAT HOOK - RED	1				P B
2	Call Order Desk	PANEL W/GRABHANDLE & COAT HOOK - BLUE	1				P B
2	Call Order Desk	PANEL W/GRABHANDLE & COAT HOOK - BROWN	1				P B
2	Call Order Desk	PANEL W/GRABHANDLE & RECESSED ASHTRAY - CHARCOAL	1				P B
2	Call Order Desk	PANEL W/GRABHANDLE & RECESSED ASHTRAY - RED	1				P B
2	Call Order Desk	PANEL W/GRABHANDLE & RECESSED ASHTRAY - BLUE	1				P B
2	Call Order Desk	PANEL W/GRABHANDLE & RECESSED ASHTRAY - BROWN	1				P B
2	Call Order Desk	PANEL W/MAGAZINE POCKET - CHARCOAL	1				P B
2	Call Order Desk	PANEL W/MAGAZINE POCKET - RED	1				P B
2	Call Order Desk	PANEL W/MAGAZINE POCKET - BLUE	1				P B
2	Call Order Desk	PANEL W/MAGAZINE POCKET - BROWN	1				P B
2	Call Order Desk	PANEL W/MAGAZINE POCKET & GRABHANDLE - CHARCOAL	1				P B
2	Call Order Desk	PANEL W/MAGAZINE POCKET & GRABHANDLE - RED	1				P B
2	Call Order Desk	PANEL W/MAGAZINE POCKET & GRABHANDLE - BLUE	1				P B
2	Call Order Desk	PANEL W/MAGAZINE POCKET & GRABHANDLE - BROWN	1				P B
2	Call Order Desk	PANEL W/MAGAZINE POCKET & RECESSED ASHTRAY - CHARCOAL	1				P B
2	Call Order Desk	PANEL W/MAGAZINE POCKET & RECESSED ASHTRAY - RED	1				P B
2	Call Order Desk	PANEL W/MAGAZINE POCKET & RECESSED ASHTRAY - BLUE	1				P B
2	Call Order Desk	PANEL W/MAGAZINE POCKET & RECESSED ASHTRAY - BROWN	1				P B
2	Call Order Desk	PANEL W/RECESSED ASHTRAY - CHARCOAL	1				P B
2	Call Order Desk	PANEL W/RECESSED ASHTRAY - RED	1				P B
2	Call Order Desk	PANEL W/RECESSED ASHTRAY - BLUE	1				P B
2	Call Order Desk	PANEL W/RECESSED ASHTRAY - BROWN	1				P B
2	Call Order Desk	PANEL W/SNACK TRAYS - CHARCOAL	1				P B
2	Call Order Desk	PANEL W/SNACK TRAYS - RED	1				P B
2	Call Order Desk	PANEL W/SNACK TRAYS - BLUE	1				P B
2	Call Order Desk	PANEL W/SNACK TRAYS - BROWN	1				P B
		P) CALL ORDER DESK FOR SPECIFIC APPLICATION					
		(V.I.N.)					
		B) WITH SEAT MODEL W6694, W7694, W6696 & W7696					

From Y-7046 Up to 6-8906	DATE: 01/2014	PAGE: Y2-1825-60

PASSENGER'S SEAT - "AMERICAN" - BACK & ACCESS

ITEM	PART	DESCRIPTION	XL45	MTH40	MTH45	MTH45S	NOTE
3	284049	. PLUG / SQUARE / BLACK	1				
4	900527	. GLASS HOLDER	1				
5	Call Order Desk	. MAGAZINE POCKET	1				P
6	860657	. SHELF	1				
7	Call Order Desk	. ASHTRAY - RECESSED	1				P
8	Call Order Desk	. ASHTRAY - SURFACED MTD	1				P
9	860422	. HANDLE	1				
	Call Order Desk	. SCREW #8 1" TYPE AB	AR				P
	Call Order Desk	. SCREW TC #8-32x1	AR				P
10	860421	. HOOK	1				
11	Call Order Desk	SCREW PLASTIC PANEL	9				P
12	Call Order Desk	WASHER NYL	9				P
		P) CALL ORDER DESK FOR SPECIFIC APPLICATION					
		(V.I.N.)					

From Y-7046 Up to 6-8906	DATE: 01/2014	PAGE: Y2-1825-60

PASSENGER'S SEAT - "AMERICAN" - BACK & ACCESS

ITEM	PART	DESCRIPTION	XL45	MTH40	MTH45	MTH45S	NOTE

From Y-7046 Up to 6-8906	DATE: 01/2014	PAGE: Y2-1826-00

PASSENGER'S SEAT - "NATIONAL" - 4209 & 4210

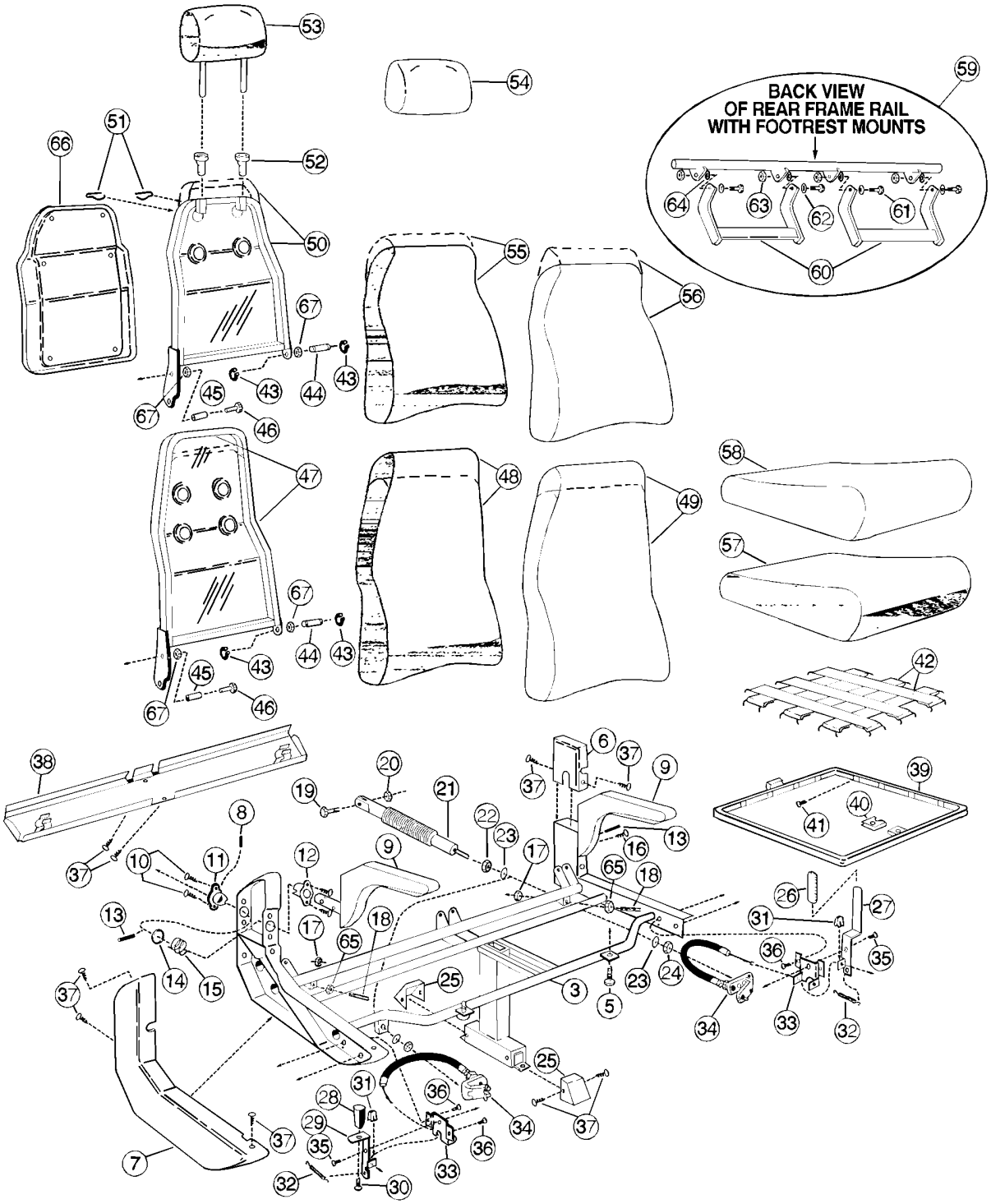

From Y-7046 Up to 6-8906	DATE: 01/2014	PAGE: Y2-1826-00
PASSENGER'S SEAT - "NATIONAL" - 4209 & 4210		

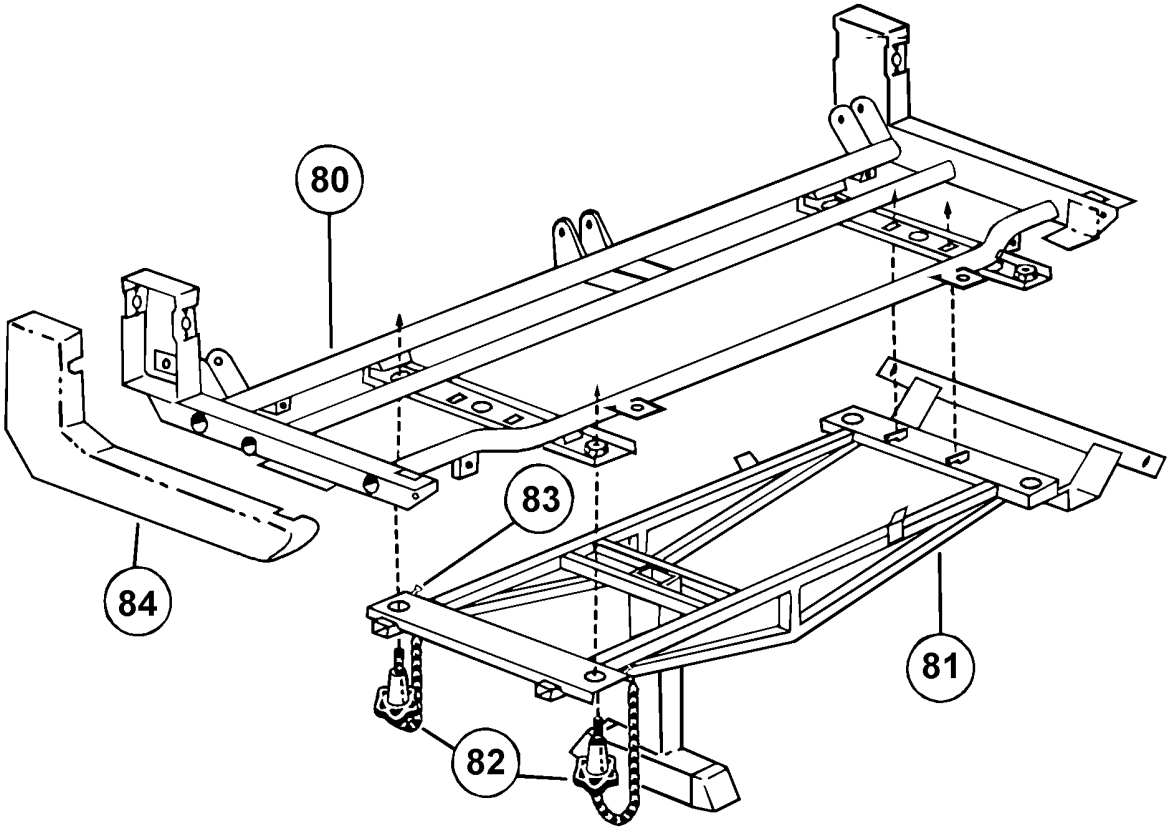

From Y-7046 Up to 6-8906	DATE: 01/2014	PAGE: Y2-1826-00

PASSENGER'S SEAT - "NATIONAL" - 4209 & 4210

ITEM	PART	DESCRIPTION	XL45	MTH40	MTH45	MTH45S	NOTE
		IMPORTANT NOTE:					
		TO ORDER COMPLETE PASSENGER'S SEAT KIT #,					
		SEE THE FINAL VEHICLE RECORD.					
3	863291	PAINTED FRAME ASSY W/FOOTREST BRACKET - L.H.	1				
3	864790	PAINTED FRAME ASSY W/FOOTREST BRACKET - R.H.	1				
3	Call Order Desk	PAINTED FRAME ASSY W/O FOOTREST BRACKET - L.H.	1				P
3	Call Order Desk	PAINTED FRAME ASSY W/O FOOTREST BRACKET - R.H.	1				P
3	Call Order Desk	KIT	1				P A
5	Call Order Desk	SCREW TP TR PH #8-32x1/2	2				P
6	Call Order Desk	TRIM PANEL - WALL SIDE	2				P B
7	864090	TRIM PANEL - AISLE SIDE - CURBSIDE	1				
7	864091	TRIM PANEL - AISLE SIDE - STREET SIDE	1				
8	Call Order Desk	ROLL PIN - 3/16" X 1/2"	2				P
9	Call Order Desk	FOLD DOWN ARM	2				P B
10	Call Order Desk	SCREW TP TR PH #8-32x1/2	8				P
11	192318	BUSHING - WELDED	1				
12	Call Order Desk	BUSHING ARM - P/M	3				P
13	Call Order Desk	ROLL PIN - 1/4" X 1 1/8"	2				P
14	Call Order Desk	WASHER	2				P
15	Call Order Desk	SPRING - ARM	2				P
16	Call Order Desk	SCREW TC CAP HEX 1/4-20x3/4	1				P
17	502600	NUT HEX NYRT 5/16-18 ZP	2				
18	Call Order Desk	SCREW SET HEXS CUP 5/16-18x1 3/4	2				P
19	Call Order Desk	SCREW CAP HEX 5/16-18x1.00 HD	2				P
20	500181	SCREW CAP HEX 5/16-18x1 G5 ZP	2				
21	863598	ACTUATOR	2				
22	500705	NUT HEX 3/8-24 ZP	2				
23	Call Order Desk	WASHER SPHERICAL - 3/8"	4				P
24	502592	NUT HEX THN 3/8-24x3/32 ZP	2				
25	195894	PEDESTRAL CAP	2				
NS	500305	SCREW CAP HEX 3/8-16x7/8 G5 ZP	2				
NS	500478	WASHER LO SPT .380x.683x.094 ZP	2				
NS	500270	WASHER FL .406x1.000x.063 SS	2				
NS	362627	PLATE ANCHOR / 3/8-16 BOLT INSIDE TRACK / 1 1/4" X 1 1/4"	2				
26	Call Order Desk	HANDLE BOOT - WALL SIDE	1				P
		P) CALL ORDER DESK FOR SPECIFIC APPLICATION					
		(V.I.N.)					
		A) FOR SEAT PRIO MARCH 1997					
		B) A.R. = POSTITION AND COLOR					

From Y-7046 Up to 6-8906	DATE: 01/2014	PAGE: Y2-1826-00

PASSENGER'S SEAT - "NATIONAL" - 4209 & 4210

ITEM	PART	DESCRIPTION	XL45	MTH40	MTH45	MTH45S	NOTE
27	864618	HANDLE ACTUATOR - WALL SIDE	1				
28	195895	KNOB	1				
29	864862	HANDLE ACTUATOR - AISLE SIDE	1				C
30	Call Order Desk	SCREW MA TR PH 1/4-20x3/4	1				P
31	864394	CABLE ATTACHMENT SPRING CLIP	2				
32	Call Order Desk	SPRING LINK RETURN	2				P
33	864121	ACTUATOR CABLE BRACKET	2				
34	863290	OUTPUT & CABLE ASSY 12"	2				
34	863803	OUTPUT & CABLE ASSY 26"	2				
35	Call Order Desk	RIVET	2				P
36	Call Order Desk	RIVET	4				P
37	Call Order Desk	SCREW TP TR PH #10x1/2	11				P
38	Call Order Desk	TRIM PANEL ASSY	1				P B
39	Call Order Desk	CUSHION FRAME ASSY	2				P
39	Call Order Desk	CUSHION BOARD (3 PASS SEAT)	3				P
40	502935	NUT SPR U 5/16-18 .025-.150	2				
41	Call Order Desk	STUD D.O.T.	32				P
42	865214	LATEX WEBBING	12				
43	Call Order Desk	TRUARC RETAINING RING	2				P
44	Call Order Desk	PIN - CENTER PIVOT - 4209 HIGH BACK / 4210	1				P
44	Call Order Desk	PIN - CENTER PIVOT - 4209/10 W/CTR. FLDG. OR 4209 LOW BACK	1				P
44	Call Order Desk	PIN - CENTER PIVOT - 4209 LOW BACK	1				P
45	Call Order Desk	PIN - PIVOT	2				P
46	193005	SCREW CAP HEX 1/4-20x2.000	2				
47	Call Order Desk	BACK FRAME ASSY - L.H. - 4209 HIGH BACK	1				P
47	Call Order Desk	BACK FRAME ASSY - R.H. - 4209 HIGH BACK	1				P
47	Call Order Desk	BACK FRAME ASSY - L.H. - 4209 LOW BACK	1				P
47	Call Order Desk	BACK FRAME ASSY - R.H. - 4209 LOW BACK	1				P
47	Call Order Desk	BACK BOARD - INDIVIDUAL (3 PASS SEAT)	3				P
48	Call Order Desk	BACK POLY - 4209A HIGH BACK	2				P
48	Call Order Desk	BACK POLY - 4209A (3 PASS SEAT)	3				P
48	Call Order Desk	BACK POLY - 4209A LOW BACK	2				P
49	Call Order Desk	BACK COVER - 4209A HIGH BACK	2				P
49	Call Order Desk	BACK COVER - 4209A (3 PASS SEAT)	3				P
49	Call Order Desk	BACK COVER - 4209A LOW BACK	2				P
50	Call Order Desk	BACK FRAME ASSY - L.H. 4210 LOW BACK	1				P
		P) CALL ORDER DESK FOR SPECIFIC APPLICATION					
		(V.I.N.)					
		B) A.R. = POSTITION AND COLOR					
		C) RELEASE HANDLE WITH KNOB USED ON AISLE SIDE					
		STANDARD SEAT AND BOTH SIDES OF REVERSIBLE					
		SEAT					

From Y-7046 Up to 6-8906	DATE: 01/2014	PAGE: Y2-1826-00

PASSENGER'S SEAT - "NATIONAL" - 4209 & 4210

ITEM	PART	DESCRIPTION	XL45	MTH40	MTH45	MTH45S	NOTE
50	Call Order Desk	BACK FRAME ASSY - R.H. 4210 LOW BACK	1				P
50	Call Order Desk	BACK FRAME ASSY - L.H. 4210 HIGH BACK	1				P
50	862738	BACK FRAME ASSY - R.H. 4210 HIGH BACK	1				
50	Call Order Desk	BACK BOARD - INDIVIDUAL (3 PASS SEAT)	3				P
51	Call Order Desk	SPRING CLIP - HEADREST - 4210	4				P
52	Call Order Desk	BUSHING - HEADREST - 4210	4				P
53	863770	HEADREST POLY - FLAT - 4210 LOW BACK	1				
53	Call Order Desk	HEADREST POLY - FLAT - 4210 (3 PASS SEAT)	3				P
53	863728	HEADREST BOARD - 4210	3				
53	863729	HEADREST POLY ASSY - 4210 HIGH BACK	2				
54	Call Order Desk	HEADREST COVER - FLAT - 4210 LOW BACK	2				P
54	862739	HEADREST COVER - FLAT - 4210 HIGH BACK / S.C.C.	1				
54	863771	HEADREST COVER - FLAT - 4210 LOW BACK / S.C.C.	1				
54	Call Order Desk	HEADREST COVER - FLAT - 4210 (3 PASS SEAT)	3				P
55	Call Order Desk	BACK POLY - 4210A LOW BACK	2				P
55	Call Order Desk	BACK POLY - 4210 (3 PASS SEAT)	3				P
55	Call Order Desk	BACK POLY - 4210A HIGH BACK	2				P
56	Call Order Desk	BACK COVER - 4210A LOW BACK	2				P
56	Call Order Desk	BACK COVER - 4210A (3 PASS SEAT)	3				P
56	Call Order Desk	BACK COVER - 4210A HIGH BACK	2				P
57	Call Order Desk	CUSHION POLY - 4209A & 4210A	2				P
57	Call Order Desk	CUSHION POLY	3				P
58	862740	CUSHION COVER - 4209A & 4210A S.C.C.	1				
58	Call Order Desk	CUSHION COVER	3				P
59	Call Order Desk	FOOTREST INSTALLATION	1				P
60	864791	HANGER & TREADLE ASSY UP TO MARCH 2000	2				
. NS	864037	. SPRING	AR				
60	864099	HANGER & TREADLE ASSY (RETROFIT KIT) FROM MARCH 2000	AR				
. NS	864037	. SPRING	1				
61	863625	FOOTREST PIVOT PIN	4				
62	500476	WASHER LO SPT .317x.586x.078 ZP	4				
63	863626	NUT HEX 5/16-24	4				
64	863627	BEARING - FOOTREST	4				
65	500701	NUT HEX 5/16-18 ZP / REPLACED BY: 5001189	2				
66	Call Order Desk	PANEL-BACK (OPTIONAL) 4210 BIG	2				P B
66	Call Order Desk	PANEL-BACK (OPTIONAL) 4210 SMALL	2				P
		P) CALL ORDER DESK FOR SPECIFIC APPLICATION					
		(V.I.N.)					
		B) A.R. = POSTITION AND COLOR					

From Y-7046 Up to 6-8906	DATE: 01/2014	PAGE: Y2-1826-00

PASSENGER'S SEAT - "NATIONAL" - 4209 & 4210

ITEM	PART	DESCRIPTION	XL45	MTH40	MTH45	MTH45S	NOTE
67	864147	BUSHING - BACK PIVOT	4				
80	N.S.S.	PAINTED FRAME ASSY - UPPER W/FOOTREST BRACKET	1				1
80	N.S.S.	PAINTED FRAME ASSY - UPPER W/O FOOTREST BRACKET	1				1
81	863757	PAINTED FRAME ASSY - LOWER	1				
82	196686	ATTACHMENT KNOB ASSY	2				
83	Call Order Desk	SOUTHCO DRIVE RIVET	2				P
84	N.S.S.	TRIM PANEL - L.H. W/O ACCENT	1				1
84	N.S.S.	TRIM PANEL - R.H. W/O ACCENT	1				1
NS	192360	GLASS HOLDER "NATIONAL	AR				
NS	195960	NET MAGAZINE "NATIONAL"	AR				
			1				
		1) NOT SOLD SEPARATELY					
		P) CALL ORDER DESK FOR SPECIFIC APPLICATION					
		(V.I.N.)					

From Y-7046 Up to 6-8906	DATE: 01/2014	PAGE: Y2-1826-05
PASSENGER'S SEAT - "AMAYA" "EUROTECH"		

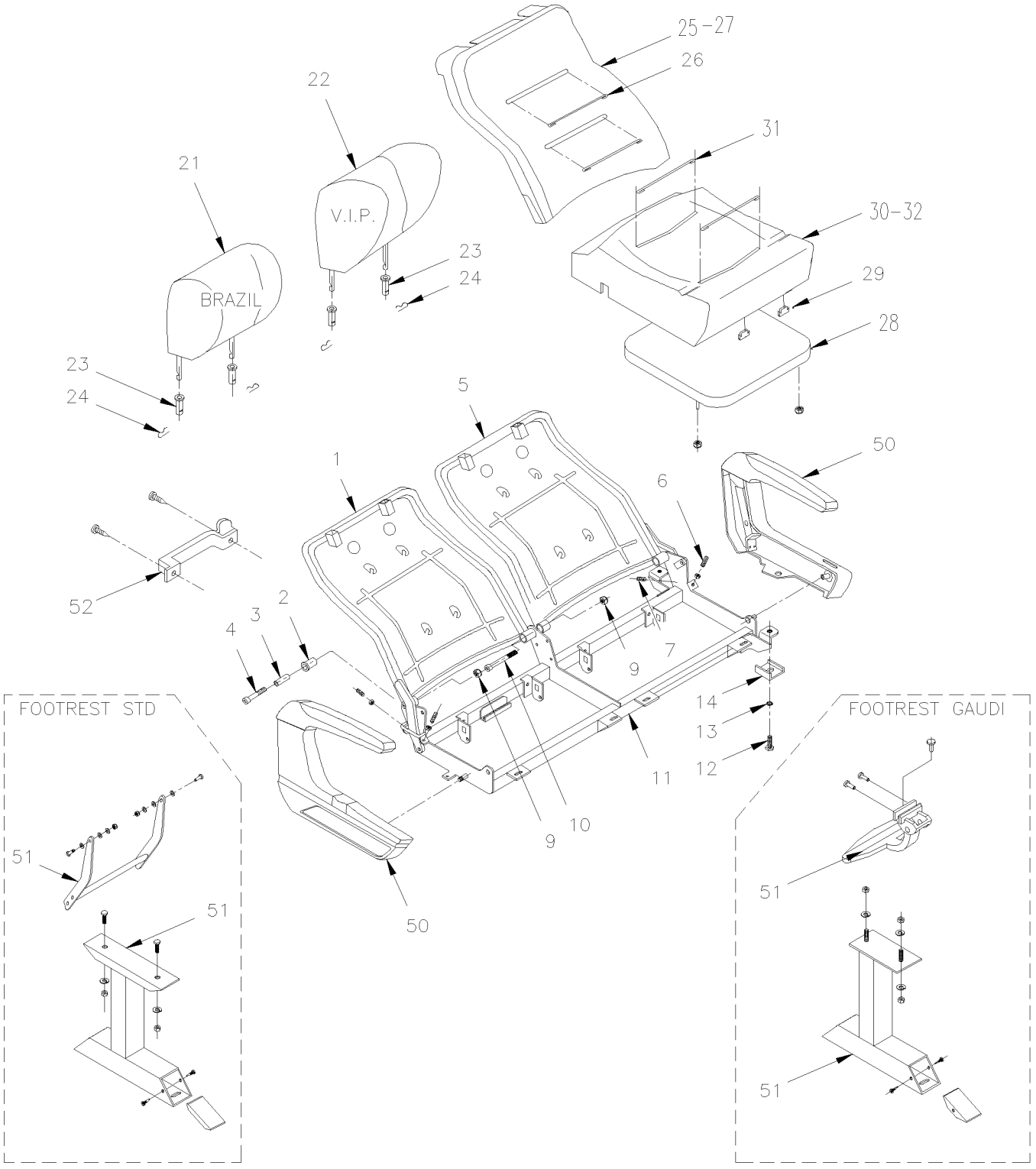

From Y-7046 Up to 6-8906	DATE: 01/2014	PAGE: Y2-1826-05
PASSENGER'S SEAT - "AMAYA" "EUROTECH"		

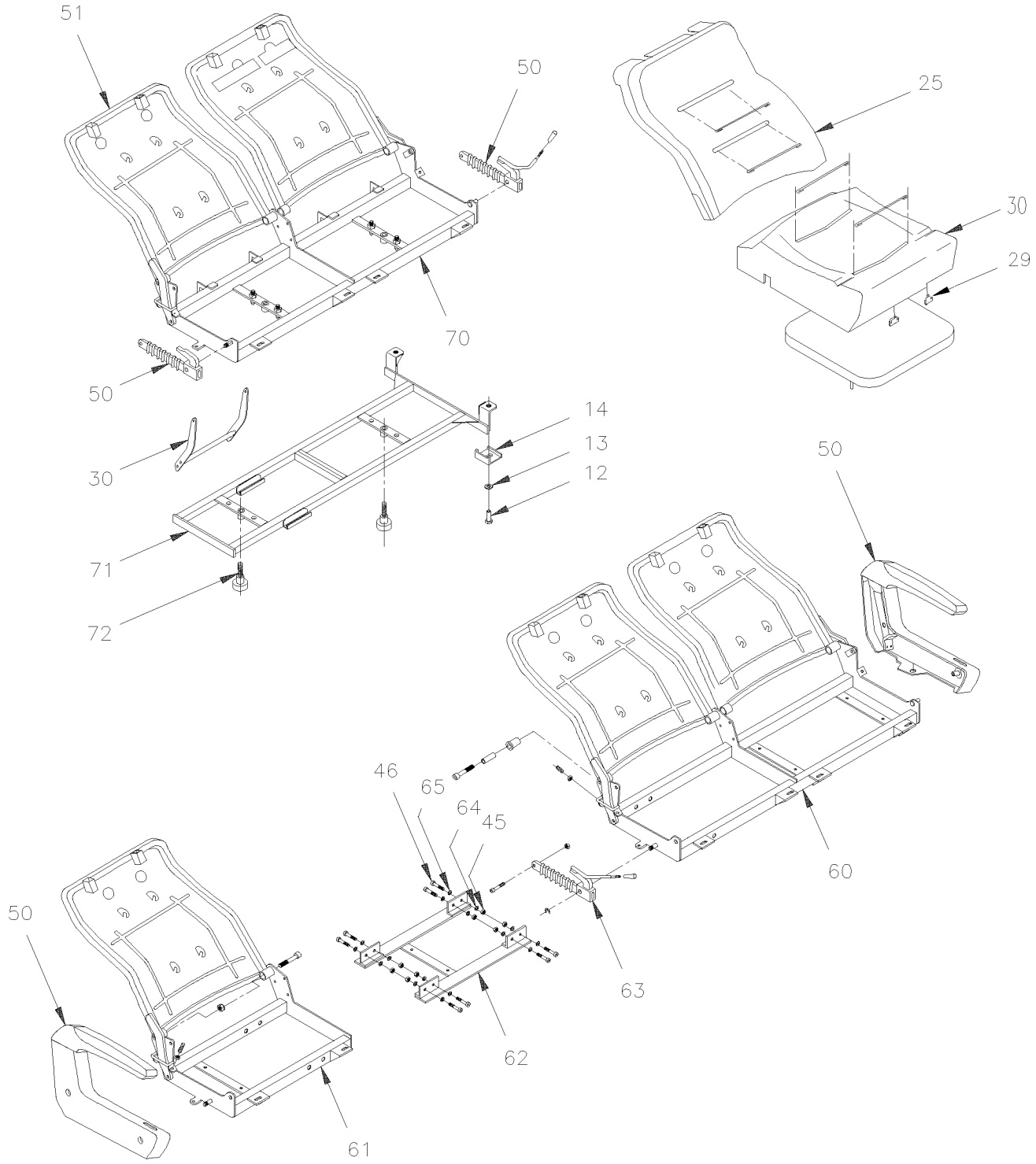

From Y-7046 Up to 6-8906	DATE: 01/2014	PAGE: Y2-1826-05

PASSENGER'S SEAT - "AMAYA" "EUROTECH"

ITEM	PART	DESCRIPTION	XL45	MTH40	MTH45	MTH45S	NOTE
		. . . . IMPORTANT NOTE:					
		. . . . TO ORDER COMPLETE PASSENGER'S SEAT KIT #,					
		. . . . SEE THE FINAL VEHICLE RECORD.					
1	Call Order Desk	BACKREST STRUCTURE R.H.	1				P
1	Call Order Desk	BACKREST STRUCTURE R.H. / W/IND "REI"	1				P
1	Call Order Desk	BACKREST STRUCTURE R.H. "EUROTECH"	1				P
2	Call Order Desk	BUSHING PLASTIC	1				P
3	Call Order Desk	INSIDE METAL BUSHING	1				P
4	70314705	SCREW CAP HEXS M10-1.5x60 G8.8 ZP	1				
5	Call Order Desk	BACKREST STRUCTURE L.H.	1				P
5	Call Order Desk	BACKREST STRUCTURE L.H. / W/IND "REI"	1				P
5	Call Order Desk	BACKREST STRUCTURE L.H. "EUROTECH"	1				P
6	Call Order Desk	LOCK BOLT M6-1x30	1				P
7	Call Order Desk	LOCK BOLT M6-1x20	1				P
9	500680	NUT HEX STO M10-1.5 ZP	1				
10	502765	SCREW CAP HEXS M10-1.5x100 G8.8 PT ZP	1				
11	Call Order Desk	STRUCTURE R.H. / W/STD FOOTREST	1				P
11	Call Order Desk	STRUCTURE R.H. / W/STD FOOTREST	1				P
11	Call Order Desk	STRUCTURE L.H. / W/STD FOOTREST	1				P
11	Call Order Desk	STRUCTURE L.H. / W/STD FOOTREST	1				P
11	Call Order Desk	STRUCTURE R.H. / W/GAUDI FOOTREST	1				P
11	Call Order Desk	STRUCTURE L.H. / W/GAUDI FOOTREST	1				P
11	Call Order Desk	STRUCTURE R.H. / W/GAUDI FOOTREST & AVION TABLE SEAT	1				P
11	Call Order Desk	STRUCTURE L.H. / W/GAUDI FOOTREST & AVION TABLE SEAT	1				P
11	Call Order Desk	STRUCTURE L.H. & R.H. / W/STD FOOTREST "EUROTECH"	1				P
12	500183	SCREW CAP HEX 5/16-18x1 1/2 G5 PT ZP	1				
13	500441	WASHER FL .312x.734x.065 ZP	1				
14	863541	BRACKET SUPPORT	1				
21	862558	HEADREST FOAM / TYPE "BRAZIL"	1				
21	Call Order Desk	COVERING ASSY S.C.C.	1				P
21	863315	HEADREST FOAM / TYPE "BRAZIL" & "EUROTECH"	1				
22	862933	HEADREST ASSY / TYPE WINGED "VIP"	1				
22	Call Order Desk	HEADREST FOAM / TYPE WINGED "VIP"	1				P
22	Call Order Desk	COVERING ASSY WING TYPE / S.C.C.	1				P
23	864810	GUIDE SLIDING	1				
23	Call Order Desk	GUIDE SLIDING	1				P
24	Call Order Desk	HEADREST PIN	1				P
25	Call Order Desk	BACKREST FOAM	1				P
26	Call Order Desk	BACKREST TUFTING WIRE / LARGE / W/"GAUDI" & "EUROTECH"	1				P
26	Call Order Desk	BACKREST TUFTING WIRE "EUROTECH" & "BRASIL	1				P
27	Call Order Desk	COVERING BACKREST ASSY S.C.C. "EUROTECH" Up to YEAR 1999	1				P
		P) CALL ORDER DESK FOR SPECIFIC APPLICATION					
		(V.I.N.)					

From Y-7046 Up to 6-8906	DATE: 01/2014	PAGE: Y2-1826-05

PASSENGER'S SEAT - "AMAYA" "EUROTECH"

ITEM	PART	DESCRIPTION	XL45	MTH40	MTH45	MTH45S	NOTE
27	Call Order Desk	COVERING BACKREST ASSY S.C.C. From YEAR 2000	1				P
28	Call Order Desk	CUSHION FRAME W/CLOTH	1				P
28	Call Order Desk	. CUSHION FRAME	1				P
28	Call Order Desk	. CUSHION CLOTH	1				P
29	864187	FASTENER COVERING	1				
30	Call Order Desk	CUSHION FOAM	1				P
31	Call Order Desk	CUSHION TUFTING WIRE "EUROTECH" Up to YEAR 1999	1				P
31	Call Order Desk	CUSHION TUFTING WIRE "EUROTECH" & "BRASIL From YEAR 2000	1				P
32	Call Order Desk	COVERING CUSHION ASSY S.C.C.	1				P
33	502716	NUT HEX NYRT 1/4-20 / REPLACED BY: 5001123	1				
49	362627	PLATE ANCHOR / 3/8-16 BOLT INSIDE TRACK / 1 1/4" X 1 1/4"	1				
50	Y2-1826-50	**ARMREST PASSENGER'S SEAT - "AMAYA" WITH "EUROTECH"**					
50	Y2-1826-51	**ARMREST PASSENGER'S SEAT - "AMAYA" WITH "BRASIL"**					
51	Y2-1826-40	**PASSENGER'S SEAT - "AMAYA" - FOOTREST & PEDESTAL**					
52	Y2-1826-60	**ACCESSORIES PASSENGER'S SEAT - "AMAYA"**					
60	Call Order Desk	STRUCTURE DOUBLE / USED W/3 LOUNGE SEAT	1				P
61	Call Order Desk	STRUCTURE SINGLE / USED W/3 LOUNGE SEAT	1				P
62	Call Order Desk	STRUCTURE UNION SEAT / USED W/3 LOUNGE SEAT	1				P
63	Call Order Desk	CENTER MECHANISM	1				P
64	500446	WASHER FL .531x1.250x.125 ZP	1				
65	Call Order Desk	FLAT WASHER	1				P
66	Call Order Desk	PRESSURE WASHER 7/16" 10mm	1				P
70	Call Order Desk	STRUCTURE FRAME ROTATING SEAT	1				P
71	Call Order Desk	STRUCTURE FRAME INFERIOR R.H. / W/STD FOOTREST	1				P
71	Call Order Desk	STRUCTURE FRAME INFERIOR L.H. / W/STD FOOTREST	1				P
71	Call Order Desk	STRUCTURE FRAME INFERIOR R.H. / W/GAUDI FOOTREST	1				P
71	Call Order Desk	STRUCTURE FRAME INFERIOR L.H. / W/GAUDI FOOTREST	1				P
72	862156	KNOB / ROTATING SEAT	2				
100	323654	SEAT TRACK COVER 12' / <> EACH SEAT / W/COVERING FLOOR / REPLACED BY: 323963	AR				
100	323963	SEAT TRACK COVER 8' / <> EACH SEAT / W/COVERING FLOOR	AR				
		P) CALL ORDER DESK FOR SPECIFIC APPLICATION					
		(V.I.N.)					

From Y-7046 Up to 6-8906	DATE: 01/2014	PAGE: Y2-1826-06

PASSENGER'S SEAT - "AMAYA" "BRASIL"

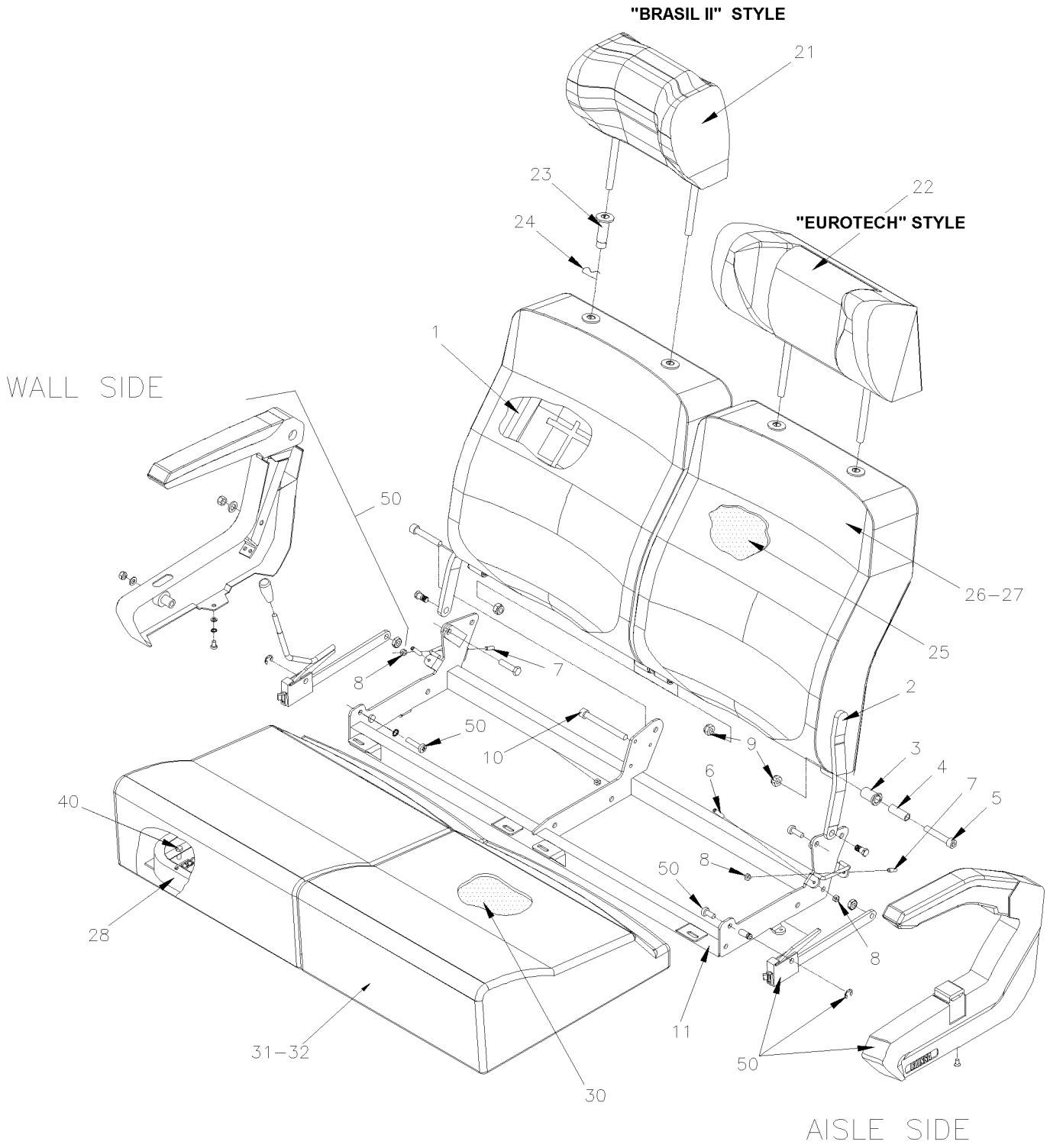

From Y-7046 Up to 6-8906	DATE: 01/2014	PAGE: Y2-1826-06

PASSENGER'S SEAT - "AMAYA" "BRASIL"

ITEM	PART	DESCRIPTION	XL45	MTH40	MTH45	MTH45S	NOTE
		IMPORTANT NOTE:					
		TO ORDER COMPLETE PASSENGER'S SEAT KIT #,					
		SEE THE FINAL VEHICLE RECORD.					
1	Call Order Desk	BACKREST ASSY R.H.	1				P
1	Call Order Desk	. BACKREST STRUCTURE R.H.	1				P
2	864073	BACKREST ASSY L.H.	1				
2	Call Order Desk	. BACKREST STRUCTURE L.H.	1				P
3	Call Order Desk	INSIDE METAL BUSHING	1				P
4	Call Order Desk	BUSHING PLASTIC	1				P
5	70314705	SCREW CAP HEXS M10-1.5x60 G8.8 ZP	2				
6	Call Order Desk	LOCK BOLT M6-1x30	1				P
7	Call Order Desk	LOCK BOLT M6-1x20	1				P
8	500609	NUT HEX M6-1.0 ZP	4				
9	500680	NUT HEX STO M10-1.5 ZP	1				
10	502765	SCREW CAP HEXS M10-1.5x100 G8.8 PT ZP	1				
11	Call Order Desk	STRUCTURE R.H.	1				P
11	Call Order Desk	STRUCTURE L.H.	1				P
21	Call Order Desk	HEADREST FOAM / TYPE "BRAZIL-II"	1				P
	Call Order Desk	COVERING HEADREST ASSY "BRAZIL-II" S.C.C.	1				P
22	863315	HEADREST FOAM / TYPE "BRAZIL" & "EUROTECH"	1				
	Call Order Desk	COVERING HEADREST ASSY "BRAZIL" & EURO S.C.C.	1				P
23	864810	GUIDE SLIDING	4				
24	Call Order Desk	HEADREST PIN	4				P
25	Call Order Desk	BACKREST FOAM	2				P
26	Call Order Desk	BACKREST TUFTING WIRE	4				P
27	Call Order Desk	COVERING BACKREST ASSY S.C.C.	2				P
28	Call Order Desk	SEAT FRAME	2				P
30	Call Order Desk	CUSHION FOAM	2				P
31	Call Order Desk	CUSHION TUFTING WIRE	4				P
	Call Order Desk	COVERING CUSHION ASSY S.C.C.	2				P
40	502716	NUT HEX NYRT 1/4-20 / REPLACED BY: 5001123	4				
50	Y2-1826-51	**ARMREST PASSENGER'S SEAT - "AMAYA" WITH "BRASIL"**					
51	Y2-1826-60	**ACCESSORIES PASSENGER'S SEAT - "AMAYA"**					
		P) CALL ORDER DESK FOR SPECIFIC APPLICATION					
		(V.I.N.)					

From Y-7046 Up to 6-8906	DATE: 01/2014	PAGE: Y2-1826-07
PASSENGER'S SEAT - "AMAYA" "SIGLIUM" TORO & TORINO		

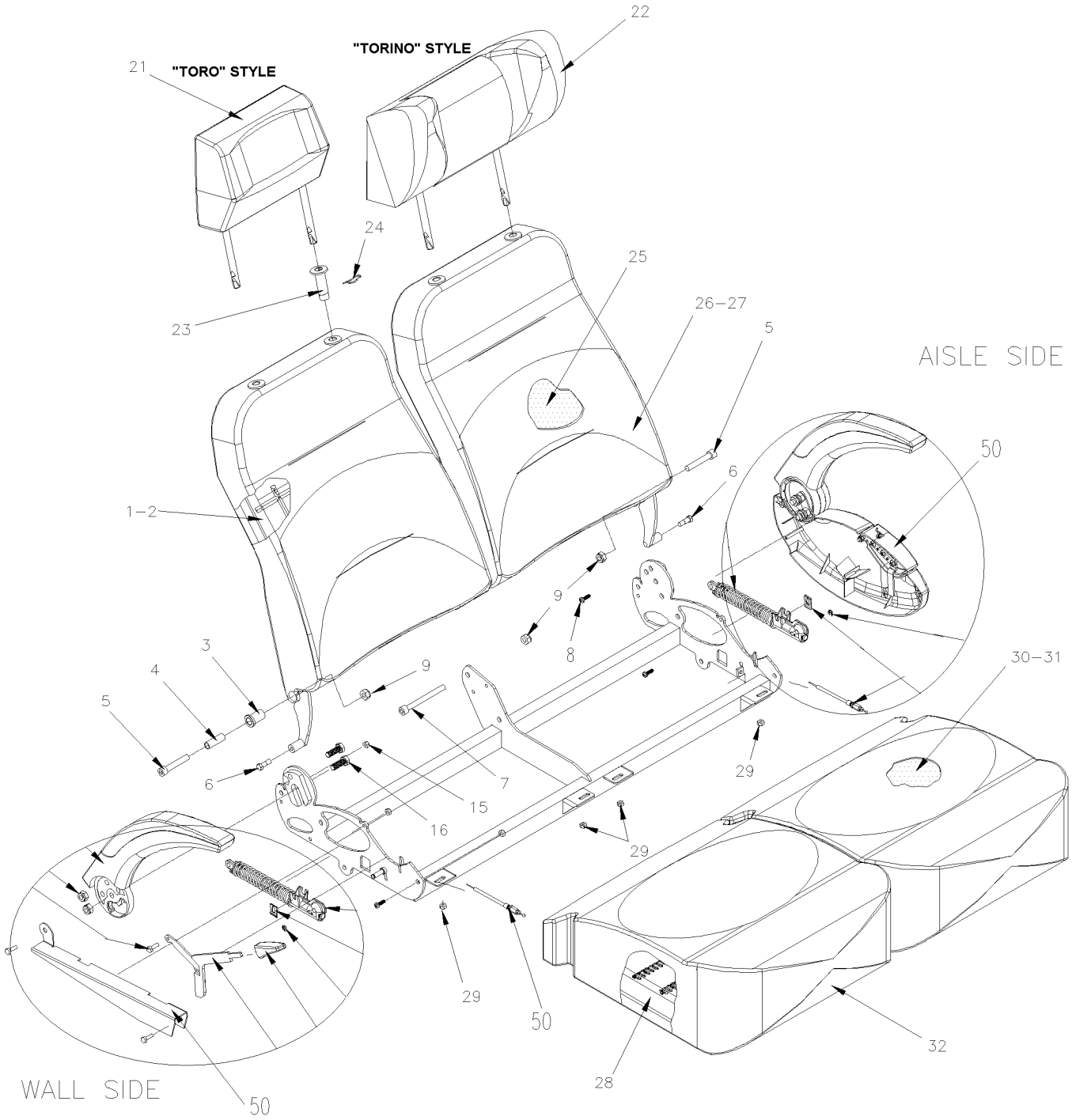

From Y-7046 Up to 6-8906	DATE: 01/2014	PAGE: Y2-1826-07

PASSENGER'S SEAT - "AMAYA" "SIGLIUM" TORO & TORINO

ITEM	PART	DESCRIPTION	XL45	MTH40	MTH45	MTH45S	NOTE
		IMPORTANT NOTE:					
		TO ORDER COMPLETE PASSENGER'S SEAT KIT #,					
		SEE THE FINAL VEHICLE RECORD.					
1	Call Order Desk	BACKREST ASSY R.H. / WSIGLUM TORO	1				P
1	Call Order Desk	. BACKREST STRUCTURE R.H. / WSIGLUM TORO	1				P
1	Call Order Desk	BACKREST ASSY R.H. / WSIGLUM TORINO	1				P
1	Call Order Desk	. BACKREST STRUCTURE R.H. / WSIGLUM TORINO	1				P
2	Call Order Desk	BACKREST ASSY L.H. / WSIGLUM TORO	1				P
2	Call Order Desk	. BACKREST STRUCTURE L.H. / W/SIGLUM TORO	1				P
2	Call Order Desk	BACKREST ASSY L.H. / WSIGLUM TORINO	1				P
2	Call Order Desk	. BACKREST STRUCTURE L.H. / W/SIGLUM TORINO	1				P
	Call Order Desk	. . INSIDE METAL BUSHING	1				P
	Call Order Desk	. . BUSHING PLASTIC	1				P
5	70314705	SCREW CAP HEXS M10-1.5x60 G8.8 ZP	2				
6	5001132	SCREW CAP HEX 5/16-18x7/8 G5 ZP	2				
7	502765	SCREW CAP HEXS M10-1.5x100 G8.8 PT ZP	1				
8	Call Order Desk	HY-LO BOLT M6-1.0x23	2				P
9	5001570	NUT HEX NYRT M10-1.5 ZP	5				
10	11500930	SCREW CAP HEX M10-1.5x30 G8.8 PHC	2				
11	500163	SCREW CAP HEX 1/4-20x3/4 G5 ZP	3				
12	500183	SCREW CAP HEX 5/16-18x1 1/2 G5 PT ZP	1				
13	500441	WASHER FL .312x.734x.065 ZP	1				
14	9415477	SCREW CAP HEX 1/4-20x3/4 ZP	1				
15	500769	NUT HEX 1/4-20 ZP	3				
16	11500930	SCREW CAP HEX M10-1.5x30 G8.8 PHC	2				
20	Call Order Desk	STRUCTURE R.H.	1				P
20	Call Order Desk	STRUCTURE L.H.	1				P
21	Call Order Desk	HEADREST FOAM / TYPE "TORO"	1				P
	Call Order Desk	COVERING HEADREST ASSY "TORO" S.C.C.	1				P
22	Call Order Desk	HEADREST FOAM / TYPE "TORINO"	1				P
NS	Call Order Desk	COVERING HEADREST ASSY "TORINO" S.C.C.	1				P
23	864810	GUIDE SLIDING	2				
24	Call Order Desk	HEADREST PIN	2				P
25	Call Order Desk	BACKREST FOAM / W/SIGLUM TORO S.C.C.	2				P
25	Call Order Desk	BACKREST FOAM / W/SIGLUM TORINO S.C.C.	2				P
26	Call Order Desk	BACKREST TUFTING WIRE	4				P
27	Call Order Desk	COVERING BACKREST ASSY "TORO" S.C.C.	2				P
27	Call Order Desk	COVERING BACKREST ASSY "TORINO" S.C.C.	2				P
28	Call Order Desk	SEAT FRAME	2				P
29	502716	NUT HEX NYRT 1/4-20 / REPLACED BY: 5001123	4				
30	Call Order Desk	CUSHION FOAM	2				P
		P) CALL ORDER DESK FOR SPECIFIC APPLICATION					
		(V.I.N.)					

From Y-7046 Up to 6-8906	DATE: 01/2014	PAGE: Y2-1826-07

PASSENGER'S SEAT - "AMAYA" "SIGLIUM" TORO & TORINO

ITEM	PART	DESCRIPTION	XL45	MTH40	MTH45	MTH45S	NOTE
31	Call Order Desk	CUSHION TUFTING WIRE	2				P
	Call Order Desk	COVERING CUSHION ASSY S.C.C.	2				P
50	Y2-1826-53	**ARMREST PASSENGER'S SEAT - "AMAYA" WITH "SIGLIUM" TORO & TORINO**					
NS	864072	ARMREST CENTRAL ASSY					
		P) CALL ORDER DESK FOR SPECIFIC APPLICATION					
		(V.I.N.)					

From Y-7046 Up to 6-8906	DATE: 01/2014	PAGE: Y2-1826-07

PASSENGER'S SEAT - "AMAYA" "SIGLIUM" TORO & TORINO

ITEM	PART	DESCRIPTION	XL45	MTH40	MTH45	MTH45S	NOTE

From Y-7046 Up to 6-8906	DATE: 01/2014	PAGE: Y2-1826-08
PASSENGER'S SEAT - "AMAYA" "GAUDI"		

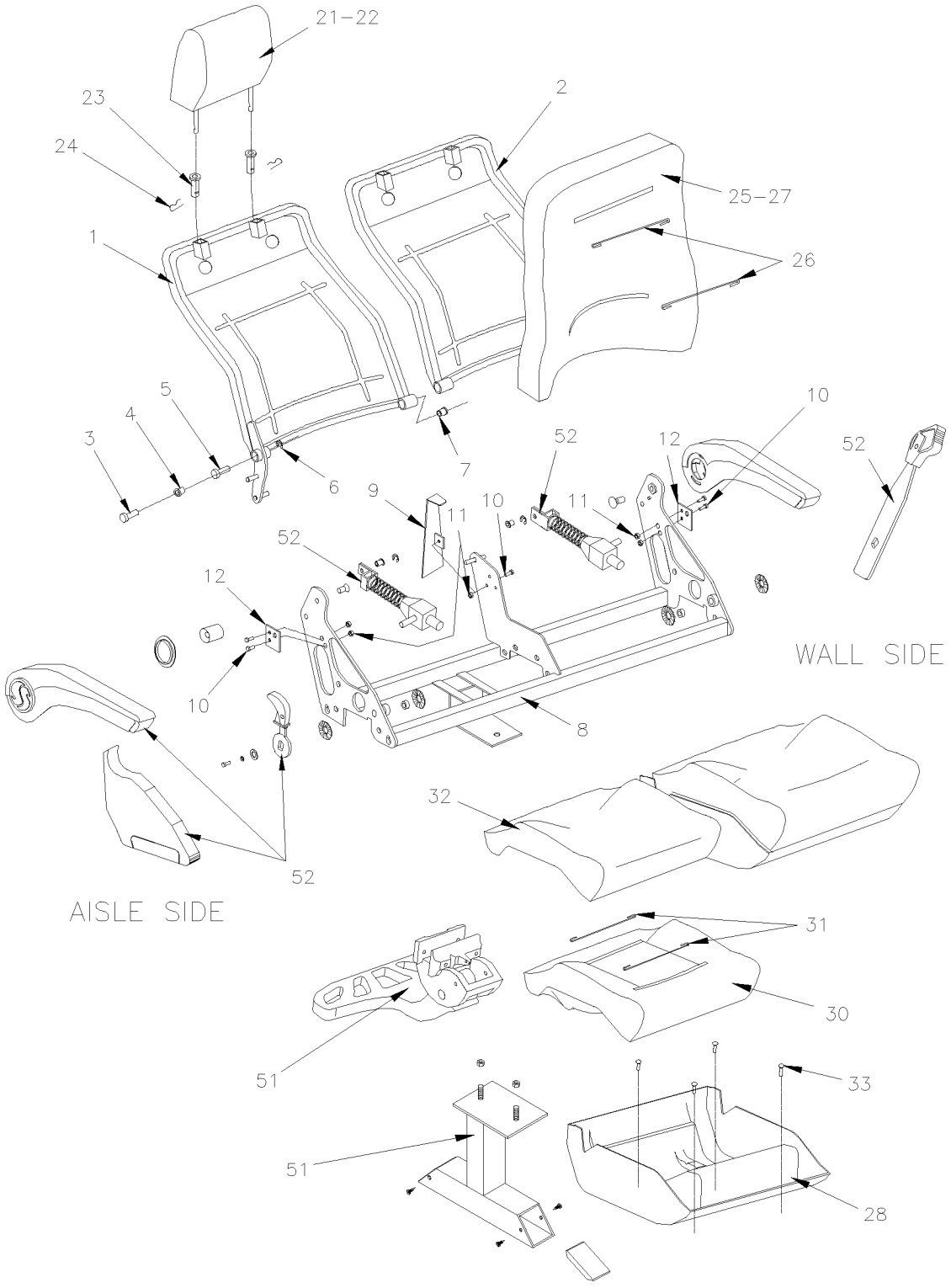

From Y-7046 Up to 6-8906	DATE: 01/2014	PAGE: Y2-1826-08

PASSENGER'S SEAT - "AMAYA" "GAUDI"

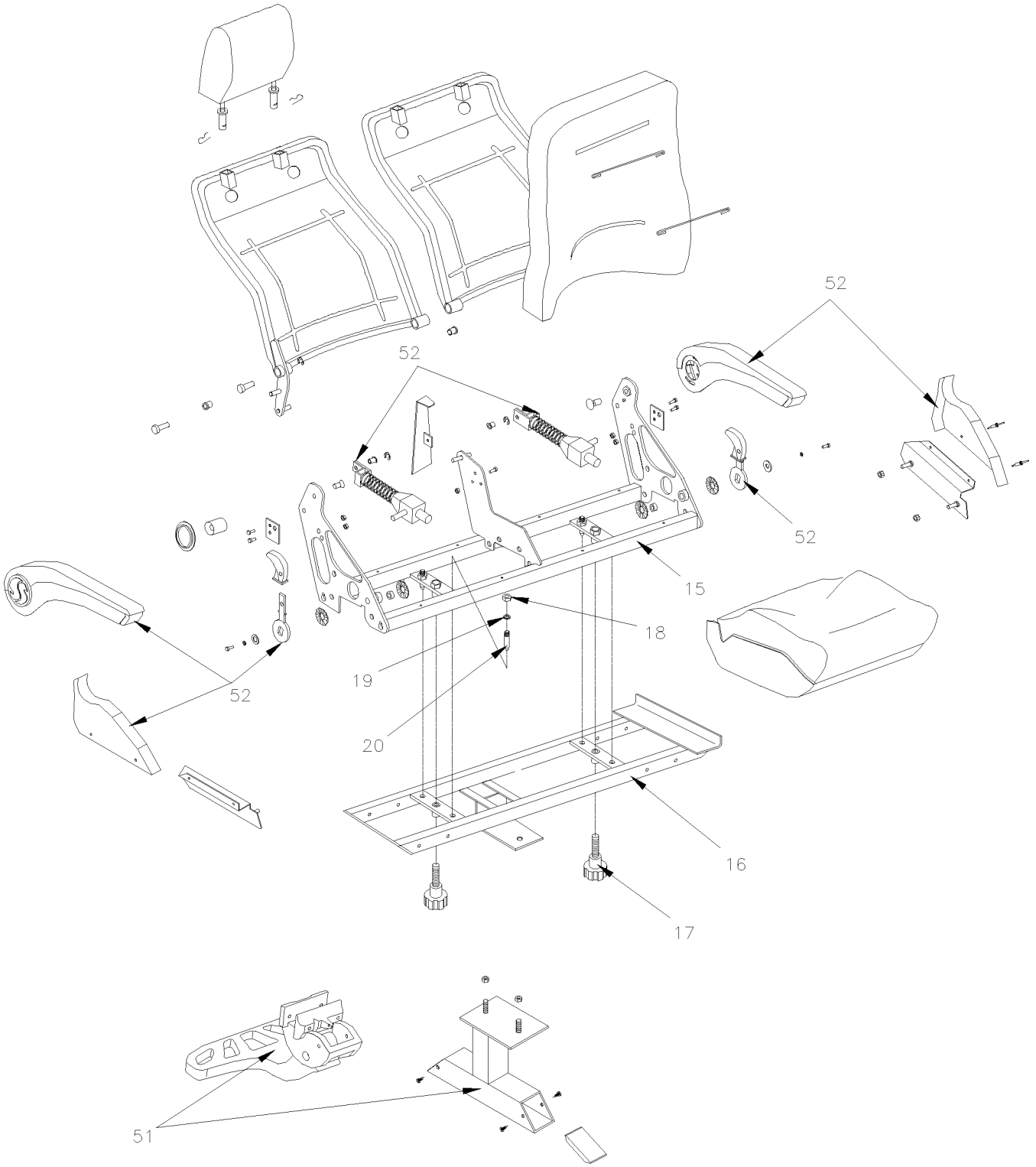

From Y-7046 Up to 6-8906	DATE: 01/2014	PAGE: Y2-1826-08

PASSENGER'S SEAT - "AMAYA" "GAUDI"

ITEM	PART	DESCRIPTION	XL45	MTH40	MTH45	MTH45S	NOTE
		IMPORTANT NOTE: BEFORE TO					
		ORDER COMPLETE PASSENGER'S SEAT					
		OR COVERING ASSY, HEAD / BACK & CUSHION					
		SEE THE FINAL VEHICLE RECORD					
1	Call Order Desk	BACKREST R.H.	1				P
2	Call Order Desk	BACKREST L.H.	1				P
3	Call Order Desk	. BUSHING PLASTIC	1				P
4	Call Order Desk	. INSIDE METAL BUSHING	1				P
5	Call Order Desk	BOLT M10X25MM	2				P
6	Call Order Desk	WASHER #9 DIN6799	2				P
7	Call Order Desk	BUSHING CENTER SEPARATOR	2				P
8	Call Order Desk	STRUCTURE L.H. / W/"GAUDI" HR	1				P
8	Call Order Desk	STRUCTURE R.H. / W/"GAUDI" HR	1				P
8	Call Order Desk	STRUCTURE L.H. / W/"GAUDI" SC	1				P
9	Call Order Desk	BACK COVER / W/"GAUDI" HR	1				P
9	Call Order Desk	BACK COVER / W/"GAUDI" SC	1				P
10	Call Order Desk	SCREW CAP HEX 1/4-20x3/4 ZP	6				P
11	500769	NUT HEX 1/4-20 ZP	6				
12	Call Order Desk	STOPPER RECLINING 3"	2				P
15	Call Order Desk	STRUCTURE UPPER / REVERSIBLE SEAT / W/"GAUDI" HR	1				P
15	Call Order Desk	STRUCTURE UPPER / REVERSIBLE SEAT / W/"GAUDI" SC	1				P
16	Call Order Desk	STRUCTURE LOWER / REVERSIBLE SEAT	1				P
17	862156	KNOB / ROTATING SEAT	2				
18	5001570	NUT HEX NYRT M10-1.5 ZP	6				
19	Call Order Desk	PRESSURE WASHER 7/16" 10mm	6				P
20	Call Order Desk	GUIDE BOLT	6				P
21	Call Order Desk	HEADREST FOAM / TYPE "GAUDI HR"	1				P
22	Call Order Desk	COVERING HEADREST ASSY "GAUDI" S.C.C.	1				P
23	864810	GUIDE SLIDING	2				
24	Call Order Desk	HEADREST PIN	2				P
25	Call Order Desk	BACKREST FOAM / W/"GAUDI"	1				P
26	Call Order Desk	BACKREST TUFTING WIRE / LARGE / W/"GAUDI" & "EUROTECH"	1				P
26	Call Order Desk	BACKREST TUFTING WIRE / SMALL / W/"GAUDI"	1				P
27	Call Order Desk	COVERING BACKREST ASSY / S.C.C. / W/"GAUDI"	1				P
28	Call Order Desk	SEAT SHELL / W/"GAUDI" HR	1				P
28	Call Order Desk	CUSHION FRAME / W/"GAUDI" SC	1				P
30	Call Order Desk	CUSHION FOAM	1				P
31	Call Order Desk	CUSHION TUFTING WIRE	2				P
32	Call Order Desk	COVERING CUSHION ASSY S.C.C.	1				P
33	Call Order Desk	BOLT 6.3x19	4				P
		P) CALL ORDER DESK FOR SPECIFIC APPLICATION					
		(V.I.N.)					

From Y-7046 Up to 6-8906	DATE: 01/2014	PAGE: Y2-1826-08

PASSENGER'S SEAT - "AMAYA" "GAUDI"

ITEM	PART	DESCRIPTION	XL45	MTH40	MTH45	MTH45S	NOTE
34	Call Order Desk	SEAT FIXING BRACKET	1				P
35	Call Order Desk	BOLT 3.9X13MM	1				P
50	Y2-1826-60	**ACCESSORIES PASSENGER'S SEAT - "AMAYA"**					
51	Y2-1826-40	**PASSENGER'S SEAT - "AMAYA" - FOOTREST & PEDESTAL**					
52	Y2-1826-52	**ARMREST PASSENGER'S SEAT - "AMAYA" WITH "GAUDI"**					
		P) CALL ORDER DESK FOR SPECIFIC APPLICATION					
		(V.I.N.)					

From Y-7046 Up to 6-8906	DATE: 01/2014	PAGE: Y2-1826-40

PASSENGER'S SEAT - "AMAYA" - FOOTREST & PEDESTAL

FOOTREST GAUDI

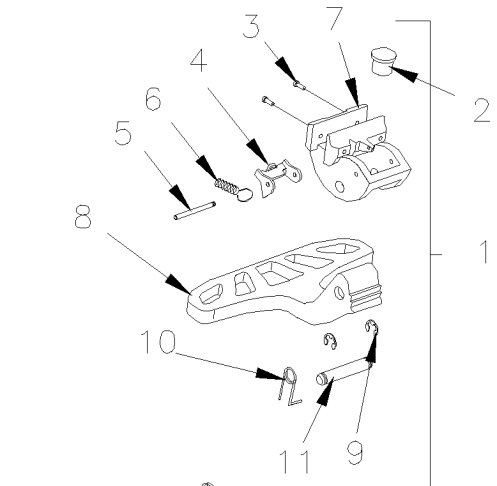

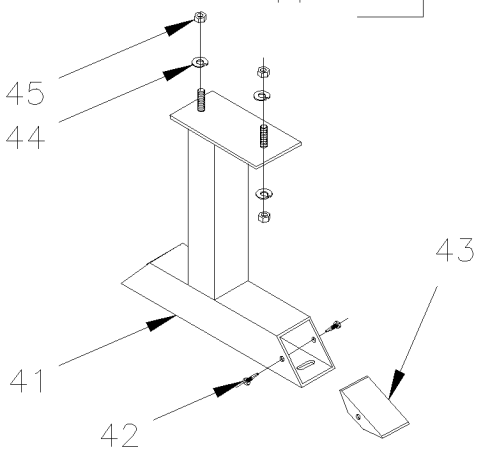

FOOTREST STD

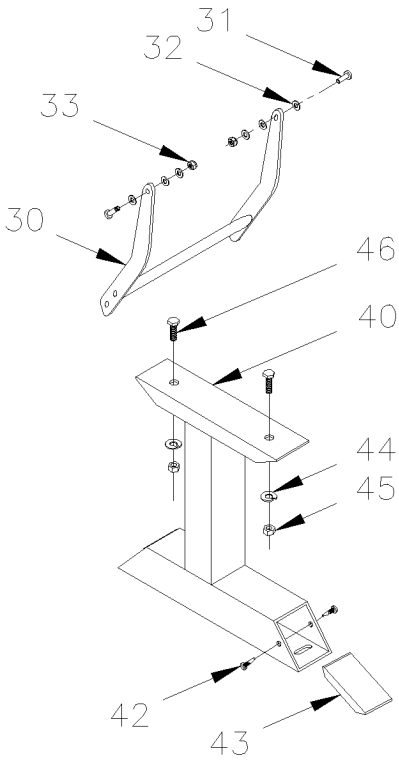

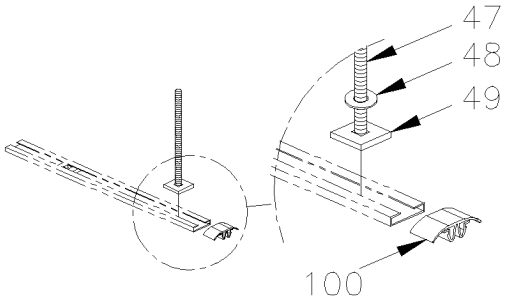

From Y-7046 Up to 6-8906	DATE: 01/2014	PAGE: Y2-1826-40

PASSENGER'S SEAT - "AMAYA" - FOOTREST & PEDESTAL

ITEM	PART	DESCRIPTION	XL45	MTH40	MTH45	MTH45S	NOTE
1	862224	FOOTREST ASSY W/SPRING / "GAUDI" / ALUMINUM / REPLACED BY: 863742	1				
1	863742	FOOTREST ASSY W/SPRING / "GALA" / PLASTIC	1				
1	862714	FOOTREST ASSY W/SPRING / "SIGLIUM" / PLASTIC	1				B
2	N.S.S.	. RUBBER BUMPER	1				1
3	N.S.S.	. SCREW CAP HEXS M8-1.25x50 SS	2				1
4	N.S.S.	. STOPPER	1				1
5	N.S.S.	. STOPPER AXLE	1				1
6	N.S.S.	. SPRING	1				1
7	N.S.S.	. FOOTREST SUPPORT	1				1
8	N.S.S.	. FOOTREST / REPLACED BY: 863742	1				1
9	N.S.S.	. WASHER M10	2				1
10	N.S.S.	. SPRING	1				1
11	N.S.S.	. FOOTREST AXLE	1				1
30	863814	FOOTREST STANDARD 10" L x 9" U	1				
31	Call Order Desk	BOLT SPECIAL M8-1.25 x10	2				P
32	500441	WASHER FL .312x.734x.065 ZP	2				
33	500868	NUT HEX NYRT M8-1.25 CP	2				
40	Call Order Desk	PEDESTAL ASSY / W STD FOOTREST	1				P
41	Call Order Desk	PEDESTAL ASSY / W GAUDI FOOTREST	1				P
41	Call Order Desk	PEDESTAL ASSY / W GAUDI FOOTREST	1				P
41	Call Order Desk	PEDESTAL ASSY / W GAUDI FOOTREST / W/REVERSIBLE "GAUDI" HR	1				P
41	Call Order Desk	PEDESTAL ASSY / W GAUDI FOOTREST / W/REVERSIBLE "GAUDI" SC	1				P
41	Call Order Desk	PEDESTAL ASSY / W GAUDI FLIP-UP SLIDE	1				P
42	504619	. CLIP CHRISTMAS TREE / BLACK 7/32"O.D.x1/2" HOLE 3/16	2				
43	862585	PEDESTAL CAP / BLACK	2				
. NS	864028	. CLIP CHRISTMAS TREE / BLACK	2				
43	863907	PEDESTAL CAP / GREY	2				
. NS	864029	. CLIP CHRISTMAS TREE / GREY	2				
44	Call Order Desk	PRESSURE WASHER 7/16" 10mm	1				P
45	500256	NUT HEX M10-1.5 ZP	2				
46	5001526	SCREW CAP HEX M16-2.0x45 G10.9 DP	2				
47	500305	SCREW CAP HEX 3/8-16x7/8 G5 ZP	2				
48	500478	WASHER LO SPT .380x.683x.094 ZP	2				
49	362627	PLATE ANCHOR / 3/8-16 BOLT INSIDE TRACK / 1 1/4" X 1 1/4"	AR				
100	323654	SEAT TRACK COVER 12' / <> EACH SEAT / W/COVERING FLOOR / REPLACED BY: 323963	AR				
100	323963	SEAT TRACK COVER 8' / <> EACH SEAT / W/COVERING FLOOR	AR				
		1) NOT SOLD SEPARATELY					
		P) CALL ORDER DESK FOR SPECIFIC APPLICATION					
		(V.I.N.)					
		B) THIS MODEL HAVE FOOTREST SUPPORT DIFFER THAN					
		PICTURE					

From Y-7046 Up to 6-8906	DATE: 01/2014	PAGE: Y2-1826-50
ARMREST PASSENGER'S SEAT - "AMAYA" WITH "EUROTECH"		

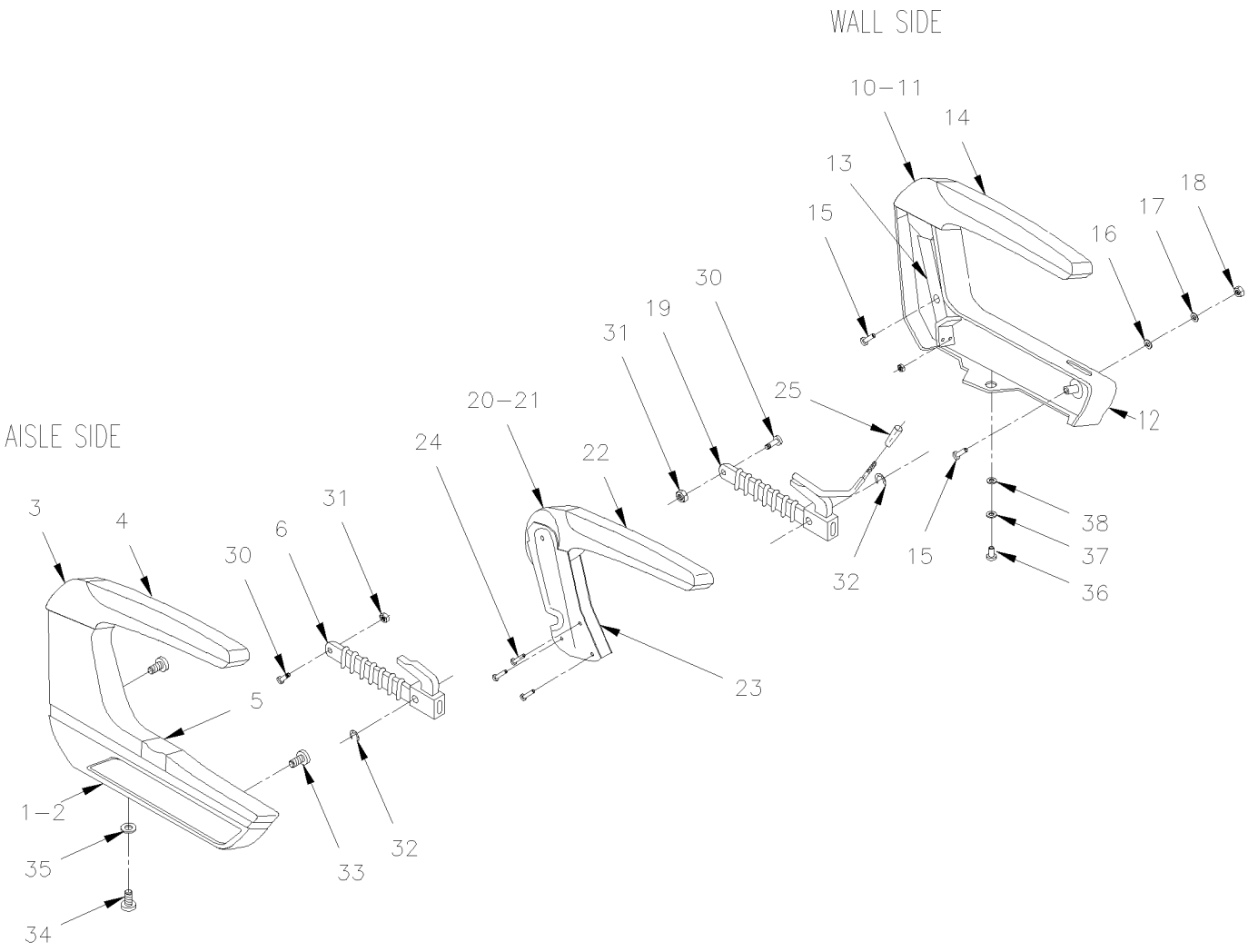

From Y-7046 Up to 6-8906	DATE: 01/2014	PAGE: Y2-1826-50

ARMREST PASSENGER'S SEAT - "AMAYA" WITH "EUROTECH"

ITEM	PART	DESCRIPTION	XL45	MTH40	MTH45	MTH45S	NOTE
1	Call Order Desk	ARMREST ASSY R.H.	1				P
1	Call Order Desk	ARMREST ASSY L.H.	1				P
2	Call Order Desk	. ARMREST AISLE SUPPORT L.H.	1				P
2	Call Order Desk	. ARMREST AISLE SUPPORT R.H.	1				P
3	Call Order Desk	. ARMREST AISLE FRAME L.H.	1				P
3	Call Order Desk	. ARMREST AISLE FRAME R.H.	1				P
	Call Order Desk	. AXLE BOLT (ARM PIVOT)	1				P
	Call Order Desk	. FIBER WASHER	1				P
4	862939	. ARMREST COVER RUBBER	1				
	Call Order Desk	. BOLT 2.5X26	1				P
5	863361	. PUSH BUTTON	1				
5	863474	. TRACK BUTTON	1				
NS	863475	. SPRING BUTTON	1				
NS	863476	. STOPPER BUTTON	1				
6	862545	. RECLINING MECANISM AILSE	1				A
10	863645	ARMREST ASSY L.H. / WALL SIDE	1				
10	Call Order Desk	ARMREST ASSY R.H. / WALL SIDE	1				P
11	Call Order Desk	. ARMREST WALL FRAME R.H.	1				P
11	863381	. ARMREST WALL FRAME L.H.	1				
	Call Order Desk	. WASHER	1				P
	Call Order Desk	. SCREW CAP HEXS M12x30	1				P
12	862937	. ARMREST WALL SUPPORT R.H.	1				
12	Call Order Desk	. ARMREST WALL SUPPORT L.H.	1				P
13	863425	. ARMREST WALL SUPPORT (REINFORCEMENT)	1				
14	862939	. ARMREST COVER RUBBER	1				
	Call Order Desk	. BOLT 2.5X26	1				P
15	Call Order Desk	. BOLT M8 X 50MM	1				P
15	Call Order Desk	. SCREW MA CHE PH M8-1.25x45	1				P
16	Call Order Desk	. WASHER FL 8.4	1				P
17	Call Order Desk	. WASHER LO INT 8.4	1				P
18	Call Order Desk	. NUT HEX M8-1.25	1				P
19	862218	RECLINING MECANISM WALL WINDOW	1				B
20	862544	CENTER ARMREST ASSY / PAINTED ALUMINUM	1				
21	Call Order Desk	. ARMREST CENTER	1				P
	Call Order Desk	. FIBER WASHER	2				P
	Call Order Desk	. BOLT MALE	1				P
	Call Order Desk	. BOLT FEMALE	1				P
22	862939	. ARMREST COVER RUBBER	1				
23	Call Order Desk	. ARMREST CENTER SUPPORT	1				P
24	Call Order Desk	. SCREW MA CHE PH M6x15	1				P
		P) CALL ORDER DESK FOR SPECIFIC APPLICATION					
		(V.I.N.)					
		A) INCLUDE ITEMS # 30,31 & 32					
		B) INCLUDE ITEMS # 25, 30, 31 & 32					

From Y-7046 Up to 6-8906	DATE: 01/2014	PAGE: Y2-1826-50

ARMREST PASSENGER'S SEAT - "AMAYA" WITH "EUROTECH"

ITEM	PART	DESCRIPTION	XL45	MTH40	MTH45	MTH45S	NOTE
25	862225	. KNOB W/ ROUND ROD INSERT MECHANISM (FORMER)	1				
25	864117	. KNOB W/SQUARE ROD INSERT MECHANISM (CURRENT)	1				
30	Call Order Desk	BOLT SPECIAL FIXING	1				P
31	500256	NUT HEX M10-1.5 ZP	1				
32	Call Order Desk	WASHER #9 DIN6799	1				P
33	Call Order Desk	SCREW OVAL HEAD M8-1.25x20	1				P
34	Call Order Desk	SCREW CAP HEXS M8x20	1				P
35	Call Order Desk	WASHER LO EXTC 6.4	1				P
36	Call Order Desk	SCREW BUT HEXS M6x10	1				P
37	Call Order Desk	PRESSURE WASHER	1				P
38	Call Order Desk	WASHER J6.4 DIN 125	1				P
		P) CALL ORDER DESK FOR SPECIFIC APPLICATION					
		(V.I.N.)					

From Y-7046 Up to 6-8906	DATE: 01/2014	PAGE: Y2-1826-50

ARMREST PASSENGER'S SEAT - "AMAYA" WITH "EUROTECH"

ITEM	PART	DESCRIPTION	XL45	MTH40	MTH45	MTH45S	NOTE

From Y-7046 Up to 6-8906	DATE: 01/2014	PAGE: Y2-1826-51
ARMREST PASSENGER'S SEAT - "AMAYA" WITH "BRASIL"		

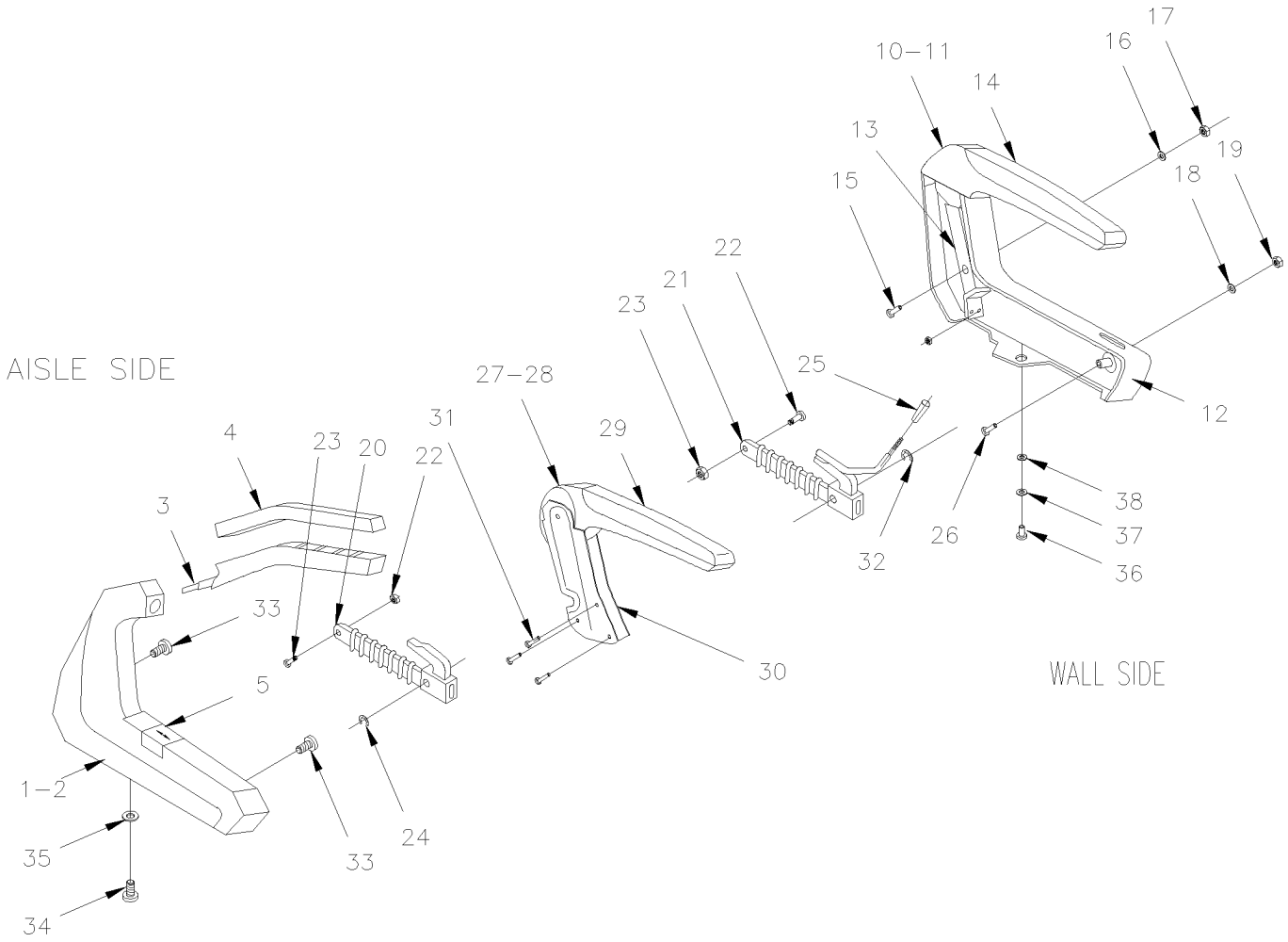

From Y-7046 Up to 6-8906	DATE: 01/2014	PAGE: Y2-1826-51

ARMREST PASSENGER'S SEAT - "AMAYA" WITH "BRASIL"

ITEM	PART	DESCRIPTION	XL45	MTH40	MTH45	MTH45S	NOTE
1	863843	ARMREST ASSY R.H.	1				
1	863844	ARMREST ASSY L.H. / REPLACED BY: 862934	1				
1	862934	ARMREST ASSY L.H.	1				
2	Call Order Desk	. ARMREST AISLE SUPPORT L.H.	1				P
2	Call Order Desk	. ARMREST AISLE SUPPORT R.H.	1				P
3	Call Order Desk	. ARMREST AISLE FRAME L.H.	1				P
3	Call Order Desk	. ARMREST AISLE FRAME R.H.	1				P
	Call Order Desk	. ARMREST CLIP	1				P
	Call Order Desk	. FIBER ARMREST WASHER	1				P
4	863427	. ARMREST COVER AISLE	1				
5	863361	. PUSH BUTTON	1				
5	863474	. TRACK BUTTON	1				
NS	863475	. SPRING BUTTON	1				
NS	863476	. STOPPER BUTTON	1				
10	863645	ARMREST ASSY L.H. / WALL SIDE	1				
10	Call Order Desk	ARMREST ASSY R.H. / WALL SIDE	1				P
11	Call Order Desk	. ARMREST WALL FRAME R.H.	1				P
11	863381	. ARMREST WALL FRAME L.H.	1				
	Call Order Desk	. WASHER	1				P
	Call Order Desk	. SCREW CAP HEXS M12x30	1				P
12	862937	. ARMREST WALL SUPPORT R.H.	1				
12	Call Order Desk	. ARMREST WALL SUPPORT L.H.	1				P
13	863425	. ARMREST WALL SUPPORT (REINFORCEMENT)	1				
14	862939	. ARMREST COVER RUBBER	1				
	Call Order Desk	. BOLT 2.5X26	1				P
15	500193	SCREW CAP HEX 3/8-16x1 1/2 G5 ZP	1				
16	500445	WASHER FL .437x1.000x.083 ZP	1				
17	500783	NUT HEX 3/8-16 ZP	1				
18	502507	WASHER LO SPT 8.1x14.8x2.0 CJ	1				
19	502543	NUT HEX M8-1.25 ZP	1				
20	862545	RECLINING MECANISM AILSE	1				
21	862218	RECLINING MECANISM WALL WINDOW	1				
22	Call Order Desk	. BOLT SPECIAL FIXING	1				P
23	500256	. NUT HEX M10-1.5 ZP	1				
24	Call Order Desk	. SNAP RING	1				P
25	862225	. KNOB W/ ROUND ROD INSERT MECHANISM (FORMER)	1				
25	864117	. KNOB W/SQUARE ROD INSERT MECHANISM (CURRENT)	1				
26	Call Order Desk	. SCREW OVAL HEAD M8-1.25x35	1				P
27	863743	. CENTER ARMREST ASSY / PAINTED SILVER	1				
28	Call Order Desk	. ARMREST CENTER	1				P
	Call Order Desk	. FIBER WASHER	2				P
	Call Order Desk	. BOLT MALE	1				P
		P) CALL ORDER DESK FOR SPECIFIC APPLICATION					
		(V.I.N.)					

From Y-7046 Up to 6-8906	DATE: 01/2014	PAGE: Y2-1826-51

ARMREST PASSENGER'S SEAT - "AMAYA" WITH "BRASIL"

ITEM	PART	DESCRIPTION	XL45	MTH40	MTH45	MTH45S	NOTE
	Call Order Desk	. BOLT FEMALE	1				P
29	863539	. ARMREST COVER CENTER	1				
30	Call Order Desk	. ARMREST CENTER SUPPORT	1				P
31	Call Order Desk	SCREW MA CHE PH M6x15	1				P
33	Call Order Desk	SCREW OVAL HEAD M8-1.25x20	1				P
34	N32018	SCREW MA PAN PH M6-1.0x12 BKP	1				
35	Call Order Desk	SCREW OVAL HEAD M8-1.25x25	1				P
36	502806	SCREW MA FL PH M6-1.0x10 ZP	1				
37	Call Order Desk	PRESSURE WASHER	1				P
38	Call Order Desk	WASHER J6.4 DIN 125	1				P
		P) CALL ORDER DESK FOR SPECIFIC APPLICATION					
		(V.I.N.)					

From Y-7046 Up to 6-8906	DATE: 01/2014	PAGE: Y2-1826-51

ARMREST PASSENGER'S SEAT - "AMAYA" WITH "BRASIL"

ITEM	PART	DESCRIPTION	XL45	MTH40	MTH45	MTH45S	NOTE

From Y-7046 Up to 6-8906	DATE: 01/2014	PAGE: Y2-1826-52

ARMREST PASSENGER'S SEAT - "AMAYA" WITH "GAUDI"

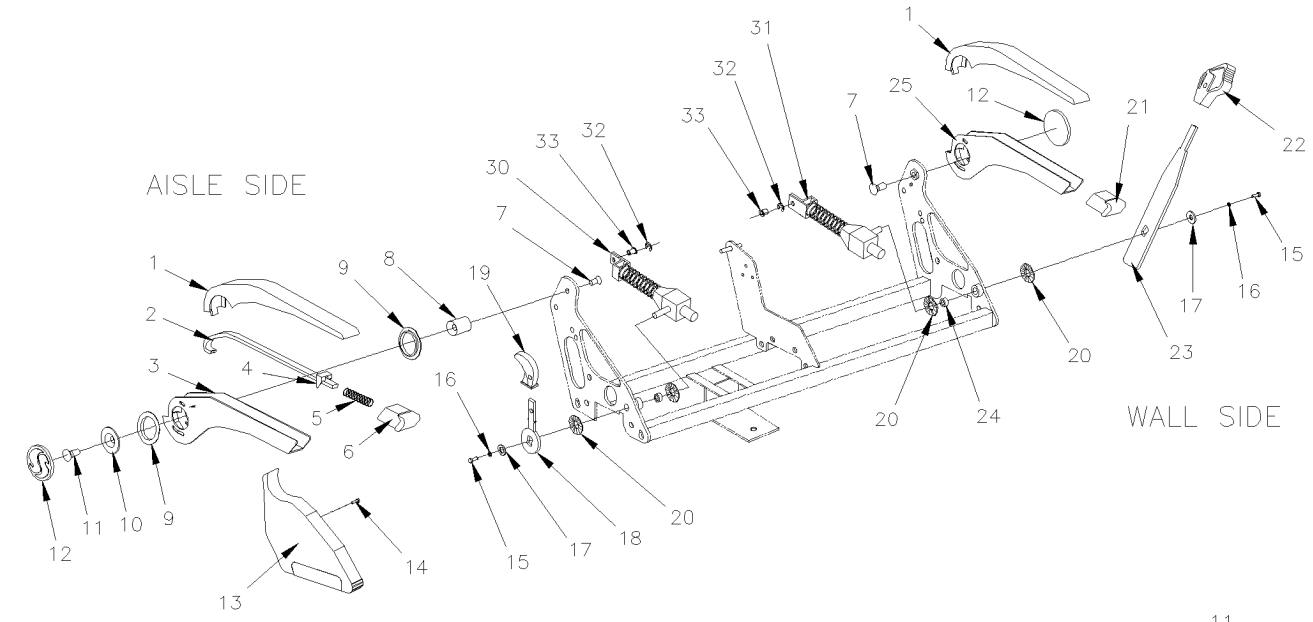

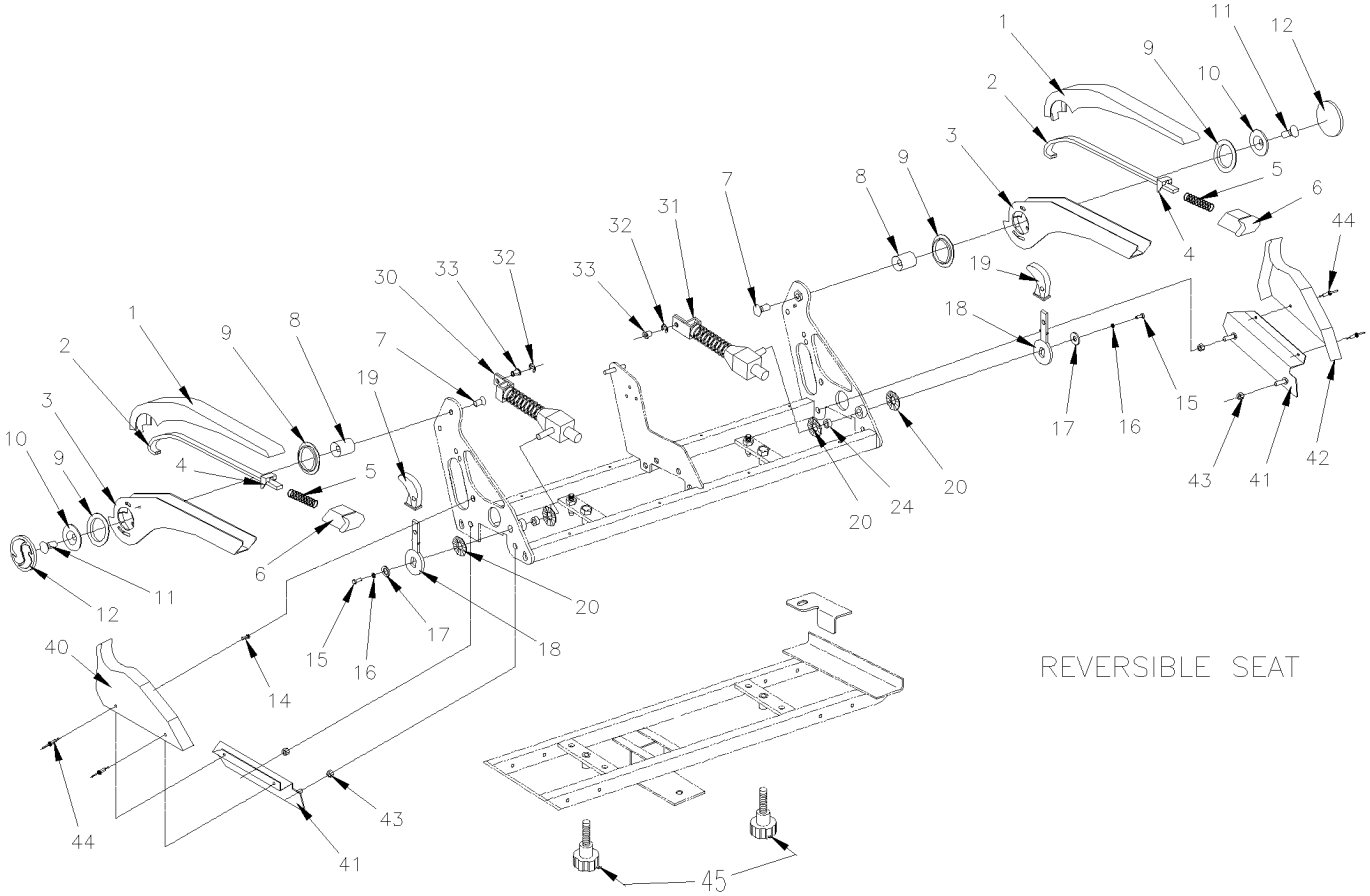

From Y-7046 Up to 6-8906	DATE: 01/2014	PAGE: Y2-1826-52

ARMREST PASSENGER'S SEAT - "AMAYA" WITH "GAUDI"

ITEM	PART	DESCRIPTION	XL45	MTH40	MTH45	MTH45S	NOTE
1	Call Order Desk	ARMREST COVER	1				P
2	Call Order Desk	FOLD DOWN ARMREST LEVER	1				P
3	Call Order Desk	AISLE ARMREST FRAME	1				P
4	Call Order Desk	FOLD DOWN ARMREST STOPPER	1				P
5	Call Order Desk	ARMREST SPRING	1				P
6	Call Order Desk	PUSH BUTTON	1				P
7	Call Order Desk	BOLT M10x19MM	1				P
8	Call Order Desk	AXLE ARMREST	1				P
9	Call Order Desk	PLASTIC BUSHING	2				P
10	Call Order Desk	PLASTIC DISC	1				P
11	Call Order Desk	BOLT M10X25MM	1				P
12	Call Order Desk	ARMREST LOGO CAP R-7010	1				P
13	864789	COVER AISLE SIDE W/L.H. SEAT	1				
13	864831	COVER AISLE SIDE W/R.H. SEAT	1				
14	Call Order Desk	BOLT 6.3x19	1				P
15	Call Order Desk	BOLT M6x15MM	1				P
16	Call Order Desk	WASHER B6.1 DIN 127	1				P
17	Call Order Desk	WASHER 6.4 DIN 9021	1				P
18	Call Order Desk	AISLE LEVER RECLINING	1				P
19	864093	KNOB RECLINING	1				
20	Call Order Desk	UNSULATED WASHER	2				P
21	Call Order Desk	BUTTON FIXED ARMREST	1				P
22	864094	KNOB WALL MECHANISM	1				
23	Call Order Desk	LEVER WALL MECHANISM	1				P
23	Call Order Desk	LEVER WALL MECHANISM (RIGHT SEAT ONLY) / W/"GAUDI" SC	1				P
24	Call Order Desk	BUSHING AXLE / W/"GAUDI" HR	1				P
24	Call Order Desk	BUSHING AXLE / W/"GAUDI" SC	1				P
25	Call Order Desk	WALL ARMREST FRAME	1				P
30	Call Order Desk	RECLINING MECHANISM AISLE / W/"GAUDI" HR	1				P
30	863881	RECLINING MECHANISM AISLE / W/"GAUDI" HR	1				
31	Call Order Desk	RECLINING MECHANISM WALL / W/"GAUDI" SC	1				P
31	863882	RECLINING MECHANISM WALL / W/"GAUDI" SC	1				
32	Call Order Desk	WASHER #9 DIN6799	1				P
33	Call Order Desk	UNSULATED WASHER	1				P
40	Call Order Desk	COVER R.H. LATERAL W/REVERSIBLE SEAT	1				P
41	Call Order Desk	COVER LATERAL COMPLEMENT W/REVERSIBLE SEAT	2				P
42	Call Order Desk	COVER L.H. LATERAL W/REVERSIBLE SEAT	1				P
43	5001570	NUT HEX NYRT M10-1.5 ZP	4				
44	504108	RIVET POP DOME OE 1/8x1/2 AL	4				
45	862156	KNOB / ROTATING SEAT	2				
		P) CALL ORDER DESK FOR SPECIFIC APPLICATION					
		(V.I.N.)					

From Y-7046 Up to 6-8906	DATE: 01/2014	PAGE: Y2-1826-53
ARMREST PASSENGER'S SEAT - "AMAYA" WITH "SIGLIUM" TORO & TORINO		

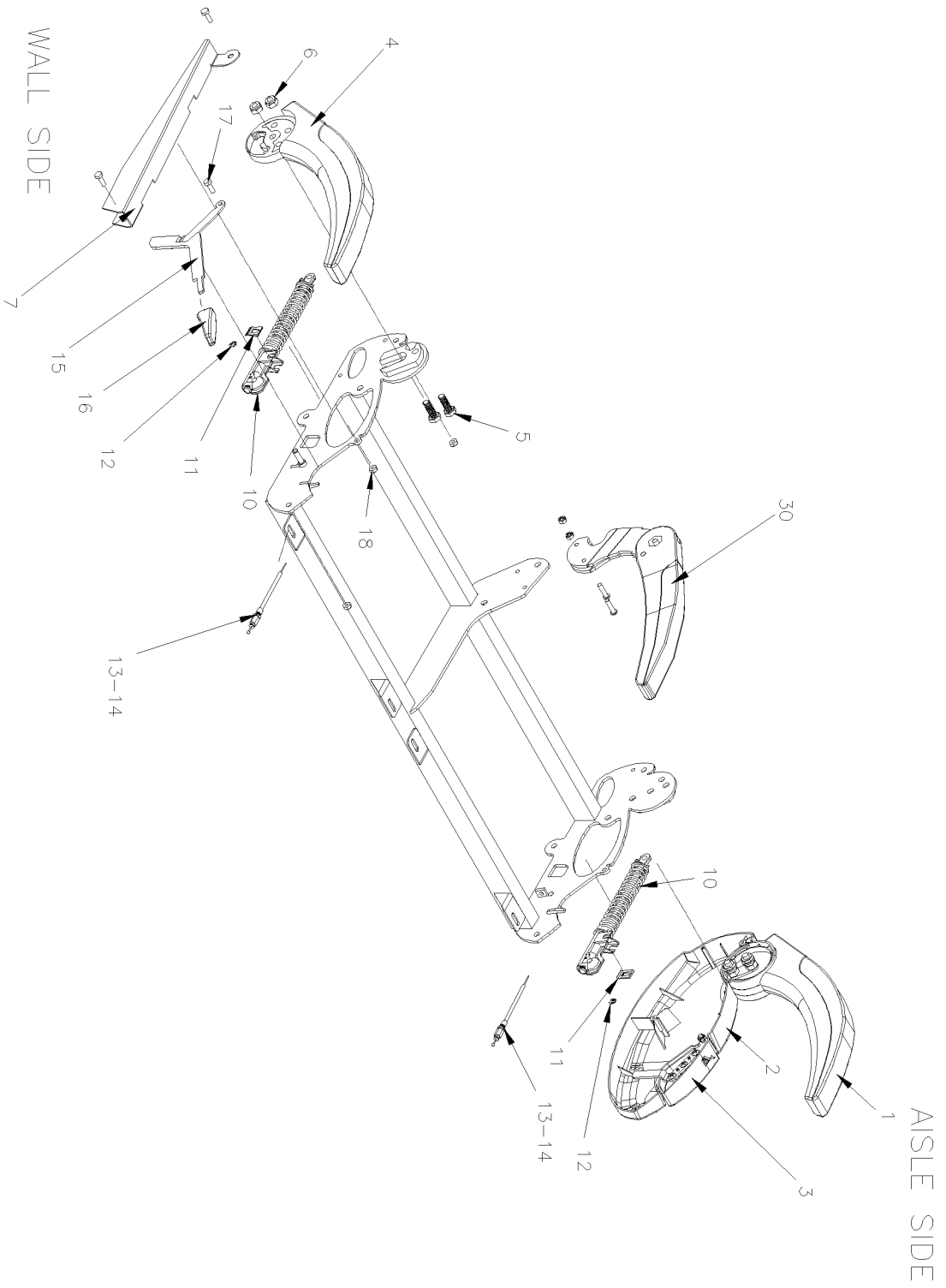

From Y-7046 Up to 6-8906	DATE: 01/2014	PAGE: Y2-1826-53

ARMREST PASSENGER'S SEAT - "AMAYA" WITH "SIGLIUM" TORO & TORINO

ITEM	PART	DESCRIPTION	XL45	MTH40	MTH45	MTH45S	NOTE
		IMPORTANT NOTE:					
		TO ORDER COMPLETE PASSENGER'S SEAT KIT #,					
		SEE THE FINAL VEHICLE RECORD.					
	864069	ARMREST R.H. AISLE ASSY	1				
. NS	863186	. ARMREST R.H.	1				
. NS	T47028600	. COVER AISLE R.H.	1				
. NS	864588	. LEVER AISLE R.H.	1				
	864070	ARMREST L.H. AISLE ASSY	1				
. NS	864938	. ARMREST L.H.	1				
. NS	Call Order Desk	. COVER AISLE L.H.	1				P
. NS	864589	. LEVER AISLE L.H.	1				
1	863186	. ARMREST R.H.	1				
1	864938	. ARMREST L.H.	1				
2	Call Order Desk	. COVER AISLE R.H.	1				P
2	Call Order Desk	. COVER AISLE L.H.	1				P
3	864588	. LEVER AISLE R.H.	1				
3	864589	. LEVER AISLE L.H.	1				
4	865070	ARMREST R.H. WINDOW SIDE	1				
5	11500930	SCREW CAP HEX M10-1.5x30 G8.8 PHC	2				
6	500256	NUT HEX M10-1.5 ZP	2				
7	Call Order Desk	COVER MECHANISC R.H.	1				P
7	Call Order Desk	COVER MECHANISC L.H.	1				P
10	863405	CYLINDER R.H.	1				
10	863406	CYLINDER L.H.	1				
11	861486	CLIP / WIRE RETAINER	2				
12	Call Order Desk	CLIP	1				P
13	863407	CABLE	2				
14	500690	NUT HEX NYRT 1/4-28 ZP	2				
15	863413	RECLINING LEVEL L.H. WINDOW	1				
15	863414	RECLINING LEVEL R.H. WINDOW	1				
16	863356	KNOB LEVER L.H. WINDOW	1				
16	863357	KNOB LEVER R.H. WINDOW	1				
17	9415477	SCREW CAP HEX 1/4-20x3/4 ZP	1				
18	500769	NUT HEX 1/4-20 ZP	1				
30	864072	ARMREST CENTRAL ASSY	1				
40	Call Order Desk	ARMREST WINDOW	1				P
		P) CALL ORDER DESK FOR SPECIFIC APPLICATION					
		(V.I.N.)					

From Y-7046 Up to 6-8906	DATE: 01/2014	PAGE: Y2-1826-60

ACCESSORIES PASSENGER'S SEAT - "AMAYA"

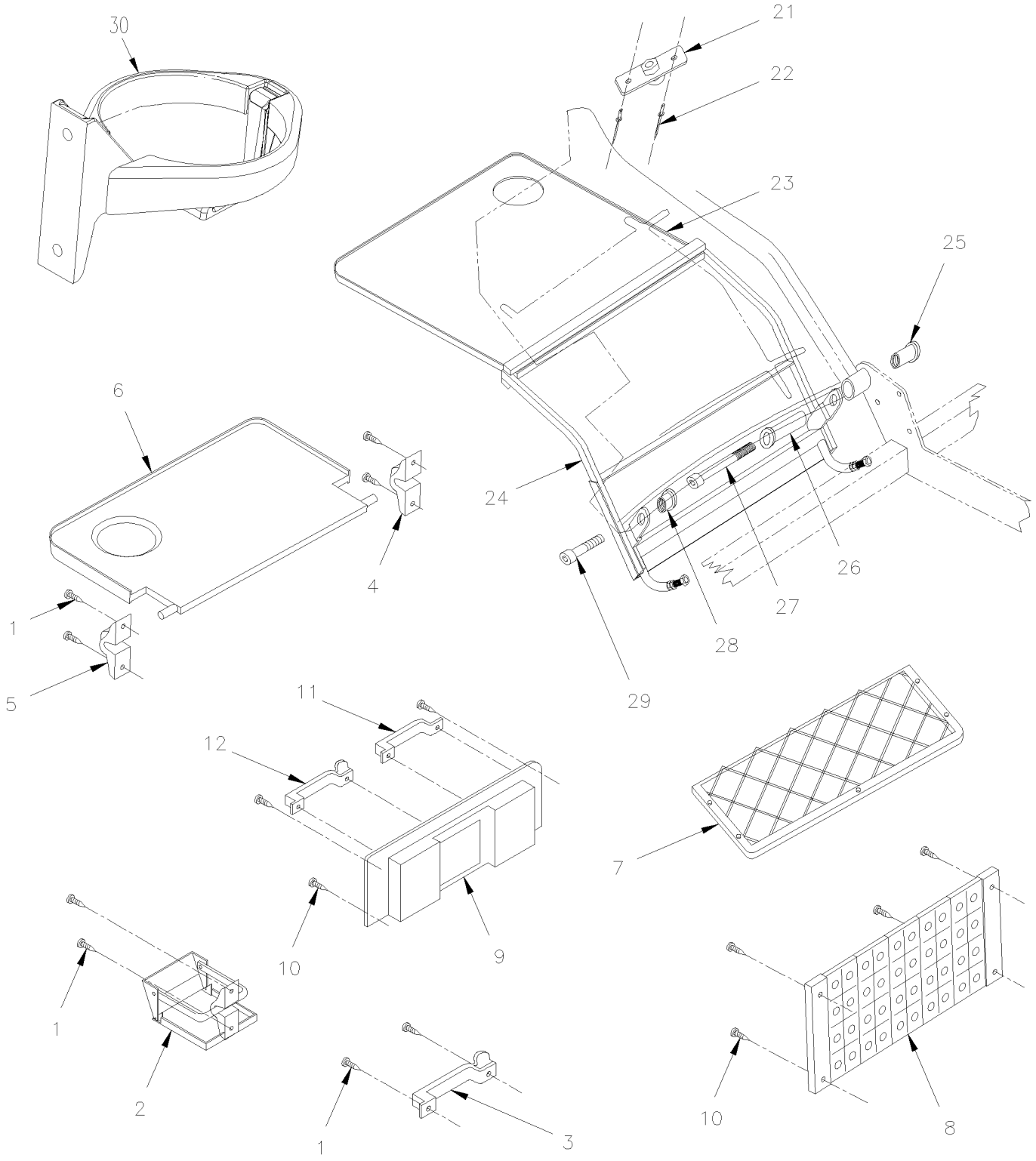

From Y-7046 Up to 6-8906	DATE: 01/2014	PAGE: Y2-1826-60

ACCESSORIES PASSENGER'S SEAT - "AMAYA"

ITEM	PART	DESCRIPTION	XL45	MTH40	MTH45	MTH45S	NOTE
1	500936	SCREW TP OV PH #10x1 1/4 ZP	1				
2	861923	GLASS HOLDER / W/"AMAYA" / W/2 HOLES FOR SCREW	1				A
NS	862932	GLASS HOLDER / W/"AMAYA" / W/3 HOLES FOR SCREW	1				
3	860422	HANDLE	1				
NS	860421	HOOK	1				
4	Call Order Desk	SUPPORT L.H.	1				P
5	Call Order Desk	SUPPORT R.H.	1				P
6	862774	TABLE STD / REPLACED BY: 863777	1				
6	863777	TABLE STD	1				
7	861922	MAGAZINE NET 16" x 6 ¾"	1				
8	861924	MAGAZINE RACK / PLASTIC 310MM x 145mm = GREY 5 BARS	1				
8	863535	MAGAZINE RACK / PLASTIC 350MM x 145mm = GREY 6 BARS	1				
9	Call Order Desk	BASE	1				P
10	Call Order Desk	BOLT #10 X 1 1/4	1				P
11	862938	HANDLE	1				
12	860422	HANDLE	1				
12	860421	HOOK	1				
21	863417	KNOB / BLACK	1				
210	863418	KNOB / GREY	1				
22	504126	RIVET POP DOME OE 3/16x5/8 AL	1				
23	861920	FOOD TRAY / GREY / W/AVION TYPE	1				
24	864799	FRAME TABLE AVION TYPE	1				
25	864800	SCREW CENTER BUSHING	1				
26	864801	CENTER BUSHING	1				
27	502765	SCREW CAP HEXS M10-1.5x100 G8.8 PT ZP	1				
28	864802	SHORT BUSHING	1				
29	70314705	SCREW CAP HEXS M10-1.5x60 G8.8 ZP	1				
NS	405795	SUPPORT TABLE, AVION TYPE / ON GALLEY WALL	1				
30	862844	CUP HOLDER, RUSPA, BLACK	AR				
30	863181	CUP HOLDER, RUSPA, BLACK	AR				
NS	864860	CUP HOLDER, FLEX, GREY	AR				
		P) CALL ORDER DESK FOR SPECIFIC APPLICATION					
		(V.I.N.)					
		A) AS SHOWN					

From Y-7046 Up to 6-8906	DATE: 01/2014	PAGE: Y2-1826-71
PASSENGER'S SEAT - "AMAYA" - FLIP-UP "GAUDI" HR & SC - W/ W.C.L.		

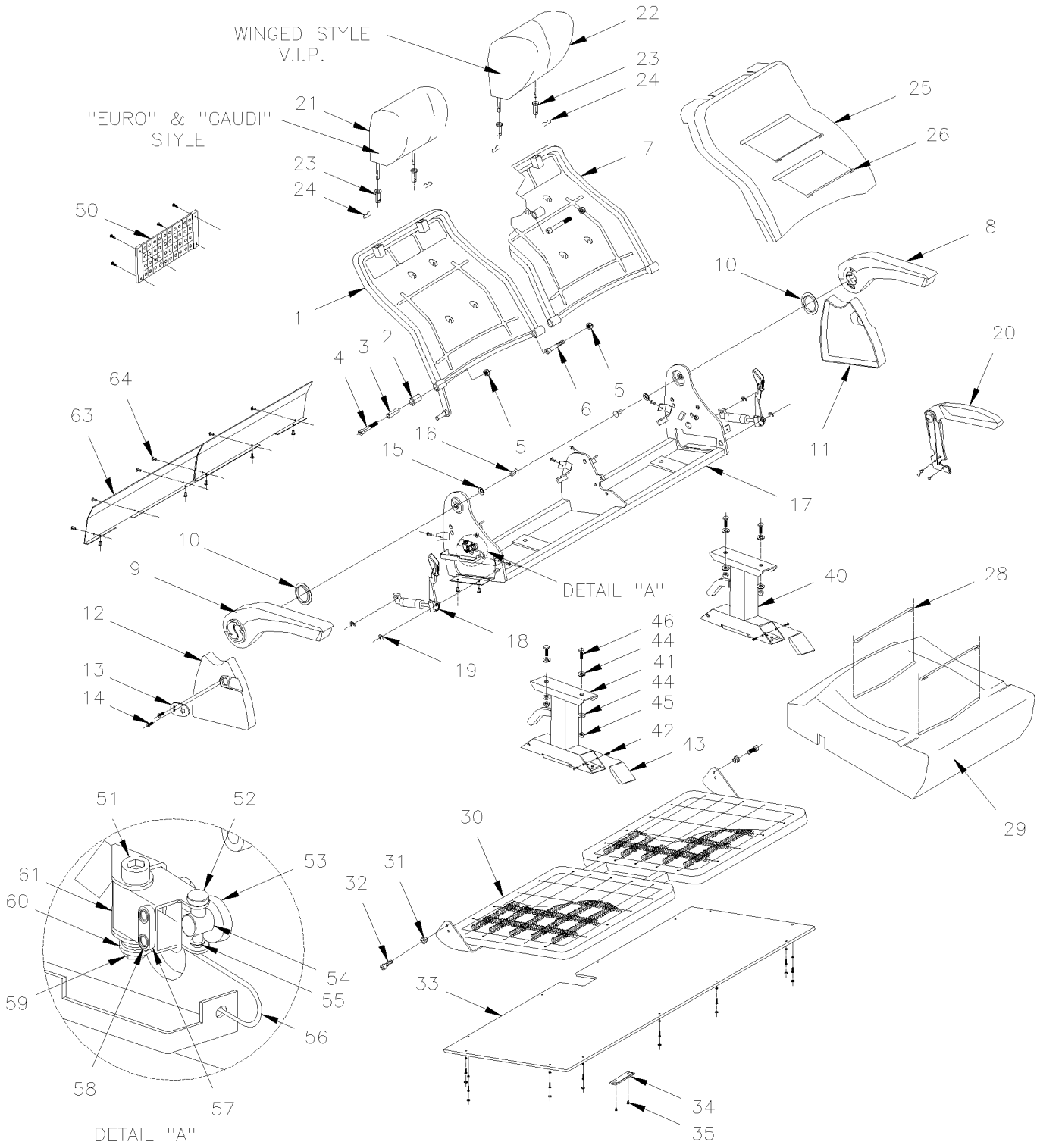

From Y-7046 Up to 6-8906	DATE: 01/2014	PAGE: Y2-1826-71

PASSENGER'S SEAT - "AMAYA" - FLIP-UP "GAUDI" HR & SC - W/ W.C.L.

ITEM	PART	DESCRIPTION	XL45	MTH40	MTH45	MTH45S	NOTE
		IMPORTANT NOTE: BEFORE TO					
		TO ORDER COMPLETE PASSENGER'S SEAT					
		OR COVERING ASSY, HEAD / BACK & CUSHION					
		SEE THE FINAL VEHICLE RECORD.					
1	Call Order Desk	BACKREST R.H. / W/FLIPPER SEAT & AVION TABLE SEAT	1				P
1	Call Order Desk	BACKREST R.H. / W/FLIPPER SEAT / W/"GAUDI"	1				P
1	Call Order Desk	BACKREST R.H. ASSY / W/FLIPPER SEAT / W/"GAUDI" GI	1				P
1	Call Order Desk	BACKREST SHELL / W/"GAUDI" GI	1				P
2	Call Order Desk	BUSHING PLASTIC	1				P
2	Call Order Desk	BUSHING PLASTIC / W/"GAUDI" SC	1				P
3	Call Order Desk	INSIDE METAL BUSHING	1				P
3	Call Order Desk	INSIDE METAL BUSHING / W/"GAUDI" SC	1				P
4	70314705	SCREW CAP HEXS M10-1.5x60 G8.8 ZP	1				
5	500256	NUT HEX M10-1.5 ZP	1				
6	502765	SCREW CAP HEXS M10-1.5x100 G8.8 PT ZP	1				
7	Call Order Desk	BACKREST L.H. / W/FLIPPER SEAT & AVION TABLE SEAT	1				P
7	Call Order Desk	BACKREST L.H. / W/FLIPPER SEAT / W/"GAUDI"	1				P
7	Call Order Desk	BACKREST L.H. ASSY / W/FLIPPER SEAT / W/"GAUDI" GI	1				P
7	Call Order Desk	BACKREST SHELL / W/"GAUDI" GI	1				P
8	864020	ARMREST ASSY L.H. / W/FLIPPER SEAT	1				
9	864019	ARMREST ASSY R.H. / W/FLIPPER SEAT	1				
10	Call Order Desk	PLASTIC BUSHING	1				P
11	Call Order Desk	CAP PLASTIC L.H. / W/"GAUDI" STATIONARY	1				P
11	Call Order Desk	CAP PLASTIC L.H. / W/"GAUDI" SLIDE	1				P
12	Call Order Desk	CAP PLASTIC R.H.	1				P
13	Call Order Desk	BLOCK HANDLE	1				P
14	Call Order Desk	SCREW MA CHE PH M6x15	1				P
15	Call Order Desk	WASHER #10.5MM DIN5797	1				P
16	Call Order Desk	SCREW CAP FL HEXS M10-1.5x16	1				P
17	Call Order Desk	STRUCTURE R.H. / W/FLIPPER SEAT	1				P
17	Call Order Desk	STRUCTURE R.H. / W/FLIPPER SEAT	1				P
17	Call Order Desk	STRUCTURE L.H. / W/FLIPPER SEAT	1				P
17	Call Order Desk	STRUCTURE R.H. / W/FLIPPER SEAT & AVION TABLE SEAT	1				P
17	Call Order Desk	STRUCTURE L.H. / W/FLIPPER SEAT & AVION TABLE SEAT	1				P
17	Call Order Desk	STRUCTURE L.H. / W/FLIPPER SEAT / SLIDE Up to VOIR	1				P
18	863540	RECLINING MECHANISM ASSY R.H.	1				
. NS	IS-136	. INSTRUCTION SHEET	1				
18	862546	RECLINING MECHANISM ASSY L.H.	1				
. NS	IS-136	. INSTRUCTION SHEET	1				
19	Call Order Desk	WASHER #9 DIN6799	1				P
20	863352	CENTER ARMREST ASSY / PAINTED CHARCOAL	1				
		P) CALL ORDER DESK FOR SPECIFIC APPLICATION					
		(V.I.N.)					

From Y-7046 Up to 6-8906	DATE: 01/2014	PAGE: Y2-1826-71

PASSENGER'S SEAT - "AMAYA" - FLIP-UP "GAUDI" HR & SC - W/ W.C.L.

ITEM	PART	DESCRIPTION	XL45	MTH40	MTH45	MTH45S	NOTE
20	Call Order Desk	SCREW MA CHE PH M6x15	1				P
21	Call Order Desk	HEAD REST ASSY / W/BRAZIL II	1				P
21	Call Order Desk	HEADREST FOAM / TYPE "GAUDI HR"	1				P
	Call Order Desk	COVERING HEADREST ASSY "GAUDI" S.C.C.	1				P
22	862933	HEADREST ASSY / TYPE WINGED "VIP"	1				
23	864810	GUIDE SLIDING	1				
24	Call Order Desk	HEADREST PIN	1				P
25	Call Order Desk	CUSHION FOAM	1				P
25	Call Order Desk	BACKREST FOAM / W/"GAUDI"	1				P
25	Call Order Desk	BACKREST FOAM AISLE / W/"GAUDI" GI	1				P
25	Call Order Desk	BACKREST FOAM WALL / W/"GAUDI" GI	1				P
26	Call Order Desk	BACKREST TUFTING WIRE "EUROTECH" & "BRASIL	1				P
26	Call Order Desk	BACKREST TUFTING WIRE / LARGE / W/"GAUDI" & "EUROTECH"	1				P
	Call Order Desk	COVERING BACKREST ASSY S.C.C. / W/"GAUDI"	1				P
27	Call Order Desk	COVERING BACKREST ASSY S.C.C. / W/"GAUDI" GI	1				P
28	Call Order Desk	CUSHION TUFTING WIRE "EUROTECH" & "BRASIL	1				P
29	Call Order Desk	CUSHION FOAM	1				P
	Call Order Desk	COVERING CUSHION ASSY S.C.C. / W/"GAUDI"	1				P
30	Call Order Desk	SEAT FRAME ASSY /W/FLIPPER SEAT	1				P
30	Call Order Desk	SEAT FRAME ASSY /W/FLIPPER SEAT / STATIONARY / W/"GAUDI"	1				P
30	Call Order Desk	SEAT FRAME ASSY /W/FLIPPER SEAT / SLIDE / W/"GAUDI"	1				P
31	Call Order Desk	SWIVEL BUSHING	1				P
32	Call Order Desk	SCREW CAP HEXS M10x25	1				P
33	Call Order Desk	CAP CUSHION SEAT / W/FLIPPER SEAT	1				P
34	Call Order Desk	SEAT FIXING BRACKET	1				P
35	Call Order Desk	BOLT 3.9X13MM	1				P
40	862917	PEDESTAL ASSY R.H. / WFLIPPER SEAT / SLIDE	1				
41	865028	PEDESTAL ASSY L.H. / WFLIPPER SEAT / SLIDE	1				
42	504619	CLIP CHRISTMAS TREE / BLACK 7/32"O.D.x1/2" HOLE 3/16	4				
43	862585	PEDESTAL CAP / BLACK	1				
. NS	864028	. CLIP CHRISTMAS TREE / BLACK	2				
43	863907	PEDESTAL CAP / GREY	2				
. NS	864029	. CLIP CHRISTMAS TREE / GREY	2				
44	Call Order Desk	PRESSURE WASHER 7/16" 10mm	1				P
45	500256	NUT HEX M10-1.5 ZP	1				
46	5001526	SCREW CAP HEX M16-2.0x45 G10.9 DP	1				
50	Y2-1826-60	**ACCESSORIES PASSENGER'S SEAT - "AMAYA"**	1				
51	Call Order Desk	SCREW CAP HEXS M8-1.25x60	1				P
52	Call Order Desk	BLOCKING PIN	1				P
53	Call Order Desk	REFERENCE BUSHING FM810120J	1				P
54	Call Order Desk	BLOCKING AXLE	1				P
55	Call Order Desk	WASHER DIN-6799 5MM	1				P
		P) CALL ORDER DESK FOR SPECIFIC APPLICATION					
		(V.I.N.)					

From Y-7046 Up to 6-8906	DATE: 01/2014	PAGE: Y2-1826-71

PASSENGER'S SEAT - "AMAYA" - FLIP-UP "GAUDI" HR & SC - W/ W.C.L.

ITEM	PART	DESCRIPTION	XL45	MTH40	MTH45	MTH45S	NOTE
56	Call Order Desk	SPRING	1				P
57	Call Order Desk	INSERT	1				P
58	Call Order Desk	TUBETARA RIVET	1				P
59	Call Order Desk	NUT HEX NYRT M8-1.25	1				P
60	Call Order Desk	ACTION SPRING	1				P
61	Call Order Desk	POPPER	1				P
63	Call Order Desk	KICK PLATE BACKREST	1				P
64	504118	RIVET POP DOME OE 3/16x3/8 AL	1				
70	Y2-1826-40	**PASSENGER'S SEAT - "AMAYA" - FOOTREST & PEDESTAL**					
100	323654	SEAT TRACK COVER 12' / <> EACH SEAT / W/COVERING FLOOR / REPLACED BY: 323963	AR				
100	323963	SEAT TRACK COVER 8' / <> EACH SEAT / W/COVERING FLOOR	AR				
		P) CALL ORDER DESK FOR SPECIFIC APPLICATION					
		(V.I.N.)					

From Y-7046 Up to 6-8906	DATE: 01/2014	PAGE: Y2-1827-02
PASSENGER'S SEAT - "ULTRA"		

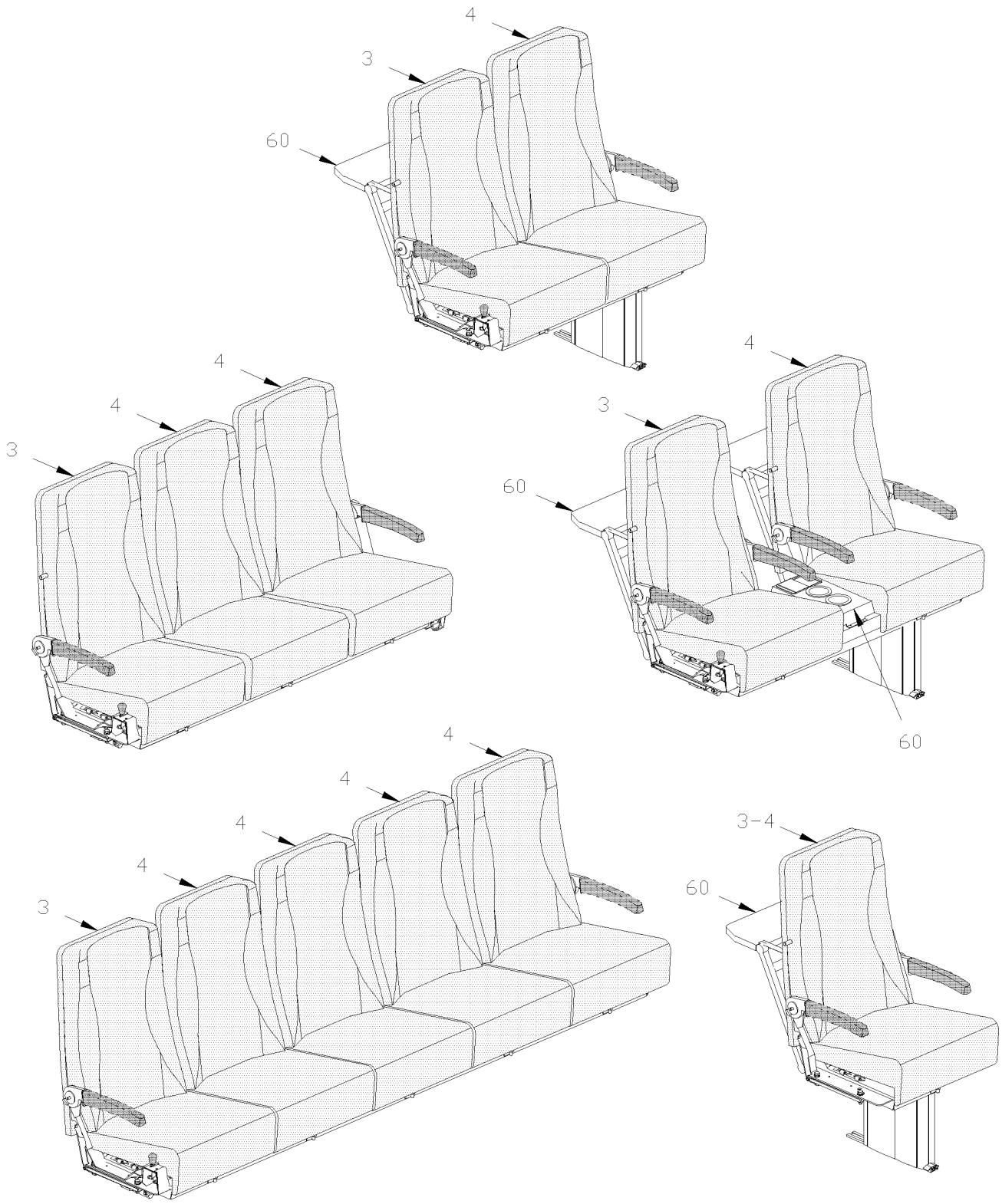

From Y-7046 Up to 6-8906	DATE: 01/2014	PAGE: Y2-1827-02
PASSENGER'S SEAT - "ULTRA"		

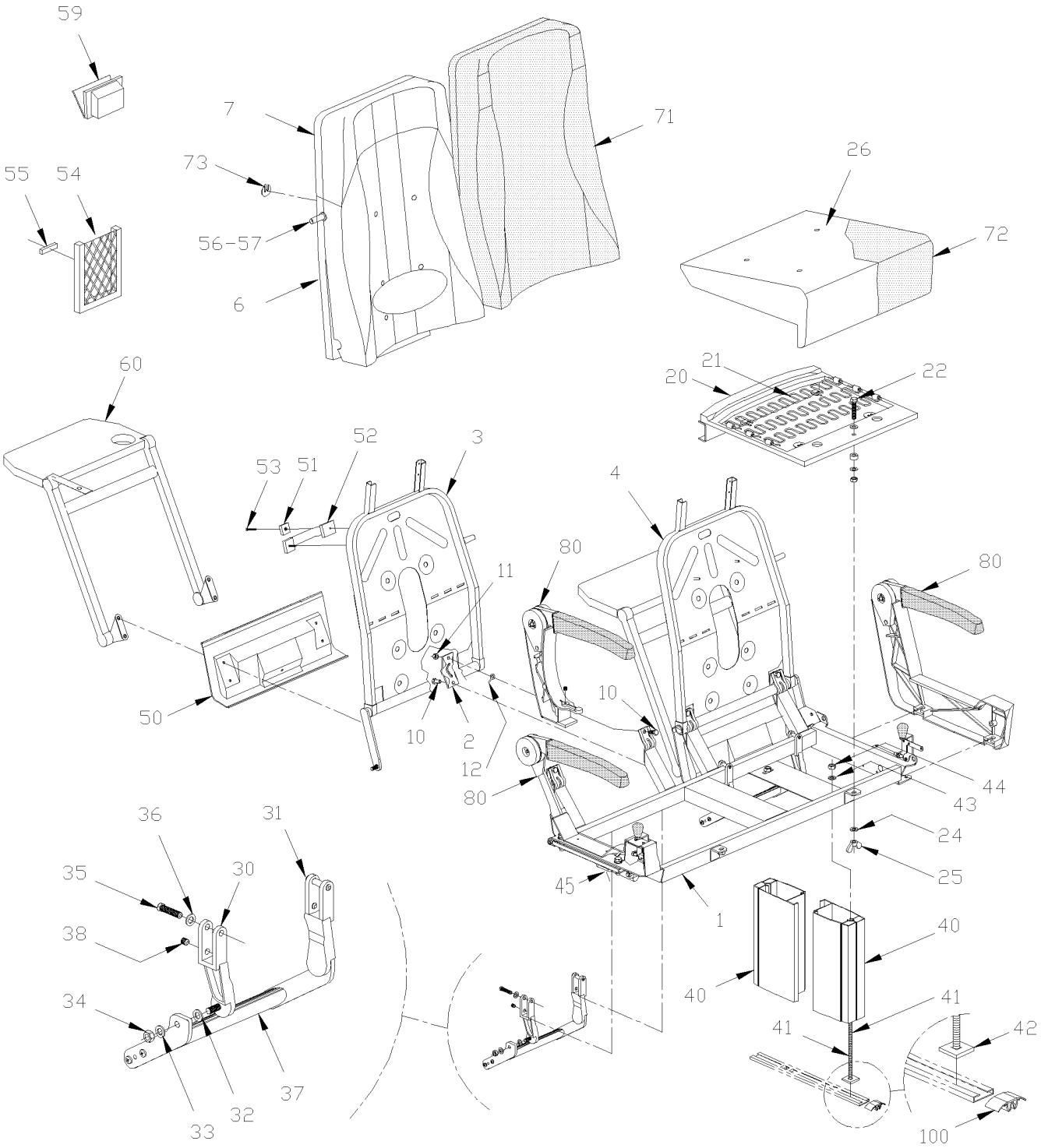

From Y-7046 Up to 6-8906	DATE: 01/2014	PAGE: Y2-1827-02

PASSENGER'S SEAT - "ULTRA"

ITEM	PART	DESCRIPTION	XL45	MTH40	MTH45	MTH45S	NOTE
	363927	SEAT ASSY L.H. / 2 PASSENGERS / 42" HIGH	AR				
	363928	SEAT ASSY R.H. / 2 PASSENGERS / 42" HIGH	AR				
	363929	SEAT ASSY ROTATING / "ULTRA"	AR				
	363931	SEAT ASSY REAR / 2 PASSENGERS / 42" HIGH	AR				
	363932	SEAT ASSY REAR / 5 PASSENGERS / 42" HIGH	AR				
1	363842	. STRUCTURE ASSY L.H. / 2 PASSENGERS	1				
1	363841	. STRUCTURE ASSY R.H. / 2 PASSENGERS	1				
1	363836	. SEAT FRAME ASSY / "ROTATING" SEAT	1				
1	363843	. STRUCTURE ASSY REAR / 3 PASSENGERS	1				
1	363844	. STRUCTURE ASSY REAR / 5 PASSENGERS	1				
1	363837	. STRUCTURE ASSY R.H. V.I.P. / 1 PASSENGERS	1				
1	363840	. STRUCTURE ASSY L.H. V.I.P. / 1 PASSENGERS	1				
1	363838	. STRUCTURE ASSY R.H. / 2 PASSENGERS V.I.P.	1				
1	363839	. STRUCTURE ASSY R.H. V.I.P. / 2 PASSENGERS	1				
2	363246	. COLLAR	4				
3	363834	. BACKREST R.H.	1				
4	363835	. BACKREST L.H.	1				B
6	363186	. FOAM BACKREST THICK	1				
6	363252	. FOAM BACKREST THIN W/42"	1				
6	363350	. FOAM BACKREST THIN W/40"	1				
7	363348	. FOAM ASSY, HEADREST 40" HIGHT / "ULTRA"	1				
7	363251	. FOAM ASSY, HEADREST 42" HIGHT / "ULTRA"	1				
NS	500583	. SCREW TP BDG PH #6x1/2 ZP	4				
NS	500240	. WASHER LO EXT .195x.410x.025 ZP	4				
10	5001336	. SCREW CAP HEXF SERR 5/16-18x3/4 ZP	8				
11	5001113	. NUT HEX JAM NYRT 5/16-18	8				
12	363273	. SPRING EYE	4				
20	363646	. SEAT FRAME ASSY W/SPRING	1				
21	363650	. . SPRING	3				
22	362353	. . SCREW	1				
24	500441	. WASHER FL .312x.734x.065 ZP	2				
25	500782	. NUT WING 5/16-18 ZP	2				
26	363645	. FOAM	1				
30	363437	. BRACKET L.H.	1				
31	363436	. BRACKET R.H.	1				
32	502723	. WASHER FL .386x.750x.050 NYL	2				
33	500441	. WASHER FL .312x.734x.065 ZP	2				
34	500777	. NUT HEX STO 5/16-18 ZP	2				
35	500183	. SCREW CAP HEX 5/16-18x1 1/2 G5 PT ZP	2				
36	500476	. WASHER LO SPT .317x.586x.078 ZP	2				
		B) QTY OF 2 WITH 3 PASSENGERS REAR SEAT AND QTY					
		OF 4 WITH 5 PASSENGERS REAR SEAT					

From Y-7046 Up to 6-8906	DATE: 01/2014	PAGE: Y2-1827-02

PASSENGER'S SEAT - "ULTRA"

ITEM	PART	DESCRIPTION	XL45	MTH40	MTH45	MTH45S	NOTE
37	362928	. FOOTREST ASSY	1				
38	502781	. SCREW SET HEXS CUP 5/16-18x1/4	2				
40	363577	. PEDESTAL SQ END / 279MM / 10.98" / 2 PIECES Up to 5-8631 / REPLACED BY: 364038	2				
40	364038	. PEDESTAL SQ END / 279MM / 10.98" / ONE PIECE From 5-8632	1				
NS	364076	. REINFORCMENT PEDESTAL / ANGLE 58MMx 20MM REAR OF PEDESTAL From 6-8789	1				
41	5001600	. SCREW CRG 3/8-16x12 G5 ZP	2				
42	363085	. PLATE ANCHOR / CARRIAGE BOLT INSIDE TRACK / 1 1/4" X 1 1/4" Up to 5-8631	2				
42	360052	. PLATE ANCHOR / CARRIAGE BOLT INSIDE TRACK / 1 1/4" X 3 1/2" From 5-8632	2				
43	500445	. WASHER FL .437x1.000x.083 ZP	2				
44	500265	. NUT HEX STO 3/8-16 ZP	2				
44	364133	. REINFORCMENT / FIXED BETWEEN SEAT & GUARD	1				
45	363821	. ATTACHMENT PLATE / "J" SHAPE TO FIX SEAT TO WALL TRACK / REPLACED BY: 364132	1				
. NS	500183	. . SCREW CAP HEX 5/16-18x1 1/2 G5 PT ZP	2				
. NS	500942	. . WASHER LO SPT .317x.586x.078 ZG603	2				
45	364132	. ATTACHMENT PLATE / "J" SHAPE TO FIX SEAT TO WALL TRACK	1				
. NS	500829	. . SCREW CAP HEX	2				
. NS	500257	. . WASHER LO SPT	2				
50	362866	. FINISHING LOWER / L.H. / NORYL Up to Y-7336	1				
50	363946	. FINISHING LOWER / L.H. / NORYL From Y-7337	1				
50	362867	. FINISHING LOWER / R.H. / NORYL Up to Y-7336	1				
50	363947	. FINISHING LOWER / R.H. / NORYL From Y-7337	1				
51	860421	. HOOK	1				
52	860422	. HANDLE	1				
NS	505229	. SPACER 3/8 I.D. X 3/8 LG	2				
53	502521	. SCREW TC OV PH #8-32x1 BK	2				
54	362707	. MAGAZINE NET 13" x 6 ½"	1				
54	860809	. MAGAZINE NET 14" x 7 ¼"	1				
55	500353	. SCREW TP FL PH #8x3/4 BK	4				
56	362943	. STOPPER LONG / WV.I.P. SEAT	1				
56	362942	. STOPPER SHORT / W/STANDARD SEAT	1				
57	5001019	. SCREW TP OV PH #10x2 EMN	1				
NS	5001116	. NUT SPR U #10A .025-.062	1				
59	861277	. ASHTRAY / PLASTIC	1				
60	Y2-1829-00	**. ACCESSORIES PASSENGER'S SEAT - "PREVOST"**					
71	Call Order Desk	. COVERING BACKREST ASSY / S.C.C. W/40" HIGHT / "ULTRA"	1				P
71	363254P	. COVERING ASSY, BACKREST / S.C.C. W/42" HIGHT	1				
72	363676	. COVERING SEATREST ASSY / S.C.C. / ALL NEW W/SPRING	1				
73	362716	. ATTACHMENT / ROUND "W" SHAPE TO FIX COVER	8				
NS	682259	. SEALANT TAPE / CLEAR / 1/32"x1 1/2"x65' / 1795	AR				B
80	Y2-1827-52	**. ARMREST PASSENGER'S SEAT - "PREVOST"**					
		P) CALL ORDER DESK FOR SPECIFIC APPLICATION					
		(V.I.N.)					
		B) QTY OF 2 WITH 3 PASSENGERS REAR SEAT AND QTY					
		OF 4 WITH 5 PASSENGERS REAR SEAT					

From Y-7046 Up to 6-8906	DATE: 01/2014	PAGE: Y2-1827-02

PASSENGER'S SEAT - "ULTRA"

ITEM	PART	DESCRIPTION	XL45	MTH40	MTH45	MTH45S	NOTE
100	323654	SEAT TRACK COVER 12' / <> EACH SEAT / W/COVERING FLOOR / REPLACED BY: 323963	AR				
100	323963	SEAT TRACK COVER 8' / <> EACH SEAT / W/COVERING FLOOR	AR				

From Y-7046 Up to 6-8906	DATE: 01/2014	PAGE: Y2-1827-02

PASSENGER'S SEAT - "ULTRA"

ITEM	PART	DESCRIPTION	XL45	MTH40	MTH45	MTH45S	NOTE

From Y-7046 Up to 6-8906	DATE: 01/2014	PAGE: Y2-1827-11

PASSENGER'S SEAT - ROTATING "PREVOST

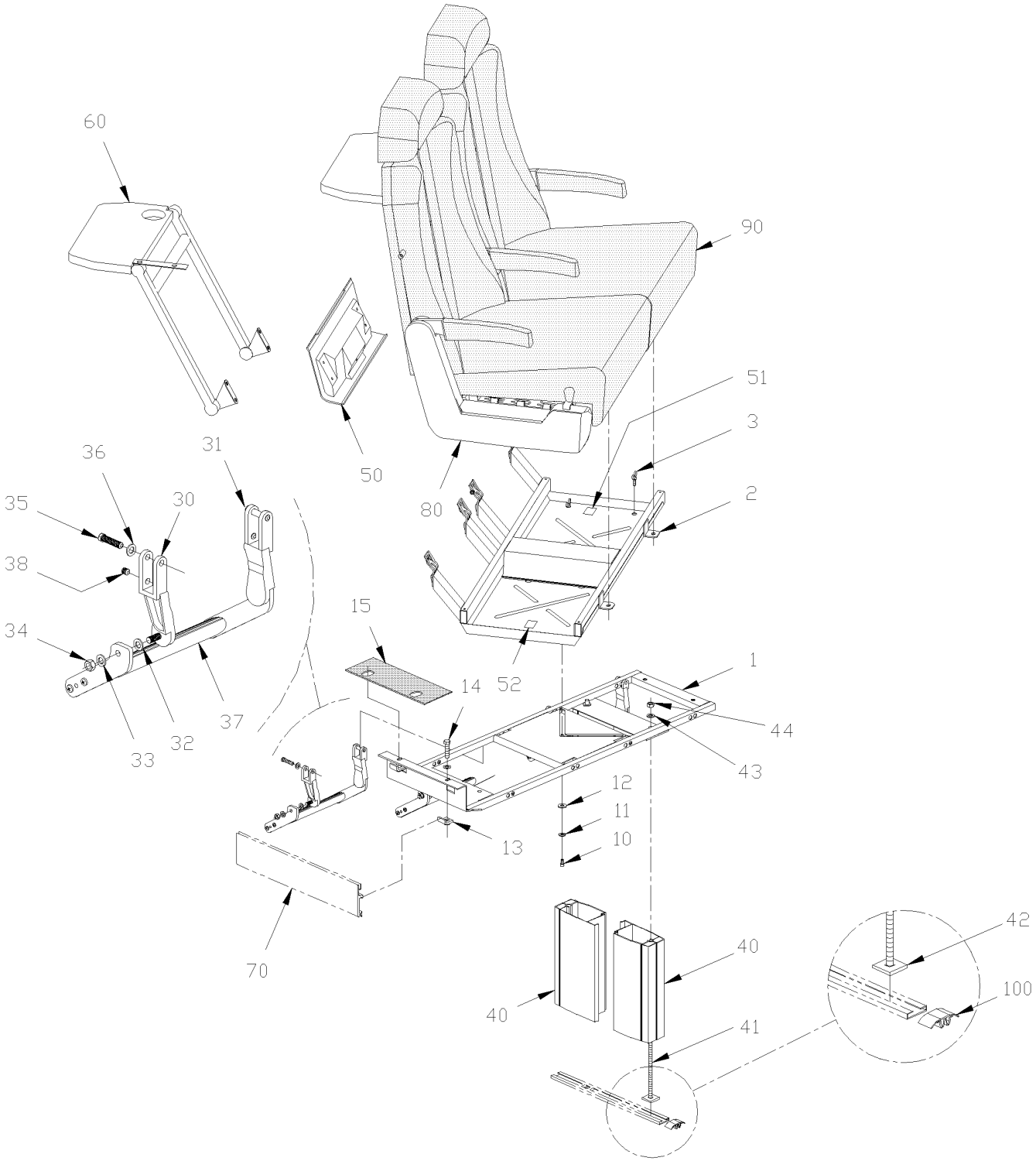

From Y-7046 Up to 6-8906	DATE: 01/2014	PAGE: Y2-1827-11

PASSENGER'S SEAT - ROTATING "PREVOST

ITEM	PART	DESCRIPTION	XL45	MTH40	MTH45	MTH45S	NOTE
		THIS PAGE SHOWS ONLY PARTS RELATED					
		WITH ROTATING SEAT. ALLS					
		OTHERS PARTS ARE ILLUSTRATED IN PAGES					
	363923	SEAT ASSY ROTATING / "TOURISMO II" / 42" HIGH	AR				
	363929	SEAT ASSY ROTATING / "ULTRA"	AR				
1	362340	MOUNTING BASE ASSY / "ROTATING" SEAT	1				
2	363836	SEAT FRAME ASSY / "ROTATING" SEAT	1				
3	5001302	SCREW TH SHR 1/4-20x3/4 SS	4				
3	500468	WASHER FL .281x1.250x.065 ZP	4				
10	500162	SCREW CAP HEX 1/4-20x1/2 G5 ZP	1				
11	500473	WASHER LO SPT .262x.489x.062 ZP	1				
12	500462	WASHER FL .343x1.500x.083 ZP	1				
13	362333	ATTACHMENT NUT / "L" SHAPE TO FIX SEAT TO WALL TRACK	2				
14	500182	SCREW CAP HEX 5/16-18x1 1/4 G5 PT ZP	2				
15	362405	RUBBER PROTECTOR PAD	1				
30	363439	BRACKET L.H.	2				
31	363438	BRACKET R.H.	2				
32	502723	WASHER FL .386x.750x.050 NYL	2				
33	500441	WASHER FL .312x.734x.065 ZP	2				
34	500777	NUT HEX STO 5/16-18 ZP	2				
35	5001375	SCREW CAP HEX M10-1.5x18 SS	2				
36	500476	WASHER LO SPT .317x.586x.078 ZP	2				
37	362928	FOOTREST ASSY	2				
38	502781	SCREW SET HEXS CUP 5/16-18x1/4	2				
40	363579	PEDESTAL SQ END / 224MM 8.81" / W/ROTATING SEAT Up to 5-8631 / REPLACED BY: 364039	2				
40	364039	PEDESTAL SQ END / 224MM 8.81" / W/ROTATING SE / ONE PIECE From 5-8632	1				
NS	364076	REINFORCMENT PEDESTAL / ANGLE 58MMx 20MM REAR OF PEDESTAL From 6-8789	1				
41	5001078	SCREW CRG 3/8-16x9 3/4 ZP	2				
42	363085	PLATE ANCHOR / CARRIAGE BOLT INSIDE TRACK / 1 1/4" X 1 1/4" Up to 5-8631	2				
42	360052	PLATE ANCHOR / CARRIAGE BOLT INSIDE TRACK / 1 1/4" X 3 1/2" From 5-8632	2				
43	362410	WASHER	2				
44	500265	NUT HEX STO 3/8-16 ZP	2				
46	362627	PLATE ANCHOR / 3/8-16 BOLT INSIDE TRACK / 1 1/4" X 1 1/4"	AR				
46	500270	WASHER FL .406x1.000x.063 SS	AR				
46	500305	SCREW CAP HEX 3/8-16x7/8 G5 ZP	AR				
46	500478	WASHER LO SPT .380x.683x.094 ZP	AR				
50	362702	FINISHING LOWER R.H.	1				
50	362701	FINISHING LOWER L.H.	1				
51	361752	DECAL "TO OPERATE.." / FIXED AT SEAT STRUCTURE	1				
52	361751	DECAL "TO OPERATE.." / FIXED AT WINDOW	1				
60	Y2-1829-00	**ACCESSORIES PASSENGER'S SEAT - "PREVOST"**					
70	Y2-2221-10	**DUCTING HEATER & A/C - BUS FLOOR**					

From Y-7046 Up to 6-8906	DATE: 01/2014	PAGE: Y2-1827-11

PASSENGER'S SEAT - ROTATING "PREVOST

ITEM	PART	DESCRIPTION	XL45	MTH40	MTH45	MTH45S	NOTE
80	Y2-1827-52	**ARMREST PASSENGER'S SEAT - "PREVOST"**					
90	Y2-1827-02	**PASSENGER'S SEAT - "ULTRA"**					
90	Y2-1828-01	**PASSENGER'S SEAT - "TOURISMO II"**					
100	323654	SEAT TRACK COVER 12' / <> EACH SEAT / W/COVERING FLOOR / REPLACED BY: 323963	AR				
100	323963	SEAT TRACK COVER 8' / <> EACH SEAT / W/COVERING FLOOR	AR				

From Y-7046 Up to 6-8906	DATE: 01/2014	PAGE: Y2-1827-11

PASSENGER'S SEAT - ROTATING "PREVOST

ITEM	PART	DESCRIPTION	XL45	MTH40	MTH45	MTH45S	NOTE

From Y-7046 Up to 6-8906	DATE: 01/2014	PAGE: Y2-1827-52

ARMREST PASSENGER'S SEAT - "PREVOST"

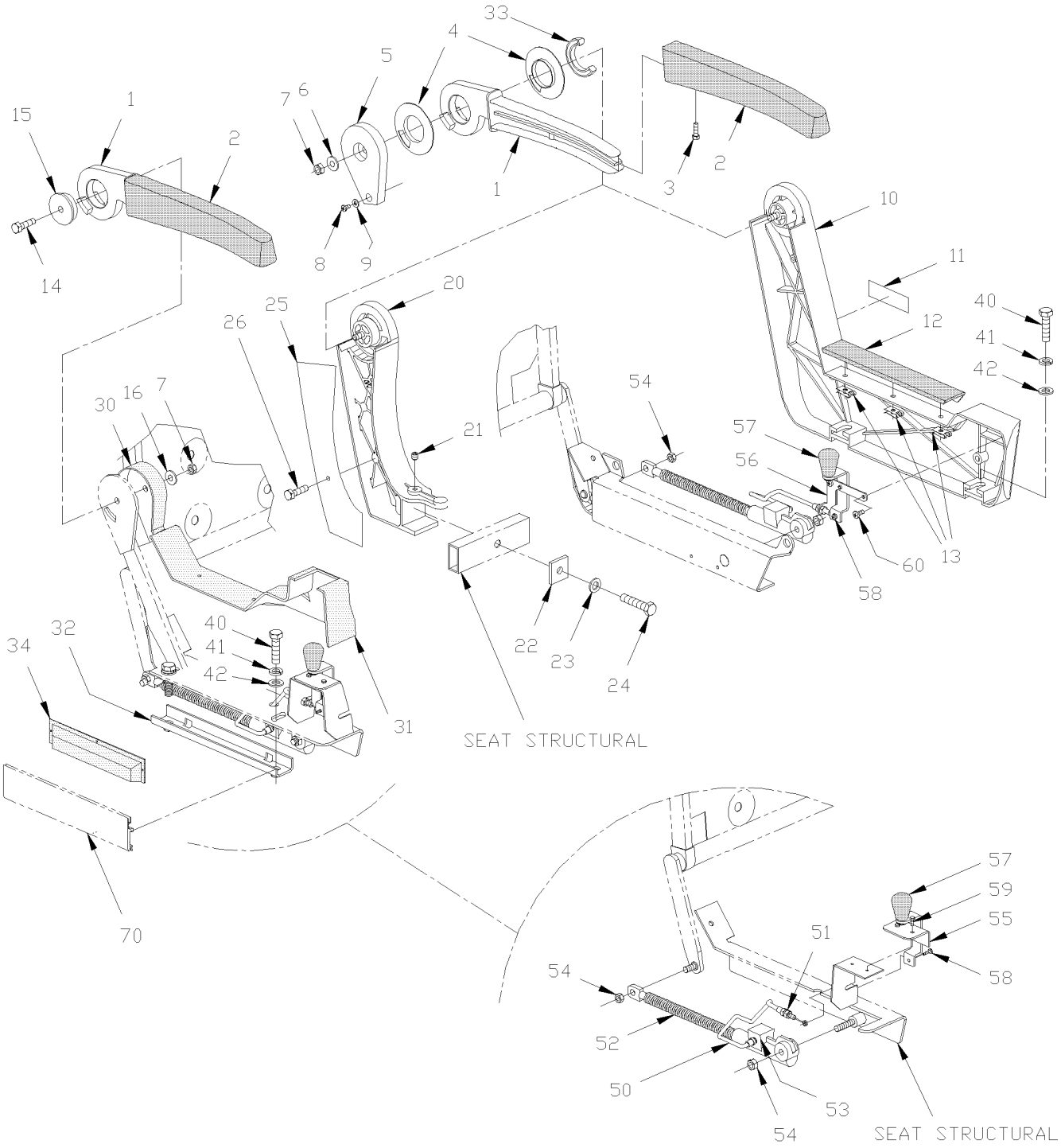

From Y-7046 Up to 6-8906	DATE: 01/2014	PAGE: Y2-1827-52

ARMREST PASSENGER'S SEAT - "PREVOST"

ITEM	PART	DESCRIPTION	XL45	MTH40	MTH45	MTH45S	NOTE
1	363597	ARMREST / SHORT	3				
1	362933	ARMREST L.H. / V.I.P.	2				
1	362934	ARMREST R.H. / V.I.P.	2				
2	363598	COVERING ARMREST / SHORT	1				
2	362541	COVERING ARMREST / V.I.P.	1				
NS	363425	FOAM COVERING ARMREST V.I.P.	AR				
3	500686	SCREW TP OV PH #6x1/2 BK	1				
NS	500345	WASHER FN CKF .187x.500x.090 BR BK	1				
4	363575	. SPACER PLASTIC / FRICTION DISK	2				
5	363565	CLOSING L.H. / GREY CHARCOAL	1				
5	362913	CLOSING / GREY CHARCOAL	2				V
5	363566	CLOSING R.H. / GREY CHARCOAL	1				
6	502510	WASHER FL .375x.875x.083	1				
7	5001113	NUT HEX JAM NYRT 5/16-18	2				
8	500658	SCREW TC PAN PH #10-24x3/4 ZP	1				
9	500470	WASHER LO SPT .193x.334x.047 ZP	1				
10	363833	. SIDE L.H. / CASTING PAINTED CHARCOAL	1				
10	363832	. SIDE R.H. / CASTING PAINTED CHARCOAL	1				
10	363858	. SIDE R.H. / CASTING PAINTED CHARCOAL / V.I.	1				V
10	363859	. SIDE L.H. / CASTING PAINTED CHARCOAL / V.I.	1				V
11	362907	. DECAL / "PREVOST"	1				
12	362871	. COVERING L.H.	1				
12	362971	. COVERING R.H.	1				
13	509814	. NUT PUSH RND ARC 3/16	3				
14	500182	SCREW CAP HEX 5/16-18x1 1/4 G5 PT ZP	1				
15	362315	WASHER RETAINING W/FLANGED 40.26MM O.D. X 44.5 MM O.D.	1				
16	500441	WASHER FL .312x.734x.065 ZP	1				
20	363564	SUPPORT / CENTRAL ARMREST / PAINTED CHARCOAL	1				
20	362904	SUPPORT / CENTRAL ARMREST / PAINTED CHARCOAL	2				V
21	502781	SCREW SET HEXS CUP 5/16-18x1/4	1				
22	362711	PLATE TIGHTENING / <> SEAT	1				
23	500476	WASHER LO SPT .317x.586x.078 ZP	1				
24	500186	SCREW CAP HEX 5/16-18x2 1/2 G5 ZP	1				
25	362927	PLATE / W/V.I.P. CENTRAL SUPPORT / CHARCOAL	1				
26	500654	SCREW TC BDG PH #8-32x1/2 ZP	2				
30	362697	COVER R.H. / NORYL / WINDOW SIDE	1				
30	362712	COVER L.H. / NORYL / WINDOW SIDE	1				
31	363780	GUARD L.H. / MECHANISM	1				
31	363779	GUARD R.H. / MECHANISM	1				
31	363958	GUARD R.H. / MECHANISM LOUNGE SEAT ONLY	1				A
31	362580	GUARD R.H. / MECHANISM / V.I.P. Up to Y-7336	1				
		A) USE ONLY WITH LOUNGE SEAT BACK OF THE VEHICLE					
		V) WITH V.I.P. SEAT ONLY					

From Y-7046 Up to 6-8906	DATE: 01/2014	PAGE: Y2-1827-52

ARMREST PASSENGER'S SEAT - "PREVOST"

ITEM	PART	DESCRIPTION	XL45	MTH40	MTH45	MTH45S	NOTE
31	363857	GUARD R.H. / MECHANISM / W/VIP SEAT From Y-7337	1				
31	362633	GUARD L.H. / MECHANISM / V.I.P. Up to Y-7336	1				
31	363856	GUARD L.H. / MECHANISM / W/VIP SEAT From Y-7337	1				
32	363821	ATTACHMENT PLATE / "J" SHAPE TO FIX SEAT TO WALL TRACK / REPLACED BY: 364132	1				
. NS	500183	. SCREW CAP HEX 5/16-18x1 1/2 G5 PT ZP	2				
. NS	500942	. WASHER LO SPT .317x.586x.078 ZG603	2				
32	364132	ATTACHMENT PLATE / "J" SHAPE TO FIX SEAT TO WALL TRACK	1				
. NS	500829	. SCREW CAP HEX	2				
. NS	500257	. WASHER LO SPT	2				
32	364133	REINFORCMENT / FIXED BETWEEN SEAT & GUARD	1				
33	362941	SLIDE INSERT PLASTIC / LONG 150 DEG	4				V
34	362579	CAP FINISHING / WALL / V.I.P.	1				V
40	500183	SCREW CAP HEX 5/16-18x1 1/2 G5 PT ZP	2				
41	500476	WASHER LO SPT .317x.586x.078 ZP	2				
42	502510	WASHER FL .375x.875x.083	2				
50	861444	CABLE ASSY	1				
51	500692	. NUT HEX 1/4-28 ZP	2				
52	363782	CYLINDER L.H. Up to Y-7336 / REPLACED BY: 861926	1				
52	861926	CYLINDER L.H. From Y-7337	1				
52	363783	CYLINDER R.H. Up to Y-7336 / REPLACED BY: 861927	1				
52	861927	CYLINDER R.H. From Y-7337	1				
53	861486	CLIP / WIRE RETAINER	2				
54	500690	NUT HEX NYRT 1/4-28 ZP	2				
55	363830	LEVER L.H. / WINDOW SIDE	1				
55	363829	LEVER R.H. / WINDOW SIDE	1				
56	363825	LEVER L.H. / CASTING	1				
56	363826	LEVER R.H. / CASTING	1				
57	861442	. KNOB	1				
NS	500394	. SCREW MA TR SLT 1/4-20x1/2 ZP	1				
58	500557	SCREW MA PAN PH #8-32x3/8 SS	2				
59	5001312	SCREW TP TR PH #8x5/8 ZP	1				
60	500657	SCREW TC TR PH #10-24x1/2 ZP	2				
70	Y2-2221-10	**DUCTING HEATER & A/C - BUS FLOOR**					
		V) WITH V.I.P. SEAT ONLY					

From Y-7046 Up to 6-8906	DATE: 01/2014	PAGE: Y2-1827-52

ARMREST PASSENGER'S SEAT - "PREVOST"

ITEM	PART	DESCRIPTION	XL45	MTH40	MTH45	MTH45S	NOTE

From Y-7046 Up to 6-8906	DATE: 01/2014	PAGE: Y2-1827-70
PASSENGER'S SEAT - "TOURISMO II" - FLIP-UP W/W.C.L.		

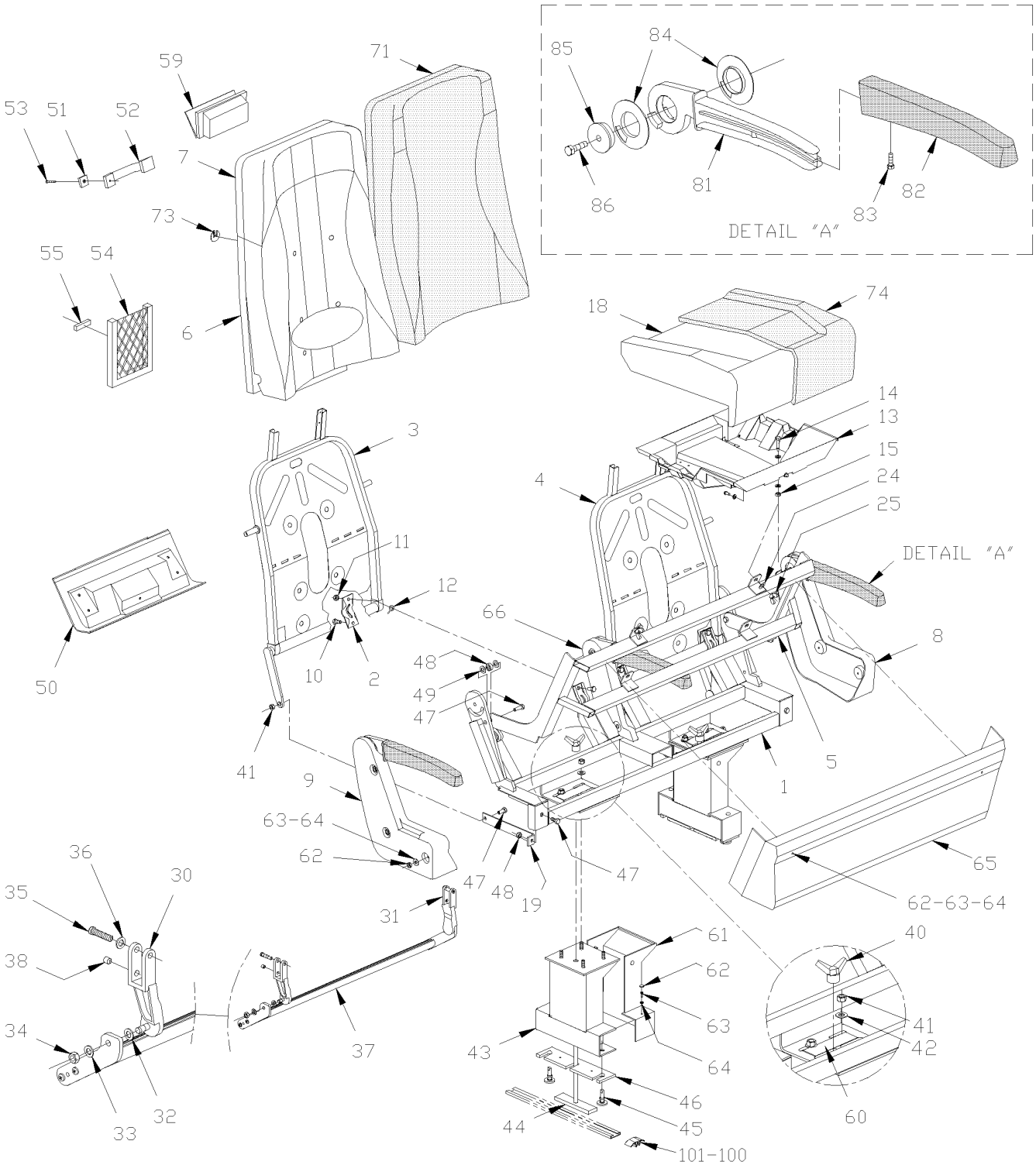

From Y-7046 Up to 6-8906	DATE: 01/2014	PAGE: Y2-1827-70

PASSENGER'S SEAT - "TOURISMO II" - FLIP-UP W/W.C.L.

ITEM	PART	DESCRIPTION	XL45	MTH40	MTH45	MTH45S	NOTE
	363376P	SEAT ASSY "FLIP-UP" ULTRA	1				
1	363302	. MOUNTING BASE ASSY / "FLIP-UP" SEAT	1				
2	363246	. COLLAR	4				
3	363180	. BACKREST R.H.	1				
4	363181	. BACKREST L.H.	1				
5	363303	. SEAT FRAME ASSY / SEATREST "FLIP-UP" SEAT	1				
NS	363538	. ROD RETAINING SEATREST	1				
6	363178P	. FOAM ASSY, BACKREST / "TOURISMO II "	1				
6	363186	. . FOAM BACKREST THICK	1				
6	363252	. . FOAM BACKREST THIN W/42"	1				
6	363350	. . FOAM BACKREST THIN W/40"	1				
7	363251	. FOAM ASSY, HEADREST 42" HIGHT / "ULTRA"	1				
NS	500583	. SCREW TP BDG PH #6x1/2 ZP	4				
NS	500240	. WASHER LO EXT .195x.410x.025 ZP	4				
8	363226	. COVER R.H. / PLASTIC	1				
9	363227	. COVER L.H. / PLASTIC	1				
10	5001336	. SCREW CAP HEXF SERR 5/16-18x3/4 ZP	8				
11	5001113	. NUT HEX JAM NYRT 5/16-18	8				
12	363273	. SPRING EYE	4				
13	363007P	. SEATREST ASSY W/HOOK / BOTTOM PLASTIC	1				
14	362353	. SCREW	1				
15	500685	. NUT HEX NYRT 5/16-18 SS	1				
18	362666	. FOAM ASSY, SEATREST / "TOURISMO & ULTRA"	1				
19	363279	. FLAT BAR / ANGLE 198MM x 28MM	2				
24	500441	. WASHER FL .312x.734x.065 ZP	2				
25	500782	. NUT WING 5/16-18 ZP	2				
30	363437	. BRACKET L.H.	1				
31	363436	. BRACKET R.H.	1				
32	502723	. WASHER FL .386x.750x.050 NYL	2				
33	500441	. WASHER FL .312x.734x.065 ZP	2				
34	500777	. NUT HEX STO 5/16-18 ZP	2				
35	500183	. SCREW CAP HEX 5/16-18x1 1/2 G5 PT ZP	2				
36	500476	. WASHER LO SPT .317x.586x.078 ZP	2				
37	363304	. FOOTREST ASSY / DOUBLE SEAT W/FLIP-UP SEAT	1				
38	502781	. SCREW SET HEXS CUP 5/16-18x1/4	2				
40	860874	. HANDLE NUT 3/8-16	2				
41	500777	. NUT HEX STO 5/16-18 ZP	7				
42	502510	. WASHER FL .375x.875x.083	1				
43	363292	. PEDESTAL	2				
44	363278	. "T" BOLT RETAINER 3/8-16 X 10 5/8"	2				
45	363280	. GUIDE 28MM O.D. / M10 - 1.5	4				
46	363281	. SLIDING TRACK / 60MM x 240MM PLASTIC	2				
47	500179	. SCREW CAP HEX 5/16-18x3/4 G5 ZP	AR				

From Y-7046 Up to 6-8906	DATE: 01/2014	PAGE: Y2-1827-70

PASSENGER'S SEAT - "TOURISMO II" - FLIP-UP W/W.C.L.

ITEM	PART	DESCRIPTION	XL45	MTH40	MTH45	MTH45S	NOTE
48	363460	. SPACER 10MM I.D. x 19MM O.D. X 8.5MM	2				
49	502723	. WASHER FL .386x.750x.050 NYL	4				
50	363311	. FINISHING LOWER R.H.	1				
50	363310	. FINISHING LOWER L.H.	1				
51	860421	. HOOK	1				
52	860422	. HANDLE	1				
NS	505229	. SPACER 3/8 I.D. X 3/8 LG	2				
52	363424	. HANDLE REINFORCEMENT SUPPORT	1				
53	502521	. SCREW TC OV PH #8-32x1 BK	2				
54	860809	. MAGAZINE NET 14" x 7 ¼"	1				
55	500353	. SCREW TP FL PH #8x3/4 BK	4				
59	861277	. ASHTRAY / PLASTIC	1				
60	404094	. DECAL "DOIT ÊTRE VERROUIL…."	2				
60	404093	. DECAL "MUST BE LOCKED…"	2				
61	363296	. COVER PEDESTAL / PLASTIC	2				
62	500686	. SCREW TP OV PH #6x1/2 BK	AR				
63	504412	. WASHER RETAINER SNAP CAP #8	AR				
64	504403	. SNAP CAP #8 FINISHING BLACK	AR				
65	323228	. CAP, INTERIOR REAR	1				
66	363229	. COVER CENTER ARMREST / PLASTIC	1				
71	363385P	. COVERING ASSY, BACKREST / S.C.C. W/42" HIGHT	1				
73	362716	. ATTACHMENT / ROUND "W" SHAPE TO FIX COVER	8				
NS	682259	. SEALANT TAPE / CLEAR / 1/32"x1 1/2"x65' / 1795	AR				
74	362736P	. COVERING SEATREST ASSY / S.C.C. / "SILHOUETTE"	1				
81	362939	. ARMREST / LONG	3				
82	363624	. COVERING ARMREST / LONG	3				
83	500686	. SCREW TP OV PH #6x1/2 BK	3				
84	363575	. SPACER PLASTIC / FRICTION DISK	6				
85	363282	. GUIDE ARMREST	1				
86	500182	. SCREW CAP HEX 5/16-18x1 1/4 G5 PT ZP	3				
100	323654	SEAT TRACK COVER 12' / <> EACH SEAT / W/COVERING FLOOR / REPLACED BY: 323963	AR				
100	323963	SEAT TRACK COVER 8' / <> EACH SEAT / W/COVERING FLOOR	AR				
101	820027	HANDLE	1				B
101	5001119	SCREW TP BDG PH #8x3/4 SS	1				B
101	502630	WASHER FL .156x.375x.049 ZP	1				B
		B) FIXED ON SEAT TRACK FOR EASIER REMOVABLE					

From Y-7046 Up to 6-8906	DATE: 01/2014	PAGE: Y2-1827-70

PASSENGER'S SEAT - "TOURISMO II" - FLIP-UP W/W.C.L.

ITEM	PART	DESCRIPTION	XL45	MTH400	MTH445	MTH455S	NOTE

From Y-7046 Up to 6-8906	DATE: 01/2014	PAGE: Y2-1828-01
PASSENGER'S SEAT - "TOURISMO II"		

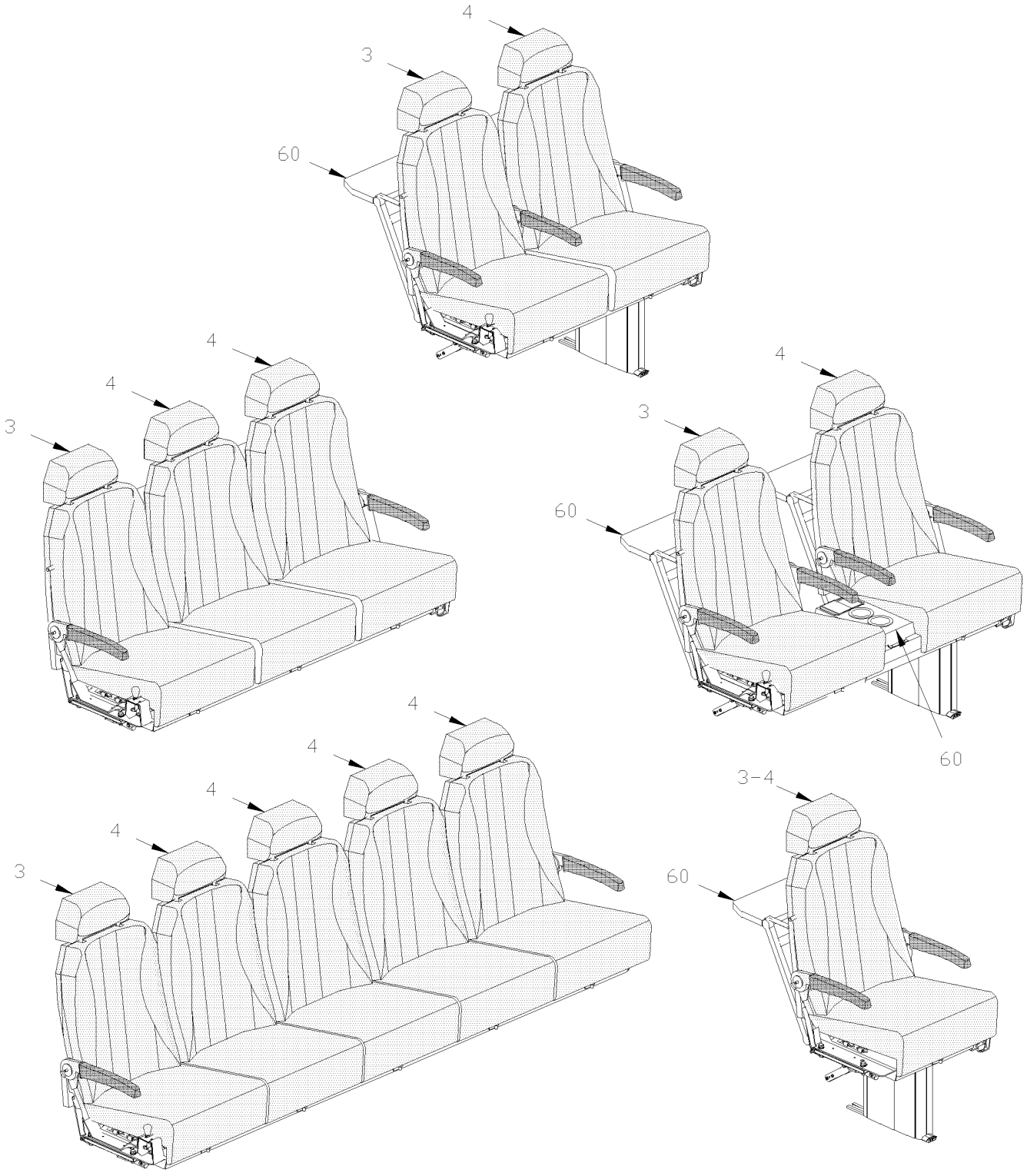

From Y-7046 Up to 6-8906	DATE: 01/2014	PAGE: Y2-1828-01

PASSENGER'S SEAT - "TOURISMO II"

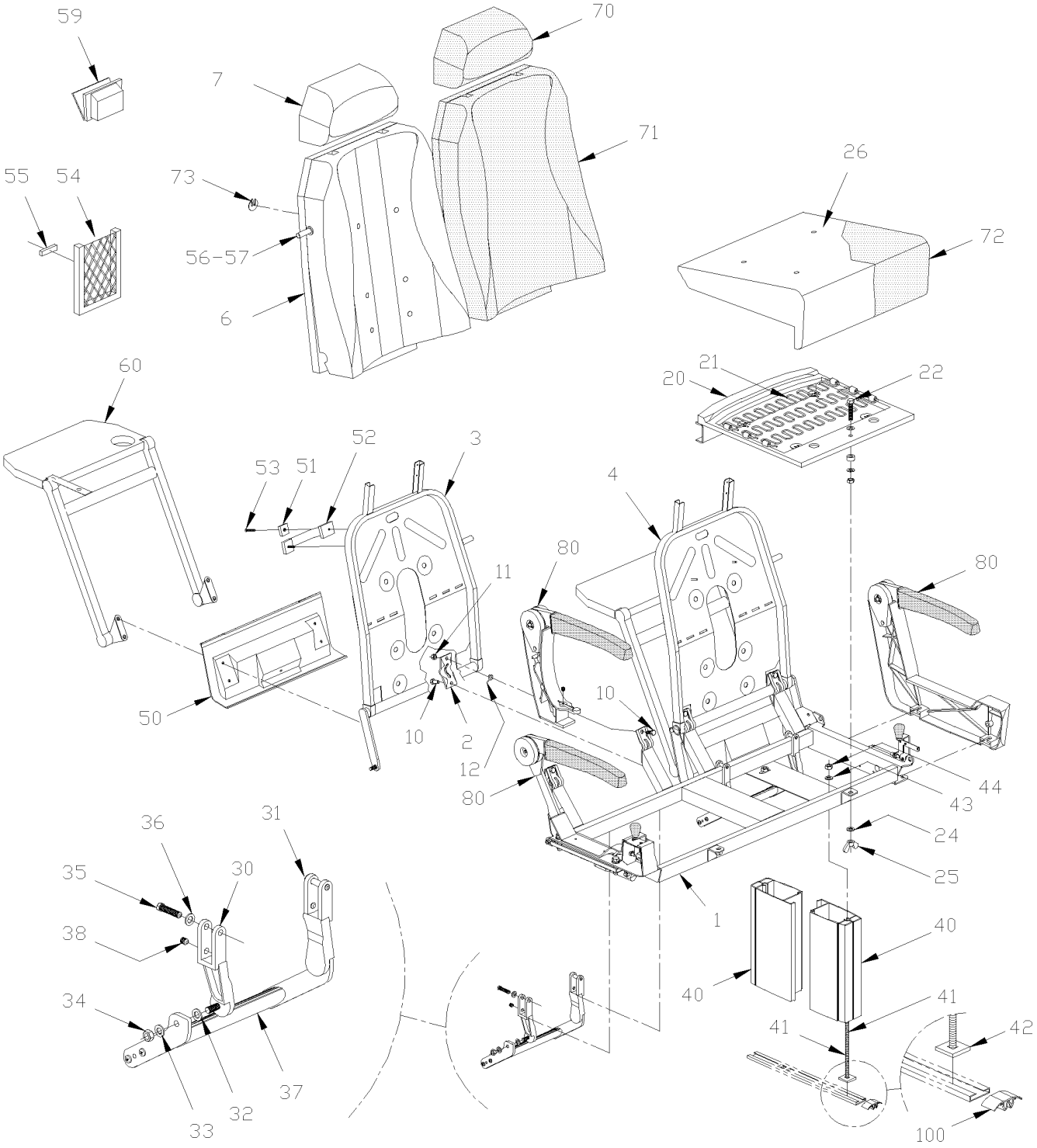

From Y-7046 Up to 6-8906	DATE: 01/2014	PAGE: Y2-1828-01

PASSENGER'S SEAT - "TOURISMO II"

ITEM	PART	DESCRIPTION	XL45	MTH40	MTH45	MTH45S	NOTE
	363922	SEAT ASSY R.H. / 2 PASSENGERS / 42" HIGH	AR				
	363921	SEAT ASSY L.H. / 2 PASSENGERS / 42" HIGH	AR				
	363925	SEAT ASSY REAR / 2 PASSENGERS / 42" HIGH	AR				
	363924	SEAT ASSY REAR / 3 PASSENGERS / 42" HIGH	AR				
	363926	SEAT ASSY REAR / 5 PASSENGERS / 42" HIGH	AR				
1	363841	. STRUCTURE ASSY R.H. / 2 PASSENGERS	1				
1	363842	. STRUCTURE ASSY L.H. / 2 PASSENGERS	1				
1	363843	. STRUCTURE ASSY REAR / 3 PASSENGERS	1				
1	363844	. STRUCTURE ASSY REAR / 5 PASSENGERS	1				
1	363838	. STRUCTURE ASSY R.H. / 2 PASSENGERS V.I.P.	1				
1	363839	. STRUCTURE ASSY R.H. V.I.P. / 2 PASSENGERS	1				
1	363837	. STRUCTURE ASSY R.H. V.I.P. / 1 PASSENGERS	1				
1	363840	. STRUCTURE ASSY L.H. V.I.P. / 1 PASSENGERS	1				
2	363246	. COLLAR	1				
3	363834	. BACKREST R.H.	1				
4	363835	. BACKREST L.H.	1				C
6	363178P	. FOAM ASSY, BACKREST / "TOURISMO II "	1				
6	363186	. . FOAM BACKREST THICK	1				
6	363177	. . FOAM BACKREST THIN	1				
6	363174	. . FOAM THIN, OBLONG 4" X 13" APPROX	1				
7	363156	. FOAM ASSY, HEADREST 42" HIGHT / "TOURISMO II "	1				
7	362753	. FOAM ASSY, HEADREST 40" HIGHT / "TOURISMO"	1				
NS	5001312	. SCREW TP TR PH #8x5/8 ZP	4				
10	5001336	. SCREW CAP HEXF SERR 5/16-18x3/4 ZP	4				
11	5001113	. NUT HEX JAM NYRT 5/16-18	4				
12	363273	. SPRING EYE	4				
20	363646	. SEAT FRAME ASSY W/SPRING	1				
21	363650	. . SPRING	3				
22	362353	. . SCREW	1				
23	500685	. NUT HEX NYRT 5/16-18 SS	1				
24	500826	. WASHER LO EXT .320x.610x.034 ZP	1				
25	500782	. NUT WING 5/16-18 ZP	2				B
26	363645	. FOAM	2				
30	363437	. BRACKET L.H.	1				
31	363436	. BRACKET R.H.	1				
32	502723	. WASHER FL .386x.750x.050 NYL	2				
33	500441	. WASHER FL .312x.734x.065 ZP	2				
34	500777	. NUT HEX STO 5/16-18 ZP	2				
35	5001375	. SCREW CAP HEX M10-1.5x18 SS	2				
36	500476	. WASHER LO SPT .317x.586x.078 ZP	2				
37	362928	. FOOTREST ASSY	1				
		B) TO FIX SEAT					
		C) QTY OF 2 WITH 3 PASSENGERS REAR SEAT AND QTY					
		OF 4 WITH 5 PASSENGERS REAR SEAT					

From Y-7046 Up to 6-8906	DATE: 01/2014	PAGE: Y2-1828-01

PASSENGER'S SEAT - "TOURISMO II"

ITEM	PART	DESCRIPTION	XL45	MTH40	MTH45	MTH45S	NOTE
38	502781	. SCREW SET HEXS CUP 5/16-18x1/4	2				
40	363577	. PEDESTAL SQ END / 279MM / 10.98" / 2 PIECES Up to 5-8631 / REPLACED BY: 364038	2				
40	364038	. PEDESTAL SQ END / 279MM / 10.98" / ONE PIECE From 5-8632	1				
NS	364076	. REINFORCMENT PEDESTAL / ANGLE 58MMx 20MM REAR OF PEDESTAL From 6-8789	1				
41	5001600	. SCREW CRG 3/8-16x12 G5 ZP	2				
42	363085	. PLATE ANCHOR / CARRIAGE BOLT INSIDE TRACK / 1 1/4" X 1 1/4" Up to 5-8631	2				
42	360052	. PLATE ANCHOR / CARRIAGE BOLT INSIDE TRACK / 1 1/4" X 3 1/2" From 5-8632	2				
43	500445	. WASHER FL .437x1.000x.083 ZP	2				
44	500265	. NUT HEX STO 3/8-16 ZP	2				
45	363821	. ATTACHMENT PLATE / "J" SHAPE TO FIX SEAT TO WALL TRACK / REPLACED BY: 364132	1				
. NS	500183	. . SCREW CAP HEX 5/16-18x1 1/2 G5 PT ZP	2				
. NS	500942	. . WASHER LO SPT .317x.586x.078 ZG603	2				
45	364132	. ATTACHMENT PLATE / "J" SHAPE TO FIX SEAT TO WALL TRACK	1				
. NS	500829	. . SCREW CAP HEX	2				
. NS	500257	. . WASHER LO SPT	2				
50	362867	. FINISHING LOWER / R.H. / NORYL Up to Y-7336	1				
50	363947	. FINISHING LOWER / R.H. / NORYL From Y-7337	1				
50	362866	. FINISHING LOWER / L.H. / NORYL Up to Y-7336	1				
50	363946	. FINISHING LOWER / L.H. / NORYL From Y-7337	1				
51	860421	. HOOK	1				
52	860422	. HANDLE	1				
53	500871	. SCREW TP OV PH #8x1 BK	2				
54	860809	. MAGAZINE NET 14" x 7 ¼"	1				
55	500353	. SCREW TP FL PH #8x3/4 BK	4				
56	5001019	. SCREW TP OV PH #10x2 EMN	1				
56	5001016	. SCREW CAP HEX M10-1.5x90 G8.8 ZP	1				
57	362942	. STOPPER SHORT / W/STANDARD SEAT	1				
57	362943	. STOPPER LONG / WV.I.P. SEAT	1				
59	861277	. ASHTRAY / PLASTIC	1				
NS	502778	. SCREW TP FL PH #6x2 BK	2				
NS	860626	. SUPPORT ASHTRAY / PLASTIC	1				
60	Y2-1829-00	**ACCESSORIES PASSENGER'S SEAT - "PREVOST"**					
70	363162P	. COVERING HEADREST 40" ASSY / S.C.C. / "TOURISMO II "	1				
70	363167P	. COVERING HEADREST 42" ASSY / S.C.C. / "TOURISMO II "	1				
71	363172P	. COVERING BACKREST ASSY / S.C.C. / "TOURISMO II "	1				
72	363676	. COVERING SEATREST ASSY / S.C.C. / ALL NEW W/SPRING	1				
73	362716	. ATTACHMENT / ROUND "W" SHAPE TO FIX COVER	8				
80	Y2-1827-52	**ARMREST PASSENGER'S SEAT - "PREVOST"**					
100	323654	SEAT TRACK COVER 12' / <> EACH SEAT / W/COVERING FLOOR / REPLACED BY: 323963	AR				
100	323963	SEAT TRACK COVER 8' / <> EACH SEAT / W/COVERING FLOOR	AR				

From Y-7046 Up to 6-8906	DATE: 01/2014	PAGE: Y2-1828-01

PASSENGER'S SEAT - "TOURISMO II"

ITEM	PART	DESCRIPTION	XL45	MTH40	MTH45	MTH45S	NOTE
153	502521	. SCREW TC OV PH #8-32x1 BK	2				
158	363644	. HEADREST REINFORCEMENT	1				

From Y-7046 Up to 6-8906	DATE: 01/2014	PAGE: Y2-1828-01

PASSENGER'S SEAT - "TOURISMO II"

ITEM	PART	DESCRIPTION	XL45	MTH40	MTH45	MTH45S	NOTE

From 5-8579 Up to 6-8906	DATE: 01/2014	PAGE: Y2-1828-05
PASSENGER'S SEAT - "MULTINA"		

PASSENGER'S SEAT 2 SEATING

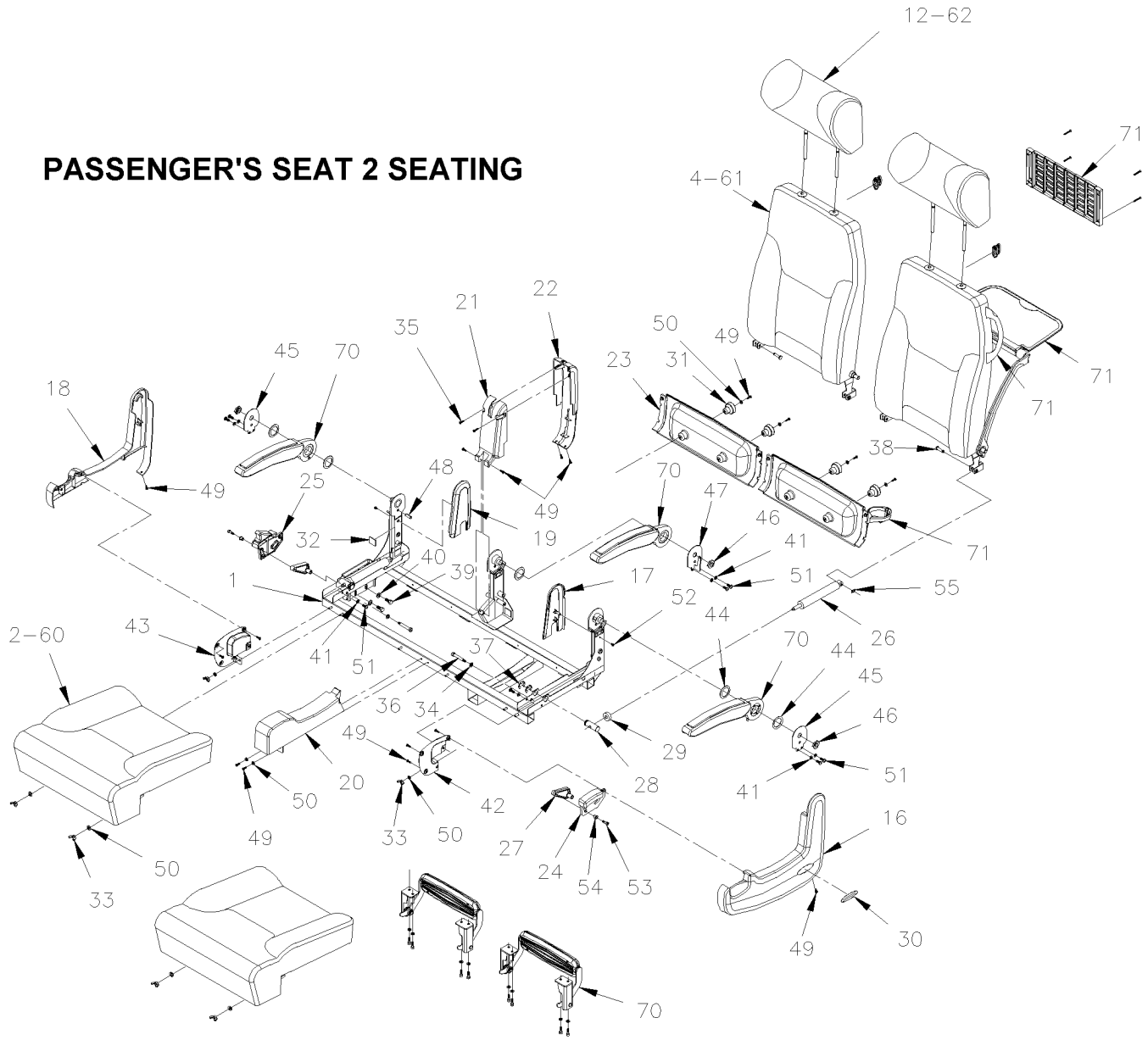

From 5-8579 Up to 6-8906	DATE: 01/2014	PAGE: Y2-1828-05
PASSENGER'S SEAT - "MULTINA"		

PASSENGER'S SEAT 3 SEATING

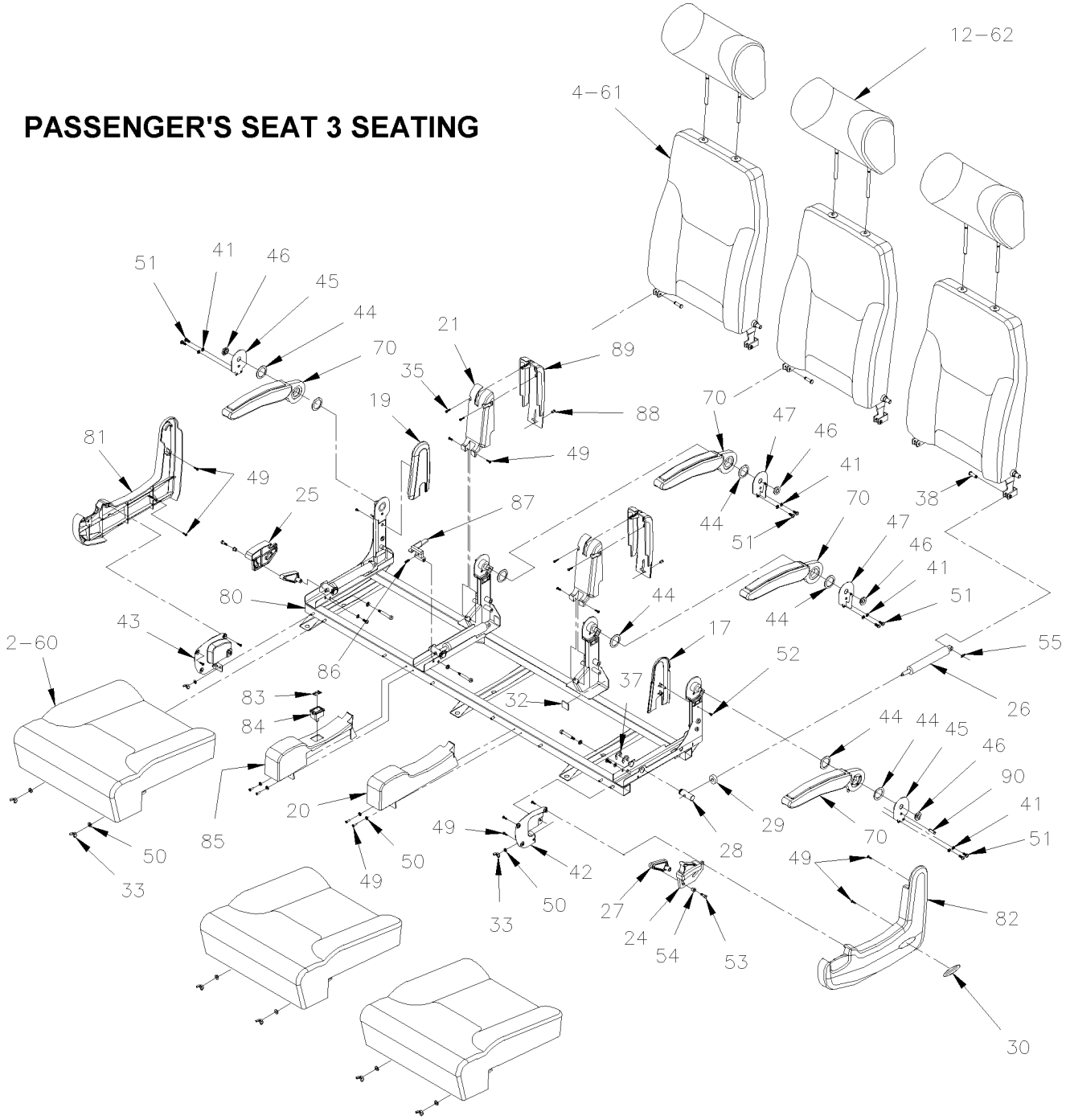

From 5-8579 Up to 6-8906	DATE: 01/2014	PAGE: Y2-1828-05
PASSENGER'S SEAT - "MULTINA"		

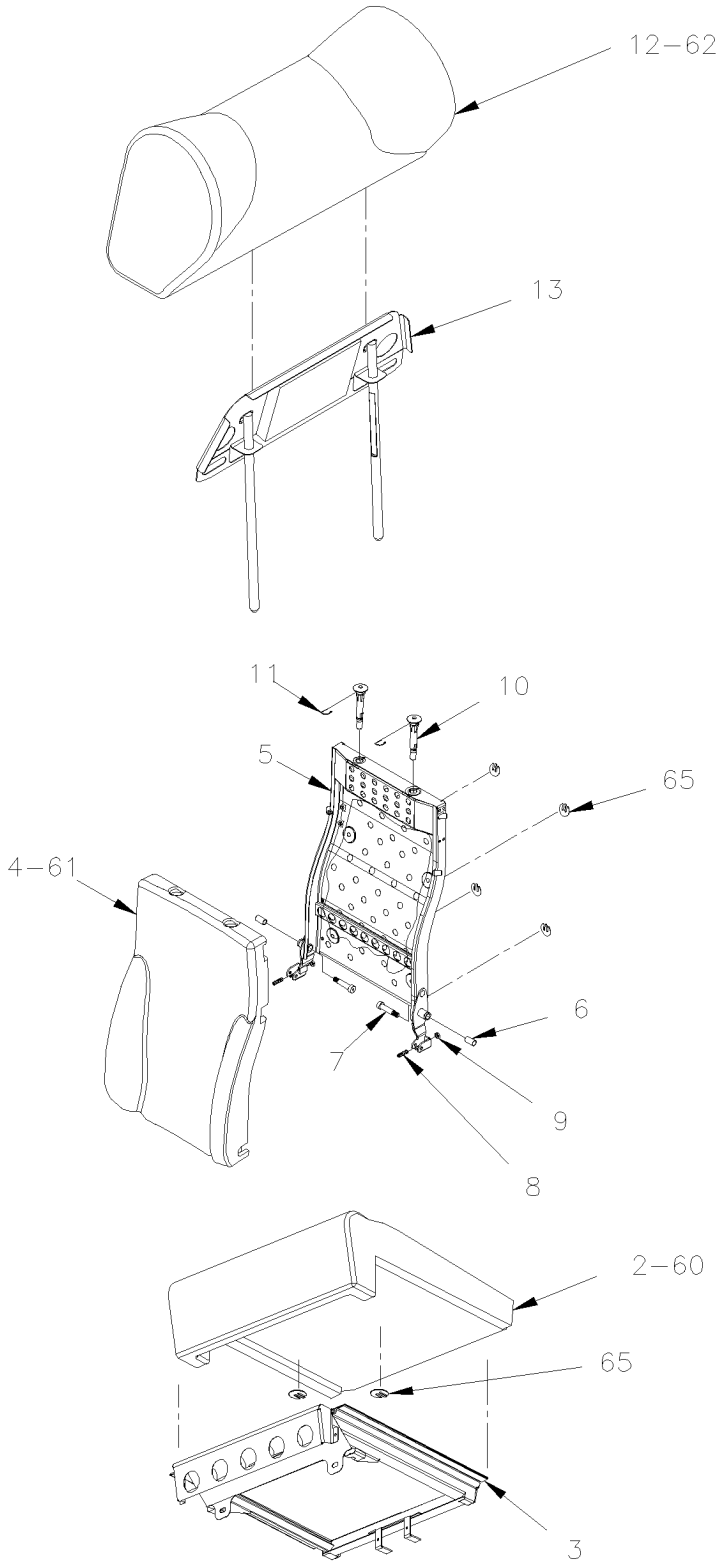

From 5-8579 Up to 6-8906	DATE: 01/2014	PAGE: Y2-1828-05

PASSENGER'S SEAT - "MULTINA"

ITEM	PART	DESCRIPTION	XL45	MTH40	MTH45	MTH45S	NOTE
	Call Order Desk	TWO-PASSENGER,S RIGHT HAND / ALLEGRO SEAT	1				P
	Call Order Desk	TWO-PASSENGER,S LEFT HAND / ALLEGRO SEAT	1				P
	Call Order Desk	THREE PASSENGER'S SEAT ASSY / ALLEGRO SEAT	1				P
1	Call Order Desk	. SEAT FRAME, TWO-PASSENGER, RIGHT-HAND	1				P
1	Call Order Desk	. SEAT FRAME, TWO-PASSENGER, LEFT-HAND	1				P
2	Call Order Desk	. BOTTOM CUSHION	2				P
2	Call Order Desk	. . PAN, BOTTOM CUSHION	1				P
3		. . FOAM CUSHION	1				
4	Call Order Desk	. BACKREST CUSHION	2				P
4	Call Order Desk	. . FOAM, BACKREST	1				P
5	Call Order Desk	. . PAN, BACKREST	1				P
6	Call Order Desk	. . BEARING, PLSTC, 12" ID x 14" OD x 25"	2				P
7	Call Order Desk	. . SCREW SHR HEXS 12x40 {M10-1.5	2				P
8	Call Order Desk	. . SCREW SET HEXS FP M8-1.25x30 M8-1.25x30	2				P
9	Call Order Desk	. . NUT HEX THN M8-1.25x4.0 ZP	2				P
10	Call Order Desk	. . SLIDING GUIDE, HEADREST	2				P
11	Call Order Desk	. . HITCH PIN CLIP, SLIDING GUIDE	2				P
12	Call Order Desk	. HEADREST CUSHION, V.I.P.	1				P
12		. . CUSHION HEADREST	1				
13		. . SUPPORT HEADREST	1				
16	Call Order Desk	. SHROUD, AISLE SIDE, LEFT-HAND	1				P
16	Call Order Desk	. SHROUD, AISLE SIDE, RIGHT-HAND	1				P
17	Call Order Desk	. SHROUD, INSIDE, LEFT-HAND	1				P
18	Call Order Desk	. SHROUD, WALL SIDE, RIGHT-HAND	1				P
18	Call Order Desk	. SHROUD, WALL SIDE, LEFT-HAND	1				P
19	Call Order Desk	. SHROUD, INSIDE, RIGHT-HAND	1				P
20	Call Order Desk	. SHROUD, CENTER FRONT	1				P
21	Call Order Desk	. SHROUD, CENTER UPPER	1				P
22	Call Order Desk	. SHROUD, CENTER REAR	1				P
23	Call Order Desk	. SHROUD, FOOTREST	1				P
24	863901	. RECLINING HANDLE, AISLE SIDE, LEFT-HAND	1				
24	863273	. RECLINING HANDLE, AISLE SIDE, RIGHT-HAND	1				
25	Call Order Desk	. RECLINING HANDLE, WALL SIDE, RIGHT-HAND	1				P
25	Call Order Desk	. RECLINING HANDLE, WALL SIDE, LEFT-HAND	1				P
26	862843	. RECLINING GAZ CYLINDER	2				
27	863185	. RECLINING LEVER	1				
28	Call Order Desk	. PIVOT CYLINDER	2				P
29	Call Order Desk	. CYLINDER STOPPER	2				P
30	Call Order Desk	. MULTINA LABEL	1				P
31	863183	. FOOTREST BUMPER	1				
32	Call Order Desk	. BACKREST STOPPER	4				P
33	Call Order Desk	. NUT WING M6-1.0 ZP	6				P
		P) CALL ORDER DESK FOR SPECIFIC APPLICATION					
		(V.I.N.)					

From 5-8579 Up to 6-8906	DATE: 01/2014	PAGE: Y2-1828-05

PASSENGER'S SEAT - "MULTINA"

ITEM	PART	DESCRIPTION	XL45	MTH40	MTH45	MTH45S	NOTE
34	Call Order Desk	. WASHER LO SPT 8.1 ZP	2				P
35	Call Order Desk	. SCREW TA PAN PH #6x3/4 ZP	2				P
36	Call Order Desk	. SCREW SHR HEXS 8x45{M6-1.0x11	2				P
37	Call Order Desk	. RING, RTNG, EXTL, STL, ZN PLD, SHAFT DIA 3/	4				P
38	Call Order Desk	. PIN, CLEVIS, CUSTOM	2				P
39	Call Order Desk	. SCREW CAP HEX M8x20 G8.8	2				P
40	Call Order Desk	. WASHER LO SPT .385 ZP	2				P
41	Call Order Desk	. WASHER LO SPT 6.1 ZP	8				P
42	Call Order Desk	. SHROUD PLATE, LEFT-HAND	1				P
43	Call Order Desk	. SHROUD PLATE, RIGHT-HAND	1				P
44	Call Order Desk	. WASHER FL 33x45.9 NYL	6				P
45	Call Order Desk	. COVER PLATE	2				P
46	Call Order Desk	. NUT HEX M16-1.5 ZP	3				P
47	Call Order Desk	. CENTRAL COVER PLATE	1				P
48	Call Order Desk	. PIN, SPR TNSN, STL, ZN PLD, 5/16 " NOM DIA	1				P
49	Call Order Desk	. SCREW TA PAN PN #8x5/8 ZP	18				P
50	Call Order Desk	. WASHER FL 6.4x12x1.6 ZP	13				P
51	Call Order Desk	. SCREW MA PAN PH M6-1.0x16 ZP	8				P
52	Call Order Desk	. SCREW TA PAN PH #8x3/8 ZP	2				P
53	863208	. SCREW SHR HEXS 6x10{M5-0.8x9.5	2				
54	863209	. BEARING, FL BRZ, 0.252" ID x 0.377" OD x 3/	2				
55	Call Order Desk	. CLIP, HAIR PIN, STL, ZN, 0.062" WR DIA x 11	2				P
60	862848	. COVERING ASSY, SEATREST / S.C.C.	1				
61	862849	. COVERING ASSY, BACKREST / S.C.C.	1				
62	862850	. COVERING ASSY, HEADREST / S.C.C.	1				
65	362716	. ATTACHMENT / ROUND "W" SHAPE TO FIX COVER	AR				
70	Y2-1828-50	**. ARMREST PASSENGER'S SEAT- "MULTINA"**					
71	Y2-1828-60	**. ACCESSORIES PASSENGER'S SEAT - "MULTINA"**					
80	Call Order Desk	. SEAT FRAME, THREE-PASSENGER	1				P
81	Call Order Desk	. SHROUD, AISLE SIDE, THREE-PASSENGER, RIGHT-	1				P
82	Call Order Desk	. SHROUD, AISLE SIDE, THREE-PASSENGER, LEFT-H	1				P
83	Call Order Desk	. RECLINING LABEL	1				P
84	864792	. RECLINING BUTTON KIT THREE PASSENGER KIT WITH DECAL ABOBE	1				
85	Call Order Desk	. SHROUD, CENTER FRONT, RECLINING BUTTON	1				P
86	Call Order Desk	. SCREW SET HEXS FP M6-1.0x16 M6-1.0x16	1				P
87	Call Order Desk	. RECLINING LEVER, THREE-PASSENGER	1				P
88	Call Order Desk	. RIVET, POP, DOME HD, OE, ALU, 5/32 IN DIA X 504109	2				P
89	Call Order Desk	. SHROUD, CENTER UPPER, REAR	2				P
90	Call Order Desk	. PIN, SPR TNSN, STL, ZN PLD, 5/16 " NOM DIA	1				P
		P) CALL ORDER DESK FOR SPECIFIC APPLICATION					
		(V.I.N.)					

From 5-8579 Up to 6-8906	DATE: 01/2014	PAGE: Y2-1828-05

PASSENGER'S SEAT - "MULTINA"

ITEM	PART	DESCRIPTION	XL45	MTH40	MTH45	MTH45S	NOTE

From 5-8579 Up to 6-8906	DATE: 01/2014	PAGE: Y2-1828-10
PASSENGER'S SEAT - "MULTINA"		

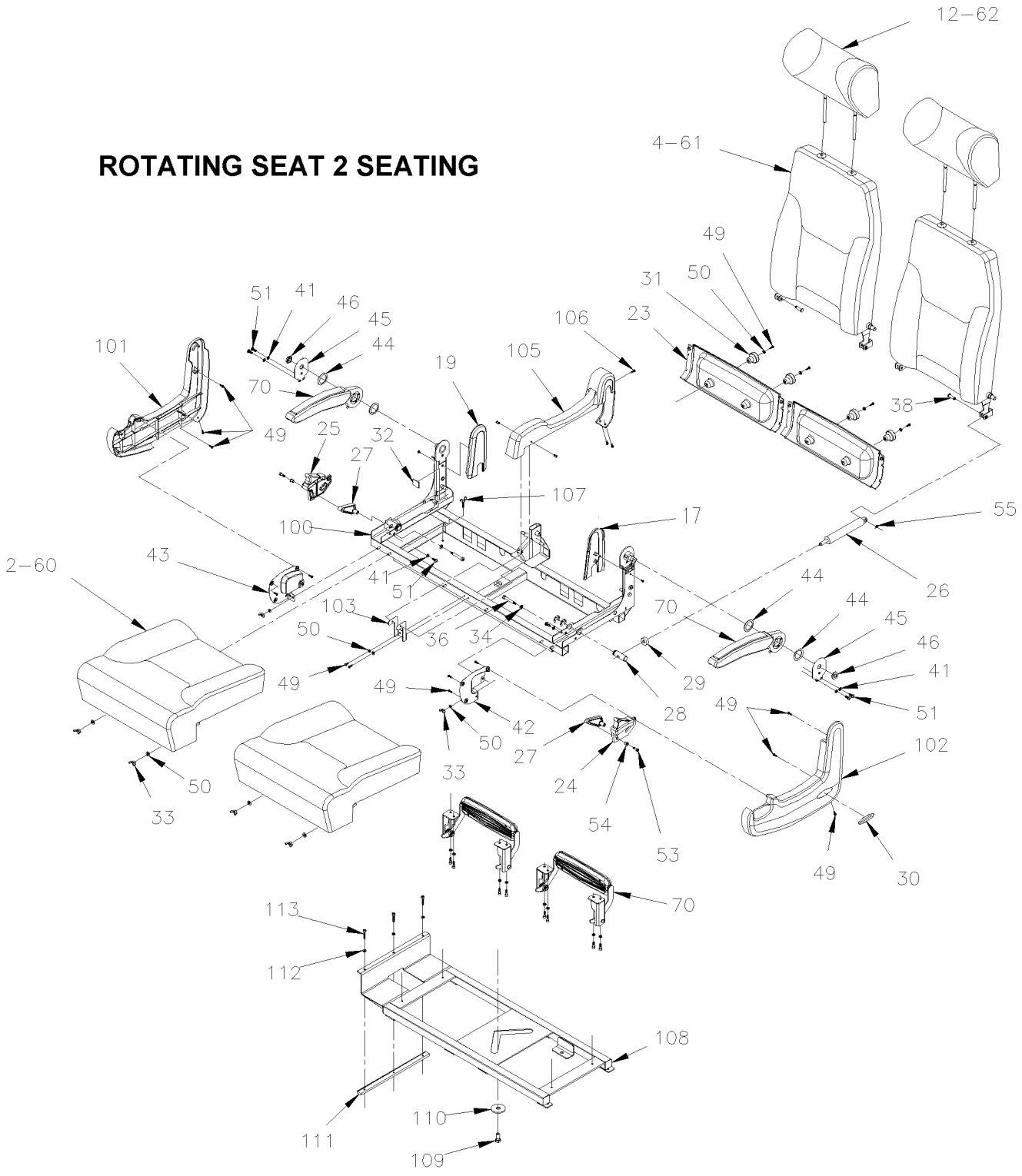

From 5-8579 Up to 6-8906	DATE: 01/2014	PAGE: Y2-1828-10

PASSENGER'S SEAT - "MULTINA"

ITEM	PART	DESCRIPTION	XL45	MTH40	MTH45	MTH45S	NOTE
		"NOTE" - "NOTE" - "NOTE" - "NOTE" - "NOTE"					
		FOR ALLS OTHERS PARTS SEE PAGE Y2-1828-05					
	Y2-1828-05	**PASSENGER'S SEAT - "MULTINA"**					
	Call Order Desk	TWO-PASSENGER ALLEGRO SWIVEL SEAT	AR				P
49	Call Order Desk	. SCREW TA PAN PN #8x5/8 ZP	1				P
50	Call Order Desk	. WASHER FL 6.4x12x1.6 ZP	1				P
70	Y2-1828-50	**. ARMREST PASSENGER'S SEAT- "MULTINA"**					
100	Call Order Desk	. SEAT FRAME, TWO-PASSENGER, SWIVEL	1				P
101	Call Order Desk	. SHROUD, AISLE SIDE, SWIVEL, RIGHT-HAND	1				P
102	Call Order Desk	. SHROUD, AISLE SIDE, SWIVEL, LEFT-HAND	1				P
103	Call Order Desk	. SUPPORT, SWIVEL CENTER SHROUD	1				P
104	Call Order Desk	. RIVET, POP, DOME HD, OE, ALU, 5/32 IN DIA X 504109	2				P
105	Call Order Desk	. SHROUD, SWIVEL CENTER	1				P
106	Call Order Desk	. SCREW TA PAN PH #8x1.00 ZP	1				P
107	Call Order Desk	. SCREW WI M6x16 ZP	4				P
108	Call Order Desk	. BASE FRAME, SWIVEL	1				P
109	Call Order Desk	. SCREW CAP HEXS M12x25 ZP	1				P
110	Call Order Desk	. WASHER FL .531x2.000x.150 ZP	1				P
111	Call Order Desk	. WALL BRACKET, BOTTOM	1				P
112	Call Order Desk	. WASHER LO SPT 6.1 ZP	15				P
113	Call Order Desk	. SCREW MA HEXS M6-1.0x30 ZP	3				P
		P) CALL ORDER DESK FOR SPECIFIC APPLICATION					
		(V.I.N.)					

From 5-8579 Up to 6-8906	DATE: 01/2014	PAGE: Y2-1828-50
ARMREST PASSENGER'S SEAT- "MULTINA"		

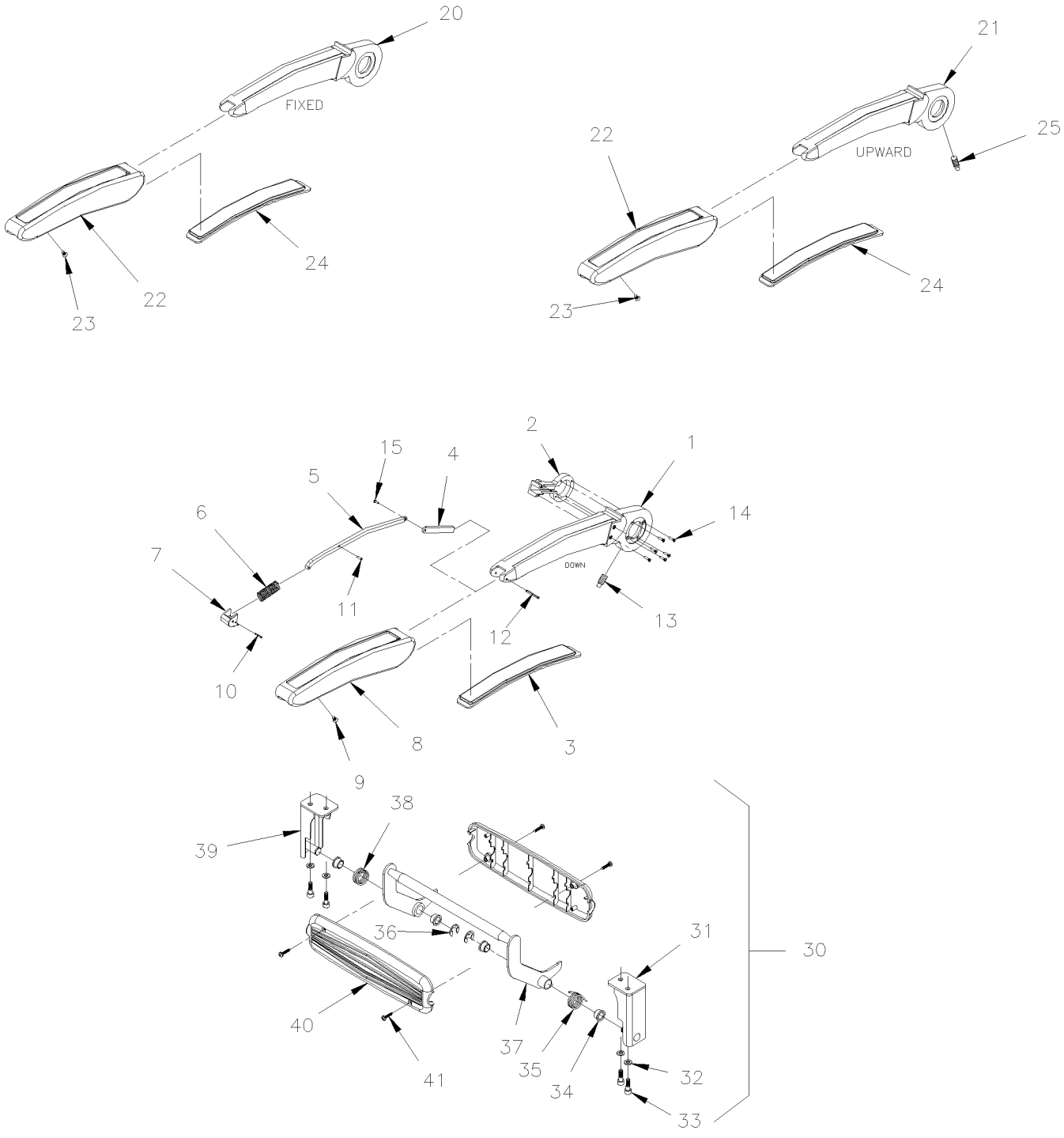

From 5-8579 Up to 6-8906	DATE: 01/2014	PAGE: Y2-1828-50

ARMREST PASSENGER'S SEAT- "MULTINA"

ITEM	PART	DESCRIPTION	XL45	MTH40	MTH45	MTH45S	NOTE
	862845	ARMREST ASSY, DOWNWARD	1				
1	Call Order Desk	. ARMREST FRAME, DOWNWARD	1				P
2	Call Order Desk	. ARMREST STOPPER	1				P
3	Call Order Desk	. ARMREST FOAM INSERT	1				P
4	Call Order Desk	. ARMREST LOCKING REAR PART	1				P
5	Call Order Desk	. RECLINING BUTTON LINK	1				P
6	Call Order Desk	. SPRING, COMP, .600 O.D. x 1.5 x .045	1				P
7	863211	. ARMREST BUTTON	1				
8	Call Order Desk	. COVER, OPEN ARMREST	1				P
9	Call Order Desk	. SCREW TP FL PH #8x1/2 ZP	1				P
10	Call Order Desk	. PIN, SPR TNSN, STL, ZN, 3/32" NOM DIA X 9/1	1				P
11	Call Order Desk	. PIN, SPR TNSN, CS, ZN, 1/8" NOM DIA X 7/8"	1				P
12	Call Order Desk	. PIN, SPR TNSN, STL, ZN, 1/8" NOM DIA X 1 1/	1				P
13	Call Order Desk	. ARMREST PIN STOPPER	1				P
14	Call Order Desk	. SCREW MA FL PH M3-0.5x12 ZP	6				P
15	Call Order Desk	. RIVET, SOLID,FLH,SST, 0.125" X 0.375" LG	1				P
20	862847	ARMREST ASSY, FIXED	1				
21	862846	ARMREST ASSY, UPWARD	1				
22	863182	. COVER, ARMREST	1				
23	Call Order Desk	. SCREW TP FL PH #8x1/2 ZP	1				P
24	Call Order Desk	. ARMREST FOAM INSERT	1				P
25	Call Order Desk	. ARMREST PIN STOPPER	1				P
30	Call Order Desk	FOOTREST ASSEMBLY	1				P
30	Call Order Desk	FOOTREST ASSEMBLY, W/ROTATING SEAT	1				P
31	Call Order Desk	. FOOTREST BRACKET, L.H.	1				P
31	Call Order Desk	. FOOTREST BRACKET, L.H. W/ROTATING SEAT	1				P
32	Call Order Desk	. WASHER LO SPT 6.1 ZP	4				P
33	Call Order Desk	. SCREW CAP HEXS SS M6x18 M6 SS	4				P
34	Call Order Desk	. BEARING, FL PLSTC, 7/16" ID x 9/16" OD x 3/	2				P
35	Call Order Desk	. TORSION SPRING, L.H.	1				P
36	Call Order Desk	. RING, RTNG, EXTL '"E" STYLE, STL ZN PLD, SH	2				P
37	Call Order Desk	. FOOTREST SHAFT ASSEMBLY	1				P
38	Call Order Desk	. TORSION SPRING, R.H.	1				P
39	Call Order Desk	. FOOTREST BRACKET, R.H.	1				P
39	Call Order Desk	. FOOTREST BRACKET, R.H. W/ROTATING SEAT	1				P
40	863391	. FOOTREST PLASTIC CAP	2				
41	Call Order Desk	. SCREW TA PAN PH #6x3/4 ZP	4				P
		P) CALL ORDER DESK FOR SPECIFIC APPLICATION					
		(V.I.N.)					

From 5-8579 Up to 6-8906	DATE: 01/2014	PAGE: Y2-1828-60
ACCESSORIES PASSENGER'S SEAT - "MULTINA"		

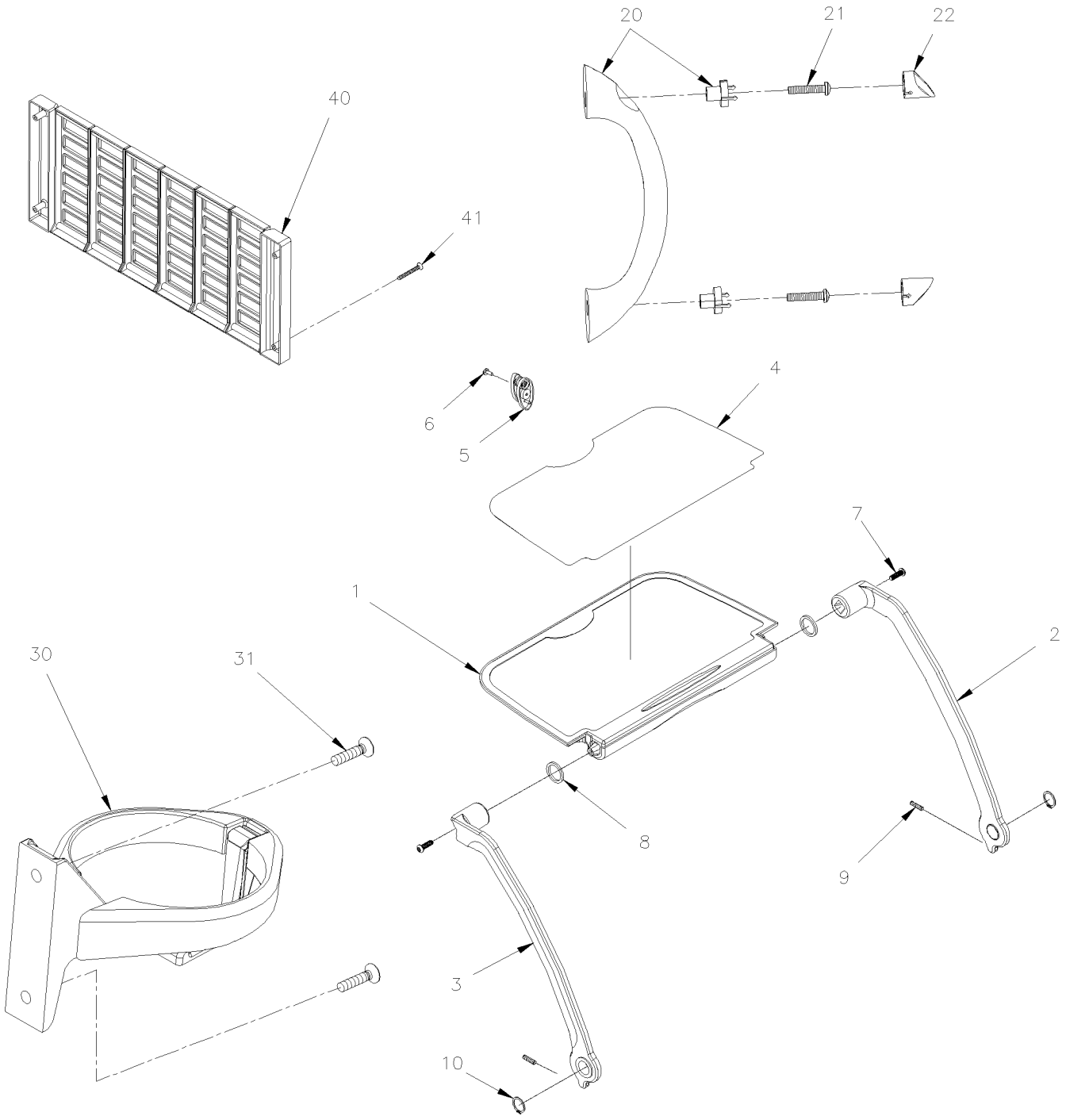

From 5-8579 Up to 6-8906	DATE: 01/2014	PAGE: Y2-1828-60

ACCESSORIES PASSENGER'S SEAT - "MULTINA"

ITEM	PART	DESCRIPTION	XL45	MTH40	MTH45	MTH45S	NOTE
	862841	TRAY TABLE, AIRCRAFT STYLE	1				
1	Call Order Desk	. TRAY TABLE ASSY	1				P
2	Call Order Desk	. TRAY TABLE ARM, LEFT-HAND	1				P
3	Call Order Desk	. TRAY TABLE ARM, RIGHT-HAND	1				P
4	Call Order Desk	. NONE-SLIP BASE	1				P
5	863210	. LATCH, TRAY TABLE	1				
6	Call Order Desk	. SCREW MA PAN PH M3.5-0.6x10 ZP	1				P
7	Call Order Desk	. SCREW CAP BUT HEXS M6x20 SS	2				P
8	Call Order Desk	. VELCRO RING WITH ADHESIVE	2				P
9	Call Order Desk	. SCREW SET HEXS FP M5x0.8x20 M5x0.8x20	2				P
10	Call Order Desk	. RING, RTNG, EXTL, SPR CS, SHAFT DIA 3/4" x	2				P
20	Call Order Desk	GRAB HANDLE LATERAL KIT	1				P
20	Call Order Desk	. GRAB HANDLE , RUSPA TORINO SOFT TOUCH, BLAC	1				P
21	Call Order Desk	. SCREW MA PAN PH M5-0.8x25 ZP	2				P
22	Call Order Desk	. SCREW BUT BK	2				P
		.					
30	862844	CUP HOLDER, RUSPA, BLACK	1				
30	863181	. CUP HOLDER, RUSPA, BLACK	1				
31	863430	SCREW MA PAN PH M3.5-0.6x10 ZP	2				
		.					
40	862842	MAGAZINE RACK / PLASTIC 350MM x 145mm = BLACK 6 BARS	1				
40	Call Order Desk	. MAGAZINE NET, RUSPA, BLACK	1				P
41	863430	SCREW MA PAN PH M3.5-0.6x10 ZP	2				
		P) CALL ORDER DESK FOR SPECIFIC APPLICATION					
		(V.I.N.)					

From Y-7046 Up to 6-8906	DATE: 01/2014	PAGE: Y2-1829-00
ACCESSORIES PASSENGER'S SEAT - "PREVOST"		

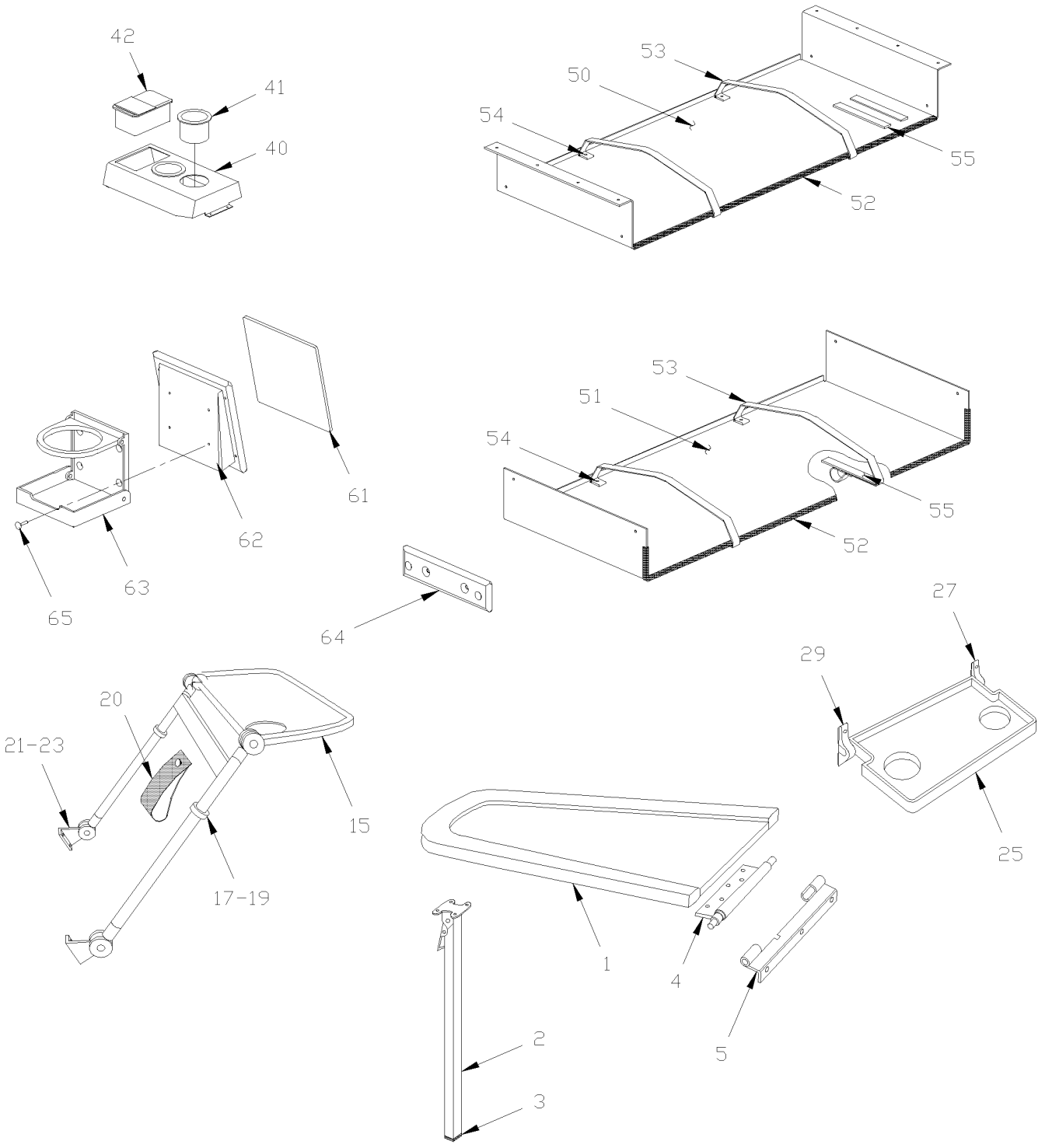

From Y-7046 Up to 6-8906	DATE: 01/2014	PAGE: Y2-1829-00

ACCESSORIES PASSENGER'S SEAT - "PREVOST"

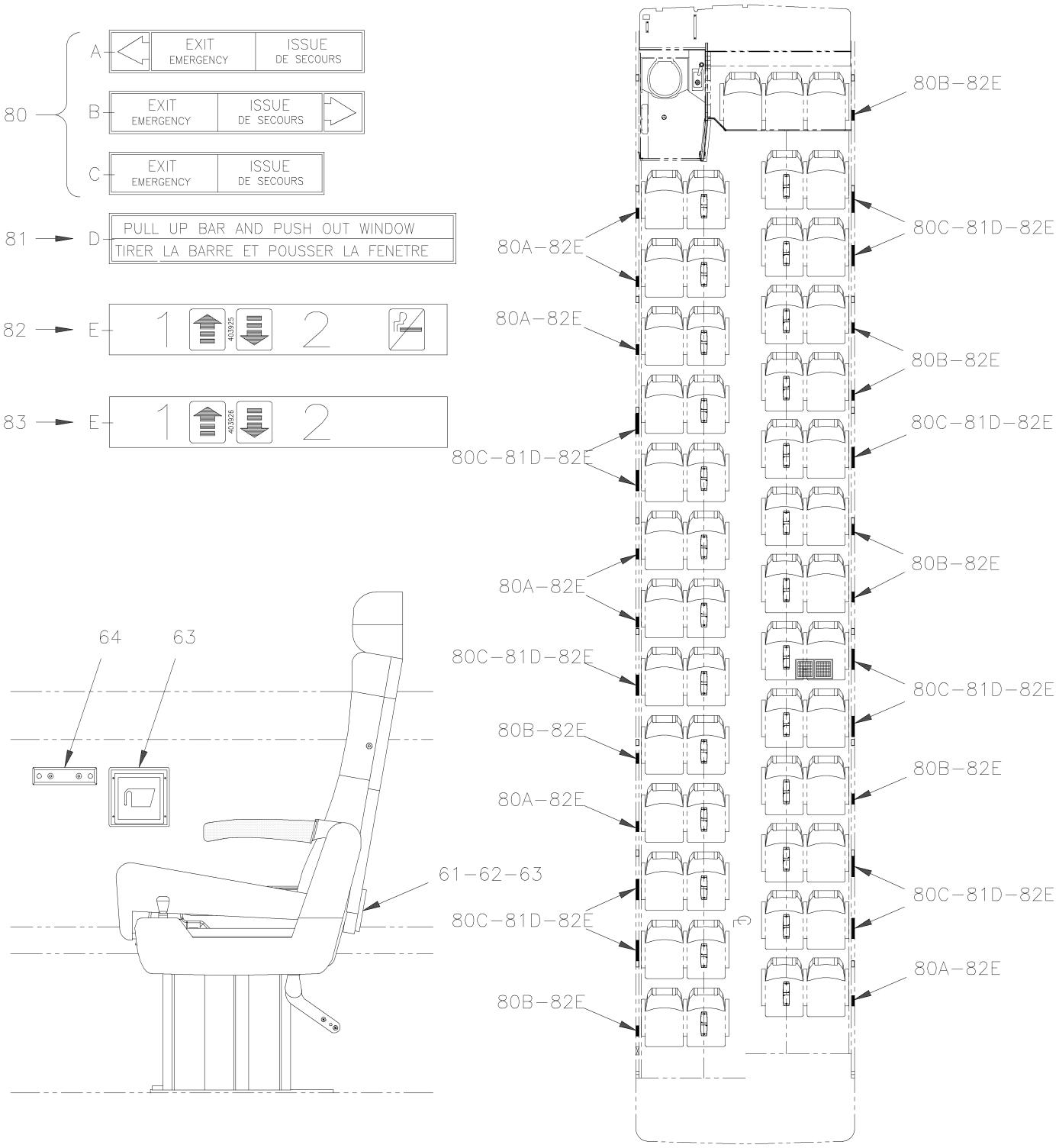

From Y-7046 Up to 6-8906	DATE: 01/2014	PAGE: Y2-1829-00

ACCESSORIES PASSENGER'S SEAT - "PREVOST"

ITEM	PART	DESCRIPTION	XL45	MTH40	MTH45	MTH45S	NOTE
1	362215	TABLE ASSY / "FORMICA" & LEATHERETTE SPECIFY COLOR / REPLACED BY: 363207	1				
1	Call Order Desk	TABLE ASSY / "FORMICA" & LEATHERETTE V.I.P. 2 PASSENGER	1				P
1	Call Order Desk	TABLE ASSY / "FORMICA" & LEATHERETTE V.I.P. 1 PASSENGER	1				P
1	363796	TABLE ASSY / GREY ABS COVERING W/4 GLASS 857MM / REPLACED BY: 364137	1				
1	363795	. COVERING W/4 GLASS HOLDER / MEDIUM GREY 857MM	1				
2	361432	. LEG (MODIFIED) / REPLACED BY: 860333	1				
2	860333	. . LEG 25 1/8" / 639.8MM / REPLACED BY: K860333	1				
3	860718	. . . GLIDE SQUARE END 1 X 1 X TUBE 13 GA / P	1				
4	360255	. HINGE / TABLE SECTION	1				
. A	360620	. . ROD LOCK	1				
. B	363604	. . SPRING COMPRESSION / .500 O.D. x 6.25 x .062	1				
. C	505221	. . SPRING, PIN 1/8 X 3/8	1				
NS	500841	. SCREW TP BDG PH #14x3/4 ZP	9				
NS	506006	. TAPE RUB ADH1 CC POL 3/8" x 1 1/4" x 20' / GREY 2520	AR				
NS	360325	. DECAL "INSTALLATION OF CARD TABLE...." "BILINGUAL"	1				
5	361658	HINGE / WALL SECTION 1 1/8"x1 5/16" ANGLE	1				
NS	360622	ENVELOPE ASSY TABLE	1				
NS	500136	SCREW MA OV PH 1/4-20x1 1/2 SS EMN	3				
NS							
NS		UTILITY TABLE					
NS							
15	363611	TABLE / W/"TOURISMO II" & "ULTRA" / BLACK	1				
15	363423	STRAP / 145MM	1				
15	363464	WASHER RETAINER	1				
15	500583	SCREW TP BDG PH #6x1/2 ZP	1				
17	363036	SPACER	4				
NS	860859	NYLON BUSHING / LOWER HINGE	2				
19	500552	SCREW TP OV PH #6x3/4 ZP	4				
20	363423	STRAP / 145MM	1				
20	363464	WASHER RETAINER	1				
20	500583	SCREW TP BDG PH #6x1/2 ZP	1				
21	502526	SCREW TC BDG PH #12-24x3/4 ZP	4				
23	502646	WASHER LO INT .129x.280x.021 ZP	4				
NS							
NS		UTILITY SHELF / W/"TOURISMO II" & "ULTRA"					
NS							
25	860657	SHELF	1				
27	860659	ATTACHMENT	2				
NS	860892	PIVOT ASSY	2				
29	500871	SCREW TP OV PH #8x1 BK	4				
NS							
NS		V.I.P PASSENGER'S SEAT CENTER CONSOLE					
		P) CALL ORDER DESK FOR SPECIFIC APPLICATION					
		(V.I.N.)					

From Y-7046 Up to 6-8906	DATE: 01/2014	PAGE: Y2-1829-00

ACCESSORIES PASSENGER'S SEAT - "PREVOST"

ITEM	PART	DESCRIPTION	XL45	MTH40	MTH45	MTH45S	NOTE
NS							
40	363519	CENTER CONSOLE V.I.P./ PLAIN	1				
40	363557	CENTER CONSOLE V.I.P./ W/2 GLASS HOLDER	1				
40	363558	CENTER CONSOLE V.I.P./ W/2 GLASS HOLDER & ASHTRAY	1				
40	363608	CENTER CONSOLE V.I.P./ W/2 SELECTOR HEAD SET	1				
40	363983	CENTER CONSOLE V.I.P./ W/2 GLASS HOLDER & 2 SELECTOR HEAD SET	1				
41	900675	GLASS HOLDER, PLASTIC BLACK	1				
42	900518	ASHTRAY	1				
NS							
NS	363079	KIT FOR RETROFIT TABLE / SPACER <> WALL AND STRUCTURE	AR				
. NS	IS-91077	. SEE INSTRUCTION SHEET	1				
50	364021	SUPPORT ASSY CARD TABLE UPPER 900MM	1				
. NS	364020	. SUPPORT UPPER	1				
51	364024	SUPPORT ASSY CARD TABLE LOWER 900MM	1				
. NS	364023	. SUPPORT LOWER	1				
52	506025	. RUBBER CHANNEL / 1/18" x 5/16" INT "U" SHAPE / SQUARE C.T.L.	AR				
53	364022	. STRAP RETAINER	2				
54	504113	. RIVET POP DOME CLE 3/16x1/4 AL	2				
55	506756	. VELCRO / LOOP ADHESIF 1" x 75'	AR				
61	363897	PLATE	AR				
62	363518	SUPPORT	AR				
63	900527	GLASS HOLDER	AR				
63	900788	GLASS HOLDER / REPLACED BY: 900527	AR				
NS	860642	GLASS HOLDER / W/"AMAYA" / W/2 HOLES FOR SCREW / REPLACED BY: 861923	1				
64	860875	TRASH BAG, SUPPORT / BLACK FIXED TO WALL	AR				
64	863976	TRASH BAG, SUPPORT / GREY FIXED TO WALL	AR				
NS	861107	TRASH BAG / BOX OF 5000	AR				
65	502664	SCREW TP PAN PH #8x1 SS EMN	4				
80	400543	DECAL, "EMERGENCY EXIT" W/RED ARROW / ENGLISH & FRENCH	AR				
81	400544	DECAL "PULL UP BAR & PUSH OUT WINDOW"	AR				
82	403925	DECAL SEAT EVEN-NUMBERED ON AISLE / 1-60 / NO SMOKING / REPLACED BY: K403925	1				
82	403928	DECAL SEAT ODD & EVEN NUMBERED ON AISLE / 1-6 / NO SMOKING / REPLACED BY: K403928	1				
83	403926	DECAL SEAT ODD-NUMBERED ON AISLE / 1-60 / REPLACED BY: K403926	1				
83	403927	DECAL SEAT ODD & EVEN NUMBERED ON AISLE / 1-6 / REPLACED BY: K403927	1				
NS	405211	DECAL / "WARNING …LOWER THE ARMREST / ENGLISH & FRENCH	1				
NS	405649	DECAL / "WARNING …LOWER THE ARMREST / ENGLISH & SPANISH	1				

From Y-7046 Up to 6-8906	DATE: 01/2014	PAGE: Y2-1832-00

FRONT FINISHING CAP - BUS

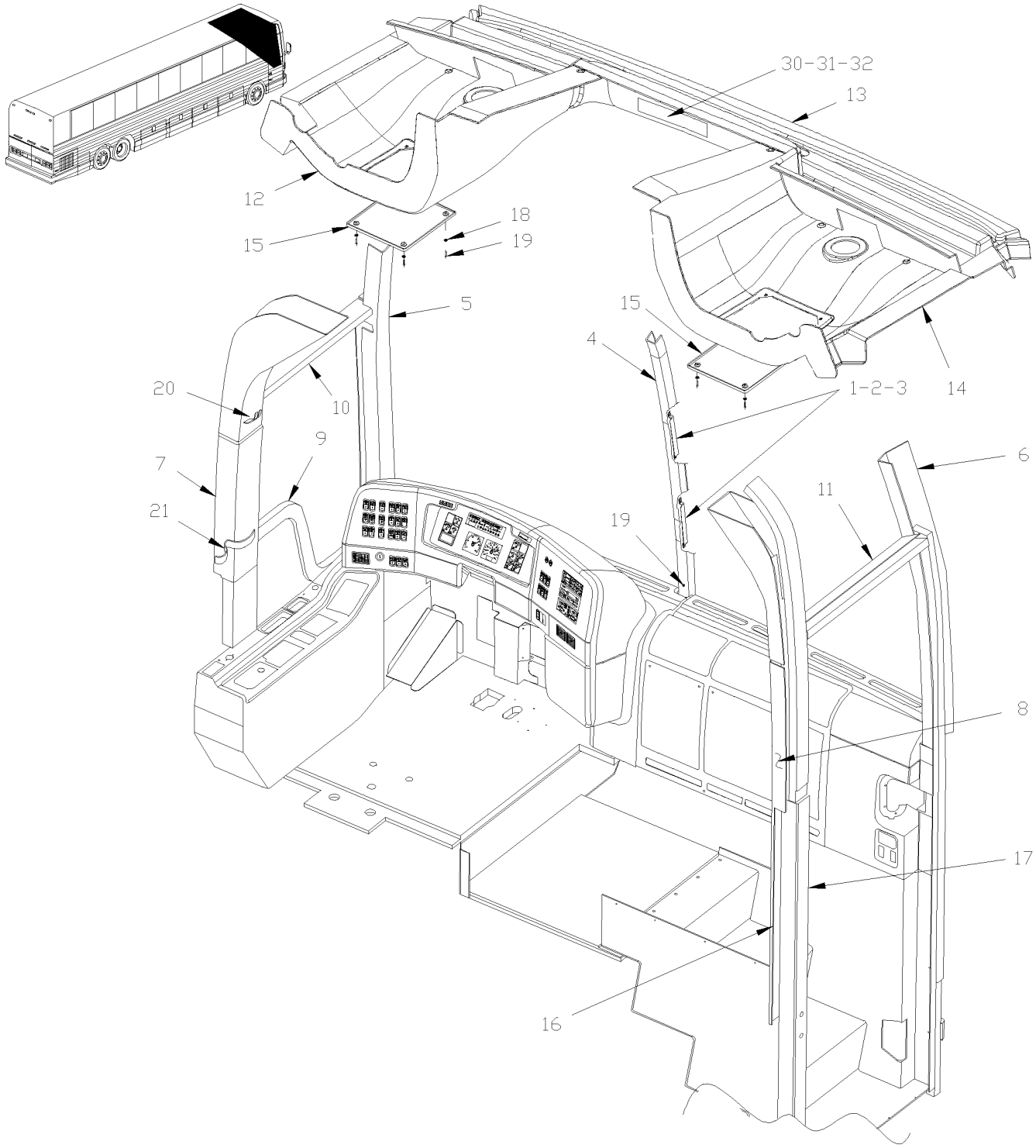

From Y-7046 Up to 6-8906	DATE: 01/2014	PAGE: Y2-1832-00

FRONT FINISHING CAP - BUS

ITEM	PART	DESCRIPTION	XL45	MTH40	MTH45	MTH45S	NOTE
1	326744	CENTRAL MOULDING SUPPORT	6				
2	502531	SCREW CAP HEX M6-1.0x16 G8.8 ZP	6				
3	502511	NUT HEX NYRT M6-1.0 ZP	6				
4	327142	CENTER MOULDING / W/WINDSHIELD 86" Up to Y-7133	1				
4	327351	CENTER MOULDING From Y-7134 Up to Y-7220 / REPLACED BY: 327370	1				
4	327370	CENTER MOULDING From Y-7221	1				
5	327042	FINISHING MOULDING L.H. WINDSHIELD	1				
6	327000	FINISHING MOULDING R.H. WINDSHIELD	1				
7	327187	L.H. MOULDING	1				
8	327186	R.H. MOULDING	1				
NS	500463	WASHER FN CKF .187x.500x.090 BR NP	AR				
NS	500552	SCREW TP OV PH #6x3/4 ZP	AR				
9	326741	FINISHING MOULDING SERVICE DOOR	1				
10	327135	UPPER MOULDING SERVICE DOOR Up to 2-7768	1				
10	327681	UPPER MOULDING SERVICE DOOR From 2-7768	1				
11	327134	UPPER MOULDING ENTRANCE DOOR	1				
12	341060	TRANSITION CEILING FRONT LEFT Up to 2-7892 / REPLACED BY: 341099	1				
12	341099	TRANSITION CEILING FRONT LEFT From 2-7893	1				
13	341061	TRANSITION CEILING Up to 3-8132	1				
13	327136	TRANSITION CEILING From 3-8133 Up to 3-8212	1				
13	341101	TRANSITION CEILING PANEL / W/FAN INSTALLATION From 4-8213	1				
14	341062	TRANSITION CEILING FRONT RIGHT Up to 2-7892 / REPLACED BY: 341100	1				
14	341100	TRANSITION CEILING FRONT RIGHT From 2-7893	1				
15	341070	ACCESS PANEL CEILING FRONT	2				
NS	500563	NUT SPR U #8-32 .094-.125	8				
16	327214	R.H. MOULDING	1				
17	327213	R.H. MOULDING	1				
18	500464	WASHER FN CKF .210x.540 SS	AR				
19	500626	SCREW TP OV PH #8x3/4 ZP	AR				
NS	502741	NUT AN #8 NYL	8				
20	900297	HOOK / COAT	1				
NS	500633	SCREW CAP HEX 5/16-24x7/8 G5 ZP	1				
NS	405052	SUPPORT / REINFORCEMENT REAR OF CAP	1				
NS	504340	RIVET POP DOME OE 1/8x3/16 SS	2				
21	409105	STRAP ASSY	1				
NS	5001055	NUT WELL M4-0.7x14.5	2				
NS	500345	WASHER FN CKF .187x.500x.090 BR BK	2				
NS	5001429	SCREW MA FL PH M4-0.7x25 EMN	2				
30	405425	DECAL MOUNTING PLATE / 275MM X 46MM Up to 5-8605 / REPLACED BY: 405707	1				
30	405707	DECAL MOUNTING PLATE / 250MM X 46MM From 5-8606	1				
31	404636	DECAL / "WATCH YOUR STEP" Up to 5-8605 / REPLACED BY: 405708	1				
31	405708	DECAL / "WATCH YOUR STEP" From 5-8606 Up to 6-8843	1				
31	409155	DECAL / "WATCH YOUR STEP" From 6-8844	1				
31	404637	DECAL / "ATTENTION À LA MARCHE" / BILINGUAL Up to 5-8456 / REPLACED BY: 409156	1				

From Y-7046 Up to 6-8906	DATE: 01/2014	PAGE: Y2-1832-00

FRONT FINISHING CAP - BUS

ITEM	PART	DESCRIPTION	XL45	MTH40	MTH45	MTH45S	NOTE
31	405689	DECAL / "ATTENTION À LA MARCHE" / BILINGUAL From 5-8457 Up to 5-8605 / REPLACED BY: 409156	1				
31	405709	DECAL / "ATTENTION À LA MARCHE" / BILINGUAL From 5-8606 Up to 6-8843 / REPLACED BY: 409156	1				
31	409156	DECAL / "ATTENTION À LA MARCHE" / BILINGUAL From 6-8844	1				
31	405648	DECAL / "WATCH YOUR STEP" / "CUINDADO CON EL Up to 5-8605	1				
31	405710	DECAL / "WATCH YOUR STEP" / "CUINDADO CON EL From 5-8606 Up to 6-8843	1				
31	409157	DECAL / "WATCH YOUR STEP" / "CUINDADO CON EL ENG & SPANISH From 6-8844	1				
32	504108	RIVET POP DOME OE 1/8x1/2 AL	2				
NS	500437	WASHER FL .125x.375x.040 ZP	2				

From Y-7046 Up to 6-8906	DATE: 01/2014	PAGE: Y2-1832-00

FRONT FINISHING CAP - BUS

ITEM	PART	DESCRIPTION	XL45	MTH400	MTH445	MTH445S	NOTE

From Y-7046 Up to 8-9339	DATE: 01/2014	PAGE: Y2-1832-50

FRONT FINISHING CAP - MTH

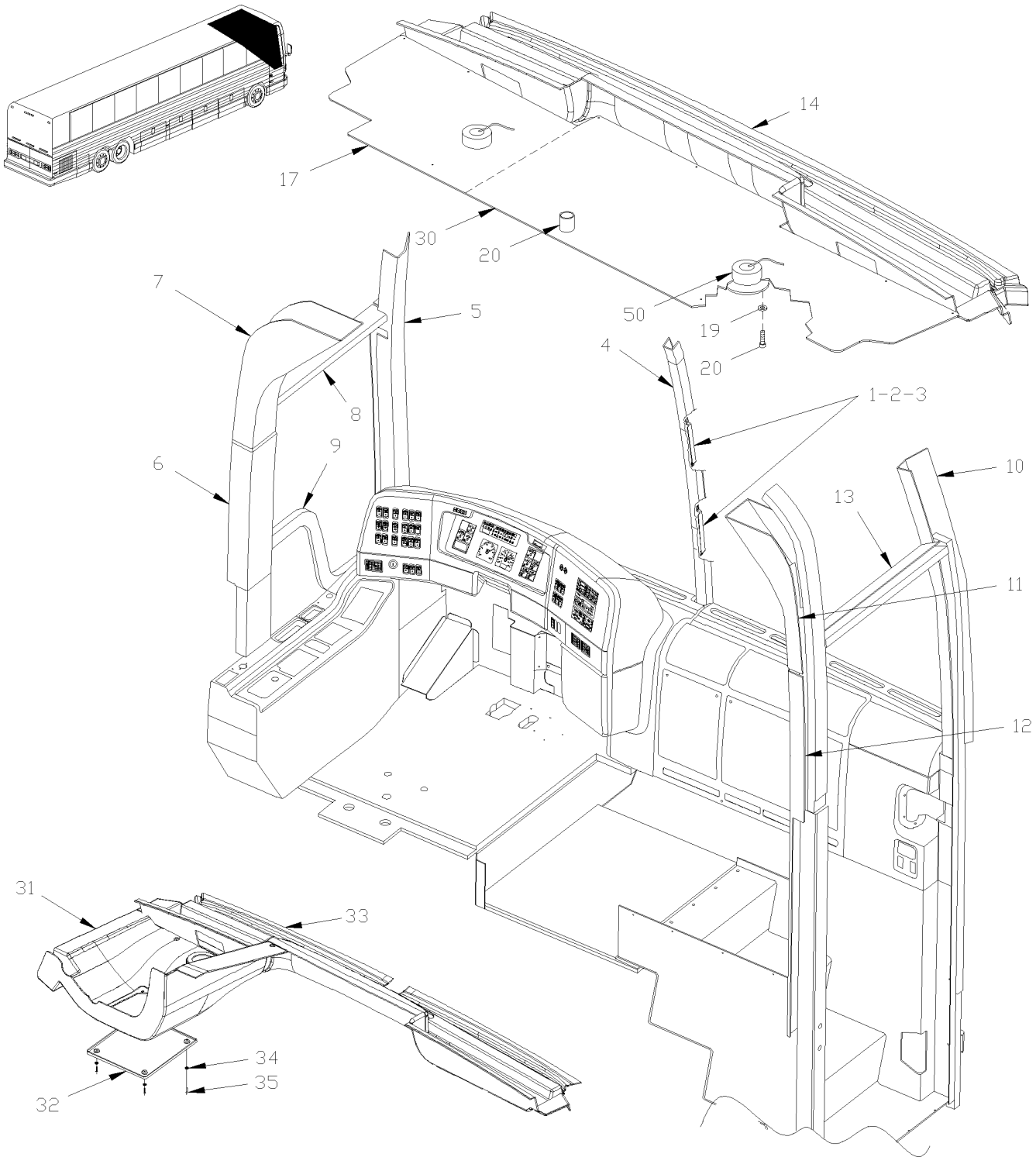

From Y-7046 Up to 8-9339	DATE: 01/2014	PAGE: Y2-1832-50

FRONT FINISHING CAP - MTH

ITEM	PART	DESCRIPTION	XL45	MTH40	MTH45	MTH45S	NOTE
1	326744	CENTRAL MOULDING SUPPORT		6	6	6	
2	502531	SCREW CAP HEX M6-1.0x16 G8.8 ZP		6	6	6	
3	502511	NUT HEX NYRT M6-1.0 ZP		12	12	12	
4	327147	CENTER MOULDING / W/WINDSHIELD 83" Up to Y-7128		1	1		
4	327142	CENTER MOULDING / W/WINDSHIELD 86"		1	1	1	
5	327145	L.H. MOULDING / WINDSHIELD / 83" Up to Y-7128		1	1		
5	327140	L.H. MOULDING / WINDSHIELD / 86"		1	1	1	
5	327182	L.H. MOULDING / WINDSHIELD 89"				1	
6	327144	L.H. MOULDING / 83" Up to Y-7128		1	1		
6	327139	L.H. MOULDING / 86"		1	1	1	
6	327563	L.H. MOULDING / 86"		1	1	1	A
6	327180	L.H. MOULDING / 89"				1	
6	327654	L.H. MOULDING / 89" Up to 3-8130				1	A
6	328012	L.H. MOULDING / 89" From 3-8131				1	
6	328013	L.H. MOULDING / 89" From 3-8131				1	A
7	327029	UPPER FINISHING MOULDING L.H.		1	1	1	
8	327135	UPPER MOULDING SERVICE DOOR		1	1	1	
9	326741	FINISHING MOULDING SERVICE DOOR		1	1	1	B
9	327179	FINISHING MOULDING SERVICE DOOR		1	1	1	C
10	327146	R.H. MOULDING / WINDSHIELD / 83" Up to Y-7128		1	1		
10	327141	R.H. MOULDING / WINDSHIELD / 86"		1	1	1	
10	327183	R.H. MOULDING / WINDSHIELD 89"				1	
11	327030	UPPER FINISHING MOULDING R.H.		1	1	1	
12	327143	R.H. MOULDING / 83" Up to Y-7128		1	1		
12	327138	R.H. MOULDING / 86"		1	1	1	
12	327181	R.H. MOULDING / 89"				1	
12	327655	R.H. MOULDING / 89"				1	A
13	327134	UPPER MOULDING ENTRANCE DOOR		1	1	1	
14	327136	TRANSITION CEILING		1	1		
14	327136	TRANSITION CEILING Up to 3-8130				1	
15	500463	WASHER FN CKF .187x.500x.090 BR NP		36	36	36	
16	500552	SCREW TP OV PH #6x3/4 ZP		36	36	36	
17	327137	TRANSITION CEILING PANEL		1	1		
17	327137	TRANSITION CEILING PANEL Up to 2-7891				1	
17	327825	TRANSITION CEILING PANEL From 2-7892 Up to 3-8130				1	
18	500436	SCREW TP OV PH #10x2 ZP		AR	AR	AR	
19	500465	WASHER FN CKF .278x.729x.119 SS		AR	AR	AR	
20	504586	WASHER SPACER, NYLON .625 O.D.X.450		AR	AR	AR	
30	327993	TRANSITION CEILING PANEL From 3-8131				1	
31	341099	TRANSITION CEILING FRONT LEFT From 3-8131				1	
32	341070	ACCESS PANEL CEILING FRONT From 3-8131				1	
		A) WITHOUT CUT AWAY FOR WINDOW CLEARENCE					
		B) MTH 83"					
		C) MTH 86" & MTH 89"					

From Y-7046 Up to 8-9339	DATE: 01/2014	PAGE: Y2-1832-50

FRONT FINISHING CAP - MTH

ITEM	PART	DESCRIPTION	XL45	MTH40	MTH45	MTH45S	NOTE
33	327992	TRANSITION CEILING From 3-8131				1	
34	500464	WASHER FN CKF .210x.540 SS From 3-8131				4	
35	500626	SCREW TP OV PH #8x3/4 ZP From 3-8131				4	
50	Y2-0665-00	**ENGINE COMPARTMENT - ELECTRIC COMPONENTS**					

From Y-7046 Up to 8-9339	DATE: 01/2014	PAGE: Y2-1832-50

FRONT FINISHING CAP - MTH

ITEM	PART	DESCRIPTION	XL45	MTH400	MTH445	MTH445S	NOTE

From Y-7046 Up to 6-8906	DATE: 01/2014	PAGE: Y2-1833-00

WINDOW FINISHING CAP & WALL

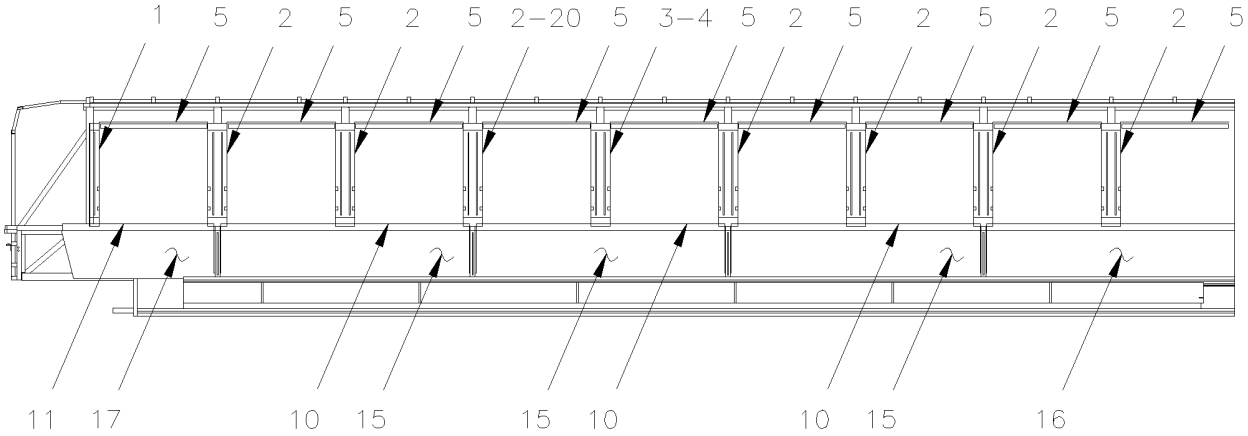

LEFT SIDE

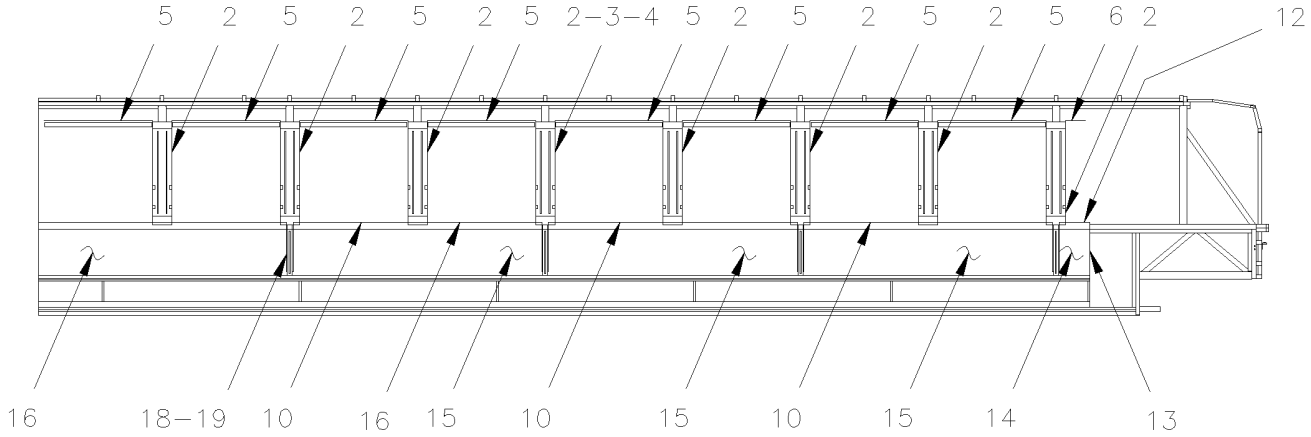

RIGHT SIDE

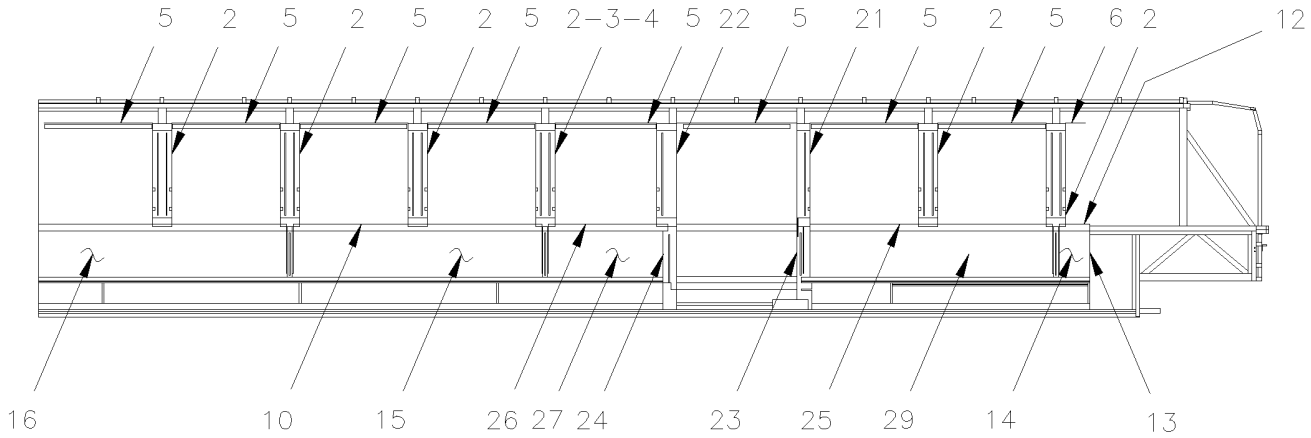

RIGHT SIDE WITH W.C.L.

From Y-7046 Up to 6-8906	DATE: 01/2014	PAGE: Y2-1833-00
WINDOW FINISHING CAP & WALL		

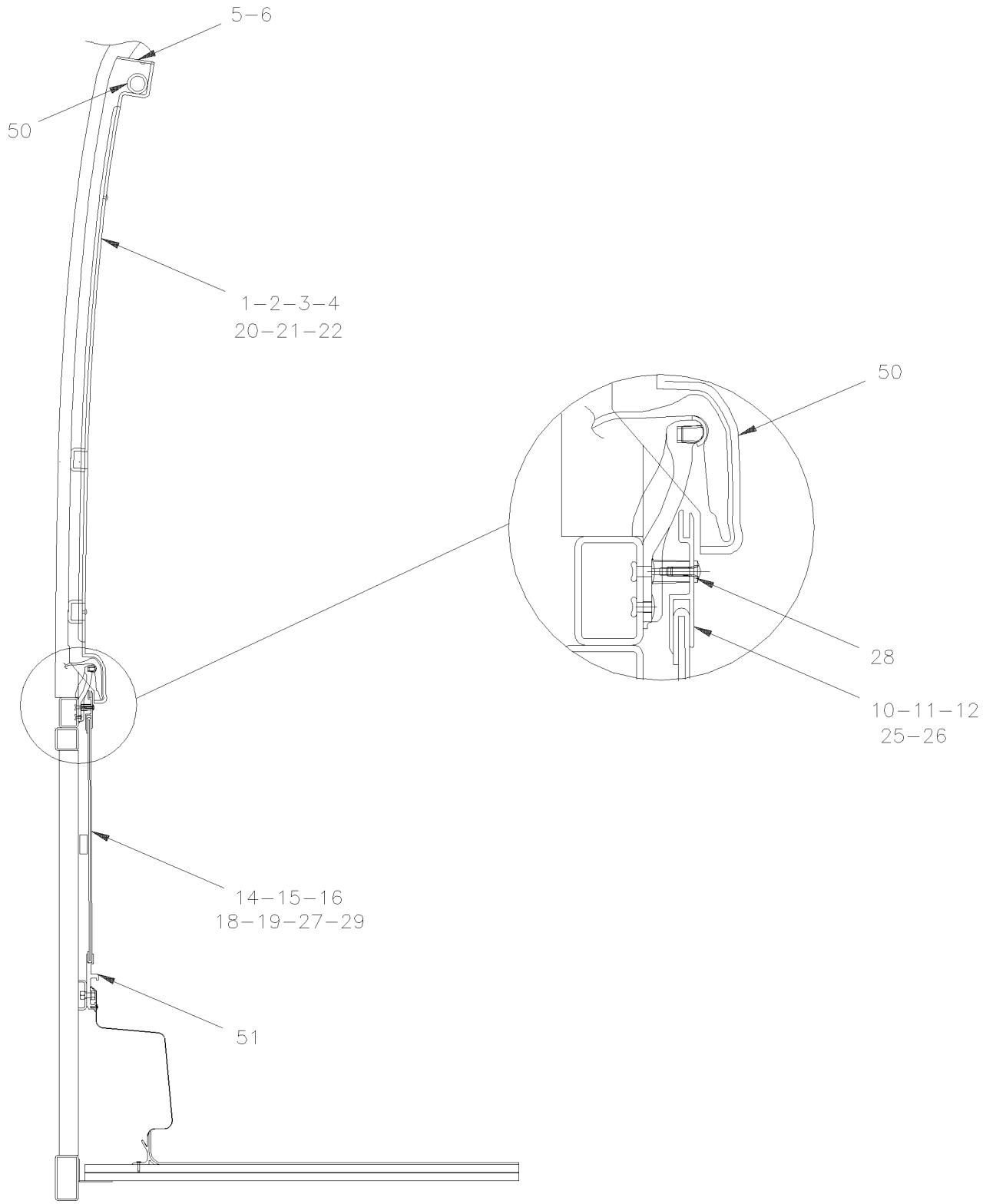

From Y-7046 Up to 6-8906	DATE: 01/2014	PAGE: Y2-1833-00

WINDOW FINISHING CAP & WALL

ITEM	PART	DESCRIPTION	XL45	MTH40	MTH45	MTH45S	NOTE
1	327109	CAP FINISHING / POST / W/S. GLASS & SUN SHADE	1				
1	327103	CAP FINISHING / POST / W/S. GLASS	1				
1	327108	CAP FINISHING / POST / W/T. GLASS & SUN SHADE	1				
1	327102	CAP FINISHING / POST / W/T. GLASS	1				
2	327107	CAP FINISHING / POST / W/S. GLASS & SUN SHADE	1				
2	327071	CAP FINISHING / POST / W/S. GLASS	1				
2	327106	CAP FINISHING / POST / W/T. GLASS & SUN SHADE	1				
2	327070	CAP FINISHING / POST / W/T. GLASS	1				
3	327105	CAP FINISHING / POST / W/S. GLASS	1				A
3	327109	CAP FINISHING / POST / W/S. GLASS & SUN SHADE Up to Y-7310	1				A
3	327111	CAP FINISHING / POST / W/S. GLASS & SUN SHADE	1				A
3	327104	CAP FINISHING / POST / W/T. GLASS	1				A
3	327110	CAP FINISHING / POST / W/T. GLASS & SUN SHADE From Y-7311	1				A
4	327171	CAP FINISHING / UPPER POST	2				A
NS	405067	DECAL / BLACK STRIP 3 1/2" x 46"	1				A,B
5	327098	FINISHING MOULDING / UPPER WINDOW W/T.GLASS / 60mm x 1108mm Up to 2-7787	16				
5	327100	FINISHING MOULDING / UPPER WINDOW W/S.GLASS / 77mm x 1108mm Up to 2-7787	16				
5	320139	FINISHING MOULDING / UPPER WINDOW / 40mm x 1108mm From 2-7788	16				
6	327099	FINISHING MOULDING / UPPER WINDOW W/T.GLASS / 60mm x 230mm Up to 2-7787	1				
6	327101	FINISHING MOULDING / UPPER WINDOW W/S.GLASS / 77mm x 230mm Up to 2-7787	1				
6	320138	FINISHING MOULDING / UPPER WINDOW / 40mm x 230mm From 2-7788	1				
10	293293	EXTRUSION, UPPER WALL 2548MM	6				
11	293294	EXTRUSION, UPPER WALL 1526MM	1				
12	293295	EXTRUSION, UPPER WALL 0293MM	1				
13	506035	TAPE RUB ADH1 NEO 1/2" x 1" x 15' / BLACK 1220X	AR				
14	Call Order Desk	PANEL ASSY / FABRIC	1				P
14	Call Order Desk	PANEL ASSY / CARPET	1				P
14	Call Order Desk	PANEL ASSY / FORMICA	1				P
15	Call Order Desk	PANEL ASSY / FABRIC	6				P
15	Call Order Desk	PANEL ASSY / CARPET	6				P
15	Call Order Desk	PANEL ASSY / FORMICA	6				P
16	327263P	PANEL ASSY / FABRIC	2				
16	Call Order Desk	PANEL ASSY / CARPET	2				P
16	Call Order Desk	PANEL ASSY / FORMICA	2				P
17	Call Order Desk	PANEL ASSY / FABRIC	1				P
17	Call Order Desk	PANEL ASSY / CARPET	1				P
17	Call Order Desk	PANEL ASSY / FORMICA	1				P
18	327024	EXTRUSION, WALL SEPARATOR 427.5MM	8				
19	322871	WOOD SPACER 1/2" X 32MM X 32MM	90				
		P) CALL ORDER DESK FOR SPECIFIC APPLICATION					
		(V.I.N.)					
		A) WITH A/C IN PARCEL RACK					
		B) UPPER WINDOW					

From Y-7046 Up to 6-8906	DATE: 01/2014	PAGE: Y2-1833-00

WINDOW FINISHING CAP & WALL

ITEM	PART	DESCRIPTION	XL45	MTH40	MTH45	MTH45S	NOTE
20	327410	CAP FINISHING / POST / W/S. GLASS Up to 6-8802 / REPLACED BY: 329325	1				W
20	329325	CAP FINISHING / POST / W/S. GLASS From 6-8803	1				W
20	327414	CAP FINISHING / POST / W/S. GLASS & SUN SHADE Up to 6-8802 / REPLACED BY: 329324	1				W
20	329324	CAP FINISHING / POST / W/S. GLASS & SUN SHADE From 6-8803	1				W
20	327411	CAP FINISHING / POST / W/T. GLASS Up to 6-8802 / REPLACED BY: 329327	1				W
20	329327	CAP FINISHING / POST / W/T. GLASS From 6-8803	1				W
20	327412	CAP FINISHING / POST / W/T. GLASS & SUN SHADE Up to 6-8802 / REPLACED BY: 329326	1				W
20	329326	CAP FINISHING / POST / W/T. GLASS & SUN SHADE From 6-8803	1				W
21	327409	CAP FINISHING / POST / W/S. GLASS	1				W
21	327407	CAP FINISHING / POST / W/S. GLASS & SUN SHADE	1				W
21	327408	CAP FINISHING / POST / W/T. GLASS	1				W
21	327406	CAP FINISHING / POST / W/T. GLASS & SUN SHADE	1				W
22	327404	CAP FINISHING / POST / W/S. GLASS	1				W
22	327402	CAP FINISHING / POST / W/S. GLASS & SUN SHADE	1				W
22	327405	CAP FINISHING / POST / W/T. GLASS	1				W
22	327401	CAP FINISHING / POST / W/T. GLASS & SUN SHADE	1				W
22	405143	DECAL / BLACK STRIP W/DOTTED 1117MM x 118MM	1				
23	327433	MOLDING, FINISHING	1				
24	327432	MOLDING, FINISHING	1				
25	293506	EXTRUSION, UPPER WALL 2481MM	1				
26	293505	EXTRUSION, UPPER WALL 1214MM	1				
27	327424P	PANEL LOWER WALL	1				
27	Call Order Desk	PANEL LOWER WALL	1				P
27	Call Order Desk	PANEL LOWER WALL	1				P
28	500611	SCREW TC BDG PH #10-24x1/2 ZP	AR				
29	Call Order Desk	PANEL ASSY / FABRIC	1				P
29	Call Order Desk	PANEL ASSY / CARPET	1				P
29	Call Order Desk	PANEL ASSY / FORMICA	1				P
50	Y2-1884-00	**SIDE WINDOW - BUS**					
51	Y2-2221-00	**UNDER FLOOR AIR DUCTING**					
		P) CALL ORDER DESK FOR SPECIFIC APPLICATION					
		(V.I.N.)					
		W) WITH W.C.L.					

From Y-7046 Up to 8-9339	DATE: 01/2014	PAGE: Y2-1834-00
REAR FINISHING CAP		

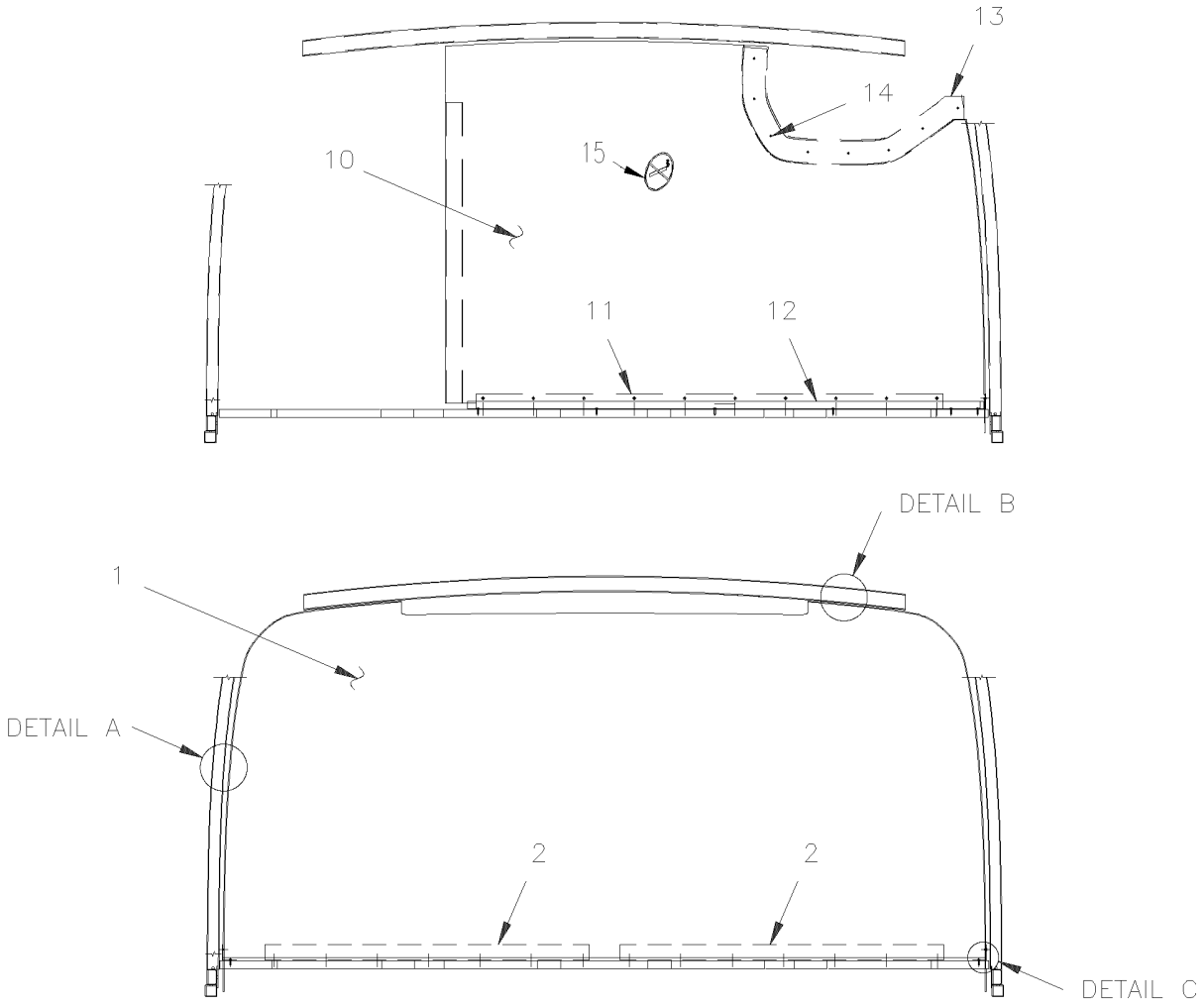

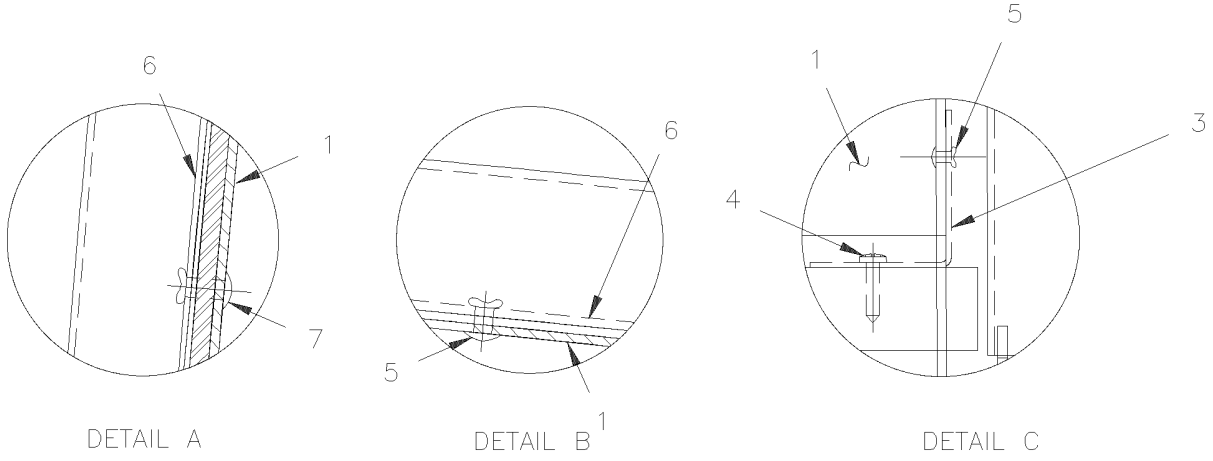

From Y-7046 Up to 8-9339	DATE: 01/2014	PAGE: Y2-1834-00

REAR FINISHING CAP

ITEM	PART	DESCRIPTION	XL45	MTH40	MTH45	MTH45S	NOTE
1	341011	CAP, REAR / FIBERGLASS LIGHT GREY MTH 83" Up to Y-7128			1		
1	341038	CAP, REAR / FIBERGLASS CHARCOAL MTH 83" Up to Y-7128			1		
1	341028	CAP, REAR / FIBERGLASS LIGHT GREY MTH 83" Up to Y-7128		1			
1	341036	CAP, REAR / FIBERGLASS CHARCOAL MTH 83" Up to Y-7128		1			
1	341012	CAP, REAR / FIBERGLASS LIGHT GREY MTH 86"			1	1	
1	341039	CAP, REAR / FIBERGLASS CHARCOAL MTH 86"			1	1	
1	341029	CAP, REAR / FIBERGLASS LIGHT GREY MTH 86"		1			
1	341037	CAP, REAR / FIBERGLASS CHARCOAL MTH 86"		1			
1	341080	CAP, REAR / FIBERGLASS MTH 89"				1	
2	341045	ANGLE 45MM X 50MM X 1040MM		2	2	2	
3	341046	ANGLE 50MM X 50MM X 315MM		2	2	2	
4	500641	SCREW TP BDG PH #8x3/4 ZP		24	24	24	
4	500592	SCREW TP FL PH #8x1 ZP Up to 6-8906	14				
5	504121	RIVET POP DOME OE 1/4x1/4 AL		AR	AR	AR	
6	506466	TAPE RUB ADH1 CC POL 1/16" x 1 1/2" x 100 / GREY 2520		AR	AR	AR	
7	504132	RIVET POP DOME OE 1/4x1/2 MNL		5	5	5	
10	341033	CAP, REAR / FIBERGLAS WITH TISSUS Up to 6-8906	1				
10	341027	CAP, REAR / FIBERGLAS LIGHT GREY Up to 6-8906	1				
10	341098	CAP, REAR / FIBERGLAS LIGHT GREY / W/O LAVATORY Up to 6-8906	1				
11	341043	ANGLE 45MM X 50MM X 1500MM Up to 6-8906	1				
12	341058	FINISHING ANGLE 344MM X 1660MM Up to 6-8906	1				
13	327032	FINISHING CAP / PLASTIC / PARCEL RACK CONTOUR Up to 6-8906	1				
14	504108	RIVET POP DOME OE 1/8x1/2 AL Up to 6-8906	6				
15	405178	MOUNTING PLATE 228MM x 228MM SS Up to 6-8906	1				
NS	500339	SCREW MA RND PH #6-32x3/4 SS Up to 6-8906	4				
NS	500286	NUT WELL #6-32x.437 Up to 6-8906	4				
15	901026	DECAL / "NO SMOKING" / 4" O.D. Up to 6-8906	1				

From Y-7046 Up to 6-8906	DATE: 01/2014	PAGE: Y2-1836-00
PARCEL RACK		

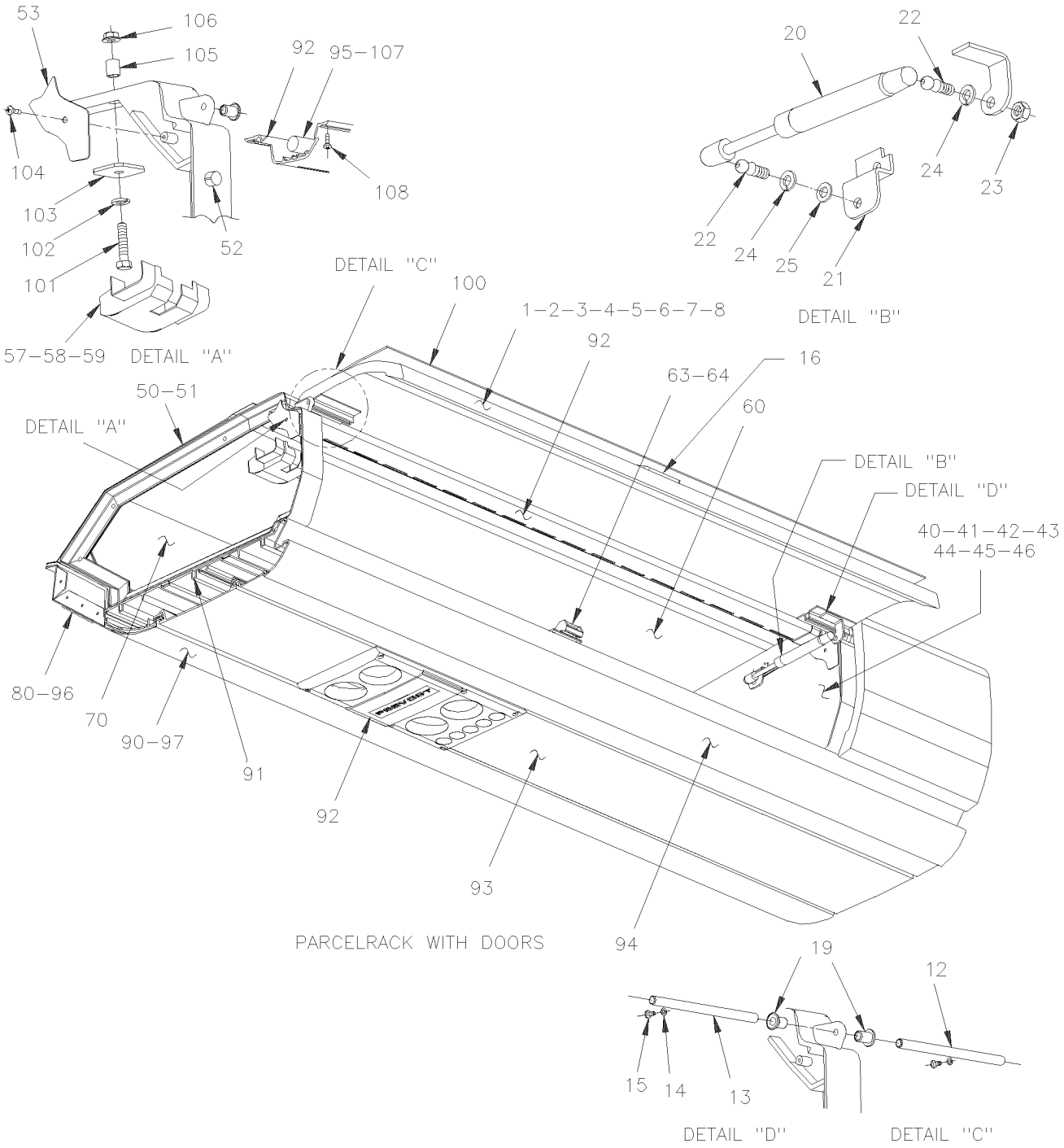

From Y-7046 Up to 6-8906	DATE: 01/2014	PAGE: Y2-1836-00
PARCEL RACK		

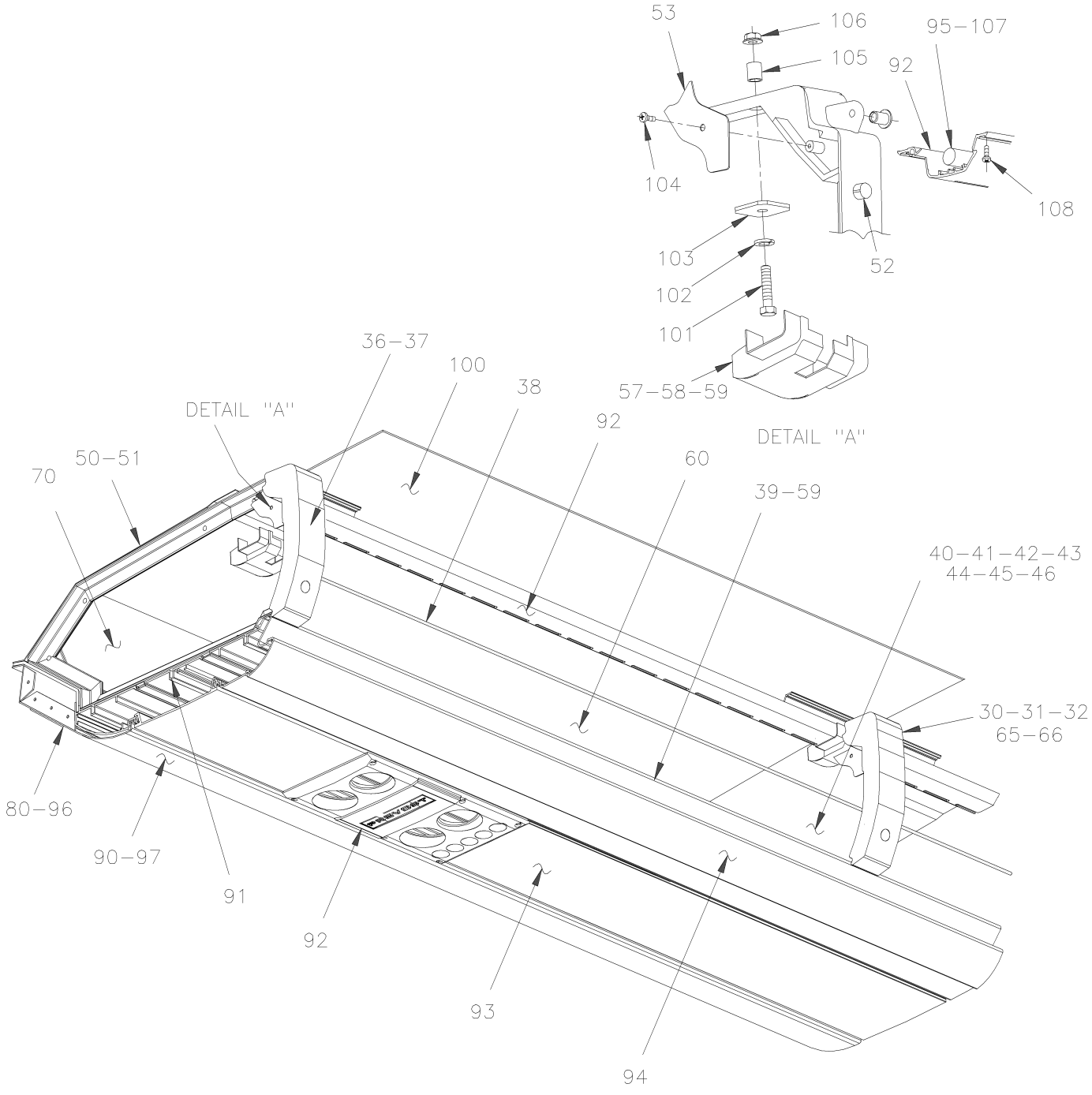

PARCELRACK WITH CORD

From Y-7046 Up to 6-8906	DATE: 01/2014	PAGE: Y2-1836-00
PARCEL RACK		

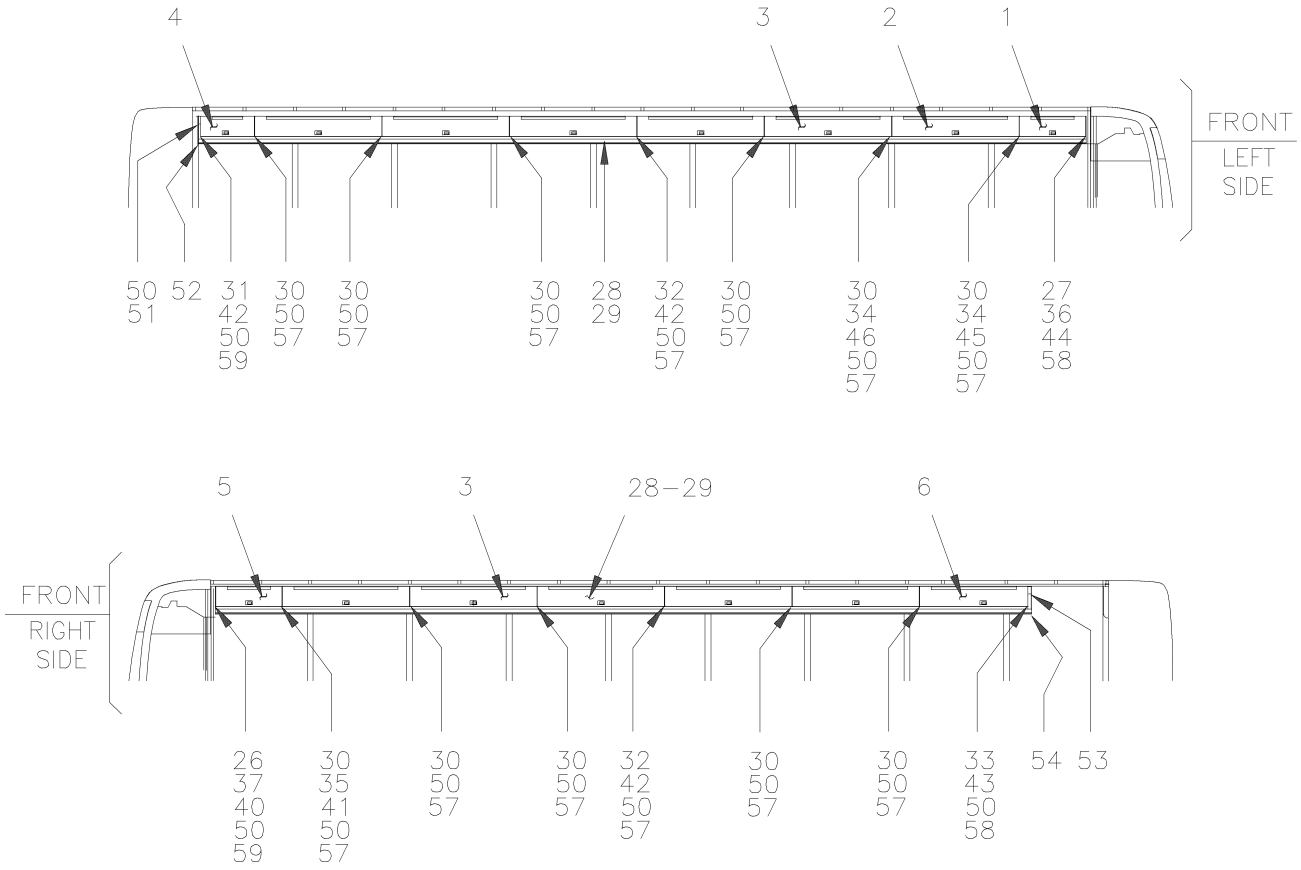

XL2−45

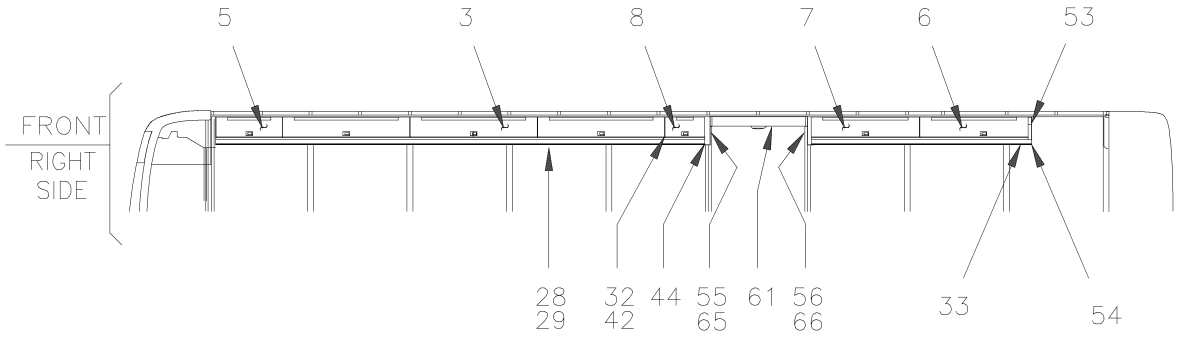

XL2−45 WITH "RICON"

From Y-7046 Up to 6-8906	DATE: 01/2014	PAGE: Y2-1836-00

PARCEL RACK

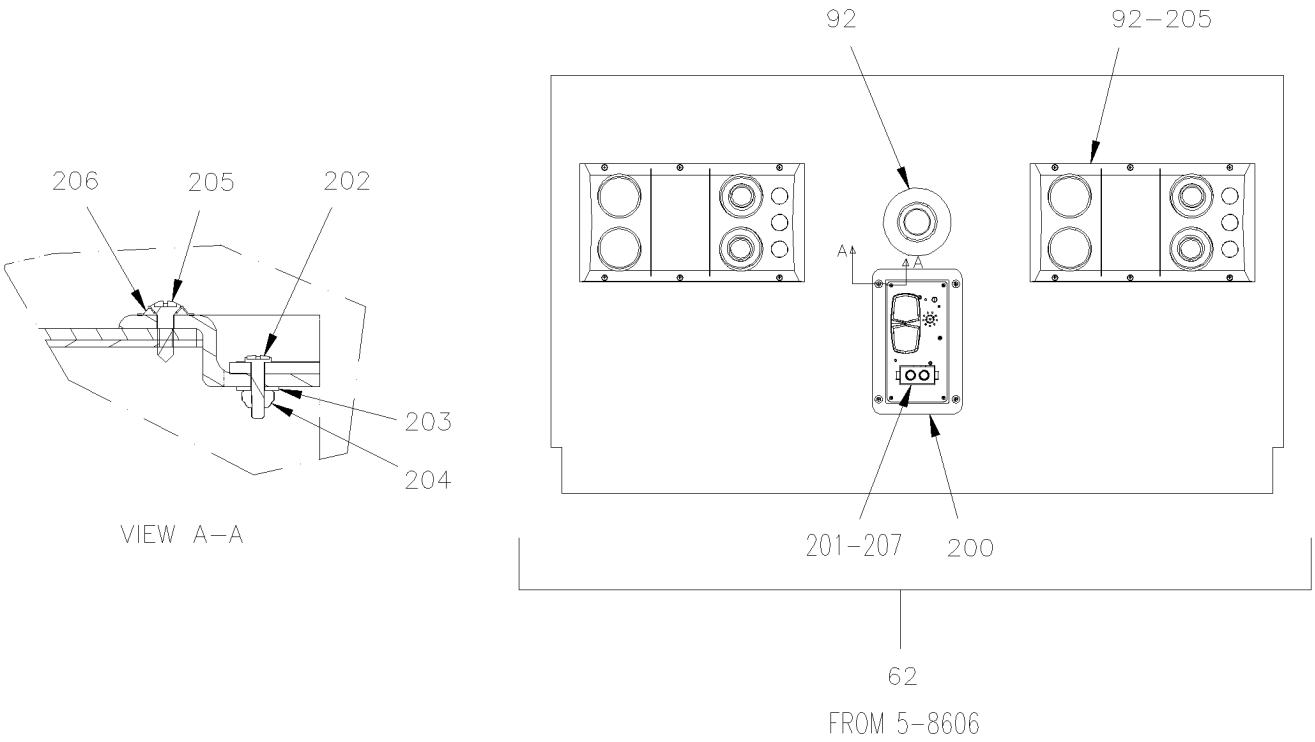

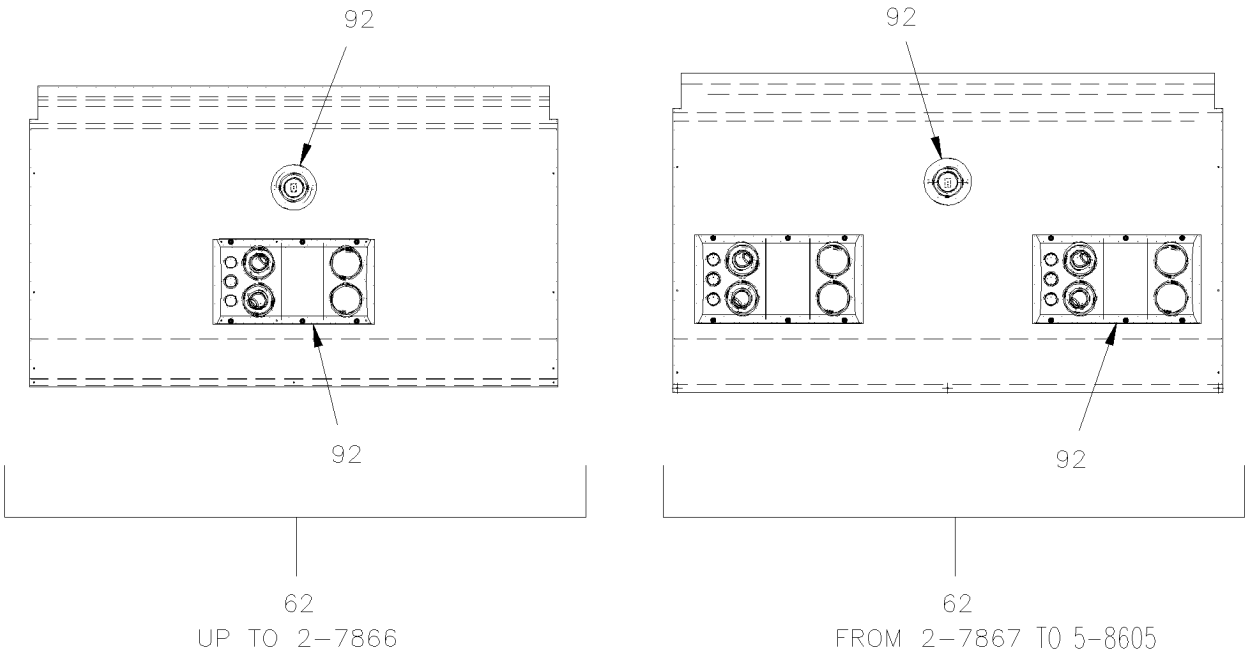

From Y-7046 Up to 6-8906	DATE: 01/2014	PAGE: Y2-1836-00

PARCEL RACK

ITEM	PART	DESCRIPTION	XL45	MTH40	MTH45	MTH45S	NOTE
1	313315	DOOR, PARCEL RACK / 864MM L.H. Up to 3-8012 / REPLACED BY: 313508	1				M
1	313508	DOOR, PARCEL RACK / 860MM L.H. From 3-8013	1				
2	313485	DOOR, PARCEL RACK / 1654MM STD. W/LOCK Up to 3-8012 / REPLACED BY: 313510	1				M
2	313510	DOOR, PARCEL RACK / 1654MM STD. W/LOCK From 3-8013	1				
3	313314	DOOR, PARCEL RACK / 1654MM Up to 3-8012 / REPLACED BY: 313506	10				M
3	313506	DOOR, PARCEL RACK / 1654MM From 3-8013	10				
4	313254	DOOR, PARCEL RACK / 701MM L.H. Up to 3-8012 / REPLACED BY: 313503	1				M
4	313503	DOOR, PARCEL RACK / 701MM From 3-8013	1				
5	313321	DOOR, PARCEL RACK / 861MM R.H. Up to 3-8012 / REPLACED BY: 313507	1				M
5	313507	DOOR, PARCEL RACK / 860MM R.H. From 3-8013	1				
5	313322	DOOR, PARCEL RACK / 861MM R.H. W/LOCK Up to 3-8012 / REPLACED BY: 313505	1				
5	313505	DOOR, PARCEL RACK / 860MM R.H. W/LOCK From 3-8013	1				
6	313255	DOOR, PARCEL RACK / 1410MM Up to 3-8012 / REPLACED BY: 313497	1				M
6	313497	DOOR, PARCEL RACK / 1410MM From 3-8013	1				
7	313464	DOOR, PARCEL RACK / 1410MM Up to 3-8012 / REPLACED BY: 313668	1				M
7	313668	DOOR, PARCEL RACK / 1410MM From 3-8013	1				
8	313465	DOOR, PARCEL RACK / 516MM Up to 3-8012 / REPLACED BY: 313669	1				M
8	313669	DOOR, PARCEL RACK / 516MM From 3-8013	1				
12	312993	PIVOT ROD 3 1/8" Up to 3-8012	1				M
12	313677	PIVOT ROD 3" From 3-8013	1				
13	313273	PIVOT ROD 6" Up to 3-8012	1				B
13	313676	PIVOT ROD 6" From 3-8013	1				
14	500240	WASHER LO EXT .195x.410x.025 ZP	1				
15	5001036	SCREW MA PAN PH M4-0.7x10 ZP	1				
16	810092	HANDLE	1				
16	810093	HANDLE W/LOCK	1				
. NS	810104	. KEY (7216)	1				
NS	313532	COVER DOOR HANDLE PARCEL RACK NSS From 3-8013	1				
NS	500557	SCREW MA PAN PH #8-32x3/8 SS From 3-8013	2				
19	313285	BUSHING NYLON FLANGE / 8.5 I.D. X 13.6 O.D. O	AR				
NS	5001481	SPACER NYLON .323 I.D. X .750 O.D. X .125	AR				
20	980020	CYLINDER GAZ / 244/164MM C/C / 35LBS	15				
21	312841	SUPPORT, CYLINDER DOOR	15				
22	980015	BALL STUD / W/10MM X M8-1.25 / 29.18MM	AR				
23	980016	NUT, CYLINDER RETAINER	AR				
24	502509	WASHER LO INT 8.4x15.0x0.8 ZP	1				
25	500874	WASHER FL 8.4x17.0x1.6 ZP	1				
26	312904	SUPPORT FRONT R.H. / "C" FORM 390MM	1				
27	312902	SUPPORT FRONT L.H. / "C" FORM 390MM	1				
		B) INCLUDE ALLS ITEMS 200 TO 207					
		M) SEE MAINTENANCE INFORMATION MI03-02					

From Y-7046 Up to 6-8906	DATE: 01/2014	PAGE: Y2-1836-00

PARCEL RACK

ITEM	PART	DESCRIPTION	XL45	MTH40	MTH45	MTH45S	NOTE
28	312930	COVER / L.H. SIDE OF VENTILATOR BOX	2				
29	312929	COVER / FRONT OF VENTILATOR BOX	2				
30	312648	PILAR COVERING	10				
32	312964	PILAR COVERING	2				
33	313536	PILAR COVERING	1				
34	312920	FINISHING CAP L.H. / FRONT OF P.R.	2				
35	312938	FINISHING CAP R.H. / FRONT OF P.R.	2				
36	312965	PILAR COVERING R.H.	1				
37	312966	PILAR COVERING L.H.	1				
38	312659	CORD, RUBBER 359"	11				
38	312658	CORD, RUBBER 434"	1				
. NS	506066	. CORD, RUBBER EXTRUSION NEO 7/16" O.D. / C.T.L.	AR				
38	312755	CORD, RUBBER 253"	1				
. NS	506066	. CORD, RUBBER EXTRUSION NEO 7/16" O.D. / C.T.L.	AR				
38	313448	CORD, RUBBER 111"	1				
. NS	506066	. CORD, RUBBER EXTRUSION NEO 7/16" O.D. / C.T.L.	AR				
NS	506066	CORD, RUBBER EXTRUSION NEO 7/16" O.D. / C.T.L.	AR				
NS	504452	CLAMP "E-Z CLIP" / "TUBE-O" / 7/16" / HC9-7	AR				
39	312984	EDGE MOULDING GREY 1600MM	11				
39	312985	EDGE MOULDING GREY 785MM	2				
39	313193	EDGE MOULDING GREY 616MM	1				
39	313195	EDGE MOULDING GREY 1324.5MM	1				
40	312905	COVER / PLAIN / W/CORD / REPLACED BY: 316664	1				
40	312595	COVER L.H. ASSY / W/LIGHT	1				
. NS	312593	. COVER L.H. / W/LIGHT HOLE	1				
41	312594	COVER L.H. / PLAIN	1				
41	312905	COVER / PLAIN / W/CORD / REPLACED BY: 316664	1				
42	312905	COVER / PLAIN / W/CORD / REPLACED BY: 316664	3				
42	312595	COVER L.H. ASSY / W/LIGHT	3				
. NS	312593	. COVER L.H. / W/LIGHT HOLE	1				
43	312514	COVER R.H. / PLAIN OFFSET W/CORD GREY	1				
43	313542	COVER R.H. / PLAIN OFFSET / W/DOOR	1				
44	312906	COVER / PLAIN / W/CORD / REPLACED BY: 316667	1				
44	312516	COVER R.H. ASSY / W/LIGHT	1				
. NS	312515	. COVER R.H. / W/LIGHT HOLE	1				
45	312906	COVER / PLAIN / W/CORD / REPLACED BY: 316667	1				
46	312596	COVER R.H. / PLAIN	1				
46	312906	COVER / PLAIN / W/CORD / REPLACED BY: 316667	1				
50	313287	SUPPORT, PARCEL RACK Up to 2-7740 / REPLACED BY: 315887	17				

From Y-7046 Up to 6-8906	DATE: 01/2014	PAGE: Y2-1836-00

PARCEL RACK

ITEM	PART	DESCRIPTION	XL45	MTH40	MTH45	MTH45S	NOTE
50	312921	SUPPORT, PARCEL RACK From 2-7741 Up to 3-7942 / REPLACED BY: 315887	17				
50	315887	SUPPORT, PARCEL RACK From 3-7943	17				
51	313402	FINISHING CAP L.H. / FRONT OF P.R.	1				
52	313467	FINISHING CAP L.H. / UNDER OF P.R. Up to Y-7670	1				
52	313615	FINISHING CAP L.H. / UNDER OF P.R. From 1-7671	1				
53	313401	FINISHING CAP R.H. / FRONT OF P.R.	1				
54	313468	FINISHING CAP R.H. / UNDER OF P.R.	1				
55	313537	COVER R.H. END CLOSING	1				
56	313538	COVER L.H. END CLOSING	1				
57	312509	COVER FINISHING PILAR LIGHTING MODULE	13				
58	312446	COVER FINISHING PILAR L.H. LIGHTING MODULE	2				
59	312508	COVER FINISHING PILAR R.H. LIGHTING MODULE	2				
60	312477	CEILING PANEL #1 R.H.	1				
60	313207	CEILING PANEL #7 R.H.	1				
60	313226	CEILING PANEL #8 L.H.	1				
60	313343	CEILING PANEL #4 R.H. & #5 L.H. W/A/C PARCEL	1				
60	313429	CEILING PANEL #5 R.H. / W/"RICON"	1				
60	313430	CEILING PANEL #6 R.H. / W/"RICON"	1				
NS	312243	INSULATING / <> TOP PANEL & STRUCTURE	AR				
60	500964	WASHER FL .203x.500x.047 ZP	AR				
60	500654	SCREW TC BDG PH #8-32x1/2 ZP	AR				
62	Call Order Desk	CEILING PANEL ASSY W/1 READING LIGHT Up to 2-7866	1				P
62	315885P	CEILING PANEL ASSY W/2 READING LIGHT From 2-7867 Up to 5-8605	1				
62	Call Order Desk	CEILING PANEL ASSY W/2 READING LIGHT W/LED From 2-7867 Up to 5-8605	1				P
62	Call Order Desk	CEILING PANEL ASSY W/2 READING LIGHT From 5-8606	1				P B
62	Call Order Desk	CEILING PANEL ASSY W/2 READING LIGHT W/LED From 5-8606	1				P B
63	312812	CATCH Up to 2-7764 / REPLACED BY: 313667	15				
63	313624	CATCH From 2-7765 Up to 3-8012 / REPLACED BY: 313667	15				
63	313667	CATCH From 3-8013	15				
64	500638	SCREW TP BDG PH #8x1/2 ZP	2				
NS	500470	WASHER LO SPT .193x.334x.047 ZP	AR				
65	313625	PILAR COVERING / FRONT W.C.L. DOOR	1				
66	313626	PILAR COVERING / BACKWARD W.C.L. DOOR	1				
70	312553P	PANEL, INTERIOR ASSY 868MM	1				
70	312456P	PANEL, INSIDE 1657MM	1				
70	Call Order Desk	PANEL, INSIDE 1657MM	1				P
70	Call Order Desk	PANEL, INSIDE #7 R.H. 1411MM	1				P
70	Call Order Desk	PANEL, INSIDE #8 L.H.	1				P
70	313437P	PANEL, INSIDE #5 R.H. / W/"RICON"	1				
		P) CALL ORDER DESK FOR SPECIFIC APPLICATION					
		(V.I.N.)					
		B) INCLUDE ALLS ITEMS 200 TO 207					

From Y-7046 Up to 6-8906	DATE: 01/2014	PAGE: Y2-1836-00

PARCEL RACK

ITEM	PART	DESCRIPTION	XL45	MTH40	MTH45	MTH45S	NOTE
70	313431P	PANEL, INSIDE #6 R.H. / W/"RICON"	1				
80	312427P	PANEL ASSY #1 WHITOUT SPEAKER HOLES	1				
80	312429P	PANEL ASSY #2,3,4,5 & 6 L.H. & R.H.	9				
80	Call Order Desk	PANEL ASSY #7 R.H.	1				P
80	Call Order Desk	PANEL ASSY #8 L.H. Up to Y-7670	1				P
80	Call Order Desk	PANEL ASSY #8 L.H. From 1-7671	1				P
80	312428P	PANEL ASSY #1 W/SPEAKER HOLE	1				
80	313434P	PANEL ASSY # 5 R.H./ W/"RICON"	1				
80	313433P	PANEL ASSY # 6 R.H./ W/"RICON"	1				
90	312371	EXTRUSION, ALUMINUM 6395MM / C.T.L.	1				
90	312528	EXTRUSION, REAR, ALUMINIUM 5850MM	1				
90	313228	EXTRUSION, REAR, ALUMINIUM 5685 MM	1				
90	313425	EXTRUSION, REAR, ALUMINIUM 2825 MM	1				
90	313427	EXTRUSION, REAR, ALUMINIUM 6370 MM	1				
90	313223	EXTRUSION, REAR, ALUMINIUM 4733 MM	1				
90	312528	EXTRUSION, REAR, ALUMINIUM 5850MM	1				
90	312530	EXTRUSION, REAR, ALUMINIUM 5773MM	1				
90	312532	EXTRUSION, ALUMINUM 6395 MM	1				
90	312534	EXTRUSION, REAR, ALUMINIUM 4448 MM	1				
90	312535	EXTRUSION, REAR, ALUMINIUM 6450MM	1				
90	312536	EXTRUSION, REAR, ALUMINIUM 3913MM	1				
90	313228	EXTRUSION, REAR, ALUMINIUM 5685 MM	1				
90	313425	EXTRUSION, REAR, ALUMINIUM 2825 MM	1				
90	313427	EXTRUSION, REAR, ALUMINIUM 6370 MM	1				
90	313223	EXTRUSION, REAR, ALUMINIUM 4733 MM	1				
NS	312511	PLATE, JUNCTION / EXTRUSION RETAINER	2				
91	312372	EXTRUSION, ALUMINUM 6395MM / C.T.L.	1				
91	312525	EXTRUSION, ALUMINIUM 5850MM	2				
91	313225	EXTRUSION, ALUMINUM 4733 MM	1				
91	313227	EXTRUSION, ALUMINIUM 5685 MM	1				
91	313426	EXTRUSION, ALUMINUM 6370 MM Up to 1-7615	1				
91	313580	EXTRUSION, ALUMINUM 6370 MM From 1-7616	1				
91	312525	EXTRUSION, ALUMINIUM 5850MM	1				
91	312526	EXTRUSION, ALUMINUM 5773MM	1				
91	312527	EXTRUSION, ALUMINUM 6395MM	1				
91	312531	EXTRUSION, ALUMINUM 6450MM Up to 1-7615	1				
91	313582	EXTRUSION, ALUMINUM 6450MM From 1-7616	1				
91	312533	EXTRUSION, ALUMINUM / 3913MM Up to 1-7615	1				
91	313583	EXTRUSION, ALUMINUM 3913 MM From 1-7616	1				
		P) CALL ORDER DESK FOR SPECIFIC APPLICATION					
		(V.I.N.)					

From Y-7046 Up to 6-8906	DATE: 01/2014	PAGE: Y2-1836-00

PARCEL RACK

ITEM	PART	DESCRIPTION	XL45	MTH40	MTH45	MTH45S	NOTE
91	312538	EXTRUSION, ALUMINUM 5148MM	1				
91	313227	EXTRUSION, ALUMINIUM 5685 MM	1				
91	313424	EXTRUSION, ALUMINUM / 2825MM Up to 1-7615	1				
91	313579	EXTRUSION, ALUMINUM 2825 MM From 1-7616	1				
91	313426	EXTRUSION, ALUMINUM 6370 MM	1				
91	313225	EXTRUSION, ALUMINUM 4733 MM	1				
92	Y2-0655-00	**INTERIOR LIGHTING**					
93	Call Order Desk	PANEL 427MM	1				P
93	312721P	PANEL 279MM	1				
93	312722P	PANEL 605MM	1				
93	312723P	PANEL 525MM	1				
93	312724P	PANEL 343MM	1				
93	312725P	PANEL 510MM	1				
93	Call Order Desk	PANEL 366MM	1				P
93	312728P	PANEL 500MM	1				
93	312729P	PANEL 356MM	1				
93	312730P	PANEL 478MM	1				
93	Call Order Desk	PANEL 631MM	1				P
93	312733P	PANEL 447MM	1				
93	Call Order Desk	PANEL 299MM	1				P
93	312735P	PANEL 402MM	1				
93	Call Order Desk	PANEL 248MM	1				P
93	Call Order Desk	PANEL 542MM	1				P
93	Call Order Desk	PANEL 773MM	1				P
93	312739P	PANEL 550MM	1				
93	Call Order Desk	PANEL 292MM	1				P
93	312741P	PANEL 538MM	1				
93	Call Order Desk	PANEL 763MM	1				P
93	Call Order Desk	PANEL 529MM	1				P
93	312745P	PANEL 472MM	1				
93	312746P	PANEL 705MM	1				
93	312747P	PANEL 454MM	1				
93	312748P	PANEL 700MM	1				
93	312749P	PANEL 421MM	1				
93	Call Order Desk	PANEL 747MM	1				P
93	Call Order Desk	PANEL 408MM	1				P
93	312752P	PANEL 484MM	1				
93	312756P	PANEL 575MM	1				
93	312757P	PANEL 598MM	1				
		P) CALL ORDER DESK FOR SPECIFIC APPLICATION					
		(V.I.N.)					

From Y-7046 Up to 6-8906	DATE: 01/2014	PAGE: Y2-1836-00

PARCEL RACK

ITEM	PART	DESCRIPTION	XL45	MTH40	MTH45	MTH45S	NOTE
93	312759P	PANEL 711MM	1				
93	312760P	PANEL 269MM	1				
93	Call Order Desk	PANEL 315MM	1				P
93	312762P	PANEL 310MM	1				
93	Call Order Desk	PANEL 352MM	1				P
93	Call Order Desk	PANEL 325MM	1				P
93	Call Order Desk	PANEL 731MM	1				P
93	Call Order Desk	PANEL 590MM	1				P
93	312767P	PANEL 457MM	1				
93	Call Order Desk	PANEL 741MM	1				P
93	312770P	PANEL 759MM	1				
93	Call Order Desk	PANEL 495MM	1				P
93	Call Order Desk	PANEL 431MM	1				P
93	312839P	PANEL 375MM	1				
93	312840P	PANEL 753MM	1				
93	Call Order Desk	PANEL 722MM	1				P
93	312946P	PANEL 437MM	1				
93	Call Order Desk	PANEL 051MM	1				P
93	313076P	PANEL 490MM	1				
93	Call Order Desk	PANEL 253MM	1				P
93	Call Order Desk	PANEL 243MM	1				P
93	Call Order Desk	PANEL 716MM	1				P
93	Call Order Desk	PANEL 213MM	1				P
93	313328P	PANEL 388MM	1				
93	Call Order Desk	PANEL 415MM	1				P
93	Call Order Desk	PANEL 073MM	1				P
93	Call Order Desk	PANEL 080MM	1				P
93	Call Order Desk	PANEL 100MM	1				P
93	Call Order Desk	PANEL 114MM	1				P
93	Call Order Desk	PANEL 149MM	1				P
93	Call Order Desk	PANEL 158MM	1				P
93	Call Order Desk	PANEL 166MM	1				P
93	Call Order Desk	PANEL 181MM	1				P
93	315913P	PANEL 184MM	1				
93	Call Order Desk	PANEL 193MM	1				P
93	Call Order Desk	PANEL 226MM	1				P
93	Call Order Desk	PANEL 231MM	1				P
93	313334P	PANEL 235MM	1				
93	Call Order Desk	PANEL 264MM	1				P
		P) CALL ORDER DESK FOR SPECIFIC APPLICATION					
		(V.I.N.)					

From Y-7046 Up to 6-8906	DATE: 01/2014	PAGE: Y2-1836-00

PARCEL RACK

ITEM	PART	DESCRIPTION	XL45	MTH40	MTH45	MTH45S	NOTE
93	Call Order Desk	PANEL 289MM	1				P
93	Call Order Desk	PANEL 304MM	1				P
93	Call Order Desk	PANEL 335MM	1				P
93	Call Order Desk	PANEL 370MM	1				P
93	Call Order Desk	PANEL 391MM	1				P
93	Call Order Desk	PANEL 396MM	1				P
93	Call Order Desk	PANEL 440MM	1				P
93	Call Order Desk	PANEL 465MM	1				P
93	Call Order Desk	PANEL 475MM	1				P
93	Call Order Desk	PANEL 516MM	1				P
93	Call Order Desk	PANEL 553MM	1				P
93	313335P	PANEL 559MM	1				
93	Call Order Desk	PANEL 560MM	1				P
93	Call Order Desk	PANEL 565MM	1				P
93	Call Order Desk	PANEL 570MM	1				P
93	Call Order Desk	PANEL 582MM	1				P
93	Call Order Desk	PANEL 601MM	1				P
93	313414P	PANEL 615MM	1				
93	Call Order Desk	PANEL 625MM	1				P
93	Call Order Desk	PANEL 636MM	1				P
93	Call Order Desk	PANEL 646MM	1				P
93	310653P	PANEL 655MM / 382MM POSITION SCREEN / L.H. W/10" LCD SCREEN	1				
93	310654P	PANEL 655MM / 382MM POSITION SCREEN / R.H. W/ LCD SCREEN	1				
93	Call Order Desk	PANEL 655MM	1				P
93	Call Order Desk	PANEL 656MM	1				P
93	Call Order Desk	PANEL 660MM	1				P
93	Call Order Desk	PANEL 672MM	1				P
93	Call Order Desk	PANEL 674MM	1				P
93	Call Order Desk	PANEL 682MM	1				P
93	Call Order Desk	PANEL 686MM	1				P
93	Call Order Desk	PANEL 690MM	1				P
93	Call Order Desk	PANEL 723MM	1				P
93	Call Order Desk	PANEL 725MM	1				P
93	Call Order Desk	PANEL 788MM	1				P
93	Call Order Desk	PANEL 802MM	1				P
93	Call Order Desk	PANEL 811MM	1				P
93	Call Order Desk	PANEL 819MM	1				P
93	Call Order Desk	PANEL 836MM	1				P
93	Call Order Desk	PANEL 843MM	1				P
		P) CALL ORDER DESK FOR SPECIFIC APPLICATION					
		(V.I.N.)					

From Y-7046 Up to 6-8906	DATE: 01/2014	PAGE: Y2-1836-00

PARCEL RACK

ITEM	PART	DESCRIPTION	XL45	MTH40	MTH45	MTH45S	NOTE
93	Call Order Desk	PANEL 850MM	1				P
93	Call Order Desk	PANEL 866MM	1				P
93	Call Order Desk	PANEL 878MM	1				P
93	Call Order Desk	PANEL 885MM	1				P
93	Call Order Desk	PANEL 905MM	1				P
93	Call Order Desk	PANEL 924MM	1				P
93	Call Order Desk	PANEL 936MM	1				P
93	315904P	PANEL 940MM	1				
93	Call Order Desk	PANEL 990MM	1				P
93	Call Order Desk	PANEL 1123MM	1				P
93	Call Order Desk	PANEL 1360MM	1				P
93	Call Order Desk	PANEL 1379MM	1				P
93	Call Order Desk	PANEL 1481MM	1				P
93	Call Order Desk	PANEL 1549MM	1				P
94	312370	HAND RAIL / EXTRUSION 4190 MM	1				
94	312518	HAND RAIL / EXTRUSION 4190 MM	1				
94	313069	HAND RAIL / EXTRUSION 3075 MM	1				
94	313072	HAND RAIL / EXTRUSION 1660 MM	1				
94	313229	HAND RAIL / EXTRUSION 2365 MM	1				
94	313423	HAND RAIL / EXTRUSION 2825 MM	1				
94	312814	HAND RAIL / EXTRUSION W/HOLE 3320 MM	1				
94	313428	HAND RAIL / EXTRUSION W/HOLE 2180 MM	1				
94	312518	HAND RAIL / EXTRUSION 4190 MM	1				
94	312520	HAND RAIL / EXTRUSION 4113 MM / REPLACED BY: K312520	1				
94	312521	HAND RAIL / EXTRUSION 4735 MM / REPLACED BY: K312521	1				
94	313582	EXTRUSION, ALUMINUM 6450MM	1				
94	312522	HAND RAIL / EXTRUSION 2808 MM	1				
94	312523	HAND RAIL / EXTRUSION W/HOLE 2260 MM	1				
94	312524	HAND RAIL / EXTRUSION 3913 MM	1				
94	312543	HAND RAIL / EXTRUSION 2867 MM	1				
94	312814	HAND RAIL / EXTRUSION W/HOLE 3320 MM	1				
94	312815	HAND RAIL / EXTRUSION W/HOLE 3320 MM	1				
94	312816	HAND RAIL / EXTRUSION W/HOLE 4190 MM	1				
94	313072	HAND RAIL / EXTRUSION 1660 MM	1				
94	313229	HAND RAIL / EXTRUSION 2365 MM	1				
94	313423	HAND RAIL / EXTRUSION 2825 MM	1				
94	313428	HAND RAIL / EXTRUSION W/HOLE 2180 MM	1				
95	064563	CABLE HARNESS / IND LIGHT R.H. / W/O DOOR	1				
95	064565	CABLE HARNESS / IND LIGHT L.H. / W/O DDOR	1				
		P) CALL ORDER DESK FOR SPECIFIC APPLICATION					
		(V.I.N.)					

From Y-7046 Up to 6-8906	DATE: 01/2014	PAGE: Y2-1836-00

PARCEL RACK

ITEM	PART	DESCRIPTION	XL45	MTH40	MTH45	MTH45S	NOTE
95	064562	CABLE HARNESS / IND LIGHT R.H. / W/DOOR	1				
95	064564	CABLE HARNESS / IND LIGHT L.H. / W/DOOR	1				
95	064712	CABLE ASSY IND LIGHT R.H. / W/DOOR & "RICON"	1				
95	064564	CABLE HARNESS / IND LIGHT L.H. / W/DOOR	1				
95	064562	CABLE HARNESS / IND LIGHT R.H. / W/DOOR	1				
95	064713	CABLE ASSY IND LIGHT R.H. / W/DOOR & "RICON"	1				
96	064560	CABLE ASSY / DIRECT LIGHT & SPEAKER L.H.	1				
96	065091	CABLE ASSY / DIRECT LIGHT & SPEAKER R.H.	1				
96	064710	CABLE ASSY SIDE LIGHT R.H. / FRONT W/"RICON Up to Y-7670	1				
96	065496	CABLE ASSY SIDE LIGHT R.H. / FRONT W/"RICON From 1-7671	1				
96	065351	CABLE ASSY SIDE LIGHT R.H. / REAR W/"RICON	1				
97	065182	CABLE ASSY / READING LIGHT STREETSIDE	1				
97	065183	CABLE ASSY / READING LIGHT CURBSIDE	1				
NS	065352	CABLE ASSY READING LIGHT R.H. / FRONT W/"RICON Up to 2-7866	1				
NS	065671	CABLE ASSY READING LIGHT R.H. / FRONT W/"RICON From 2-7867	1				
97	064847	CABLE ASSY READING LIGHT R.H. / REAR W/"RICON	1				
100	Y2-1837-00	**CEILING PANELS & MOULDING - BUS**					
101	500183	SCREW CAP HEX 5/16-18x1 1/2 G5 PT ZP Up to 3-7990	AR				
101	502927	SCREW CAP HEX M8-1.25x50 G8.8 ZG603 From 3-7991	AR				
102	500476	WASHER LO SPT .317x.586x.078 ZP	AR				
103	312367	FIXING PLATE	18				
104	500638	SCREW TP BDG PH #8x1/2 ZP	18				
105	313003	SPACER	18				
106	502523	RIVET NUT FL OKS 5/16-18 .059-.119 Up to 3-7990	18				
106	5001337	NUT INS FL HEX M8-1.25 0.5-3.0 ZP From 3-7991	18				
107	830153	TUBE / 32WATT / F32T8SPX41 - 48"	AR				
108	500583	SCREW TP BDG PH #6x1/2 ZP	AR				
NS	315891	ANGLE SUPPORT / (FIXED TO LAVATORY WALL) From 2-7923	1				A
110	MI03-02	SEE MAINTENANCE INFORMATION					
200	341120	SUPPORT DETECTOR MODULE TWU From 5-8606	1				
201	563592	MODULE ALARM DETECTOR W.C.L. TWU From 5-8606	1				
202	500518	SCREW MA BDG PH #4-40x1/2 ZP From 5-8606	4				
203	500157	WASHER FL .125x.375x.032 SS From 5-8606	4				
204	500425	NUT HEX NYRT #4-40 SS From 5-8606	4				
205	500333	SCREW TP OV PH #6x3/4 BK From 5-8606	4				
206	500345	WASHER FN CKF .187x.500x.090 BR BK From 5-8606	4				
207	563945	LIGHT TWS W.C.L. From 5-8606	1				
		A) FIXED TO LAVATORY WALL					

From Y-7046 Up to 6-8906	DATE: 01/2014	PAGE: Y2-1836-00

PARCEL RACK

ITEM	PART	DESCRIPTION	XL45	MTH40	MTH45	MTH45S	NOTE

From Y-7046 Up to 6-8906	DATE: 01/2014	PAGE: Y2-1837-00

CEILING PANELS & MOULDING - BUS

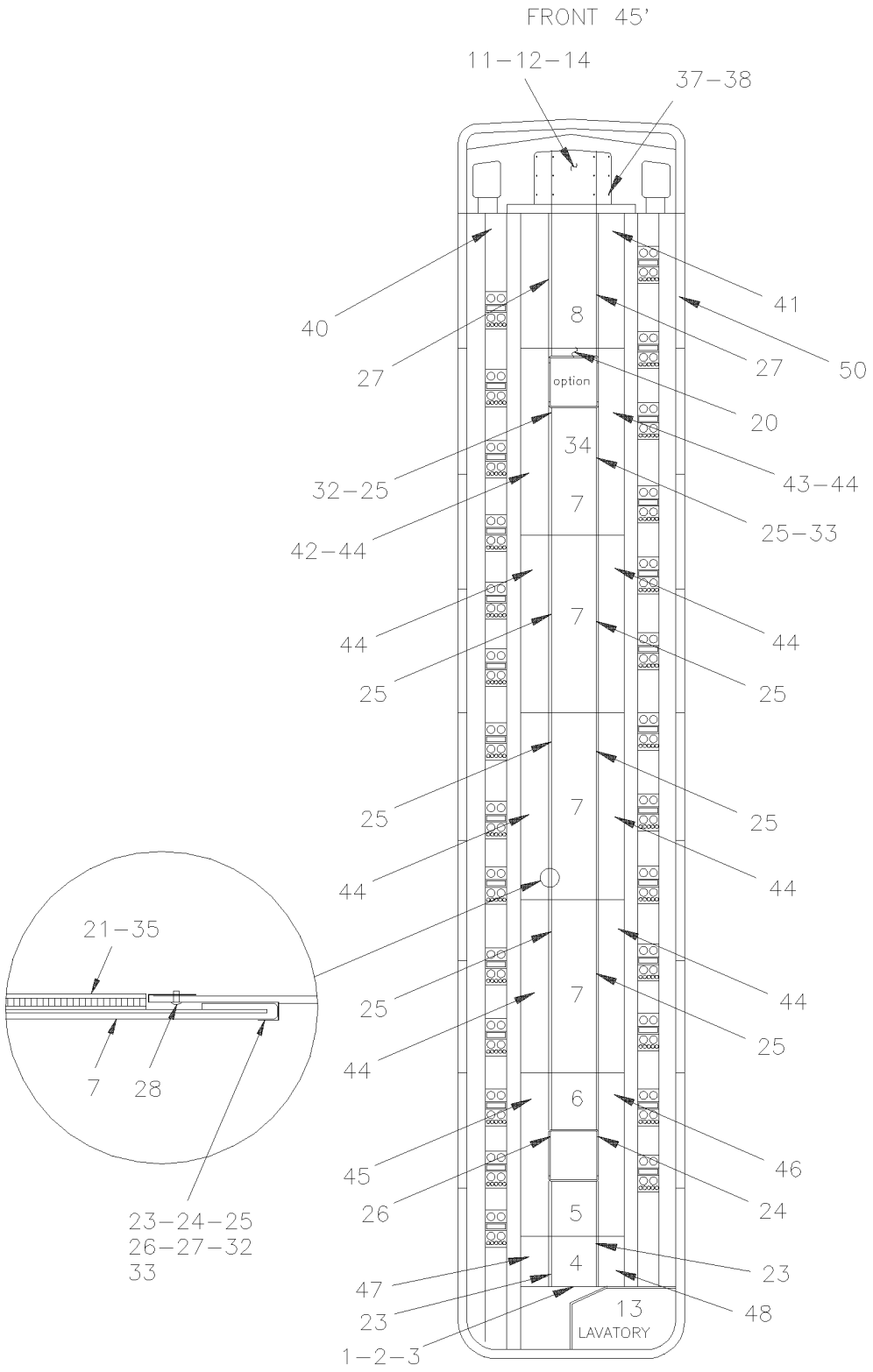

From Y-7046 Up to 6-8906	DATE: 01/2014	PAGE: Y2-1837-00

CEILING PANELS & MOULDING - BUS

ITEM	PART	DESCRIPTION	XL45	MTH40	MTH45	MTH45S	NOTE
1	341058	FINISHING ANGLE 344MM X 1660MM	1				
1	341059	FINISHING MOULDING W/TISSUS	1				
2	500552	SCREW TP OV PH #6x3/4 ZP	4				
3	500463	WASHER FN CKF .187x.500x.090 BR NP	4				
4	Call Order Desk	CEILING PANEL ASSY	1				P
5	Call Order Desk	CEILING PANEL ASSY / W/EMERGENCY EXIT	1				P
6	Call Order Desk	CEILING PANEL ASSY / W/EMERGENCY EXIT	1				P
7	Call Order Desk	CEILING PANEL ASSY #2,3,4 & 5	1				P
8	Call Order Desk	CEILING PANEL ASSY #1	1				P
11	Call Order Desk	CEILING PANEL ASSY / FRONT / 642MM WIDE Up to 6-8892	1				P
11	Call Order Desk	CEILING PANEL ASSY / FRONT / 642MM WIDE From 6-8893	1				P
11	341115P	CEILING PANEL ASSY / FRONT / 642MM WIDE / W/FLAT SCREEN 10" Up to 6-8892	1				
11	Call Order Desk	CEILING PANEL ASSY / FRONT / 642MM WIDE / W/FLAT SCREEN 15" Up to 6-8892	1				P
12	Call Order Desk	CEILING PANEL ASSY / FRONT / 870MM WIDE Up to 6-8892	1				P
12	Call Order Desk	CEILING PANEL ASSY / FRONT / 870MM WIDE From 6-8893	1				P
12	341116P	CEILING PANEL ASSY / FRONT / 870MM WIDE / W/FLAT SCREEN 10" Up to 6-8892	1				
12	Call Order Desk	CEILING PANEL ASSY / FRONT / 870MM WIDE / W/FLAT SCREEN 15" Up to 6-8892	1				P
13	341042	CEILLING PANEL / LAVATORY Up to 2-7922	1				
13	341090P	CEILLING PANEL / LAVATORY From 2-7923	1				
14	504107	RIVET POP DOME OE 1/8x5/16 AL	14				
20	340983P	CEILING PANEL ASSY / SMALL W/EMERGENCY EXIT / (USED W/ITEM # 34 ONLY)	1				
. NS	313018	. CEILING PANEL 222mm x 640mm	1				
21	341021	TAPE DUAL LOCK 2" x 530MM / BLACK SJ3541	AR				
23	313180	FINISHING MOULDING SS "J" 628MM Up to 2-7833	2				
23	313653	FINISHING MOULDING ALU GREY"J" 628MM From 2-7834	2				
24	313179	FINISHING MOULDING SS "J" 1943MM W/EMERGENCY Up to 2-7833	1				
24	313652	FINISHING MOULDING ALU "J" 1943MM W/EMERGENCY From 2-7834	1				
25	313183	FINISHING MOULDING SS "J" 1943MM Up to 2-7833	8				
25	313656	FINISHING MOULDING ALU GREY "J" 1943MM From 2-7834	8				
26	313182	FINISHING MOULDING SS "J" 1943MM W/EMERGENCY Up to 2-7833	1				
26	313655	FINISHING MOULDING A G "J" 1943MM W/EMERGENCY From 2-7834	1				
27	313166	FINISHING MOULDING SS "J" 1279MM Up to 2-7833	2				
27	313648	FINISHING MOULDING ALU GREY "J" 1279MM From 2-7834	2				
28	504339	RIVET POP DOME OE 1/8x3/8 SS	42				
29	506466	TAPE RUB ADH1 CC POL 1/16" x 1 1/2" x 100 / GREY 2520	AR				
32	313169	FINISHING MOULDING SS "J" 1943MM W/EMERGENCY Up to 2-7833	1				
32	313651	FINISHING MOULDING ALU "J" 1943MM W/EMERGENCY From 2-7834	1				
33	313168	FINISHING MOULDING SS "J" 1943MM W/EMERGENCY Up to 2-7833	1				
33	313650	FINISHING MOULDING ALU "J" 1943MM W/EMERGENCY From 2-7834	1				
34	Call Order Desk	CEILING PANEL ASSY	1				P A
35	340988	TAPE DUAL LOCK 2" x 178MM / BLACK SJ3541	22				
		P) CALL ORDER DESK FOR SPECIFIC APPLICATION					
		(V.I.N.)					
		A) WITH EMERGENCY EXIT					

From Y-7046 Up to 6-8906	DATE: 01/2014	PAGE: Y2-1837-00

CEILING PANELS & MOULDING - BUS

ITEM	PART	DESCRIPTION	XL45	MTH40	MTH45	MTH45S	NOTE
37	328910	FINISHING MOULDING "J" SHAPE	2				
38	504339	RIVET POP DOME OE 1/8x3/8 SS	4				
40	Call Order Desk	CEILING PANEL ASSY #1 L.H.	1				P
41	Call Order Desk	CEILING PANEL ASSY #1 R.H.	1				P
42	Call Order Desk	CEILING PANEL ASSY / W/EMERGENCY EXIT / FRONT	1				P
43	Call Order Desk	CEILING PANEL ASSY / W/EMERGENCY EXIT / FRONT	1				P
44	Call Order Desk	CEILING PANEL ASSY #2-3-4 & 5	1				P
45	Call Order Desk	CEILING PANEL ASSY / W/EMERGENCY EXIT / REAR	1				P
46	Call Order Desk	CEILING PANEL ASSY / W/EMERGENCY EXIT / REAR	1				P
47	313226	CEILING PANEL #8 L.H.	1				
48	Call Order Desk	CEILING PANEL ASSY #7 R.H.	1				P
50	Y2-1833-00	**WINDOW FINISHING CAP & WALL**					
		P) CALL ORDER DESK FOR SPECIFIC APPLICATION					
		(V.I.N.)					

From Y-7046 Up to 6-8906	DATE: 01/2014	PAGE: Y2-1837-00

CEILING PANELS & MOULDING - BUS

ITEM	PART	DESCRIPTION	XL45	MTH400	MTH445	MTH445S	NOTE

From Y-7046 Up to 8-9339	DATE: 01/2014	PAGE: Y2-1837-50

CEILING PANELS & MOULDING - MTH

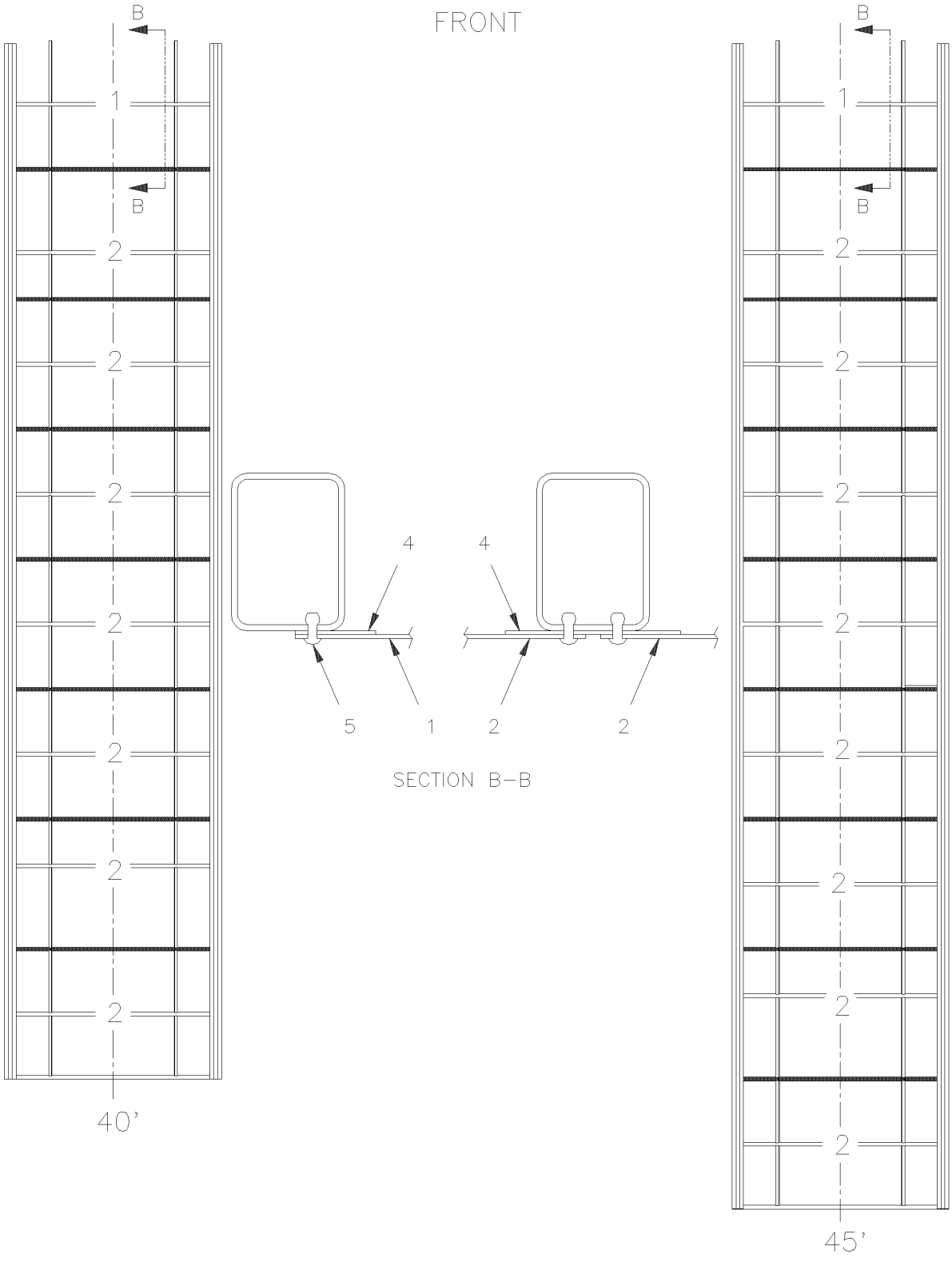

From Y-7046 Up to 8-9339	DATE: 01/2014	PAGE: Y2-1837-50

CEILING PANELS & MOULDING - MTH

ITEM	PART	DESCRIPTION	XL45	MTH40	MTH45	MTH45S	NOTE
1	341075	CEILLING PANEL #1		1	1	1	
1	341095	CEILLING PANEL #1 / W/SLIDE-OUT			1		
2	341074	CEILLING PANEL		7			
2	341096	CEILLING PANEL #2,3 & 4 / W/SLIDE-OUT			7		
2	341074	CEILLING PANEL			8	8	
4	506466	TAPE RUB ADH1 CC POL 1/16" x 1 1/2" x 100 / GREY 2520		2	2	2	
5	504339	RIVET POP DOME OE 1/8x3/8 SS		AR	AR	AR	

From Y-7046 Up to 6-8906	DATE: 01/2014	PAGE: Y2-1838-00

FLOOR - BUS

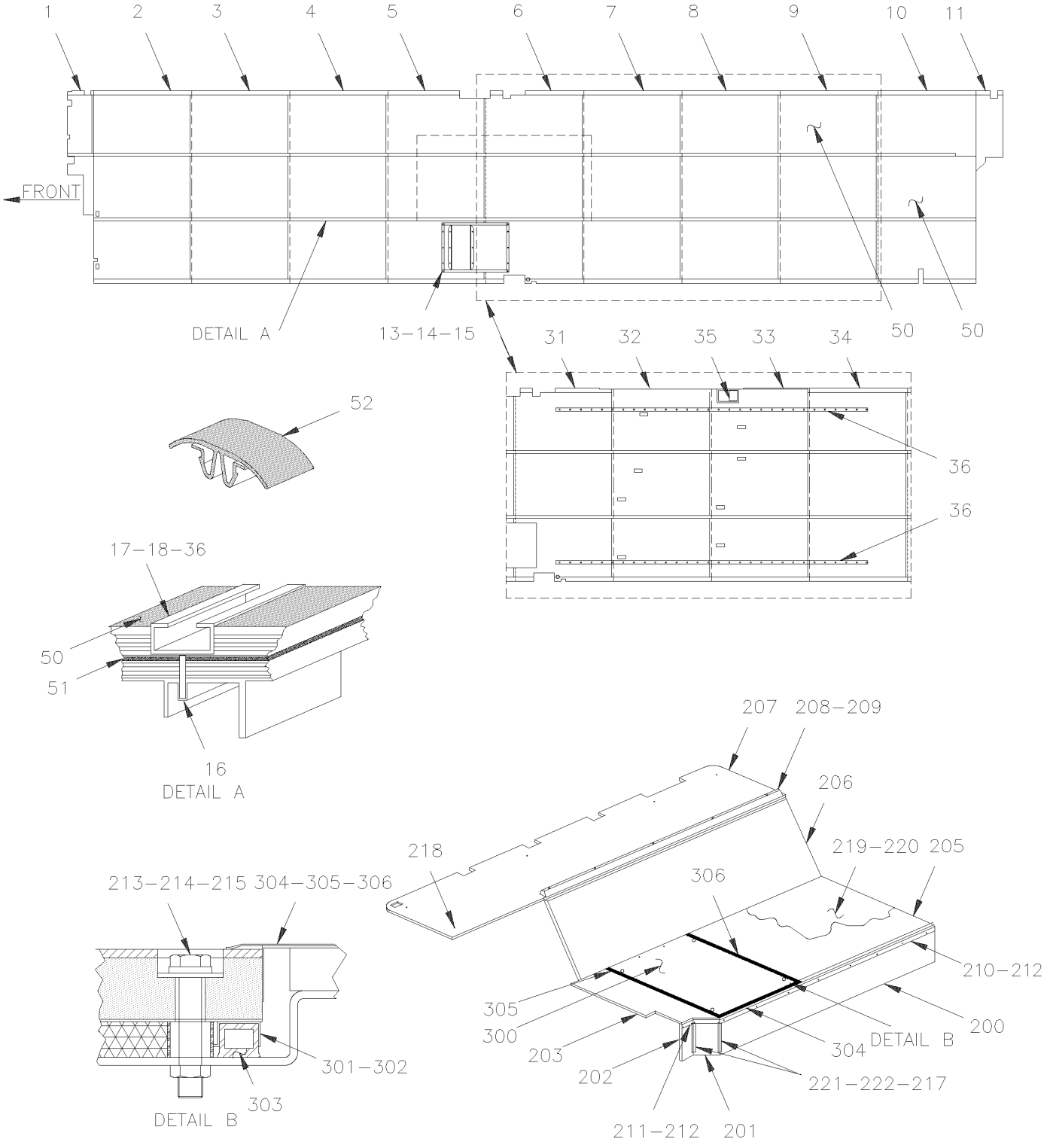

From Y-7046 Up to 6-8906	DATE: 01/2014	PAGE: Y2-1838-00

FLOOR - BUS

ITEM	PART	DESCRIPTION	XL45	MTH40	MTH45	MTH45S	NOTE
1	Call Order Desk	FLOOR / W/STD SEAT Up to Y-7348	1				P
1	Call Order Desk	FLOOR / W/STD SEAT From Y-7349	1				P
1	Call Order Desk	FLOOR / W/1 V.I.P. PASSENGER CURBSIDE From Y-7349	1				P
2	Call Order Desk	FLOOR / W/STD SEAT Up to Y-7348	1				P
2	Call Order Desk	FLOOR / W/STD SEAT From Y-7349	1				P
2	Call Order Desk	FLOOR / W/1 V.I.P. PASSENGER CURBSIDE From Y-7349	1				P
3	324877P	FLOOR / W/STD SEAT Up to Y-7348	1				
3	Call Order Desk	FLOOR / W/STD SEAT From Y-7349	1				P
3	Call Order Desk	FLOOR / W/1 V.I.P. PASSENGER CURBSIDE From Y-7349	1				P
3	Call Order Desk	FLOOR / W/STD SEAT From Y-7349	1				P A
4	324877P	FLOOR / W/STD SEAT Up to Y-7348	1				
4	Call Order Desk	FLOOR / W/STD SEAT From Y-7349	1				P
4	Call Order Desk	FLOOR / W/1 V.I.P. PASSENGER CURBSIDE From Y-7349	1				P
4	Call Order Desk	FLOOR / W/STD SEAT From Y-7349	1				P A
5	Call Order Desk	FLOOR / W/STD SEAT Up to Y-7348	1				P
5	Call Order Desk	FLOOR / W/STD SEAT From Y-7349	1				P
5	Call Order Desk	FLOOR / W/1 V.I.P. PASSENGER CURBSIDE From Y-7349	1				P
5	Call Order Desk	FLOOR / W/STD SEAT From Y-7349	1				P A
6	Call Order Desk	FLOOR / W/STD SEAT From Y-7349	1				P
6	Call Order Desk	FLOOR / W/1 V.I.P. PASSENGER CURBSIDE From Y-7349	1				P
7	324877P	FLOOR / W/STD SEAT Up to Y-7348	1				
7	Call Order Desk	FLOOR / W/STD SEAT From Y-7349	1				P
7	Call Order Desk	FLOOR / W/STD SEAT From Y-7349	1				P A
7	Call Order Desk	FLOOR / W/1 V.I.P. PASSENGER CURBSIDE From Y-7349	1				P
8	324847P	FLOOR / W/STD SEAT Up to Y-7348	1				
8	Call Order Desk	FLOOR / W/STD SEAT From Y-7349	1				P
8	Call Order Desk	FLOOR / W/1 V.I.P. PASSENGER CURBSIDE From Y-7349	1				P
9	324847P	FLOOR / W/STD SEAT Up to Y-7348	1				
9	Call Order Desk	FLOOR / W/STD SEAT From Y-7349	1				P
9	Call Order Desk	FLOOR / W/1 V.I.P. PASSENGER CURBSIDE From Y-7349	1				P
10	Call Order Desk	FLOOR / W/STD SEAT Up to Y-7348	1				P
10	Call Order Desk	FLOOR / W/STD SEAT From Y-7349	1				P
10	Call Order Desk	FLOOR / W/1 V.I.P. PASSENGER CURBSIDE From Y-7349	1				P
11	Call Order Desk	FLOOR / W/STD SEAT Up to Y-7348	1				P
11	Call Order Desk	FLOOR / W/STD SEAT From Y-7349	1				P
12	324479	FLOOR / W/STD SEAT Up to Y-7348	1				
12	327379	PANEL / FIRE WALL From Y-7349	1				
NS	508068	VENEER PLYWOOD 1/2" THICK 4' X 8' Up to Y-7348	AR				
NS	508392	VENEER PLYWOOD 7/16" THICK 4` X 8`	AR				
		P) CALL ORDER DESK FOR SPECIFIC APPLICATION					
		(V.I.N.)					
		A) FLOOR WITH PRESSURISATION SYSTEM					

From Y-7046 Up to 6-8906	DATE: 01/2014	PAGE: Y2-1838-00

FLOOR - BUS

ITEM	PART	DESCRIPTION	XL45	MTH40	MTH45	MTH45S	NOTE
13	Call Order Desk	ACCES, AIR RETURN	1				P
14	500640	SCREW TP BDG PH #6x3/4 ZP	8				
15	680065	TAPE COMPOUND / BLACK / 1/32" X 1" X 33' / L163-2400	AR				
16	5001533	SCREW TC FL PH #10-24x1 1/4 ZP SS410	AR				
17	326759	SEAT TRACK 6096MM Up to 5-8392	2				
17	329149	SEAT TRACK 10695MM From 5-8393	1				
18	326760	SEAT TRACK 4599MM Up to 5-8392	2				
18	329149	SEAT TRACK 10695MM From 5-8393	1				
19	680093	SEALANT TAPE BUTYL / GREY / 1/6"x1 1/2"x50' / 71079B11760	AR				
20	5001532	SCREW DR WF RO #14x1 3/4 ZP	AR				
31	Call Order Desk	PANEL FLOOR	1				P
32	Call Order Desk	PANEL FLOOR	1				P
33	Call Order Desk	PANEL FLOOR	1				P
34	Call Order Desk	PANEL FLOOR	1				P
35	Call Order Desk	PANEL ACCESS	1				P
36	327474	SEAT TRACK 3651MM Up to 5-8392 / REPLACED BY: 329150	1				
36	329150	SEAT TRACK 3651MM From 5-8393	2				
50	Y2-1838-05	**FLOOR & COVERING - "R.C.A."**					
50	Y2-1838-10	**FLOOR COVERING - "TARAFLEX"**					
51	850027	INSULATING PAD NOISE ADH2 1/16" x 39" x 48"	AR				
52	323654	SEAT TRACK COVER 12' / <> EACH SEAT / W/COVERING FLOOR / REPLACED BY: 323963	AR				
52	323963	SEAT TRACK COVER 8' / <> EACH SEAT / W/COVERING FLOOR	AR				
NS	324791	CARPET PROTECTOR SS 25MM X 2438MM / W/CARPET ON FLOOR	AR				
NS	820027	HANDLE	AR				W
52	5001119	SCREW TP BDG PH #8x3/4 SS	AR				W
52	502630	WASHER FL .156x.375x.049 ZP	AR				W
200	324939	PANEL FRONT SEAT Up to Y-7348	1				
200	328798	PANEL FRONT SEAT From Y-7349	1				
201	324124	PANEL FRONT SEAT Up to Y-7348	1				
201	328799	PANEL FRONT SEAT From Y-7349	1				
202	324125	PANEL FRONT SEAT Up to Y-7348	1				
202	328800	PANEL FRONT SEAT From Y-7349	1				
203	324928	PANEL SEAT Up to Y-7348	1				
203	328801	PANEL SEAT From Y-7349	1				
205	324927	PANEL SEAT Up to Y-7348	1				
205	328797	PANEL SEAT From Y-7349	1				
206	326822	PANEL SEAT Up to Y-7348	1				
206	328796	PANEL SEAT From Y-7349	1				
207	326823	PANEL SEAT Up to Y-7348	1				
		P) CALL ORDER DESK FOR SPECIFIC APPLICATION					
		(V.I.N.)					
		W) USE WITH W.C.L. SEAT TRACK					

From Y-7046 Up to 6-8906	DATE: 01/2014	PAGE: Y2-1838-00

FLOOR - BUS

ITEM	PART	DESCRIPTION	XL45	MTH40	MTH45	MTH45S	NOTE
207	328795	PANEL REAR SEAT From Y-7349	1				
207	328133	PANEL SEAT	1				O
208	324423	STOPPER, SEAT	1				
209	500436	SCREW TP OV PH #10x2 ZP	5				
210	325190	ANGLE FINISHING	1				
211	325189	ANGLE FINISHING	1				
212	5001085	SCREW TP PAN PH #6x1 1/4 ZP	12				
213	500186	SCREW CAP HEX 5/16-18x2 1/2 G5 ZP	4				
214	500985	WASHER FL .343x.875x.125 ZP	4				
215	471119	SEAL WASHER / <> RUB RAIL & PANEL	4				
216	680532	SEALANT SIKA #221 / GREY / 310ml CARTRIDGE	1				
217	500618	SCREW TP FL PH #10x1 ZP	40				
218	500940	SCREW TP FL PH #10x2 ZP	17				
219	326949	OZITE 1730MM X 1860MM	1				
220	680030	GLUE	1				
221	401500	ANGLE FINISHING	2				
222	500640	SCREW TP BDG PH #6x3/4 ZP	12				
300	Call Order Desk	PANEL ASSY / ENGINE ACCESS	1				P
. NS	328761	. WEATHERSTRIP RUBBER ASSY / REPLACED BY: 320037	1				
. NS	485610	. . WEATHERSTRIP RUBBER / ADH / RAW MATERIAL	AR				
. NS	483941	. . WEATHERSTRIP RUBBER / ADH / RAW MATERIAL / REPLACED BY: 485610	AR				
. NS	320037	. WEATHERSTRIP RUBBER ASSY	1				
301	328752	. MOULDING SIDE WEATHERSTRIP RETAINER	2				
302	324889	. MOULDING	2				
303	328761	. WEATHERSTRIP RUBBER ASSY / REPLACED BY: 320037	1				
. NS	485610	. . WEATHERSTRIP RUBBER / ADH / RAW MATERIAL	AR				
. NS	483941	. . WEATHERSTRIP RUBBER / ADH / RAW MATERIAL / REPLACED BY: 485610	AR				
303	320037	. WEATHERSTRIP RUBBER ASSY	1				
304	324904	. MOULDING	1				
305	328776	. MOULDING	1				
306	328759	. MOULDING	1				
		P) CALL ORDER DESK FOR SPECIFIC APPLICATION					
		(V.I.N.)					
		O) WITH DAMPER AIR TRAP #453887					

From Y-7046 Up to 6-8906	DATE: 01/2014	PAGE: Y2-1838-05
FLOOR & COVERING - "R.C.A."		

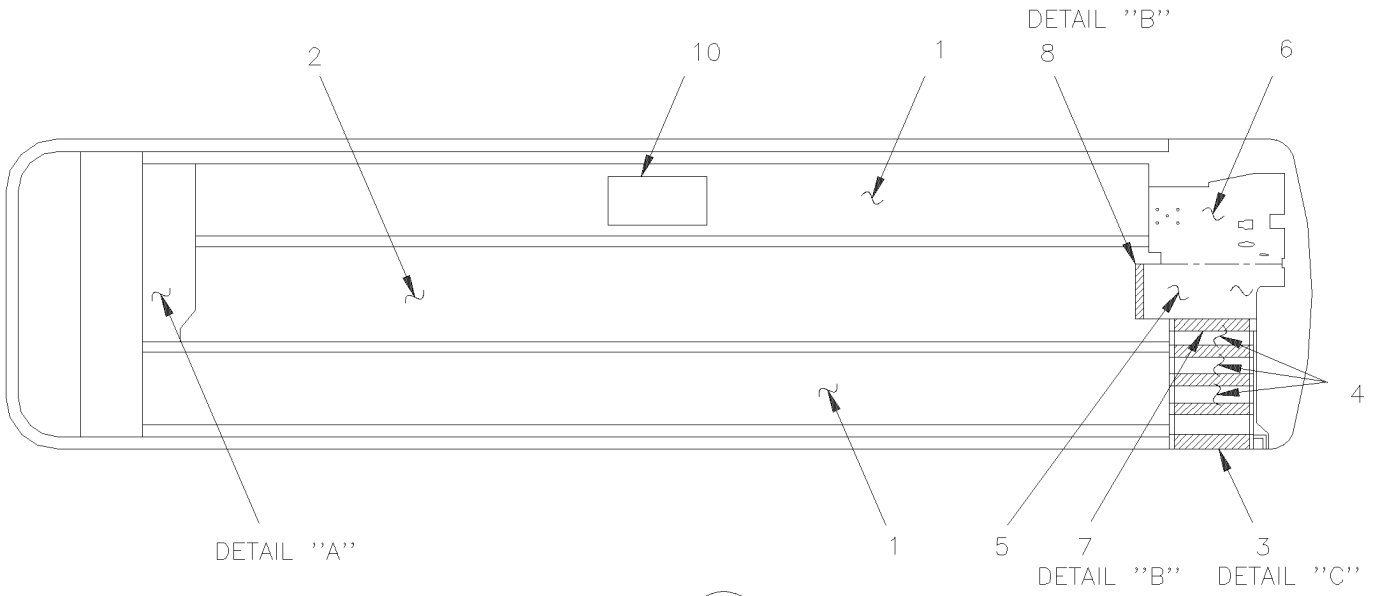

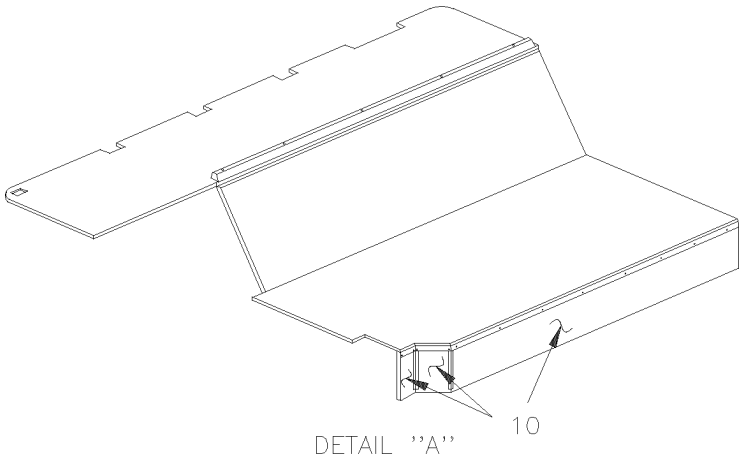

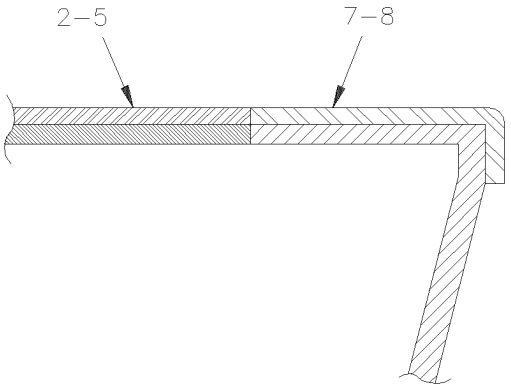

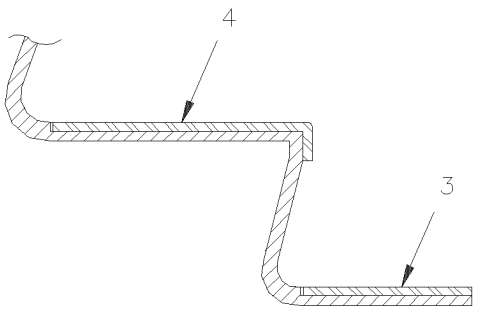

From Y-7046 Up to 6-8906	DATE: 01/2014	PAGE: Y2-1838-05

FLOOR & COVERING - "R.C.A."

ITEM	PART	DESCRIPTION	XL45	MTH40	MTH45	MTH45S	NOTE
		FLOOR COVERING SIDE SECTION / 26 1/8" X 38'					
1	506710	COVERING / CODE "A" = 702	2				
1	506712	COVERING / CODE "B" = 777	2				
1	506714	COVERING / CODE "C" = 653	2				
1	506716	COVERING / CODE "D" = 747	2				
1	506718	COVERING / CODE "E" = 766	2				
1	506720	COVERING / CODE "F" = 604	2				
1	506722	COVERING / CODE "G" = 758	2				
1	5061026	COVERING / CODE "H" = 630	1				
1	506724	COVERING / CODE "I" = 895	2				
1	5061034	COVERING / CODE "J" = 466	1				
1	5060014	COVERING / CODE "K" = 852	1				
1	506726	COVERING / CODE "L" = 975	2				
1	506730	COVERING / CODE "Q" = 788	2				
1	5060059	COVERING / CODE "R" = 411	1				
		FLOOR COVERING AISLE SECTION / 36 3/8" X 38'					
2	506711	COVERING / CODE "A" = 702	1				
2	506713	COVERING / CODE "B" = 777	1				
2	506715	COVERING / CODE "C" = 653	1				
2	506717	COVERING / CODE "D" = 747	1				
2	506719	COVERING / CODE "E" = 766	1				
2	506721	COVERING / CODE "F" = 604	1				
2	506723	COVERING / CODE "G" = 758	1				
2	5061027	COVERING / CODE "H" = 630	1				
2	506725	COVERING / CODE "I" = 895	1				
2	5061035	COVERING / CODE "J" = 466	1				
2	5060015	COVERING / CODE "K" = 852	1				
2	506727	COVERING / CODE "L" = 975	1				
2	506729	COVERING / CODE "Q" = 788	1				
2	5060060	COVERING / CODE "R" = 411	1				
		STEP TREAD COVERING 1STEP/ 10"X25"5/8 (UNCUT)					
		AT THE BEGENNING OF					
		PART NUMBER 326936 + SUFFIX CODE "?" LETTER					
3	506951	STEP TREAD COVERING / CODE "A" = 702	1				
3	506952	STEP TREAD COVERING / CODE "B" = 777	1				
3	506953	STEP TREAD COVERING / CODE "C" = 653	1				
3	506954	STEP TREAD COVERING / CODE "D" = 747	1				

From Y-7046 Up to 6-8906	DATE: 01/2014	PAGE: Y2-1838-05

FLOOR & COVERING - "R.C.A."

ITEM	PART	DESCRIPTION	XL45	MTH40	MTH45	MTH45S	NOTE
3	506955	STEP TREAD COVERING / CODE "E" = 766	1				
3	506956	STEP TREAD COVERING / CODE "F" = 604	1				
3	506957	STEP TREAD COVERING / CODE "G" = 758	1				
3	5061031	STEP TREAD COVERING / CODE "H" = 630	1				
3	506958	STEP TREAD COVERING / CODE "I" = 895	1				
3	5061040	STEP TREAD COVERING / CODE "J" = 466	1				
3	5060020	STEP TREAD COVERING / CODE "K" = 852	1				
3	506959	STEP TREAD COVERING / CODE "L" = 975	1				
3	506960	STEP TREAD COVERING / CODE "Q" = 788	1				
3	5060069	STEP TREAD COVERING / CODE "R" = 411	1				
		STEP TREAD COVERING 2,3,4 STEP / 9"7/8 X 25"5/8					
4	506888	STEP TREAD COVERING / CODE "A" = 702	3				
4	506889	STEP TREAD COVERING / CODE "B" = 777	3				
4	506890	STEP TREAD COVERING / CODE "C" = 653	3				
4	506891	STEP TREAD COVERING / CODE "D" = 747	3				
4	506892	STEP TREAD COVERING / CODE "E" = 766	3				
4	506893	STEP TREAD COVERING / CODE "F" = 604	3				
4	506894	STEP TREAD COVERING / CODE "G" = 758	3				
4	5061028	STEP TREAD COVERING / CODE "H" = 630	1				
4	506895	STEP TREAD COVERING / CODE "I" = 895	3				
4	5061038	STEP TREAD COVERING / CODE "J" = 466	1				
4	5060016	STEP TREAD COVERING / CODE "K" = 852	1				
4	506896	STEP TREAD COVERING / CODE "L" = 975	3				
4	506897	STEP TREAD COVERING / CODE "Q" = 788	3				
4	5060061	STEP TREAD COVERING / CODE "R" = 411	1				
		FLOOR COVERING UPPER STEPWELL SECTION / 22" X 46"					
5	506926	COVERING / CODE "A" = 702	1				
5	506927	COVERING / CODE "B" = 777	1				
5	506928	COVERING / CODE "C" = 653	1				
5	506929	COVERING / CODE "D" = 747	1				
5	506930	COVERING / CODE "E" = 766	1				
5	506931	COVERING / CODE "F" = 604	1				
5	506932	COVERING / CODE "G" = 758	1				
5	5061029	COVERING / CODE "H" = 630	1				
5	506933	COVERING / CODE "I" = 895	1				
5	5061036	COVERING / CODE "J" = 466	1				
5	5060019	COVERING / CODE "K" = 852	1				
5	506934	COVERING / CODE "L" = 975	1				

From Y-7046 Up to 6-8906	DATE: 01/2014	PAGE: Y2-1838-05

FLOOR & COVERING - "R.C.A."

ITEM	PART	DESCRIPTION	XL45	MTH40	MTH45	MTH45S	NOTE
5	506935	COVERING / CODE "Q" = 788	1				
5	5060062	COVERING / CODE "R" = 411	1				
		FLOOR COVERING DRIVER'S SECTION / 29" X 48"½					
6	506898	COVERING / CODE "A" = 702	1				
6	506899	COVERING / CODE "B" = 777	1				
6	506900	COVERING / CODE "C" = 653	1				
6	506901	COVERING / CODE "D" = 747	1				
6	506902	COVERING / CODE "E" = 766	1				
6	506903	COVERING / CODE "F" = 604	1				
6	506904	COVERING / CODE "G" = 758	1				
6	5061029	COVERING / CODE "H" = 630	1				
6	506905	COVERING / CODE "I" = 895	1				
6	5061037	COVERING / CODE "J" = 466	1				
6	5060018	COVERING / CODE "K" = 852	1				
6	506906	COVERING / CODE "L" = 975	1				
6	506907	COVERING / CODE "Q" = 788	1				
6	5060063	COVERING / CODE "R" = 411	1				
7	506886	STEP NOZZING 3" X 27"1/2 WHITE	1				
8	506887	STEP NOZZING 3" X 22"1/2 WHITE	1				
NS							
NS		FLOOR COVERING FOR ENGINE TRAP REAR / 30" X 60"					
NS							
10	506457	COVERING / CODE "A" = 702	1				
10	506458	COVERING / CODE "B" = 777	1				
10	506459	COVERING / CODE "C" = 653	1				
10	506460	COVERING / CODE "D" = 747	1				
10	506461	COVERING / CODE "E" = 766	1				
10	506462	COVERING / CODE "F" = 604	1				
10	506583	COVERING / CODE "G" = 758	1				
10	5061032	COVERING / CODE "H" = 630	1				
10	506495	COVERING / CODE "I" = 895	1				
10	5061039	COVERING / CODE "J" = 466	1				
10	5060019	COVERING / CODE "K" = 852	1				
10	506590	COVERING / CODE "L" = 975	1				
10	506661	COVERING / CODE "Q" = 788	1				
10	5061120	COVERING / CODE "R" = 411	1				
NS	680028	GLUE / 15LITERS	AR				W
NS	684654	GLUE CONTACT "SCOTCH-GRIP" / 18.9 LITER / 3M #1357-NEUTRAL	AR				F
NS	684655	GLUE CONTACT "SCOTCH-GRIP" / 3.8 LITER / 3M #1357-NEUTRAL	AR				F
		F) TO FIX COVERING ON FIBERGLASS					
		W) TO FIX COVERING ON WOOD					

From Y-7046 Up to 6-8906	DATE: 01/2014	PAGE: Y2-1838-05

FLOOR & COVERING - "R.C.A."

ITEM	PART	DESCRIPTION	XL45	MTH40	MTH45	MTH45S	NOTE
NS	684685	ADHESIVE SIMSON #ISR 70-03 / BLACK / 310ml CARTRIDGE	AR				F
15	CODE A	#702 R.C.A. LIGHT BLUE					
15	CODE B	#777 R.C.A. LIGHT CREAM					
15	CODE C	#653 R.C.A. LIGHT GREEN					
15	CODE D	#747 R.C.A. LIGHT BROWN					
15	CODE E	#766 R.C.A. DARK GREY					
15	CODE F	#604 R.C.A. BLACK					
15	CODE G	#758 R.C.A. CREAM					
15	CODE H	#630 R.C.A. BROWN					
15	CODE I	#895 R.C.A. RED					
15	CODE J	#602 R.C.A. ORANGE					
15	CODE K	#650 R.C.A. MAGENTA					
15	CODE L	#975 R.C.A. RED					
15	CODE Q	#788 R.C.A. LIGHT GREY					
15	CODE R	#411 R.C.A. LIGHT GREY					
		F) TO FIX COVERING ON FIBERGLASS					

From Y-7046 Up to 6-8906	DATE: 01/2014	PAGE: Y2-1838-05

FLOOR & COVERING - "R.C.A."

ITEM	PART	DESCRIPTION	XL45	MTH40	MTH45	MTH45S	NOTE

From Y-7046 Up to 6-8906	DATE: 01/2014	PAGE: Y2-1838-10

FLOOR COVERING - "TARAFLEX"

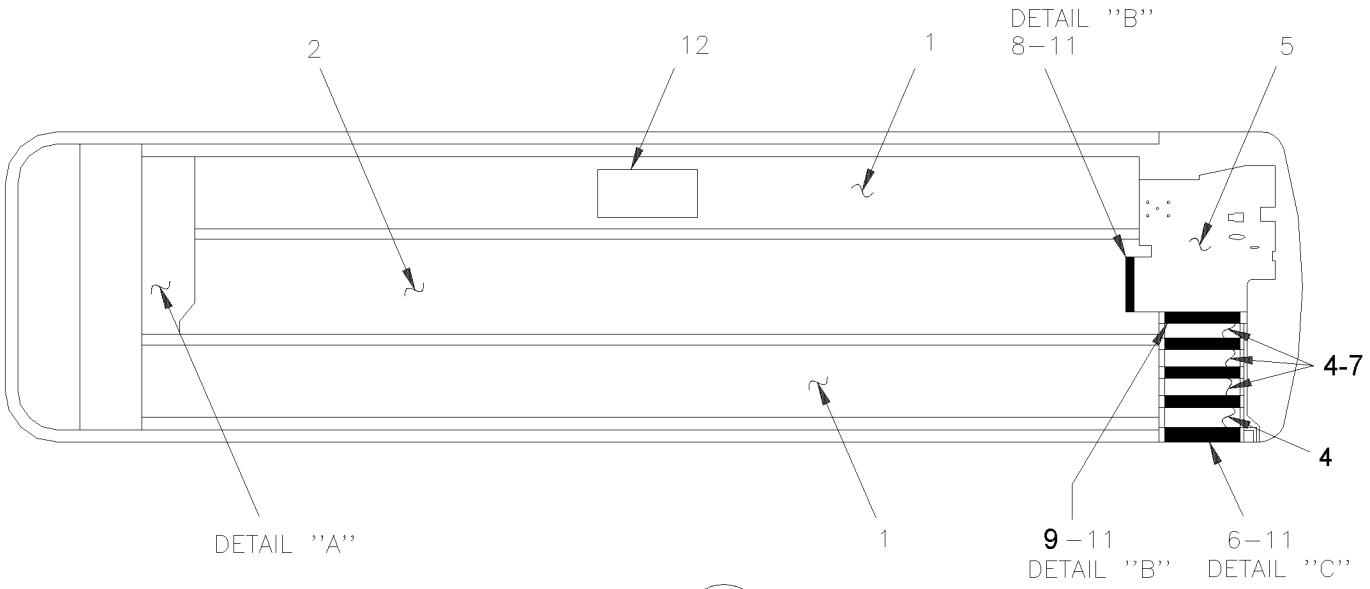

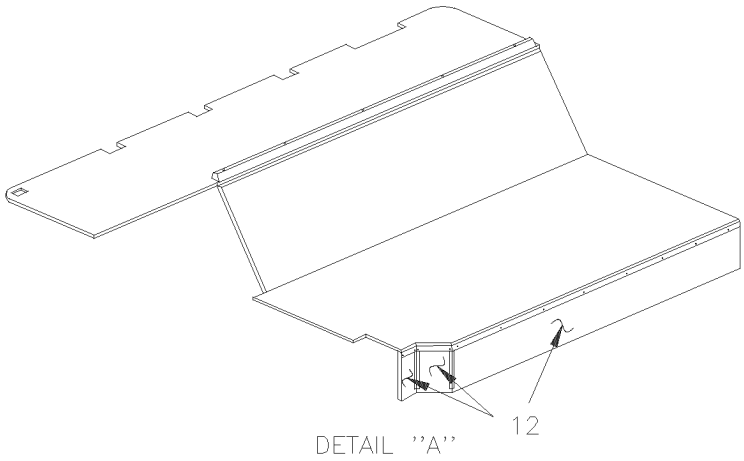

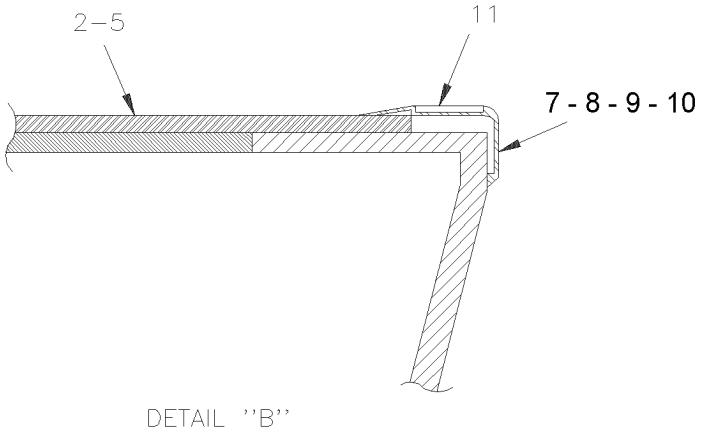

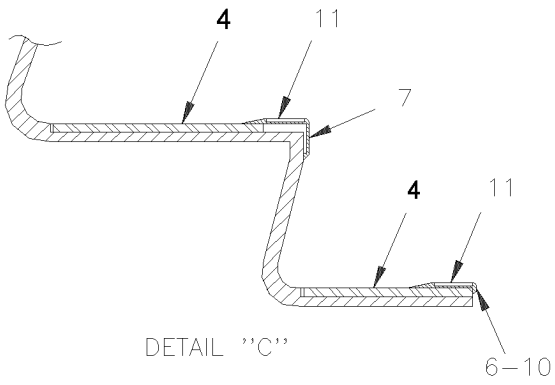

From Y-7046 Up to 6-8906	DATE: 01/2014	PAGE: Y2-1838-10

FLOOR COVERING - "TARAFLEX"

ITEM	PART	DESCRIPTION	XL45	MTH40	MTH45	MTH45S	NOTE
		FLOOR COVERING SIDE SECTION / 664MM X 11582MM					
1	506800	COVERING DARK GREY #8780 PEGASUS	2				
1	506856	COVERING RED #6132 RUBIS	2				
1	506841	COVERING LIGHT GREY #8779 CYGNUS	2				
1	5061052	COVERING BROWN #8311 SWEDEN	2				
1	5061059	COVERING GREY #8731 POLAND	2				
1	5061066	COVERING GREEN #8525 CHINA	2				
1	5061073	COVERING BLUE #8414 EGYPT	2				
1	5061080	COVERING POUPRE #8720 RUSSIA	2				
1	5060021	COVERING BLUE #8423 AQUILIA	2				
1	328253	COVERING DARK GREY TARABUS #8750 TUCUNA	2				
1	5060007	COVERING LIGHT GREY #6768 GRIFFON	2				
1	5060039	COVERING DARK GREY #6782 URANUS	2				
1	5060049	COVERING DARK GREY #6782 SIRIUS	2				
1	820073	COVERING DARK GREY #8816 SYCAMORE	2				
1	5061087	COVERING GREY #8729 NORWAY	2				
1	820073	COVERING DARK GREY #8816 SYCAMORE	2				
1	820084	COVERING MED BLUE #9418 OLYMPE	2				
1	820089	COVERING DARK GREY #9727 ZEPHIR	2				
1	820096	COVERING DARK GREY URANUS #6727 ANTHRACITE	2				
		FLOOR COVERING AISLE SECTION / 924MMX11582MM					
2	506801	COVERING DARK GREY #8780 PEGASUS	1				
2	506857	COVERING RED #6132 RUBIS	1				
2	506840	COVERING LIGHT GREY #8779 CYGNUS	1				
2	506848	COVERING RED #6132 RUBIS	1				
2	5061053	COVERING BROWN #8311 SWEDEN	1				
2	5061060	COVERING GREY #8731 POLAND	1				
2	5061067	COVERING GREEN #8525 CHINA	1				
2	5061074	COVERING BLUE #8414 EGYPT	1				
2	5061081	COVERING POUPRE #8720 RUSSIA	1				
2	5060022	COVERING BLUE #8423 AQUILIA	1				
2	328254	COVERING DARK GREY TARABUS #8750 TUCUNA	1				
2	5060008	COVERING LIGHT GREY #6768 GRIFFON	1				
2	5060040	COVERING DARK GREY #6782 URANUS	1				
2	5060050	COVERING DARK GREY #6782 SIRIUS	1				
2	820074	COVERING DARK GREY #8816 SYCAMORE	1				
2	5061088	COVERING GREY #8729 NORWAY	1				
2	820074	COVERING DARK GREY #8816 SYCAMORE	1				

From Y-7046 Up to 6-8906	DATE: 01/2014	PAGE: Y2-1838-10

FLOOR COVERING - "TARAFLEX"

ITEM	PART	DESCRIPTION	XL45	MTH40	MTH45	MTH45S	NOTE
2	820085	COVERING MED BLUE #9418 OLYMPE	1				
2	820090	COVERING DARK GREY #9727 ZEPHIR	1				
2	820097	COVERING DARK GREY URANUS #6727 ANTHRACITE	1				
		FLOOR COVERING STEP / 246MM X 654MM					
4	506939	COVERING DARK GREY #8780 PEGASUS	4				
4	506943	COVERING RED #6132 RUBIS	4				
4	506947	COVERING LIGHT GREY #8779 CYGNUS	4				
4	506940	COVERING DARK GREY #8780 PEGASUS	4				
4	506944	COVERING RED #6132 RUBIS	4				
4	506948	COVERING LIGHT GREY #8779 CYGNUS	4				
4	5061054	COVERING BROWN #8311 SWEDEN	1				
4	5061061	COVERING GREY #8731 POLAND	1				
4	5061068	COVERING GREEN #8525 CHINA	1				
4	5061075	COVERING BLUE #8414 EGYPT	1				
4	5061082	COVERING POUPRE #8720 RUSSIA	1				
4	5060023	COVERING BLUE #8423 AQUILIA	1				
4	328255	COVERING DARK GREY TARABUS #8750 TUCUNA	1				
4	5060009	COVERING LIGHT GREY #6768 GRIFFON	1				
4	5060041	COVERING DARK GREY #6782 URANUS	1				
4	5060051	COVERING DARK GREY #6782 SIRIUS	1				
4	820075	COVERING DARK GREY #8816 SYCAMORE	1				
4	5061089	COVERING GREY #8729 NORWAY	1				
4	820075	COVERING DARK GREY #8816 SYCAMORE	1				
4	820086	COVERING MED BLUE #9418 OLYMPE	1				
4	820091	COVERING DARK GREY #9727 ZEPHIR	1				
4	820098	COVERING DARK GREY URANUS #6727 ANTHRACITE	1				
		FLOOR COVERING UPPER STEPWELL / 1230MM X 1345MM					
5	506942	COVERING DARK GREY #8780 PEGASUS	1				
5	506946	COVERING RED #6132 RUBIS	1				
5	506950	COVERING LIGHT GREY #8779 CYGNUS	1				
5	5061055	COVERING BROWN #8311 SWEDEN	1				
5	5061062	COVERING GREY #8731 POLAND	1				
5	5061069	COVERING GREEN #8525 CHINA	1				
5	5061076	COVERING BLUE #8414 EGYPT	1				
5	5061083	COVERING POUPRE #8720 RUSSIA	1				
5	5060024	COVERING BLUE #8423 AQUILIA	1				
5	328256	COVERING DARK GREY TARABUS #8750 TUCUNA	1				
5	5060010	COVERING LIGHT GREY #6768 GRIFFON	1				

From Y-7046 Up to 6-8906	DATE: 01/2014	PAGE: Y2-1838-10

FLOOR COVERING - "TARAFLEX"

ITEM	PART	DESCRIPTION	XL45	MTH40	MTH45	MTH45S	NOTE
5	5060042	COVERING DARK GREY #6782 URANUS	1				
5	5060052	COVERING DARK GREY #6782 SIRIUS	1				
5	5061090	COVERING GREY #8729 NORWAY	1				
5	820076	COVERING DARK GREY #8816 SYCAMORE	1				
5	820087	COVERING MED BLUE #9418 OLYMPE	1				
5	820092	COVERING DARK GREY #9727 ZEPHIR	1				
5	820099	COVERING DARK GREY URANUS #6727 ANTHRACITE	1				
6	506936	EXTRUSION "STEPBUS" 652MM	1				
7	506937	EXTRUSION "STEPBUS" 654MM	3				
8	506938	EXTRUSION "STEPBUS" 565MM	1				
9	5061023	EXTRUSION "STEPBUS" 700MM	1				
10	500435	SCREW TP FL PH #6x1 ZP	8				
11	506808	WHITE STRIP "STEPBUS" 34MM x 1490MM / BOX OF 20 / REPLACED BY: 5061033	1				
11	5061033	WHITE STRIP "STEPBUS" 34MM x 1490MM / BOX OF 20 / REPLACED BY: 5061280	1				
11	5061280	WHITE STRIP "STEPBUS" 34MM x 1490MM / EACH	1				
11	506088	WHITE STRIP "STEPBUS" 34MM x 565MM	1				
		FLOOR COVERING / 762MM X 1524MM					
12	506839	COVERING LIGHT GREY #8779 CYGNUS	1				
12	506794	COVERING DARK GREY #8780 PEGASUS	1				
12	506855	COVERING RED #6132 RUBIS	1				
12	5061056	COVERING BROWN #8311 SWEDEN	1				
12	5061063	COVERING GREY #8731 POLAND	1				
12	5061070	COVERING GREEN #8525 CHINA	1				
12	5061077	COVERING BLUE #8414 EGYPT	1				
12	5061084	COVERING POUPRE #8720 RUSSIA	1				
12	5006025	COVERING BLUE #8423 AQUILIA	1				
12	328257	COVERING DARK GREY TARABUS #8750 TUCUNA	1				
12	5060011	COVERING LIGHT GREY #6768 GRIFFON	1				
12	5060043	COVERING DARK GREY #6782 URANUS	1				
12	5060053	COVERING DARK GREY #6782 SIRIUS	1				
12	5061091	COVERING GREY #8729 NORWAY	1				
12	820077	COVERING DARK GREY #8816 SYCAMORE	1				
12	820088	COVERING MED BLUE #9418 OLYMPE	1				
12	820093	COVERING DARK GREY #9727 ZEPHIR	1				
12	820100	COVERING DARK GREY URANUS #6727 ANTHRACITE	1				
NS	680031	GLUE / 1LITER	1				W
NS	680028	GLUE / 15LITERS	1				W
NS	684654	GLUE CONTACT "SCOTCH-GRIP" / 18.9 LITER / 3M #1357-NEUTRAL	AR				F
		F) TO FIX COVERING ON FIBERGLASS					
		W) TO FIX COVERING ON WOOD					

From Y-7046 Up to 6-8906	DATE: 01/2014	PAGE: Y2-1838-10

FLOOR COVERING - "TARAFLEX"

ITEM	PART	DESCRIPTION	XL45	MTH40	MTH45	MTH45S	NOTE
NS	684655	GLUE CONTACT "SCOTCH-GRIP" / 3.8 LITER / 3M #1357-NEUTRAL	AR				F
NS	684685	ADHESIVE SIMSON #ISR 70-03 / BLACK / 310ml CARTRIDGE	AR				F
		F) TO FIX COVERING ON FIBERGLASS					

From Y-7046 Up to 6-8906	DATE: 01/2014	PAGE: Y2-1838-10

FLOOR COVERING - "TARAFLEX"

ITEM	PART	DESCRIPTION	XL45	MTH40	MTH45	MTH45S	NOTE

From Y-7046 Up to 8-9276	DATE: 01/2014	PAGE: Y2-1838-50
FLOOR - MTH		

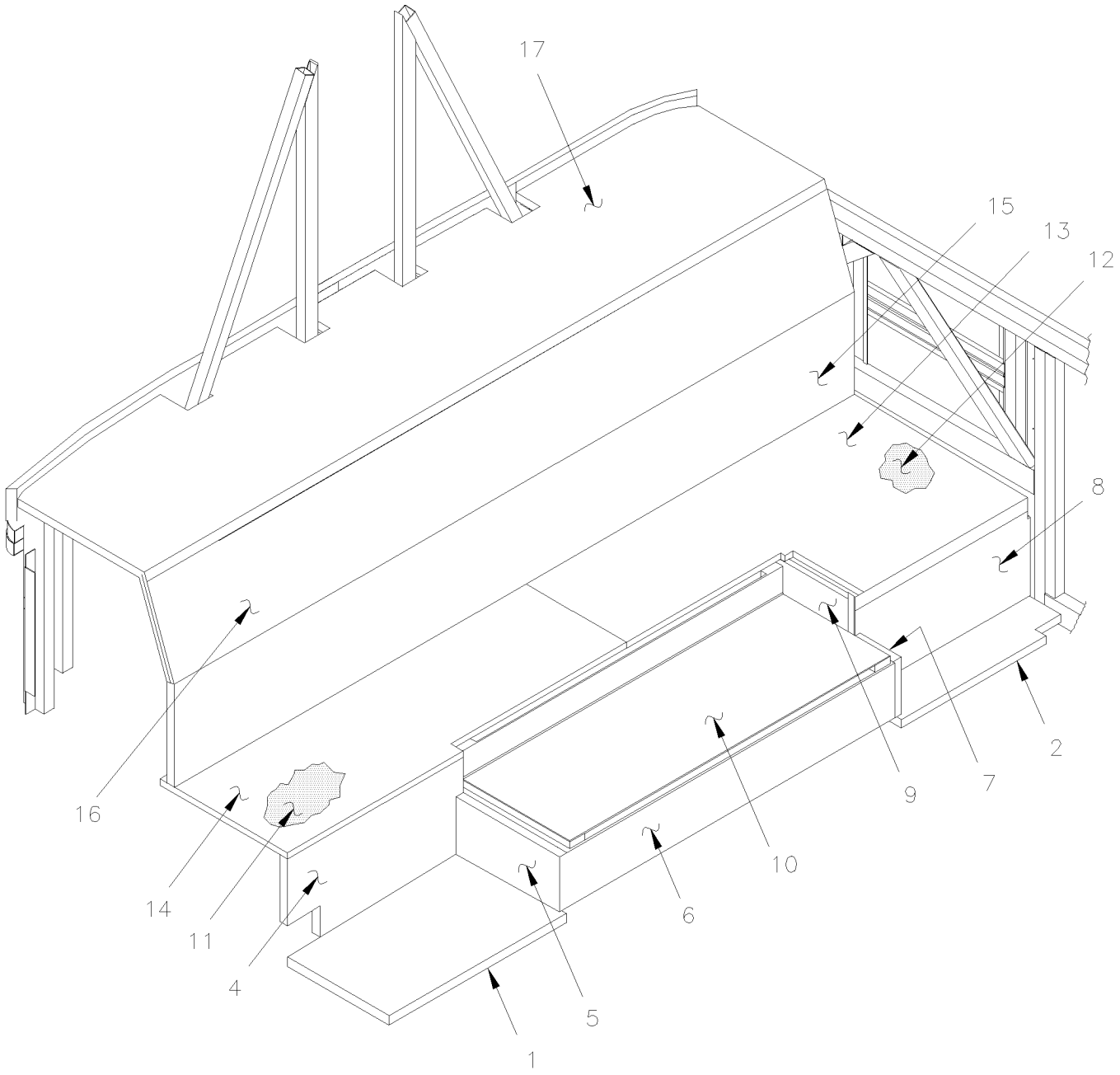

From Y-7046 Up to 8-9276	DATE: 01/2014	PAGE: Y2-1838-50
FLOOR - MTH		

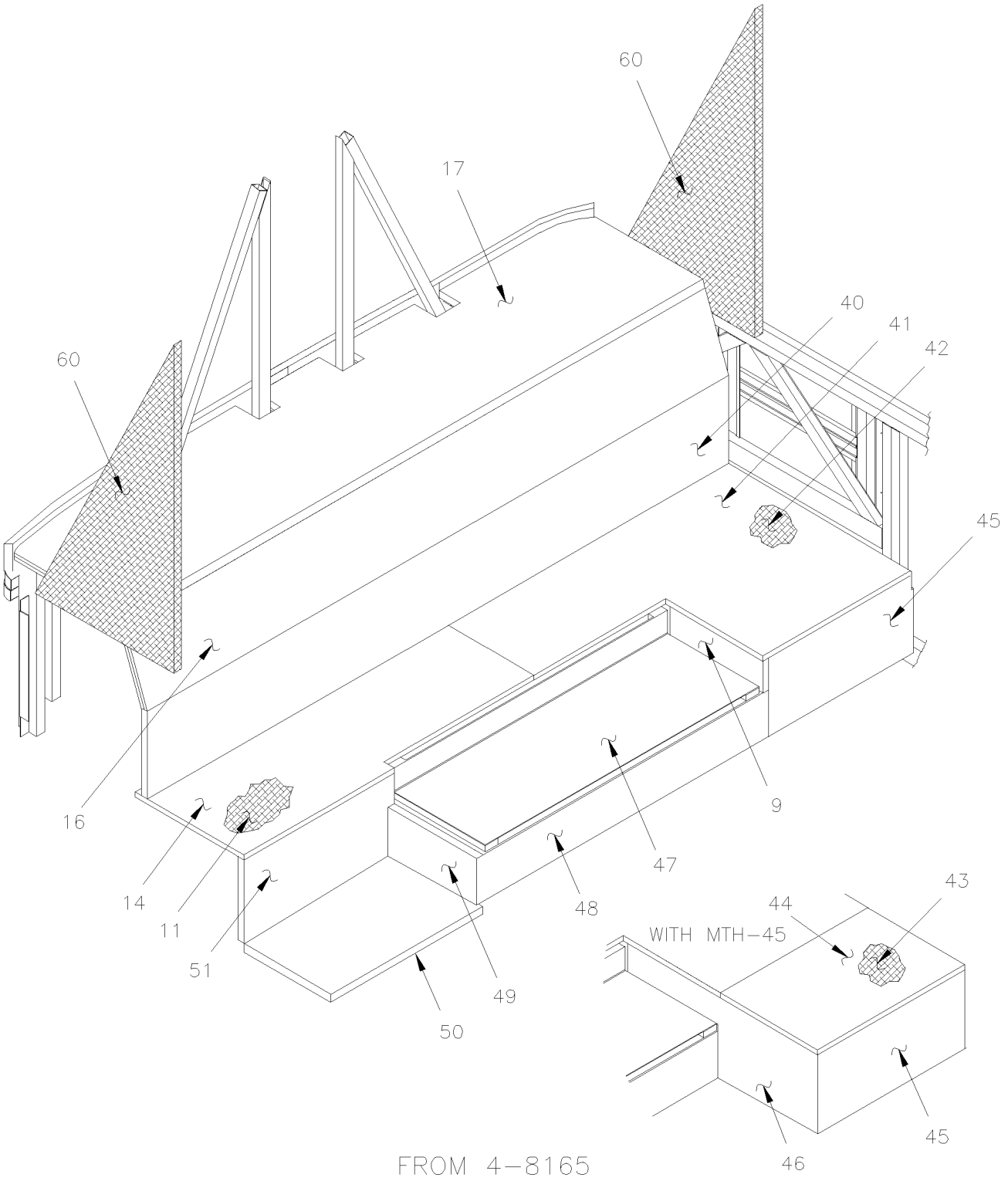

From Y-7046 Up to 8-9276	DATE: 01/2014	PAGE: Y2-1838-50
FLOOR - MTH		

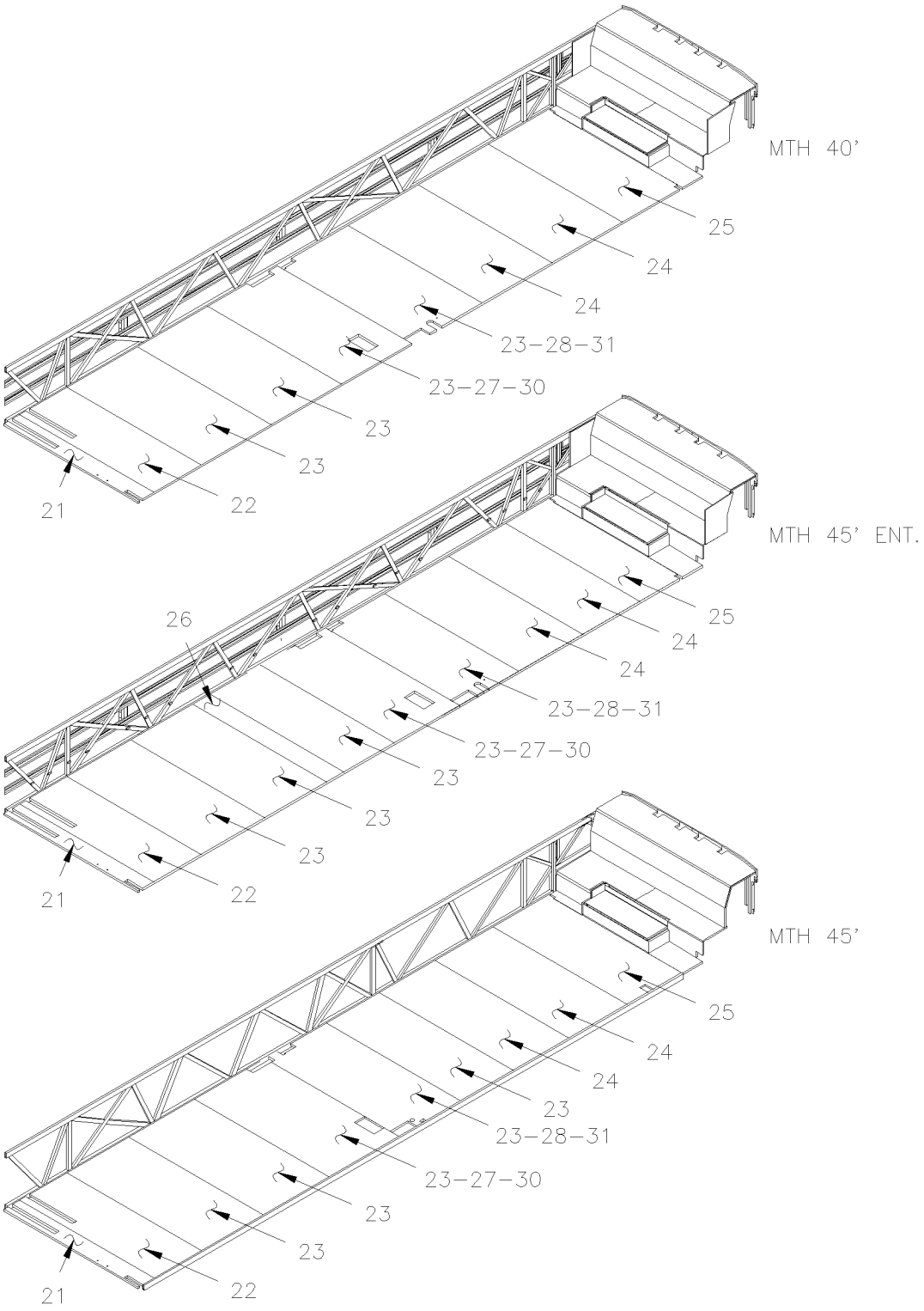

From Y-7046 Up to 8-9276	DATE: 01/2014	PAGE: Y2-1838-50
FLOOR - MTH		

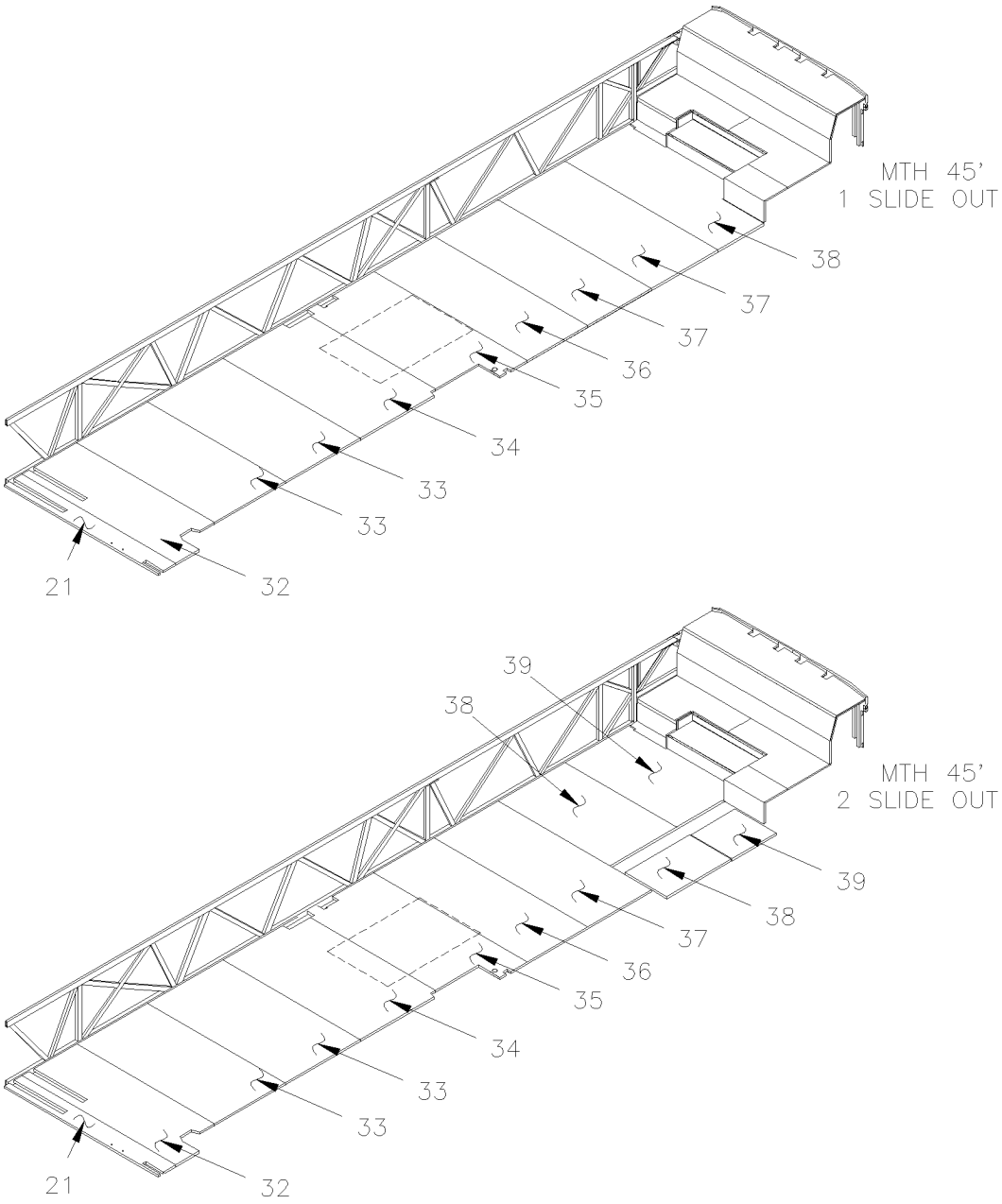

FROM 4-8165 UP TO 5-8805

From Y-7046 Up to 8-9276	DATE: 01/2014	PAGE: Y2-1838-50

FLOOR - MTH

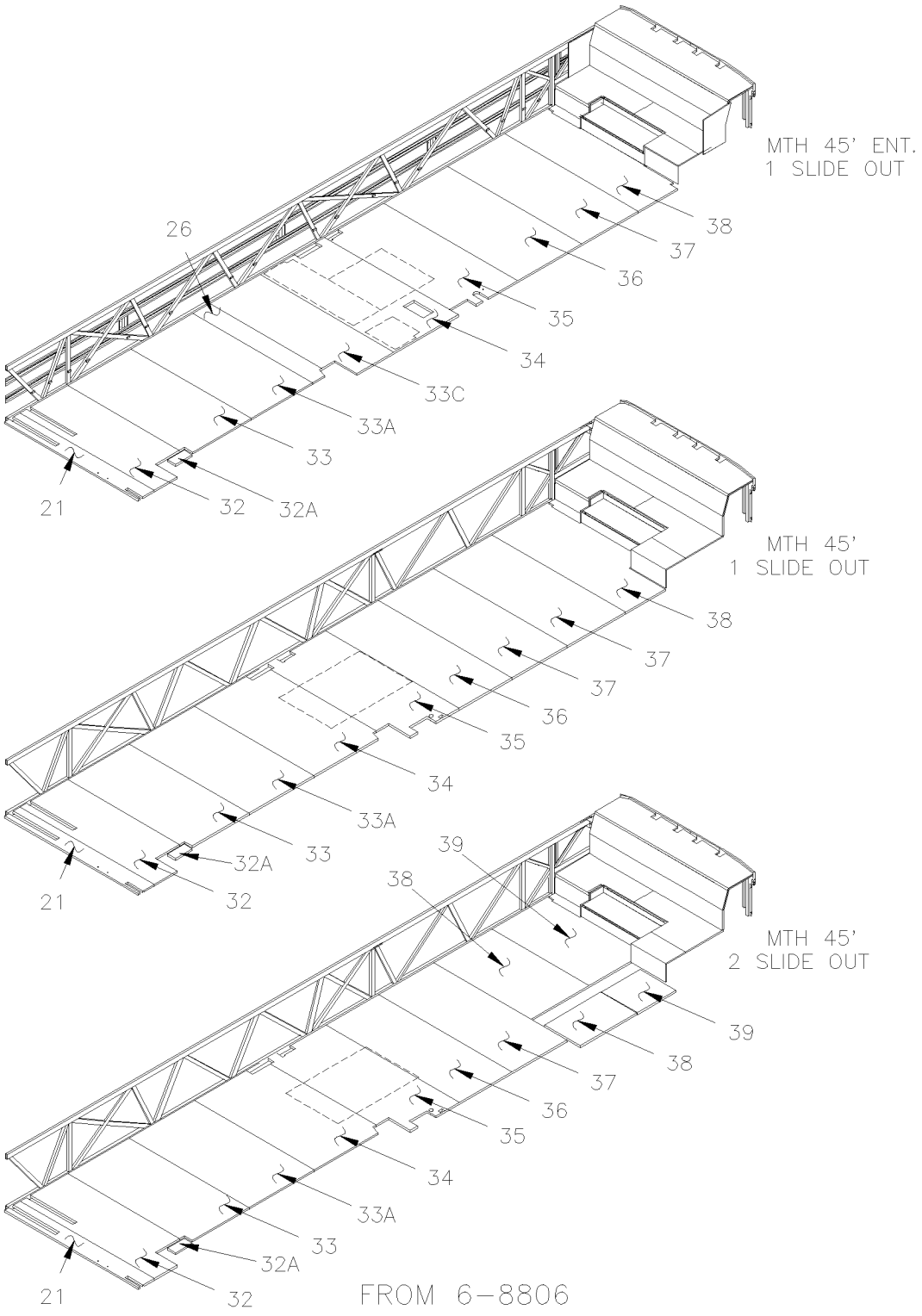

From Y-7046 Up to 8-9276	DATE: 01/2014	PAGE: Y2-1838-50

FLOOR - MTH

ITEM	PART	DESCRIPTION	XL45	MTH40	MTH45	MTH45S	NOTE
1	324420	FLOOR PANEL ASSY		1	1	1	
2	324472	FLOOR PANEL ASSY Up to 3-8164		1		1	
2	324419	FLOOR PANEL ASSY Up to 3-8164		1		1	A
2	323972	FLOOR PANEL ASSY			1		
4	327151	FLOOR PANEL ASSY		1		1	
4	325083	FLOOR PANEL ASSY		1		1	A
4	325082	FLOOR PANEL ASSY Up to 3-8164			1		
4	325081	FLOOR PANEL ASSY Up to 3-8164			1		A
4	325131	SUPPORT		1	1	1	
5	325074	FLOOR PANEL ASSY Up to 3-8164		1	1	1	
5	326207	FLOOR PANEL ASSY From 4-8165		1		1	
6	325076	FLOOR PANEL ASSY Up to 3-8164		1	1	1	
6	327826	FLOOR PANEL ASSY From 4-8165		1		1	
7	325075	FLOOR PANEL ASSY Up to 3-8164		1	1	1	
8	325078	FLOOR PANEL ASSY		1		1	
8	327827	FLOOR PANEL ASSY Up to 3-8164		1		1	
8	325077	FLOOR PANEL ASSY			1		
9	325080	FLOOR PANEL ASSY Up to 3-8164		1		1	
9	327830	FLOOR PANEL ASSY From 4-8165		1		1	
9	325079	FLOOR PANEL ASSY			1		
10	Call Order Desk	ACCESS ENGINE FLOOR PANEL Up to 3-8164		1		1	P
. NS	324683	. WEATHERSTRIP RUBBER ASSY Up to 3-8164		1		1	
10	327829P	ACCESS ENGINE FLOOR PANEL From 4-8165		1		1	
. NS	327978	. WEATHERSTRIP RUBBER ASSY From 4-8165		1		1	
10	Call Order Desk	ACCESS ENGINE FLOOR PANEL Up to 3-8164			1		P
. NS	324296	. WEATHERSTRIP RUBBER ASSY Up to 3-8164			1		
NS	500186	SCREW CAP HEX 5/16-18x2 1/2 G5 ZP		6	6	6	
NS	500985	WASHER FL .343x.875x.125 ZP		6	6	6	
NS	471119	SEAL WASHER / <> RUB RAIL & PANEL		6	6	6	
NS	680532	SEALANT SIKA #221 / GREY / 310ml CARTRIDGE		1	1	1	
11	325049	INSULATING		1	1	1	
12	325050	INSULATING Up to 3-8164		1	1	1	
13	325048	FLOOR PANEL ASSY Up to 3-8164		1	1	1	
13	327479	FLOOR PANEL ASSY From 5-8165		1		1	C
14	325052	FLOOR PANEL ASSY Up to 3-8164		1	1	1	
14	326819	FLOOR PANEL ASSY From 4-8165		1		1	
14	327881	FLOOR PANEL ASSY From 4-8165			1		
15	324674	PANEL ASSY		1		1	
15	324241	PANEL ASSY Up to 3-8164			1		
		P) CALL ORDER DESK FOR SPECIFIC APPLICATION					
		(V.I.N.)					
		A) W/SMALL A/C					
		C) THIS PANEL FINISH IN LINE WITH # 6 PANEL					

From Y-7046 Up to 8-9276	DATE: 01/2014	PAGE: Y2-1838-50

FLOOR - MTH

ITEM	PART	DESCRIPTION	XL45	MTH40	MTH45	MTH45S	NOTE
16	324012	PANEL ASSY		1	1	1	
17	326844	PANEL ASSY		1		1	
17	326628	PANEL ASSY			1		
NS	680096	SEALANT BUTYL ALUM / GREY / 310ml CARTRIDGE		1	1	1	
17	500293	SCREW TP PAN PH #10x1 SS		1	1	1	
17	500618	SCREW TP FL PH #10x1 ZP		1	1	1	
17	500642	SCREW TP BDG PH #10x3/4 ZP		1	1	1	
17	5001232	NUT SLE #10-24x1/2 CHR		1	1	1	
17	5001236	SCREW MA FL PH #10-24x1 ZP		40	40	40	
17	5001143	SCREW DR WF TORX #12x2 CP / REPLACED BY: 5001532		AR	AR	AR	
21	Call Order Desk	FLOOR PANEL ASSY		1		1	P
21	Call Order Desk	FLOOR PANEL ASSY			1		P
22	Call Order Desk	FLOOR PANEL ASSY		1		1	P
22	Call Order Desk	FLOOR PANEL ASSY			1		P
23	323968P	FLOOR PANEL ASSY		3			
23	323968P	FLOOR PANEL ASSY				4	
23	Call Order Desk	FLOOR PANEL ASSY			5		P
24	Call Order Desk	FLOOR PANEL ASSY		2		2	P
24	Call Order Desk	FLOOR PANEL ASSY			1		P
25	325426P	FLOOR PANEL ASSY		1		1	A
25	Call Order Desk	FLOOR PANEL ASSY		1		1	P B
25	Call Order Desk	FLOOR PANEL ASSY Up to 4-8164			1		P B
25	Call Order Desk	FLOOR PANEL ASSY Up to 4-8164			1		P B
26	325442P	FLOOR PANEL ASSY Up to 6-8805				1	
26	Call Order Desk	FLOOR PANEL ASSY From 6-8806				1	P
27	Call Order Desk	FLOOR PANEL ASSY Up to 5-8726		1		1	P B
27	Call Order Desk	FLOOR PANEL ASSY From 5-8727				1	P B
27	Call Order Desk	FLOOR PANEL ASSY			1		P B
28	Call Order Desk	FLOOR PANEL ASSY Up to 4-8205		1		1	P B
28	Call Order Desk	FLOOR PANEL ASSY From 4-8206 Up to 5-8726		1		1	P B
28	Call Order Desk	FLOOR PANEL ASSY From 5-8727				1	P B
28	Call Order Desk	FLOOR PANEL ASSY			1		P B
30	327379	PANEL / FIRE WALL			1		
30	325729	PANEL / FIRE WALL		1		1	
31	325730	PANEL / FIRE WALL		1		1	
		NEXT FLOORS ARE USE WITH "SLIDE-OUT"					
32	Call Order Desk	FLOOR PANEL ASSY Up to 6-8805			1		P
		P) CALL ORDER DESK FOR SPECIFIC APPLICATION					
		(V.I.N.)					
		A) W/SMALL A/C					
		B) W/LARGE A/C					

From Y-7046 Up to 8-9276	DATE: 01/2014	PAGE: Y2-1838-50

FLOOR - MTH

ITEM	PART	DESCRIPTION	XL45	MTH40	MTH45	MTH45S	NOTE
32	Call Order Desk	FLOOR PANEL ASSY From 6-8806			1		P
32A	328214	FLOOR PANEL ASSY STREETSIDE (SMALL PIECE) From 6-8806			1		
33	Call Order Desk	FLOOR PANEL ASSY Up to 6-8805			2		P
33	Call Order Desk	FLOOR PANEL ASSY From 6-8806			1		P
33A	Call Order Desk	FLOOR PANEL ASSY BACKWARD From 6-8806				1	P
33C	Call Order Desk	FLOOR PANEL ASSY From 6-8806				1	P
34	Call Order Desk	FLOOR PANEL ASSY Up to 6-8805			1		P A
34	Call Order Desk	FLOOR PANEL ASSY From 6-8806			1		P
34	Call Order Desk	FLOOR PANEL ASSY Up to 6-8805			1		P B
34	Call Order Desk	FLOOR PANEL ASSY From 6-8806			1		P B
34	Call Order Desk	FLOOR PANEL ASSY From 6-8806				1	P A
34	Call Order Desk	FLOOR PANEL ASSY From 6-8806				1	P B
35	Call Order Desk	FLOOR PANEL ASSY Up to 3-8070			1		P A
35	Call Order Desk	FLOOR PANEL ASSY From 3-8071 Up to 6-8805			1		P A
35	Call Order Desk	FLOOR PANEL ASSY From 6-8806			1		P A
35	Call Order Desk	FLOOR PANEL ASSY Up to 3-8070			1		P B
35	Call Order Desk	FLOOR PANEL ASSY From 3-8071 Up to 6-8805			1		P B
35	Call Order Desk	FLOOR PANEL ASSY From 6-8806			1		P B
35	Call Order Desk	FLOOR PANEL ASSY From 6-8806				1	P A
35	Call Order Desk	FLOOR PANEL ASSY From 6-8806				1	P B
36	Call Order Desk	FLOOR PANEL ASSY Up to 6-8805			1		P B
36	Call Order Desk	FLOOR PANEL ASSY From 6-8806			1		P A
36	Call Order Desk	FLOOR PANEL ASSY Up to 6-8805			1		P A
36	Call Order Desk	FLOOR PANEL ASSY From 6-8806			1	1	P A
36	Call Order Desk	FLOOR PANEL ASSY From 6-8806			1	1	P B
36	Call Order Desk	FLOOR PANEL ASSY				1	P
37	Call Order Desk	FLOOR PANEL ASSY Up to 6-8805			1		P
37	Call Order Desk	FLOOR PANEL ASSY From 6-8806 Up to 8-9095			1		P
37	Call Order Desk	FLOOR PANEL ASSY From 8-9096			1		P
37	Call Order Desk	FLOOR PANEL ASSY				1	P
NS	Call Order Desk	FLOOR PANEL TOP FORWARD CURBSIDE From 4-8165			1		P
NS	Call Order Desk	FLOOR PANEL TOP FORWARD STREETSIDE From 4-8165			1		P
NS	Call Order Desk	FLOOR PANEL TOP BACKWARD CURBSIDE From 4-8165			1		P
NS	Call Order Desk	FLOOR PANEL ASSY BACKWARD STREETSIDE From 4-8165			1		P
NS	Call Order Desk	FLOOR PANEL ASSY W/OUT REAR SLIDE OUT From 4-8165			1		P
38	Call Order Desk	FLOOR PANEL ASSY / REPLACED BY: 325426P				1	P
40	327991	PANEL ASSY From 4-8165			1		
41	327880	FLOOR PANEL ASSY From 5-8165 Up to 6-8805			1		C
		P) CALL ORDER DESK FOR SPECIFIC APPLICATION					
		(V.I.N.)					
		A) W/SMALL A/C					
		B) W/LARGE A/C					
		C) THIS PANEL FINISH IN LINE WITH # 6 PANEL					

From Y-7046 Up to 8-9276	DATE: 01/2014	PAGE: Y2-1838-50

FLOOR - MTH

ITEM	PART	DESCRIPTION	XL45	MTH40	MTH45	MTH45S	NOTE
41	328186	FLOOR PANEL ASSY From 6-8806			1		C
42	327878	INSULATING From 4-8165 Up to 6-8805			1		
42	328191	INSULATING From 6-8806			1		
43	327877	INSULATING From 4-8165 Up to 6-8805			1		
43	328196	INSULATING From 6-8806			1		
44	327879	FLOOR PANEL ASSY / FORWARD From 4-8165 Up to 6-8805			1		
44	328195	FLOOR PANEL ASSY / FORWARD From 6-8806			1		
44	327967	FLOOR PANEL ASSY / FORWARD From 6-8806			1		A
45	327865	FLOOR PANEL ASSY From 4-8165 Up to 5-8805			1		A
45	328292	FLOOR PANEL ASSY From 6-8806			1		A
45	327864	FLOOR PANEL ASSY From 4-8165 Up to 5-8805			1		
45	Call Order Desk	FLOOR PANEL ASSY From 6-8806			1		P
46	327840	FLOOR PANEL ASSY From 4-8165 Up to 6-8805			1		A
46	327973	FLOOR PANEL ASSY From 6-8806			1		
47	327887P	ACCESS ENGINE FLOOR PANEL From 4-8165			1		
48	327838	FLOOR PANEL ASSY From 4-8165			1		
49	327861	FLOOR PANEL ASSY From 4-8165			1		
50	324240	FLOOR PANEL ASSY From 4-8165			1		
51	327862	FLOOR PANEL ASSY From 4-8165			1		
51	327863	FLOOR PANEL ASSY From 4-8165			1		A
60	Y2-1839-70	**INSULATING REAR END INSIDE OVER ENGINE**					
		P) CALL ORDER DESK FOR SPECIFIC APPLICATION					
		(V.I.N.)					
		A) W/SMALL A/C					
		C) THIS PANEL FINISH IN LINE WITH # 6 PANEL					

From Y-7046 Up to 8-9276	DATE: 01/2014	PAGE: Y2-1838-50

FLOOR - MTH

ITEM	PART	DESCRIPTION	XL45	MTH40	MTH45	MTH45S	NOTE

From 8-9279 Up to 8-9339	DATE: 01/2014	PAGE: Y2-1838-51
FLOOR - MTH		

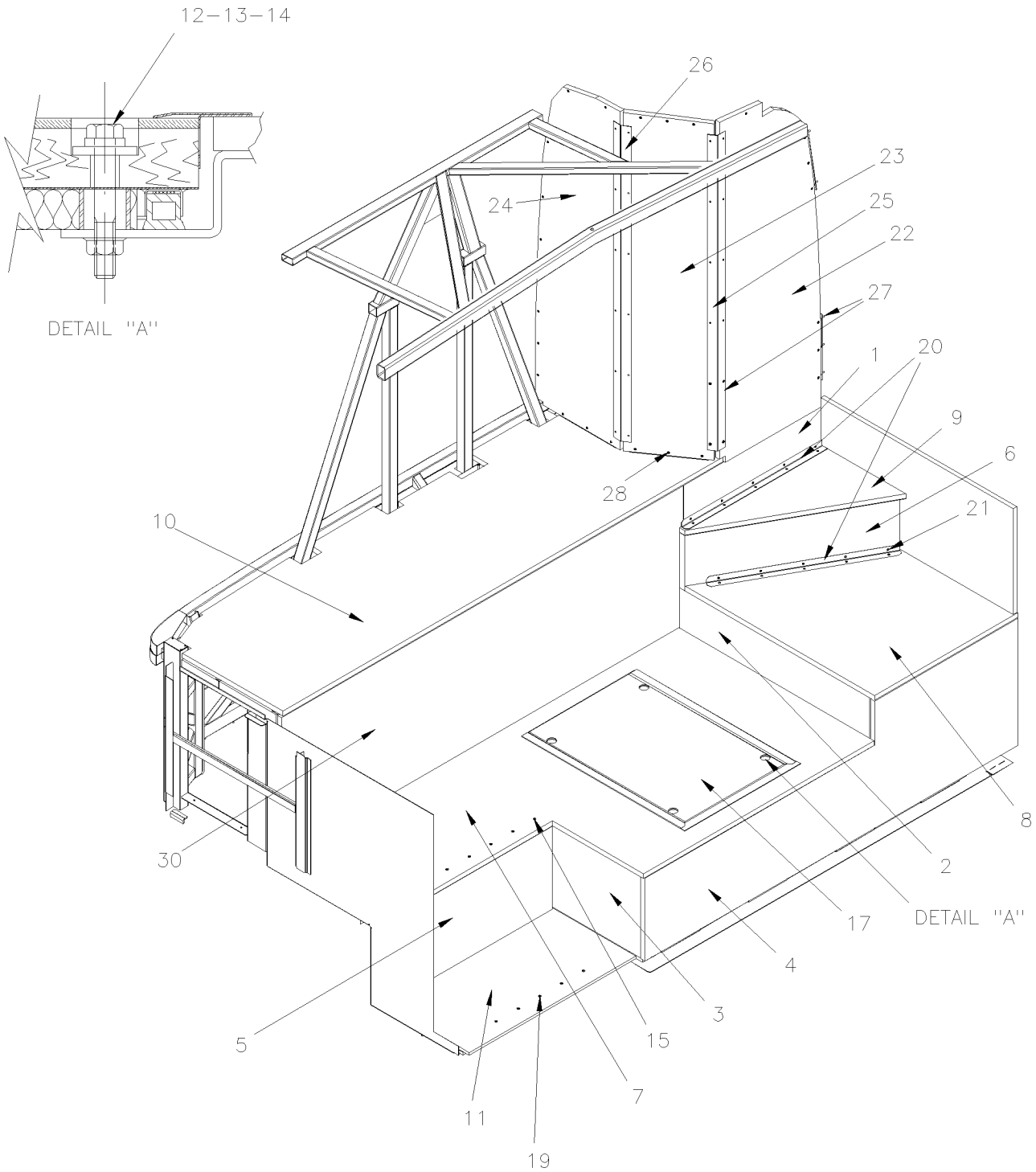

MTH–40' & MTH–45' ENT

From 8-9279 Up to 8-9339	DATE: 01/2014	PAGE: Y2-1838-51
FLOOR - MTH		

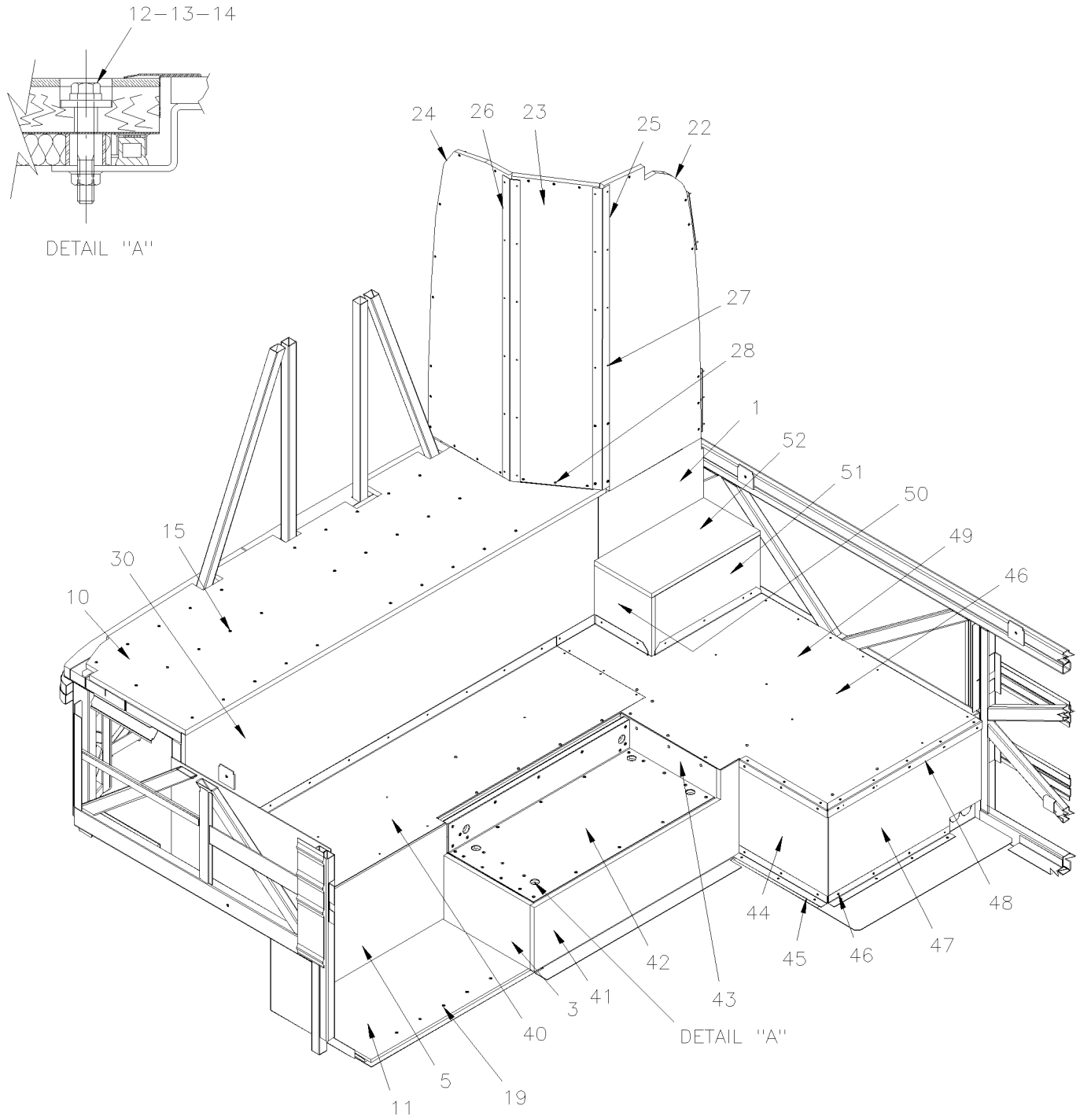

MTH−45'

From 8-9279 Up to 8-9339	DATE: 01/2014	PAGE: Y2-1838-51

FLOOR - MTH

ITEM	PART	DESCRIPTION	XL45	MTH40	MTH45	MTH45S	NOTE
1	328684	FLOOR PANEL ASSY				1	
1	328695	FLOOR PANEL ASSY			1		
2	328669	FLOOR PANEL ASSY				1	
3	328664	FLOOR PANEL ASSY				1	
3	328695	FLOOR PANEL ASSY			1		
4	328665	FLOOR PANEL ASSY				1	
5	328663	FLOOR PANEL / W/LARGE A/C				1	B
5	328676	FLOOR PANEL / W/SMALL A/C				1	A
5	328696	FLOOR PANEL / W/LARGE A/C			1		B
5	328685	FLOOR PANEL / W/SMALL A/C			1		A
6	328666	FLOOR PANEL ASSY				1	
7	328667	FLOOR PANEL ASSY				1	
8	328671	FLOOR PANEL ASSY				1	
9	328670	FLOOR PANEL ASSY				1	
10	328672	FLOOR PANEL ASSY			1		
11	328673	FLOOR PANEL ASSY				1	
11	328733	FLOOR PANEL ASSY			1		
12	500186	SCREW CAP HEX 5/16-18x2 1/2 G5 ZP			4	4	
13	500985	WASHER FL .343x.875x.125 ZP			4	4	
14	471119	SEAL WASHER / <> RUB RAIL & PANEL			4	4	
15	500620	SCREW TP FL PH #10x1 1/2 ZP			AR	AR	
16	680096	SEALANT BUTYL ALUM / GREY / 310ml CARTRIDGE			AR	AR	
17	Call Order Desk	PANEL ASSY / ENGINE ACCESS				1	P
. NS	328761	. WEATHERSTRIP RUBBER ASSY / REPLACED BY: 320037				1	
. . NS	485610	. . WEATHERSTRIP RUBBER / ADH / RAW MATERIAL				AR	
. . NS	483941	. . WEATHERSTRIP RUBBER / ADH / RAW MATERIAL / REPLACED BY: 485610				AR	
. NS	320037	. WEATHERSTRIP RUBBER ASSY				1	
18	684517	ADHESIVE SIMSON #ISR 70-03 / GREY / 310ml CARTRIDGE			AR	AR	
19	5001349	SCREW WO TR PH #8x7/8			6	6	
20	328450	ANGLE				2	
21	500373	SCREW TP BDG PH #6x1/2 ZG603			20	20	
22	Call Order Desk	PANEL VENEER				1	P
23	Call Order Desk	PANEL VENEER			1		P
23	Call Order Desk	PANEL VENEER				1	P
24	Call Order Desk	PANEL VENEER			1		P
24	Call Order Desk	PANEL VENEER				1	P
25	320398	SUPPORT VENEER			1		
25	320399	SUPPORT VENEER				1	
26	320398	SUPPORT VENEER			1	1	
26	320399	SUPPORT VENEER			1		
		P) CALL ORDER DESK FOR SPECIFIC APPLICATION					
		(V.I.N.)					
		A) WITH SMALL A/C SYSTEM					
		B) WITH LARGE A/C SYSTEM					

From 8-9279 Up to 8-9339	DATE: 01/2014	PAGE: Y2-1838-51

FLOOR - MTH

ITEM	PART	DESCRIPTION	XL45	MTH40	MTH45	MTH45S	NOTE
27	500641	SCREW TP BDG PH #8x3/4 ZP			AR	AR	
28	500645	SCREW TP OV PH #8x1 1/4 ZP			AR	AR	
29	405809	ANGLE LOWER 260MM			5	5	
30	328668	FLOOR PANEL ASSY			1	1	
40	328689	ALL PANEL			1		
41	328687	FLOOR PANEL ASSY			1		
42	Call Order Desk	PANEL ASSY / ENGINE ACCESS			1		P
43	328630	FLOOR PANEL ASSY			1		
44	328708	FLOOR PANEL ASSY			1		
45	328731	ANGLE LOWER FLOOR			1		A
45	328732	ANGLE LOWER FLOOR			1		B
46	500613	SCREW TP PAN PH #10x1/2 ZP			32		
47	328706	F W/O SO SAC			1		A
47	328712	F W/O SO LAC			1		B
48	328730	ANGLE UPPER FLOOR			1		
49	328697	ALL PANEL			1		
50	328690	FLOOR PANEL ASSY			1		
51	328691	FLOOR PANEL ASSY			1		
52	328692	FLOOR PANEL ASSY			1		
		P) CALL ORDER DESK FOR SPECIFIC APPLICATION					
		(V.I.N.)					
		A) WITH SMALL A/C SYSTEM					
		B) WITH LARGE A/C SYSTEM					

From Y-7046 Up to 2-7702	DATE: 01/2014	PAGE: Y2-1839-00

INSULATING SIDE WALL - LOWER PANEL - BUS

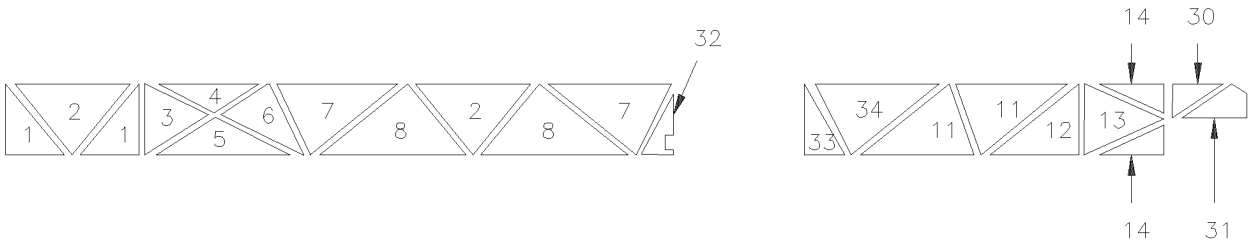

BUS 45' WITH RICON

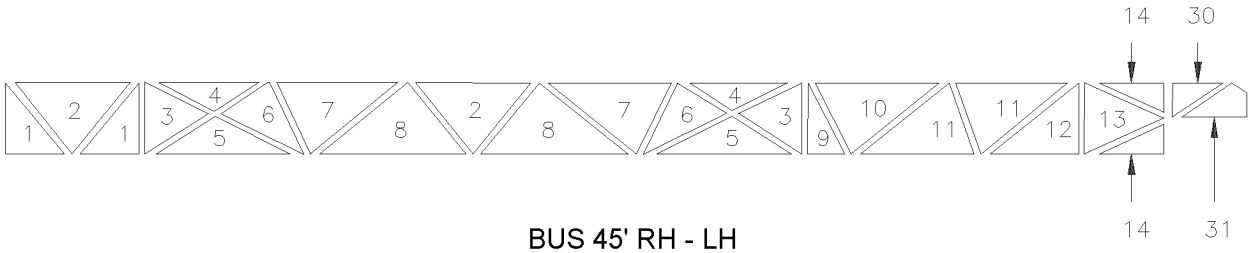

BUS 45' RH - LH

From Y-7046 Up to 2-7702	DATE: 01/2014	PAGE: Y2-1839-00

INSULATING SIDE WALL - LOWER PANEL - BUS

ITEM	PART	DESCRIPTION	XL45	MTH40	MTH45	MTH45S	NOTE
1	350893	SIDE INSULATION PANEL	4				
2	350894	SIDE INSULATION PANEL	2				
3	350895	SIDE INSULATION PANEL	4				
4	350896	SIDE INSULATION PANEL	4				
5	350897	SIDE INSULATION PANEL	4				
6	350898	SIDE INSULATION PANEL	4				
7	350899	SIDE INSULATION PANEL	2				
8	350900	SIDE INSULATION PANEL	4				
9	350901	SIDE INSULATION PANEL	2				
10	350902	SIDE INSULATION PANEL	2				
11	350903	SIDE INSULATION PANEL	4				
12	350904	SIDE INSULATION PANEL	2				
13	350905	SIDE INSULATION PANEL	2				
14	350906	SIDE INSULATION PANEL	4				
30	350949	SIDE INSULATION PANEL	1				
31	350950	SIDE INSULATION PANEL	1				
32	350977	SIDE INSULATION PANEL	1				
33	350979	SIDE INSULATION PANEL	1				
34	350978	SIDE INSULATION PANEL	1				
NS	350922	KIT INSULATING PANEL L.H. & R.H. WALL	2				
NS	350975	KIT INSULATING PANEL R.H. WALL / W/W.C.L.	1				
NS	850073	ALUMINUM WALL COVERING ADHESIVE / 28 1/2" X 448" / REPLACED BY: 850094	2				
NS	684196	PRIMER ELASTOCOL # 593	AR				
NS	320104	INSULATING PLATE / ALUMINUM 18GA / "E" SHAPE 90MM X 102MM	AR				

From 2-7703 Up to 6-8906	DATE: 01/2014	PAGE: Y2-1839-01
INSULATING SIDE WALL - LOWER PANEL - BUS		

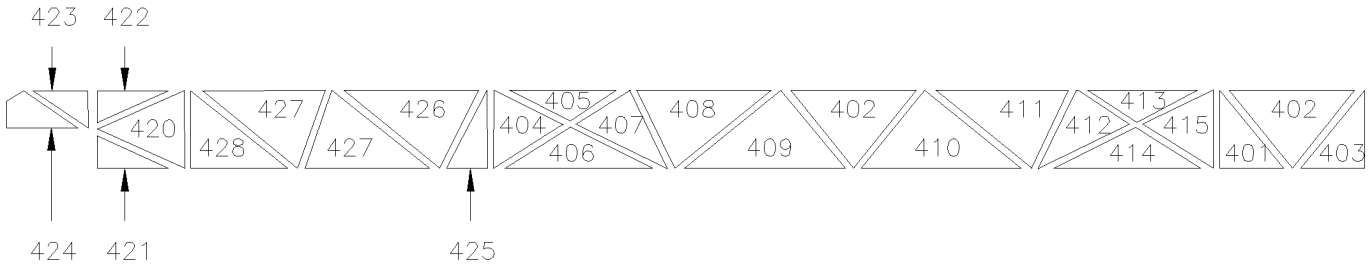

BUS – 45' LH

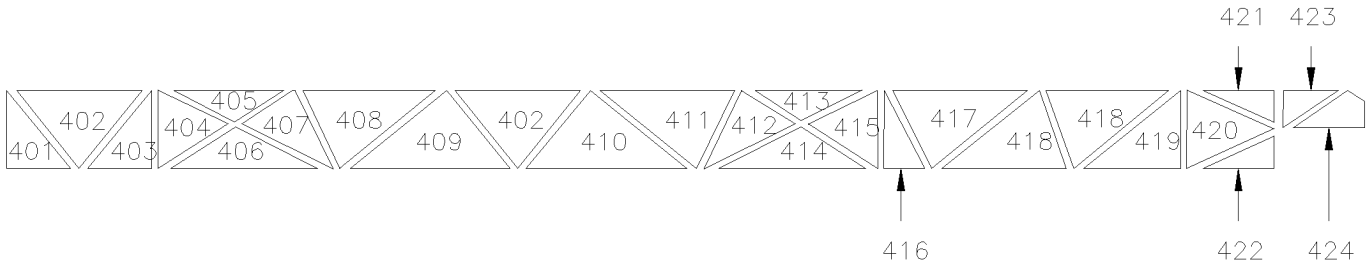

BUS – 45' RH

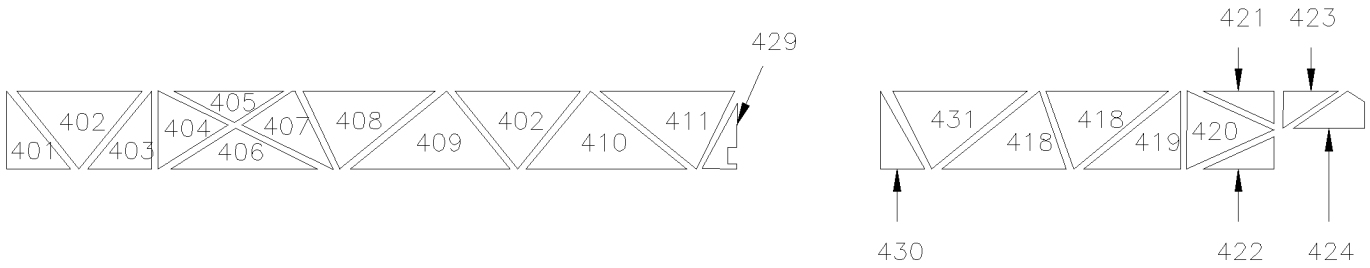

BUS – 45' RH W / W.C.L.

From 2-7703 Up to 6-8906	DATE: 01/2014	PAGE: Y2-1839-01

INSULATING SIDE WALL - LOWER PANEL - BUS

ITEM	PART	DESCRIPTION	XL45	MTH40	MTH45	MTH45S	NOTE
	351130	KIT INSULATING PANEL L.H. WALL Up to 3-8164	1				
	351500	KIT INSULATING PANEL L.H. WALL From 4-8165	1				
	351131	KIT INSULATING PANEL R.H. WALL Up to 3-8164	1				
	351499	KIT INSULATING PANEL R.H. WALL From 4-8165	1				
	351135	KIT INSULATING PANEL R.H. WALL / W/W.C.L. Up to 3-8464	1				
	351501	KIT INSULATING PANEL R.H. WALL / W/W.C.L. From 4-8165	1				
30	350949	SIDE INSULATION PANEL	2				
31	350950	SIDE INSULATION PANEL	2				
401	351107	SIDE INSULATOR PANEL	2				
402	351108	SIDE INSULATOR PANEL	2				
403	351109	SIDE INSULATOR PANEL	2				
404	351110	SIDE INSULATOR PANEL	2				
405	351111	SIDE INSULATOR PANEL	2				
406	351112	SIDE INSULATOR PANEL	2				
407	351113	SIDE INSULATOR PANEL	2				
408	351114	SIDE INSULATOR PANEL	2				
409	351115	SIDE INSULATOR PANEL	2				
410	351116	SIDE INSULATOR PANEL	2				
411	351117	SIDE INSULATOR PANEL	2				
412	351118	SIDE INSULATOR PANEL	2				
413	351119	SIDE INSULATOR PANEL	2				
414	351120	SIDE INSULATOR PANEL	2				
415	351121	SIDE INSULATOR PANEL	2				
416	351122	SIDE INSULATOR PANEL	2				
417	351123	SIDE INSULATOR PANEL	2				
418	351124	SIDE INSULATOR PANEL	2				
419	351125	SIDE INSULATOR PANEL	2				
420	351126	SIDE INSULATOR PANEL	2				
421	351127	SIDE INSULATOR PANEL	2				
422	351128	SIDE INSULATOR PANEL	2				
423	350949	SIDE INSULATION PANEL	1				
424	350950	SIDE INSULATION PANEL	1				
425	351129	SIDE INSULATOR PANEL	2				
426	351132	SIDE INSULATOR PANEL	2				
427	351133	SIDE INSULATOR PANEL	2				
428	351134	SIDE INSULATOR PANEL	2				
429	351136	SIDE INSULATOR PANEL	2				
430	351137	SIDE INSULATOR PANEL	2				
431	351138	SIDE INSULATOR PANEL	2				
NS	850073	ALUMINUM WALL COVERING ADHESIVE / 28 1/2" X 448" / REPLACED BY: 850094	2				
NS	684196	PRIMER ELASTOCOL # 593	AR				
NS	320104	INSULATING PLATE / ALUMINUM 18GA / "E" SHAPE 90MM X 102MM	AR				

From Y-7046 Up to 6-8906	DATE: 01/2014	PAGE: Y2-1839-05

INSULATING FRONT - BUS

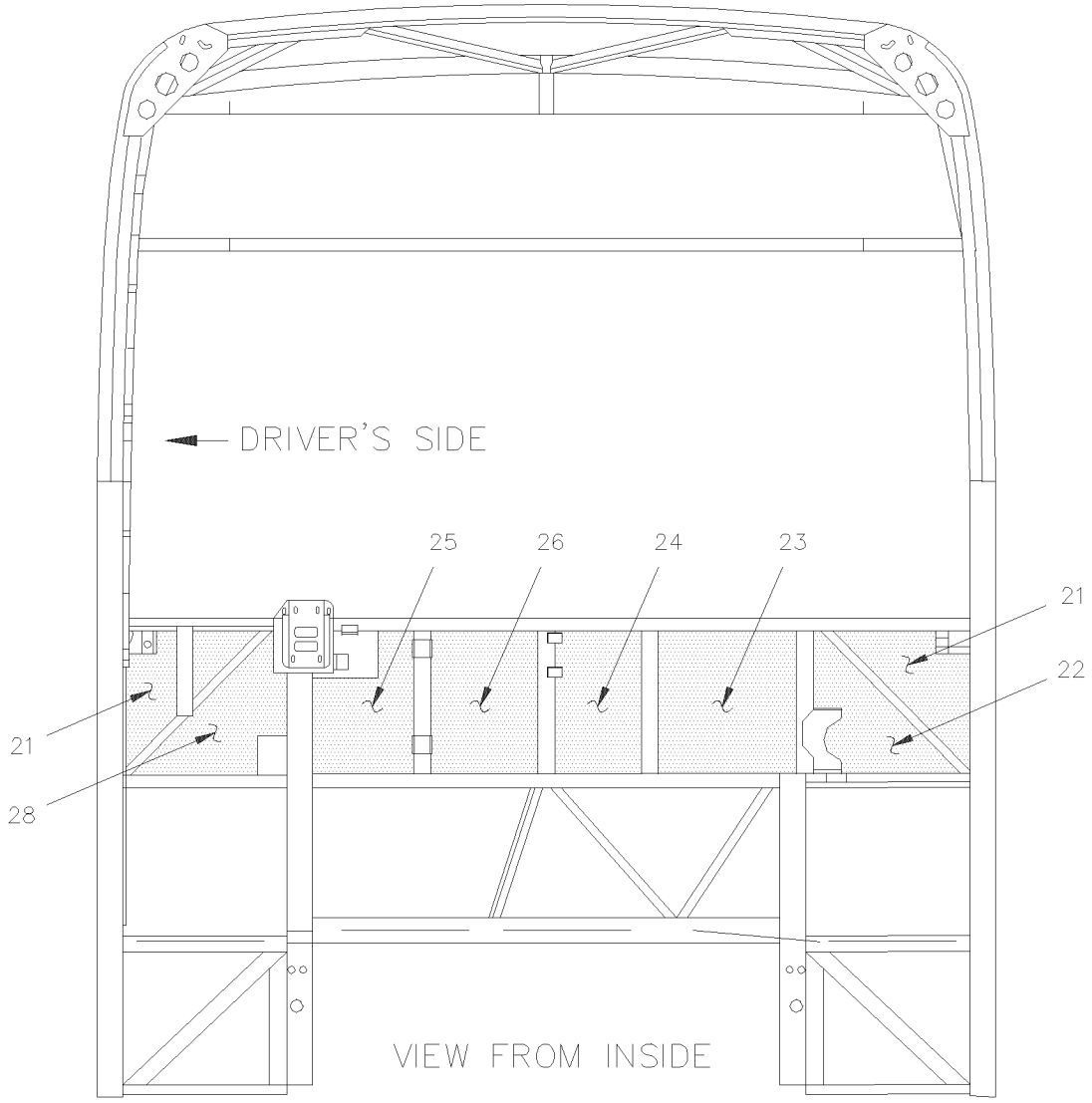

BUS 45'

From Y-7046 Up to 6-8906	DATE: 01/2014	PAGE: Y2-1839-05

INSULATING FRONT - BUS

ITEM	PART	DESCRIPTION	XL45	MTH40	MTH45	MTH45S	NOTE
21	350929	INSULATING PANEL	2				
22	350930	INSULATING PANEL	1				
23	350931	INSULATING PANEL	1				
24	350932	INSULATING PANEL	1				
25	350933	INSULATING PANEL	1				
26	350934	INSULATING PANEL	1				
27	350935	INSULATING PANEL	1				
28	350936	INSULATING PANEL	1				
NS	680397	CONTACT GLUE / AEROSOL	AR				
28	850032	INSULATION PAD NOISE 1" x 48" x 35' / ARMAFLEX POLYURETHANE FOAM	AR				

From Y-7046 Up to 8-9339	DATE: 01/2014	PAGE: Y2-1839-10
INSULATING FLOOR REAR AXLE		

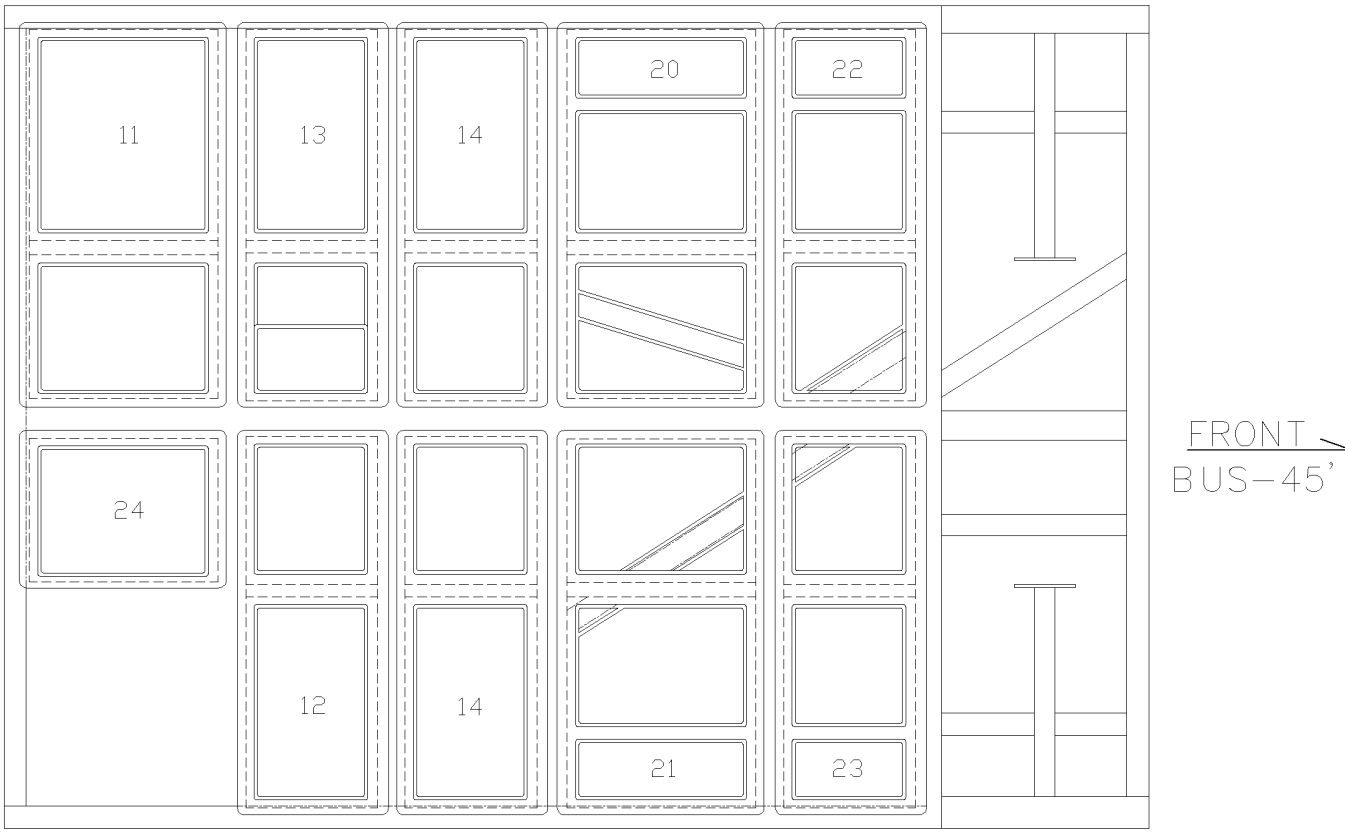

From Y-7046 Up to 8-9339	DATE: 01/2014	PAGE: Y2-1839-10
INSULATING FLOOR REAR AXLE		

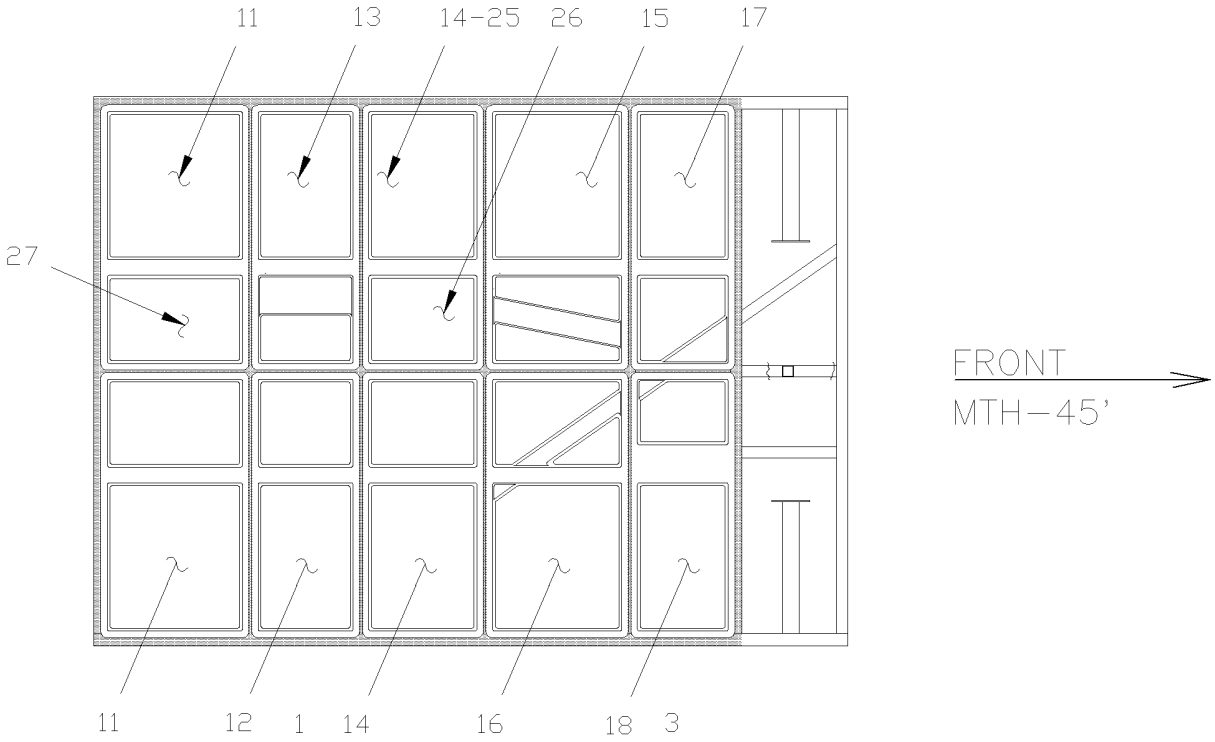

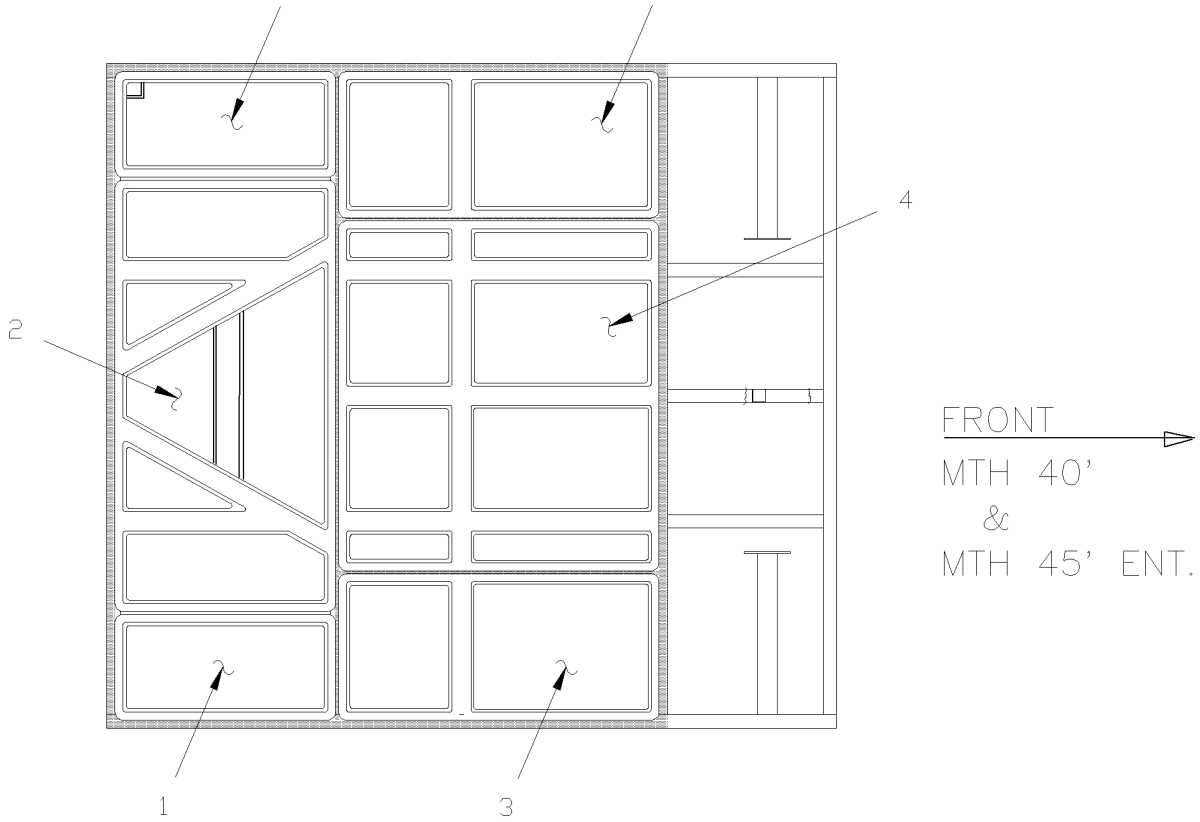

From Y-7046 Up to 8-9339	DATE: 01/2014	PAGE: Y2-1839-10

INSULATING FLOOR REAR AXLE

ITEM	PART	DESCRIPTION	XL45	MTH40	MTH45	MTH45S	NOTE
1	324561	INSULATING HOLDER # 1 Up to 7-9095		2		2	
1	328644	INSULATING HOLDER # 1 STREETSIDE From 7-9096		1		1	
1	328680	INSULATING HOLDER # 1 STREETSIDE From 7-9096		1		1	
2	324562	INSULATING HOLDER # 2 Up to 7-9095		1		1	
2	329490	INSULATING HOLDER # 2 From 7-9096		1		1	
3	324563	INSULATING HOLDER # 3		2		2	
4	324564	INSULATING HOLDER # 4		1		1	
11	325099	INSULATING HOLDER	2		2		
12	325100	INSULATING HOLDER	1		1		
13	325101	INSULATING HOLDER	1		1		
14	325102	INSULATING HOLDER	2		2		
15	325103	INSULATING HOLDER	1		1		
16	325104	INSULATING HOLDER	1		1		
17	325105	INSULATING HOLDER	1		1		
18	325106	INSULATING HOLDER	1		1		
NS	325098	INSULATING KIT	1		1		
NS	324320	INSULATING KIT Up to 7-9095		1		1	
18	328683	INSULATING KIT From 7-9096		1		1	
NS	327443	INSULATING KIT / W/W.C.L. Up to 6-8906	1				
20	327415	INSULATING HOLDER Up to 6-8906	1				
21	327416	INSULATING HOLDER Up to 6-8906	1				
22	327417	INSULATING HOLDER Up to 6-8906	1				
23	327418	INSULATING HOLDER Up to 6-8906	1				
24	325178	INSULATING HOLDER Up to 6-8906	1				
25	351367	INSULATING HOLDER	1		1		
26	351368	INSULATING HOLDER	1		1		
27	351366	INSULATING HOLDER	1		1		
NS	329069	INSULATING PAD 48" X 48" / CUT TO FIT	AR	AR	AR	AR	

From Y-7046 Up to 8-9339	DATE: 01/2014	PAGE: Y2-1839-10

INSULATING FLOOR REAR AXLE

ITEM	PART	DESCRIPTION	XL45	MTH400	MTH445	MTH445S	NOTE

From Y-7046 Up to 8-9339	DATE: 01/2014	PAGE: Y2-1839-15

INSULATING FRONT - SUBFRAME

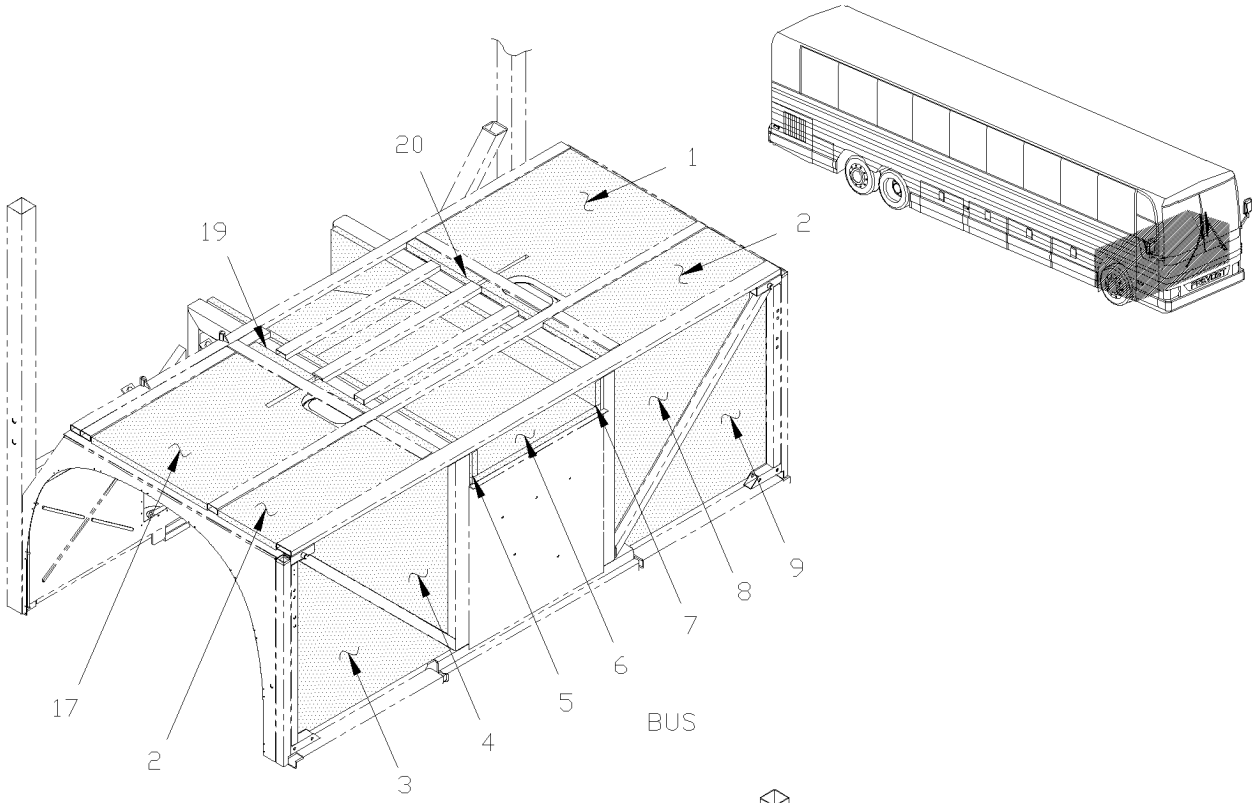

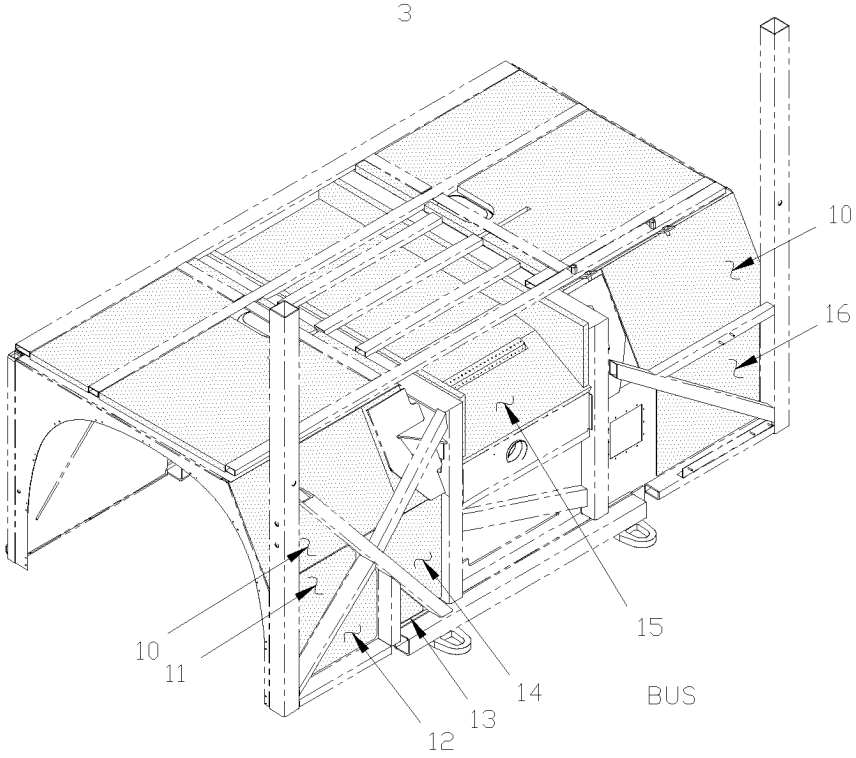

From Y-7046 Up to 8-9339	DATE: 01/2014	PAGE: Y2-1839-15

INSULATING FRONT - SUBFRAME

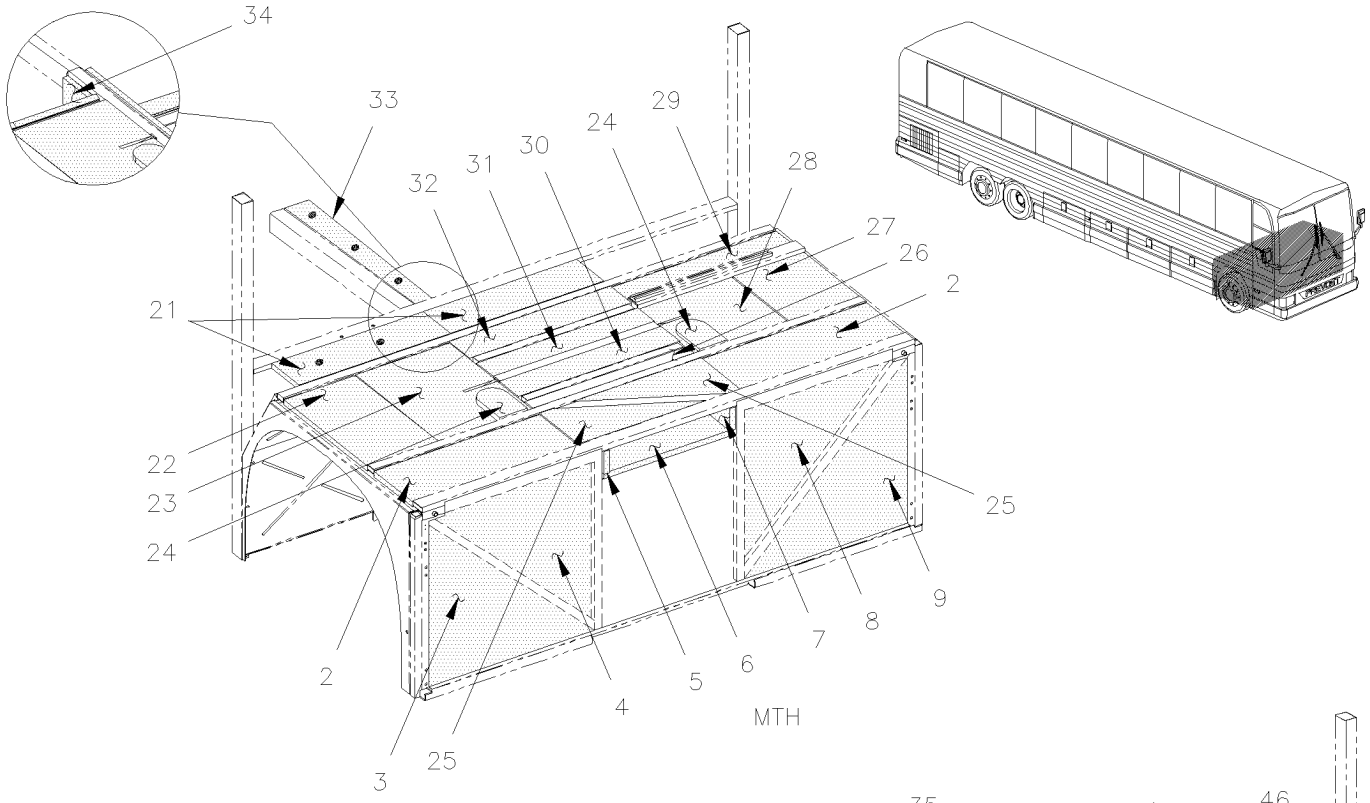

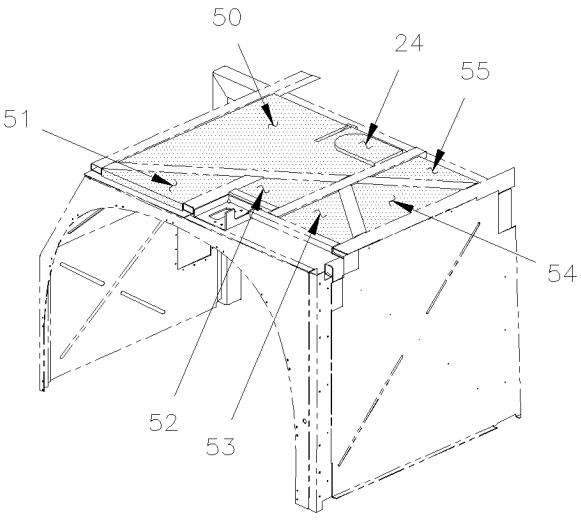

MTH–45' WITH "SLIDE–OUT"

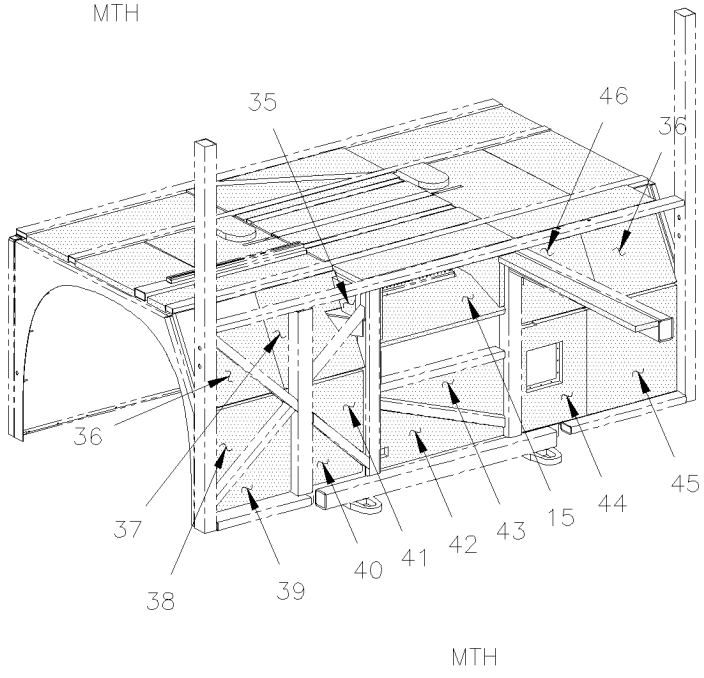

MTH

From Y-7046 Up to 8-9339	DATE: 01/2014	PAGE: Y2-1839-15

INSULATING FRONT - SUBFRAME

ITEM	PART	DESCRIPTION	XL45	MTH40	MTH45	MTH45S	NOTE
1	326973	INSULATING Up to 6-8906	1				R
1	327222	INSULATING Up to 6-8906	1				I
2	326511	INSULATING PAD 1" 1/16 Up to 6-8906	1				
3	326975	INSULATING Up to 2-7751	1				
3	327650	INSULATING From 2-7752 Up to 2-7806	1				
3	326503	INSULATING From 2-7806		1	1	1	
4	326976	INSULATING Up to 2-7751 / REPLACED BY: 329059	1				
4	329059	INSULATING From 2-7752 Up to 2-7806	1				
4	326505	INSULATING Up to 2-7751 / REPLACED BY: 329061	1	1	1	1	R
4	329061	INSULATING From 2-7752 Up to 2-7806	1	1	1	1	R
5	325357	INSULATING PAD NOISE 1"	1	1	1	1	
5	325360	INSULATING PAD 1"		1	1	1	
5	328748	INSULATING PAD NOISE 1" From 2-7752 Up to 6-8906	1				
6	326521	INSULATING PAD 1"1/16	1	1	1	1	
7	325360	INSULATING PAD 1" Up to 2-7751	1				
7	328748	INSULATING PAD NOISE 1"	1	1	1	1	
8	326977	INSULATING Up to 2-7751 / REPLACED BY: 329060	1				
8	329060	INSULATING From 2-7752 Up to 2-7806	1				
8	326504	INSULATING Up to 2-7751 / REPLACED BY: 329062	1	1	1	1	R
8	329062	INSULATING From 2-7752 Up to 2-7806	1	1	1	1	R
9	326978	INSULATING Up to 2-7751	1				
9	327649	INSULATING From 2-7752 Up to 2-7806	1				
9	326502	INSULATING Up to 2-7751		1	1	1	
9	329062	INSULATING From 2-7752 Up to 2-7806		1	1	1	
10	327223	INSULATING PAD NOISE 1/16"		1	1	1	I
10	326981	INSULATING PAD NOISE 1/16" Up to 6-8906	1				R
11	327021	INSULATING Up to 2-7881 / REPLACED BY: 327727	1				R
11	327727	INSULATING From 2-7882 Up to 6-8906	1				R
12	326979	INSULATING Up to 2-7881	1				R
12	327728	INSULATING From 2-7882 Up to 6-8906	1				R
13	327020	INSULATING Up to 2-7881	1				R
13	327729	INSULATING From 2-7882 Up to 6-8906	1				R
14	327224	INSULATING Up to 2-7881		1	1	1	R
14	327022	INSULATING Up to 2-7881 / REPLACED BY: K327022	1				R
14	327731	INSULATING From 2-7882 Up to 6-8906	1				R
NS	327732	INSULATING From 2-7882 Up to 6-8906	1				I
15	326520	INSULATING PAD 1"1/16	1	1	1	1	
16	326980	INSULATING	1	1	1	1	
17	327219	INSULATING		1	1	1	
17	327170	INSULATING Up to 6-8906	1				
		I) WITH INDEPANDANT SUSPENSION					
		R) WITH I BEAM RIGID SUSPENSION					

From Y-7046 Up to 8-9339	DATE: 01/2014	PAGE: Y2-1839-15

INSULATING FRONT - SUBFRAME

ITEM	PART	DESCRIPTION	XL45	MTH40	MTH45	MTH45S	NOTE
19	327220	INSULATING		1	1	1	
20	327221	INSULATING		1	1	1	
21	326577	INSULATING PAD NOISE 1"		2	2	2	
22	326525	INSULATING		1	1	1	
23	326510	INSULATING		1	1	1	
24	326512	INSULATING		2	2	2	
25	325023	INSULATING PAD NOISE 1"		2	2	2	
26	326509	INSULATING		1	1	1	
27	326514	INSULATING		1	1	1	
28	326513	INSULATING		1	1	1	
29	326515	INSULATING		1	1	1	
30	325323	INSULATING PAD NOISE 1" Up to 4-8164		1	1	1	
30	351489	INSULATING From 4-8165		1	1	1	
31	325322	INSULATING		1	1	1	
32	326527	INSULATING Up to 4-8164		1	1	1	
32	351490	INSULATING From 4-8165		1	1	1	
33	326529	INSULATING		1	1	1	
34	326523	INSULATING		1	1	1	
35	326524	INSULATING		2	2	2	
36	326508	INSULATING		2	2	2	
37	326507	INSULATING Up to 4-8164		1	1	1	
37	351486	INSULATING From 4-8165		1	1	1	
39	326518	INSULATING Up to 2-7881		1	1	1	
40	326519	INSULATING Up to 2-7881		1	1	1	
42	327279	INSULATING		1	1	1	
43	327278	INSULATING		1	1	1	
44	326516	INSULATING Up to 4-8164		1	1	1	
44	351484	INSULATING From 4-81685		1	1	1	
45	326517	INSULATING		1	1	1	
46	326506	INSULATING Up to 4-8164		1	1	1	
46	351485	INSULATING From 4-8165		1	1	1	
50	327775	INSULATING			1		
51	327776	INSULATING			1		
52	327777	INSULATING			1		
53	327778	INSULATING			1		
54	327779	INSULATING			1		
55	327780	INSULATING			1		

From Y-7046 Up to 6-8906	DATE: 01/2014	PAGE: Y2-1839-20

INSULATING FLOOR & REAR - BUS

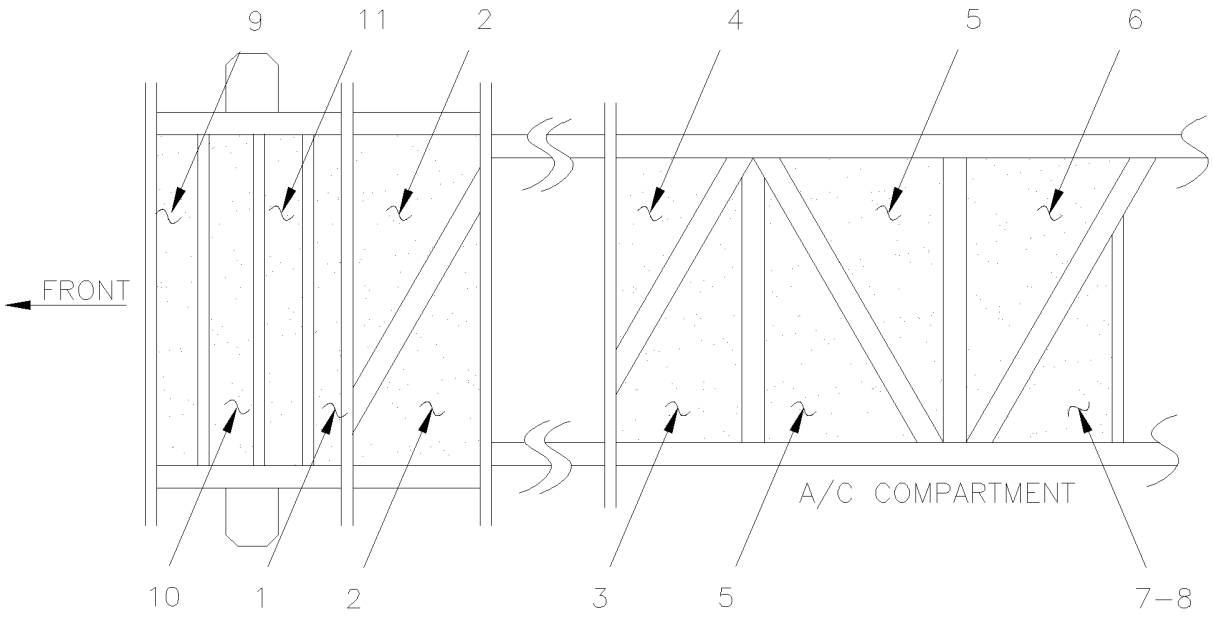

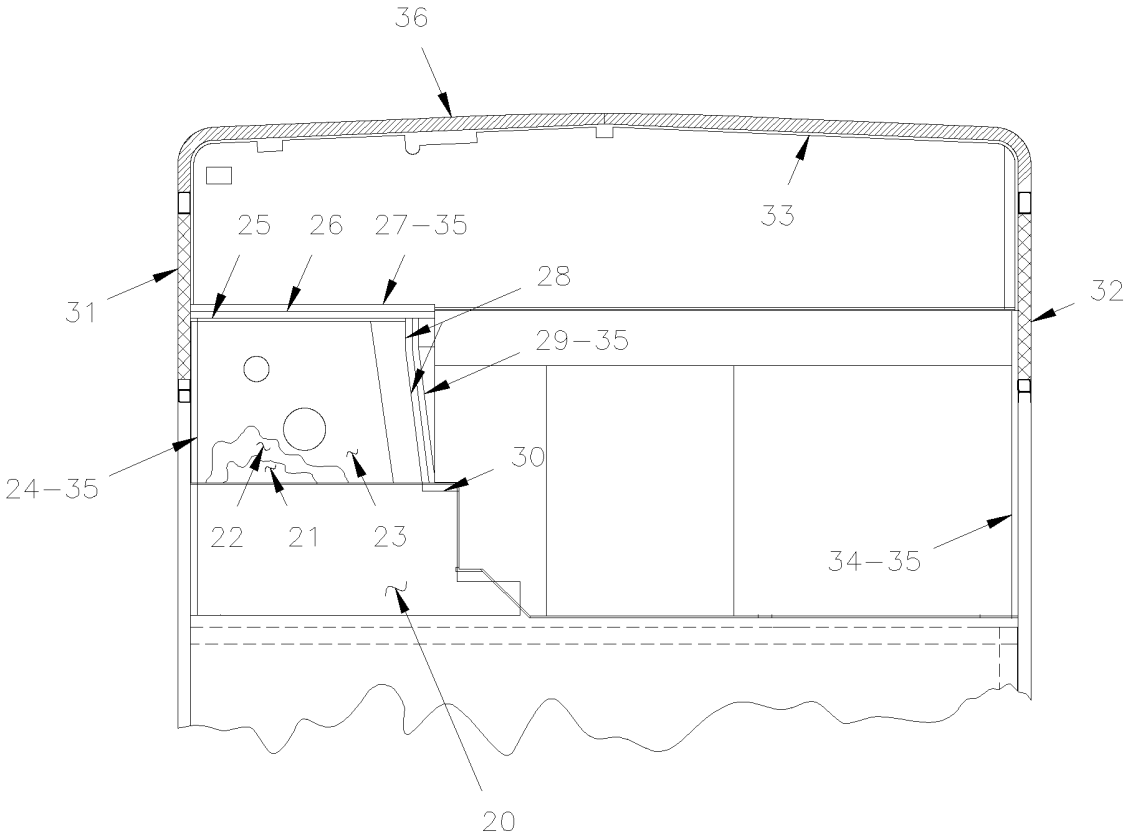

From Y-7046 Up to 6-8906	DATE: 01/2014	PAGE: Y2-1839-20

INSULATING FLOOR & REAR - BUS

ITEM	PART	DESCRIPTION	XL45	MTH40	MTH45	MTH45S	NOTE
1	328777	INSULATING PAD NOISE 1"	1				
2	325023	INSULATING PAD NOISE 1"	2				
3	324331	INSULATING PANEL	1				
4	324330	INSULATING PANEL	1				
5	324332	INSULATING PANEL	2				
6	324333	INSULATING PANEL	1				
7	324334	INSULATING PANEL	1				
8	680397	CONTACT GLUE / AEROSOL	AR				
9	328749	INSULATING PAD NOISE 1"	1				
10	325322	INSULATING	1				
11	325323	INSULATING PAD NOISE 1"	1				
20	324785	INSULATING PANEL	1				
21	324788	INSULATING PANEL	1				
22	325145	INSULATING PANEL	1				
23	325140	INSULATING PANEL	1				
24	326993	INSULATING PANEL	1				
25	325151	INSULATING PANEL	1				
26	326994	INSULATING PANEL	1				
27	326995	INSULATING PANEL	1				
28	325146	INSULATING PANEL	2				
29	324786	INSULATING PANEL	1				
30	325150	INSULATING PANEL	1				
31	326667	INSULATING	1				
32	326668	INSULATING	1				
33	326821	INSULATING PANEL	1				
34	326996	INSULATING PANEL	1				
35	680397	CONTACT GLUE / AEROSOL	AR				
36	326820	INSULATING	1				

From 8-9279 Up to 8-9339	DATE: 01/2014	PAGE: Y2-1839-25

INSULATING - REAR DPF FILTER

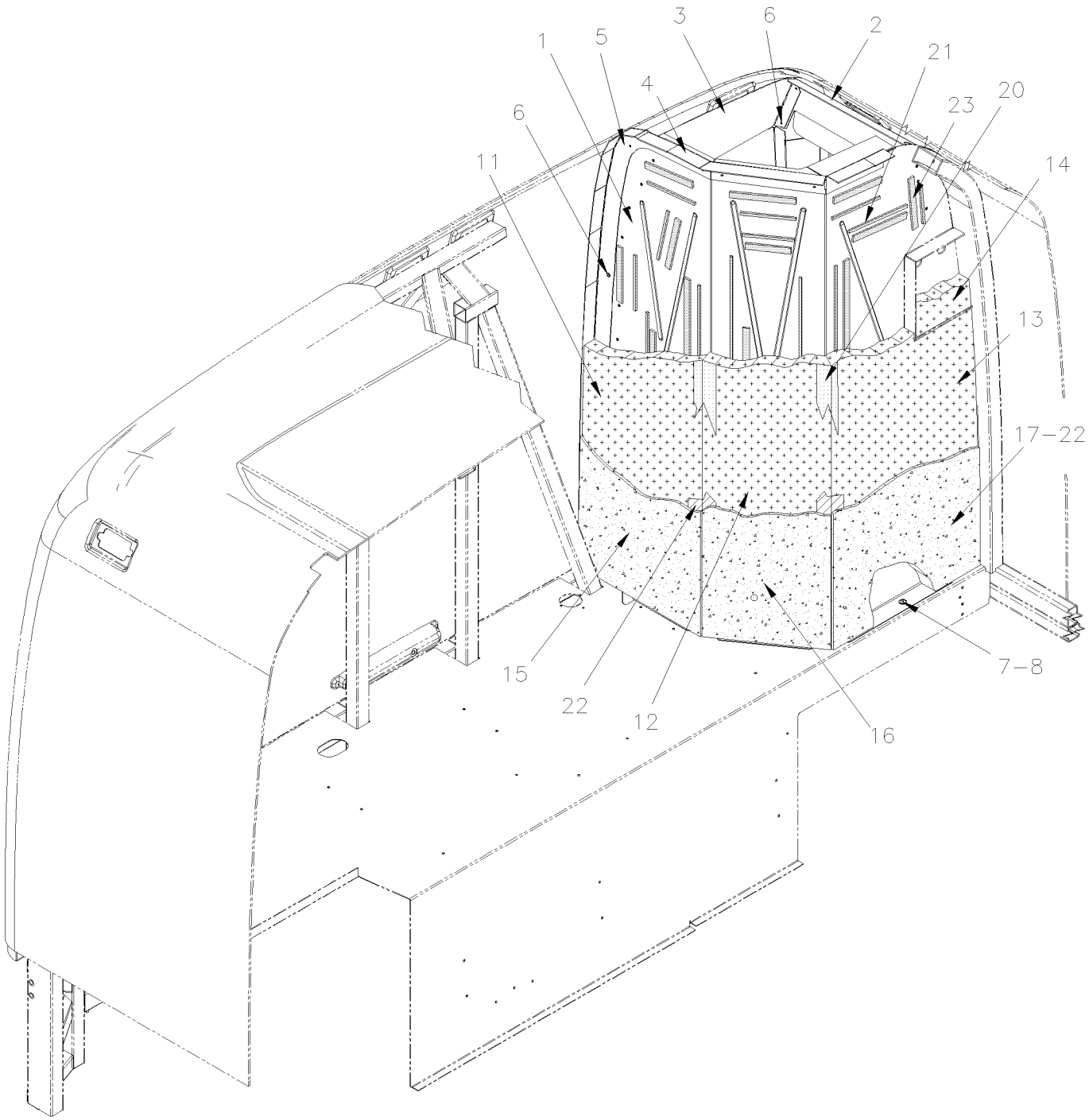

From 8-9279 Up to 8-9339	DATE: 01/2014	PAGE: Y2-1839-25

INSULATING - REAR DPF FILTER

ITEM	PART	DESCRIPTION	XL45	MTH40	MTH45	MTH45S	NOTE
1	351846	WALL SHEET PANEL			1		
1	351835	WALL SHEET PANEL				1	
2	351828	PANEL FIRE WALL			1	1	
3	351834	PANEL FIRE WALL			1	1	
4	351847	ANGLE RETAINER			1	1	
5	351843	ANGLE RETAINER			1	1	
6	504488	RIVET MGLP PRDG 3/16x17/64 SS			17	17	
7	504459	RIVET MGLP PRDG 1/4x3/8 SS			17	17	
8	500411	WASHER FL .260x.697x.050 SS			17	17	
10	351848	KIT INSULATING PANEL			1		
10	351829	KIT INSULATING PANEL				1	
11	351850	. INSULATING PANEL INTERIOR CURBSIDE			1		
11	351845	. INSULATING PANEL INTERIOR CURBSIDE				1	
12	351844	. INSULATING PANEL INTERIOR CENTER			1		
12	351813	. INSULATING PANEL INTERIOR CENTER				1	
13	351849	. INSULATING PANEL INTERIOR STREETSIDE			1		
13	351812	. INSULATING PANEL INTERIOR STREETSIDE				1	
14	351818	. INSULATING PANEL INTERIOR SUPPORT			1	1	
15	351819	INSULATING PANEL EXTERIOR CURBSIDE			1	1	
16	351820	INSULATING PANEL EXTERIOR CENTER			1	1	
17	351817	INSULATING PANEL EXTERIOR STREETSIDE			1	1	
20	682484	TAPE ALUMINUM ADH1 .005" x 3" x 300' ALUMINUM FSK3"			AR	AR	
21	507000	TAPE RUB ADH2 POL 3/16" x 1/4" x 50' / BLACK V2206			AR	AR	
22	680052	GLUE			1	1	
23	684517	ADHESIVE SIMSON #ISR 70-03 / GREY / 310ml CARTRIDGE			AR	AR	

From Y-7046 Up to 8-9339	DATE: 01/2014	PAGE: Y2-1839-30

INSULATING ROOF PANELS

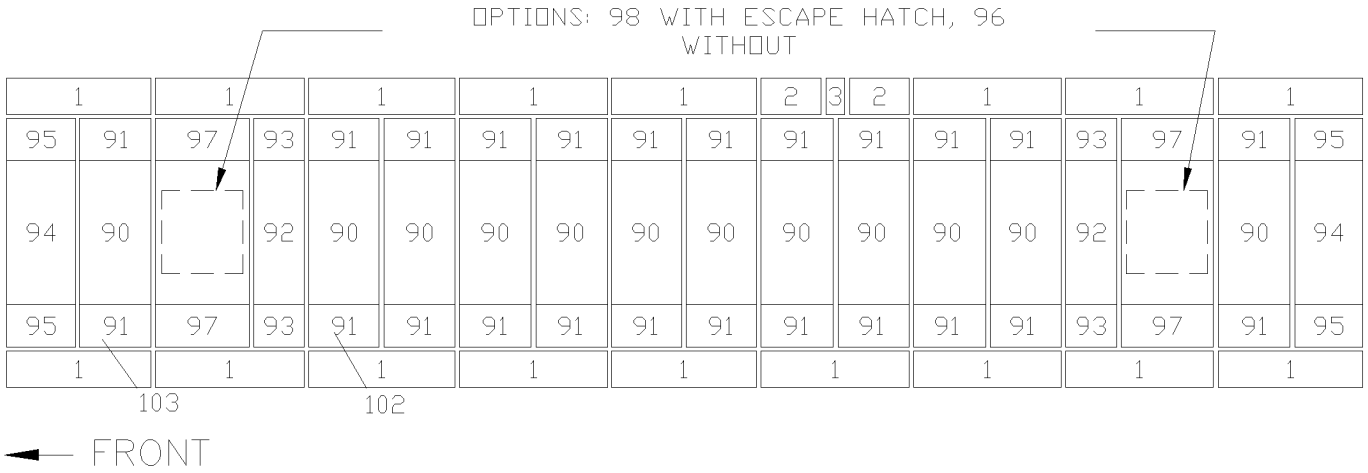

BUS & MTH 45

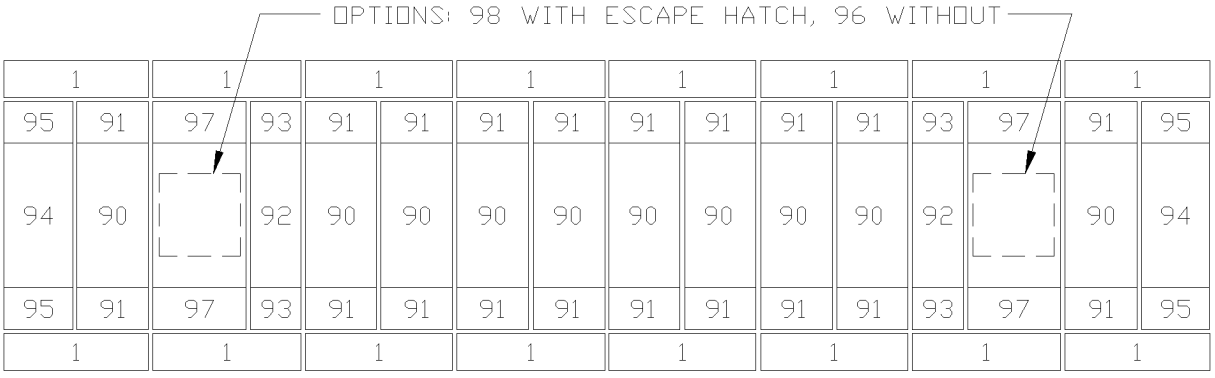

BUS & MTH 40

From Y-7046 Up to 8-9339	DATE: 01/2014	PAGE: Y2-1839-30

INSULATING ROOF PANELS

ITEM	PART	DESCRIPTION	XL45	MTH40	MTH45	MTH45S	NOTE
	350794	KIT ROOF INSULATING PANEL			1	1	
	350795	KIT ROOF INSULATING PANEL Up to 5-8813		1			
	350841	KIT INSULATING ROOF PANEL Up to 6-8906	1				
	351321	KIT ROOF SIDE INSULATING PANEL	1		1	1	
	351323	KIT ROOF SIDE INSULATING PANEL Up to 5-8813		1			
	351371	KIT ROOF INSILATING PANEL / W/SLIDE OUT From 2-7922			1		
1	351316	. INSULATING PANEL	17		17	17	
1	351316	. INSULATING PANEL Up to 5-8813		16			
2	351317	. INSULATING PANEL	2		2	2	
3	351319	. INSULATING PANEL	1		1	1	
90	350713	. INSULATING PANEL Up to 5-8813		10			
90	350713	. INSULATING PANEL	12		12	12	
91	350714	. INSULATING PANEL Up to 5-8813		20			
91	350714	. INSULATING PANEL	24		24	24	
92	350715	. INSULATING PANEL	2	2	2	2	
93	350716	. INSULATING PANEL	4	4	4	4	
94	350717	. INSULATING PANEL	2	2	2	2	
95	350719	. INSULATING PANEL	4	4	4	4	
96	350725	. INSULATING PANEL Up to 6-8906	1				
96	350725	. INSULATING PANEL		2	2	2	
97	350734	. INSULATING PANEL	4	4	4	4	
98	350738	. INSULATING PANEL/ W/EMERGENCY EXIT Up to 6-8906	1				
102	351337	. INSULATING PANEL / W/SLIDE OUT From 2-7922			1		
103	351365	. INSULATING PANEL / W/SLIDE OUT From 2-7922			1		

From Y-7046 Up to 2-7702	DATE: 01/2014	PAGE: Y2-1839-50

INSULATING SIDE WALL - LOWER PANEL - MTH

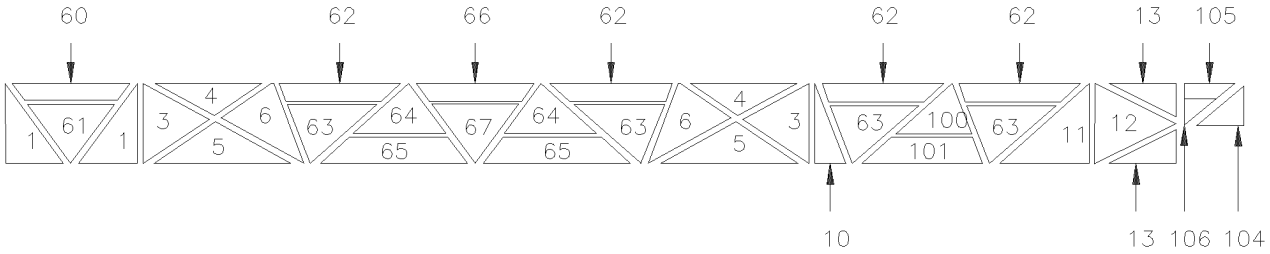

MTH 45', 83" & 86"

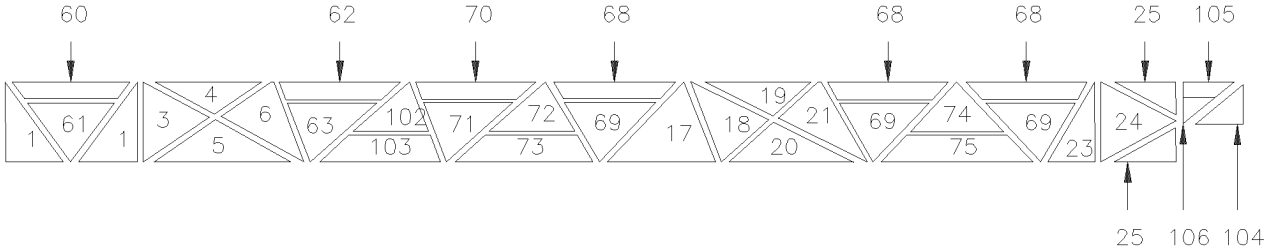

MTH 45', ENT 86"

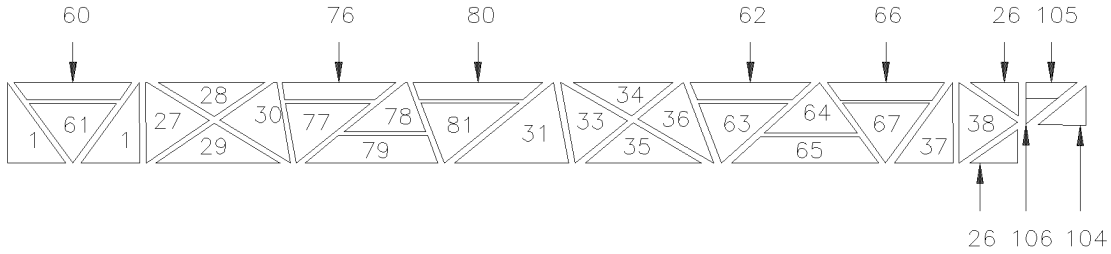

MTH 40', 83" & 86"

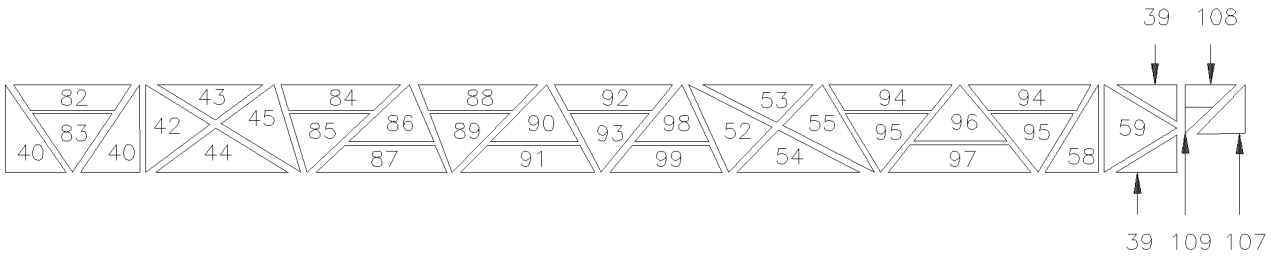

MTH 45', ENT 89"

VIEWS ARE RH FROM INSIDE

From Y-7046 Up to 2-7702	DATE: 01/2014	PAGE: Y2-1839-50

INSULATING SIDE WALL - LOWER PANEL - MTH

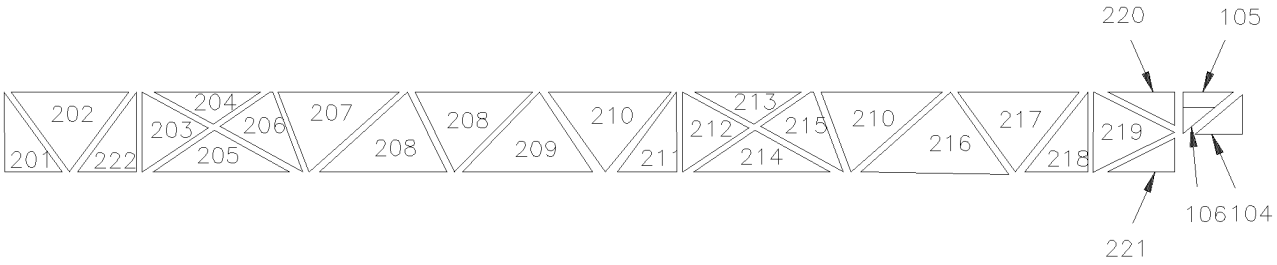

MTH 45', ENT 86" W/PLAIN PANEL

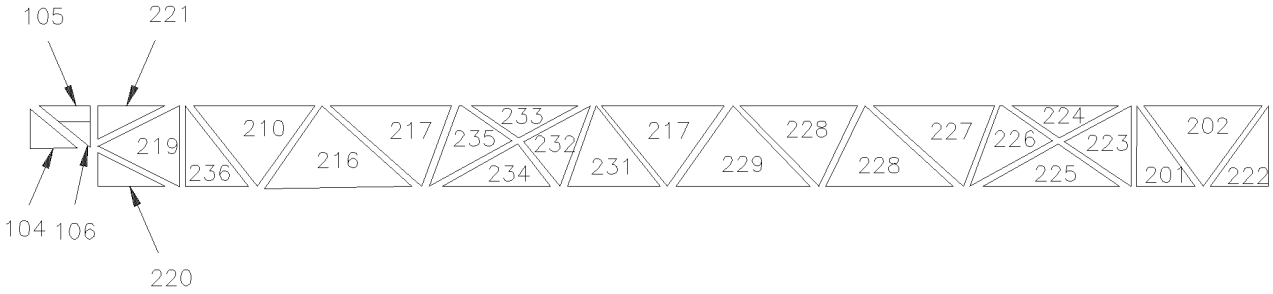

MTH 45', ENT 86" W/PLAIN PANEL

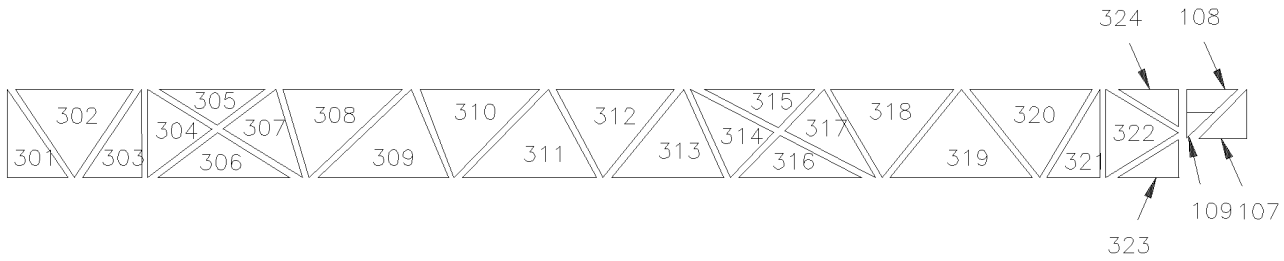

MTH 45', ENT 89" W/PLAIN PANEL

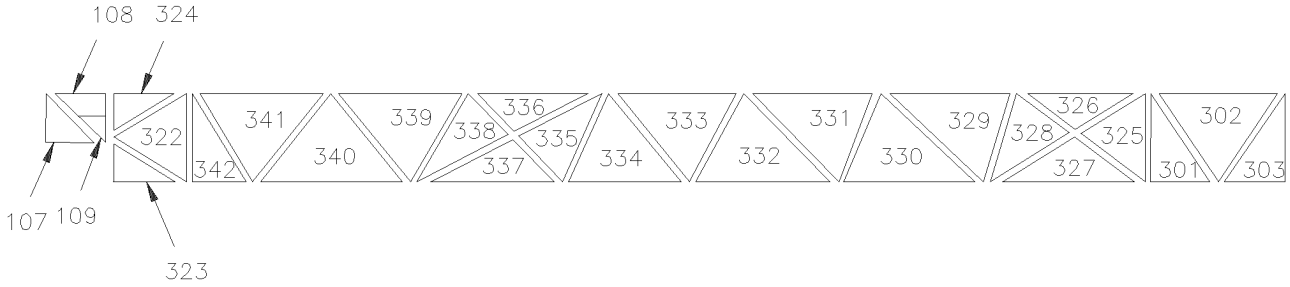

MTH 45', ENT 89" W/PLAIN PANEL

From Y-7046 Up to 2-7702	DATE: 01/2014	PAGE: Y2-1839-50

INSULATING SIDE WALL - LOWER PANEL - MTH

ITEM	PART	DESCRIPTION	XL45	MTH40	MTH45	MTH45S	NOTE
	350786	KIT INSULATING PANEL Up to 5-8813		2			
	350718	KIT INSULATING PANEL			2		
	350749	KIT INSULATING PANEL 86" HEIGHT				2	A
	350840	KIT INSULATING PANEL 89" HEIGHT				2	A
	351048	KIT INSULTING R.H. PANEL 86" HEIGHT				1	B
	351049	KIT INSULTING L.H. PANEL 86" HEIGHT				1	B
	351105	KIT INSULTING R.H. PANEL 89" HEIGHT				1	B
	351106	KIT INSULTING L.H. PANEL 89" HEIGHT				1	B
1	350691	. SIDE INSULATION PANEL		4	4	4	
3	350694	. SIDE INSULATION PANEL			4		
3	350694	. SIDE INSULATION PANEL				2	
4	350695	. SIDE INSULATION PANEL			4		
4	350695	. SIDE INSULATION PANEL				2	
5	350696	. SIDE INSULATION PANEL			4		
5	350696	. SIDE INSULATION PANEL				2	
6	350697	. SIDE INSULATION PANEL			4		
6	350697	. SIDE INSULATION PANEL				2	
10	350707	. SIDE INSULATION PANEL			2		
11	350710	. SIDE INSULATION PANEL			2		
12	350711	. SIDE INSULATION PANEL			2		
13	350712	. SIDE INSULATION PANEL			4		
17	350728	. SIDE INSULATION PANEL				2	
18	350729	. SIDE INSULATION PANEL				2	
19	350730	. SIDE INSULATION PANEL				2	
20	350731	. SIDE INSULATION PANEL				2	
21	350732	. SIDE INSULATION PANEL				2	
23	350735	. SIDE INSULATION PANEL				2	
24	350736	. SIDE INSULATION PANEL				2	
25	350737	. SIDE INSULATION PANEL				4	
26	350776	. SIDE INSULATION PANEL Up to 5-8813		4			
27	350759	. SIDE INSULATION PANEL Up to 5-8813		2			
28	350760	. SIDE INSULATION PANEL Up to 5-8813		2			
29	350761	. SIDE INSULATION PANEL Up to 5-8813		2			
30	350762	. SIDE INSULATION PANEL Up to 5-8813		2			
31	350763	. SIDE INSULATION PANEL Up to 5-8813		2			
33	350767	. SIDE INSULATION PANEL Up to 5-8813		2			
34	350768	. SIDE INSULATION PANEL Up to 5-8813		2			
35	350769	. SIDE INSULATION PANEL Up to 5-8813		2			
36	350770	. SIDE INSULATION PANEL Up to 5-8813		2			
37	350774	. SIDE INSULATION PANEL Up to 5-8813		2			
38	350775	. SIDE INSULATION PANEL Up to 5-8813		2			
		A) MTH ENTERTAINER WITH STAINLESS STEEL UPPER					
		PANELLING					
		B) MTH ENTERTAINER WITH FLAT PANELLING					

From Y-7046 Up to 2-7702	DATE: 01/2014	PAGE: Y2-1839-50

INSULATING SIDE WALL - LOWER PANEL - MTH

ITEM	PART	DESCRIPTION	XL45	MTH40	MTH45	MTH45S	NOTE
39	350818	. SIDE INSULATION PANEL				4	
40	350796	. SIDE INSULATION PANEL				4	
42	350799	. SIDE INSULATION PANEL				2	
43	350800	. SIDE INSULATION PANEL				2	
44	350801	. SIDE INSULATION PANEL				2	
45	350802	. SIDE INSULATION PANEL				2	
52	350809	. SIDE INSULATION PANEL				2	
53	350810	. SIDE INSULATION PANEL				2	
54	350811	. SIDE INSULATION PANEL				2	
55	350812	. SIDE INSULATION PANEL				2	
58	350816	. SIDE INSULATION PANEL				2	
59	350817	. SIDE INSULATION PANEL				2	
60	350848	. SIDE INSULATION PANEL		2	2	2	
61	350849	. SIDE INSULATION PANEL		2	2	2	
62	350850	. SIDE INSULATION PANEL		2		2	
62	350850	. SIDE INSULATION PANEL			8		
63	350851	. SIDE INSULATION PANEL		2		2	
63	350851	. SIDE INSULATION PANEL			8		
64	350852	. SIDE INSULATION PANEL		2	2		
65	350853	. SIDE INSULATION PANEL		2			
65	350853	. SIDE INSULATION PANEL			4		
66	350854	. SIDE INSULATION PANEL		2			
66	350854	. SIDE INSULATION PANEL			4		
67	350855	. SIDE INSULATION PANEL		2	2		
68	350864	. SIDE INSULATION PANEL				6	
69	350865	. SIDE INSULATION PANEL				6	
70	350860	. SIDE INSULATION PANEL				2	
71	350861	. SIDE INSULATION PANEL				2	
72	350862	. SIDE INSULATION PANEL				2	
73	350863	. SIDE INSULATION PANEL				2	
74	350866	. SIDE INSULATION PANEL				2	
75	350867	. SIDE INSULATION PANEL				2	
76	350868	. SIDE INSULATION PANEL Up to 5-8813		2			
77	350869	. SIDE INSULATION PANEL Up to 5-8813		2			
78	350870	. SIDE INSULATION PANEL Up to 5-8813		2			
79	350871	. SIDE INSULATION PANEL Up to 5-8813		2			
80	350872	. SIDE INSULATION PANEL Up to 5-8813		2			
81	350873	. SIDE INSULATION PANEL Up to 5-8813		2			
82	350874	. SIDE INSULATION PANEL				2	
83	350875	. SIDE INSULATION PANEL				2	
84	350876	. SIDE INSULATION PANEL				2	

From Y-7046 Up to 2-7702	DATE: 01/2014	PAGE: Y2-1839-50

INSULATING SIDE WALL - LOWER PANEL - MTH

ITEM	PART	DESCRIPTION	XL45	MTH40	MTH45	MTH45S	NOTE
85	350877	. SIDE INSULATION PANEL				2	
86	350878	. SIDE INSULATION PANEL				2	
87	350879	. SIDE INSULATION PANEL				2	
88	350880	. SIDE INSULATION PANEL				2	
89	350881	. SIDE INSULATION PANEL				2	
90	350882	. SIDE INSULATION PANEL				2	
91	350883	. SIDE INSULATION PANEL				2	
92	350884	. SIDE INSULATION PANEL				2	
93	350885	. SIDE INSULATION PANEL				2	
94	350888	. SIDE INSULATION PANEL				4	
95	350889	. SIDE INSULATION PANEL				4	
96	350890	. SIDE INSULATION PANEL				2	
97	350891	. SIDE INSULATION PANEL				2	
98	350886	. SIDE INSULATION PANEL				2	
99	350887	. SIDE INSULATION PANEL				2	
100	350856	. SIDE INSULATION PANEL			2		
101	350857	. SIDE INSULATION PANEL			2		
102	350858	. SIDE INSULATION PANEL				2	
103	350859	. SIDE INSULATION PANEL				2	
104	350943	. SIDE INSULATION PANEL		1	1	1	
105	350944	. SIDE INSULATION PANEL		1	1	1	
106	350945	. SIDE INSULATION PANEL		1	1	1	
107	350946	. SIDE INSULATION PANEL				1	
108	350947	. SIDE INSULATION PANEL				1	
109	350948	. SIDE INSULATION PANEL				1	
201	351005	. SIDE INSULATOR PANEL				2	
202	351006	. SIDE INSULATOR PANEL				2	
203	351007	. SIDE INSULATOR PANEL				1	
204	351008	. SIDE INSULATOR PANEL				1	
205	351009	. SIDE INSULATOR PANEL				1	
206	351010	. SIDE INSULATOR PANEL				1	
207	351011	. SIDE INSULATOR PANEL				1	
208	351012	. SIDE INSULATOR PANEL				2	
209	351013	. SIDE INSULATOR PANEL				1	
210	351014	. SIDE INSULATOR PANEL				2	
211	351015	. SIDE INSULATOR PANEL				1	
212	351016	. SIDE INSULATOR PANEL				1	
213	351017	. SIDE INSULATOR PANEL				1	
214	351018	. SIDE INSULATOR PANEL				1	
215	351019	. SIDE INSULATOR PANEL				1	
216	351020	. SIDE INSULATOR PANEL				2	

From Y-7046 Up to 2-7702	DATE: 01/2014	PAGE: Y2-1839-50

INSULATING SIDE WALL - LOWER PANEL - MTH

ITEM	PART	DESCRIPTION	XL45	MTH40	MTH45	MTH45S	NOTE
217	351021	. SIDE INSULATOR PANEL				2	
218	351022	. SIDE INSULATOR PANEL				1	
219	351023	. SIDE INSULATOR PANEL				2	
220	351024	. SIDE INSULATOR PANEL				2	
221	351025	. SIDE INSULATOR PANEL				2	
222	351026	. SIDE INSULATOR PANEL				2	
223	351027	. SIDE INSULATOR PANEL				1	
224	351028	. SIDE INSULATOR PANEL				1	
225	351029	. SIDE INSULATOR PANEL				1	
226	351030	. SIDE INSULATOR PANEL				1	
227	351031	. SIDE INSULATOR PANEL				1	
228	351032	. SIDE INSULATOR PANEL				2	
229	351033	. SIDE INSULATOR PANEL				1	
231	351035	. SIDE INSULATOR PANEL				1	
232	351036	. SIDE INSULATOR PANEL				1	
233	351037	. SIDE INSULATOR PANEL				1	
234	351038	. SIDE INSULATOR PANEL				1	
235	351039	. SIDE INSULATOR PANEL				1	
236	351040	. SIDE INSULATOR PANEL				1	
301	351063	. SIDE INSULATOR PANEL				2	
302	351064	. SIDE INSULATOR PANEL				2	
303	351065	. SIDE INSULATOR PANEL				2	
304	351066	. SIDE INSULATOR PANEL				1	
305	351067	. SIDE INSULATOR PANEL				1	
306	351068	. SIDE INSULATOR PANEL				1	
307	351069	. SIDE INSULATOR PANEL				1	
308	351070	. SIDE INSULATOR PANEL				1	
309	351071	. SIDE INSULATOR PANEL				1	
310	351072	. SIDE INSULATOR PANEL				1	
311	351073	. SIDE INSULATOR PANEL				1	
312	351074	. SIDE INSULATOR PANEL				1	
314	351076	. SIDE INSULATOR PANEL				1	
315	351077	. SIDE INSULATOR PANEL				1	
316	351078	. SIDE INSULATOR PANEL				1	
317	351079	. SIDE INSULATOR PANEL				1	
318	351080	. SIDE INSULATOR PANEL				1	
319	351081	. SIDE INSULATOR PANEL				1	
320	351082	. SIDE INSULATOR PANEL				1	
321	351083	. SIDE INSULATOR PANEL				1	
322	351084	. SIDE INSULATOR PANEL				2	
323	351085	. SIDE INSULATOR PANEL				2	

From Y-7046 Up to 2-7702	DATE: 01/2014	PAGE: Y2-1839-50

INSULATING SIDE WALL - LOWER PANEL - MTH

ITEM	PART	DESCRIPTION	XL45	MTH40	MTH45	MTH45S	NOTE
324	351086	. SIDE INSULATOR PANEL				2	
325	351087	. SIDE INSULATOR PANEL				1	
326	351088	. SIDE INSULATOR PANEL				1	
327	351089	. SIDE INSULATOR PANEL				1	
328	351090	. SIDE INSULATOR PANEL				1	
329	351091	. SIDE INSULATOR PANEL				1	
330	351092	. SIDE INSULATOR PANEL				1	
331	351093	. SIDE INSULATOR PANEL				1	
332	351094	. SIDE INSULATOR PANEL				1	
333	351095	. SIDE INSULATOR PANEL				1	
334	351096	. SIDE INSULATOR PANEL				1	
335	351097	. SIDE INSULATOR PANEL				1	
336	351098	. SIDE INSULATOR PANEL				1	
337	351099	. SIDE INSULATOR PANEL				1	
338	351100	. SIDE INSULATOR PANEL				1	
339	351101	. SIDE INSULATOR PANEL				1	
340	351102	. SIDE INSULATOR PANEL				1	
341	351103	. SIDE INSULATOR PANEL				1	
342	351104	. SIDE INSULATOR PANEL				1	
NS	850065	ALUMINUM WALL COVERING ADHESIVE / 32 1/4" X 455" / REPLACED BY: 850089			2		
NS	850066	ALUMINUM WALL COVERING ADHESIVE / 32 1/4" X 415" Up to 5-8813 / REPLACED BY: 850089		2			
NS	850070	ALUMINUM WALL COVERING ADHESIVE / 36" X 438" / REPLACED BY: 850090				2	
NS	684196	PRIMER ELASTOCOL # 593		AR	AR	AR	
NS	320104	INSULATING PLATE / ALUMINUM 18GA / "E" SHAPE 90MM X 102MM		AR	AR	AR	

From Y-7046 Up to 2-7702	DATE: 01/2014	PAGE: Y2-1839-50

INSULATING SIDE WALL - LOWER PANEL - MTH

ITEM	PART	DESCRIPTION	XL45	MTH40	MTH45	MTH45S	NOTE

From 2-7703 Up to 8-9339	DATE: 01/2014	PAGE: Y2-1839-51

INSULATING SIDE WALL - LOWER PANEL - MTH

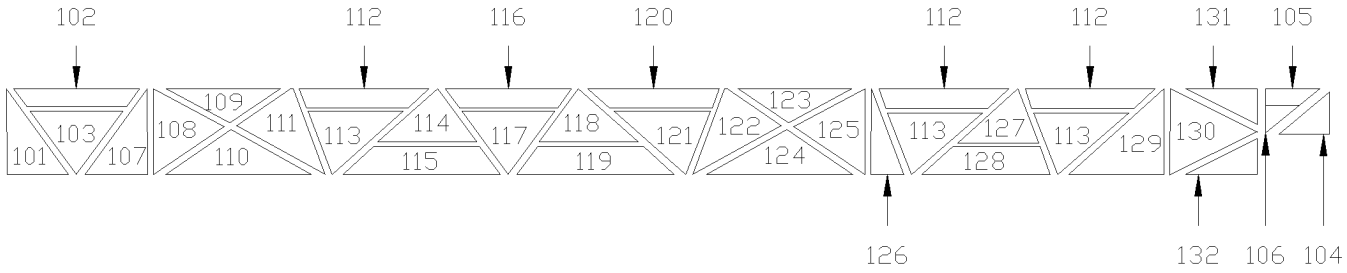

MTH 45' LH

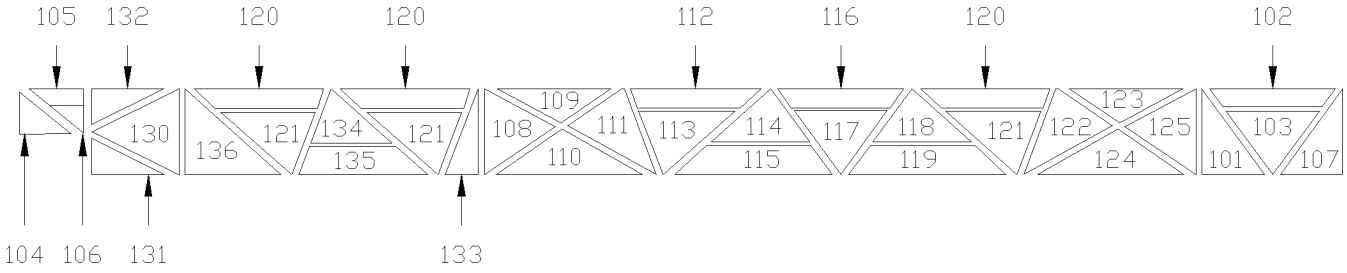

MTH 45' RH

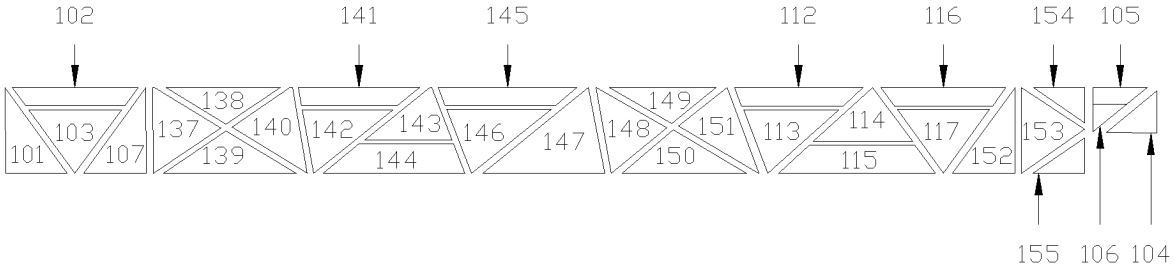

MTH 40' LH

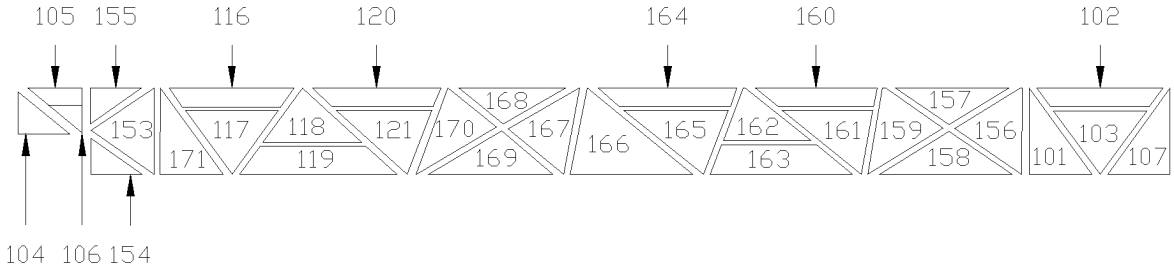

MTH 40' RH

VIEWS ARE FROM THE OUTSIDE OF VEHICULE

From 2-7703 Up to 8-9339	DATE: 01/2014	PAGE: Y2-1839-51
INSULATING SIDE WALL - LOWER PANEL - MTH		

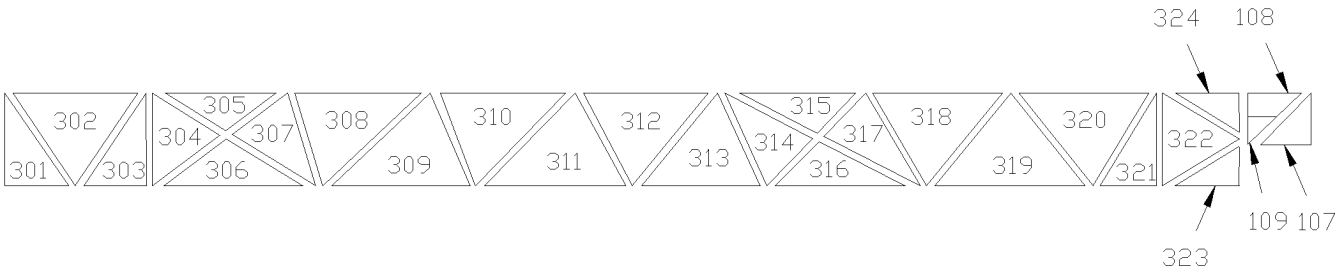

MTH 45', ENT 89'' RH

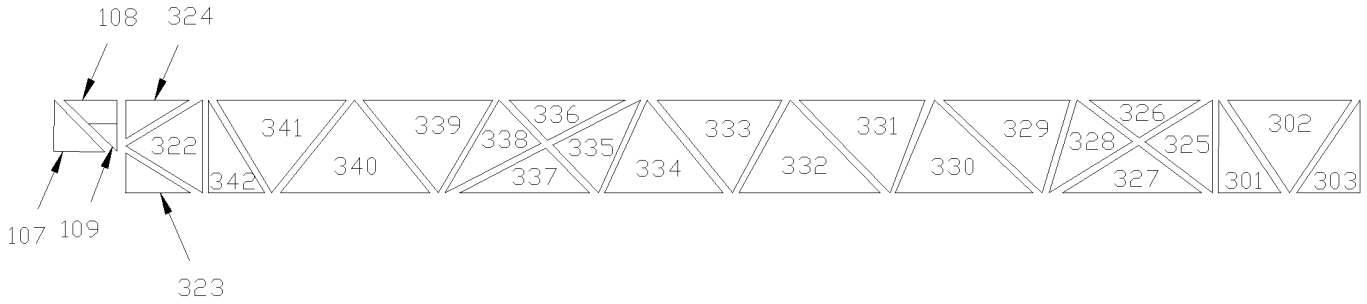

MTH 45', ENT 89'' LH

From 2-7703 Up to 8-9339	DATE: 01/2014	PAGE: Y2-1839-51

INSULATING SIDE WALL - LOWER PANEL - MTH

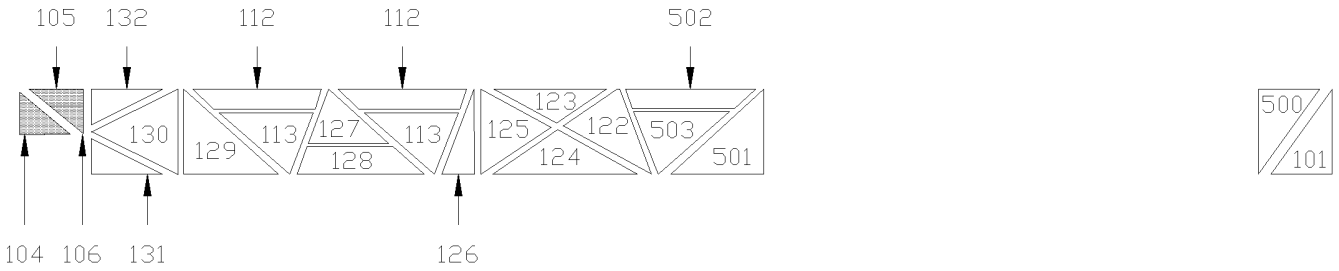

MTH 45', SLIDE-OUT, SINGLE CASE, LH

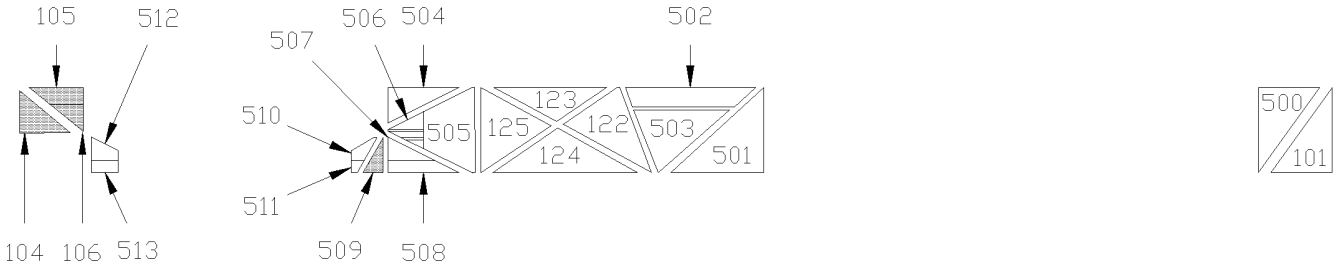

MTH 45', SLIDE-OUT, DOUBLE CASE, LH

INSIDE INSTALLATION

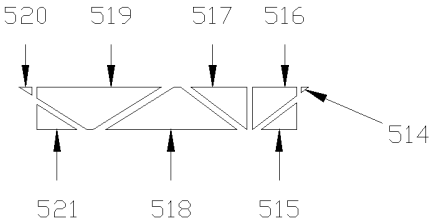

MTH 45', SLIDE-OUT, DOUBLE CASE, LH

OUTSIDE INSTALLATION

From 2-7703 Up to 8-9339	DATE: 01/2014	PAGE: Y2-1839-51

INSULATING SIDE WALL - LOWER PANEL - MTH

ITEM	PART	DESCRIPTION	XL45	MTH40	MTH45	MTH45S	NOTE
	351139	KIT INSULATING PANEL L.H. WALL Up to 3-8164			1		
	351338	KIT INSULATING PANEL L.H. WALL From 4-8165			1		
	351384	KIT INSULATING PANEL L.H. WALL / W/SLIDE OUT From 3-8109 Up to 3-8164			1		B
	351420	KIT INSULATING PANEL L.H. WALL / W/SLIDE OUT From 4-8165 Up to 6-8805			1		B
	351519	KIT INSULATING PANEL L.H. WALL / W/SLIDE OUT From 6-8806			1		B
	351315	KIT INSULATING PANEL L.H. WALL / W/SLIDE OUT From 3-8109 Up to 3-8164			1		A
	351409	KIT INSULATING PANEL L.H. WALL / W/SLIDE OUT From 4-8165			1		A
	351140	KIT INSULATING PANEL R.H. WALL Up to 3-8164			1		
	351465	KIT INSULATING PANEL R.H. WALL From 4-8165			1		
	351141	KIT INSULATING PANEL L.H. WALL Up to 3-8164		1			
	351475	KIT INSULATING PANEL L.H. WALL From 4-8165 Up to 5-8813		1			
	351142	KIT INSULATING PANEL R.H. WALL Up to 3-8164		1			
	351476	KIT INSULATING PANEL R.H. WALL From 4-8165 Up to 5-8813		1			
	351105	KIT INSULTING R.H. PANEL 89" HEIGHT Up to 3-8164				1	
	351478	KIT INSULTING R.H. PANEL 89" HEIGHT From 4-8165 Up to 6-8805				1	
	351582	KIT INSULTING R.H. PANEL 89" HEIGHT From 6-8806				1	
	351106	KIT INSULTING L.H. PANEL 89" HEIGHT Up to 3-8164				1	
	351477	KIT INSULTING L.H. PANEL 89" HEIGHT From 4-8165 Up to 6-8805				1	
	351581	KIT INSULTING L.H. PANEL 89" HEIGHT From 6-8806				1	
	351547	KIT INSULTING L.H. PANEL 89" / W/SLIDE OUT From 6-8806				1	
101	351143	SIDE INSULATOR PANEL Up to 5-8813		1			
101	351143	SIDE INSULATOR PANEL			2		
102	351144	SIDE INSULATOR PANEL Up to 5-8813		1			
102	351144	SIDE INSULATOR PANEL			2		
103	351145	SIDE INSULATOR PANEL Up to 5-8813		1			
103	351145	SIDE INSULATOR PANEL			2		
104	350943	SIDE INSULATION PANEL		1	1	1	
105	350944	SIDE INSULATION PANEL		1	1	1	
106	350945	SIDE INSULATION PANEL		1	1	1	
107	351146	SIDE INSULATOR PANEL Up to 5-8813		1			
107	351146	SIDE INSULATOR PANEL			2		
107	350946	SIDE INSULATION PANEL				2	
108	351147	SIDE INSULATOR PANEL			2		
108	350947	SIDE INSULATION PANEL				2	
109	351148	SIDE INSULATOR PANEL			2		
109	350948	SIDE INSULATION PANEL				2	
110	351149	SIDE INSULATOR PANEL			2		
111	351150	SIDE INSULATOR PANEL			2		
112	351151	SIDE INSULATOR PANEL Up to 5-8813		1			
112	351151	SIDE INSULATOR PANEL			2		
		A) WITH FRONT SLIDE OUT					
		B) WITH DOUBLE SLIDE OUT					

From 2-7703 Up to 8-9339	DATE: 01/2014	PAGE: Y2-1839-51

INSULATING SIDE WALL - LOWER PANEL - MTH

ITEM	PART	DESCRIPTION	XL45	MTH40	MTH45	MTH45S	NOTE
113	351152	SIDE INSULATOR PANEL Up to 5-8813		1			
113	351152	SIDE INSULATOR PANEL			2		
114	351153	SIDE INSULATOR PANEL Up to 5-8813		1			
114	351153	SIDE INSULATOR PANEL			2		
115	351154	SIDE INSULATOR PANEL Up to 5-8813		1			
115	351154	SIDE INSULATOR PANEL			2		
116	351155	SIDE INSULATOR PANEL		2	2		
117	351156	SIDE INSULATOR PANEL		1	1		
118	351157	SIDE INSULATOR PANEL Up to 5-8813		1			
118	351157	SIDE INSULATOR PANEL			2		
119	351158	SIDE INSULATOR PANEL Up to 5-8813		1			
119	351158	SIDE INSULATOR PANEL			2		
120	351159	SIDE INSULATOR PANEL Up to 5-8813		1			
120	351159	SIDE INSULATOR PANEL			2		
121	351160	SIDE INSULATOR PANEL Up to 5-8813		1			
121	351160	SIDE INSULATOR PANEL			2		
122	351161	SIDE INSULATOR PANEL			2		
123	351162	SIDE INSULATOR PANEL			2		
124	351163	SIDE INSULATOR PANEL			2		
125	351164	SIDE INSULATOR PANEL			2		
126	351165	SIDE INSULATOR PANEL			1		
127	351166	SIDE INSULATOR PANEL			1		
128	351167	SIDE INSULATOR PANEL			1		
129	351168	SIDE INSULATOR PANEL			1		
130	351169	SIDE INSULATOR PANEL			2		
131	351170	SIDE INSULATOR PANEL			2		
132	351171	SIDE INSULATOR PANEL			2		
133	351172	SIDE INSULATOR PANEL			1		
134	351173	SIDE INSULATOR PANEL			1		
135	351174	SIDE INSULATOR PANEL			1		
136	351175	SIDE INSULATOR PANEL			1		
137	351176	SIDE INSULATOR PANEL Up to 5-8813		1			
138	351177	SIDE INSULATOR PANEL Up to 5-8813		1			
139	351178	SIDE INSULATOR PANEL Up to 5-8813		1			
140	351179	SIDE INSULATOR PANEL Up to 5-8813		1			
141	351180	SIDE INSULATOR PANEL Up to 5-8813		1			
142	351181	SIDE INSULATOR PANEL Up to 5-8813		1			
143	351182	SIDE INSULATOR PANEL Up to 5-8813		1			
144	351183	SIDE INSULATOR PANEL Up to 5-8813		1			
145	351184	SIDE INSULATOR PANEL Up to 5-8813		1			

From 2-7703 Up to 8-9339	DATE: 01/2014	PAGE: Y2-1839-51

INSULATING SIDE WALL - LOWER PANEL - MTH

ITEM	PART	DESCRIPTION	XL45	MTH40	MTH45	MTH45S	NOTE
146	351185	SIDE INSULATOR PANEL Up to 5-8813		1			
147	351186	SIDE INSULATOR PANEL Up to 5-8813		1			
148	351187	SIDE INSULATOR PANEL Up to 5-8813		1			
149	351188	SIDE INSULATOR PANEL Up to 5-8813		1			
150	351189	SIDE INSULATOR PANEL Up to 5-8813		1			
151	351190	SIDE INSULATOR PANEL Up to 5-8813		1			
152	351191	SIDE INSULATOR PANEL Up to 5-8813		1			
153	351192	SIDE INSULATOR PANEL Up to 5-8813		1			
154	351193	SIDE INSULATOR PANEL Up to 5-8813		1			
155	351194	SIDE INSULATOR PANEL Up to 5-8813		2			
156	351195	SIDE INSULATOR PANEL Up to 5-8813		1			
157	351196	SIDE INSULATOR PANEL Up to 5-8813		1			
158	351197	SIDE INSULATOR PANEL Up to 5-8813		1			
159	351198	SIDE INSULATOR PANEL Up to 5-8813		1			
160	351199	SIDE INSULATOR PANEL Up to 5-8813		1			
161	351200	SIDE INSULATOR PANEL Up to 5-8813		1			
162	351201	SIDE INSULATOR PANEL Up to 5-8813		1			
163	351202	SIDE INSULATOR PANEL Up to 5-8813		1			
164	351203	SIDE INSULATOR PANEL Up to 5-8813		1			
165	351204	SIDE INSULATOR PANEL Up to 5-8813		1			
166	351205	SIDE INSULATOR PANEL Up to 5-8813		1			
167	351206	SIDE INSULATOR PANEL Up to 5-8813		1			
168	351207	SIDE INSULATOR PANEL Up to 5-8813		1			
169	351208	SIDE INSULATOR PANEL Up to 5-8813		1			
170	351209	SIDE INSULATOR PANEL Up to 5-8813		1			
171	351210	SIDE INSULATOR PANEL Up to 5-8813		1			
301	351063	SIDE INSULATOR PANEL				2	
302	351064	SIDE INSULATOR PANEL				2	
303	351065	SIDE INSULATOR PANEL				2	
304	351066	SIDE INSULATOR PANEL				1	
305	351067	SIDE INSULATOR PANEL				1	
306	351068	SIDE INSULATOR PANEL				1	
307	351069	SIDE INSULATOR PANEL				1	
308	351070	SIDE INSULATOR PANEL				1	
309	351071	SIDE INSULATOR PANEL				1	
310	351072	SIDE INSULATOR PANEL				1	
311	351073	SIDE INSULATOR PANEL				1	
312	351074	SIDE INSULATOR PANEL				1	
313	351075	SIDE INSULATOR PANEL				1	
314	351076	SIDE INSULATOR PANEL				1	

From 2-7703 Up to 8-9339	DATE: 01/2014	PAGE: Y2-1839-51

INSULATING SIDE WALL - LOWER PANEL - MTH

ITEM	PART	DESCRIPTION	XL45	MTH40	MTH45	MTH45S	NOTE
315	351077	SIDE INSULATOR PANEL				1	
316	351078	SIDE INSULATOR PANEL				1	
317	351079	SIDE INSULATOR PANEL				1	
318	351080	SIDE INSULATOR PANEL				1	
319	351081	SIDE INSULATOR PANEL				1	
320	351082	SIDE INSULATOR PANEL				1	
321	351083	SIDE INSULATOR PANEL				1	
322	351084	SIDE INSULATOR PANEL				2	
323	351085	SIDE INSULATOR PANEL				2	
324	351086	SIDE INSULATOR PANEL				2	
325	351087	SIDE INSULATOR PANEL				1	
326	351088	SIDE INSULATOR PANEL				1	
327	351089	SIDE INSULATOR PANEL				1	
328	351090	SIDE INSULATOR PANEL				1	
329	351091	SIDE INSULATOR PANEL				1	
330	351092	SIDE INSULATOR PANEL				1	
331	351093	SIDE INSULATOR PANEL				1	
332	351094	SIDE INSULATOR PANEL				1	
333	351095	SIDE INSULATOR PANEL				1	
334	351096	SIDE INSULATOR PANEL				1	
335	351097	SIDE INSULATOR PANEL				1	
336	351098	SIDE INSULATOR PANEL				1	
337	351099	SIDE INSULATOR PANEL				1	
338	351100	SIDE INSULATOR PANEL				1	
339	351101	SIDE INSULATOR PANEL				1	
340	351102	SIDE INSULATOR PANEL				1	
341	351103	SIDE INSULATOR PANEL				1	
342	351104	SIDE INSULATOR PANEL				1	
432	Call Order Desk	SIDE INSULATOR PANEL From 4-8165			1		P
433	351340	SIDE INSULATOR PANEL From 4-8165			1		
434	351341	SIDE INSULATOR PANEL From 4-8165			1		
435	351342	SIDE INSULATOR PANEL From 4-8165			1		
436	351343	SIDE INSULATOR PANEL From 4-8165			1		
437	351344	SIDE INSULATOR PANEL From 4-8165			1		
500	351388	SIDE INSULATOR PANEL			1		
501	351387	SIDE INSULATOR PANEL			1		
502	351389	SIDE INSULATOR PANEL			1		
503	351390	SIDE INSULATOR PANEL			1		
504	351391	SIDE INSULATOR PANEL			1		
505	351392	SIDE INSULATOR PANEL			1		
		P) CALL ORDER DESK FOR SPECIFIC APPLICATION					
		(V.I.N.)					

From 2-7703 Up to 8-9339	DATE: 01/2014	PAGE: Y2-1839-51

INSULATING SIDE WALL - LOWER PANEL - MTH

ITEM	PART	DESCRIPTION	XL45	MTH40	MTH45	MTH45S	NOTE
506	351393	SIDE INSULATOR PANEL			1		
507	351394	SIDE INSULATOR PANEL			1		
508	351395	SIDE INSULATOR PANEL			1		
509	351396	SIDE INSULATOR PANEL			1		
510	351397	SIDE INSULATOR PANEL			1		
511	351398	SIDE INSULATOR PANEL			1		
512	351399	SIDE INSULATOR PANEL			1		
513	351400	SIDE INSULATOR PANEL			1		
514	351401	SIDE INSULATOR PANEL			1		
515	351402	SIDE INSULATOR PANEL			1		
516	351403	SIDE INSULATOR PANEL			1		
517	351404	SIDE INSULATOR PANEL			1		
518	351405	SIDE INSULATOR PANEL			1		
519	351406	SIDE INSULATOR PANEL			1		
520	351407	SIDE INSULATOR PANEL			1		
521	351408	SIDE INSULATOR PANEL			1		
NS	850065	ALUMINUM WALL COVERING ADHESIVE / 32 1/4" X 455" / REPLACED BY: 850089			2		
523	850066	ALUMINUM WALL COVERING ADHESIVE / 32 1/4" X 415" / REPLACED BY: 850089		2			
524	850070	ALUMINUM WALL COVERING ADHESIVE / 36" X 438" / REPLACED BY: 850090				2	
525	850080	ALUMINUM WALL COVERING ADHESIVE / 32 1/4" X 300" / REPLACED BY: 850095				2	
526	850081	ALUMINUM WALL COVERING ADHESIVE / 36" X 300" / REPLACED BY: 850096				2	

From Y-7046 Up to 8-9339	DATE: 01/2014	PAGE: Y2-1839-55

INSULATING FRONT - MTH

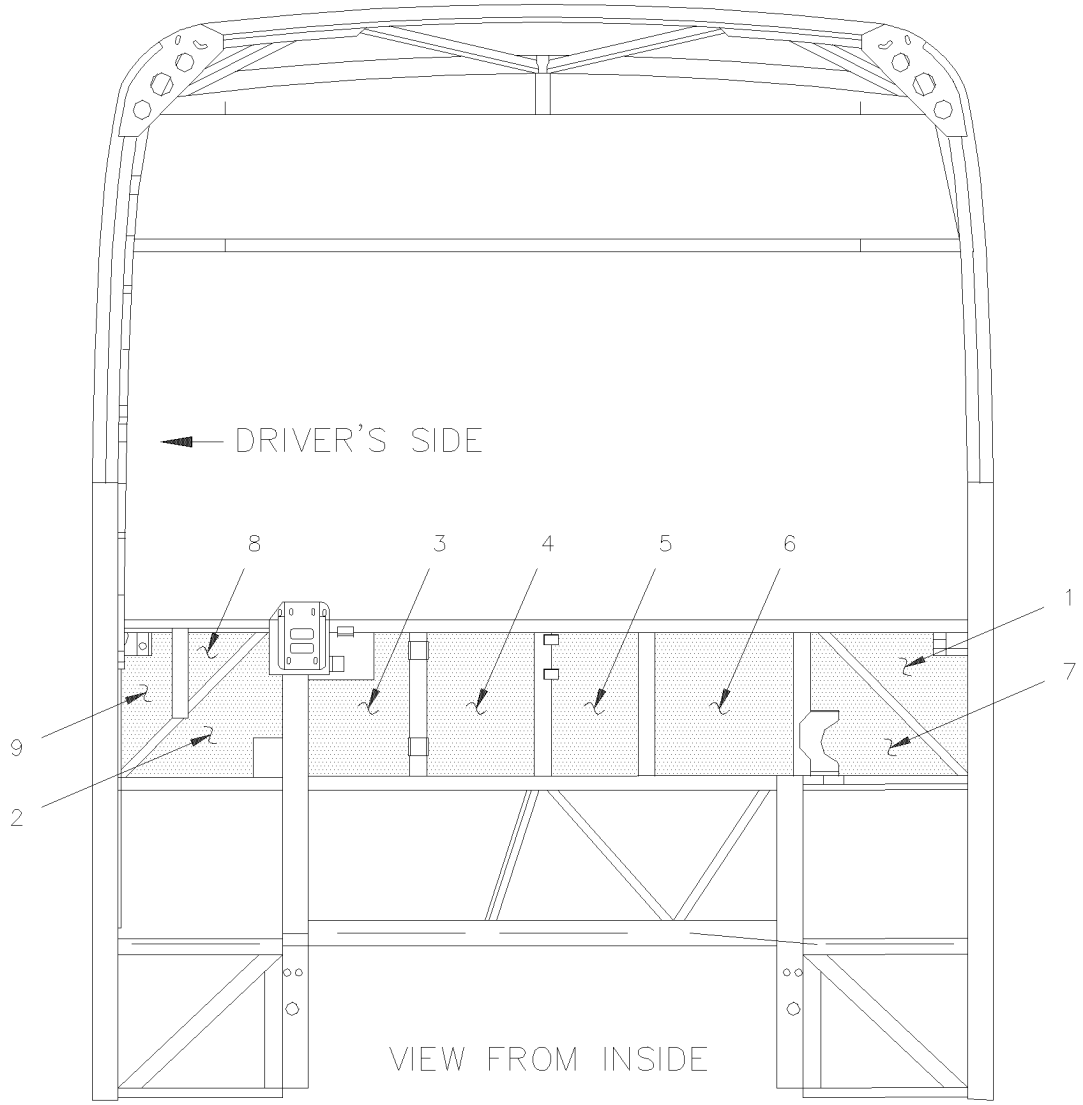

MTH

From Y-7046 Up to 8-9339	DATE: 01/2014	PAGE: Y2-1839-55

INSULATING FRONT - MTH

ITEM	PART	DESCRIPTION	XL45	MTH40	MTH45	MTH45S	NOTE
1	350828	INSULATING PANEL MTH 83" Up to Y-7128		1	1		
1	350962	INSULATING PANEL MTH 86"		1	1	1	
1	351050	INSULATING PANEL MTH 89"				1	
2	350829	INSULATING PANEL MTH 83" Up to Y-7128		1	1		
2	350963	INSULATING PANEL MTH 86"		1	1	1	
2	351051	INSULATING PANEL MTH 89"				1	
3	350830	INSULATING PANEL MTH 83" Up to Y-7128		1	1		
3	350964	INSULATING PANEL MTH 86"		1	1	1	
3	351052	INSULATING PANEL MTH 89"				1	
4	350831	INSULATING PANEL MTH 83" Up to Y-7128		1	1		
4	350965	INSULATING PANEL MTH 86"		1	1	1	
4	351053	INSULATING PANEL MTH 89"				1	
5	350832	INSULATING PANEL MTH 83" Up to Y-7128		1	1		
5	350966	INSULATING PANEL MTH 86"		1	1	1	
5	351054	INSULATING PANEL MTH 89"				1	
6	350833	INSULATING PANEL MTH 83" Up to Y-7128		1	1		
6	350967	INSULATING PANEL MTH 86"		1	1	1	
6	351055	INSULATING PANEL MTH 89"				1	
7	350834	INSULATING PANEL MTH 83" Up to Y-7128		1	1		
7	350968	INSULATING PANEL MTH 86"		1	1	1	
7	351056	INSULATING PANEL MTH 89"				1	
8	350925	INSULATING PANEL MTH 83" Up to Y-7128		1	1		
8	350969	INSULATING PANEL MTH 86"		1	1	1	
8	351058	INSULATING PANEL MTH 89"				1	
9	350926	INSULATING PANEL MTH 83" Up to Y-7128		1	1		
9	350970	INSULATING PANEL MTH 86"		1	1	1	
9	351057	INSULATING PANEL MTH 89"				1	
NS	680397	CONTACT GLUE / AEROSOL		AR	AR	AR	
9	850032	INSULATION PAD NOISE 1" x 48" x 35' / ARMAFLEX POLYURETHANE FOAM		AR	AR	AR	

From Y-7046 Up to 8-9339	DATE: 01/2014	PAGE: Y2-1839-60

INSULATING SIDE WALL - UPPER

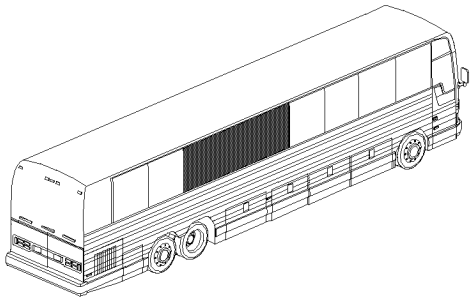

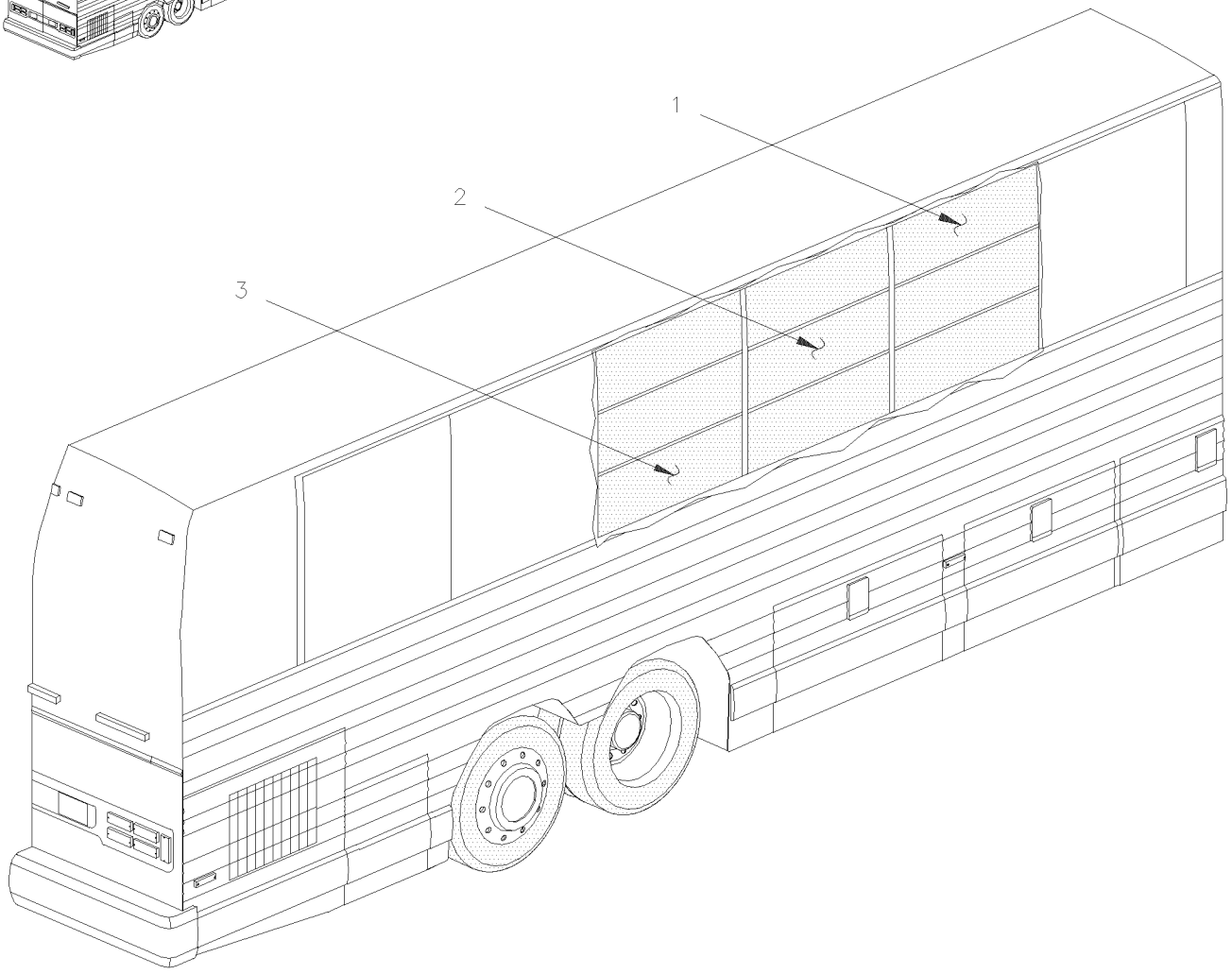

From Y-7046 Up to 8-9339	DATE: 01/2014	PAGE: Y2-1839-60

INSULATING SIDE WALL - UPPER

ITEM	PART	DESCRIPTION	XL45	MTH40	MTH45	MTH45S	NOTE
1	350675	SIDE INSULATION PANEL / MTH 83" Up to Y-7128			8		
1	350675	SIDE INSULATION PANEL / MTH 83" Up to Y-7128		6			
1	350680	SIDE INSULATION PANEL / MTH 86" Up to 5-8813		6			
1	350680	SIDE INSULATION PANEL / MTH 86"			8	8	
1	350681	SIDE INSULATION PANEL / MTH 89"			8	8	
2	350676	SIDE INSULATION PANEL			8	8	
2	350676	SIDE INSULATION PANEL Up to 5-8813		6			
3	350678	SIDE INSULATOR PANEL 427MM / MTH 83" & 86"			8	8	
3	350678	SIDE INSULATOR PANEL 427MM / MTH 83" & 86" Up to 5-8813		6			
3	350679	SIDE INSULATOR PANEL 351MM / MTH 89"				8	
NS	680532	SEALANT SIKA #221 / GREY / 310ml CARTRIDGE		AR	AR	AR	

From Y-7046 Up to 7-9095	DATE: 01/2014	PAGE: Y2-1839-70
INSULATING REAR END INSIDE OVER ENGINE		

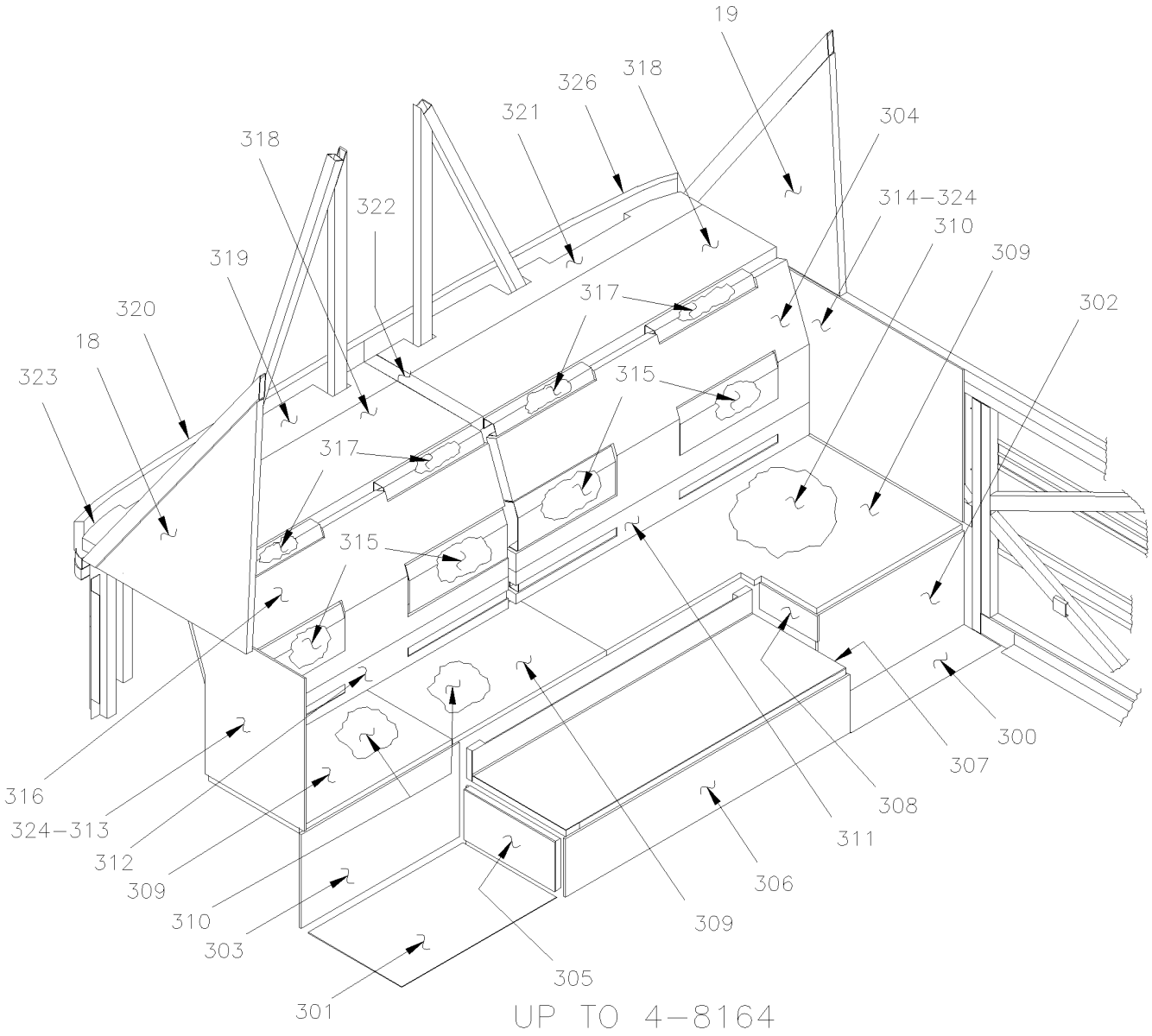

From Y-7046 Up to 7-9095	DATE: 01/2014	PAGE: Y2-1839-70

INSULATING REAR END INSIDE OVER ENGINE

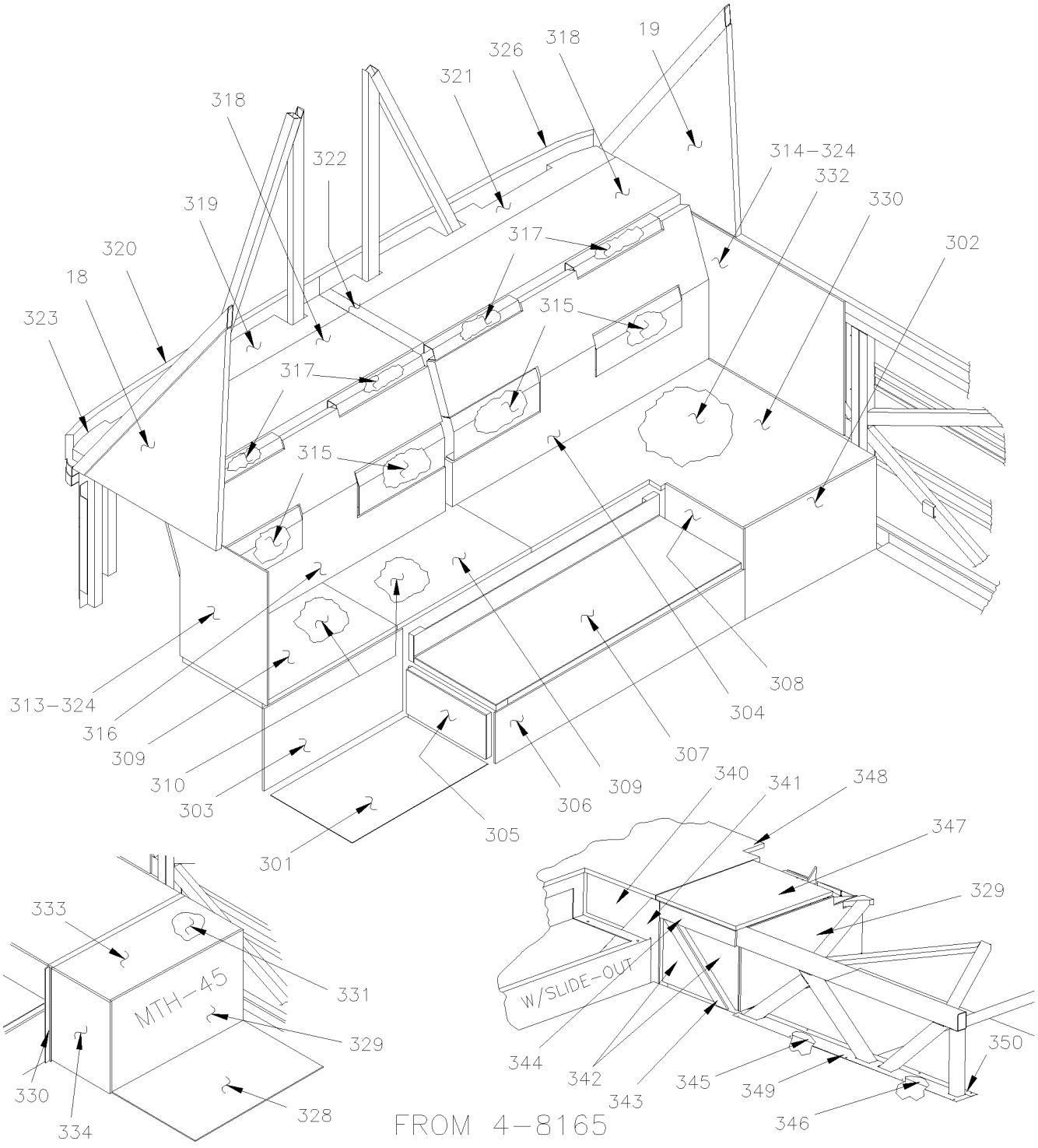

From Y-7046 Up to 7-9095	DATE: 01/2014	PAGE: Y2-1839-70

INSULATING REAR END INSIDE OVER ENGINE

ITEM	PART	DESCRIPTION	XL45	MTH40	MTH45	MTH45S	NOTE
18	326667	INSULATING				1	
18	327036	INSULATING		1	1		83
19	326668	INSULATING				1	
19	327037	INSULATING		1	1		83
300	323984	INSULATING Up to 3-8164		1	1	1	
301	324421	INSULATING Up to 3-8164		1	1	1	
302	325423	INSULATING Up to 3-8164		1		1	
302	327906	INSULATING From 4-8165		1		1	A
302	327835	INSULATING From 4-8165		1		1	
302	325410	INSULATING Up to 3-8164			1		
303	327344	INSULATING		1		1	
303	325425	INSULATING		1		1	A
303	325415	INSULATING Up to 3-8164			1		
303	327857	INSULATING From 4-8165			1		
303	325416	INSULATING Up to 3-8164			1		A
303	327858	INSULATING From 4-8165			1		A
304	325406	INSULATING		1		1	
304	325406	INSULATING Up to 3-8164			1		
304	327884	INSULATING From 4-8165			1		
305	325414	INSULATING Up to 3-8164		1		1	
305	325414	INSULATING From 4-8165 Up to 5-8805			1		
305	327856	INSULATING From 5-8806			1		
306	325413	INSULATING Up to 3-8164		1	1	1	
306	327831	INSULATING From 4-8165		1		1	
306	327819	INSULATING From 4-8165			1		
307	325411	INSUALTING Up to 3-8164		1	1	1	
307	327854	INSULATING From 4-8165			1		
308	325424	INSULATING Up to 3-8164		1		1	
308	327834	INSULATING From 4-8165		1		1	
308	325412	INSUALTING Up to 3-8164			1		
308	327839	INSULATING From 4-8165			1		
309	325120	INSULATING KIT Up to 3-8164		1		1	
309	325120	INSULATING KIT Up to 3-8164			1		
309	327837	INSULATING KIT From 4-8165		1		1	
310	324409	INSULATING		1	1	1	
310	327836	INSUALTING From 4-8165		1		1	
310	325047	INSULATING			1		
311	325420	INSULATING		1	1	1	
312	325422	INSULATING		1	1	1	
313	324080	INSUALTING		1	1		83

83) MTH 83" ONLY

A) W/SMALL A/C

From Y-7046 Up to 7-9095	DATE: 01/2014	PAGE: Y2-1839-70

INSULATING REAR END INSIDE OVER ENGINE

ITEM	PART	DESCRIPTION	XL45	MTH40	MTH45	MTH45S	NOTE
313	324688	INSUALTING		1	1	1	
314	324081	INSUALTING		1	1		83
314	324703	INSULATING		1	1	1	
315	324958	INSULATING		4	4	4	
316	325408	INSULATING		1		1	
316	325408	INSULATING Up to 3-8164			1		
316	327885	INSULATING From 4-8165			1		
317	324959	INSULATING		4	4	4	
318	325417	INSULATING		2	2		83
318	325418	INSULATING				2	
319	326708	INSULATING		1	1		83
319	327165	INSULATING		1	1	1	
319	328913	INSULATING				1	89
320	326820	INSULATING		1	1		
320	327166	INSULATING		1	1	1	
321	326709	INSULATING		1	1		83
321	327164	INSULATING		1	1	1	
321	328914	INSULATING				1	89
322	326715	INSULATING		1	1	1	
322	328915	INSULATING				1	89
323	682484	TAPE ALUMINUM ADH1 .005" x 3" x 300' ALUMINUM FSK3"		AR	AR	AR	
324	680397	CONTACT GLUE / AEROSOL		1	1	1	
326	326821	INSULATING PANEL		1	1		83
326	327167	INSULATING		1	1	1	
328	327976	INSULATING From 4-8165			1		A
328	328745	INSULATING From 4-8165 Up to 5-8805			1		
328	328014	INSULATING From 5-8806			1		
329	327860	INSULATING From 4-8165 Up to 5-8805			1		A
329	328290	INSULATING From 5-8806			1		A
329	327859	INSULATING From 4-8165 Up to 5-8805			1		
329	329087	INSULATING From 5-8806			1		
330	327875	INSULATING KIT From 4-8165 Up to 5-8805			1		
330	327964	INSULATING KIT From 4-8165			1		
330	328017	INSULATING KIT From 4-8165 Up to 5-8805			1		S
330	328185	INSULATING KIT From 5-8806			1		S
331	327873	INSULATING From 4-8165 Up to 5-8805			1		
331	328189	INSULATING From 5-8806			1		
331	327965	INSULATING From 4-8165 Up to 5-8805			1		S
332	327874	INSULATING From 4-8165 Up to 5-8805			1		
		83) MTH 83" ONLY					
		89) MTH 89" ONLY					
		A) W/SMALL A/C					
		S) WITH REAR SLIDE OUT					

From Y-7046 Up to 7-9095	DATE: 01/2014	PAGE: Y2-1839-70

INSULATING REAR END INSIDE OVER ENGINE

ITEM	PART	DESCRIPTION	XL45	MTH40	MTH45	MTH45S	NOTE
332	328192	INSULATING From 5-8806			1		
332	328190	INSULATING From 5-8806			1		S
333	327884	INSULATING From 4-8165			1		
334	327855	INSULATING From 4-8165 Up to 5-8805			1		
340	327968	INSULATING From 4-8165			1		
341	327969	INSULATING From 4-8165			1		
342	327970	INSULATING From 4-8165			2		
343	327972	INSULATING From 4-8165			1		
344	327971	INSULATING From 4-8165			1		
345	328021	INSULATING From 4-8165			1		
346	328020	INSULATING From 4-8165			1		
347	327967	FLOOR PANEL ASSY / FORWARD From 4-8165 Up to 5-8805			1		
NS	328187	FLOOR PANEL ASSY / FORWARD From 5-8806			1		
348	328015	FLOOR PANEL ASSY / BACKWARD From 4-8165			1		
349	328022	PLATE FINISHING From 4-8165			1		
350	328023	PLATE FINISHING From 4-8165			1		
350	500434	SCREW TP FL PH #8x3/4 ZP From 4-8165			AR		
		S) WITH REAR SLIDE OUT					

From Y-7046 Up to 7-9095	DATE: 01/2014	PAGE: Y2-1839-70

INSULATING REAR END INSIDE OVER ENGINE

ITEM	PART	DESCRIPTION	XL45	MTH40	MTH45	MTH45S	NOTE

From 7-9096 Up to 8-9339	DATE: 01/2014	PAGE: Y2-1839-71

INSULATING REAR END INSIDE OVER ENGINE

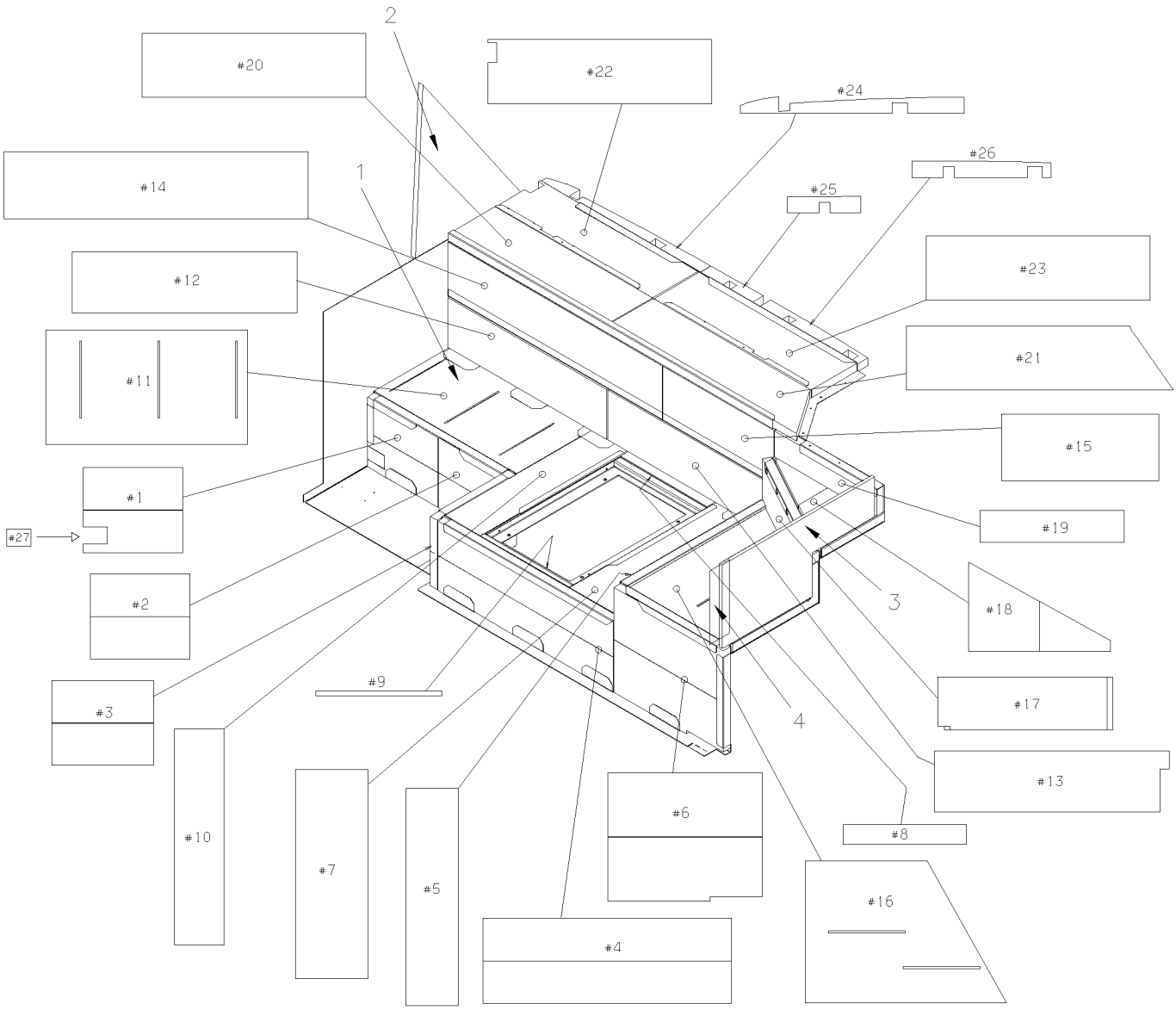

MTH–40' & MTH–45' ENT

From 7-9096 Up to 8-9339	DATE: 01/2014	PAGE: Y2-1839-71
INSULATING REAR END INSIDE OVER ENGINE		

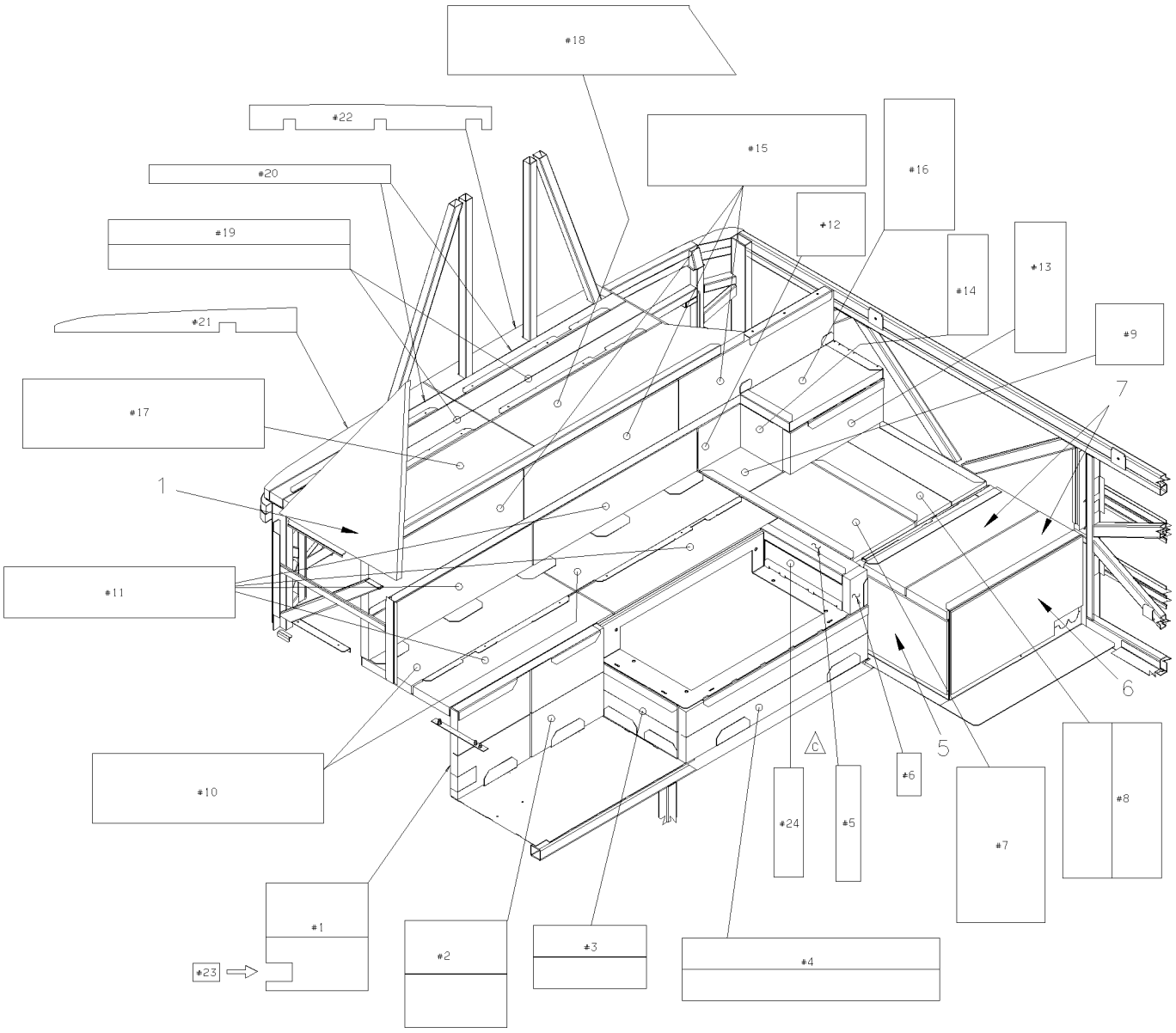

MTH-45'

From 7-9096 Up to 8-9339	DATE: 01/2014	PAGE: Y2-1839-71

INSULATING REAR END INSIDE OVER ENGINE

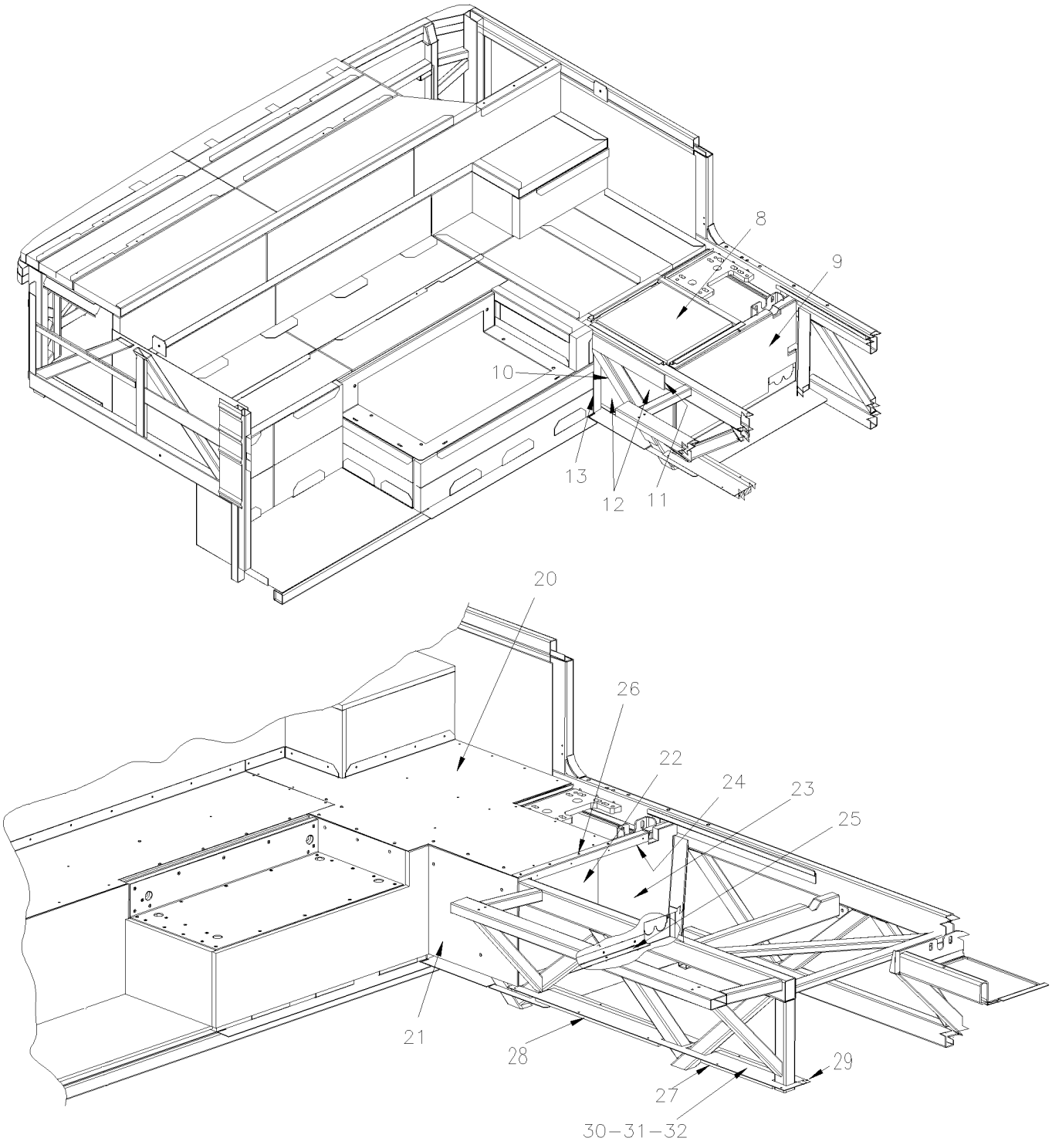

From 7-9096 Up to 8-9339	DATE: 01/2014	PAGE: Y2-1839-71

INSULATING REAR END INSIDE OVER ENGINE

ITEM	PART	DESCRIPTION	XL45	MTH40	MTH45	MTH45S	NOTE
1	328698	KIT REAR END INSULATING			1		
1	328662	KIT REAR END INSULATING				1	
2	326667	INSULATING				1	
2	327036	INSULATING			1		
3	328451	INSULATING STREETSIDE				1	
4	682484	TAPE ALUMINUM ADH1 .005" x 3" x 300' ALUMINUM FSK3"			AR	AR	
5	327839	INSULATING			1		
6	328707	INSULATING / W/SMALL A/C			1		
6	328711	INSULATING / W/LARGE A/C			1		
7	328704	INSULATING			2		
8	328705	INSULATING / W/SLIDE OUT			1		
9	328290	INSULATING			1		
9	329087	INSULATING			1		
10	328721	INSULATING			1		
11	328720	INSULATING			1		
12	327970	INSULATING			2		
13	328722	INSULATING			1		
20	328694	ALLUMINUM PANEL Up to 8-9330			1		
20	320259	ALLUMINUM PANEL From 8-9331			1		
NS	320260	INSULATING 360MNM X 250MM From 8-9331			1		
20	320261	INSULATING 250MM X 250MM From 8-9331			1		
21	328714	INSULATING			1		
22	328715	INSULATING			1		
23	328716	INSULATING / W/LARGE A/C			1		
23	328723	INSULATING / W/SMALL A/C			1		
24	328727	ANGLE RETAINER			1		
25	328729	ANGLE RETAINER / W/LARGE A/C			1		
25	328728	ANGLE RETAINER / W/SMALL A/C			1		
26	500613	SCREW TP PAN PH #10x1/2 ZP			AR		
27	328020	INSULATING			1		
28	328021	INSULATING			1		
29	328023	PLATE FINISHING			1		
30	328022	PLATE FINISHING			1		

From Y-7046 Up to 8-9339	DATE: 01/2014	PAGE: Y2-1839-90

INSULATING - "SLIDE-OUT"

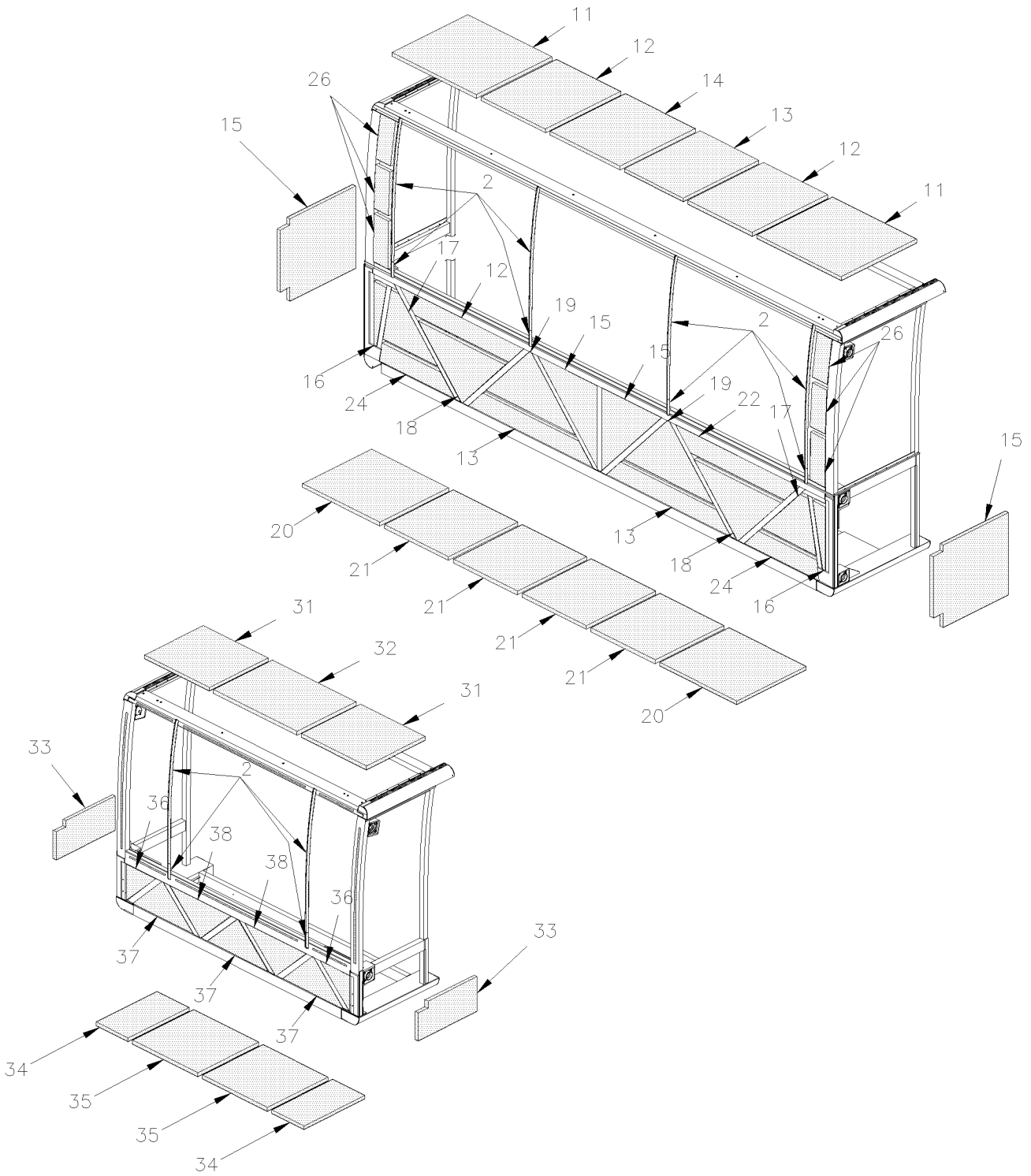

From Y-7046 Up to 8-9339	DATE: 01/2014	PAGE: Y2-1839-90

INSULATING - "SLIDE-OUT"

ITEM	PART	DESCRIPTION	XL45	MTH40	MTH45	MTH45S	NOTE
	690203	FRONT S/O INSULATION KIT Up to 4-8251 / REPLACED BY: 351426			1		A
	351426	FRONT S/O INSULATION KIT From 4-8252			1		
1	690204	REAR S/O INSULATION KIT Up to 4-8251 / REPLACED BY: 351443			1		B
1	351443	REAR S/O INSULATION KIT From 4-8252			1		
		A) INCLUDES ITEMS #2 TO 26					
		B) INCLUDES ITEMS #2 & 30 TO 38					

	DATE: 01/2014	PAGE: Y2-18-EXT
BODY EXTERIOR		

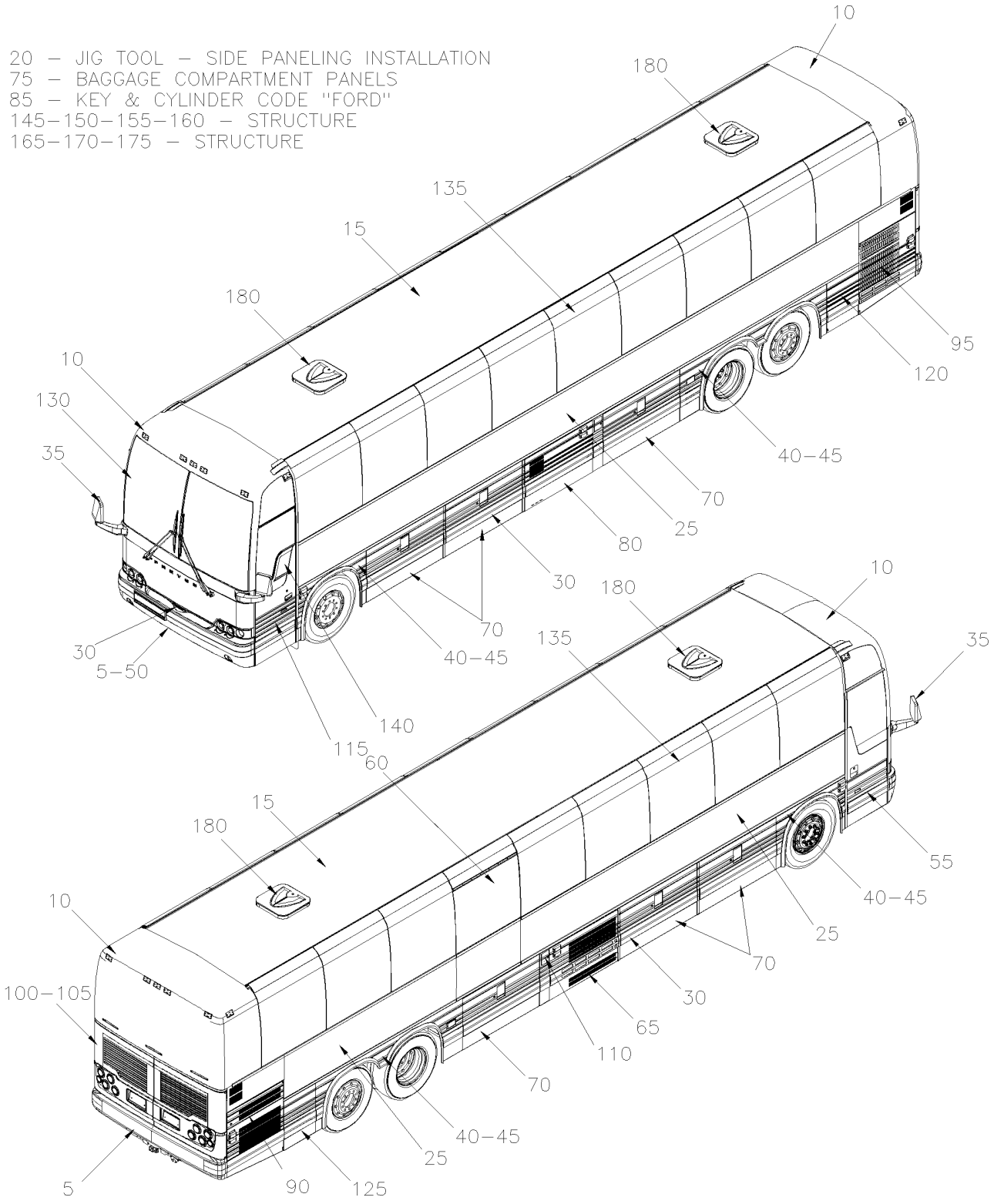

	DATE: 01/2014	PAGE: Y2-18-EXT

BODY EXTERIOR

ITEM	PART	DESCRIPTION	XL45	MTH40	MTH45	MTH45S	NOTE
5	Y2-1850-00	**BUMPER FRONT From Y-7046 Up to 2-7764**					
5	Y2-1850-01	**BUMPER FRONT From 2-7765 Up to 4-8358**					
5	Y2-1850-02	**BUMPER FRONT From 4-8359 Up to 8-9339**					
5	Y2-1850-10	**BUMPER REAR From Y-7046 Up to 8-9339**					
5	Y2-1850-15	**BUMPER REAR - BUS "OPTION" / "ROMEO RIM" From Y-7046 Up to 6-8906**					
10	Y2-1851-00	**FRONT CAP - INSTALLATION From Y-7046 Up to 8-9339**					
10	Y2-1851-20	**REAR CAP - INSTALLATION From Y-7046 Up to 8-9339**					
15	Y2-1852-00	**ROOF PANEL From Y-7046 Up to 8-9339**					
20	Y2-1853-50	**JIG TOOL - SIDE PANELING INSTALLATION From Y-7046 Up to 8-9339**					
25	Y2-1854-00	**SIDE PANELS - BUS From Y-7046 Up to 6-8906**					
25	Y2-1854-10	**WEATHERSTRIP & RETAINER - BUS From Y-7046 Up to 6-8906**					
25	Y2-1854-20	**WEATHERSTRIP & RETAINER - MTH From Y-7046 Up to 8-9339**					
25	Y2-1854-50	**SIDE PANELS - MTH From Y-7046 Up to 8-9339**					
25	Y2-1854-51	**SIDE FLAT PANEL - MTH ENTERTAINER From 1-7436 Up to 8-9339**					
25	Y2-1854-90	**SIDE PANELS - "SLIDE-OUT" From Y-7046 Up to 6-8805**					
25	Y2-1854-91	**SIDE PANELS - "SLIDE-OUT" From 6-8806 Up to 8-9339**					
25	Y2-1854-95	**"SLIDE-OUT" - INSTALLATION From Y-7046 Up to 6-8805**					
25	Y2-1854-96	**"SLIDE-OUT" - INSTALLATION From 6-8806 Up to 8-9339**					
30	Y2-1855-00	**RUB RAIL - CREST & TRIMS From Y-7046 Up to 8-9339**					
35	Y2-1856-20	**MIRROR "RAMCO" FLAT GLASS / SILVER PAINTED From Y-7046 Up to 2-7763**					
35	Y2-1856-21	**MIRROR "RAMCO" FLAT GLASS / SILVER PAINTED From 2-7764 Up to 6-8906**					
35	Y2-1856-22	**MIRROR "RAMCO" FLAT GLASS / BLACK PAINTED From Y-7046 Up to 2-7763**					
35	Y2-1856-23	**MIRROR "RAMCO" FLAT GLASS / BLACK PAINTED From 2-7764 Up to 6-8906**					
35	Y2-1856-30	**MIRROR "RAMCO" 2 GLASSES / SILVER PAINTED From Y-7046 Up to 2-7763**					
35	Y2-1856-31	**MIRROR "RAMCO" 2 GLASSES / SILVER PAINTED From 2-7764 Up to 6-8906**					
35	Y2-1856-32	**MIRROR "RAMCO" 2 GLASSES / BLACK PAINTED From Y-7046 Up to 2-7763**					
35	Y2-1856-33	**MIRROR "RAMCO" 2 GLASSES / BLACK PAINTED From 2-7764 Up to 6-8906**					
35	Y2-1856-50	**MIRROR "RAMCO" FLAT GLASS / CHROME From Y-7046 Up to 2-7763**					
35	Y2-1856-51	**MIRROR "RAMCO" FLAT GLASS / CHROME From 2-7764 Up to 8-9339**					
35	Y2-1856-60	**MIRROR "RAMCO" 2 GLASSES / CHROME From Y-7046 Up to 2-7763**					
35	Y2-1856-61	**MIRROR "RAMCO" 2 GLASSES / CHROME From 2-7764 Up to 8-9339**					
40	Y2-1857-00	**FENDER L.H. - BUS W/FLAT PANELING From Y-7046 Up to 6-8906**					
40	Y2-1857-05	**FENDER R.H. - BUS W/FLAT PANELING From Y-7046 Up to 6-8906**					
40	Y2-1857-10	**FENDER L.H. - BUS W/FLUTED PANELLING From Y-7046 Up to 6-8906**					
40	Y2-1857-15	**FENDER R.H. - BUS W/FLUTED PANELLING From Y-7046 Up to 8-9339**					
40	Y2-1857-50	**FENDERS L.H. - MTH From Y-7046 Up to 8-9339**					
40	Y2-1857-51	**FENDERS L.H. - MTH 45 ENT From 7-9096 Up to 8-9278**					
40	Y2-1857-55	**FENDERS R.H. - MTH From Y-7046 Up to 8-9339**					
40	Y2-1857-56	**FENDERS R.H. - MTH 45 ENT From 7-9096 Up to 8-9278**					
45	Y2-1859-00	**SPLASH GUARD - FRONT & REAR From Y-7046 Up to 8-9339**					
50	Y2-1860-10	**SPARE WHEEL DOOR ASSY From Y-7046 Up to 2-7764**					
50	Y2-1860-11	**SPARE WHEEL DOOR ASSY From 2-7765 Up to 8-9339**					
55	Y2-1862-00	**ENTRANCE DOOR ASSY - BUS From Y-7046 Up to 6-8906**					
55	Y2-1862-50	**ENTRANCE DOOR ASSY - MTH From Y-7046 Up to 8-9339**					

	DATE: 01/2014	PAGE: Y2-18-EXT

BODY EXTERIOR

ITEM	PART	DESCRIPTION	XL45	MTH40	MTH45	MTH45S	NOTE
55	Y2-1862-60	**ENTRANCE DOOR FRAME - INSTALLATION From Y-7046 Up to 8-9339**					
60	Y2-1862-80	**ENTRANCE DOOR ASSY - W.C.L. From Y-7046 Up to 6-8906**					
60	Y2-1862-82	**ENTRANCE DOOR - INSTALLATION - W.C.L. From Y-7046 Up to 6-8906**					
65	Y2-1863-00	**CONDENSOR DOOR ASSY - BUS From Y-7046 Up to 6-8906**					
65	Y2-1863-50	**CONDENSOR DOOR ASSY From Y-7046 Up to 8-9339**					
65	Y2-1863-51	**CONDENSOR DOOR ASSY From Y-7046 Up to 8-9278**					
70	Y2-1864-00	**BAGGAGE DOOR ASSY - BUS From Y-7046 Up to 6-8906**					
70	Y2-1864-50	**BAGGAGE DOOR ASSY - MTH From Y-7046 Up to 8-9339**					
70	Y2-1864-60	**BAGGAGE DOOR R.H. - W/HINGE "SPECIAL" From Y-7046 Up to 8-9339**					
70	Y2-1864-80	**BAGGAGE DOOR - W.C.L."RICON" From Y-7046 Up to 6-8906**					
70	Y2-1864-90	**BAGGAGE DOOR - W/"SLIDE-OUT" INSTALLATION From Y-7046 Up to 2-7763**					
70	Y2-1864-91	**BAGGAGE DOOR - W/"SLIDE-OUT" INSTALLATION From 2-7764 Up to 8-9339**					
75	Y2-1865-00	**FLOOR BAGGAGE COMPARTMENT - BUS From Y-7046 Up to 1-7680**					
75	Y2-1865-01	**FLOOR BAGGAGE COMPARTMENT - BUS From 1-7681 Up to 6-8906**					
75	Y2-1865-10	**SEPARATOR PANEL - BAGGAGE COMPARTMENT - BUS From Y-7046 Up to 6-8906**					
75	Y2-1865-20	**EVAPORATOR & CONDENSOR WALL From Y-7046 Up to 8-9339**					
75	Y2-1865-50	**FLOOR BAGGAGE COMPARTMENT - MTH From Y-7046 Up to 6-8805**					
75	Y2-1865-51	**FLOOR BAGGAGE COMPARTMENT - MTH From 6-8806 Up to 8-9339**					
75	Y2-1865-55	**SEPARATOR PANEL - BAGGAGE COMPARTMENT - MTH From Y-7046 Up to 6-8805**					
75	Y2-1865-56	**SEPARATOR PANEL - BAGGAGE COMPARTMENT - MTH From 6-8806 Up to 8-9339**					
75	Y2-1865-60	**SEPARATOR PANEL - BAGGAGE COMPARTMENT - MTH From Y-7046 Up to 6-8805**					
75	Y2-1865-61	**SEPARATOR PANEL - BAGGAGE COMPARTMENT - MTH From 6-8806 Up to 8-9339**					
80	Y2-1866-00	**EVAPORATOR DOOR ASSY - BUS From Y-7046 Up to 6-8906**					
80	Y2-1866-50	**EVAPORATOR DOOR ASSY - MTH From Y-7046 Up to 6-8805**					
80	Y2-1866-51	**EVAPORATOR DOOR ASSY - MTH From 6-8806 Up to 8-9339**					
85	Y2-1867-00	**KEY & CYLINDER CODE "FORD" From Y-7046 Up to 8-9339**					
90	Y2-1868-00	**A/C COMPRESSOR DOOR ASSY From Y-7046 Up to 3-8164**					
90	Y2-1868-01	**A/C COMPRESSOR DOOR ASSY From 4-8165 Up to 8-9339**					
95	Y2-1869-00	**RADIATOR DOOR ASSY From Y-7046 Up to 3-8164**					
95	Y2-1869-01	**RADIATOR DOOR ASSY - BUS From 4-8165 Up to 6-8906**					
95	Y2-1869-50	**RADIATOR DOOR ASSY - MTH-45' SMALL From 4-8165 Up to 8-9339**					
95	Y2-1869-55	**RADIATOR DOOR ASSY - MTH-40' & MTH-45' ENT From 4-8165 Up to 8-9339**					
95	Y2-1869-60	**RADIATOR DOOR ASSY - MTH-45' LARGE From 4-8165 Up to 8-9339**					
100	Y2-1870-00	**ENGINE DOOR ASSY L.H. From Y-7046 Up to 3-8164**					
100	Y2-1870-01	**ENGINE DOOR ASSY L.H. From 4-8165 Up to 8-9339**					
100	Y2-1870-05	**ENGINE DOOR ASSY R.H. From Y-7046 Up to 3-8164**					
100	Y2-1870-06	**ENGINE DOOR ASSY R.H. From 4-8165 Up to 8-9339**					
105	Y2-1870-10	**ENGINE DOOR ASSY - INSTALLATION From Y-7046 Up to 8-9339**					
110	Y2-1875-00	**FUEL TANK FILLING DOOR From Y-7046 Up to 8-9339**					
115	Y2-1879-00	**FRONT SERVICE DOOR ASSY From Y-7046 Up to 8-9339**					
115	Y2-1879-10	**FRONT SERVICE DOOR - INSTALLATION From Y-7046 Up to 8-9339**					
120	Y2-1879-50	**REAR SERVICE DOOR - L.H. SIDE From Y-7046 Up to 3-8164**					
120	Y2-1879-51	**REAR SERVICE DOOR - L.H. SIDE From 4-8165 Up to 8-9339**					
125	Y2-1879-60	**REAR SERVICE DOOR - R.H. SIDE From Y-7046 Up to 8-9339**					

	DATE: 01/2014	PAGE: Y2-18-EXT

BODY EXTERIOR

ITEM	PART	DESCRIPTION	XL45	MTH40	MTH45	MTH45S	NOTE
130	Y2-1880-00	**WINDSHIELD & CHANNEL - W/1 LOCK From Y-7046 Up to 2-7913**					
130	Y2-1880-01	**WINDSHIELD & CHANNEL - W/2 LOCK From 2-7914 Up to 8-9339**					
135	Y2-1884-00	**SIDE WINDOW - BUS From Y-7046 Up to 6-8906**					
135	Y2-1884-50	**SIDE WINDOW - MTH From Y-7046 Up to 8-9339**					
135	Y2-1884-60	**AWNING WINDOW - MTH From Y-7046 Up to 8-9339**					
135	Y2-1884-65	**ELECTRICAL AWNING WINDOW ASSY From Y-7046 Up to 8-9339**					
135	Y2-1884-80	**ELECTRICAL SLIDING WINDOW ASSY From 7-9287 Up to 8-9339**					
135	Y2-1884-90	**"SLIDE-OUT" - GLASS - MTH From Y-7046 Up to 6-8805**					
135	Y2-1884-91	**"SLIDE-OUT" - GLASS - MTH From 6-8806 Up to 8-9339**					
140	Y2-1886-00	**POWER WINDOW - ELECTRICAL INSTALLATION From Y-7046 Up to 6-8901**					
140	Y2-1886-01	**POWER WINDOW - ELECTRICAL INSTALLATION From 6-8902 Up to 8-9339**					
145	Y2-1890-00	**ROOF STRUCTURE From Y-7046 Up to 8-9339**					
145	Y2-1890-10	**STRUCTURE WALL - UPPER From Y-7046 Up to 8-9339**					
150	Y2-1891-00	**LOWER WALL STRUCTURE - BUS From Y-7046 Up to 6-8906**					
150	Y2-1891-50	**LOWER WALL STRUCTURE - MTH 40' From Y-7046 Up to 5-8813**					
150	Y2-1891-55	**LOWER WALL STRUCTURE - MTH 45' ENT 86" From Y-7046 Up to 1-7631**					
150	Y2-1891-56	**LOWER WALL STRUCTURE - MTH 45' ENT 89" From Y-7046 Up to 8-9339**					
150	Y2-1891-60	**LOWER WALL STRUCTURE - MTH 45' From Y-7046 Up to 8-9339**					
155	Y2-1893-00	**BAGGAGE COMPARTMENT STRUCTURE From Y-7046 Up to 6-8906**					
155	Y2-1893-50	**BAGGAGE COMPARTMENT STRUCTURE From Y-7046 Up to 6-8805**					
160	Y2-1894-00	**REAR CAP - STRUCTURE From Y-7046 Up to 8-9339**					
160	Y2-1894-05	**REAR LH - STRUCTURE From Y-7046 Up to 3-8164**					
160	Y2-1894-06	**REAR LH - STRUCTURE From 4-8165 Up to 8-9339**					
160	Y2-1894-10	**REAR RH - STRUCTURE From Y-7046 Up to 7-9095**					
160	Y2-1894-11	**REAR RH - STRUCTURE From 7-9096 Up to 8-9339**					
165	Y2-1895-00	**FRONT STRUCTURE From Y-7046 Up to 8-9339**					
165	Y2-1895-10	**FRONT LOWER FLOOR STRUCTURE - BUS From Y-7046 Up to 6-8906**					
165	Y2-1895-50	**FRONT LOWER FLOOR STRUCTURE - MTH From Y-7046 Up to 6-8906**					
170	Y2-1896-00	**FRONT SHEATING - BUS From Y-7046 Up to 6-8906**					
170	Y2-1896-50	**FRONT SHEATING - MTH From Y-7046 Up to 8-9339**					
175	Y2-1897-00	**FRONT SUB-FRAME / W/I BEAM RIGID SUSPENSION From Y-7046 Up to 6-8906**					
175	Y2-1897-10	**REAR SUB-FRAME BUS & MTH-45' From Y-7046 Up to 8-9339**					
175	Y2-1897-11	**REAR SUB-FRAME MTH-45' ENT From 7-9096 Up to 8-9339**					
175	Y2-1897-50	**FRONT SUB-FRAME / W/INDEPENDENT SUSPENSION - 16500 LBS From Y-7046 Up to 3-8164**					
175	Y2-1897-51	**FRONT SUB-FRAME / W/INDEPENDENT SUSPENSION - 18000 LBS From 4-8165 Up to 8-9339**					
180	Y2-1898-00	**ESCAPE HATCH - INSTALLATION From Y-7046 Up to 5-8699**					
181	Y2-1898-01	**ESCAPE HATCH - INSTALLATION From 5-8700 Up to 8-9339**					

From Y-7046 Up to 2-7764	DATE: 01/2014	PAGE: Y2-1850-00
BUMPER FRONT		

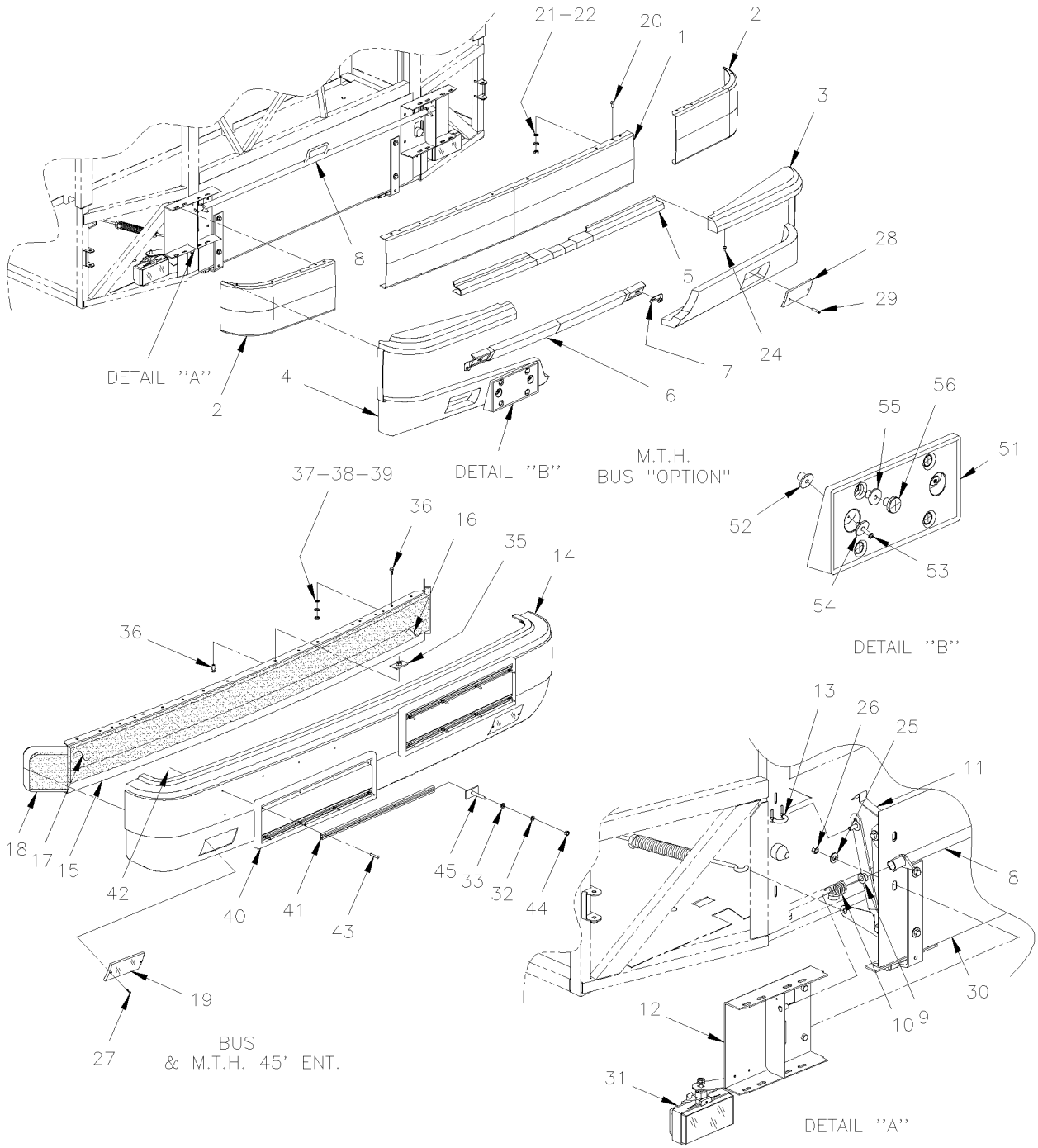

From Y-7046 Up to 2-7764	DATE: 01/2014	PAGE: Y2-1850-00

BUMPER FRONT

ITEM	PART	DESCRIPTION	XL45	MTH40	MTH45	MTH45S	NOTE
		NEXT BUMPER IT STANDARD ON MTH-40 & MTH-45					
		AND IT "OPTIONAL" WITH MTH-45' ENT					
	410679P	BUMPER ASSY / FRONT		1	1		
1	410655	. BUMPER CENTER PART / SS		1	1		
2	410674	. BUMPER CORNER / SS / S.B.		2	2		
3	410675	. MOULDING L.H.		1	1		
4	410676	. MOULDING R.H.		1	1		
5	410677	. MOULDING UPPER		1	1		
6	410678	. MOULDING LOWER		1	1		
7	410723	. SUPPORT L.H.		1	1		
7	410724	. SUPPORT R.H.		1	1		
NS	500163	. SCREW CAP HEX 1/4-20x3/4 G5 ZP	4	4	4	4	
NS	500441	. WASHER FL .312x.734x.065 ZP	1	1	1	1	
8	410669	. HANDLE / RELEASE	1	1	1	1	
9	410667	. BUSHING NYLON	2	2	2	2	
10	410672	. SPRING	2	2	2	2	
11	410656	SAFETY HOOK	1	1	1	1	
12	410795	SUPPORT R.H. Up to Y-7288 / REPLACED BY: 410814		1	1		
12	410814	. SUPPORT R.H. From Y-7289		1	1		
12	410797	SUPPORT L.H. Up to Y-7288 / REPLACED BY: 410813		1	1		
12	410813	. SUPPORT L.H. From Y-7289		1	1		
12	410761	SUPPORT L.H. Up to Y-7288 / REPLACED BY: 410815	1			1	
12	410815	SUPPORT L.H. From Y-7289	1			1	
12	410762	SUPPORT R.H. Up to Y-7288 / REPLACED BY: 410816	1			1	
12	410816	SUPPORT R.H. From Y-7289	1			1	
13	5001424	U-BOLT 1" I.D. x 2 3/16 x 5/16-18 SS	2			2	
		NEXT BUMPER IT STANDARD ON BUS & MTH-45 "ENT"					
14	410775P	BUMPER ASSY, FRONT BUS & MTH ENT Up to 1-7596	1			1	A
14	410854P	BUMPER Up to 1-7596	1			1	S
14	410772	. BUMPER SKIN, FRONT BUS & MTH ENT Up to 1-7596 / REPLACED BY: K410772	1			1	B
14	410839	. BUMPER ASSY, FRONT BUS & MTH ENT From 1-7597	1			1	S
15	410766	. BUMPER REINFORCEMENT Up to 1-7596	1			1	
15	410842	. BUMPER REINFORCEMENT Up to 1-7596	1			1	S
15	410820	. REINFORCEMENT PLATE / 495MM x 45MM Up to 1-7596	4			4	
		A) THIS BUMPER ARE SUPERSEDED BY 410854P					
		B) THIS BUMPER ARE SUPERSEDED BY 410899					
		S) USE IN SERVICE ONLY FOR SKIN REPLACEMENT					

From Y-7046 Up to 2-7764	DATE: 01/2014	PAGE: Y2-1850-00

BUMPER FRONT

ITEM	PART	DESCRIPTION	XL45	MTH40	MTH45	MTH45S	NOTE
15	410821	. REINFORCEMENT PLATE / 225MM x 45MM Up to 1-7596	2			2	
15	410900	. REINFORCEMENT PLATE / 225MM x 45MM	1			1	C
16	410770	. CUSHION LOWER	1			1	
17	410769	. CUSHION UPPER	1			1	
18	410771	. CUSHION CORNER	2			2	
19	410773	FOG COVER LH	1			1	D
19	410776	FOG COVER RH	1			1	D
20	500191	SCREW CAP HEX 3/8-16x1 G5 ZP	4	4	4	4	
21	500478	WASHER LO SPT .380x.683x.094 ZP	4	4	4	4	
22	500445	WASHER FL .437x1.000x.083 ZP	4	4	4	4	
24	5001438	RIVET DRV TR 1/4x3/4 NYL		AR	AR		
25	500270	WASHER FL .406x1.000x.063 SS	4	4	4	4	
26	500102	NUT HEX 3/8-16 SS	4	4	4	4	
27	500952	SCREW TP BDG PH #8x1/2 SS	4			4	
28	410835	FOG COVER	2				
29	5001438	RIVET DRV TR 1/4x3/4 NYL	4				
30	Y2-1860-10	**SPARE WHEEL DOOR ASSY**					
31	Y2-0661-00	**FOG LAMP**					
32	502570	WASHER LO SPT 6.1x11.8x1.6 SS	8				
33	502637	WASHER FL .200x.437x.037 SS	8				
35	410878	ANCHOR NUT / M10-1.5 From 1-7596	23			23	
36	500191	SCREW CAP HEX 3/8-16x1 G5 ZP Up to 1-7595	39			39	
36	5001444	SCREW CAP HEX M10-1.5x22 G8.8 ZP From 1-7596	39			39	
37	500478	WASHER LO SPT .380x.683x.094 ZP	AR			AR	
37	502644	WASHER FL 10.5x30.0x2.5 ZP	AR			AR	
38	500478	WASHER LO SPT .380x.683x.094 ZP Up to 1-7596	AR			AR	
38	500257	WASHER LO SPT 10.2x18.1x2.2 ZP From 1-7597	1			1	
39	500680	NUT HEX STO M10-1.5 ZP	AR			AR	
40	410817	MOULDING / PLATE HOLDER	1				
41	410818	TRACK / LICENCE PLATE HOLDER 630MM	1				
42	500589	NUT WELL M4-0.7x13.5	8				
43	502809	SCREW MA OV PH M4-0.7x30 SS EMN	8				
44	500787	NUT HEX #10-24 SS	8				
NS	507333	PROTECTOR CAP / BLACK / .172 I.D. x .500	8				
45	504286	T SCREW 10-24 X 3/4" / SS / PLATE HOLDER	8				
51	410827	. MOULDING / PLATE HOLDER	2			2	
		C) USE ONLY WITH OLD # 410766 WITH NEW BUMPER					
		ASSY #410899 UP TO 1-7596					
		D) THOSE COVER DO NOT FIT WITH SERVICE BUMPER					
		#410854 & #410839					

From Y-7046 Up to 2-7764	DATE: 01/2014	PAGE: Y2-1850-00

BUMPER FRONT

ITEM	PART	DESCRIPTION	XL45	MTH40	MTH45	MTH45S	NOTE
52	5001055	NUT WELL M4-0.7x14.5	4			4	
53	502677	SCREW MA RND PH M4-0.7x25 SS	4			4	
54	502759	WASHER FL .218x.875x.062 SS	4			4	
55	5001009	NUT AN 1/4 NYL	8			8	
56	5001245	SCREW TC CAP HEXW SLT #12-24x1/2 ZP	8			8	

From 2-7765 Up to 4-8358	DATE: 01/2014	PAGE: Y2-1850-01
BUMPER FRONT		

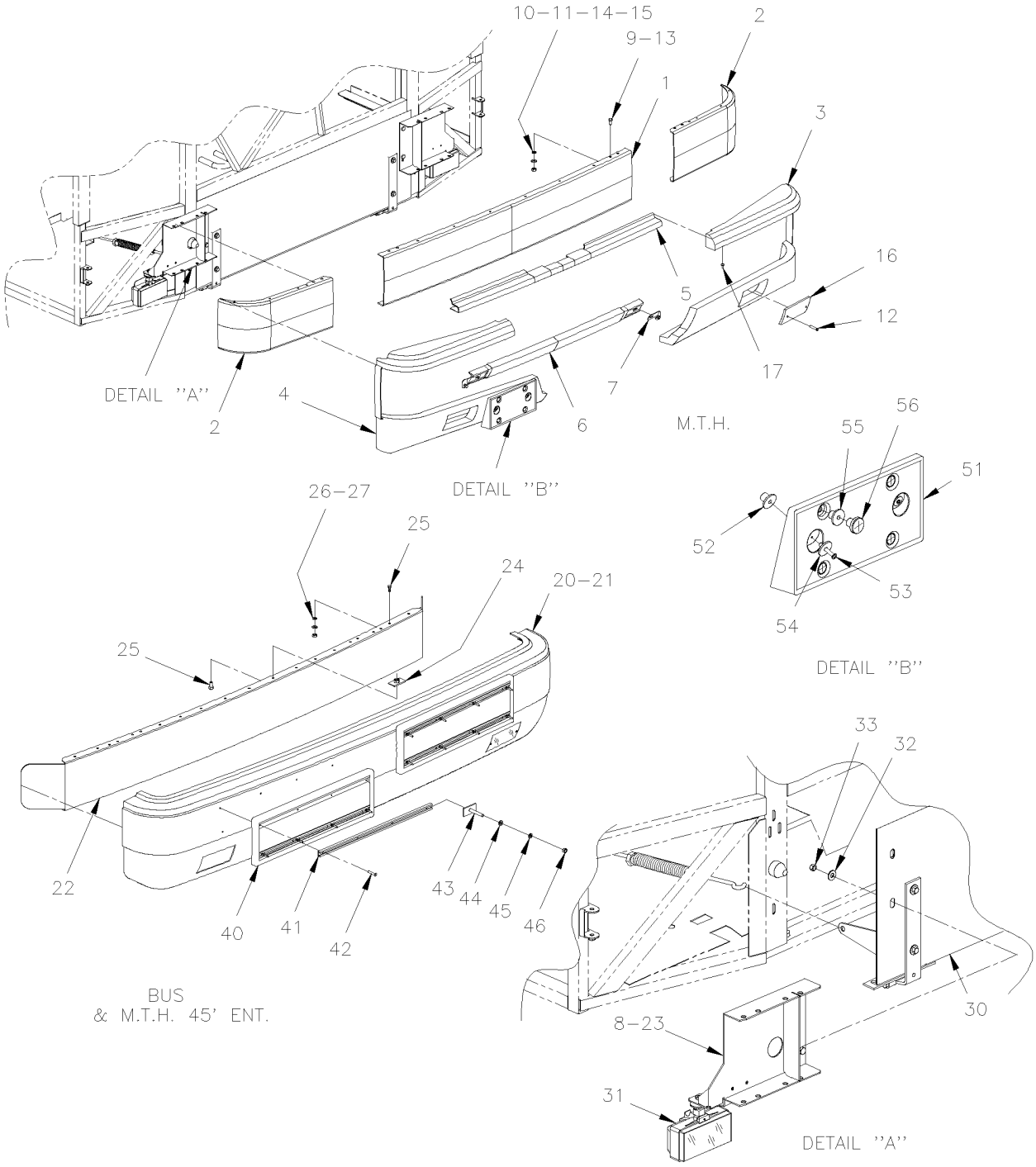

From 2-7765 Up to 4-8358	DATE: 01/2014	PAGE: Y2-1850-01

BUMPER FRONT

ITEM	PART	DESCRIPTION	XL45	MTH40	MTH45	MTH45S	NOTE
		NEXT BUMPER IT STANDARD ON MTH-40 & MTH-45					
		AND IT "OPTIONAL" WITH MTH-45' ENT					
	410931P	BUMPER ASSY W/FOG LAMP		1	1		
1	410655	. BUMPER CENTER PART / SS		1	1		
2	410674	. BUMPER CORNER / SS / S.B.		2	2		
3	410675	. MOULDING L.H.		1	1		
4	410676	. MOULDING R.H.		1	1		
5	410677	. MOULDING UPPER		1	1		
6	410678	. MOULDING LOWER		1	1		
7	410723	. SUPPORT L.H.		1	1		
7	410724	. SUPPORT R.H.		1	1		
NS	500163	. SCREW CAP HEX 1/4-20x3/4 G5 ZP		2	2		
NS	500270	. WASHER FL .406x1.000x.063 SS		2	2		
8	410934	SUPPORT L.H.		1	1		
8	410933	SUPPORT R.H.		1	1		
9	5001444	. SCREW CAP HEX M10-1.5x22 G8.8 ZP		16	16		
10	500257	. WASHER LO SPT 10.2x18.1x2.2 ZP		16	16		
11	502644	. WASHER FL 10.5x30.0x2.5 ZP		16	16		
12	5001438	. RIVET DRV TR 1/4x3/4 NYL		20	20		
13	500163	. SCREW CAP HEX 1/4-20x3/4 G5 ZP		2	2		
14	500441	. WASHER FL .312x.734x.065 ZP		2	2		
15	502716	. NUT HEX NYRT 1/4-20 / REPLACED BY: 5001123		2	2		
16	410835	FOG COVER		2	2		
17	5001438	RIVET DRV TR 1/4x3/4 NYL		4	4		
		NEXT BUMPER IT STANDARD ON BUS & MTH-45 "ENT"					
20	410928P	BUMPER ASSY, FRONT BUS & MTH ENT	1			1	
21	410839	. BUMPER ASSY, FRONT BUS & MTH ENT	1			1	
22	410842	. BUMPER REINFORCEMENT	1			1	
23	410906	. SUPPORT R.H.	1			1	
23	410907	. SUPPORT L.H.	1			1	
24	410878	. ANCHOR NUT / M10-1.5	23			23	
25	5001444	. SCREW CAP HEX M10-1.5x22 G8.8 ZP	39			39	
26	500257	. WASHER LO SPT 10.2x18.1x2.2 ZP	16			16	
27	502644	. WASHER FL 10.5x30.0x2.5 ZP	16			16	
30	Y2-1860-11	**SPARE WHEEL DOOR ASSY**					
31	Y2-0661-00	**FOG LAMP**					
32	500270	WASHER FL .406x1.000x.063 SS	4				
33	500102	NUT HEX 3/8-16 SS	4				
40	410817	MOULDING / PLATE HOLDER	1			1	
41	410818	TRACK / LICENCE PLATE HOLDER 630MM	1			1	

From 2-7765 Up to 4-8358	DATE: 01/2014	PAGE: Y2-1850-01

BUMPER FRONT

ITEM	PART	DESCRIPTION	XL45	MTH40	MTH45	MTH45S	NOTE
42	500360	SCREW TP FL PH #8x1 1/4 BK	8			8	
43	504286	T SCREW 10-24 X 3/4" / SS / PLATE HOLDER	8			8	
44	502637	WASHER FL .200x.437x.037 SS	8			8	
NS	502570	WASHER LO SPT 6.1x11.8x1.6 SS	8			8	
45	500787	NUT HEX #10-24 SS	8			8	
46	507333	PROTECTOR CAP / BLACK / .172 I.D. x .500	8			8	
51	410827	MOULDING / PLATE HOLDER		2	2	2	
52	5001055	NUT WELL M4-0.7x14.5		4	4	4	
53	502677	SCREW MA RND PH M4-0.7x25 SS		4	4	4	
54	502759	WASHER FL .218x.875x.062 SS		4	4	4	
55	5001009	NUT AN 1/4 NYL		8	8	8	
56	5001245	SCREW TC CAP HEXW SLT #12-24x1/2 ZP		8	8	8	

From 2-7765 Up to 4-8358	DATE: 01/2014	PAGE: Y2-1850-01

BUMPER FRONT

ITEM	PART	DESCRIPTION	XL45	MTH400	MTH445	MTH455S	NOTE

From 4-8359 Up to 8-9339	DATE: 01/2014	PAGE: Y2-1850-02
BUMPER FRONT		

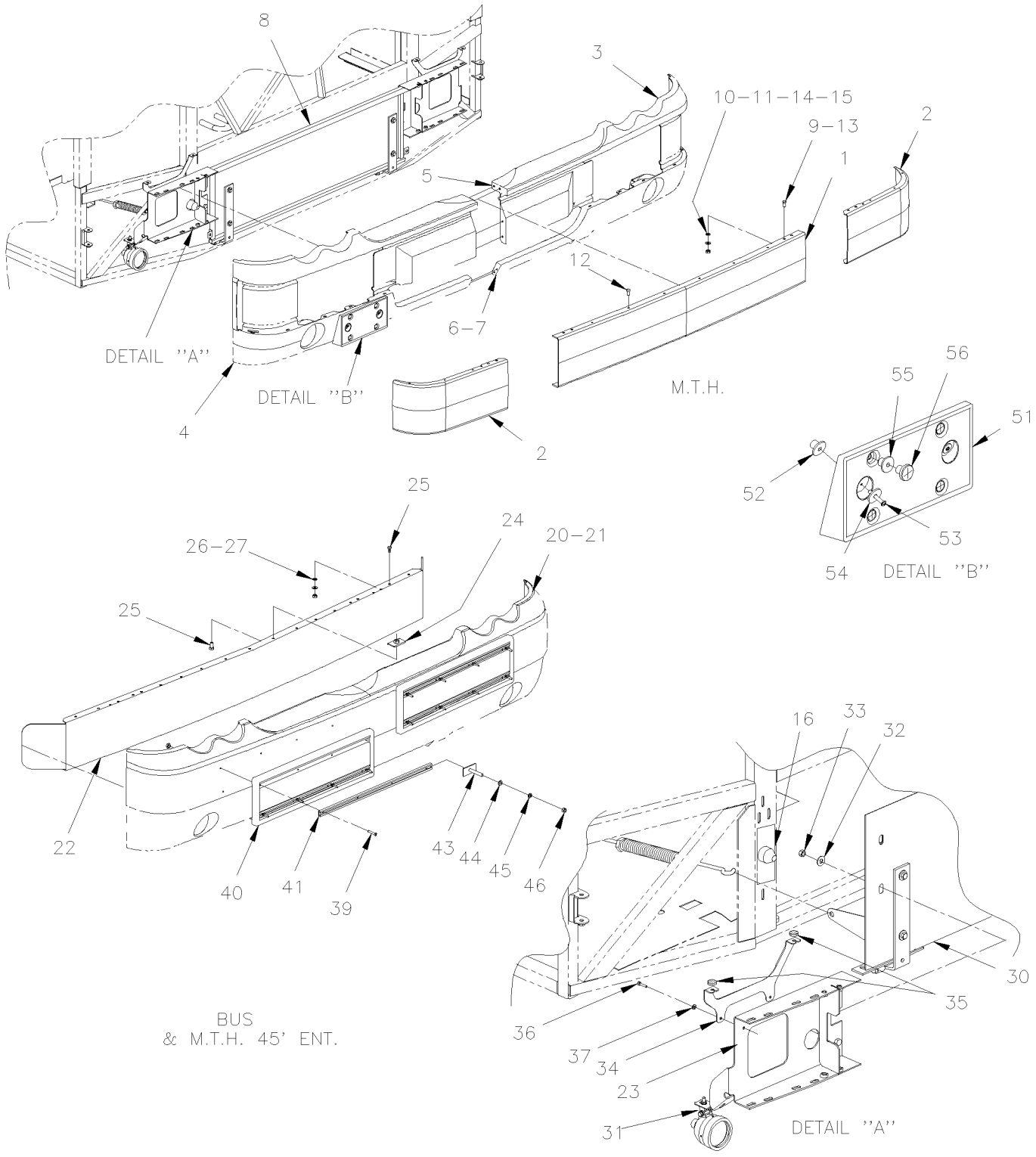

From 4-8359 Up to 8-9339	DATE: 01/2014	PAGE: Y2-1850-02

BUMPER FRONT

ITEM	PART	DESCRIPTION	XL45	MTH40	MTH45	MTH45S	NOTE
		NEXT BUMPER IT STANDARD ON MTH-40 & MTH-45					
		AND IT "OPTIONAL" WITH MTH-45' ENT					
	411088	BUMPER ASSY W/FOG LAMP / S.B. Up to 5-8468		1	1		
	411099	BUMPER ASSY W/FOG LAMP W/OUT HEAD LAMP WASHER HOLE / B.A. From 5-8469		1	1		
1	411018	. BUMPER CENTER PART / SS / S.B. Up to 5-8468		1	1		
1	411117	. BUMPER CENTER PART / SS / S.B. From 7-9281 Up to SERVICE		1	1		
1	411058	. BUMPER CENTER PART / SS / S.B.2B From 5-8469 Up to 7-9280		1	1		
1	411116	. BUMPER CENTER PART / SS / B.A. From 7-9281		1	1		
2	410674	. BUMPER CORNER / SS / S.B. Up to 5-8468		2	2		
2	411057	. BUMPER CORNER / SS / S.B.2B From 5-8469		2	2		
3	411013	. MOULDING L.H.		1	1		
4	411012	. MOULDING R.H.		1	1		
NS	504716	. BUMPER RUBBER .875 OD X .256 TH X .312 HOLE		1	1		
5	411036	. ATTACHMENT UPPER / CURBSIDE		1	1		
5	411042	. ATTACHMENT UPPER / STREETSIDE		1	1		
6	411037	. ATTACHMENT LOWER / STREETSIDE		1	1		
7	411038	. ATTACHMENT LOWER / CURBSIDE		1	1		
7	411055	. ATTACHMENT "U" SHAPE W/NUT		1	1		
NS	5001587	. NUT HEX NYRT M5-0.8 SS		2	2		
NS	5001146	. SCREW CAP HEX M5-0.8x20 SS EMN		2	2		
8	411024	STRUCTURE BUMPER Up to 7-9280 / REPLACED BY: 411118		1	1		
8	411118	STRUCTURE BUMPER From 7-9281		1	1		
9	5001675	. SCREW SET HEXS CONE M8-1.25x16 SS		16	16		
10	960143	. WASHER FL 10.5x26.0x2.0 ZP		16	16		
11	3852496	. WASHER LO SPT 10.2x18.1x2.2 ZG603		16	16		
12	5001438	. RIVET DRV TR 1/4x3/4 NYL		20	20		
13	500163	. SCREW CAP HEX 1/4-20x3/4 G5 ZP		2	2		
14	500441	. WASHER FL .312x.734x.065 ZP		2	2		
15	502716	. NUT HEX NYRT 1/4-20 / REPLACED BY: 5001123		2	2		
16	287258	RUBBER BUMPER 126MM X 48MM	4				
NS	502603	SCREW CAP HEXS M4-0.7x20 G12.9 ZP	8				
NS	411084	SHIM SPACER	AR				
		NEXT BUMPER IT STANDARD ON BUS & MTH-45 "ENT"					
20	411089	BUMPER ASSY / FRONT	1			1	
21	411010	. BUMPER SKIN, FRONT BUS & MTH ENT / REPLACED BY: K411010	1			1	
22	411014	. BUMPER REINFORCEMENT	1			1	
22	411209	. BUMPER REINFORCEMENT	1			1	
23	411025	. SUPPORT CUBRE SIDE	1			1	
23	411026	. SUPPORT STREET SIDE	1			1	
24	410878	. ANCHOR NUT / M10-1.5	22			22	
25	500359	. SCREW CAP HEX M10-1.5x22 G8.8 ZG603	22			22	

From 4-8359 Up to 8-9339	DATE: 01/2014	PAGE: Y2-1850-02

BUMPER FRONT

ITEM	PART	DESCRIPTION	XL45	MTH40	MTH45	MTH45S	NOTE
26	3852496	. WASHER LO SPT 10.2x18.1x2.2 ZG603	16			16	
27	5001417	. WASHER FL 11.0x34.0x3.0 SS	16			16	
30	Y2-1860-11	**SPARE WHEEL DOOR ASSY**					
31	Y2-0661-01	**FOG LAMP**					
32	500270	WASHER FL .406x1.000x.063 SS	4				
33	500102	NUT HEX 3/8-16 SS	4				
34	411054	SUPPORT UPPER CORNER STREETSIDE	1				
34	411053	SUPPORT UPPER CORNER CURBSIDE	1				
35	504716	BUMPER RUBBER .875 OD X .256 TH X .312 HOLE	2				
36	502622	SCREW CAP HEX M6-1.0x20 SS EMN	4				
37	502510	WASHER FL .375x.875x.083	4				
39	500360	SCREW TP FL PH #8x1 1/4 BK	AR			AR	
40	410817	MOULDING / PLATE HOLDER	1			1	
41	410818	TRACK / LICENCE PLATE HOLDER 630MM	1			1	
42	500360	SCREW TP FL PH #8x1 1/4 BK	8			8	
43	504286	T SCREW 10-24 X 3/4" / SS / PLATE HOLDER	8			8	
44	502637	WASHER FL .200x.437x.037 SS	8			8	
44	502570	WASHER LO SPT 6.1x11.8x1.6 SS	8			8	
45	500787	NUT HEX #10-24 SS	8			8	
46	507333	PROTECTOR CAP / BLACK / .172 I.D. x .500	8			8	
51	410827	MOULDING / PLATE HOLDER		2	2	2	
52	5001055	NUT WELL M4-0.7x14.5		4	4	4	
53	502677	SCREW MA RND PH M4-0.7x25 SS		4	4	4	
54	502759	WASHER FL .218x.875x.062 SS		4	4	4	
55	5001009	NUT AN 1/4 NYL		8	8	8	
56	5001245	SCREW TC CAP HEXW SLT #12-24x1/2 ZP		8	8	8	

From 4-8359 Up to 8-9339	DATE: 01/2014	PAGE: Y2-1850-02

BUMPER FRONT

ITEM	PART	DESCRIPTION	XL45	MTH40	MTH45	MTH45S	NOTE

From Y-7046 Up to 8-9339	DATE: 01/2014	PAGE: Y2-1850-10

BUMPER REAR

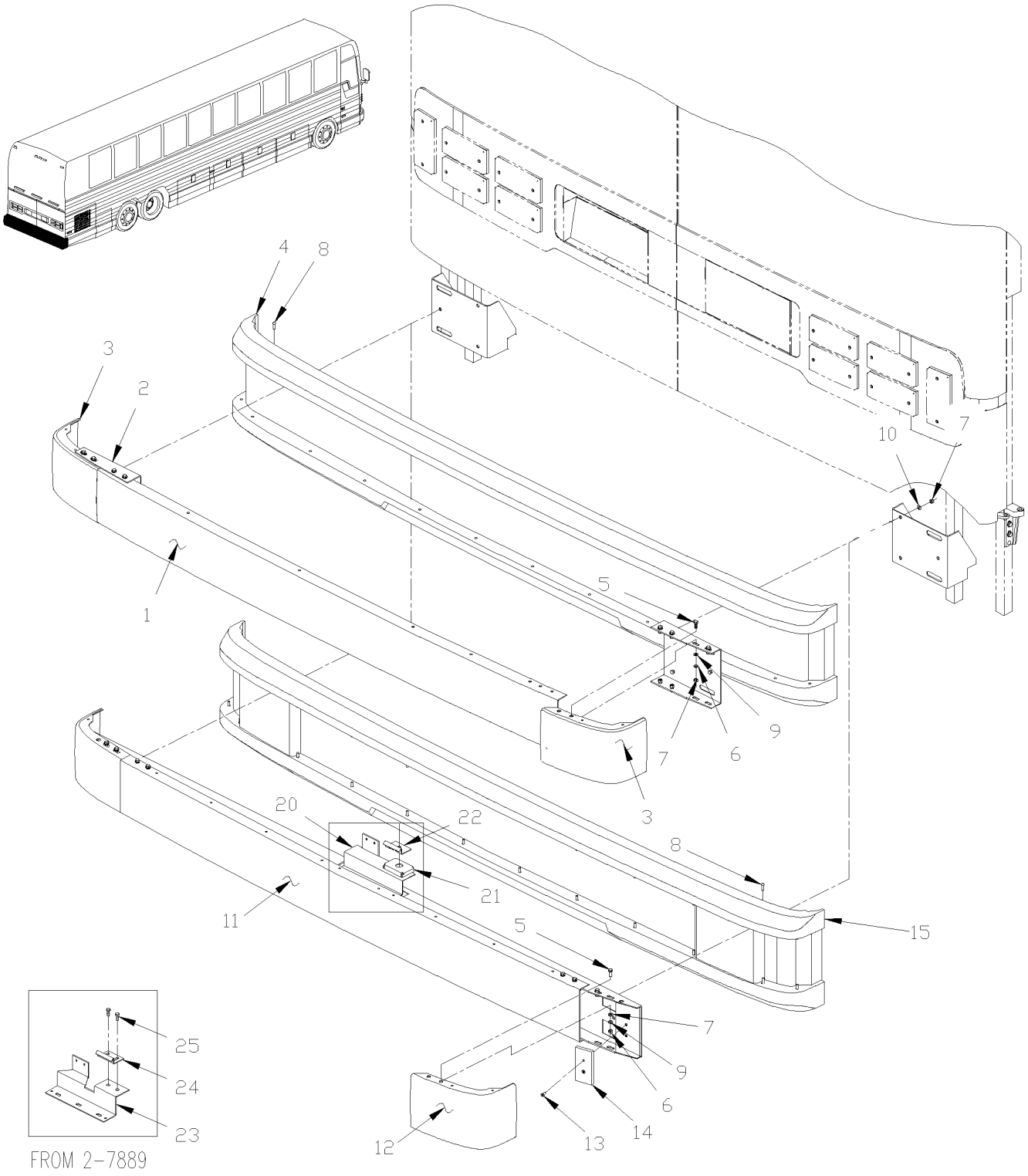

From Y-7046 Up to 8-9339	DATE: 01/2014	PAGE: Y2-1850-10

BUMPER REAR

ITEM	PART	DESCRIPTION	XL45	MTH40	MTH45	MTH45S	NOTE
		NEXT BUMPER IT STANDARD ON MTH-40 & MTH-45					
		AND IT "OPTIONAL" WITH MTH-45' ENT					
	411090P	BUMPER REAR ASSY / B.A.			1	1	
1	410652	. BUMPER REAR CENTER / SS Up to 2-7888		1	1	1	
1	410562	. BUMPER REAR CENTER / SS / S.B. From 2-7889 Up to 5-8468		1	1	1	
1	411059	. BUMPER REAR CENTER / SS / S.B.2B From 5-8469		1	1	1	
2	410691	. SUPPORT		2	2	2	
3	410689	. BUMPER / CORNER / SS / S.B. Up to 5-8468		2	2	2	
3	411061	. BUMPER / CORNER / SS / S.B.2B From 5-8469		2	2	2	
4	473858	. TRIM REAR BUMPER / W/TRAILLER HITCH		1	1	1	
4	473770	. TRIM REAR BUMPER		1	1	1	
5	5001231	. SCREW CAP HEX M10-1.5x25 SS	16	16	16	16	
6	500958	. WASHER FL .531x1.062x.095 SS	16	16	16	16	
7	502567	. NUT HEX M10-1.5 SS	16	16	16	16	
8	5001438	. RIVET DRV TR 1/4x3/4 NYL	23	23	23	23	
9	502585	. WASHER LO SERR 10.2x26.3x1.4 ZP	16	16	16	16	
10	284447	WASHERS BELLEVILLE	6	6	6	6	
		NEXT BUMPER IT STANDARD ON BUS & MTH-45 "ENT"					
11	410740P	BUMPER ASSY REAR BLACK	1			1	
NS	410741P	BUMPER ASSY REAR BLACK / W/TRAILER HITCH Up to 2-7888	1			1	A
11	Call Order Desk	BUMPER ASSY REAR BLACK	1				P C
11	410738	. BUMPER REAR CENTER / BLACK Up to 2-7888 / REPLACED BY: 410563	1			1	
11	410563	. BUMPER REAR CENTER / BLACK From 2-7889 / REPLACED BY: 411214	1			1	
11	411214	. BUMPER REAR CENTER / BLACK	1			1	
12	410748	. BUMPER / CORNER / BLACK	2			2	
13	5001198	. SCREW MA FL PH M6-1.0x16 ZP	4			4	
13	5001182	. NUT HEX NYRT M6-1.0 SS	4			4	
14	410737	. STOPPER	2			2	
15	473770	. TRIM REAR BUMPER	1			1	
15	474170	. TRIM REAR BUMPER / W/TRAILLER HITCH				1	A
15	417570	. TRIM REAR BUMPER / W/TRAILLER GLANDHAND Up to 6-8906	1				C
20	285984	ATTACMENT & STOPPER LH ENGINE DOOR / (WELDED TO BUMPER) Up to 2-7888	1			1	
21	282869	FLOATING NUT ASSY WITH CASE Up to 1-7627 / REPLACED BY: 287943	1			1	
		P) CALL ORDER DESK FOR SPECIFIC APPLICATION					
		(V.I.N.)					
		A) THIS BUMPER ARE ASSY WITH TRIM W/TRAILER					
		HITCH					
		C) THIS BUMPER ASSY ARE ASSY WITH TRIM FOR					
		TRAILER CONNECTION RECESS					

From Y-7046 Up to 8-9339	DATE: 01/2014	PAGE: Y2-1850-10

BUMPER REAR

ITEM	PART	DESCRIPTION	XL45	MTH40	MTH45	MTH45S	NOTE
21	287943	FLOATING NUT ASSY WITH CASE From 1-7628 Up to 2-7888	1			1	
22	280141	CATCH PIN / RETAINER Up to 2-7888	1			1	B
23	287231	ATTACHMENT & STOPPER LH ENGINE DOOR / (WELDED TO BUMPER) From 2-7889	1			1	
24	287286	CATCH PIN / RETAINER 45MMx21MM 90° From 2-7889	1			1	B
25	502780	SCREW CAP HEX M8-1.25x25 SS EMN From 2-7889	2			2	
		B) THOSE PARTS ARE INCLUDE IN KIT #287225					

From Y-7046 Up to 8-9339	DATE: 01/2014	PAGE: Y2-1850-10

BUMPER REAR

ITEM	PART	DESCRIPTION	XL45	MTH400	MTH445	MTH455S	NOTE

From Y-7046 Up to 6-8906	DATE: 01/2014	PAGE: Y2-1850-15

BUMPER REAR - BUS "OPTION" / "ROMEO RIM"

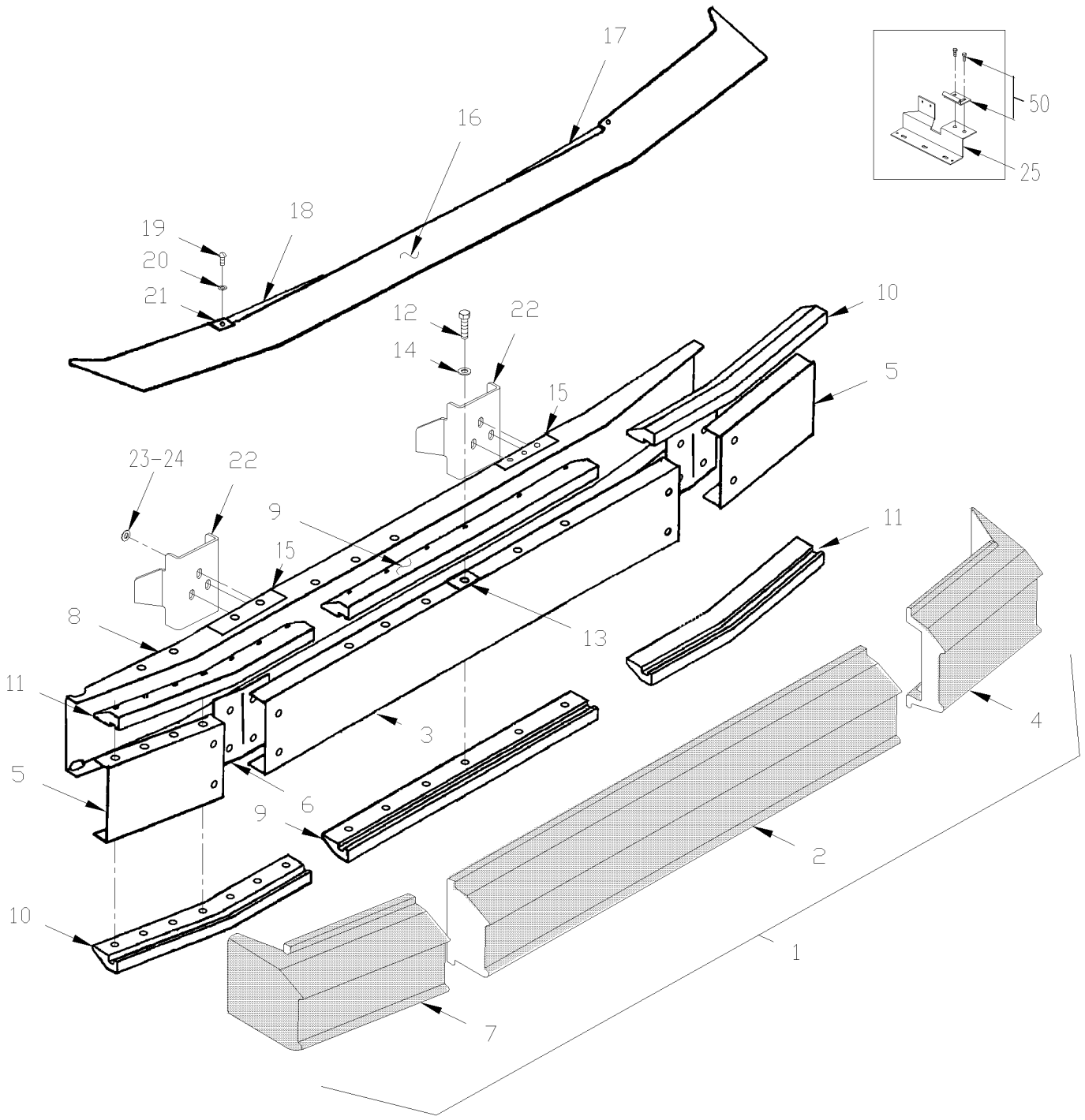

From Y-7046 Up to 6-8906	DATE: 01/2014	PAGE: Y2-1850-15

BUMPER REAR - BUS "OPTION" / "ROMEO RIM"

ITEM	PART	DESCRIPTION	XL45	MTH40	MTH45	MTH45S	NOTE
1	410624	BUMPER ASSY	1				
2	910010	. MODULE CENTER	1				
3	910013	. PLATE BACK / CENTER	1				
4	410592	. MODULE END / R.H.	1				
5	910016	. PLATE BACK / L.H. & R.H.	2				
6	910015	. SPACER PLASTIC	1				
7	410591	. MODULE END / L.H.	1				
8	910007	. STRUCTURE BACK-UP	1				
9	910014	. CLAMP CENTER	2				
10	910029	. CLAMP END / L.H. TOP & R.H. BOTTOM	2				
11	910028	. CLAMP END / R.H. TOP & L.H. BOTTOM	2				
12	910023	. SCREW CAP HEXF 1/2-13x2 1/4 BKC	38				
13	910024	. NUT RETAINER SPRING	34				
13	910025	. NUT HEXF BK 1/2-13 / 2 EACH CORNER	4				
14	500547	. WASHER FL .484x.750x.031 ZP / REPLACED BY: 502525	42				
15	910031	. SUPPORT W/3 BOLTS	2				
16	411107	PANEL / BLACK PAINT	1				
16	411106	. PANEL / UNPAINT	1				
17	410473	ATTACHMENT R.H. MOUNTING / REAR BUMPER	1				
18	410472	ATTACHMENT L.H. MOUNTING / REAR BUMPER	1				
19	502686	SCREW CAP HEX M6-1.0x30 SS EMN	4				
20	502573	WASHER FL 6.4x12.5x1.6 SS	4				
21	502738	NUT SPR U M6-1.0 0.6-4.0	4				
22	216083	BRACKET BUMPER L.H. & R.H. / (WELDED AT STRUCTURE)	2				
23	500789	NUT HEX 1/2-13 ZP	6				
24	502901	WASHER FL .625x1.469x.109 ZG603	6				
NS	500482	WASHER LO SPT .506x.873x.125 ZP	6				
25	289372	ATTACHMENT & STOPPER LH ENGINE DOOR / BOLTED TO BUMPER	1				
NS	5001330	SCREW CAP HEX 1/2-13x1 SS	3				
NS	5001534	WASHER LO SPT .509x.873x.125 SS	3				
50	Y2-1870-10	**ENGINE DOOR ASSY - INSTALLATION**					

From Y-7046 Up to 8-9339	DATE: 01/2014	PAGE: Y2-1851-00

FRONT CAP - INSTALLATION

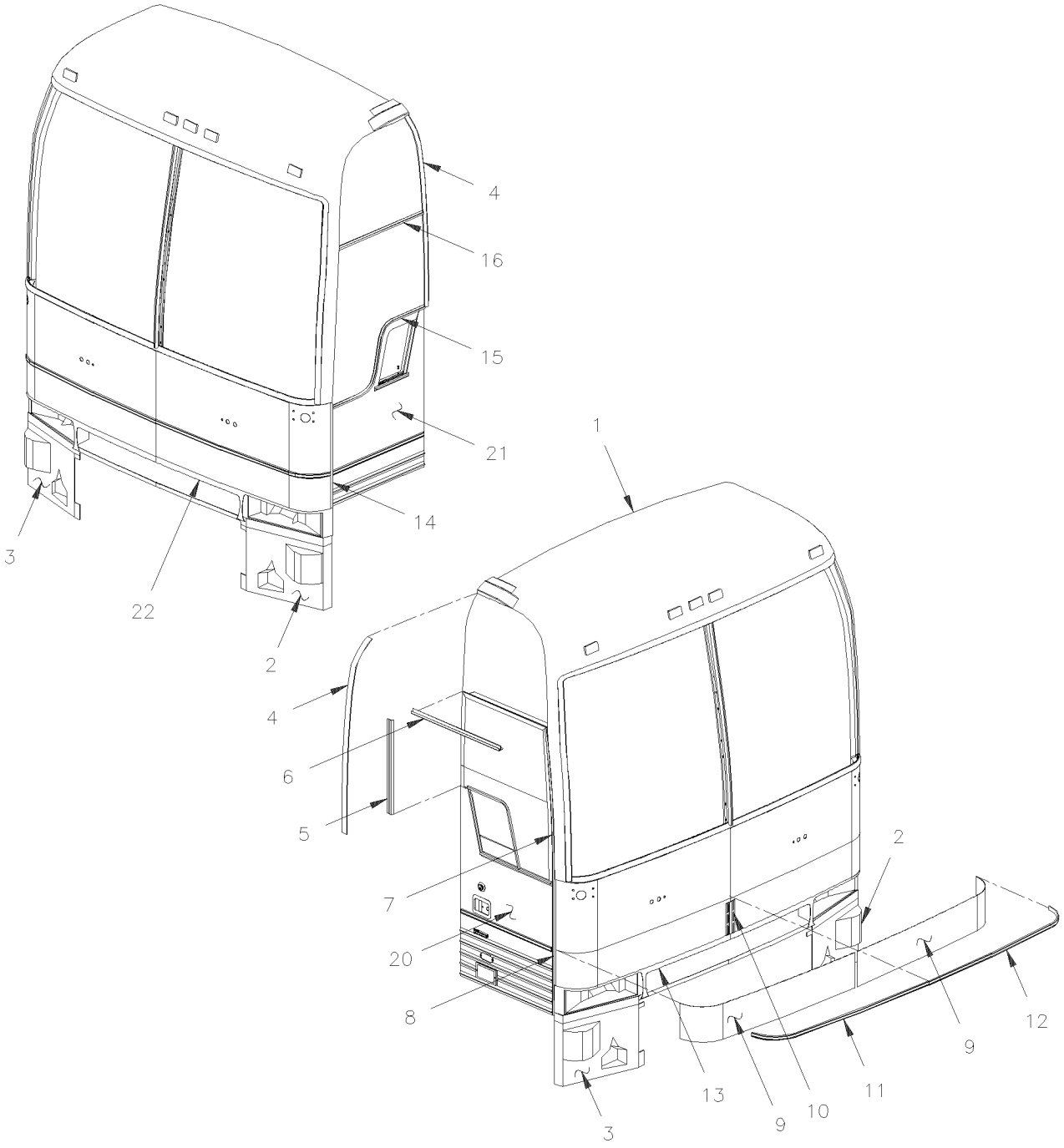

From Y-7046 Up to 8-9339	DATE: 01/2014	PAGE: Y2-1851-00

FRONT CAP - INSTALLATION

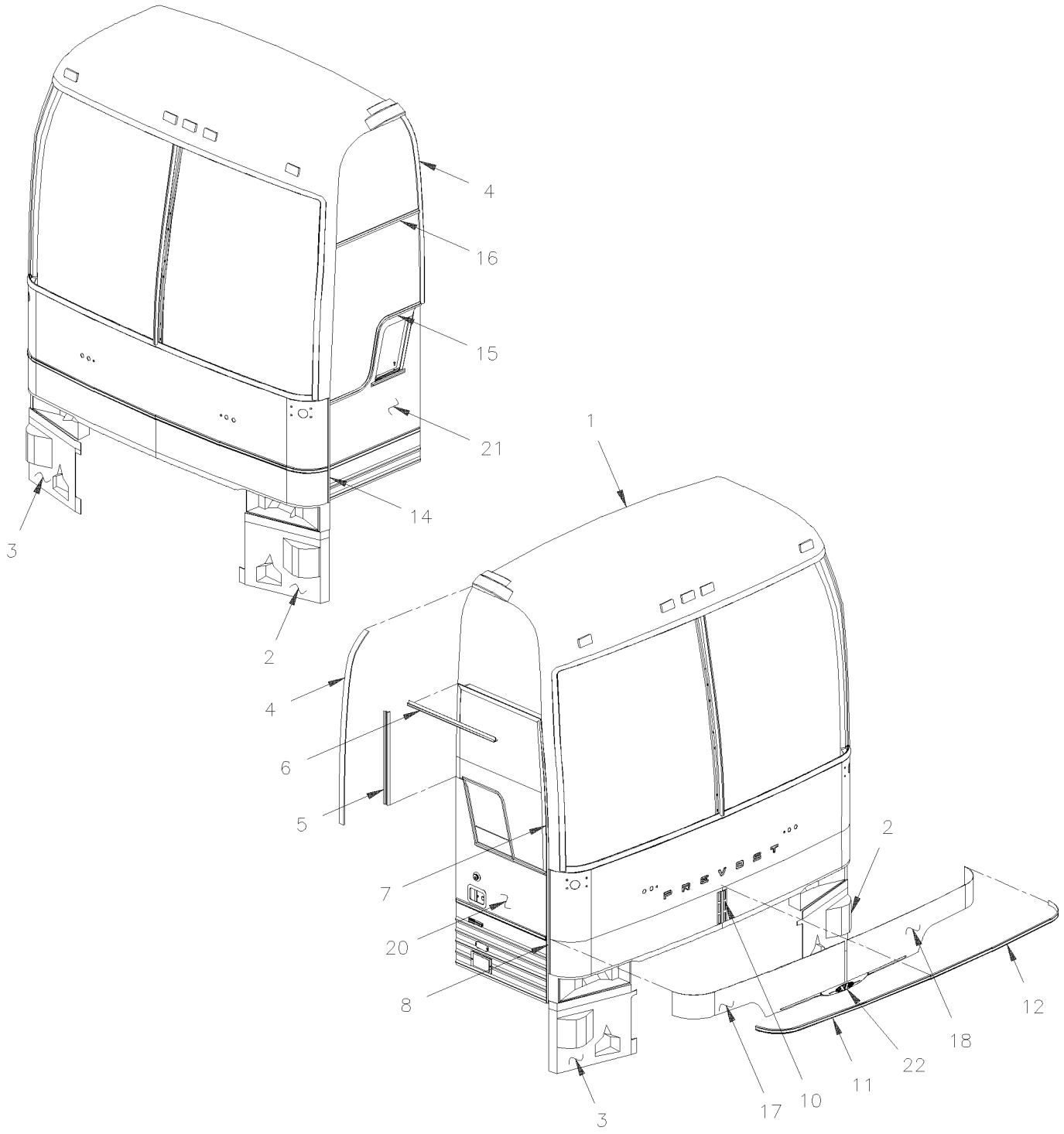

From Y-7046 Up to 8-9339	DATE: 01/2014	PAGE: Y2-1851-00

FRONT CAP - INSTALLATION

ITEM	PART	DESCRIPTION	XL45	MTH40	MTH45	MTH45S	NOTE
1	473735	FRONT CAP BUS 80" / WLARGE WINDSHIELD Up to 3-8108	1				
. NS	477410	. HALF FRONT CAP BUS / LOWER SECTION ONLY Up to 3-8108	1				
1	475775	FRONT CAP BUS 80" / WLARGE WINDSHIELD From 3-8109 Up to 4-8358	1				
. NS	477410	. HALF FRONT CAP BUS / LOWER SECTION ONLY From 3-8109 Up to 4-8358	1				
1	477445	FRONT CAP BUS 80" / WLARGE WINDSHIELD From 4-8359 Up to 6-8906	1				
. NS	477411	. HALF FRONT CAP BUS / LOWER SECTION ONLY From 4-8359 Up to 6-8906	1				
1	473612	FRONT CAP MTH 83" / WSMALL WINDSHIELD Up to Y-7128		1	1		
. NS	477412	. HALF FRONT CAP MTH 83" / LOWER SECTION ONLY Up to Y-7128		1	1		
1	474282	FRONT CAP MTH 83" / WLARGE WINDSHIELD Up to Y-7128		1	1		
. NS	477412	. HALF FRONT CAP MTH 83" / LOWER SECTION ONLY Up to Y-7128		1	1		
1	473732	FRONT CAP MTH 86" / WSMALL WINDSHIELD Up to 4-8167		1	1	1	B
. NS	477413	. HALF FRONT CAP MTH 86" / LOWER SECTION ONLY Up to 4-8167		1	1	1	
1	474283	FRONT CAP MTH 86" / WLARGE WINDSHIELD Up to 4-8207		1	1	1	
. NS	477413	. HALF FRONT CAP MTH 86" / LOWER SECTION ONLY Up to 4-8207		1	1	1	
1	475783	FRONT CAP MTH 86" / WLARGE WINDSHIELD From 4-8208 Up to 4-8358		1	1	1	
. NS	477413	. HALF FRONT CAP MTH 86" / LOWER SECTION ONLY From 4-8208 Up to 4-8358		1	1	1	
1	477443	FRONT CAP MTH 86" / WLARGE WINDSHIELD From 4-8359		1	1	1	
. NS	477414	. HALF FRONT CAP MTH 86" / LOWER SECTION ONLY From 4-8359		1	1	1	
1	475053	FRONT CAP MTH 86" / WLARGE WINDSHIELD From 1-7448 Up to 4-8207		1	1	1	B
. NS	477413	. HALF FRONT CAP MTH 86" / LOWER SECTION ONLY From 1-7448 Up to 4-8207		1	1	1	
1	475785	FRONT CAP MTH 86" / WLARGE WINDSHIELD From 4-8208 Up to 4-8358		1	1	1	B
. NS	477413	. HALF FRONT CAP MTH 86" / LOWER SECTION ONLY From 4-8208 Up to 4-8358		1	1	1	
1	477444	FRONT CAP MTH 86" / WLARGE WINDSHIELD From 4-8359		1	1	1	B
. NS	477414	. HALF FRONT CAP MTH 86" / LOWER SECTION ONLY From 4-8359		1	1	1	
1	473733	FRONT CAP MTH 89" / WLARGE WINDSHIELD Up to 4-8207				1	
. NS	477415	. HALF FRONT CAP MTH 89" / LOWER SECTION ONLY Up to 4-8207				1	
1	475779	FRONT CAP MTH 89" / WLARGE WINDSHIELD From 4-8208 Up to 4-8358				1	
. NS	477415	. HALF FRONT CAP MTH 89" / LOWER SECTION ONLY From 4-8208 Up to 4-8358				1	
1	477442	FRONT CAP MTH 89" / WLARGE WINDSHIELD From 4-8359				1	
. NS	477416	. HALF FRONT CAP MTH 89" / LOWER SECTION ONLY From 4-8359				1	
1	475378	FRONT CAP MTH 89" / WLARGE WINDSHIELD From 2-7744 Up to 4-8207				1	B
. NS	477415	. HALF FRONT CAP MTH 89" / LOWER SECTION ONLY From 2-7744 Up to 4-8207				1	
1	475787	FRONT CAP MTH 89" / WLARGE WINDSHIELD From 4-8208 Up to 4-8358				1	B
. NS	477415	. HALF FRONT CAP MTH 89" / LOWER SECTION ONLY From 4-8208 Up to 4-8358				1	
		B) WITHOUT UPPER SIDE GLASS					

From Y-7046 Up to 8-9339	DATE: 01/2014	PAGE: Y2-1851-00

FRONT CAP - INSTALLATION

ITEM	PART	DESCRIPTION	XL45	MTH40	MTH45	MTH45S	NOTE
1	476205	FRONT CAP MTH 89" / WLARGE WINDSHIELD From 4-8359				1	B
. NS	477416	. HALF FRONT CAP MTH 89" / LOWER SECTION ONLY From 4-8359				1	
2	474088	. PANEL LOWER L.H. Up to 4-8358 / REPLACED BY: 477474	1				
2	477474	. PANEL LOWER L.H. From 4-8359	1				
3	474087	. PANEL LOWER R.H. Up to 3-8108 / REPLACED BY: 477475	1				
3	475777	. PANEL LOWER R.H. From 3-8109 Up to 4-8358	1				
3	477475	. PANEL LOWER R.H. / WITHOUT HEAD LAMP WASHER From 4-8359	1				
NS	504546	RIVET CHY MONOLOK PRDG 1/4x5/8 CJ	36				
NS	500426	SCREW TP PAN PH #8x1 SS	6				
NS	506769	TAPE RUB ADH2 CC POL 1/8" x 1/4" x 60' / BLACK H1CC-N-#14	AR				
NS	506785	TAPE RUB ADH2 CC POL 1/16" x 1/4" x 200' / BLACK I1C-N-A	AR				
NS	475704	KIT STONE PROTECTOR / VINYL FILM 2x25"x120 + 1x8"x120"	1				
NS	475703	KIT STONE PROTECTOR / VINYL FILM 2x25"x120 + 1x16"x120"		1	1	1	
4	474952	FINISHING MOULDING 1219.5MM	2				
4	474067	FINISHING MOULDING BUS & MTH 83" 1264MM Up to Y-7128		2	2		
4	474068	FINISHING MOULDING 1340MM MTH 86"		2	2	2	
NS	504339	RIVET POP DOME OE 1/8x3/8 SS	AR				
5	474042	MOULDING SUPPORT 709MM / MTH 86"		1	1	1	
5	474137	MOULDING SUPPORT 645MM / MTH 83" & BUS / S.B. Up to 6-8906	1				
5	474137	MOULDING SUPPORT 645MM / MTH 83" & BUS / S.B. Up to 5-8468		1	1		
5	477520	MOULDING SUPPORT 645MM / MTH 83 / B.A. From 5-8469		1	1		
6	474082	DRIP MOULDING OVER ENTRANCE DOOR / S.B. Up to 6-8906	1				
6	474082	DRIP MOULDING OVER ENTRANCE DOOR / S.B. Up to 5-8468		1	1	1	
6	477516	DRIP MOULDING OVER ENTRANCE DOOR / B.A. From 5-8469		1	1	1	
7	474106	FINISHING MOULDING ENTRA. DOOR 1131MM / S.B. Up to 6-8906	1				
7	474106	FINISHING MOULDING ENTRA. DOOR 1131MM / S.B. Up to 5-8468		1	1	1	
7	477517	FINISHING MOULDING ENTRA. DOOR 1131MM / B.A. From 5-8469		1	1	1	
8	474245	FINISHING MOULDING ENTRA. DOOR 1307MM / S.B. Up to 4-8358	1				
8	477481	FINISHING MOULDING ENTRA. DOOR 1304MM / S.B. From 4-8359 Up to 6-8906	1				
8	474104	FINISHING MOULDING ENTRA. DOOR 1383MM MTH83" / S.B. Up to Y-7128		1	1		
8	474105	FINISHING MOULDING ENTRA. DOOR 1459MM MTH86" / S.B. Up to 4-8358		1	1	1	
8	477477	FINISHING MOULDING ENTRA. DOOR 1456MM MTH86" / S.B. From 4-8359 Up to 5-8468 / REPLACED BY: 477514		1	1		
8	477514	FINISHING MOULDING ENTRA. DOOR 1456MM MTH86" / B.A. From 5-8469		1	1		
8	474569	FINISHING MOULDING ENTRA. DOOR 1535MM MTH89" / S.B. Up to 4-8358				1	
8	477478	FINISHING MOULDING ENTRA. DOOR 1531MM MTH89" / S.B. From 4-8359 Up to 5-8468 / REPLACED BY: 477522					
8	477522	FINISHING MOULDING ENTRA. DOOR 1531MM MTH89" / B.A. From 5-8469				1	
9	473875	PANEL SS / S.B. Up to 4-8358	2				A
10	474102	FINISHING CENTER SS / S.B. Up to 4-8358	1				A
		A) COACH WITH STAINLESS STEEL SIDE LOWER PANELLING					
		B) WITHOUT UPPER SIDE GLASS					

From Y-7046 Up to 8-9339	DATE: 01/2014	PAGE: Y2-1851-00

FRONT CAP - INSTALLATION

ITEM	PART	DESCRIPTION	XL45	MTH40	MTH45	MTH45S	NOTE
10	477473	FINISHING CENTER SS / S.B. Up to 6-8906	1				A
10	477473	FINISHING CENTER SS / S.B. From 4-8359 Up to 5-8468		1	1	1	
10	477521	FINISHING CENTER SS / B.A. From 5-8469		1	1	1	
11	473611	MOULDING SS R.H. / S.B. Up to 6-8906	1				A
11	473611	MOULDING SS R.H. / S.B. Up to 5-8468		1	1	1	
11	477512	MOULDING SS R.H. / B.A. From 5-8469		1	1	1	
12	473752	MOULDING SS L.H. / S.B. Up to 6-8906	1				A
12	473752	MOULDING SS L.H. / S.B. Up to 5-8468		1	1	1	
12	477513	MOULDING SS L.H. / B.A. From 5-8469		1	1	1	
13	474658	CREST SUPPORT FIBERGLASS Up to 4-8358	1				
13	474658	CREST SUPPORT FIBERGLASS From Y-7336 Up to 4-8358		1	1	1	
14	474252	FINISHING MOULDING SERVI. DOOR 1296MM / S.B. Up to 4-8358	1				
14	477480	FINISHING MOULDING SERVI. DOOR 1296MM / S.B. From 4-8359 Up to 6-8906	1				
14	474247	FINISHING MOULDING SERVI. DOOR 1373MM MTH83" / S.B. Up to Y-7128		1	1		
14	474250	FINISHING MOULDING SERVI. DOOR 1449MM MTH86" / S.B. Up to 4-8358		1	1	1	
14	477476	FINISHING MOULDING SERVI. DOOR 1455MM MTH86" / S.B. From 4-8359 Up to 5-8468 / REPLACED BY: 477515					
14	477515	FINISHING MOULDING SERVI. DOOR 1455MM MTH86" / B.A. From 5-8469		1	1		
14	474251	FINISHING MOULDING SERVI. DOOR 1525MM MTH89" / S.B. Up to 4-8358				1	
14	477479	FINISHING MOULDING SERVI. DOOR 1531MM MTH89" / S.B. From 4-8359 Up to 5-8468 / REPLACED BY: 477523					
14	477523	FINISHING MOULDING SERVI. DOOR 1531MM MTH89" / B.A. From 5-8469				1	
15	286448	DRIP MOULDING "S" BUS & MTH83"	1	1	1		
15	286646	DRIP MOULDING "S" MTH86" & MTH89"		1	1	1	
NS	683083	ADHESIVE SIKA #252 / BLACK / 600 ml SAUSAGE	AR				
NS	683447	ADHESIVE SIKATACK PLUS / BLACK / 23 Liters	AR				
NS	683097	CLEANER SIKA #205 / CLEAR / 1000ml	AR				
NS	681091	PRIMER SIKA #206 / BLACK / 250ml	AR				
NS	790392	BLOCK, RUBBER SPACER 1" X 5/16" x 1/ ADHESIVE	AR				
16	286454	DRIP MOULDING OVER DRIVER'S WINDOW	1				
17	477470	PANEL SS / CURBSIDE / S.B. Up to 6-8906	1				A
17	477470	PANEL SS / CURBSIDE / S.B. From 4-8359 Up to 5-8468		1	1	1	
17	477518	PANEL SS / CURBSIDE / B.A. From 5-8469		1	1	1	
17	477890	PANEL SS / CURBSIDE / B.A.			1		V
18	477469	PANEL SS / STREETSIDE / S.B. Up to 6-8906	1				A
18	477469	PANEL SS / STREETSIDE / S.B. From 4-8359 Up to 5-8468		1	1	1	
18	477519	PANEL SS / STREETSIDE / B.A. From 5-8469		1	1	1	
18	477891	PANEL SS / STREETSIDE / B.A.			1		V
20	Y2-1862-00	**ENTRANCE DOOR ASSY - BUS**					
20	Y2-1862-50	**ENTRANCE DOOR ASSY - MTH**					
21	Y2-1879-00	**FRONT SERVICE DOOR ASSY**					
22	Y2-1855-00	**RUB RAIL - CREST & TRIMS**					
		A) COACH WITH STAINLESS STEEL SIDE LOWER					
		PANELLING					
		V) WITH "VORAD" SYSTEM					

From Y-7046 Up to 8-9339	DATE: 01/2014	PAGE: Y2-1851-00

FRONT CAP - INSTALLATION

ITEM	PART	DESCRIPTION	XL45	MTH40	MTH45	MTH45S	NOTE
NS	373995	KIT, ADAPTOR HEATER HOSE / NEW AIR INLET CURBSIDE Up to 3-8109	1				
. NS	IS-02054	. SEE INSTRUCTION SHEET Up to 3-8109	1				
NS	373998	KIT, ADAPTOR HEATER HOSE / NEW AIR INLET STREETSIDE Up to 3-8109	1				
. NS	IS-02086	. SEE INSTRUCTION SHEET Up to 3-8109	1				
NS	374011	KIT, ADAPTOR HEATER HOSE / NEW AIR INLET CURBSIDE Up to 3-8109		1	1	1	
. NS	IS-02113	. SEE INSTRUCTION SHEET Up to 3-8109		1	1	1	

From Y-7046 Up to 8-9339	DATE: 01/2014	PAGE: Y2-1851-20

REAR CAP - INSTALLATION

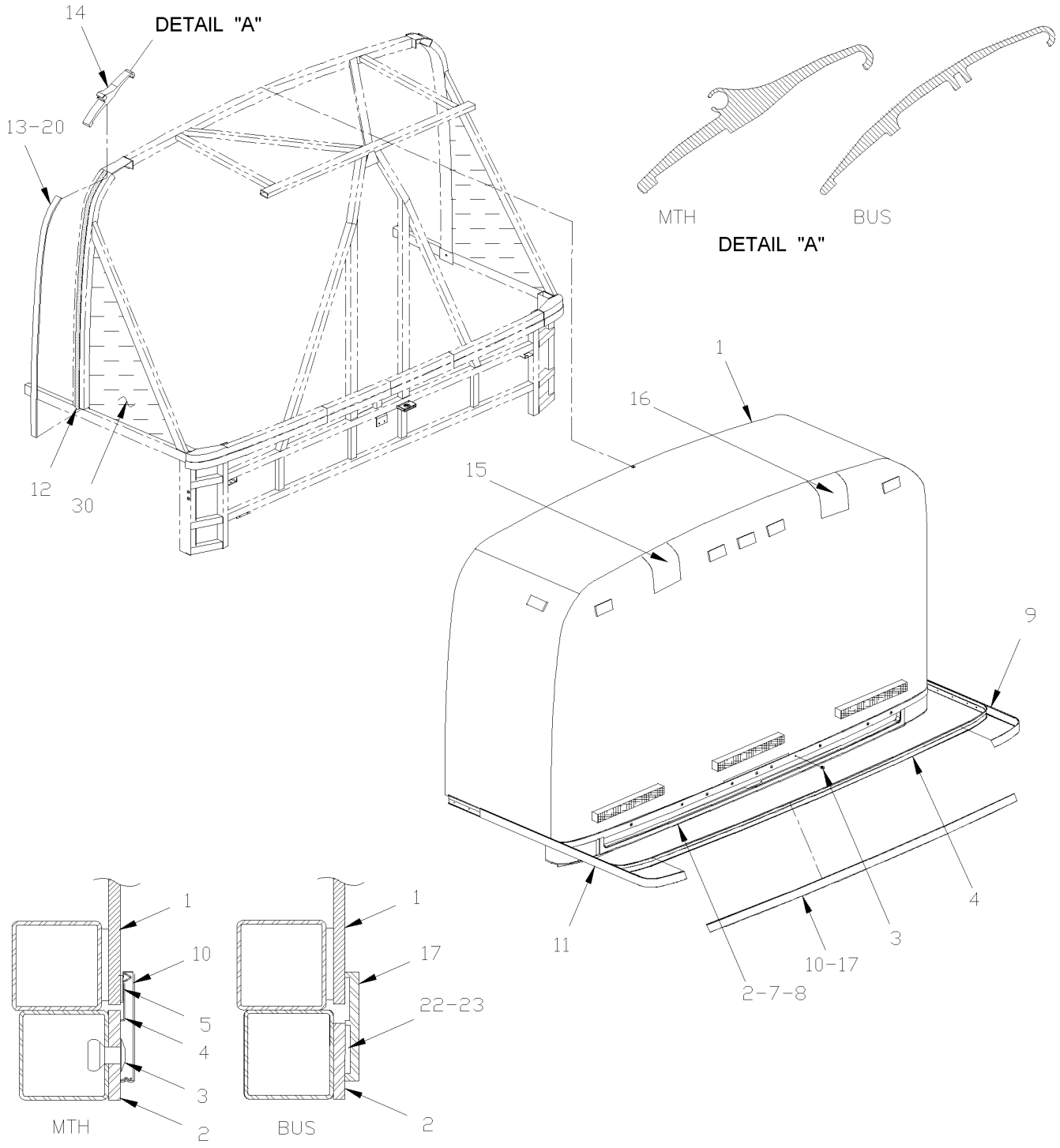

From Y-7046 Up to 8-9339	DATE: 01/2014	PAGE: Y2-1851-20

REAR CAP - INSTALLATION

ITEM	PART	DESCRIPTION	XL45	MTH40	MTH45	MTH45S	NOTE
1	473626	REAR CAP ASSY / BUS & MTH 83" Up to 6-8906	1				
1	473652	REAR CAP ASSY / MTH 83" Up to Y-7128		1			
1	473654	REAR CAP ASSY / MTH 86"		1			
1	474632	REAR CAP ASSY / MTH 86" W/BUCKET CAMERA		1			
1	473653	REAR CAP ASSY / MTH 86"			1		
1	475073	REAR CAP ASSY / MTH 86" W/BUCKET CAMERA			1		
1	473626	REAR CAP ASSY / BUS & MTH 83" Up to 6-8906			1		
1	473653	REAR CAP ASSY / MTH 86"				1	
1	473655	REAR CAP ASSY / MTH 89"				1	
1	474943	REAR CAP ASSY / MTH 89" WITH SATELITE				1	
2	473822	MOULDING FIBER GLASS "Z SHAPE" Up to 6-8906	1				
2	473768	AIR INTAKE / W/MTH 83" & MTH-86" Up to 8-9347 / REPLACED BY: 479253		1	1	1	
2	479253	AIR INTAKE / W/MTH-86" From 8-9348			1		
2	473953	AIR INTAKE / W/MTH-89"				1	
3	504416	RIVET POP DOME OE 3/16x5/8 SS	12	12	12	12	
4	473895	MOULDING RETAINER / 2250MM	1	1	1	1	
5	506225	TAPE RUB ADH1 CC POL 1/16" x 1/4" x 100' / GREY 2520	AR	AR	AR	AR	
7	504340	RIVET POP DOME OE 1/8x3/16 SS	10	10	10	10	
8	500353	SCREW TP FL PH #8x3/4 BK	6	6	6	6	
9	473831	MOULDING RIGHT CORNER		1	1	1	
10	473896	FINISHING MOULDING SS / 2125MM		1	1	1	
11	473833	MOULDING LEFT CORNER		1	1	1	
12	293135	RUBBER SEAL 1315MM / W/83"	2	2	2		
12	293136	RUBBER SEAL 1391MM W/86" & 89"		2	2	2	
13	474067	FINISHING MOULDING BUS & MTH 83" 1264MM	2	2	2		
13	474068	FINISHING MOULDING 1340MM MTH 86"		2	2	2	
13	474069	FINISHING MOULDING 1417MM MTH 89"				2	
14	293256	UPPER EXTRUSION 38MM Up to 4-8270 / REPLACED BY: 293712	2				
14	293712	UPPER EXTRUSION 38MM From 4-8271 Up to 6-8906	2				
14	293230	UPPER EXTRUSION 38MM Up to 4-8270		2	2	2	
14	293715	UPPER EXTRUSION 38MM From 4-8271		2	2	2	
15	475144	REAR CAP DRIP COVER L.H. / W/89"				1	
16	475145	REAR CAP DRIP COVER R.H. / W/89"				1	
17	474359	FINISHING MOULDING PLASTIC 2800MM	1			1	A
20	506759	TAPE RUB ADH2 CC POL 1/8" x 1/2" x 100' / BLACK I1C-N-A	AR	AR	AR	AR	
22	683446	PRIMER SIKA #206 / BLACK / 1000ml	AR	AR	AR	AR	
22	683448	ACCELERATOR SIKA / 600ml SAUSAGE	AR	AR	AR	AR	
22	683084	SEALANT SIKA #221 / GREY / 600 ml SAUSAGE	AR	AR	AR	AR	
23	683447	ADHESIVE SIKATACK PLUS / BLACK / 23 Liters	AR	AR	AR	AR	
23	683083	ADHESIVE SIKA #252 / BLACK / 600 ml SAUSAGE	AR	AR	AR	AR	
23	683916	PRIMER SIKA #215 / CLEAR / 1000ml	AR	AR	AR	AR	
23	683097	CLEANER SIKA #205 / CLEAR / 1000ml	AR	AR	AR	AR	
30	Y2-1839-70	**INSULATING REAR END INSIDE OVER ENGINE**					
		A) MTH 45E WITH FLAT SIDE PANELING					

From Y-7046 Up to 8-9339	DATE: 01/2014	PAGE: Y2-1852-00
ROOF PANEL		

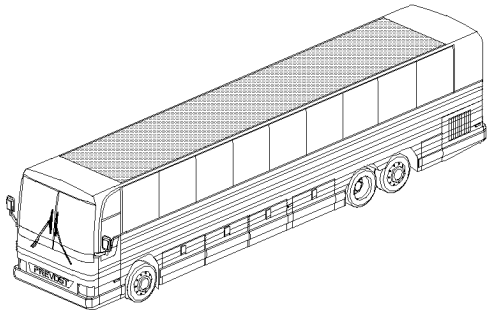

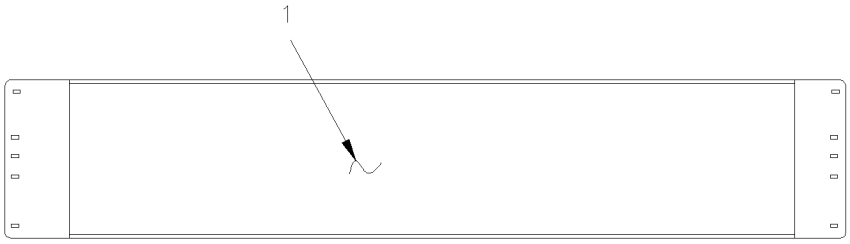

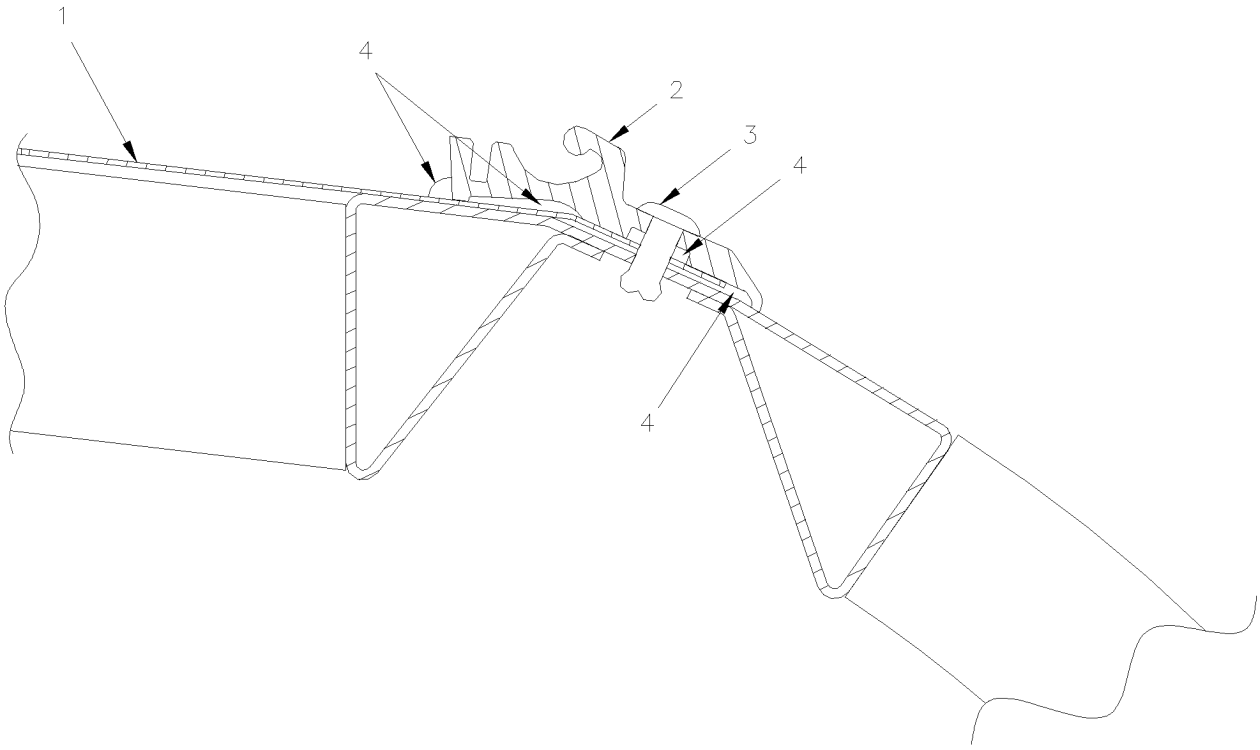

From Y-7046 Up to 8-9339	DATE: 01/2014	PAGE: Y2-1852-00

ROOF PANEL

ITEM	PART	DESCRIPTION	XL45	MTH40	MTH45	MTH45S	NOTE
1	970268	ALUMINUM SHEET 3003 WHITE 18GAX82 1/4" Up to Y-7194	165	165	165	165	
1	970274	ALUMINUM SHEET 3003 WHITE 18GAX82 1/4" From Y-7195 / REPLACED BY: 478980	165	165	165	165	
2	293182	EXTRUSION, ALUMINUM 5220MM (205.5")		4			
2	293181	EXTRUSION, ALUMINUM 5870MM (231.1")	4		4	4	
3	504546	RIVET CHY MONOLOK PRDG 1/4x5/8 CJ	AR	AR	AR	AR	
3	504545	RIVET CHY MONOLOK PRDG 1/4x3/8 CJ	50	50	50	50	A
4	680532	SEALANT SIKA #221 / GREY / 310ml CARTRIDGE	AR	AR	AR	AR	
4	682462	ADHESIVE SIKA #252 / BLACK / 310ml CARTRIDGE	AR	AR	AR	AR	
5	474057P	KIT, ROOF PANELING XL SERIES	1	1	1	1	
		A) EACH END					

From Y-7046 Up to 8-9339	DATE: 01/2014	PAGE: Y2-1853-50

JIG TOOL - SIDE PANELING INSTALLATION

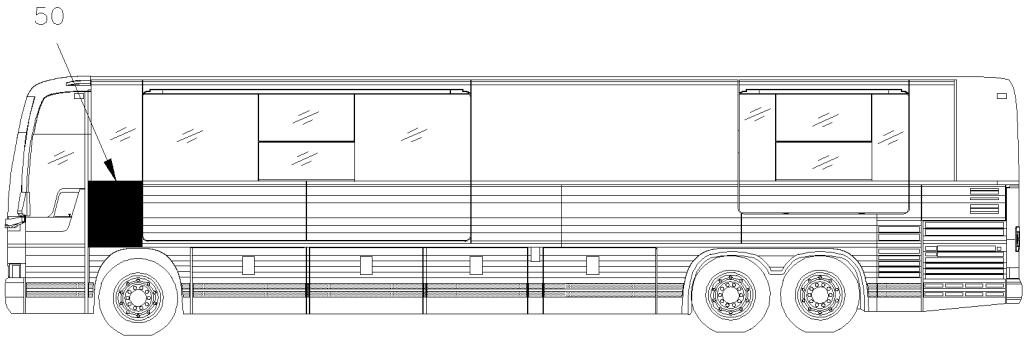

MTH. 45' WITH ''SLIDE-OUT''

KIT # 1	TO FIX THIS PANEL YOUR REQUIRE ALL ITEMS SHOWN ON THIS PAGE

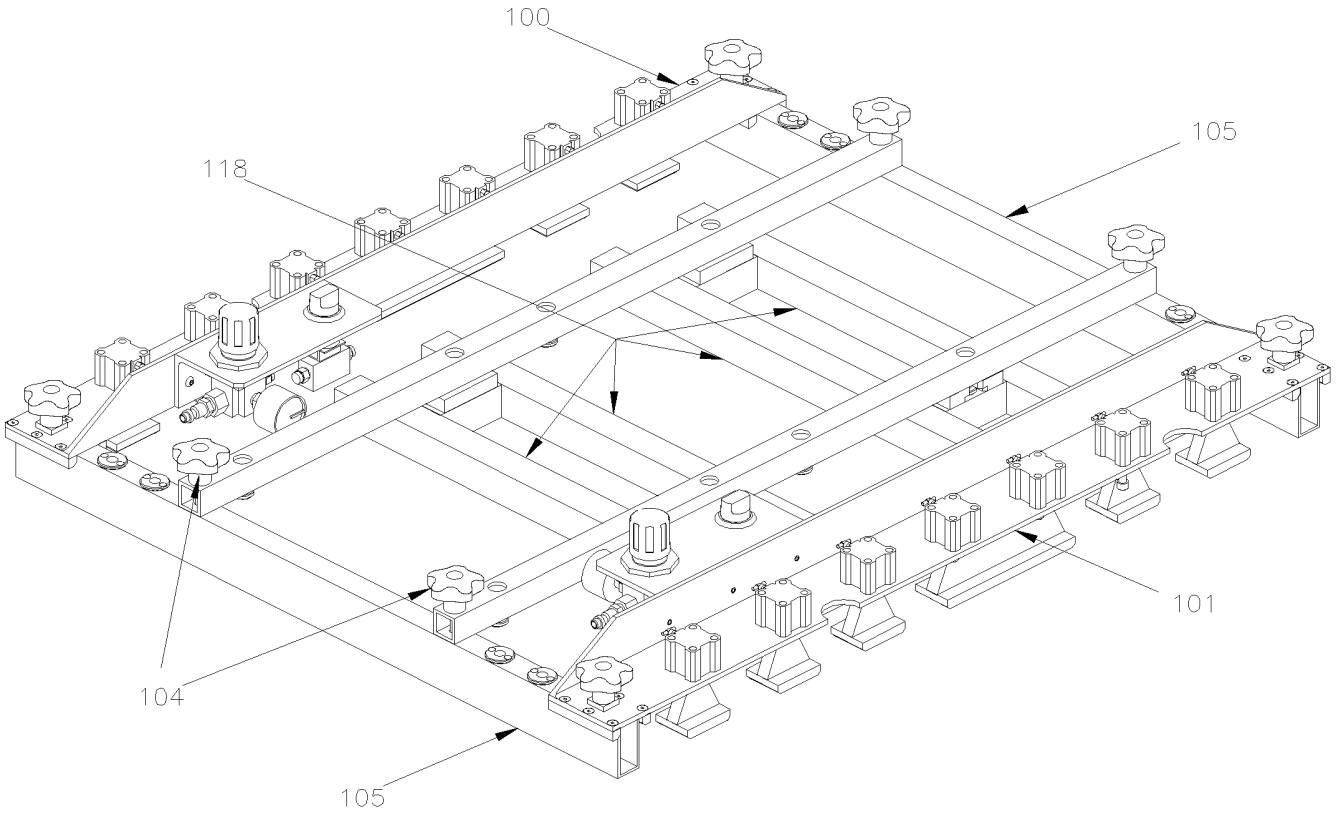

From Y-7046 Up to 8-9339	DATE: 01/2014	PAGE: Y2-1853-50

JIG TOOL - SIDE PANELING INSTALLATION

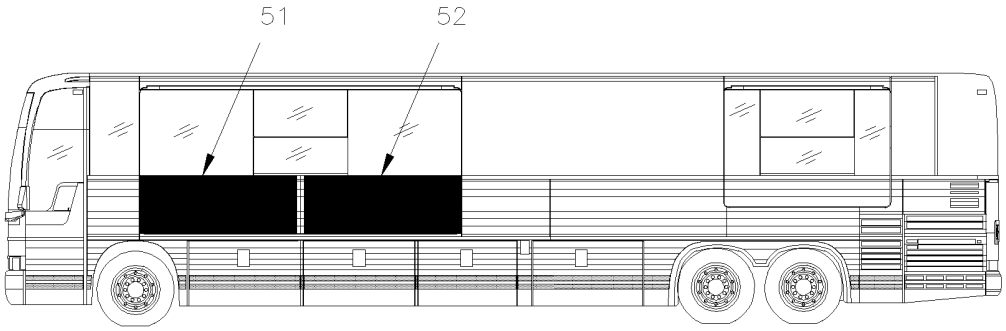

MTH. 45' WITH "SLIDE-OUT"

KIT # 2	TO FIX THIS PANEL YOUR REQUIRE ALL ITEMS SHOWN ON THIS PAGE

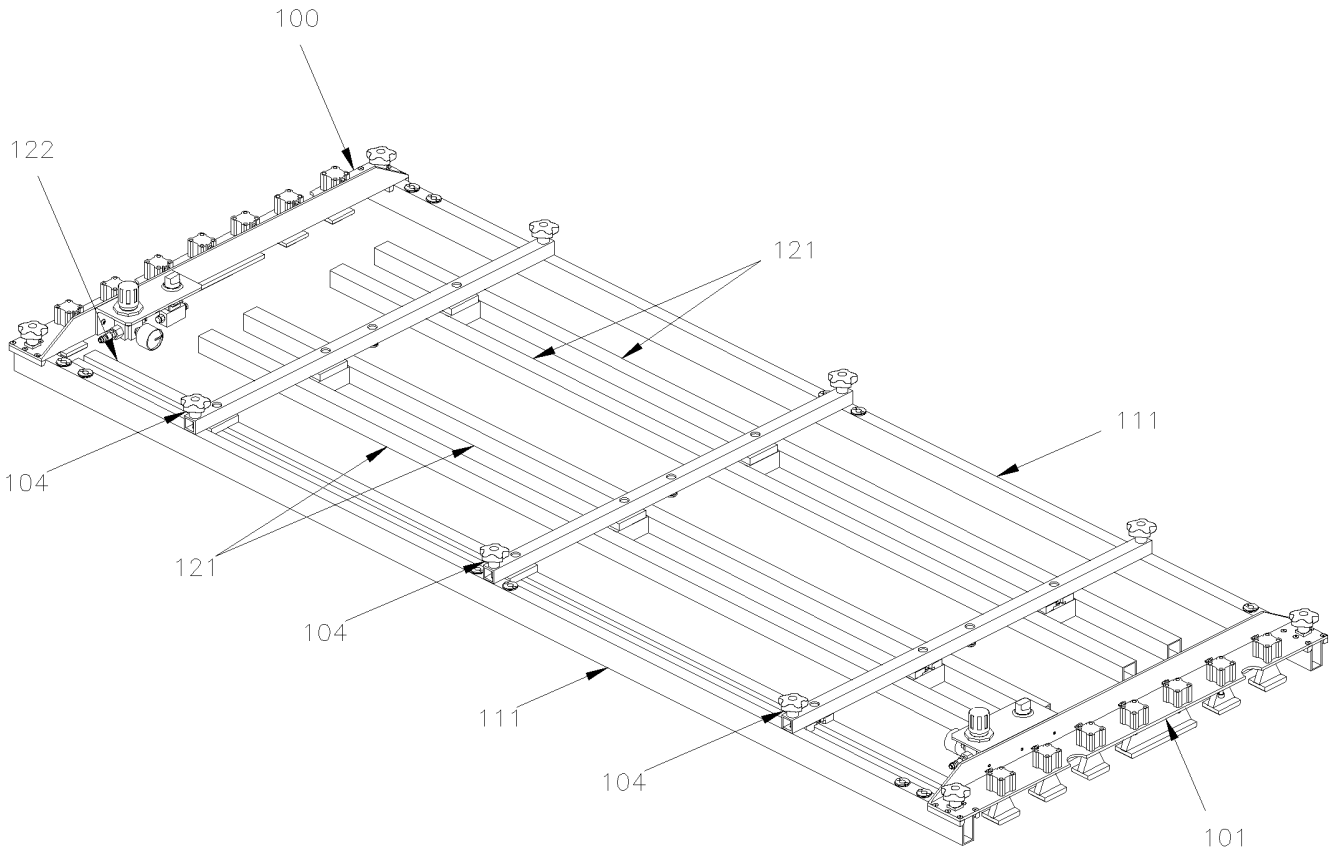

From Y-7046 Up to 8-9339	DATE: 01/2014	PAGE: Y2-1853-50

JIG TOOL - SIDE PANELING INSTALLATION

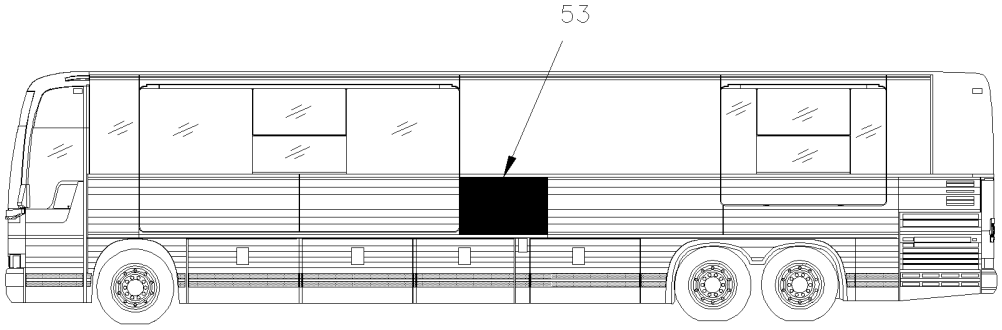

MTH. 45' WITH "SLIDE-OUT"

KIT # 3	TO FIX THIS PANEL YOUR REQUIRE ALL ITEMS SHOWN ON THIS PAGE

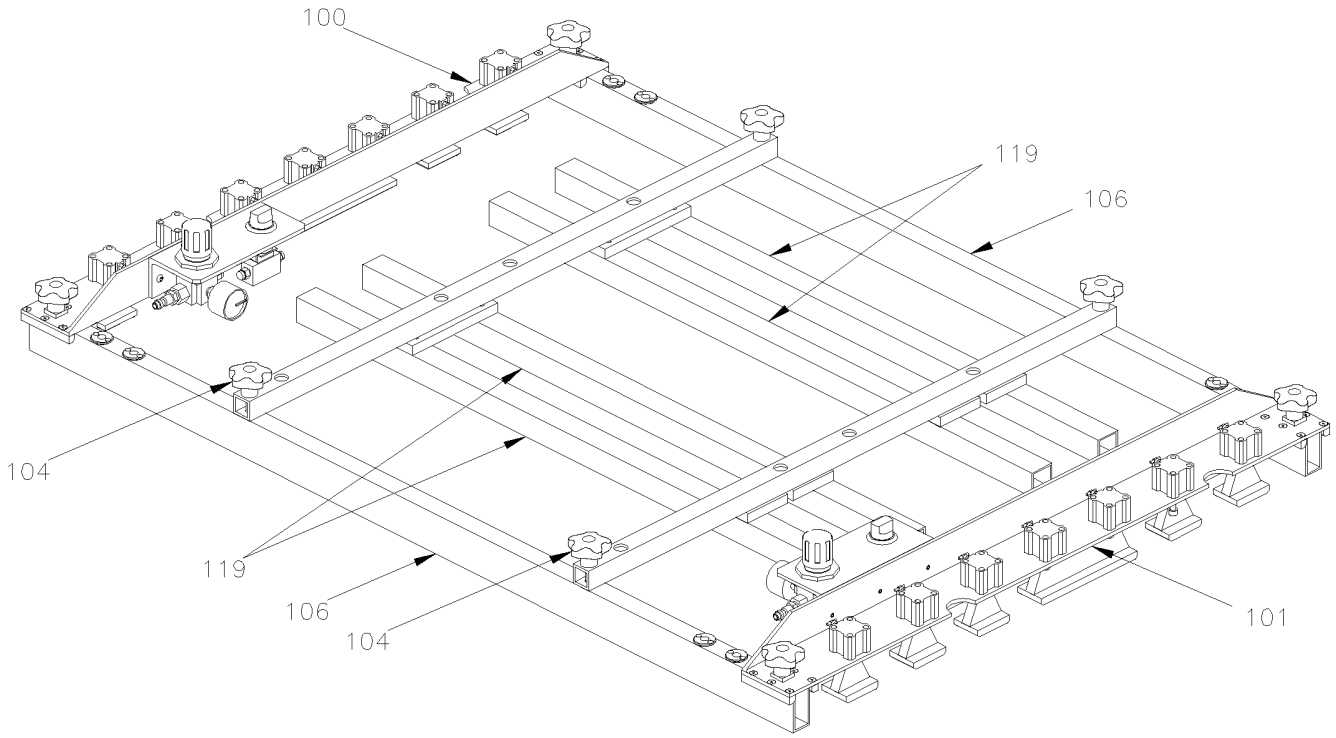

From Y-7046 Up to 8-9339	DATE: 01/2014	PAGE: Y2-1853-50

JIG TOOL - SIDE PANELING INSTALLATION

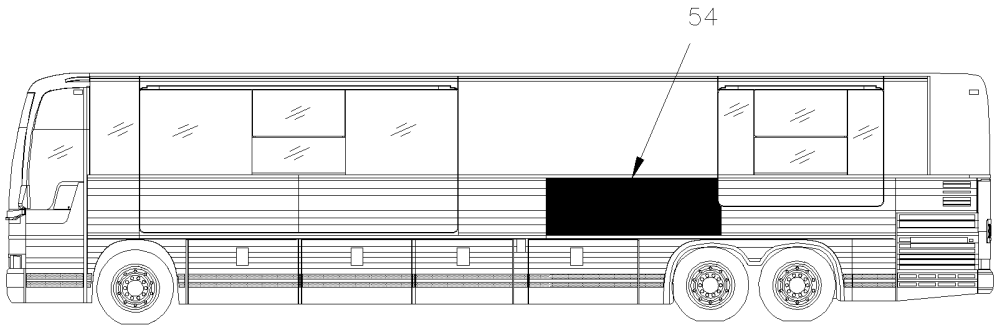

MTH. 45' WITH "SLIDE-OUT"

KIT # 4	TO FIX THIS PANEL YOUR REQUIRE ALL ITEMS SHOWN ON THIS PAGE

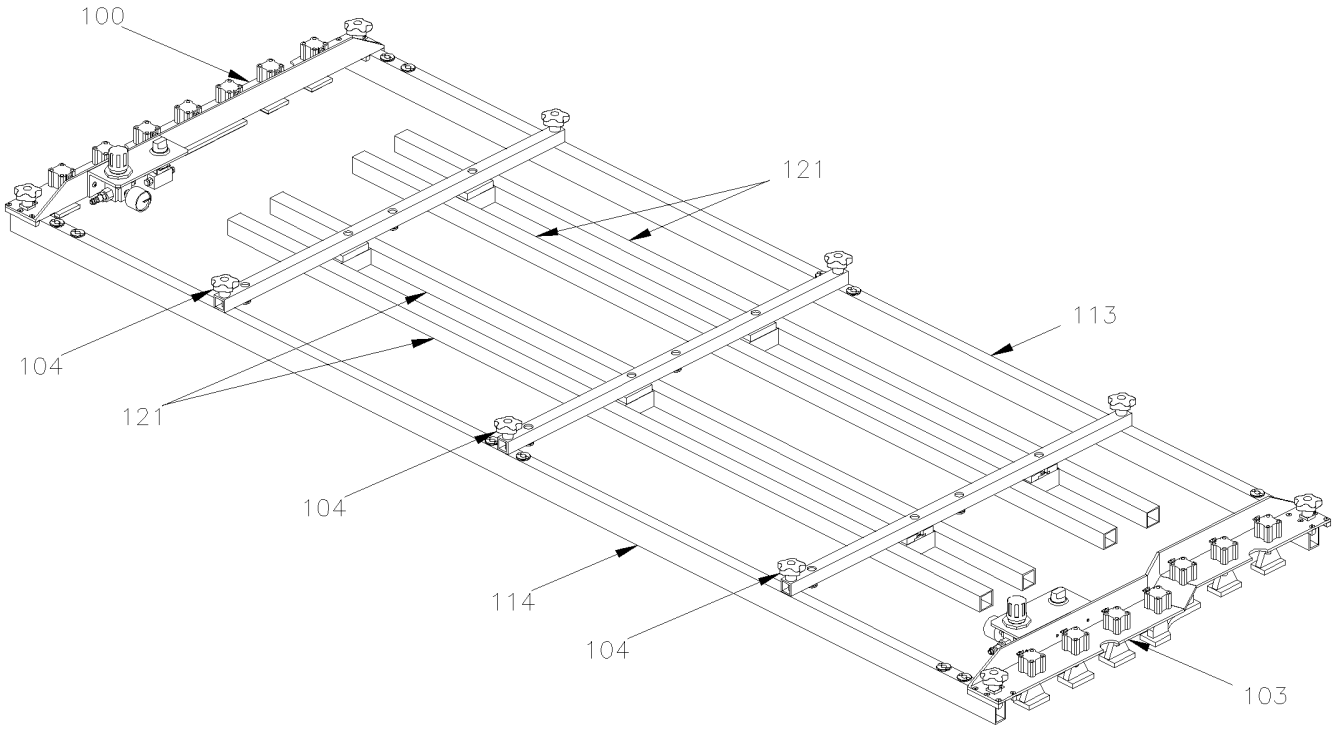

From Y-7046 Up to 8-9339	DATE: 01/2014	PAGE: Y2-1853-50

JIG TOOL - SIDE PANELING INSTALLATION

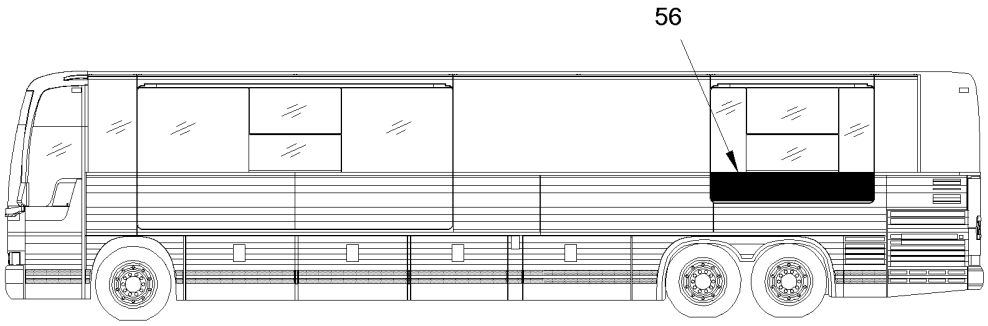

MTH. 45' WITH "SLIDE-OUT"
UP TO 3-8164

KIT # 5	TO FIX THIS PANEL YOUR REQUIRE ALL ITEMS SHOWN ON THIS PAGE

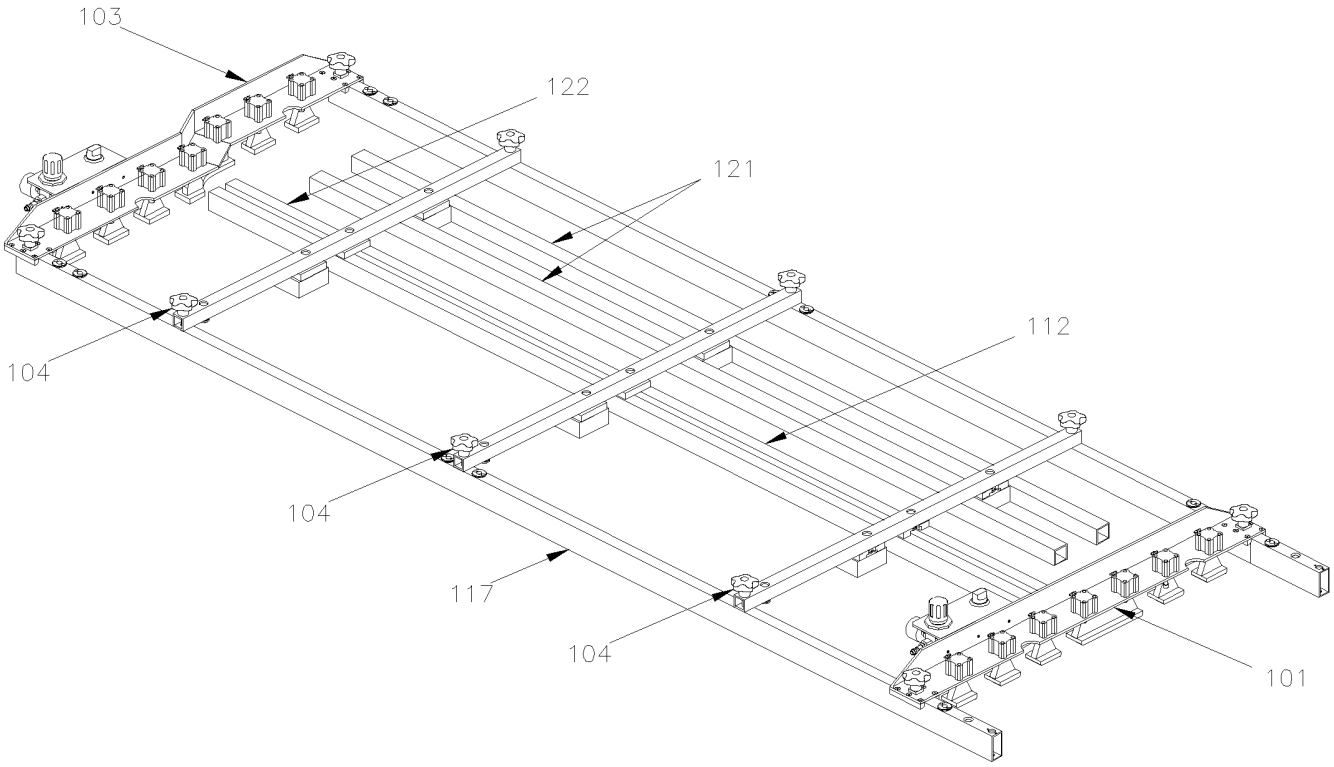

From Y-7046 Up to 8-9339	DATE: 01/2014	PAGE: Y2-1853-50

JIG TOOL - SIDE PANELING INSTALLATION

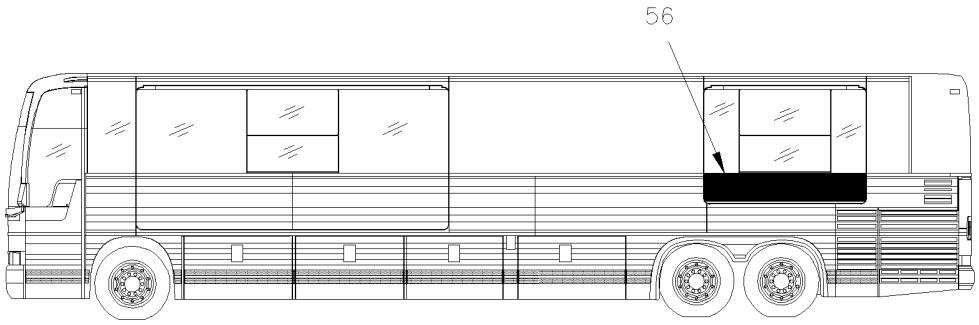

MTH. 45' WITH "SLIDE-OUT"

FROM 4-8165

KIT # 6	TO FIX THIS PANEL YOUR REQUIRE ALL ITEMS SHOWN ON THIS PAGE

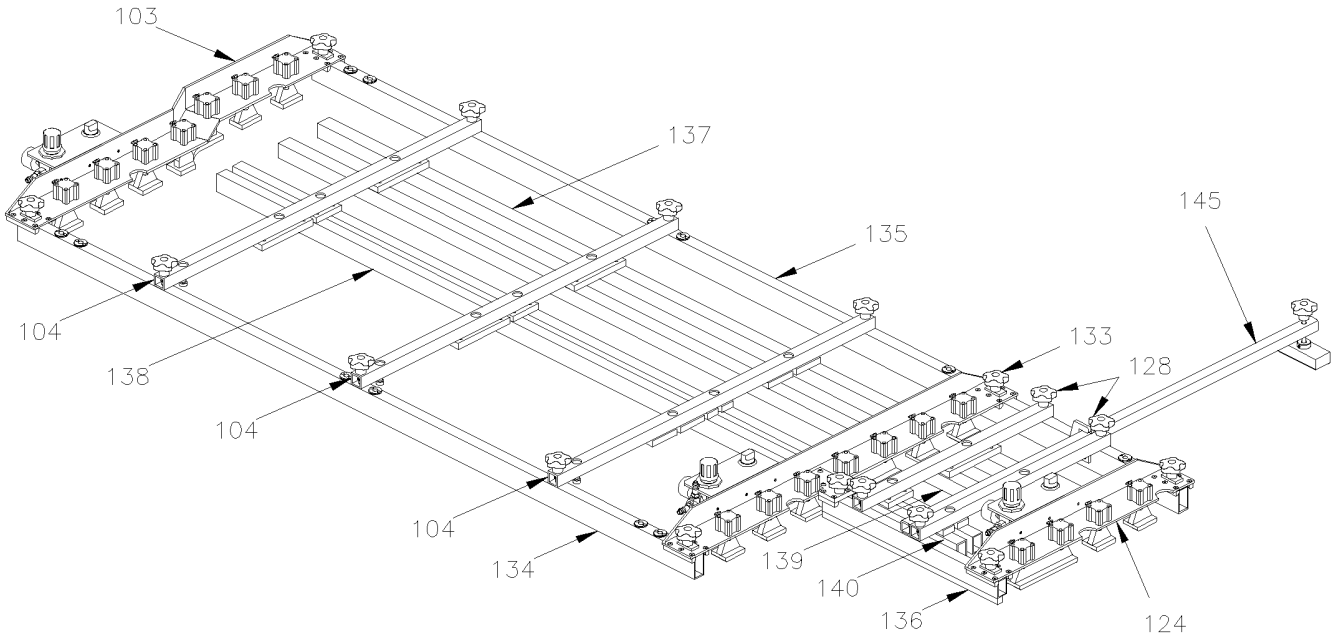

From Y-7046 Up to 8-9339	DATE: 01/2014	PAGE: Y2-1853-50

JIG TOOL - SIDE PANELING INSTALLATION

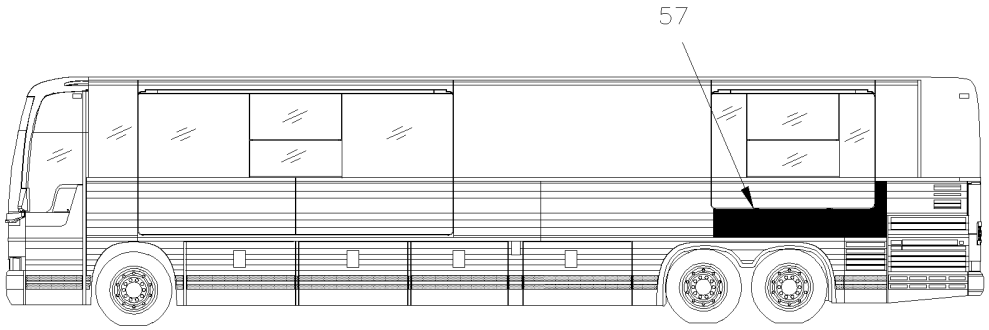

MTH. 45' WITH ''SLIDE-OUT''
UP TO 3-8164

KIT # 7	TO FIX THIS PANEL YOUR REQUIRE ALL ITEMS SHOWN ON THIS PAGE

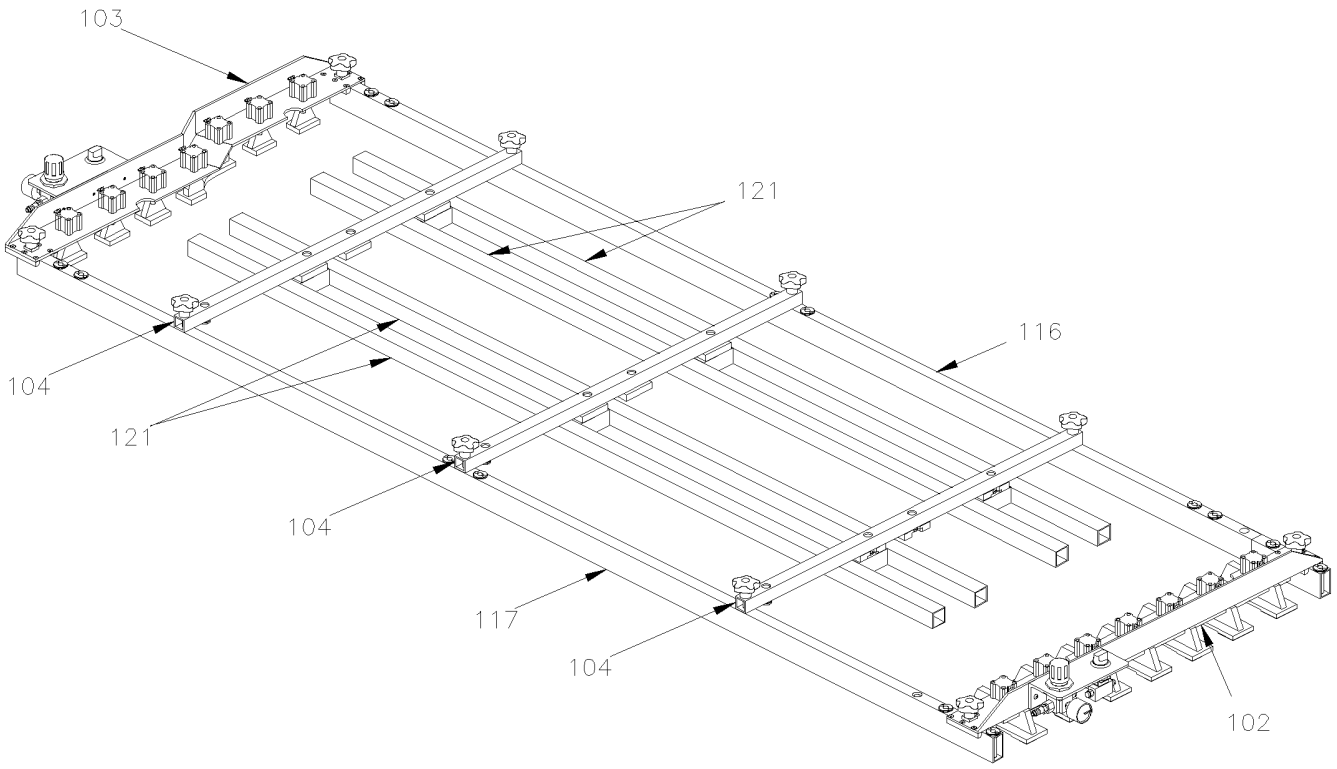

From Y-7046 Up to 8-9339	DATE: 01/2014	PAGE: Y2-1853-50

JIG TOOL - SIDE PANELING INSTALLATION

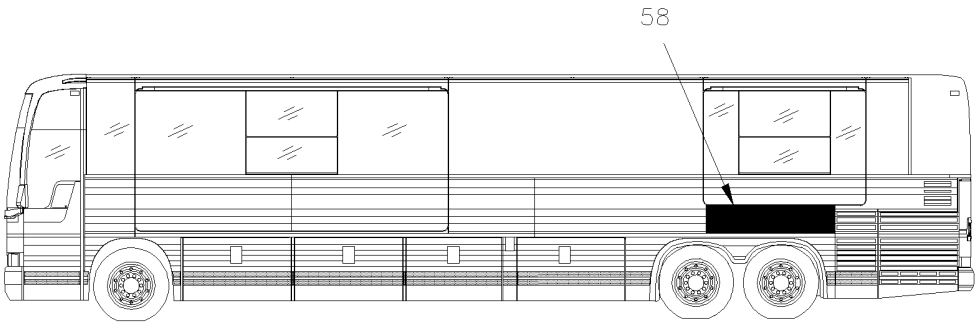

MTH. 45' WITH "SLIDE-OUT"
FROM 4-8165

KIT # 8	TO FIX THIS PANEL YOUR REQUIRE ALL ITEMS SHOWN ON THIS PAGE

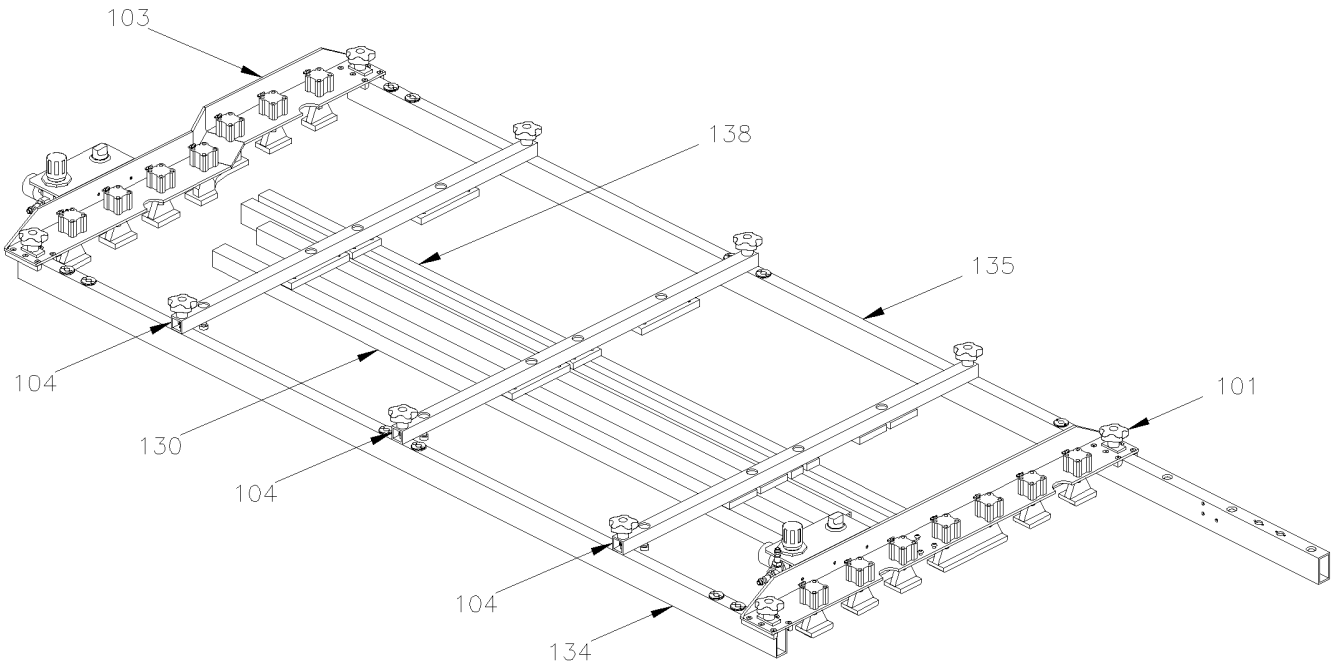

From Y-7046 Up to 8-9339	DATE: 01/2014	PAGE: Y2-1853-50

JIG TOOL - SIDE PANELING INSTALLATION

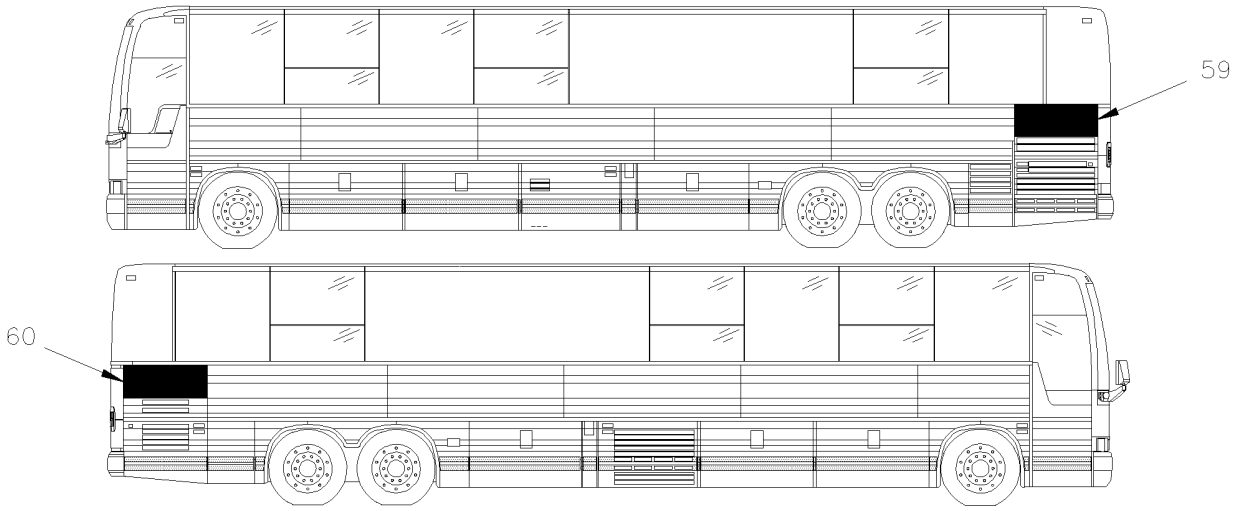

MTH. 45'

KIT # 9	TO FIX THIS PANEL YOUR REQUIRE ALL ITEMS SHOWN ON THIS PAGE

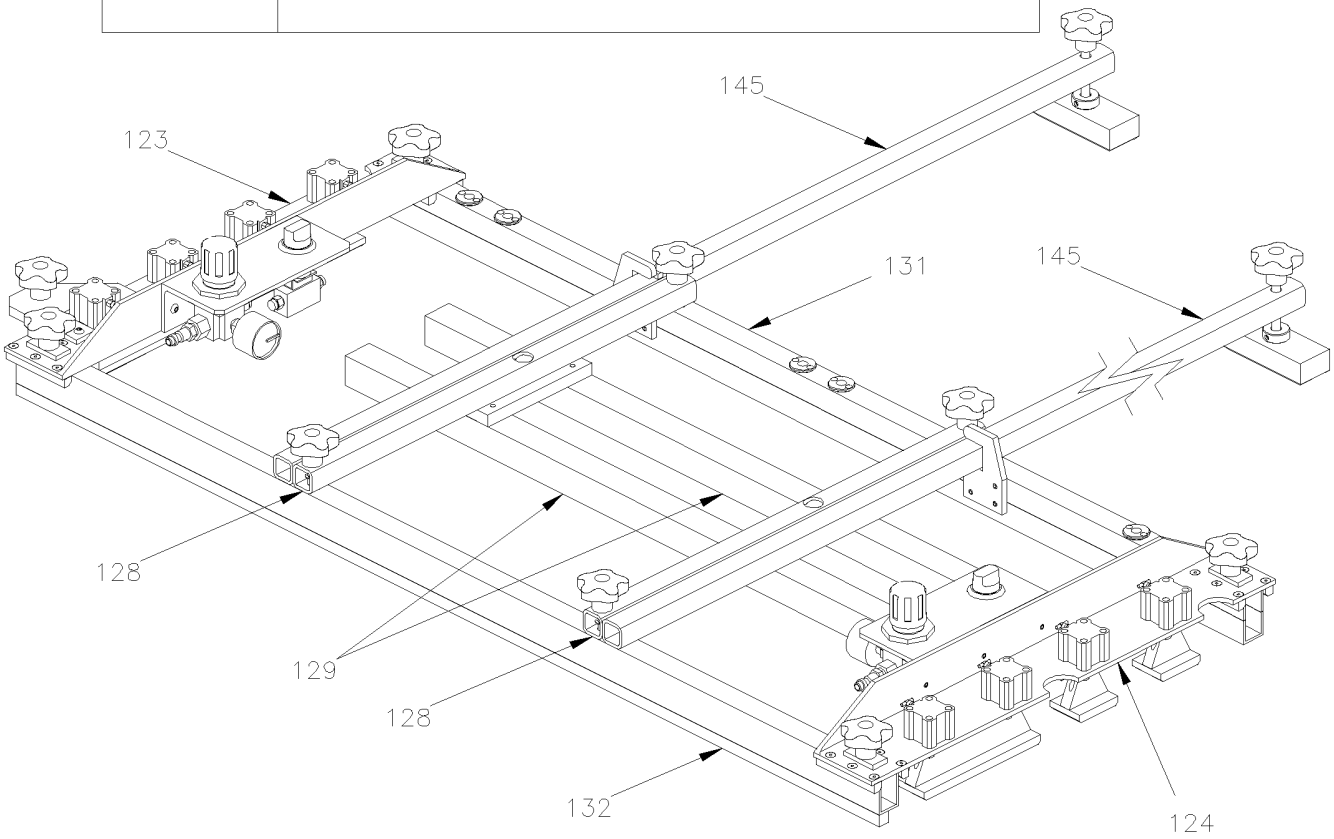

From Y-7046 Up to 8-9339	DATE: 01/2014	PAGE: Y2-1853-50

JIG TOOL - SIDE PANELING INSTALLATION

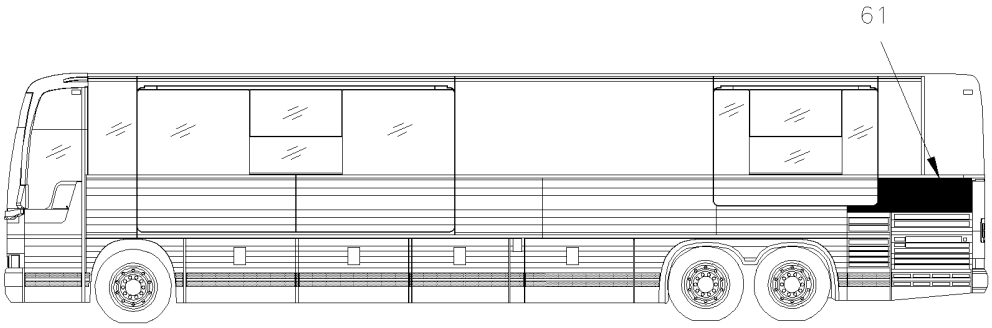

MTH. 45' WITH "SLIDE-OUT"
FROM 4-8165

KIT # 10	TO FIX THIS PANEL YOUR REQUIRE ALL ITEMS SHOWN ON THIS PAGE

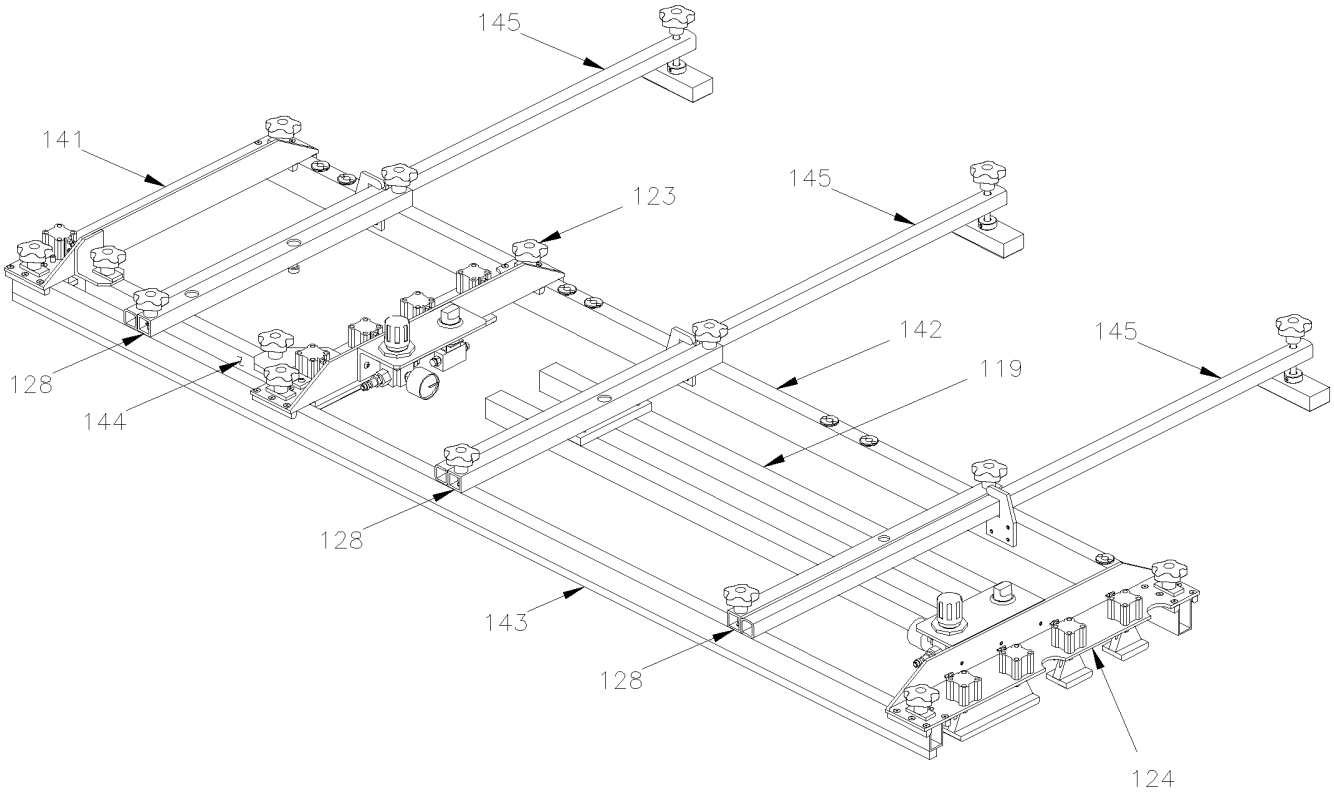

From Y-7046 Up to 8-9339	DATE: 01/2014	PAGE: Y2-1853-50

JIG TOOL - SIDE PANELING INSTALLATION

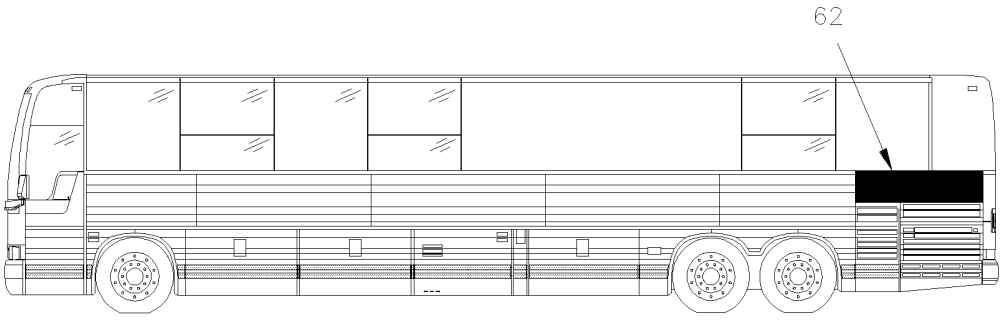

MTH. 45'

FROM 4-8165

KIT # 11	TO FIX THIS PANEL YOUR REQUIRE ALL ITEMS SHOWN ON THIS PAGE

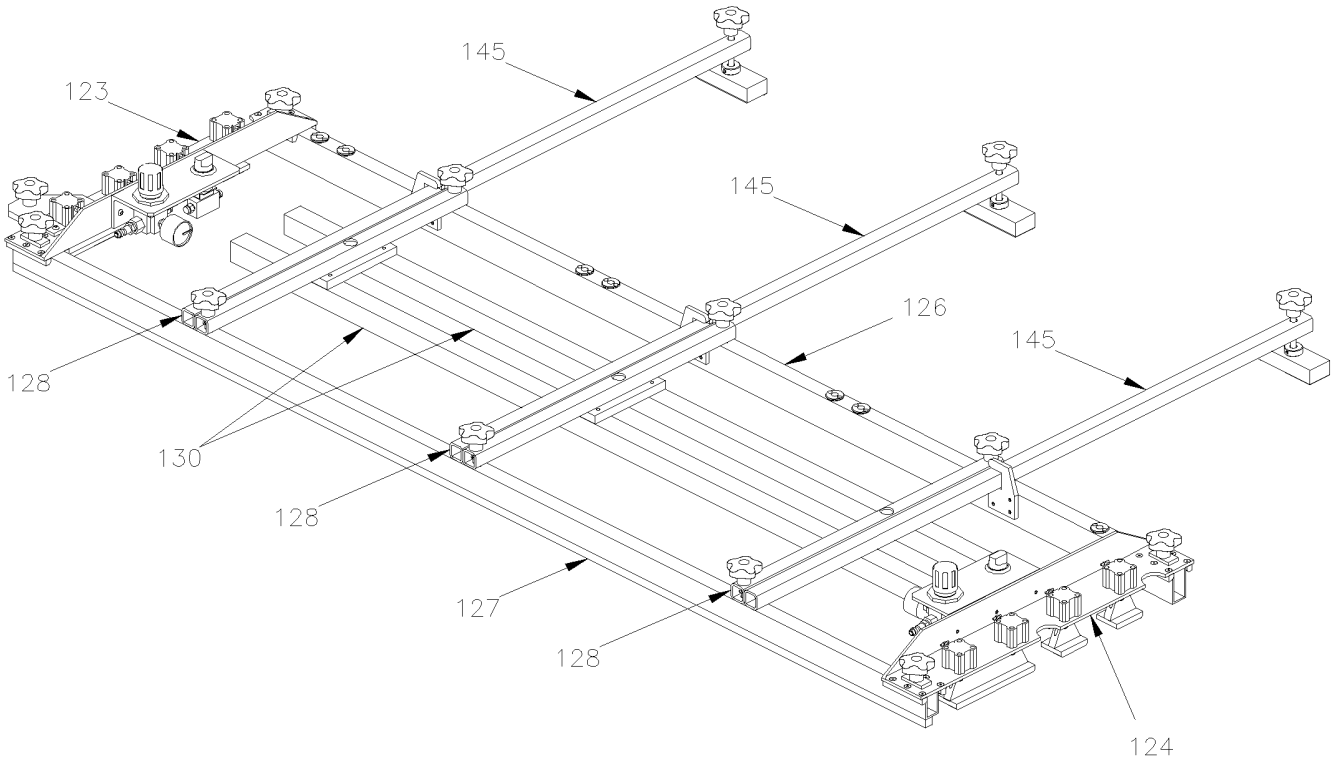

From Y-7046 Up to 8-9339	DATE: 01/2014	PAGE: Y2-1853-50

JIG TOOL - SIDE PANELING INSTALLATION

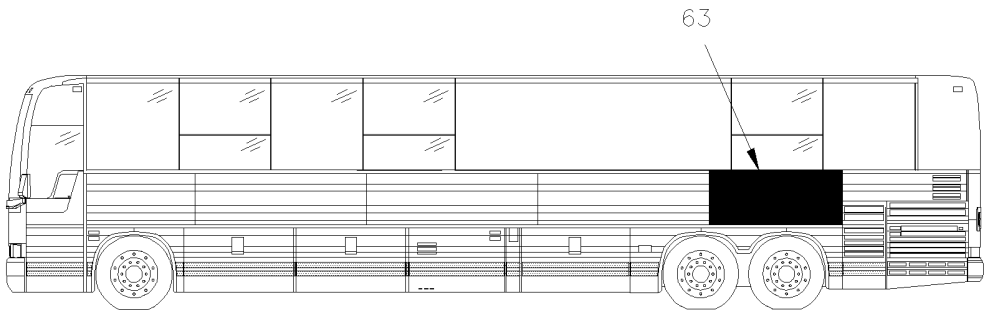

MTH. 45'
FROM 4-8165

KIT # 12	TO FIX THIS PANEL YOUR REQUIRE ALL ITEMS SHOWN ON THIS PAGE

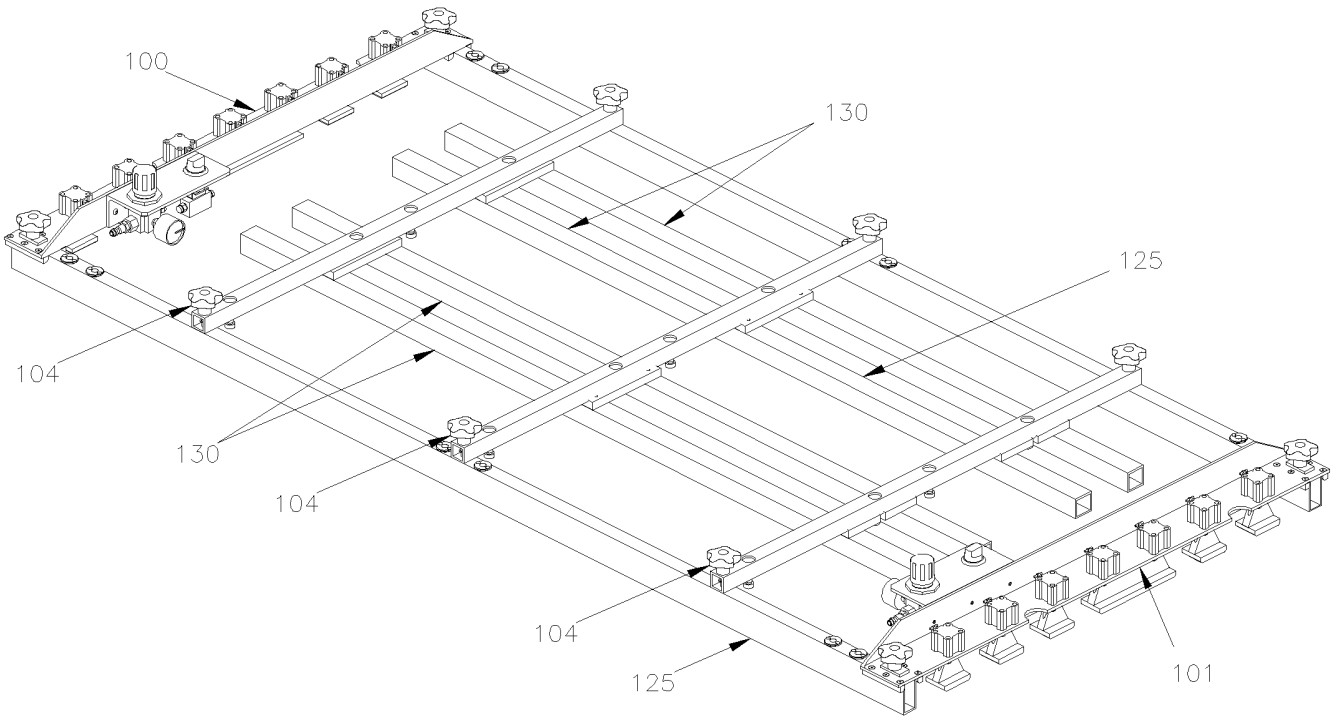

From Y-7046 Up to 8-9339	DATE: 01/2014	PAGE: Y2-1853-50

JIG TOOL - SIDE PANELING INSTALLATION

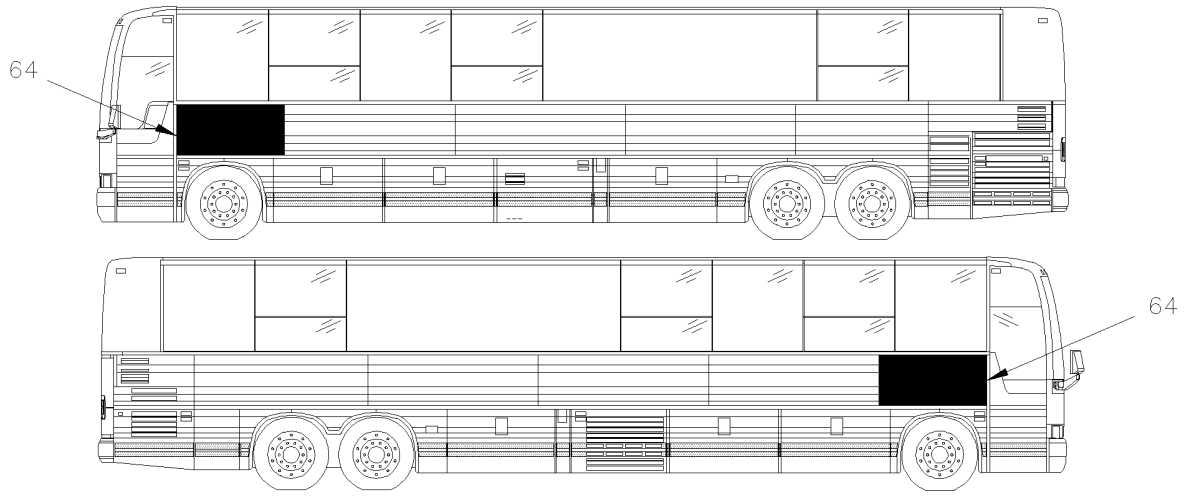

MTH. 45' & MTH 45' ENT WITH ''OPTION''

KIT # 13	TO FIX THIS PANEL YOUR REQUIRE ALL ITEMS SHOWN ON THIS PAGE

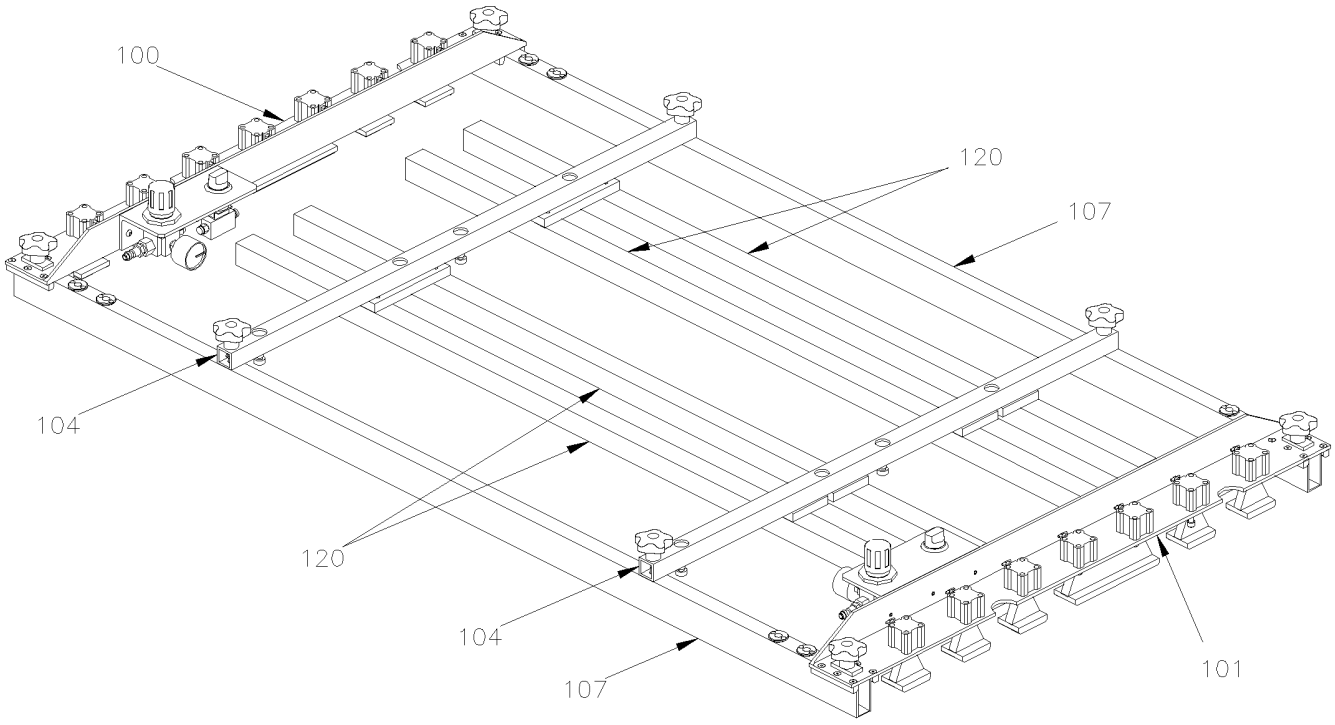

From Y-7046 Up to 8-9339	DATE: 01/2014	PAGE: Y2-1853-50

JIG TOOL - SIDE PANELING INSTALLATION

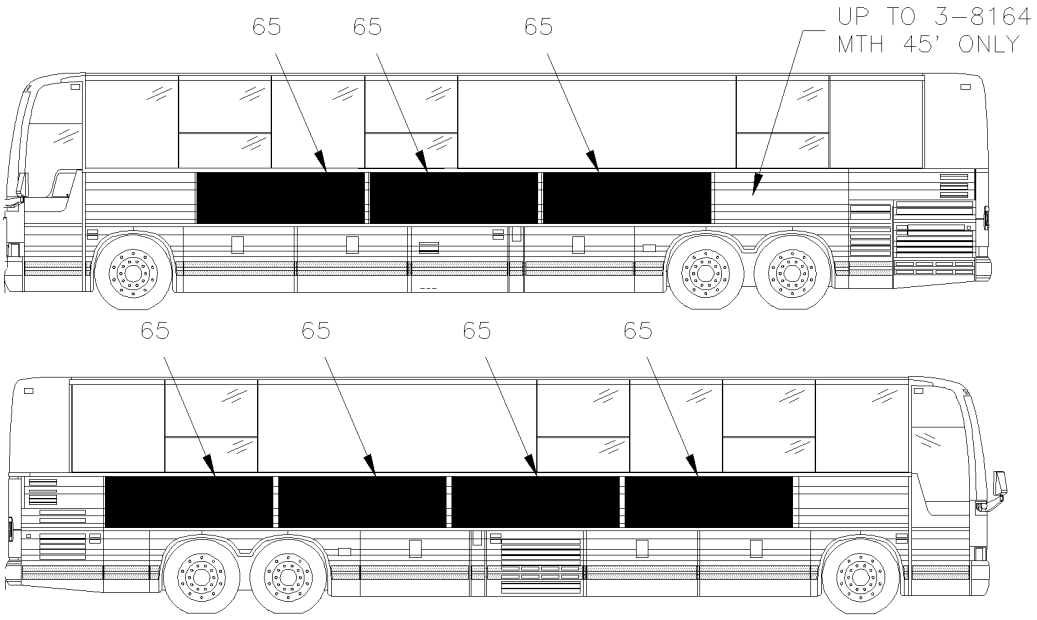

MTH. 40' & MTH 45' ENT

KIT # 14	TO FIX THIS PANEL YOUR REQUIRE ALL ITEMS SHOWN ON THIS PAGE

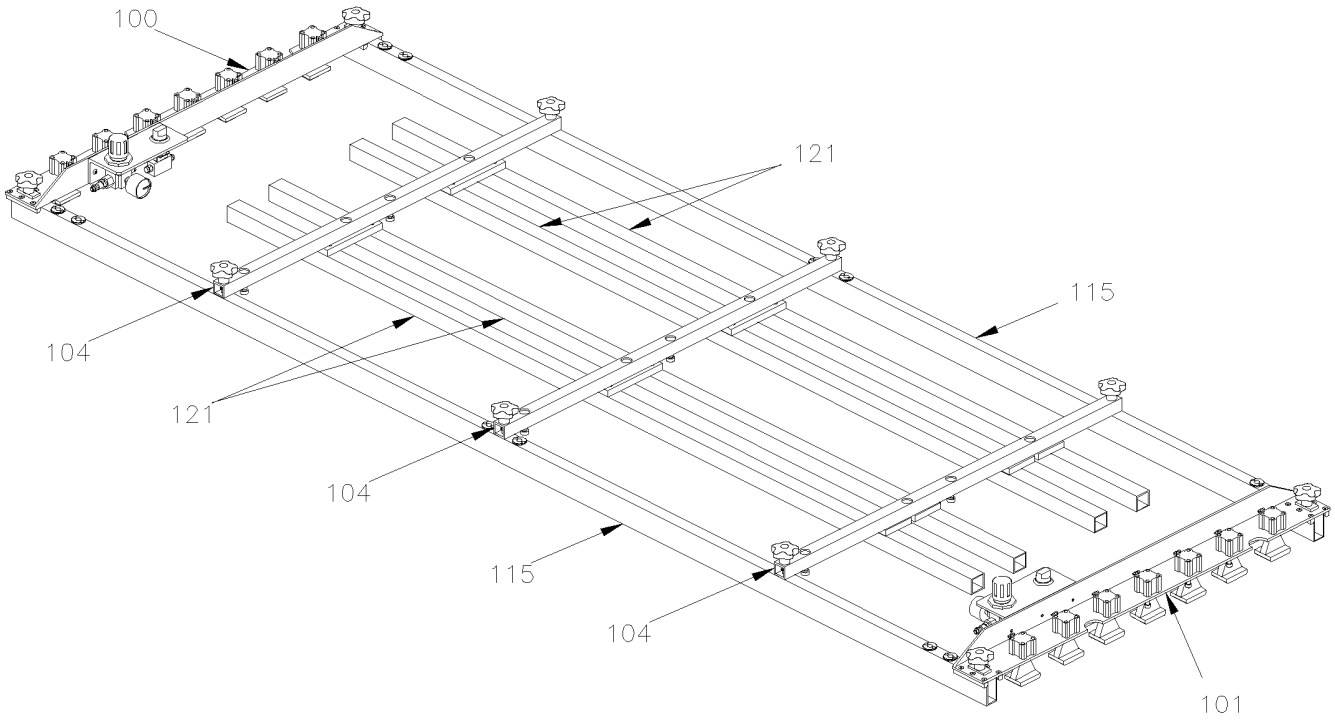

From Y-7046 Up to 8-9339	DATE: 01/2014	PAGE: Y2-1853-50
JIG TOOL - SIDE PANELING INSTALLATION		

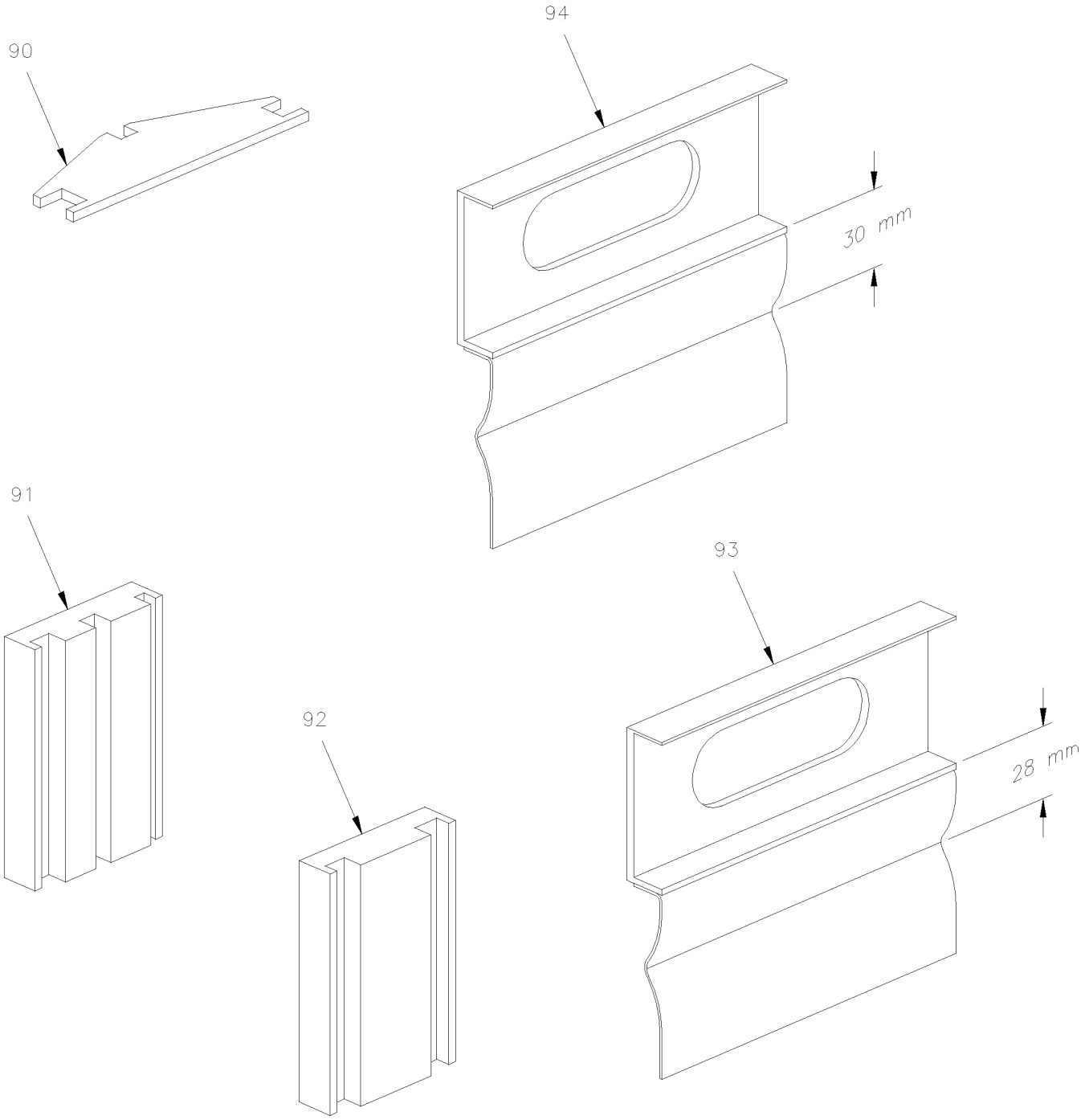

From Y-7046 Up to 8-9339	DATE: 01/2014	PAGE: Y2-1853-50
JIG TOOL - SIDE PANELING INSTALLATION		

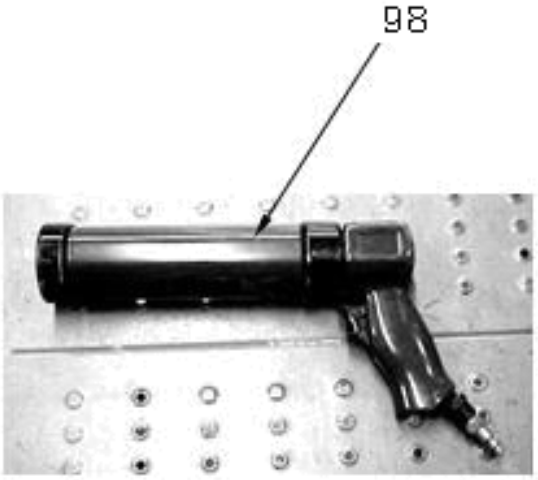

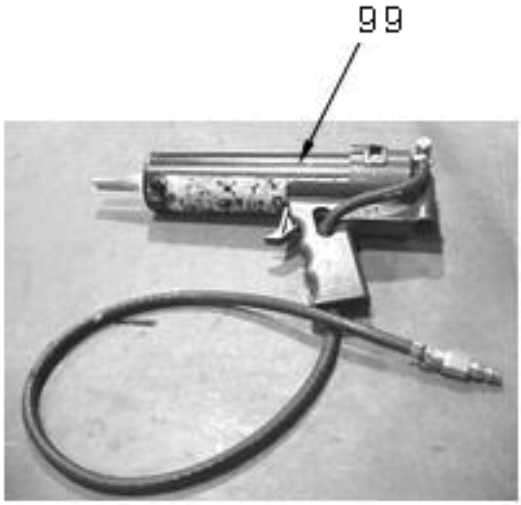

From Y-7046 Up to 8-9339	DATE: 01/2014	PAGE: Y2-1853-50

JIG TOOL - SIDE PANELING INSTALLATION

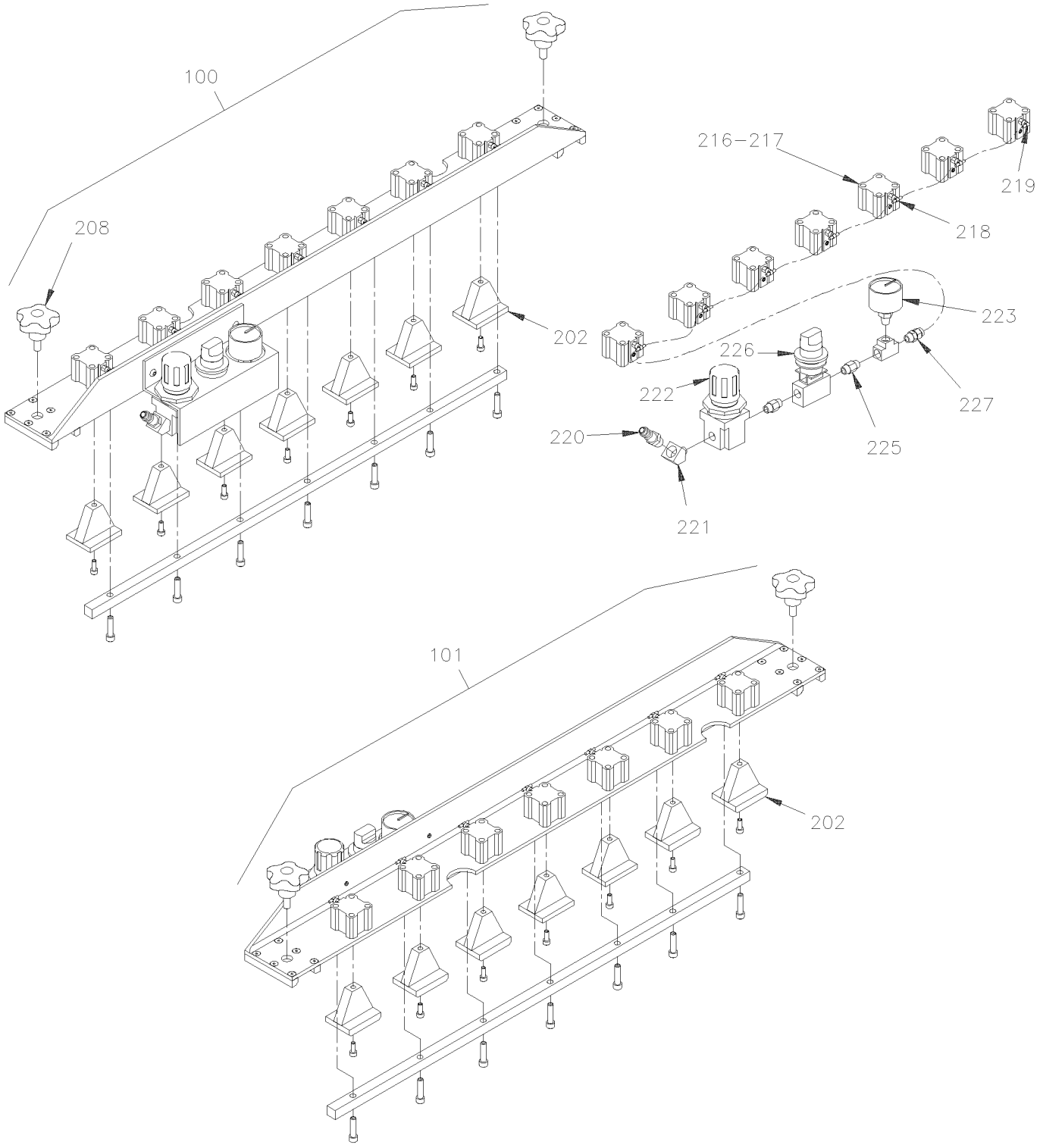

From Y-7046 Up to 8-9339	DATE: 01/2014	PAGE: Y2-1853-50

JIG TOOL - SIDE PANELING INSTALLATION

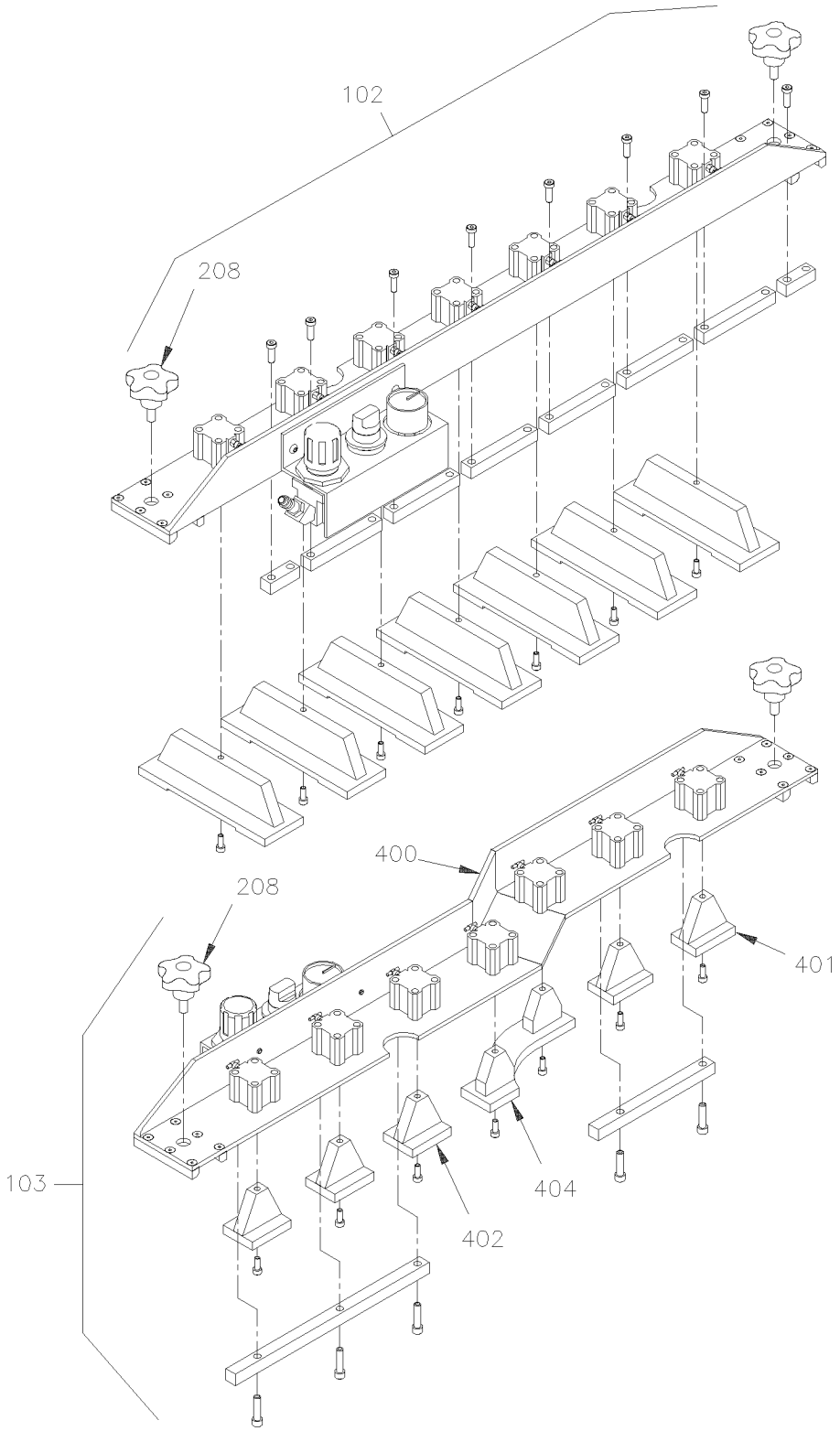

From Y-7046 Up to 8-9339	DATE: 01/2014	PAGE: Y2-1853-50

JIG TOOL - SIDE PANELING INSTALLATION

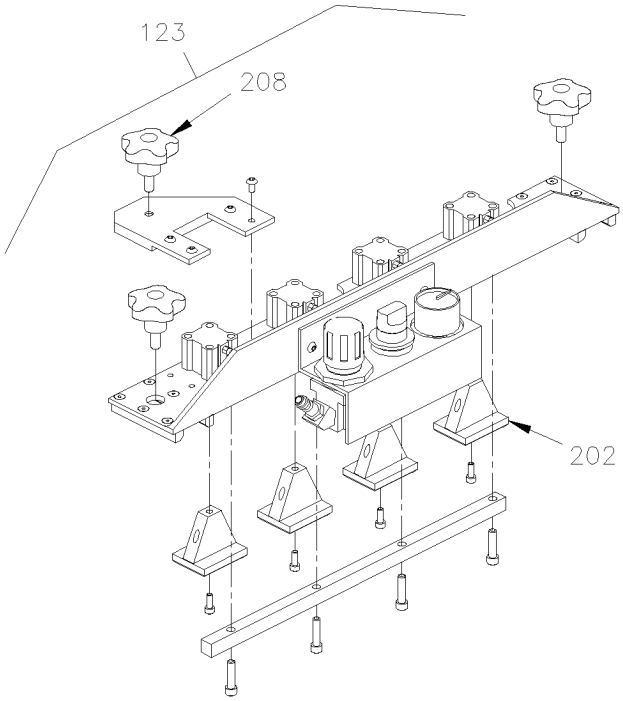

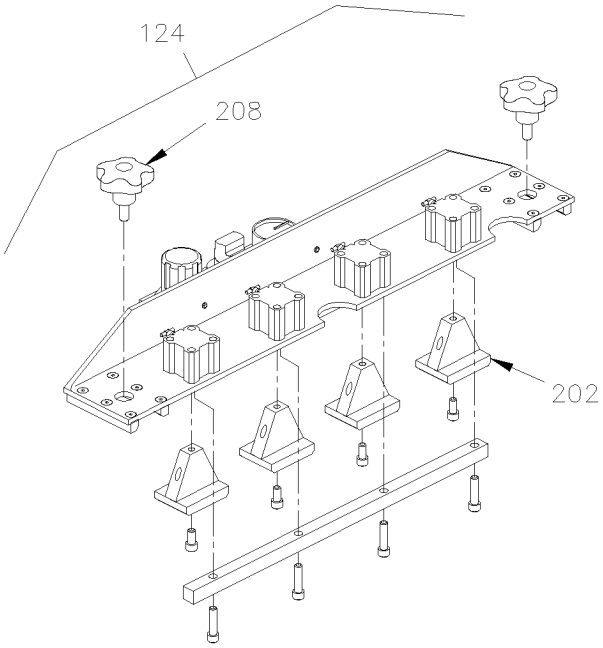

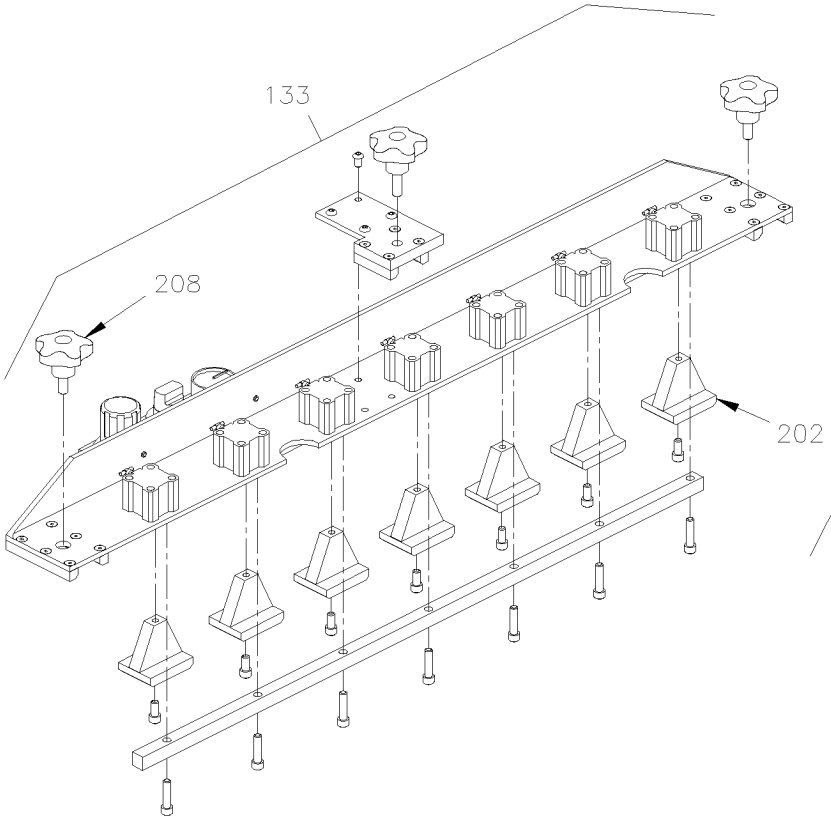

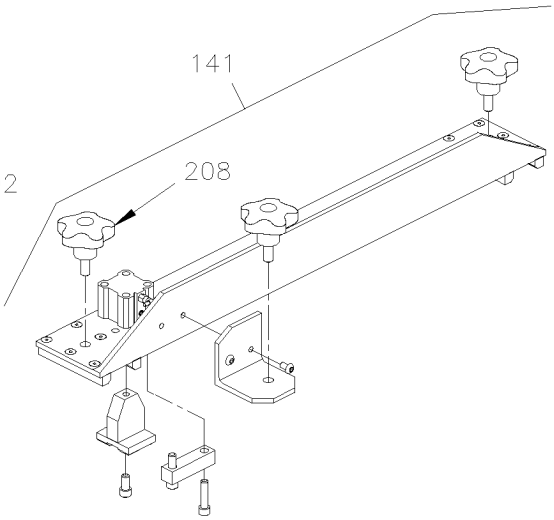

From Y-7046 Up to 8-9339	DATE: 01/2014	PAGE: Y2-1853-50

JIG TOOL - SIDE PANELING INSTALLATION

ITEM	PART	DESCRIPTION	XL45	MTH40	MTH45	MTH45S	NOTE
1	684593	KIT JIG ASM / 28 3/8" WIDE			1		
2	684623	KIT JIG ASM / 87 5/16" WIDE			1		
3	684627	KIT JIG ASM / 47 7/8" WIDE			1		
4	684631	KIT JIG ASM / 94 & 95 5/8" WIDE			1		
5	684638	KIT JIG ASM / 90 5/16" & 95 5/8" WIDE Up to 3-8164			1		
6	684542	KIT JIG ASM / 18 1/4 & 90 5/16" WIDE From 4-8165			1		
7	684639	KIT JIG ASM / 97 1/16" & 95 5/8" WIDE Up to 3-8164			1		
8	684551	KIT JIG ASM / 70 1/2 & 90 5/16" WIDE From 4-8165			1		
9	684538	KIT JIG ASM / 44 5/8" WIDE		1	1	1	
10	684553	KIT JIG ASM / 69 3/4" (2) & 15 1/8" WIDE From 4-8165			1		
11	684561	KIT JIG ASM / 69 3/4" WIDE			1		
12	684559	KIT JIG ASM / 70 1/2" WIDE From 4-8165			1		
13	684539	KIT JIG ASM / 59 5/16" WIDE			1	1	
14	684534	KIT JIG ASM / 95 5/8" WIDE		1	1	1	
50	690053	PANEL SUB ASSY / FORWARD FRT/"SLIDE-OUT" / S.B. Up to 4-8247 / REPLACED BY: 476120			1		
50	476120	PANEL SUB ASSY / FORWARD FRT/"SLIDE-OUT" / S.B. From 4-8248 Up to 5-8468 / REPLACED BY: 477592			1		
50	477592	PANEL SUB ASSY / FORWARD FRT/"SLIDE-OUT" / B.A. From 5-8469 / REPLACED BY: 477593			1		
50	477593	PANEL / FORWARD FRT/"SLIDE-OUT" / B.A. SERVICE From 5-8469					
51	690192	PANEL SUB ASSY / FORWARD FRT/"SLIDE-OUT" / S.B. Up to 4-8247 / REPLACED BY: 477598			1		
51	476136	PANEL SUB ASSY / FORWARD FRT/"SLIDE-OUT" / S.B. From 4-8248 Up to 5-8468 / REPLACED BY: 477598			1		
51	477598	PANEL SUB ASSY / FORWARD FRT/"SLIDE-OUT" / B.A. From 5-8469 / REPLACED BY: 477599			1		
51	477599	PANEL / FORWARD FRT/"SLIDE-OUT" / B.A. From 5-8469			1		
52	690194	PANEL SUB ASSY / BACKWARD FRT/"SLIDE-OUT" / S.B. Up to 4-8247 / REPLACED BY: 476137			1		
52	476137	PANEL SUB ASSY / BACKWARD FRT/"SLIDE-OUT" / S.B. From 4-8248 Up to 5-8468 / REPLACED BY: 477600			1		
52	477600	PANEL SUB ASSY / BACKWARD FRT/"SLIDE-OUT" / B.A. From 5-8469 / REPLACED BY: 477601			1		
52	477601	PANEL / BACKWARD FRT/"SLIDE-OUT" / B.A. / SERVICE From 5-8469			1		
53	690054	PANEL SUB ASSY / BACKWARD FRT/"SLIDE-OUT" / 1215MM / S.B. Up to 4-8247 / REPLACED BY: 477594			1		
53	476116	PANEL SUB ASSY / BACKWARD FRT/"SLIDE-OUT" / 1215MM / S.B. From 4-8248 Up to 5-8468 / REPLACED BY: 477594			1		
53	476253	PANEL SUB ASSY / BACKWARD FRT/"SLIDE-OUT" / 1219MM / S.B. Up to 5-8468 / REPLACED BY: 477823			1		S,C
53	477594	PANEL SUB ASSY / BACKWARD FRT/"SLIDE-OUT" / 1215MM / B.A. From 5-8469 / REPLACED BY: 477595			1		
53	477595	PANEL / BACKWARD FRT/"SLIDE-OUT" / 1215MM / B.A. From 5-8469			1		
53	477823	PANEL SUB ASSY / BACKWARD FRT/"SLIDE-OUT" / 1219MM / B.A. From 5-8469 / REPLACED BY: 477594			1		S,C
53	477825	PANEL / BACKWARD FRT/"SLIDE-OUT" / 1219MM / B.A. / SERVICE From 5-8469			1		
54	690024	PANEL SUB ASSY / FORWARD REAR /"SLIDE-OUT" / S.B. Up to 4-8247 / REPLACED BY: 476117			1		
		C) NEED REWORK FOR ADJUSTMENT					
		S) SERVICE NUMBER ONLY					

From Y-7046 Up to 8-9339	DATE: 01/2014	PAGE: Y2-1853-50

JIG TOOL - SIDE PANELING INSTALLATION

ITEM	PART	DESCRIPTION	XL45	MTH40	MTH45	MTH45S	NOTE
54	476117	PANEL SUB ASSY / FORWARD REAR/"SLIDE-OUT" / S.B. From 4-8248 Up to 5-8468 / REPLACED BY: 477596			1		
54	477596	PANEL SUB ASSY / FORWARD REAR/"SLIDE-OUT" / B.A. From 5-8469 Up to 6-8805 / REPLACED BY: 477597			1		
54	477597	PANEL / FORWARD REAR/"SLIDE-OUT" / B.A. / SERVICE From 5-8469 Up to 6-8805			1		
54	477785	PANEL SUB ASSY / FORWARD REAR/"SLIDE-OUT". / B.A. From 6-8806 / REPLACED BY: 477786			1		
54	477786	PANEL / FORWARD REAR/"SLIDE-OUT" / B.A. / SERVICE From 6-8806			1		
56	690188	PANEL SUB ASSY / REAR / "SLIDE-OUT" / S.B. Up to 4-8247 / REPLACED BY: 476131			1		
56	476131	PANEL SUB ASSY / REAR / "SLIDE-OUT" / S.B. From 4-8248 Up to 5-8468 / REPLACED BY: 477602			1		
56	477602	PANEL SUB ASSY / REAR / "SLIDE-OUT" / B.A. From 5-8469 Up to 6-8805 / REPLACED BY: 477603			1		
56	477603	PANEL / REAR / "SLIDE-OUT" / B.A. / SERVICE From 5-8469 Up to 6-8805			1		
56	477783	PANEL SUB ASSY / REAR / "SLIDE-OUT" / B.A. From 6-8806 / REPLACED BY: 477784			1		
56	477784	PANEL / REAR / "SLIDE-OUT" / B.A. / SERVICE From 6-8806			1		
57	690025	PANEL SUB ASSY / LOWER, REAR "SLIDE-OUT" / S.B. Up to 3-8164			1		
57	474828	PANEL ONLY / LOWER, REAR "SLIDE-OUT" / S.B. / SERVICE / REPLACED BY: 477824			1		
57	477824	PANEL ONLY / LOWER, REAR "SLIDE-OUT" / B.A. / SERVICE			1		
NS	475581	REINFORCEMENT 67MM X 1821MM / SERVICE			1		
NS	475582	REINFORCEMENT 67MM X 1934MM / SERVICE			1		
58	475839	PANEL SUB ASSY / LOWER, REAR "SLIDE-OUT" / S.B. From 4-8165 Up to 5-8468 / REPLACED BY: 476469			1		R
58	477590	PANEL SUB ASSY / LOWER, REAR "SLIDE-OUT" / B.A. From 5-8469 Up to 6-8805 / REPLACED BY: 476469			1		R
58	477591	PANEL / LOWER, REAR "SLIDE-OUT" / B.A. From 5-8469 Up to 6-8805			1		S
58	477787	PANEL SUB ASSY / LOWER, REAR "SLIDE-OUT" / B.A. From 6-8806 / REPLACED BY: 477788			1		R
58	477788	PANEL / LOWER, REAR "SLIDE-OUT" / B.A. / SERVICE From 6-8806			1		
58	475850	PANEL SUB ASSY / LOWER, REAR "SLIDE-OUT" / S.B. From 4-8165 Up to 5-8468 / REPLACED BY: 476469			1		S
58	476469	PANEL SUB ASSY / LOWER, REAR "SLIDE-OUT" / B.A. From 5-8469 / REPLACED BY: 477591			1		S
59	474152	PANEL SUB ASSY AIR INTAKE LH / S.B. O.E.M. Up to 2-7818 / REPLACED BY: 476468			1		
59	475525	PANEL SUB ASSY AIR INTAKE LH / S.B. O.E.M. From 2-7819 Up to 4-8164 / REPLACED BY: 477566			1		R
59	475599	PANEL SUB ASSY AIR INTAKE LH / S.B. / SERVICE From 2-7819 Up to 4-8164 / REPLACED BY: 477566			1		S
59	474152	PANEL SUB ASSY AIR INTAKE LH / S.B. O.E.M. Up to 2-7818 / REPLACED BY: 476468		1		1	R
59	475525	PANEL SUB ASSY AIR INTAKE LH / S.B. O.E.M. From 2-7819 Up to 5-8468 / REPLACED BY: 477566		1		1	R
59	475599	PANEL SUB ASSY AIR INTAKE LH / S.B. / SERVICE From 2-7819 Up to 5-8468 / REPLACED BY: 477566				1	S
59	477566	PANEL SUB ASSY AIR INTAKE LH / B.A. O.E.M. From 5-8469 Up to 5-8813 / REPLACED BY: 477567		1			R
59	476468	PANEL SUB ASSY AIR INTAKE LH / B.A. / SERVICE From 5-8469 Up to 5-8813 / REPLACED BY: 477566					S
59	477567	PANEL SUB ASSY AIR INTAKE LH / B.A. / SERVICE From 5-8469 Up to 5-8813		1			S
59	479163	PANEL 136MM X 1285MM / UPPER / RADIATOR DOOR / B.A.	1				N
59	474200	PANEL SUB ASSY AIR INTAKE LH / 89" / S.B. Up to 2-7818				1	
		N) NO TOOL TO FIX THIS PANEL					
		R) PRODUCTION NUMBER REFERENCE ONLY					
		S) SERVICE NUMBER ONLY					

From Y-7046 Up to 8-9339	DATE: 01/2014	PAGE: Y2-1853-50

JIG TOOL - SIDE PANELING INSTALLATION

ITEM	PART	DESCRIPTION	XL45	MTH40	MTH45	MTH45S	NOTE
60	474151	PANEL SUB ASSY AIR INTAKE RH / S.B. Up to 2-7818 / REPLACED BY: 475598		1	1	1	R
60	475524	PANEL SUB ASSY AIR INTAKE RH / S.B. O.E.M. From 2-7819 Up to 5-8468 / REPLACED BY: 477572		1	1	1	R
60	475598	PANEL SUB ASSY AIR INTAKE RH / S.B. / SERVICE From 2-7819 Up to 5-8468 / REPLACED BY: 477572		1	1	1	S
60	477572	PANEL SUB ASSY AIR INTAKE RH / B.A. O.E.M. From 5-8469 / REPLACED BY: 476467		1	1		R
60	476467	PANEL SUB ASSY AIR INTAKE RH / B.A. / SERVICE From 5-8469 / REPLACED BY: 477572		1	1		S
60	477573	PANEL AIR INTAKE RH / B.A. / SERVICE From 5-8469		1	1		S
60	474201	PANEL SUB ASSY AIR INTAKE RH / 89" / S.B. Up to 2-7818				1	
61	475840	PANEL SUB ASSY AIR INTAKE LH / S.B. O.E.M. From 4-8165 Up to 5-8468 / REPLACED BY: 477574			1		R
61	475851	PANEL SUB ASSY AIR INTAKE LH / S.B. / SERVICE From 4-8165 Up to 5-8468 / REPLACED BY: 477574			1		S
61	477574	PANEL SUB ASSY AIR INTAKE LH / B.A. From 5-8469 Up to 5-8805 / REPLACED BY: 476470			1		R
61	476470	PANEL SUB ASSY AIR INTAKE LH / B.A. / SERVICE From 5-8469 Up to 5-8805 / REPLACED BY: 477574			1		S
61	477575	PANEL AIR INTAKE LH / B.A. / SERVICE From 5-8469 Up to 5-8805			1		S
61	477781	PANEL SUB ASSY AIR INTAKE LH / B.A. From 5-8806 Up to 8-8339 / REPLACED BY: 477782			1		R
61	477782	PANEL AIR INTAKE LH / B.A. / SERVICE From 5-8806 Up to 8-8339			1		
62	475658	PANEL SUB ASSY AIR INTAKE LH / S.B. From 4-8165 Up to 5-8468 / REPLACED BY: 477568			1		
62	477568	PANEL SUB ASSY AIR INTAKE LH / B.A. From 5-8469 Up to 8-9339 / REPLACED BY: 477569			1		
62	477569	PANEL AIR INTAKE LH / B.A. / SERVICE From 5-8469 Up to 8-9339			1		
63	475654	PANEL SUB ASSY / S.B. From 4-8165 Up to 5-8468 / REPLACED BY: 477580			1		
63	477580	PANEL SUB ASSY / B.A. From 5-8469 / REPLACED BY: 477581			1		
63	477581	UPPER PANEL 840MM X 1789MM / W/OUT REINFORCEMENT / B.A. / SERVICE From 5-8469			1		S
64	474150	PANEL SUB ASSY / S.B. Up to 2-7818 / REPLACED BY: K474150			1	1	A
64	475523	PANEL SUB ASSY / S.B. O.E.M. From 2-7819 Up to 5-8468 / REPLACED BY: 476466			1	1	A,R
64	475597	PANEL SUB ASSY / S.B. / SERVICE From 2-7819 Up to 5-8468 / REPLACED BY: 476466			1	1	A,S
64	477576	PANEL SUB ASSY / B.A. O.E.M. From 5-8469 / REPLACED BY: 476466			1		R
64	476466	PANEL SUB ASSY / B.A. / SERVICE From 5-8469 / REPLACED BY: 477577			1		S
64	477577	UPPER PANEL 840MM X 1521MM / W/OUT REINFORCEMENT / B.A. / SERVICE From 5-8469			1		S
65	474149	PANEL SUB ASSY / S.B. Up to 2-7818 / REPLACED BY: K474149		8	8	8	
65	475522	PANEL SUB ASSY / S.B. O.E.M. From 2-7819 Up to 5-8468 / REPLACED BY: 477578		8	8	8	R
65	475596	PANEL SUB ASSY / S.B. / SERVICE From 2-7819 Up to 5-8468 / REPLACED BY: 476465		8	8	8	S
65	477578	PANEL SUB ASSY / B.A. O.E.M. From 5-8469 / REPLACED BY: 477579		8	8		R
65	476465	PANEL SUB ASSY / B.A. / SERVICE From 5-8469 / REPLACED BY: 477579		8	8		S
65	477579	UPPER PANEL 840MM X 2428MM / B.A. / SERVICE From 5-8469		8	8		S
		A) MTH 45' ENT 86" WITH FLUTE SIDE PANELS					
		"OPTION"					
		R) PRODUCTION NUMBER REFERENCE ONLY					
		S) SERVICE NUMBER ONLY					

From Y-7046 Up to 8-9339	DATE: 01/2014	PAGE: Y2-1853-50

JIG TOOL - SIDE PANELING INSTALLATION

ITEM	PART	DESCRIPTION	XL45	MTH40	MTH45	MTH45S	NOTE
90	684598	GLUE JIG		1	1	1	
91	684614	TOP MOULDING TAPE APPLICATOR JIG		1	1	1	
92	684604	BOTTOM MOULDING TAPE APPLICATOR JIG		1	1	1	
93	684533	TOP MOULDING INSTALLATION JIG		1	1	1	
94	684656	BOTTOM MOULDING INSTALLATION JIG		1	1	1	
95	682176	SEALANT SIKA #221 / BLACK / 310ml CARTRIDGE		AR	AR	AR	
96	683481	ACCELERATOR SIKA / 310ml CARTRIDGE		AR	AR	AR	
98	683634	PNEUMATIC GUN / "RODAC"		1	1	1	
99	684427	PNEUMATIC GUN / "WESTBURNE"		1	1	1	
100	684599	SUPPORT CYLINDER ASSY L.H. STD W/7 CYL		1	1	1	
101	684620	SUPPORT CYLINDER ASSY R.H. STD W/7 CYL		1	1	1	
102	684640	SUPPORT CYLINDER ASSY R.H. W/WIDE SHOES Up to 3-8164			1		
103	684632	SUPPORT CYLINDER ASSY R.H. "S" SHAPE			1		
104	684621	TUBE VERTICAL SUPPORT 33 1/8"		3	3	3	
105	684594	TUBE HORIZONTAL SUPPORT 28 3/8"			2		
106	684628	TUBE HORIZONTAL SUPPORT 47 7/8"			1		
107	684540	TUBE HORIZONTAL SUPPORT 59 15/16"		1	1	1	
111	684624	TUBE HORIZONTAL SUPPORT 87 5/16"			2		
112	684532	TUBE HORIZONTAL SUPPORT 90 5/16" / W/"S" Up to 3-8164			1		
113	684636	TUBE HORIZONTAL SUPPORT 94"			1		
114	684637	TUBE HORIZONTAL SUPPORT 95 5/8"			2		
115	684535	TUBE HORIZONTAL SUPPORT 95 5/8"		2	2	2	
116	684643	TUBE HORIZONTAL SUPPORT 97 1/16" Up to 3-8164			1		
117	684522	TUBE HORIZONTAL SUPPORT 95 5/8" / W/"S" Up to 3-8164			1		
118	684597	FRAME ASSY 16"			1		
119	684630	FRAME ASSY 34"			2		
120	684541	FRAME ASSY 48"		1	1	1	
121	684625	FRAME ASSY 73"		2	2	2	
122	684626	FRAME ASSY 80"		1	1	1	
123	684524	SUPPORT CYLINDER ASSY L.H. SHORT W/4 CYL			1		
124	684525	SUPPORT CYLINDER ASSY R.H. SHORT W/4 CYL			1		
125	684560	TUBE HORIZONTAL SUPPORT 70 1/2" From 4-8165			1		
126	684562	TUBE HORIZONTAL SUPPORT 69 3/4" / UPPER From 4-8165			1		
127	684563	TUBE HORIZONTAL SUPPORT 69 3/4" / LOWER From 4-8165			1		
128	684530	TUBE VERTICAL SUPPORT 19 7/8" From 4-8165			2		
129	684531	FRAME ASSY 28"			1		
130	684552	FRAME ASSY 54" From 4-8165			1		

From Y-7046 Up to 8-9339	DATE: 01/2014	PAGE: Y2-1853-50

JIG TOOL - SIDE PANELING INSTALLATION

ITEM	PART	DESCRIPTION	XL45	MTH40	MTH45	MTH45S	NOTE
131	684527	TUBE HORIZONTAL SUPPORT 44 5/8" / UPPER			1		
132	684529	TUBE HORIZONTAL SUPPORT 44 5/8" / LOWER			1		
133	684543	SUPPORT CYLINDER ASSY R.H. W/7 CYL / W/COOLING USE From 4-8165			1		
134	684545	TUBE HORIZONTAL SUPPORT 70 1/2" / LOWER From 4-8165			1		
135	684544	TUBE HORIZONTAL SUPPORT 90 5/16" / UPPER From 4-8165			1		
136	684546	TUBE HORIZONTAL SUPPORT 18 1/4" / LOWER From 4-8165			1		
137	684547	FRAME ASSY 60" From 4-8165			1		
138	684548	FRAME ASSY 60" W/SLIDE OUT From 4-8165			1		
139	684549	FRAME ASSY 10" From 4-8165			1		
140	684550	FRAME ASSY 10" W/SLIDE OUT From 4-8165			1		
141	684554	SUPPORT CYLINDER ASSY L.H. SHORT W/1 CYL From 4-8165			1		
142	684555	TUBE HORIZONTAL SUPPORT 69 3/4" / UPPER From 4-8165			1		
143	684556	TUBE HORIZONTAL SUPPORT 69 3/4" / LOWER From 4-8165			1		
144	684557	TUBE HORIZONTAL SUPPORT 15 1/8" From 4-8165			1		
145	684536	TUBE VERTICAL AUXILIARY SUPPORT 45 1/2"		3	3	3	
202	684600	HOLDING BLOCK ASSY 1 7/8" HEIGHT / W/CHAMFER		1	1	1	
208	684602	HANDLE 5/16-18		1	1	1	
216	684609	SCREW CAP HEXS 1/4-20x1/2		1	1	1	
217	684610	CYLINDER 20MM / 10MM STROKE		1	1	1	
218	684611	MALE BRANCH TEE / PUSH-IN FITTING / #4X#4XM5-0.8 PLAS		1	1	1	
219	684612	MALE ELBOW 90° / PUSH-IN FITTING / #2xM5-0.8 PLAS		1	1	1	
220	684613	NIPPLE / QUICK DISCONNECT "INDUSTRIAL" / #4x1/4NPT-M STL		1	1	1	
221	501328	STREET ELBOW 45º / PIPE FITTING / 1/8NPT-Mx1/8NPT-F BR		1	1	1	
222	684615	REGULATOR 1/8 N.P.T.		1	1	1	
223	684616	GAUGE AIR / 0/60		1	1	1	
225	684617	CONNECTOR MALE 1/8 N.P.T. X 1/8 TUBING		1	1	1	
226	684618	VALVE 3/2 ACTUATOR		1	1	1	
227	684619	MALE ELBOW 90° / PUSH-IN FITTING / #2x1/8NPT-M PLAS		1	1	1	
400	684582	PLATE ASSY WELDED		1	1	1	
401	684634	HOLDING BLOCK ASSY 1 7/8" HEIGHT		1	1	1	
402	684633	HOLDING BLOCK ASSY 1 7/8" HEIGHT		1	1	1	
404	684635	HOLDING BLOCK ASSY 1 7/8" HEIGHT / W/OFFSET		1	1	1	
408	684606	SCREW CAP BUT HEXS #10-24x3/8		1	1	1	
409	684607	SCREW CAP FL HEXS #8-32x1/2		1	1	1	
410	5001269	SCREW CAP HEXS 1/4-20x1 ZP		1	1	1	
411	684605	SCREW CAP HEXS #10-32x1/2		1	1	1	

From Y-7046 Up to 6-8906	DATE: 01/2014	PAGE: Y2-1854-00

SIDE PANELS - BUS

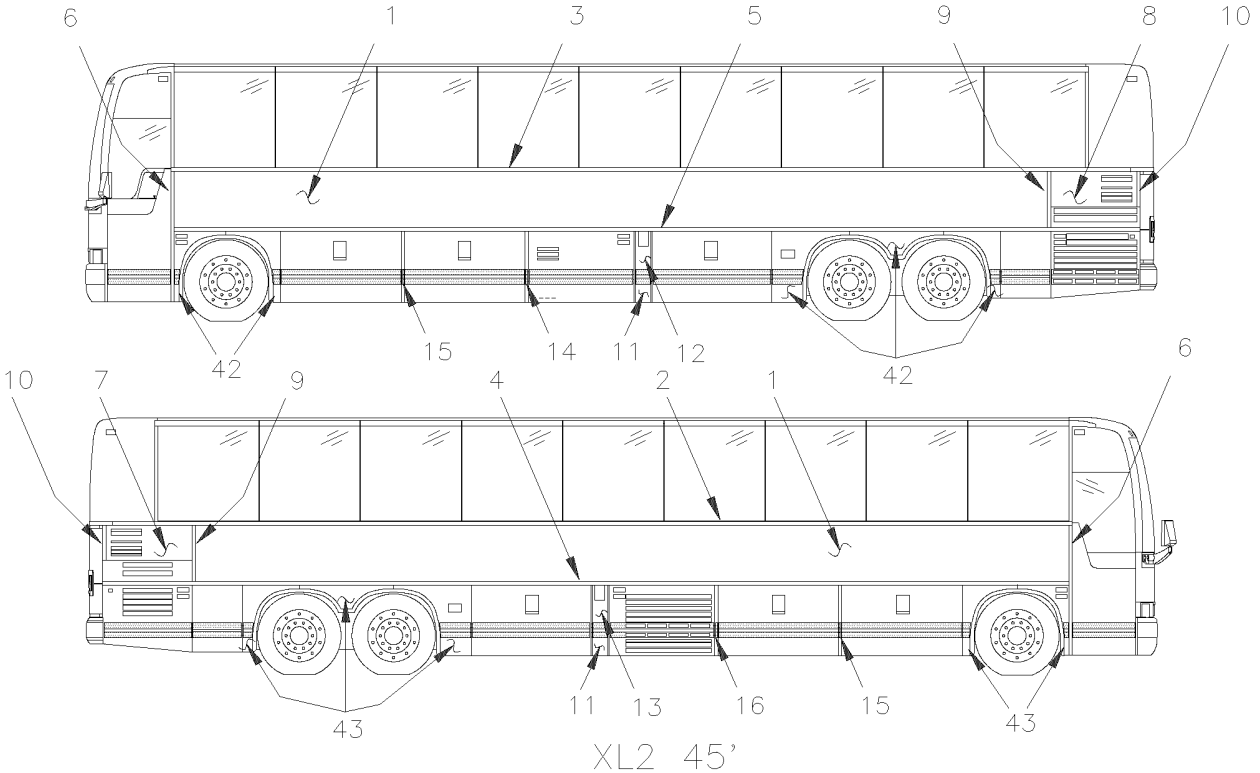

XL2 45'

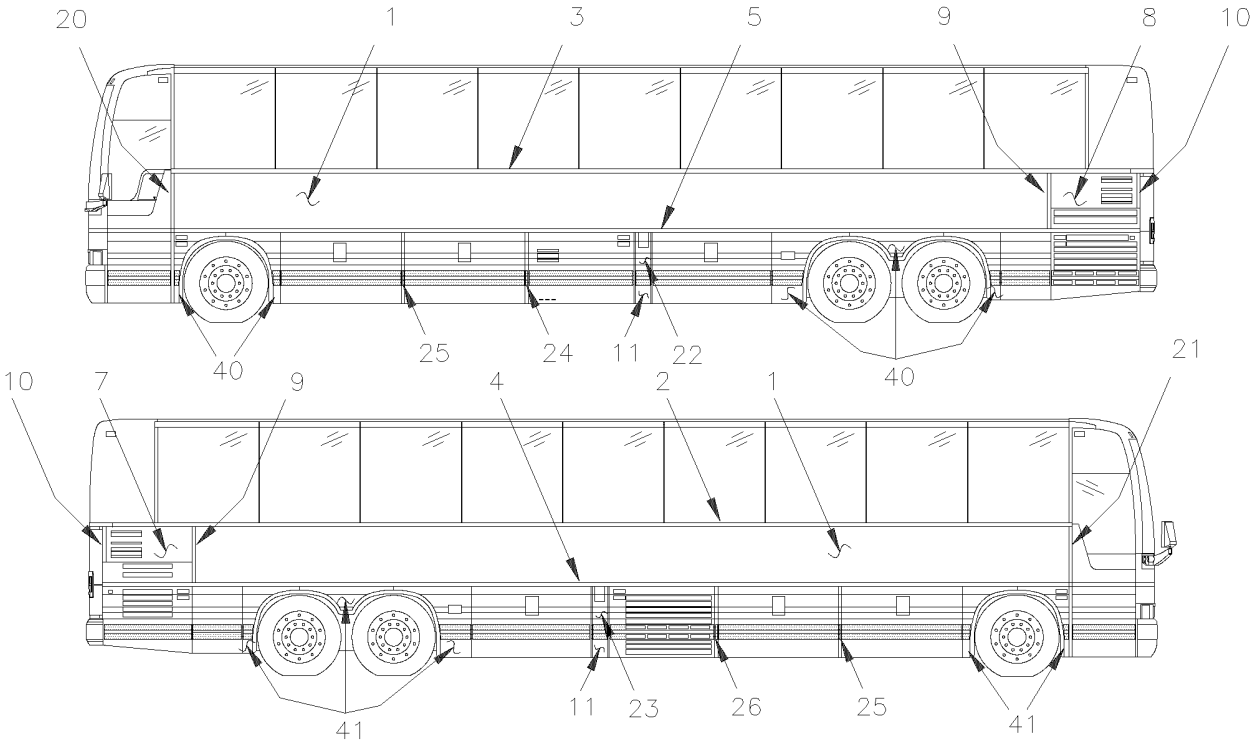

XL2 45' WITH STAINLESS PANELING

From Y-7046 Up to 6-8906	DATE: 01/2014	PAGE: Y2-1854-00
SIDE PANELS - BUS		

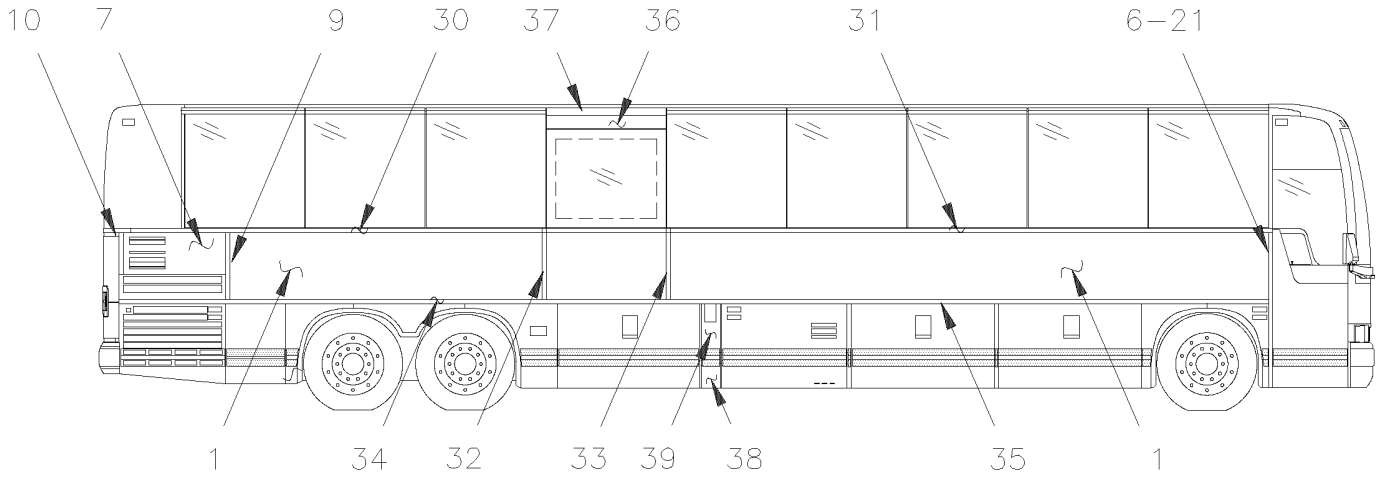

BUS WITH W.C.L.

From Y-7046 Up to 6-8906	DATE: 01/2014	PAGE: Y2-1854-00

SIDE PANELS - BUS

ITEM	PART	DESCRIPTION	XL45	MTH40	MTH45	MTH45S	NOTE
1	970271	STAINLESS STEEL SHEET 759MM X 11392MM	2				
NS	506759	TAPE RUB ADH2 CC POL 1/8" x 1/2" x 100' / BLACK I1C-N-A	1				
NS	506648	TAPE RUB ADH1 CC POL 1/8" x 1/2"x 50' / GREY 2542	1				
2	474514	FINISHING MOULDING UPPER R.H. 12253MM	1				
3	474515	FINISHING MOULDING UPPER L.H. 12253MM	1				
4	474512	FINISHING MOULDING LOWER R.H. 9846MM	1				
5	474513	FINISHING MOULDING LOWER L.H. 9846MM	1				
6	474388	FINISHING MOULDING S.S.	2				
NS	504473	RIVET POP DOME OE 1/8x1/4 SS	12				
6	506869	TAPE RUB ADH2 POL .031" x 1/4" x 300' / BLACK	AR				
6	506785	TAPE RUB ADH2 CC POL 1/16" x 1/4" x 200' / BLACK I1C-N-A	AR				
7	474347	PANEL SUB ASSY AIR INTAKE R.H. O.E.M. / REPLACED BY: 474244	1				
7	475603	PANEL SUB ASSY AIR INTAKE R.H. SERVICE / REPLACED BY: 474244	1				
7	474244	PANEL AIR INTAKE R.H. SERVICE	1				
7	477830	PANEL SUB ASSY AIR INTAKE R.H. / "SPECIAL OPTION" HYDRO QC / REPLACED BY: 477832	1				
7	477832	PANEL AIR INTAKE L.H. / "SPECIAL OPTION" HYDRO QC SERVICE	1				
8	474346	PANEL SUB ASSY AIR INTAKE L.H. O.E.M. / REPLACED BY: 474243	1				
8	475602	PANEL SUB ASSY AIR INTAKE L.H. SERVICE / REPLACED BY: 474243	1				
8	474243	PANEL AIR INTAKE L.H. SERVICE	1				
8	477831	PANEL SUB ASSY AIR INTAKE L.H. / "SPECIAL OPTION" HYDRO QC / REPLACED BY: 477832	1				
8	477832	PANEL AIR INTAKE L.H. / "SPECIAL OPTION" HYDRO QC SERVICE	1				
9	474409	FINISHING MOULDING ALUMINUM 713MM	2				
9	506769	TAPE RUB ADH2 CC POL 1/8" x 1/4" x 60' / BLACK H1CC-N-#14	AR				
10	474387	FINISHING MOULDING S.S. 400MM	2				
NS	683083	ADHESIVE SIKA #252 / BLACK / 600 ml SAUSAGE	AR				
NS	683084	SEALANT SIKA #221 / GREY / 600 ml SAUSAGE	AR				
NS	683097	CLEANER SIKA #205 / CLEAR / 1000ml	AR				
NS	683916	PRIMER SIKA #215 / CLEAR / 1000ml	AR				
11	473130	PANEL, LOWER 200MM X 262MM / S.B.	2				
12	474227	PANEL, L.H. 200MM X 676MM	1				
12	477962	PANEL, L.H. 200MM X 676MM W/OUT FUEL DOOR	1				
13	474284	PANEL, R.H. 200MM X 676MM	1				
14	474318	FINISHING POST / "J" SHAPE	1				
15	474224	FINISHING POST / "U" SHAPE 39MM X 912MM / <> 2 BAG. DOORS	2				
16	474226	FINISHING POST / "J" SHAPE	1				
20	474821	FINISHING MOULDING S.S. / L.H.	1				
21	474820	FINISHING MOULDING S.S. / R.H.	1				
22	474048	PANEL, L.H. 200MM X 676MM / S.B.	1				
22	477963	PANEL, L.H. 200MM X 676MM / S.B. W/OUT FUEL DOOR	1				
23	474049	PANEL, R.H. 200MM X 676MM / S.B.	1				
24	474062	FINISHING POST / "J" SHAPE L.H. / S.B.	1				
25	474054	FINISHING POST / "U" SHAPE 39MM X 912MM / <> 2 BAG. DOORS / S.B.	2				
26	474063	FINISHING POST / "J" SHAPE R.H. / S.B.	1				
30	475061	FINISHING MOULDING UPPER R.H. 4479MM	1				

From Y-7046 Up to 6-8906	DATE: 01/2014	PAGE: Y2-1854-00

SIDE PANELS - BUS

ITEM	PART	DESCRIPTION	XL45	MTH40	MTH45	MTH45S	NOTE
31	475062	FINISHING MOULDING UPPER R.H. 6472MM	1				
32	474946	FINISHING MOULDING / SS / BACKWARD W.C.L. DOOR	1				
33	474945	FINISHING MOULDING / SS / FORWARD W.C.L. DOOR	1				
34	475063	FINISHING MOULDING LOWER R.H. 3462MM	1				
35	475060	FINISHING MOULDING LOWER R.H. 6496MM	1				
36	475065	PANEL ASSY / UPPER W.C.L. DOOR	1				
. NS	474822	. PANEL / UPPER W.C.L. DOOR	1				
. NS	474897	. DRIP MOULDING SS	1				
. NS	5001015	. SCREW TP BDG PH #6x1/2 SS EMN	8				
36	474822	. PANEL / UPPER W.C.L. DOOR	1				
36	474897	. DRIP MOULDING SS	1				
NS	287190	INSULATOR PANEL UPPER DOOR	2				
NS	287189	INSULATOR PANEL UPPER DOOR	1				
37	293269	EXTRUSION ALUMINUM 1287MM Up to 4-8270	1				
37	293699	EXTRUSION ALUMINUM 1287MM From 4-8271	1				
38	474693	PANEL, LOWER 196MM X 262MM	1				
39	474680	PANEL, R.H. 196MM X 676MM	1				
40	Y2-1857-50	**FENDERS L.H. - MTH**					
41	Y2-1857-55	**FENDERS R.H. - MTH**					
42	Y2-1857-05	**FENDER R.H. - BUS W/FLAT PANELING**					
43	Y2-1857-00	**FENDER L.H. - BUS W/FLAT PANELING**					

From Y-7046 Up to 6-8906	DATE: 01/2014	PAGE: Y2-1854-10

WEATHERSTRIP & RETAINER - BUS

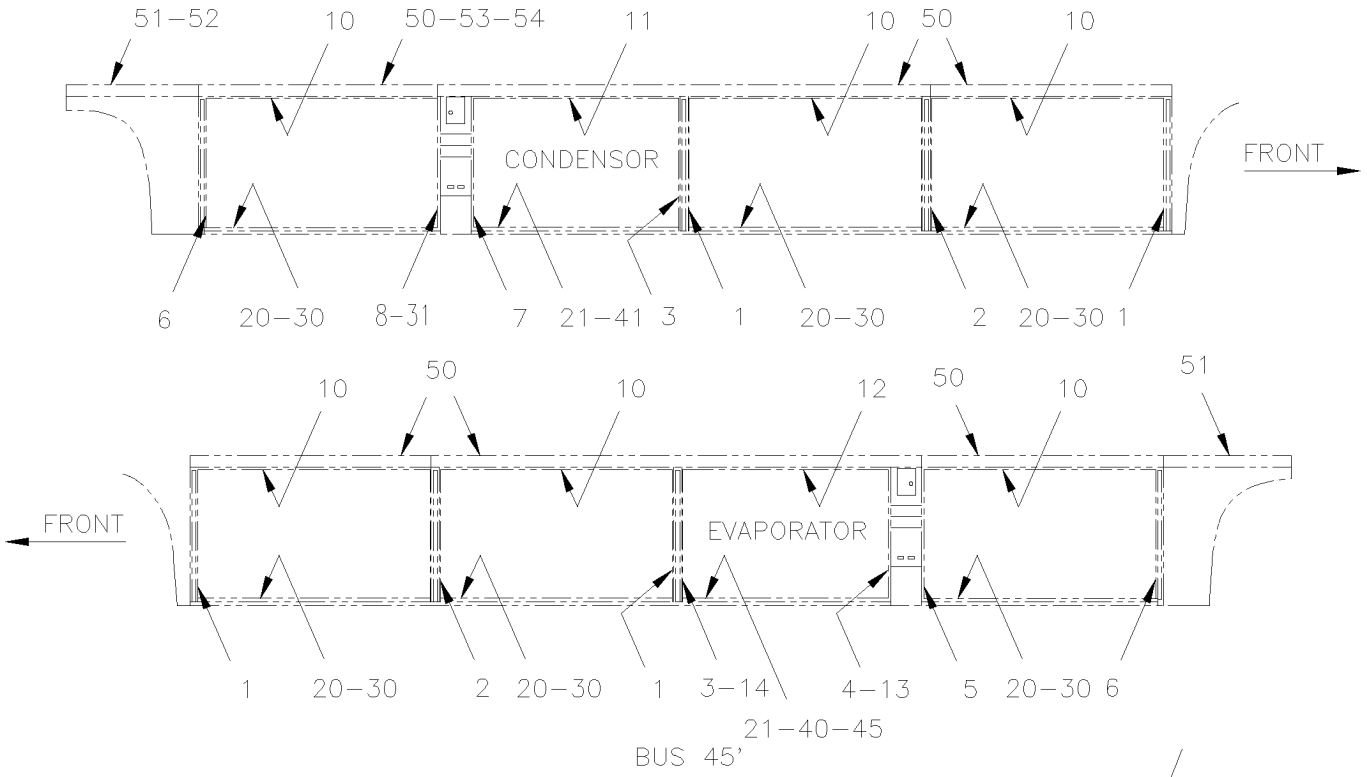

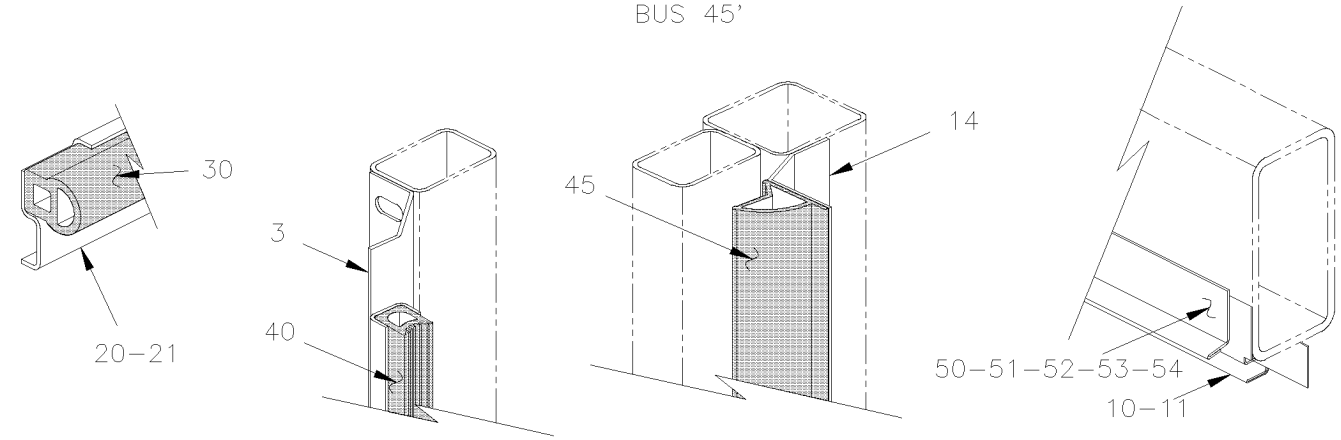

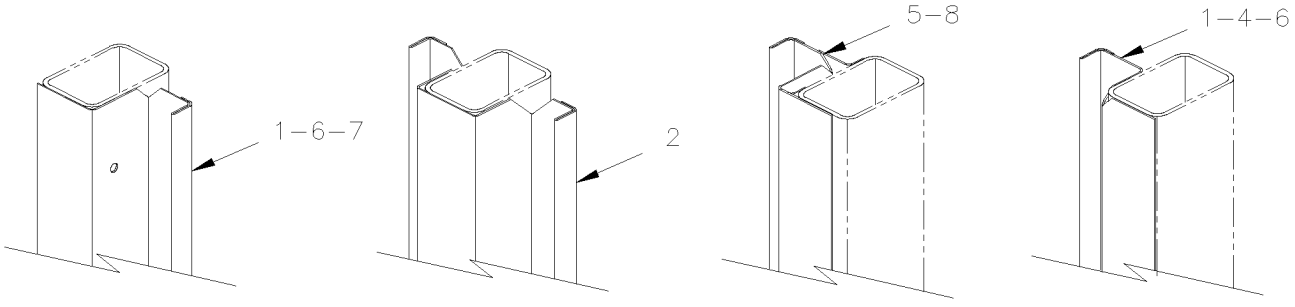

From Y-7046 Up to 6-8906	DATE: 01/2014	PAGE: Y2-1854-10

WEATHERSTRIP & RETAINER - BUS

ITEM	PART	DESCRIPTION	XL45	MTH40	MTH45	MTH45S	NOTE
1	482222	MOULDING / WEATHERSTRIP RETAINER FRONT	4				
2	480979	MOULDING / WEATHERSTRIP RETAINER / DOUBLE <> TWO BAGGAGE DOOR	2				
3	482137	MOULDING / WEATHERSTRIP RETAINER Up to 2-7839	1				
4	481013	MOULDING / WEATHERSTRIP RETAINER 838MM Up to 2-7839	1				
5	481269	MOULDING / WEATHERSTRIP RETAINER 838MM L.H.	1				
6	482824	MOULDING / WEATHERSTRIP RETAINER 838MM	2				
7	481255	MOULDING / WEATHERSTRIP RETAINER 838MM	1				
8	481270	MOULDING / WEATHERSTRIP RETAINER 838MM R.H.	1				
10	473702	MOULDING / WEATHERSTRIP RETAINER 1543MM	6				
11	473701	MOULDING / WEATHERSTRIP RETAINER 1365MM	1				
12	475153	MOULDING / WEATHERSTRIP RETAINER 1365MM Up to 2-7839	1				
12	214683	SEAL DOOR RETAINER / UPPER DOOR From 2-7840	1				
13	214682	SEAL DOOR RETAINER / BACKWARD DOOR From 2-7840	1				
14	214684	SEAL DOOR RETAINER / FORWARD DOOR From 2-7840 / REPLACED BY: 215748	1				
20	483029	MOULDING / WEATHERSTRIP RETAINER 1536MM WELDED TO STRUCTURE	6				
21	483031	MOULDING / WEATHERSTRIP RETAINER 1365MM WELDED TO STRUCTURE	2				
22	480154	. WEATHERSTRIP RUBBER / ADH / RAW MATERIAL Up to 5-8544 / REPLACED BY: 485610	AR				
22	483941	. WEATHERSTRIP RUBBER / ADH / RAW MATERIAL From 5-8545 / REPLACED BY: 485610	AR				
22	485610	. WEATHERSTRIP RUBBER / ADH / RAW MATERIAL	AR				
30	481988	WEATHERSTRIP / W/60" BAGGAGE DOORS / REPLACED BY: 485628	6				
30	485628	WEATHERSTRIP / W/60" BAGGAGE DOORS	6				
30	482330	WEATHERSTRIP / W/60" HINGE BAGGAGE DOOR / REPLACED BY: 485631	1				A
30	485631	WEATHERSTRIP / W/60" HINGE BAGGAGE DOOR	1				
30	480154	. WEATHERSTRIP RUBBER / ADH / RAW MATERIAL Up to 5-8544 / REPLACED BY: 485610	AR				
30	483941	. WEATHERSTRIP RUBBER / ADH / RAW MATERIAL From 5-8545 / REPLACED BY: 485610	AR				
30	485610	. WEATHERSTRIP RUBBER / ADH / RAW MATERIAL	AR				
31	474913	MOULDING / WEATHERSTRIP RETAINER / W/W.C.L.	1				A
40	482096	WEATHERSTRIP / EVAPORATOR DOOR Up to 2-7839 / REPLACED BY: 280152	1				
41	482099	WEATHERSTRIP / CONDENSOR DOOR / REPLACED BY: 280152	1				
41	480009	WEATHERSTRIP / CONDENSOR DOOR	1				
45	483555	WEATHERSTRIP / EVAPORATOR DOOR From 2-7840 / REPLACED BY: 484125	1				
50	473706	DRIP MOULDING / 1535MM / S.B.	6				
51	474060	DRIP MOULDING / 1765MM / S.B.	2				
52	475024	DRIP MOULDING / 1654MM	1				A
53	475025	DRIP MOULDING / 375MM	1				A
54	474799	DRIP MOULDING / 1285MM	1				B
		A) USE WITH W.C.L.					
		B) FIXED AT W.C.L. ENTRANCE DOOR					

From Y-7046 Up to 8-9339	DATE: 01/2014	PAGE: Y2-1854-20
WEATHERSTRIP & RETAINER - MTH		

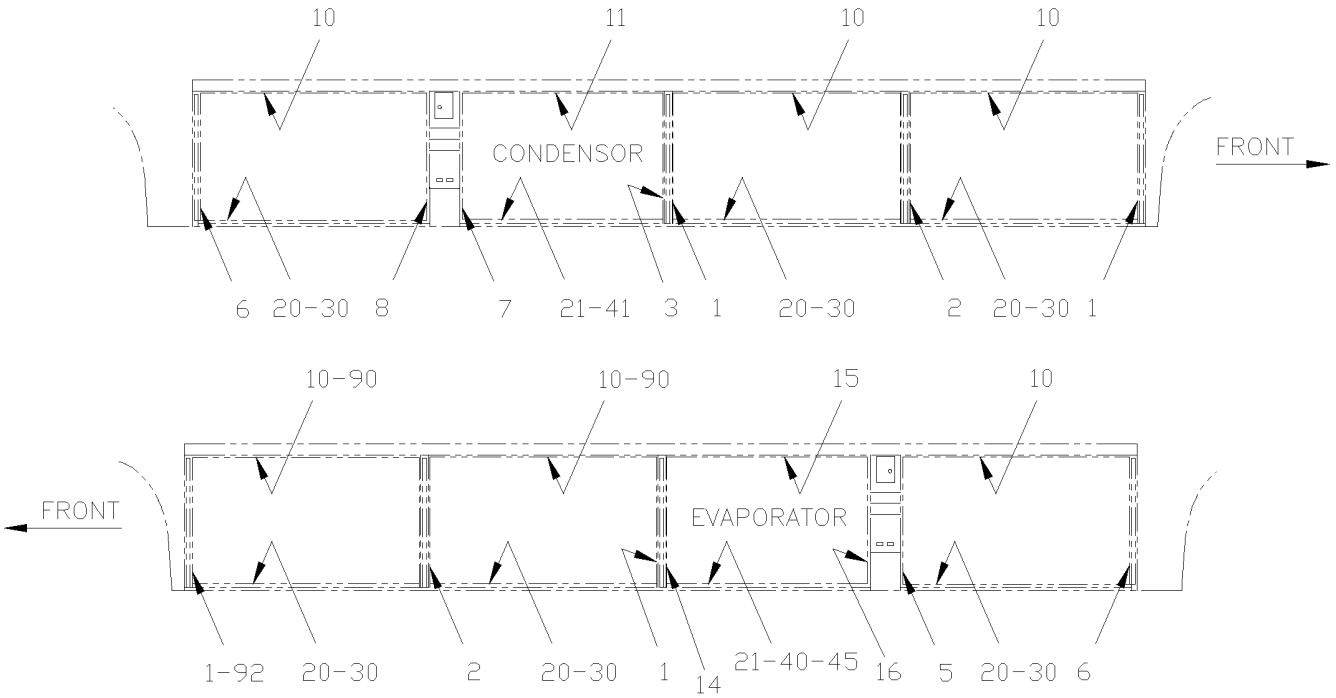

MTH 45' WITH LARGE A/C SYSTEM

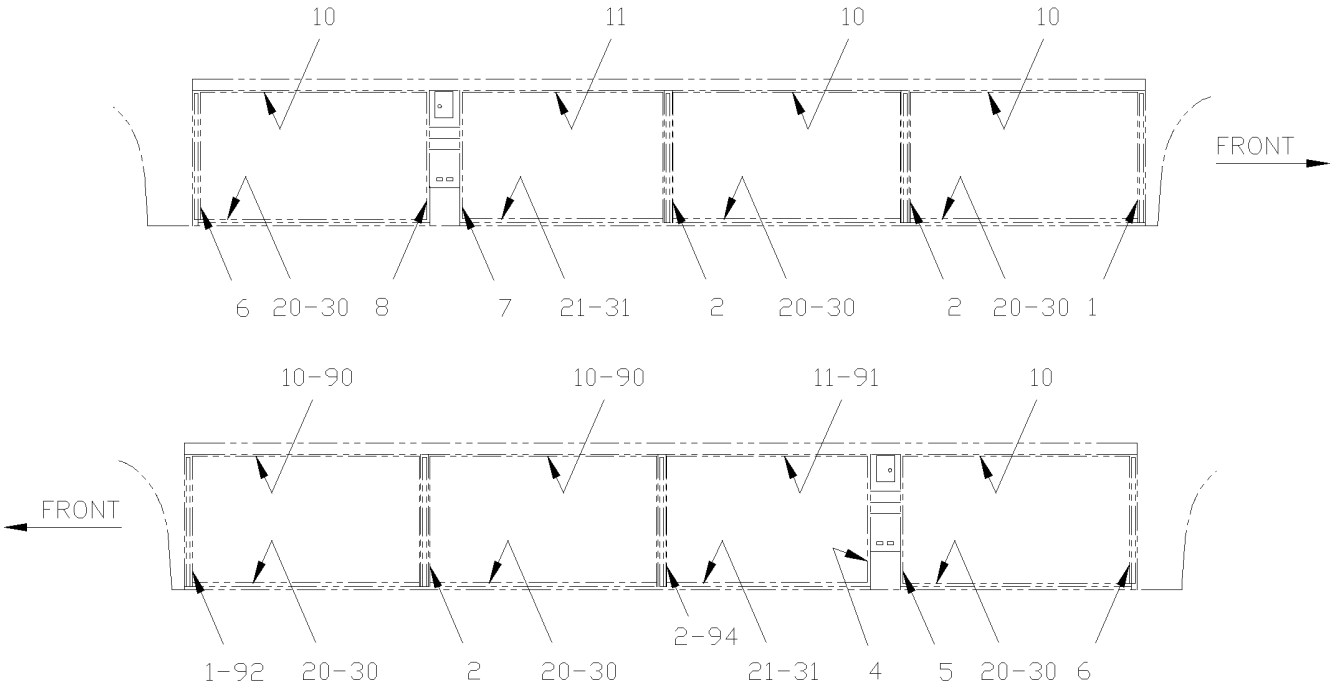

MTH 45' WITH SMALL A/C SYSTEM

From Y-7046 Up to 8-9339	DATE: 01/2014	PAGE: Y2-1854-20

WEATHERSTRIP & RETAINER - MTH

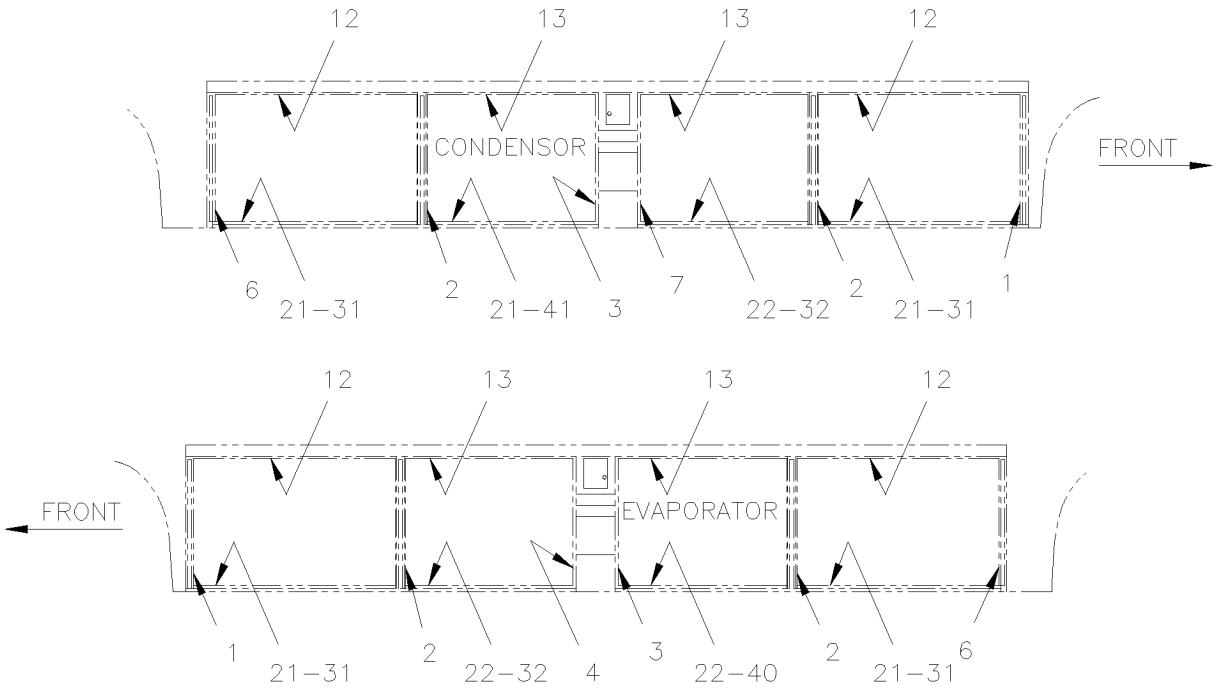

MTH 40' WITH LARGE A/C SYSTEM

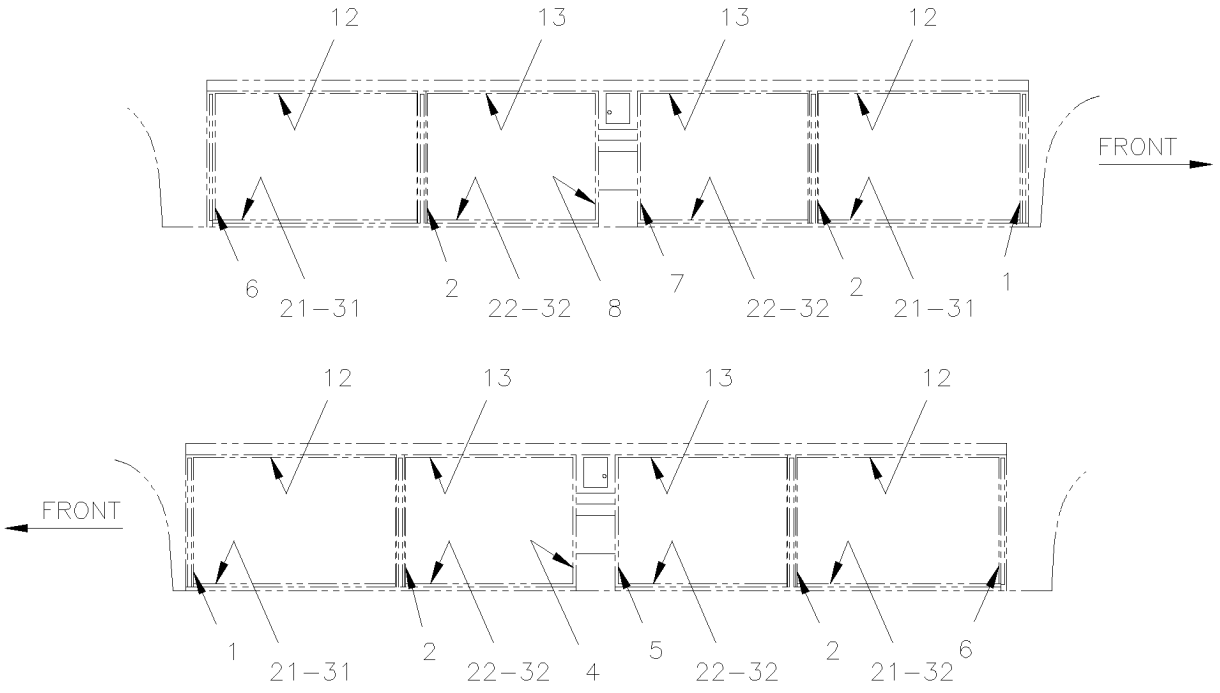

MTH 40' WITH SMALL A/C SYSTEM

From Y-7046 Up to 8-9339	DATE: 01/2014	PAGE: Y2-1854-20

WEATHERSTRIP & RETAINER - MTH

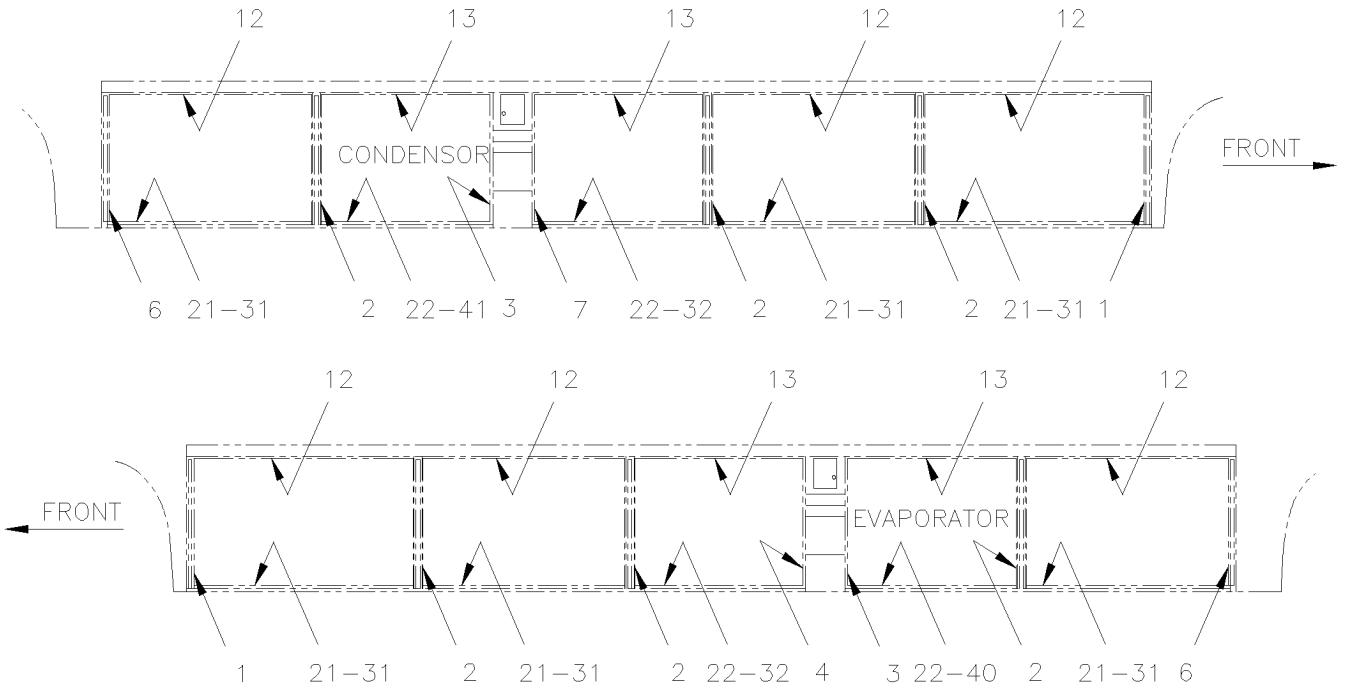

MTH 45' ENT. WITH LARGE A/C SYSTEM

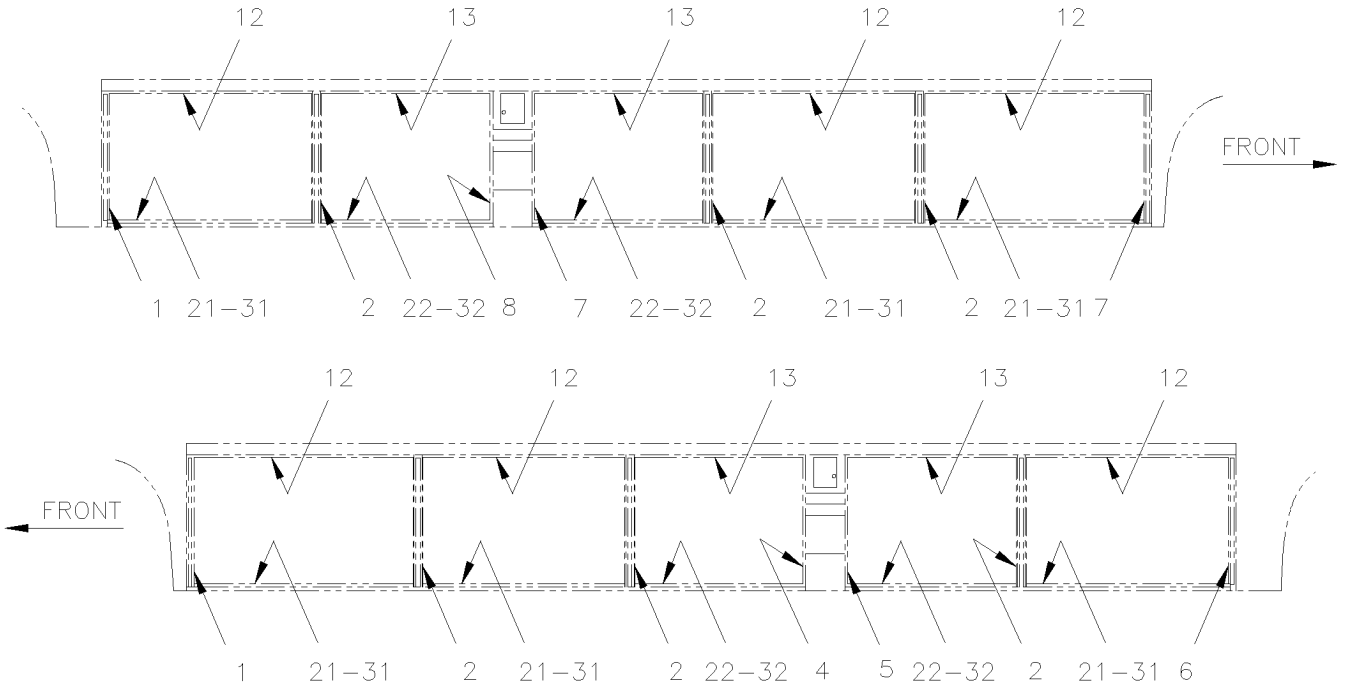

MTH 45' ENT. WITH SMALL A/C SYSTEM

From Y-7046 Up to 8-9339	DATE: 01/2014	PAGE: Y2-1854-20
WEATHERSTRIP & RETAINER - MTH		

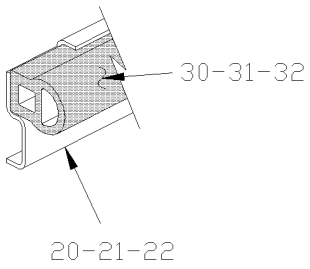

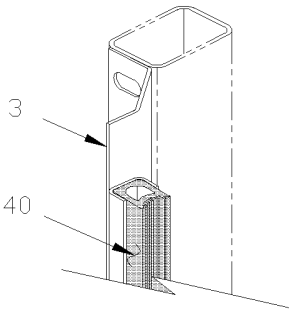

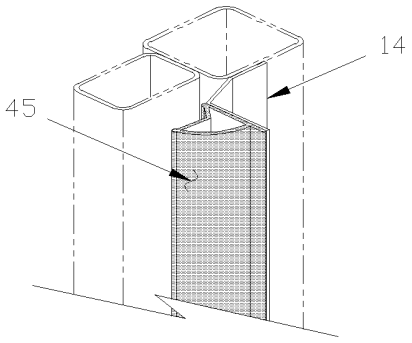

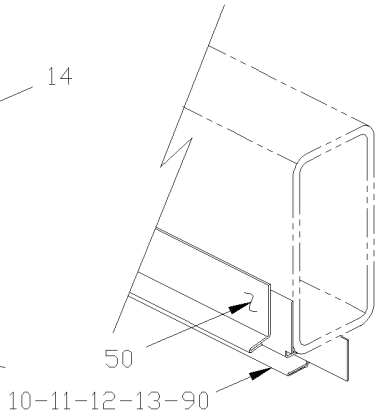

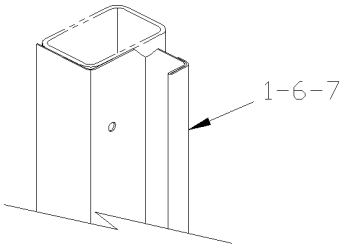

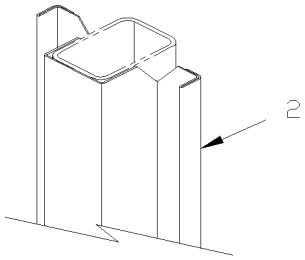

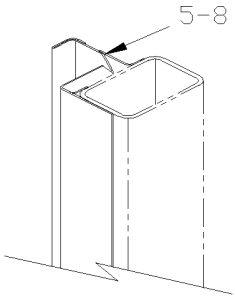

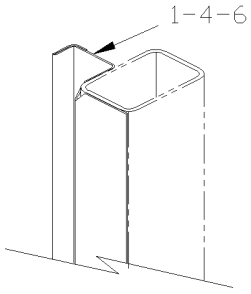

From Y-7046 Up to 8-9339	DATE: 01/2014	PAGE: Y2-1854-20

WEATHERSTRIP & RETAINER - MTH

ITEM	PART	DESCRIPTION	XL45	MTH40	MTH45	MTH45S	NOTE
1	482222	MOULDING / WEATHERSTRIP RETAINER FRONT		2		2	
1	482222	MOULDING / WEATHERSTRIP RETAINER FRONT			4		
2	480979	MOULDING / WEATHERSTRIP RETAINER / DOUBLE <> TWO BAGGAGE DOOR Up to 5-8813		4			
2	480979	MOULDING / WEATHERSTRIP RETAINER / DOUBLE <> TWO BAGGAGE DOOR			2		
2	480979	MOULDING / WEATHERSTRIP RETAINER / DOUBLE <> TWO BAGGAGE DOOR				6	
3	482137	MOULDING / WEATHERSTRIP RETAINER		1		1	
3	483709	MOULDING / WEATHERSTRIP RETAINER / W/FRONT "SLIDE-OUT" From 2-7871			1		
4	481013	MOULDING / WEATHERSTRIP RETAINER 838MM		1		1	
5	481269	MOULDING / WEATHERSTRIP RETAINER 838MM L.H.		1	1	1	
6	482824	MOULDING / WEATHERSTRIP RETAINER 838MM		2	2	2	
7	481255	MOULDING / WEATHERSTRIP RETAINER 838MM		1	1	1	
8	481270	MOULDING / WEATHERSTRIP RETAINER 838MM R.H.		1	1	1	
10	473702	MOULDING / WEATHERSTRIP RETAINER 1543MM			6		
11	473701	MOULDING / WEATHERSTRIP RETAINER 1365MM Up to 2-7763			1		
11	475153	MOULDING / WEATHERSTRIP RETAINER 1365MM From 2-7764			1		
12	473704	MOULDING / WEATHERSTRIP RETAINER 1371MM Up to 5-8813		4			
12	473704	MOULDING / WEATHERSTRIP RETAINER 1371MM				6	
13	473703	MOULDING / WEATHERSTRIP RETAINER 1155MM		4		4	
13	474869	MOULDING / WEATHERSTRIP RETAINER 990MM				1	A
14	482137	MOULDING / WEATHERSTRIP RETAINER Up to 2-7763			1		
14	214684	SEAL DOOR RETAINER / FORWARD DOOR From 2-7764 / REPLACED BY: 215748			1		
15	473701	MOULDING / WEATHERSTRIP RETAINER 1365MM Up to 2-7763			1		
15	214683	SEAL DOOR RETAINER / UPPER DOOR From 2-7764			1		
16	481013	MOULDING / WEATHERSTRIP RETAINER 838MM Up to 2-7763			1		
16	214682	SEAL DOOR RETAINER / BACKWARD DOOR From 2-7764			1		
20	483029	MOULDING / WEATHERSTRIP RETAINER 1536MM WELDED TO STRUCTURE			1		
21	483031	MOULDING / WEATHERSTRIP RETAINER 1365MM WELDED TO STRUCTURE Up to 5-8813		1			
21	483031	MOULDING / WEATHERSTRIP RETAINER 1365MM WELDED TO STRUCTURE			1		
21	483031	MOULDING / WEATHERSTRIP RETAINER 1365MM WELDED TO STRUCTURE				1	
21	483711	MOULDING / WEATHERSTRIP RETAINER 1326MM WELDED TO STRUCTURE Up to 5-8813		1			B
22	483030	MOULDING / WEATHERSTRIP RETAINER 1149MM WELDED TO STRUCTURE		1		1	
22	483693	MOULDING / WEATHERSTRIP RETAINER 1107MM WELDED TO STRUCTURE Up to 5-8813		1			B
30	481988	WEATHERSTRIP / W/60" BAGGAGE DOORS / REPLACED BY: 485628			6		
30	485628	WEATHERSTRIP / W/60" BAGGAGE DOORS			6		
30	482330	WEATHERSTRIP / W/60" HINGE BAGGAGE DOOR / REPLACED BY: 485631			AR		
30	485631	WEATHERSTRIP / W/60" HINGE BAGGAGE DOOR			AR		
31	481033	WEATHERSTRIP / W/53" BAGGAGE DOORS Up to 5-8813 / REPLACED BY: 485635		4			
		A) USE WITH 38" BAGGAGE DOOR					
		B) WITH "SLIDE OUT"					

From Y-7046 Up to 8-9339	DATE: 01/2014	PAGE: Y2-1854-20

WEATHERSTRIP & RETAINER - MTH

ITEM	PART	DESCRIPTION	XL45	MTH40	MTH45	MTH45S	NOTE
31	485635	WEATHERSTRIP / W/53" BAGGAGE DOORS		4			
31	481033	WEATHERSTRIP / W/53" BAGGAGE DOORS / REPLACED BY: 485635			2		
31	485635	WEATHERSTRIP / W/53" BAGGAGE DOORS			2		
31	481033	WEATHERSTRIP / W/53" BAGGAGE DOORS / REPLACED BY: 485635				6	
31	485635	WEATHERSTRIP / W/53" BAGGAGE DOORS				6	
31	483462	WEATHERSTRIP / W/53" HINGE BAGGAGE DOOR / REPLACED BY: 485632		AR	AR	AR	
31	485632	WEATHERSTRIP / W/53" HINGE BAGGAGE DOOR		AR	AR	AR	
32	482462	WEATHERSTRIP / W/45" BAGGAGE DOORS Up to 5-8813 / REPLACED BY: 485630		4			
32	485630	WEATHERSTRIP / W/45" BAGGAGE DOORS		4		4	
32	483692	WEATHERSTRIP / W/45" HINGE BAGGAGE DOOR Up to 5-8813 / REPLACED BY: 485633		AR		AR	
33	480154	. WEATHERSTRIP RUBBER / ADH / RAW MATERIAL Up to 5-8844 / REPLACED BY: 485610		AR	AR	AR	
33	483941	. WEATHERSTRIP RUBBER / ADH / RAW MATERIAL From 5-8545 / REPLACED BY: 485610		AR	AR	AR	
33	485610	. WEATHERSTRIP RUBBER / ADH / RAW MATERIAL		AR	AR	AR	
40	481163	WEATHERSTRIP / EVAPORATOR DOOR / REPLACED BY: 280152		1		1	
40	482096	WEATHERSTRIP / EVAPORATOR DOOR Up to 2-7763 / REPLACED BY: 280152			1		
41	482099	WEATHERSTRIP / CONDENSOR DOOR / REPLACED BY: 280152		1	1	1	
41	480009	WEATHERSTRIP / CONDENSOR DOOR		1	1	1	
45	483555	WEATHERSTRIP / EVAPORATOR DOOR From 2-7764 / REPLACED BY: 484125			1		
50	Y2-1854-50	**SIDE PANELS - MTH**					
90	475246	MOULDING / WEATHERSTRIP RETAINER From 2-7764 Up to 3-8109			1		C
90	475767	MOULDING / WEATHERSTRIP RETAINER 1495MM From 3-8110			1		C
90	478265	MOULDING / WEATHERSTRIP RETAINER 1488MM From OPTION			6		C,E
91	475265	MOULDING / WEATHERSTRIP RETAINER 1320MM From 2-7764			1		D
92	475297	MOULDING / WEATHERSTRIP RETAINER From 2-7764 Up to 3-8109			1		C
92	476077	MOULDING / WEATHERSTRIP RETAINER From 3-8110			1		C
94	475272	MOULDING / WEATHERSTRIP RETAINER From 2-7764 Up to 3-8109			1		B
94	475764	MOULDING / WEATHERSTRIP RETAINER From 3-8110			1		B
		B) WITH "SLIDE OUT"					
		C) WITH BAGGAGE DOOR WITH HINGE FOR "SLIDE-OUT"					
		D) WITH BAGGAGE DOOR WITH HINGE FOR "SLIDE-OUT" AND SMALL A/C					
		E) WITH 6 DOORS HINGED 60" FOR SLIDE OUT					

From Y-7046 Up to 8-9339	DATE: 01/2014	PAGE: Y2-1854-50

SIDE PANELS - MTH

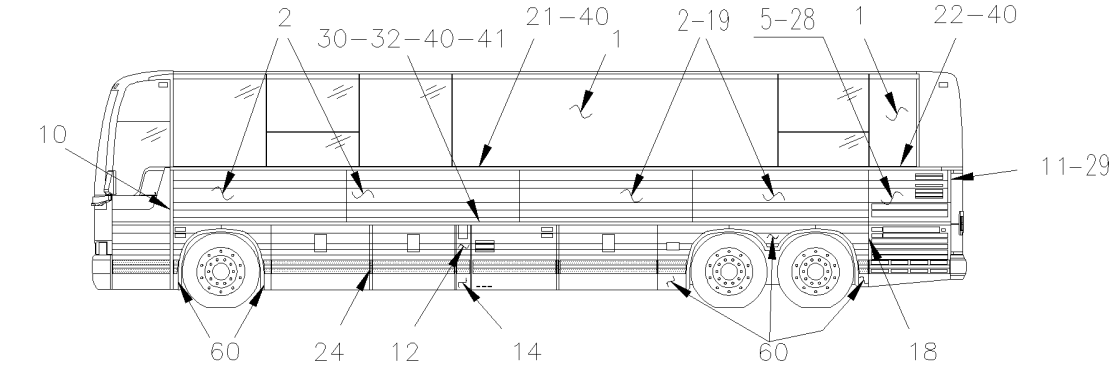

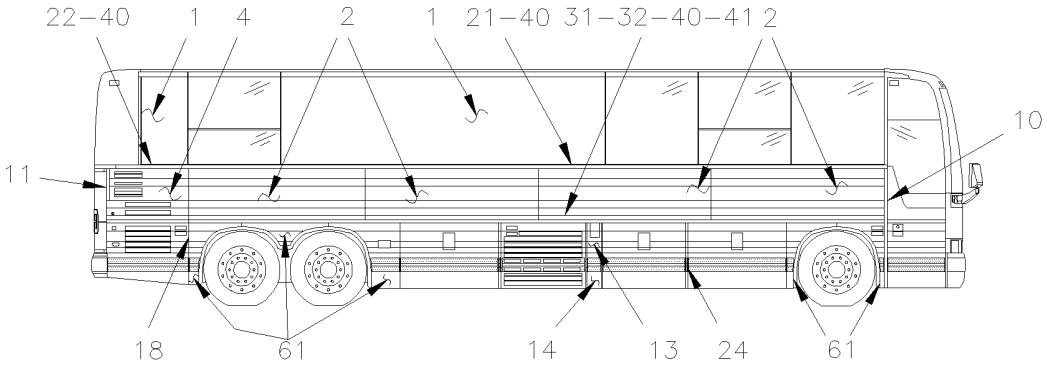

MTH. 40'

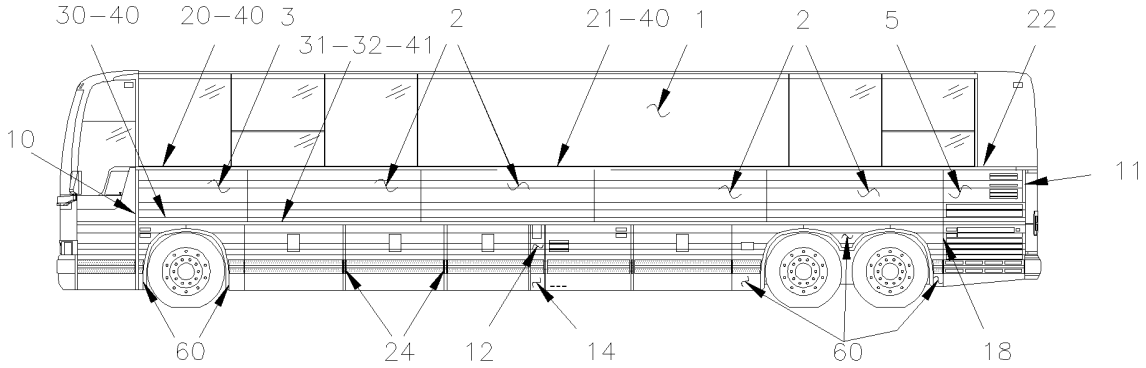

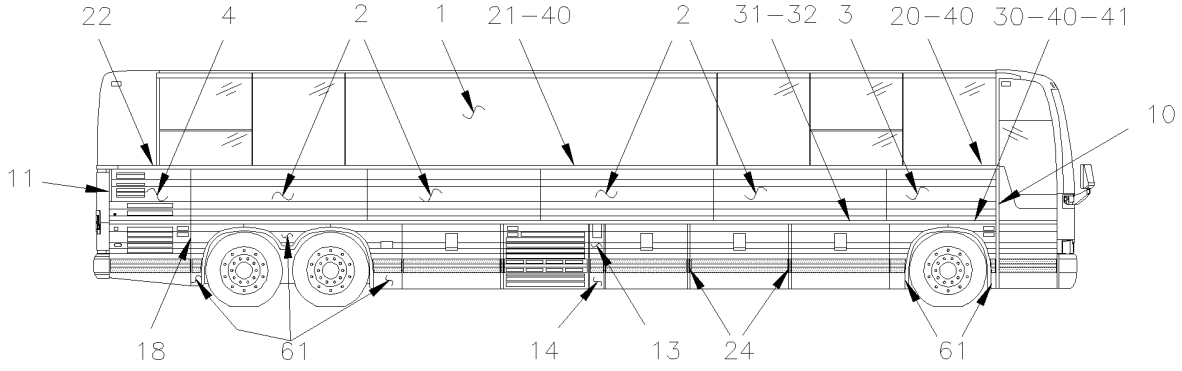

MTH 45' ENT.

From Y-7046 Up to 8-9339	DATE: 01/2014	PAGE: Y2-1854-50

SIDE PANELS - MTH

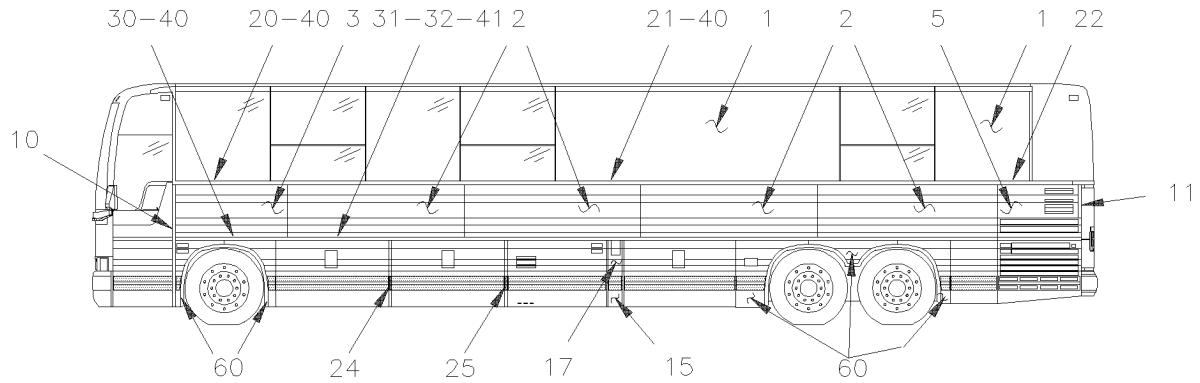

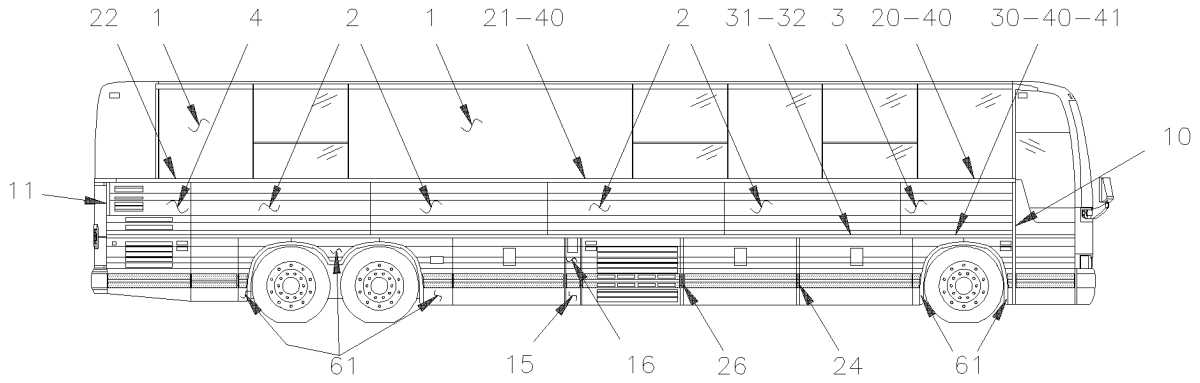

MTH. 45'

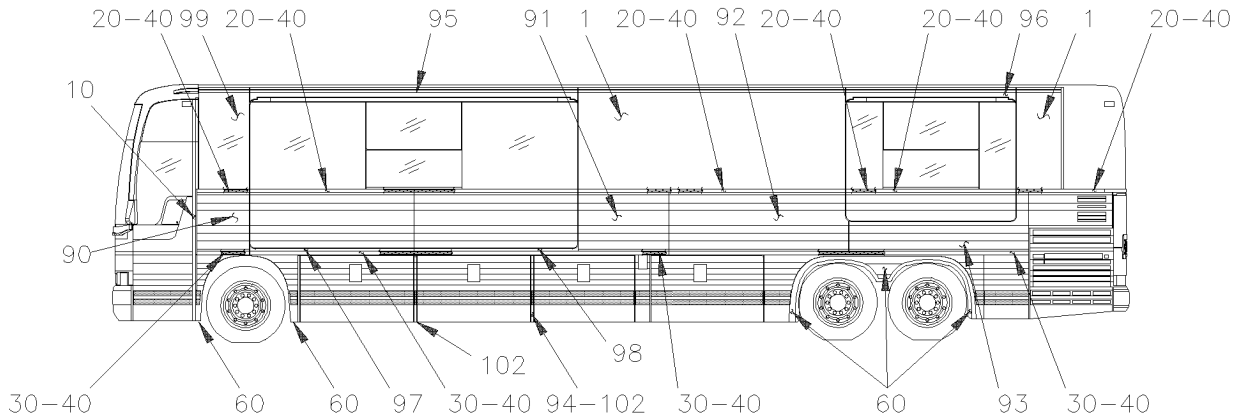

MTH. 45' WITH "SLIDE−OUT"
UP TO 3−8164

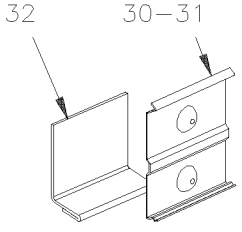

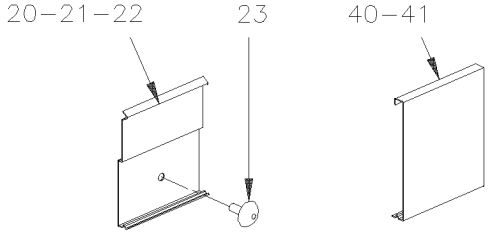

From Y-7046 Up to 8-9339	DATE: 01/2014	PAGE: Y2-1854-50

SIDE PANELS - MTH

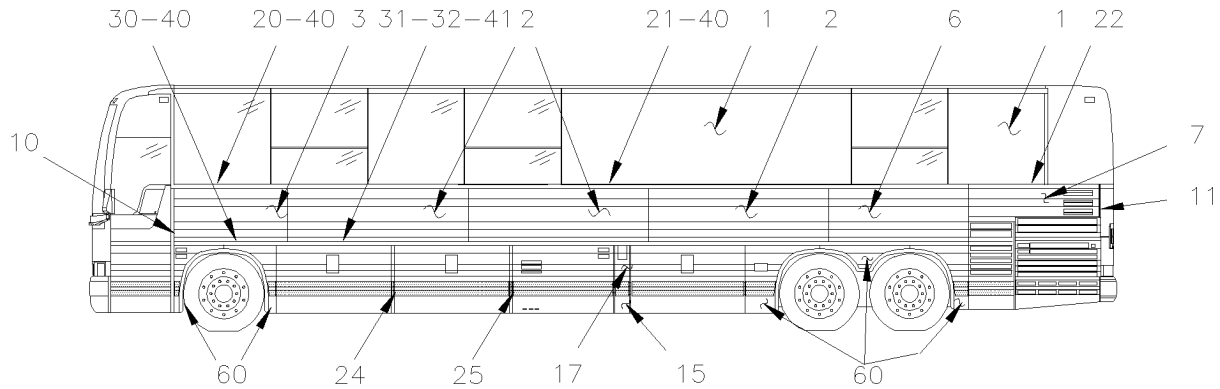

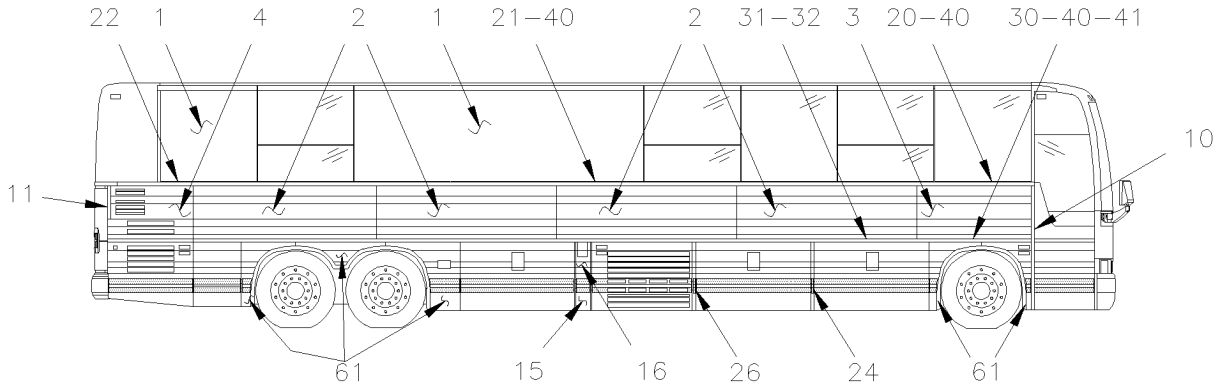

MTH. 45'

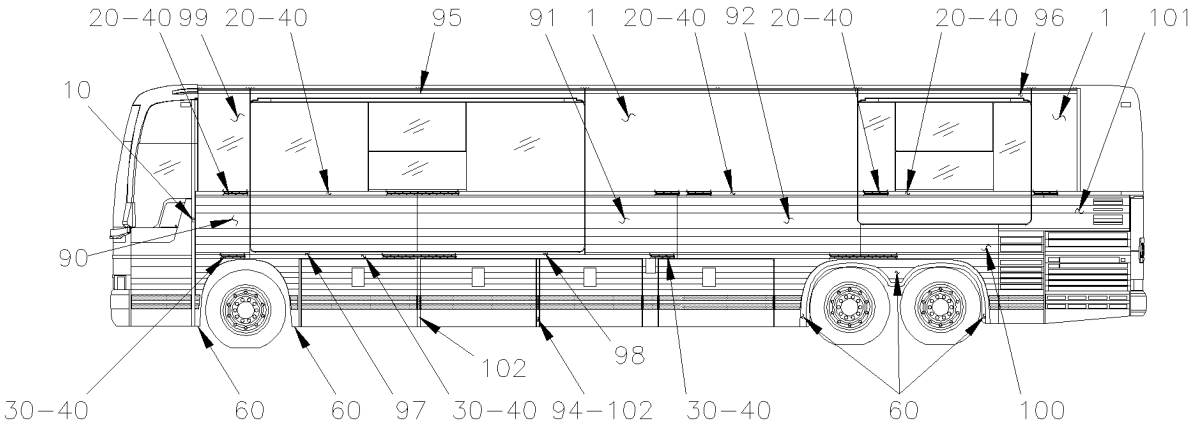

MTH. 45' WITH "SLIDE−OUT"
FROM 4−8165

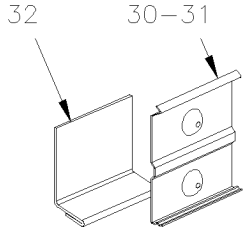

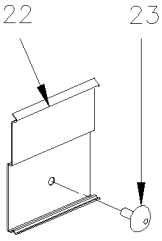

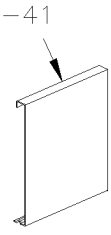

From Y-7046 Up to 8-9339	DATE: 01/2014	PAGE: Y2-1854-50

SIDE PANELS - MTH

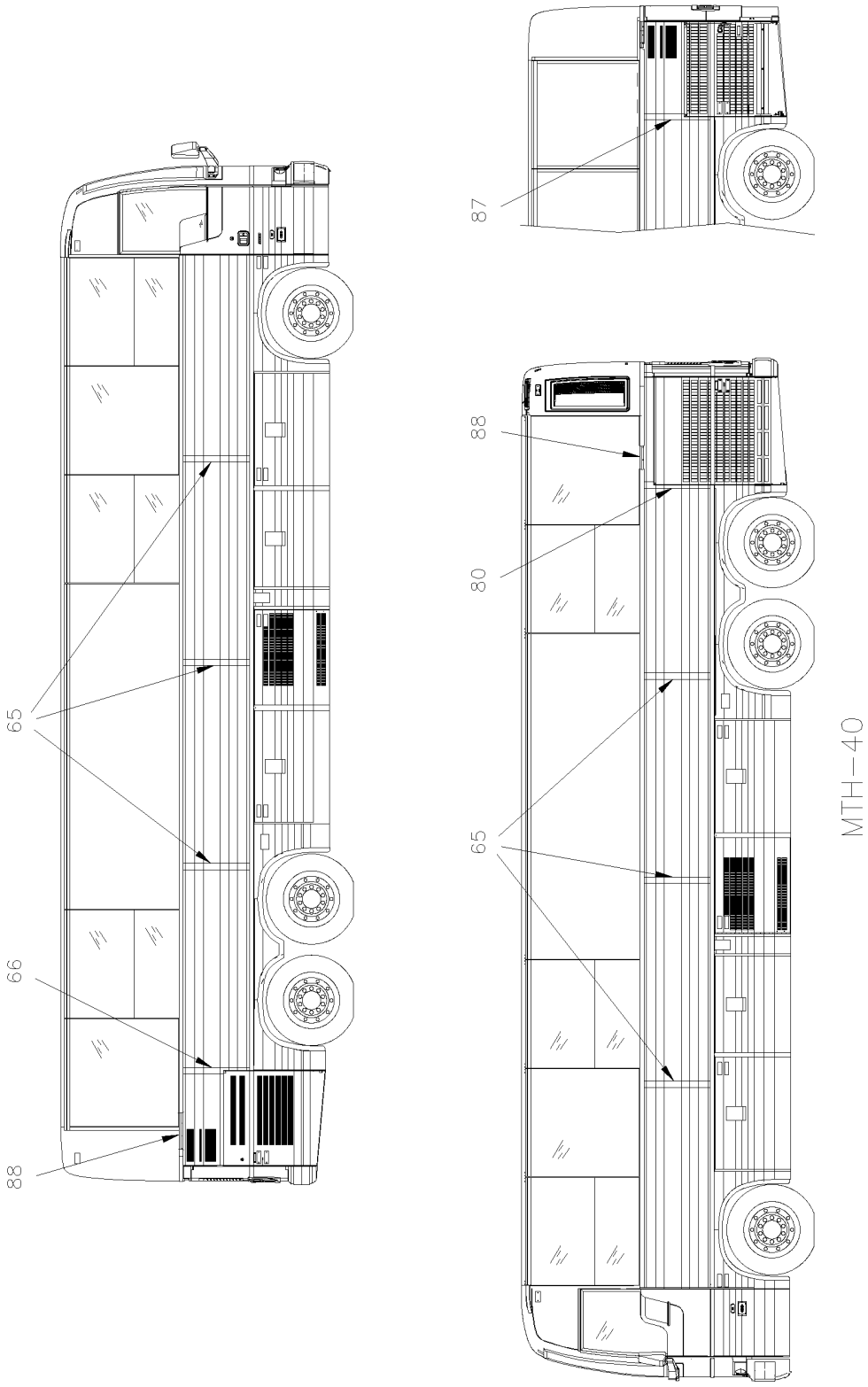

From Y-7046 Up to 8-9339	DATE: 01/2014	PAGE: Y2-1854-50

SIDE PANELS - MTH

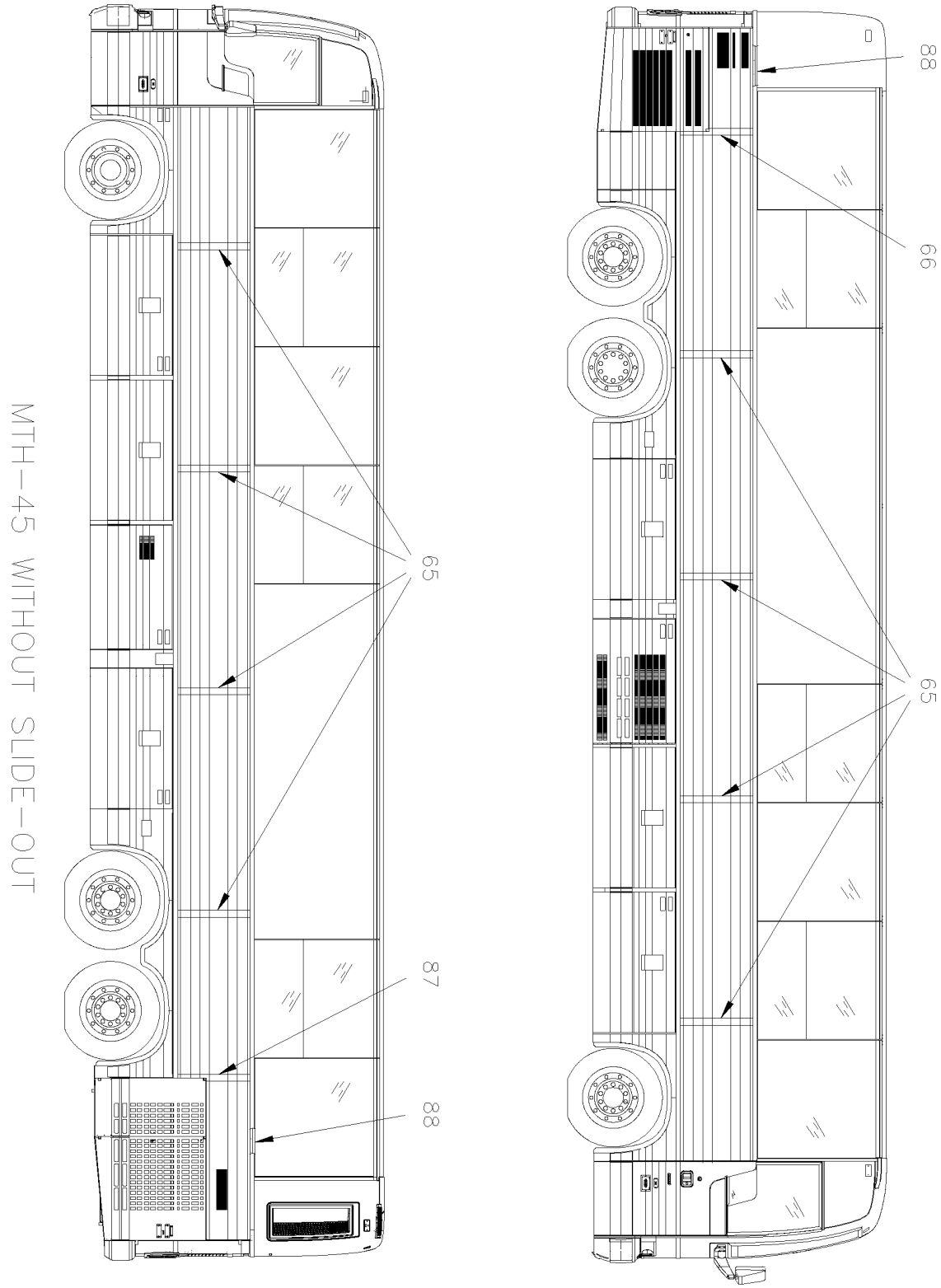

From Y-7046 Up to 8-9339	DATE: 01/2014	PAGE: Y2-1854-50

SIDE PANELS - MTH

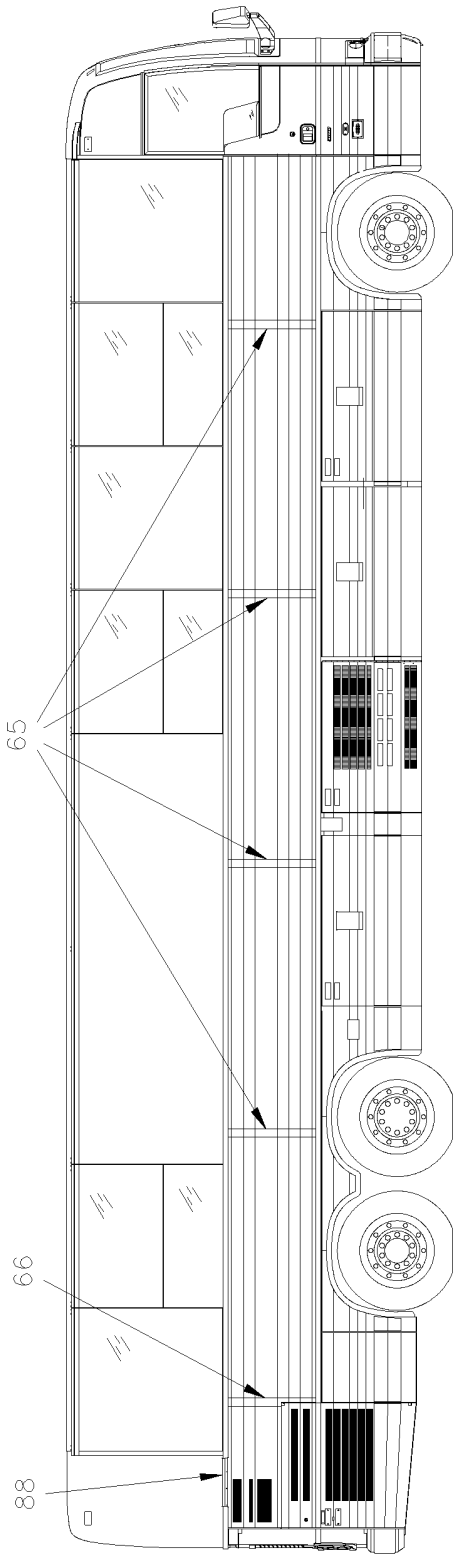

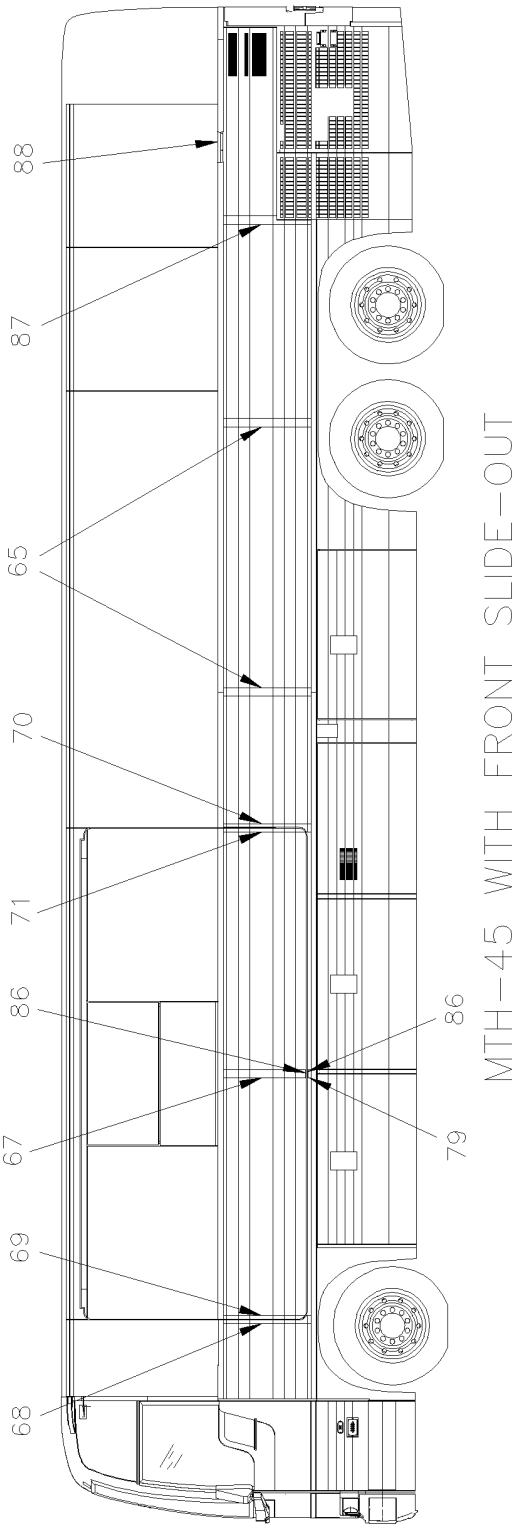

From Y-7046 Up to 8-9339	DATE: 01/2014	PAGE: Y2-1854-50
SIDE PANELS - MTH		

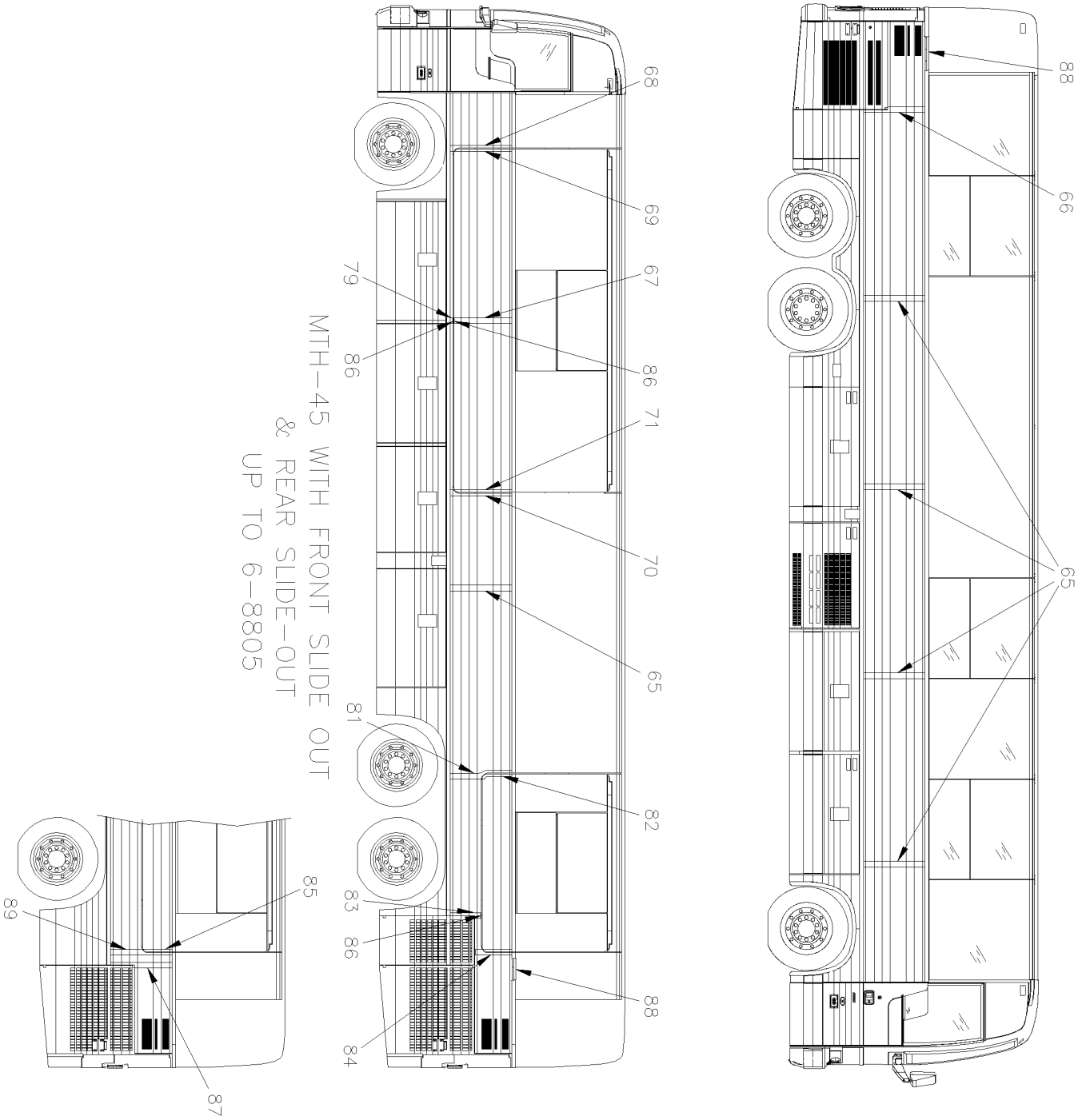

From Y-7046 Up to 8-9339	DATE: 01/2014	PAGE: Y2-1854-50

SIDE PANELS - MTH

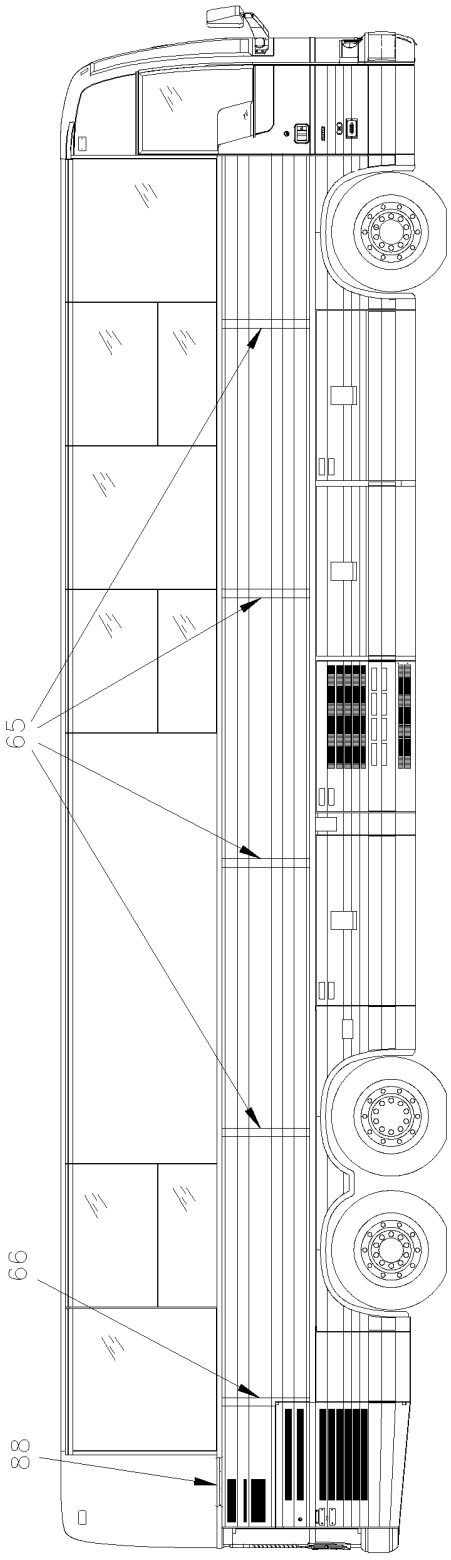

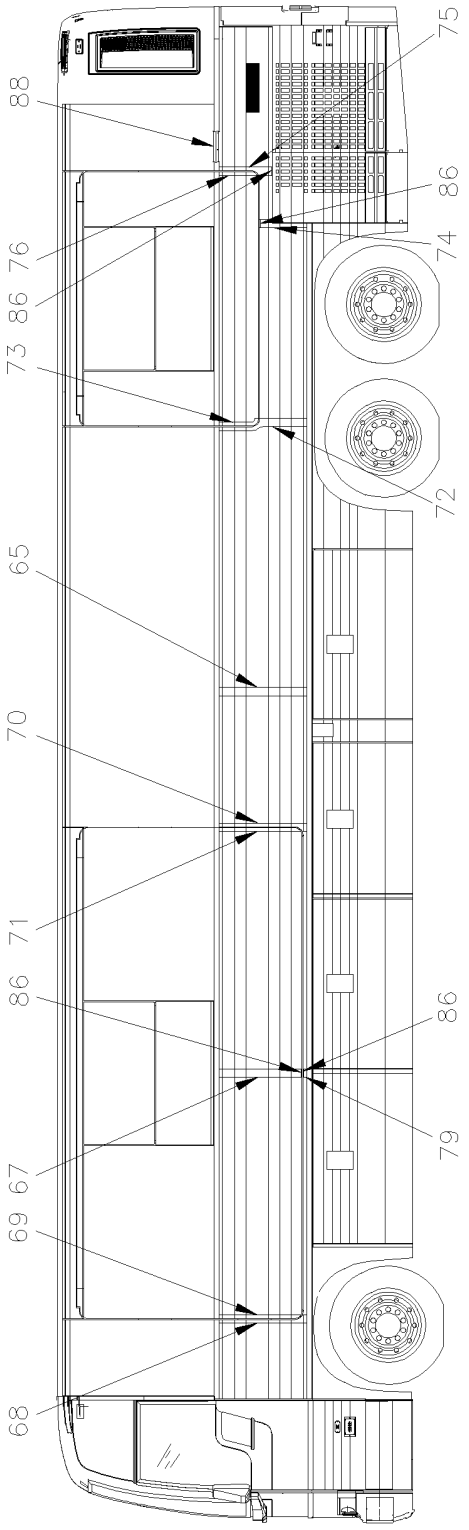

MTH-45 WITH FRONT SLIDE-OUT
& 7.5' REAR SLIDE-OUT
FROM 6-8806

From Y-7046 Up to 8-9339	DATE: 01/2014	PAGE: Y2-1854-50
SIDE PANELS - MTH		

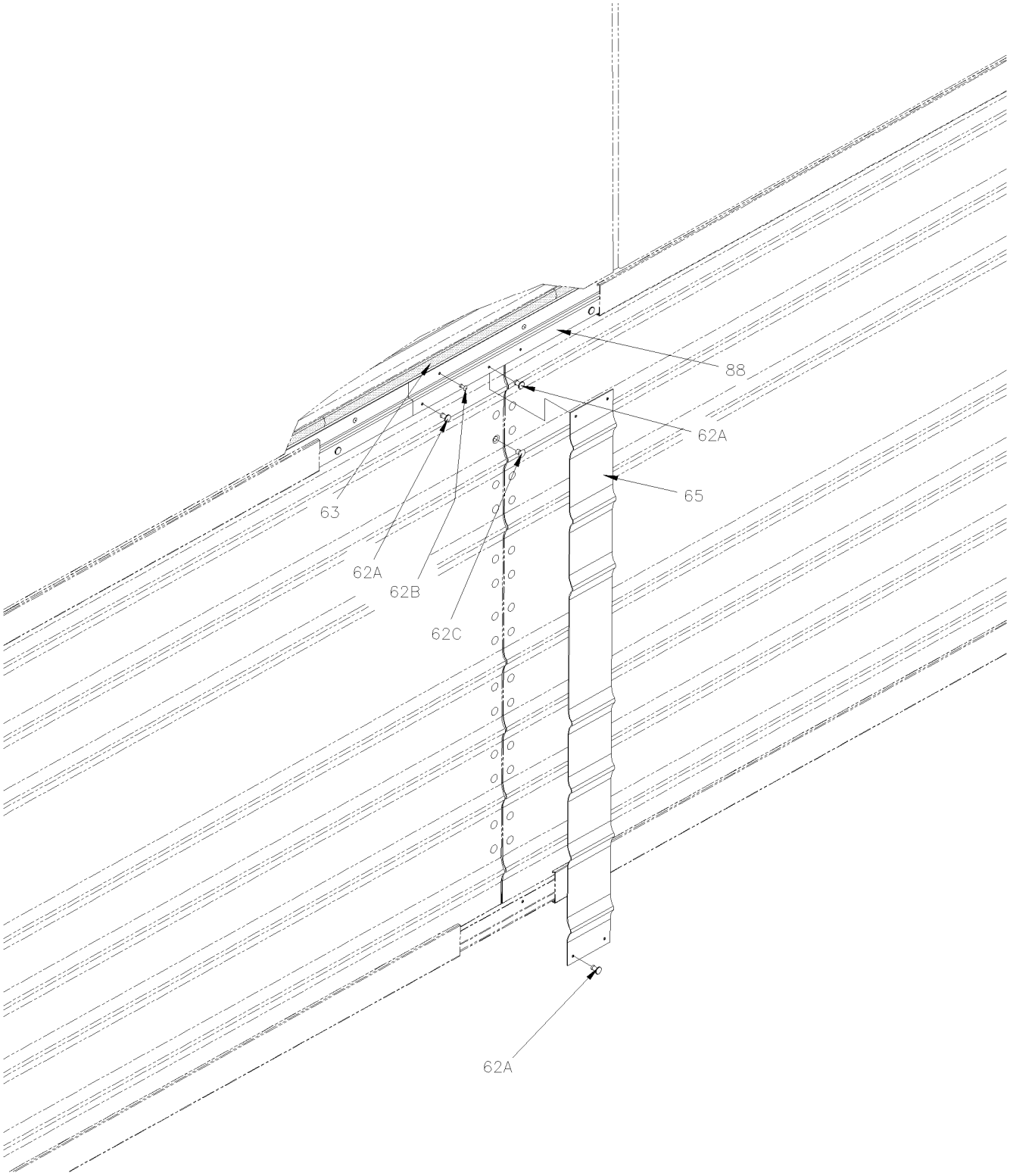

From Y-7046 Up to 8-9339	DATE: 01/2014	PAGE: Y2-1854-50

SIDE PANELS - MTH

ITEM	PART	DESCRIPTION	XL45	MTH40	MTH45	MTH45S	NOTE
1	474315	UPPER PANEL / MTH-83" 489.3MM Up to Y-7128		AR	AR		
1	474567	UPPER PANEL / MTH-83" 792MM Up to Y-7128		AR	AR		
1	474275	UPPER PANEL / MTH-83" 1287.4MM Up to Y-7128		AR	AR		
1	474180	UPPER PANEL / MTH-83" 2582.8MM Up to Y-7128		AR	AR		
1	474566	UPPER PANEL / MTH-83" 3078MM Up to Y-7128		AR	AR		
1	474179	UPPER PANEL / MTH-83" 3878.2MM Up to Y-7128		AR	AR		
1	474568	UPPER PANEL / MTH-83" 4373MM Up to Y-7128		AR	AR		
1	474314	UPPER PANEL / MTH-83" 4676.3MM Up to Y-7128		AR	AR		
1	474181	UPPER PANEL / MTH-83" 5176.6MM Up to Y-7128		AR	AR		
1	474421	UPPER PANEL / MTH-83" 6469MM Up to Y-7128		AR	AR		
1	475011	UPPER PANEL / MTH-86" & 89" 96MM		AR	AR	AR	
1	474660	UPPER PANEL / MTH-86" & 89" 195.2MM		AR	AR	AR	
1	476541	UPPER PANEL / MTH-86" & 89" 215MM		AR	AR	AR	
1	475479	UPPER PANEL / MTH-86" & 89" 271.4MM		AR	AR	AR	
1	475027	UPPER PANEL / MTH-86" & 89" 310MM		AR	AR	AR	
1	474851	UPPER PANEL / MTH-86" & 89" 328.6MM		AR	AR	AR	
1	475040	UPPER PANEL / MTH-86" & 89" 340.5MM		AR	AR	AR	
1	474655	UPPER PANEL / MTH-86" & 89" 399.5MM		AR	AR	AR	
1	474732	UPPER PANEL / MTH-86" & 89" 414MM		AR	AR	AR	
1	474591	UPPER PANEL / MTH-86" & 89" 423.8MM		AR	AR	AR	
1	475110	UPPER PANEL / MTH-86" & 89" 433.3MM		AR	AR	AR	
1	474465	UPPER PANEL / MTH-86" & 89" 489.3MM		AR	AR	AR	
1	475003	UPPER PANEL / MTH-86" & 89" 500MM		AR	AR	AR	
1	474990	UPPER PANEL / MTH-86" & 89" 500MM		AR	AR	AR	
1	475408	UPPER PANEL / MTH-86" & 89" 579.4MM		AR	AR	AR	
1	474654	UPPER PANEL / MTH-86" & 89" 589.5MM		AR	AR	AR	
1	474788	UPPER PANEL / MTH-86" & 89" 603.3MM		AR	AR	AR	
1	475366	UPPER PANEL / MTH-86" & 89" 613MM		AR	AR	AR	
1	474562	UPPER PANEL / MTH-86" & 89" 639.7MM		AR	AR	AR	
1	474572	UPPER PANEL / MTH-86" & 89" 689.8MM		AR	AR	AR	
1	476246	UPPER PANEL / MTH-86" & 89" 703MM		AR	AR	AR	
1	475128	UPPER PANEL / MTH-86" & 89" 741.3MM		AR	AR	AR	
1	474998	UPPER PANEL / MTH-86" & 89" 843MM		AR	AR	AR	
1	476237	UPPER PANEL / MTH-86" & 89" 849MM		AR	AR	AR	
1	475084	UPPER PANEL / MTH-86" & 89" 881MM		AR	AR	AR	
1	474651	UPPER PANEL / MTH-86" & 89" 887.2MM		AR	AR	AR	
1	478331	UPPER PANEL / MTH-86" & 89" 908.1MM		AR	AR	AR	
1	475078	UPPER PANEL / MTH-86" & 89" 914MM		AR	AR	AR	

From Y-7046 Up to 8-9339	DATE: 01/2014	PAGE: Y2-1854-50

SIDE PANELS - MTH

ITEM	PART	DESCRIPTION	XL45	MTH40	MTH45	MTH45S	NOTE
1	474879	UPPER PANEL / MTH-86" & 89" 938.2MM		AR	AR	AR	
1	476128	UPPER PANEL / MTH-86" & 89" 982MM		AR	AR	AR	
1	476488	UPPER PANEL / MTH-86" & 89" 1103MM		AR	AR	AR	
1	475283	UPPER PANEL / MTH-86" & 89" 1107MM		AR	AR	AR	
1	474553	UPPER PANEL / MTH-86" & 89" 1109.5MM		AR	AR	AR	
1	474495	UPPER PANEL / MTH-86" & 89" 1127MM		AR	AR	AR	
1	476508	UPPER PANEL / MTH-86" & 89" 1440MM		AR	AR	AR	
1	474656	UPPER PANEL / MTH-86" & 89" 2177.5MM		AR	AR	AR	
1	475098	UPPER PANEL / MTH-86" & 89" 2490.9MM		AR	AR	AR	
1	476099	UPPER PANEL / MTH-86" & 89" 2526.5MM		AR	AR	AR	
1	474772	UPPER PANEL / MTH-86" & 89" 2560MM		AR	AR	AR	
1	474182	UPPER PANEL / MTH-86" & 89" 2582.8MM		AR	AR	AR	
1	475072	UPPER PANEL / MTH-86" & 89" 2836MM		AR	AR	AR	
1	475148	UPPER PANEL / MTH-86" & 89" 2907MM		AR	AR	AR	
1	476127	UPPER PANEL / MTH-86" & 89" 2932MM		AR	AR	AR	
1	475077	UPPER PANEL / MTH-86" & 89" 2956.3MM		AR	AR	AR	
1	475365	UPPER PANEL / MTH-86" & 89" 3165MM		AR	AR	AR	
1	474623	UPPER PANEL / MTH-86" & 89" 3230.5MM		AR	AR	AR	
1	474564	UPPER PANEL / MTH-86" & 89" 3230.5MM		AR	AR	AR	
1	476129	UPPER PANEL / MTH-86" & 89" 3237MM		AR	AR	AR	
1	475407	UPPER PANEL / MTH-86" & 89" 3291MM		AR	AR	AR	
1	475181	UPPER PANEL / MTH-86" & 89" 3414.5MM		AR	AR	AR	
1	474786	UPPER PANEL / MTH-86" & 89" 3607.5MM		AR	AR	AR	
1	478330	UPPER PANEL / MTH-86" & 89" 3302.7MM		AR	AR	AR	
1	475109	UPPER PANEL / MTH-86" & 89" 3344.9MM		AR	AR	AR	
1	475485	UPPER PANEL / MTH-86" & 89" 3364.7MM		AR	AR	AR	
1	690013	UPPER PANEL / MTH-86" 3607.5MM From 2-7819 Up to 4-8251 / REPLACED BY: 474786			AR		
1	476540	UPPER PANEL / MTH-86" & 89" 3655MM		AR	AR	AR	
1	476786	UPPER PANEL / MTH-86" & 89" 3675MM		AR	AR	AR	
1	475010	UPPER PANEL / MTH-86" & 89" 3682MM		AR	AR	AR	
1	475086	UPPER PANEL / MTH-86" & 89" 3731MM		AR	AR	AR	
1	476495	UPPER PANEL / MTH-86" & 89" 3838MM		AR	AR	AR	
1	475081	UPPER PANEL / MTH-86" & 89" 3859.1MM		AR	AR	AR	
1	474183	UPPER PANEL / MTH-86" & 89" 3878.2MM		AR	AR	AR	
1	474791	UPPER PANEL / MTH-86" & 89" 3930.5MM		AR	AR	AR	
1	474959	UPPER PANEL / MTH-86" & 89" 3967MM		AR	AR	AR	
1	474496	UPPER PANEL / MTH-86" & 89" 4038.5MM		AR	AR	AR	
1	474554	UPPER PANEL / MTH-86" & 89" 4056MM		AR	AR	AR	
1	475392	UPPER PANEL / MTH-86" & 89" 4059MM		AR	AR	AR	

From Y-7046 Up to 8-9339	DATE: 01/2014	PAGE: Y2-1854-50

SIDE PANELS - MTH

ITEM	PART	DESCRIPTION	XL45	MTH40	MTH45	MTH45S	NOTE
1	476487	UPPER PANEL / MTH-86" & 89" 4062MM		AR	AR	AR	
1	474790	UPPER PANEL / MTH-86" & 89" 4105.6MM		AR	AR	AR	
1	475790	UPPER PANEL / MTH-86" & 89" 4105.6MM		AR	AR	AR	
1	475617	UPPER PANEL / MTH-86" & 89" 4108MM		AR	AR	AR	
1	475071	UPPER PANEL / MTH-86" & 89" 4131.4MM		AR	AR	AR	
1	476268	UPPER PANEL / MTH-86" & 89" 4193MM		AR	AR	AR	
1	474878	UPPER PANEL / MTH-86" & 89" 4227.4MM		AR	AR	AR	
1	475079	UPPER PANEL / MTH-86" & 89" 4251.7MM		AR	AR	AR	
1	474652	UPPER PANEL / MTH-86" & 89" 4278.1MM		AR	AR	AR	
1	476236	UPPER PANEL / MTH-86" & 89" 4316.5MM		AR	AR	AR	
1	475000	UPPER PANEL / MTH-86" & 89" 4372MM		AR	AR	AR	
1	475367	UPPER PANEL / MTH-86" & 89" 4461MM		AR	AR	AR	
1	474597	UPPER PANEL / MTH-86" & 89" 4475.8MM		AR	AR	AR	
1	Call Order Desk	UPPER PANEL / MTH-86" & 89" 4480MM		AR	AR	AR	P
1	476247	UPPER PANEL / MTH-86" & 89" 4512MM		AR	AR	AR	
1	474561	UPPER PANEL / MTH-86" & 89" 4525.9MM		AR	AR	AR	
1	475565	UPPER PANEL / MTH-86" & 89" 4529MM		AR	AR	AR	
1	476435	UPPER PANEL / MTH-86" & 89" 4532MM		AR	AR	AR	
1	476729	UPPER PANEL / MTH-86" & 89" 4656MM		AR	AR	AR	
1	475282	UPPER PANEL / MTH-86" & 89" 4660MM		AR	AR	AR	
1	476570	UPPER PANEL / MTH-86" & 89" 4711MM		AR	AR	AR	
1	475004	UPPER PANEL / MTH-86" & 89" 4715MM		AR	AR	AR	
1	476787	UPPER PANEL / MTH-86" & 89" 4803MM		AR	AR	AR	
1	474661	UPPER PANEL / MTH-86" & 89" 4970.5MM		AR	AR	AR	
1	476507	UPPER PANEL / MTH-86" & 89" 5021MM		AR	AR	AR	
1	476463	UPPER PANEL / MTH-86" & 89" 5022.8MM		AR	AR	AR	
1	476245	UPPER PANEL / MTH-86" & 89" 5064MM		AR	AR	AR	
1	476567	UPPER PANEL / MTH-86" & 89" 5068.1MM		AR	AR	AR	
1	474801	UPPER PANEL / MTH-86" & 89" 5081.3MM		AR	AR	AR	
1	475458	UPPER PANEL / MTH-86" & 89" 5154.5MM		AR	AR	AR	
1	474184	UPPER PANEL / MTH-86" & 89" 5173.6MM		AR	AR	AR	
1	476534	UPPER PANEL / MTH-86" & 89" 5226MM		AR	AR	AR	
1	475388	UPPER PANEL / MTH-86" & 89" 5326MM		AR	AR	AR	
1	474556	UPPER PANEL / MTH-86" & 89" 5351.4MM		AR	AR	AR	
1	476506	UPPER PANEL / MTH-86" & 89" 5404.6MM		AR	AR	AR	
1	475799	UPPER PANEL / MTH-86" & 89" 5438.8MM		AR	AR	AR	
1	476902	UPPER PANEL / MTH-86" & 89" 5590.3MM		AR	AR	AR	
1	475002	UPPER PANEL / MTH-86" & 89" 5631MM		AR	AR	AR	
1	476330	UPPER PANEL / MTH-86" & 89" 5654MM		AR	AR	AR	
		P) CALL ORDER DESK FOR SPECIFIC APPLICATION					
		(V.I.N.)					

From Y-7046 Up to 8-9339	DATE: 01/2014	PAGE: Y2-1854-50

SIDE PANELS - MTH

ITEM	PART	DESCRIPTION	XL45	MTH40	MTH45	MTH45S	NOTE
1	475127	UPPER PANEL / MTH-86" & 89" 5719.7MM		AR	AR	AR	
1	474573	UPPER PANEL / MTH-86" & 89" 5771.2MM		AR	AR	AR	
1	474814	UPPER PANEL / MTH-86" & 89" 5775.3MM		AR	AR	AR	
1	476557	UPPER PANEL / MTH-86" & 89" 5895.1MM		AR	AR	AR	
1	474977	UPPER PANEL / MTH-86" & 89" 5953MM		AR	AR	AR	
1	474989	UPPER PANEL / MTH-86" & 89" 5961MM		AR	AR	AR	
1	474464	UPPER PANEL / MTH-86" & 89" 5971.7MM		AR	AR	AR	
1	474590	UPPER PANEL / MTH-86" & 89" 6037.2MM		AR	AR	AR	
1	476560	UPPER PANEL / MTH-86" & 89" 6098.3MM		AR	AR	AR	
1	475028	UPPER PANEL / MTH-86" & 89" 6151MM		AR	AR	AR	
1	475083	UPPER PANEL / MTH-86" & 89" 6181.7MM		AR	AR	AR	
1	475478	UPPER PANEL / MTH-86" & 89" 6189.6MM		AR	AR	AR	
1	474674	UPPER PANEL / MTH-86" & 89" 6265.8MM		AR	AR	AR	
1	474715	UPPER PANEL / MTH-86" & 89" 6377MM		AR	AR	AR	
1	473592	UPPER PANEL / MTH-86" & 89" 6469MM		AR	AR	AR	
1	474717	UPPER PANEL / MTH-86" & 89" 6469MM		AR	AR	AR	
1	475803	UPPER PANEL / MTH-86" & 89" 6753.2MM		AR	AR	AR	
1	475129	UPPER PANEL / MTH-86" & 89" 6867.5MM		AR	AR	AR	
1	474625	UPPER PANEL / MTH-86" & 89" 7764.4MM		AR	AR	AR	
1	475029	UPPER PANEL / MTH-86" & 89" 7446.4MM		AR	AR	AR	
1	475386	UPPER PANEL / MTH-86" & 89" 8113.7MM		AR	AR	AR	
1	478108	UPPER PANEL / MTH-86" & 89" 9661.4MM		AR	AR	AR	
1	475636	UPPER PANEL / MTH-86" & 89" 10957MM		AR	AR	AR	
1	476682	UPPER PANEL / MTH-86" & 89" 43507.5MM		AR	AR	AR	
2	474149	PANEL SUB ASSY / S.B. Up to 2-7818 / REPLACED BY: K474149		8	8	8	
2	475596	PANEL SUB ASSY / S.B. From 2-7819 Up to 5-8468 / REPLACED BY: 476465		8	8	8	
2	476465	PANEL SUB ASSY / B.A. From 5-8469 / REPLACED BY: 477579		8	8		
3	474150	PANEL SUB ASSY / S.B. Up to 2-7818 / REPLACED BY: K474150			2	2	
			1				
3	475597	PANEL SUB ASSY / S.B. From 2-7819 Up to 5-8468 / REPLACED BY: 476466			2	2	
3	476466	PANEL SUB ASSY / B.A. From 5-8469 / REPLACED BY: 477577			2		
4	474151	PANEL SUB ASSY AIR INTAKE RH / S.B. Up to 2-7818 / REPLACED BY: 475598		1	1	1	
4	475598	PANEL SUB ASSY AIR INTAKE RH / S.B. From 2-7819 Up to 5-8468 / REPLACED BY: 477572		1	1	1	
4	476467	PANEL SUB ASSY AIR INTAKE RH / B.A. From 5-8469 / REPLACED BY: 477572		1	1		
5	474152	PANEL SUB ASSY AIR INTAKE LH / S.B. Up to 2-7818 / REPLACED BY: 476468		1	1	1	
5	475599	PANEL SUB ASSY AIR INTAKE LH / S.B. From 2-7819 Up to 5-8468 / REPLACED BY: 477566		1		1	
5	475599	PANEL SUB ASSY AIR INTAKE LH / S.B. From 2-7819 Up to 3-8164 / REPLACED BY: 477566			1		
5	476468	PANEL SUB ASSY AIR INTAKE LH / B.A. From 5-8469 / REPLACED BY: 477566		1			
6	475654	PANEL SUB ASSY / S.B. From 4-8165 Up to 5-8468 / REPLACED BY: 477580			1		

From Y-7046 Up to 8-9339	DATE: 01/2014	PAGE: Y2-1854-50

SIDE PANELS - MTH

ITEM	PART	DESCRIPTION	XL45	MTH40	MTH45	MTH45S	NOTE
6	477580	PANEL SUB ASSY / B.A. From 5-8469 / REPLACED BY: 477581			1		
6	477581	UPPER PANEL 840MM X 1789MM / W/OUT REINFORCEMENT / B.A. SERVICE From 5-8469			1		
7	475658	PANEL SUB ASSY AIR INTAKE LH / S.B. From 4-8165 Up to 5-8468 / REPLACED BY: 477568			1		
7	477568	PANEL SUB ASSY AIR INTAKE LH / B.A. From 5-8469 / REPLACED BY: 477569			1		
7	477569	PANEL AIR INTAKE LH / B.A. SERVICE From 5-8469			1		
10	474070	FINISHING MOULDING SS / ANGLE 1364MM / S.B. Up to 5-8468 / REPLACED BY: 477527		2	2	2	
10	477527	FINISHING MOULDING SS / ANGLE 1364MM / B.A. From 5-8469		2	2		
11	473940	FINISHING MOULDING SS / ANGLE 476MM / S.B. Up to 5-8468 / REPLACED BY: 477528		2	2	2	
11	477528	FINISHING MOULDING SS / ANGLE 476MM / B.A. From 5-8469		2	2		
NS	504473	RIVET POP DOME OE 1/8x1/4 SS		12	12		
11	504473	RIVET POP DOME OE 1/8x1/4 SS				18	
12	474429	PANEL L.H. UPPER ASSY W/FUEL DOOR LH / S.B. Up to Y-7439 / REPLACED BY: 474646		1		1	
12	474646	PANEL L.H. UPPER ASSY W/FUEL DOOR LH / S.B. From Y-7440 Up to 5-8468 / REPLACED BY: 477549		1		1	
12	477549	PANEL L.H. UPPER ASSY W/FUEL DOOR LH / B.A. From 5-8469		1		1	
12	474428	. PANEL 257MM X 690MM / S.B. Up to 5-8468 / REPLACED BY: 477539		1		1	
12	477539	. PANEL 257MM X 690MM / B.A. From 5-8469		1		1	
13	474430	PANEL R.H. UPPER ASSY W/FUEL DOOR RH / S.B. Up to Y-7439 / REPLACED BY: 474979		1		1	
13	474979	PANEL R.H. UPPER ASSY W/FUEL DOOR RH / S.B. From Y-7440 Up to 5-8468 / REPLACED BY: 477538		1		1	
13	477538	PANEL R.H. UPPER ASSY W/FUEL DOOR RH / B.A. From 5-8469		1		1	
13	474428	. PANEL 257MM X 690MM / S.B. Up to 5-8468 / REPLACED BY: 477539		1		1	
13	477539	. PANEL 257MM X 690MM / B.A. From 5-8469		1		1	
14	473498	PANEL, LOWER 262MM X 257MM / S.B. Up to 5-8468 / REPLACED BY: 477546		1		1	
14	477546	PANEL, LOWER 262MM X 257MM / B.A. From 5-8469		1		1	
15	473130	PANEL, LOWER 200MM X 262MM / S.B. Up to 5-8468			2		
15	477547	PANEL, LOWER 200MM X 262MM / B.A. From 5-8469			2		
16	474049	PANEL, R.H. 200MM X 676MM / S.B. Up to 5-8468			1		
16	477543	PANEL, R.H. 200MM X 676MM / B.A. From 5-8469			1		
17	474048	PANEL, L.H. 200MM X 676MM / S.B. Up to 5-8468			1		
17	477552	PANEL, L.H. 200MM X 676MM / B.A. From 5-8469			1		
18	474722	FINISHING MOULDING 838.5MM / SPACER / S.B. Up to 5-8468 / REPLACED BY: 477673		2		2	
18	477673	FINISHING MOULDING 838.5MM / SPACER / B.A. From 5-8469		2		2	
20	473845	MOULDING RETAINER / 1518MM Up to 3-8044			2	2	
21	473843	MOULDING RETAINER / 2425MM Up to 3-8044		8	8	8	
22	473847	MOULDING RETAINER / 1130MM Up to 3-8044		2	2	2	
22	473895	MOULDING RETAINER / 2250MM Up to 3-8044		1	1	1	
22	475669	MOULDING RETAINER / 312MM From 3-8045		1	1	1	
22	477436	MOULDING RETAINER / 50MM From 3-8045		4	4		
23	504488	RIVET MGLP PRDG 3/16x17/64 SS		AR	AR	AR	
24	474054	FINISHING POST / "U" SHAPE 39MM X 912MM / <> 2 BAG. DOORS / S.B. Up to 5-8468		1	1		

From Y-7046 Up to 8-9339	DATE: 01/2014	PAGE: Y2-1854-50

SIDE PANELS - MTH

ITEM	PART	DESCRIPTION	XL45	MTH40	MTH45	MTH45S	NOTE
24	477548	FINISHING POST / "U" SHAPE 39MM X 912MM / <> 2 BAG. DOORS / B.A. From 5-8469		1	1		
24	474054	FINISHING POST / "U" SHAPE 39MM X 912MM / <> 2 BAG. DOORS / S.B. Up to 5-8468				4	
24	477548	FINISHING POST / "U" SHAPE 39MM X 912MM / <> 2 BAG. DOORS / B.A. From 5-8469				4	
25	474062	FINISHING POST / "J" SHAPE L.H. / S.B. Up to 5-8468			1		
25	477555	FINISHING POST / "J" SHAPE L.H. / B.A. From 5-8469			1		
26	474063	FINISHING POST / "J" SHAPE R.H. / S.B. Up to 5-8468			1		
26	477556	FINISHING POST / "J" SHAPE R.H. / B.A. From 5-8469			1		
30	473846	MOULDING RETAINER / 1518MM Up to 3-8044			2	2	
31	473844	MOULDING RETAINER / 2425MM Up to 3-8044		8	8	8	
NS	473826	MOULDING RETAINER / 1125MM Up to 3-8044		1	1	1	
32	473709	DRIP MOULDING / 1364MM / S.B. Up to 5-8468 / REPLACED BY: 477533		4			
32	477533	DRIP MOULDING / 1364MM / B.A. From 5-8469		4			
32	473709	DRIP MOULDING / 1364MM / S.B. Up to 5-8468 / REPLACED BY: 477533				6	
32	477533	DRIP MOULDING / 1364MM / B.A. From 5-8469				6	
32	473706	DRIP MOULDING / 1535MM / S.B. Up to 5-8468			6		
32	477530	DRIP MOULDING / 1535MM / B.A. From 5-8469			6		
32	473708	DRIP MOULDING / 1560MM / S.B. Up to 5-8468			2		
32	477531	DRIP MOULDING / 1560MM / B.A. From 5-8469			2		
32	473707	DRIP MOULDING 1148MM / S.B. Up to 5-8468 / REPLACED BY: 477534		2		2	
32	477534	DRIP MOULDING 1148MM / B.A. From 5-8469		2		2	
32	473705	DRIP MOULDING / 1402MM / S.B. Up to 5-8468 / REPLACED BY: 477535		2		2	
32	477535	DRIP MOULDING / 1402MM / B.A. From 5-8469		2		2	
32	474061	DRIP MOULDING / 1468MM / S.B. Up to 5-8468 / REPLACED BY: 477536		2		2	
32	477536	DRIP MOULDING / 1468MM / B.A. From 5-8469		2		2	
32	474060	DRIP MOULDING / 1765MM / S.B. Up to 5-8468			2		
32	477532	DRIP MOULDING / 1765MM / B.A. From 5-8469			2		
32	474868	DRIP MOULDING / 1445MM / S.B. Up to 5-8813		1			A
40	474074	FINISHING MOULDING SS / 5373MM Up to 3-8044		6			
40	474076	FINISHING MOULDING SS / 6135MM Up to 3-8044			2	2	
40	474159	FINISHING MOULDING S.S. / 6385MM From 3-8045		2			
40	474159	FINISHING MOULDING S.S. / 6385MM From 3-8045			6		
41	474075	FINISHING MOULDING SS / 4348MM Up to 3-8044		6			
41	474077	FINISHING MOULDING SS / 5110MM Up to 3-8044			2	2	
41	474161	FINISHING MOULDING S.S. / 4861MM From 3-8045		6			
41	474161	FINISHING MOULDING S.S. / 4861MM From 3-8045			1		
NS	5060044	TAPE RUB ADH2 CC POL 1/4" X 1/4" X 50' / BLACK I1C-N-A			AR		
60	Y2-1857-50	**FENDERS L.H. - MTH**					
61	Y2-1857-55	**FENDERS R.H. - MTH**					
		A) WITH 38" BAGGAGE DOOR					

From Y-7046 Up to 8-9339	DATE: 01/2014	PAGE: Y2-1854-50

SIDE PANELS - MTH

ITEM	PART	DESCRIPTION	XL45	MTH40	MTH45	MTH45S	NOTE
62A	504488	RIVET MGLP PRDG 3/16x17/64 SS		AR	AR		
62A	504487	RIVET MGLP PRDG 3/16x7/16 SS		AR	AR		
62B	504339	RIVET POP DOME OE 1/8x3/8 SS		AR	AR		
62C	G1010062-002	RIVET POP CK OE 3/16x1/4 SS		AR	AR		
63	475140	RUBBER SEAL EXTRUSION 13.0x5.5		AR	AR		
NS	506225	TAPE RUB ADH1 CC POL 1/16" x 1/4" x 100' / GREY 2520		AR	AR		
NS	5060044	TAPE RUB ADH2 CC POL 1/4" X 1/4" X 50' / BLACK I1C-N-A		AR	AR		
NS	684517	ADHESIVE SIMSON #ISR 70-03 / GREY / 310ml CARTRIDGE		AR	AR		
NS	682989	ANTISILICONE STANDOX / CLEAR / 4 Liters		AR	AR		
NS							
65	477337	FINISHING MOULDING S.S.		AR	AR		
66	477338	FINISHING MOULDING S.S.		1	1		
67	477339	FINISHING MOULDING S.S.			1		
68	477340	FINISHING MOULDING S.S.			1		
69	477341	FINISHING MOULDING S.S.			1		
70	477342	FINISHING MOULDING S.S.			1		
71	477343	FINISHING MOULDING S.S.			1		
72	477344	FINISHING MOULDING S.S.			1		
73	477345	FINISHING MOULDING S.S.			1		
74	477346	FINISHING MOULDING S.S.			1		
75	477347	FINISHING MOULDING S.S.			1		
76	477348	FINISHING MOULDING S.S.			1		
79	477351	FINISHING MOULDING S.S.			1		
80	477352	FINISHING MOULDING S.S.		1	1		
81	477353	FINISHING MOULDING S.S.			1		
82	477354	FINISHING MOULDING S.S.			1		
83	477355	FINISHING MOULDING S.S.			1		
84	477356	FINISHING MOULDING S.S.			1		
85	477357	FINISHING MOULDING S.S.			1		
86	477358	FINISHING MOULDING S.S.			AR		
87	477360	FINISHING MOULDING S.S.		1	1		
88	477361	MOULDING "Z" SHAPE S.S. 2438MM		AR	AR		
89	477362	FINISHING MOULDING S.S.	1				
90	690053	PANEL SUB ASSY / FORWARD FRT/"SLIDE-OUT" / S.B. Up to 4-8247 / REPLACED BY: 476120			1		
90	476120	PANEL SUB ASSY / FORWARD FRT/"SLIDE-OUT" / S.B. From 4-8248 Up to 5-8468 / REPLACED BY: 477592					
90	477592	PANEL SUB ASSY / FORWARD FRT/"SLIDE-OUT" / B.A. From 5-8469 / REPLACED BY: 477593			1		
90	477593	PANEL / FORWARD FRT/"SLIDE-OUT" / B.A. From 5-8469			1		
91	690054	PANEL SUB ASSY / BACKWARD FRT/"SLIDE-OUT" / 1215MM / S.B. Up to 4-8247 / REPLACED BY: 477594			1		
91	476253	PANEL SUB ASSY / BACKWARD FRT/"SLIDE-OUT" / 1219MM / S.B. From 4-8248 Up to 5-8468 / REPLACED BY: 477823			1		
		B) NEED REWORK FOR ADJUSTMENT					

From Y-7046 Up to 8-9339	DATE: 01/2014	PAGE: Y2-1854-50

SIDE PANELS - MTH

ITEM	PART	DESCRIPTION	XL45	MTH40	MTH45	MTH45S	NOTE
91	477823	PANEL SUB ASSY / BACKWARD FRT/"SLIDE-OUT" / 1219MM / B.A. From 5-8469 Up to 6-8805 / REPLACED BY: 477594			1		B
91	477824	PANEL ONLY / LOWER, REAR "SLIDE-OUT" / B.A. / SERVICE From 5-8469 Up to 6-8805			1		B
91	477594	PANEL SUB ASSY / BACKWARD FRT/"SLIDE-OUT" / 1215MM / B.A. From 6-8806 / REPLACED BY: 477595			1		
91	477595	PANEL / BACKWARD FRT/"SLIDE-OUT" / 1215MM / B.A. / SERVICE From 6-8806			1		
92	690024	PANEL SUB ASSY / FORWARD REAR /"SLIDE-OUT" / S.B. Up to 4-8247 / REPLACED BY: 476117			1		
92	476117	PANEL SUB ASSY / FORWARD REAR/"SLIDE-OUT" / S.B. From 4-8248 Up to 5-8468 / REPLACED BY: 477596			1		
92	477596	PANEL SUB ASSY / FORWARD REAR/"SLIDE-OUT" / B.A. From 5-8469 Up to 6-8805 / REPLACED BY: 477597			1		
92	477597	PANEL / FORWARD REAR/"SLIDE-OUT" / B.A. / SERVICE From 5-8769 Up to 6-8805			1		
92	477785	PANEL SUB ASSY / FORWARD REAR/"SLIDE-OUT". / B.A. From 6-8806 / REPLACED BY: 477786			1		
92	477786	PANEL / FORWARD REAR/"SLIDE-OUT" / B.A. / SERVICE From 6-8806			1		
93	690025	PANEL SUB ASSY / LOWER, REAR "SLIDE-OUT" / S.B. Up to 3-8164			1		
93	474828	PANEL ONLY / LOWER, REAR "SLIDE-OUT" / S.B. / SERVICE Up to 3-8164 / REPLACED BY: 477824			1		
93	477824	PANEL ONLY / LOWER, REAR "SLIDE-OUT" / B.A. / SERVICE Up to 3-8164			1		
NS	475581	REINFORCEMENT 67MM X 1821MM / SERVICE Up to 3-8164			1		
NS	475582	REINFORCEMENT 67MM X 1934MM / SERVICE Up to 3-8164			1		
94	690226	FINISHING POST / S.B. Up to 2-7763			1		S
94	690237	FINISHING POST / S.B. Up to 2-7763			1		S
94	475330	FINISHING POST / "J" SHAPE L.H. / 29.5 MM WID / S.B. From 2-7764 Up to 5-8468 / REPLACED BY: 477558			1		
94	477558	FINISHING POST / "J" SHAPE L.H. / 29.5 MM WID / B.A. From 5-8469			1		S
95	690032	PANEL ASSY / UPPER "SLIDE-OUT" 4425.6MM Up to 4-8247 / REPLACED BY: 293740			1		
95	293740	PANEL ASSY / UPPER "SLIDE-OUT" 4425.6MM From 4-8248 Up to 6-8805			1		
95	293825	PANEL ASSY / UPPER "SLIDE-OUT" 4426MM From 8-8806			1		
96	690026	PANEL ASSY / UPPER "SLIDE-OUT" 2292.4MM Up to 4-8247 / REPLACED BY: 293742			1		
96	293742	PANEL ASSY / UPPER "SLIDE-OUT" 2292.4MM From 4-8248 Up to 6-8805			1		
96	293826	PANEL ASSY / UPPER "SLIDE-OUT" 2293MM From 8-8806			1		
97	690217	PANEL LOWER / <> "SLIDE-OUT" & MOULDING FORWA / S.B. Up to 4-8247 / REPLACED BY: 474831			1		
97	474831	PANEL LOWER / <> "SLIDE-OUT" & MOULDING FORWA / S.B. From 4-8248 Up to 5-8468 / REPLACED BY: 477588			1		
97	477588	PANEL LOWER / <> "SLIDE-OUT" & MOULDING FORWARD / B.A. From 5-8469			1		
98	690218	PANEL LOWER / <> "SLIDE-OUT" & MOULDING / BAC / S.B. Up to 4-8247 / REPLACED BY: 474832			1		
98	474832	PANEL LOWER / <> "SLIDE-OUT" & MOULDING / BAC / S.B. From 4-8248 Up to 5-8468 / REPLACED BY: 477589			1		
98	477589	PANEL LOWER / <> "SLIDE-OUT" & MOULDING / BACKWARD / B.A. From 5-8469			1		
99	Y2-1884-50	**SIDE WINDOW - MTH**					
100	475850	PANEL SUB ASSY / LOWER, REAR "SLIDE-OUT" / S.B. From 4-8165 Up to 5-8468 / REPLACED BY: 476469			1		
100	476469	PANEL SUB ASSY / LOWER, REAR "SLIDE-OUT" / B.A. From 5-8469 Up to 6-8805 / REPLACED BY: 477591			1		
100	477787	PANEL SUB ASSY / LOWER, REAR "SLIDE-OUT" / B.A. From 6-8806 / REPLACED BY: 477788			1		
100	477788	PANEL / LOWER, REAR "SLIDE-OUT" / B.A. / SERVICE From 6-8806			1		
101	475851	PANEL SUB ASSY AIR INTAKE LH / S.B. From 4-8165 Up to 5-8468 / REPLACED BY: 477574			1		
NS	475842	PANEL / JUNCTION / BETWEEN ITEM 100 & 101 / S.B. From 4-8165 Up to 5-8468			1		
101	476470	PANEL SUB ASSY AIR INTAKE LH / B.A. From 5-8469 Up to 6-8805 / REPLACED BY: 477574			1		
		B) NEED REWORK FOR ADJUSTMENT					
		S) USE ONLY WITH SMALL A/C SYSTEM					

From Y-7046 Up to 8-9339	DATE: 01/2014	PAGE: Y2-1854-50

SIDE PANELS - MTH

ITEM	PART	DESCRIPTION	XL45	MTH40	MTH45	MTH45S	NOTE
101	477781	PANEL SUB ASSY AIR INTAKE LH / B.A. From 6-8806 / REPLACED BY: 477782			1		
101	477782	PANEL AIR INTAKE LH / B.A. / SERVICE From 6-8806			1		
NS	477608	PANEL / JUNCTION / <> ITEM 100 & 101 / B.A. From 5-8469 Up to 6-8805			1		
102	690227	FINISHING POST / "J" SHAPE L.H. / 25.4MM WIDE / S.B. Up to 2-7763			1		
102	690238	FINISHING POST / "J" SHAPE L.H. / 34.9MM WIDE / S.B. Up to 2-7763			1		
102	475363	FINISHING POST / "J" SHAPE L.H. / 36. MM WIDE / S.B. From 2-7764 Up to 5-8468 / REPLACED BY: 477557			1		
102	477557	FINISHING POST / "J" SHAPE L.H. / 36. MM WIDE / B.A. From 5-8469			1		
NS	685251	CLEANER "DESCO" D-537 (4Liters) ALUMINUM & SS		AR	AR	AR	

From 1-7436 Up to 8-9339	DATE: 01/2014	PAGE: Y2-1854-51

SIDE FLAT PANEL - MTH ENTERTAINER

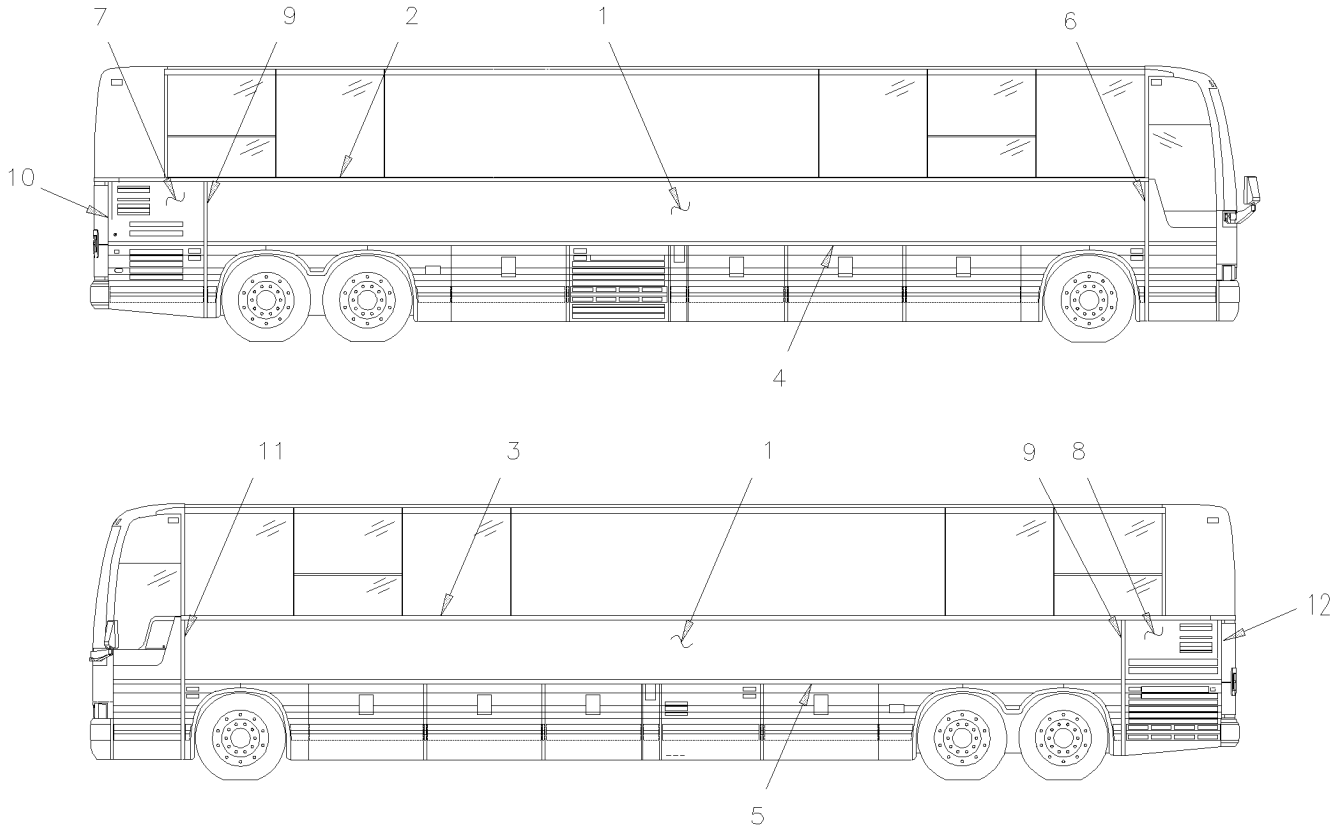

MTH 45' ENT.

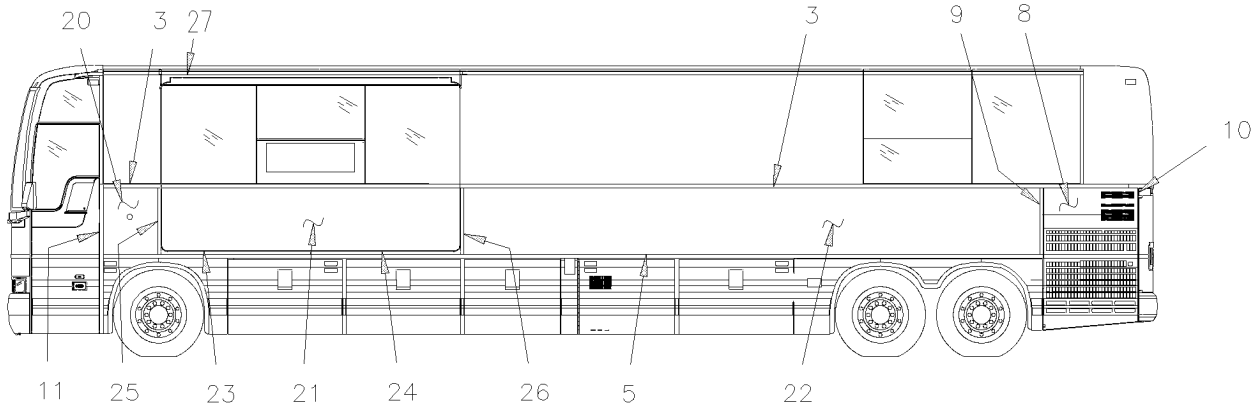

FROM 6-8806

From 1-7436 Up to 8-9339	DATE: 01/2014	PAGE: Y2-1854-51

SIDE FLAT PANEL - MTH ENTERTAINER

ITEM	PART	DESCRIPTION	XL45	MTH40	MTH45	MTH45S	NOTE
1	970287	STAINLESS STEEL SHEET 835MM X 11392MM Up to 1-7632				2	
1	970286	STAINLESS STEEL SHEET 912MM X 11392MM				2	
2	474514	FINISHING MOULDING UPPER R.H. 12253MM				1	
3	474515	FINISHING MOULDING UPPER L.H. 12253MM				1	
4	474512	FINISHING MOULDING LOWER R.H. 9846MM				1	
5	474513	FINISHING MOULDING LOWER L.H. 9846MM				1	
6	475149	FINISHING MOULDING SS / ANGLE 1777MM / W/86" Up to 1-7632				1	
6	475103	FINISHING MOULDING SS / ANGLE 1853MM / W/89" / S.B. Up to 5-8468 / REPLACED BY: 477524				1	
6	477524	FINISHING MOULDING SS / ANGLE 1853MM / W/89" / B.A. From 5-8469				1	
NS	504473	RIVET POP DOME OE 1/8x1/4 SS				12	
7	474995	PANEL SUB ASSY AIR INTAKE R.H. / MTH 86" Up to 1-7632 / REPLACED BY: 474929				1	
7	474929	PANEL AIR INTAKE R.H. / MTH 86" SERVICE Up to 1-7632				1	
7	475104	PANEL SUB ASSY AIR INTAKE R.H. / MTH 89" O.E.M. / REPLACED BY: 475108				1	
7	475600	PANEL SUB ASSY AIR INTAKE R.H. / MTH 89" SERVICE / REPLACED BY: 475108				1	
7	475108	PANEL AIR INTAKE R.H. / MTH 89" SERVICE				1	
8	474994	PANEL SUB ASSY AIR INTAKE L.H. / MTH 86" Up to 1-7632 / REPLACED BY: 474928				1	
8	474928	PANEL AIR INTAKE L.H. / MTH 86" SERVICE Up to 1-7632				1	
8	475105	PANEL SUB ASSY AIR INTAKE L.H. / MTH 89" O.E.M. / REPLACED BY: 475107				1	
8	475601	PANEL SUB ASSY AIR INTAKE L.H. / MTH 89" SERVICE / REPLACED BY: 475107				1	
8	475107	PANEL AIR INTAKE L.H. / MTH 89" service				1	
9	475006	FINISHING MOULDING ALUMINUM 789MM / W86" Up to 5-8452				2	
9	475101	FINISHING MOULDING ALUMINUM 865MM / W89"				2	
10	473940	FINISHING MOULDING SS / ANGLE 476MM / S.B. Up to 1-7632 / REPLACED BY: 477528				2	
10	477528	FINISHING MOULDING SS / ANGLE 476MM / B.A. From 5-8469				2	
10	475137	FINISHING MOULDING SS / ANGLE 552MM / W/89" / S.B. Up to 5-8468 / REPLACED BY: 477525				2	
10	477525	FINISHING MOULDING SS / ANGLE 552MM / W/89" / B.A. From 5-8469				2	
11	475150	FINISHING MOULDING SS / ANGLE 1777MM / W/86" Up to 1-7632				1	
11	475102	FINISHING MOULDING SS / ANGLE 1853MM / W/89" / S.B. Up to 5-8468 / REPLACED BY: 477526				1	
11	477526	FINISHING MOULDING SS / ANGLE 1853MM / W/89" / B.A. From 5-8469				1	
NS	506790	TAPE RUB ADH2 CC POL 1/16" x 1/2" x 200' / BLACK I1C-N-A				AR	
NS	506769	TAPE RUB ADH2 CC POL 1/8" x 1/4" x 60' / BLACK H1CC-N-#14				AR	
NS	506785	TAPE RUB ADH2 CC POL 1/16" x 1/4" x 200' / BLACK I1C-N-A				AR	
NS	506759	TAPE RUB ADH2 CC POL 1/8" x 1/2" x 100' / BLACK I1C-N-A				AR	
NS	506648	TAPE RUB ADH1 CC POL 1/8" x 1/2"x 50' / GREY 2542				AR	
NS	683097	CLEANER SIKA #205 / CLEAR / 1000ml				AR	
NS	683916	PRIMER SIKA #215 / CLEAR / 1000ml				AR	
NS	683083	ADHESIVE SIKA #252 / BLACK / 600 ml SAUSAGE				AR	
20	477938	PANEL FLAT FORWARD SLIDE OUT From 6-8806				1	
21	477936	PANEL FLAT FRONT SLIDE OUT From 6-8806				1	
22	970310	STAINLESS STEEL SHEET 912MM X 7086MM From 6-8806				1	
23	477836	PANEL FLAT FORWARD UNDER SLIDE OUT From 6-8806				1	
24	477921	PANEL FLAT BACKWARD UNDER SLIDE OUT From 6-8806				1	
25	477939	MOULDING FORWARD SLIDE OUT From 6-8806				1	
26	477940	MOULDING BACKWARD SLIDE OUT From 6-8806				1	

From 1-7436 Up to 8-9339	DATE: 01/2014	PAGE: Y2-1854-51

SIDE FLAT PANEL - MTH ENTERTAINER

ITEM	PART	DESCRIPTION	XL45	MTH40	MTH45	MTH45S	NOTE
27	293834	PANEL ASSY / UPPER "SLIDE-OUT" 3553.2MM From 6-8806				1	

From 1-7436 Up to 8-9339	DATE: 01/2014	PAGE: Y2-1854-51

SIDE FLAT PANEL - MTH ENTERTAINER

ITEM	PART	DESCRIPTION	XL45	MTH400	MTH445	MTH445S	NOTE

From Y-7046 Up to 6-8805	DATE: 01/2014	PAGE: Y2-1854-90
SIDE PANELS - "SLIDE-OUT"		

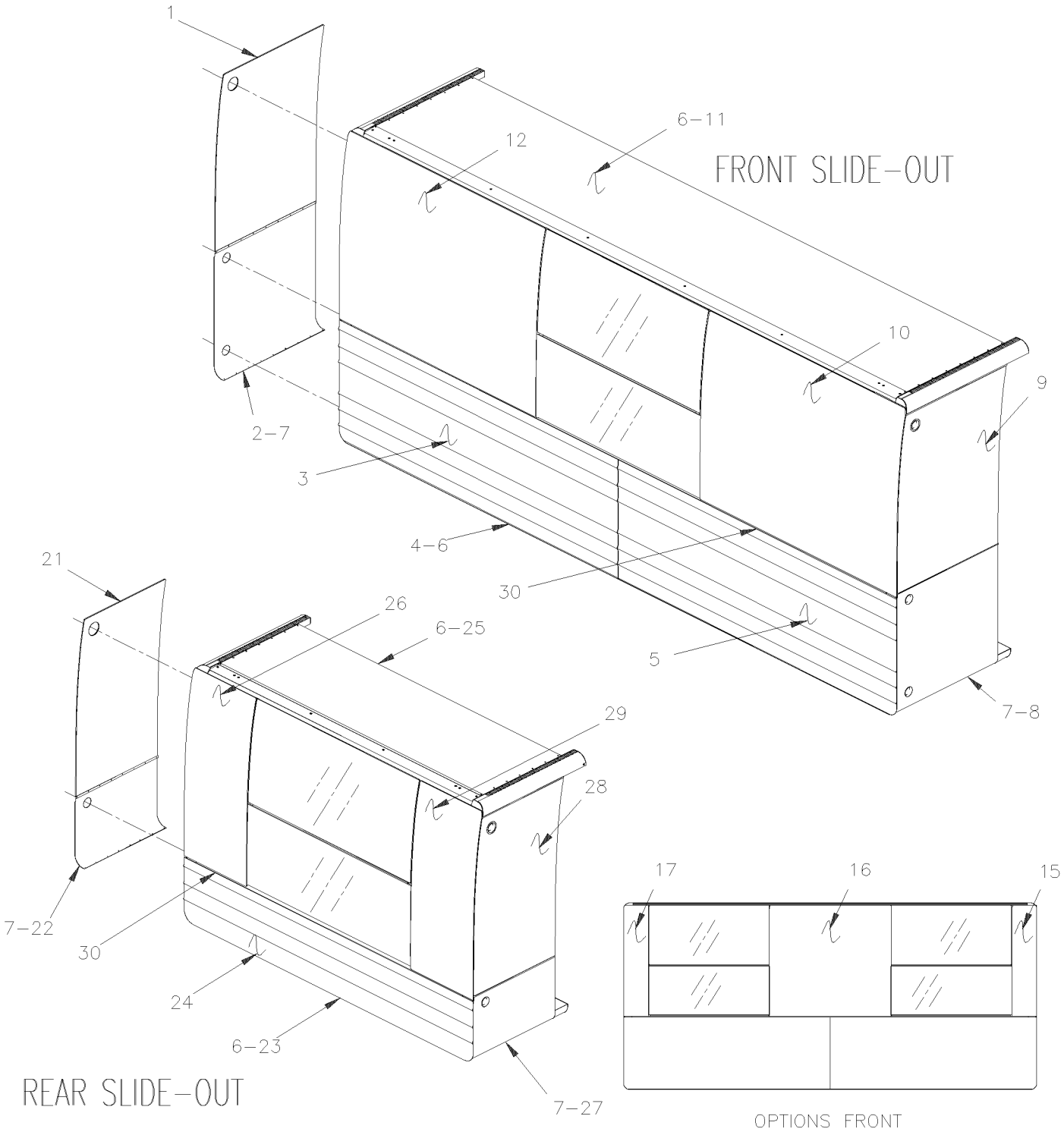

From Y-7046 Up to 6-8805	DATE: 01/2014	PAGE: Y2-1854-90

SIDE PANELS - "SLIDE-OUT"

ITEM	PART	DESCRIPTION	XL45	MTH40	MTH45	MTH45S	NOTE
1	690158	FRONT SIDE FIBERGLASS			1		
2	690149	FRONT PANEL S.S. / S.B. Up to 4-8251 / REPLACED BY: 477670			1		
2	477423	FRONT PANEL S.S. / S.B. From 4-8252 Up to 5-8468 / REPLACED BY: 477670			1		
2	477670	FRONT PANEL S.S. / B.A. From 5-8469			1		
2	690207	FRONT PANEL AL.			1		
3	690192	PANEL SUB ASSY / FORWARD FRT/"SLIDE-OUT" / S.B. Up to 4-8247 / REPLACED BY: 477598			1		
3	476136	PANEL SUB ASSY / FORWARD FRT/"SLIDE-OUT" / S.B. From 4-8248 Up to 5-8468 / REPLACED BY: 477598					
3	477598	PANEL SUB ASSY / FORWARD FRT/"SLIDE-OUT" / B.A. From 5-8469 / REPLACED BY: 477599			1		
3	477599	PANEL / FORWARD FRT/"SLIDE-OUT" / B.A. / SERVICE From 5-8469			1		
4	690186	UNDER FLOOR PANEL AL. Up to 4-8251 / REPLACED BY: 477420			1		
4	477420	UNDER FLOOR PANEL AL. From 4-8252			1		
5	690194	PANEL SUB ASSY / BACKWARD FRT/"SLIDE-OUT" / S.B. Up to 4-8247 / REPLACED BY: 476137			1		
5	476137	PANEL SUB ASSY / BACKWARD FRT/"SLIDE-OUT" / S.B. From 4-8248 Up to 5-8468 / REPLACED BY: 477600					
5	477600	PANEL SUB ASSY / BACKWARD FRT/"SLIDE-OUT" / B.A. From 5-8469 / REPLACED BY: 477601			1		
5	477601	PANEL / BACKWARD FRT/"SLIDE-OUT" / B.A. / SERVICE From 5-8469			1		
6	690268	RIVET POP CK CLE 1/8x1/4 AL Up to 4-8251 / REPLACED BY: 502876			AR		
6	502876	RIVET POP CK CLE 1/8x3/16 AL From 4-8252			AR		
7	690273	RVT CLE CK 120° S. STEEL 1/8" X 0.313" LG. Up to 4-8251 / REPLACED BY: 502872			AR		
7	502872	RIVET POP CK OE 1/8x3/16 SS From 4-8252			AR		
7	690268	RIVET POP CK CLE 1/8x1/4 AL Up to 4-8251 / REPLACED BY: 502876			AR		
7	502876	RIVET POP CK CLE 1/8x3/16 AL From 4-8252			AR		
8	690150	REAR PANEL S.S. / S.B. Up to 4-8251 / REPLACED BY: 477421			1		
8	477421	REAR PANEL S.S. / S.B. From 4-8252 Up to 5-8468 / REPLACED BY: 477669			1		
8	477669	REAR PANEL S.S. / B.A. From 5-8469			1		
8	690208	REAR PANEL AL.			1		
9	690159	REAR SIDE FIBERGLASS			1		
10	690205	REAR LARGE FIBERGLASS			1		
11	690185	ROOF PANEL AL. Up to 4-8251 / REPLACED BY: 477404			1		
11	477404	ROOF PANEL AL. From 4-8252 Up to 5-8513 / REPLACED BY: 478109			1		
11	478109	ROOF PANEL AL. From 5-8514			1		
12	690206	FRONT LARGE FIBERGLASS			1		
15	690252	CORNER, REAR FIBERGLASS Up to 4-8247			1		
15	476511	CORNER, REAR FIBERGLASS From 4-8248			1		
16	690143	STANDARD FIBERGLASS			1		
17	690251	CORNER, FRONT FIBERGLASS Up to 4-8247			1		
17	476510	CORNER, FRONT FIBERGLASS From 4-8248			1		
21	690156	FRONT SIDE FIBERGLASS			1		
22	690153	REAR PANEL S.S. / S.B. Up to 4-8251 / REPLACED BY: 477428			1		
22	477428	REAR PANEL S.S. / B.A. From 4-8252 Up to 5-8468 / REPLACED BY: 477672			1		
22	477672	REAR PANEL S.S. / B.A. From 5-8469			1		
22	690210	REAR PANEL AL.			1		
23	690146	UNDER FLOOR PANEL AL. Up to 4-8251 / REPLACED BY: 477425			1		
23	477425	UNDER FLOOR PANEL AL. From 4-8252 Up to 5-8513 / REPLACED BY: 477895			1		
23	477895	UNDER FLOOR PANEL AL. From 5-8514			1		

From Y-7046 Up to 6-8805	DATE: 01/2014	PAGE: Y2-1854-90

SIDE PANELS - "SLIDE-OUT"

ITEM	PART	DESCRIPTION	XL45	MTH40	MTH45	MTH45S	NOTE
24	690188	PANEL SUB ASSY / REAR / "SLIDE-OUT" / S.B. Up to 4-8247 / REPLACED BY: 476131			1		
24	476131	PANEL SUB ASSY / REAR / "SLIDE-OUT" / S.B. From 4-8248 Up to 5-8468 / REPLACED BY: 477602			1		
24	477602	PANEL SUB ASSY / REAR / "SLIDE-OUT" / B.A. From 5-8469 / REPLACED BY: 477603			1		
24	477603	PANEL / REAR / "SLIDE-OUT" / B.A. / SERVICE From 5-8469			1		
25	690145	ROOF PANEL AL. Up to 4-8251 / REPLACED BY: 477424			1		
25	477424	ROOF PANEL AL. From 4-8252 Up to 5-8513 / REPLACED BY: 477896			1		
25	477896	ROOF PANEL AL. From 5-8514			1		
26	690147	FRONT FIBERGLASS			1		
27	690152	FRONT PANEL S.S. / S.B. Up to 4-8251 / REPLACED BY: 477426			1		
27	477426	FRONT PANEL S.S. / B.A. From 4-8252 Up to 5-8468 / REPLACED BY: 477671			1		
27	477671	REAR PANEL S.S. / B.A. From 5-8469			1		
27	690209	FRONT PANEL AL.			1		
28	690157	REAR SIDE FIBERGLASS			1		
29	690148	REAR FIBERGLASS			1		
30	293281	RUBBER SEAL EXTRUSION / ADHESIVE / LOWER WINDOW			AR		

From Y-7046 Up to 6-8805	DATE: 01/2014	PAGE: Y2-1854-90

SIDE PANELS - "SLIDE-OUT"

ITEM	PART	DESCRIPTION	XL45	MTH40	MTH45	MTH45S	NOTE

From 6-8806 Up to 8-9339	DATE: 01/2014	PAGE: Y2-1854-91
SIDE PANELS - "SLIDE-OUT"		

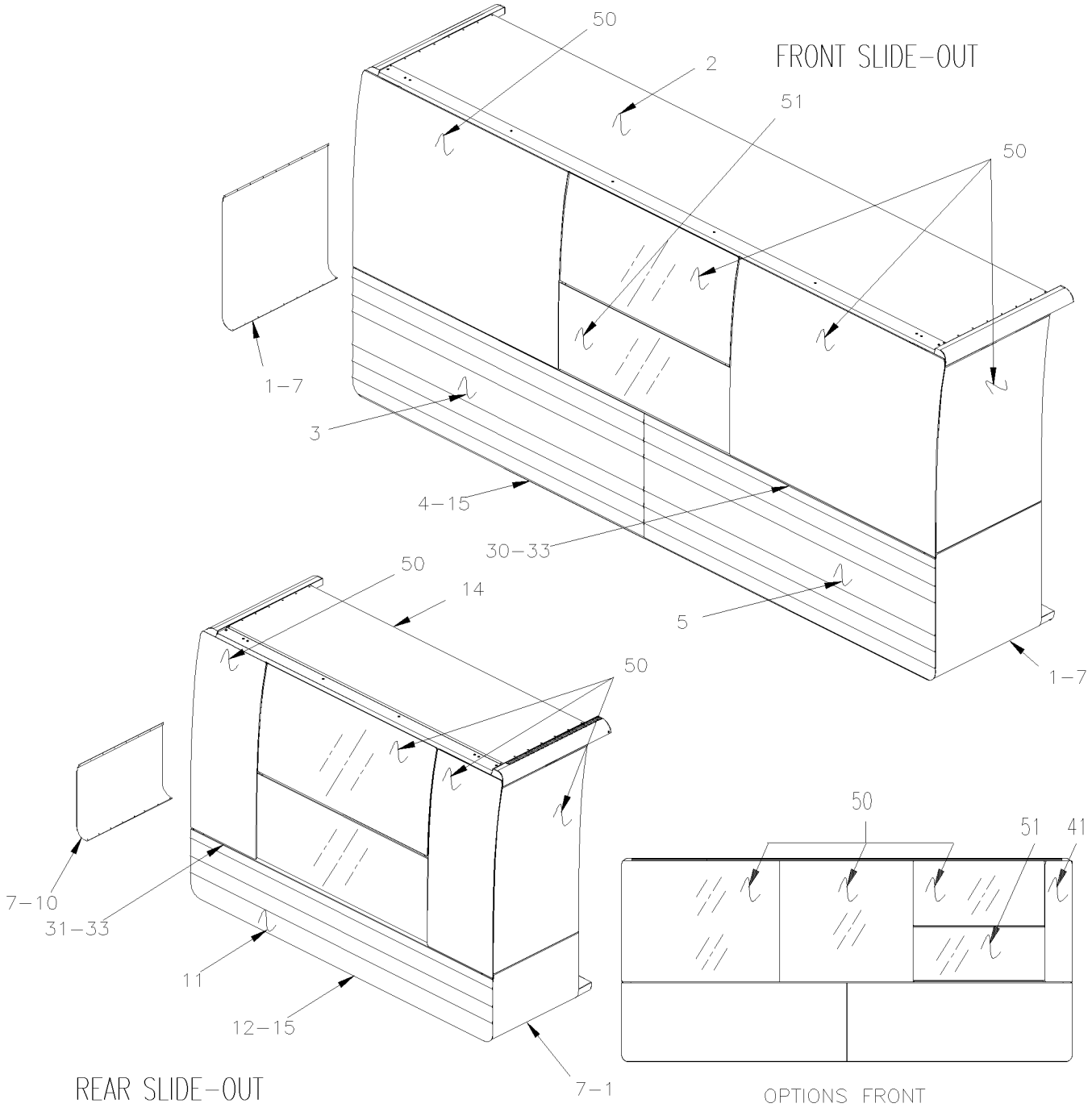

From 6-8806 Up to 8-9339	DATE: 01/2014	PAGE: Y2-1854-91
SIDE PANELS - "SLIDE-OUT"		

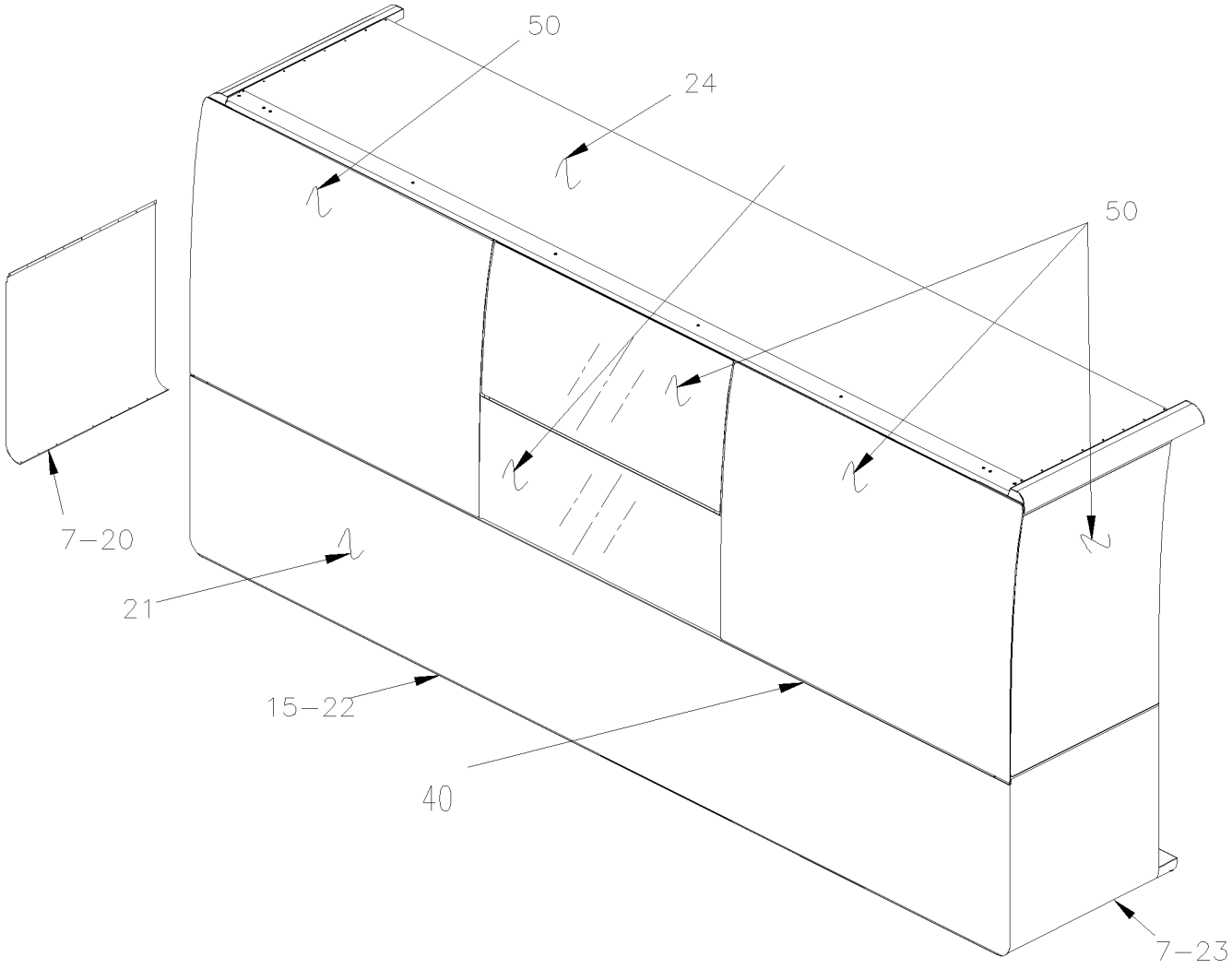

FRONT SLIDE-OUT

MTH 45' ENT.

From 6-8806 Up to 8-9339	DATE: 01/2014	PAGE: Y2-1854-91

SIDE PANELS - "SLIDE-OUT"

ITEM	PART	DESCRIPTION	XL45	MTH40	MTH45	MTH45S	NOTE
1	477766	FRONT & REAR PANEL S.S. / B.A. Up to 6-8945 / REPLACED BY: 470031			1		
1	470031	FRONT & REAR PANEL S.S. / B.A. From 6-8946			1		
2	477763	ROOF PANEL AL.			1		
3	477598	PANEL SUB ASSY / FORWARD FRT/"SLIDE-OUT" / B.A. / REPLACED BY: 477599			1		
3	477599	PANEL / FORWARD FRT/"SLIDE-OUT" / B.A. / SERVICE			1		
4	477764	PANEL UNDER			1		
5	477600	PANEL SUB ASSY / BACKWARD FRT/"SLIDE-OUT" / B.A. / REPLACED BY: 477601			1		
5	477601	PANEL / BACKWARD FRT/"SLIDE-OUT" / B.A. / SERVICE			1		
7	502872	RIVET POP CK OE 1/8x3/16 SS			AR	AR	
NS	506785	TAPE RUB ADH2 CC POL 1/16" x 1/4" x 200' / BLACK I1C-N-A			AR	AR	
NS	680532	SEALANT SIKA #221 / GREY / 310ml CARTRIDGE			AR	AR	
10	477773	FRONT & REAR PANEL S.S. / B.A. Up to 6-8945 / REPLACED BY: 470034			1		
10	470034	FRONT & REAR PANEL S.S. / B.A. From 6-8946			1		
11	477783	PANEL SUB ASSY / REAR / "SLIDE-OUT" / B.A. / REPLACED BY: 477784			1		
11	477784	PANEL / REAR / "SLIDE-OUT" / B.A. / SERVICE			1		
12	477772	UNDER FLOOR PANEL AL.			1		
14	477771	ROOF PANEL AL.			1		
15	477902	CAP PLASTIC BLACK / ROD LOOK			1		
20	477839	FRONT PANEL S.S. / B.A. Up to 6-8947 / REPLACED BY: 470033				1	
20	470033	FRONT PANEL S.S. / B.A. From 6-8948				1	
21	477936	PANEL FLAT FRONT SLIDE OUT				1	
22	477838	PANEL UNDER				1	
23	477985	REAR PANEL S.S. / B.A. Up to 6-8947 / REPLACED BY: 470032				1	
23	470032	REAR PANEL S.S. / B.A. From 6-8948				1	
24	477837	ROOF PANEL AL.				1	
30	476132	FINISHING MOULDING SS / 4425.6MM			1		
31	476135	FINISHING MOULDING SS / 2292.4MM			1		
32	474515	FINISHING MOULDING UPPER L.H. 12253MM			1		
33	293281	RUBBER SEAL EXTRUSION / ADHESIVE / LOWER WINDOW			1		
40	474515	FINISHING MOULDING UPPER L.H. 12253MM				1	
41	476733	PANEL FIBERGLASS 265.7MM			1		
50	Y2-1884-91	**"SLIDE-OUT" - GLASS - MTH**					
51	Y2-1884-60	**AWNING WINDOW - MTH**					
51	Y2-1884-65	**ELECTRICAL AWNING WINDOW ASSY**					
51	Y2-1884-80	**ELECTRICAL SLIDING WINDOW ASSY**					
51	790458	**SLIDING WINDOW L.H. - MTH**					
NS	470035	KIT, REMPLACEMENT END PANEL Up to 6-8947			1	1	
. NS	IS-06028	. SEE INSTRUCTION SHEET Up to 6-8947			1	1	
53	684217	JIG FOR HOLE RIVET POSITIONING / USED ONLY WITH 470035 KIT Up to 6-8947			1	1	

From 6-8806 Up to 8-9339	DATE: 01/2014	PAGE: Y2-1854-91

SIDE PANELS - "SLIDE-OUT"

ITEM	PART	DESCRIPTION	XL45	MTH40	MTH45	MTH45S	NOTE

From Y-7046 Up to 6-8805	DATE: 01/2014	PAGE: Y2-1854-95

"SLIDE-OUT" - INSTALLATION

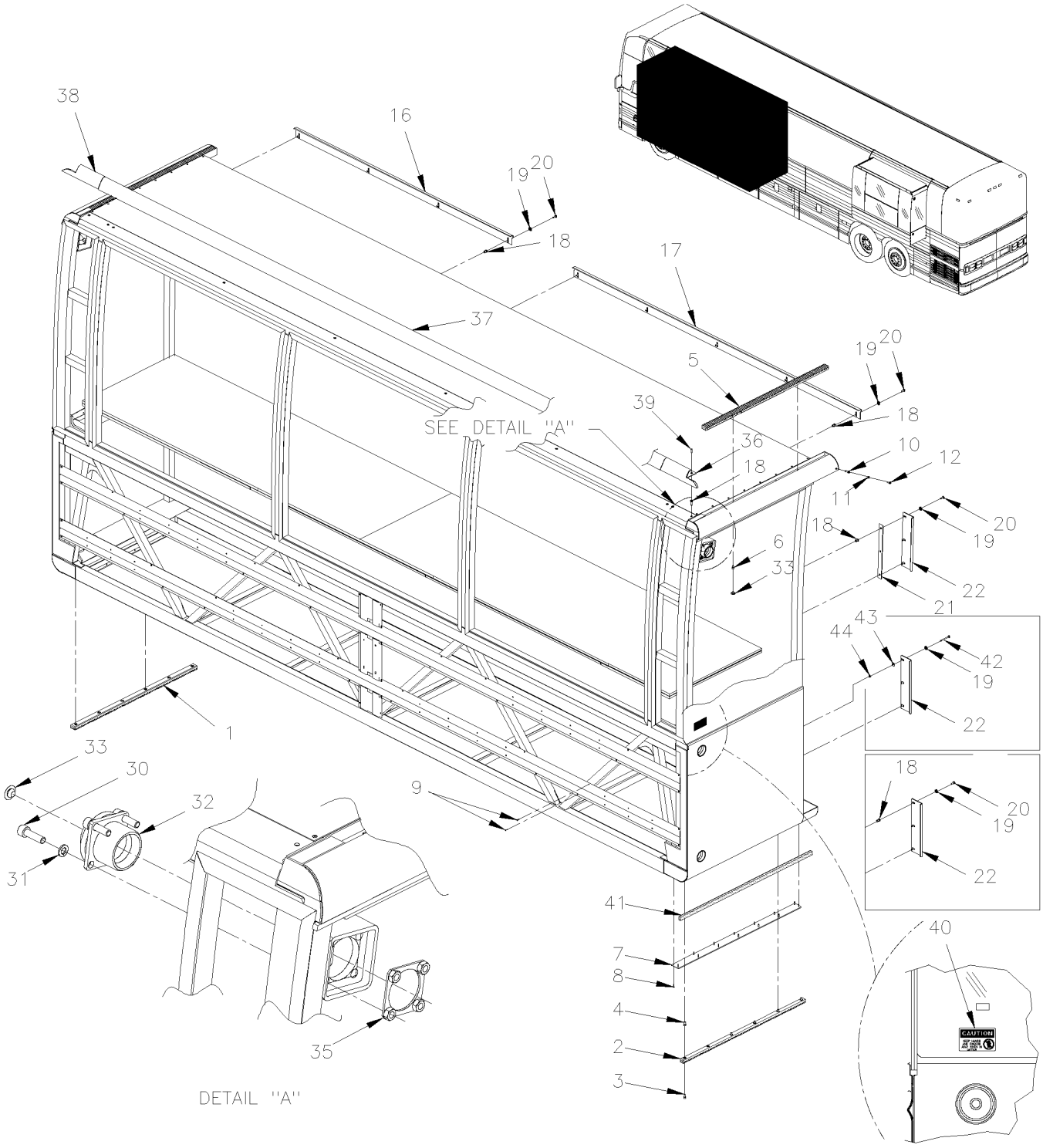

From Y-7046 Up to 6-8805	DATE: 01/2014	PAGE: Y2-1854-95

"SLIDE-OUT" - INSTALLATION

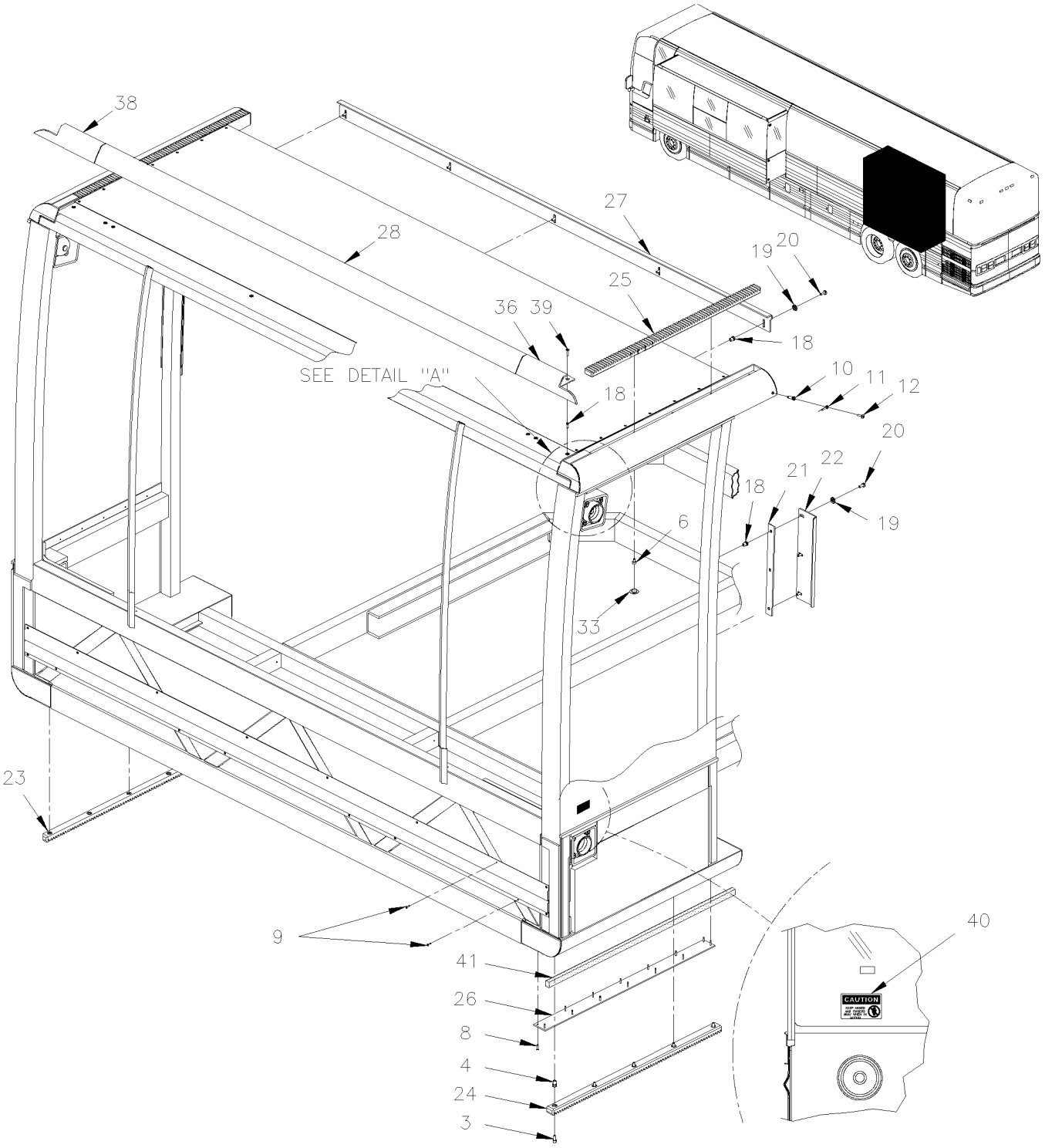

From Y-7046 Up to 6-8805	DATE: 01/2014	PAGE: Y2-1854-95

"SLIDE-OUT" - INSTALLATION

ITEM	PART	DESCRIPTION	XL45	MTH40	MTH45	MTH45S	NOTE
1	690183	FRONT BOTTOM RACK Up to 4-8251 / REPLACED BY: 407517			1		
1	407517	FRONT BOTTOM RACK From 4-8252			1		
2	690184	FRONT BOTTOM RACK Up to 4-8251 / REPLACED BY: 407516			1		
2	407516	FRONT BOTTOM RACK From 4-8252			1		
3	966802	SCREW CAP HEXS M6-1.0x16 G8.8 ZP			12		
4	690280	NUT INS TYPE "A-L" OE M6-1.0 4.2-6.6 ZP Up to 4-8251 / REPLACED BY: 502839			12		
4	502839	NUT INS TYPE "A-L" OE M6-1.0 4.2-6.6 ZP From 4-8252			12		
5	690196	TOP RACK / REPLACED BY: 407515			2		
6	5001025	SCREW CAP HEXS M6-1.0x12 G8.8 ZP			12		
7	690138	SLIDING PLATE / FORWARD / S.B. Up to 3-8251 / REPLACED BY: 490498			2		
7	490498	SLIDING PLATE / FORWARD / S.B. From 3-8252 Up to 5-8468 / REPLACED BY: 491063			1		
7	491063	SLIDING PLATE / FORWARD / S.B. From 5-8469			1		
NS	476352	SLIDING PLATE / BACKWARD / S.B. From 3-8252 Up to 5-8468 / REPLACED BY: 477585			1		
NS	477585	SLIDING PLATE / BACKWARD / B.A. From 5-8469			1		
8	504107	RIVET POP DOME OE 1/8x5/16 AL			28		
9	504339	RIVET POP DOME OE 1/8x3/8 SS			52		
10	690260	NUT INS TYPE "A-L" OE M5-0.8 3.3-5.7 ZP Up to 4-8251 / REPLACED BY: 502879			11		
10	502879	NUT INS TYPE "A-L" OE M5-0.8 3.3-5.7 ZP From 4-8252			11		
11	Y2-2390-20	**"SLIDE-OUT" - FRONT MECHANISM INSTALLATION**					
12	690258	SCREW MA PAN PH M5-0.8x16 ZP Up to 4-8251 / REPLACED BY: 502653			1		
12	502653	SCREW MA PAN PH M5-0.8x16 SS From 4-8252			1		
16	690200	ROOF KEY Up to 1-7664			1		
16	476179	PLATE TOP STOPPER 1790MM From 1-7665			1		
17	690140	ROOF KEY Up to 1-7664 / REPLACED BY: 690142			1		
17	476179	PLATE TOP STOPPER 1790MM From 1-7665			1		
18	690259	NUT INS TYPE "A-L" OE M6-1.0 0.7-4.2 ZP Up to 4-8251 / REPLACED BY: 502842			21		
18	502842	NUT INS TYPE "A-L" OE M6-1.0 0.7-4.2 ZP From 4-8252			21		
19	690267	WASHER LO SERR 6.1x16.0x0.9 ZP Up to 4-8251 / REPLACED BY: 500356			32		
19	500356	WASHER LO SERR 6.1x16.0x0.9 ZG603 From 4-8252			32		
20	5001209	SCREW CAP HEX M6-1.0x25 G8.8 ZP			32		
21	690214	SPACER Up to 4-8251 / REPLACED BY: 476180			2		
21	476180	SPACER From 4-8252			2		
22	690141	SIDE KEY Up to 4-8251 / REPLACED BY: 476176			4		
22	476176	SIDE KEY STOPPER 300MM From 4-8252			4		
23	690221	FRONT BOTTOM RACK Up to 4-8251 / REPLACED BY: 407521			1		
23	407521	FRONT BOTTOM RACK From 4-8252			1		
24	690220	FRONT BOTTOM RACK Up to 4-8251 / REPLACED BY: 407520			1		
24	407520	FRONT BOTTOM RACK From 4-8252			1		
25	690195	TOP RACK Up to 4-8251 / REPLACED BY: 407522			1		
25	407522	TOP RACK From 4-8252			1		
26	690191	SLIDING PLATE Up to 3-8251 / REPLACED BY: 490965			2		

From Y-7046 Up to 6-8805	DATE: 01/2014	PAGE: Y2-1854-95

"SLIDE-OUT" - INSTALLATION

ITEM	PART	DESCRIPTION	XL45	MTH40	MTH45	MTH45S	NOTE
26	490965	SLIDING PLATE / FORWARD / S.B. From 3-8252 Up to 5-8468 / REPLACED BY: 491064			1		
26	491064	SLIDING PLATE / FORWARD / S.B. From 5-8469			1		
NS	476353	SLIDING PLATE / FORWARD / S.B. From 3-8252 Up to 5-8468 / REPLACED BY: 477584			1		
NS	477584	SLIDING PLATE / FORWARD / B.A. From 5-8469			1		
27	690142	ROOF KEY Up to 4-8251 / REPLACED BY: 476179			1		
27	476179	PLATE TOP STOPPER 1790MM From 4-8252			1		
28	690255	KEY OUTSIDE ROOF ASSY W/RUBBER / CENTRAL REAR Up to Y-7266			1		
28	Call Order Desk	KEY OUTSIDE ROOF ASSY W/RUBBER / CENTRAL REAR From 4-8252			1		P
28	476188	. KEY OUTSIDE ROOF EXTRUSION 1754MM / CENTRAL REAR			1		
28	476190	. RUBBER EXTRUSION / RAW MATERIAL / REPLACED BY: 470095			AR		
28	470095	. RUBBER EXTRUSION / RAW MATERIAL			1		
30	690271	SCREW CAP HEXS M10-1.5x35 G10.9 Up to 4-8251 / REPLACED BY: 502877			24		
30	502877	SCREW CAP HEXS M10-1.5x35 G10.9 From 4-8252			24		
31	500257	WASHER LO SPT 10.2x18.1x2.2 ZP			24		
32	690144	STEEL RECEPTACLE Up to 4-8251 / REPLACED BY: 407518			6		
32	407518	STEEL RECEPTACLE From 4-8252			6		
32	690216	CHROMIUM-PLATED RECEPTACLE / REPLACED BY: 407518			6		
33	690285	SNAP-IN PLUG 1/2" Up to 4-8251 / REPLACED BY: 502840			18		
33	502840	SNAP-IN PLUG / .500 O.D. From 4-8252			18		
34	690179	FRONT S/O ASSY			1		
35	690139	BOLTING PLATE ASSY Up to 4-8251 / REPLACED BY: 490964			6		
35	490964	BOLTING PLATE ASSY From 4-8252			6		
36	690212	KEY OUTSIDE ROOF ASSY W/RUBBER / BACKWARD Up to 4-8251			1		
36	Call Order Desk	KEY OUTSIDE ROOF ASSY W/RUBBER / BACKWARD From 4-8252			1		P
36	476186	. KEY OUTSIDE ROOF EXTRUSION / BACKWARD			1		
36	476190	. RUBBER EXTRUSION / RAW MATERIAL / REPLACED BY: 470095			AR		
36	470095	. RUBBER EXTRUSION / RAW MATERIAL			AR		
37	690213	KEY OUTSIDE ROOF ASSY W/RUBBER / CENTRAL FRONT From Y-7267 Up to 4-8251			1		
37	Call Order Desk	KEY OUTSIDE ROOF ASSY W/RUBBER / CENTRAL FRONT From 4-8252			1		P
37	476189	. KEY OUTSIDE ROOF EXTRUSION 3886MM / CENTRAL FRONT			1		
37	476190	. RUBBER EXTRUSION / RAW MATERIAL / REPLACED BY: 470095			1		
37	470095	. RUBBER EXTRUSION / RAW MATERIAL			AR		
38	690211	KEY OUTSIDE ROOF ASSY W/RUBBER / FORWARD Up to 4-8251			1		
38	Call Order Desk	KEY OUTSIDE ROOF ASSY W/RUBBER / FORWARD From 4-8252			1		P
38	476187	. KEY OUTSIDE ROOF / FORWARD			1		
38	476190	. RUBBER EXTRUSION / RAW MATERIAL / REPLACED BY: 470095			AR		
38	470095	. RUBBER EXTRUSION / RAW MATERIAL			AR		
39	502639	SCREW MA FL PH M5-0.8X12 ZP Up to 1-7664			18		
39	502631	SCREW CAP HEX M6-1.0x20 G8.8 ZP From 1-7665			18		
40	690232	DECAL " KEEP HANDS & FINGERS AWAY.." Up to 4-8251 / REPLACED BY: 476130			2		
40	476130	DECAL " KEEP HANDS & FINGERS AWAY.." From 4-8252			1		
		P) CALL ORDER DESK FOR SPECIFIC APPLICATION					
		(V.I.N.)					

From Y-7046 Up to 6-8805	DATE: 01/2014	PAGE: Y2-1854-95

"SLIDE-OUT" - INSTALLATION

ITEM	PART	DESCRIPTION	XL45	MTH40	MTH45	MTH45S	NOTE
41	506277	TAPE RUB ADH1 CC POL 1/2" x 3/4" x 15' / GREY 2520X			AR		
	N25539	THREAD LOCKER LOCTITE #262 / RED / 250ml			AR		
42	N.P.N.	SCREW CAP HEX ZP M6 X 55 From 1-7665			AR		4
43	690261	WASHER FL 6.4x12.0x1.6 SS From 1-7665 Up to 4-8251 / REPLACED BY: 502573			AR		
43	502573	WASHER FL 6.4x12.5x1.6 SS From 4-8252			AR		
44	502511	NUT HEX NYRT M6-1.0 ZP From 1-7665			AR		
		4) NO PARTS NUMBER					

From Y-7046 Up to 6-8805	DATE: 01/2014	PAGE: Y2-1854-95

"SLIDE-OUT" - INSTALLATION

ITEM	PART	DESCRIPTION	XL45	MTH40	MTH45	MTH45S	NOTE

From 6-8806 Up to 8-9339	DATE: 01/2014	PAGE: Y2-1854-96
"SLIDE-OUT" - INSTALLATION		

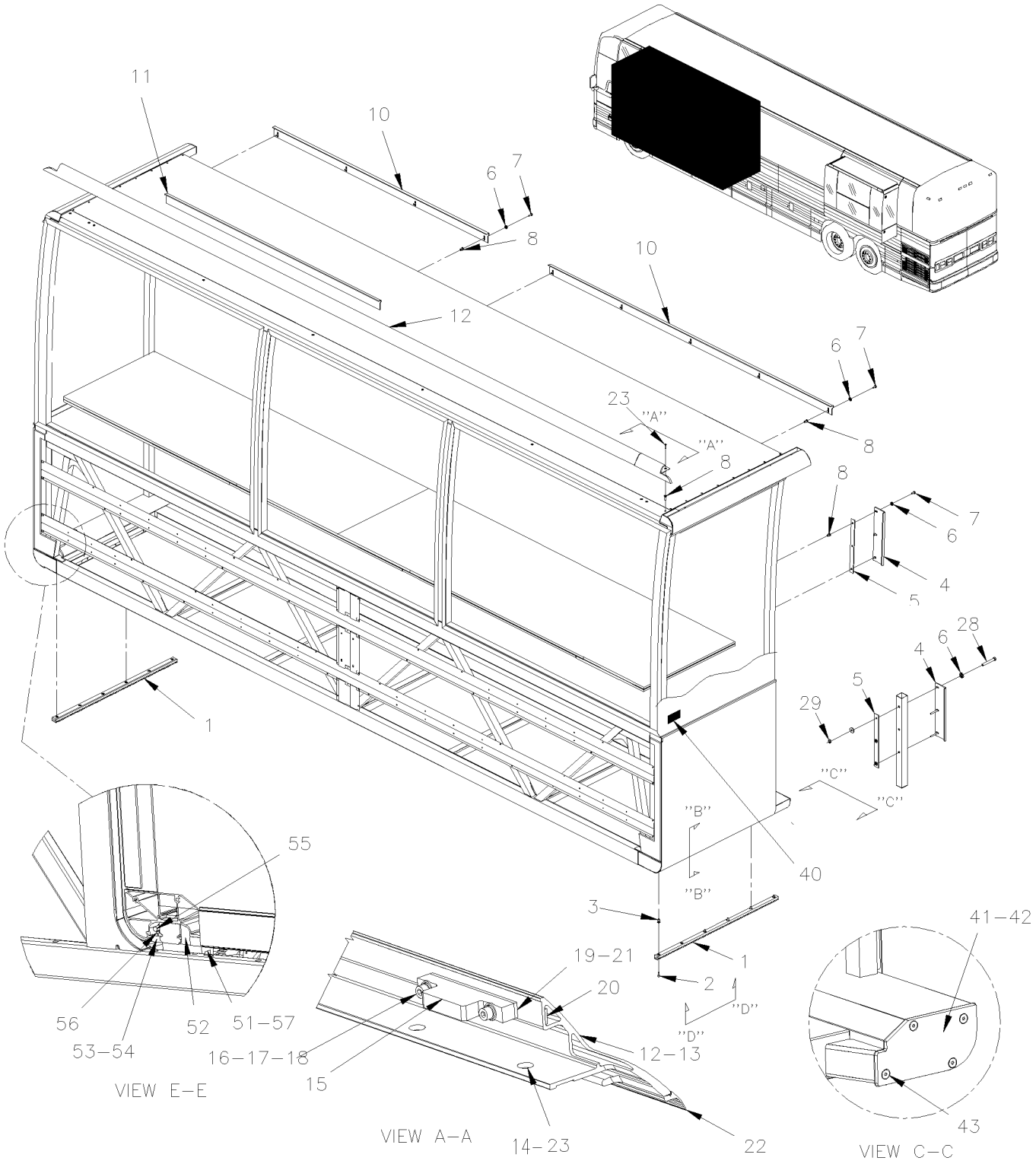

From 6-8806 Up to 8-9339	DATE: 01/2014	PAGE: Y2-1854-96
"SLIDE-OUT" - INSTALLATION		

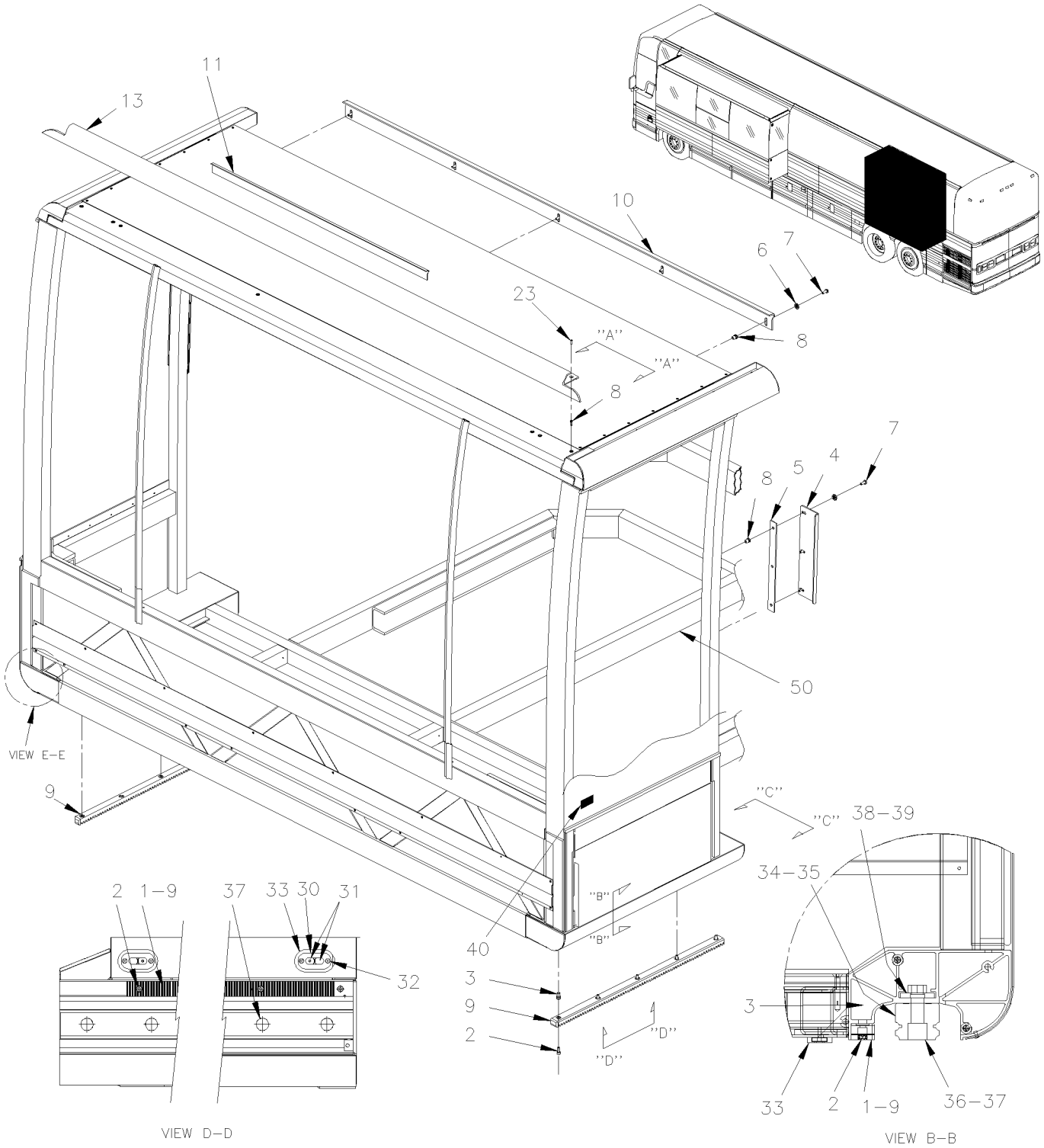

From 6-8806 Up to 8-9339	DATE: 01/2014	PAGE: Y2-1854-96

"SLIDE-OUT" - INSTALLATION

ITEM	PART	DESCRIPTION	XL45	MTH40	MTH45	MTH45S	NOTE
1	470125	BOTTOM RACK 935MM			2		
1	470127	BOTTOM RACK 785MM				2	
2	5001610	SCREW CAP HEXS M6-1.0x25 SS EMN			AR	AR	
3	502839	NUT INS TYPE "A-L" OE M6-1.0 4.2-6.6 ZP			AR	AR	
4	476176	SIDE KEY STOPPER 300MM			4	4	
5	476180	SPACER			AR	AR	
6	5001586	WASHER FL 6.4x17.0x3.0 ZP			AR	AR	
7	5001209	SCREW CAP HEX M6-1.0x25 G8.8 ZP			AR	AR	
8	502842	NUT INS TYPE "A-L" OE M6-1.0 0.7-4.2 ZP			AR	AR	
9	470127	BOTTOM RACK 785MM			2		
10	477723	PLATE TOP STOPPER 1354MM			2		
10	477723	PLATE TOP STOPPER 1354MM				1	
11	477915	INTERIOR KEY			2		
11	477915	INTERIOR KEY				1	
12	Call Order Desk	TOP EXTRUSION ASSY FRONT SLIDE-OUT			1		P
12	Call Order Desk	TOP EXTRUSION ASSY FRONT SLIDE-OUT				1	P
13	Call Order Desk	TOP EXTRUSION ASSY REAR SLIDE-OUT 7.5'			1	1	P
14	477726	. EXTRUSION FRONT SLIDE-OUT			1		
14	477913	. EXTRUSION FRONT SLIDE-OUT				1	
14	477810	. EXTRUSION REAR SLIDE-OUT 7.5'			1		
15	477724	. BUMPER			2	2	
16	5001611	. SCREW CAP HEXS M6-1.0x30 SS EMN			4	4	
17	502570	. WASHER LO SPT 6.1x11.8x1.6 SS			4	4	
18	502573	. WASHER FL 6.4x12.5x1.6 SS			4	4	
19	477725	. SHIM 12.7MM x 101MM x 11GA			AR	AR	
19	477807	. SHIM 12.7MM x 101MM x 16GA			AR	AR	
20	477778	. ANCHOR PLATE W/THREAD			2	2	
21	5001612	. SCREW CAP FL HEXS M4-0.7x8 SS EMN			2	2	
22	476190	. RUBBER EXTRUSION / RAW MATERIAL Up to 7-9027 / REPLACED BY: 470095			AR	AR	
22	470095	. RUBBER EXTRUSION / RAW MATERIAL From 7-9028			AR	AR	
23	971850	SCREW MA FL TORX M6-1.0x20 G8.8 ZP			AR	AR	
28	509838	SCREW CAP HEX M6-1.0x55 G8.8 ZP			6	6	
29	502511	NUT HEX NYRT M6-1.0 ZP			6	6	
30	470124	SUPPORT MAGNET / ALUMINUM			2	2	
31	592949	MAGNET .200 TH x 700MM O.D.			4	4	
32	5001614	SCREW CAP FL HEXS M4-0.7x16 SS EMN			4	4	
33	476473	GASKET MAGNET SUPPORT			2	2	
		P) CALL ORDER DESK FOR SPECIFIC APPLICATION					
		(V.I.N.)					

From 6-8806 Up to 8-9339	DATE: 01/2014	PAGE: Y2-1854-96

"SLIDE-OUT" - INSTALLATION

ITEM	PART	DESCRIPTION	XL45	MTH40	MTH45	MTH45S	NOTE
NS	682176	SEALANT SIKA #221 / BLACK / 310ml CARTRIDGE			AR	AR	
34	470108	RAIL GUIDE LINEAR BEARING 1058MM			2		
35	470126	RAIL GUIDE LINEAR BEARING 904MM			2	2	
NS	507642	RAIL GUIDE LINEAR BEARING 254MM PLASTIC DUMMY / USE WITH 470107 ONLY			AR	AR	W
NS	685232	RAIL GUIDE EXTENSION TOOL L.H.			AR	AR	T
NS	685233	RAIL GUIDE EXTENSION TOOL R.H.			AR	AR	T
36	5001617	SCREW CAP HEXS M14-2.0x55 G10.9 DP			AR	AR	
NS	680038	THREAD LOCKER LOCTITE #243 / BLUE / 50ml			AR	AR	
37	504721	FINISHING PLUG / RAIL GUIDE			AR	AR	
38	470104	ATTACHMENT STRIP 1020MM			2		
39	477901	ATTACHMENT STRIP 900MM			2	2	
40	476130	DECAL " KEEP HANDS & FINGERS AWAY.."			1	1	
40	477989	DECAL " ON OVERRIDE MUST BE LOW TORQUE…"			1	1	
41	477879	CLOSING PLATE / FORWARD			1	1	
NS	477744	GASKET CLOSING PLATE / FORWARD			1	1	
42	477681	CLOSING PLATE / BACKWARD			1	1	
NS	477790	GASKET CLOSING PLATE / BACKWARD			1	1	
43	5001617	SCREW CAP HEXS M14-2.0x55 G10.9 DP			8	8	
50	Y2-2390-41	**"SLIDE-OUT" - BED SUPPORT**					
51	470114	SPACER NYLON 100MM x 41MM x 35MM			2	2	
52	476415	SEALING BLOCK 78MM			2	2	
53	476416	SEALING BLOCK R.H. 49.8MM			1	1	
54	476436	SEALING BLOCK L.H. 49.8MM			1	1	
55	5001603	SCREW CAP HEXS M10-1.5x20 SS EMN			2	2	
56	5001602	SCREW SET HEXS FLAT M6-1.0x6 SS			2	2	
57	5001604	SCREW CAP HEXS M8-1.25x70 G8.8 DP			4	4	
NS	502889	WASHER LO SPT 8.1x12.7x2.0 ZG603	4				
		T) THOSE RAIL EXTENTION TOOLS ARE FOR EASY					
		REMOVED SLIDE-OUT FROM STRUCTURE					
		W) "WARNING" YOUR REQUIRE 2 OF THIS DUMMY BEFORE					
		REMOVE THE SLIDE-OUT FROM STRUCTURE					

From Y-7046 Up to 8-9339	DATE: 01/2014	PAGE: Y2-1855-00

RUB RAIL - CREST & TRIMS

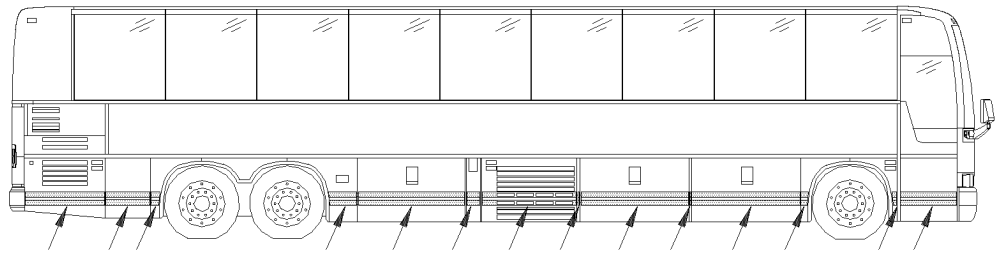

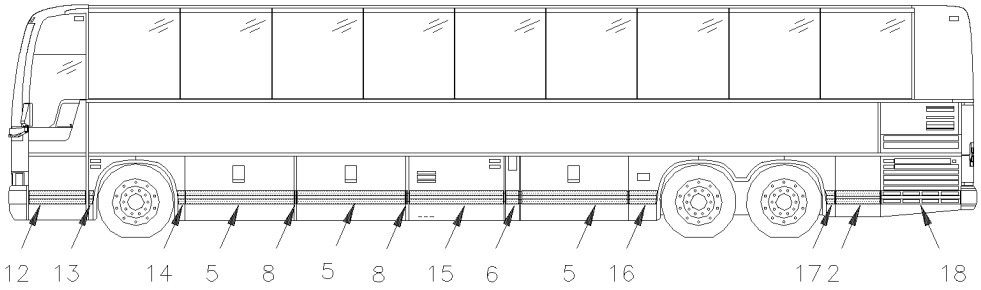

BUS 45'

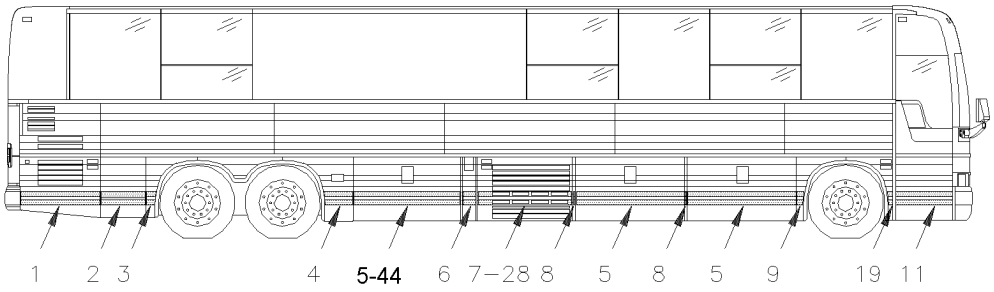

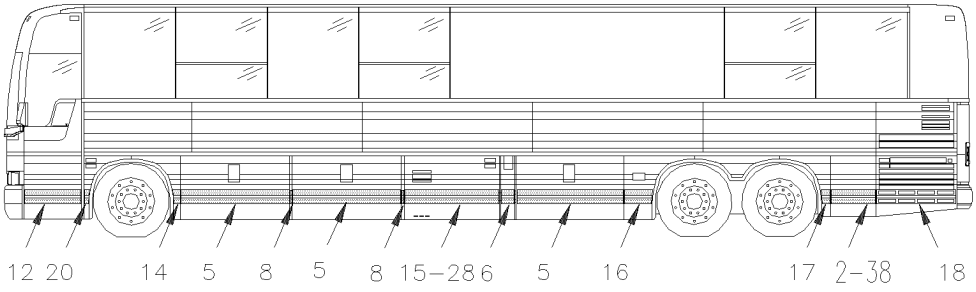

MTH. 45'

From Y-7046 Up to 8-9339	DATE: 01/2014	PAGE: Y2-1855-00

RUB RAIL - CREST & TRIMS

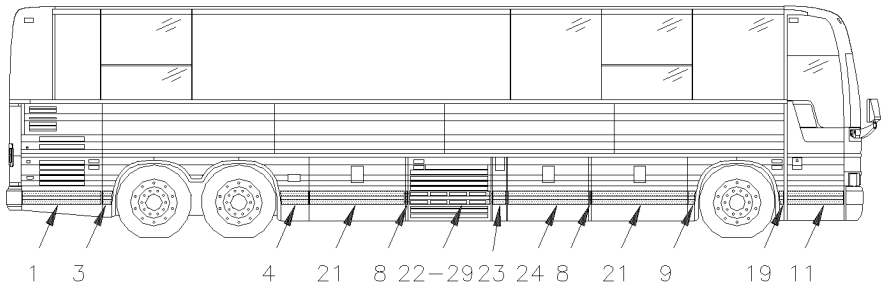

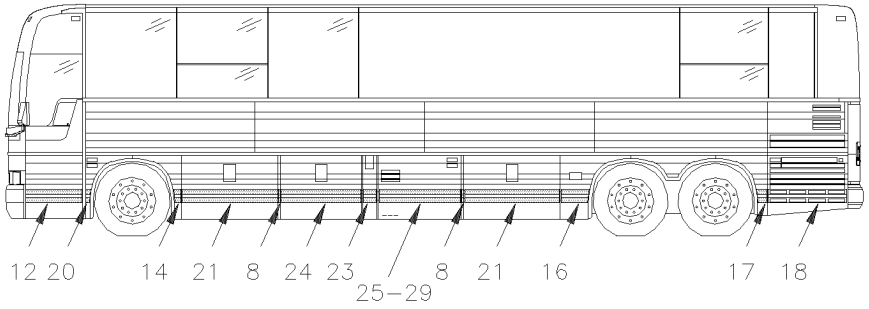

MTH. 40'

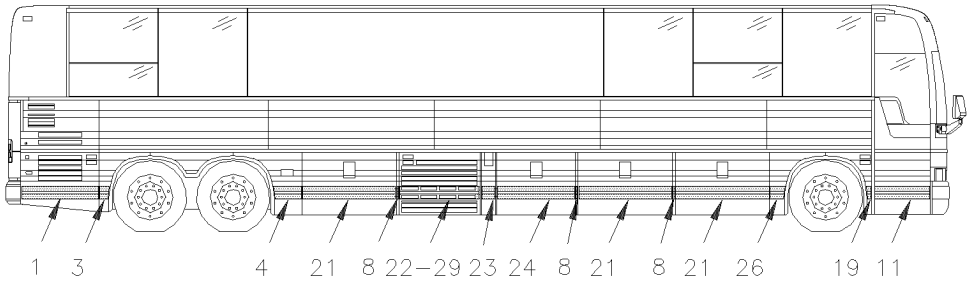

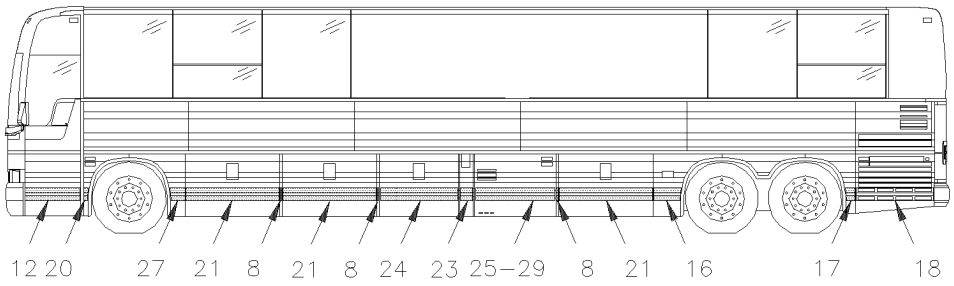

MTH 45' ENT.

From Y-7046 Up to 8-9339	DATE: 01/2014	PAGE: Y2-1855-00

RUB RAIL - CREST & TRIMS

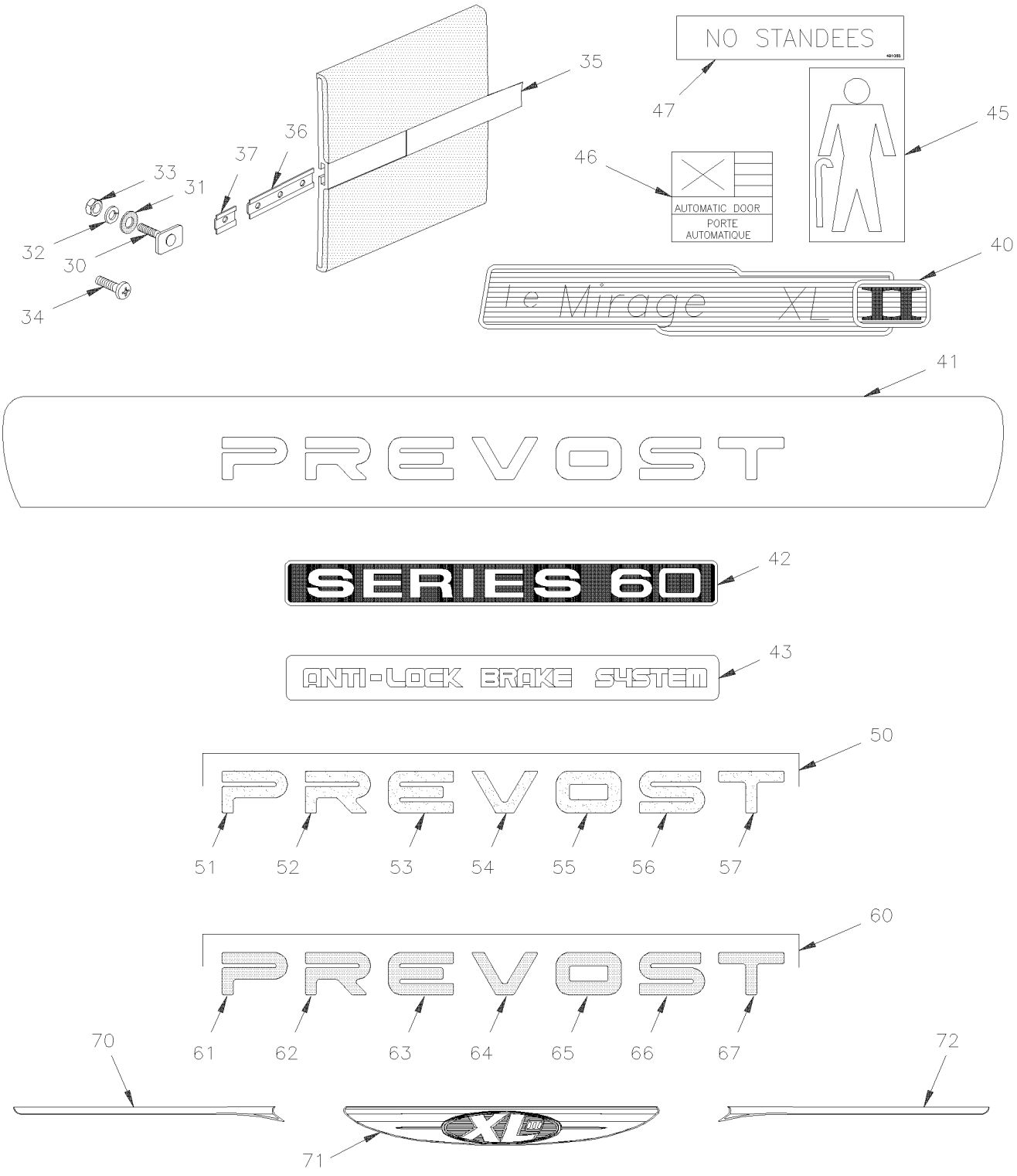

From Y-7046 Up to 8-9339	DATE: 01/2014	PAGE: Y2-1855-00

RUB RAIL - CREST & TRIMS

ITEM	PART	DESCRIPTION	XL45	MTH40	MTH45	MTH45S	NOTE
1	286639	RUB RAIL ASSY / 1115MM	1	1	1	1	
2	286640	RUB RAIL ASSY / 624MM Up to 6-8906	2				
2	286640	RUB RAIL ASSY / 624MM Up to 3-8164			2		
2	286640	RUB RAIL ASSY / 624MM From 4-8165			1		
3	474303	RUB RAIL ASSY / 132MM	1		1		
3	474303	RUB RAIL ASSY / 132MM Up to 7-9095		1		1	
3	476584	RUB RAIL ASSY / 249MM From 7-9096				1	
4	474302	RUB RAIL ASSY / 399MM	1		1		
4	474302	RUB RAIL ASSY / 399MM Up to 7-9095		1		1	
4	476583	RUB RAIL ASSY / 294MM From 7-9096				1	
5	474293	RUB RAIL ASSY / 1527MM	6		6		
6	474296	RUB RAIL ASSY / 194MM	2		2		
7	474301	RUB RAIL ASSY / 1349MM	1		1		
8	474294	RUB RAIL ASSY / 33MM	4	4	4		
8	474294	RUB RAIL ASSY / 33MM				6	
9	474300	RUB RAIL ASSY / 108MM	1	1	1		
10	474299	RUB RAIL ASSY / 68MM Up to 6-8906	1				
11	474290	RUB RAIL ASSY / 794MM / W/1 ½" SCREW	1	1	1	1	
. NS	474304	. SPECIAL SCREW ASSY SQ SS 1/4-20 X 1"½	1	1	1	1	
12	474766	RUB RAIL ASSY / 794MM / W/1" SCREW	1	1	1	1	
13	474291	RUB RAIL ASSY / 66MM	1	1	1	1	
14	474292	RUB RAIL ASSY / 108MM	1	1	1		
15	474295	RUB RAIL ASSY / 1351MM	1		1		
16	474297	RUB RAIL ASSY / 399MM	1		1		
16	474297	RUB RAIL ASSY / 399MM Up to 7-9095		1		1	
16	476581	RUB RAIL ASSY / 294MM From 7-9096				1	
17	474298	RUB RAIL ASSY / 132MM	1		1		
17	474298	RUB RAIL ASSY / 132MM Up to 7-9095		1		1	
17	476793	RUB RAIL ASSY / 99MM From 7-9096				1	
18	286639	RUB RAIL ASSY / 1115MM Up to 6-8906	1				
18	286638	RUB RAIL ASSY / 1115MM / W/0.93 SQF PERFORATED AREA			1		
18	286638	RUB RAIL ASSY / 1115MM / W/0.93 SQF PERFORATED AREA		1		1	
19	474827	RUB RAIL ASSY / 101MM				1	
20	474826	RUB RAIL ASSY / 101MM				1	
21	474612	RUB RAIL ASSY / 1356MM				6	
21	474612	RUB RAIL ASSY / 1356MM Up to 5-8813		4			
22	474616	RUB RAIL ASSY / 1134MM		1		1	
23	474797	RUB RAIL ASSY / 251MM		1		1	
24	474613	RUB RAIL ASSY / 1140MM		2		2	

From Y-7046 Up to 8-9339	DATE: 01/2014	PAGE: Y2-1855-00

RUB RAIL - CREST & TRIMS

ITEM	PART	DESCRIPTION	XL45	MTH40	MTH45	MTH45S	NOTE
25	474614	RUB RAIL ASSY / 1135MM		1		1	
26	474615	RUB RAIL ASSY / 222MM				1	
27	474611	RUB RAIL ASSY / 222MM				1	
28	474612	RUB RAIL ASSY / 1356MM			2		A
29	474613	RUB RAIL ASSY / 1140MM		2		2	
30	474304	SPECIAL SCREW ASSY SQ SS 1/4-20 X 1"½	AR	AR	AR	AR	
31	473378	SEAL WASHER / <> RUB RAIL & PANEL	AR	AR	AR	AR	
32	500270	WASHER FL .406x1.000x.063 SS	AR	AR	AR	AR	
33	5001123	NUT HEXF 1/4-20 SS	AR	AR	AR	AR	
34	500310	SCREW TC FL PH #10-24x1 1/4 SS410 / REPLACED BY: 5001533	AR	AR	AR	AR	
35	920010	STRIPE, REFLECTIVE BLACK / 22MM X 150'	AR	AR	AR	AR	
35	287287	. STRIPE, REFLECTIVE BLACK / 22MM X 15' / REPLACED BY: 920010	AR	AR	AR	AR	
36	474777	ATTACHMENT SUPPORT THICK 5.6MM X 100MM	1	1	1	1	
36	474944	ATTACHMENT SUPPORT THIN 4.MM X 100MM	1	1	1	1	
36	474783	ATTACHMENT SUPPORT THICK 5.6MM X 30MM	AR	AR	AR	AR	
37	474953	ATTACHMENT SUPPORT THIN 4.MM X 30MM	1	1	1	1	
40	490902	CREST "XL-II"	1	1	1	1	
41	490849	CREST "PREVOST" 168MM X 1420MM Up to 4-8358		1	1	1	C
41	490918	CREST "PREVOST" 107MM X 1327MM Up to 4-8358	1	1	1	1	C
NS	474658	CREST SUPPORT FIBERGLASS Up to 4-8358	1	1	1	1	
NS	506790	TAPE RUB ADH2 CC POL 1/16" x 1/2" x 200' / BLACK I1C-N-A Up to 6-8906	AR				
NS	506769	TAPE RUB ADH2 CC POL 1/8" x 1/4" x 60' / BLACK H1CC-N-#14 Up to 6-8906	AR				
42	490718	DECAL, "SERIES 60" SS Up to 6-8906	1				
43	490651	DECAL, "ANTI-LOCK BRAKE SYSTEM" Up to 6-8906	1				
44	474949	RUB RAIL ASSY / 1513MM Up to 6-8906	1				W
45	131490	DECAL "FRONT KNEELING" / BLACK ON ALUMINIUM Up to 6-8906	1				
45	Call Order Desk	DECAL "FRONT KNEELING" / BLACK ON ALUMINIUM Up to 6-8906	1				P
46	285813	DECAL / "AUTOMATIC DOOR" / HAND OFF / ALU ENG & FRENCH Up to 6-8906	1				
46	282473	DECAL / "AUTOMATIC DOOR" / HAND OFF / CLEAR ENG & FRENCH Up to 6-8906 / REPLACED BY: 285813	1				
47	491068	DECAL "NO STANDEES" / W/"NEW-JERSEY" Up to 6-8906	1				
50	490922	CREST "PREVOST" GOLD REAR		1	1	1	
51	490931	. LETTER "P" GOLD		1	1	1	
52	490932	. LETTER "R" GOLD		1	1	1	
53	490933	. LETTER "E" GOLD		1	1	1	
54	490934	. LETTER "V" GOLD		1	1	1	
55	490935	. LETTER "O" GOLD		1	1	1	
56	490936	. LETTER "S" GOLD		1	1	1	
57	490937	. LETTER "T" GOLD		1	1	1	
60	490921	CREST "PREVOST" SILVER REAR	1	1	1	1	
		P) CALL ORDER DESK FOR SPECIFIC APPLICATION					
		(V.I.N.)					
		A) MTH WITH SMALL A/C SYSTEM					
		C) USE ON MTH FROM Y-7336					
		W) WITH W.C.L. BAGGAGE DOOR					

From Y-7046 Up to 8-9339	DATE: 01/2014	PAGE: Y2-1855-00

RUB RAIL - CREST & TRIMS

ITEM	PART	DESCRIPTION	XL45	MTH40	MTH45	MTH45S	NOTE
61	490924	. LETTER "P" SILVER	1	1	1	1	
62	490925	. LETTER "R" SILVER / REPLACED BY: 490921	1	1	1	1	
63	490926	. LETTER "E" SILVER / REPLACED BY: 490921	1	1	1	1	
64	490927	. LETTER "V" SILVER / REPLACED BY: 490921	1	1	1	1	
65	490928	. LETTER "O" SILVER / REPLACED BY: 490921	1	1	1	1	
66	490929	. LETTER "S" SILVER / REPLACED BY: 490921	1	1	1	1	
67	490930	. LETTER "T" SILVER	1	1	1	1	
70	491015	CREST "XL-II" & X3-45 / CURBSIDE WING PART From 4-8359	1	1	1	1	
71	491014	CREST "XL-II" / CENTER PART From 4-8359	1	1	1	1	
72	491016	CREST "XL-II" & X3-45 / STREETSIDE WING PART From 4-8359	1	1	1	1	

From Y-7046 Up to 2-7763	DATE: 01/2014	PAGE: Y2-1856-20
MIRROR "RAMCO" FLAT GLASS / SILVER PAINTED		

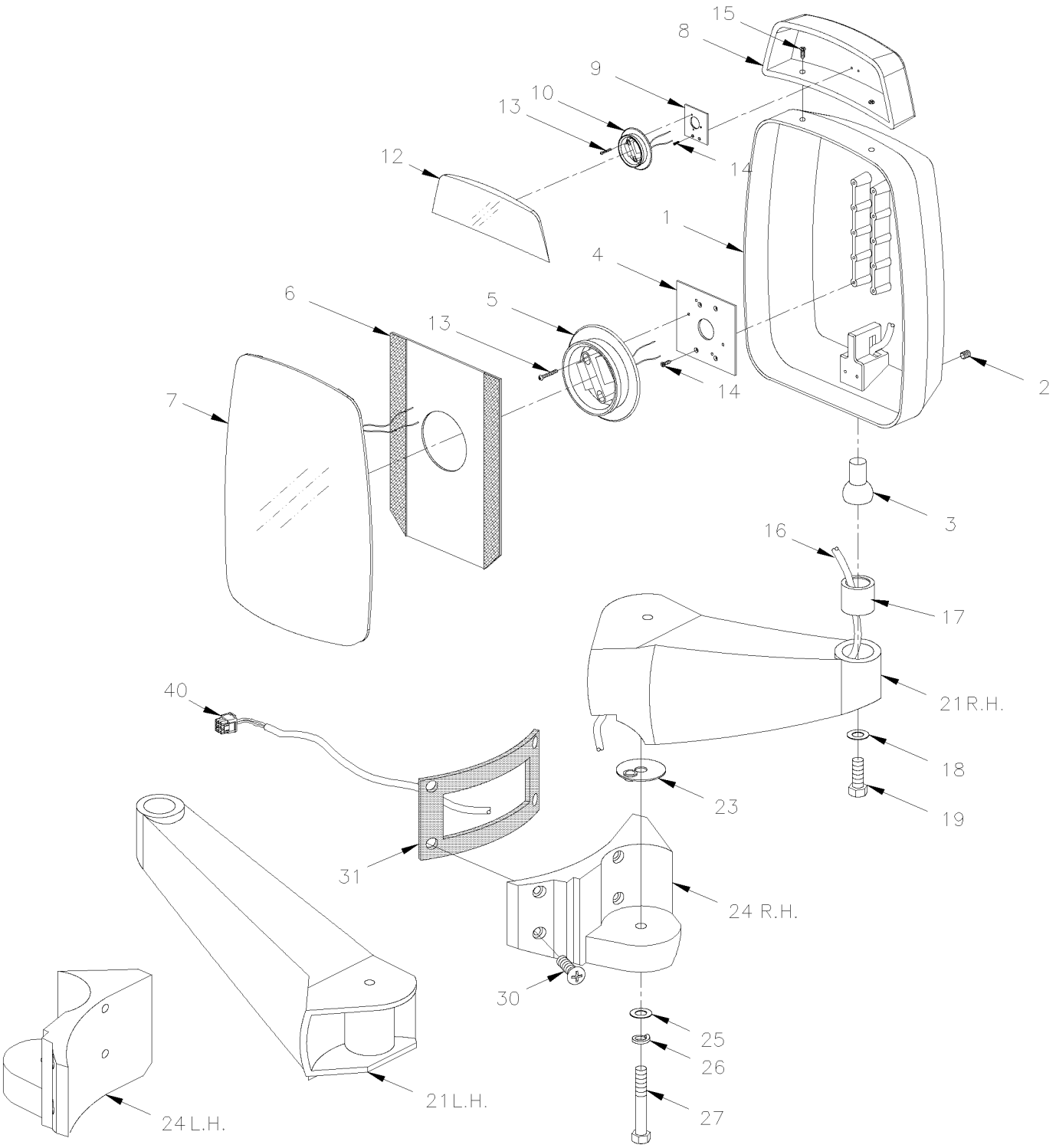

From Y-7046 Up to 2-7763	DATE: 01/2014	PAGE: Y2-1856-20

MIRROR "RAMCO" FLAT GLASS / SILVER PAINTED

ITEM	PART	DESCRIPTION	XL45	MTH40	MTH45	MTH45S	NOTE
	990329	MIRROR ASSY, L.H. / W/CONVEX ELECTRIC / W/8 PINS CONNECTOR	1				
	990330	MIRROR ASSY, R.H. / W/CONVEX ELECTRIC / W/8 PINS CONNECTOR	1				
1	990346	. HEAD ASSY / W/CONVEX ELECTRIC / W/8 PINS CONNECTOR	1				
2	502812	. . SCREW SET HEXS CUP 3/8-16X3/8 SS	1				
3	990186	. . STUD, BALL	1				
4	990272	. . NOTCHED BACK MOUNTING PLATE (2" X 3")	1				
5	990349	. . MOTOR 12V / MEDIUM / BLACK / 108MM / 4 1/4" O.D.	1				
6	990268	. . VELCRO PLATE / 8" X 8"	1				
7	990199	. . GLASS ASSY W/HEATER 12V	1				
8	990346	. . HEAD ASSY / W/CONVEX ELECTRIC / W/8 PINS CONNECTOR	1				
9	990295	. . . PLATE, TOP MOTOR MOUNTING	1				
10	990300	. . . MOTOR 12V / SMALL / BLACK / 85MM / 3 5/16" O.D. / REPLACED BY: 990219	1				
. NS	564494	. . . . TAB TERMINAL / 20-16 / AMP 63138-1	4				
12	990339	. . . GLASS CONVEX ASSY W/HEATER 12V	1				
13	N.P.N.	. . SCREW TC PAN PH ZP 6-32 X 1 1/8"	3				4
14	500660	. . SCREW TC FL PH #6-32x3/8 ZP	3				
15	N.P.N.	. . SCREW CAP HEX SS 10-24 X 1"	2				4
NS	500787	. . NUT HEX #10-24 SS	2				
16	990377	. . CABLE ASSY / W/CONNECTOR 8PIN	1				
17	990379	. . CUP, BALL STUD RETAINER / ONE PIECE	1				
18	500270	. . WASHER FL .406x1.000x.063 SS	1				
19		. . SCREW CAP HEX SS 3/8-24 X 1.250	1				
21	990313	. ARM, L.H. / REPLACED BY: 990393	1				
21	990315	. ARM, R.H.	1				
23	990265	. WASHER ALUMINUM 2 " O.D.	1				
23	504082	. . SNAP BUSHING / .125x.312x.312	1				
24	990309	. BRACKET, MOUNTING R.H.	1				
24	990311	. BRACKET, MOUNTING L.H.	1				
25	500958	. WASHER FL .531x1.062x.095 SS	1				
26	500035	. WASHER LO SPT .317x.586x.078 SS	1				
27	990500	. SCREW 1/2-13x2 HHCS SS	1				
30	5001461	SCREW MA FL PH M8-1.25x40 SS	2				
30	5001581	SCREW CAP BUT HEXS M8-1.25x40 SS	2				
NS	5001341	WASHER FL 8.4x17.0x1.6 SS	2				
31	490873	GASKET, RH	2				
31	490894	GASKET, LH	1				
40	562920	CONNECTOR / SH 8C / SWITCHCRAFT EN3C8FC	1				A
NS	562919	CONNECTOR / PH 8C / SWITCHCRAFT EN3P8MC	2				A,B
NS	065583	KIT, RETROFIT CONNECTOR "CONXAL" 8C	1				
. NS	IS-01082	. SEE INSTRUCTION SHEET	1				
		4) NO PARTS NUMBER					
		A) FOR PRODUCT IMPROVEMENT ASK KIT 065583					
		B) THIS CONNECTOR IT USED ON CABLE HARNESS FROM INSIDE OF VEHICULE					

From Y-7046 Up to 2-7763	DATE: 01/2014	PAGE: Y2-1856-20

MIRROR "RAMCO" FLAT GLASS / SILVER PAINTED

ITEM	PART	DESCRIPTION	XL45	MTH40	MTH45	MTH45S	NOTE
. NS	065534	. CABLE ASSY , INTERFACE / <> SWITCHCRAFT & CONNEXALL	1				

From Y-7046 Up to 2-7763	DATE: 01/2014	PAGE: Y2-1856-20

MIRROR "RAMCO" FLAT GLASS / SILVER PAINTED

ITEM	PART	DESCRIPTION	XL45	MTH400	MTH445	MTH445S	NOTE

From 2-7764 Up to 6-8906	DATE: 01/2014	PAGE: Y2-1856-21
MIRROR "RAMCO" FLAT GLASS / SILVER PAINTED		

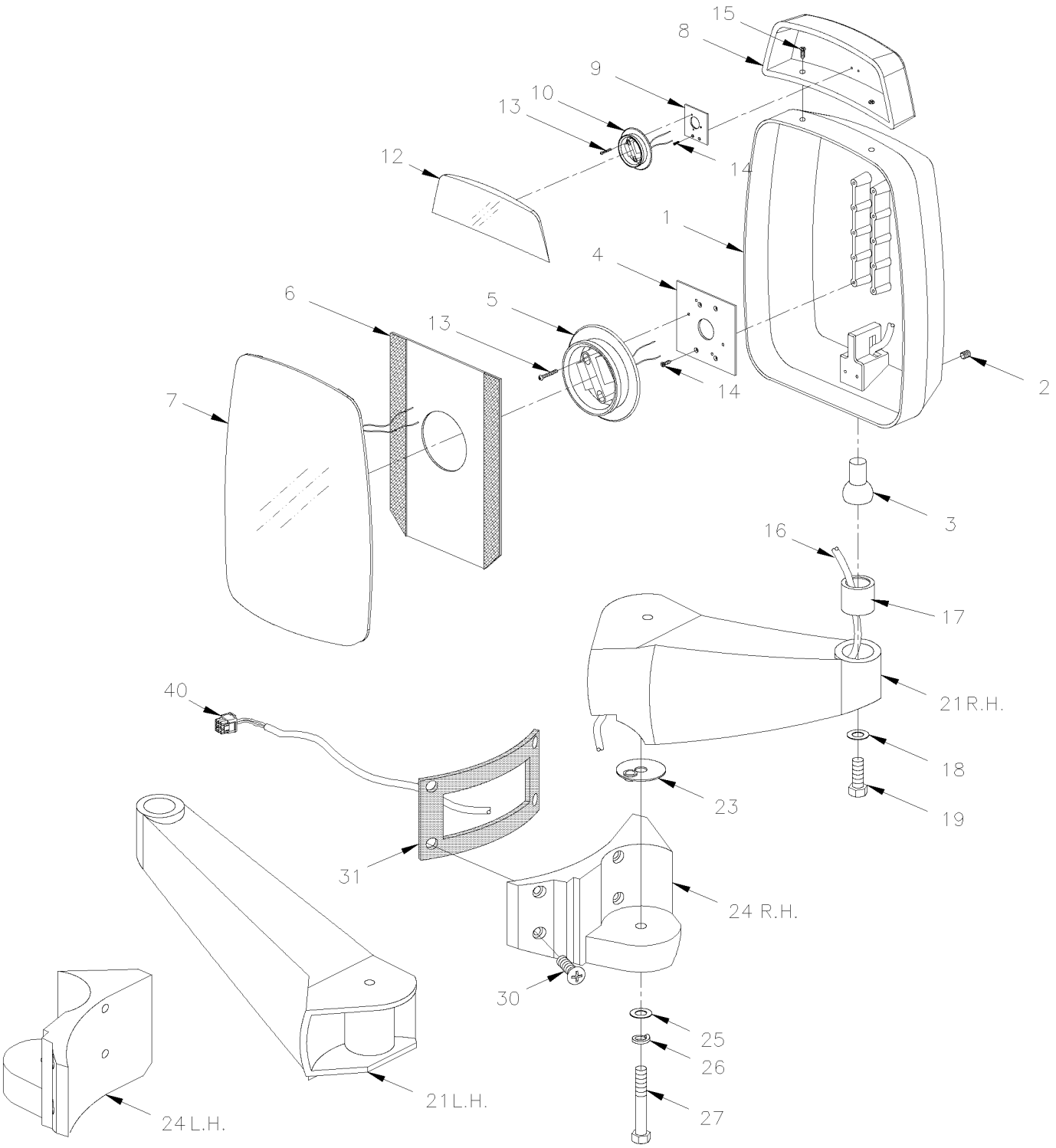

From 2-7764 Up to 6-8906	DATE: 01/2014	PAGE: Y2-1856-21

MIRROR "RAMCO" FLAT GLASS / SILVER PAINTED

ITEM	PART	DESCRIPTION	XL45	MTH40	MTH45	MTH45S	NOTE
	990364	MIRROR ASSY, L.H. / W/CONVEX ELECTRIC / W/8 PINS CONNECTOR Up to 3-8041 / REPLACED BY: 990408					
	990408	MIRROR ASSY, L.H. / W/CONVEX ELECTRIC / W/8 PINS CONNECTOR From 3-8042	1				
	990365	MIRROR ASSY, R.H. / W/CONVEX ELECTRIC / W/8 PINS CONNECTOR	1				
1	990375	. HEAD ASSY / W/CONVEX ELECTRIC / W/8 PINS CONNECTOR	1				
2	502812	. . SCREW SET HEXS CUP 3/8-16X3/8 SS	1				
3	990186	. . STUD, BALL	1				
4	990272	. . NOTCHED BACK MOUNTING PLATE (2" X 3")	1				
5	990349	. . MOTOR 12V / MEDIUM / BLACK / 108MM / 4 1/4" O.D.	1				
6	990268	. . VELCRO PLATE / 8" X 8"	1				
7	990199	. . GLASS ASSY W/HEATER 12V	1				
8	990346	. . HEAD ASSY / W/CONVEX ELECTRIC / W/8 PINS CONNECTOR	1				
9	990295	. . . PLATE, TOP MOTOR MOUNTING	1				
10	990300	. . . MOTOR 12V / SMALL / BLACK / 85MM / 3 5/16" O.D. / REPLACED BY: 990219	1				
. NS	564494	. . . . TAB TERMINAL / 20-16 / AMP 63138-1	4				
12	990339	. . . GLASS CONVEX ASSY W/HEATER 12V	1				
13	N.P.N.	. . SCREW TC PAN PH ZP 6-32 X 1 1/8"	3				4
14	500660	. . SCREW TC FL PH #6-32x3/8 ZP	3				
15	N.P.N.	. . SCREW CAP HEX SS 10-24 X 1"	2				4
NS	500787	. . NUT HEX #10-24 SS	2				
16	N.P.N.	. . CABLE ASSY / W/CONNECTOR 8PIN / SEE ITEM # 40	1				4
17	990379	. . CUP, BALL STUD RETAINER / ONE PIECE	1				
18	500270	. . WASHER FL .406x1.000x.063 SS	1				
19		. . SCREW CAP HEX SS 3/8-24 X 1.250	1				
21	990313	. ARM, L.H. Up to 3-8041 / REPLACED BY: 990393	1				
21	990315	. ARM, R.H.	1				
21	990393	. ARM, L.H. / DIRTY FREE From 3-8042	1				
23	990265	. WASHER ALUMINUM 2 " O.D.	1				
23	504082	. . SNAP BUSHING / .125x.312x.312	1				
24	990309	. BRACKET, MOUNTING R.H.	1				
24	990311	. BRACKET, MOUNTING L.H.	1				
25	500958	. WASHER FL .531x1.062x.095 SS	1				
26	500035	. WASHER LO SPT .317x.586x.078 SS	1				
27	990500	. SCREW 1/2-13x2 HHCS SS	1				
30	5001461	SCREW MA FL PH M8-1.25x40 SS	2				
30	5001581	SCREW CAP BUT HEXS M8-1.25x40 SS	2				
NS	5001341	WASHER FL 8.4x17.0x1.6 SS	2				
31	490873	GASKET, RH	2				
31	490894	GASKET, LH	1				
40	563163	CONNECTOR / W 45" CABLE ASSY / PH 8C / CONXALL 3280-8PG-324	1				
NS	563088	CONNECTOR / MULTI CON X / SH 8C / CONXALL 4280-8SG-300	2				B
NS	562511	SOCKET TERMINAL / 20 / CONXALL 586SG	AR				B
		4) NO PARTS NUMBER					
		B) THIS CONNECTOR IT USED ON CABLE HARNESS FROM					
		INSIDE OF VEHICULE					

From Y-7046 Up to 2-7763	DATE: 01/2014	PAGE: Y2-1856-22
MIRROR "RAMCO" FLAT GLASS / BLACK PAINTED		

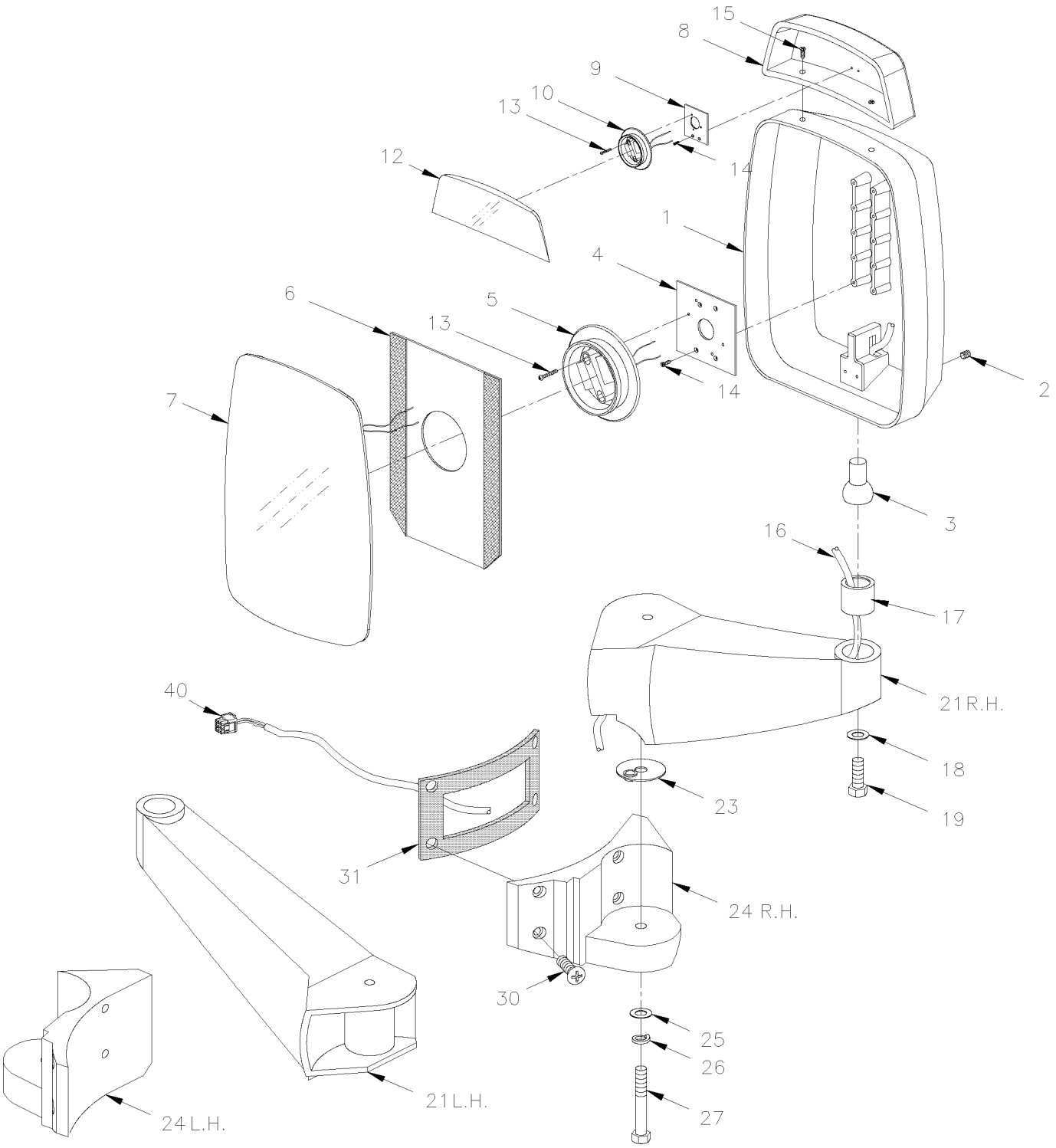

From Y-7046 Up to 2-7763	DATE: 01/2014	PAGE: Y2-1856-22

MIRROR "RAMCO" FLAT GLASS / BLACK PAINTED

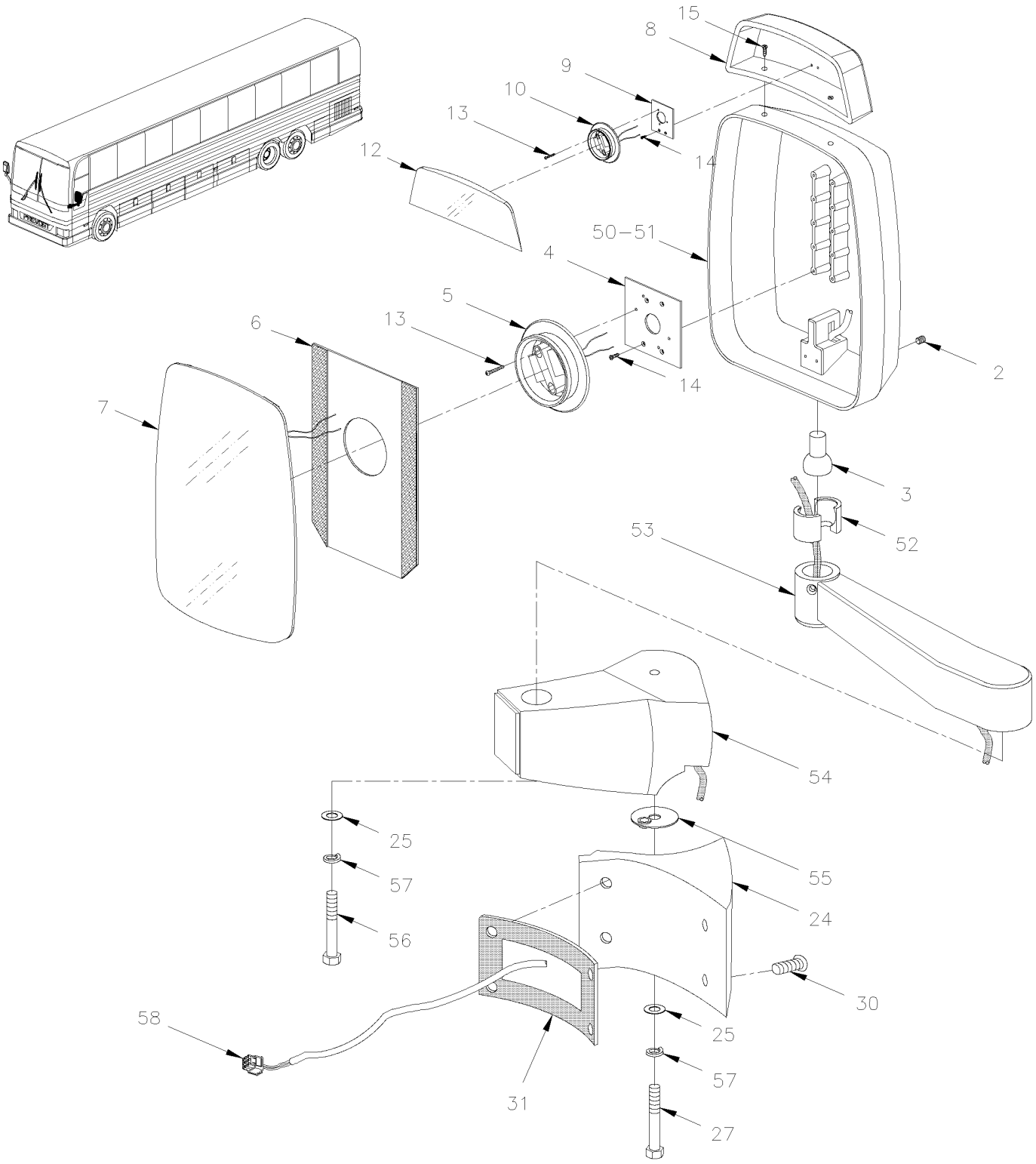

From Y-7046 Up to 2-7763	DATE: 01/2014	PAGE: Y2-1856-22

MIRROR "RAMCO" FLAT GLASS / BLACK PAINTED

ITEM	PART	DESCRIPTION	XL45	MTH40	MTH45	MTH45S	NOTE
	990328	MIRROR ASSY, R.H. / W/CONVEX ELECTRIC / W/8 PINS CONNECTOR	1				
	990327	MIRROR ASSY, L.H. / W/CONVEX ELECTRIC / W/8 PINS CONNECTOR	1				
1	990345	. HEAD ASSY / W/CONVEX ELECTRIC / W/8 PINS CONNECTOR	1				
2	502812	. . SCREW SET HEXS CUP 3/8-16X3/8 SS	1				
3	990186	. . STUD, BALL	1				
4	990272	. . NOTCHED BACK MOUNTING PLATE (2" X 3")	1				
5	990349	. . MOTOR 12V / MEDIUM / BLACK / 108MM / 4 1/4" O.D.	1				
6	990268	. . VELCRO PLATE / 8" X 8"	1				
7	990199	. . GLASS ASSY W/HEATER 12V	1				
8	990297	. MIRROR ASSY / CONVEX ELECTRIC	1				
9	990295	. . PLATE, TOP MOTOR MOUNTING	1				
10	990219	. . MOTOR 12V / SMALL / BLACK / 85MM / 3 5/16" O.D.	1				
12	990339	. . GLASS CONVEX ASSY W/HEATER 12V	1				
13	N.P.N.	. . SCREW TC FL PH ZP 6-32 X 1 1/8"	3				4
14	500660	. . SCREW TC FL PH #6-32x3/8 ZP	2				
15	N.P.N.	. . SCREW CAP HEX SS 10-24 X 1"	2				4
NS	500787	. . NUT HEX #10-24 SS	2				
16	990377	. . CABLE ASSY / W/CONNECTOR 8PIN	1				
17	990379	. . CUP, BALL STUD RETAINER / ONE PIECE	1				
18	500270	. . WASHER FL .406x1.000x.063 SS	1				
19	N.P.N.	. . SCREW CAP HEX SS 3/8-24 X 1.250	1				4
21	990307	. ARM, L.H. / REPLACED BY: 990399	1				
21	990308	. ARM, R.H.	1				
23	990265	. WASHER ALUMINUM 2 " O.D.	1				
NS	504082	. . SNAP BUSHING / .125x.312x.312	1				
24	990305	. BRACKET, MOUNTING R.H.	1				
24	990306	. BRACKET, MOUNTING L.H.	1				
25	500958	. WASHER FL .531x1.062x.095 SS	1				
26	500035	. WASHER LO SPT .317x.586x.078 SS	1				
27	990500	. SCREW 1/2-13x2 HHCS SS	1				
30	5001461	SCREW MA FL PH M8-1.25x40 SS	2				
30	5001581	SCREW CAP BUT HEXS M8-1.25x40 SS	2				
NS	5001341	WASHER FL 8.4x17.0x1.6 SS	2				
31	490873	GASKET, RH	1				
31	490894	GASKET, LH	1				
40	562920	CONNECTOR / SH 8C / SWITCHCRAFT EN3C8FC	2				C
NS	562919	CONNECTOR / PH 8C / SWITCHCRAFT EN3P8MC	2				B,C
NS	065583	KIT, RETROFIT CONNECTOR "CONXAL" 8C	1				
. NS	IS-01082	. SEE INSTRUCTION SHEET	1				
		4) NO PARTS NUMBER					
		B) THIS CONNECTOR IT USED ON CABLE HARNESS FROM					
		INSIDE OF VEHICULE					
		C) FOR PRODUCT IMPROVEMENT ASK KIT 065583					

From Y-7046 Up to 2-7763	DATE: 01/2014	PAGE: Y2-1856-22

MIRROR "RAMCO" FLAT GLASS / BLACK PAINTED

ITEM	PART	DESCRIPTION	XL45	MTH40	MTH45	MTH45S	NOTE
. NS	065534	. CABLE ASSY , INTERFACE / <> SWITCHCRAFT & CONNEXALL	1				
50	990384	MIRROR ASSY, R.H. / W/CONVEX ELECTRIC / W/9 PINS CONNECTOR / ORLEAN	1				A
51	990383	HEAD ASSY / W/CONVEX ELECTRIC / W/9 PINS CONNECTOR / ORLEAN	1				
52	990187	CUP, BALL	2				
NS	502812	SCREW SET HEXS CUP 3/8-16X3/8 SS	2				
53	990211	ARM, R.H. / 13" X 7"	1				
54	490955	ARM L.H. / (ORLEAN OPTION) / REPLACED BY: 990392	1				
55	490958	WASHER ALUMINUM 38.1 I.D. x 57.2 O.D. x 12G	1				
56	990381	SCREW CAP HEX SS 1/2-13X5	1				
57	5001534	WASHER LO SPT .509x.873x.125 SS	2				
58	561669	CONNECTOR / UNIVERSAL MATE-N-LOK / SH 9C / AMP 1-480706-0	2				
58	561671	PIN TERMINAL / 24-18 / AMP 350690-1	2				
NS	561670	CONNECTOR / UNIVERSAL MATE-N-LOK / PH 9C / AMP 1-480707-0	2				
NS	561673	SOCKET TERMINAL / 24-18 / AMP 350689-1	18				
NS	562916	INTERFACE SEAL / 9C / AMP 794277-1	2				
NS	562918	SEAL PLUG FREE CAVITY / AMP 770377-1	2				
NS	504555	GROMMET / .500x.812x.125x.344x1.062x.031	2				
		A) INCLUDE ITEMS 21, 24, 50					

From 2-7764 Up to 6-8906	DATE: 01/2014	PAGE: Y2-1856-23
MIRROR "RAMCO" FLAT GLASS / BLACK PAINTED		

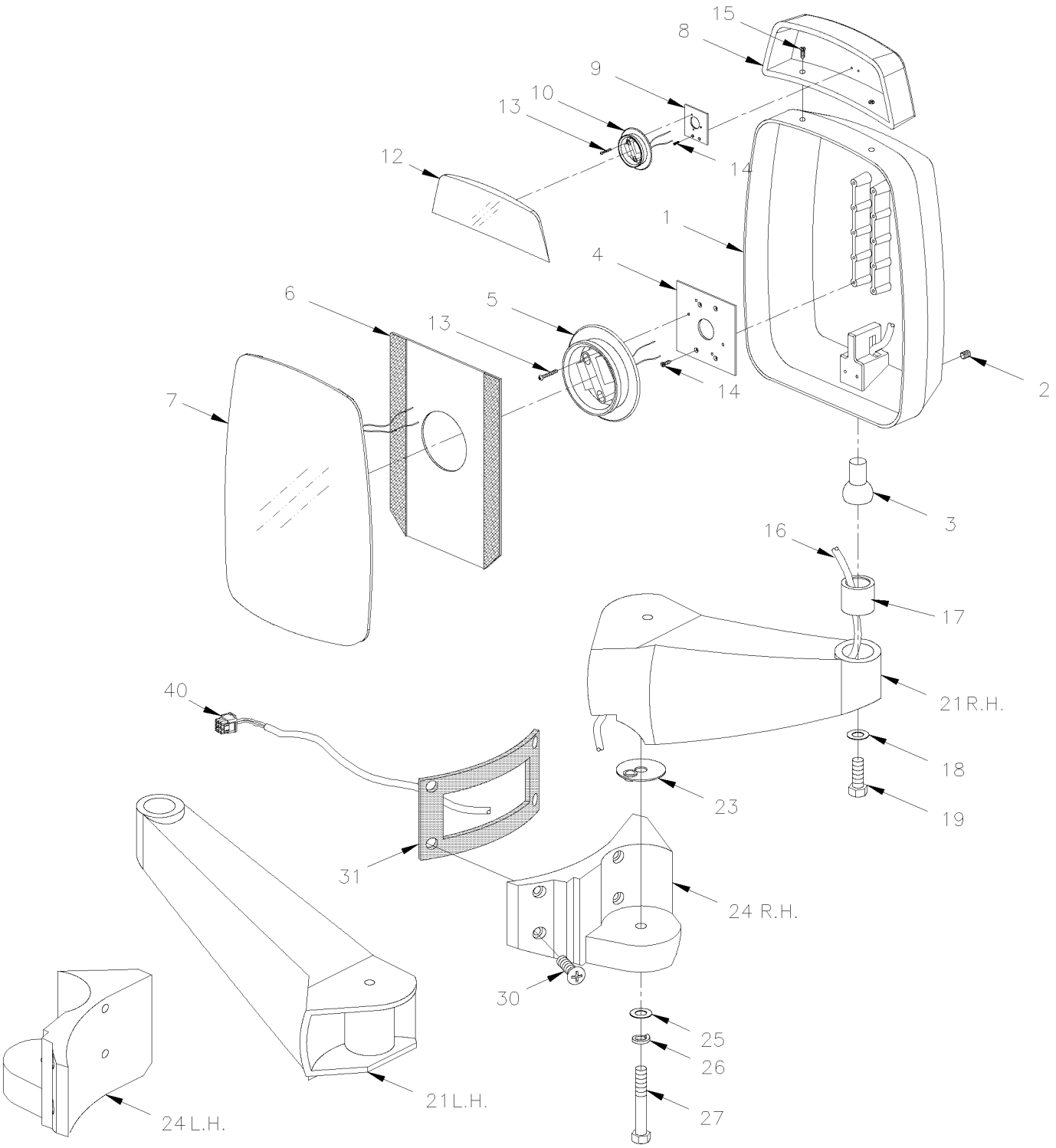

From 2-7764 Up to 6-8906	DATE: 01/2014	PAGE: Y2-1856-23

MIRROR "RAMCO" FLAT GLASS / BLACK PAINTED

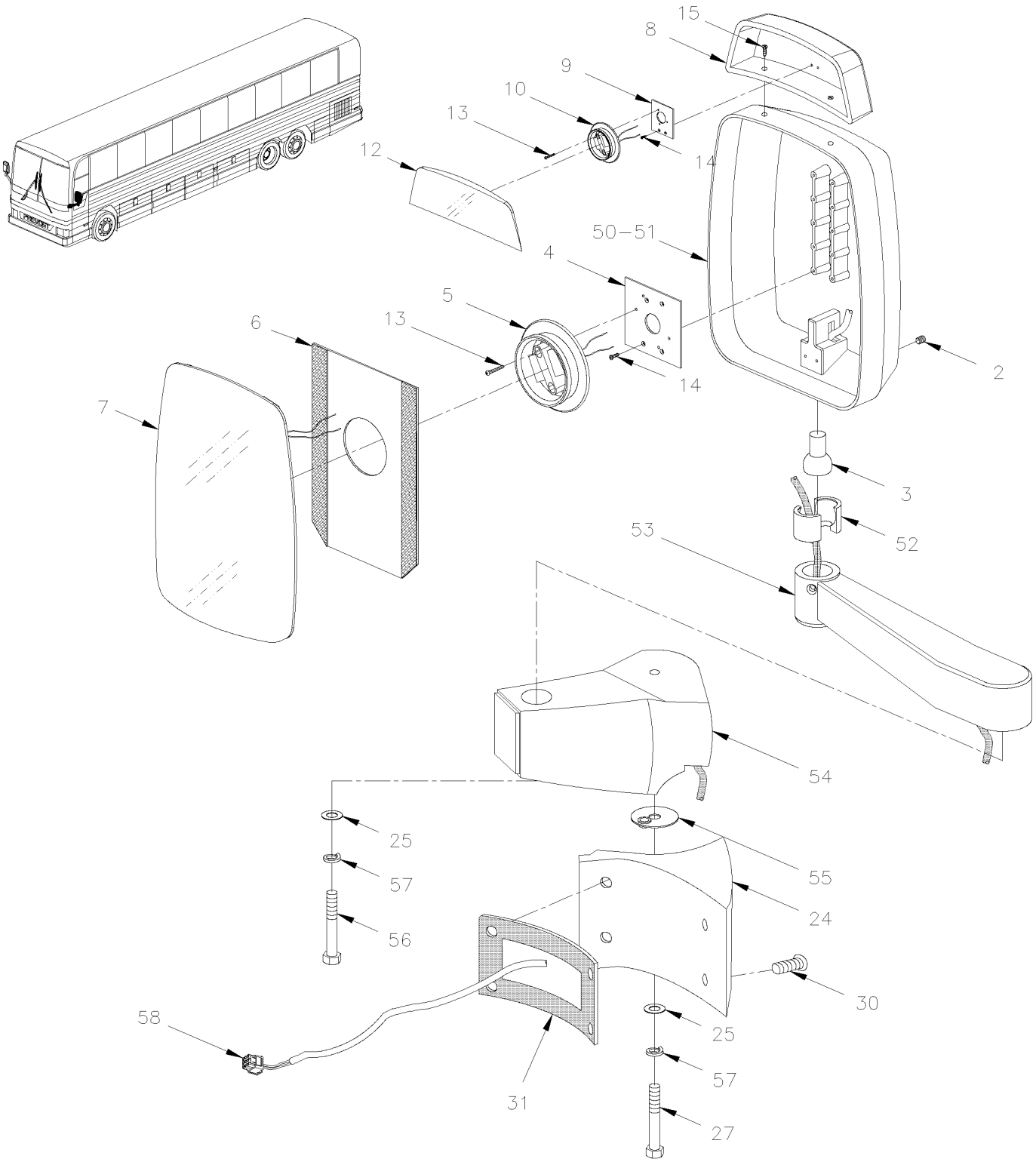

From 2-7764 Up to 6-8906	DATE: 01/2014	PAGE: Y2-1856-23

MIRROR "RAMCO" FLAT GLASS / BLACK PAINTED

ITEM	PART	DESCRIPTION	XL45	MTH40	MTH45	MTH45S	NOTE
	990363	MIRROR ASSY, R.H. / W/CONVEX ELECTRIC / W/8 PINS CONNECTOR	1				
	990361	MIRROR ASSY, R.H. / W/CONVEX MANUAL / W/5 PINS CONNECTOR	1				
	990384	MIRROR ASSY, R.H. / W/CONVEX ELECTRIC / W/9 PINS CONNECTOR / ORLEAN	1				A
	990362	MIRROR ASSY, L.H. / W/CONVEX ELECTRIC / W/8 PINS CONNECTOR Up to 3-8041 / REPLACED BY: 990413	1				
	990407	MIRROR ASSY, L.H. / W/CONVEX ELECTRIC / W/8 PINS CONNECTOR From 3-8042	1				
	990360	MIRROR ASSY, L.H. / W/CONVEX MANUAL / W/5 PINS CONNECTOR / REPLACED BY: 990406	1				
	990415	MIRROR ASSY, L.H. / W/CONVEX ELECTRIC / W/9 PINS CONNECTOR / ORLEAN	1				A
1	990374	. HEAD ASSY / W/CONVEX ELECTRIC / W/8 PINS CONNECTOR	1				
1	990373	. HEAD ASSY / W/CONVEX MANUAL / W/5 PINS CONNECTOR	1				
1	990383	. HEAD ASSY / W/CONVEX ELECTRIC / W/9 PINS CONNECTOR / ORLEAN	1				A
2	502812	. . SCREW SET HEXS CUP 3/8-16X3/8 SS	1				
3	990186	. . STUD, BALL	1				
4	990272	. . NOTCHED BACK MOUNTING PLATE (2" X 3")	1				
5	990349	. . MOTOR 12V / MEDIUM / BLACK / 108MM / 4 1/4" O.D.	1				
6	990268	. . VELCRO PLATE / 8" X 8"	1				
7	990199	. . GLASS ASSY W/HEATER 12V	1				
8	990297	. MIRROR ASSY / CONVEX ELECTRIC	1				
9	990295	. . PLATE, TOP MOTOR MOUNTING	1				
10	990219	. . MOTOR 12V / SMALL / BLACK / 85MM / 3 5/16" O.D.	1				
10	990402	. . MECHANISM MANUAL ASSY, SMALL / 85MM / 3 5/16" O.D. / W/SNAP	1				
12	990339	. . GLASS CONVEX ASSY W/HEATER 12V	1				
13	N.P.N.	. . SCREW TC FL PH ZP 6-32 X 1 1/8"	3				4
14	500660	. . SCREW TC FL PH #6-32x3/8 ZP	2				
15	N.P.N.	. . SCREW CAP HEX SS 10-24 X 1"	2				4
NS	500787	. . NUT HEX #10-24 SS	2				
16	N.P.N.	. . CABLE ASSY / W/CONNECTOR 8PIN / SEE ITEM # 40	1				4
17	990379	. . CUP, BALL STUD RETAINER / ONE PIECE	1				
18	500270	. . WASHER FL .406x1.000x.063 SS	1				
19	N.P.N.	. . SCREW CAP HEX SS 3/8-24 X 1.250	1				4
21	990307	. ARM, L.H. Up to 3-8041 / REPLACED BY: 990399	1				
21	990392	. ARM, L.H. / DIRTY FREE From 3-8042	1				
21	990308	. ARM, R.H.	1				
23	990265	. WASHER ALUMINUM 2 " O.D.	1				
NS	504082	. . SNAP BUSHING / .125x.312x.312	1				
24	990305	. BRACKET, MOUNTING R.H.	1				
24	990306	. BRACKET, MOUNTING L.H.	1				
25	500958	. WASHER FL .531x1.062x.095 SS	1				
26	500035	. WASHER LO SPT .317x.586x.078 SS	1				
27	990500	. SCREW 1/2-13x2 HHCS SS	1				
30	5001461	SCREW MA FL PH M8-1.25x40 SS	2				
		4) NO PARTS NUMBER					
		A) "OPTION ORLEAN"					

From 2-7764 Up to 6-8906	DATE: 01/2014	PAGE: Y2-1856-23

MIRROR "RAMCO" FLAT GLASS / BLACK PAINTED

ITEM	PART	DESCRIPTION	XL45	MTH40	MTH45	MTH45S	NOTE
30	5001581	SCREW CAP BUT HEXS M8-1.25x40 SS	2				
NS	5001341	WASHER FL 8.4x17.0x1.6 SS	2				
31	490873	GASKET, RH	1				
31	490894	GASKET, LH	1				
40	563163	CONNECTOR / W 45" CABLE ASSY / PH 8C / CONXALL 3280-8PG-324	2				
40	563196	CONNECTOR / W 45" CABLE ASSY / PH 5C / CONXALL 3280-5PG-324	2				
NS	563088	CONNECTOR / MULTI CON X / SH 8C / CONXALL 4280-8SG-300	1				B
NS	563090	CONNECTOR / MULTI CON X / SH 5C / CONXALL 4280-5SG-300	1				B
NS	562511	SOCKET TERMINAL / 20 / CONXALL 586SG	AR				B
50	200295P	MIRROIR ASSY, L.H. / ELECTRIC / CONVEX / (ORLEAN OPTION) Up to 3-8041	1				A
51	990383	. HEAD ASSY / W/CONVEX ELECTRIC / W/9 PINS CONNECTOR / ORLEAN Up to 3-8041	1				A
52	990187	. CUP, BALL Up to 3-8041	2				A
NS	502812	. SCREW SET HEXS CUP 3/8-16X3/8 SS Up to 3-8041	2				A
53	990211	. ARM, R.H. / 13" X 7" Up to 3-8041	1				A
54	490955	. ARM L.H. / (ORLEAN OPTION) Up to 3-8041 / REPLACED BY: 990392	1				A
55	490958	. WASHER ALUMINUM 38.1 I.D. x 57.2 O.D. x 12G Up to 3-8041	1				A
56	990381	. SCREW CAP HEX SS 1/2-13X5 Up to 3-8041	1				A
57	5001534	. WASHER LO SPT .509x.873x.125 SS Up to 3-8041	2				A
58	561669	. CONNECTOR / UNIVERSAL MATE-N-LOK / SH 9C / AMP 1-480706-0 Up to 3-8041	2				A
58	561671	. PIN TERMINAL / 24-18 / AMP 350690-1 Up to 3-8041	2				A
NS	561670	. CONNECTOR / UNIVERSAL MATE-N-LOK / PH 9C / AMP 1-480707-0 Up to 3-8041	2				A
NS	561673	. SOCKET TERMINAL / 24-18 / AMP 350689-1 Up to 3-8041	18				A
NS	562916	. INTERFACE SEAL / 9C / AMP 794277-1 Up to 3-8041	2				A
NS	562918	. SEAL PLUG FREE CAVITY / AMP 770377-1 Up to 3-8041	2				A
NS	504555	. GROMMET / .500x.812x.125x.344x1.062x.031 Up to 3-8041	2				A
		A) "OPTION ORLEAN"					
		B) THIS CONNECTOR IT USED ON CABLE HARNESS FROM INSIDE OF VEHICULE					

From Y-7046 Up to 2-7763	DATE: 01/2014	PAGE: Y2-1856-30
MIRROR "RAMCO" 2 GLASSES / SILVER PAINTED		

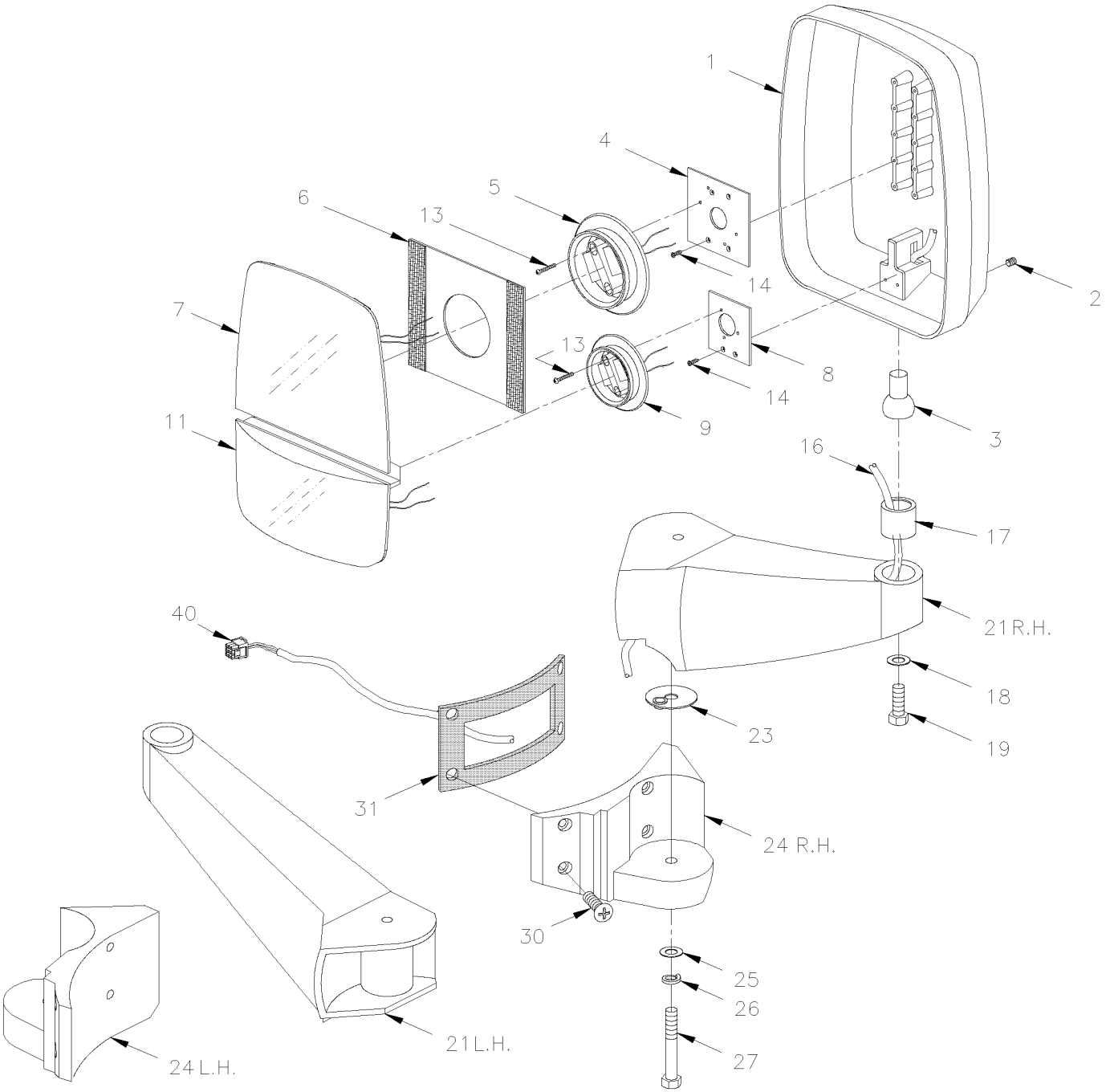

From Y-7046 Up to 2-7763	DATE: 01/2014	PAGE: Y2-1856-30

MIRROR "RAMCO" 2 GLASSES / SILVER PAINTED

ITEM	PART	DESCRIPTION	XL45	MTH40	MTH45	MTH45S	NOTE
	990324	MIRROR ASSY, R.H. / ELECTRIC / W/8 PINS CONNECTOR	1				
	990320	MIRROR ASSY, R.H. / MANUAL / W/5 PINS CONNECTOR	1				
	990323	MIRROR ASSY, L.H. / ELECTRIC / W/8 PINS CONNECTOR	1				
	990319	MIRROR ASSY, L.H. / MANUAL / W/5 PINS CONNECTOR	1				
1	990343	. HEAD ASSY / ELECTRIC / W/8 PINS CONNECTOR	1				
1	990341	. HEAD ASSY / MANUAL / W/5 PINS CONNECTOR	1				
2	502812	. . SCREW SET HEXS CUP 3/8-16X3/8 SS	1				
3	990186	. . STUD, BALL	1				
4	990272	. . NOTCHED BACK MOUNTING PLATE (2" X 3")	1				
5	990349	. . MOTOR 12V / MEDIUM / BLACK / 108MM / 4 1/4" O.D.	1				
6	990266	. . VELCRO PLATE / 6" X 7"	1				
7	990182	. . FLAT GLASS ASSY W/HEATER 12V	1				
8	990273	. . POWER CONVEX MOTOR BASE PLATE	1				
9	990300	. . MOTOR 12V / SMALL / BLACK / 85MM / 3 5/16" O.D. / REPLACED BY: 990219	1				
. NS	564494	. . . TAB TERMINAL / 20-16 / AMP 63138-1	4				
9	990402	. MECHANISM MANUAL ASSY, SMALL / 85MM / 3 5/16" O.D. / W/SNAP	1				
11	990338	. . CONVEX GLASS ASSY W/HEATER 12V	1				
13	N.P.N.	. . SCREW TC FL PH ZP 6-32 X 1 1/8"	3				4
14	500660	. . SCREW TC FL PH #6-32x3/8 ZP	2				
16	990377	. . CABLE ASSY / W/CONNECTOR 8PIN	1				
16	990378	. . CABLE ASSY / W/CONNECTOR 5PIN	1				
17	990379	. . CUP, BALL STUD RETAINER / ONE PIECE	1				
18	500270	. . WASHER FL .406x1.000x.063 SS	1				
19	N.P.N.	. . SCREW CAP HEX SS 3/8-24 X 1.250	1				4
21	990313	. ARM, L.H. / REPLACED BY: 990393	1				
21	990315	. ARM, R.H.	1				
23	990265	. WASHER ALUMINUM 2 " O.D.	1				
NS	504082	. . SNAP BUSHING / .125x.312x.312	1				
24	990309	. BRACKET, MOUNTING R.H.	1				
24	990311	. BRACKET, MOUNTING L.H.	1				
25	500958	. WASHER FL .531x1.062x.095 SS	1				
26	500035	. WASHER LO SPT .317x.586x.078 SS	1				
27	990500	. SCREW 1/2-13x2 HHCS SS	1				
30	5001461	SCREW MA FL PH M8-1.25x40 SS	2				
30	5001581	SCREW CAP BUT HEXS M8-1.25x40 SS	2				
NS	5001341	WASHER FL 8.4x17.0x1.6 SS	2				
31	490873	GASKET, RH	1				
31	490894	GASKET, LH	1				
40	562920	CONNECTOR / SH 8C / SWITCHCRAFT EN3C8FC	1				A
40	562922	CONNECTOR / SH 5C / SWITCHCRAFT EN3C5FC	1				A
		4) NO PARTS NUMBER					
		A) FOR PRODUCT IMPROVEMENT ASK KIT 065583					

From Y-7046 Up to 2-7763	DATE: 01/2014	PAGE: Y2-1856-30

MIRROR "RAMCO" 2 GLASSES / SILVER PAINTED

ITEM	PART	DESCRIPTION	XL45	MTH40	MTH45	MTH45S	NOTE
NS	562919	CONNECTOR / PH 8C / SWITCHCRAFT EN3P8MC	1				A,B
NS	562921	CONNECTOR / PH 5C / SWITCHCRAFT EN3P5MC	1				A,B
NS	065583	KIT, RETROFIT CONNECTOR "CONXAL" 8C	1				
. NS	IS-01082	. SEE INSTRUCTION SHEET	1				
. NS	065534	. CABLE ASSY , INTERFACE / <> SWITCHCRAFT & CONNEXALL	1				
		A) FOR PRODUCT IMPROVEMENT ASK KIT 065583					
		B) THIS CONNECTOR IT USED ON CABLE HARNESS FROM INSIDE OF VEHICULE					

From Y-7046 Up to 2-7763	DATE: 01/2014	PAGE: Y2-1856-30

MIRROR "RAMCO" 2 GLASSES / SILVER PAINTED

ITEM	PART	DESCRIPTION	XL45	MTH40	MTH45	MTH45S	NOTE

From 2-7764 Up to 6-8906	DATE: 01/2014	PAGE: Y2-1856-31
MIRROR "RAMCO" 2 GLASSES / SILVER PAINTED		

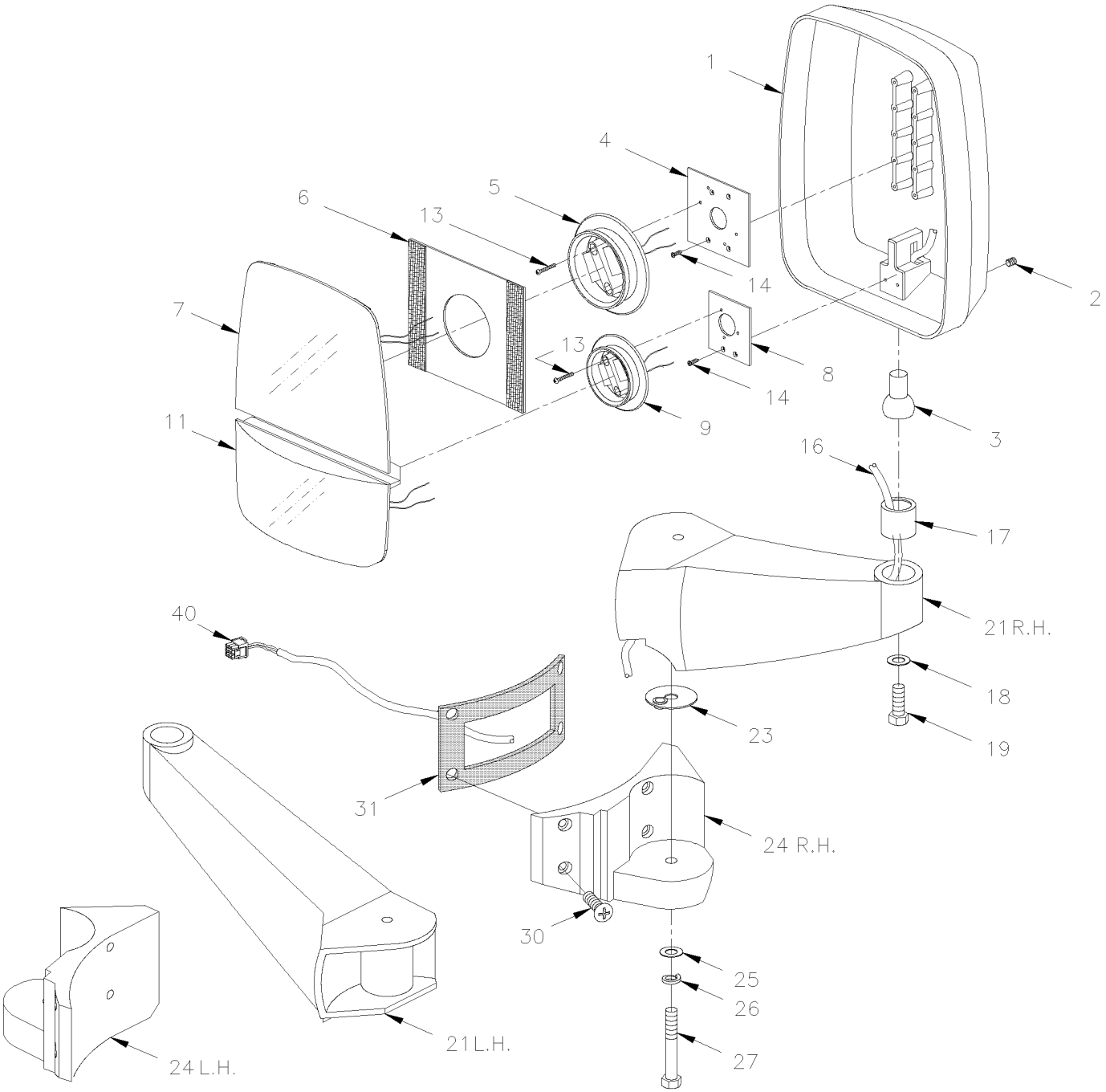

From 2-7764 Up to 6-8906	DATE: 01/2014	PAGE: Y2-1856-31

MIRROR "RAMCO" 2 GLASSES / SILVER PAINTED

ITEM	PART	DESCRIPTION	XL45	MTH40	MTH45	MTH45S	NOTE
	990357	MIRROR ASSY, R.H. / ELECTRIC / W/8 PINS CONNECTOR	1				
	990353	MIRROR ASSY, R.H. / MANUAL / W/5 PINS CONNECTOR	1				
	990356	MIRROR ASSY, L.H. / ELECTRIC / W/8 PINS CONNECTOR Up to 3-8041 / REPLACED BY: 990404	1				
	990404	MIRROR ASSY, L.H. / ELECTRIC / W/8 PINS CONNECTOR From 3-8042	1				
	990352	MIRROR ASSY, L.H. / MANUAL / W/5 PINS CONNECTOR	1				
1	990371	. HEAD ASSY / ELECTRIC / W/8 PINS CONNECTOR	1				
1	990369	. HEAD ASSY / MANUAL / W/5 PINS CONNECTOR	1				
2	502812	. . SCREW SET HEXS CUP 3/8-16X3/8 SS	1				
3	990186	. . STUD, BALL	1				
4	990272	. . NOTCHED BACK MOUNTING PLATE (2" X 3")	1				
5	990349	. . MOTOR 12V / MEDIUM / BLACK / 108MM / 4 1/4" O.D.	1				
6	990266	. . VELCRO PLATE / 6" X 7"	1				
7	990182	. . FLAT GLASS ASSY W/HEATER 12V	1				
8	990273	. . POWER CONVEX MOTOR BASE PLATE	1				
9	990219	. . MOTOR 12V / SMALL / BLACK / 85MM / 3 5/16" O.D.	1				
9	990402	MECHANISM MANUAL ASSY, SMALL / 85MM / 3 5/16" O.D. / W/SNAP	1				
11	990338	. . CONVEX GLASS ASSY W/HEATER 12V	1				
13	N.P.N.	. . SCREW TC FL PH ZP 6-32 X 1 1/8"	3				4
14	500660	. . SCREW TC FL PH #6-32x3/8 ZP	2				
16	N.P.N.	. . CABLE ASSY / W/CONNECTOR 8PIN / SEE ITEM # 40	1				4
16	N.P.N.	. . CABLE ASSY / W/CONNECTOR 5PIN / SEE ITEM # 40	1				4
17	990379	. . CUP, BALL STUD RETAINER / ONE PIECE	1				
18	500270	. . WASHER FL .406x1.000x.063 SS	1				
19	N.P.N.	. . SCREW CAP HEX SS 3/8-24 X 1.250	1				4
21	990313	. ARM, L.H. Up to 3-8041 / REPLACED BY: 990393	1				
21	990393	. ARM, L.H. / DIRTY FREE From 3-8042	1				
21	990315	. ARM, R.H.	1				
23	990265	. WASHER ALUMINUM 2 " O.D.	1				
NS	504082	. . SNAP BUSHING / .125x.312x.312	1				
24	990309	. BRACKET, MOUNTING R.H.	1				
24	990311	. BRACKET, MOUNTING L.H.	1				
25	500958	. WASHER FL .531x1.062x.095 SS	1				
26	500035	. WASHER LO SPT .317x.586x.078 SS	1				
27	990500	. SCREW 1/2-13x2 HHCS SS	1				
30	5001461	SCREW MA FL PH M8-1.25x40 SS	2				
30	5001581	SCREW CAP BUT HEXS M8-1.25x40 SS	2				
NS	5001341	WASHER FL 8.4x17.0x1.6 SS	2				
31	490873	GASKET, RH	1				
31	490894	GASKET, LH	1				
40	563163	CONNECTOR / W 45" CABLE ASSY / PH 8C / CONXALL 3280-8PG-324	1				
40	563196	CONNECTOR / W 45" CABLE ASSY / PH 5C / CONXALL 3280-5PG-324	1				
		4) NO PARTS NUMBER					

From 2-7764 Up to 6-8906	DATE: 01/2014	PAGE: Y2-1856-31

MIRROR "RAMCO" 2 GLASSES / SILVER PAINTED

ITEM	PART	DESCRIPTION	XL45	MTH40	MTH45	MTH45S	NOTE
NS	563088	CONNECTOR / MULTI CON X / SH 8C / CONXALL 4280-8SG-300	1				B
NS	563090	CONNECTOR / MULTI CON X / SH 5C / CONXALL 4280-5SG-300	1				B
NS	562511	SOCKET TERMINAL / 20 / CONXALL 586SG	AR				B
		B) THIS CONNECTOR IT USED ON CABLE HARNESS FROM					
		INSIDE OF VEHICULE					

From 2-7764 Up to 6-8906	DATE: 01/2014	PAGE: Y2-1856-31

MIRROR "RAMCO" 2 GLASSES / SILVER PAINTED

ITEM	PART	DESCRIPTION	XL45	MTH40	MTH45	MTH45S	NOTE

From Y-7046 Up to 2-7763	DATE: 01/2014	PAGE: Y2-1856-32
MIRROR "RAMCO" 2 GLASSES / BLACK PAINTED		

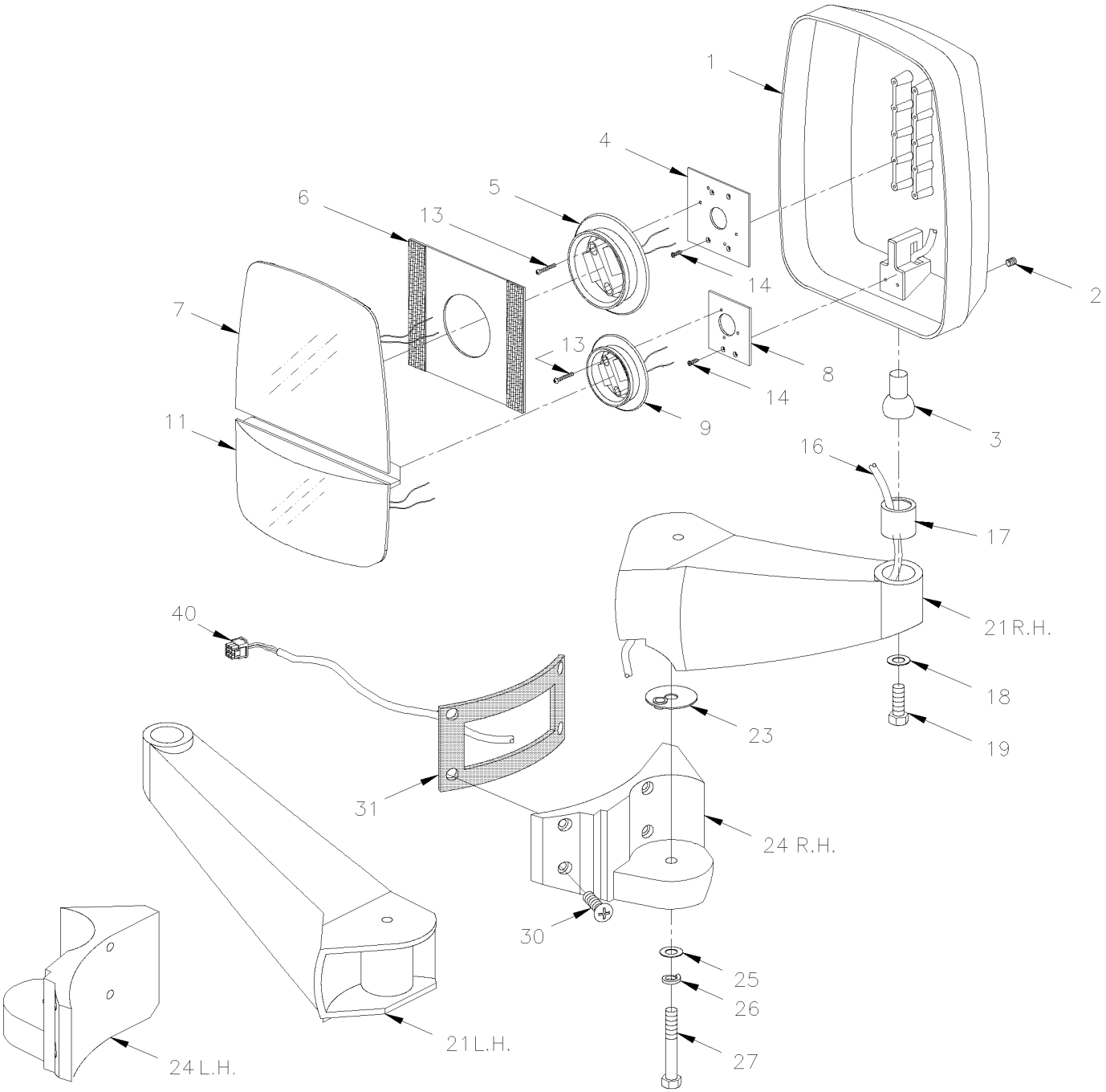

From Y-7046 Up to 2-7763	DATE: 01/2014	PAGE: Y2-1856-32

MIRROR "RAMCO" 2 GLASSES / BLACK PAINTED

ITEM	PART	DESCRIPTION	XL45	MTH40	MTH45	MTH45S	NOTE
	990322	MIRROR ASSY, R.H. / ELECTRIC / W/8 PINS CONNECTOR	1				
	990318	MIRROR ASSY, R.H. / MANUAL / W/5 PINS CONNECTOR	1				
	990321	MIRROR ASSY, L.H. / ELECTRIC / W/8 PINS CONNECTOR	1				
	990317	MIRROR ASSY, L.H. / MANUAL / W/5 PINS CONNECTOR	1				
1	990342	. HEAD ASSY / ELECTRIC / W/8 PINS CONNECTOR	1				
1	990340	. HEAD ASSY / MANUAL / W/5 PINS CONNECTOR	1				
2	502812	. . SCREW SET HEXS CUP 3/8-16X3/8 SS	1				
3	990186	. . STUD, BALL	1				
4	990272	. . NOTCHED BACK MOUNTING PLATE (2" X 3")	1				
5	990349	. . MOTOR 12V / MEDIUM / BLACK / 108MM / 4 1/4" O.D.	1				
6	990266	. . . VELCRO PLATE / 6" X 7"	1				
7	990182	. . FLAT GLASS ASSY W/HEATER 12V	1				
8	990273	. . POWER CONVEX MOTOR BASE PLATE	1				
9	990219	. . MOTOR 12V / SMALL / BLACK / 85MM / 3 5/16" O.D.	1				
9	990402	. . MECHANISM MANUAL ASSY, SMALL / 85MM / 3 5/16" O.D. / W/SNAP	1				
11	990338	. . CONVEX GLASS ASSY W/HEATER 12V	1				
12	990282	. . CABLE ASSY W/2 WIRES HEATER ELEMENT	1				
13	N.P.N.	. . SCREW TC FL PAN PH ZP 6-32 X 1 1/8"	7				4
14	500660	. . SCREW TC FL PH #6-32x3/8 ZP	2				
16	990377	. . CABLE ASSY / W/CONNECTOR 8PIN	1				
16	990378	. . CABLE ASSY / W/CONNECTOR 5PIN	1				
17	990379	. . CUP, BALL STUD RETAINER / ONE PIECE	1				
18	500270	. . WASHER FL .406x1.000x.063 SS	1				
19	N.P.N.	. . SCREW CAP HEX SS 3/8-24 X 1.250	1				4
21	990307	. ARM, L.H. / REPLACED BY: 990399	1				
NS	990308	. ARM, R.H.	1				
23	990265	. WASHER ALUMINUM 2 " O.D.	1				
NS	504082	. . SNAP BUSHING / .125x.312x.312	1				
24	990305	. BRACKET, MOUNTING R.H.	1				
24	990306	. BRACKET, MOUNTING L.H.	1				
25	500958	. WASHER FL .531x1.062x.095 SS	1				
26	500035	. WASHER LO SPT .317x.586x.078 SS	1				
27	990500	. SCREW 1/2-13x2 HHCS SS	1				
30	5001461	SCREW MA FL PH M8-1.25x40 SS	2				
30	5001581	SCREW CAP BUT HEXS M8-1.25x40 SS	2				
NS	5001341	WASHER FL 8.4x17.0x1.6 SS	2				
31	490873	GASKET, RH	1				
31	490894	GASKET, LH	1				
40	562920	CONNECTOR / SH 8C / SWITCHCRAFT EN3C8FC	1				A
40	562922	CONNECTOR / SH 5C / SWITCHCRAFT EN3C5FC	1				A
		4) NO PARTS NUMBER					
		A) FOR PRODUCT IMPROVEMENT ASK KIT 065583					

From Y-7046 Up to 2-7763	DATE: 01/2014	PAGE: Y2-1856-32

MIRROR "RAMCO" 2 GLASSES / BLACK PAINTED

ITEM	PART	DESCRIPTION	XL45	MTH40	MTH45	MTH45S	NOTE
NS	562919	CONNECTOR / PH 8C / SWITCHCRAFT EN3P8MC	2				A,B
NS	562921	CONNECTOR / PH 5C / SWITCHCRAFT EN3P5MC	2				A,B
NS	065583	KIT, RETROFIT CONNECTOR "CONXAL" 8C	1				
. NS	IS-01082	. SEE INSTRUCTION SHEET	1				
. NS	065534	. CABLE ASSY , INTERFACE / <> SWITCHCRAFT & CONNEXALL	1				
		A) FOR PRODUCT IMPROVEMENT ASK KIT 065583					
		B) THIS CONNECTOR IT USED ON CABLE HARNESS FROM INSIDE OF VEHICULE					

From Y-7046 Up to 2-7763	DATE: 01/2014	PAGE: Y2-1856-32

MIRROR "RAMCO" 2 GLASSES / BLACK PAINTED

ITEM	PART	DESCRIPTION	XL45	MTH40	MTH45	MTH45S	NOTE

From 2-7764 Up to 6-8906	DATE: 01/2014	PAGE: Y2-1856-33
MIRROR "RAMCO" 2 GLASSES / BLACK PAINTED		

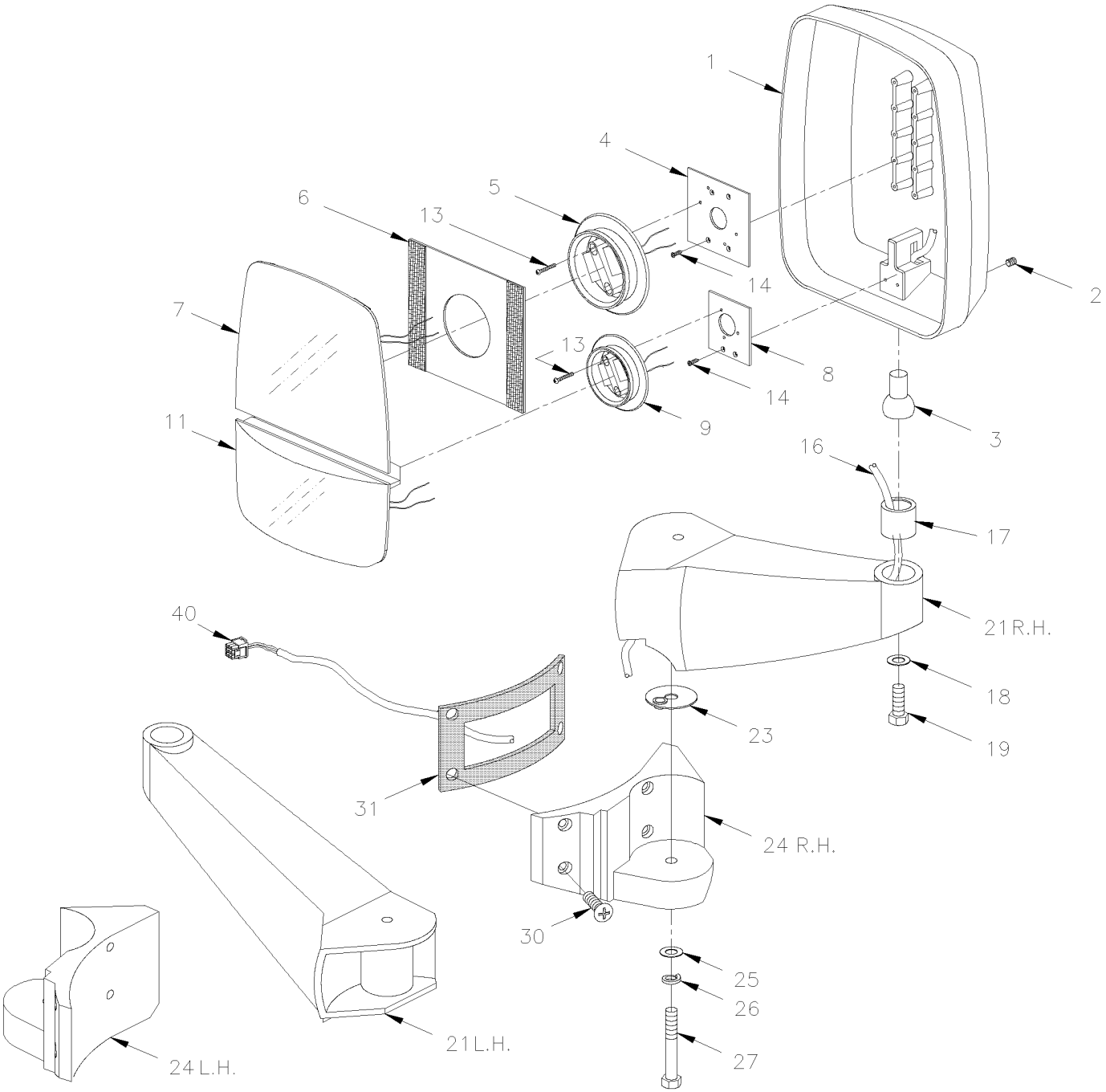

From 2-7764 Up to 6-8906	DATE: 01/2014	PAGE: Y2-1856-33

MIRROR "RAMCO" 2 GLASSES / BLACK PAINTED

ITEM	PART	DESCRIPTION	XL45	MTH40	MTH45	MTH45S	NOTE
	990355	MIRROR ASSY, R.H. / ELECTRIC / W/8 PINS CONNECTOR	1				
	990351	MIRROR ASSY, R.H. / MANUAL / W/5 PINS CONNECTOR	1				
	990354	MIRROR ASSY, L.H. / ELECTRIC / W/8 PINS CONNECTOR Up to 3-8041 / REPLACED BY: 990411	1				
	990403	MIRROR ASSY, L.H. / ELECTRIC / W/8 PINS CONNECTOR From 3-8042	1				
	990350	MIRROR ASSY, L.H. / MANUAL / W/5 PINS CONNECTOR	1				
1	990370	. HEAD ASSY / ELECTRIC / W/8 PINS CONNECTOR	1				
1	990368	. HEAD ASSY / MANUAL / W/5 PINS CONNECTOR	1				
2	502812	. . SCREW SET HEXS CUP 3/8-16X3/8 SS	1				
3	990186	. . STUD, BALL	1				
4	990272	. . NOTCHED BACK MOUNTING PLATE (2" X 3")	1				
5	990349	. . MOTOR 12V / MEDIUM / BLACK / 108MM / 4 1/4" O.D.	1				
6	990266	. . . VELCRO PLATE / 6" X 7"	1				
7	990182	. . FLAT GLASS ASSY W/HEATER 12V	1				
8	990273	. . POWER CONVEX MOTOR BASE PLATE	1				
9	990219	. . MOTOR 12V / SMALL / BLACK / 85MM / 3 5/16" O.D.	1				
9	990402	. . MECHANISM MANUAL ASSY, SMALL / 85MM / 3 5/16" O.D. / W/SNAP	1				
11	990338	. . CONVEX GLASS ASSY W/HEATER 12V	1				
12	990282	. . CABLE ASSY W/2 WIRES HEATER ELEMENT	1				
13	N.P.N.	. . SCREW TC FL PAN PH ZP 6-32 X 1 1/8"	7				4
14	500660	. . SCREW TC FL PH #6-32x3/8 ZP	2				
16	N.P.N.	. . CABLE ASSY / W/CONNECTOR 8PIN / SEE ITEM # 40	1				4
16	N.P.N.	. . CABLE ASSY / W/CONNECTOR 5PIN / SEE ITEM # 40	1				4
17	990379	. . CUP, BALL STUD RETAINER / ONE PIECE	1				
18	500270	. . WASHER FL .406x1.000x.063 SS	1				
19	N.P.N.	. . SCREW CAP HEX SS 3/8-24 X 1.250	1				4
21	990307	. ARM, L.H. Up to 3-8041 / REPLACED BY: 990399	1				
21	990392	. ARM, L.H. / DIRTY FREE From 3-8042	1				
NS	990308	. ARM, R.H.	1				
23	990265	. WASHER ALUMINUM 2 " O.D.	1				
NS	504082	. . SNAP BUSHING / .125x.312x.312	1				
24	990305	. BRACKET, MOUNTING R.H.	1				
24	990306	. BRACKET, MOUNTING L.H.	1				
25	500958	. WASHER FL .531x1.062x.095 SS	1				
26	500035	. WASHER LO SPT .317x.586x.078 SS	1				
27	990500	. SCREW 1/2-13x2 HHCS SS	1				
30	5001461	SCREW MA FL PH M8-1.25x40 SS	2				
30	5001581	SCREW CAP BUT HEXS M8-1.25x40 SS	2				
NS	5001341	WASHER FL 8.4x17.0x1.6 SS	2				
31	490873	GASKET, RH	1				
31	490894	GASKET, LH	1				
40	563163	CONNECTOR / W 45" CABLE ASSY / PH 8C / CONXALL 3280-8PG-324	1				
		4) NO PARTS NUMBER					

From 2-7764 Up to 6-8906	DATE: 01/2014	PAGE: Y2-1856-33

MIRROR "RAMCO" 2 GLASSES / BLACK PAINTED

ITEM	PART	DESCRIPTION	XL45	MTH40	MTH45	MTH45S	NOTE
40	563196	CONNECTOR / W 45" CABLE ASSY / PH 5C / CONXALL 3280-5PG-324	1				
NS	563088	CONNECTOR / MULTI CON X / SH 8C / CONXALL 4280-8SG-300	2				B
NS	563090	CONNECTOR / MULTI CON X / SH 5C / CONXALL 4280-5SG-300	2				B
NS	562511	SOCKET TERMINAL / 20 / CONXALL 586SG	AR				B
		B) THIS CONNECTOR IT USED ON CABLE HARNESS FROM					
		INSIDE OF VEHICULE					

From 2-7764 Up to 6-8906	DATE: 01/2014	PAGE: Y2-1856-33

MIRROR "RAMCO" 2 GLASSES / BLACK PAINTED

ITEM	PART	DESCRIPTION	XL45	MTH40	MTH45	MTH45S	NOTE

From Y-7046 Up to 2-7763	DATE: 01/2014	PAGE: Y2-1856-50
MIRROR "RAMCO" FLAT GLASS / CHROME		

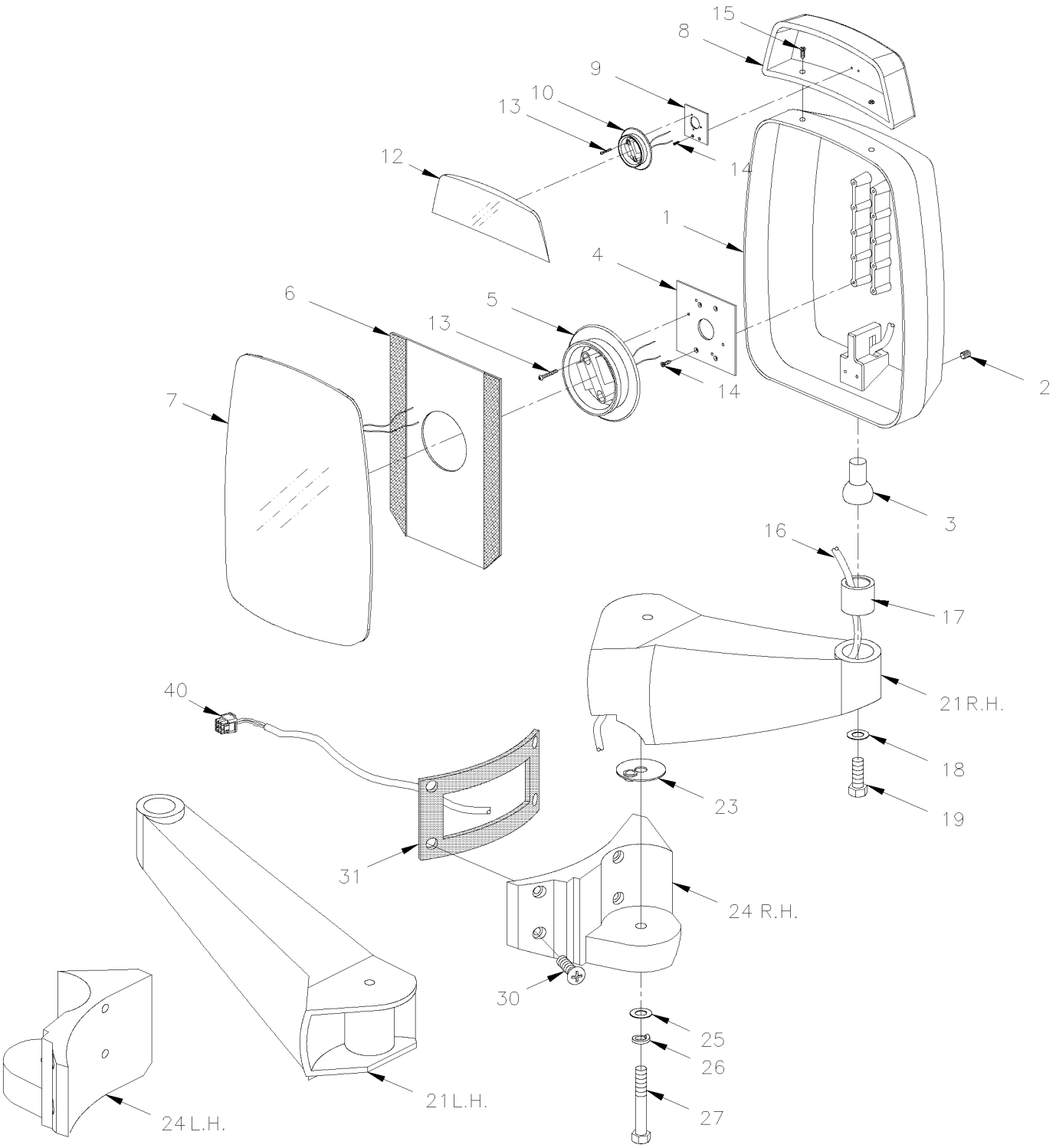

From Y-7046 Up to 2-7763	DATE: 01/2014	PAGE: Y2-1856-50

MIRROR "RAMCO" FLAT GLASS / CHROME

ITEM	PART	DESCRIPTION	XL45	MTH40	MTH45	MTH45S	NOTE
	990331	MIRROR ASSY, L.H. / W/CONVEX ELECTRIC / W/8 PINS CONNECTOR	1	1	1	1	
	990332	MIRROR ASSY, R.H. / W/CONVEX ELECTRIC / W/8 PINS CONNECTOR	1	1	1	1	
1	990347	. HEAD ASSY / W/CONVEX ELECTRIC / W/8 PINS CONNECTOR	1	1	1	1	
2	502812	. . SCREW SET HEXS CUP 3/8-16X3/8 SS	1	1	1	1	
3	990186	. . STUD, BALL	1	1	1	1	
4	990272	. . NOTCHED BACK MOUNTING PLATE (2" X 3")	1	1	1	1	
5	990349	. . MOTOR 12V / MEDIUM / BLACK / 108MM / 4 1/4" O.D.	1	1	1	1	
6	990268	. . VELCRO PLATE / 8" X 8"	1	1	1	1	
7	990199	. . GLASS ASSY W/HEATER 12V	1	1	1	1	
8	990302	. MIRROR ASSY / CONVEX ELECTRIC	1	1	1	1	
9	990295	. . PLATE, TOP MOTOR MOUNTING	1	1	1	1	
10	990219	. . MOTOR 12V / SMALL / BLACK / 85MM / 3 5/16" O.D.	1	1	1	1	
12	990339	. . GLASS CONVEX ASSY W/HEATER 12V	1	1	1	1	
13	N.P.N.	. . SCREW TC FL PH ZP 6-32 X 1 1/8"	3	3	3	3	4
14	500660	. . SCREW TC FL PH #6-32x3/8 ZP	2	2	2	2	
15	N.P.N.	. . SCREW CAP HEX SS 10-24 X 1"	2	2	2	2	4
NS	500787	. . NUT HEX #10-24 SS	2	2	2	2	
16	990377	. . CABLE ASSY / W/CONNECTOR 8PIN	1	1	1	1	
17	990379	. . CUP, BALL STUD RETAINER / ONE PIECE	1	1	1	1	
18	500270	. . WASHER FL .406x1.000x.063 SS	1	1	1	1	
19	N.P.N.	. . SCREW CAP HEX SS 3/8-24 X 1.250	1	1	1	1	4
21	990316	. ARM, R.H.	1	1	1	1	
21	990314	. ARM, L.H.	1	1	1	1	
23	990265	. WASHER ALUMINUM 2 " O.D.	1	1	1	1	
NS	504082	. . SNAP BUSHING / .125x.312x.312	1	1	1	1	
24	990310	. BRACKET, MOUNTING R.H.	1	1	1	1	
24	990312	. BRACKET, MOUNTING L.H.	1	1	1	1	
25	500958	. WASHER FL .531x1.062x.095 SS	1	1	1	1	
26	500035	. WASHER LO SPT .317x.586x.078 SS	1	1	1	1	
27	990500	. SCREW 1/2-13x2 HHCS SS	1	1	1	1	
30	5001461	SCREW MA FL PH M8-1.25x40 SS	2	2	2	2	
30	5001581	SCREW CAP BUT HEXS M8-1.25x40 SS	2	2	2	2	
NS	5001341	WASHER FL 8.4x17.0x1.6 SS	2	2	2	2	
31	490873	GASKET, RH	1	1	1	1	
31	490894	GASKET, LH	1	1	1	1	
40	562920	CONNECTOR / SH 8C / SWITCHCRAFT EN3C8FC	2	2	2	2	A
NS	562919	CONNECTOR / PH 8C / SWITCHCRAFT EN3P8MC	2	2	2	2	A,B
NS	065583	KIT, RETROFIT CONNECTOR "CONXAL" 8C	1	1	1	1	
. NS	IS-01082	. SEE INSTRUCTION SHEET	1	1	1	1	
. NS	065534	. CABLE ASSY , INTERFACE / <> SWITCHCRAFT & CONNEXALL	1	1	1	1	
		4) NO PARTS NUMBER					
		A) FOR PRODUCT IMPROVEMENT ASK KIT 065583					
		B) THIS CONNECTOR IT USED ON CABLE HARNESS FROM INSIDE OF VEHICULE					

From 2-7764 Up to 8-9339	DATE: 01/2014	PAGE: Y2-1856-51
MIRROR "RAMCO" FLAT GLASS / CHROME		

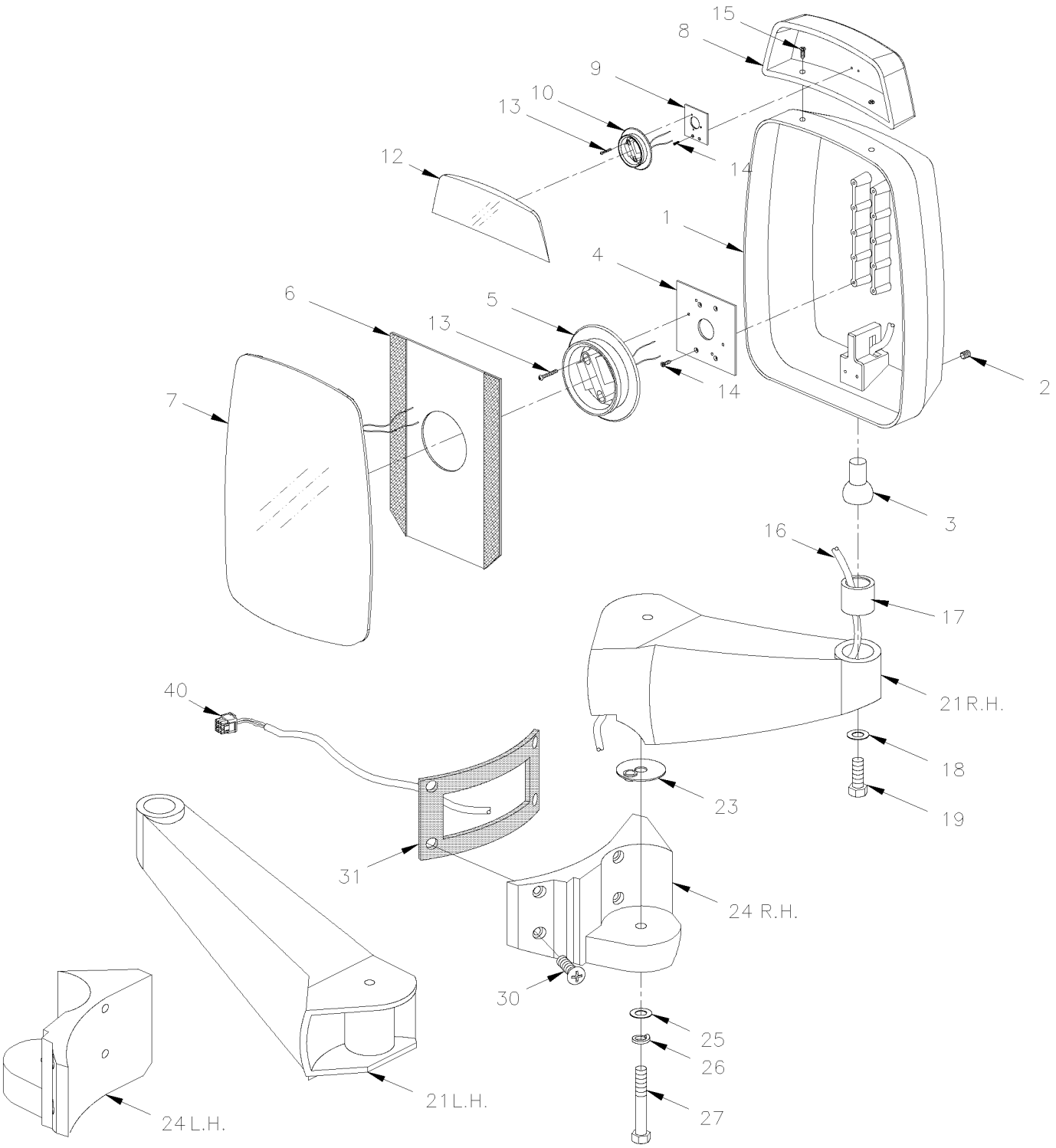

From 2-7764 Up to 8-9339	DATE: 01/2014	PAGE: Y2-1856-51

MIRROR "RAMCO" FLAT GLASS / CHROME

ITEM	PART	DESCRIPTION	XL45	MTH40	MTH45	MTH45S	NOTE
	990366	MIRROR ASSY, L.H. / W/CONVEX ELECTRIC / W/8 PINS CONNECTOR Up to 3-8041 / REPLACED BY : 990414	1	1	1	1	
	990409	MIRROR ASSY, L.H. / W/CONVEX ELECTRIC / W/8 PINS CONNECTOR From 3-8042	1	1	1	1	
	990367	MIRROR ASSY, R.H. / W/CONVEX ELECTRIC / W/8 PINS CONNECTOR	1	1	1	1	
1	990376	. HEAD ASSY / W/CONVEX ELECTRIC / W/8 PINS CONNECTOR	1	1	1	1	
2	502812	. . SCREW SET HEXS CUP 3/8-16X3/8 SS	1	1	1	1	
3	990186	. . STUD, BALL	1	1	1	1	
4	990272	. . NOTCHED BACK MOUNTING PLATE (2" X 3")	1	1	1	1	
5	990349	. . MOTOR 12V / MEDIUM / BLACK / 108MM / 4 1/4" O.D.	1	1	1	1	
6	990268	. . VELCRO PLATE / 8" X 8"	1	1	1	1	
7	990199	. . GLASS ASSY W/HEATER 12V	1	1	1	1	
8	990302	. MIRROR ASSY / CONVEX ELECTRIC	1	1	1	1	
9	990295	. . PLATE, TOP MOTOR MOUNTING	1	1	1	1	
10	990219	. . MOTOR 12V / SMALL / BLACK / 85MM / 3 5/16" O.D.	1	1	1	1	
12	990339	. . GLASS CONVEX ASSY W/HEATER 12V	1	1	1	1	
13	N.P.N.	. . SCREW TC FL PH ZP 6-32 X 1 1/8"	3	3	3	3	4
14	500660	. . SCREW TC FL PH #6-32x3/8 ZP	2	2	2	2	
15	N.P.N.	. . SCREW CAP HEX SS 10-24 X 1"	2	2	2	2	4
NS	500787	. . NUT HEX #10-24 SS	2	2	2	2	
16	N.P.N.	. . CABLE ASSY / W/CONNECTOR 8PIN / SEE ITEM # 40	1	1	1	1	4
17	990379	. . CUP, BALL STUD RETAINER / ONE PIECE	1	1	1	1	
18	500270	. . WASHER FL .406x1.000x.063 SS	1	1	1	1	
19	N.P.N.	. . SCREW CAP HEX SS 3/8-24 X 1.250	1	1	1	1	4
21	990316	. ARM, R.H.	1	1	1	1	
21	990314	. ARM, L.H. Up to 3-8041	1	1	1	1	
21	990394	. ARM, L.H. / DIRTY FREE From 3-8042	1	1	1	1	
23	990265	. WASHER ALUMINUM 2 " O.D.	1	1	1	1	
NS	504082	. . SNAP BUSHING / .125x.312x.312	1	1	1	1	
24	990310	. BRACKET, MOUNTING R.H.	1	1	1	1	
24	990312	. BRACKET, MOUNTING L.H.	1	1	1	1	
25	500958	. WASHER FL .531x1.062x.095 SS	1	1	1	1	
26	500035	. WASHER LO SPT .317x.586x.078 SS	1	1	1	1	
27	990500	. SCREW 1/2-13x2 HHCS SS	1	1	1	1	
30	5001461	SCREW MA FL PH M8-1.25x40 SS	2	2	2	2	
30	5001581	SCREW CAP BUT HEXS M8-1.25x40 SS	2	2	2	2	
NS	5001341	WASHER FL 8.4x17.0x1.6 SS	2	2	2	2	
31	490873	GASKET, RH	1	1	1	1	
31	490894	GASKET, LH	1	1	1	1	
40	563163	CONNECTOR / W 45" CABLE ASSY / PH 8C / CONXALL 3280-8PG-324	2	2	2	2	
NS	563088	CONNECTOR / MULTI CON X / SH 8C / CONXALL 4280-8SG-300	2	2	2	2	B
NS	562511	SOCKET TERMINAL / 20 / CONXALL 586SG	AR	AR	AR	AR	B
		4) NO PARTS NUMBER					
		B) THIS CONNECTOR IT USED ON CABLE HARNESS FROM INSIDE OF VEHICULE					

From Y-7046 Up to 2-7763	DATE: 01/2014	PAGE: Y2-1856-60
MIRROR "RAMCO" 2 GLASSES / CHROME		

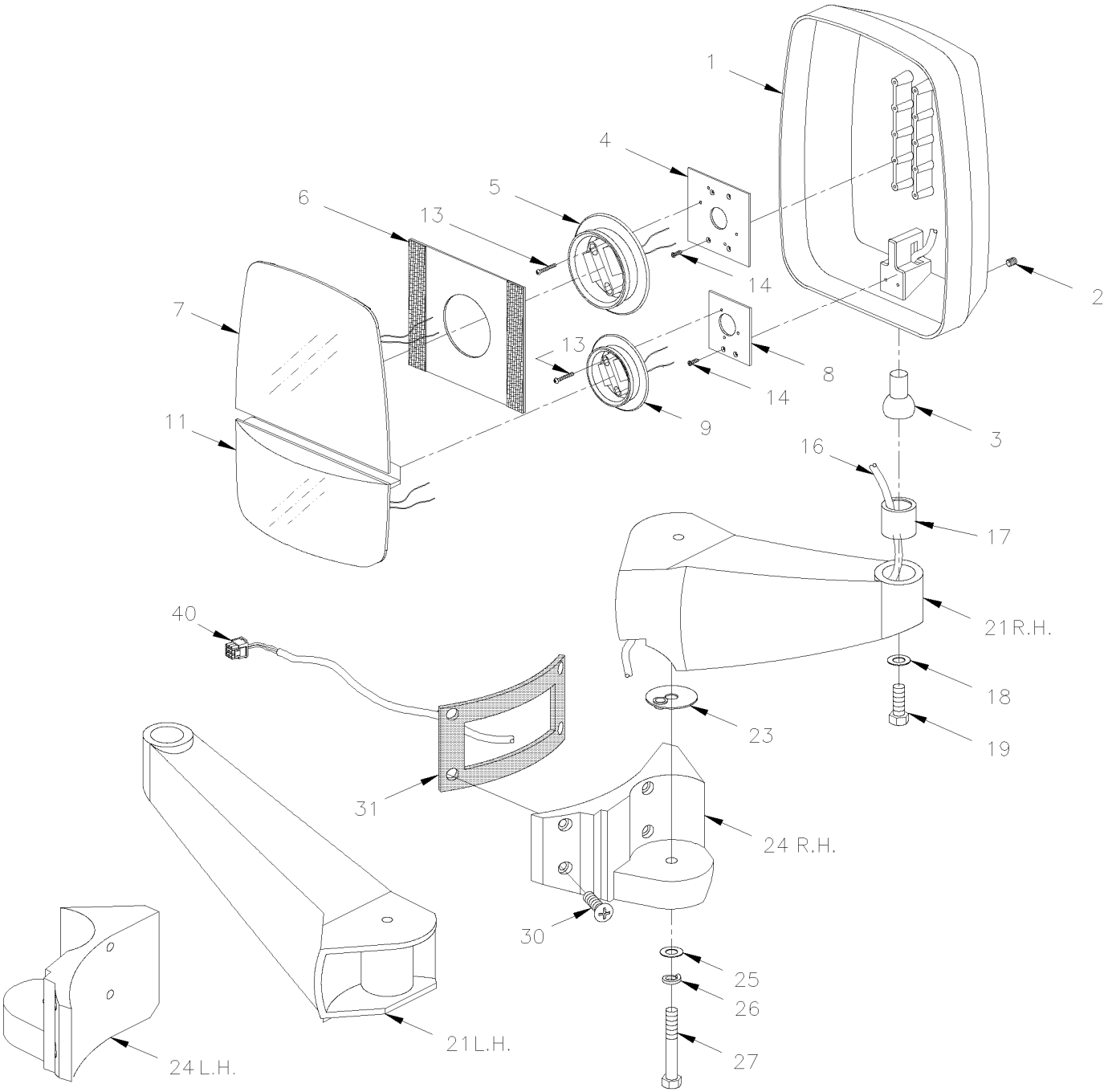

From Y-7046 Up to 2-7763	DATE: 01/2014	PAGE: Y2-1856-60

MIRROR "RAMCO" 2 GLASSES / CHROME

ITEM	PART	DESCRIPTION	XL45	MTH40	MTH45	MTH45S	NOTE
	990326	MIRROR ASSY, R.H. / ELECTRIC / W/8 PINS CONNECTOR		1	1	1	
	990325	MIRROR ASSY, L.H. / ELECTRIC / W/8 PINS CONNECTOR		1	1	1	
1	990344	. HEAD ASSY / ELECTRIC / W/8 PINS CONNECTOR		1	1	1	
2	502812	. . SCREW SET HEXS CUP 3/8-16X3/8 SS		1	1	1	
3	990186	. . STUD, BALL		1	1	1	
4	990272	. . NOTCHED BACK MOUNTING PLATE (2" X 3")		1	1	1	
5	990349	. . MOTOR 12V / MEDIUM / BLACK / 108MM / 4 1/4" O.D.		1	1	1	
6	990266	. . VELCRO PLATE / 6" X 7"		1	1	1	
7	990182	. . FLAT GLASS ASSY W/HEATER 12V		1	1	1	
8	990273	. . POWER CONVEX MOTOR BASE PLATE		1	1	1	
9	990219	. . MOTOR 12V / SMALL / BLACK / 85MM / 3 5/16" O.D.		1	1	1	
11	990338	. . CONVEX GLASS ASSY W/HEATER 12V		1	1	1	
13	N.P.N.	. . SCREW TC FL PH ZP 6-32 X 1 1/8"		3	3	3	4
14	500660	. . SCREW TC FL PH #6-32x3/8 ZP		2	2	2	
16	990377	. . CABLE ASSY / W/CONNECTOR 8PIN		1	1	1	
17	990379	. . CUP, BALL STUD RETAINER / ONE PIECE		1	1	1	
18	500270	. . WASHER FL .406x1.000x.063 SS		1	1	1	
19	N.P.N.	. . SCREW CAP HEX SS 3/8-24 X 1.250		1	1	1	4
21	990316	. ARM, R.H.		1	1	1	
21	990314	. ARM, L.H.		1	1	1	
23	990265	. WASHER ALUMINUM 2 " O.D.		1	1	1	
NS	504082	. . SNAP BUSHING / .125x.312x.312		1	1	1	
24	990310	. BRACKET, MOUNTING R.H.		1	1	1	
24	990312	. BRACKET, MOUNTING L.H.		1	1	1	
25	500958	. WASHER FL .531x1.062x.095 SS		1	1	1	
26	500035	. WASHER LO SPT .317x.586x.078 SS		1	1	1	
27	990500	. SCREW 1/2-13x2 HHCS SS		1	1	1	
30	5001461	SCREW MA FL PH M8-1.25x40 SS		2	2	2	
30	5001581	SCREW CAP BUT HEXS M8-1.25x40 SS		2	2	2	
NS	5001341	WASHER FL 8.4x17.0x1.6 SS		2	2	2	
31	490873	GASKET, RH		1	1	1	
31	490894	GASKET, LH		1	1	1	
40	562920	CONNECTOR / SH 8C / SWITCHCRAFT EN3C8FC		1	1	1	A
NS	562919	CONNECTOR / PH 8C / SWITCHCRAFT EN3P8MC		1	1	1	A,B
NS	065583	KIT, RETROFIT CONNECTOR "CONXAL" 8C		1	1	1	
. NS	IS-01082	. SEE INSTRUCTION SHEET		1	1	1	
. NS	065534	. CABLE ASSY , INTERFACE / <> SWITCHCRAFT & CONNEXALL		1	1	1	
		4) NO PARTS NUMBER					
		A) FOR PRODUCT IMPROVEMENT ASK KIT 065583T					
		B) THIS CONNECTOR IT USED ON CABLE HARNESS FROM					
		INSIDE OF VEHICULE					

From 2-7764 Up to 8-9339	DATE: 01/2014	PAGE: Y2-1856-61
MIRROR "RAMCO" 2 GLASSES / CHROME		

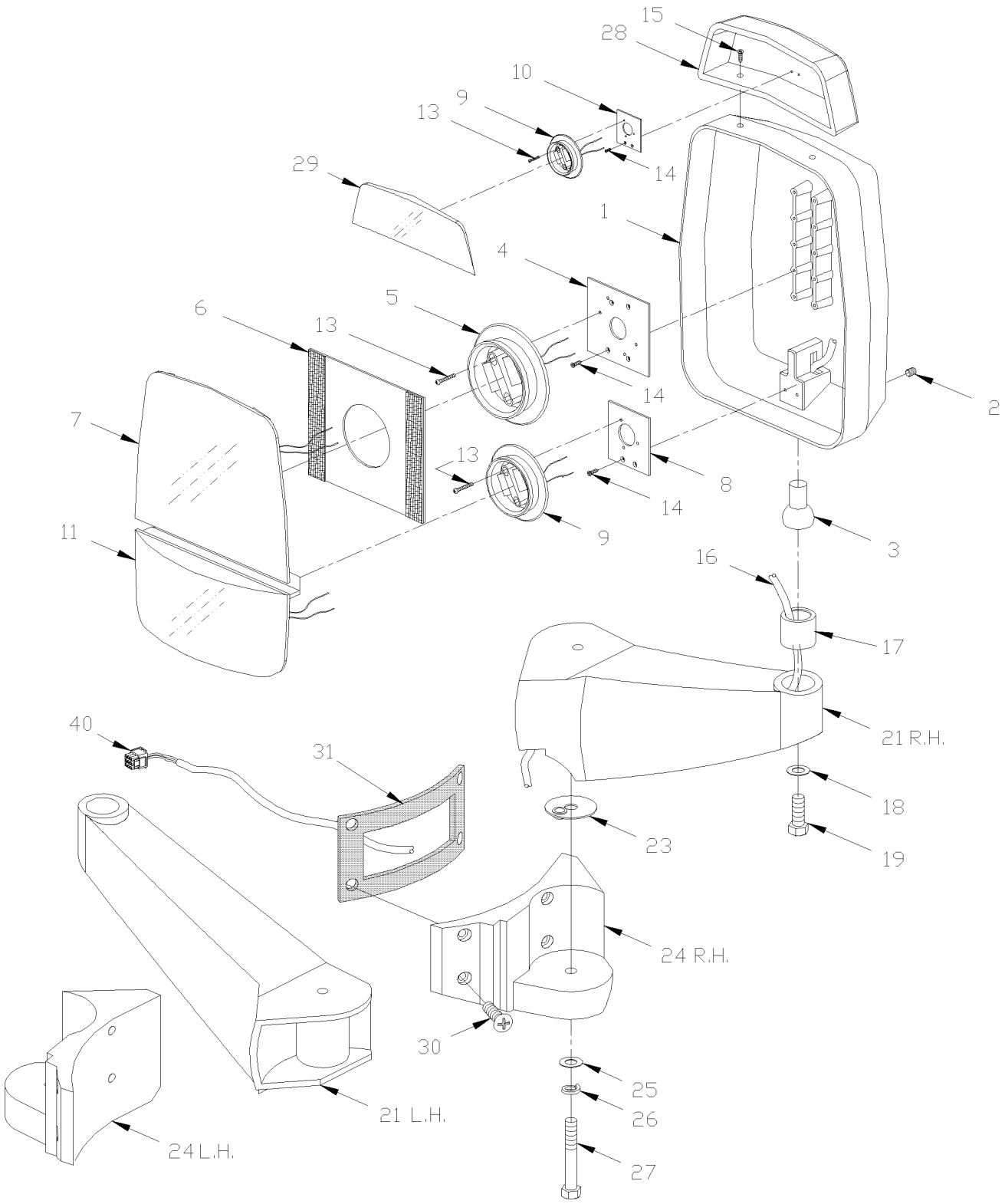

From 2-7764 Up to 8-9339	DATE: 01/2014	PAGE: Y2-1856-61

MIRROR "RAMCO" 2 GLASSES / CHROME

ITEM	PART	DESCRIPTION	XL45	MTH40	MTH45	MTH45S	NOTE
	990359	MIRROR ASSY, R.H. / ELECTRIC / W/8 PINS CONNECTOR		1	1	1	
	990390	MIRROR ASSY, R.H. / ELECTRIC W/AUXILIARY CONVEX OVER / W/8 PINS CONNECTOR		1	1	1	A
	990358	MIRROR ASSY, L.H. / ELECTRIC / W/8 PINS CONNECTOR Up to 3-8041 / REPLACED BY: 990412		1	1	1	
	990389	MIRROR ASSY, L.H. / ELECTRIC W/AUXILIARY CONVEX OVER / W/8 PINS CONNECTOR Up to 3-8041 / REPLACED BY: 990410		1	1	1	A
	990405	MIRROR ASSY, L.H. / ELECTRIC / W/8 PINS CONNECTOR From 3-8042		1	1	1	
	990410	MIRROR ASSY, L.H. / ELECTRIC W/AUXILIARY CONVEX OVER / W/8 PINS CONNECTOR From 3-8042		1	1	1	A
1	990372	. HEAD ASSY / ELECTRIC / W/8 PINS CONNECTOR		1	1	1	
1	990391	. HEAD ASSY / W/AUXILIARY CONVEX OVER / W/8 PINS CONNECTOR		1	1	1	A
2	502812	. . SCREW SET HEXS CUP 3/8-16X3/8 SS		1	1	1	
3	990186	. . STUD, BALL		1	1	1	
4	990272	. . NOTCHED BACK MOUNTING PLATE (2" X 3")		1	1	1	
5	990349	. . MOTOR 12V / MEDIUM / BLACK / 108MM / 4 1/4" O.D.		1	1	1	
6	990266	. . VELCRO PLATE / 6" X 7"		1	1	1	
7	990182	. . FLAT GLASS ASSY W/HEATER 12V		1	1	1	
8	990273	. . POWER CONVEX MOTOR BASE PLATE		1	1	1	
9	990219	. . MOTOR 12V / SMALL / BLACK / 85MM / 3 5/16" O.D.		1	1	1	
10	990295	. . PLATE, TOP MOTOR MOUNTING		1	1	1	A
11	990338	. . CONVEX GLASS ASSY W/HEATER 12V		1	1	1	
13	N.P.N.	. . SCREW TC FL PH ZP 6-32 X 1 1/8"		6	6	6	4
14	500660	. . SCREW TC FL PH #6-32x3/8 ZP		8	8	8	
15	N.P.N.	. . SCREW CAP HEX SS 10-24 X 1"		2	2	2	4 A
16	N.P.N.	. . CABLE ASSY / W/CONNECTOR 8PIN / SEE ITEM # 40		1	1	1	4
17	990379	. . CUP, BALL STUD RETAINER / ONE PIECE		1	1	1	
18	500270	. . WASHER FL .406x1.000x.063 SS		1	1	1	
19	N.P.N.	. . SCREW CAP HEX SS 3/8-24 X 1.250		1	1	1	4
21	990316	. ARM, R.H.		1	1	1	
21	990314	. ARM, L.H. Up to 3-8041		1	1	1	
21	990394	. ARM, L.H. / DIRTY FREE From 3-8042		1	1	1	
23	990265	. WASHER ALUMINUM 2 " O.D.		1	1	1	
NS	504082	. . SNAP BUSHING / .125x.312x.312		1	1	1	
24	990310	. BRACKET, MOUNTING R.H.		1	1	1	
24	990312	. BRACKET, MOUNTING L.H.		1	1	1	
25	500958	. WASHER FL .531x1.062x.095 SS		1	1	1	
26	500035	. WASHER LO SPT .317x.586x.078 SS		1	1	1	
27	990500	. SCREW 1/2-13x2 HHCS SS		1	1	1	
28	990302	. MIRROR ASSY / CONVEX ELECTRIC		1	1	1	A
29	990339	. GLASS CONVEX ASSY W/HEATER 12V		1	1	1	A
30	5001461	SCREW MA FL PH M8-1.25x40 SS		2	2	2	
30	5001581	SCREW CAP BUT HEXS M8-1.25x40 SS		2	2	2	
NS	5001341	WASHER FL 8.4x17.0x1.6 SS		2	2	2	
		4) NO PARTS NUMBER					
		A) WITH ELECTRIC CONVEX OVER					

From 2-7764 Up to 8-9339	DATE: 01/2014	PAGE: Y2-1856-61

MIRROR "RAMCO" 2 GLASSES / CHROME

ITEM	PART	DESCRIPTION	XL45	MTH40	MTH45	MTH45S	NOTE
31	490873	GASKET, RH		1	1	1	
31	490894	GASKET, LH		1	1	1	
40	563163	CONNECTOR / W 45" CABLE ASSY / PH 8C / CONXALL 3280-8PG-324		1	1	1	
NS	563088	CONNECTOR / MULTI CON X / SH 8C / CONXALL 4280-8SG-300		1	1	1	B
41	562511	SOCKET TERMINAL / 20 / CONXALL 586SG		AR	AR	AR	B
		B) THIS CONNECTOR IT USED ON CABLE HARNESS FROM					
		INSIDE OF VEHICULE					

From 2-7764 Up to 8-9339	DATE: 01/2014	PAGE: Y2-1856-61

MIRROR "RAMCO" 2 GLASSES / CHROME

ITEM	PART	DESCRIPTION	XL45	MTH40	MTH45	MTH45S	NOTE

From Y-7046 Up to 6-8906	DATE: 01/2014	PAGE: Y2-1857-00

FENDER L.H. - BUS W/FLAT PANELING

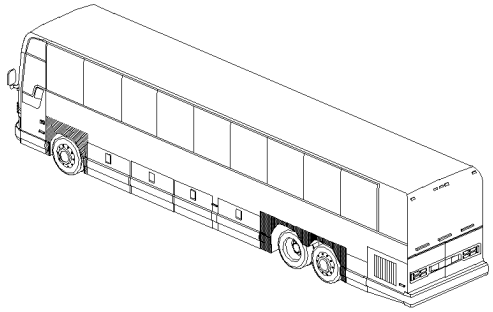

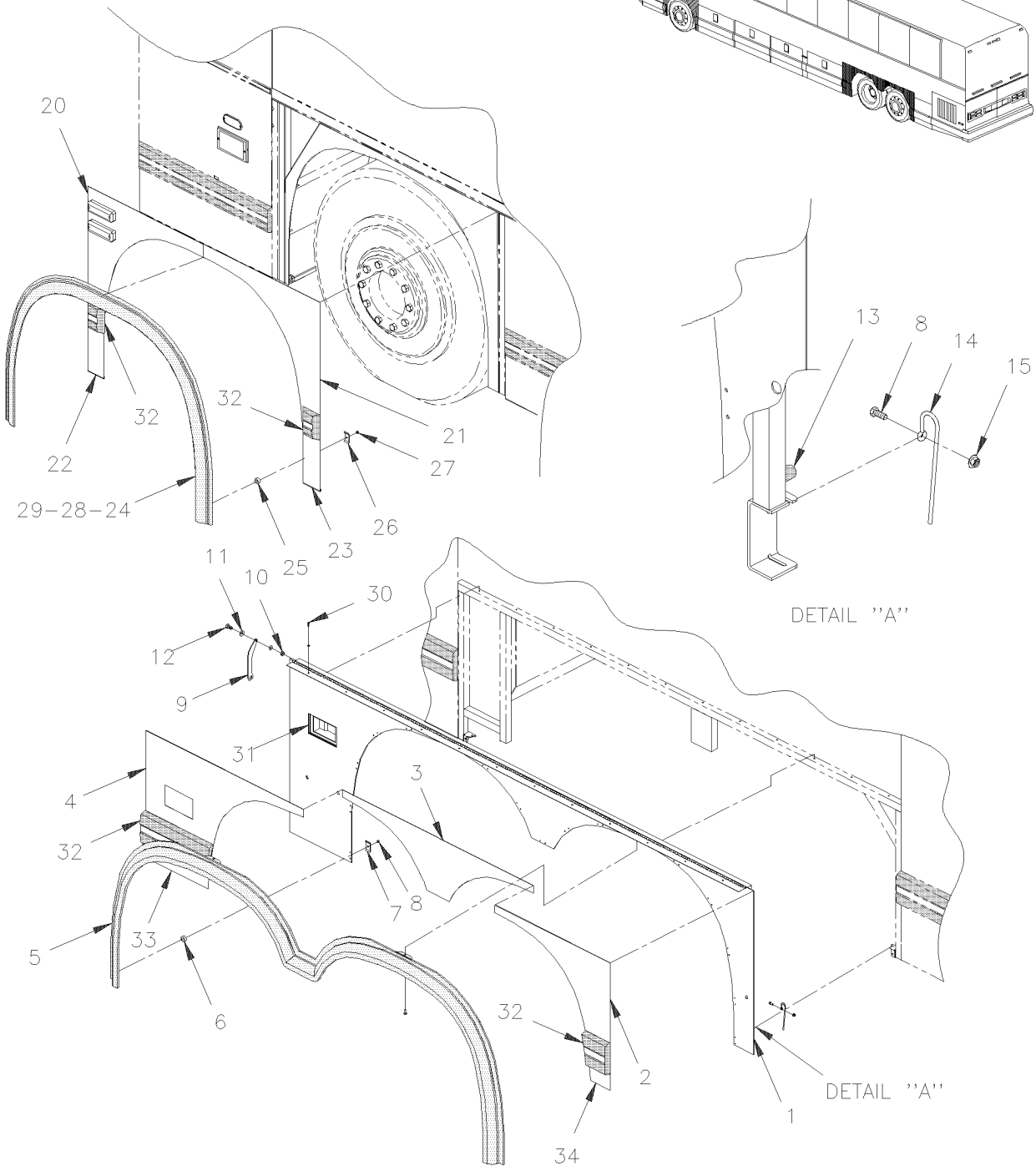

From Y-7046 Up to 6-8906	DATE: 01/2014	PAGE: Y2-1857-00

FENDER L.H. - BUS W/FLAT PANELING

ITEM	PART	DESCRIPTION	XL45	MTH40	MTH45	MTH45S	NOTE
	474340	REAR FENDER ASSY L.H. W/EDGE Up to 1-7688	1				
	475159	REAR FENDER ASSY L.H. W/EDGE From 1-7689	1				
1	213920	. FRAME REAR FENDER L.H.	1				
2	474219	. PANEL L.H. & R.H. BACKWARD	1				
3	474221	. PANEL CENTER	1				
4	474220	. PANEL L.H. & R.H. FORWARD	1				
4	477927	. PANEL L.H. & R.H. FORWARD / W/DOCKING LIGHTS	1				
5	240455	. EDGE MOULDING LH W/FLAT PANEL Up to 1-7688 / REPLACED BY: 240494	1				
5	240494	. EDGE MOULDING LH W/FLAT PANEL From 1-7689	1				
5	500658	. SCREW TC PAN PH #10-24x3/4 ZP	2				
6	571755	. SPACERS BUTTITE STAINLESS	1				
7	240436	. MOUNTING PLATE EDGE 43.2mm x 25mm	1				
8	502622	. SCREW CAP HEX M6-1.0x20 SS EMN	2				
9	240412	. LEVER / FOR LOCK	1				
NS	502803	. PIN HITCH CLIP .094 DIA. SS	1				
10	500868	. NUT HEX NYRT M8-1.25 CP	1				
NS	502543	. NUT HEX M8-1.25 ZP	1				
11	471119	. SEAL WASHER / <> RUB RAIL & PANEL	1				
11	500874	. WASHER FL 8.4x17.0x1.6 ZP	1				
12	502589	. SCREW CAP HEX M8-1.25x25 G8.8 ZP	1				
13	504527	. BUMPER PLUG / .625ODx.312THx.250HOLEx.125	4				
14	472830	. SPRING GUIDE HOLDER	2				
15	5001182	. NUT HEX NYRT M6-1.0 SS	2				
NS	681092	. ADHESIVE SIKA #255FC / BLACK / 310ml CARTRIDGE	AR				
NS	683097	. CLEANER SIKA #205 / CLEAR / 1000ml	AR				
NS	683446	. PRIMER SIKA #206 / BLACK / 1000ml	AR				
NS	506790	. TAPE RUB ADH2 CC POL 1/16" x 1/2" x 200' / BLACK I1C-N-A	AR				
20	474607	PANEL FRONT L.H. FORWARD Up to 3-8164	1				
20	473738	PANEL FRONT L.H. FORWARD From 4-8165 Up to 5-8358 / REPLACED BY: K473738	1				
20	476360	PANEL FRONT L.H. FORWARD From 5-8359	1				
21	474222	PANEL UPPER LH & RH BACKWARD Up to 3-8164	1				
21	473718	PANEL UPPER LH & RH BACKWARD From 4-8165	1				
22	474004	PANEL LOWER 95MM X 243MM / S.B.	1				
23	474006	PANEL LOWER 103MM X 255MM / S.B.	1				
24	240454	EDGE MOULDING W/FLAT PANEL Up to 1-7688 / REPLACED BY: 240493	1				
24	240493	EDGE MOULDING W/FLAT PANEL From 1-7689 Up to 4-8193	1				
24	240623	EDGE MOULDING W/FLAT PANEL From 4-8194	1				
25	571755	SPACERS BUTTITE STAINLESS	22				
26	240436	MOUNTING PLATE EDGE 43.2mm x 25mm	27				
27	5001182	NUT HEX NYRT M6-1.0 SS	22				
28	460430	MOULDING RUBBER 2540MM	1				A
29	460431	FENDER RUBBER FRONT / L.H. & R.H. / (ORLEAN OPTION)	1				A
NS	5001182	NUT HEX NYRT M6-1.0 SS	22				A
		A) "OPTION" WITH XL 102" RUBBER FENDER					

From Y-7046 Up to 6-8906	DATE: 01/2014	PAGE: Y2-1857-00

FENDER L.H. - BUS W/FLAT PANELING

ITEM	PART	DESCRIPTION	XL45	MTH40	MTH45	MTH45S	NOTE
NS	240436	MOUNTING PLATE EDGE 43.2mm x 25mm	22				A
30	504488	RIVET MGLP PRDG 3/16x17/64 SS	14				
31	Y2-0663-00	**DOCK & CORNERING LIGHT**					
32	Y2-1855-00	**RUB RAIL - CREST & TRIMS**					
33	474003	PANEL LOWER 394MM X 255MM / S.B.	1				
34	473995	PANEL LOWER 127MM X 205MM / S.B.	1				
		A) "OPTION" WITH XL 102" RUBBER FENDER					

From Y-7046 Up to 6-8906	DATE: 01/2014	PAGE: Y2-1857-00

FENDER L.H. - BUS W/FLAT PANELING

ITEM	PART	DESCRIPTION	XL45	MTH40	MTH45	MTH45S	NOTE

From Y-7046 Up to 6-8906	DATE: 01/2014	PAGE: Y2-1857-05

FENDER R.H. - BUS W/FLAT PANELING

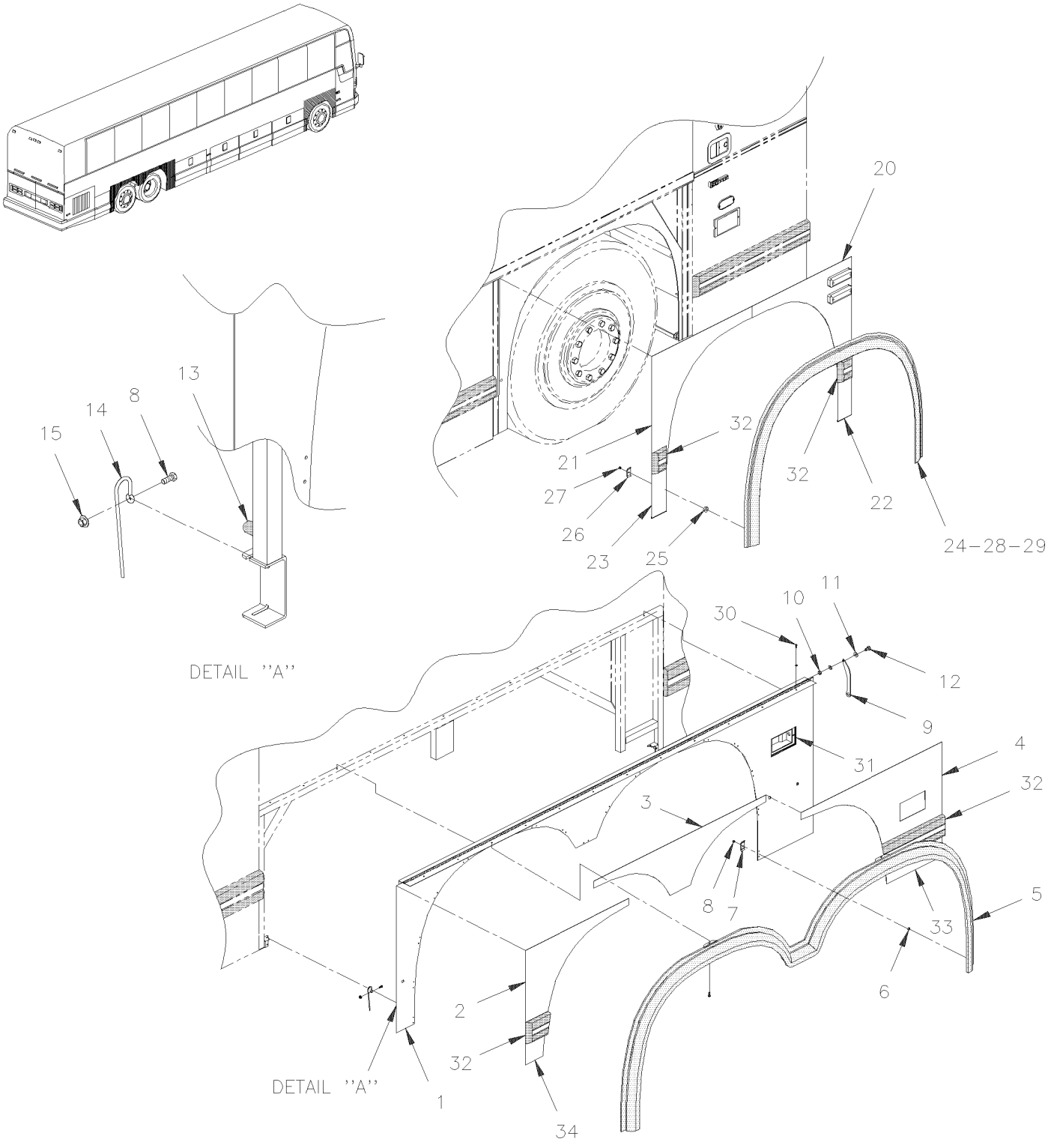

From Y-7046 Up to 6-8906	DATE: 01/2014	PAGE: Y2-1857-05

FENDER R.H. - BUS W/FLAT PANELING

ITEM	PART	DESCRIPTION	XL45	MTH40	MTH45	MTH45S	NOTE
	474339	REAR FENDER ASSY R.H. W/EDGE Up to 1-7688	1				
	475160	REAR FENDER ASSY R.H. W/EDGE From 1-7689	1				
1	213940	. FRAME REAR FENDER R.H.	1				
2	474219	. PANEL L.H. & R.H. BACKWARD	1				
3	474221	. PANEL CENTER	1				
4	474220	. PANEL L.H. & R.H. FORWARD	1				
4	477927	. PANEL L.H. & R.H. FORWARD / W/DOCKING LIGHTS	1				
5	240456	. EDGE MOULDING RH W/FLAT PANEL Up to 1-7688 / REPLACED BY: 240495	1				
5	240495	. EDGE MOULDING RH W/FLAT PANEL From 1-7689	1				
NS	500658	. SCREW TC PAN PH #10-24x3/4 ZP	2				
6	571755	. SPACERS BUTTITE STAINLESS	1				
7	240436	. MOUNTING PLATE EDGE 43.2mm x 25mm	1				
8	502622	. SCREW CAP HEX M6-1.0x20 SS EMN	2				
9	240412	. LEVER / FOR LOCK	1				
NS	502803	. PIN HITCH CLIP .094 DIA. SS	1				
10	500868	. NUT HEX NYRT M8-1.25 CP	1				
NS	502543	. NUT HEX M8-1.25 ZP	1				
11	471119	. SEAL WASHER / <> RUB RAIL & PANEL	1				
NS	500874	. WASHER FL 8.4x17.0x1.6 ZP	1				
12	502589	. SCREW CAP HEX M8-1.25x25 G8.8 ZP	1				
13	504527	. BUMPER PLUG / .625ODx.312THx.250HOLEx.125	4				
14	472830	. SPRING GUIDE HOLDER	2				
15	5001182	. NUT HEX NYRT M6-1.0 SS	2				
NS	681092	. ADHESIVE SIKA #255FC / BLACK / 310ml CARTRIDGE	AR				
NS	683097	. CLEANER SIKA #205 / CLEAR / 1000ml	AR				
NS	683446	. PRIMER SIKA #206 / BLACK / 1000ml	AR				
NS	506790	. TAPE RUB ADH2 CC POL 1/16" x 1/2" x 200' / BLACK I1C-N-A	AR				
20	474608	PANEL FRONT R.H. FORWARD Up to 3-8164	1				
20	473719	PANEL FRONT R.H. FOWARD From 4-8165 Up to 5-8358 / REPLACED BY: K473719	1				
20	476359	PANEL FRONT R.H. FOWARD From 5-8359	1				
21	474222	PANEL UPPER LH & RH BACKWARD Up to 3-8164	1				
21	473718	PANEL UPPER LH & RH BACKWARD From 4-8165	1				
22	474004	PANEL LOWER 95MM X 243MM / S.B.	1				
23	474006	PANEL LOWER 103MM X 255MM / S.B.	1				
24	240454	EDGE MOULDING W/FLAT PANEL Up to 1-7688 / REPLACED BY: 240493	1				
24	240493	EDGE MOULDING W/FLAT PANEL From 1-7689 Up to 4-8193	1				
24	240623	EDGE MOULDING W/FLAT PANEL From 4-8194	1				
25	571755	SPACERS BUTTITE STAINLESS	22				
26	240436	MOUNTING PLATE EDGE 43.2mm x 25mm	22				
27	5001182	NUT HEX NYRT M6-1.0 SS	22				
28	460430	MOULDING RUBBER 2540MM	1				A
29	460431	FENDER RUBBER FRONT / L.H. & R.H. / (ORLEAN OPTION)	1				A
29	5001182	NUT HEX NYRT M6-1.0 SS	22				A
		A) "OPTION" WITH XL 102" RUBBER FENDER					

From Y-7046 Up to 6-8906	DATE: 01/2014	PAGE: Y2-1857-05

FENDER R.H. - BUS W/FLAT PANELING

ITEM	PART	DESCRIPTION	XL45	MTH40	MTH45	MTH45S	NOTE
29	240436	MOUNTING PLATE EDGE 43.2mm x 25mm	22				A
30	504488	RIVET MGLP PRDG 3/16x17/64 SS	14				
31	Y2-0663-00	**DOCK & CORNERING LIGHT**					
32	Y2-1855-00	**RUB RAIL - CREST & TRIMS**					
33	474003	PANEL LOWER 394MM X 255MM / S.B.	1				
34	473995	PANEL LOWER 127MM X 205MM / S.B.	1				
		A) "OPTION" WITH XL 102" RUBBER FENDER					

From Y-7046 Up to 6-8906	DATE: 01/2014	PAGE: Y2-1857-05

FENDER R.H. - BUS W/FLAT PANELING

ITEM	PART	DESCRIPTION	XL45	MTH40	MTH45	MTH45S	NOTE

From Y-7046 Up to 6-8906	DATE: 01/2014	PAGE: Y2-1857-10

FENDER L.H. - BUS W/FLUTED PANELLING

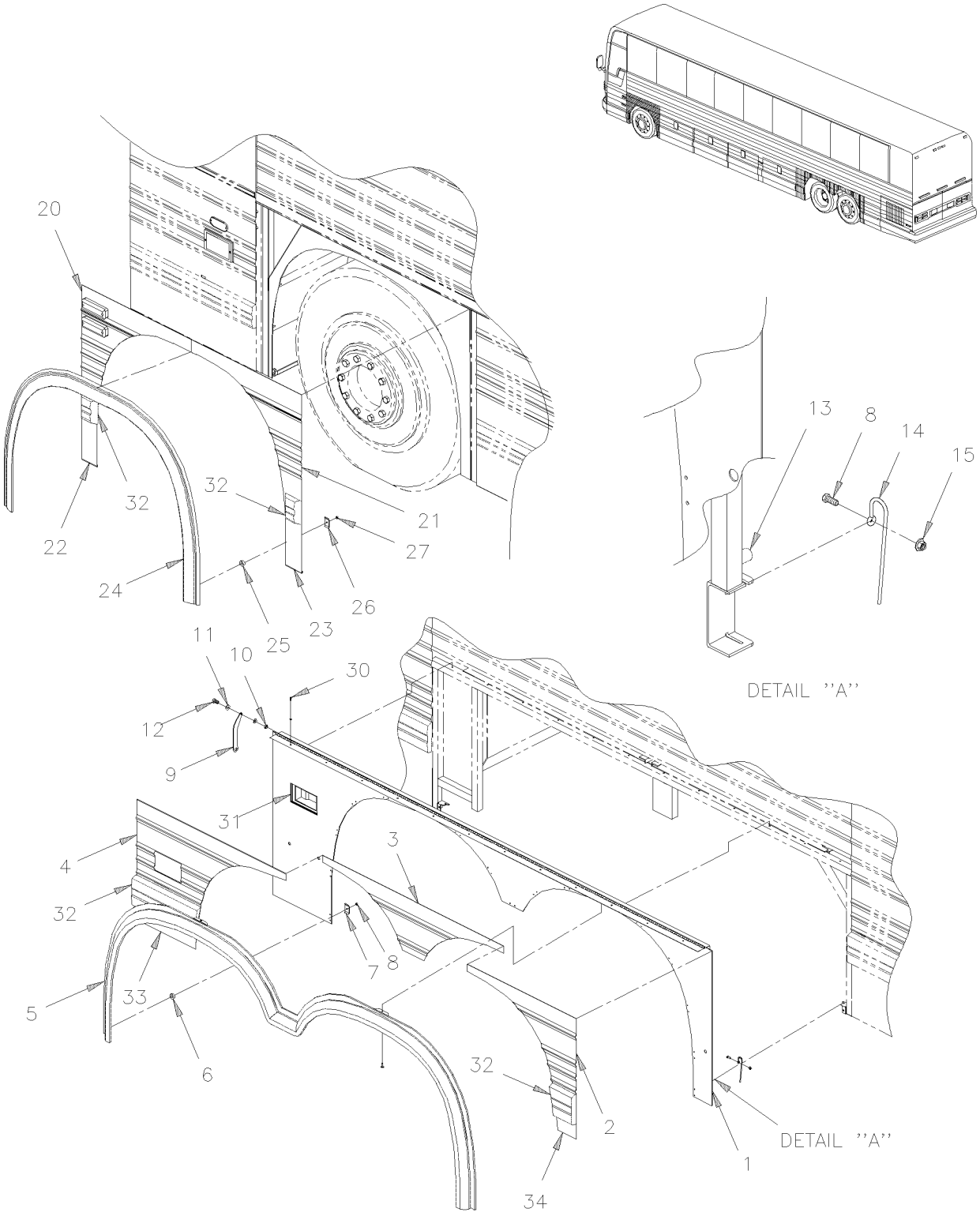

From Y-7046 Up to 6-8906	DATE: 01/2014	PAGE: Y2-1857-10

FENDER L.H. - BUS W/FLUTED PANELLING

ITEM	PART	DESCRIPTION	XL45	MTH40	MTH45	MTH45S	NOTE
	474497	REAR FENDER ASSY L.H. W/EDGE / S.B.	1				A
	474906	REAR FENDER ASSY L.H. W/EDGE / S.B.	1				B
	474110	. REAR FENDER ASSY L.H. W/OUT EDGE / S.B. / REPLACED BY: 477626	1				
1	213920	. . FRAME REAR FENDER L.H.	1				
2	474350	. . PANEL REAR L.H. BACKWARD / S.B. / REPLACED BY: 477560	1				A
3	474354	. . PANEL CENTER / S.B. / REPLACED BY: 477562	1				A
4	474352	. . PANEL REAR L.H. FORWARD / REPLACED BY: 477561	1				A
4	474909	. . PANEL REAR L.H. FORWARD	1				B
5	240482	. . EDGE MOULDING LH W/FLUTED PANEL	1				
NS	500658	. . SCREW TC PAN PH #10-24x3/4 ZP	2				
6	571755	. . SPACERS BUTTITE STAINLESS	15				
7	240436	. . MOUNTING PLATE EDGE 43.2mm x 25mm	15				
8	502622	. . SCREW CAP HEX M6-1.0x20 SS EMN	2				
9	240412	. . LEVER / FOR LOCK	1				
NS	502803	. . PIN HITCH CLIP .094 DIA. SS	1				
10	500868	. . NUT HEX NYRT M8-1.25 CP	1				
10	502543	. . NUT HEX M8-1.25 ZP	1				
11	471119	. . SEAL WASHER / <> RUB RAIL & PANEL	1				
11	500874	. . WASHER FL 8.4x17.0x1.6 ZP	1				
12	502589	. . SCREW CAP HEX M8-1.25x25 G8.8 ZP	1				
13	504527	. . BUMPER PLUG / .625ODx.312THx.250HOLEx.125	4				
14	472830	. . SPRING GUIDE HOLDER	2				
15	5001182	. . NUT HEX NYRT M6-1.0 SS	17				
NS	506790	. . TAPE RUB ADH2 CC POL 1/16" x 1/2" x 200' / BLACK I1C-N-A	AR				
20	474857	PANEL FRONT L.H. FORWARD / S.B. Up to 5-8358 / REPLACED BY: 476358	1				
20	477616	PANEL FRONT L.H. FORWARD / S.B. From 5-8359	1				
21	474355	PANEL FRONT L.H. BACKWARD / S.B. Up to 3-8164	1				A
21	473650	PANEL FRONT L.H. BACKWARD / S.B. From 4-8165	1				A
22	474004	PANEL LOWER 95MM X 243MM / S.B.	1				A
23	474006	PANEL LOWER 103MM X 255MM / S.B.	1				A
24	240481	EDGE MOULDING W/FLUTED PANEL Up to 4-8193	1				
24	240528	EDGE MOULDING W/FLUTED PANEL From 4-8195	1				
25	571755	SPACERS BUTTITE STAINLESS	22				
26	240436	MOUNTING PLATE EDGE 43.2mm x 25mm	22				
27	5001182	NUT HEX NYRT M6-1.0 SS	22				
30	504488	RIVET MGLP PRDG 3/16x17/64 SS	14				
31	Y2-0663-00	**DOCK & CORNERING LIGHT**					
32	Y2-1855-00	**RUB RAIL - CREST & TRIMS**					
33	474003	PANEL LOWER 394MM X 255MM / S.B.	2				A
34	473995	PANEL LOWER 127MM X 205MM / S.B.	2				A
		A) WITH DOCKING LIGHT					
		B) W/OUT DOCKING LIGHT					

From Y-7046 Up to 8-9339	DATE: 01/2014	PAGE: Y2-1857-15

FENDER R.H. - BUS W/FLUTED PANELLING

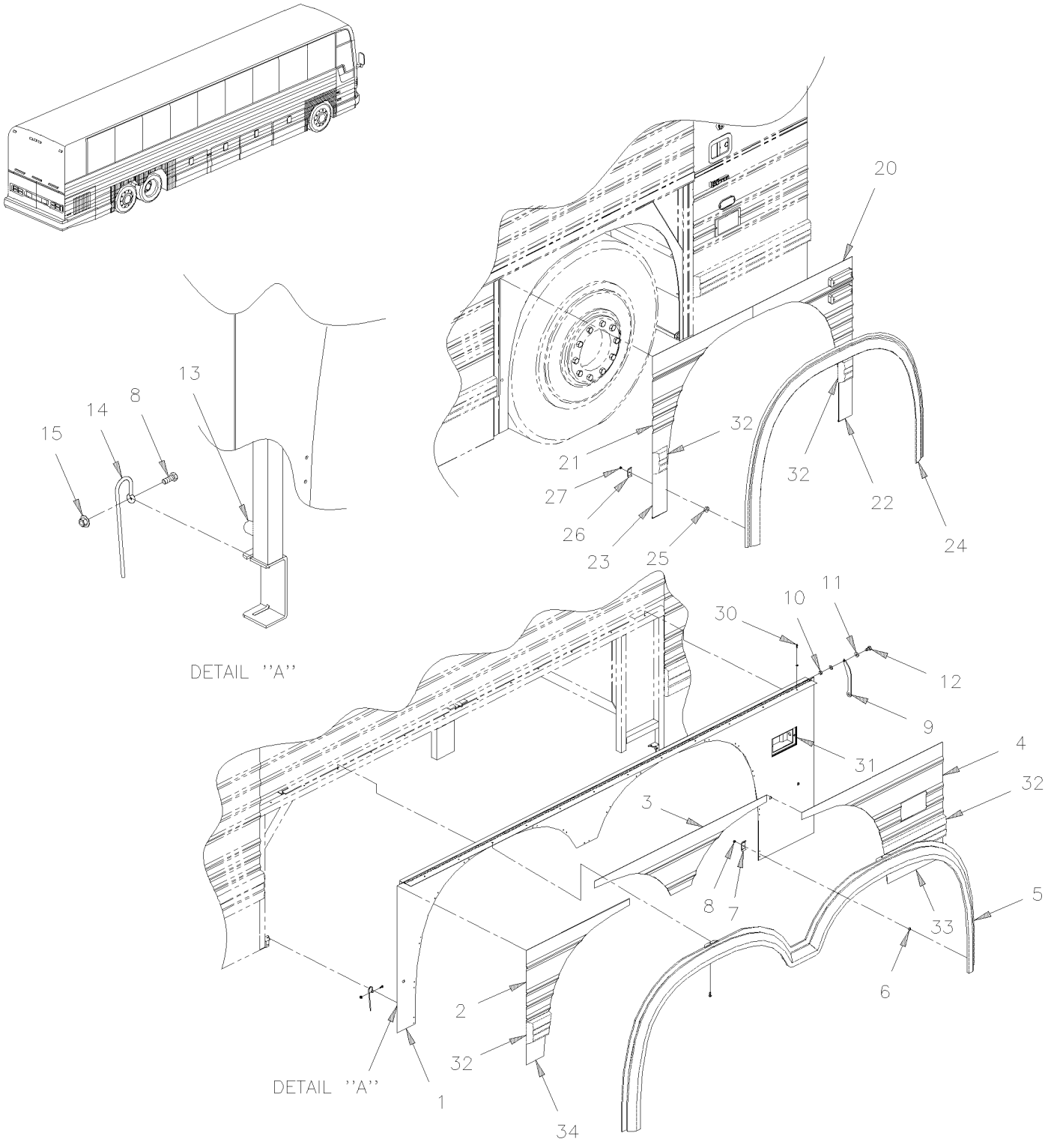

From Y-7046 Up to 8-9339	DATE: 01/2014	PAGE: Y2-1857-15

FENDER R.H. - BUS W/FLUTED PANELLING

ITEM	PART	DESCRIPTION	XL45	MTH40	MTH45	MTH45S	NOTE
	474498	REAR FENDER ASSY R.H. W/EDGE / S.B. / REPLACED BY: 474957	1				A
	474905	REAR FENDER ASSY R.H. W/EDGE / S.B.	1				B
	474111	. REAR FENDER ASSY R.H. W/OUT EDGE / S.B. / REPLACED BY: 477627	1				
1	213940	. . FRAME REAR FENDER R.H.	1				
2	474351	. . PANEL REAR R.H BACKWARD / REPLACED BY: 477640	1				A
3	474354	. . PANEL CENTER / S.B. / REPLACED BY: 477562	1				A
4	474353	. . PANEL REAR R.H. FORWARD / REPLACED BY: 477559	1				A
4	474908	. . PANEL REAR R.H. FORWARD	1				B
5	240483	. . EDGE MOULDING RH W/FLUTED PANEL	1				
6	571755	. . SPACERS BUTTITE STAINLESS	15				
7	240436	. . MOUNTING PLATE EDGE 43.2mm x 25mm	15				
8	502622	. . SCREW CAP HEX M6-1.0x20 SS EMN	2				
9	240412	. . LEVER / FOR LOCK	1				
9	502803	. . PIN HITCH CLIP .094 DIA. SS	1				
10	500868	. . NUT HEX NYRT M8-1.25 CP	1				
10	502543	. . NUT HEX M8-1.25 ZP	1				
11	471119	. . SEAL WASHER / <> RUB RAIL & PANEL	1				
11	500874	. . WASHER FL 8.4x17.0x1.6 ZP	1				
12	502589	. . SCREW CAP HEX M8-1.25x25 G8.8 ZP	1				
13	504527	. . BUMPER PLUG / .625ODx.312THx.250HOLEx.125	4				
14	472830	. . SPRING GUIDE HOLDER	2				
15	5001182	. . NUT HEX NYRT M6-1.0 SS	17				
NS	506790	. . TAPE RUB ADH2 CC POL 1/16" x 1/2" x 200' / BLACK I1C-N-A	AR				
20	474858	PANEL FRONT R.H. FORWARD / S.B. Up to 5-8358 / REPLACED BY: K474858	1				A
20	477615	PANEL FRONT R.H. FORWARD / S.B. From 5-8359	1				
21	474356	PANEL FRONT R.H. BACKWARD / S.B. Up to 3-8164	1				A
21	474232	PANEL FRONT R.H. BACKWARD / S.B. From 4-8165 Up to 5-8461	1				A
22	474004	PANEL LOWER 95MM X 243MM / S.B. Up to 5-8468	1				
23	474006	PANEL LOWER 103MM X 255MM / S.B. Up to 5-8468	1				
24	240481	EDGE MOULDING W/FLUTED PANEL Up to 4-8193	1				
24	240528	EDGE MOULDING W/FLUTED PANEL From 4-8194	1				
25	571755	SPACERS BUTTITE STAINLESS	22				
26	240436	MOUNTING PLATE EDGE 43.2mm x 25mm	22				
27	474003	PANEL LOWER 394MM X 255MM / S.B. Up to 5-8468	2				A
27	477563	PANEL LOWER 394MM X 255MM / B.A. From 5-8469	2				A
30	504488	RIVET MGLP PRDG 3/16x17/64 SS	14				
31	Y2-0663-00	**DOCK & CORNERING LIGHT**					
32	Y2-1855-00	**RUB RAIL - CREST & TRIMS**					
33	474003	PANEL LOWER 394MM X 255MM / S.B.	1				A
34	473995	PANEL LOWER 127MM X 205MM / S.B.	1				A
		A) WITH DOCKING LIGHT					
		B) W/OUT DOCKING LIGHT					

From Y-7046 Up to 8-9339	DATE: 01/2014	PAGE: Y2-1857-50

FENDERS L.H. - MTH

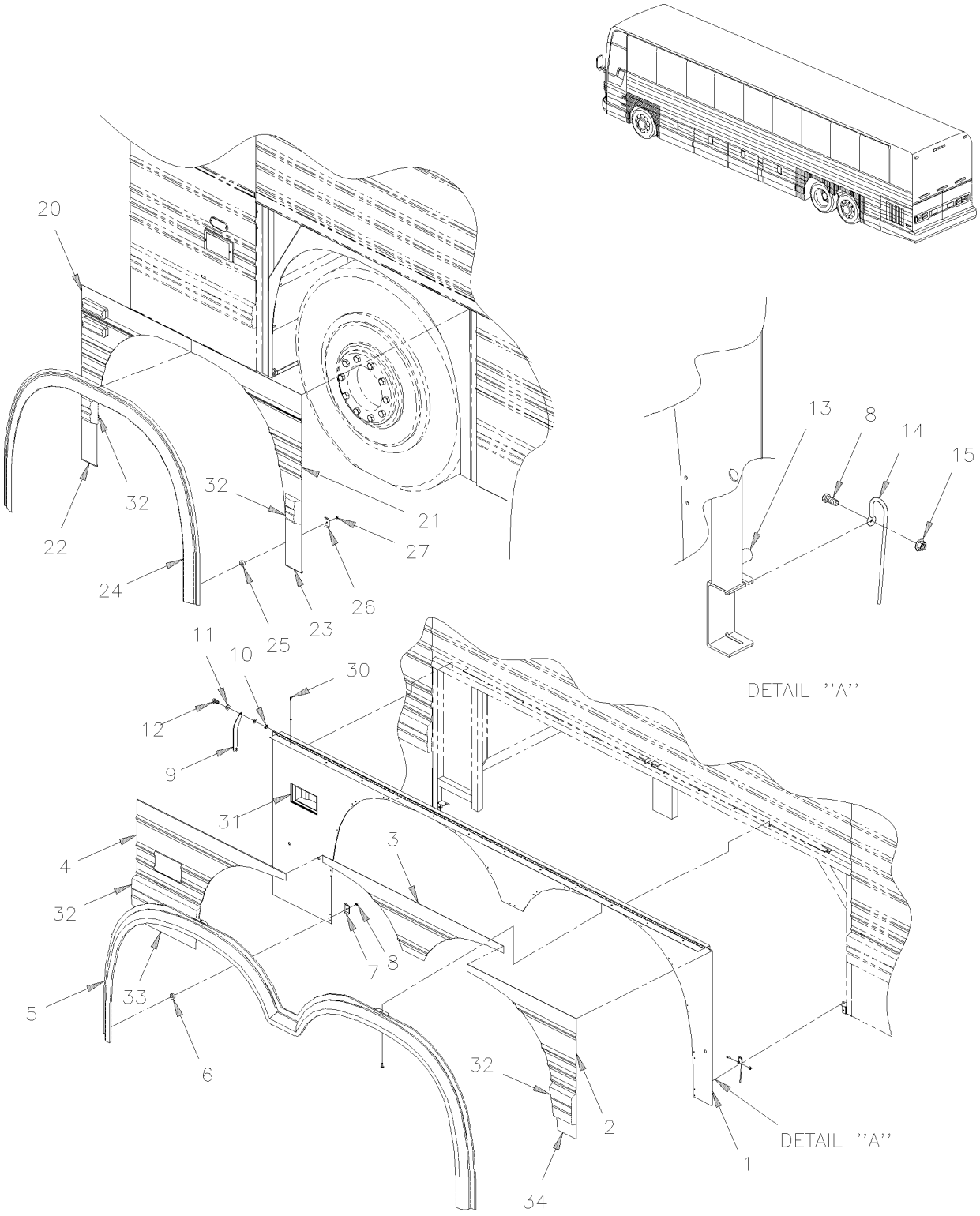

From Y-7046 Up to 8-9339	DATE: 01/2014	PAGE: Y2-1857-50

FENDERS L.H. - MTH

ITEM	PART	DESCRIPTION	XL45	MTH40	MTH45	MTH45S	NOTE
		"WARNING" - "WARNING" -"WARNING" - "WARNING"					
		FOR MTH-45 ENT FROM 7-9096					
		SEE NEXT PAGE Y2-1857-51					
	474497	REAR FENDER ASSY L.H. W/EDGE / S.B. Up to Y-7379		1	1	1	
	474955	REAR FENDER ASSY L.H. W/EDGE / S.B. From Y-7380		1	1	1	
	474110	. REAR FENDER ASSY L.H. W/OUT EDGE / S.B. Up to 5-8468 / REPLACED BY: 477626		1	1	1	
	477626	. REAR FENDER ASSY L.H. W/OUT EDGE / B.A. From 5-8469		1	1	1	
1	213920	. . FRAME REAR FENDER L.H.		1	1	1	
2	474350	. . PANEL REAR L.H. BACKWARD / S.B. Up to 5-8468 / REPLACED BY: 477560		1	1	1	
2	477560	. . PANEL REAR L.H. BACKWARD / B.A. From 5-8469		1	1	1	
3	474354	. . PANEL CENTER / S.B. Up to 5-8468 / REPLACED BY: 477562		1	1	1	
3	477562	. . PANEL CENTER / B.A. From 5-8469		1	1	1	
4	474352	. . PANEL REAR L.H. FORWARD Up to 5-8468 / REPLACED BY: 477561		1	1	1	
4	477561	. . PANEL REAR L.H. FORWARD / B.A. From 5-8469		1	1	1	
5	240418	. . EDGE MOULDING LH W/FLUTED & SS RAIL RECESS		1	1	1	
5	240482	. . EDGE MOULDING LH W/FLUTED PANEL		1	1	1	
NS	500658	. . SCREW TC PAN PH #10-24x3/4 ZP		2	2	2	
6	571755	. . SPACERS BUTTITE STAINLESS		15	15	15	
7	240436	. . MOUNTING PLATE EDGE 43.2mm x 25mm		15	15	15	
8	502622	. . SCREW CAP HEX M6-1.0x20 SS EMN		2	2	2	
9	240412	. . LEVER / FOR LOCK		1	1	1	
NS	502803	. . PIN HITCH CLIP .094 DIA. SS		1	1	1	
10	500868	. . NUT HEX NYRT M8-1.25 CP		1	1	1	
10	502543	. . NUT HEX M8-1.25 ZP		1	1	1	
11	471119	. . SEAL WASHER / <> RUB RAIL & PANEL		1	1	1	
11	500874	. . WASHER FL 8.4x17.0x1.6 ZP		1	1	1	
12	502589	. . SCREW CAP HEX M8-1.25x25 G8.8 ZP		1	1	1	
13	504527	. . BUMPER PLUG / .625ODx.312THx.250HOLEx.125		4	4	4	
14	472830	. . SPRING GUIDE HOLDER		2	2	2	
15	5001182	. . NUT HEX NYRT M6-1.0 SS		17	17	17	
NS	681092	. . ADHESIVE SIKA #255FC / BLACK / 310ml CARTRIDGE		AR	AR	AR	
NS	683097	. . CLEANER SIKA #205 / CLEAR / 1000ml		AR	AR	AR	
NS	683446	. . PRIMER SIKA #206 / BLACK / 1000ml		AR	AR	AR	
NS	506790	. . TAPE RUB ADH2 CC POL 1/16" x 1/2" x 200' / BLACK I1C-N-A		AR	AR	AR	
20	474609	PANEL FRONT L.H. FORWARD / S.B. Up to 3-8164		1	1	1	
20	473507	PANEL FRONT L.H. FORWARD / S.B. From 4-8165 Up to 5-8358 / REPLACED BY: 477634		1	1	1	
20	476356	PANEL FRONT L.H. FORWARD / S.B. From 5-8359 Up to 5-8468 / REPLACED BY: 477634		1	1	1	
20	477634	PANEL FRONT L.H. FORWARD / B.A. From 5-8469		1	1	1	
21	474355	PANEL FRONT L.H. BACKWARD / S.B. Up to 3-8164		1	1		
21	473650	PANEL FRONT L.H. BACKWARD / S.B. From 4-8165 Up to 5-8468		1	1		
21	477639	PANEL FRONT L.H. BACKWARD / B.A. From 5-8469		1	1		
21	474360	PANEL FRONT L.H. BACKWARD / S.B. Up to 3-8164				1	

From Y-7046 Up to 8-9339	DATE: 01/2014	PAGE: Y2-1857-50

FENDERS L.H. - MTH

ITEM	PART	DESCRIPTION	XL45	MTH40	MTH45	MTH45S	NOTE
21	473739	PANEL FRONT L.H. BACKWARD / S.B. From 4-8165 Up to 5-8468 / REPLACED BY: 477633				1	
21	477633	PANEL FRONT L.H. BACKWARD / B.A. From 5-8469				1	
22	474004	PANEL LOWER 95MM X 243MM / S.B. Up to 5-8468		1	1	1	
22	477637	PANEL LOWER 95MM X 243MM / B.A. From 5-8469		1	1	1	
23	474006	PANEL LOWER 103MM X 255MM / S.B. Up to 5-8468		1	1		
23	477537	PANEL LOWER 103MM X 255MM / B.A. From 5-8469		1	1		
23	474262	PANEL LOWER 217MM X 255MM / S.B. Up to 5-8468 / REPLACED BY: 477638				1	
23	477638	PANEL LOWER 217MM X 255MM / B.A. From 5-8469				1	
24	240415	EDGE MOULDING W/FLUTED & SS RAIL RECESS		1	1	1	
24	240481	EDGE MOULDING W/FLUTED PANEL Up to 4-8193		1	1	1	
24	240528	EDGE MOULDING W/FLUTED PANEL From 4-9194		1	1	1	
25	571755	SPACERS BUTTITE STAINLESS		22	22	22	
26	240436	MOUNTING PLATE EDGE 43.2mm x 25mm		22	22	22	
27	5001182	NUT HEX NYRT M6-1.0 SS		22	22	22	
30	504488	RIVET MGLP PRDG 3/16x17/64 SS		14	14	14	
31	Y2-0663-00	**DOCK & CORNERING LIGHT**					
32	Y2-1855-00	**RUB RAIL - CREST & TRIMS**					
33	474003	PANEL LOWER 394MM X 255MM / S.B. Up to 5-8468		2	2	2	
33	477563	PANEL LOWER 394MM X 255MM / B.A. From 5-8469		2	2	2	
34	473995	PANEL LOWER 127MM X 205MM / S.B. Up to 5-8468		2	2	2	
34	477632	PANEL LOWER 127MM X 205MM / B.A. From 5-8469		2	2	2	

From Y-7046 Up to 8-9339	DATE: 01/2014	PAGE: Y2-1857-50

FENDERS L.H. - MTH

ITEM	PART	DESCRIPTION	XL45	MTH40	MTH45	MTH45S	NOTE

From 7-9096 Up to 8-9278	DATE: 01/2014	PAGE: Y2-1857-51

FENDERS L.H. - MTH 45 ENT

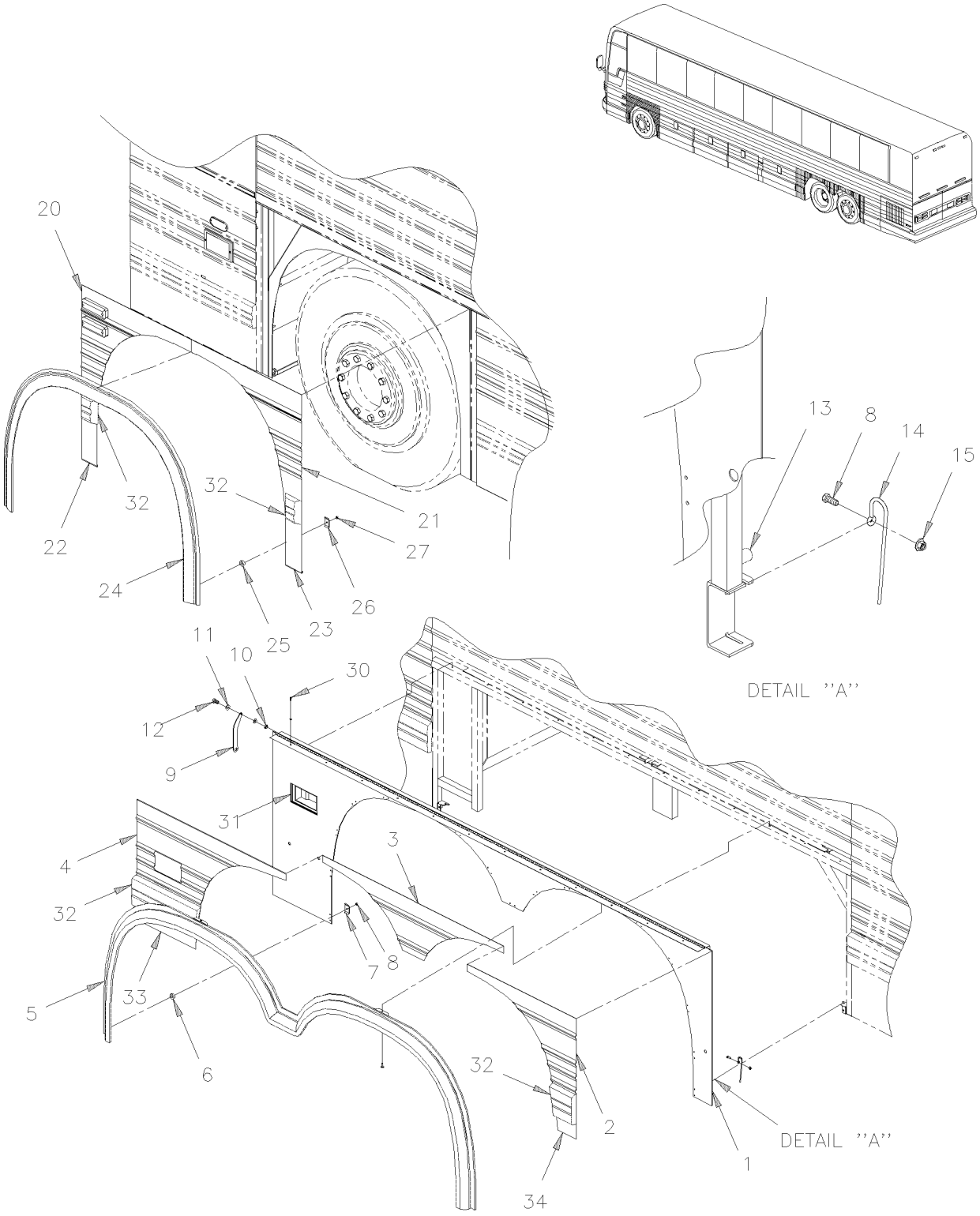

From 7-9096 Up to 8-9278	DATE: 01/2014	PAGE: Y2-1857-51

FENDERS L.H. - MTH 45 ENT

ITEM	PART	DESCRIPTION	XL45	MTH40	MTH45	MTH45S	NOTE
	460504	REAR FENDER ASSY L.H. W/EDGE / B.A. Up to 8-9276				1	
	460518	REAR FENDER ASSY L.H. W/EDGE / B.A. From 8-9279				1	
	460513	. REAR FENDER ASSY L.H. W/OUT EDGE / B.A. Up to 8-9276				1	
	460519	. REAR FENDER ASSY L.H. W/OUT EDGE / B.A. From 8-9279				1	
1	460502	. . FRAME REAR FENDER L.H. Up to 8-9276				1	
1	460517	. . FRAME REAR FENDER L.H. From 8-9279				1	
2	476714	. . PANEL REAR L.H. BACKWARD / B.A. Up to 8-9276				1	
2	476736	. . PANEL REAR L.H. BACKWARD / B.A. From 8-9279				1	
3	477562	. . PANEL CENTER / B.A.				1	
4	476716	. . PANEL REAR L.H. FORWARD / B.A.				1	
5	240482	. . EDGE MOULDING LH W/FLUTED PANEL				1	
5	240418	. . EDGE MOULDING LH W/FLUTED & SS RAIL RECESS				1	O
NS	500283	. . SCREW TC TR PH #10-24x3/4 SS				2	
6	571755	. . SPACERS BUTTITE STAINLESS				15	
7	240436	. . MOUNTING PLATE EDGE 43.2mm x 25mm				15	
8	502622	. . SCREW CAP HEX M6-1.0x20 SS EMN				2	
9	240412	. . LEVER / FOR LOCK				1	
NS	502803	. . PIN HITCH CLIP .094 DIA. SS				1	
10	500868	. . NUT HEX NYRT M8-1.25 CP				1	
10	502543	. . NUT HEX M8-1.25 ZP				1	
11	471119	. . SEAL WASHER / <> RUB RAIL & PANEL				1	
11	500874	. . WASHER FL 8.4x17.0x1.6 ZP				1	
12	502589	. . SCREW CAP HEX M8-1.25x25 G8.8 ZP				1	
13	504527	. . BUMPER PLUG / .625ODx.312THx.250HOLEx.125				4	
14	472830	. . SPRING GUIDE HOLDER				2	
15	5001182	. . NUT HEX NYRT M6-1.0 SS				17	
NS	681092	. . ADHESIVE SIKA #255FC / BLACK / 310ml CARTRIDGE				AR	
NS	683097	. . CLEANER SIKA #205 / CLEAR / 1000ml				AR	
NS	683446	. . PRIMER SIKA #206 / BLACK / 1000ml				AR	
NS	506790	. . TAPE RUB ADH2 CC POL 1/16" x 1/2" x 200' / BLACK I1C-N-A				AR	
20	477634	PANEL FRONT L.H. FORWARD / B.A.				1	
21	477633	PANEL FRONT L.H. BACKWARD / B.A.				1	
22	477637	PANEL LOWER 95MM X 243MM / B.A.				1	
23	477638	PANEL LOWER 217MM X 255MM / B.A.				1	
24	240528	EDGE MOULDING W/FLUTED PANEL				1	
24	240415	EDGE MOULDING W/FLUTED & SS RAIL RECESS				1	O
25	571755	SPACERS BUTTITE STAINLESS				22	
26	240436	MOUNTING PLATE EDGE 43.2mm x 25mm				22	
27	5001182	NUT HEX NYRT M6-1.0 SS				22	
30	504488	RIVET MGLP PRDG 3/16x17/64 SS				14	
31	Y2-0663-00	**DOCK & CORNERING LIGHT**					
32	Y2-1855-00	**RUB RAIL - CREST & TRIMS**					
33	476719	PANEL LOWER 286MM X 255MM / B.A.				2	
		O) WITH "OPTION"					

From 7-9096 Up to 8-9278	DATE: 01/2014	PAGE: Y2-1857-51

FENDERS L.H. - MTH 45 ENT

ITEM	PART	DESCRIPTION	XL45	MTH40	MTH45	MTH45S	NOTE
34	476718	PANEL LOWER 240MM X 205MM / B.A. Up to 8-9276				1	
34	476798	PANEL LOWER 88MM X 205MM / B.A. From 8-9279				1	

From 7-9096 Up to 8-9278	DATE: 01/2014	PAGE: Y2-1857-51

FENDERS L.H. - MTH 45 ENT

ITEM	PART	DESCRIPTION	XL45	MTH40	MTH45	MTH45S	NOTE

From Y-7046 Up to 8-9339	DATE: 01/2014	PAGE: Y2-1857-55

FENDERS R.H. - MTH

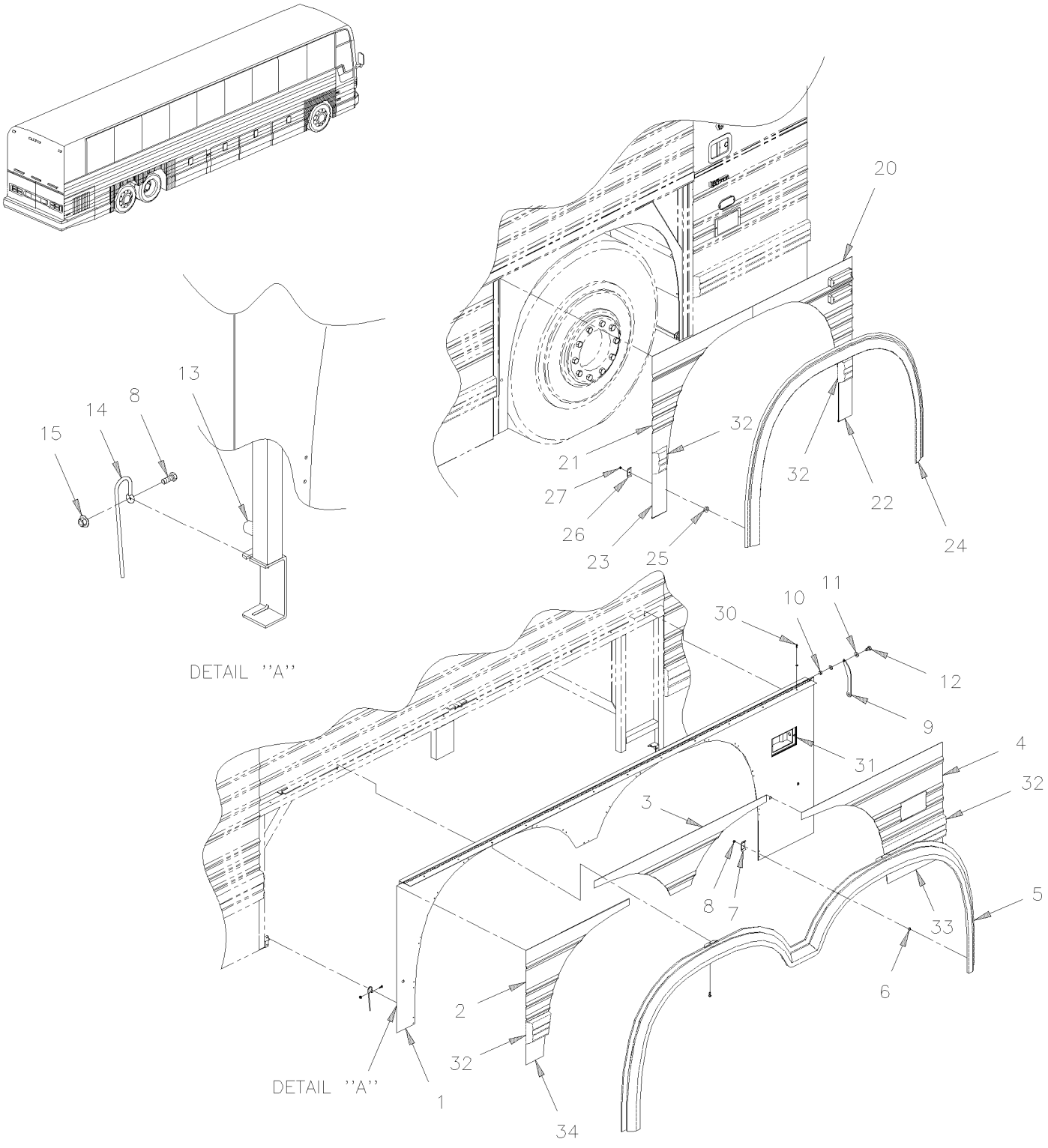

From Y-7046 Up to 8-9339	DATE: 01/2014	PAGE: Y2-1857-55

FENDERS R.H. - MTH

ITEM	PART	DESCRIPTION	XL45	MTH40	MTH45	MTH45S	NOTE
		"WARNING" - "WARNING" -"WARNING" - "WARNING"					
		FOR MTH-45 ENT FROM 7-9096					
		SEE NEXT PAGE Y2-1857-56					
	474498	REAR FENDER ASSY R.H. W/EDGE / S.B. Up to Y-7379 / REPLACED BY: 474957		1	1	1	
	474957	REAR FENDER ASSY R.H. W/EDGE / S.B. From Y-7380 Up to 5-8468		1	1	1	
	477630	REAR FENDER ASSY R.H. W/EDGE / B.A. From 5-8469		1	1	1	
	474111	. REAR FENDER ASSY R.H. W/OUT EDGE / S.B. Up to 5-8468 / REPLACED BY: 477627		1	1	1	
	477627	. REAR FENDER ASSY R.H. W/OUT EDGE / B.A. From 5-8469		1	1	1	
1	213940	. . FRAME REAR FENDER R.H.		1	1	1	
2	474351	. . PANEL REAR R.H BACKWARD Up to 5-8468 / REPLACED BY: 477640		1	1	1	
2	477640	. . PANEL REAR R.H BACKWARD / B.A. From 5-8469		1	1	1	
3	474354	. . PANEL CENTER / S.B. Up to 5-8468 / REPLACED BY: 477562		1	1	1	
3	477562	. . PANEL CENTER / B.A. From 5-8469		1	1	1	
4	474353	. . PANEL REAR R.H. FORWARD Up to 5-8468 / REPLACED BY: 477559		1	1	1	
4	477559	. . PANEL REAR R.H. FORWARD / B.A. From 5-8469		1	1	1	
5	240435	. . EDGE MOULDING RH W/FLUTED & SS RAIL RECESS		1	1	1	
5	240483	. . EDGE MOULDING RH W/FLUTED PANEL		1	1	1	
6	571755	. . SPACERS BUTTITE STAINLESS		15	15	15	
7	240436	. . MOUNTING PLATE EDGE 43.2mm x 25mm		15	15	15	
8	502622	. . SCREW CAP HEX M6-1.0x20 SS EMN		2	2	2	
9	240412	. . LEVER / FOR LOCK		1	1	1	
9	502803	. . PIN HITCH CLIP .094 DIA. SS		1	1	1	
10	500868	. . NUT HEX NYRT M8-1.25 CP		1	1	1	
10	502543	. . NUT HEX M8-1.25 ZP		1	1	1	
11	471119	. . SEAL WASHER / <> RUB RAIL & PANEL		1	1	1	
11	500874	. . WASHER FL 8.4x17.0x1.6 ZP		1	1	1	
12	502589	. . SCREW CAP HEX M8-1.25x25 G8.8 ZP		1	1	1	
13	504527	. . BUMPER PLUG / .625ODx.312THx.250HOLEx.125		4	4	4	
14	472830	. . SPRING GUIDE HOLDER		2	2	2	
15	5001182	. . NUT HEX NYRT M6-1.0 SS		17	17	17	
20	474610	PANEL FRONT R.H. FORWARD / S.B. Up to 3-8164		1	1	1	
20	473676	PANEL FRONT R.H. FORWARD / S.B. From 4-8165 Up to 5-8358 / REPLACED BY: 477635		1	1	1	
20	476355	PANEL FRONT R.H. FORWARD / S.B. From 5-8359 Up to 5-8468 / REPLACED BY: 477635		1	1	1	
20	477635	PANEL FRONT R.H. FORWARD / B.A. From 5-8469		1	1	1	
21	474356	PANEL FRONT R.H. BACKWARD / S.B. Up to 3-8164		1	1		
21	474232	PANEL FRONT R.H. BACKWARD / S.B. From 4-8165 Up to 5-8468		1	1		
21	477631	PANEL FRONT R.H. BACKWARD / B.A. From 5-8469		1	1		
21	474361	PANEL FRONT R.H. BACKWARD / S.B. Up to 4-8164				1	
21	473546	PANEL FRONT R.H. BACKWARD / S.B. From 5-8165 Up to 5-8468 / REPLACED BY: 477636				1	
21	477636	PANEL FRONT R.H. BACKWARD / B.A. From 5-8469				1	
22	474004	PANEL LOWER 95MM X 243MM / S.B. Up to 5-8468		1	1	1	
22	477637	PANEL LOWER 95MM X 243MM / B.A. From 5-8469		1	1	1	
23	474006	PANEL LOWER 103MM X 255MM / S.B. Up to 5-8468		1	1		

From Y-7046 Up to 8-9339	DATE: 01/2014	PAGE: Y2-1857-55

FENDERS R.H. - MTH

ITEM	PART	DESCRIPTION	XL45	MTH40	MTH45	MTH45S	NOTE
23	477537	PANEL LOWER 103MM X 255MM / B.A. From 5-8469		1	1		
23	474262	PANEL LOWER 217MM X 255MM / S.B. Up to 5-8468 / REPLACED BY: 477638				1	
23	477638	PANEL LOWER 217MM X 255MM / B.A. From 5-8469				1	
24	240415	EDGE MOULDING W/FLUTED & SS RAIL RECESS		1	1	1	
24	240481	EDGE MOULDING W/FLUTED PANEL Up to 4-8193		1	1	1	
24	240528	EDGE MOULDING W/FLUTED PANEL From 4-8194		1	1	1	
25	571755	SPACERS BUTTITE STAINLESS		22	22	22	
26	240436	MOUNTING PLATE EDGE 43.2mm x 25mm		22	22	22	
27	474003	PANEL LOWER 394MM X 255MM / S.B. Up to 5-8468		2	2	2	
27	477563	PANEL LOWER 394MM X 255MM / B.A. From 5-8469		2	2	2	
30	504488	RIVET MGLP PRDG 3/16x17/64 SS		14	14	14	
31	Y2-0663-00	**DOCK & CORNERING LIGHT**					
32	Y2-1855-00	**RUB RAIL - CREST & TRIMS**					
33	474003	PANEL LOWER 394MM X 255MM / S.B. Up to 5-8468		1	1	1	
33	477563	PANEL LOWER 394MM X 255MM / B.A. From 5-8469		1	1	1	
34	473995	PANEL LOWER 127MM X 205MM / S.B. Up to 5-8468		1	1	1	
34	477632	PANEL LOWER 127MM X 205MM / B.A. From 5-8469		1	1	1	

From Y-7046 Up to 8-9339	DATE: 01/2014	PAGE: Y2-1857-55

FENDERS R.H. - MTH

ITEM	PART	DESCRIPTION	XL45	MTH40	MTH45	MTH45S	NOTE

From 7-9096 Up to 8-9278	DATE: 01/2014	PAGE: Y2-1857-56
FENDERS R.H. - MTH 45 ENT		

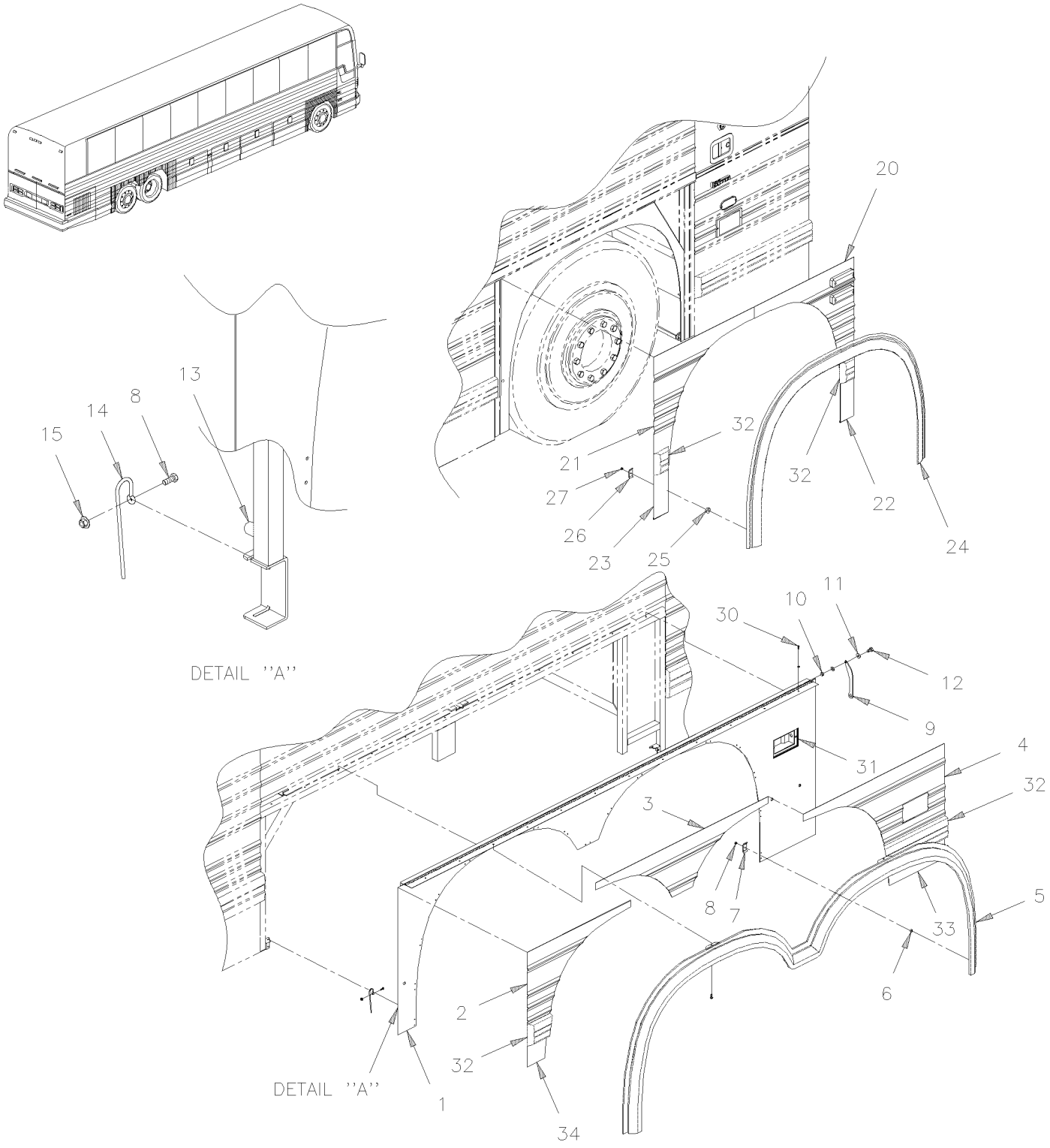

From 7-9096 Up to 8-9278	DATE: 01/2014	PAGE: Y2-1857-56

FENDERS R.H. - MTH 45 ENT

ITEM	PART	DESCRIPTION	XL45	MTH40	MTH45	MTH45S	NOTE
	460503	REAR FENDER ASSY R.H. W/EDGE / B.A. Up to 8-9276				1	
	460508	. REAR FENDER ASSY R.H. W/OUT EDGE / B.A. Up to 8-9276				1	
1	460501	. . FRAME REAR FENDER R.H. Up to 8-9276				1	
2	476715	. . PANEL REAR R.H BACKWARD				1	
3	477562	. . PANEL CENTER / B.A.				1	
4	476717	. . PANEL REAR R.H. FORWARD / B.A.				1	
5	240483	. . EDGE MOULDING RH W/FLUTED PANEL				1	
5	240435	. . EDGE MOULDING RH W/FLUTED & SS RAIL RECESS				1	O
6	571755	. . SPACERS BUTTITE STAINLESS				15	
7	240436	. . MOUNTING PLATE EDGE 43.2mm x 25mm				15	
8	502622	. . SCREW CAP HEX M6-1.0x20 SS EMN				2	
9	240412	. . LEVER / FOR LOCK				1	
9	502803	. . PIN HITCH CLIP .094 DIA. SS				1	
10	500868	. . NUT HEX NYRT M8-1.25 CP				1	
10	502543	. . NUT HEX M8-1.25 ZP				1	
11	471119	. . SEAL WASHER / <> RUB RAIL & PANEL				1	
11	500874	. . WASHER FL 8.4x17.0x1.6 ZP				1	
12	502589	. . SCREW CAP HEX M8-1.25x25 G8.8 ZP				1	
13	504527	. . BUMPER PLUG / .625ODx.312THx.250HOLEx.125				4	
14	472830	. . SPRING GUIDE HOLDER				2	
15	5001182	. . NUT HEX NYRT M6-1.0 SS				17	
20	477635	PANEL FRONT R.H. FORWARD / B.A.				1	
21	477636	PANEL FRONT R.H. BACKWARD / B.A.				1	
22	477637	PANEL LOWER 95MM X 243MM / B.A.				1	
23	477638	PANEL LOWER 217MM X 255MM / B.A.				1	
24	240528	EDGE MOULDING W/FLUTED PANEL				1	
24	240415	EDGE MOULDING W/FLUTED & SS RAIL RECESS				1	O
25	571755	SPACERS BUTTITE STAINLESS				22	
26	240436	MOUNTING PLATE EDGE 43.2mm x 25mm				22	
27	5001182	NUT HEX NYRT M6-1.0 SS				22	
30	504488	RIVET MGLP PRDG 3/16x17/64 SS				14	
31	Y2-0663-00	**DOCK & CORNERING LIGHT**					
32	Y2-1855-00	**RUB RAIL - CREST & TRIMS**					
33	476719	PANEL LOWER 286MM X 255MM / B.A.				1	
34	476718	PANEL LOWER 240MM X 205MM / B.A.				1	
		O) WITH "OPTION"					

From Y-7046 Up to 8-9339	DATE: 01/2014	PAGE: Y2-1859-00

SPLASH GUARD - FRONT & REAR

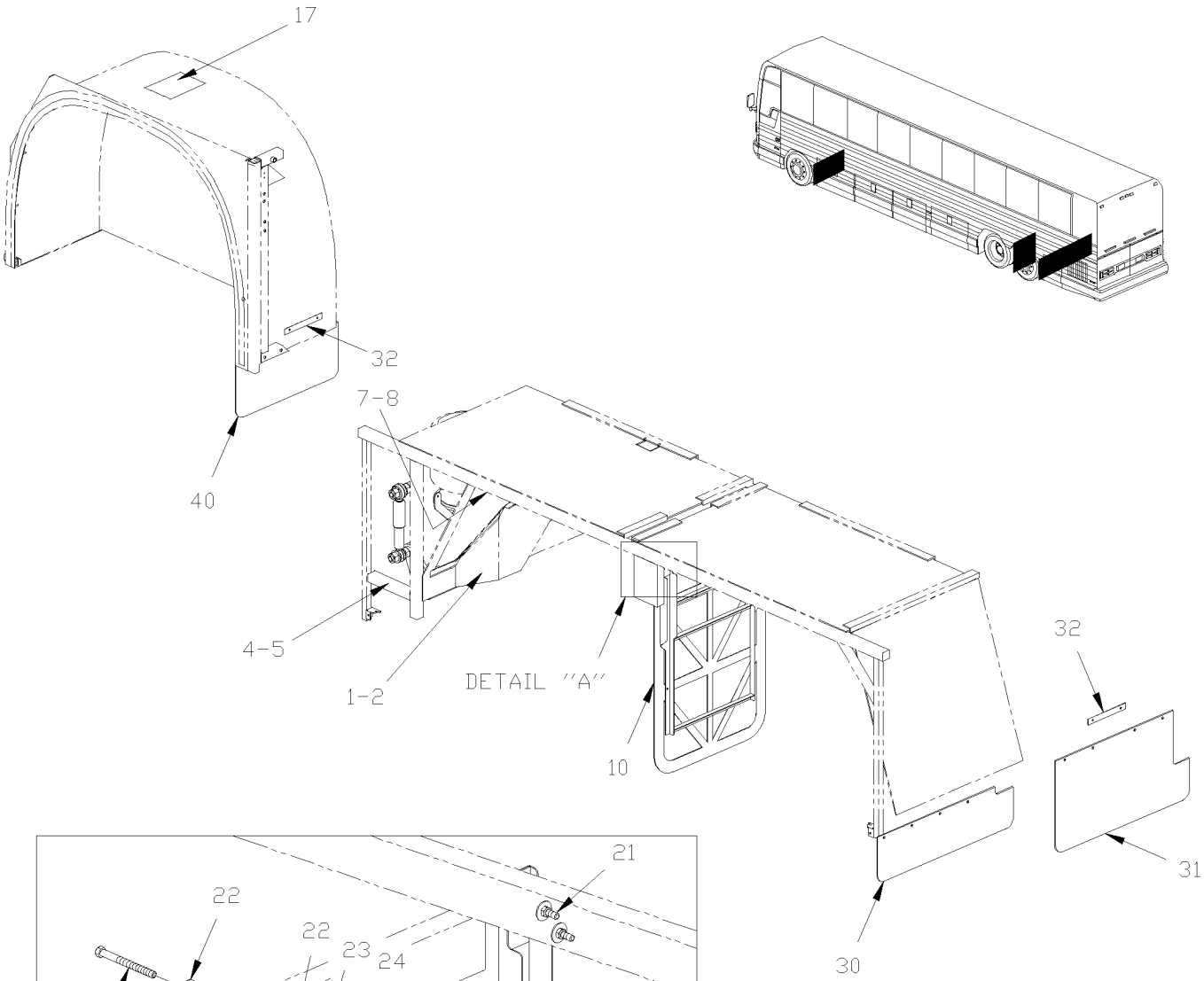

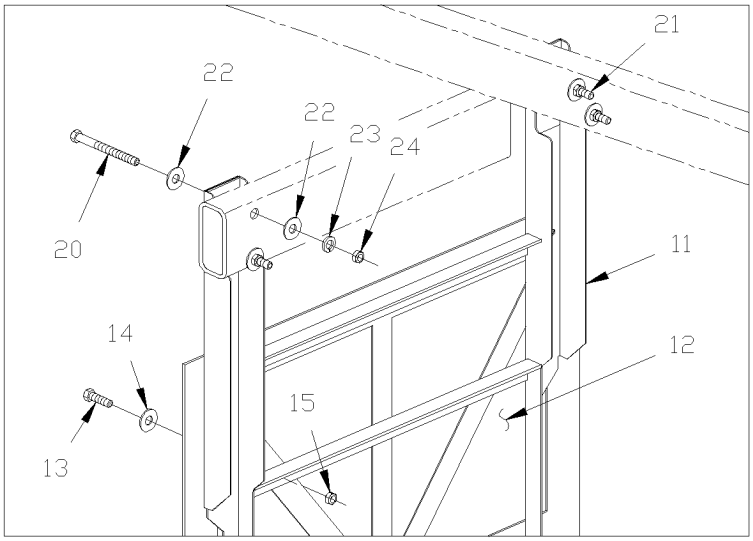

DETAIL ''A''

From Y-7046 Up to 8-9339	DATE: 01/2014	PAGE: Y2-1859-00

SPLASH GUARD - FRONT & REAR

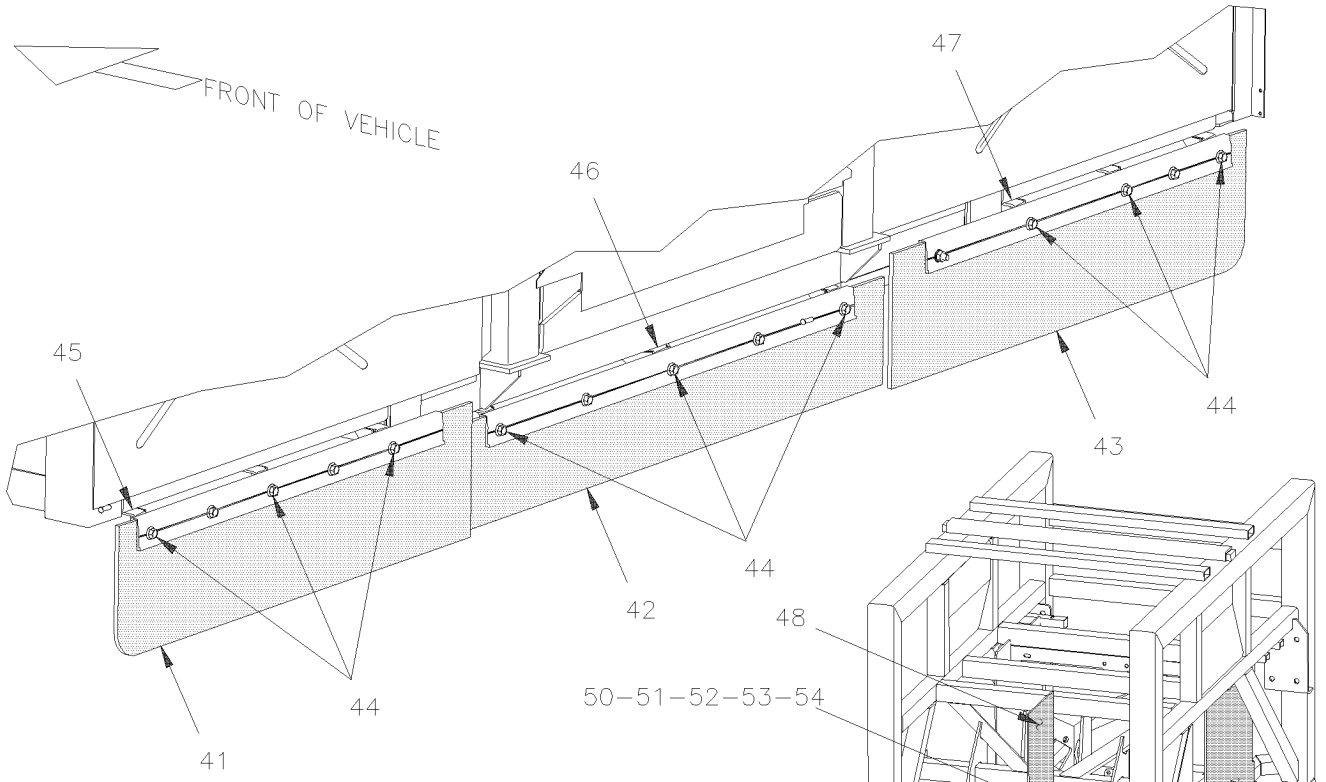

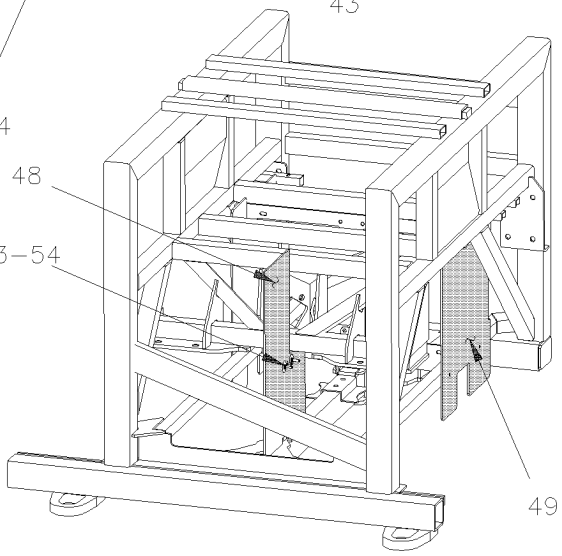

IND. SUSP. UP TO 3–8164

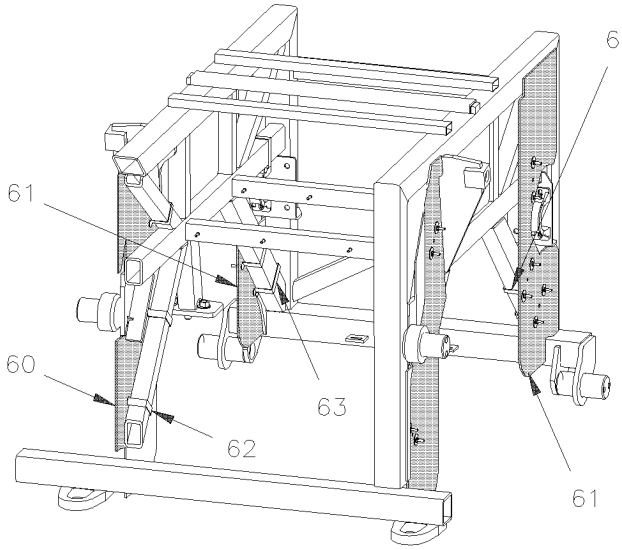

RIGID SUSP.

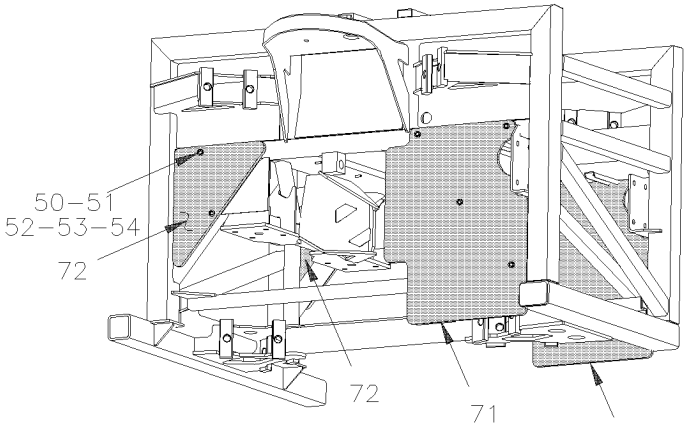

IND. SUSP. FROM 4–8165

From Y-7046 Up to 8-9339	DATE: 01/2014	PAGE: Y2-1859-00

SPLASH GUARD - FRONT & REAR

ITEM	PART	DESCRIPTION	XL45	MTH40	MTH45	MTH45S	NOTE
1	460413	SPLASH GUARD RH	1		1		
1	460413	SPLASH GUARD RH Up to 7-9095		1		1	
1	460644	SPLASH GUARD RH From 7-9096				1	
2	460414	SPLASH GUARD LH	1		1		
2	460414	SPLASH GUARD LH Up to 7-9095		1		1	
2	460645	SPLASH GUARD LH From 7-9096				1	
4	214382	SUPPORT LH	1		1		
4	214382	SUPPORT LH Up to 7-9095		1		1	
4	460646	SUPPORT From 7-9096				1	
5	214404	SUPPORT RH	1		1		
5	214404	SUPPORT RH Up to 7-9095		1		1	
5	460646	SUPPORT From 7-9096				1	
7	500440	WASHER FL .250x.562x.065 ZP	7		7		
7	500440	WASHER FL .250x.562x.065 ZP Up to 7-9095		7		7	
7	5001169	SCREW TP CAP HEXW #12x3/4 SS410 From 7-9096				12	
8	500441	WASHER FL .312x.734x.065 ZP	7		7		
8	500441	WASHER FL .312x.734x.065 ZP Up to 7-9095		7		7	
8	500411	WASHER FL .260x.697x.050 SS From 7-9096				12	
10	460358	SPLASH GUARD / L.H. & R.H. / <> DRIVE & TAG	2		2		
10	460358	SPLASH GUARD / L.H. & R.H. / <> DRIVE & TAG Up to 7-9095		2		2	
10	460643	SPLASH GUARD / R.H. <> DRIVE & TAG From 7-9096				1	
10	460637	SPLASH GUARD / L.H. <> DRIVE & TAG From 7-9096				1	
11	460357	. SUPPORT L.H. & R.H.	1		1		
11	460357	. SUPPORT L.H. & R.H. Up to 7-9095		1		1	
11	460638	. SUPPORT L.H. & R.H. From 7-9096				1	
12	460351	. RUBBER PAD	1		1		
. NS	960015	. . RUBBER PAD	1		1		
12	460351	. RUBBER PAD Up to 7-9095		1		1	
. NS	960015	. . RUBBER PAD Up to 7-9095		1		1	
12	460642	. RUBBER PAD R.H. From 7-9096				1	
. NS	960015	. . RUBBER PAD From 7-9096				1	
12	460641	. RUBBER PAD L.H. From 7-9096				1	
. NS	960015	. . RUBBER PAD From 7-9096				1	
12	960015	. . RUBBER PAD	1	1	1	1	
13	502737	. SCREW CAP HEX M6-1.0x25 SS EMN	1		1		
13	502737	. SCREW CAP HEX M6-1.0x25 SS EMN Up to 7-9095		1		1	
13	5001636	. SCREW CAP HEX M6-1.0x50 SS EMN From 7-9096				1	
14	500411	. WASHER FL .260x.697x.050 SS	10		10		
15	502573	. WASHER FL 6.4x12.5x1.6 SS	10		10		
15	502573	. WASHER FL 6.4x12.5x1.6 SS Up to 7-9095		10		10	
15	5001182	. NUT HEX NYRT M6-1.0 SS From 7-9096				10	

From Y-7046 Up to 8-9339	DATE: 01/2014	PAGE: Y2-1859-00

SPLASH GUARD - FRONT & REAR

ITEM	PART	DESCRIPTION	XL45	MTH40	MTH45	MTH45S	NOTE
17	214485	ACCESS PANEL PLASTIC L.H. 278MM x 278MM Up to 2-7805			1		
17	214668	ACCESS PANEL PLASTIC L.H. 275MM x 625MM From 7-7806			1		
NS	504249	RIVET CHY Q PRDG 3/16x3/8 SS / REPLACED BY: 504747			1		
NS	504379	RIVET POP DOME OE 3/16x1/4 SS			1		
NS	790482	SCELLANT BUTYL / NOIR "GUERTIN" / REPLACED BY: 682176			1		
20	5001185	SCREW CAP HEX M8-1.25x80 SS EMN	4	4	4	4	
21	5001186	SCREW CAP HEX M8-1.25x90 SS EMN	4	4	4	4	
22	500270	WASHER FL .406x1.000x.063 SS	8	8	8	8	
23	5001161	WASHER LO SPT 8.1x14.8x2.0 SS-304	4	4	4	4	
24	5001188	NUT HEX M8-1.25 SS	4	4	4	4	
30	460397	SPLASH GUARD / BEHIND TAG AXLE STREETSIDE 730MM x 273MM Up to 6-8906	1				
30	460397	SPLASH GUARD / BEHIND TAG AXLE STREETSIDE 730MM x 273MM From 4-8165 Up to 5-8523		1	1	1	
30	460458	SPLASH GUARD / BEHIND TAG AXLE STREETSIDE 730MM x 400MM From 5-8524			1		
31	460396	SPLASH GUARD / BEHIND TAG AXLE CURBSIDE 730MM x 740MM Up to 6-8906	1				
31	460396	SPLASH GUARD / BEHIND TAG AXLE CURBSIDE 730MM x 740MM		1	1	1	
32	460189	STRIP, FIXATION / SS 203MM W/2 HOLES Up to 6-8906	4				
NS	500923	SCREW TC CAP HEX 1/4-20x3/4 ZP Up to 6-8906 / REPLACED BY: 5001515	1				
40	490081	SPLASH GUARD / BEHIND FRONT AXLE 9" X 22"	2	2	2	2	
NS	500165	SCREW CAP HEX 1/4-20x1 G5 ZP Up to 6-8906	8				
NS	500473	WASHER LO SPT .262x.489x.062 ZP Up to 6-8906	8				
NS	500769	NUT HEX 1/4-20 ZP Up to 6-8906	8				
NS	507335	PROTECTOR CAP / BLACK / .234 I.D. x .500 Up to 6-8906	8				
41	460449	AIR SHIELD DEFLECTOR ASSY / STREETSIDE	1	1	1	1	
. NS	460443	. AIR SHIELD DEFLECTOR	1	1	1	1	
. NS	460433	. EXTRUSION ALUMINUM / STREETSIDE	1	1	1	1	
42	460450	AIR SHIELD DEFLECTOR ASSY / CENTER	1	1	1	1	
. NS	460444	. AIR SHIELD DEFLECTOR / CENTER	1	1	1	1	
. NS	460434	. EXTRUSION ALUMINUM / CENTER	1	1	1	1	
43	460451	AIR SHIELD DEFLECTOR ASSY / CURBSIDE	1	1	1	1	
. NS	460445	. AIR SHIELD DEFLECTOR / CURBSIDE	1	1	1	1	
. NS	460435	. EXTRUSION ALUMINUM / CURBSIDE	1	1	1	1	
44	502912	SCREW CAP HEXF M8-1.25x25 SS EMN	15	15	15	15	
44	502911	NUT HEXF M8-1.25 SS	6			6	
45	460440	SUPPORT / AIR SHIELD / STREETSIDE	1	1	1	1	
46	460441	SUPPORT / AIR SHIELD / CENTER	1	1	1	1	
47	460442	SUPPORT / AIR SHIELD / CURBSIDE	1	1	1	1	
48	460452	AIR SHIELD DEFLECTOR / FORWARD / W/IND SUSPENSION Up to 3-8164	1			1	A
49	460386	AIR SHIELD DEFLECTOR / BACKWARD / W/IND SUSPENSION Up to 3-8164	2				A
50	464663	COLLAR ASSY 44MM FORWARD / W/IND SUSPENSION Up to 3-8164	2	2	2	2	C
51	502565	NUT HEX M6-1.0 SS	AR	AR	AR	AR	
52	502570	WASHER LO SPT 6.1x11.8x1.6 SS	AR	AR	AR	AR	
		A) BUS W/INDEPENDANT SUSPENSION ONLY					
		C) INCLUDE IN RETROFIT KIT #460436					

From Y-7046 Up to 8-9339	DATE: 01/2014	PAGE: Y2-1859-00

SPLASH GUARD - FRONT & REAR

ITEM	PART	DESCRIPTION	XL45	MTH40	MTH45	MTH45S	NOTE
53	502573	WASHER FL 6.4x12.5x1.6 SS	AR	AR	AR	AR	
54	502810	SCREW TP CAP HEXW FL M6.3-1.81x30 PHC Up to 6-8906	8				
60	460439	AIR SHIELD DEFLECTOR / FORWARD / W/RIGID SUSPENSION	1			1	B
61	460446	AIR SHIELD DEFLECTOR / BACKWARD / W/RIGID SUSPENSION	1			1	B
62	464665	COLLAR ASSY 57MM BACKWARD / W/RIGID SUSPENSION Up to 3-8164	6			6	B
63	464664	COLLAR ASSY 82MM BACKWARD / W/RIGID SUSPENSION Up to 3-8164	6			6	B
NS	460436	KIT RETROFIT AIR SHIELD DEFLECTOR / W/IND SUSPENSION	1			1	
. NS	D460031	. SEE DRAWING	1			1	
NS	460437	KIT RETROFIT AIR SHIELD DEFLECTOR / W/RIGID SUSPENSION	1			1	
. NS	D460031	. SEE DRAWING	1			1	
71	460455	AIR SHIELD DEFLECTOR / FORWARD / W/IND SUSPENSION From 4-8165 Up to 6-8805	2	2	2	2	
71	460492	AIR SHIELD DEFLECTOR / FORWARD / W/IND SUSPENSION From 6-8806	2	2	2	2	
72	460456	AIR SHIELD DEFLECTOR / BACKWARD / W/IND SUSPENSION From 4-8165	2	2	2	2	
		B) INCLUDE INRETROFIT KIT #460437					

From Y-7046 Up to 8-9339	DATE: 01/2014	PAGE: Y2-1859-00

SPLASH GUARD - FRONT & REAR

ITEM	PART	DESCRIPTION	XL45	MTH40	MTH45	MTH45S	NOTE

From Y-7046 Up to 2-7764	DATE: 01/2014	PAGE: Y2-1860-10

SPARE WHEEL DOOR ASSY

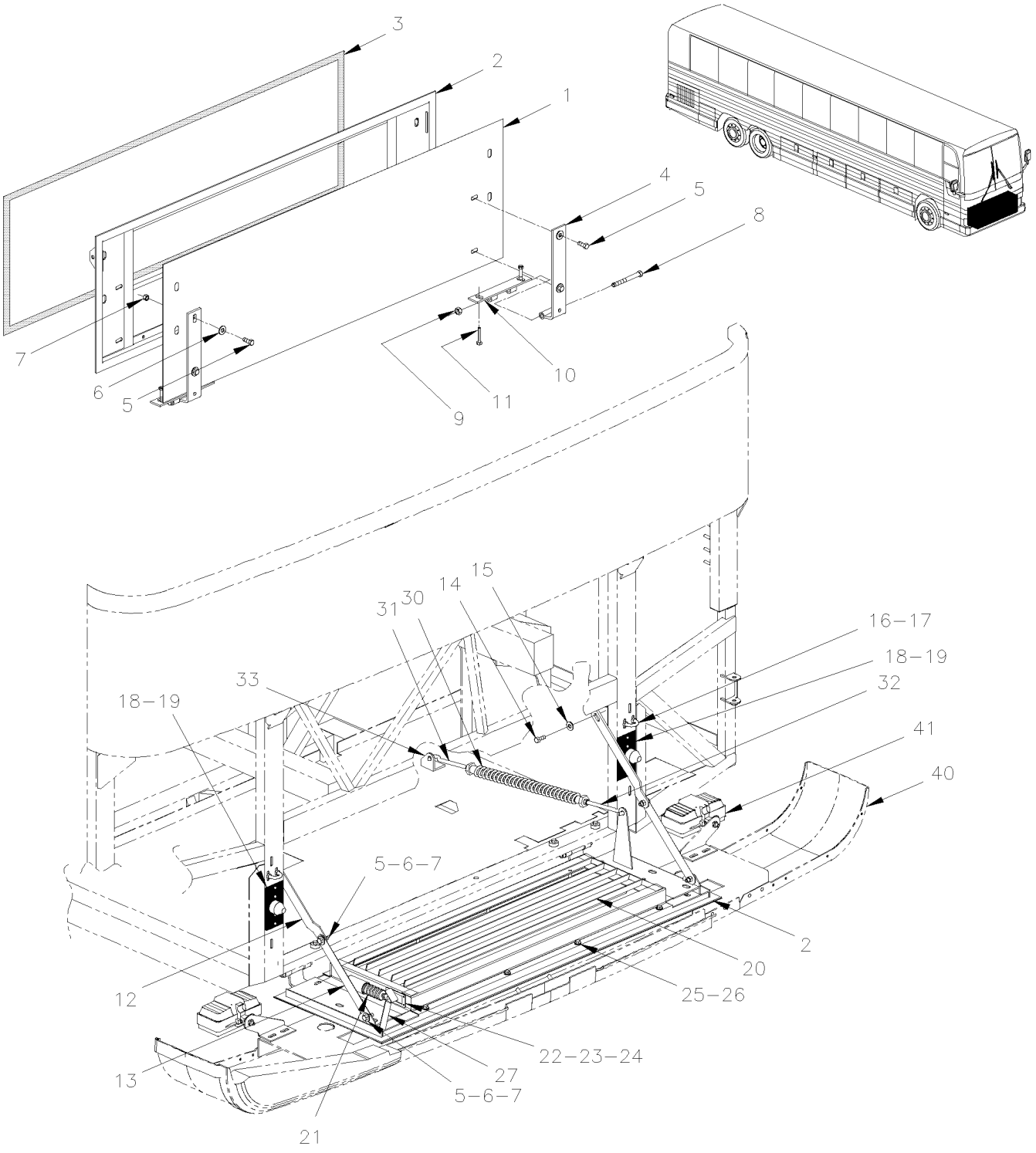

From Y-7046 Up to 2-7764	DATE: 01/2014	PAGE: Y2-1860-10

SPARE WHEEL DOOR ASSY

ITEM	PART	DESCRIPTION	XL45	MTH40	MTH45	MTH45S	NOTE
	286702P	SPARE WHEEL DOOR ASSY / W/HINGE	1				A
	287350	SPARE WHEEL DOOR ASSY / W/PLAIN PANEL		1	1	1	
	287352	SPARE WHEEL DOOR ASSY / W/PERFORATED		1	1	1	
	287354	SPARE WHEEL DOOR ASSY / W/HINGE				1	C
	286718	. SPARE WHEEL DOOR ASSY	1				A
1	286576	. . PANEL, PLASTIC	1				A
1	473710	. . PANEL, PLAIN PANEL		1	1	1	
1	473711	. . PANEL, PERFORATED		1	1	1	
2	285869	. . FRAME / REPLACED BY: 286995		1	1	1	
2	286995	. . FRAME		1	1	1	
2	287002	. . FRAME	1				A
3	285891	. RUBBER SEAL EXTRUSION / SPARE WHEEL DOOR / REPLACED BY: 289935	1	1	1	1	
3	289935	. RUBBER SEAL EXTRUSION / SPARE WHEEL DOOR / REPLACED BY: 288907	1	1	1	1	
4	286094	. HINGE UPPER SECTION		2	2	2	
4	287939	. HINGE UPPER SECTION / W/REINFORCEMENT	2				A
5	500191	SCREW CAP HEX 3/8-16x1 G5 ZP	8	8	8	8	
6	500445	WASHER FL .437x1.000x.083 ZP	16	16	16	16	
7	500265	NUT HEX STO 3/8-16 ZP	8	8	8	8	
8	500080	SCREW CAP HEX 7/16-20x4 1/2 G5 ZP	1	1	1	1	
9	500714	NUT HEX STO 7/16-20 ZP	1	1	1	1	
10	286092	HINGE LOWER SECTION	1	1	1	1	
11	500214	SCREW CAP HEX 1/2-13x1 1/4 G5 ZP	4	4	4	4	
NS	500482	WASHER LO SPT .506x.873x.125 ZP	4	4	4	4	
NS	500448	WASHER FL .625x1.469x.109 ZP	4	4	4	4	
12	281348	. STOPPER UPPER SECTION	2	2	2	2	
13	281347	. STOPPER LOWER SECTION	2	2	2	2	
14	500192	SCREW CAP HEX 3/8-16x1 1/4 G5 ZP	4	4	4	4	
15	500444	WASHER FL .406x.812x.065 ZP	8	8	8	8	
NS	500265	NUT HEX STO 3/8-16 ZP	2	2	2	2	
16	5001424	U-BOLT 1" I.D. x 2 3/16 x 5/16-18 SS	2	2	2	2	
17	5001083	NUT HEXF NYRT 5/16-18 ZP	8	8	8	8	
18	410668	RUBBER BUMPER 61.4MM X 48MM	4	4	4	4	
19	500310	SCREW TC FL PH #10-24x1 1/4 SS410 / REPLACED BY: 5001533	8	8	8	8	
20	051570	SHUTTER ASSY		1	1	1	
. NS	550568	. CYLINDER AIR / SHUTTER / W/4" MOUNT		1	1	1	
. NS	550569	. BOOT RUBBER		1	1	1	
. NS	550577	. SPRING EXTENSION / .350 O.D. x 6.875 x .069		1	1	1	
. NS	550179	. BUSHING 5/16" I.D. / NYLON		AR	AR	AR	
NS	550577	. SPRING EXTENSION / .350 O.D. x 6.875 x .069		1	1	1	
21	550568	. CYLINDER AIR / SHUTTER / W/4" MOUNT		1	1	1	
NS	550569	. . BOOT RUBBER		1	1	1	
		A) ALSO USE WITH MTH-45S WITH SPARE TIRE					
		C) USE W/OUT SPARE & WITH BLACK BUMPER					

From Y-7046 Up to 2-7764	DATE: 01/2014	PAGE: Y2-1860-10

SPARE WHEEL DOOR ASSY

ITEM	PART	DESCRIPTION	XL45	MTH40	MTH45	MTH45S	NOTE
NS	550179	. . BUSHING 5/16" I.D. / NYLON		1	1	1	
21	641365	MALE ELBOW 45° NON-SWIVEL / PUSH-IN FITTING / #4x1/8NPT-M BR		1	1	1	
NS	640996	MALE ELBOW 90º / NTA FITTING / #4x1/8NPT-M BR		1	1	1	
NS	503402	TUBE, NYLON 1/4 O.D. / BLACK S.L.		1	1	1	
22	282953	PLATE, CLOSING		1	1	1	
23	282954	GASKET		1	1	1	
24	504340	RIVET POP DOME OE 1/8x3/16 SS		4	4	4	
25	500639	SCREW CAP HEXS 5/16-18x7/8 ZP		8	8	8	
26	500441	WASHER FL .312x.734x.065 ZP	8	8	8	8	
NS	500476	WASHER LO SPT .317x.586x.078 ZP	8	8	8	8	
27	410656	SAFETY HOOK	1	1	1	1	
30	285156	SPRING ASSY Up to 1-7546	1	1	1	1	
30	410836	SPRING ASSY From 1-7547	1	1	1	1	B
31	5001238	. SCREW HOOK 3/8-16x5 ZP	1	1	1	1	
NS	500102	. NUT HEX 3/8-16 SS	1	1	1	1	
32	5001239	. SCREW HOOK 3/8-16x5 LH ZP	1	1	1	1	
NS	5061019	. NUT HEX LH 3/8-16 SS	1	1	1	1	
33	285155	ANGLE SUPPORT BUMPER SPRING	1	1	1	1	
NS	288003	KIT SPRING CLEARENCE STEERING BOX XLII SPARE WHEEL DOOR Up to 2-7764	1	1	1	1	
. NS	IS-01095	. SEE INSTRUCTION SHEET Up to 2-7764					
40	Y2-1850-00	**BUMPER FRONT**					
41	Y2-0661-00	**FOG LAMP**					
		B) FOR PRODUCT IMPROVMENT ASK KIT #288003					

From Y-7046 Up to 2-7764	DATE: 01/2014	PAGE: Y2-1860-10

SPARE WHEEL DOOR ASSY

ITEM	PART	DESCRIPTION	XL45	MTH400	MTH445	MTH455S	NOTE

From 2-7765 Up to 8-9339	DATE: 01/2014	PAGE: Y2-1860-11

SPARE WHEEL DOOR ASSY

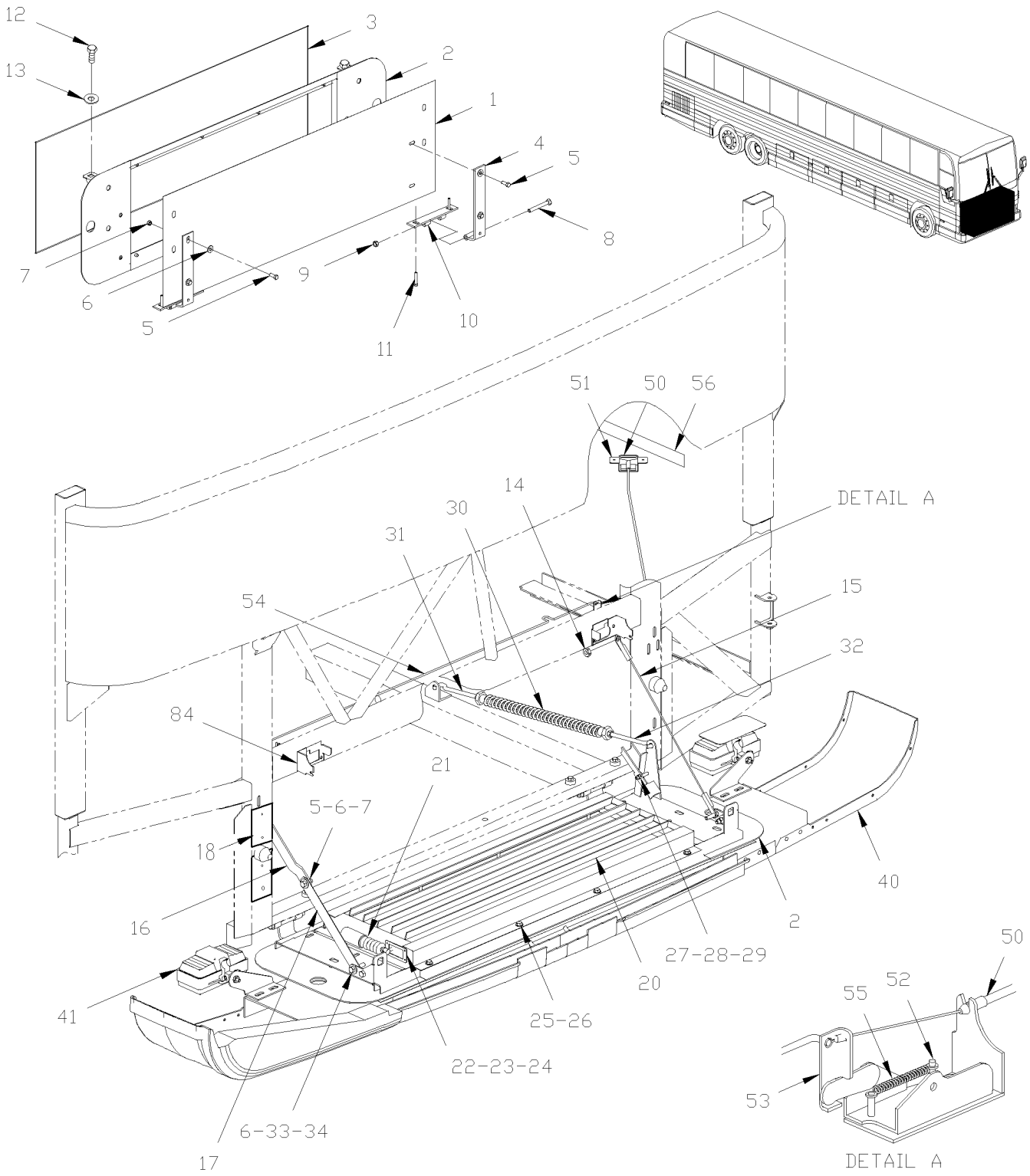

From 2-7765 Up to 8-9339	DATE: 01/2014	PAGE: Y2-1860-11

SPARE WHEEL DOOR ASSY

ITEM	PART	DESCRIPTION	XL45	MTH40	MTH45	MTH45S	NOTE
	287252P	SPARE WHEEL DOOR ASSY / W/HINGE Up to 6-8906	1				
	287351	SPARE WHEEL DOOR ASSY / W/PLAIN PANEL		1	1	1	
	287353	SPARE WHEEL DOOR ASSY / W/PERFORATED		1	1	1	
	287355	SPARE WHEEL DOOR ASSY / W/HINGE				1	C
1	287289	. PANEL, PLASTIC	1			1	A
1	287299	. PANEL, PERFORATED / S.B. Up to 5-8468 / REPLACED BY: 288536		1	1	1	
1	288536	. PANEL, PERFORATED / B.A. From 5-8469		1	1	1	
1	287300	. PANEL, PLAIN PANEL / S.B. Up to 5-8468 / REPLACED BY: 288535		1	1	1	
1	288535	. PANEL, PLAIN PANEL / B.A. From 5-8469		1	1	1	
2	287294	. FRAME ASSY Up to 2-7890		1	1	1	
2	287386	. FRAME ASSY From 2-7891		1	1	1	
2	287955	. FRAME ASSY Up to 2-7890	1			1	A
2	287385	. FRAME ASSY From 2-7891	1			1	A
3	285891	. RUBBER SEAL EXTRUSION / SPARE WHEEL DOOR Up to 5-8650 / REPLACED BY: 289935	1	1	1	1	
3	289935	. RUBBER SEAL EXTRUSION / SPARE WHEEL DOOR From 5-8651 / REPLACED BY: 288907	1	1	1	1	
4	287265	. HINGE UPPER SECTION / W/REINFORCEMENT Up to 4-8358	2				A
4	288564	. HINGE UPPER SECTION From 4-8359	2	2	2	2	
4	287266	. HINGE UPPER SECTION Up to 4-8358		2	2	2	
5	955535	. SCREW CAP HEX 3/8-16x1 1/4 G5 ZG603	4	4	4	4	
NS	287383	. RETAINING PLATE W/NUT / 195MM X 30MM	2	2	2	2	
6	500445	. WASHER FL .437x1.000x.083 ZP	10	10	10	10	
NS	500897	. WASHER FL .437x1.000x.083 ZG603	6	6	6	6	
7	500102	. NUT HEX 3/8-16 SS	6	6	6	6	
8	500080	. SCREW CAP HEX 7/16-20x4 1/2 G5 ZP	2	2	2	2	
9	3853273	. NUT HEX STO 7/16-20 ZG603	2	2	2	2	
10	287264	. HINGE LOWER SECTION Up to 4-8358	2	2	2	2	
10	288563	. HINGE LOWER SECTION From 4-8359	2	2	2	2	
11	500214	. SCREW CAP HEX 1/2-13x1 1/4 G5 ZP	4	4	4	4	
11	500482	. WASHER LO SPT .506x.873x.125 ZP	4	4	4	4	
11	500448	. WASHER FL .625x1.469x.109 ZP	4	4	4	4	
12	284438	. PIN STRIKER	2	2	2	2	
13	284447	. WASHERS BELLEVILLE	2	2	2	2	
14	500265	NUT HEX STO 3/8-16 ZP	AR	AR	AR	AR	
15	287284	CABLE DOOR ASSY 550MM Up to 2-7851	2	2	2	2	
15	287284	CABLE DOOR ASSY 550MM From 2-7852	1	1	1	1	
16	281348	STOPPER UPPER SECTION From 2-7852	1	1	1	1	
17	281347	STOPPER LOWER SECTION From 2-7852	1	1	1	1	
18	287258	RUBBER BUMPER 126MM X 48MM From 5-8359	4	4	4	4	
NS	502903	SCREW TC FL PH #10-24x1 1/4 ZG603 From 5-8359	8	8	8	8	
NS	411084	SHIM SPACER	4				
20	051570	SHUTTER ASSY		1	1	1	
. NS	550568	. CYLINDER AIR / SHUTTER / W/4" MOUNT		1	1	1	
		A) ALSO USE WITH MTH-45S WITH SPARE TIRE					
		C) USE W/OUT SPARE & WITH BLACK BUMPER					

From 2-7765 Up to 8-9339	DATE: 01/2014	PAGE: Y2-1860-11

SPARE WHEEL DOOR ASSY

ITEM	PART	DESCRIPTION	XL45	MTH40	MTH45	MTH45S	NOTE
. NS	550569	. BOOT RUBBER		1	1	1	
. NS	550577	. SPRING EXTENSION / .350 O.D. x 6.875 x .069		1	1	1	
. NS	550179	. BUSHING 5/16" I.D. / NYLON		AR	AR	AR	
NS	550577	. SPRING EXTENSION / .350 O.D. x 6.875 x .069		1	1	1	
21	550568	. CYLINDER AIR / SHUTTER / W/4" MOUNT		1	1	1	
NS	550569	. BOOT RUBBER		1	1	1	
NS	550179	. BUSHING 5/16" I.D. / NYLON		AR	AR	AR	
NS	641365	MALE ELBOW 45° NON-SWIVEL / PUSH-IN FITTING / #4x1/8NPT-M BR		1	1	1	
NS	640996	MALE ELBOW 90º / NTA FITTING / #4x1/8NPT-M BR		1	1	1	
NS	503402	TUBE, NYLON 1/4 O.D. / BLACK S.L.		8	8	8	
22	282953	PLATE, CLOSING		1	1	1	
23	282954	GASKET		1	1	1	
24	504340	RIVET POP DOME OE 1/8x3/16 SS		1	1	1	
25	500639	SCREW CAP HEXS 5/16-18x7/8 ZP Up to 6-8906	8				
26	500441	WASHER FL .312x.734x.065 ZP	AR	AR	AR	AR	
NS	500476	WASHER LO SPT .317x.586x.078 ZP	AR	AR	AR	AR	
27	287274	DOOR LOCKER	1	1	1	1	
28	502170	PIN, CLEVIS 5/16 x 1 5/8 SS	1	1	1	1	
29	502097	PIN, COTTER 3/32 x 3/4	1	1	1	1	
30	285156	SPRING ASSY Up to 2-7890	1	1	1	1	
30	410836	SPRING ASSY From 2-7891	1	1	1	1	
31	5001238	SCREW HOOK 3/8-16x5 ZP	AR	AR	AR	AR	
32	500102	NUT HEX 3/8-16 SS	AR	AR	AR	AR	
33	500197	SCREW CAP HEX 3/8-16x1 G5 ZG603	2	2	2	2	
34	500265	NUT HEX STO 3/8-16 ZP	2	2	2	2	
40	Y2-1850-01	**BUMPER FRONT**					
40	Y2-1850-02	**BUMPER FRONT**					
41	Y2-0660-01	**HEADLAMP & FRONT DIRECTIONAL LAMPS ROUND "HALOGENE" & "XENON"**					
50	287285	CABLE HANDLE ASSY Up to 8-9292 / REPLACED BY: 289495	1	1	1	1	
50	289495	CABLE HANDLE ASSY From 8-9293	1				
NS	504379	RIVET POP DOME OE 3/16x1/4 SS	4	4	4	4	
51	287288	SUPPORT / HANDLE Up to 8-9292 / REPLACED BY: 289981	1	1	1	1	
51	289981	SUPPORT / HANDLE From 8-9293	1				
NS	502500	SCREW TC BDG PH #8-32x1/2 CJ	2	2	2	2	
NS	5001378	WASHER LO EXT 5.3x10x0.6 ZP	2	2	2	2	
52	780588	LOCK SPAGNOLET R.H. / W/G-FITTING Up to 2-7755 / REPLACED BY: 780653	2	2	2	2	
. NS	780340	. CLIP, RETAINER ROD Up to 2-7755	1	1	1	1	
. NS	507607	. GREASE FITTING / Up to 2-7755	1	1	1	1	
52	780653	LOCK SPAGNOLET R.H. / W/G-FITTING From 2-7756 Up to 3-8108	2				
. NS	780340	. CLIP, RETAINER ROD From 2-7756 Up to 3-8108	1				
. NS	507607	. GREASE FITTING / From 2-7756 Up to 3-8108	1				
52	780653	LOCK SPAGNOLET R.H. / W/G-FITTING From 3-8109 Up to 6-8906	1				

From 2-7765 Up to 8-9339	DATE: 01/2014	PAGE: Y2-1860-11

SPARE WHEEL DOOR ASSY

ITEM	PART	DESCRIPTION	XL45	MTH40	MTH45	MTH45S	NOTE
52	780652	LOCK SPAGNOLET L.H. / W/G-FITTING From 3-8109 Up to 6-8906	1				
. NS	780340	. CLIP, RETAINER ROD From 3-8109 Up to 6-8906	1				
. NS	507607	. GREASE FITTING / From 3-8109 Up to 6-8906	1				
52	780653	LOCK SPAGNOLET R.H. / W/G-FITTING From 2-7756		2	2	2	
. NS	780340	. CLIP, RETAINER ROD From 2-7756		1	1	1	
. NS	507607	. GREASE FITTING / From 2-7756		1	1	1	
NS	502582	WASHER LO SERR 6.1x16.2x0.9 ZP	4	4	4	4	
NS	502531	SCREW CAP HEX M6-1.0x16 G8.8 ZP	4	4	4	4	
53	287256	LEVER PIVOT Up to 8-9292 / REPLACED BY: 289496	2	2	2	2	
53	289496	LEVER PIVOT From 8-9293			1	1	
NS	504379	RIVET POP DOME OE 3/16x1/4 SS	2	2	2	2	
54	287257	ROD Up to 3-8108	1				
54	287424	ROD From 3-8109 Up to 6-8906	1				
54	287257	ROD		1	1	1	
55	284914	SPRING EXTENSION / .305 O.D. x 1.562 x .051	2	2	2	2	
56	287290	DECAL / "UNLATCH FRONT BUMPER" ENG & FRENCH	1	1	1	1	
56	288199	DECAL / "UNLATCH FRONT BUMPER" ENG & SPANISH	1	1	1	1	
84	287255	SUPPORT SPAGNOLET Up to 8-9292 / REPLACED BY: 289497	2	2	2	2	
84	289497	SUPPORT SPAGNOLET From 8-9293			1	1	
NS	411052	DECAL "WARNING / ADVERTENCIA" IN ORDER...	1	1	1	1	

From Y-7046 Up to 6-8906	DATE: 01/2014	PAGE: Y2-1862-00

ENTRANCE DOOR ASSY - BUS

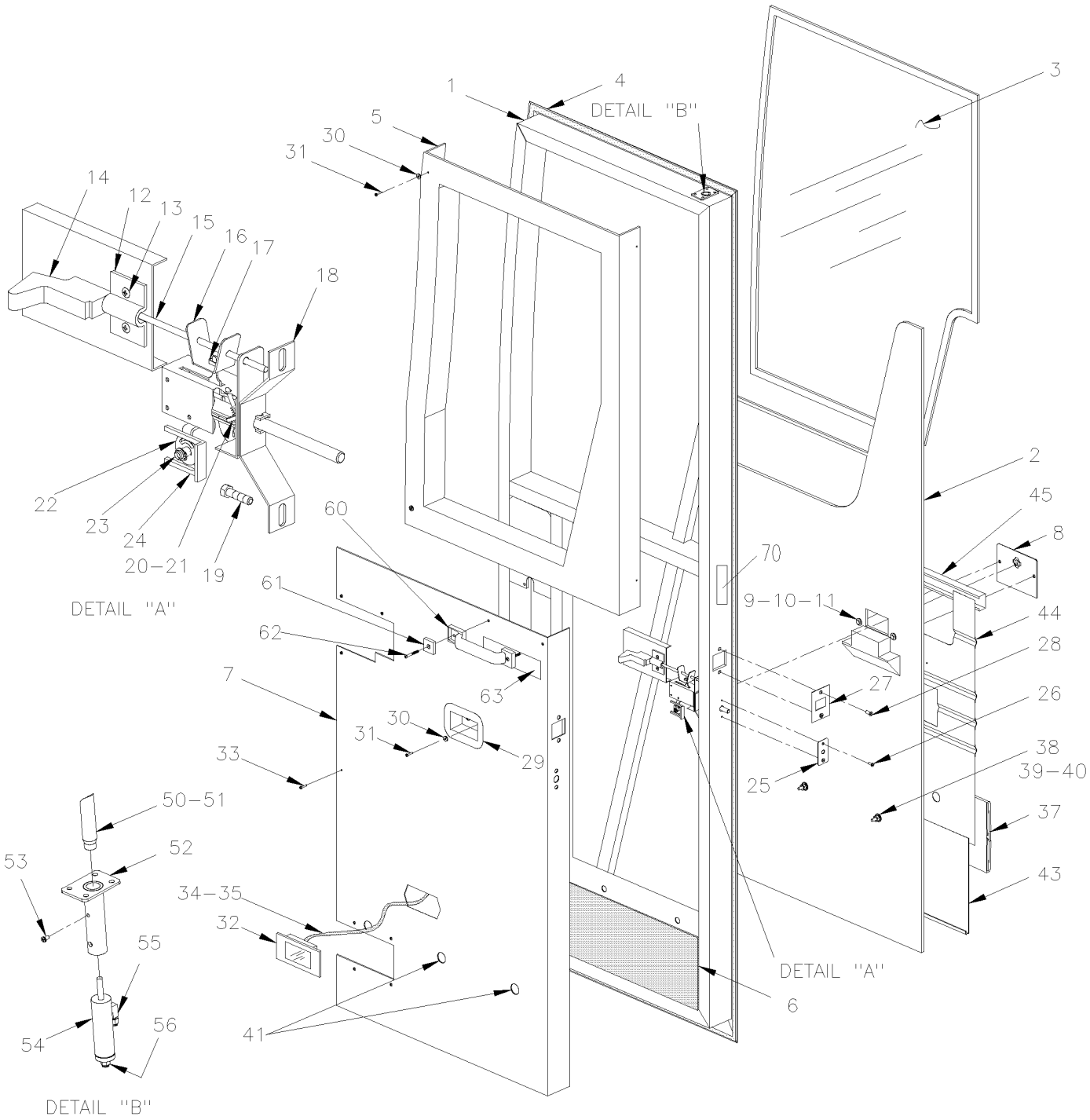

From Y-7046 Up to 6-8906	DATE: 01/2014	PAGE: Y2-1862-00

ENTRANCE DOOR ASSY - BUS

ITEM	PART	DESCRIPTION	XL45	MTH40	MTH45	MTH45S	NOTE
		ALL DOORS ASSY DO NOT INCLUDE					
		RUB-RAIL PLEASE ORDER SEPARATELY					
	286672P	ENTRANCE DOOR ASSY Up to 1-7661	1				
	287123P	ENTRANCE DOOR ASSY From 1-7662	1				
	287357	ENTRANCE DOOR ASSY / W/FLUTED PANEL	1				A
	287356	ENTRANCE DOOR ASSY / W/FLUTED PANEL	1				B
1	Call Order Desk	ENTRANCE DOOR FRAME Up to 1-7661	1				P
1	287108P	ENTRANCE DOOR FRAME From 1-7662	1				
2	286516	PANEL FIBERGLASS	1				B
2	287900	PANEL FIBERGLASS	1				A
2	288626	PANEL FIBERGLASS	1				F
3	286463	ENTRANCE DOOR WINDOW	1				
4	286464	RUBBER SEAL EXTRUSION / ENTRANCE DOOR Up to 2-7722 / REPLACED BY: 287976	1				
4	287976	RUBBER SEAL EXTRUSION / ENTRANCE DOOR From 2-7723 Up to 5-8650 / REPLACED BY: 287494					
4	287494	RUBBER SEAL EXTRUSION / ENTRANCE DOOR From 5-8651 / REPLACED BY: 288911	1				
5	286537	INTERIOR WINDOW MOULDING Up to 1-7661	1				
5	287122	INTERIOR WINDOW MOULDING From 1-7662	1				
6	286660	ENTRANCE DOOR INSULATING	1				
7	286536	INTERIOR PANEL Up to 1-7661	1				
7	287106	INTERIOR PANEL From 1-7662 Up to 4-8327 / REPLACED BY: 289696	1				
7	289696	INTERIOR PANEL Up to 4-8327	1				
7	289289	INTERIOR PANEL From 4-8328 / REPLACED BY: 289695	1				
7	289695	INTERIOR PANEL From 4-8328	1				
7	289282	ACCESS PANEL 834MM X 494MM From 4-8328	1				
8	286531	ENTRANCE DOOR HANDLE	1				
9	500609	NUT HEX M6-1.0 ZP	2				
10	500411	WASHER FL .260x.697x.050 SS	2				
11	502564	WASHER LO SPT 6.1x11.8x1.6 ZP	2				
12	780483	CLAMP	1				
13	500654	SCREW TC BDG PH #8-32x1/2 ZP	2				
13	502806	SCREW MA FL PH M6-1.0x10 ZP	2				
14	284127	BUTTON	1				
NS	286663	ROD ENTRANCE DOOR	1				
16	286661	LOCK	1				
		P) CALL ORDER DESK FOR SPECIFIC APPLICATION					
		(V.I.N.)					
		A) ALSO USE WITH BUS WITH FLUTED LOWER					
		PANELLLING WITH DOCKING LIGHT					
		B) ALSO USE WITH BUS WITH FLUTED LOWER					
		PANELLLING W/OUT DOCKING LIGHT					
		F) USE WITH BUS WITH FLAT LOWER PANELLING WITH					
		DOCKING LIGHT					

From Y-7046 Up to 6-8906	DATE: 01/2014	PAGE: Y2-1862-00

ENTRANCE DOOR ASSY - BUS

ITEM	PART	DESCRIPTION	XL45	MTH40	MTH45	MTH45S	NOTE
17	504069	GROMMET / .281x.375x.062x.250x.562	1				
18	286555	LOCK SUPPORT ASSY	1				
19	500948	SCREW TC CAP HEX 1/4-20x1 ZP	2				
20	502151	SPRING COMPRESSION / .300 O.D. x 1 x .032	2				
21	481564	ROD GUIDE	2				
22	286553	PIVOT LOCK 18.7MM OFFSET	1				
23	504556	RING RETAINER / EXT 6 x 5 x .72mm	1				
24	780236	RETAINER CLIP / REPLACED BY: 780887	1				
25	286552	FINISHING PLATE	1				
26	500654	SCREW TC BDG PH #8-32x1/2 ZP	2				
27	286585	STRIKING PLATE ASSY	1				
28	5001198	SCREW MA FL PH M6-1.0x16 ZP	2				
29	286674	LOCK HOUSING	1				
NS	506869	TAPE RUB ADH2 POL .031" x 1/4" x 300' / BLACK	AR				
30	500345	WASHER FN CKF .187x.500x.090 BR BK	7				
31	500333	SCREW TP OV PH #6x3/4 BK	7				
32	330279	LAMP ASSY 24V W/BULB / REPLACED BY: K330279	1				
32	830197	LAMP ASSY 24V LEDS	1				
NS	068140	CABLE INTERFACE 330279 TO 830197	1				
33	500814	SCREW TP BDG PH #6x3/4 BK	8				
34	065131	CABLE ASSY / ENTRANCE DOOR	1				
35	504637	CABLE TIE / 3/16" x 13"	4				
37	474290	RUB RAIL ASSY / 794MM / W/1 ½" SCREW	1				
. NS	474304	. SPECIAL SCREW ASSY SQ SS 1/4-20 X 1"½	1				
38	474304	SPECIAL SCREW ASSY SQ SS 1/4-20 X 1"½	3				
39	473378	SEAL WASHER / <> RUB RAIL & PANEL	3				
39	500444	WASHER FL .406x.812x.065 ZP	3				
40	502716	NUT HEX NYRT 1/4-20 / REPLACED BY: 5001123	3				
41	504433	SNAP-IN PLUG / 1.090 O.D.	3				
43	287144	PANEL LOWER / S.B.	1				A
44	287139	UPPER PANEL	1				A
44	287917	UPPER PANEL	1				B
45	287146	FINISHING MOULDING SS 800MM	1				B
50	287012	UPPER LOCK ASSY	1				
51	285271	. CATCH	1				
51	282383	. CATCH	1				
		A) ALSO USE WITH BUS WITH FLUTED LOWER					
		PANELLLING WITH DOCKING LIGHT					
		B) ALSO USE WITH BUS WITH FLUTED LOWER					
		PANELLLING W/OUT DOCKING LIGHT					

From Y-7046 Up to 6-8906	DATE: 01/2014	PAGE: Y2-1862-00

ENTRANCE DOOR ASSY - BUS

ITEM	PART	DESCRIPTION	XL45	MTH40	MTH45	MTH45S	NOTE
52	287011	. PLATE MOUNTING	1				
53	500560	. SCREW MA PAN PH M4-0.7x6 ZP	1				
53	502636	. WASHER LO SPT 4.1x7.6x0.9 ZP	1				
54	641392	. CYLINDER 7/8" X 1" STROKE / DOUBLE ACTION Up to 4-8225 / REPLACED BY: 641983	1				
54	641983	. CYLINDER 7/8" X 1" STROKE / DOUBLE ACTION From 4-8226	1				
55	641369	. MALE ELBOW 90° NON-SWIVEL / PUSH-IN FITTING #4x1/8NPT-M BR	1				
56	641242	. MALE CONNECTOR / PUSH-IN FITTING / #4x1/8NPT-M BR	1				
56	683276	. GREASE LOW TEMPERATURE	1				
NS	506769	TAPE RUB ADH2 CC POL 1/8" x 1/4" x 60' / BLACK H1CC-N-#14	AR				
NS	506790	TAPE RUB ADH2 CC POL 1/16" x 1/2" x 200' / BLACK I1C-N-A	AR				
NS	683097	CLEANER SIKA #205 / CLEAR / 1000ml	AR				
NS	683446	PRIMER SIKA #206 / BLACK / 1000ml	AR				
NS	681092	ADHESIVE SIKA #255FC / BLACK / 310ml CARTRIDGE	AR				
NS	683885	ADHESIVE SIKA TACK ULTRA FAST 2 / BLACK / 325ml	AR				
60	860422	HANDLE	1				
61	284049	PLUG / SQUARE / BLACK	1				
62	500360	SCREW TP FL PH #8x1 1/4 BK	2				
63	400095	DECAL / "WATCH YOUR STEP" ENG & FRENCH	1				
70	406050	DECAL / "C.W.A." & "T.C.A."	1				
70	157729	DECAL / WALL TO WALL TURNING DIAM 90' 3" WITH VIN #	1				

From Y-7046 Up to 8-9339	DATE: 01/2014	PAGE: Y2-1862-50

ENTRANCE DOOR ASSY - MTH

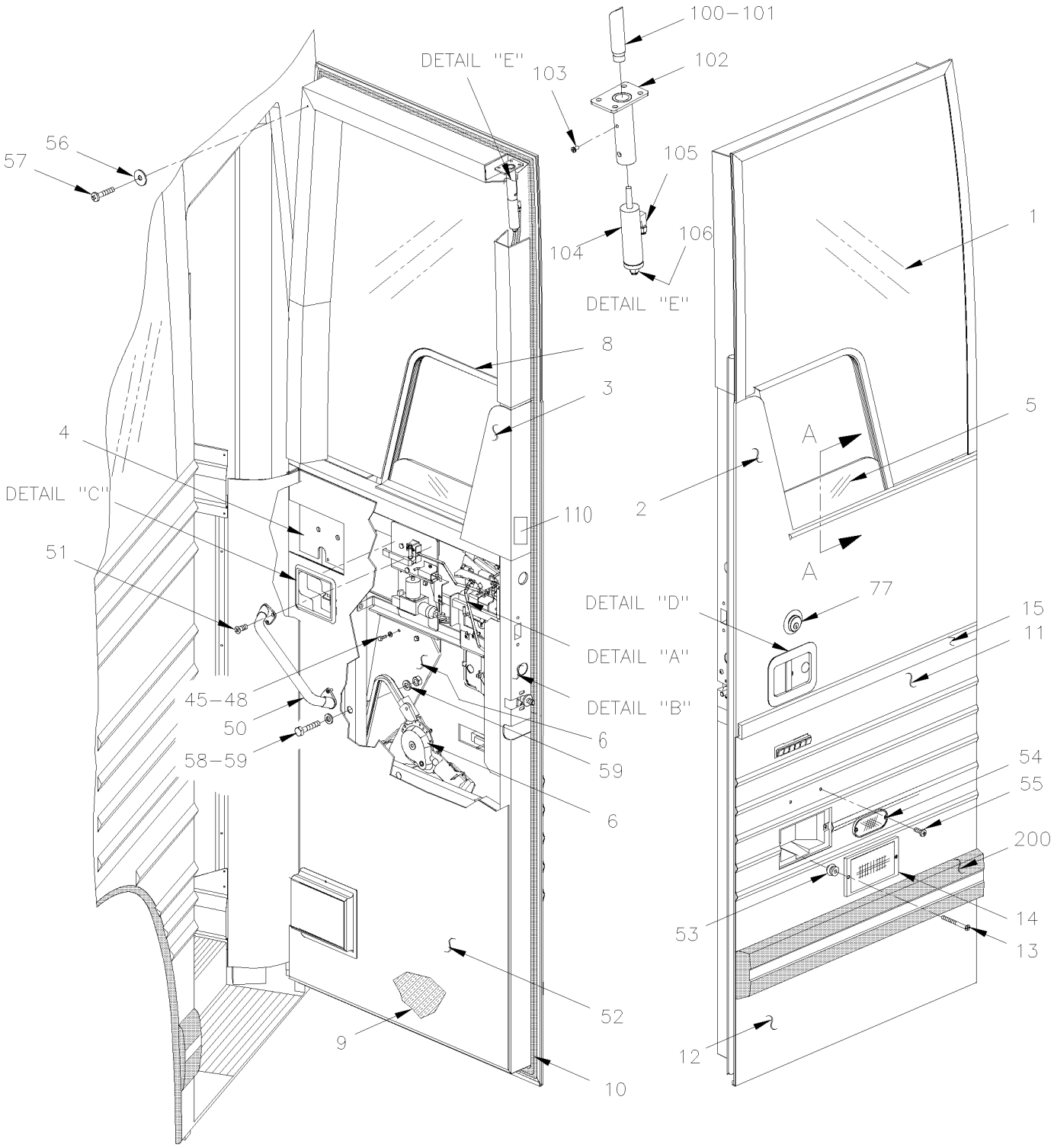

From Y-7046 Up to 8-9339	DATE: 01/2014	PAGE: Y2-1862-50

ENTRANCE DOOR ASSY - MTH

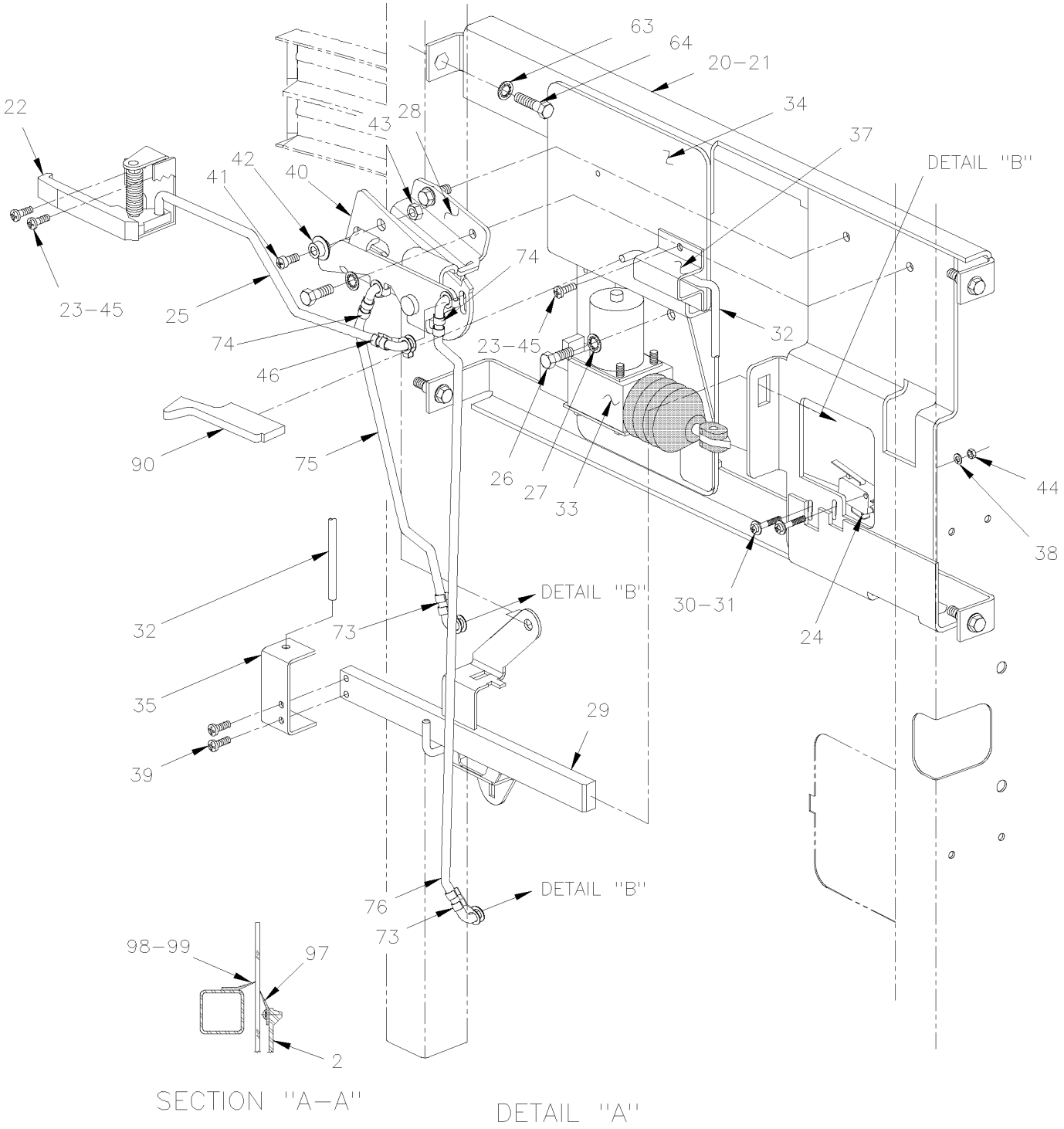

From Y-7046 Up to 8-9339	DATE: 01/2014	PAGE: Y2-1862-50
ENTRANCE DOOR ASSY - MTH		

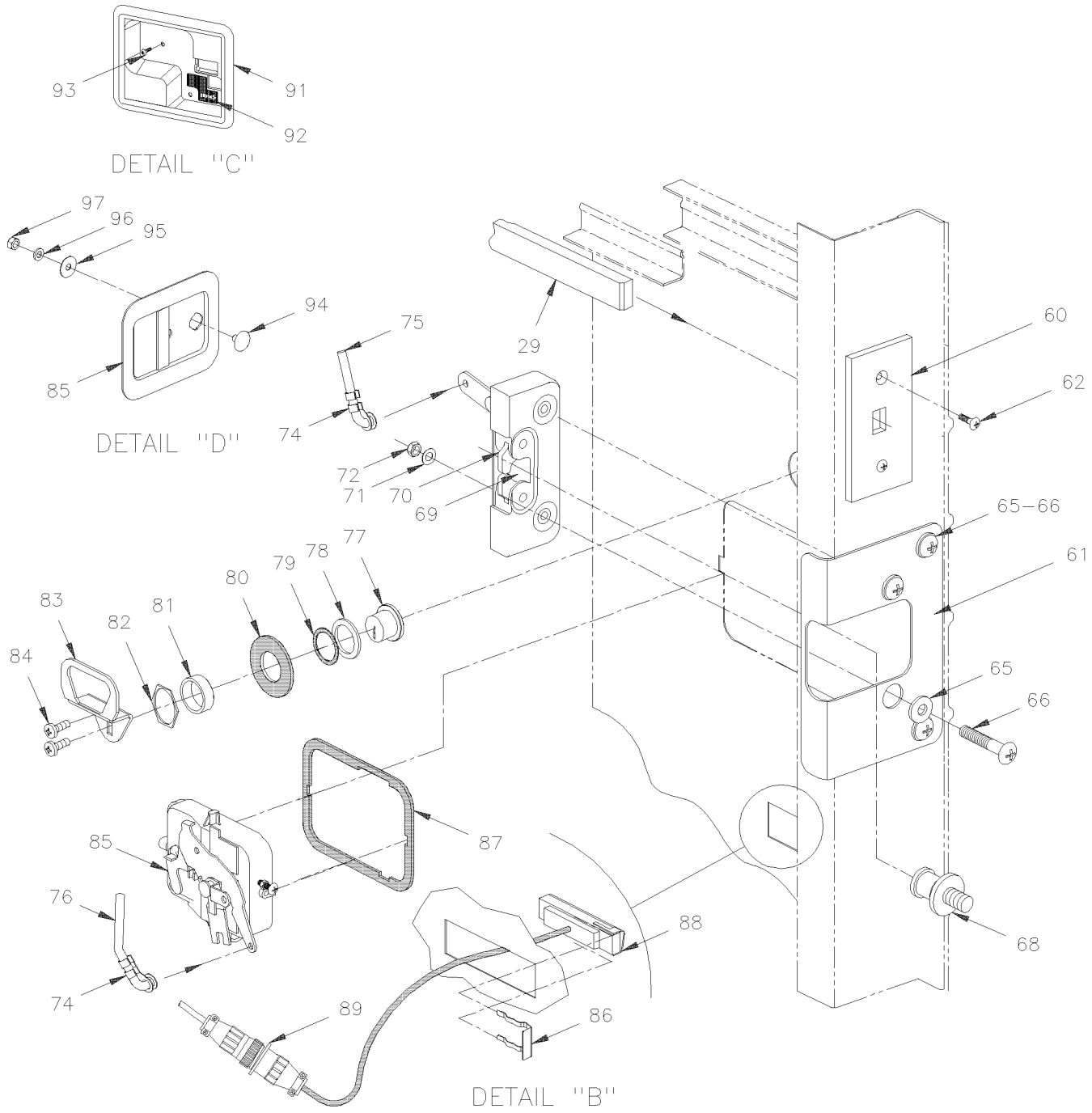

From Y-7046 Up to 8-9339	DATE: 01/2014	PAGE: Y2-1862-50

ENTRANCE DOOR ASSY - MTH

ITEM	PART	DESCRIPTION	XL45	MTH40	MTH45	MTH45S	NOTE
		ALL DOORS ASSY DO NOT INCLUDE					
		RUB-RAIL PLEASE ORDER SEPARATELY					
	287168P	ENTRANCE DOOR ASSY MTH 83" Up to 1-7128		1	1		
	286429P	ENTRANCE DOOR ASSY MTH 86" Up to 1-7662		1	1	1	
	287130P	ENTRANCE DOOR ASSY MTH 86" From 1-7663		1	1	1	
	286962P	ENTRANCE DOOR ASSY MTH 89"				1	
	287181P	ENTRANCE DOOR ASSY MTH 89"				1	
1	286080	GLASS ENTRANCE DOOR / MTH 83" Up to Y-7128		1	1		
1	286427	GLASS ENTRANCE DOOR / MTH 86" & 89"		1	1	1	
2	286031	PANEL UPPER / MTH 83" Up to Y-7128		1	1		B
2	286446	PANEL UPPER / MTH 86"		1	1	1	B
2	286715	PANEL UPPER / MTH 89"				1	
NS	504340	RIVET POP DOME OE 1/8x3/16 SS		3	3	3	
3	286124	FINISHING CAP MTH 83" Up to Y-7128		1	1		
3	287915	FINISHING CAP MTH 83", 86", & 89" / SERVICE		1	1		
3	286431	FINISHING CAP MTH 86" & 89" Up to 1-7662		1	1	1	
3	287915	FINISHING CAP MTH 83", 86", & 89" From 1-7663		1	1	1	
4	Call Order Desk	FRAME ASSY 83" Up to Y-7128		1	1		P
4	287938P	FRAME ASSY 83" / SERVICE		1	1		
4	Call Order Desk	FRAME ASSY 86" Up to 1-7662		1	1	1	P
4	287129P	FRAME ASSY 86" From 1-7663		1	1	1	
4	287136P	FRAME ASSY 89"				1	
5	286196	GLASS ASSY W/SUPPORT		1	1	1	
5	286078	GLASS		1	1	1	
5	299049	SUPPORT ASSY		1	1	1	
5	681092	ADHESIVE SIKA #255FC / BLACK / 310ml CARTRIDGE		1	1	1	
6	Y2-1886-00	**POWER WINDOW - ELECTRICAL INSTALLATION**					
6	Y2-1886-01	**POWER WINDOW - ELECTRICAL INSTALLATION**					
8	293088	MOULDING		1	1	1	
9	286226	INSULATION WITH 83" DOOR Up to Y-7128		1	1	1	
9	286435	INSULATION WITH 86" DOOR		1	1	1	
		P) CALL ORDER DESK FOR SPECIFIC APPLICATION					
		(V.I.N.)					
		B) THOSE PANEL ARE FIXED WITH KIT 682444					

From Y-7046 Up to 8-9339	DATE: 01/2014	PAGE: Y2-1862-50

ENTRANCE DOOR ASSY - MTH

ITEM	PART	DESCRIPTION	XL45	MTH40	MTH45	MTH45S	NOTE
9	286736	INSULATION WITH 89" DOOR				1	
10	286067	RUBBER SEAL EXTRUSION / ENTRANCE DOOR MTH-83" Up to Y-7128 / REPLACED BY: 287975		1	1		
10	287975	RUBBER SEAL EXTRUSION / ENTRANCE DOOR MTH-83" / SERVICE Up to UPDATED / REPLACED BY: 289938		1	1		
10	289938	RUBBER SEAL EXTRUSION / ENTRANCE DOOR MTH-83" / SERVICE / REPLACED BY: 288917		1	1		
10	286142	RUBBER SEAL EXTRUSION / ENTRANCE DOOR MTH-86" Up to 2-7715 / REPLACED BY: 287974		1	1	1	
10	287974	RUBBER SEAL EXTRUSION / ENTRANCE DOOR MTH-86" From 2-7716 Up to 5-8650 / REPLACED BY: 289931		1	1	1	
10	289931	RUBBER SEAL EXTRUSION / ENTRANCE DOOR MTH-86" From 5-8651 / REPLACED BY: 288915		1	1	1	
10	286725	WEATHERSTRIP / ENTRANCE DOOR MTH 89" / ENTRANCE DOOR MTH-89" Up to 2-7771 / REPLACED BY: 287977		1	1	1	
10	287977	RUBBER SEAL EXTRUSION / ENTRANCE DOOR MTH-89" From 2-7772 Up to 5-8650 / REPLACED BY: 289932		1	1	1	
10	289932	RUBBER SEAL EXTRUSION / ENTRANCE DOOR MTH-89" From 5-8651 / REPLACED BY: 288916				1	
11	286981	PANEL CENTER / MTH W/DOCKING LAMP / S.B. Up to 5-8468 / REPLACED BY: 288523		1	1	1	
11	288523	PANEL CENTER / MTH W/DOCKING LAMP / B.A. From 5-8469		1	1	1	
12	286130	PANEL LOWER / S.B. Up to 5-8468 / REPLACED BY: 288524		1	1	1	
12	288524	PANEL LOWER / B.A. From 5-8469		1	1	1	
NS	504335	RIVET POP DOME CLE 3/16x1/4 AL		2	2	2	
NS	500437	WASHER FL .125x.375x.040 ZP		2	2	2	
13	502530	SCREW MA OV PH M4-0.7x40 SS		2	2	2	
14	Y2-0663-00	**DOCK & CORNERING LIGHT**					
15	286084	FINISHING MOULDING SS 800MM / S.B. Up to 5-8468		1	1	1	
15	288522	FINISHING MOULDING SS 800MM / B.A. From 5-8469		1	1	1	
20	286218	. MECHANISM ASSY Up to 1-7515 / REPLACED BY: 287211		1	1	1	
20	287211	. MECHANISM ASSY From 1-7516 Up to 5-8431		1	1	1	F
20	288554	. MECHANISM ASSY From 5-8432		1	1	1	
21	285732	. . SUPPORT ASSY Up to 1-7515		1	1	1	
21	287212	. . SUPPORT ASSY From 1-7516		1	1	1	
22	780484	. . LEVER, RELEASE / REPLACED BY: 780891		1	1	1	
23	500654	. . SCREW TC BDG PH #8-32x1/2 ZP		4	4	4	
24	561677	. . MICRO SWITCH		1	1	1	
NS	680066	. . GLUE / ADBOND 5014 ADH 23.6ML BOTTLE		AR	AR	AR	
25	283387	. . ROD		1	1	1	
26	500472	. . WASHER LO INT .256x.478x.028 ZP		4	4	4	
27	502531	. . SCREW CAP HEX M6-1.0x16 G8.8 ZP		4	4	4	
28	285748	. . SHUTTER, RELEASE ASSY Up to 1-7515		1	1	1	
		F) FOR PRODUCT IMPROVEMENT, ASK KIT #288556					

From Y-7046 Up to 8-9339	DATE: 01/2014	PAGE: Y2-1862-50

ENTRANCE DOOR ASSY - MTH

ITEM	PART	DESCRIPTION	XL45	MTH40	MTH45	MTH45S	NOTE
28	287213	. . SHUTTER, RELEASE ASSY From 1-7516 Up to 5-8431		1	1	1	F
28	288552	. . SHUTTER, RELEASE ASSY From 5-8432		1	1	1	
29	286217	. . BAR ASSY, RIVETED		1	1	1	
30	5001412	. . SCREW MA CHE PH M3-0.5x20 EMN		2	2	2	
31	500591	. . WASHER FL 4.3x9.0x0.8 ZP		2	2	2	
32	284836	. . ROD		1	1	1	
33	780428	. . LOCK ACTUATOR / 12V		1	1	1	
. NS	562076	. . . CONNECTOR / PACK-CON I / FEMALE HOUSING / 2C / PED 8911772		1	1	1	
34	284834	. . SUPPORT ACTUATOR		1	1	1	
35	283364	. . TIE		1	1	1	
37	780483	. . CLAMP		1	1	1	
38	502579	. . NUT HEX M3-0.5 NP		2	2	2	
39	500393	. . SCREW TC BDG PH #10-24x3/8 ZP		2	2	2	
40	502156	. . SPRING EXTENSION / .437 O.D. x 2 x .041 / REPLACED BY: 502183		1	1	1	
41	502746	. . SCREW MA PAN PH M5-0.8x20 SS EMN		1	1	1	
42	285546	. . STOPPER		1	1	1	
43	502782	. . NUT HEX NYRT M5-0.8 CP		1	1	1	
44	502691	. . WASHER LO SPT 3.6x6.7x0.8 ZP		2	2	2	
45	680066	. . GLUE / ADBOND 5014 ADH 23.6ML BOTTLE		AR	AR	AR	
46	504541	. . CLIP ROD 1/4" R.H.		1	1	1	
48	502806	SCREW MA FL PH M6-1.0x10 ZP		2	2	2	
50	900308	HANDLE / LONG Up to 1-7715 / REPLACED BY: 901047		1	1	1	
50	901047	HANDLE / SHORT From 1-7716		1	1	1	
51	500616	SCREW TP FL PH #10x3/4 ZP		4	4	4	
52	286175	PANEL FINISHING / AL. / MTH 83" Up to Y-7128		1	1		
52	288994	PANEL FINISHING / AL. / MTH 83"		1	1		
52	286434	PANEL FINISHING / AL. / MTH 86" Up to 1-7662		1	1	1	
52	288995	PANEL FINISHING / AL. / MTH 86" From 1-7663 Up to 4-8327		1	1	1	
52	289279	PANEL FINISHING / AL. / MTH 86" From 4-8328		1	1	1	
52	287120	PANEL FINISHING / AL. / MTH 89" Up to 1-7662				1	
52	287311	PANEL FINISHING / AL. / MTH 89" From 1-7663 Up to 4-8327				1	
52	289281	PANEL FINISHING / AL. / MTH 89" From 4-8328				1	
NS	504373	PLUG BUTTON / 1.000 O.D. / BARE METAL		3	3	3	
		F) FOR PRODUCT IMPROVEMENT, ASK KIT #288556					

From Y-7046 Up to 8-9339	DATE: 01/2014	PAGE: Y2-1862-50

ENTRANCE DOOR ASSY - MTH

ITEM	PART	DESCRIPTION	XL45	MTH40	MTH45	MTH45S	NOTE
NS	286117	FINISHING PLATE		1	1	1	
NS	289282	ACCESS PANEL 834MM X 494MM From 4-8328		1	1	1	
53	500589	NUT WELL M4-0.7x13.5		2	2	2	
54	930212	REFLECTOR AMBER 1 1/8" x 4 3/8"		1	1	1	
55	500124	SCREW TP TR PH #8x1/2 SS		2	2	2	
56	500345	WASHER FN CKF .187x.500x.090 BR BK		14	14	14	
57	5001097	SCREW TC OV PH #6-32x3/4 SS410 BK		14	14	14	
58	502622	SCREW CAP HEX M6-1.0x20 SS EMN		4	4	4	
59	502573	WASHER FL 6.4x12.5x1.6 SS		4	4	4	
60	283397	GUIDE ASSY		1	1	1	
61	286117	FINISHING PLATE		1	1	1	
62	500654	SCREW TC BDG PH #8-32x1/2 ZP		2	2	2	
62	500438	WASHER FL .187x.437x.050 ZP		2	2	2	
63	502582	WASHER LO SERR 6.1x16.2x0.9 ZP		2	2	2	
64	5001433	SCREW CAP HEX M6-1.0x25 SS		1	1	1	
65	500411	WASHER FL .260x.697x.050 SS		4	4	4	
66	500559	SCREW MA TR PH 1/4-20x1 1/2 SS EMN		4	4	4	
68	780189	STRIKER & SHIM		1	1	1	A
70	286042	REWORK LOCK Up to 1-7662		1	1	1	
70	780592	LATCH, LH. From 1-7663		1	1	1	
71	500411	WASHER FL .260x.697x.050 SS		4	4	4	
72	502716	NUT HEX NYRT 1/4-20 / REPLACED BY: 5001123		4	4	4	
73	504243	CLIP ROD 1/4" L.H.		2	2	2	
74	504541	CLIP ROD 1/4" R.H.		4	4	4	
NS	504541	CLIP ROD 1/4" R.H.		2	2	2	
75	285751	RELEASE MECHANISM ROD Up to 5-8431		1	1	1	
75	288201	RELEASE MECHANISM ROD From 5-8432		1	1	1	
76	285752	HANDLE ROD Up to 5-8431		1	1	1	
76	288200	HANDLE ROD From 5-8432		1	1	1	
77	780430	CYLINDER LOCK ASSY W/2 KEYS / "CORBIN"		1	1	1	S
. NS	780562	. KEY / "CORBIN" BLANK		2	2	2	
77	780803	CYLINDER LOCK ASSY W/2 KEYS / "SCHLAGE" SERVICE		1	1	1	
. NS	7808XX	. KEY / "SCHLAGE" BLANK		1	1	1	
		A) FIXED ON STRUCTURAL FRAME					
		S) THIS MODEL IT OBSOLETED REPLACE BY 780803					
		WITH NEW LEVER # 289029					

From Y-7046 Up to 8-9339	DATE: 01/2014	PAGE: Y2-1862-50

ENTRANCE DOOR ASSY - MTH

ITEM	PART	DESCRIPTION	XL45	MTH40	MTH45	MTH45S	NOTE
NS	780562	KEY / "CORBIN" BLANK		1	1	1	
78	283468	WASHER FINISHING		1	1	1	
79	285198	GASKET		1	1	1	
80	285188	GASKET		1	1	1	
81	286704	SPACER / <>LOCK & NUT		1	1	1	
82	780427	NUT		1	1	1	
83	286626	LEVER, TRIANGULAR SHAPE / W/"CORBIN" 18MM OFFSET		1	1	1	
83	289029	LEVER, TRIANGULAR SHAPE / W/"SCHLAGE" 18MM OFFSET SERVICE		1	1	1	
84	N.S.P.	SCREW MA FL PH 22 (INCLUDE W/ITEM #77)		1	1	1	2
85	281714	HANDLE EXTERIOR / MODIFIED Up to 5-8431		1	1	1	F
85	780713	HANDLE EXTERIOR From 5-8432		1	1	1	
NS	288814	SPACER From 5-8432		1	1	1	
NS	500438	WASHER FL .187x.437x.050 ZP		1	1	1	
NS	500438	WASHER FL .187x.437x.050 ZP		1	1	1	
NS	507610	FOAM LOW EXPANSION		1	1	1	
86	780429	CLIP RETAINER Up to Y-7377 / REPLACED BY: 780637		1	1	1	
86	780637	CLIP RETAINER From Y-7378		1	1	1	
87	285187	GASKET Up to 5-8413		1	1	1	
87	288815	GASKET From 5-8414		1	1	1	
88	065301	KEYBOARD ASSY Up to Y-7377		1	1	1	
88	065015	KEYBOARD ASSY From Y-7378 / REPLACED BY: 065301		1	1	1	
NS	286224	SHIM Up to Y-7377		1	1	1	
88	065900	WATER DEFLECTOR / PLASTIC From 4-8262		1	1	1	C
89	064831	CABLE KEYLESS MODULE		1	1	1	
NS	504637	CABLE TIE / 3/16" x 13"		1	1	1	
NS	560503	CLAMP / 1/4" I.D. / REPLACED BY: 952624		1	1	1	
NS	500641	SCREW TP BDG PH #8x3/4 ZP		1	1	1	
90	284127	BUTTON		1	1	1	
91	780482	BEZEL / REPLACED BY: 780890		1	1	1	
92	283769	. DECAL / "LOCK"		1	1	1	
93	5001155	SCREW TP PAN PH #8x3/4 BK		1	1	1	
94	286480	PLUG SS 3/4" O.D. X M8-1.25		1	1	1	
95	286481	WASHER FL .354x1.02x 22GA SS		1	1	1	
		2) NOT SOLD BY PREVOST (SEE MANUFACTURING PART					
		NUMBER AT END OF DESCRIPTION LINE)					
		C) FOR PRODUCT IMPROVEMENT USE THIS NEW					
		DEFLECTOR UP TO 4-8261					
		F) FOR PRODUCT IMPROVEMENT, ASK KIT #288556					

From Y-7046 Up to 8-9339	DATE: 01/2014	PAGE: Y2-1862-50

ENTRANCE DOOR ASSY - MTH

ITEM	PART	DESCRIPTION	XL45	MTH40	MTH45	MTH45S	NOTE
96	502507	WASHER LO SPT 8.1x14.8x2.0 CJ		1	1	1	
97	286993	FLAP SEAL GLASS ASSY		1	1	1	
NS	286992	. FLAP SUPPORT		1	1	1	
98	286235	. FLAP SEAL 3/4" x 7/8" / PVC / 335MM Up to 2-7799 / REPLACED BY: 288063		1	1	1	
98	288063	. FLAP SEAL / 37.6MM x 335MM / W/FLOCKING From 2-7800		1	1	1	
99	286717	ANGLE SS 345MM		1	1	1	
NS	500124	SCREW TP TR PH #8x1/2 SS		4	4	4	
100	287012	UPPER LOCK ASSY		1	1	1	
101	285271	. CATCH		1	1	1	
101	282383	. CATCH		1	1	1	
102	287011	. PLATE MOUNTING		1	1	1	
103	500560	. SCREW MA PAN PH M4-0.7x6 ZP		1	1	1	
NS	502636	. WASHER LO SPT 4.1x7.6x0.9 ZP		1	1	1	
104	641392	. CYLINDER 7/8" X 1" STROKE / DOUBLE ACTION Up to 4-8225 / REPLACED BY: 641983		1	1	1	
104	641983	. CYLINDER 7/8" X 1" STROKE / DOUBLE ACTION From 4-8226		1	1	1	
105	641369	. MALE ELBOW 90° NON-SWIVEL / PUSH-IN FITTING #4x1/8NPT-M BR		1	1	1	
106	641242	. MALE CONNECTOR / PUSH-IN FITTING / #4x1/8NPT-M BR		1	1	1	
NS	683276	. GREASE LOW TEMPERATURE		AR	AR	AR	
110	406050	DECAL / "C.W.A." & "T.C.A."			1	1	
110	157729	DECAL / WALL TO WALL TURNING DIAM 90' 3" WITH VIN #			1	1	
200	Y2-1855-00	**RUB RAIL - CREST & TRIMS**					
NS	506769	TAPE RUB ADH2 CC POL 1/8" x 1/4" x 60' / BLACK H1CC-N-#14		AR	AR	AR	
NS	506790	TAPE RUB ADH2 CC POL 1/16" x 1/2" x 200' / BLACK I1C-N-A		AR	AR	AR	
NS	680065	TAPE COMPOUND / BLACK / 1/32" X 1" X 33' / L163-2400		AR	AR	AR	
NS	683097	CLEANER SIKA #205 / CLEAR / 1000ml		AR	AR	AR	
NS	683446	PRIMER SIKA #206 / BLACK / 1000ml		AR	AR	AR	
NS	683083	ADHESIVE SIKA #252 / BLACK / 600 ml SAUSAGE		AR	AR	AR	
NS	683288	ADHESIVE SIKA #255FC / BLACK / 600ml SAUSAGE		AR	AR	AR	
NS	683885	ADHESIVE SIKA TACK ULTRA FAST 2 / BLACK / 325ml		AR	AR	AR	
NS	288556	KIT, HANDLE EXTERIOR REPLACEMENT / MTH		1	1	1	
. NS	IS-03090	. SEE INSTRUCTION SHEET		1	1	1	

From Y-7046 Up to 8-9339	DATE: 01/2014	PAGE: Y2-1862-50

ENTRANCE DOOR ASSY - MTH

ITEM	PART	DESCRIPTION	XL45	MTH40	MTH45	MTH45S	NOTE

From Y-7046 Up to 8-9339	DATE: 01/2014	PAGE: Y2-1862-60

ENTRANCE DOOR FRAME - INSTALLATION

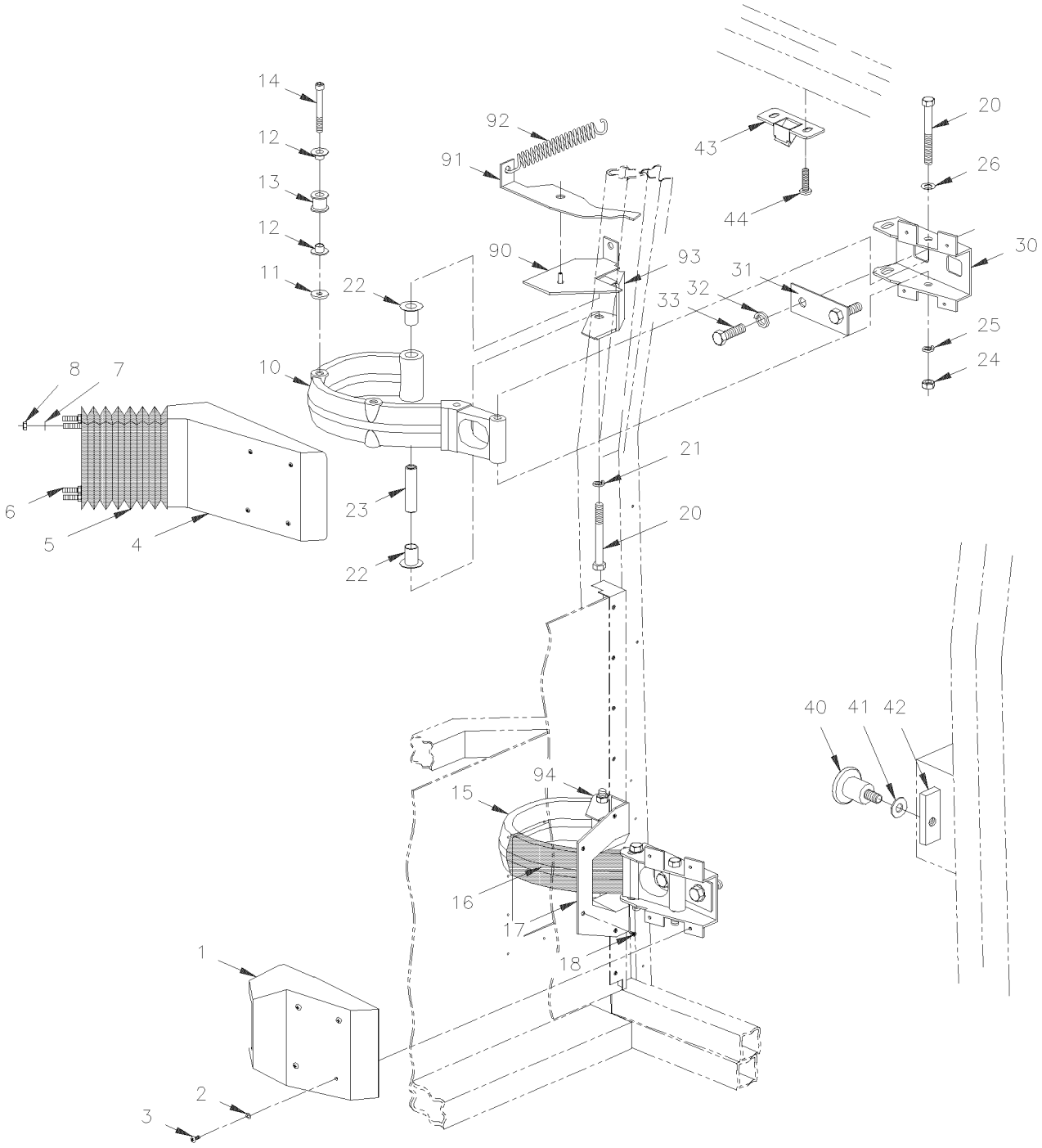

From Y-7046 Up to 8-9339	DATE: 01/2014	PAGE: Y2-1862-60

ENTRANCE DOOR FRAME - INSTALLATION

ITEM	PART	DESCRIPTION	XL45	MTH40	MTH45	MTH45S	NOTE
1	326604	CAP COVER LOWER	1	1	1	1	
2	500950	WASHER FL .187x.625x.094 RUB	8	8	8	8	
3	500409	SCREW TP PAN PH #8x1/2 BK	8	8	8	8	
4	326727	CAP COVER UPPER	1	1	1	1	
5	285492	BELLOWS / RUBBER	1	1	1	1	
6	285491	PLATE BELLOW RETAINER	2	2	2	2	
7	500964	WASHER FL .203x.500x.047 ZP	8	8	8	8	
8	502782	NUT HEX NYRT M5-0.8 CP	8	8	8	8	
10	285937	HINGE UPPER Up to 2-7924 / REPLACED BY: 287340	1				
10	287340	HINGE UPPER From 2-7925 Up to 4-8334	1				
10	287471	HINGE UPPER From 4-8335 Up to 6-8906	1				
10	284287	HINGE UPPER Up to 2-7874		1	1	1	
10	287339	HINGE UPPER From 2-7875 Up to 3-8074		1	1	1	
10	287404	HINGE UPPER From 3-8075 Up to 4-8334		1	1	1	
10	287472	HINGE UPPER From 4-8335		1	1	1	
11	282956	WASHER Up to 3-8074		1	1	1	
11	502638	WASHER FL .312x.734x.065 ZG603 From 3-8075		1	1	1	
12	507301	BUSHING NYLINER Up to 3-8074		2	2	2	
12	507628	BUSHING NYLINER From 3-8075		2	2	2	
13	284214	ROLLER SS 9.5MM I.D.x14.5 O.D. 19Flx17Th Up to 3-8074		1	1	1	
13	287405	ROLLER SS 11MM I.D.x14.5 O.D. 19Flx17Th From 3-8075		1	1	1	
14	5001108	SCREW SHR HEXS 5/16x3/4 {1/4-20 Up to 3-8074		1	1	1	
14	500876	SCREW SHR HEXS 3/8x3/4 {5/16-18 From 3-8075		1	1	1	
15	286477	HINGE Up to 2-7815 / REPLACED BY: 287341	1	1	1	1	
15	287341	HINGE From 2-7816	1	1	1	1	
16	326228	COVER HINGE LOWER / PLASTIC	1	1	1	1	
17	326227	PANEL FINISHING LOWER	1	1	1	1	
20	5001016	SCREW CAP HEX M10-1.5x90 G8.8 ZP	2	2	2	2	
21	500257	WASHER LO SPT 10.2x18.1x2.2 ZP	2	2	2	2	
22	507326	BEARING FLANGE	2	2	2	2	
23	284285	SPACER / <> BEARING FLANGE Up to 2-7874 / REPLACED BY: 287337	2	2	2	2	
23	287337	SPACER / <> BEARING FLANGE From 2-7875	2	2	2	2	
24	500256	NUT HEX M10-1.5 ZP	4	4	4	4	
25	502585	WASHER LO SERR 10.2x26.3x1.4 ZP	4	4	4	4	
26	500445	WASHER FL .437x1.000x.083 ZP	2	2	2	2	
30	284040	ATTACHMENT	2	2	2	2	
31	286998	SUPPORT PLATE 134MM X 48MM	2	2	2	2	
32	500810	WASHER LO SPT 12.2x21.1x2.5 ZP	4	4	4	4	
33	502731	SCREW CAP HEX M12-1.75x40 G8.8 ZP	4	4	4	4	
40	780189	STRIKER & SHIM	1	1	1	1	
41	500446	WASHER FL .531x1.250x.125 ZP	1	1	1	1	
42	285014	FIXING BLOCK	1	1	1	1	
43	287008	DOOR STOPPER ASSY	1	1	1	1	
44	502806	SCREW MA FL PH M6-1.0x10 ZP	2	2	2	2	

From Y-7046 Up to 8-9339	DATE: 01/2014	PAGE: Y2-1862-60

ENTRANCE DOOR FRAME - INSTALLATION

ITEM	PART	DESCRIPTION	XL45	MTH40	MTH45	MTH45S	NOTE
90	251022	LEVER AND SUPPORT ASSY (WELDED TO FRAME) Up to 2-7745 / REPLACED BY: 251548		1	1	1	
90	251548	LEVER AND SUPPORT ASSY SS (WELDED TO FRAME) From 2-7746		1	1	1	
NS	504543	. RIVET SHR FL 3/8x3/16 STL		1	1	1	
91	212098	. DOOR STOPPER Up to 2-7745 / REPLACED BY: 214664		1	1	1	
91	214664	. DOOR STOPPER From 2-7746		1	1	1	
92	502255	SPRING EXTENSION / .814 O.D. x 3.14 x .148		1	1	1	
93	251083	HINGE SUPPORT / UPPER		1	1	1	
94	251001	HINGE SUPPORT / LOWER	1	1	1	1	

From Y-7046 Up to 8-9339	DATE: 01/2014	PAGE: Y2-1862-60

ENTRANCE DOOR FRAME - INSTALLATION

ITEM	PART	DESCRIPTION	XL45	MTH400	MTH445	MTH445S	NOTE

From Y-7046 Up to 6-8906	DATE: 01/2014	PAGE: Y2-1862-80

ENTRANCE DOOR ASSY - W.C.L.

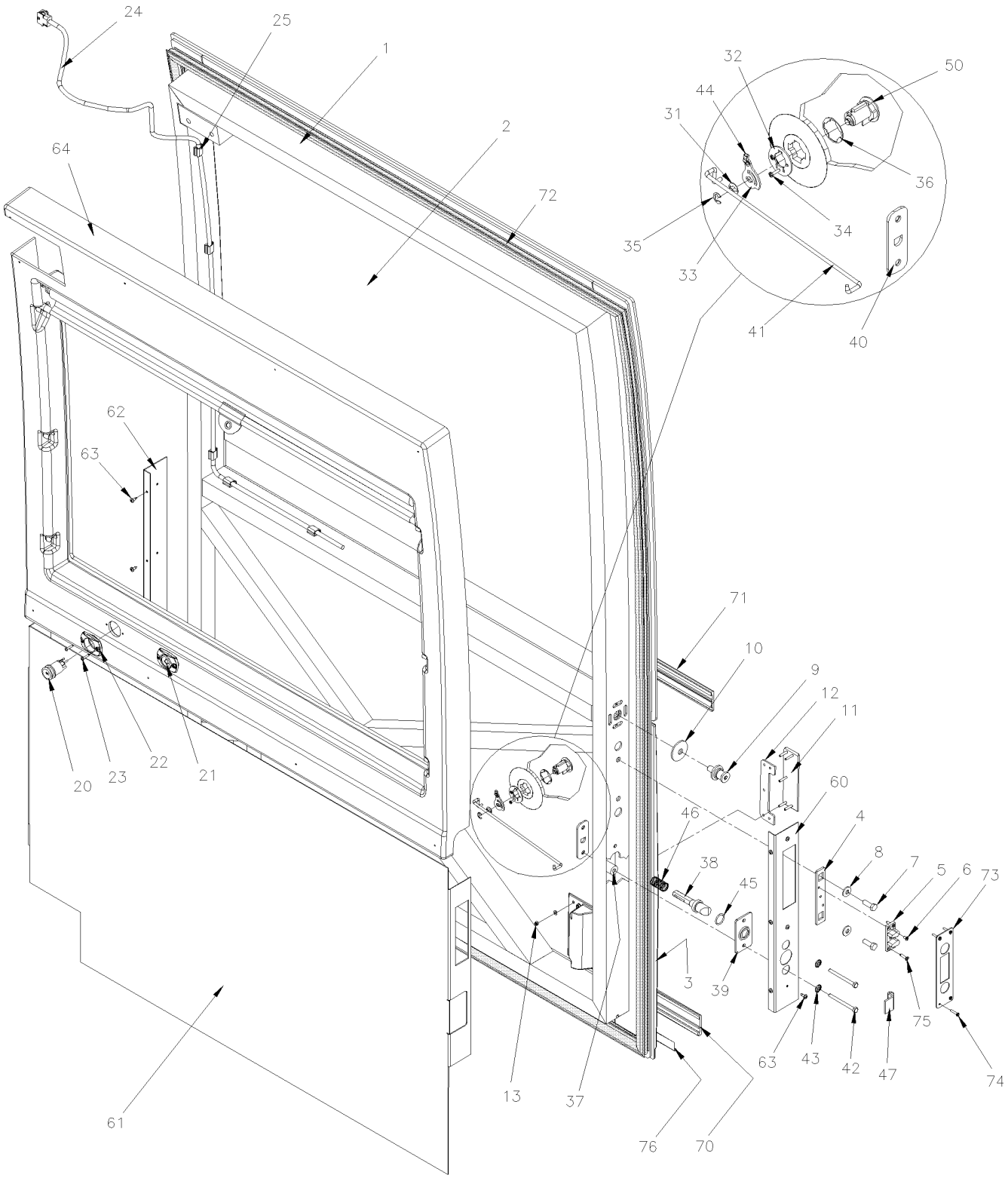

From Y-7046 Up to 6-8906	DATE: 01/2014	PAGE: Y2-1862-80

ENTRANCE DOOR ASSY - W.C.L.

ITEM	PART	DESCRIPTION	XL45	MTH40	MTH45	MTH45S	NOTE
	287003P	DOOR ASSY	1				
1	286743	. FRAME ASSY	1				
NS	287184	. INSULATOR PANEL UPPER	1				
NS	283334	. INSULATOR PANEL UPPER From 9-9585	1				
NS	287185	. INSULATOR PANEL FOWARD	1				
NS	283335	. INSULATOR PANEL FOWARD From 9-9585	1				
NS	287186	. INSULATOR PANEL BACKWARD	1				
NS	283333	. INSULATOR PANEL BACKWARD From 9-9585	1				
NS	287187	. INSULATOR PANEL LOWER	1				
NS	282985	. INSULATOR PANEL LOWER From 9-9585	1				
NS	287188	. INSULATOR PANEL LOWER HINGE	1				
NS	680397	. CONTACT GLUE / AEROSOL	AR				
2	286988	. GLASS THERMOS 13%	1				
NS	507000	. TAPE RUB ADH2 POL 3/16" x 1/4" x 50' / BLACK V2206	AR				
NS	687957	. GLUE MS POLYMER LOCTITE 5590 / "A" 400ml CARTRIDGE	AR				
3	286989	. PANEL FIBERGLASS	1				
3	288887	. PANEL FIBERGLASS WITH "FORD" KEY	1				
3	282617	. PANEL FIBERGLASS WITH HANDLE	1				
NS	506236	. TAPE RUB ADH1 CC POL 1/16" x 1/2" x 100' / GREY 2520	AR				
NS	506648	. TAPE RUB ADH1 CC POL 1/8" x 1/2"x 50' / GREY 2542	AR				
NS	683480	. ADHESIVE SIKA #264 / BLACK / 310ml CARTRIDGE	AR				
NS	683481	. ACCELERATOR SIKA / 310ml CARTRIDGE	AR				
4	283929	. PLATE / TO FIX DOVETAIL	1				
5	780496	. DOVETAIL, MALE	1				
6	500371	. SCREW MA FL PH M4-0.7x8 ZG603	3				
7	502589	. SCREW CAP HEX M8-1.25x25 G8.8 ZP	2				
8	500321	. WASHER BEL SPR .331x.827x.098 ZG603	2				
9	780189	. STRIKER & SHIM	1				
10	284447	. WASHERS BELLEVILLE	11				
11	283956	. HANDLE ASSY / W/5 STUDS	1				
12	283954	. GASKET / <> HANDLE & BODY	1				
13	502557	. NUT HEX NYRT M4-0.7 SS	5				
13	502556	. WASHER FL 4.3x9.0X0.8 SS	5				
20	830158	. SWITCH / OFF-ON / S.P.S.T. / READING LIGHT	1				

From Y-7046 Up to 6-8906	DATE: 01/2014	PAGE: Y2-1862-80

ENTRANCE DOOR ASSY - W.C.L.

ITEM	PART	DESCRIPTION	XL45	MTH40	MTH45	MTH45S	NOTE
21	830159	. SWITCH / OFF-M/ON / S.P.S.T. / CHIME	1				
22	409259	. PROTECTOR SWITCH / CAP	2				
23	500814	. SCREW TP BDG PH #6x3/4 BK	4				
24	065369	. CABLE HARNESS / READING LIGHT CURBSIDE DOOR / W/W.C.L.	1				
25	504536	. CABLE CLIP ½" / ADHESIVE	6				
30	289004	KIT RETROFIT, DOOR CYLINDER LOCK W/CATCH PIN Up to 8-9281	1				A
31	283853	. SPACER / WASHER 9/16" O.D. X 1/4" I.D. Up to 8-9281	1				
32	285811	. WASHER / CYLINDER LOCK RETAINER Up to 8-9281	1				
33	288839	. PIVOT LOCK ROD / W/W.C.L. DOOR Up to 8-9281	1				
34	500518	. SCREW MA BDG PH #4-40x1/2 ZP Up to 8-9281	2				
35	504402	. RING RETAINER / EXT .250 x .210 x .025" Up to 8-9281	1				
36	780237	. SEAL RUBBER 1/32" TH Up to 8-9281 / REPLACED BY: 2800032	1				
36	2800032	. SEAL RUBBER 1/16" TH Up to 8-9281	1				
37	288833	. SLEEVE 19MM O.D. x 7.5MM I.D. x 36MM Up to 8-9281	2				
38	288832	. CATCH PIN SS / 91MM Up to 8-9281	1				
38	289586	. CATCH PIN ACETAL / 91MM Up to 8-9281	1				
39	288831	. GUIDE PIN FRONT W/19MM I.D. Up to 8-9281	1				
40	288834	. GUIDE PIN INSIDE / W/D HOLE Up to 8-9281	1				
41	288837	. ROD OPENING 252.4MM Up to 8-9281	1				
42	5001667	. SCREW CAP HEX M6-1.0x70 BK Up to 8-9281	2				
43	500356	. WASHER LO SERR 6.1x16.0x0.9 ZG603 Up to 8-9281	2				
44	502724	. SCREW CAP HEX #10-32x1/4 BZC Up to 8-9281	1				
45	507212	. O-RING Up to 8-9281	1				
46	502910	. SPRING COMPRESSION / .720 O.D. 1.75 x .055 Up to 8-9281	1				
47	288890	. CATCH PIN RETAINER / (WELDED AT STRUCTURE) Up to 8-9281	1				
		FOR CYLINDER KEY CODE SEE ITEM #13 AT PAGE / Y2-1867-00					B
50	Y2-1867-00	**KEY & CYLINDER CODE "FORD"**					B
60	285990	FINISHING MOULDING FORWARD	1				F
60	287197	FINISHING MOULDING	1				T
61	287191P	FINISNING PANEL / TISSUS	1				
61	Call Order Desk	FINISHING PANEL / FORMICA	1				P
		P) CALL ORDER DESK FOR SPECIFIC APPLICATION					
		(V.I.N.)					
		A) FOR RETROFIT DEAD BOLT & "FORD" KEY ASK FOR					
		KIT # 289004 INCLUD ALLS ITEMS IN GREEN					
		B) THIS CYLINDER LOCK ARE NOT INCLUDE IN KIT					
		289004 SEE YOU O.E.M. KEY CODE					
		F) WITH FORMICA					
		T) WITH TISSUS					

From Y-7046 Up to 6-8906	DATE: 01/2014	PAGE: Y2-1862-80

ENTRANCE DOOR ASSY - W.C.L.

ITEM	PART	DESCRIPTION	XL45	MTH40	MTH45	MTH45S	NOTE
61	287182	PANEL ALUMINUM	1				
61	Call Order Desk	PANEL FORMICA	1				P
62	287946	FINISHING MOULDING BACKWARD	1				F
62	287197	FINISHING MOULDING	1				T
63	500952	SCREW TP BDG PH #8x1/2 SS	12				
64	287155	INTERIOR WINDOW MOULDING	1				
64	288726	INTERIOR WINDOW MOULDING	1				
64	287154	INTERIOR WINDOW MOULDING	1				S
64	288725	INTERIOR WINDOW MOULDING	1				S
NS	500552	SCREW TP OV PH #6x3/4 ZP	9				
NS	500463	WASHER FN CKF .187x.500x.090 BR NP	9				
NS	506191	TAPE RUB ADH1 CC POL 1/8" x 1/4" x 50' / GREY 2520X	AR				F
NS	405142	DECAL / BLACK STRIP W/DOTTED 1063MM x 149MM	1				S
70	474666	FINISHING MOULDING LOWER W.C.L. DOOR 1285MM	1				
71	474794	FINISHING MOULDING UPPER W.C.L. DOOR 1285MM	1				
NS	682462	ADHESIVE SIKA #252 / BLACK / 310ml CARTRIDGE	1				
72	289937	RUBBER SEAL EXTRUSION / W.C.L. ENTRANCE DOOR / REPLACED BY: 288909	1				
72	288909	RUBBER SEAL EXTRUSION / W.C.L. ENTRANCE DOOR SERVICE / REPLACED BY: 2800160	1				
73	287208	FINISHING PLATE SS	1				
74	5001040	SCREW TC PAN PH #6-32x3/4 SS	4				
75	500260	SCREW TC FL PH #8-32x3/4 BK	2				
76	474799	DRIP MOULDING / 1285MM	1				
		P) CALL ORDER DESK FOR SPECIFIC APPLICATION					
		(V.I.N.)					
		F) WITH FORMICA					
		S) WITH SUNSHINE ROLLER					
		T) WITH TISSUS					

From Y-7046 Up to 6-8906	DATE: 01/2014	PAGE: Y2-1862-82

ENTRANCE DOOR - INSTALLATION - W.C.L.

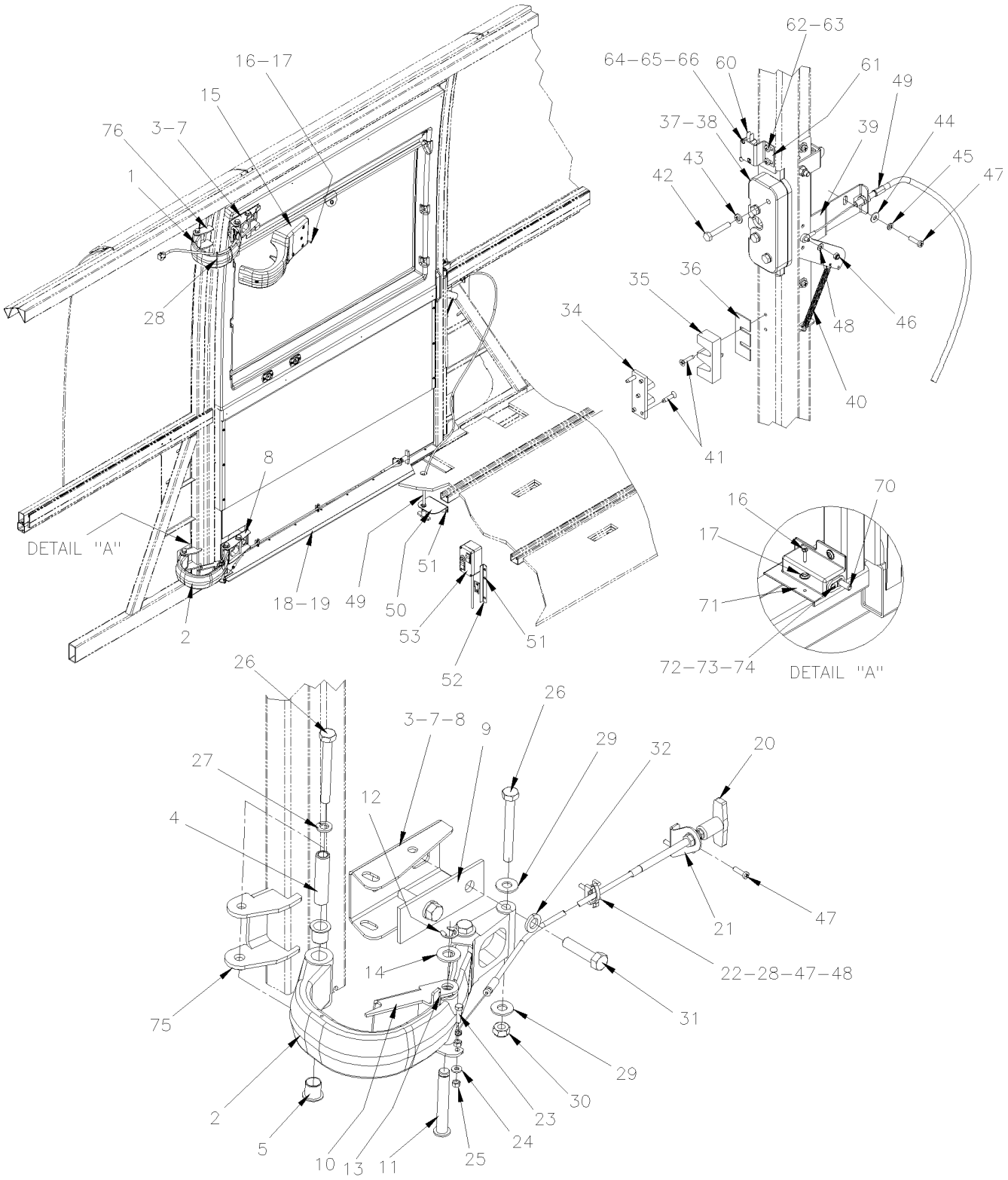

From Y-7046 Up to 6-8906	DATE: 01/2014	PAGE: Y2-1862-82

ENTRANCE DOOR - INSTALLATION - W.C.L.

ITEM	PART	DESCRIPTION	XL45	MTH40	MTH45	MTH45S	NOTE
1	284287	HINGE UPPER Up to 2-7874	1				
1	287339	HINGE UPPER From 2-7875 Up to 3-8074	1				
1	287404	HINGE UPPER From 3-8075 Up to 3-8334	1				
1	287472	HINGE UPPER From 3-8335	1				
2	287924	HINGE LOWER Up to 2-7874 / REPLACED BY: 287338	1				
2	287338	HINGE LOWER From 2-7875	1				
3	287948	RUBBER PAD 110MM X 75MM	1				B
4	287337	SPACER / <> BEARING FLANGE	2				
5	507326	BEARING FLANGE	4				
NS	680739	GREASE SYNTHETIC / RED (20KL)	AR				
7	287151	ATTACHMENT UPPER HINGE	1				
8	287152	ATTACHMENT LOWER HINGE	1				
9	286998	SUPPORT PLATE 134MM X 48MM	2				
10	287179	LEVER LOCK	1				
11	287180	PIVOT	1				
12	507110	RING RETAINER / EXT .500 x .392 x .042" / SS	1				
13	371135	SPRING, TORSION / .562 I.D. x .061	1				
14	500958	WASHER FL .531x1.062x.095 SS	1				
15	287160	CAP COVER UPPER	1				
16	500552	SCREW TP OV PH #6x3/4 ZP	5				
17	500463	WASHER FN CKF .187x.500x.090 BR NP	5				
18	287193	DOORSTEP W.C.L. Up to 5-8605	1				
18	288623	DOORSTEP W.C.L. From 5-8606	1				
19	504340	RIVET POP DOME OE 1/8x3/16 SS	9				
20	780635	CABLE DOOR SAFETY UNLATCH Up to 3-8114 / REPLACED BY: 287407	1				
20	287456	CABLE DOOR SAFETY UNLATCH From 3-8115 Up to 4-8278 / REPLACED BY: 287407	1				
20	287470	CABLE DOOR SAFETY UNLATCH From 4-8279	1				
21	287196	SUPPORT CABLE	1				
22	504013	TIE MOUNT / 1/4" X 1/4" I.D.	2				
23	5001146	SCREW CAP HEX M5-0.8x20 SS EMN	1				
24	5001449	NUT HEX M5-0.8 SS	2				
25	502570	WASHER LO SPT 6.1x11.8x1.6 SS	1				
NS	680038	THREAD LOCKER LOCTITE #243 / BLUE / 50ml	1				
26	5001016	SCREW CAP HEX M10-1.5x90 G8.8 ZP	6				
27	500257	WASHER LO SPT 10.2x18.1x2.2 ZP	2				
28	504637	CABLE TIE / 3/16" x 13"	AR				
29	500445	WASHER FL .437x1.000x.083 ZP	8				
30	502617	NUT HEX NYRT M10-1.5 CP	4				
31	5001519	SCREW CAP HEX M12-1.75x50 G8.8 FT ZP	4				
		B) FIXED ON GLASS WINDOW IN LINE WITH UPPER					
		HINGE					

From Y-7046 Up to 6-8906	DATE: 01/2014	PAGE: Y2-1862-82

ENTRANCE DOOR - INSTALLATION - W.C.L.

ITEM	PART	DESCRIPTION	XL45	MTH40	MTH45	MTH45S	NOTE
32	500482	WASHER LO SPT .506x.873x.125 ZP	4				
34	780496	DOVETAIL, MALE	1				
35	780497	DOVETAIL, FEMALE / FIXED ON STRUCTURE	1				
36	287209	SHIM 16GA	2				
37	287173	LATCH ASSY	1				
38	287645	SHIM LATCH SS 16 GA	AR				
39	287171	TRANSFER LEVER Up to 3-8114 / REPLACED BY: 287427	1				A
39	289242	TRANSFER LEVER From 3-8115	1				S
40	502092	. SPRING EXTENSION / .240 O.D. x 2.5 x .034	1				
41	500260	SCREW TC FL PH #8-32x3/4 BK	2				
42	502818	SCREW CAP HEX M6-1.0x35 G8.8 ZP	4				
43	502570	WASHER LO SPT 6.1x11.8x1.6 SS	4				
44	500964	WASHER FL .203x.500x.047 ZP	3				
45	500470	WASHER LO SPT .193x.334x.047 ZP	3				
46	500590	NUT HEX NYRT M4-0.7 ZP	1				
47	500658	SCREW TC PAN PH #10-24x3/4 ZP	7				
48	500591	WASHER FL 4.3x9.0x0.8 ZP	3				
49	780636	CABLE DOOR LATCH Up to 3-8114 / REPLACED BY: 287217	1				
49	287455	CABLE DOOR LATCH From 3-8115 Up to 4-8278 / REPLACED BY: 287217	1				
49	287469	CABLE DOOR LATCH From 4-8279	1				
50	287174	SUPPORT CABLE	1				
51	504379	RIVET POP DOME OE 3/16x1/4 SS	AR				
52	363896	ANGLE GUIDE REMOTE CONTROL	1				
53	Y2-2380-05	**W.C.L. "RICON" MODEL "F9A"**					
53	Y2-2380-06	**W.C.L. "RICON" MODEL "HC-L002"**					
53	Y2-2380-07	**W.C.L. "RICON" REMOVABLE MODEL "F9T"**					
53	Y2-2380-08	**W.C.L. "RICON" REMOVABLE MODEL "F9TF"**					
60	562096	MICRO SWITCH	1				
61	065388	SUPPORT / SWITCH	1				
62	5001491	SCREW TC PAN PH #8-32x3/4 SS	2				
63	500581	WASHER LO SPT .141x.250x.031 SS	2				
64	502519	SCREW MA FL SLT #4-40x5/8 ZP	2				
65	5001407	WASHER LO EXT 3.2x6.0x0.4 SS	2				
66	502520	NUT HEX #4-40 ZP	2				
70	562303	SWITCH / S.P.S.T. / N.C.	1				
71	065444	SWITCH SUPPORT / ENTRANCE DOOR W.C.L.	1				
72	500148	SCREW MA RND PH #6-32x1/2 SS	1				
73	502649	WASHER LO EXT .141x.320x.022 ZP	1				
74	500553	NUT HEX #6-32 SS / REPLACED BY: 500997	1				
		A) FOR PRODUCT IMPROVEMENT ASK KIT #287427 Up to					
		3-8114					
		S) AS SHOWN					

From Y-7046 Up to 6-8906	DATE: 01/2014	PAGE: Y2-1862-82

ENTRANCE DOOR - INSTALLATION - W.C.L.

ITEM	PART	DESCRIPTION	XL45	MTH40	MTH45	MTH45S	NOTE
75	287897	HINGE SUPPORT / LOWER	1				
76	287898	HINGE SUPPORT / UPPER	1				
80	287217	KIT, CABLE DOOR LATCH W.C.L. Up to 4-8278	1				
. NS	IS-03051	. SEE INSTRUCTION SHEET Up to 4-8278	1				
81	287407	KIT, CABLE DOOR SAFETY LATCH W.C.L. Up to 4-8278	1				
. NS	IS-03051	. SEE INSTRUCTION SHEET Up to 4-8278	1				
82	287427	KIT WCL DOOR Up to 3-8114	1				
. NS	IS-02048A	. SEE INSTRUCTION SHEET Up to 3-8114	1				

From Y-7046 Up to 6-8906	DATE: 01/2014	PAGE: Y2-1863-00
CONDENSOR DOOR ASSY - BUS		

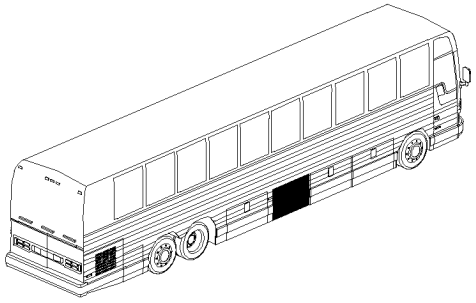

BUS 45'

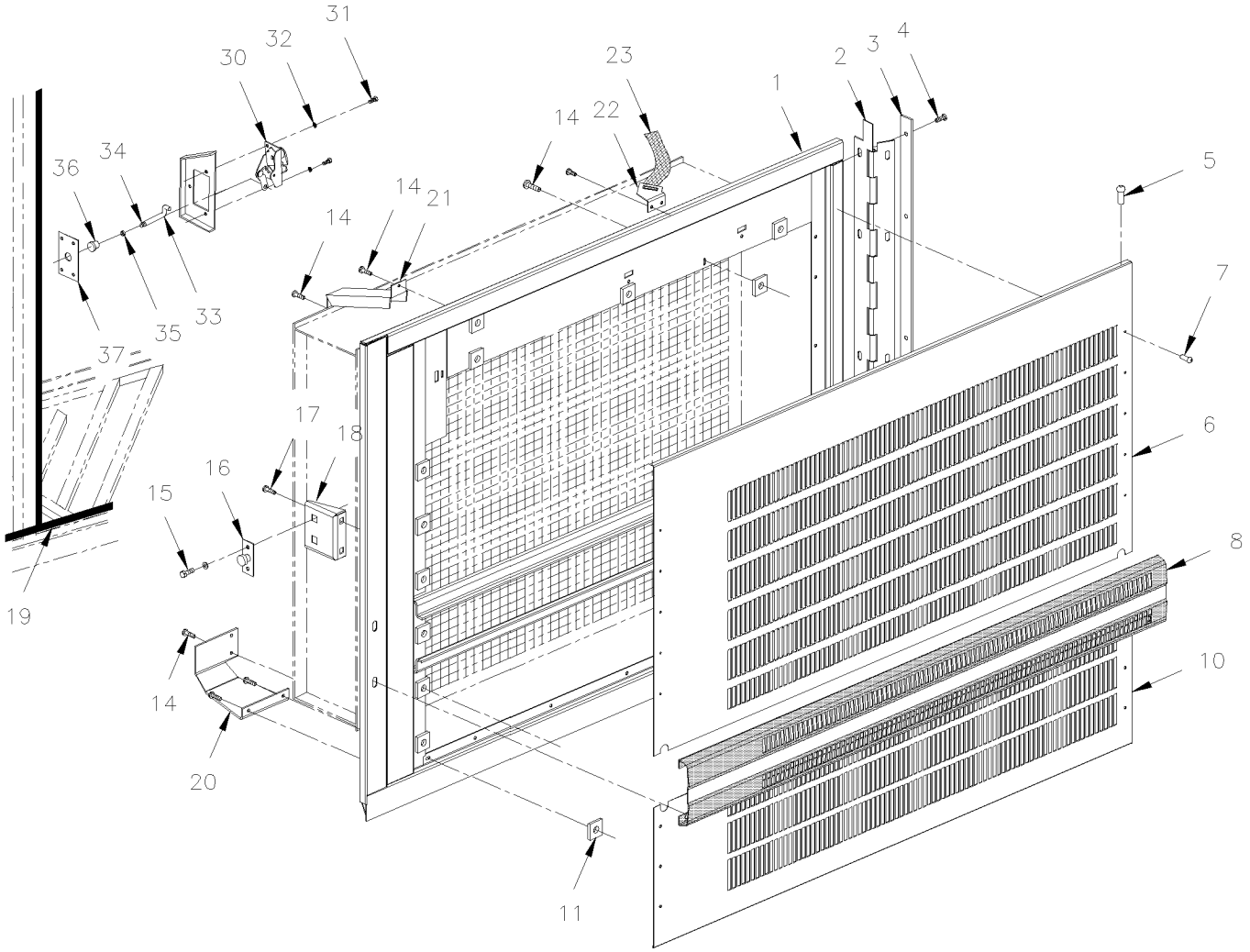

From Y-7046 Up to 6-8906	DATE: 01/2014	PAGE: Y2-1863-00

CONDENSOR DOOR ASSY - BUS

ITEM	PART	DESCRIPTION	XL45	MTH40	MTH45	MTH45S	NOTE
		ALL DOORS ASSY DO NOT INCLUDE					
		RUB-RAIL PLEASE ORDER SEPARATELY					
	483651	CONDENSOR DOOR ASSY / W/FLAT PANEL	1				
	483658	CONDENSOR DOOR ASSY / W/FLUTED	1				A
1	483015	. FRAME ASSY / 1354MM Up to 2-7753 / REPLACED BY: 483814	1				F
1	483102	. FRAME ASSY / 1354MM From 2-7754 Up to 5-8358 / REPLACED BY: 483814	1				
1	483814	. FRAME ASSY / 1354MM From 5-8359	1				
NS	481047	. HINGE PLATE 31"1/16 W/ 5 HOLES 1/4-28 Up to 2-7831	1				B
NS	483638	. HINGE PLATE 31"1/16 W/ 5 HOLES 1/4-28 From 2-7832	1				B
2	480907	. HINGE	1				
3	480910	. REINFORCEMENT OF HINGE / THIN 31 1/4" x 1/8 FRAME SIDE	1				
NS	481840	. REINFORCEMENT OF HINGE / 31 7/8" X GA11 STRUCTURE SIDE	1				
NS	481131	. SHIM 2" X 1"1/8 / HINGE SUPPORT	AR				
4	500316	. SCREW MA FL PH 1/4-28x3/4 SS	5				
5	504340	. RIVET POP DOME OE 1/8x3/16 SS	AR				
6	483147	. PANEL, UPPER / FLAT Up to 2-7753 / REPLACED BY: 483543	1				
6	483543	. PANEL, UPPER / FLAT From 2-7754 Up to 5-8358 / REPLACED BY: 483805	1				
6	483805	. PANEL, UPPER / FLAT From 5-8359	1				
6	483331	. PANEL, UPPER / WFLUTED / S.B. Up to 5-8358 / REPLACED BY: K483331	1				A
6	483804	. PANEL, UPPER / WFLUTED / S.B. From 5-8359	1				A
NS	680025	. CAULKING STRIP 3/16" O.D. X 14'	AR				
NS	680065	. TAPE COMPOUND / BLACK / 1/32" X 1" X 33' / L163-2400	AR				
7	504272	. RIVET CHY Q BRAZ 3/16x1/8 SS / REPLACED BY: 504745	AR				
8	Y2-1855-00	**RUB RAIL - CREST & TRIMS**					
10	483245	. PANEL, LOWER	1				
10	483332	. PANEL, LOWER / S.B.	1				A
11	481249	. NUT Up to 2-7753	AR				
14	500524	. SCREW TP PAN PH #12x5/8 SS Up to 2-7753	AR				
NS	5001181	. SCREW CAP HEX M6-1.0x12 SS From 2-7754	AR				
NS	500411	. WASHER FL .260x.697x.050 SS From 2-7754	AR				
15	500316	. SCREW MA FL PH 1/4-28x3/4 SS	2				
NS	502582	. WASHER LO SERR 6.1x16.2x0.9 ZP	2				
NS	500692	. NUT HEX 1/4-28 ZP	2				
16	780278	. PIN, STRIKER STUD	1				
NS	283326	. STRIKER PLATE, MOUNTING / 60MM X 25MM	1				
NS	500163	. SCREW CAP HEX 1/4-20x3/4 G5 ZP	2				
NS	502583	. WASHER LO SERR 8.15x22.3x1.0 ZP / REPLACED BY: 502856	2				
18	284605	. SUPPORT / TO FIX CATCH	1				
		A) USE WITH BUS WITH FLUTED LOWER PANELLING					
		B) INSIDE OF DOOR FRAME PANEL					
		F) FOR PRODUCT IMPROVEMENT, ASK KIT 483536					

From Y-7046 Up to 6-8906	DATE: 01/2014	PAGE: Y2-1863-00

CONDENSOR DOOR ASSY - BUS

ITEM	PART	DESCRIPTION	XL45	MTH40	MTH45	MTH45S	NOTE
19	482099	. WEATHERSTRIP / CONDENSOR DOOR / REPLACED BY: 280152	1				
19	480009	. WEATHERSTRIP / CONDENSOR DOOR	1				
NS	280152	. . WEATHERSTRIP RUBBER EPDM CC EXTRUSION / RAW MATERIAL	AR				
20	482322	SUPPORT	1				
21	Y2-2255-00	**CONDENSOR - INSTALLATION LARGE SYSTEM**					
22	452813	SUPPORT STRAP RETAINER W/2 SLOTS & 2 HOLES Up to 2-7753	1				
23	505507	STRAP NYLON 1" WIDE / S.L. Up to 2-7878	AR				
NS	452816	SUPPORT STRAP Up to 2-7878	1				C
NS	284439	PLATE, STRAP RETAINING / OBLONG 16.5MM x 25.4MM W/2 HOLES Up to 2-7878	1				
30	780282	LOCK SPAGNOLET L.H. Up to 2-7755	1				
30	780652	LOCK SPAGNOLET L.H. / W/G-FITTING From 2-7756	1				
. NS	780340	. CLIP, RETAINER ROD From 2-7756	1				
. NS	507607	. GREASE FITTING / From 2-7756	1				
NS	505213	SHIM 1/16" THICK	AR				
NS	505193	SHIM 1/8" THICK	AR				
31	955271	SCREW CAP HEX M6-1.0x16 G8.8 ZG603	2				
32	502582	WASHER LO SERR 6.1x16.2x0.9 ZP	2				
33	284596	ROD OPENING 68MM	1				
34	500764	NUT HEX #8-32 ZP	1				
35	504083	SNAP BUSHING / .250x.468.406	1				
36	505504	KNOB, PULL / 8-32	1				
37	482726	CLOSING PLATE 30MM X 50MM / SS	1				
NS	504473	RIVET POP DOME OE 1/8x1/4 SS	4				
NS	483536	KIT RETROFIT, CONDENSER DOOR Up to 2-7753	1				
. NS	IS-01061	. SEE INSTRUCTION SHEET Up to 2-7753	1				
		C) FIXED UNDER PASSENGER FLOOR					

From Y-7046 Up to 6-8906	DATE: 01/2014	PAGE: Y2-1863-00

CONDENSOR DOOR ASSY - BUS

ITEM	PART	DESCRIPTION	XL45	MTH40	MTH45	MTH45S	NOTE

From Y-7046 Up to 8-9339	DATE: 01/2014	PAGE: Y2-1863-50
CONDENSOR DOOR ASSY		

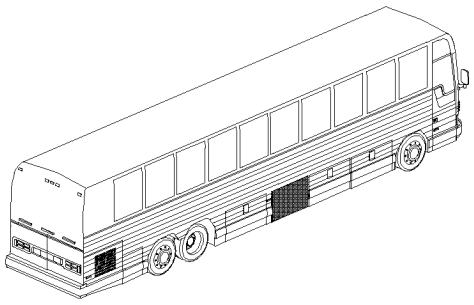

MTH 45'

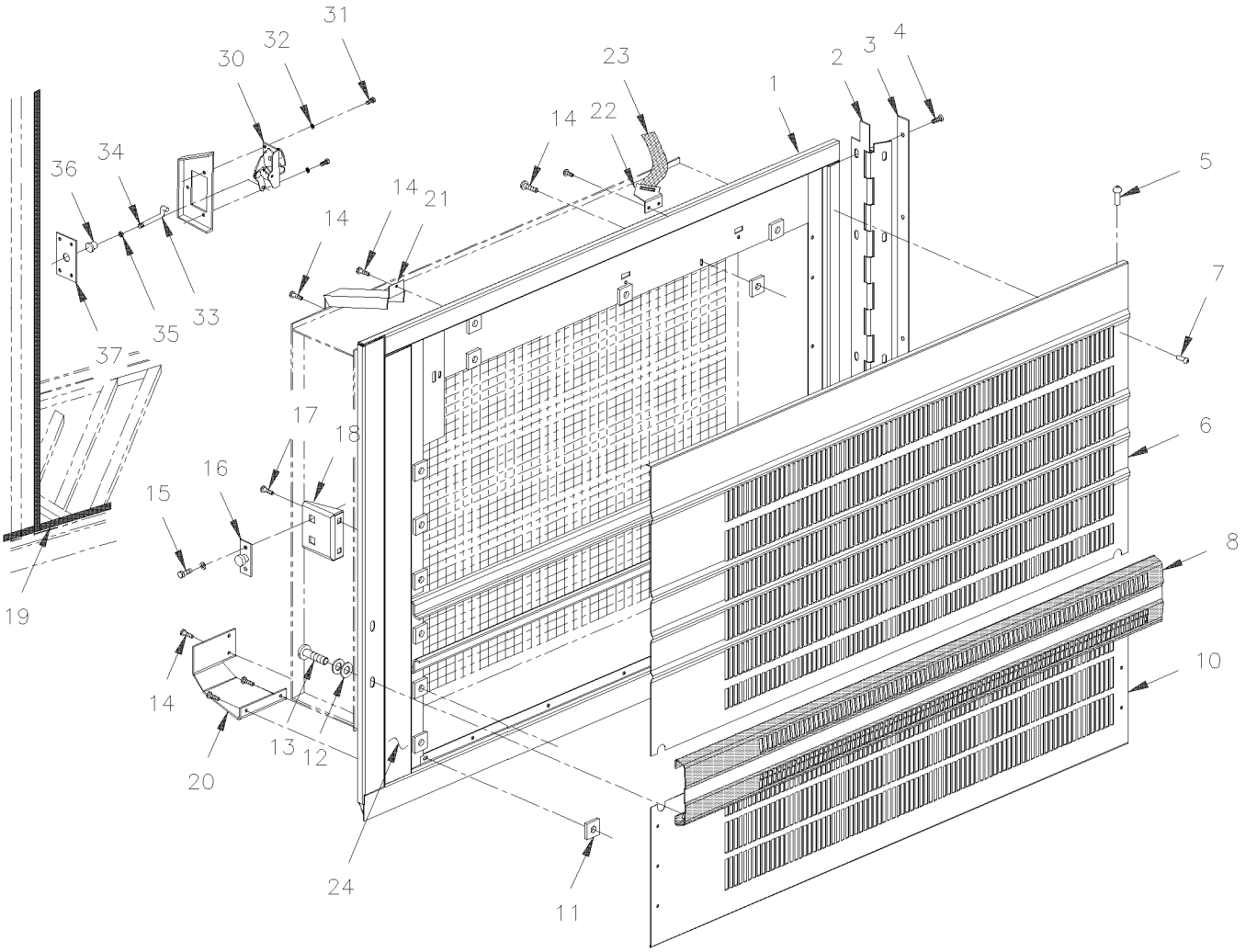

From Y-7046 Up to 8-9339	DATE: 01/2014	PAGE: Y2-1863-50

CONDENSOR DOOR ASSY

ITEM	PART	DESCRIPTION	XL45	MTH40	MTH45	MTH45S	NOTE
		ALL DOORS ASSY DO NOT INCLUDE					
		RUB-RAIL PLEASE ORDER SEPARATELY					
	453321P	CONDENSOR DOOR ASSY W/1 MOTOR			1		
1	482668	. FRAME ASSY			1		
NS	481047	. HINGE PLATE 31"1/16 W/ 5 HOLES 1/4-28 Up to 2-7831			1		A
NS	483638	. HINGE PLATE 31"1/16 W/ 5 HOLES 1/4-28 From 2-7832			1		A
2	480907	. HINGE			1		
3	480910	. REINFORCEMENT OF HINGE / THIN 31 1/4" x 1/8 FRAME SIDE			1		
NS	481840	. REINFORCEMENT OF HINGE / 31 7/8" X GA11 STRUCTURE SIDE			1		
NS	481131	. SHIM 2" X 1"1/8 / HINGE SUPPORT			AR		
4	500316	. SCREW MA FL PH 1/4-28x3/4 SS			5		
5	504340	. RIVET POP DOME OE 1/8x3/16 SS			AR		
6	482670	. PANEL, UPPER / S.B. Up to 5-8358 / REPLACED BY: 483900			1		
6	483800	. PANEL, UPPER / S.B. From 5-8359 Up to 5-8468			1		
6	483900	. PANEL, UPPER / B.A. From 5-8469			1		
NS	680025	. CAULKING STRIP 3/16" O.D. X 14'			AR		
NS	680065	. TAPE COMPOUND / BLACK / 1/32" X 1" X 33' / L163-2400			AR		
7	504272	. RIVET CHY Q BRAZ 3/16x1/8 SS / REPLACED BY: 504745			AR		
8	Y2-1855-00	**RUB RAIL - CREST & TRIMS**					
10	482669	. PANEL, LOWER / S.B. Up to 5-8468 / REPLACED BY: 483896			1		
10	483896	. PANEL, LOWER / B.A. From 5-8469			1		
11	481249	. NUT			AR		
12	500411	. WASHER FL .260x.697x.050 SS			4		
NS	500473	. WASHER LO SPT .262x.489x.062 ZP			4		
13	500556	. SCREW MA TR PH 1/4-20x3/4 SS			4		
14	500524	. SCREW TP PAN PH #12x5/8 SS			AR		
15	500316	. SCREW MA FL PH 1/4-28x3/4 SS			2		
NS	502582	. WASHER LO SERR 6.1x16.2x0.9 ZP			2		
NS	500692	. NUT HEX 1/4-28 ZP			2		
16	780278	. PIN, STRIKER STUD			1		
NS	283326	. STRIKER PLATE, MOUNTING / 60MM X 25MM			1		
NS	500163	. SCREW CAP HEX 1/4-20x3/4 G5 ZP			2		
NS	502583	. WASHER LO SERR 8.15x22.3x1.0 ZP / REPLACED BY: 502856			2		
18	284605	. SUPPORT / TO FIX CATCH			1		
19	482099	WEATHERSTRIP / CONDENSOR DOOR / REPLACED BY: 280152			1		
NS	480009	WEATHERSTRIP / CONDENSOR DOOR			1		
NS	280152	. WEATHERSTRIP RUBBER EPDM CC EXTRUSION / RAW MATERIAL			AR		
20	482452	SUPPORT			1		
NS	482328	BLOCK SUPPORT			1		
NS	481055	SHIM / FOR THE BLOCK			1		
21	Y2-2255-50	**CONDENSOR - INSTALLATION LARGE SYSTEM**					
		A) INSIDE OF DOOR FRAME PANEL					

From Y-7046 Up to 8-9339	DATE: 01/2014	PAGE: Y2-1863-50

CONDENSOR DOOR ASSY

ITEM	PART	DESCRIPTION	XL45	MTH40	MTH45	MTH45S	NOTE
22	452813	SUPPORT STRAP RETAINER W/2 SLOTS & 2 HOLES			1		
23	505507	STRAP NYLON 1" WIDE / S.L.			AR		
NS	452816	SUPPORT STRAP			1		
24	482125	REINFORCEMENT, VERTICAL			1		
30	780282	LOCK SPAGNOLET L.H.			1		
NS	505213	SHIM 1/16" THICK			AR		
NS	505193	SHIM 1/8" THICK			AR		
31	502531	SCREW CAP HEX M6-1.0x16 G8.8 ZP			2		
32	502582	WASHER LO SERR 6.1x16.2x0.9 ZP			2		
33	284596	ROD OPENING 68MM			1		
34	500764	NUT HEX #8-32 ZP			1		
35	504083	SNAP BUSHING / .250x.468.406			1		
36	505504	KNOB, PULL / 8-32			1		
37	482726	CLOSING PLATE 30MM X 50MM / SS			1		
NS	504473	RIVET POP DOME OE 1/8x1/4 SS			4		

From Y-7046 Up to 8-9339	DATE: 01/2014	PAGE: Y2-1863-50

CONDENSOR DOOR ASSY

ITEM	PART	DESCRIPTION	XL45	MTH40	MTH45	MTH45S	NOTE

From Y-7046 Up to 8-9278	DATE: 01/2014	PAGE: Y2-1863-51
CONDENSOR DOOR ASSY		

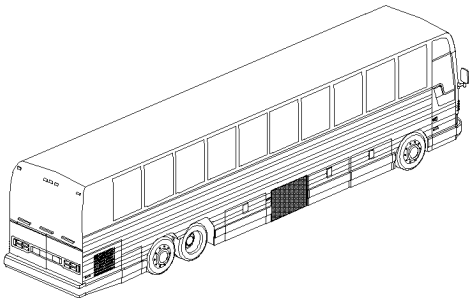

MTH 40' & 45' ENT

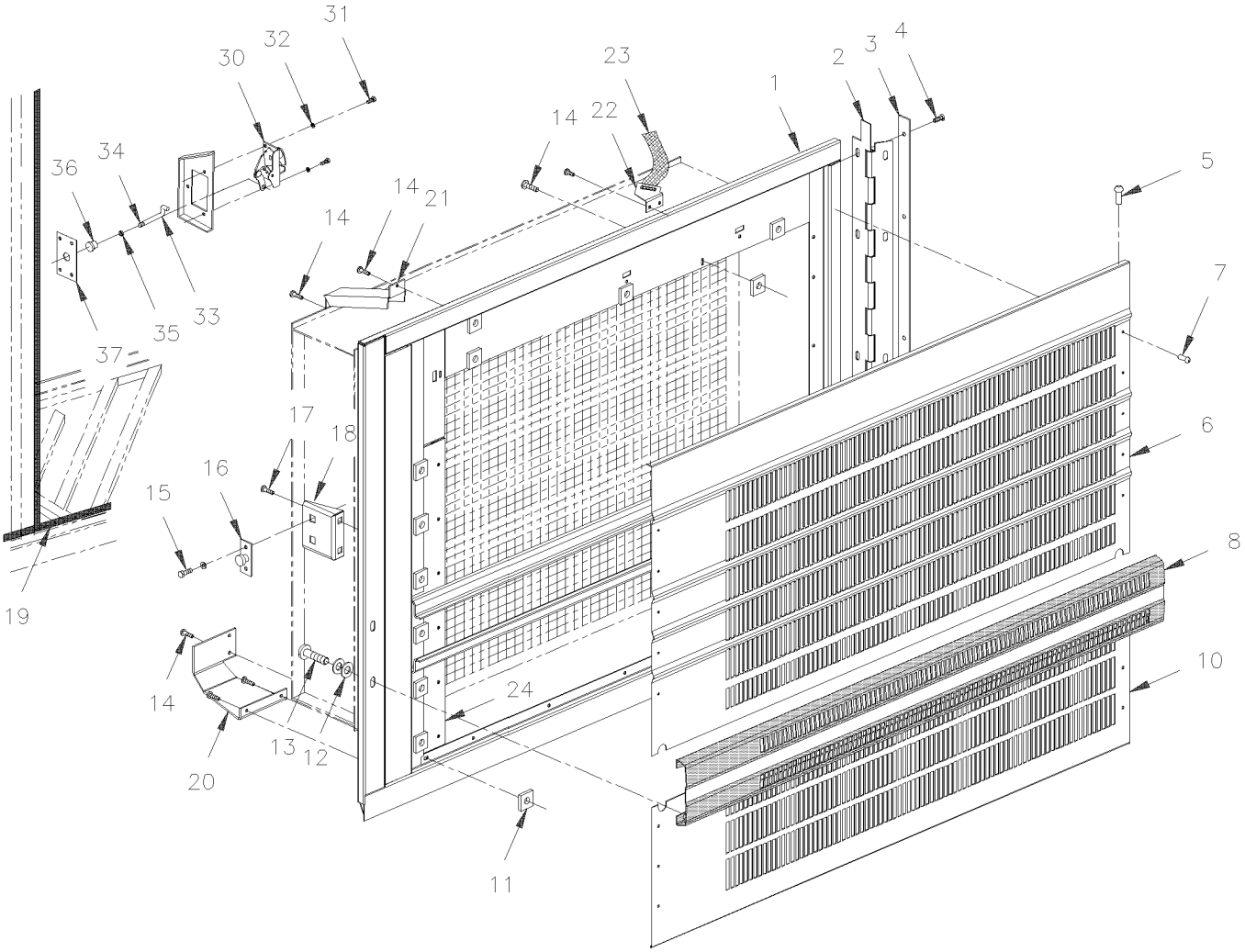

From Y-7046 Up to 8-9278	DATE: 01/2014	PAGE: Y2-1863-51

CONDENSOR DOOR ASSY

ITEM	PART	DESCRIPTION	XL45	MTH40	MTH45	MTH45S	NOTE
		ALL DOORS ASSY DO NOT INCLUDE					
		RUB-RAIL PLEASE ORDER SEPARATELY					
	483008P	CONDENSOR DOOR ASSY W/ 1 MOTOR		1		1	
1	483014	. FRAME ASSY Up to 5-8358		1		1	
1	483816	. FRAME ASSY From 5-8359		1		1	
NS	481047	. HINGE PLATE 31"1/16 W/ 5 HOLES 1/4-28 Up to 2-7831		1		1	A
NS	483638	. HINGE PLATE 31"1/16 W/ 5 HOLES 1/4-28 From 2-7832		1		1	A
2	480907	. HINGE		1		1	
3	480910	. REINFORCEMENT OF HINGE / THIN 31 1/4" x 1/8 FRAME SIDE		1		1	
NS	481840	. REINFORCEMENT OF HINGE / 31 7/8" X GA11 STRUCTURE SIDE		1		1	
NS	481131	. SHIM 2" X 1"1/8 / HINGE SUPPORT		AR		AR	
4	500316	. SCREW MA FL PH 1/4-28x3/4 SS		5		5	
5	504340	. RIVET POP DOME OE 1/8x3/16 SS		4		4	
6	483006	. PANEL, UPPER / S.B. Up to 5-8358 / REPLACED BY: 483899		1		1	
6	483803	. PANEL, UPPER / S.B. From 5-8359 Up to 5-8468		1		1	
6	483899	. PANEL, UPPER / B.A. From 5-8469		1		1	
NS	680025	. CAULKING STRIP 3/16" O.D. X 14'		AR		AR	
NS	680065	. TAPE COMPOUND / BLACK / 1/32" X 1" X 33' / L163-2400		AR		AR	
7	504272	. RIVET CHY Q BRAZ 3/16x1/8 SS / REPLACED BY: 504745		17		17	
8	Y2-1855-00	**. RUB RAIL - CREST & TRIMS**					
10	483007	. LOWER PANEL W/0.81 SQF PERFORATED AREA / S.B. Up to 5-8468 / REPLACED BY: 483940		1		1	
10	483940	. LOWER PANEL W/0.81 SQF PERFORATED AREA / B.A. From 5-8469		1		1	
11	481249	. NUT		25		25	
12	500411	. WASHER FL .260x.697x.050 SS		4		4	
NS	500473	. WASHER LO SPT .262x.489x.062 ZP		4		4	
13	500556	. SCREW MA TR PH 1/4-20x3/4 SS		4		4	
14	500524	. SCREW TP PAN PH #12x5/8 SS		AR		AR	
15	500316	. SCREW MA FL PH 1/4-28x3/4 SS		2		2	
NS	502582	. WASHER LO SERR 6.1x16.2x0.9 ZP		2		2	
NS	500692	. NUT HEX 1/4-28 ZP		2		2	
16	780278	. PIN, STRIKER STUD		1		1	
NS	283326	. STRIKER PLATE, MOUNTING / 60MM X 25MM		1		1	
NS	500163	. SCREW CAP HEX 1/4-20x3/4 G5 ZP		2		2	
NS	502583	. WASHER LO SERR 8.15x22.3x1.0 ZP / REPLACED BY: 502856		2		2	
18	284605	. SUPPORT / TO FIX CATCH		1		1	
19	482099	WEATHERSTRIP / CONDENSOR DOOR / REPLACED BY: 280152		1		1	
19	480009	WEATHERSTRIP / CONDENSOR DOOR		1		1	
19	280152	. WEATHERSTRIP RUBBER EPDM CC EXTRUSION / RAW MATERIAL		AR		AR	
20	482452	SUPPORT		1		1	
21	Y2-2255-50	**CONDENSOR - INSTALLATION LARGE SYSTEM**					
22	452813	SUPPORT STRAP RETAINER W/2 SLOTS & 2 HOLES		1		1	
		A) INSIDE OF DOOR FRAME PANEL					

From Y-7046 Up to 8-9278	DATE: 01/2014	PAGE: Y2-1863-51

CONDENSOR DOOR ASSY

ITEM	PART	DESCRIPTION	XL45	MTH40	MTH45	MTH45S	NOTE
23	505507	STRAP NYLON 1" WIDE / S.L.		AR		AR	
24	482366	REINFORCEMENT, VERTICAL		1		1	
30	780282	LOCK SPAGNOLET L.H.		1		1	
NS	505213	SHIM 1/16" THICK		AR		AR	
NS	505193	SHIM 1/8" THICK		AR		AR	
31	502531	SCREW CAP HEX M6-1.0x16 G8.8 ZP		2		2	
32	502582	WASHER LO SERR 6.1x16.2x0.9 ZP		2		2	
33	284596	ROD OPENING 68MM		1		1	
34	500764	NUT HEX #8-32 ZP		1		1	
35	504083	SNAP BUSHING / .250x.468.406		1		1	
36	505504	KNOB, PULL / 8-32		1		1	
37	482726	CLOSING PLATE 30MM X 50MM / SS		1		1	
NS	504473	RIVET POP DOME OE 1/8x1/4 SS		4		4	

From Y-7046 Up to 8-9278	DATE: 01/2014	PAGE: Y2-1863-51

CONDENSOR DOOR ASSY

ITEM	PART	DESCRIPTION	XL45	MTH40	MTH45	MTH45S	NOTE

From Y-7046 Up to 6-8906	DATE: 01/2014	PAGE: Y2-1864-00

BAGGAGE DOOR ASSY - BUS

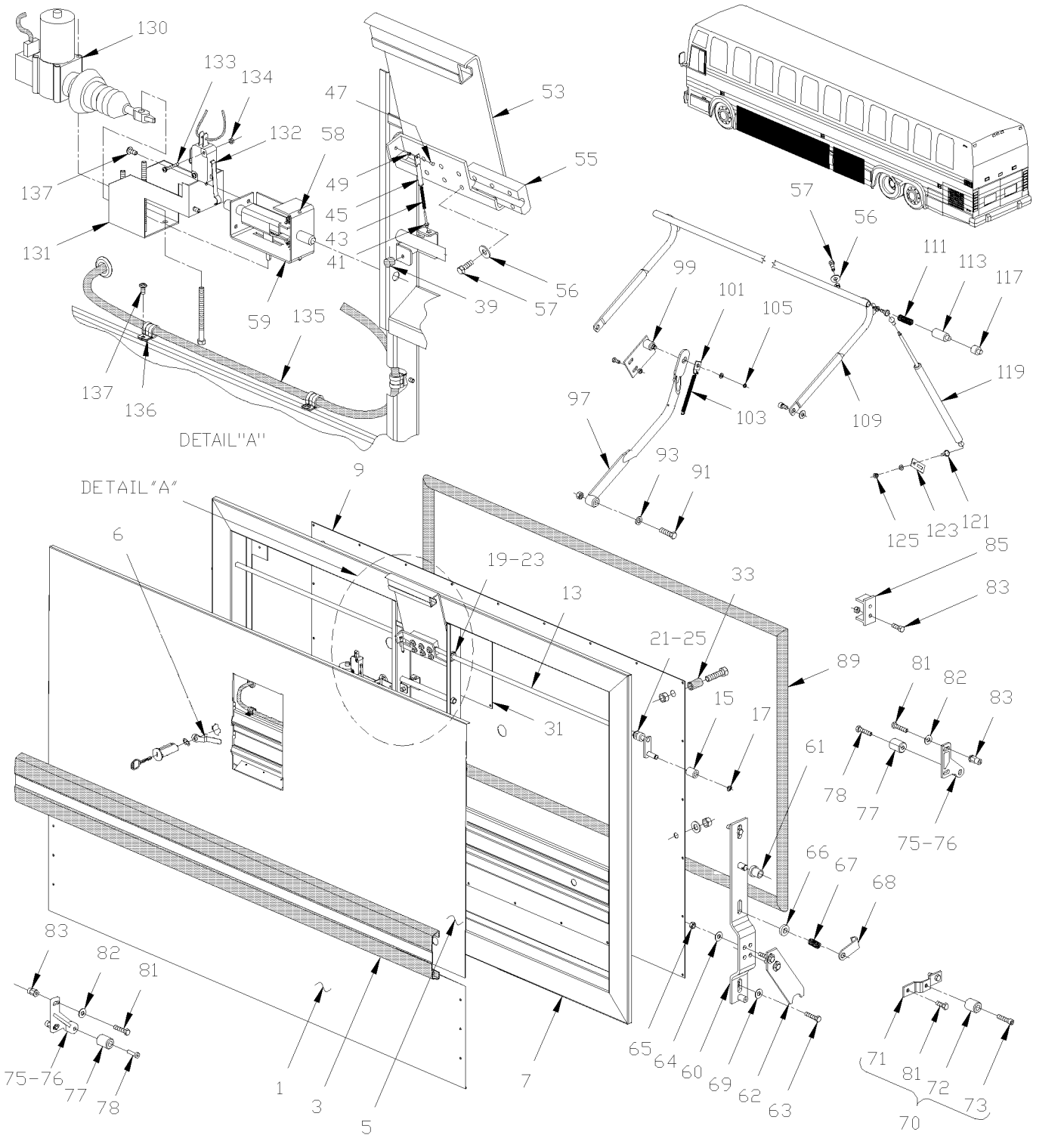

From Y-7046 Up to 6-8906	DATE: 01/2014	PAGE: Y2-1864-00

BAGGAGE DOOR ASSY - BUS

ITEM	PART	DESCRIPTION	XL45	MTH40	MTH45	MTH45S	NOTE
		ALL DOORS ASSY DO NOT INCLUDE					
		RUB-RAIL PLEASE ORDER SEPARATELY					
	483519	DOOR ASSY 60" / W/FLAT PANEL & ELECTRIC LOCK	6				
	483136P	DOOR ASSY 60" / W/FLAT PANEL	6				
	483404	DOOR ASSY 60" / W/INSUL & ELECTRIC LOCK	AR				A
	483404	DOOR ASSY 60" / W/INSUL & ELECTRIC LOCK	6				A
	483518	DOOR ASSY 60" / W/INT PANEL	6				B
1	481994	. LOWER PANEL 60" / S.B.	AR				A
1	483220	. LOWER PANEL 60" / FLAT Up to 1-7726 / REPLACED BY: 483542	1				
1	483542	. LOWER PANEL 60" / FLAT From 1-7727	1				
NS	504272	. RIVET CHY Q BRAZ 3/16x1/8 SS / REPLACED BY: 504745	6				
3	Y2-1855-00	**. RUB RAIL - CREST & TRIMS**					
NS	504433	. SNAP-IN PLUG / 1.090 O.D.	AR				
5	482860	. UPPER PANEL 60" / S.B.	AR				A
5	483129	. UPPER PANEL 60" / FLAT	1				
6	281498	. PIVOT LOCK 3/8" OFFSET / REPLACED BY: 287406	1				
7	483110	. FRAME 60" Up to 2-7760 / REPLACED BY: 483733	1				
7	483480	. FRAME 60" From 2-7761 Up to 3-8109 / REPLACED BY: 483733	1				
7	483733	. FRAME 60" From 3-8110	1				
9	483146	. PANEL INTERIOR 60" Up to 2-7760	1				
9	483538	. PANEL INTERIOR 60" From 2-7761 Up to 5-8358 / REPLACED BY: K483538	1				
9	483812	. PANEL INTERIOR 60" From 5-8359	1				
NS	504347	. RIVET POP DOME OE 3/16x1/4 AL	AR				
NS	506268	. TAPE RUB ADH1 URE 3/8" x 1/2" x 25' / GREY 1820	1				
13	481975	. ROD ASSY LOCK W/60" Up to 2-7831	2				
13	483593	. ROD ASSY LOCK W/60" From 2-7832	2				
13	481973	. . ROD LOCK W/60" Up to 2-7831	2				
13	483594	. . ROD LOCK W/60" From 2-7832	2				
15	480478	. . ROLLER Up to 2-7831	1				
15	483595	. . ROLLER From 2-7832	1				
17	504318	. . RING RETAINER / EXT .375 x .352 x .025	1				
19	504650	. GROMMET / .375x.625x.062x.313x.875	2				
		A) USE WITH BUS WITH FLUTED LOWER PANELLING					
		B) USE WITH BUS WITH FLUTED LOWER PANELLING &					
		W/OUT ELECTRICAL LOCK					

From Y-7046 Up to 6-8906	DATE: 01/2014	PAGE: Y2-1864-00

BAGGAGE DOOR ASSY - BUS

ITEM	PART	DESCRIPTION	XL45	MTH40	MTH45	MTH45S	NOTE
21	507254	. BUSHING NYLINER W/SHOULDER	2				
23	507260	. BUSHING NYLINER W/SHOULDER .375x.437x.375x.594	2				
25	505229	. SPACER 3/8 I.D. X 3/8 LG	2				
31	481787	. PANEL ACCESS 9" X 9"	1				
NS	500257	. WASHER LO SPT 10.2x18.1x2.2 ZP	4				
33	504311	. BUMPER RUBBER / 1.500 OD x1.500 TH x.250 HOLE Up to 2-7760	2				
33	5001168	. BUMPER RUBBER / .750 OD x .562 TH x .187 HOLE From 2-7761	2				
NS	500508	. SCREW TC PAN PH #10-32x1 1/2 ZP / REPLACED BY: 5001143	2				
39	504334	. BUMPER RUBBER / .625 OD x .406 TH x .156 HOLE	1				
NS	504339	. RIVET POP DOME OE 1/8x3/8 SS	1				
41	481007	. ROD ASSY MALE	1				
43	480394	. SPRING COMPRESSION / .355 O.D. 3.375 x .063	1				
45	481227	. ROD FEMALE	1				
47	504142	. RIVET SOL RND 1/4x3/8 SS	1				
49	481012	. BUSHING LEVER	1				
53	481358	. HANDLE ASSY / S.B.	1				
55	481011	. RETAINER ROD / HANDLE / CHROMATE Up to 2-7831	1				
55	483587	. RETAINER ROD / HANDLE / E-COAT BLACK From 2-7832	1				
56	500473	. WASHER LO SPT .262x.489x.062 ZP	6				
57	500163	. SCREW CAP HEX 1/4-20x3/4 G5 ZP	6				
58	481564	. ROD GUIDE	2				
59	502151	. SPRING COMPRESSION / .300 O.D. x 1 x .032	2				
NS	480932	. BRACKET ASSY	1				
. NS	480933	. . BRACKET / REPLACED BY: 480932	1				
. NS	480935	. . ROD	1				
. NS	480937	. . PLATE, SUPPORT / REPLACED BY: 480932	1				
60	480465	. PLATE ASSY L.H. Up to 1-7680	1				
60	482820	. PLATE ASSY L.H. From 1-7681 Up to 1-7831	1				
60	483588	. PLATE ASSY L.H. From 2-7832	1				
60	480466	. PLATE ASSY R.H. Up to 1-7680	1				
60	482994	. PLATE ASSY R.H. From 1-7681 Up to 1-7831	1				
60	483591	. PLATE ASSY R.H. From 2-7832	1				
60	480463	. . BRACKET ASSY L.H. Up to 2-7831	1				
60	483589	. . BRACKET ASSY L.H. From 2-7832	1				
60	480464	. . BRACKET ASSY R.H. Up to 2-7831	1				

From Y-7046 Up to 6-8906	DATE: 01/2014	PAGE: Y2-1864-00

BAGGAGE DOOR ASSY - BUS

ITEM	PART	DESCRIPTION	XL45	MTH40	MTH45	MTH45S	NOTE
60	483592	. . BRACKET ASSY R.H. From 2-7832	1				
61	507257	. . BUSHING NYLINER W/SHOULDER	1				
62	480498	. . PLATE LOCK Up to 1-7680 / REPLACED BY: 483590	1				
62	482358	. . PLATE LOCK From 1-7681 Up to 1-7831	1				
62	483590	. . PLATE LOCK From 2-7832	1				
63	500179	. . SCREW CAP HEX 5/16-18x3/4 G5 ZP	5				
64	500441	. . WASHER FL .312x.734x.065 ZP	1				
65	500777	. . NUT HEX STO 5/16-18 ZP	1				
66	481287	. SPACER Up to 2-7831	1				
66	481496	. SPACER From 2-7832	1				
67	480705	. SPRING COMPRESSION / .600 O.D. x 1 x .055 CROMAT	1				
68	480657	. HOOK 68MM	1				
NS	500441	. WASHER FL .312x.734x.065 ZP	1				
NS	500183	. SCREW CAP HEX 5/16-18x1 1/2 G5 PT ZP	7				
69	500476	. WASHER LO SPT .317x.586x.078 ZP	5				
70	480510	. PLATE ASSY ANCHOR / ROLLER Up to 1-7680	2				H
71	481615	. PLATE ATTACHMENT Up to 1-7680	1				H
72	480387	. ROLLER CATCH / LOWER Up to 2-7831	1				
72	483597	. ROLLER CATCH / LOWER From 2-7832	1				
73	502512	. SCREW CAP HEXS 5/16-18x1 1/2 ZP Up to 1-7680 / REPLACED BY: 502503	1				
75	483389	ATTACHMENT ASSY L.H. / W/ROLLER From 1-7681 Up to 2-7831	1				V
75	483598	ATTACHMENT ASSY L.H. / W/ROLLER From 2-7832 Up to 2-7934 / REPLACED BY: 483602	1				V
75	483602	ATTACHMENT ASSY L.H. / W/ROLLER / DIE CASTING From 2-7935	1				V
75	483388	ATTACHMENT ASSY R.H. / W/ROLLER From 1-7681 Up to 2-7831	1				V
75	483596	ATTACHMENT ASSY R.H. / W/ROLLER From 2-7832 Up to 2-7934 / REPLACED BY: 483604	1				V
75	483604	ATTACHMENT ASSY R.H. / W/ROLLER / DIE CASTING From 2-7935	1				V
76	483386	. ATTACHMENT ASSY L.H. From 1-7681 Up to 2-7934 / REPLACED BY: 483460	1				
76	483387	. ATTACHMENT ASSY R.H. From 1-7681 Up to 2-7934 / REPLACED BY: 483461	1				
76	483460	. ATTACHMENT ASSY L.H. / DIE CASTING From 2-7935	1				
76	483461	. ATTACHMENT ASSY R.H. / DIE CASTING From 2-7935	1				
77	483597	. ROLLER CATCH / LOWER From 1-7681	1				
78	502503	. SCREW CAP HEXS 5/16-18x1 1/2 ZG603	1				
81	500181	SCREW CAP HEX 5/16-18x1 G5 ZP Up to 3-7990	AR				
81	955297	SCREW CAP HEX M8-1.25x25 G8.8 ZG603 From 3-7991	AR				
82	5001045	WASHER BEL SPR .331x.827x.098 ZP Up to 3-7990	AR				
		H) THOSE PLATE ATTACHMENTS ARE FIXED HORIZONTAL					
		ON FLOOR STRUCTURE					
		V) THOSE ATTACHMENTS ARE FIXED ON VERTICAL POST					
		STRUCTURE					

From Y-7046 Up to 6-8906	DATE: 01/2014	PAGE: Y2-1864-00

BAGGAGE DOOR ASSY - BUS

ITEM	PART	DESCRIPTION	XL45	MTH40	MTH45	MTH45S	NOTE
82	500321	WASHER BEL SPR .331x.827x.098 ZG603 From 3-7991	AR				
83	502523	RIVET NUT FL OKS 5/16-18 .059-.119 Up to 3-7990	AR				
83	5001337	NUT INS FL HEX M8-1.25 0.5-3.0 ZP From 3-7991	AR				
85	482289	STRIKER CATCH Up to 2-7831	2				
85	483599	STRIKER CATCH From 2-7832	2				
89	481988	WEATHERSTRIP / W/60" BAGGAGE DOORS / REPLACED BY: 485628	6				
89	485628	WEATHERSTRIP / W/60" BAGGAGE DOORS	6				
NS	480154	. WEATHERSTRIP RUBBER / ADH / RAW MATERIAL Up to 5-8544 / REPLACED BY: 485610	AR				
NS	483941	. WEATHERSTRIP RUBBER / ADH / RAW MATERIAL From 5-8545 / REPLACED BY: 485610	AR				
89	485610	. WEATHERSTRIP RUBBER / ADH / RAW MATERIAL	AR				
91	500162	SCREW CAP HEX 1/4-20x1/2 G5 ZP	6				
93	500473	WASHER LO SPT .262x.489x.062 ZP	6				
97	481065	LEVER ASSY Up to 2-7831 / REPLACED BY: K481065	1				
97	483581	LEVER ASSY From 2-7832	1				
97	481062	. LEVER Up to 2-7831	1				
97	483582	. LEVER From 2-7832	1				
NS	507143	. BUSHING, NYLINER (8-L-12-D)	1				
99	481757	. PLATE ATTACHMENT Up to 2-7831	1				
99	483583	. PLATE ATTACHMENT From 2-7832	1				
101	480382	. PLATE ATTACHMENT / SPRING Up to 2-7831	1				
101	483584	. PLATE ATTACHMENT / SPRING From 2-7832	1				
103	502056	. SPRING EXTENSION / .437 O.D. X 5.375 x .062	1				
105	504477	. RING RETAINER / EXT 14.0 X 13.4 X 1.0mm	1				
NS	500496	. WASHER FL .437x.750x.054 ZP	AR				
109	482349	LEVER / W/60" Up to 2-7831	1				
109	483586	LEVER / W/60" From 2-7832	1				
111	502144	SPRING COMPRESSION / .720 O.D. x 2 x .062	1				
113	480369	PIVOT	1				
113	483585	PIVOT From 2-7832	1				
NS	5001346	SCREW SET HEXS CONE 1/4-20x3/4	1				
117	507141	BUSHING, NYLINER W/SHOULDER (7-L-7-F)	2				
119	980024	CYLINDER GAZ / 669/409MM C/C / 200LBS / REPLACED BY: 980030	1				
121	980015	BALL STUD / W/10MM X M8-1.25 / 29.18MM	2				
121	288625	BLOCK RETAINER CYLINDER From 6-8806			1	1	C
121	502790	SCREW CAP HEX M8-1.25x20 G8.8 ZP From 6-8806			2	2	C
		C) THOSE PARTS ARE LOCATED TO FLOOR BEAM WITH					
		SLIDE-OUT					

From Y-7046 Up to 6-8906	DATE: 01/2014	PAGE: Y2-1864-00

BAGGAGE DOOR ASSY - BUS

ITEM	PART	DESCRIPTION	XL45	MTH40	MTH45	MTH45S	NOTE
121	500441	WASHER FL .312x.734x.065 ZP From 6-8806			2	2	C
121	500476	WASHER LO SPT .317x.586x.078 ZP From 6-8806			2	2	C
123	481088	PLATE CYLINDER ADJUSTEMENT / W/53" & 60"	1				
125	502760	NUT HEX TWAY M8-1.25 ZP	2				
		NEXT FOLLOWING PARTS ARE RELATED WITH					
		ELECTRICAL DOOR LOCK					
		(FOR RETORFIT YOU REQUIRE ONE SET FOR EACH)					
130	780428	LOCK ACTUATOR / 12V	1				
. NS	562076	. CONNECTOR / PACK-CON I / FEMALE HOUSING / 2C / PED 8911772	1				
131	482109	BRACKET / TO FIX LOCK ACTUATOR	1				
132	562096	MICRO SWITCH	1				
133	502577	SCREW MA PAN PH M3-0.5x16 ZP	2				
134	502579	NUT HEX M3-0.5 NP	2				
135	062796	CABLE ASSY / ACTUATOR POWER / EACH DOOR	1				
136	560481	CLAMP / 5/8" I.D. / REPLACED BY: 952629	3				
137	500883	SCREW TC PAN PH #8-32x3/8 ZP	6				
NS	062823	CABLE ASSY / <> FRT JCT PANEL W/DOOR LOCK	1				
NS	063387	CABLE ASSY / <> FUEL COMP & REAR DOOR	1				
NS	063361	CABLE ASSY / <> FRT JCT PANEL TO FUEL COMPT	1				
		C) THOSE PARTS ARE LOCATED TO FLOOR BEAM WITH					
		SLIDE-OUT					

From Y-7046 Up to 8-9339	DATE: 01/2014	PAGE: Y2-1864-50

BAGGAGE DOOR ASSY - MTH

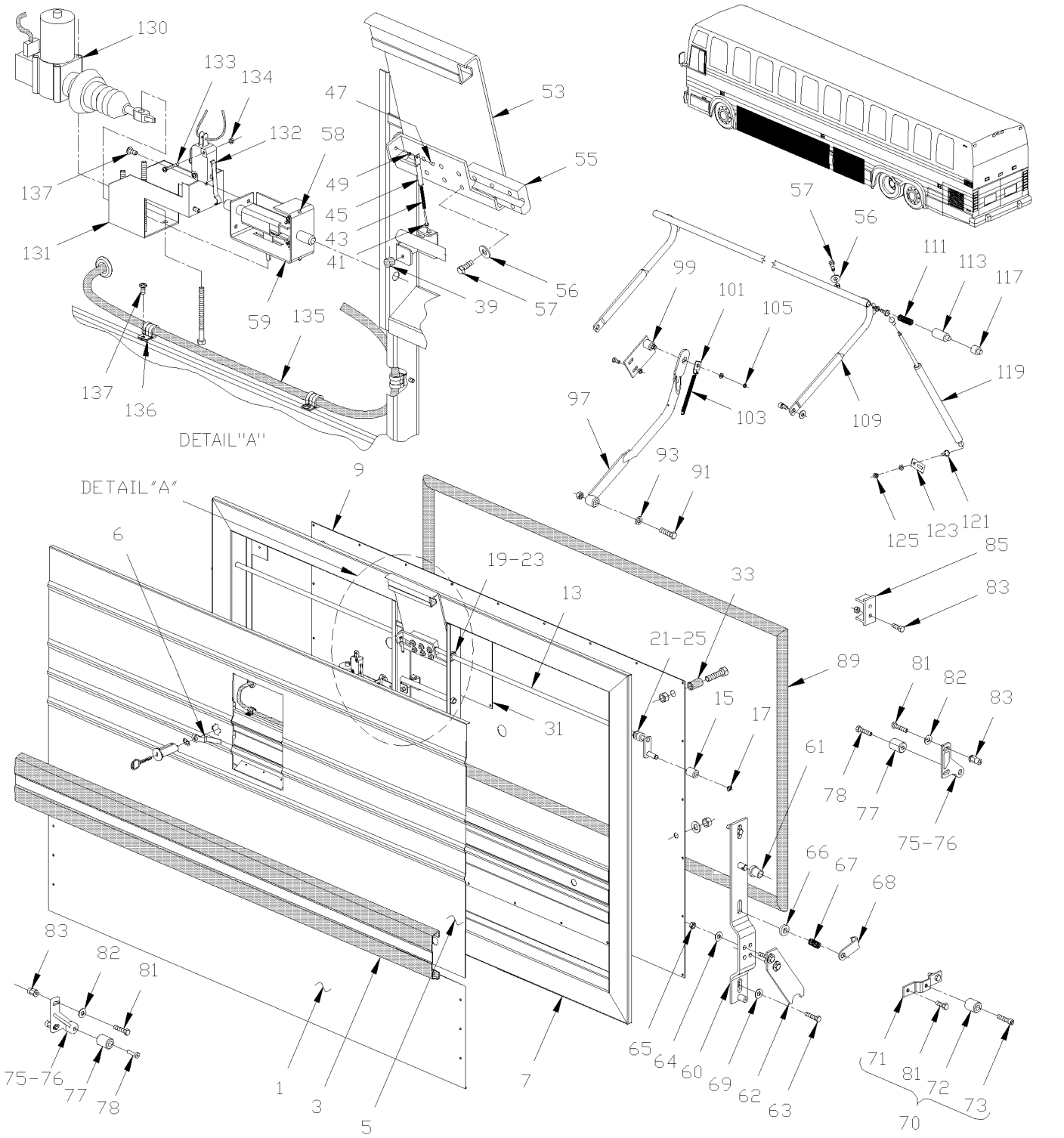

From Y-7046 Up to 8-9339	DATE: 01/2014	PAGE: Y2-1864-50

BAGGAGE DOOR ASSY - MTH

ITEM	PART	DESCRIPTION	XL45	MTH40	MTH45	MTH45S	NOTE
		ALL DOORS ASSY DO NOT INCLUDE					
		RUB-RAIL PLEASE ORDER SEPARATELY					
		THE FOLLOWING 4 DOOR ARE STANDARD WITH					
		PANEL W/O PERFORATED PANELS.					
		FOR SPECIAL PURPOSE DOOR ASSY REFER TO					
		PERFORATED & SPECIAL PANELS (BOOK PA-1108)					
	483328P	DOOR ASSY 38" / W/INSULATING & INT. PANEL				AR	
	350972	. INSULATING KIT / 38" DOOR				1	
	483521	DOOR ASSY 45" / W/INSUL & ELECTRIC LOCK		2		2	
	483783	BAGGAGE DOOR ASSY 45" / W/INSUL & ELECTRIC LO / SPECIFIED UPPER & LOWER PANE		AR		AR	E
NS	350954	. INSULATING KIT / 45" DOOR		1		1	
	483520	DOOR ASSY 53" / W/INSUL & ELECTRIC LOCK Up to 5-8813		6			
	483520	DOOR ASSY 53" / W/INSUL & ELECTRIC LOCK			2		
	483520	DOOR ASSY 53" / W/INSUL & ELECTRIC LOCK				8	
	483782	BAGGAGE DOOR ASSY 53" / W/INSUL & ELECTRIC LO / SPECIFIED UPPER & LOWER PANE		AR	AR	AR	F
NS	350951	. INSULATING KIT / 53" DOOR		1	1	1	
	483404	DOOR ASSY 60" / W/INSUL & ELECTRIC LOCK			6		
	483784	BAGGAGE DOOR ASSY 60" / W/INSUL & ELECTRIC LO / SPECIFIED UPPER & LOWER PANE			AR		G
NS	350940	. INSULATING KIT / 60" DOOR			1		
		E) SERVICE NUMBER SPECIFIED "UPPER & LOWER					
		PANEL" SEE CONVERTER'S SPECIAL BAGGAGES PANEL					
		BOOK # PA-1108 SECTION 04					
		F) SERVICE NUMBER SPECIFIED "UPPER & LOWER					
		PANEL" SEE CONVERTER'S SPECIAL BAGGAGES PANEL					
		BOOK # PA-1108 SECTION 06					
		G) SERVICE NUMBER SPECIFIED "UPPER & LOWER					
		PANEL" SEE CONVERTER'S SPECIAL BAGGAGES PANEL					
		BOOK # PA-1108 SECTION 09					

From Y-7046 Up to 8-9339	DATE: 01/2014	PAGE: Y2-1864-50

BAGGAGE DOOR ASSY - MTH

ITEM	PART	DESCRIPTION	XL45	MTH40	MTH45	MTH45S	NOTE
1	474769	. LOWER PANEL 38" / S.B. Up to 5-8468				1	
1	483928	. LOWER PANEL 38" / B.A. From 5-8469				1	
1	482490	. LOWER PANEL 45" / S.B. Up to 5-8468		1		1	
1	483887	. LOWER PANEL 45" / B.A. From 5-8469		1		1	
1	481003	. LOWER PANEL 53" / S.B. Up to 5-8468		1	1	1	
1	483772	. LOWER PANEL 53" / B.A. From 5-8469		1	1	1	
1	481994	. LOWER PANEL 60" / S.B. Up to 5-8468			1		
1	483881	. LOWER PANEL 60" / B.A. From 5-8469			1		
NS	504272	. RIVET CHY Q BRAZ 3/16x1/8 SS / REPLACED BY: 504745		6	6	6	
3	Y2-1855-00	**. RUB RAIL - CREST & TRIMS**					
NS	504433	. SNAP-IN PLUG / 1.090 O.D.		AR	AR	AR	
5	474768	. UPPER PANEL 38" / S.B. Up to 5-8813		1			
5	482888	. UPPER PANEL 45" / S.B. Up to 5-8468 / REPLACED BY: 483842		1		1	
5	483842	. UPPER PANEL 45" / B.A. From 5-8469		1		1	
5	482832	. UPPER PANEL 53" / S.B. Up to 5-8468 / REPLACED BY: 483827		1	1	1	
5	483827	. UPPER PANEL 53" / B.A. From 5-8469		1	1	1	
5	482860	. UPPER PANEL 60" / S.B. Up to 5-8468			1		
5	483838	. UPPER PANEL 60" / B.A. From 5-8469			1		
5	483954	. UPPER PANEL 60" / B.A. From 5-8457			1		J
6	281498	. PIVOT LOCK 3/8" OFFSET / REPLACED BY: 287406		1	1	1	
7	483320	. FRAME 38" Up to 2-7760 / REPLACED BY: 483483		1			
7	483483	. FRAME 38" From 2-7761 Up to 3-8109		1			
7	483736	. FRAME 38" From 3-8110 Up to 5-8813		1			
7	483168	. FRAME 45" Up to 2-7760 / REPLACED BY: 483481		1		1	
7	483481	. FRAME 45" From 2-7761 Up to 3-8109 / REPLACED BY: 483734		1		1	
7	483734	. FRAME 45" From 3-8110		1		1	
		J) USE WITH "VORAD" SYSTEM					

From Y-7046 Up to 8-9339	DATE: 01/2014	PAGE: Y2-1864-50

BAGGAGE DOOR ASSY - MTH

ITEM	PART	DESCRIPTION	XL45	MTH40	MTH45	MTH45S	NOTE
7	483169	. FRAME 53" Up to 2-7760 / REPLACED BY: 483482		1	1	1	
7	483482	. FRAME 53" From 2-7761 Up to 3-8109 / REPLACED BY: 483735		1	1	1	
7	483735	. FRAME 53" From 3-8110		1	1	1	
7	483110	. FRAME 60" Up to 2-7760 / REPLACED BY: 483733			1		
7	483480	. FRAME 60" From 2-7761 Up to 3-8109 / REPLACED BY: 483733			1		
7	483733	. FRAME 60" From 3-8110			1		
9	483324	. PANEL INTERIOR 38" Up to 5-8813		1			
9	483194	. PANEL INTERIOR 45" Up to 2-7760		1		1	
9	483561	. PANEL INTERIOR 45" From 2-7761 Up to 5-8358		1		1	
9	483813	. PANEL INTERIOR 45" From 5-8359		1		1	
9	483195	. PANEL INTERIOR 53" Up to 2-7760		1	1	1	
9	483560	. PANEL INTERIOR 53" From 2-7761 Up to 5-8358 / REPLACED BY: K483560		1	1	1	
9	483811	. PANEL INTERIOR 53" From 5-8359		1	1	1	
9	483146	. PANEL INTERIOR 60" Up to 2-7760			1		
9	483538	. PANEL INTERIOR 60" From 2-7761 Up to 5-8358 / REPLACED BY: K483538			1		
9	483812	. PANEL INTERIOR 60" From 5-8359			1		
9	482224	. PANEL INTERIOR 60"			1		C
9	482225	. PANEL INTERIOR 60"			1		D
NS	504347	. RIVET POP DOME OE 3/16x1/4 AL		AR	AR	AR	
NS	506268	. TAPE RUB ADH1 URE 3/8" x 1/2" x 25' / GREY 1820		1	1	1	
13	481135	. ROD ASSY LOCK W/38" Up to 2-7831		2			
13	480782	. ROD ASSY LOCK W/38" From 2-7832 Up to 5-8813		2			
13	482473	. ROD ASSY LOCK W/45" Up to 2-7831		2		2	
13	480769	. ROD ASSY LOCK W/45" From 2-7832		2		2	
13	481039	. ROD ASSY LOCK W/53" Up to 2-7831		2	2	2	
13	480936	. ROD ASSY LOCK W/53" From 2-7832		2	2	2	
		C) USE WITH 4TH BAY DOOR WITH 2 ACCESS PANEL					
		"MARATHON"					
		D) USE WITH 1ST BAY DOOR WITH 2 ACCESS PANEL					
		"MARATHON"					

From Y-7046 Up to 8-9339	DATE: 01/2014	PAGE: Y2-1864-50

BAGGAGE DOOR ASSY - MTH

ITEM	PART	DESCRIPTION	XL45	MTH40	MTH45	MTH45S	NOTE
13	481975	. ROD ASSY LOCK W/60" Up to 2-7831			2		
13	483593	. ROD ASSY LOCK W/60" From 2-7832			2		
13	481086	. . ROD LOCK W/38" Up to 2-7831		1			
13	480783	. . ROD LOCK W/38" From 2-7832 Up to 5-8813		1			
13	482475	. . ROD LOCK W/45" Up to 2-7831		1		1	
13	480770	. . ROD LOCK W/45" From 2-7832		1		1	
13	480995	. . ROD LOCK W/53" Up to 2-7831		2	2	2	
13	480940	. . ROD LOCK W/53" From 2-7832		2	2	2	
13	481973	. . ROD LOCK W/60" Up to 2-7831			2		
13	483594	. . ROD LOCK W/60" From 2-7832			2		
15	480478	. . ROLLER Up to 2-7831		1	1	1	
15	483595	. . ROLLER From 2-7832		1	1	1	
17	504318	. . RING RETAINER / EXT .375 x .352 x .025		1	1	1	
19	504650	. GROMMET / .375x.625x.062x.313x.875		2	2	2	
21	507254	. BUSHING NYLINER W/SHOULDER		2	2	2	
23	507260	. BUSHING NYLINER W/SHOULDER .375x.437x.375x.594		2	2	2	
25	505229	. SPACER 3/8 I.D. X 3/8 LG		2	2	2	
31	481787	. PANEL ACCESS 9" X 9"		1	1	1	
NS	500257	. WASHER LO SPT 10.2x18.1x2.2 ZP		4	4	4	
33	504311	. BUMPER RUBBER / 1.500 OD x1.500 TH x.250 HOLE Up to 2-7760		2	2	2	
33	5001168	. BUMPER RUBBER / .750 OD x .562 TH x .187 HOLE From 2-7761		2	2	2	
NS	500508	. SCREW TC PAN PH #10-32x1 1/2 ZP / REPLACED BY: 5001143		2	2	2	
39	504334	. BUMPER RUBBER / .625 OD x .406 TH x .156 HOLE		1	1	1	
NS	504339	. RIVET POP DOME OE 1/8x3/8 SS		1	1	1	
41	481007	. ROD ASSY MALE		1	1	1	
43	480394	. SPRING COMPRESSION / .355 O.D. 3.375 x .063		1	1	1	

From Y-7046 Up to 8-9339	DATE: 01/2014	PAGE: Y2-1864-50

BAGGAGE DOOR ASSY - MTH

ITEM	PART	DESCRIPTION	XL45	MTH40	MTH45	MTH45S	NOTE
45	481227	. ROD FEMALE		1	1	1	
47	504142	. RIVET SOL RND 1/4x3/8 SS		1	1	1	
49	481012	. BUSHING LEVER		1	1	1	
53	481358	. HANDLE ASSY / S.B. Up to 5-8468		1	1	1	
53	483897	. HANDLE ASSY / B.A. From 5-8469		1	1	1	
55	481011	. RETAINER ROD / HANDLE / CHROMATE Up to 2-7831		1	1	1	
55	483587	. RETAINER ROD / HANDLE / E-COAT BLACK From 2-7832		1	1	1	
56	500473	. WASHER LO SPT .262x.489x.062 ZP		6	6	6	
57	500163	. SCREW CAP HEX 1/4-20x3/4 G5 ZP		6	6	6	
58	481564	. ROD GUIDE		2	2	2	
59	502151	. SPRING COMPRESSION / .300 O.D. x 1 x .032		2	2	2	
NS	480932	. BRACKET ASSY		1	1	1	
. NS	480933	. . BRACKET / REPLACED BY: 480932		1	1	1	
. NS	480935	. . ROD		1	1	1	
. NS	480937	. . PLATE, SUPPORT / REPLACED BY: 480932		1	1	1	
60	480465	. PLATE ASSY L.H. Up to 1-7680		1	1	1	
60	482820	. PLATE ASSY L.H. From 1-7681 Up to 1-7831		1	1	1	
60	483588	. PLATE ASSY L.H. From 2-7832		1	1	1	
60	480466	. PLATE ASSY R.H. Up to 1-7680		1	1	1	
60	482994	. PLATE ASSY R.H. From 1-7681 Up to 1-7831		1	1	1	
60	483591	. PLATE ASSY R.H. From 2-7832		1	1	1	
60	480463	. . BRACKET ASSY L.H. Up to 2-7831		1	1	1	
60	483589	. . BRACKET ASSY L.H. From 2-7832		1	1	1	
60	480464	. . BRACKET ASSY R.H. Up to 2-7831		1	1	1	
60	483592	. . BRACKET ASSY R.H. From 2-7832		1	1	1	
61	507257	. . BUSHING NYLINER W/SHOULDER		1	1	1	

From Y-7046 Up to 8-9339	DATE: 01/2014	PAGE: Y2-1864-50

BAGGAGE DOOR ASSY - MTH

ITEM	PART	DESCRIPTION	XL45	MTH40	MTH45	MTH45S	NOTE
62	480498	. . PLATE LOCK Up to 1-7680 / REPLACED BY: 483590		1	1	1	
62	482358	. . PLATE LOCK From 1-7681 Up to 1-7831		1	1	1	
62	483590	. . PLATE LOCK From 2-7832		1	1	1	
63	500179	. . SCREW CAP HEX 5/16-18x3/4 G5 ZP		5	5	5	
64	500441	. . WASHER FL .312x.734x.065 ZP		1	1	1	
65	500777	. . NUT HEX STO 5/16-18 ZP		1	1	1	
66	481287	. SPACER Up to 2-7831		1	1	1	
66	481496	. SPACER From 2-7832		1	1	1	
67	480705	. SPRING COMPRESSION / .600 O.D. x 1 x .055 CROMAT		1	1	1	
68	480657	. HOOK 68MM				1	
68	483477	. HOOK 76MM		1	1		
NS	500441	. WASHER FL .312x.734x.065 ZP		1	1	1	
NS	500183	. SCREW CAP HEX 5/16-18x1 1/2 G5 PT ZP		7	7	7	
69	500476	. WASHER LO SPT .317x.586x.078 ZP		5	5	5	
70	480510	. PLATE ASSY ANCHOR / ROLLER Up to 1-7680		2	2	2	H
71	481615	. PLATE ATTACHMENT Up to 1-7680		1	1	1	H
72	480387	. ROLLER CATCH / LOWER Up to 2-7831		1	1	1	
72	483597	. ROLLER CATCH / LOWER From 2-7832		1	1	1	
73	502512	. SCREW CAP HEXS 5/16-18x1 1/2 ZP Up to 1-7680 / REPLACED BY: 502503		1	1	1	
75	483389	ATTACHMENT ASSY L.H. / W/ROLLER From 1-7681 Up to 2-7831		1	1	1	V
75	483598	ATTACHMENT ASSY L.H. / W/ROLLER From 2-7832 Up to 2-7934 / REPLACED BY: 483602		1	1	1	V
75	483602	ATTACHMENT ASSY L.H. / W/ROLLER / DIE CASTING From 2-7935		1	1	1	V
75	483388	ATTACHMENT ASSY R.H. / W/ROLLER From 1-7681 Up to 2-7831		1	1	1	V
75	483596	ATTACHMENT ASSY R.H. / W/ROLLER From 2-7832 Up to 2-7934 / REPLACED BY: 483604		1	1	1	V
75	483604	ATTACHMENT ASSY R.H. / W/ROLLER / DIE CASTING From 2-7935		1	1	1	V
76	483386	. ATTACHMENT ASSY L.H. From 1-7681 Up to 2-7934 / REPLACED BY: 483460		1	1	1	
		H) THOSE PLATE ATTACHMENTS ARE FIXED HORIZONTAL					
		ON FLOOR STRUCTURE					
		V) THOSE ATTACHMENTS ARE FIXED ON VERTICAL POST					
		STRUCTURE					

From Y-7046 Up to 8-9339	DATE: 01/2014	PAGE: Y2-1864-50

BAGGAGE DOOR ASSY - MTH

ITEM	PART	DESCRIPTION	XL45	MTH40	MTH45	MTH45S	NOTE
76	483387	. ATTACHMENT ASSY R.H. From 1-7681 Up to 2-7934 / REPLACED BY: 483461		1	1	1	
76	483460	. ATTACHMENT ASSY L.H. / DIE CASTING From 2-7935		1	1	1	
76	483461	. ATTACHMENT ASSY R.H. / DIE CASTING From 2-7935		1	1	1	
77	483597	. ROLLER CATCH / LOWER From 1-7681		1	1	1	
78	502503	. SCREW CAP HEXS 5/16-18x1 1/2 ZG603		1	1	1	
81	500181	SCREW CAP HEX 5/16-18x1 G5 ZP Up to 3-7990		AR	AR	AR	
81	955297	SCREW CAP HEX M8-1.25x25 G8.8 ZG603 From 3-7991	AR				
82	5001045	WASHER BEL SPR .331x.827x.098 ZP Up to 3-7990		AR	AR	AR	
82	500321	WASHER BEL SPR .331x.827x.098 ZG603 From 3-7991	AR				
83	502523	RIVET NUT FL OKS 5/16-18 .059-.119 Up to 3-7990		AR	AR	AR	
83	5001337	NUT INS FL HEX M8-1.25 0.5-3.0 ZP From 3-7991	AR				
85	482289	STRIKER CATCH Up to 2-7831		2	2	2	
85	483599	STRIKER CATCH From 2-7832		2	2	2	
86	502523	RIVET NUT FL OKS 5/16-18 .059-.119		AR	AR	AR	
89	481137	WEATHERSTRIP / W/38" BAGGAGE DOORS Up to 5-8813 / REPLACED BY: 485629		2			
89	485629	WEATHERSTRIP / W/38" BAGGAGE DOORS Up to 5-8813		2			
89	482462	WEATHERSTRIP / W/45" BAGGAGE DOORS / REPLACED BY: 485630		2		2	
89	485630	WEATHERSTRIP / W/45" BAGGAGE DOORS		2		2	
89	481033	WEATHERSTRIP / W/53" BAGGAGE DOORS Up to 5-8813 / REPLACED BY: 485635		6			
89	481033	WEATHERSTRIP / W/53" BAGGAGE DOORS / REPLACED BY: 485635				8	
89	481033	WEATHERSTRIP / W/53" BAGGAGE DOORS / REPLACED BY: 485635			2		
89	485635	WEATHERSTRIP / W/53" BAGGAGE DOORS		AR	AR	AR	
89	481988	WEATHERSTRIP / W/60" BAGGAGE DOORS / REPLACED BY: 485628			6		
89	485628	WEATHERSTRIP / W/60" BAGGAGE DOORS			6		
NS	480154	. WEATHERSTRIP RUBBER / ADH / RAW MATERIAL Up to 5-8544 / REPLACED BY: 485610		AR	AR	AR	
NS	483941	. WEATHERSTRIP RUBBER / ADH / RAW MATERIAL From 5-8545 / REPLACED BY: 485610		AR		AR	

From Y-7046 Up to 8-9339	DATE: 01/2014	PAGE: Y2-1864-50

BAGGAGE DOOR ASSY - MTH

ITEM	PART	DESCRIPTION	XL45	MTH40	MTH45	MTH45S	NOTE
89	485610	. WEATHERSTRIP RUBBER / ADH / RAW MATERIAL		AR		AR	
91	500162	SCREW CAP HEX 1/4-20x1/2 G5 ZP		6	6	6	
93	500473	WASHER LO SPT .262x.489x.062 ZP		6	6	6	
97	481065	LEVER ASSY Up to 2-7831 / REPLACED BY: K481065		1	1	1	
97	483581	LEVER ASSY From 2-7832		1	1	1	
97	481062	. LEVER Up to 2-7831		1	1	1	
97	483582	. LEVER From 2-7832		1	1	1	
NS	507143	. BUSHING, NYLINER (8-L-12-D)		1	1	1	
99	481757	. PLATE ATTACHMENT Up to 2-7831		1	1	1	
99	483583	. PLATE ATTACHMENT From 2-7832		1	1	1	
101	480382	. PLATE ATTACHMENT / SPRING Up to 2-7831		1	1	1	
101	483584	. PLATE ATTACHMENT / SPRING From 2-7832		1	1	1	
103	502056	. SPRING EXTENSION / .437 O.D. X 5.375 x .062		1	1	1	
105	504477	. RING RETAINER / EXT 14.0 X 13.4 X 1.0mm		1	1	1	
NS	500496	. WASHER FL .437x.750x.054 ZP		AR	AR	AR	
109	481084	LEVER / W/38" Up to 2-7831		1			
109	480785	LEVER / W/38" From 2-7832 Up to 5-8813		1			
109	482459	LEVER / W/45" Up to 2-7831		1		1	
109	480767	LEVER / W/45" From 2-7832		1		1	
109	482277	LEVER / W/53" Up to 2-7831		1	1	1	
109	483660	LEVER / W/53" From 2-7832		1	1	1	
109	482349	LEVER / W/60" Up to 2-7831			1		
109	483586	LEVER / W/60" From 2-7832			1		
111	502144	SPRING COMPRESSION / .720 O.D. x 2 x .062		1	1	1	
113	480369	PIVOT		1	1	1	
113	483585	PIVOT From 2-7832		1	1	1	

From Y-7046 Up to 8-9339	DATE: 01/2014	PAGE: Y2-1864-50

BAGGAGE DOOR ASSY - MTH

ITEM	PART	DESCRIPTION	XL45	MTH40	MTH45	MTH45S	NOTE
NS	5001346	SCREW SET HEXS CONE 1/4-20x3/4		1	1	1	
117	507141	BUSHING, NYLINER W/SHOULDER (7-L-7-F)		2	2	2	
119	980024	CYLINDER GAZ / 669/409MM C/C / 200LBS / REPLACED BY: 980030		1	1	1	
119	192226	CYLINDER GAZ / 669/409MM C/C / 200LBS +++++		AR	AR	AR	
. NS	980017	. CLIP BALL STUD 10MM RETAINER		2	2	2	
121	980015	BALL STUD / W/10MM X M8-1.25 / 29.18MM		2	2	2	
123	481088	PLATE CYLINDER ADJUSTEMENT / W/53" & 60"		1	1	1	
NS	482276	PLATE CYLINDER ADJUSTEMENT FOR OVER LOAD DOOR W/RAIL SS		AR		AR	
123	481305	PLATE ANGLE CYLINDER ADJUSTEMENT / W/38"		1		1	
123	482787	SUPPORT ASSY / W/45"		2		2	
125	502760	NUT HEX TWAY M8-1.25 ZP		2	2	2	
130	780428	LOCK ACTUATOR / 12V		1	1	1	
. NS	562076	. CONNECTOR / PACK-CON I / FEMALE HOUSING / 2C / PED 8911772		1	1	1	
131	482109	BRACKET / TO FIX LOCK ACTUATOR		1	1	1	
132	562096	MICRO SWITCH		1	1	1	
133	502577	SCREW MA PAN PH M3-0.5x16 ZP		2	2	2	
134	502579	NUT HEX M3-0.5 NP		2	2	2	
135	062796	CABLE ASSY / ACTUATOR POWER / EACH DOOR		1	1	1	
136	560481	CLAMP / 5/8" I.D. / REPLACED BY: 952629		3	3	3	
137	500883	SCREW TC PAN PH #8-32x3/8 ZP		6	6	6	
NS	062823	CABLE ASSY / <> FRT JCT PANEL W/DOOR LOCK		1	1	1	
NS	064473	CABLE ASSY / <> FUEL COMP & REAR DOOR		1		1	
NS	063387	CABLE ASSY / <> FUEL COMP & REAR DOOR			1		
NS	064471	CABLE ASSY / <> FRT JCT PANEL TO FUEL COMPT Up to 5-8813		1			
NS	064470	CABLE ASSY / <> FRT JCT PANEL TO FUEL COMPT.				1	
NS	063361	CABLE ASSY / <> FRT JCT PANEL TO FUEL COMPT			1		

From Y-7046 Up to 8-9339	DATE: 01/2014	PAGE: Y2-1864-60
BAGGAGE DOOR R.H. - W/HINGE "SPECIAL"		

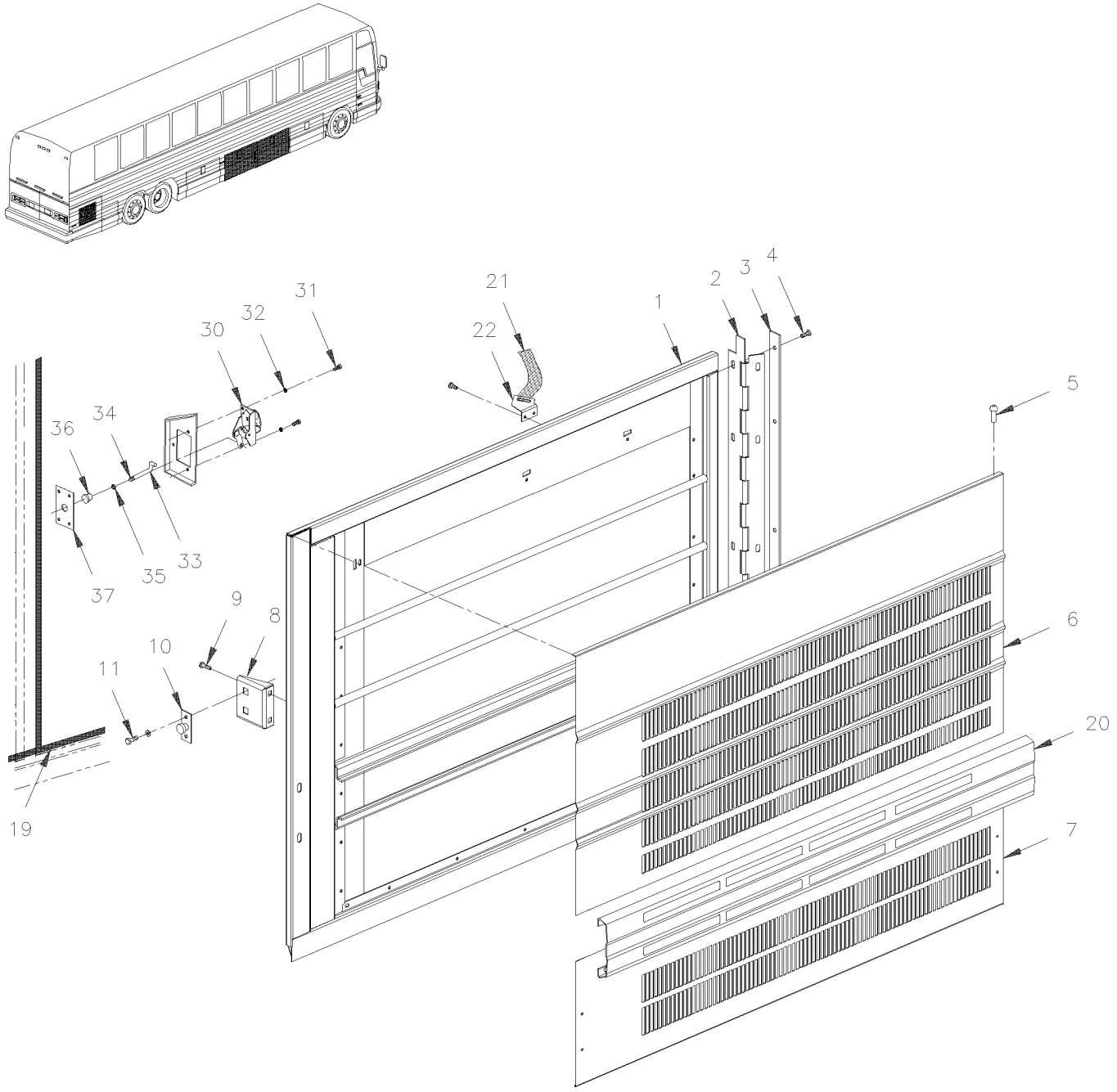

From Y-7046 Up to 8-9339	DATE: 01/2014	PAGE: Y2-1864-60

BAGGAGE DOOR R.H. - W/HINGE "SPECIAL"

ITEM	PART	DESCRIPTION	XL45	MTH40	MTH45	MTH45S	NOTE
	483023P	BAGGAGE DOOR 45" W/3.49 SQF PERFORATED AREA		1		1	
	482678P	BAGGAGE DOOR 53" W/2.58 SQF PERFORATED AREA		1	1	1	
1	483013	. FRAME ASSY 53"		1	1	1	
1	483009	. FRAME ASSY 45"		1		1	
1	680065	. TAPE COMPOUND / BLACK / 1/32" X 1" X 33' / L163-2400		AR	AR	AR	
1	680025	. CAULKING STRIP 3/16" O.D. X 14'		AR	AR	AR	
NS	481047	. HINGE PLATE 31"1/16 W/ 5 HOLES 1/4-28 Up to 2-7831		1	1	1	A
NS	483638	. HINGE PLATE 31"1/16 W/ 5 HOLES 1/4-28 From 2-7832		1	1	1	A
2	480907	. HINGE		1	1	1	
3	480910	. REINFORCEMENT OF HINGE / THIN 31 1/4" x 1/8 FRAME SIDE Up to 2-7831		1	1	1	
3	483637	. SUPPORT, HINGE / THIN 31 1/4 LG From 2-7832		1	1	1	
NS	481840	. REINFORCEMENT OF HINGE / 31 7/8" X GA11 STRUCTURE SIDE		1	1	1	
NS	481131	. SHIM 2" X 1"1/8 / HINGE SUPPORT		AR	AR	AR	
4	500316	. SCREW MA FL PH 1/4-28x3/4 SS		1	1	1	
5	504340	. RIVET POP DOME OE 1/8x3/16 SS		4	4	4	
6	482829	. PANEL W/2.58 SQF PERFORATED AREA / S.B. Up to 5-8468 / REPLACED BY: 483964			1		
6	483964	. PANEL W/2.58 SQF PERFORATED AREA / B.A. From 5-8469			1		
6	483005	. UPPER PANEL W/1.90 SQF PERFORATED AREA / S.B.		1		1	
7	483007	. LOWER PANEL W/0.81 SQF PERFORATED AREA / S.B. Up to 5-8468 / REPLACED BY: 483940		1		1	
7	483940	. LOWER PANEL W/0.81 SQF PERFORATED AREA / B.A. From 5-8469		1		1	
NS	504272	. RIVET CHY Q BRAZ 3/16x1/8 SS / REPLACED BY: 504745		6	6	6	
8	284605	. SUPPORT / TO FIX CATCH		1	1	1	
9	500163	. SCREW CAP HEX 1/4-20x3/4 G5 ZP		2	2	2	
NS	502583	. WASHER LO SERR 8.15x22.3x1.0 ZP / REPLACED BY: 502856		2	2	2	
10	780278	. PIN, STRIKER STUD		1	1	1	
NS	283326	. STRIKER PLATE, MOUNTING / 60MM X 25MM		1	1	1	
11	500316	. SCREW MA FL PH 1/4-28x3/4 SS		7	7	7	
NS	502582	. WASHER LO SERR 6.1x16.2x0.9 ZP		2	2	2	
NS	500692	. NUT HEX 1/4-28 ZP		2	2	2	
19	482099	WEATHERSTRIP / CONDENSOR DOOR / REPLACED BY: 280152			1		
19	480009	WEATHERSTRIP / CONDENSOR DOOR			1		
19	280152	. WEATHERSTRIP RUBBER EPDM CC EXTRUSION / RAW MATERIAL			AR		
20	Y2-1855-00	**RUB RAIL - CREST & TRIMS**					
21	505507	STRAP NYLON 1" WIDE / S.L.		AR	AR	AR	
22	452813	SUPPORT STRAP RETAINER W/2 SLOTS & 2 HOLES		1	1	1	
30	780282	LOCK SPAGNOLET L.H.		1	1	1	
31	502531	SCREW CAP HEX M6-1.0x16 G8.8 ZP		2	2	2	
32	502582	WASHER LO SERR 6.1x16.2x0.9 ZP		2	2	2	
33	284596	ROD OPENING 68MM		1		1	
NS	482698	STRING 450 LG			1		
34	500764	NUT HEX #8-32 ZP		1		1	
35	504083	SNAP BUSHING / .250x.468.406		1		1	
36	505504	KNOB, PULL / 8-32		1		1	
		A) INSIDE OF DOOR FRAME PANEL					

From Y-7046 Up to 8-9339	DATE: 01/2014	PAGE: Y2-1864-60

BAGGAGE DOOR R.H. - W/HINGE "SPECIAL"

ITEM	PART	DESCRIPTION	XL45	MTH40	MTH45	MTH45S	NOTE
37	482725	CLOSING PLATE 30MM X 50MM / ALU		1		1	
37	505213	SHIM 1/16" THICK		AR	AR	AR	
37	505193	SHIM 1/8" THICK		AR	AR	AR	
37	504473	RIVET POP DOME OE 1/8x1/4 SS		4	4	4	
37	481157	WEATHERSTRIP / CONDENSOR DOOR / REPLACED BY: 280152		1		1	
37	480154	WEATHERSTRIP RUBBER / ADH / RAW MATERIAL Up to 5-8544 / REPLACED BY: 485610		AR	AR	AR	
37	483941	WEATHERSTRIP RUBBER / ADH / RAW MATERIAL From 5-8545 / REPLACED BY: 485610		AR	AR	AR	
37	485610	WEATHERSTRIP RUBBER / ADH / RAW MATERIAL		AR	AR	AR	
37	482453	SUPPORT			1		

From Y-7046 Up to 8-9339	DATE: 01/2014	PAGE: Y2-1864-60

BAGGAGE DOOR R.H. - W/HINGE "SPECIAL"

ITEM	PART	DESCRIPTION	XL45	MTH40	MTH45	MTH45S	NOTE

From Y-7046 Up to 6-8906	DATE: 01/2014	PAGE: Y2-1864-80

BAGGAGE DOOR - W.C.L."RICON"

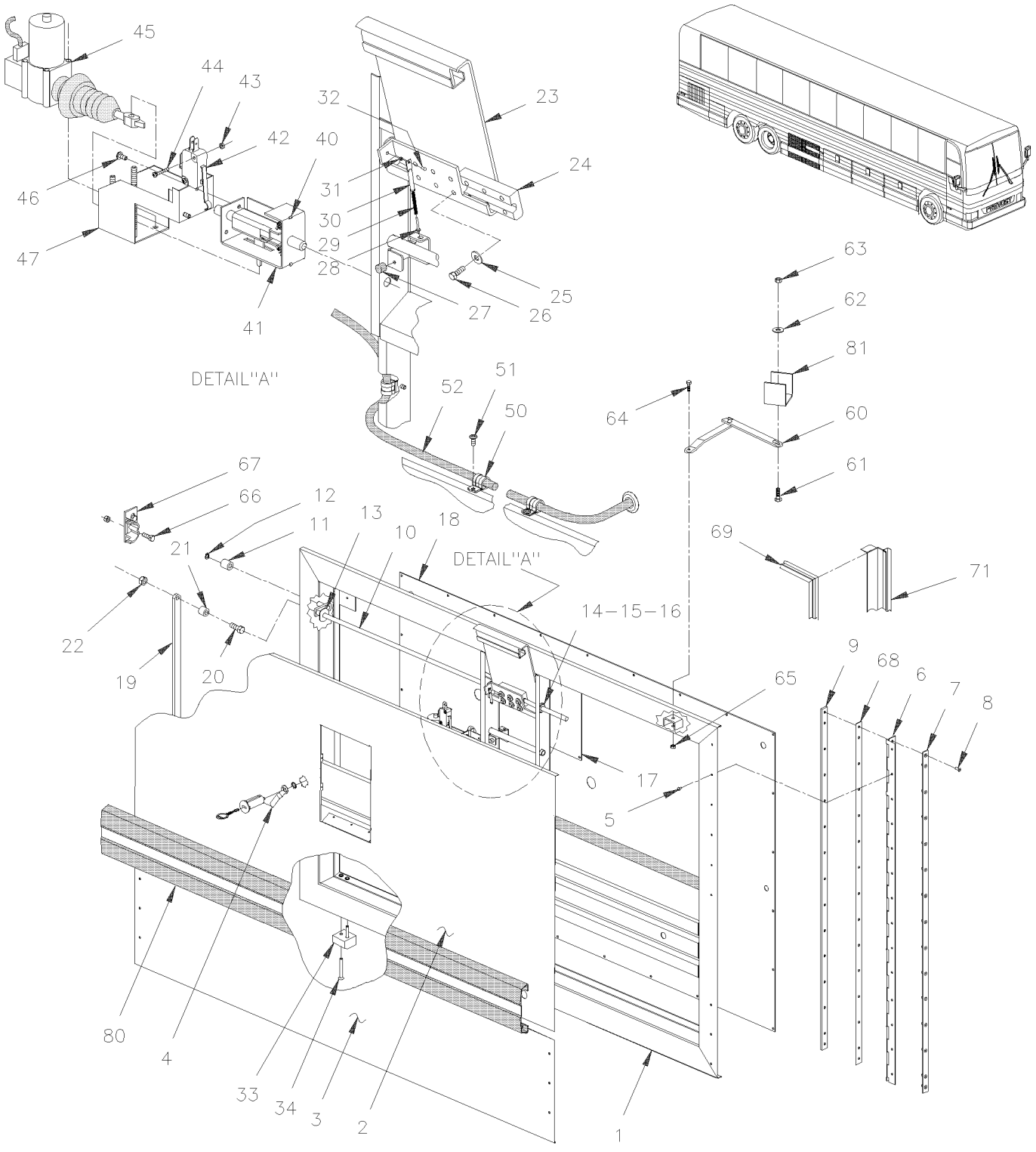

From Y-7046 Up to 6-8906	DATE: 01/2014	PAGE: Y2-1864-80

BAGGAGE DOOR - W.C.L."RICON"

ITEM	PART	DESCRIPTION	XL45	MTH40	MTH45	MTH45S	NOTE
		ALL DOORS ASSY DO NOT INCLUDE					
		RUB-RAIL PLEASE ORDER SEPARATELY					
	483333P	BAGGAGE DOOR ASSY / W.C.L. W/FLAT PANEL Up to 4-8278	1				
	483807	BAGGAGE DOOR ASSY From 4-8279	1				
	483648	BAGGAGE DOOR ASSY / W.C.L. W/FLUTED PANEL Up to 4-8278	1				A
1	483336	. BAGGAGE DOOR FRAME Up to 2-7760 / REPLACED BY: 483484	1				
1	483484	. BAGGAGE DOOR FRAME From 2-7761 Up to 3-8109	1				
1	483737	. BAGGAGE DOOR FRAME From 3-8110 Up to 4-8278	1				
1	483789	. BAGGAGE DOOR FRAME From 4-8279	1				
2	483335	. UPPER PANEL	1				
2	483355	. UPPER PANEL	1				A
NS	504340	. RIVET POP DOME OE 1/8x3/16 SS	12				
3	483373	. LOWER PANEL	1				
3	483359	. LOWER PANEL	1				A
NS	504272	. RIVET CHY Q BRAZ 3/16x1/8 SS / REPLACED BY: 504745	6				
4	281498	. PIVOT LOCK 3/8" OFFSET / REPLACED BY: 287406	1				
5	504272	. RIVET CHY Q BRAZ 3/16x1/8 SS / REPLACED BY: 504745	6				
6	480907	. HINGE	1				
7	480910	. REINFORCEMENT OF HINGE / THIN 31 1/4" x 1/8 FRAME SIDE Up to 2-7831	1				
7	483637	. SUPPORT, HINGE / THIN 31 1/4 LG From 2-7832	1				
8	500316	. SCREW MA FL PH 1/4-28x3/4 SS	5				
9	481047	. HINGE PLATE 31"1/16 W/ 5 HOLES 1/4-28 Up to 2-7831	1				
9	483638	. HINGE PLATE 31"1/16 W/ 5 HOLES 1/4-28 From 2-7832	1				
10	483351	. ROD ASSY LOCK / W.C.L. DOOR Up to 2-7831	1				
10	483634	. ROD ASSY LOCK / W.C.L. DOOR From 2-7832 Up to 3-8109	1				
10	483540	. ROD ASSY LOCK / W.C.L. DOOR From 3-8110 Up to 4-8278	1				
10	483352	. . ROD LOCK / W.C.L. DOOR Up to 2-7831	1				
10	483635	. . ROD LOCK / W.C.L. DOOR From 2-7832 Up to 3-8109	1				
10	483539	. . ROD LOCK / W.C.L. DOOR From 3-8110 Up to 4-8278	1				
10	483787	. ROD LOCK / 60" From 4-8279	1				
11	483366	. ROLLER Up to 2-7831	1				
11	483636	. ROLLER From 2-7832	1				
12	504318	. RING RETAINER / EXT .375 x .352 x .025	1				
13	505520	. SPACER 3/8 I.D. X 5/8 LG	2				
NS	507254	. BUSHING NYLINER W/SHOULDER	1				
14	504650	. GROMMET / .375x.625x.062x.313x.875	2				
15	507260	. BUSHING NYLINER W/SHOULDER .375x.437x.375x.594	2				
16	5001011	. WASHER FL .406x.625x.040 ZP	4				
16	502102	. PIN, COTTER 1/8 x 1	2				
17	481787	. PANEL ACCESS 9" X 9"	1				
		A) BUS WITH FLUTED LOWER PANELING					

From Y-7046 Up to 6-8906	DATE: 01/2014	PAGE: Y2-1864-80

BAGGAGE DOOR - W.C.L."RICON"

ITEM	PART	DESCRIPTION	XL45	MTH40	MTH45	MTH45S	NOTE
NS	500582	. SCREW TP BDG PH #8x3/8 ZP	4				
18	483334	. INTERIOR PANEL	1				
NS	504347	. RIVET POP DOME OE 3/16x1/4 AL	28				
NS	504433	. SNAP-IN PLUG / 1.090 O.D.	1				
19	483356	. ROD TRANSFER Up to 2-7831	1				
19	483639	. ROD TRANSFER From 2-7832 Up to 4-8278	1				
19	483792	. ROD TRANSFER From 4-8279	1				
20	502625	. SCREW SHR HEXS 5/16x3/8 {1/4-20	2				
21	507301	. BUSHING NYLINER	2				
22	502819	. NUT HEX JAM 1/4-20 ZP	2				
23	481358	. HANDLE ASSY / S.B.	1				
24	481011	. RETAINER ROD / HANDLE / CHROMATE Up to 2-7831	1				
24	483587	. RETAINER ROD / HANDLE / E-COAT BLACK From 2-7832	1				
25	500473	. WASHER LO SPT .262x.489x.062 ZP	6				
26	500163	. SCREW CAP HEX 1/4-20x3/4 G5 ZP	6				
27	504334	. BUMPER RUBBER / .625 OD x .406 TH x .156 HOLE	1				
NS	504339	. RIVET POP DOME OE 1/8x3/8 SS	2				
28	481007	. ROD ASSY MALE	1				
29	480394	. SPRING COMPRESSION / .355 O.D. 3.375 x .063	1				
30	481227	. ROD FEMALE	1				
31	481012	. BUSHING LEVER	1				
32	504459	. RIVET MGLP PRDG 1/4x3/8 SS	1				
NS	502573	. WASHER FL 6.4x12.5x1.6 SS	1				
33	483788	. DOOR SUPPORT NYLON 60MM 32MM 6.4MM From 4-8279	1				
NS	483796	. SHIM SS 14GA 60MM x 32MM From 4-8279	AR				
34	500346	. SCREW MA FL PH 1/4-20x1 SS EMN From 4-8279	2				
40	481564	. ROD GUIDE	2				
41	502151	. SPRING COMPRESSION / .300 O.D. x 1 x .032	2				
42	562096	. MICRO SWITCH	1				
43	502579	. NUT HEX M3-0.5 NP	4				
44	502577	. SCREW MA PAN PH M3-0.5x16 ZP	2				
45	780428	. LOCK ACTUATOR / 12V	1				
. NS	562076	. . CONNECTOR / PACK-CON I / FEMALE HOUSING / 2C / PED 8911772	1				
46	500883	. SCREW TC PAN PH #8-32x3/8 ZP	AR				
47	482109	. BRACKET / TO FIX LOCK ACTUATOR	1				
50	560481	. CLAMP / 5/8" I.D. / REPLACED BY: 952629	3				
51	500883	. SCREW TC PAN PH #8-32x3/8 ZP	AR				
52	062796	. CABLE ASSY / ACTUATOR POWER / EACH DOOR	1				
60	281444	. GUIDE ASSY / L.H. DOOR Up to 2-7831	1				
60	281912	. GUIDE ASSY / L.H. DOOR From 2-7832	1				
61	502780	. SCREW CAP HEX M8-1.25x25 SS EMN	1				
62	500270	. WASHER FL .406x1.000x.063 SS	2				

From Y-7046 Up to 6-8906	DATE: 01/2014	PAGE: Y2-1864-80

BAGGAGE DOOR - W.C.L."RICON"

ITEM	PART	DESCRIPTION	XL45	MTH40	MTH45	MTH45S	NOTE
63	500868	. NUT HEX NYRT M8-1.25 CP	1				
64	502568	. SCREW MA PAN PH M6-1.0x20 EMN	1				
65	502511	. NUT HEX NYRT M6-1.0 ZP	1				
65	502573	. WASHER FL 6.4x12.5x1.6 SS	3				
66	5001216	. SCREW CAP HEXF SERR 5/16-18x1 ZP Up to 4-8278	4				
66	955297	. SCREW CAP HEX M8-1.25x25 G8.8 ZG603 From 4-8279	4				
NS	500321	. WASHER BEL SPR .331x.827x.098 ZG603 From 4-8279	4				
67	482289	. STRIKER CATCH Up to 2-7831	1				
67	483599	. STRIKER CATCH From 2-7832 Up to 4-8278	2				
67	483799	. STRIKER CATCH L.H. From 4-8279	2				
68	481131	. SHIM 2" X 1"1/8 / HINGE SUPPORT	6				
69	482330	. WEATHERSTRIP / W/60" HINGE BAGGAGE DOOR / REPLACED BY: 485631	1				
69	485631	. WEATHERSTRIP / W/60" HINGE BAGGAGE DOOR	1				
70	475067	. BRACE	1				
71	474913	. MOULDING / WEATHERSTRIP RETAINER / W/W.C.L.	1				
72	500611	. SCREW TC BDG PH #10-24x1/2 ZP	2				
80	Y2-1855-00	**. RUB RAIL - CREST & TRIMS**	1				
81	N.P.N.	. SUPPORT WELDED TO STRUCTURE	1				4
		4) NO PARTS NUMBER					

From Y-7046 Up to 2-7763	DATE: 01/2014	PAGE: Y2-1864-90

BAGGAGE DOOR - W/"SLIDE-OUT" INSTALLATION

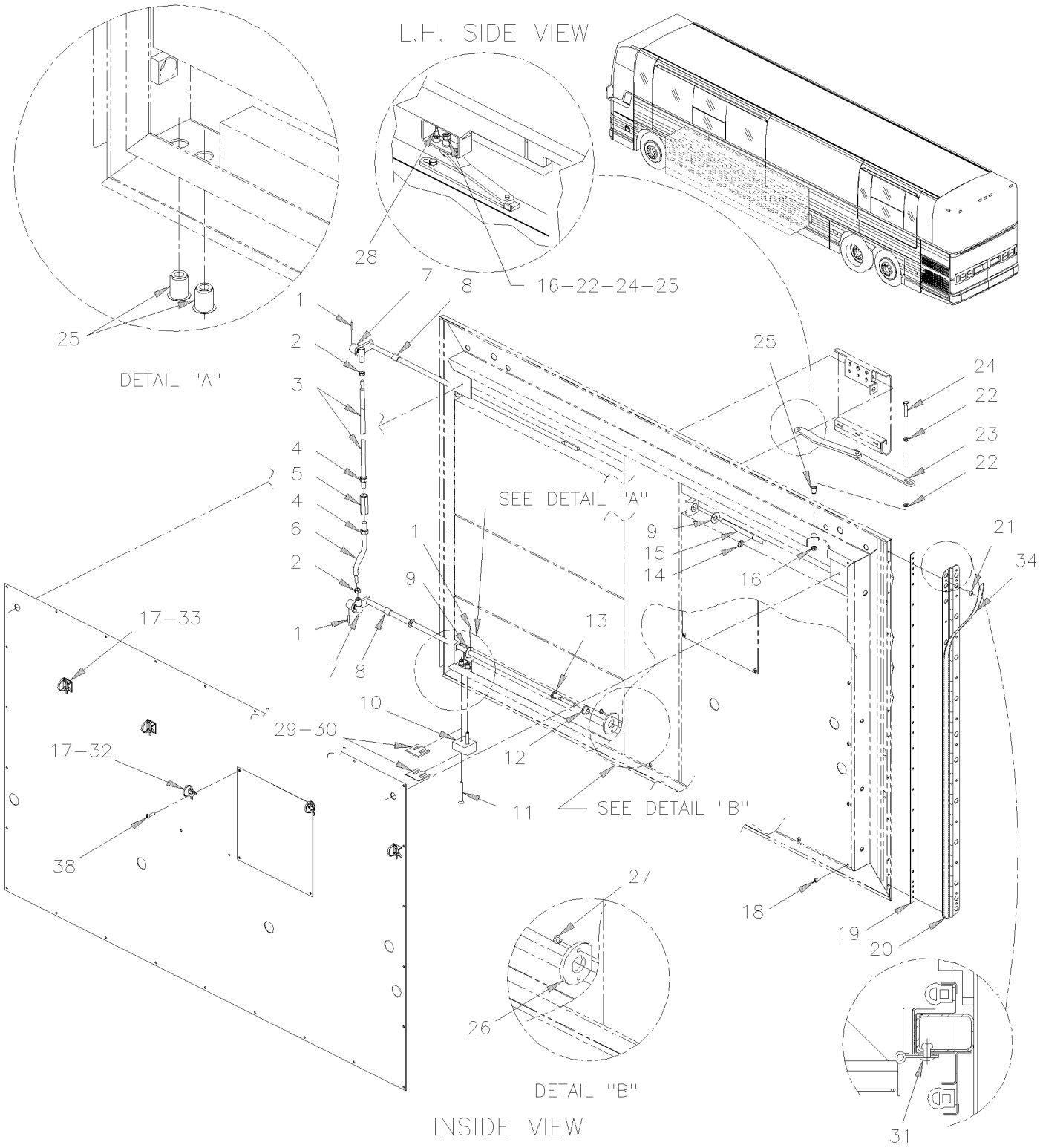

From Y-7046 Up to 2-7763	DATE: 01/2014	PAGE: Y2-1864-90

BAGGAGE DOOR - W/"SLIDE-OUT" INSTALLATION

ITEM	PART	DESCRIPTION	XL45	MTH40	MTH45	MTH45S	NOTE
	690399	BAGGAGE DOOR ASSY 60" / W/SLIDE OUT / REPLACED BY: 483650			2		
	690400	BAGGAGE DOOR ASSY 53" / W/SLIDE OUT / REPLACED BY: 483649			1		
1	690265	. SPRING PIN			3		
2	690281	. NUT HEX S/S 1/4-28			2		
3	N.S.P.	. L.H. CLOSING ARM (0100341) Up to TODAY			1		2
3	690122	. L.H. CLOSING ARM From FUTUR			1		
4	500783	. NUT HEX 3/8-16 ZP			2		
5	N.S.P.	. NUT HEX CPG ZP 3/8-16 UNC / (5000083) Up to TODAY			1		2
5	690123	. L.H. & R.H. COUPLING NUT From FUTUR			1		
6	690029	. CLOSING ARM			1		
7	690030	. BALL JOINT			2		
8	690292	. SPACER, BUTTITE ROLLER			2		
9	690011	. WASHER FL 3/8 SS			2		
10	690119	. BLOCK			1		
11	690282	. SCREW CAP FL HEXS M6-1.0x50 SS EMN			2		
12	507260	. BUSHING NYLINER W/SHOULDER .375x.437x.375x.594			1		
13	690269	. NUT SPR PO RND 3/8			1		
14	N.S.P.	. RING, RETAINING EXT. S/S 3/8" / (5000160)			1		2
15	690027	. REPLACEMENT ROD			1		
16	502511	. NUT HEX NYRT M6-1.0 ZP			2		
17	N.S.P.	. CABLE CLAMP / (5000073) Up to 1-7353			AR		2
17	504015	. CABLE TIE / 3/16" X 14"1/2 From 1-7354 / REPLACED BY: 504637			5		
18	504347	. RIVET POP DOME OE 3/16x1/4 AL			28		
19	690094	. SPACER			1		
20	690116	. HINGE			1		
21	504352	. RIVET POP DOME OE 3/16x7/8 AL			24		
22	5001462	. WASHER FL 6.4x18.0x1.6 ZP			4		
23	281445	. GUIDE ASSY / R.H. DOOR			1		
24	502533	. SCREW CAP HEX M6-1.0x30 G8.8 ZP			2		
25	690259	. NUT INS TYPE "A-L" OE M6-1.0 0.7-4.2 ZP / REPLACED BY: 502842			4		
26	690009	. WASHER			1		
27	504107	. RIVET POP DOME OE 1/8x5/16 AL			2		
28	690274	. SCREW TC CAP HEXW TEKS #10-16x1/2 ZP			2		
29	690230	. SPACER 1/8"			AR		
30	690231	. SPACER 1/16"			AR		
31	504440	. RIVET POP DOME OE 3/16x7/16 AL / REPLACED BY: 504339			AR		
32	690276	. SCREW APPLIED MOUNTS			2		
33	690293	. 4 WAY ADHESIVE BRACKED MOUNT			3		
34	5061020	. TAPE RUB ADH1 CC POL 1/32" x 1/2" x 50' / BLACK H1C-N			AR		
NS	690353	. GLUE EPOXY CIBA			AR		
NS	682176	. SEALANT SIKA #221 / BLACK / 310ml CARTRIDGE			AR		
	N25539	. THREAD LOCKER LOCTITE #262 / RED / 250ml			AR		
		2) NOT SOLD BY PREVOST (SEE MANUFACTURING PART					
		NUMBER AT END OF DESCRIPTION LINE)					

From Y-7046 Up to 2-7763	DATE: 01/2014	PAGE: Y2-1864-90

BAGGAGE DOOR - W/"SLIDE-OUT" INSTALLATION

ITEM	PART	DESCRIPTION	XL45	MTH40	MTH45	MTH45S	NOTE
38	690262	. SCREW TP PAN PH #10x3/4" ZP / REPLACED BY: 500658			2		
38	500658	. SCREW TC PAN PH #10-24x3/4 ZP			2		

From Y-7046 Up to 2-7763	DATE: 01/2014	PAGE: Y2-1864-90

BAGGAGE DOOR - W/"SLIDE-OUT" INSTALLATION

ITEM	PART	DESCRIPTION	XL45	MTH40	MTH45	MTH45S	NOTE

From 2-7764 Up to 8-9339	DATE: 01/2014	PAGE: Y2-1864-91

BAGGAGE DOOR - W/"SLIDE-OUT" INSTALLATION

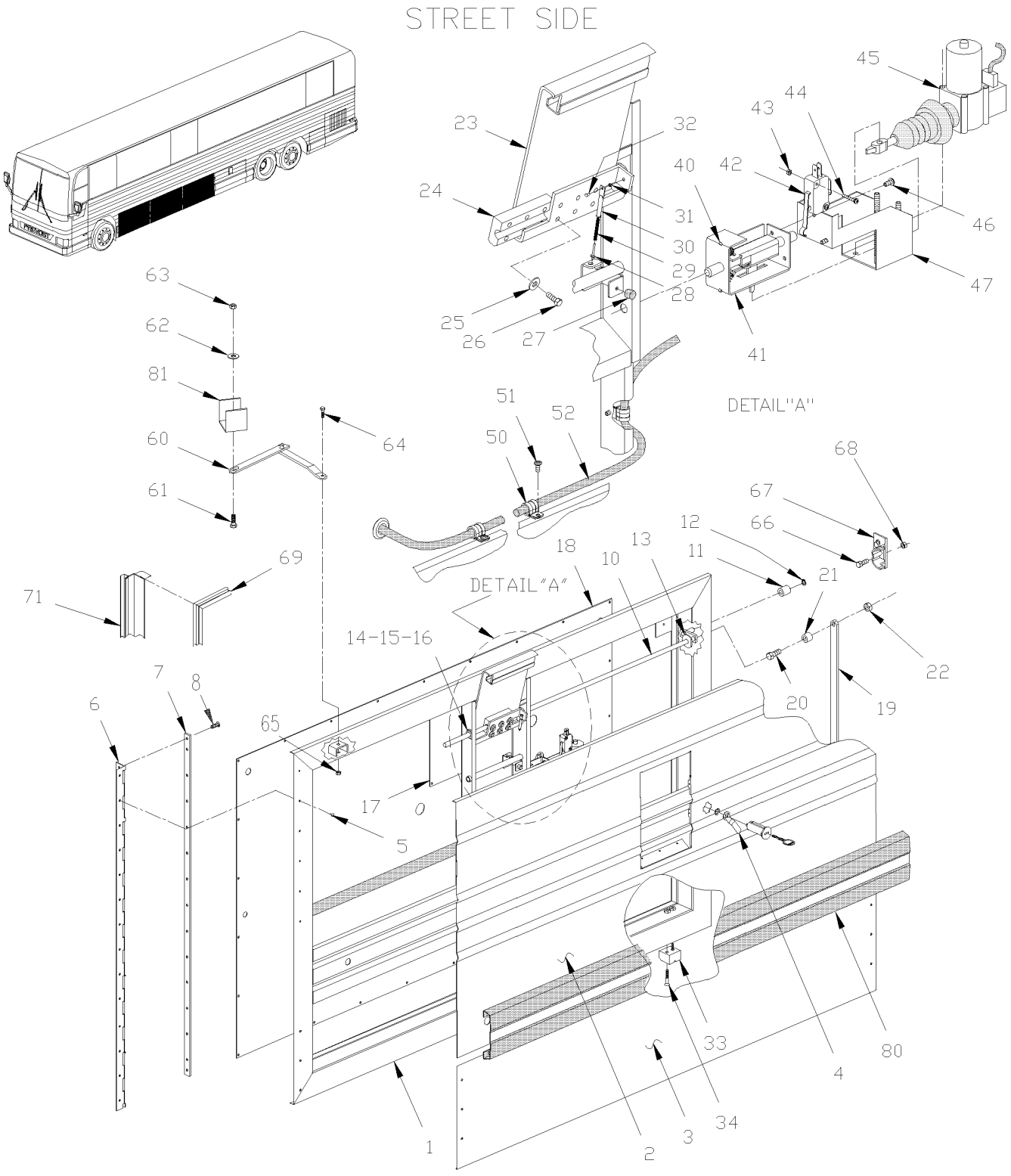

From 2-7764 Up to 8-9339	DATE: 01/2014	PAGE: Y2-1864-91

BAGGAGE DOOR - W/"SLIDE-OUT" INSTALLATION

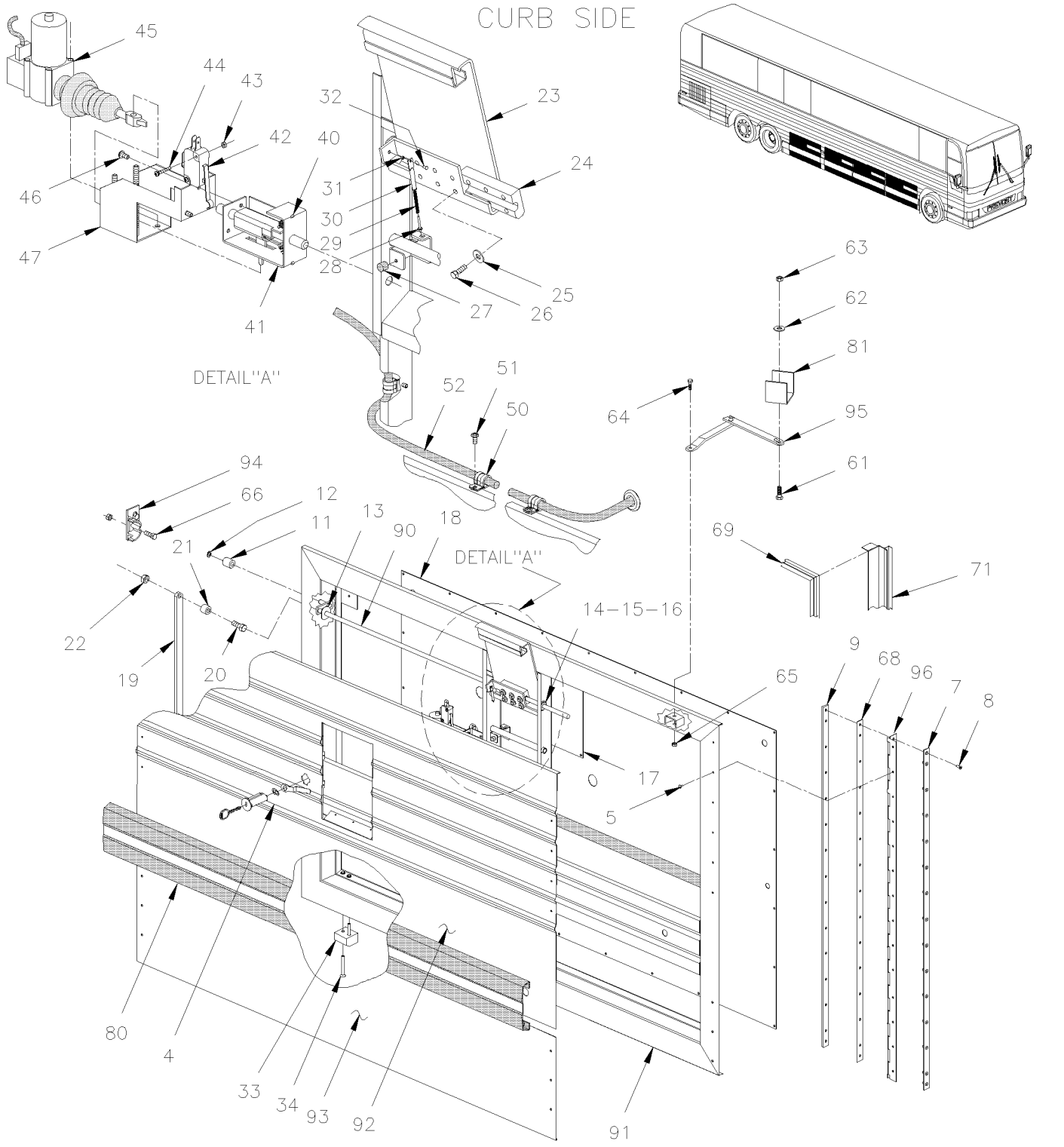

From 2-7764 Up to 8-9339	DATE: 01/2014	PAGE: Y2-1864-91

BAGGAGE DOOR - W/"SLIDE-OUT" INSTALLATION

ITEM	PART	DESCRIPTION	XL45	MTH40	MTH45	MTH45S	NOTE
		ALL DOORS ASSY DO NOT INCLUDE					
		RUB-RAIL PLEASE ORDER SEPARATELY					
	485409	BAGGAGE DOOR ASSY 45"		2			A
	483472	BAGGAGE DOOR ASSY 45"		2			B
	483650	BAGGAGE DOOR ASSY 60" / W/SLIDE OUT			AR		A
	483475	BAGGAGE DOOR ASSY 60" / W/SLIDE OUT			AR		C
	483649	BAGGAGE DOOR ASSY 53" / W/SLIDE OUT		1	1	1	A
	483474	BAGGAGE DOOR ASSY 53" / W/SLIDE OUT		1	1	1	D
	483649	BAGGAGE DOOR ASSY 53" / W/SLIDE OUT		2	2	2	A
	483474	BAGGAGE DOOR ASSY 53" / W/SLIDE OUT		2	2	2	D
1	483415	. FRAME ASSY 60"			1		
1	483699	. FRAME ASSY 45" Up to 3-8109		1			
1	483738	. FRAME ASSY 45" From 3-8110		1			
1	483465	. FRAME ASSY 53" Up to 3-8109			1		
1	483732	. FRAME ASSY 53" From 3-8110		1	1	1	
2	483445	. UPPER PANEL 60" / S.B. Up to 5-8468 / REPLACED BY: 483857			1		
2	483857	. UPPER PANEL 60" / B.A. From 5-8469			1		
2	483953	. UPPER PANEL 60" / B.A. From 5-8457			1		V
2	483705	. UPPER PANEL 45" / S.B. Up to 5-8468 / REPLACED BY: 483929		1			
2	483929	. UPPER PANEL 45" / B.A. From 5-8469		1			
2	483654	. UPPER PANEL 53" / S.B. Up to 5-8468 / REPLACED BY: 483866			1		
2	483866	. UPPER PANEL 53" / B.A. From 5-8469		1	1	1	
3	483463	. LOWER PANEL 60" / S.B. Up to 5-8468 / REPLACED BY: 483903			1		
3	483903	. LOWER PANEL 60" / B.A. From 5-8469			1		
3	483706	. LOWER PANEL 45" / S.B. Up to 5-8468 / REPLACED BY: 483930		1			
3	483930	. LOWER PANEL 45" / B.A. From 5-8469		1			
3	483655	. LOWER PANEL 53" / S.B. Up to 5-8468 / REPLACED BY: 483911			1		
3	483911	. LOWER PANEL 53" / B.A. From 5-8469		1	1	1	
3	483659	. LOWER PANEL 53" W / 1.09 SQF PERFORATED / S.B. Up to 5-8468 / REPLACED BY: 483912			1		
		A) DOOR ASSY W/OUT PREFORATED PANEL					
		B) SERVICE NUMBER SPECIFIED "UPPER AND LOWER					
		PANEL". SEE CONVERTER BAGGAGE BOOK PA-1108 AT					
		SECTION #19					
		C) SERVICE NUMBER SPECIFIED "UPPER AND LOWER					
		PANEL". SEE CONVERTER BAGGAGE BOOK PA-1108 AT					
		SECTION #10					
		D) MOUNTED WITH PLAIN 2 PANELS W/O VENTILATION					
		V) USE WITH "VORALD" SYSTEM					

From 2-7764 Up to 8-9339	DATE: 01/2014	PAGE: Y2-1864-91

BAGGAGE DOOR - W/"SLIDE-OUT" INSTALLATION

ITEM	PART	DESCRIPTION	XL45	MTH40	MTH45	MTH45S	NOTE
3	483912	. LOWER PANEL 53" W/1.09 SQF PERFORATED / B.A. From 5-8469		1	1	1	
NS	504272	. RIVET CHY Q BRAZ 3/16x1/8 SS / REPLACED BY: 504745		6	6	6	
4	281498	. PIVOT LOCK 3/8" OFFSET / REPLACED BY: 287406		1	1	1	
5	504272	. RIVET CHY Q BRAZ 3/16x1/8 SS / REPLACED BY: 504745		18	18	18	
6	483442	. HINGE		1	1	1	
NS	483606	. SUPPORT, HINGE / THIN 844.5MM LG		1	1	1	
7	481047	. HINGE PLATE 31"1/16 W/ 5 HOLES 1/4-28 Up to 2-7831			1		
7	483638	. HINGE PLATE 31"1/16 W/ 5 HOLES 1/4-28 From 2-7832		1	1	1	
NS	483610	SHIM 18GA SS / 131MM X 29MM		3	3	3	
8	500316	SCREW MA FL PH 1/4-28x3/4 SS		5	5	5	
10	483446	. ROD ASSY LOCK W/60" Up to 2-7831			2		
10	483677	. ROD ASSY LOCK W/60" From 2-7832 Up to 3-8109			2		
10	483670	. ROD ASSY LOCK W/60" From 3-8110 Up to 5-8494			2		
10	483447	. . ROD LOCK W/60" Up to 2-7831			1		
10	483675	. . ROD LOCK W/60" From 2-7832 Up to 3-8109			1		
10	483669	. . ROD LOCK W/60" From 3-8110 Up to 5-8494			2		
10	485424	. . ROD LOCK W/60" From 5-8495			2		
10	483498	. ROD ASSY LOCK W/53" Up to 2-7831			2		
10	483678	. ROD ASSY LOCK W/53" From 2-7832 Up to 3-8109		2	2		
10	483668	. ROD ASSY LOCK W/53" From 3-8110 Up to 5-8494		2	2		
10	483499	. . ROD LOCK W/53" Up to 2-7831		1	1		
10	483676	. . ROD LOCK W/53" From 2-7832 Up to 3-8109		1	1		
10	483667	. . ROD LOCK W/53" From 3-8110 Up to 5-8494		1	1		
10	485427	. . ROD LOCK W/53" From 5-8495		2	2	2	
10	483702	. ROD ASSY LOCK W/45" Up to 3-8109		2			
10	483657	. ROD ASSY LOCK W/45" From 3-8110 Up to 5-8494		2			
10	483703	. . ROD LOCK W/45" Up to 3-8109		1			
10	483656	. . ROD LOCK W/45" From 3-8110 Up to 5-8494		1			
10	485425	. . ROD LOCK W/45" From 5-8495		2			
11	483366	. ROLLER Up to 2-7831			1		
11	483636	. ROLLER From 2-7832		1	1	1	

From 2-7764 Up to 8-9339	DATE: 01/2014	PAGE: Y2-1864-91

BAGGAGE DOOR - W/"SLIDE-OUT" INSTALLATION

ITEM	PART	DESCRIPTION	XL45	MTH40	MTH45	MTH45S	NOTE
12	504318	. RING RETAINER / EXT .375 x .352 x .025		1	1	1	
13	505520	. SPACER 3/8 I.D. X 5/8 LG		2	2	2	
NS	507254	. BUSHING NYLINER W/SHOULDER		1	1	1	
14	504650	. GROMMET / .375x.625x.062x.313x.875		2	2	2	
15	507260	. BUSHING NYLINER W/SHOULDER .375x.437x.375x.594		2	2	2	
16	5001011	. WASHER FL .406x.625x.040 ZP		4	4	4	
16	502102	. PIN, COTTER 1/8 x 1		2	2	2	
17	481787	. PANEL ACCESS 9" X 9"		1	1	1	
NS	500582	. SCREW TP BDG PH #8x3/8 ZP		4	4	4	
18	483538	. PANEL INTERIOR 60" Up to 5-8358 / REPLACED BY: K483538			1		
18	483812	. PANEL INTERIOR 60" From 5-8359			1		
18	483955	. PANEL INTERIOR 60" From 5-8457			1		V
18	483560	. PANEL INTERIOR 53" Up to 5-8358 / REPLACED BY: K483560		1	1		
18	483811	. PANEL INTERIOR 53" From 5-8359		1	1	1	
NS	504347	. RIVET POP DOME OE 3/16x1/4 AL		28	28	28	
NS	504433	. SNAP-IN PLUG / 1.090 O.D.		1	1	1	
19	483356	. ROD TRANSFER Up to 2-7831			1		
19	483639	. ROD TRANSFER From 2-7832		1	1	1	
20	502625	. SCREW SHR HEXS 5/16x3/8 {1/4-20 Up to 3-8109		2	2		
21	507301	. BUSHING NYLINER		2	2		
22	502819	. NUT HEX JAM 1/4-20 ZP Up to 3-8109		2	2		
22	504689	. RING RETAINER / EXT .312 x .243 x .025" / SS From 3-8110		2	2	2	
23	481358	. HANDLE ASSY / S.B. Up to 5-8468		1	1		
23	483897	. HANDLE ASSY / B.A. From 5-8469		1	1	1	
24	481011	. RETAINER ROD / HANDLE / CHROMATE Up to 2-7831			1		
24	483587	. RETAINER ROD / HANDLE / E-COAT BLACK From 2-7832		1	1	1	
25	500473	. WASHER LO SPT .262x.489x.062 ZP		6	6	6	
26	500163	. SCREW CAP HEX 1/4-20x3/4 G5 ZP		6	6	6	
27	504334	. BUMPER RUBBER / .625 OD x .406 TH x .156 HOLE		1	1	1	
NS	504339	. RIVET POP DOME OE 1/8x3/8 SS		2	2	2	
28	481007	. ROD ASSY MALE		1	1	1	

V) USE WITH "VORALD" SYSTEM

From 2-7764 Up to 8-9339	DATE: 01/2014	PAGE: Y2-1864-91

BAGGAGE DOOR - W/"SLIDE-OUT" INSTALLATION

ITEM	PART	DESCRIPTION	XL45	MTH40	MTH45	MTH45S	NOTE
29	480394	. SPRING COMPRESSION / .355 O.D. 3.375 x .063		1	1	1	
30	481227	. ROD FEMALE		1	1	1	
31	481012	. BUSHING LEVER		1	1	1	
32	504459	. RIVET MGLP PRDG 1/4x3/8 SS		1	1	1	
NS	502573	. WASHER FL 6.4x12.5x1.6 SS		1	1	1	
33	483690	. DOOR SUPPORT NYLON 22.3MM 29MM 38.1MM Up to 3-8109		1	1	1	
33	483674	. DOOR SUPPORT NYLON 25.4MM 25.4MM 38.1MM From 3-8110		1	1	1	
33	483222	. SHIM SS 18GA 35MM x 38.1MM Up to 3-8109		AR	AR	AR	
33	483742	. SHIM SS 18GA 25.4MM x 38.1MM From 3-8110		AR	AR	AR	
34	500368	. SCREW MA FL SLT 1/4-20x1 1/2 ZP		2	2	2	
40	481564	. ROD GUIDE		2	2	2	
41	502151	. SPRING COMPRESSION / .300 O.D. x 1 x .032		2	2	2	
42	562096	. MICRO SWITCH		1	1	1	
43	502579	. NUT HEX M3-0.5 NP		4	4	4	
44	502577	. SCREW MA PAN PH M3-0.5x16 ZP		2	2	2	
45	780428	. LOCK ACTUATOR / 12V		1	1	1	
. NS	562076	. . CONNECTOR / PACK-CON I / FEMALE HOUSING / 2C / PED 8911772		1	1	1	
46	500883	. SCREW TC PAN PH #8-32x3/8 ZP		6	6	6	
47	482109	. BRACKET / TO FIX LOCK ACTUATOR		1	1	1	
50	560481	. CLAMP / 5/8" I.D. / REPLACED BY: 952629		3	3	3	
51	500883	. SCREW TC PAN PH #8-32x3/8 ZP		AR	AR	AR	
52	062796	. CABLE ASSY / ACTUATOR POWER / EACH DOOR Up to 7-9095		1	1	1	
52	067002	. CABLE ASSY / ACTUATOR POWER / EACH DOOR From 7-9096 / REPLACED BY: 068083		1	1	1	
52	066658	CABLE ASSY / TO STRETCH ACTUATOR CABLE ABOVE 1350MM		1	1	1	
60	281445	GUIDE ASSY / R.H. DOOR Up to 2-7831			1		
60	288031	GUIDE ASSY / R.H. DOOR From 2-7832		1	1	1	
61	502780	SCREW CAP HEX M8-1.25x25 SS EMN		1	1	1	
62	500270	WASHER FL .406x1.000x.063 SS		2	2	2	
63	500868	NUT HEX NYRT M8-1.25 CP		1	1	1	
64	502737	SCREW CAP HEX M6-1.0x25 SS EMN		1	1	1	
65	502511	NUT HEX NYRT M6-1.0 ZP		1	1	1	

From 2-7764 Up to 8-9339	DATE: 01/2014	PAGE: Y2-1864-91

BAGGAGE DOOR - W/"SLIDE-OUT" INSTALLATION

ITEM	PART	DESCRIPTION	XL45	MTH40	MTH45	MTH45S	NOTE
65	502573	WASHER FL 6.4x12.5x1.6 SS		3	3	3	
66	955297	SCREW CAP HEX M8-1.25x25 G8.8 ZG603		4	4	4	
NS	500321	WASHER BEL SPR .331x.827x.098 ZG603		4	4	4	
67	482289	STRIKER CATCH Up to 2-7831			1		
67	483599	STRIKER CATCH From 2-7832 Up to 5-8494		1	1		
67	485429	STRIKER CATCH R.H. From 5-8495		1	1	1	
NS	483730	SHIM SS 14GA 73.2MM x 38.1MM		AR	AR	AR	
NS	284059	SHIM WASHER SS 18GA 32MM O.D. x 14MM I.D.		AR	AR		
68	5001337	NUT INS FL HEX M8-1.25 0.5-3.0 ZP		4	4		
69	482330	WEATHERSTRIP / W/60" HINGE BAGGAGE DOOR / REPLACED BY: 485631			1		
69	485631	WEATHERSTRIP / W/60" HINGE BAGGAGE DOOR			1		
69	483692	WEATHERSTRIP / W/45" HINGE BAGGAGE DOOR / REPLACED BY: 485633		1			
69	485633	WEATHERSTRIP / W/45" HINGE BAGGAGE DOOR		1			
69	483462	WEATHERSTRIP / W/53" HINGE BAGGAGE DOOR / REPLACED BY: 485632		1	1	1	
69	485632	WEATHERSTRIP / W/53" HINGE BAGGAGE DOOR		1	1	1	
71	475297	MOULDING / WEATHERSTRIP RETAINER Up to 3-8109		1	1		
71	476077	MOULDING / WEATHERSTRIP RETAINER From 3-8110		1	1	1	
NS	500611	SCREW TC BDG PH #10-24x1/2 ZP		2	2	2	
80	Y2-1855-00	**RUB RAIL - CREST & TRIMS**		1	1	1	
81	N.P.N.	SUPPORT WELDED TO STRUCTURE		1	1	1	4
		NEXT FOLLOWING ITEMS ARE RELATED					
		WITH HINGED DOORS CURBSIDE INSTALLATION					
89	Call Order Desk	BAGGAGE DOOR ASSY 60" / W/HINGE CURBSIDE			AR		P C
89	485622	BAGGAGE DOOR ASSY 53" / W/HINGE CURBSIDE		AR	AR	AR	D
90	483787	ROD LOCK / 60"			2		
90	484004	ROD LOCK / 53"		2	2	2	
91	484075	FRAME ASSY 60"			1		
91	484078	FRAME ASSY 53"		1	1	1	
92	485444	UPPER PANEL 60" / CURBSIDE DOOR W/HINGE / B.A. Up to 6-8805			1		
		4) NO PARTS NUMBER					
		P) CALL ORDER DESK FOR SPECIFIC APPLICATION					
		(V.I.N.)					
		C) SERVICE NUMBER SPECIFIED "UPPER AND LOWER					
		PANEL". SEE CONVERTER BAGGAGE BOOK PA-1108 AT					
		SECTION #10					
		D) MOUNTED WITH PLAIN 2 PANELS W/O VENTILATION					

From 2-7764 Up to 8-9339	DATE: 01/2014	PAGE: Y2-1864-91

BAGGAGE DOOR - W/"SLIDE-OUT" INSTALLATION

ITEM	PART	DESCRIPTION	XL45	MTH40	MTH45	MTH45S	NOTE
92	484090	UPPER PANEL 60" / CURBSIDE DOOR W/HINGE / B.A. From 6-8806			1		
92	484001	UPPER PANEL 53" / CURBSIDE DOOR W/HINGE / B.A. Up to 6-8805		1	1	1	
92	484089	UPPER PANEL 53" / CURBSIDE DOOR W/HINGE / B.A. From 6-8806		1	1	1	
92	485457	UPPER PANEL 53" W/1.51 SQF PERFORATED AREA / B.A.		1	1	1	
93	485443	LOWER PANEL 60" / B.A.			1		
93	484000	LOWER PANEL 53" / B.A.		1	1	1	
93	485456	LOWER PANEL 53" W/1.09 SQF PERFORATED / B.A.		1	1	1	
94	483799	STRIKER CATCH L.H.		2	2	2	
95	281912	GUIDE ASSY / L.H. DOOR		1	1	1	
96	484086	HINGE curbside		1	1	1	

From Y-7046 Up to 1-7680	DATE: 01/2014	PAGE: Y2-1865-00
FLOOR BAGGAGE COMPARTMENT - BUS		

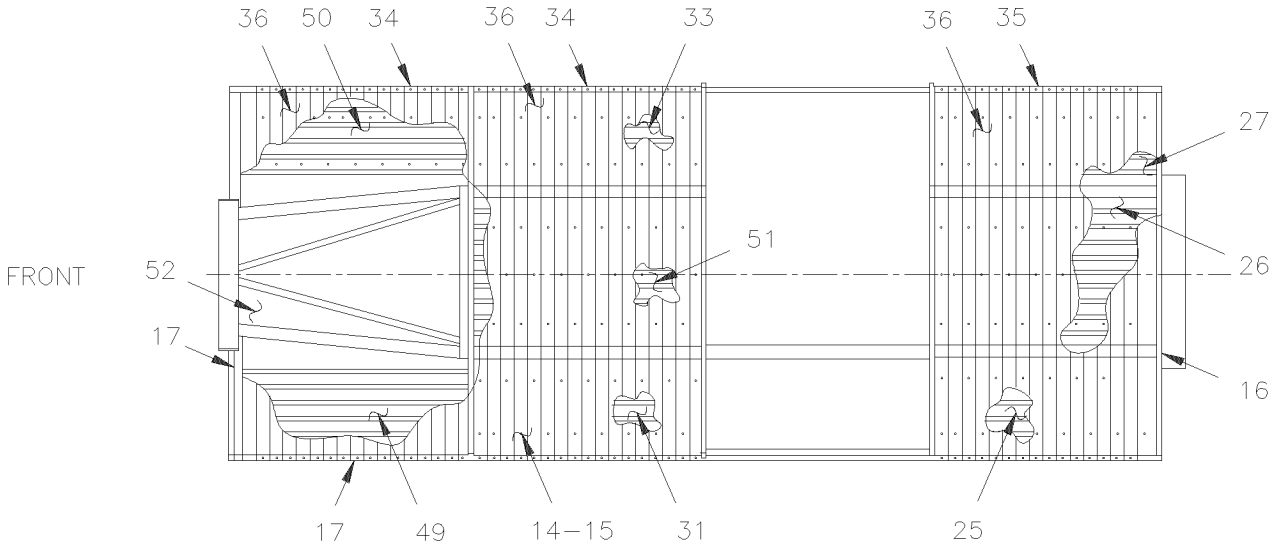

BUS – W/IND SUSPENSION

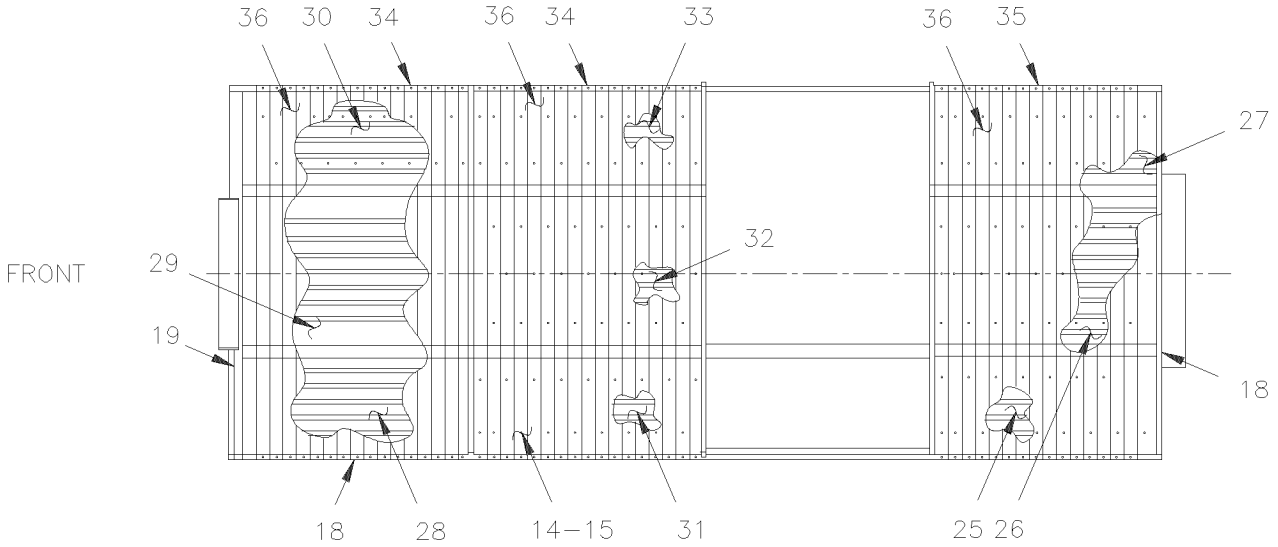

BUS – W/RIGID SUSPENSION

From Y-7046 Up to 1-7680	DATE: 01/2014	PAGE: Y2-1865-00

FLOOR BAGGAGE COMPARTMENT - BUS

ITEM	PART	DESCRIPTION	XL45	MTH40	MTH45	MTH45S	NOTE
14	505409	RIVET COLLAR HUCK 3/16	AR				
15	505408	PIN MAGNA-GRIP 3/16 SS	AR				
16	504127	RIVET POP DOME OE 3/16x3/4 AL	AR				
17	504487	RIVET MGLP PRDG 3/16x7/16 SS	AR				
18	504610	RIVET MGLP PRDG 1/4x5/8 SS	AR				
19	504459	RIVET MGLP PRDG 1/4x3/8 SS	AR				
25	483303	PANEL UNDERFLOOR REAR L.H.	1				
26	483300	PANEL UNDERFLOOR REAR CENTER	1				
27	483297	PANEL UNDERFLOOR REAR R.H.	1				
28	483082	PANEL UNDERFLOOR FRONT L.H. / 1ST BAY	1				
29	483083	PANEL UNDERFLOOR FRONT CENTER	1				
30	483081	PANEL UNDERFLOOR FRONT R.H. / 1ST BAY	1				
31	482254	PANEL UNDERFLOOR FRONT L.H. / 2ND BAY	1				
32	483216	PANEL UNDERFLOOR FRONT CENTER / 2ND BAY	1				
33	482250	PANEL UNDERFLOOR FRONT R.H. / 2ND BAY	1				
34	482248	MOULDING SS / <> FLOOR PANEL & STRUCTURE 1537MM	4				
35	482249	MOULDING SS / <> FLOOR PANEL & STRUCTURE 1530MM	2				
36	482239	PANEL FLOOR / BAGGAGE COMPARTMENT	3				
49	483231	PANEL UNDERFLOOR FRONT L.H. / 1ST BAY	1				
50	483232	PANEL UNDERFLOOR FRONT R.H. / 1ST BAY	1				
51	482386	PANEL UNDERFLOOR FRONT CENTER / 2ND BAY	14				
52	483240	PANEL UNDERFLOOR FRONT CENTER / 1ST BAY	1				
53	504339	RIVET POP DOME OE 1/8x3/8 SS	1				

From 1-7681 Up to 6-8906	DATE: 01/2014	PAGE: Y2-1865-01
FLOOR BAGGAGE COMPARTMENT - BUS		

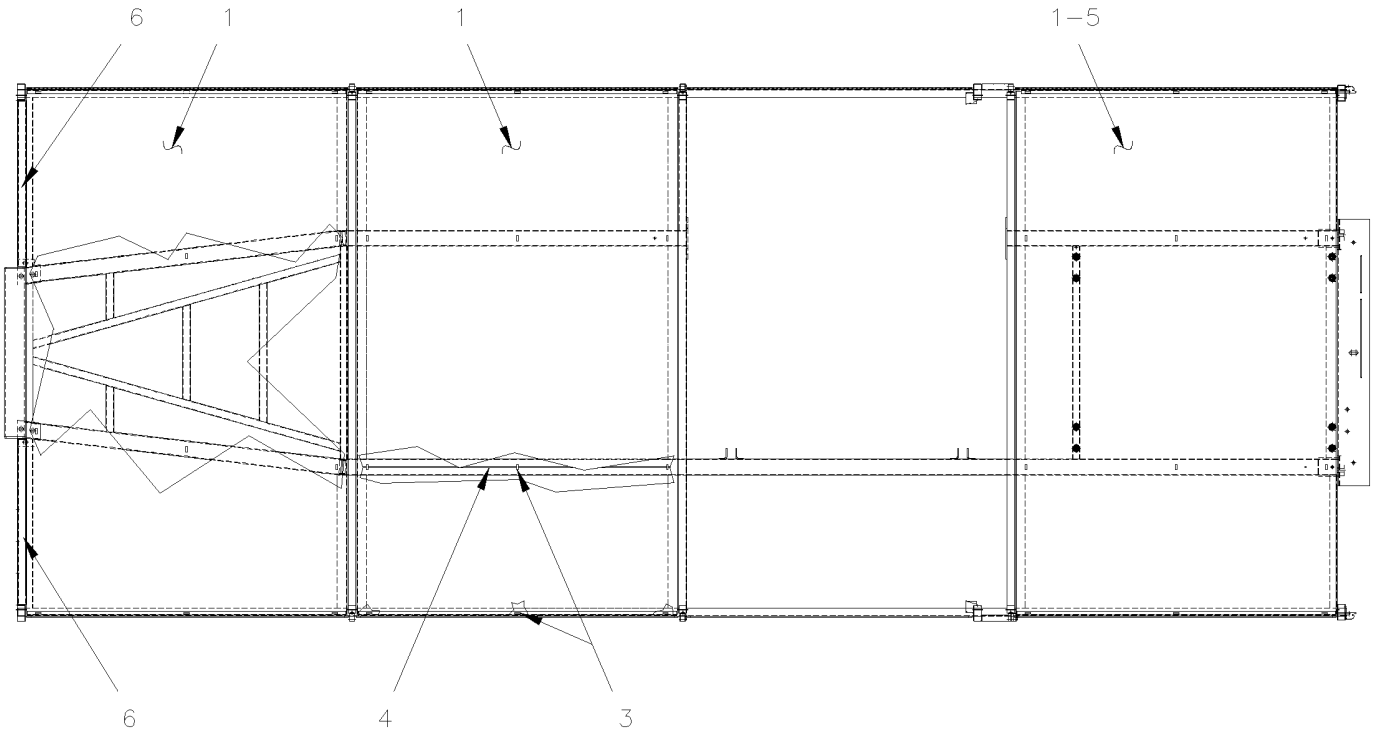

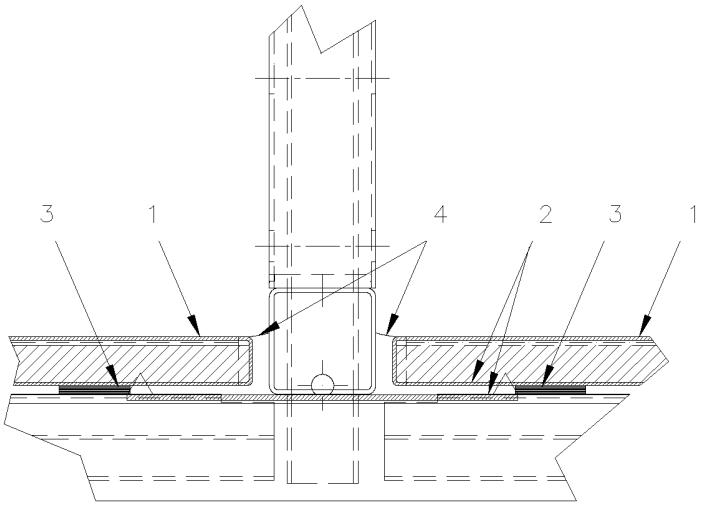

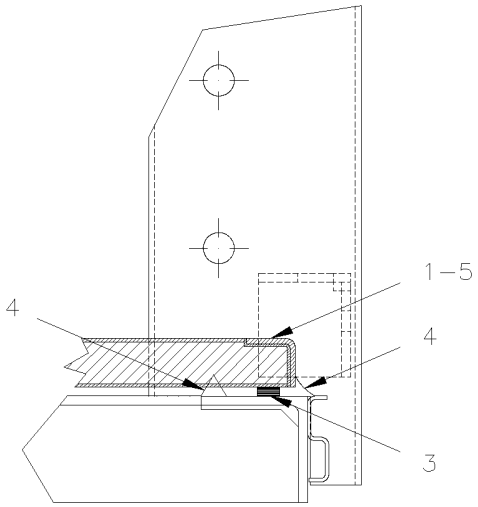

From 1-7681 Up to 6-8906	DATE: 01/2014	PAGE: Y2-1865-01

FLOOR BAGGAGE COMPARTMENT - BUS

ITEM	PART	DESCRIPTION	XL45	MTH40	MTH45	MTH45S	NOTE
1	483450	BAGGAGE FLOOR PANEL	3				
2	683097	CLEANER SIKA #205 / CLEAR / 1000ml	AR				
3	790392	BLOCK, RUBBER SPACER 1" X 5/16" x 1/ ADHESIVE	36				
4	683084	SEALANT SIKA #221 / GREY / 600 ml SAUSAGE	AR				
5	483451	BAGGAGE FLOOR PANEL / W/W.C.L. Up to 4-8278	1				W
5	483775	BAGGAGE FLOOR PANEL / W/W.C.L. From 4-8279	1				W
6	482403	CHANNEL "U" 793MM / SS	2				A
6	482404	CHANNEL "U" 704MM / SS	2				A
		A) WITH INDEPENDANT SUSPENSION					
		W) WITH W.C.L. ONLY					

From Y-7046 Up to 6-8906	DATE: 01/2014	PAGE: Y2-1865-10

SEPARATOR PANEL - BAGGAGE COMPARTMENT - BUS

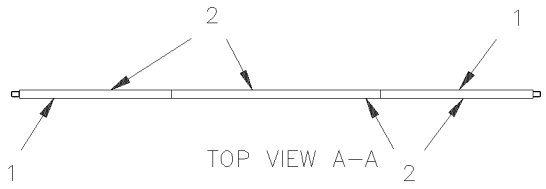

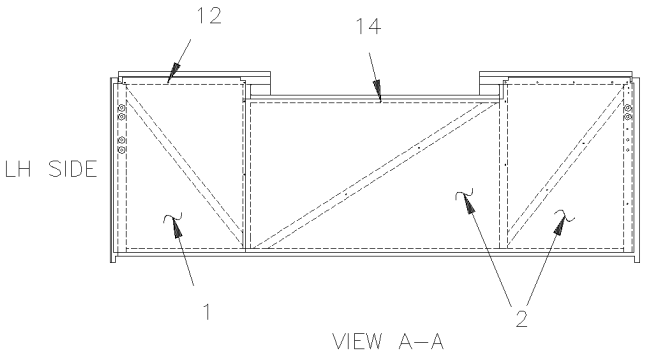

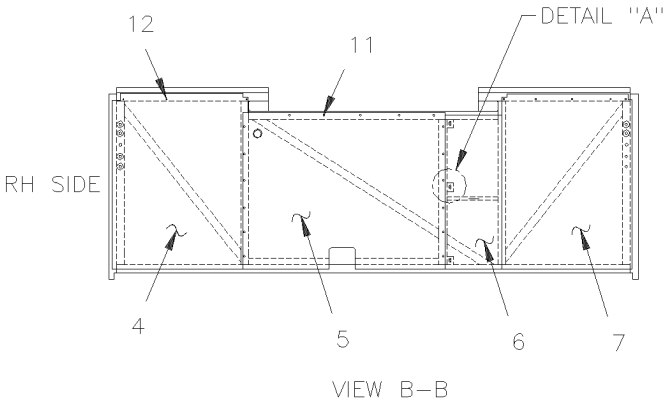

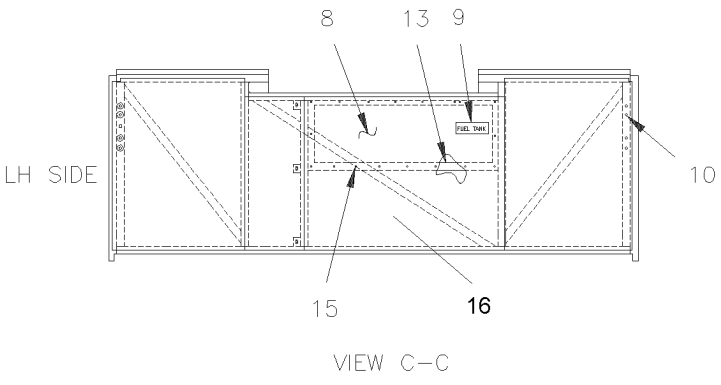

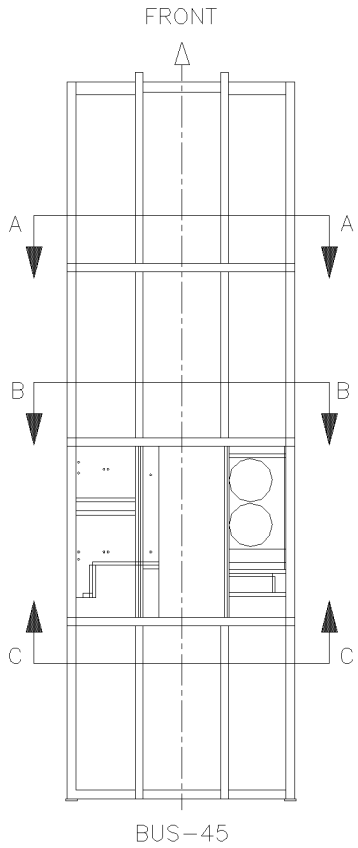

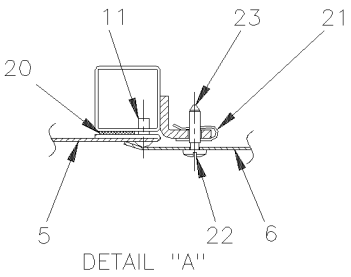

From Y-7046 Up to 6-8906	DATE: 01/2014	PAGE: Y2-1865-10

SEPARATOR PANEL - BAGGAGE COMPARTMENT - BUS

ITEM	PART	DESCRIPTION	XL45	MTH40	MTH45	MTH45S	NOTE
1	482468	PANEL SIDE SEPARATOR Up to 1-7680	2				
1	483421	PANEL SIDE SEPARATOR From 1-7681	1				
2	483111	PANEL SIDE & CENTER SEPARATOR Up to 1-7680	2				
2	483491	PANEL SIDE & CENTER SEPARATOR From 1-7681	1				
4	483096	PANEL SIDE SEPARATOR Up to 1-7680	1				
4	483428	PANEL SIDE SEPARATOR From 1-7681	1				
5	480927	PANEL FUEL TANK CLOSING Up to 5-8486	1				
5	485383	PANEL FUEL TANK CLOSING From 5-8487	1				
6	480929	PANEL DOOR ASSY W/HINGE Up to 1-7680	1				
6	481193	PANEL DOOR ASSY W/HINGE From 1-7681	1				
6	480928	. HINGE / DOOR PANEL 27 1/8" (689mm)	1				
7	480921	PANEL SIDE SEPARATOR Up to 1-7680	1				
7	483429	PANEL SIDE SEPARATOR From 1-7681	1				
8	483344	PANEL FUEL TANK ACCESS / RIVETED 270MM x 913MM	1				
8	Call Order Desk	PANEL FUEL TANK ACCESS	1				P
8	483400	. PANEL FUEL TANK ACCESS 251MM X 898MM	1				A
8	483399	. . HINGE	1				A
8	504363	. STUD 5/16 O.D. X 7/16 (DZUS)	7				A
8	504353	. RETAINER, 5/16"DIA. (DZUS) STUD	7				A
8	504365	SPRING HOOK / DZUS 5/16	7				A
8	504339	RIVET POP DOME OE 1/8x3/8 SS	AR				A
9	031163	DECAL / "FUEL TANK ACCESS" ENG & SPANISH	1				
10	504528	HOLE PLUG BUTTON / .437 O.D. BLACK	10				
11	500657	SCREW TC TR PH #10-24x1/2 ZP	24				
12	504347	RIVET POP DOME OE 3/16x1/4 AL	AR				
13	506268	TAPE RUB ADH1 URE 3/8" x 1/2" x 25' / GREY 1820	AR				
14	506001	TAPE RUB ADH1 CC POL 1/8" x 3/4" x 50' / GREY 2520X	AR				
15	502526	SCREW TC BDG PH #12-24x3/4 ZP	17				
16	483344	PANEL FUEL TANK ACCESS / RIVETED 270MM x 913MM	1				
16	483398	PANEL LOWER	1				A
20	506071	TAPE RUB ADH1 CC POL 1/8" x 1/2" x 50' / GREY 2520X	AR				
21	504377	NUT SPR U 1 1/64x1/2x.109-.161	3				
22	504289	WASHER SPR GRIP .437x.020 AL	3				
23	504376	SCREW FST SLT #12 18x28.2 STL	3				
		P) CALL ORDER DESK FOR SPECIFIC APPLICATION					
		(V.I.N.)					
		A) USE WITH FUEL TANK PANEL ACCESS WITH HINGE					

From Y-7046 Up to 8-9339	DATE: 01/2014	PAGE: Y2-1865-20

EVAPORATOR & CONDENSOR WALL

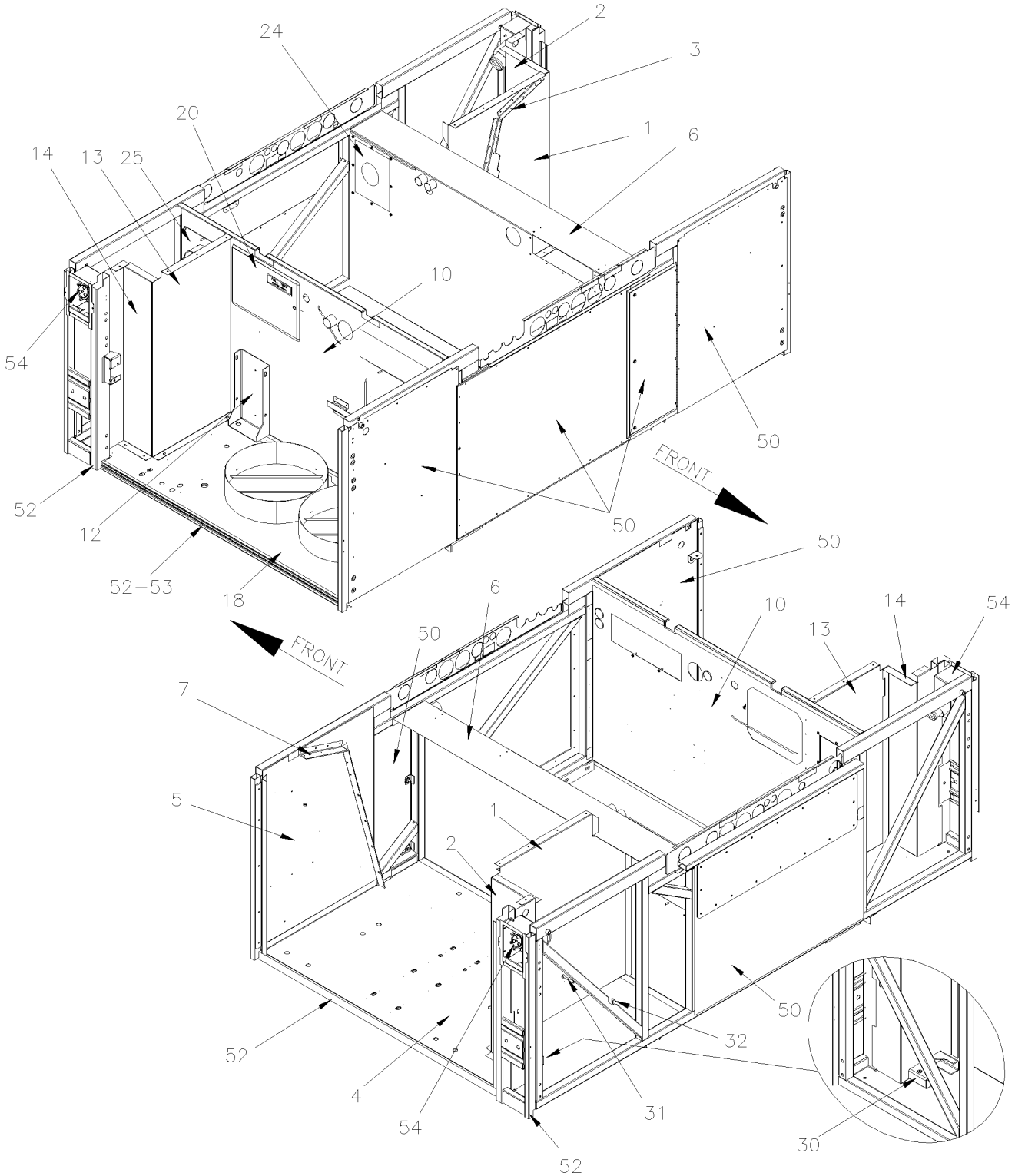

WITH LARGE A/C SYSTEM

From Y-7046 Up to 8-9339	DATE: 01/2014	PAGE: Y2-1865-20
EVAPORATOR & CONDENSOR WALL		

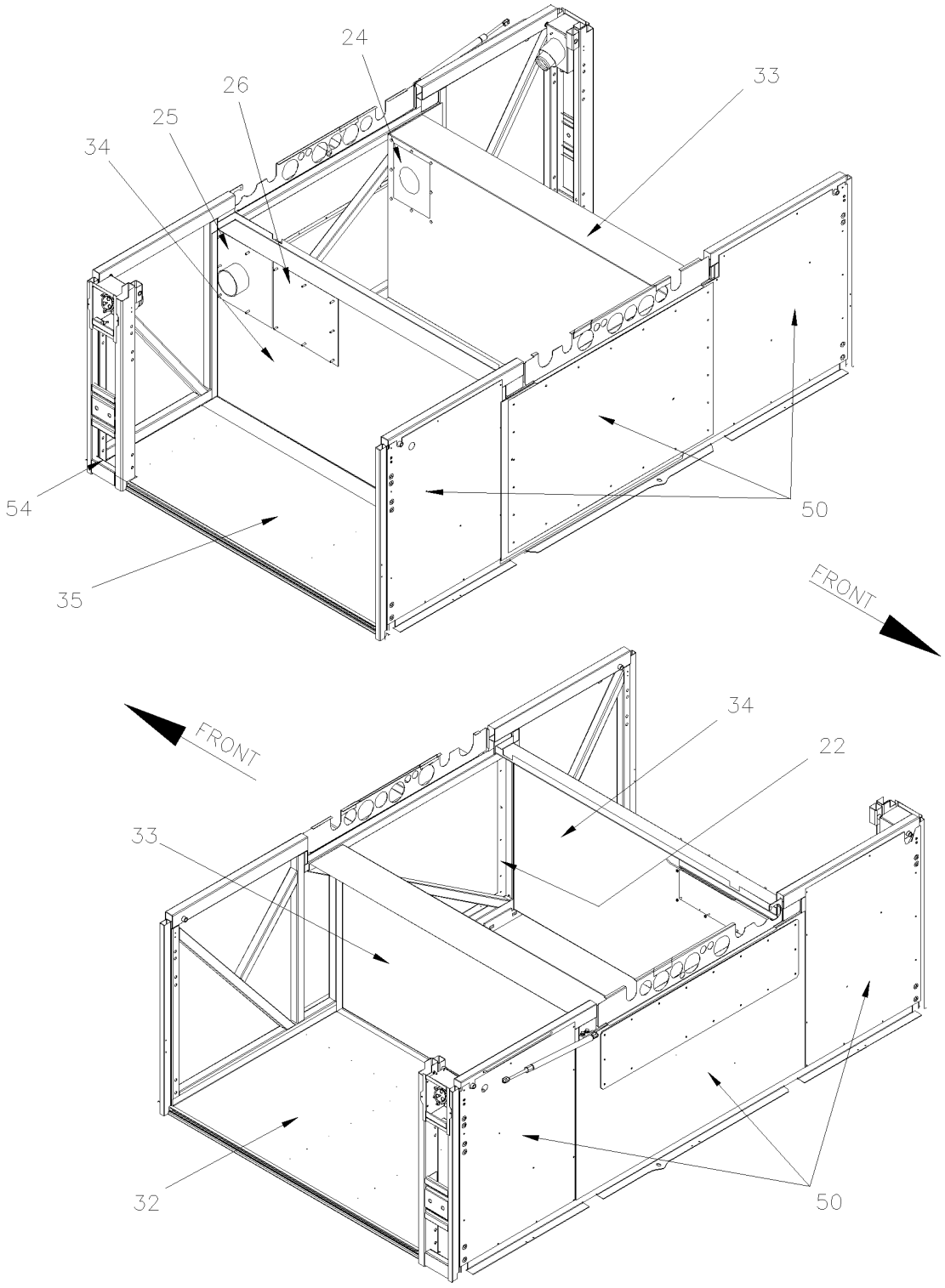

MTH WITH SMALL A/C SYSTEM

From Y-7046 Up to 8-9339	DATE: 01/2014	PAGE: Y2-1865-20

EVAPORATOR & CONDENSOR WALL

ITEM	PART	DESCRIPTION	XL45	MTH40	MTH45	MTH45S	NOTE
1	221073	PANEL EVAPORATOR SEPARATOR BACKWARD / REPLACED BY: 482115	1		1		
1	221174	PANEL EVAPORATOR SEPARATOR BACKWARD / W/W.C.L. "RICON"	1				
1	221187	PANEL EVAPORATOR SEPARATOR BACKWARD / W/"SLIDE-OUT" Up to 2-7908			1		
1	221265	PANEL EVAPORATOR SEPARATOR BACKWARD / W/"SLIDE-OUT" From 2-7909 Up to 3-8097			1		
1	221275	PANEL EVAPORATOR SEPARATOR BACKWARD / W/"SLIDE-OUT" From 3-8098			1		
1	482392	PANEL EVAPORATOR WALL BACKWARD		1		1	
2	221125	ANGLE PANEL CLOSING SEPARATOR			1		
3	480859	SUPPORT ANGLE / TO FIX HEATER & EVAPO	1				
3	482029	SUPPORT ANGLE / TO FIX HEATER & EVAPO Up to 6-8805		1	1	1	
4	482753	EVAPORATOR FLOOR ASSY Up to 1-7408 / REPLACED BY: 483371	1		1		
4	483371	EVAPORATOR FLOOR ASSY From 1-7409	1		1		
4	482742	EVAPORATOR FLOOR ASSY Up to 1-7408 / REPLACED BY: 483372		1		1	
4	483372	EVAPORATOR FLOOR ASSY From 1-7409		1		1	
5	482136	PANEL EVAPORATOR WALL FORWARD From R-830	1				
6	214111	REAR VERTICAL PANEL EVAPORATOR	1		1		
6	482356	REAR VERTICAL PANEL EVAPORATOR Up to 6-8805		1		1	
6	215874	REAR VERTICAL PANEL EVAPORATOR From 6-8806				1	
7	480858	SUPPORT ANGLE / TO FIX HEATER & EVAPO	1				
7	482028	SUPPORT ANGLE / TO FIX HEATER & EVAPO Up to 6-8805		1	1	1	
10	214174	REAR VERTICAL PANEL CONDENSOR Up to Y-7307	1		1		
10	214470	REAR VERTICAL PANEL CONDENSOR From Y-7308 Up to Y-7330	1		1		
NS	214469	ANGLE CLOSING PLATE 102MM From Y-7308	3		3		
10	214506	REAR VERTICAL PANEL CONDENSOR From Y-7331 Up to 1-7676	1		1		
10	214544	REAR VERTICAL PANEL CONDENSOR From 1-7677 Up to 3-8128	1		1		
10	215144	REAR VERTICAL PANEL CONDENSOR From 3-8129 Up to 4-8205	1		1		
10	215295	REAR VERTICAL PANEL CONDENSOR From 4-8206	1		1		
10	214322	REAR VERTICAL PANEL CONDENSOR Up to 1-7676		1		1	
10	214543	REAR VERTICAL PANEL CONDENSOR From 1-7677 Up to 3-8128		1		1	
10	215145	REAR VERTICAL PANEL CONDENSOR From 3-8129		1		1	
12	454044	SUPPORT RECEIVER TANK Up to 4-8205	1				
12	454125	SUPPORT RECEIVER TANK / WELDED TO STRUCTURE From 4-8206	1				
13	482755	PANEL CONDENSOR SEPARATOR BACKWARD Up to Y-7307	1		1		
13	214494	PANEL CONDENSOR SEPARATOR BACKWARD From Y-7308	1		1		
13	214512	PANEL CONDENSOR SEPARATOR BACKWARD / W/W.C.L. "RICON" Up to 1-7680	1				
13	213894	PANEL CONDENSOR SEPARATOR BACKWARD / W/W.C.L. "RICON" From 1-7681	1				
14	221124	ANGLE PANEL SEPARATOR	1		1		
14	212771	ANGLE PANEL SEPARATOR / W/W.C.L. "RICON"	1				
18	482747	CONDENSOR FLOOR ASSY 1150MM		1		1	
18	482750	CONDENSOR FLOOR ASSY 1524MM Up to 4-8205	1		1		
18	485413	CONDENSOR FLOOR ASSY 1524MM From 4-8206			1		

From Y-7046 Up to 8-9339	DATE: 01/2014	PAGE: Y2-1865-20

EVAPORATOR & CONDENSOR WALL

ITEM	PART	DESCRIPTION	XL45	MTH40	MTH45	MTH45S	NOTE
20	032016	DOOR ACCESS PANEL / FUEL COMPONENT From V-6258		1		1	
20	506268	TAPE RUB ADH1 URE 3/8" x 1/2" x 25' / GREY 1820	AR				I
22	481191	CLOSING PANEL FUEL TANK 28 3/8" x 39" Up to 5-8487 / REPLACED BY: 481471	1		1		
22	481471	CLOSING PANEL FUEL TANK / W/AUX TANK 28 3/8" x 39" Up to 5-8487		1			
24	482008	CLOSING PANEL FUEL HOSE ADAPTOR / STREETSIDE 9" x 11 3/8" From P-646 Up to T-5830	1		1		
24	032081	CLOSING PANEL FUEL HOSE ADAPTOR / STREETSIDE 9" x 11 3/8" From T-5831	1		1		
25	482039	CLOSING PANEL FUEL HOSE ADAPTOR / CURBSIDE 305MM x 222MM From P-646 Up to T-5830			1		L
25	032082	CLOSING PANEL FUEL HOSE ADAPTOR / CURBSIDE 306MM x 224MM From P-646 Up to T-5830			1		L
25	482201	CLOSING PANEL FUEL HOSE ADAPTOR / CURBSIDE 293MM x 318MM From P-646 Up to T-5830			1		S
25	032083	CLOSING PANEL FUEL HOSE ADAPTOR / CURBSIDE 293MM x 320MM From T-5831			1		S
26	482202	FUEL ACCESSORIES DOOR PANEL 303MM x 308MM From P-646 Up to T-5830			1		S
26	032076	FUEL ACCESSORIES DOOR PANEL 293MM x 308MM From T-5831			1		S
26	482040	FUEL ACCESSORIES DOOR PANEL 303MM x 240MM From P-646 Up to T-5830	1		1		L
26	032084	FUEL ACCESSORIES DOOR PANEL 306MM x 243MM From T-5831	1		1		L
30	211540	SUPPORT JACK / FORMER DEC 2003 / REPLACED BY: 215539	1				
30	215539	SUPPORT JACK / CURRENT DEC 2003	1				
30	213593	SUPPORT / JACK ACCESSORIES	1				
31	211887	SUPPORT ACCESSORIES TOOL	1				
NS	211155	ANGLE RETAINER	1				
		NEXT ARE RELATED WITH SMALL A/C SYSTEM					
32	482811	FLOOR PANEL / EVAPO COMP W/SMALL A/C SYSTEM Up to 1-7680		1		1	
32	483420	FLOOR PANEL / EVAPO COMP W/SMALL A/C SYSTEM From 1-7681		1		1	
32	482752	FLOOR PANEL / EVAPO COMP W/SMALL A/C SYSTEM Up to 1-7680			1		
32	483418	FLOOR PANEL / EVAPO COMP W/SMALL A/C SYSTEM From 1-7681			1		
33	482810	REAR VERTICAL PANEL / EVAPO COMP W/SMALL A/C SYSTEM		1		1	
33	221071	REAR VERTICAL PANEL / EVAPO COMP W/SMALL A/C SYSTEM / REPLACED BY: 482428			1		
34	482808	REAR VERTICAL PANEL / COND COMP W/SMALL A/C SYSTEM Up to 9-9615		1		1	
34	483253	REAR VERTICAL PANEL / COND COMP W/SMALL A/C SYSTEM From 9-9616				1	
34	221070	REAR VERTICAL PANEL / COND COMP W/SMALL A/C SYSTEM / REPLACED BY: 482426			1		
35	482809	FLOOR PANEL / COND COMP W/SMALL A/C SYSTEM Up to 1-7680		1		1	
35	483419	FLOOR PANEL / COND COMP W/SMALL A/C SYSTEM From 1-7681		1		1	
35	482751	FLOOR PANEL / COND COMP W/SMALL A/C SYSTEM Up to 1-7680			1		
35	483417	FLOOR PANEL / COND COMP W/SMALL A/C SYSTEM From 1-7681			1		
50	Y2-1865-10	**SEPARATOR PANEL - BAGGAGE COMPARTMENT - BUS**					
50	Y2-1865-55	**SEPARATOR PANEL - BAGGAGE COMPARTMENT - MTH**					
50	Y2-1865-56	**SEPARATOR PANEL - BAGGAGE COMPARTMENT - MTH**					
		I) NOT INCLUDE WITH THE ACCESS DOOR					
		L) WITH LARGE A/C SYSTEM					
		S) WITH SMALL A/C SYSTEM					

From Y-7046 Up to 8-9339	DATE: 01/2014	PAGE: Y2-1865-20

EVAPORATOR & CONDENSOR WALL

ITEM	PART	DESCRIPTION	XL45	MTH40	MTH45	MTH45S	NOTE
50	Y2-1865-60	**SEPARATOR PANEL - BAGGAGE COMPARTMENT - MTH**					
51	Y2-1865-00	**FLOOR BAGGAGE COMPARTMENT - BUS**					
51	Y2-1865-01	**FLOOR BAGGAGE COMPARTMENT - BUS**					
52	Y2-1893-00	**BAGGAGE COMPARTMENT STRUCTURE**					
53	Y2-1854-10	**WEATHERSTRIP & RETAINER - BUS**					
53	Y2-1854-20	**WEATHERSTRIP & RETAINER - MTH**					
54	Y2-1875-00	**FUEL TANK FILLING DOOR**					

From Y-7046 Up to 8-9339	DATE: 01/2014	PAGE: Y2-1865-20

EVAPORATOR & CONDENSOR WALL

ITEM	PART	DESCRIPTION	XL45	MTH40	MTH45	MTH45S	NOTE

From Y-7046 Up to 6-8805	DATE: 01/2014	PAGE: Y2-1865-50

FLOOR BAGGAGE COMPARTMENT - MTH

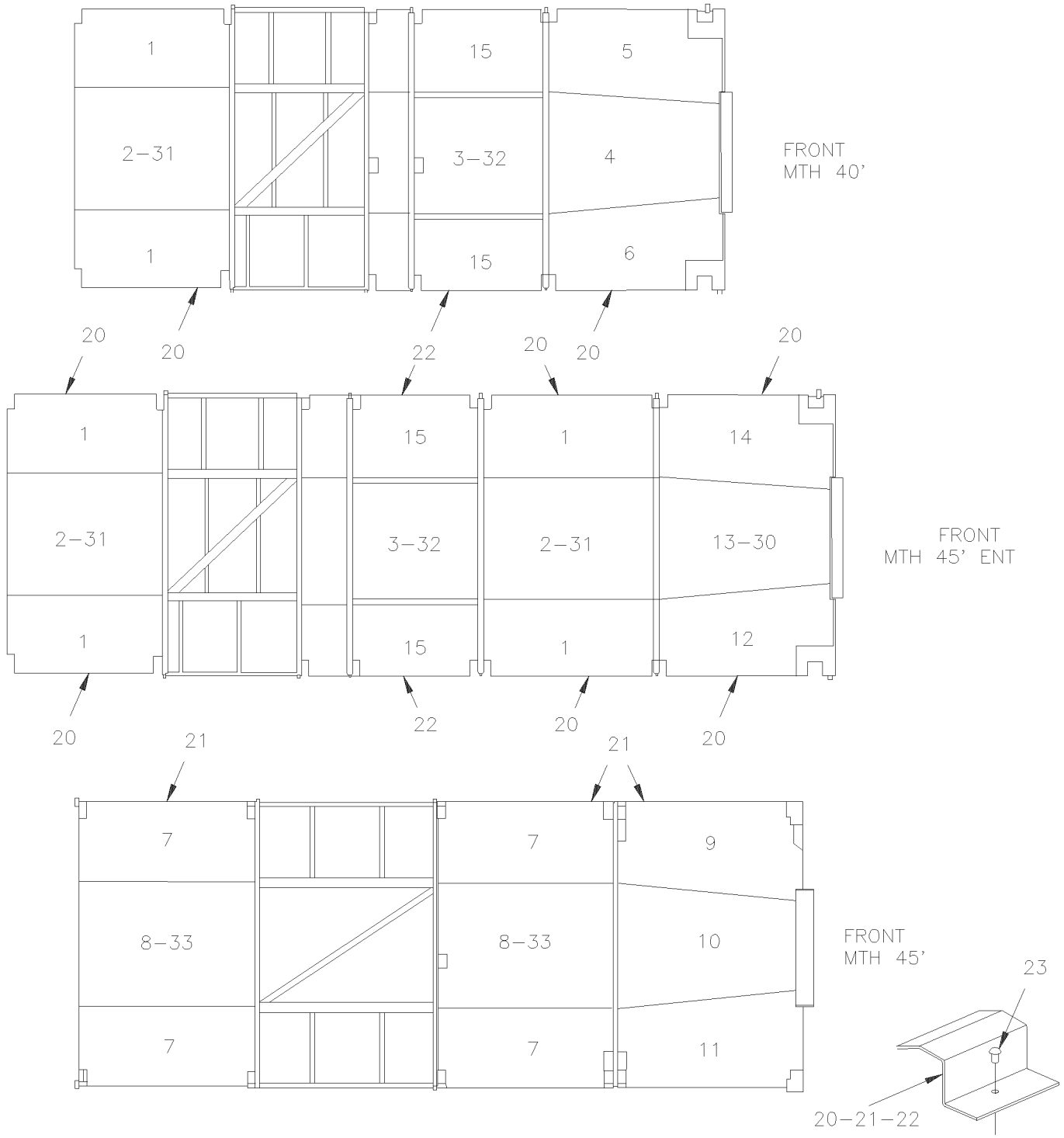

From Y-7046 Up to 6-8805	DATE: 01/2014	PAGE: Y2-1865-50

FLOOR BAGGAGE COMPARTMENT - MTH

ITEM	PART	DESCRIPTION	XL45	MTH40	MTH45	MTH45S	NOTE
1	481097	PANEL FLOOR L.H. & R.H. Up to 1-7680		1	1	1	
1	483431	PANEL FLOOR L.H. & R.H. From 1-7681		1	1	1	
2	481098	PANEL FLOOR CENTER		2			
2	481098	PANEL FLOOR CENTER				4	
3	482613	PANEL FLOOR CENTER		1			
3	482613	PANEL FLOOR CENTER				2	
4	483058	PANEL FLOOR CENTER FRONT		1		1	
5	483060	PANEL FLOOR L.H. FRONT Up to 1-7680		1			
5	483432	PANEL FLOOR L.H. FRONT From 1-7681 Up to 2-7806		1			
5	483627	PANEL FLOOR L.H. FRONT From 2-7807		1			
6	483059	PANEL FLOOR R.H. FRONT Up to 1-7680		1			
6	483433	PANEL FLOOR R.H. FRONT From 1-7681 Up to 2-7806		1			
6	483628	PANEL FLOOR R.H. FRONT From 2-7807		1			
7	481958	PANEL FLOOR L.H. & R.H. Up to 1-7680			4		
7	483430	PANEL FLOOR L.H. & R.H. From 1-7681			1		
8	481959	PANEL FLOOR CENTER			2		
9	483056	PANEL FLOOR L.H. FRONT Up to 1-7680			1		
9	483435	PANEL FLOOR L.H. FRONT From 1-7681 Up to 2-7806			1		
9	483631	PANEL FLOOR L.H. FRONT From 2-7807			1		
10	483055	PANEL FLOOR CENTER FRONT			1		
11	483057	PANEL FLOOR R.H. FRONT Up to 1-7680			1		
11	483436	PANEL FLOOR R.H. FRONT From 1-7681 Up to 2-7806			1		
11	483632	PANEL FLOOR R.H. FRONT From 2-7807			1		
12	483285	PANEL FLOOR R.H. FRONT Up to 1-7680				1	
12	483438	PANEL FLOOR R.H. FRONT From 1-7681 Up to 2-7806				1	
12	483629	PANEL FLOOR R.H. FRONT From 2-7807				1	
13	483283	PANEL FLOOR CENTER / FRONT				1	
14	483284	PANEL FLOOR L.H. FRONT Up to 1-7680				1	
14	483437	PANEL FLOOR L.H. FRONT From 1-7681 Up to 2-7806				1	
14	483630	PANEL FLOOR L.H. FRONT From 2-7807				1	
15	482448	PANEL FLOOR L.H. & R.H. Up to 1-7680		2		2	
15	483434	PANEL FLOOR L.H. & R.H. From 1-7681		2		2	
20	481130	MOULDING FINISHING 1235MM "Z" SHAPE / S.B. Up to 1-7680		4			
20	481130	MOULDING FINISHING 1235MM "Z" SHAPE / S.B. Up to 1-7680				6	
20	483439	MOULDING FINISHING 1362MM "Z" SHAPE / S.B. From 1-7681 Up to 1-7948 / REPLACED BY: 483745		4			
20	483439	MOULDING FINISHING 1362MM "Z" SHAPE / S.B. From 1-7681 Up to 1-7948 / REPLACED BY: 483745				6	
20	483745	MOULDING FINISHING 1342MM "Z" SHAPE / S.B. From 2-7949 Up to 5-8468 / REPLACED BY: 483933		4			
20	483933	MOULDING FINISHING 1342MM "Z" SHAPE / B.A. From 5-8469		4			
20	483745	MOULDING FINISHING 1342MM "Z" SHAPE / S.B. From 2-7949 Up to 5-8468 / REPLACED BY: 483933				6	
20	483933	MOULDING FINISHING 1342MM "Z" SHAPE / B.A. From 5-8469				6	
21	481966	MOULDING FINISHING 1405MM "Z" SHAPE / S.B. Up to 1-7680			6		
21	483440	MOULDING FINISHING 1533MM "Z" SHAPE / S.B. From 1-7681 Up to 1-7948 / REPLACED BY: 483971			6		
21	483673	MOULDING FINISHING 1529MM "Z" SHAPE / S.B. From 3-8110 / REPLACED BY: 483971			6		

From Y-7046 Up to 6-8805	DATE: 01/2014	PAGE: Y2-1865-50

FLOOR BAGGAGE COMPARTMENT - MTH

ITEM	PART	DESCRIPTION	XL45	MTH40	MTH45	MTH45S	NOTE
21	483744	MOULDING FINISHING 1513MM "Z" SHAPE / S.B. From 2-7949 Up to 3-8109 / REPLACED BY: 483971			6		
21	483673	MOULDING FINISHING 1529MM "Z" SHAPE / S.B. From 3-8110 Up to 5-8468 / REPLACED BY: 483971			6		
21	483971	MOULDING FINISHING 1529MM "Z" SHAPE / B.A. From 5-8469			6		
21	483453	MOULDING FINISHING 1533MM "Z" SHAPE / S.B. Up to 3-8109 / REPLACED BY: 483939			1		A
21	483743	MOULDING FINISHING 1533MM "Z" SHAPE / S.B. From 3-8110 Up to 5-8468 / REPLACED BY: 483939			1		A
21	483939	MOULDING FINISHING 1533MM "Z" SHAPE / B.A. From 5-8469			1		A
22	482639	MOULDING FINISHING 1018MM "Z" SHAPE / S.B. Up to 1-7680		2		2	
22	483441	MOULDING FINISHING 1146MM "Z" SHAPE / S.B. From 1-7681 Up to 1-7948 / REPLACED BY: 483746		2		2	
22	483746	MOULDING FINISHING 1126MM "Z" SHAPE / S.B. From 2-7949 Up to 5-8468 / REPLACED BY: 483934		2		2	
22	483934	MOULDING FINISHING 1126MM "Z" SHAPE / B.A. From 5-8469		2		2	
23	504339	RIVET POP DOME OE 1/8x3/8 SS		40	40	40	
23	680092	SEALANT TAPE BUTYL / GREY / 1/16"x3/4x50' / 71011V1760		AR	AR	AR	
23	500844	SCREW TC FL PH #10-32x1 1/4 ZP		AR	AR	AR	
30	483362	PANEL ALLUMINUM 14GA / FLOOR COVERING Up to 1-7860				1	
30	483720	PANEL ALLUMINUM 14GA / FLOOR COVERING From 1-7861				1	
31	482114	PANEL ALLUMINUM 14GA / FLOOR COVERING Up to 1-7860				1	
31	482351	PANEL ALLUMINUM 14GA / FLOOR COVERING From 1-7861				1	
32	482719	PANEL ALLUMINUM 14GA / FLOOR COVERING Up to 1-7860				1	
32	482350	PANEL ALLUMINUM 14GA / FLOOR COVERING From 1-7861				1	
33	482131	PANEL ALLUMINUM 14GA / FLOOR COVERING			2		
		A) WITH HINGE DOOR WITH "SLIDE-OUT"					

From Y-7046 Up to 6-8805	DATE: 01/2014	PAGE: Y2-1865-50

FLOOR BAGGAGE COMPARTMENT - MTH

ITEM	PART	DESCRIPTION	XL45	MTH40	MTH45	MTH45S	NOTE

From 6-8806 Up to 8-9339	DATE: 01/2014	PAGE: Y2-1865-51

FLOOR BAGGAGE COMPARTMENT - MTH

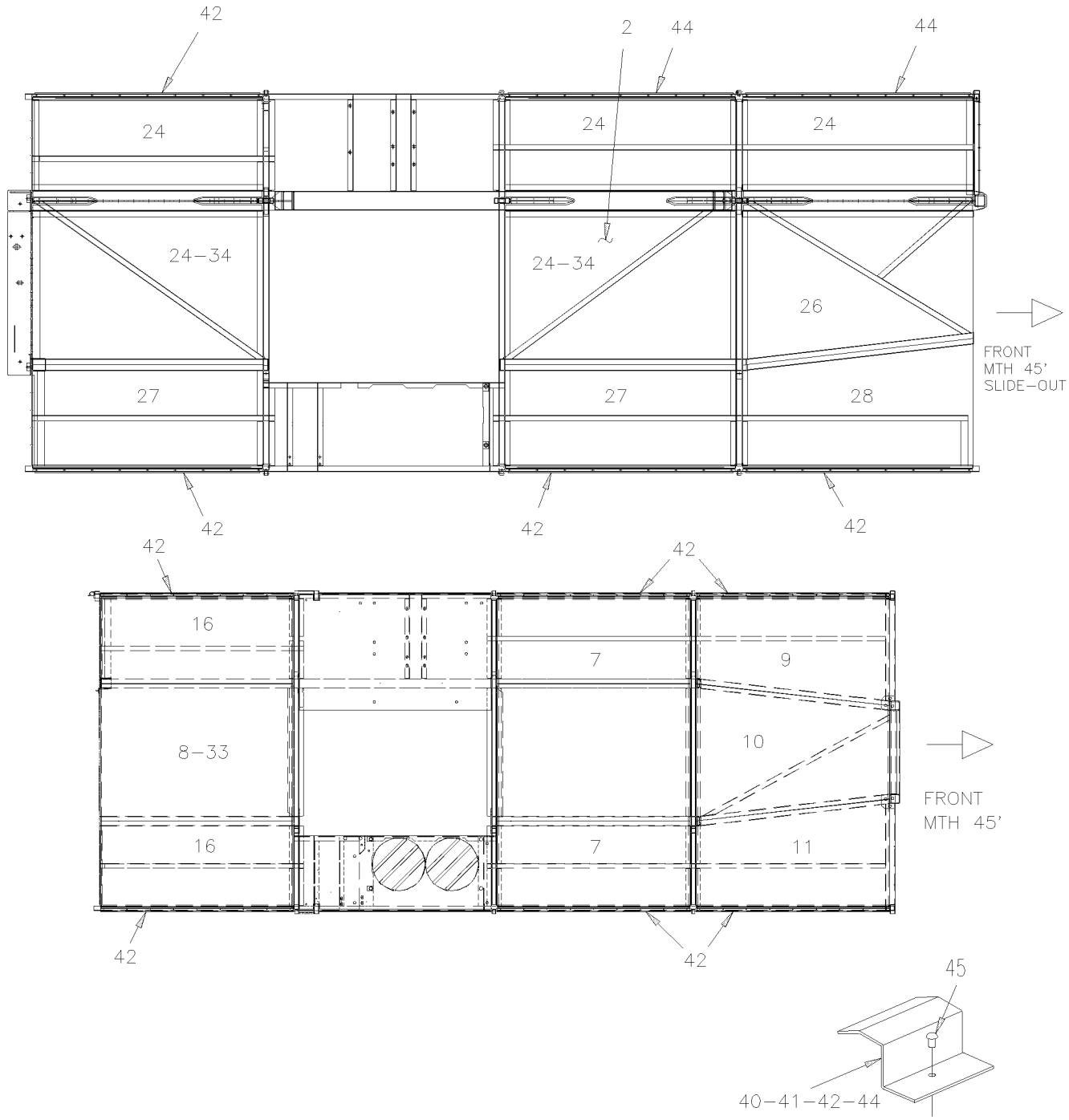

From 6-8806 Up to 8-9339	DATE: 01/2014	PAGE: Y2-1865-51

FLOOR BAGGAGE COMPARTMENT - MTH

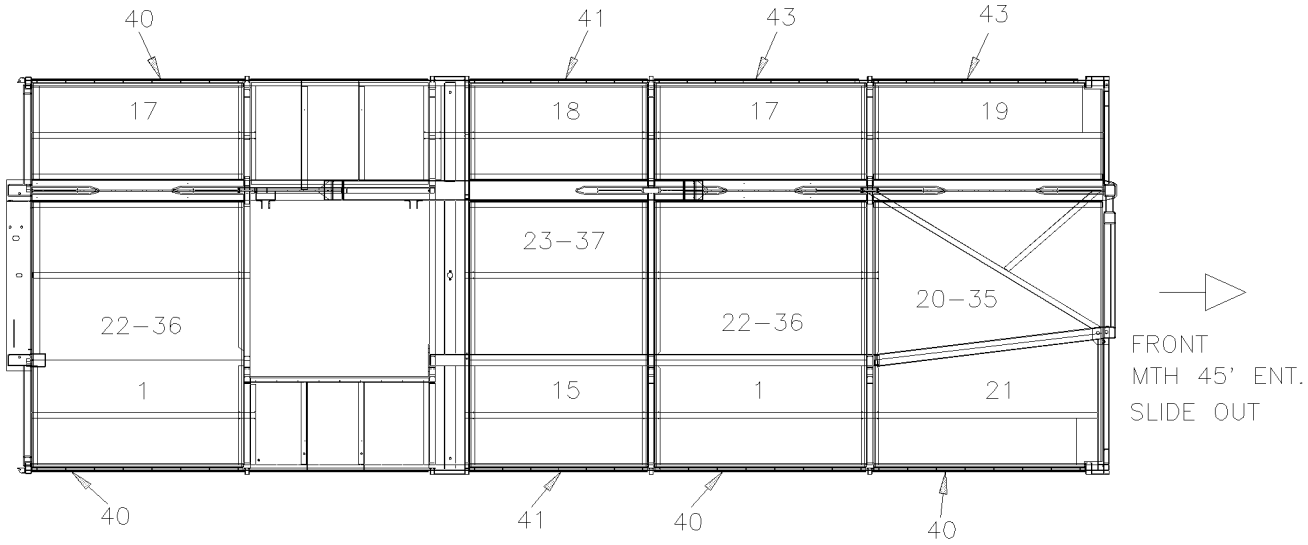

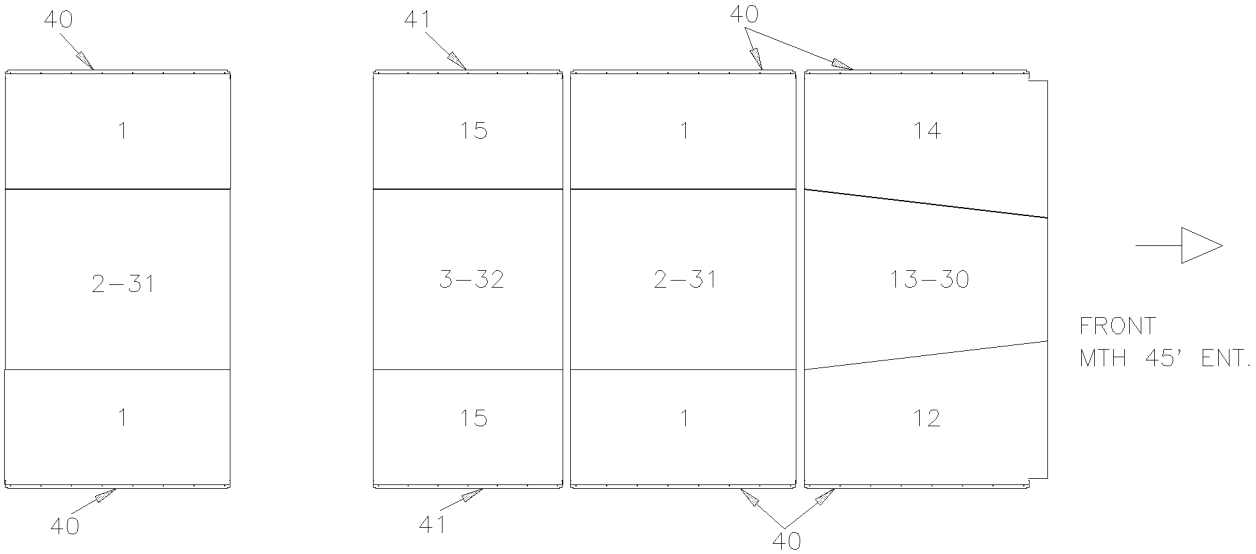

From 6-8806 Up to 8-9339	DATE: 01/2014	PAGE: Y2-1865-51
FLOOR BAGGAGE COMPARTMENT - MTH		

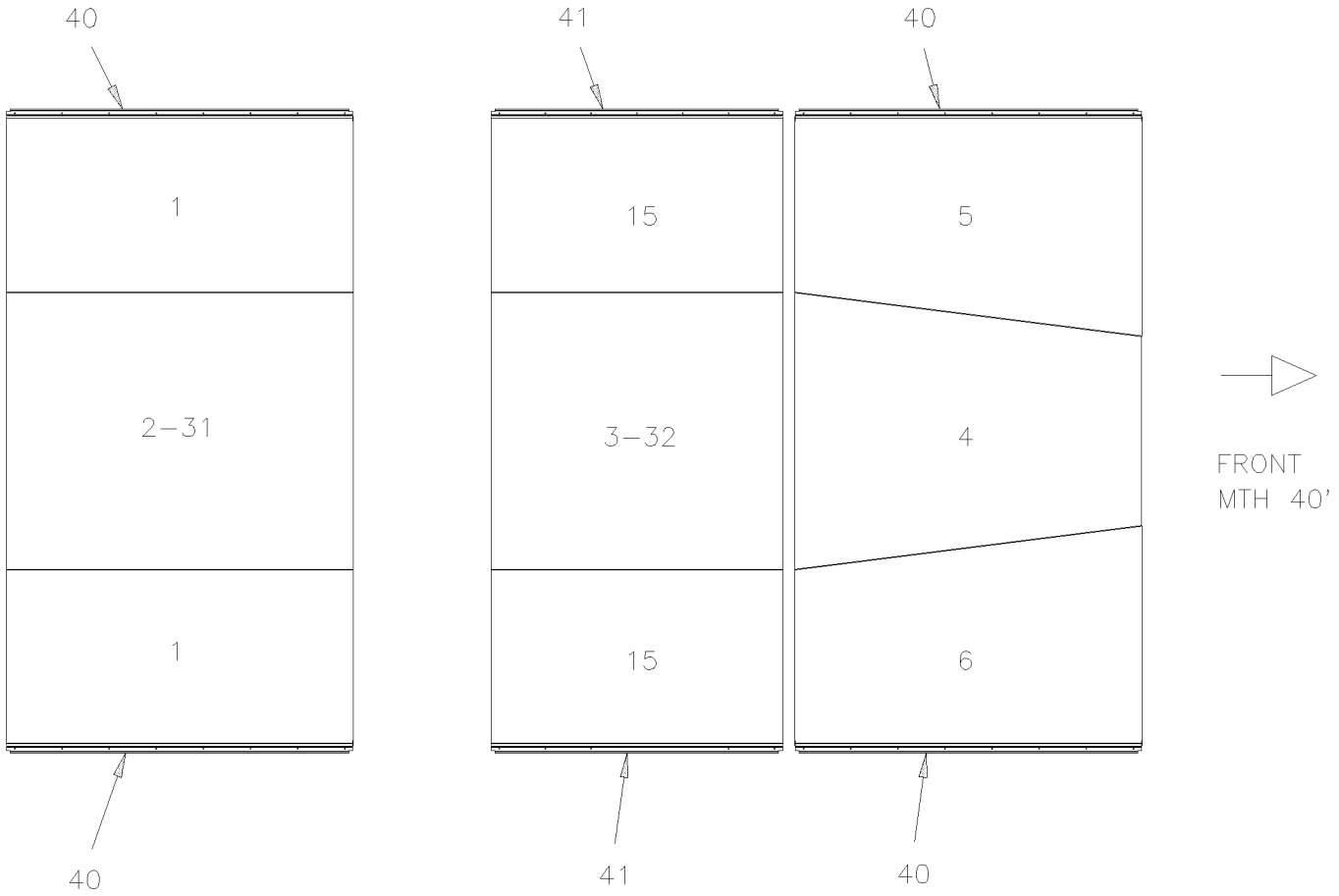

From 6-8806 Up to 8-9339	DATE: 01/2014	PAGE: Y2-1865-51

FLOOR BAGGAGE COMPARTMENT - MTH

ITEM	PART	DESCRIPTION	XL45	MTH40	MTH45	MTH45S	NOTE
1	483431	PANEL FLOOR L.H. & R.H. Up to 5-8813		2			
11	483431	PANEL FLOOR L.H. & R.H.				4	
2	481098	PANEL FLOOR CENTER Up to 5-8813		1			
21	481098	PANEL FLOOR CENTER				2	
3	482613	PANEL FLOOR CENTER		1		1	
4	483058	PANEL FLOOR CENTER FRONT Up to 5-8813		1			
5	483627	PANEL FLOOR L.H. FRONT Up to 5-8813		1			
6	483628	PANEL FLOOR R.H. FRONT Up to 5-8813		1			
7	483430	PANEL FLOOR L.H. & R.H.			2		
8	481959	PANEL FLOOR CENTER			2		
9	483631	PANEL FLOOR L.H. FRONT			1		
10	483055	PANEL FLOOR CENTER FRONT			1		
11	483632	PANEL FLOOR R.H. FRONT			1		
12	483629	PANEL FLOOR R.H. FRONT				1	
13	483283	PANEL FLOOR CENTER / FRONT				1	
14	483630	PANEL FLOOR L.H. FRONT				1	
15	483434	PANEL FLOOR L.H. & R.H.				2	
16	489181	MOULDING FINISHING 1529MM "Z" SHAPE			2		
17	489187	PANEL FLOOR L.H. / W/SLIDE OUT				2	
18	489188	PANEL FLOOR L.H. / W/SLIDE OUT				1	
19	489189	PANEL FLOOR L.H. FRONT / W/SLIDE OUT				1	
20	489186	PANEL FLOOR CENTER / FRONT / W/SLIDE OUT				1	
21	489190	MOULDING FINISHING 1359MM "Z" SHAPE		1		1	
22	489184	PANEL FLOOR CENTER / W/SLIDE OUT				2	
23	489185	PANEL FLOOR CENTER / W/SLIDE OUT				1	
24	489175	PANEL FLOOR L.H. / W/SLIDE OUT			3		
25	489176	PANEL FLOOR CENTER / W/SLIDE OUT			2		
26	489178	PANEL FLOOR CENTER / FRONT / W/SLIDE OUT			1		
27	489177	PANEL FLOOR R.H. / W/SLIDE OUT			2		
28	489179	PANEL FLOOR R.H. / FRONT / W/SLIDE OUT			1		
30	483720	PANEL ALLUMINUM 14GA / FLOOR COVERING Up to 5-8813		1			
31	482351	PANEL ALLUMINUM 14GA / FLOOR COVERING Up to 5-8813		1			
311	482351	PANEL ALLUMINUM 14GA / FLOOR COVERING				2	
32	482350	PANEL ALLUMINUM 14GA / FLOOR COVERING		1		1	
33	482131	PANEL ALLUMINUM 14GA / FLOOR COVERING			2		
34	489194	PANEL ALLUMINUM 14GA / FLOOR COVERING / W/SLIDE OUT			2		
35	485496	PANEL ALLUMINUM 14GA / FLOOR COVERING / W/SLIDE OUT				1	
36	485498	PANEL ALLUMINUM 14GA / FLOOR COVERING / W/SLIDE OUT				2	
37	485497	PANEL ALLUMINUM 14GA / FLOOR COVERING / W/SLIDE OUT				1	
40	489190	MOULDING FINISHING 1359MM "Z" SHAPE Up to 5-8813		4			
401	489190	MOULDING FINISHING 1359MM "Z" SHAPE				6	
41	489191	MOULDING FINISHING 1143MM "Z" SHAPE		2		2	
42	489181	MOULDING FINISHING 1529MM "Z" SHAPE		6		6	
43	489192	MOULDING FINISHING 1359MM "Z" SHAPE / W/HINGE DOOR & SLIDE OUT				2	

From 6-8806 Up to 8-9339	DATE: 01/2014	PAGE: Y2-1865-51

FLOOR BAGGAGE COMPARTMENT - MTH

ITEM	PART	DESCRIPTION	XL45	MTH40	MTH45	MTH45S	NOTE
44	489182	MOULDING FINISHING 1533MM "Z" SHAPE / W/HINGE DOOR & SLIDE OUT			2		
44	485584	MOULDING FINISHING 1533MM "Z" SHAPE / W/HINGE DOOR & SLIDE OUT			1		
45	504339	RIVET POP DOME OE 1/8x3/8 SS		AR	AR	AR	
NS	685126	ADHESIVE SIMSON #ISR 70-03 / GREY / 600ml SAUSAGE		AR	AR	AR	
NS	790392	BLOCK, RUBBER SPACER 1" X 5/16" x 1/ ADHESIVE		AR	AR	AR	

From 6-8806 Up to 8-9339	DATE: 01/2014	PAGE: Y2-1865-51

FLOOR BAGGAGE COMPARTMENT - MTH

ITEM	PART	DESCRIPTION	XL45	MTH40	MTH45	MTH45S	NOTE

From Y-7046 Up to 6-8805	DATE: 01/2014	PAGE: Y2-1865-55

SEPARATOR PANEL - BAGGAGE COMPARTMENT - MTH

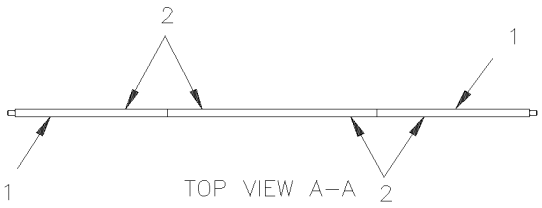

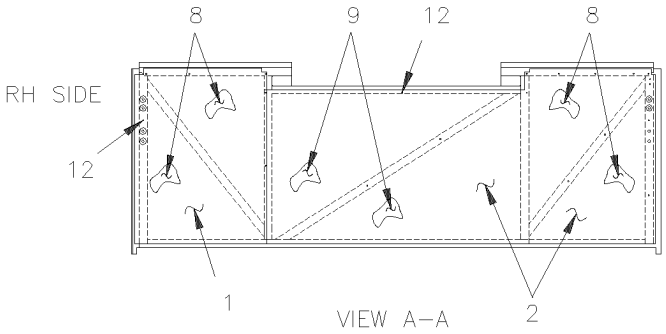

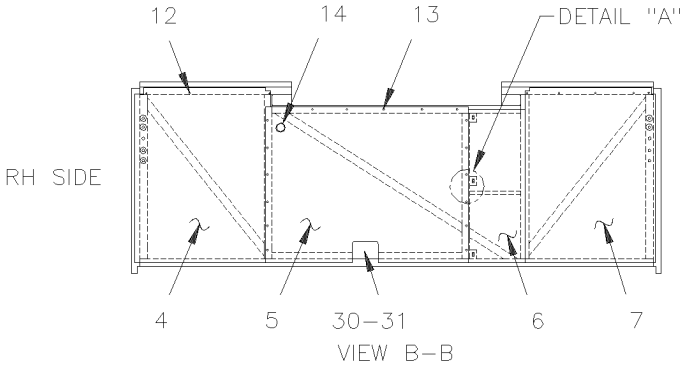

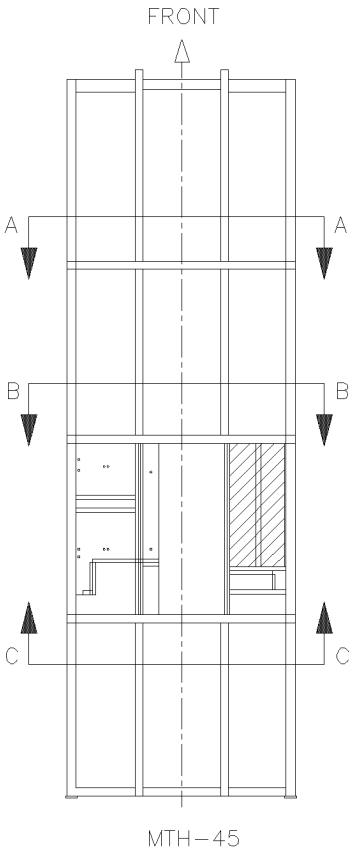

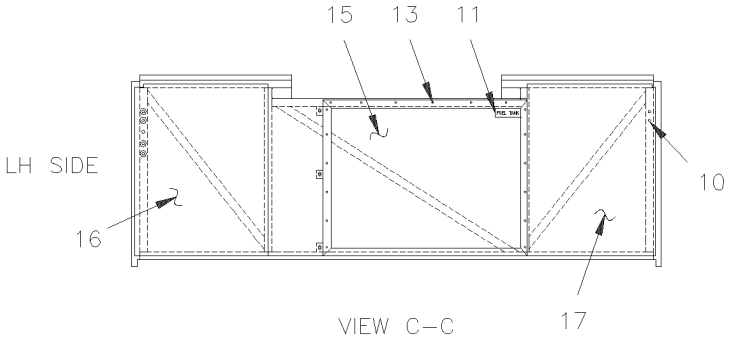

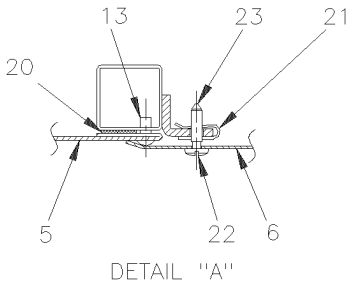

From Y-7046 Up to 6-8805	DATE: 01/2014	PAGE: Y2-1865-55

SEPARATOR PANEL - BAGGAGE COMPARTMENT - MTH

ITEM	PART	DESCRIPTION	XL45	MTH40	MTH45	MTH45S	NOTE
1	482467	PANEL SIDE SEPARATOR			2		
1	483384	PANEL			1		C
2	483111	PANEL SIDE & CENTER SEPARATOR			2		
2	483383	PANEL SIDE & CENTER SEPARATOR			2		C
4	482996	PANEL SIDE SEPARATOR			1		
5	481471	CLOSING PANEL FUEL TANK / W/AUX TANK 28 3/8" x 39" Up to 4-8305			1		
5	481109	. PANEL FUEL TANK CLOSING From 4-8306 / REPLACED BY: 481471			1		
6	481193	PANEL DOOR ASSY W/HINGE			1		
6	480928	. HINGE / DOOR PANEL 27 1/8" (689mm)			1		
7	481194	PANEL SIDE SEPARATOR			1		
7	481241	PANEL SIDE SEPARATOR			1		B
7	483385	PANEL			1		C
8	350028	INSULATING PANEL FOAM / <> CONDENSOR OR EVAPORATOR & BAGGAGE			4		
9	350029	INSULATING			2		
10	504528	HOLE PLUG BUTTON / .437 O.D. BLACK			14		
11	031163	DECAL / "FUEL TANK ACCESS" ENG & SPANISH			1		
12	504347	RIVET POP DOME OE 3/16x1/4 AL			AR		
13	500657	SCREW TC TR PH #10-24x1/2 ZP			48		
14	504059	GROMMET / 1.250x1.500x.094x.375x1.875			1		A
14	504443	SNAP-IN PLUG / 1.500 O.D.			1		
15	481191	CLOSING PANEL FUEL TANK 28 3/8" x 39" Up to 4-8293 / REPLACED BY: 481471			1		
15	485381	PANEL FRAME / FORWARD FUEL TANK 990MM x 766MM From 4-8294			1		
NS	485383	PANEL FUEL TANK CLOSING From 4-8294			1		
16	482997	PANEL SIDE SEPARATOR			1		B
17	481197	PANEL SIDE SEPARATOR			1		B
17	506001	TAPE RUB ADH1 CC POL 1/8" x 3/4" x 50' / GREY 2520X			AR		
20	506071	TAPE RUB ADH1 CC POL 1/8" x 1/2" x 50' / GREY 2520X			AR		
21	504377	NUT SPR U 1 1/64x1/2x.109-.161			3		
22	504289	WASHER SPR GRIP .437x.020 AL			13		
23	504376	SCREW FST SLT #12 18x28.2 STL			3		
30	481472	PANEL CLOSING / 6 5/8" x 4 1/2"			1		
31	504272	RIVET CHY Q BRAZ 3/16x1/8 SS / REPLACED BY: 504745			7		
		A) WITH AUX. FUEL TANK					
		B) WITH SMALL A/C SYSTEM					
		C) WITH SLIDE-OUT					

From 6-8806 Up to 8-9339	DATE: 01/2014	PAGE: Y2-1865-56
SEPARATOR PANEL - BAGGAGE COMPARTMENT - MTH		

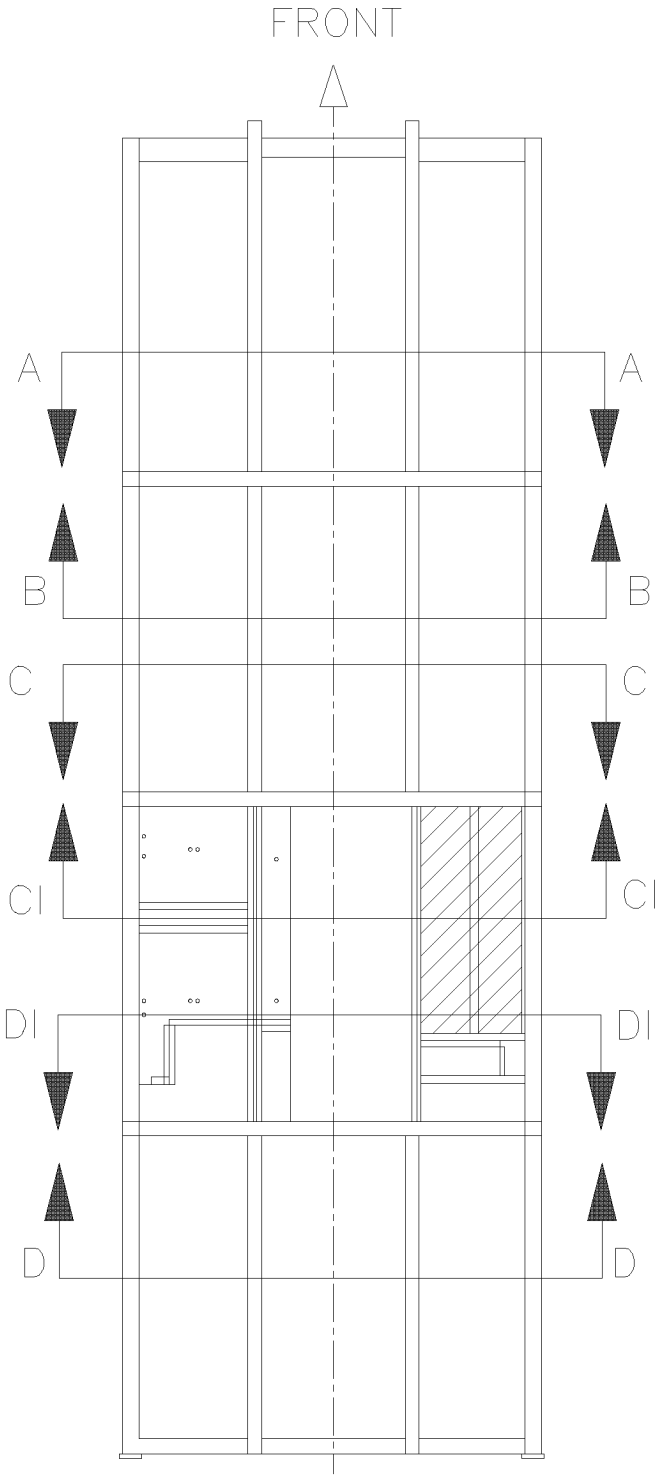

From 6-8806 Up to 8-9339	DATE: 01/2014	PAGE: Y2-1865-56

SEPARATOR PANEL - BAGGAGE COMPARTMENT - MTH

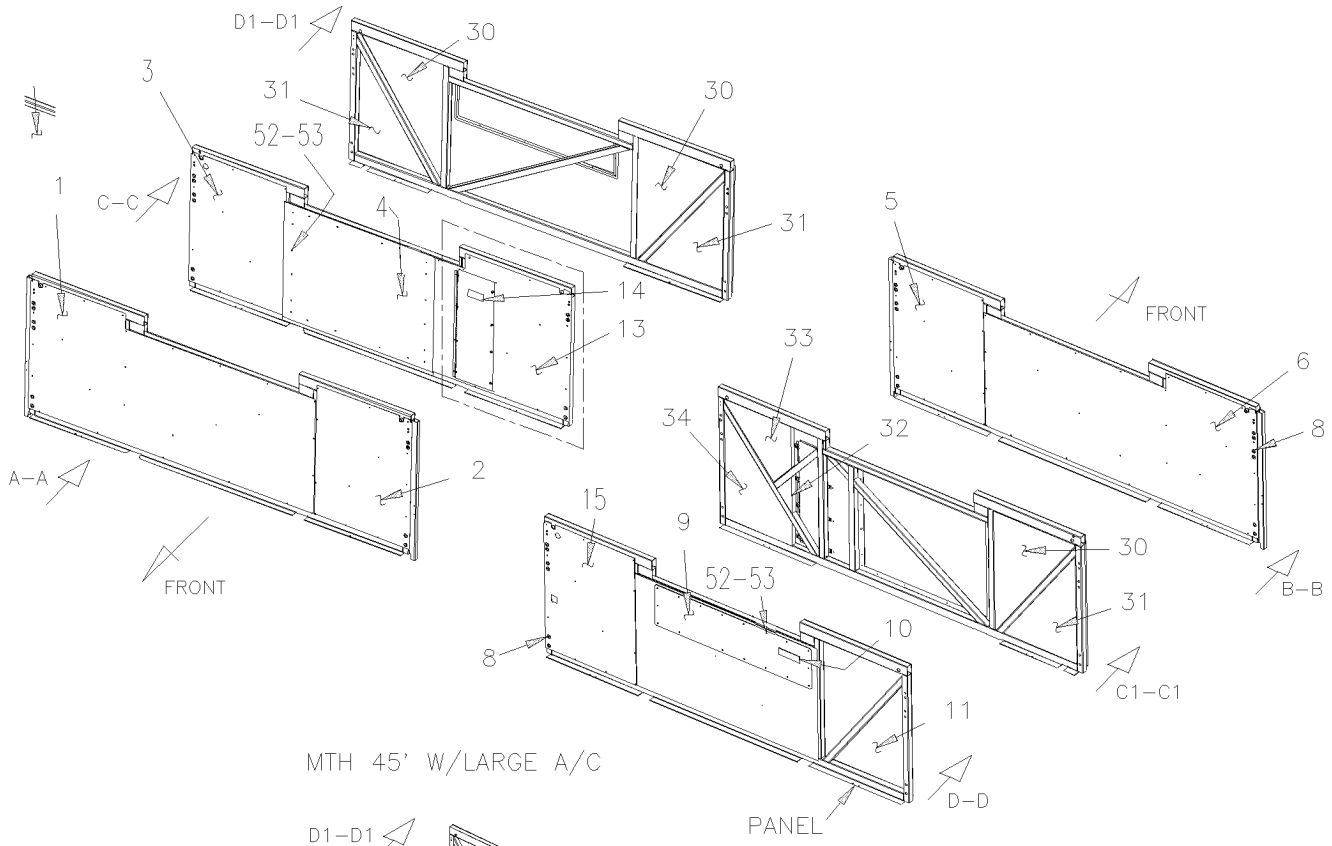

MTH 45' W/LARGE A/C

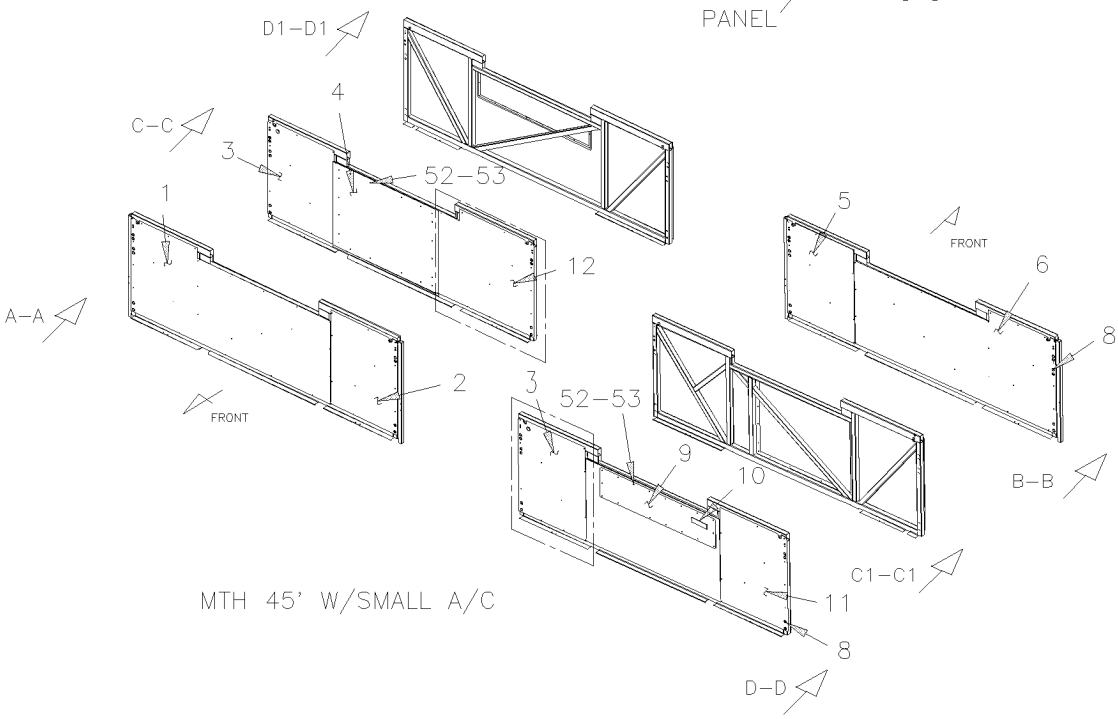

MTH 45' W/SMALL A/C

From 6-8806 Up to 8-9339	DATE: 01/2014	PAGE: Y2-1865-56

SEPARATOR PANEL - BAGGAGE COMPARTMENT - MTH

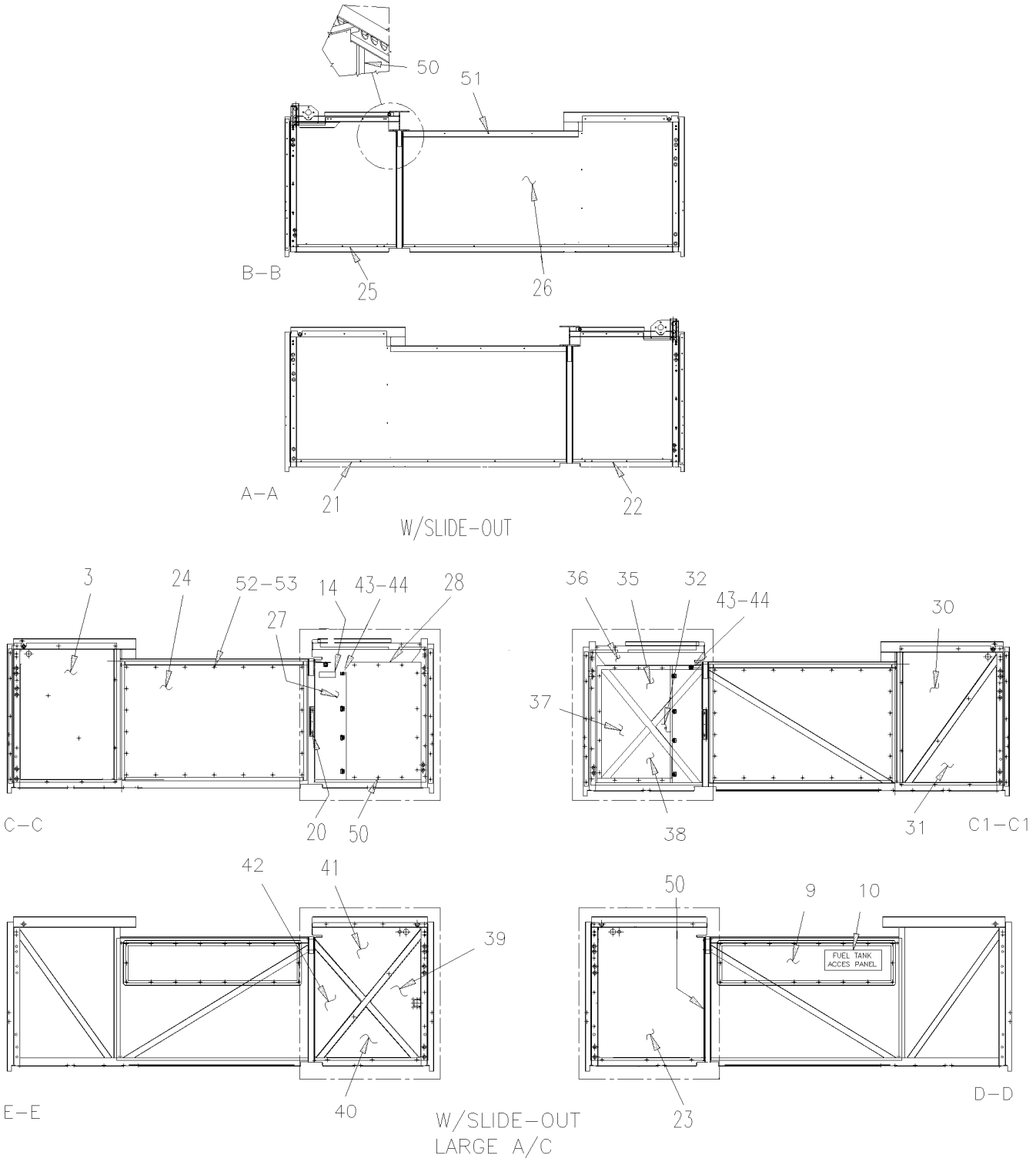

From 6-8806 Up to 8-9339	DATE: 01/2014	PAGE: Y2-1865-56

SEPARATOR PANEL - BAGGAGE COMPARTMENT - MTH

ITEM	PART	DESCRIPTION	XL45	MTH40	MTH45	MTH45S	NOTE
1	485512	PANEL SIDE & CENTER SEPARATOR Up to 7-9095			1		
1	484066	PANEL SIDE & CENTER SEPARATOR From 7-9096			1		
2	482427	PANEL SIDE SEPARATOR Up to 7-9095			1		
2	484067	PANEL SIDE SEPARATOR From 7-9096			1		
3	482471	PANEL SIDE SEPARATOR			1		
4	485517	PANEL FUEL TANK CLOSING 990MM x 746MM			1		
5	485523	PANEL SIDE SEPARATOR Up to 7-9095			1		
5	484068	PANEL SIDE SEPARATOR From 7-9096			1		
6	485512	PANEL SIDE & CENTER SEPARATOR Up to 7-9095			1		
6	484066	PANEL SIDE & CENTER SEPARATOR From 7-9096			1		
8	504528	HOLE PLUG BUTTON / .437 O.D. BLACK			1		
9	482521	PANEL FUEL TANK ACCESS			1		
10	031163	DECAL / "FUEL TANK ACCESS" ENG & SPANISH			1		
11	482427	PANEL SIDE SEPARATOR			1		
11	484067	PANEL SIDE SEPARATOR From 7-9096			1		
12	485518	PANEL SIDE SEPARATOR / W/SMALL A/C			1		
13	Call Order Desk	ACCESS PANEL LARGE W/HINGE DOOR			1		P
NS	485519	. PANEL			1		
NS	485507	. PANEL DOOR			1		
NS	480928	. HINGE / DOOR PANEL 27 1/8" (689mm)			1		
NS	504104	. RIVET POP DOME OE 1/8x1/8 SS			8		
NS	504604	. FASTENER			4		
NS	504605	. RECEPTACLE 6 MM			4		
NS	506228	. TAPE RUB ADH1 CC POL 1/4" x 1/2" x 37.5' / GREY 2520X			AR		
NS	506225	. TAPE RUB ADH1 CC POL 1/16" x 1/4" x 100' / GREY 2520			AR		
14	370354	DECAL / AIR FILTER ENG & FRENCH			1		
14	374207	DECAL / AIR FILTER ENG & SPANISH			1		
15	485521	PANEL SIDE SEPARATOR			1		
20	480928	HINGE / DOOR PANEL 27 1/8" (689mm)			1		
21	482499	PANEL SIDE & CENTER SEPARATOR / W/SLIDE OUT Up to 7-9095			1		
21	484060	PANEL SIDE & CENTER SEPARATOR / W/SLIDE OUT From 7-9096			1		
22	484035	PANEL SIDE & CENTER SEPARATOR / W/SLIDE OUT Up to 7-9095			1		
22	484062	PANEL SIDE & CENTER SEPARATOR / W/SLIDE OUT From 7-9096			1		
23	482469	PANEL SIDE SEPARATOR / W/SLIDE OUT			1		
23	485458	PANEL SIDE SEPARATOR / W/SLIDE OUT & SMALL A/C			1		
24	482519	PANEL FUEL TANK CLOSING			1		S
25	482477	PANEL SIDE SEPARATOR / W/SLIDE OUT Up to 7-9095			1		
25	484063	PANEL SIDE SEPARATOR / W/SLIDE OUT From 7-9096			1		
26	482518	PANEL SIDE & CENTER SEPARATOR / W/SLIDE OUT Up to 7-9095			1		
26	484061	PANEL SIDE & CENTER SEPARATOR / W/SLIDE OUT From 7-9096			1		
27	Call Order Desk	ACCESS PANEL ASSY / SMALL W/DZUS / W/SLIDE OUT			1		P
		P) CALL ORDER DESK FOR SPECIFIC APPLICATION					
		(V.I.N.)					
		S) WITH SLIDE-OUT					

From 6-8806 Up to 8-9339	DATE: 01/2014	PAGE: Y2-1865-56

SEPARATOR PANEL - BAGGAGE COMPARTMENT - MTH

ITEM	PART	DESCRIPTION	XL45	MTH40	MTH45	MTH45S	NOTE
28	Call Order Desk	ACCESS PANEL ASSY / LARGE W/RECEPTACLE / W/SLIDE OUT			1		P
. NS	483262	. ACCESS PANEL			1		
. NS	504605	. RECEPTACLE 6 MM			4		
. NS	506268	. TAPE RUB ADH1 URE 3/8" x 1/2" x 25' / GREY 1820			AR		
30	355878	INSULATOR PANEL			1		
31	355879	INSULATOR PANEL			1		
32	351573	INSULATOR PANEL			1		
33	355902	INSULATOT PANEL			1		
34	355901	INSULATOR PANEL			1		
35	351574	INSULATOR PANEL			1		
36	351570	INSULATOR PANEL / W/SLIDE OUT			1		
37	351571	INSULATOR PANEL / W/SLIDE OUT			1		
38	351572	INSULATOR PANEL / W/SLIDE OUT			1		
39	355874	INSULATOR PANEL / W/SLIDE OUT			1		
40	355875	INSULATOR PANEL / W/SLIDE OUT			1		
41	355877	INSULATOR PANEL / W/SLIDE OUT			1		
42	355876	INSULATOR PANEL / W/SLIDE OUT			1		
43	504605	RECEPTACLE 6 MM			1		
44	504604	FASTENER			AR		
50	682348	TAPE, DOUBLE COATED ACRYLIC			AR		
51	504347	RIVET POP DOME OE 3/16x1/4 AL			AR		
52	500657	SCREW TC TR PH #10-24x1/2 ZP			AR		
53	506002	TAPE RUB ADH1 CC POL 3/16" x 1/2" x 40' / GREY 2520			AR		
		P) CALL ORDER DESK FOR SPECIFIC APPLICATION					
		(V.I.N.)					

From 6-8806 Up to 8-9339	DATE: 01/2014	PAGE: Y2-1865-56

SEPARATOR PANEL - BAGGAGE COMPARTMENT - MTH

ITEM	PART	DESCRIPTION	XL45	MTH40	MTH45	MTH45S	NOTE

From Y-7046 Up to 6-8805	DATE: 01/2014	PAGE: Y2-1865-60
SEPARATOR PANEL - BAGGAGE COMPARTMENT - MTH		

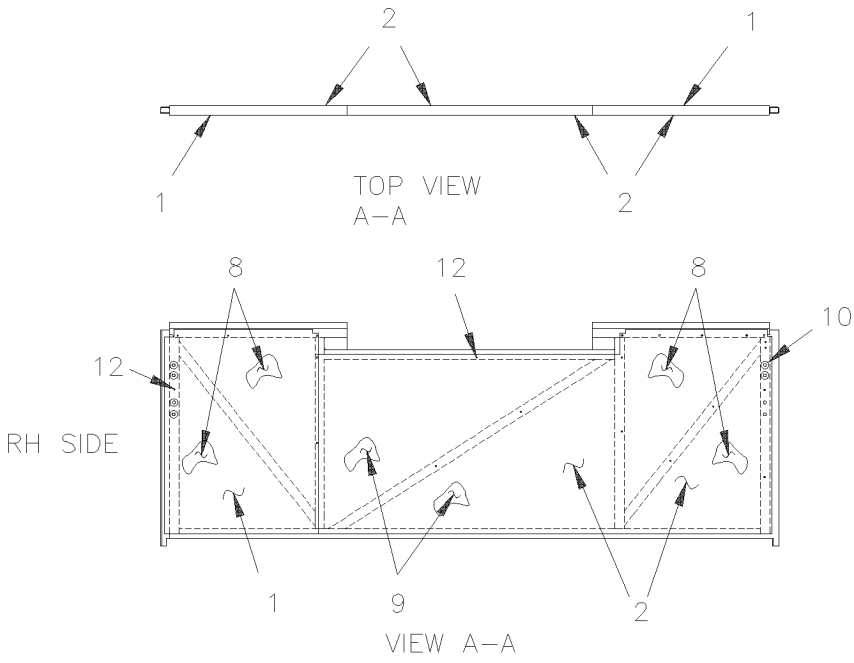

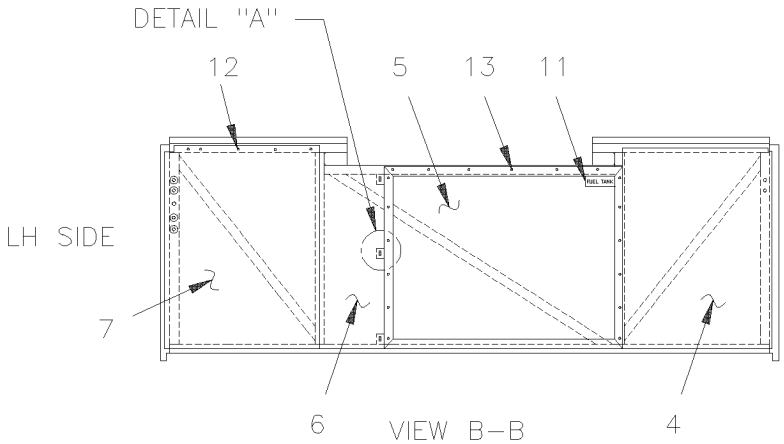

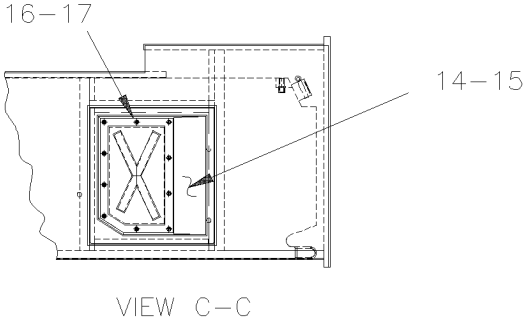

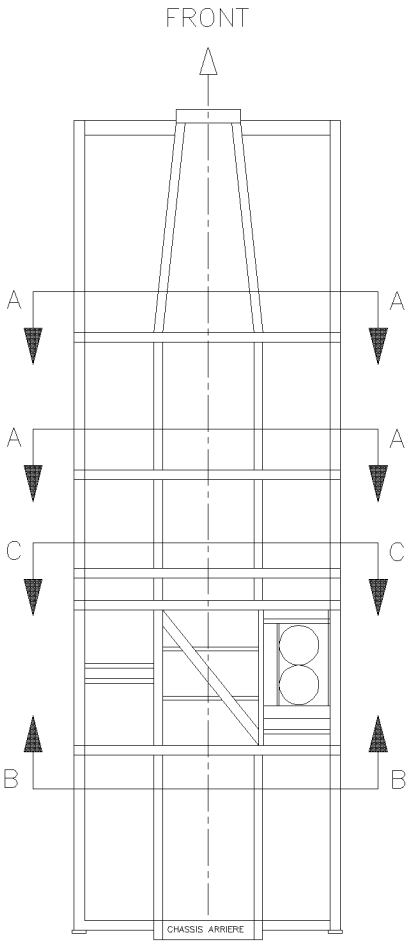

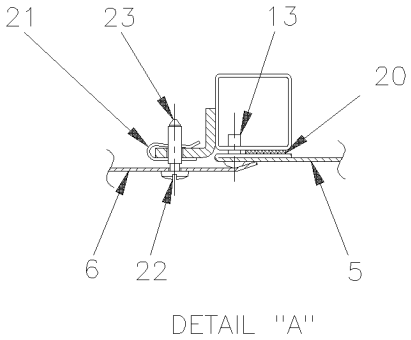

From Y-7046 Up to 6-8805	DATE: 01/2014	PAGE: Y2-1865-60

SEPARATOR PANEL - BAGGAGE COMPARTMENT - MTH

ITEM	PART	DESCRIPTION	XL45	MTH40	MTH45	MTH45S	NOTE
1	482467	PANEL SIDE SEPARATOR		2			
1	482467	PANEL SIDE SEPARATOR				4	
2	483111	PANEL SIDE & CENTER SEPARATOR		2			
2	483111	PANEL SIDE & CENTER SEPARATOR				4	
4	482724	PANEL SIDE SEPARATOR		1		1	
4	481197	PANEL SIDE SEPARATOR		1			A
4	213573	PANEL SIDE SEPARATOR / BAGGAGE COMPARTMENT				1	B
5	481191	CLOSING PANEL FUEL TANK 28 3/8" x 39" Up to 4-8306 / REPLACED BY: 481471		1		1	
5	485381	PANEL FRAME / FORWARD FUEL TANK 990MM x 766MM From 4-8307		1		1	
NS	485383	PANEL FUEL TANK CLOSING From 4-8307		1		1	
6	481193	PANEL DOOR ASSY W/HINGE		1		1	
NS	480928	. HINGE / DOOR PANEL 27 1/8" (689mm)		1		1	
7	482997	PANEL SIDE SEPARATOR		1		1	A
7	483251	PANEL SIDE SEPARATOR		1		1	
8	350028	INSULATING PANEL FOAM / <> CONDENSOR OR EVAPORATOR & BAGGAGE		4			
8	350028	INSULATING PANEL FOAM / <> CONDENSOR OR EVAPORATOR & BAGGAGE				8	
9	350029	INSULATING		2			
9	350029	INSULATING				4	
10	504528	HOLE PLUG BUTTON / .437 O.D. BLACK		8		8	
11	031163	DECAL / "FUEL TANK ACCESS" ENG & SPANISH		1		1	
12	504347	RIVET POP DOME OE 3/16x1/4 AL		AR		AR	
13	500657	SCREW TC TR PH #10-24x1/2 ZP		24		24	
14	482684	ACCESS PANEL		1		1	C
15	285684	RUBBER SEAL EXTRUSION 405MM X 501MM / ACCESS DOOR / REPLACED BY: 289933		1		1	C
15	289933	RUBBER SEAL EXTRUSION 405MM X 501MM / ACCESS DOOR / REPLACED BY: 288905		1		1	C
16	5001209	SCREW CAP HEX M6-1.0x25 G8.8 ZP		10		10	C
17	500411	WASHER FL .260x.697x.050 SS		10		10	C
17	506466	TAPE RUB ADH1 CC POL 1/16" x 1 1/2" x 100 / GREY 2520		AR		AR	C
20	506071	TAPE RUB ADH1 CC POL 1/8" x 1/2" x 50' / GREY 2520X		AR		AR	
21	504377	NUT SPR U 1 1/64x1/2x.109-.161		3		3	
22	504289	WASHER SPR GRIP .437x.020 AL		3		3	
23	504376	SCREW FST SLT #12 18x28.2 STL		3		3	
24	214903	PANEL SIDE SEPARATOR		1			A
		A) WITH SMALL A/C SYSTEM					
		B) WITH SMALL A/C SYSTEM & SPECIAL DOOR 38"					
		C) WITH LARGE A/C SYSTEM					

From 6-8806 Up to 8-9339	DATE: 01/2014	PAGE: Y2-1865-61

SEPARATOR PANEL - BAGGAGE COMPARTMENT - MTH

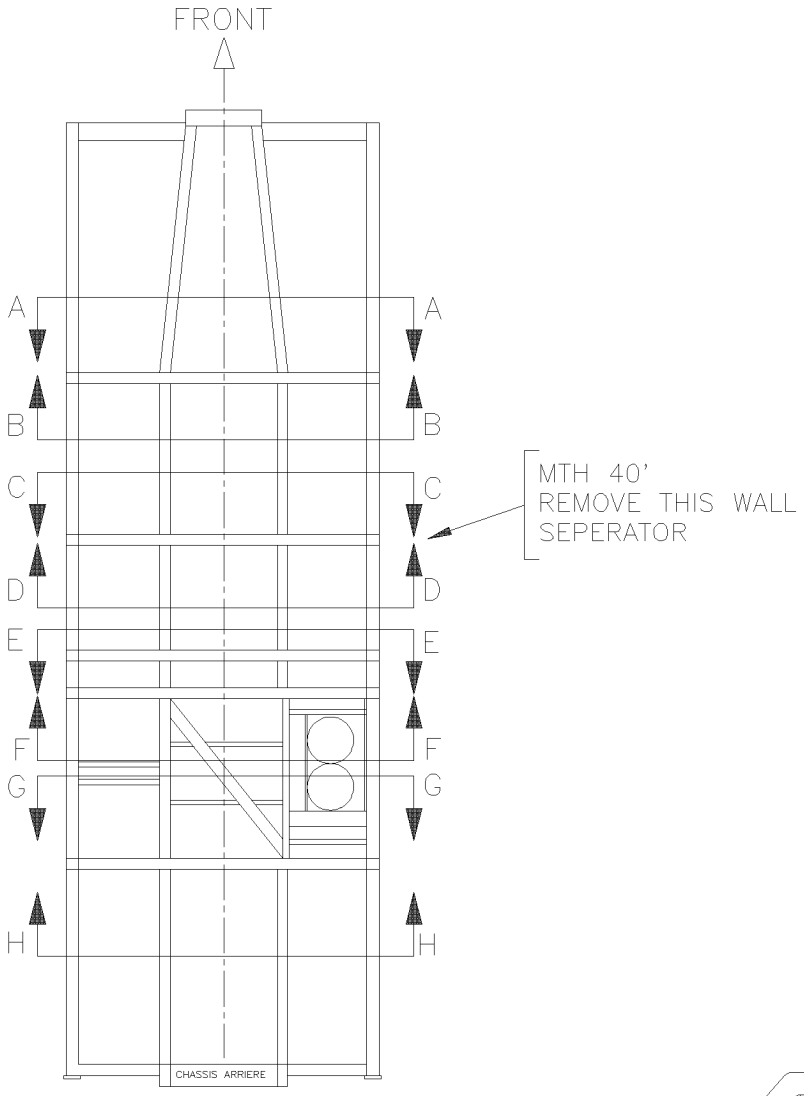

MTH 40 & MTH 45'
ENT

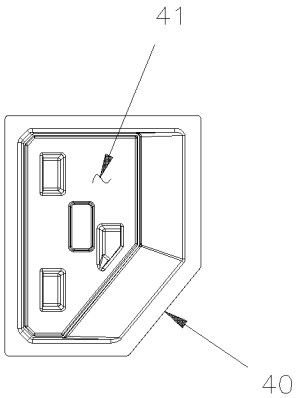

VIEW E–E

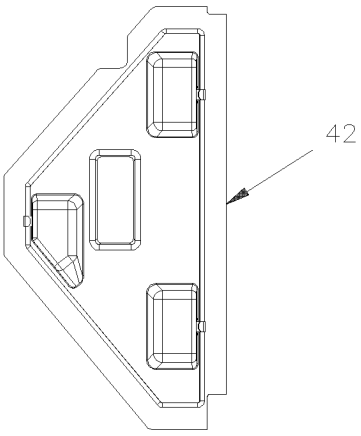

VIEW F–F

From 6-8806 Up to 8-9339	DATE: 01/2014	PAGE: Y2-1865-61

SEPARATOR PANEL - BAGGAGE COMPARTMENT - MTH

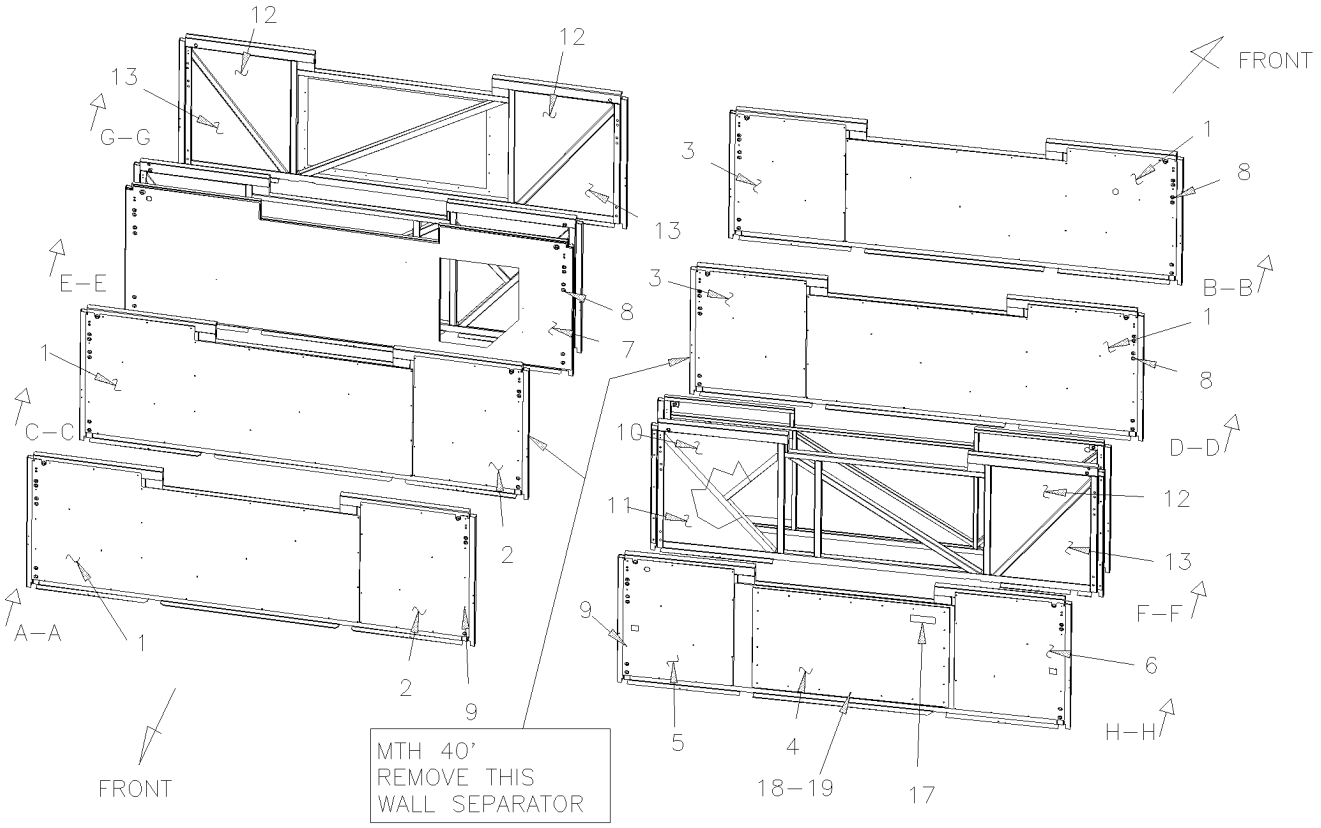

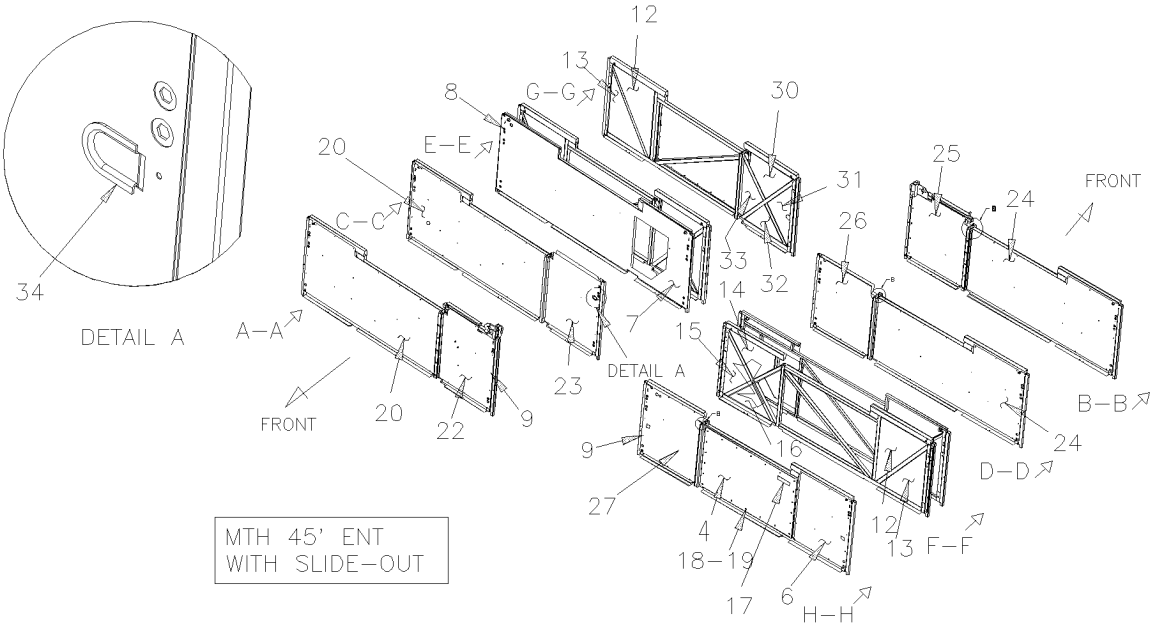

From 6-8806 Up to 8-9339	DATE: 01/2014	PAGE: Y2-1865-61

SEPARATOR PANEL - BAGGAGE COMPARTMENT - MTH

ITEM	PART	DESCRIPTION	XL45	MTH40	MTH45	MTH45S	NOTE
1	485512	PANEL SIDE & CENTER SEPARATOR Up to 5-8813		2			
1	485512	PANEL SIDE & CENTER SEPARATOR Up to 7-9095				4	
1	484066	PANEL SIDE & CENTER SEPARATOR From 7-9096				4	
2	482427	PANEL SIDE SEPARATOR Up to 5-8813		2			
2	482427	PANEL SIDE SEPARATOR				4	
3	485523	PANEL SIDE SEPARATOR Up to 5-8813		2			
3	485523	PANEL SIDE SEPARATOR Up to 7-9095				4	
3	484068	PANEL SIDE SEPARATOR From 7-9096				4	
4	482519	PANEL FUEL TANK CLOSING		1		1	
5	485521	PANEL SIDE SEPARATOR		1		1	
5	482471	PANEL SIDE SEPARATOR		1		1	
6	485535	PANEL SIDE SEPARATOR		1		1	
6	482427	PANEL SIDE SEPARATOR		1		1	A
7	215803	PANEL FUEL TANK CLOSING SS From 6-8806				1	
7	215868	PANEL FUEL TANK CLOSING SS W/SMALL A/C SYSTEM Up to 8-8805				1	
7	215877	PANEL FUEL TANK CLOSING SS From 8-8806				1	
8	504528	HOLE PLUG BUTTON / .437 O.D. BLACK		AR		AR	
9	504347	RIVET POP DOME OE 3/16x1/4 AL		AR		AR	
10	351662	INSULATOR PANEL		1		1	
11	351663	INSULATOR PANEL		1		1	
12	355878	INSULATOR PANEL		3		3	
13	355879	INSULATOR PANEL		3		3	
14	351652	INSULATOR PANEL / W/SLIDE OUT				1	
15	351653	INSULATOR PANEL / W/SLIDE OUT				1	
16	351654	INSULATOR PANEL / W/SLIDE OUT				1	
17	031163	DECAL / "FUEL TANK ACCESS" ENG & SPANISH		1		1	
18	500657	SCREW TC TR PH #10-24x1/2 ZP		22		22	
19	506071	TAPE RUB ADH1 CC POL 1/8" x 1/2" x 50' / GREY 2520X		AR		AR	
20	482499	PANEL SIDE & CENTER SEPARATOR / W/SLIDE OUT Up to 7-9095				2	
20	484060	PANEL SIDE & CENTER SEPARATOR / W/SLIDE OUT From 7-9096				2	
22	484035	PANEL SIDE & CENTER SEPARATOR / W/SLIDE OUT Up to 7-9095				1	
22	484062	PANEL SIDE & CENTER SEPARATOR / W/SLIDE OUT From 7-9096				1	
23	485476	PANEL SIDE SEPARATOR / W/SLIDE OUT				1	
24	482518	PANEL SIDE & CENTER SEPARATOR / W/SLIDE OUT Up to 7-9095				2	
24	484061	PANEL SIDE & CENTER SEPARATOR / W/SLIDE OUT From 7-9096				2	
25	482477	PANEL SIDE SEPARATOR / W/SLIDE OUT Up to 7-9095				1	
25	484063	PANEL SIDE SEPARATOR / W/SLIDE OUT From 7-9096				1	
26	485475	PANEL SIDE SEPARATOR / W/SLIDE OUT				1	
27	482469	PANEL SIDE SEPARATOR / W/SLIDE OUT				1	
27	485458	PANEL SIDE SEPARATOR / W/SLIDE OUT & SMALL A/C		1		1	
30	355877	INSULATOR PANEL / W/SLIDE OUT				1	
31	355874	INSULATOR PANEL / W/SLIDE OUT				1	
32	355875	INSULATOR PANEL / W/SLIDE OUT				1	

A) WITH SMALL A/C SYSTEM

From 6-8806 Up to 8-9339	DATE: 01/2014	PAGE: Y2-1865-61

SEPARATOR PANEL - BAGGAGE COMPARTMENT - MTH

ITEM	PART	DESCRIPTION	XL45	MTH40	MTH45	MTH45S	NOTE
33	355876	INSULATOR PANEL / W/SLIDE OUT				1	
34	506338	RUBBER CHANNEL / 1/16" x 1/4" INT "U" SHAPE / ROUND C.T.L.		AR		AR	
40	484013	ACCESS PANEL		1		1	
41	484015	COVER		1		1	
42	484026	FRAME		1		1	

From Y-7046 Up to 6-8906	DATE: 01/2014	PAGE: Y2-1866-00

EVAPORATOR DOOR ASSY - BUS

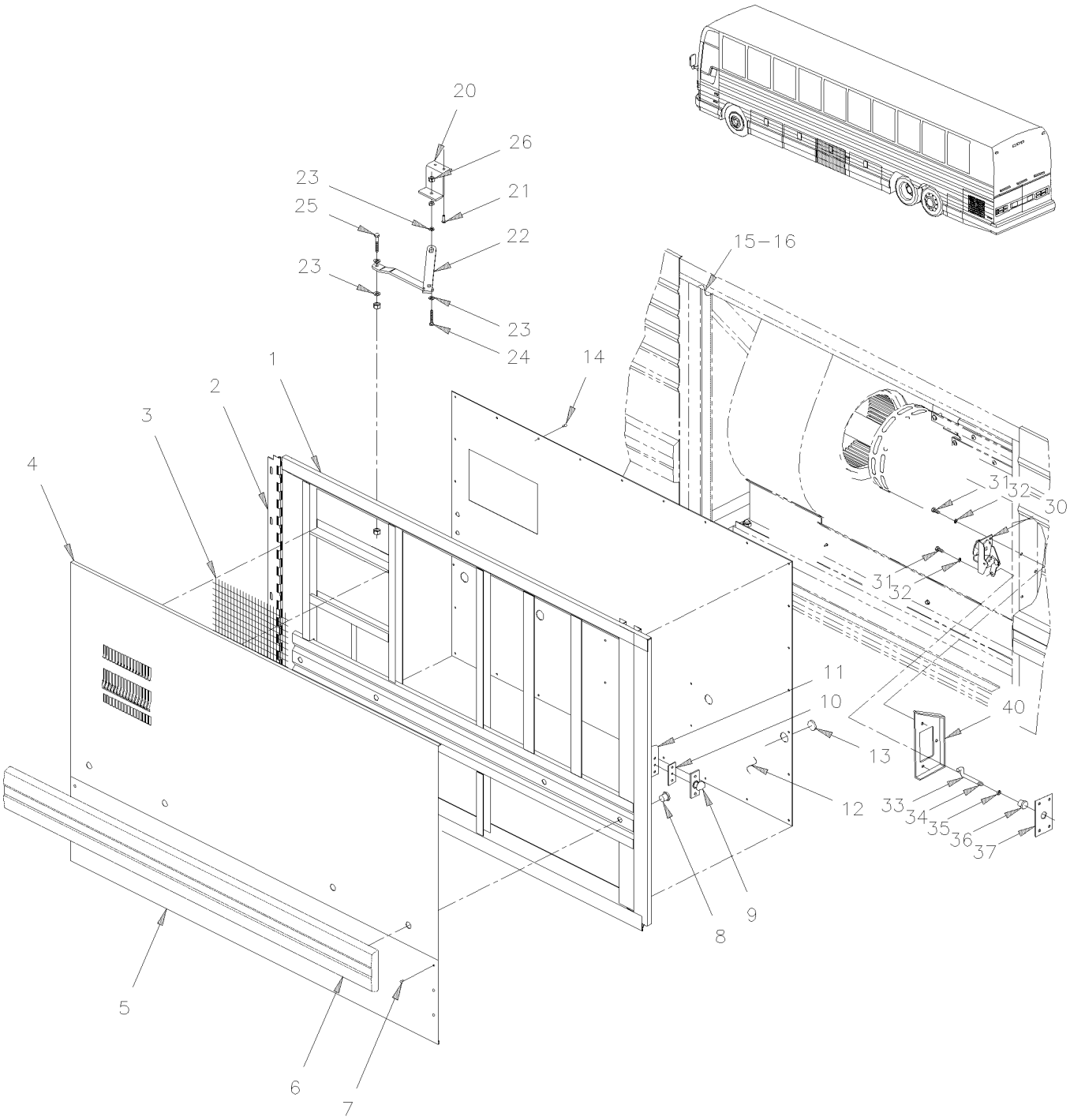

From Y-7046 Up to 6-8906	DATE: 01/2014	PAGE: Y2-1866-00

EVAPORATOR DOOR ASSY - BUS

ITEM	PART	DESCRIPTION	XL45	MTH40	MTH45	MTH45S	NOTE
		ALL EVAPORATOR DOORS ASSY DO NOT INCLUDE					
		RUB-RAIL PLEASE ORDER SEPARATELY					
	483261P	EVAPORATOR DOOR ASSY / W/FLAT PANEL Up to 2-7839	1				
	483554P	EVAPORATOR DOOR ASSY / W/FLAT PANEL From 2-7840	1				
1	483132	. DOOR FRAME (WELDED) Up to 2-7839	1				
1	483528	. DOOR FRAME (WELDED) From 2-7840	1				
NS	483580	. KIT INSULATING PANEL From 2-7840	1				
2	481840	. REINFORCEMENT OF HINGE / 31 7/8" X GA11 STRUCTURE SIDE	1				
NS	481131	. SHIM 2" X 1"1/8 / HINGE SUPPORT	9				
NS	5001184	. SCREW TP PAN PH #12x1/2 SS	7				
NS	500316	. SCREW MA FL PH 1/4-28x3/4 SS	5				
3	452987	. GRILL	1				
NS	680532	. SEALANT SIKA #221 / GREY / 310ml CARTRIDGE	1				
4	474225	. PANEL, UPPER / FLAT Up to 2-7839	1				
4	475413	. PANEL, UPPER / FLAT From 2-7840 Up to 5-8358 / REPLACED BY: 477491	1				
4	477491	. PANEL, UPPER / FLAT From 5-8359	1				
4	477455	. PANEL, UPPER / FLAT / "SPECIAL OPTION" HYDRO QC	1				
4	474055	. PANEL, UPPER / S.B. Up to 2-7839 / REPLACED BY: 477666	1				A
4	483646	. PANEL, UPPER / S.B. From 2-7840 Up to 5-8358	1				A
4	485423	. PANEL, UPPER / S.B. From 5-8359	1				A
4	477489	. PANEL, UPPER / S.B. From 5-8359 / REPLACED BY: 477666	1				A
5	473446	. PANEL, LOWER / S.B. Up to 2-7839	1				
5	483600	. PANEL, LOWER / S.B. From 2-7840	1				
6	Y2-1855-00	**. RUB RAIL - CREST & TRIMS**					
7	504272	. RIVET CHY Q BRAZ 3/16x1/8 SS / REPLACED BY: 504745	18				
8	500301	. NUT HEXF STO 3/8-16 ZP	4				
NS	473378	. SEAL WASHER / <> RUB RAIL & PANEL	4				
9	780278	. PIN, STRIKER STUD	1				
NS	500316	. SCREW MA FL PH 1/4-28x3/4 SS	2				
NS	502582	. WASHER LO SERR 6.1x16.2x0.9 ZP	2				
NS	500692	. NUT HEX 1/4-28 ZP	2				
10	283326	. STRIKER PLATE, MOUNTING / 60MM X 25MM	1				
11	284556	. STRIKER SUPPORT 86 x 25 x 60	1				
NS	500163	. SCREW CAP HEX 1/4-20x3/4 G5 ZP	2				
NS	502583	. WASHER LO SERR 8.15x22.3x1.0 ZP / REPLACED BY: 502856	2				
12	482828	. INTERIOR PANEL Up to 2-7839 / REPLACED BY: K482828	1				
12	483601	. INTERIOR PANEL From 2-7840 Up to 5-8358 / REPLACED BY: 483809	1				
12	483809	. INTERIOR PANEL From 5-8359	1				
12	485414	. INTERIOR PANEL / "SPECIAL OPTION" HYDRO QC	1				
13	504433	. SNAP-IN PLUG / 1.090 O.D.	4				
14	504347	. RIVET POP DOME OE 3/16x1/4 AL	AR				
		A) USE WITH BUS WITH FLUTED LOWER PANELLING					

From Y-7046 Up to 6-8906	DATE: 01/2014	PAGE: Y2-1866-00

EVAPORATOR DOOR ASSY - BUS

ITEM	PART	DESCRIPTION	XL45	MTH40	MTH45	MTH45S	NOTE
NS	064990	. CABLE ASSY / SIDE MARKER LAMP FOR DOORS Up to 5-8358 / REPLACED BY: 067207	2				
. NS	473832	. . GROMMET 2 HOLESx1.6x11.0MMx2.0MMx8.0MMx16MM Up to 5-8358	1				
NS	067207	. CABLE ASSY / SIDE MARKER LAMP FOR DOORS	2				
. NS	473832	. . GROMMET 2 HOLESx1.6x11.0MMx2.0MMx8.0MMx16MM	1				
NS	504068	. GROMMET / .500x.750x.062x.312x1.062 Up to 5-8358	2				
NS	504397	. GROMMET / .750x1.062x.062x.375x1.375 From 5-8359	2				
15	482096	WEATHERSTRIP / EVAPORATOR DOOR Up to 2-7839 / REPLACED BY: 280152	1				
15	483555	WEATHERSTRIP / EVAPORATOR DOOR From 2-7840 / REPLACED BY: 484125	1				
16	482137	MOULDING / WEATHERSTRIP RETAINER Up to 2-7839	1				
16	Y2-1854-10	**WEATHERSTRIP & RETAINER - BUS**					
20	481839	SUPPORT ASSY / DOOR GUIDE	1				
21	500535	SCREW TP CAP HEX #14x3/4 ZP	2				
22	281445	GUIDE ASSY / R.H. DOOR Up to 2-7831	1				
22	288031	GUIDE ASSY / R.H. DOOR From 2-7832	1				
23	500441	WASHER FL .312x.734x.065 ZP	3				
24	500165	SCREW CAP HEX 1/4-20x1 G5 ZP	1				
25	500556	SCREW MA TR PH 1/4-20x3/4 SS	1				
26	500769	NUT HEX 1/4-20 ZP	2				
30	780282	LOCK SPAGNOLET L.H.	1				
31	502531	SCREW CAP HEX M6-1.0x16 G8.8 ZP	2				
32	502582	WASHER LO SERR 6.1x16.2x0.9 ZP	2				
33	284596	ROD OPENING 68MM	1				
NS	504083	SNAP BUSHING / .250x.468.406	1				
35	500764	NUT HEX #8-32 ZP	1				
36	505504	KNOB, PULL / 8-32	1				
37	482726	CLOSING PLATE 30MM X 50MM / SS	1				
NS	504473	RIVET POP DOME OE 1/8x1/4 SS	1				
40	284555	LOCK SUPPORT / (WELDED TO STRUCTURE)	1				

From Y-7046 Up to 6-8906	DATE: 01/2014	PAGE: Y2-1866-00

EVAPORATOR DOOR ASSY - BUS

ITEM	PART	DESCRIPTION	XL45	MTH40	MTH45	MTH45S	NOTE

From Y-7046 Up to 6-8805	DATE: 01/2014	PAGE: Y2-1866-50

EVAPORATOR DOOR ASSY - MTH

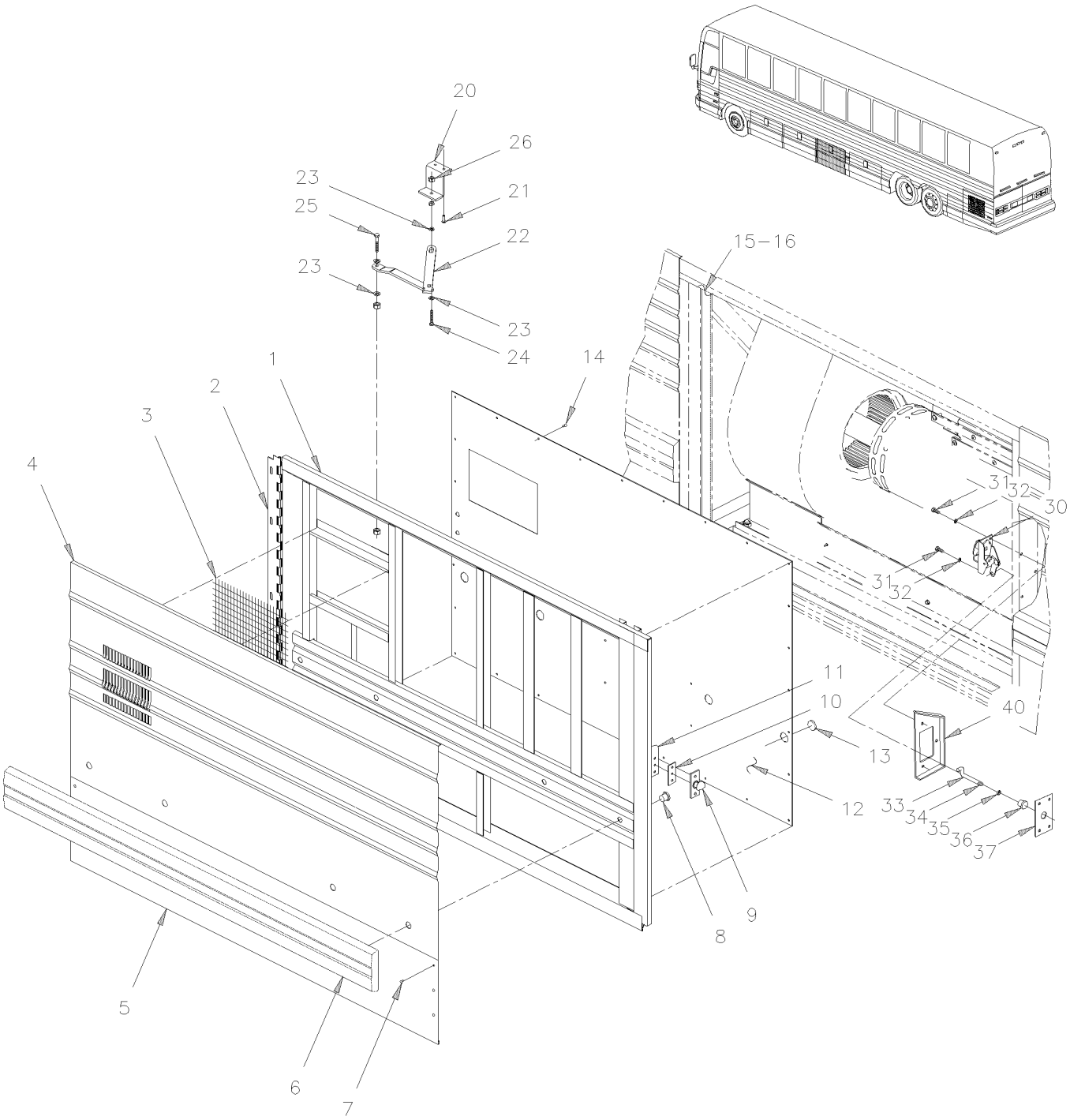

From Y-7046 Up to 6-8805	DATE: 01/2014	PAGE: Y2-1866-50

EVAPORATOR DOOR ASSY - MTH

ITEM	PART	DESCRIPTION	XL45	MTH40	MTH45	MTH45S	NOTE
		ALL EVAPORATOR DOORS ASSY DO NOT INCLUDE					
		RUB-RAIL PLEASE ORDER SEPARATELY					
	482989P	EVAPORATOR DOOR ASSY		1		1	
	482974P	EVAPORATOR DOOR ASSY			1		
1	483172	. DOOR FRAME (WELDED)		1		1	
1	483132	. DOOR FRAME (WELDED)			1		
NS	483580	. KIT INSULATING PANEL From 2-7840			1		
2	481840	. REINFORCEMENT OF HINGE / 31 7/8" X GA11 STRUCTURE SIDE		1	1	1	
NS	481131	. SHIM 2" X 1"1/8 / HINGE SUPPORT		9	9	9	
NS	5001184	. SCREW TP PAN PH #12x1/2 SS		7	7	7	
NS	500316	. SCREW MA FL PH 1/4-28x3/4 SS		5	5	5	
3	452987	. GRILL		1	1	1	
NS	680532	. SEALANT SIKA #221 / GREY / 310ml CARTRIDGE		1	1	1	
4	482985	. PANEL, UPPER / S.B. Up to 5-8358 / REPLACED BY: 483938		1		1	
4	483801	. PANEL, UPPER / S.B. From 5-8359 Up to 5-8468 / REPLACED BY: 483938		1		1	
4	483938	. PANEL, UPPER / B.A. From 5-8469		1		1	
4	474055	. PANEL, UPPER / S.B. Up to 2-7839 / REPLACED BY: 477666			1		
4	477489	. PANEL, UPPER / S.B. From 4-8359 Up to 5-8468 / REPLACED BY: 477666			1		
4	477666	. PANEL, UPPER / B.A. From 5-8469			1		
5	473445	. PANEL, LOWER / S.B. Up to 5-8468 / REPLACED BY: 477668		1		1	
5	477668	. PANEL, LOWER / B.A. From 5-8469		1		1	
5	473446	. PANEL, LOWER / S.B. Up to 5-8468			1		
5	477667	. PANEL, LOWER / B.A. From 5-8469			1		
6	Y2-1855-00	**. RUB RAIL - CREST & TRIMS**					
7	504272	. RIVET CHY Q BRAZ 3/16x1/8 SS / REPLACED BY: 504745		18	18	18	
8	500301	. NUT HEXF STO 3/8-16 ZP		4	4	4	
NS	473378	. SEAL WASHER / <> RUB RAIL & PANEL		4	4	4	
9	780278	. PIN, STRIKER STUD		1	1	1	
NS	500316	. SCREW MA FL PH 1/4-28x3/4 SS		2	2	2	
NS	502582	. WASHER LO SERR 6.1x16.2x0.9 ZP		2	2	2	
NS	500692	. NUT HEX 1/4-28 ZP		2	2	2	
10	283326	. STRIKER PLATE, MOUNTING / 60MM X 25MM		1	1	1	
11	284556	. STRIKER SUPPORT 86 x 25 x 60		1	1	1	
NS	500163	. SCREW CAP HEX 1/4-20x3/4 G5 ZP		2	2	2	
NS	502583	. WASHER LO SERR 8.15x22.3x1.0 ZP / REPLACED BY: 502856		2	2	2	
12	482828	. INTERIOR PANEL Up to 5-8358 / REPLACED BY: K482828			1		
12	483802	. INTERIOR PANEL From 5-8359			1		
12	483028	. INTERIOR PANEL Up to 5-8358 / REPLACED BY: 483810		1		1	
12	483810	. INTERIOR PANEL From 5-8359		1		1	
13	504433	. SNAP-IN PLUG / 1.090 O.D.		4	4	4	
14	504347	. RIVET POP DOME OE 3/16x1/4 AL		AR	AR	AR	

From Y-7046 Up to 6-8805	DATE: 01/2014	PAGE: Y2-1866-50

EVAPORATOR DOOR ASSY - MTH

ITEM	PART	DESCRIPTION	XL45	MTH40	MTH45	MTH45S	NOTE
NS	064990	. CABLE ASSY / SIDE MARKER LAMP FOR DOORS Up to 5-8358 / REPLACED BY: 067207			2		
. NS	473832	. . GROMMET 2 HOLESx1.6x11.0MMx2.0MMx8.0MMx16MM Up to 5-8358			1		
NS	067207	. CABLE ASSY / SIDE MARKER LAMP FOR DOORS			2		
. NS	473832	. . GROMMET 2 HOLESx1.6x11.0MMx2.0MMx8.0MMx16MM			1		
NS	504068	. GROMMET / .500x.750x.062x.312x1.062 Up to 5-8358			2		
NS	504397	. GROMMET / .750x1.062x.062x.375x1.375 From 5-8359			2		
15	482096	WEATHERSTRIP / EVAPORATOR DOOR / REPLACED BY: 280152			1		
15	481163	WEATHERSTRIP / EVAPORATOR DOOR / REPLACED BY: 280152		1		1	
16	482137	MOULDING / WEATHERSTRIP RETAINER		1	1	1	
16	Y2-1854-20	**WEATHERSTRIP & RETAINER - MTH**					
20	481839	SUPPORT ASSY / DOOR GUIDE		1	1	1	
21	500535	SCREW TP CAP HEX #14x3/4 ZP		2	2	2	
22	281445	GUIDE ASSY / R.H. DOOR Up to 2-7831		1	1	1	
22	288031	GUIDE ASSY / R.H. DOOR From 2-7832		1	1	1	
23	500441	WASHER FL .312x.734x.065 ZP		3	3	3	
24	500165	SCREW CAP HEX 1/4-20x1 G5 ZP		1	1	1	
25	500556	SCREW MA TR PH 1/4-20x3/4 SS		1	1	1	
26	500769	NUT HEX 1/4-20 ZP		2	2	2	
30	780282	LOCK SPAGNOLET L.H.		1	1	1	
31	502531	SCREW CAP HEX M6-1.0x16 G8.8 ZP		2	2	2	
32	502582	WASHER LO SERR 6.1x16.2x0.9 ZP		2	2	2	
33	284596	ROD OPENING 68MM		1	1	1	
33	287170	ROD OPENING 228MM			1		C
NS	504083	SNAP BUSHING / .250x.468.406		1	1	1	
35	500764	NUT HEX #8-32 ZP		1	1	1	
36	505504	KNOB, PULL / 8-32		1	1	1	
37	482726	CLOSING PLATE 30MM X 50MM / SS		1	1	1	
NS	504473	RIVET POP DOME OE 1/8x1/4 SS		1	1	1	
37	482453	SUPPORT			1		C
40	284555	LOCK SUPPORT / (WELDED TO STRUCTURE)		1	1	1	
		C) WITH SLIDE-OUT					

From Y-7046 Up to 6-8805	DATE: 01/2014	PAGE: Y2-1866-50

EVAPORATOR DOOR ASSY - MTH

ITEM	PART	DESCRIPTION	XL45	MTH40	MTH45	MTH45S	NOTE

From 6-8806 Up to 8-9339	DATE: 01/2014	PAGE: Y2-1866-51
EVAPORATOR DOOR ASSY - MTH		

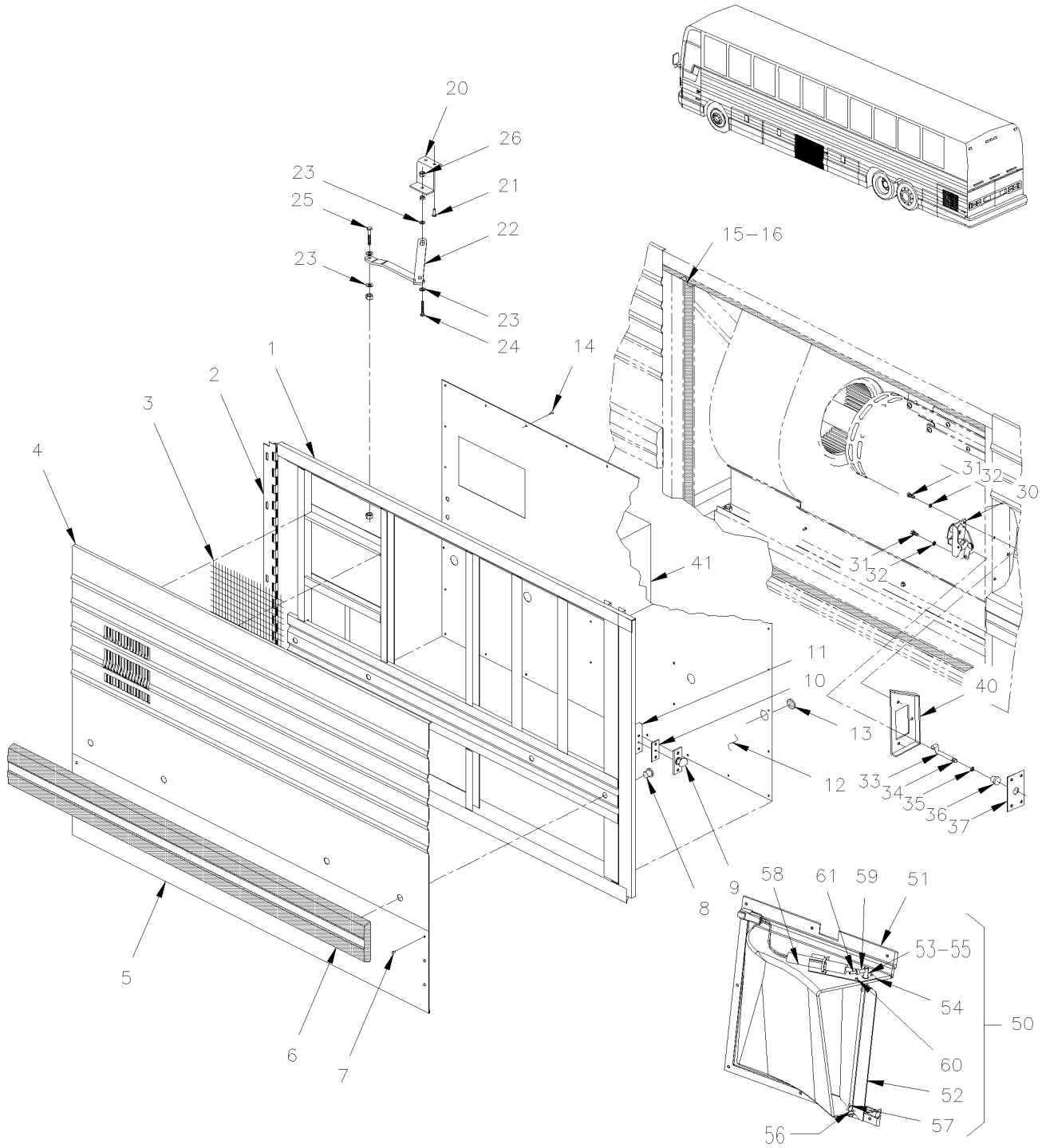

From 6-8806 Up to 8-9339	DATE: 01/2014	PAGE: Y2-1866-51

EVAPORATOR DOOR ASSY - MTH

ITEM	PART	DESCRIPTION	XL45	MTH40	MTH45	MTH45S	NOTE
		ALL EVAPORATOR DOORS ASSY DO NOT INCLUDE					
		RUB-RAIL PLEASE ORDER SEPARATELY					
	Call Order Desk	EVAPORATOR DOOR ASSY		1		1	P
	Call Order Desk	EVAPORATOR DOOR ASSY			1		P
1	485482	. DOOR FRAME (WELDED)		1		1	
1	483995	. DOOR FRAME (WELDED)			1		
NS	Call Order Desk	. KIT INSULATING PANEL			1		P
1	485491	. KIT INSULATING PANEL		1		1	
2	481840	. REINFORCEMENT OF HINGE / 31 7/8" X GA11 STRUCTURE SIDE		1	1	1	
NS	481131	. SHIM 2" X 1"1/8 / HINGE SUPPORT		9	9	9	
NS	500124	. SCREW TP TR PH #8x1/2 SS		7	7	7	
NS	500316	. SCREW MA FL PH 1/4-28x3/4 SS		5	5	5	
3	453997	. GASKET		1	1	1	
NS	871382	. FILTER SCREEN 12" x 12"		1	1	1	
NS	680532	. SEALANT SIKA #221 / GREY / 310ml CARTRIDGE		1	1	1	
4	485489	. PANEL, UPPER		1		1	
4	485447	. PANEL, UPPER			1		
5	485488	. PANEL, LOWER		1		1	
5	485446	. PANEL, LOWER			1		
6	Y2-1855-00	**. RUB RAIL - CREST & TRIMS**					
7	504272	. RIVET CHY Q BRAZ 3/16x1/8 SS / REPLACED BY: 504745		18	18	18	
8	500301	. NUT HEXF STO 3/8-16 ZP		4	4	4	
NS	473378	. SEAL WASHER / <> RUB RAIL & PANEL		4	4	4	
9	780278	. PIN, STRIKER STUD		1	1	1	
NS	500316	. SCREW MA FL PH 1/4-28x3/4 SS		2	2	2	
NS	502582	. WASHER LO SERR 6.1x16.2x0.9 ZP		2	2	2	
NS	500692	. NUT HEX 1/4-28 ZP		2	2	2	
10	283326	. STRIKER PLATE, MOUNTING / 60MM X 25MM		1	1	1	
11	284556	. STRIKER SUPPORT 86 x 25 x 60		1	1	1	
NS	500163	. SCREW CAP HEX 1/4-20x3/4 G5 ZP		2	2	2	
NS	502583	. WASHER LO SERR 8.15x22.3x1.0 ZP / REPLACED BY: 502856		2	2	2	
12	483998	. INTERIOR PANEL			1		
12	485487	. INTERIOR PANEL		1		1	
13	504433	. SNAP-IN PLUG / 1.090 O.D.		4	4	4	
14	504347	. RIVET POP DOME OE 3/16x1/4 AL		AR	AR	AR	
15	483555	WEATHERSTRIP / EVAPORATOR DOOR / REPLACED BY: 484125			1		
15	485499	WEATHERSTRIP / EVAPORATOR DOOR / REPLACED BY: 485637		1		1	
16	214684	SEAL DOOR RETAINER / FORWARD DOOR / REPLACED BY: 215748		1	1	1	
16	Y2-1854-20	**WEATHERSTRIP & RETAINER - MTH**					
		P) CALL ORDER DESK FOR SPECIFIC APPLICATION					
		(V.I.N.)					

From 6-8806 Up to 8-9339	DATE: 01/2014	PAGE: Y2-1866-51

EVAPORATOR DOOR ASSY - MTH

ITEM	PART	DESCRIPTION	XL45	MTH40	MTH45	MTH45S	NOTE
20	481839	SUPPORT ASSY / DOOR GUIDE		1	1	1	
21	500535	SCREW TP CAP HEX #14x3/4 ZP		2	2	2	
22	281445	GUIDE ASSY / R.H. DOOR		1	1	1	
22	288031	GUIDE ASSY / R.H. DOOR		1	1	1	
23	502638	WASHER FL .312x.734x.065 ZG603		3	3	3	
24	500165	SCREW CAP HEX 1/4-20x1 G5 ZP		1	1	1	
25	500171	SCREW CAP HEX 1/4-20x1 G5 ZG603		1	1	1	
26	500247	NUT HEX 1/4-20 ZG603		2	2	2	
30	780282	LOCK SPAGNOLET L.H.		1	1	1	
31	955271	SCREW CAP HEX M6-1.0x16 G8.8 ZG603		2	2	2	
32	500356	WASHER LO SERR 6.1x16.0x0.9 ZG603		2	2	2	
33	284596	ROD OPENING 68MM		1	1	1	
33	287170	ROD OPENING 228MM			1		S
NS	504083	SNAP BUSHING / .250x.468.406		1	1	1	
35	500764	NUT HEX #8-32 ZP		1	1	1	
36	505504	KNOB, PULL / 8-32		1	1	1	
37	482657	CLOSING PLATE 58MM X 58MM / SS		1	1	1	
NS	504473	RIVET POP DOME OE 1/8x1/4 SS		1	1	1	
37	504083	SNAP BUSHING / .250x.468.406		1	1	1	
40	284555	LOCK SUPPORT / (WELDED TO STRUCTURE)		1	1	1	
40	482453	SUPPORT			1	1	S
41	Y2-0621-00	**A/C JUNCTION BOX ASSY**					
41	Y2-0621-50	**A/C CONDENSOR MOTOR RELAY**					
50	Call Order Desk	DAMPER TRAP ASSY		1	1	1	P
51	374151	. DEFLECTOR PANEL		1	1	1	
52	374171	. DAMPER		1	1	1	
53	374172	. ROD		1	1	1	
54	374173	. PLATE FIXTURE		1	1	1	
55	507309	. BUSHING NYLINED .312x.375x.078x.500		1	1	1	
56	500975	. WASHER FL .378x.620x.094 NYL		1	1	1	
57	504339	. RIVET POP DOME OE 1/8x3/8 SS		1	1	1	
58	373415	. ACTUATOR ASSY		1	1	1	
59	374021	. TUBE NYLON #4 12MM		1	1	1	
60	504340	. RIVET POP DOME OE 1/8x3/16 SS		5	5	5	
61	502243	. SPRING PIN		1	1	1	
NS	064990	CABLE ASSY / SIDE MARKER LAMP FOR DOORS / REPLACED BY: 067207		1	1	1	
. NS	473832	. GROMMET 2 HOLESx1.6x11.0MMx2.0MMx8.0MMx16MM		1	1	1	
NS	067207	CABLE ASSY / SIDE MARKER LAMP FOR DOORS		1	1	1	
. NS	473832	. GROMMET 2 HOLESx1.6x11.0MMx2.0MMx8.0MMx16MM		1	1	1	
		P) CALL ORDER DESK FOR SPECIFIC APPLICATION					
		(V.I.N.)					
		S) WITH SLIDE-OUT					

From 6-8806 Up to 8-9339	DATE: 01/2014	PAGE: Y2-1866-51

EVAPORATOR DOOR ASSY - MTH

ITEM	PART	DESCRIPTION	XL45	MTH40	MTH45	MTH45S	NOTE

From Y-7046 Up to 8-9339	DATE: 01/2014	PAGE: Y2-1867-00
KEY & CYLINDER CODE "FORD"		

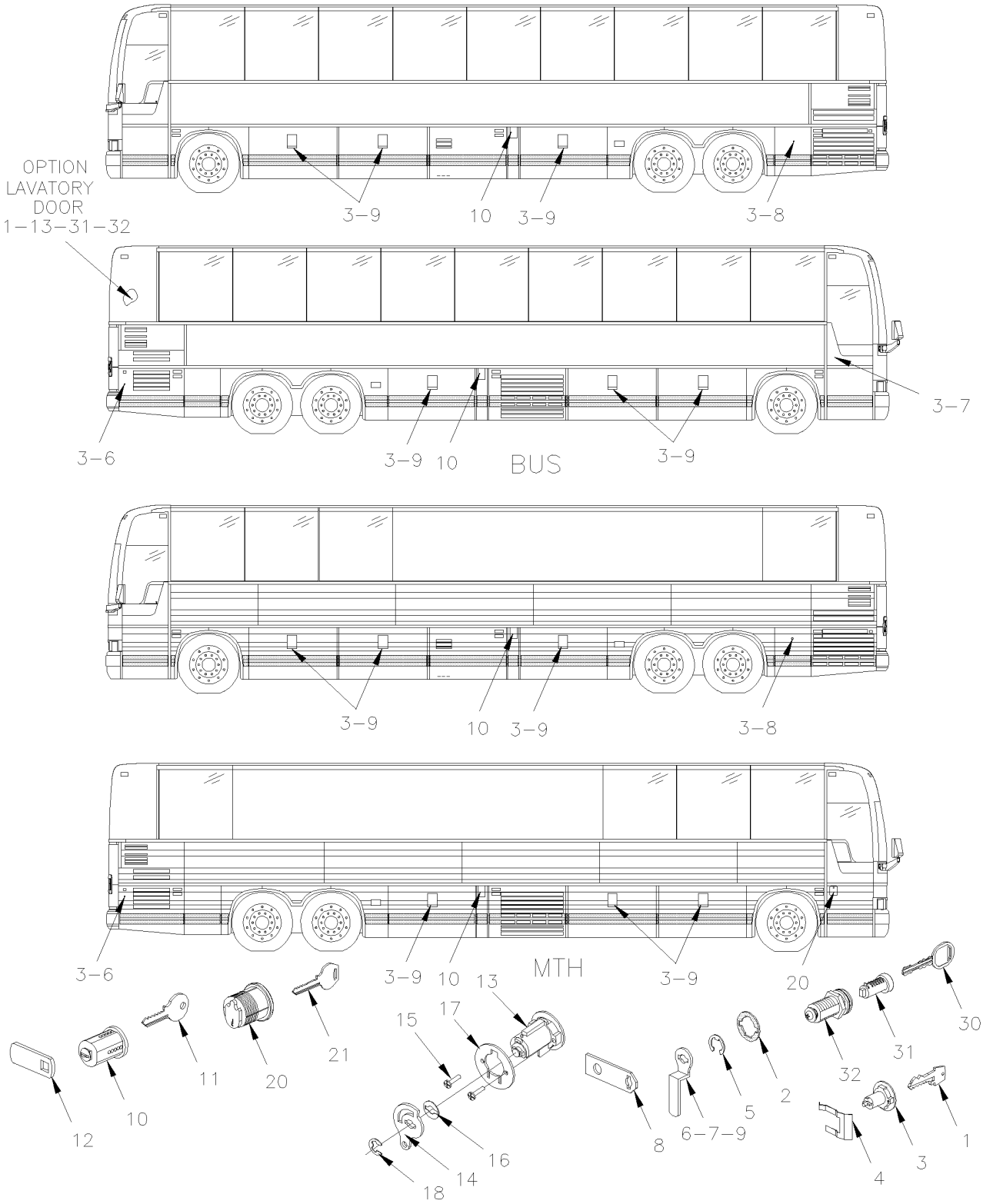

From Y-7046 Up to 8-9339	DATE: 01/2014	PAGE: Y2-1867-00

KEY & CYLINDER CODE "FORD"

ITEM	PART	DESCRIPTION	XL45	MTH40	MTH45	MTH45S	NOTE
	780238	KEY BLANK UNCUT	AR				
1	282179	KEY CODE / 00		1	1	1	
1	282180	KEY CODE / 01		1	1	1	
1	282181	KEY CODE / 02		1	1	1	
1	282182	KEY CODE / 03		1	1	1	
1	282183	KEY CODE / 04		1	1	1	
1	282184	KEY CODE / 05		1	1	1	
1	282185	KEY CODE / 06		1	1	1	
1	282186	KEY CODE / 07		1	1	1	
1	282187	KEY CODE / 08		1	1	1	
1	282188	KEY CODE / 09		1	1	1	
1	282189	KEY CODE / 10		1	1	1	
1	282190	KEY CODE / 11		1	1	1	
1	282191	KEY CODE / 12		1	1	1	
1	282192	KEY CODE / 13		1	1	1	
1	282193	KEY CODE / 14		1	1	1	
1	282194	KEY CODE / 15		1	1	1	
1	282195	KEY CODE / 16		1	1	1	
1	282196	KEY CODE / 17		1	1	1	
1	282197	KEY CODE / 18		1	1	1	
1	282198	KEY CODE / 19		1	1	1	
1	282199	KEY CODE / 20		1	1	1	
1	282200	KEY CODE / 21		1	1	1	
1	282201	KEY CODE / 22		1	1	1	
1	282202	KEY CODE / 23		1	1	1	
1	282203	KEY CODE / 24		1	1	1	
1	282204	KEY CODE / 25		1	1	1	
1	282205	KEY CODE / 26		1	1	1	
1	282206	KEY CODE / 27		1	1	1	
1	282207	KEY CODE / 28		1	1	1	
1	282208	KEY CODE / 29		1	1	1	
1	282209	KEY CODE / 30		1	1	1	
1	282210	KEY CODE / 31		1	1	1	
1	282211	KEY CODE / 32		1	1	1	
1	282212	KEY CODE / 33		1	1	1	
1	282213	KEY CODE / 34		1	1	1	

From Y-7046 Up to 8-9339	DATE: 01/2014	PAGE: Y2-1867-00

KEY & CYLINDER CODE "FORD"

ITEM	PART	DESCRIPTION	XL45	MTH40	MTH45	MTH45S	NOTE
1	282214	KEY CODE / 35		1	1	1	
1	282215	KEY CODE / 36		1	1	1	
1	282216	KEY CODE / 37		1	1	1	
1	282217	KEY CODE / 38		1	1	1	
1	282218	KEY CODE / 39		1	1	1	
1	282219	KEY CODE / 40		1	1	1	
1	282220	KEY CODE / 41		1	1	1	
1	282221	KEY CODE / 42		1	1	1	
1	282222	KEY CODE / 43		1	1	1	
1	282223	KEY CODE / 44		1	1	1	
1	282224	KEY CODE / 45		1	1	1	
1	282225	KEY CODE / 46		1	1	1	
1	282226	KEY CODE / 47		1	1	1	
1	282227	KEY CODE / 48		1	1	1	
1	282228	KEY CODE / 49		1	1	1	
1	282229	KEY CODE / 50		1	1	1	
1	282230	KEY CODE / 51		1	1	1	
1	282231	KEY CODE / 52		1	1	1	
1	282232	KEY CODE / 53		1	1	1	
1	282233	KEY CODE / 54		1	1	1	
1	282234	KEY CODE / 55		1	1	1	
1	282235	KEY CODE / 56		1	1	1	
1	282236	KEY CODE / 57		1	1	1	
1	282237	KEY CODE / 58		1	1	1	
1	282238	KEY CODE / 59		1	1	1	
1	282239	KEY CODE / 60		1	1	1	
1	282240	KEY CODE / 61		1	1	1	
1	282241	KEY CODE / 62		1	1	1	
1	282242	KEY CODE / 63		1	1	1	
1	282243	KEY CODE / 64		1	1	1	
1	282244	KEY CODE / 65		1	1	1	
1	282245	KEY CODE / 66		1	1	1	
1	282246	KEY CODE / 67		1	1	1	
1	282247	KEY CODE / 68		1	1	1	
1	282248	KEY CODE / 69		1	1	1	
1	282249	KEY CODE / 70		1	1	1	
1	282250	KEY CODE / 71		1	1	1	
1	282251	KEY CODE / 72		1	1	1	

From Y-7046 Up to 8-9339	DATE: 01/2014	PAGE: Y2-1867-00

KEY & CYLINDER CODE "FORD"

ITEM	PART	DESCRIPTION	XL45	MTH40	MTH45	MTH45S	NOTE
1	282252	KEY CODE / 73		1	1	1	
1	282253	KEY CODE / 74		1	1	1	
1	282254	KEY CODE / 75		1	1	1	
1	282255	KEY CODE / 76		1	1	1	
1	282256	KEY CODE / 77		1	1	1	
1	282257	KEY CODE / 78		1	1	1	
1	282258	KEY CODE / 79		1	1	1	
1	282259	KEY CODE / 80		1	1	1	
1	282260	KEY CODE / 81		1	1	1	
1	282261	KEY CODE / 82		1	1	1	
1	282262	KEY CODE / 83		1	1	1	
1	282263	KEY CODE / 84		1	1	1	
1	282264	KEY CODE / 85		1	1	1	
1	282265	KEY CODE / 86		1	1	1	
1	282266	KEY CODE / 87		1	1	1	
1	282267	KEY CODE / 88		1	1	1	
1	282268	KEY CODE / 89		1	1	1	
1	282269	KEY CODE / 90		1	1	1	
1	282270	KEY CODE / 91		1	1	1	
1	282271	KEY CODE / 92		1	1	1	
1	282272	KEY CODE / 93		1	1	1	
1	282273	KEY CODE / 94		1	1	1	
1	282274	KEY CODE / 95		1	1	1	
1	282275	KEY CODE / 96		1	1	1	
1	282276	KEY CODE / 97		1	1	1	
1	282277	KEY CODE / 98		1	1	1	
1	282278	KEY CODE / 99		1	1	1	
1	780217	KEY CODE / FA 0000	1				
1	780218	KEY CODE / FA 0050	1				
1	780219	KEY CODE / FA 0100	1				
1	780220	KEY CODE / FA 0221	1				
1	780221	KEY CODE / FA 0225	1				
1	780222	KEY CODE / FA 0300	1				
1	780223	KEY CODE / FA 0400	1				
1	780224	KEY CODE / FA 0500	1				
1	780225	KEY CODE / FA 0600	1				
1	780226	KEY CODE / FA 0800	1				
1	282427	KEY CODE / FA 1212	1				

From Y-7046 Up to 8-9339	DATE: 01/2014	PAGE: Y2-1867-00

KEY & CYLINDER CODE "FORD"

ITEM	PART	DESCRIPTION	XL45	MTH40	MTH45	MTH45S	NOTE
1	780654	KEY CODE / FA 0001	AR				
1	780624	KEY CODE / FA 0028	AR				
1	780649	KEY CODE / FA 0055	AR				
1	780604	KEY CODE / FA 0013	AR				
1	780656	KEY CODE / FA 0109	AR				
1	780627	KEY CODE / FA 0113	AR				
1	780829	KEY CODE / FA 0150	AR				
1	780543	KEY CODE / FA 0169	AR				
1	780599	KEY CODE / FA 0190	AR				
1	780530	KEY CODE / FA 0199	AR				
1	780659	KEY CODE / FA 0208	AR				
1	780597	KEY CODE / FA 0221	AR				
1	780572	KEY CODE / FA 0268	AR				
1	780582	KEY CODE / FA 0368	AR				
1	780610	KEY CODE / FA 0506	AR				
1	780622	KEY CODE / FA 0528	AR				
1	780585	KEY CODE / FA 0532	AR				
1	780791	KEY CODE / FA 0563	AR				
1	780534	KEY CODE / FA 0648	AR				
1	780641	KEY CODE / FA 0704	AR				
1	780608	KEY CODE / FA 0714	AR				
1	780632	KEY CODE / FA 0692	AR				
1	780601	KEY CODE / FA 1252	AR				
1	780550	KEY CODE / FA 1320	AR				
1	780644	KEY CODE / FA 1343	AR				
1	780545	KEY CODE / FA 1486	AR				
1	780548	KEY CODE / FA 1549	AR				
2	780237	SEAL RUBBER 1/32" TH / REPLACED BY: 2800032	AR				
2	2800032	SEAL RUBBER 1/16" TH SERVICE	AR				
3	282079	CYLINDER LOCK / CODE 00		1	1	1	
3	282080	CYLINDER LOCK / CODE 01		1	1	1	
3	282081	CYLINDER LOCK / CODE 02		1	1	1	
3	282082	CYLINDER LOCK / CODE 03		1	1	1	
3	282083	CYLINDER LOCK / CODE 04		1	1	1	
3	282084	CYLINDER LOCK / CODE 05		1	1	1	
3	282085	CYLINDER LOCK / CODE 06		1	1	1	
3	282086	CYLINDER LOCK / CODE 07		1	1	1	
3	282087	CYLINDER LOCK / CODE 08		1	1	1	

From Y-7046 Up to 8-9339	DATE: 01/2014	PAGE: Y2-1867-00

KEY & CYLINDER CODE "FORD"

ITEM	PART	DESCRIPTION	XL45	MTH40	MTH45	MTH45S	NOTE
3	282088	CYLINDER LOCK / CODE 09		1	1	1	
3	282089	CYLINDER LOCK / CODE 10		1	1	1	
3	282090	CYLINDER LOCK / CODE 11		1	1	1	
3	282091	CYLINDER LOCK / CODE 12		1	1	1	
3	282092	CYLINDER LOCK / CODE 13		1	1	1	
3	282093	CYLINDER LOCK / CODE 14		1	1	1	
3	282094	CYLINDER LOCK / CODE 15		1	1	1	
3	282095	CYLINDER LOCK / CODE 16		1	1	1	
3	282096	CYLINDER LOCK / CODE 17		1	1	1	
3	282097	CYLINDER LOCK / CODE 18		1	1	1	
3	282098	CYLINDER LOCK / CODE 19		1	1	1	
3	282099	CYLINDER LOCK / CODE 20		1	1	1	
3	282100	CYLINDER LOCK / CODE 21		1	1	1	
3	282101	CYLINDER LOCK / CODE 22		1	1	1	
3	282102	CYLINDER LOCK / CODE 23		1	1	1	
3	282103	CYLINDER LOCK / CODE 24		1	1	1	
3	282104	CYLINDER LOCK / CODE 25		1	1	1	
3	282105	CYLINDER LOCK / CODE 26		1	1	1	
3	282106	CYLINDER LOCK / CODE 27		1	1	1	
3	282107	CYLINDER LOCK / CODE 28		1	1	1	
3	282108	CYLINDER LOCK / CODE 29		1	1	1	
3	282109	CYLINDER LOCK / CODE 30		1	1	1	
3	282110	CYLINDER LOCK / CODE 31		1	1	1	
3	282111	CYLINDER LOCK / CODE 32		1	1	1	
3	282112	CYLINDER LOCK / CODE 33		1	1	1	
3	282113	CYLINDER LOCK / CODE 34		1	1	1	
3	282114	CYLINDER LOCK / CODE 35		1	1	1	
3	282115	CYLINDER LOCK / CODE 36		1	1	1	
3	282116	CYLINDER LOCK / CODE 37		1	1	1	
3	282117	CYLINDER LOCK / CODE 38		1	1	1	
3	282118	CYLINDER LOCK / CODE 39		1	1	1	
3	282119	CYLINDER LOCK / CODE 40		1	1	1	
3	282120	CYLINDER LOCK / CODE 41		1	1	1	
3	282121	CYLINDER LOCK / CODE 42		1	1	1	
3	282122	CYLINDER LOCK / CODE 43		1	1	1	
3	282123	CYLINDER LOCK / CODE 44		1	1	1	
3	282124	CYLINDER LOCK / CODE 45		1	1	1	
3	282125	CYLINDER LOCK / CODE 46		1	1	1	

From Y-7046 Up to 8-9339	DATE: 01/2014	PAGE: Y2-1867-00

KEY & CYLINDER CODE "FORD"

ITEM	PART	DESCRIPTION	XL45	MTH40	MTH45	MTH45S	NOTE
3	282126	CYLINDER LOCK / CODE 47		1	1	1	
3	282127	CYLINDER LOCK / CODE 48		1	1	1	
3	282128	CYLINDER LOCK / CODE 49		1	1	1	
3	282129	CYLINDER LOCK / CODE 50		1	1	1	
3	282130	CYLINDER LOCK / CODE 51		1	1	1	
3	282131	CYLINDER LOCK / CODE 52		1	1	1	
3	282132	CYLINDER LOCK / CODE 53		1	1	1	
3	282133	CYLINDER LOCK / CODE 54		1	1	1	
3	282134	CYLINDER LOCK / CODE 55		1	1	1	
3	282135	CYLINDER LOCK / CODE 56		1	1	1	
3	282136	CYLINDER LOCK / CODE 57		1	1	1	
3	282137	CYLINDER LOCK / CODE 58		1	1	1	
3	282138	CYLINDER LOCK / CODE 59		1	1	1	
3	282139	CYLINDER LOCK / CODE 60		1	1	1	
3	282140	CYLINDER LOCK / CODE 61		1	1	1	
3	282141	CYLINDER LOCK / CODE 62		1	1	1	
3	282142	CYLINDER LOCK / CODE 63		1	1	1	
3	282143	CYLINDER LOCK / CODE 64		1	1	1	
3	282144	CYLINDER LOCK / CODE 65		1	1	1	
3	282145	CYLINDER LOCK / CODE 66		1	1	1	
3	282146	CYLINDER LOCK / CODE 67		1	1	1	
3	282147	CYLINDER LOCK / CODE 68		1	1	1	
3	282148	CYLINDER LOCK / CODE 69		1	1	1	
3	282149	CYLINDER LOCK / CODE 70		1	1	1	
3	282150	CYLINDER LOCK / CODE 71		1	1	1	
3	282151	CYLINDER LOCK / CODE 72		1	1	1	
3	282152	CYLINDER LOCK / CODE 73		1	1	1	
3	282153	CYLINDER LOCK / CODE 74		1	1	1	
3	282154	CYLINDER LOCK / CODE 75		1	1	1	
3	282155	CYLINDER LOCK / CODE 76		1	1	1	
3	282156	CYLINDER LOCK / CODE 77		1	1	1	
3	282157	CYLINDER LOCK / CODE 78		1	1	1	
3	282158	CYLINDER LOCK / CODE 79		1	1	1	
3	282159	CYLINDER LOCK / CODE 80		1	1	1	
3	282160	CYLINDER LOCK / CODE 81		1	1	1	
3	282161	CYLINDER LOCK / CODE 82		1	1	1	
3	282162	CYLINDER LOCK / CODE 83		1	1	1	
3	282163	CYLINDER LOCK / CODE 84		1	1	1	

From Y-7046 Up to 8-9339	DATE: 01/2014	PAGE: Y2-1867-00

KEY & CYLINDER CODE "FORD"

ITEM	PART	DESCRIPTION	XL45	MTH40	MTH45	MTH45S	NOTE
3	282164	CYLINDER LOCK / CODE 85		1	1	1	
3	282165	CYLINDER LOCK / CODE 86		1	1	1	
3	282166	CYLINDER LOCK / CODE 87		1	1	1	
3	282167	CYLINDER LOCK / CODE 88		1	1	1	
3	282168	CYLINDER LOCK / CODE 89		1	1	1	
3	282169	CYLINDER LOCK / CODE 90		1	1	1	
3	282170	CYLINDER LOCK / CODE 91		1	1	1	
3	282171	CYLINDER LOCK / CODE 92		1	1	1	
3	282172	CYLINDER LOCK / CODE 93		1	1	1	
3	282173	CYLINDER LOCK / CODE 94		1	1	1	
3	282174	CYLINDER LOCK / CODE 95		1	1	1	
3	282175	CYLINDER LOCK / CODE 96		1	1	1	
3	282176	CYLINDER LOCK / CODE 97		1	1	1	
3	282177	CYLINDER LOCK / CODE 98		1	1	1	
3	282178	CYLINDER LOCK / CODE 99		1	1	1	
3	780235	CYLINDER LOCK / CODE FA 0000 / REPLACED BY: 282285	1				
3	780240	CYLINDER LOCK / CODE FA 0050 / REPLACED BY: 282286	1				
3	780241	CYLINDER LOCK / CODE FA 0100 / REPLACED BY: 282287	1				
3	780242	CYLINDER LOCK / CODE FA 0221 / REPLACED BY: 780596	1				
3	780243	CYLINDER LOCK / CODE FA 0225 / REPLACED BY: 282289	1				
3	780244	CYLINDER LOCK / CODE FA 0300 / REPLACED BY: 282290	1				
3	780245	CYLINDER LOCK / CODE FA 0400 / REPLACED BY: 282291	1				
3	780246	CYLINDER LOCK / CODE FA 0500 / REPLACED BY: 282292	1				
3	780247	CYLINDER LOCK / CODE FA 0600 / REPLACED BY: 282293	1				
3	780248	CYLINDER LOCK / CODE FA 0800 / REPLACED BY: 282294	1				
3	282426	CYLINDER LOCK / CODE FA 1212	1				
3	780655	CYLINDER LOCK / CODE FA 0001	AR				
3	780603	CYLINDER LOCK / CODE FA 0013	AR				
3	780625	CYLINDER LOCK / CODE FA 0028	AR				
3	780650	CYLINDER LOCK / CODE FA 0055	AR				
3	780657	CYLINDER LOCK / CODE FA 0109	AR				
3	780626	CYLINDER LOCK / CODE FA 0113	AR				
3	780830	CYLINDER LOCK / CODE FA 0150	AR				
3	780542	CYLINDER LOCK / CODE FA 0169	AR				
3	780598	CYLINDER LOCK / CODE FA 0190	AR				
3	780529	CYLINDER LOCK / CODE FA 0199	AR				
3	780658	CYLINDER LOCK / CODE FA 0208	AR				
3	780596	CYLINDER LOCK / CODE FA 0221	AR				

From Y-7046 Up to 8-9339	DATE: 01/2014	PAGE: Y2-1867-00

KEY & CYLINDER CODE "FORD"

ITEM	PART	DESCRIPTION	XL45	MTH40	MTH45	MTH45S	NOTE
3	780581	CYLINDER LOCK / CODE FA 0368	AR				
3	780609	CYLINDER LOCK / CODE FA 0506	AR				
3	780584	CYLINDER LOCK / CODE FA 0532	AR				
3	780621	CYLINDER LOCK / CODE FA 0528	AR				
3	780792	CYLINDER LOCK / CODE FA 0563	AR				
3	780555	CYLINDER LOCK / CODE FA 0692	AR				
3	780640	CYLINDER LOCK / CODE FA 0704	AR				
3	780590	CYLINDER LOCK / CODE FA 0721	AR				
3	780540	CYLINDER LOCK / CODE FA 1116	AR				
3	780600	CYLINDER LOCK / CODE FA 1252	AR				
3	780549	CYLINDER LOCK / CODE FA 1320	AR				
3	780643	CYLINDER LOCK / CODE FA 1343	AR				
3	780544	CYLINDER LOCK / CODE FA 1486	AR				
3	780547	CYLINDER LOCK / CODE FA 1549	AR				
4	780236	. RETAINER CLIP / REPLACED BY: 780887	1				
5	504477	. RING RETAINER / EXT 14.0 X 13.4 X 1.0mm	1				
6	281498	PIVOT LOCK 3/8" OFFSET Up to 4-8297 / REPLACED BY: 287406	1				
6	287406	PIVOT LOCK 9.5MM OFFSET From 4-8298	1				
7	286553	PIVOT LOCK 18.7MM OFFSET	1				
8	284531	PIVOT LOCK ROD	1		1		
9	281498	PIVOT LOCK 3/8" OFFSET / REPLACED BY: 287406	AR				
10	780180	LOCK CYLINDER W/KEY / "VIRO"	AR				
. NS	780501	. KEY	1				
10	780806	LOCK CYLINDER W/KEY / "VIRO"	AR				
. NS	780501	. KEY	1				
11	780501	. KEY	AR				
12		. PIVOT LEVER INCLUDE WITH #780180	AR				
12	289549	PIVOT LOCK ACTUATOR 42.4MM / W/11MM OFFSET	AR				S
		NEXT CYLINDER LOCK ARE MODIFIED					
		WITH 2 THREADED HOLES SCREW 4-40					
		AND THEY USE ON "W.C.L." PASENGER'S SIDE DOOR					
		SEE PAGE X3-1862-80					
13	284561	CYLINDER LOCK MODIFIED / CODE A	1				
13	282286	CYLINDER LOCK / CODE B / FA 0050	1				
13	282287	CYLINDER LOCK / CODE C / FA 0100	1				
13	282288	CYLINDER LOCK / CODE D / FA 0221 / REPLACED BY: 285932	1				
		S) REQUIERED ONLY IN SERVICE IF YOU NEED TO					
		CHANGE YOUR OLD CYLINDER LOCK # 780180					

From Y-7046 Up to 8-9339	DATE: 01/2014	PAGE: Y2-1867-00

KEY & CYLINDER CODE "FORD"

ITEM	PART	DESCRIPTION	XL45	MTH40	MTH45	MTH45S	NOTE
13	282289	CYLINDER LOCK / CODE E / FA 0225	1				
13	282290	CYLINDER LOCK / CODE F / FA 0300	1				
13	282291	CYLINDER LOCK / CODE G / FA 0400	1				
13	282292	CYLINDER LOCK / CODE H / FA 0500	1				
13	282293	CYLINDER LOCK / CODE I / FA 0600	1				
13	282294	CYLINDER LOCK / CODE J / FA 0800	1				
13	282426	CYLINDER LOCK / CODE FA 1212	1				
13	Call Order Desk	CYLINDER LOCK MODIFIED / CODE FA 0001	1				P
13	287379	CYLINDER LOCK / CODE BA / FA 0001	1				
13	286156	CYLINDER LOCK / CODE M / FA 0013	1				
13	Call Order Desk	CYLINDER LOCK MODIFIED / CODE FA 0020	1				P
13	287079	CYLINDER LOCK / CODE O / FA 0028	1				
13	287335	CYLINDER LOCK / CODE P / FA 0055	1				
13	Call Order Desk	CYLINDER LOCK MODIFIED / CODE FA 0107	1				P
13	287926	CYLINDER LOCK / CODE Q / FA 0107	1				
13	287460	CYLINDER LOCK / CODE R / FA 0109	1				
13	Call Order Desk	CYLINDER LOCK MODIFIED / CODE FA 0109	1				P
13	287100	CYLINDER LOCK / CODE S / FA 0113	1				
13	287736	CYLINDER LOCK / CODE AY / FA 0150	1				
13	285021	CYLINDER LOCK / CODE U / FA 0169	1				
13	285946	CYLINDER LOCK / CODE V / FA 0190	1				
13	284513	CYLINDER LOCK / CODE W / FA 0199	1				
13	Call Order Desk	CYLINDER LOCK MODIFIED / CODE FA 0206	1				P
13	288154	CYLINDER LOCK / CODE Y / FA 0208	1				
13	Call Order Desk	CYLINDER LOCK MODIFIED / CODE FA 0208	1				P
13	285496	CYLINDER LOCK / CODE Z / FA 0268	1				
13	Call Order Desk	CYLINDER LOCK MODIFIED / CODE FA 0268	1				P
13	285932	CYLINDER LOCK MODIFIED / CODE FA 0221	1				
13	285584	CYLINDER LOCK / CODE AA / FA 0368	1				
13	284841	CYLINDER LOCK MODIFIED / CODE FA 0368	1				
13	287633	CYLINDER LOCK MODIFIED / WITH 2 HOLES #4-40 / CODE L / FA 0329	1				
13	286459	CYLINDER LOCK / CODE AC / FA 0506	1				
13	285264	CYLINDER LOCK / CODE AB / FA 0443	1				
13	286983	CYLINDER LOCK / CODE AD / FA 0528	1				
13	285577	CYLINDER LOCK MODIFIED / CODE FA 0528	1				
13	285670	CYLINDER LOCK / CODE AE / FA 0532	1				
13	Call Order Desk	CYLINDER LOCK MODIFIED / CODE FA 0563	1				P
13	285545	CYLINDER LOCK / CODE AG / FA 0625	1				
		P) CALL ORDER DESK FOR SPECIFIC APPLICATION					
		(V.I.N.)					

From Y-7046 Up to 8-9339	DATE: 01/2014	PAGE: Y2-1867-00

KEY & CYLINDER CODE "FORD"

ITEM	PART	DESCRIPTION	XL45	MTH40	MTH45	MTH45S	NOTE
13	284373	CYLINDER LOCK / CODE AH / FA 0648	1				
13	287920	CYLINDER LOCK / CODE AJ / FA 0692	1				
13	285276	CYLINDER LOCK / CODE AI / FA 0668	1				
13	287247	CYLINDER LOCK / CODE AK / FA 0704	1				
13	286418	CYLINDER LOCK / CODE AL / FA 0714	1				
13	285861	CYLINDER LOCK / CODE AM / FA 0721	1				
13	287654	CYLINDER LOCK MODIFIED / WITH 2 HOLES #4-40 / CODE AN / FA 0726	1				
13	287701	CYLINDER LOCK MODIFIED / WITH 2 HOLES #4-40 / CODE AX / FA 0899	1				
13	284935	CYLINDER LOCK / CODE AO / FA 1116	1				
13	286049	CYLINDER LOCK / CODE AP / FA 1252	1				
13	285572	CYLINDER LOCK / CODE AQ / FA 1316	1				
13	780549	CYLINDER LOCK / CODE FA 1320	1				
13	287250	CYLINDER LOCK / CODE AS / FA 1343	1				
13	287653	CYLINDER LOCK MODIFIED / WITH 2 HOLES #4-40 / CODE AW / FA 1465	1				
13	780547	CYLINDER LOCK / CODE FA 1549	1				
14	288839	PIVOT LOCK ROD / W/W.C.L. DOOR	1				
14	280128	PIVOT LOCK ROD / W/W.C.L. DOOR 54MM O.D.	1				
15	500518	SCREW MA BDG PH #4-40x1/2 ZP	2				
16	283853	SPACER / WASHER 9/16" O.D. X 1/4" I.D.	1				
17	285811	WASHER / CYLINDER LOCK RETAINER	1				
18	504402	RING RETAINER / EXT .250 x .210 x .025"	1				
20	780430	CYLINDER LOCK ASSY W/2 KEYS / "CORBIN"		1	1	1	SS
. NS	780562	. KEY / "CORBIN" BLANK		2	2	2	
20	780803	CYLINDER LOCK ASSY W/2 KEYS / "SCHLAGE" SERVICE		1	1	1	
. NS	7808XX	. KEY / "SCHLAGE" BLANK		1	1	1	
21	780562	KEY / "CORBIN" BLANK		AR	AR	AR	
30	780780	KEY, UNCUT / NS SERIE NS SERIES From 5-8522	AR				
30	780660	KEY / NS 8888 From 5-8522	AR				
30	780661	KEY / NS 8701 From 5-8522	AR				
30	780662	KEY / NS 8702 From 5-8522	AR				
30	780663	KEY / NS 8703 From 5-8522	AR				
30	780664	KEY / NS 8704 From 5-8522	AR				
30	780665	KEY / NS 8705 From 5-8522	AR				
30	780667	KEY / NS 8707 From 5-8522	AR				
30	780668	KEY / NS 8708 From 5-8522	AR				
30	780669	KEY / NS 8709 From 5-8522	AR				
30	780670	KEY / NS 8710 From 5-8522	AR				
30	780671	KEY / NS 8711 From 5-8522	AR				
		SS) THIS MODEL IT OBSOLETED REPLACE BY 780803					
		WITH NEW LEVER # 289031					

From Y-7046 Up to 8-9339	DATE: 01/2014	PAGE: Y2-1867-00

KEY & CYLINDER CODE "FORD"

ITEM	PART	DESCRIPTION	XL45	MTH40	MTH45	MTH45S	NOTE
30	780672	KEY / NS 8712 From 5-8522	AR				
30	780673	KEY / NS 8713 From 5-8522	AR				
30	780674	KEY / NS 8714 From 5-8522	AR				
30	780675	KEY / NS 8715 From 5-8522	AR				
30	780676	KEY / NS 8716 From 5-8522	AR				
30	780677	KEY / NS 8717 From 5-8522	AR				
30	780678	KEY / NS 8718 From 5-8522	AR				
30	780679	KEY / NS 8719 From 5-8522	AR				
30	780680	KEY / NS 8720 From 5-8522	AR				
30	780681	KEY / NS 8721 From 5-8522	AR				
30	780682	KEY / NS 8722 From 5-8522	AR				
30	780683	KEY / NS 8723 From 5-8522	AR				
30	780684	KEY / NS 8724 From 5-8522	AR				
30	780685	KEY / NS 8725 From 5-8522	AR				
30	780686	KEY / NS 8726 From 5-8522	AR				
30	780687	KEY / NS 8727 From 5-8522	AR				
30	780688	KEY / NS 8728 From 5-8522	AR				
30	780689	KEY / NS 8729 From 5-8522	AR				
30	780690	KEY / NS 8730 From 5-8522	AR				
30	780716	KEY / NS 8731 From 5-8522	AR				
30	780717	KEY / NS 8732 From 5-8522	AR				
30	780718	KEY / NS 8733 From 5-8522	AR				
30	780719	KEY / NS 8734 From 5-8522	AR				
30	780720	KEY / NS 8735 From 5-8522	AR				
30	780721	KEY / NS 8736 From 5-8522	AR				
30	780722	KEY / NS 8737 From 5-8522	AR				
30	780723	KEY / NS 8738 From 5-8522	AR				
30	780724	KEY / NS 8739 From 5-8522	AR				
30	780725	KEY / NS 8740 From 5-8522	AR				
31	780691	CYLINDER LOCK / NS 8888 From 5-8522	AR				
31	780692	CYLINDER LOCK / NS 8701 From 5-8522	AR				
31	780693	CYLINDER LOCK / NS 8702 From 5-8522	AR				
31	780694	CYLINDER LOCK / NS 8703 From 5-8522	AR				
31	780695	CYLINDER LOCK / NS 8704 From 5-8522	AR				
31	780696	CYLINDER LOCK / NS 8705 From 5-8522	AR				
31	780697	CYLINDER LOCK / NS 8707 From 5-8522	AR				
31	780698	CYLINDER LOCK / NS 8708 From 5-8522	AR				
31	780699	CYLINDER LOCK / NS 8709 From 5-8522	AR				

From Y-7046 Up to 8-9339	DATE: 01/2014	PAGE: Y2-1867-00

KEY & CYLINDER CODE "FORD"

ITEM	PART	DESCRIPTION	XL45	MTH40	MTH45	MTH45S	NOTE
31	780700	CYLINDER LOCK / NS 8710 From 5-8522	AR				
31	780701	CYLINDER LOCK / NS 8711 From 5-8522	AR				
31	780702	CYLINDER LOCK / NS 8712 From 5-8522	AR				
31	780703	CYLINDER LOCK / NS 8713 From 5-8522	AR				
31	780704	CYLINDER LOCK / NS 8714 From 5-8522	AR				
31	780705	CYLINDER LOCK / NS 8715 From 5-8522	AR				
31	780706	CYLINDER LOCK / NS 8716 From 5-8522	AR				
31	780707	CYLINDER LOCK / NS 8717 From 5-8522	AR				
31	780708	CYLINDER LOCK / NS 8718 From 5-8522	AR				
31	780709	CYLINDER LOCK / NS 8719 From 5-8522	AR				
31	780710	CYLINDER LOCK / NS 8720 From 5-8522	AR				
31	780666	CYLINDER LOCK / NS 8721 From 5-8522	AR				
31	780726	CYLINDER LOCK / NS 8722 From 5-8522	AR				
31	780727	CYLINDER LOCK / NS 8723 From 5-8522	AR				
31	780728	CYLINDER LOCK / NS 8724 From 5-8522	AR				
31	780729	CYLINDER LOCK / NS 8725 From 5-8522	AR				
31	780730	CYLINDER LOCK / NS 8726 From 5-8522	AR				
31	780731	CYLINDER LOCK / NS 8727 From 5-8522	AR				
31	780732	CYLINDER LOCK / NS 8728 From 5-8522	AR				
31	780733	CYLINDER LOCK / NS 8729 From 5-8522	AR				
31	780734	CYLINDER LOCK / NS 8730 From 5-8522	AR				
31	780735	CYLINDER LOCK / NS 8731 From 5-8522	AR				
31	780736	CYLINDER LOCK / NS 8732 From 5-8522	AR				
31	780737	CYLINDER LOCK / NS 8733 From 5-8522	AR				
31	780738	CYLINDER LOCK / NS 8734 From 5-8522	AR				
31	780739	CYLINDER LOCK / NS 8735 From 5-8522	AR				
31	780740	CYLINDER LOCK / NS 8736 From 5-8522	AR				
31	780741	CYLINDER LOCK / NS 8737 From 5-8522	AR				
31	780742	CYLINDER LOCK / NS 8738 From 5-8522	AR				
31	780743	CYLINDER LOCK / NS 8739 From 5-8522	AR				
31	780744	CYLINDER LOCK / NS 8740 From 5-8522	AR				
32	780745	CYLINDER LOCK BODY From 5-8522	AR				

From Y-7046 Up to 8-9339	DATE: 01/2014	PAGE: Y2-1867-00

KEY & CYLINDER CODE "FORD"

ITEM	PART	DESCRIPTION	XL45	MTH40	MTH45	MTH45S	NOTE

From Y-7046 Up to 3-8164	DATE: 01/2014	PAGE: Y2-1868-00

A/C COMPRESSOR DOOR ASSY

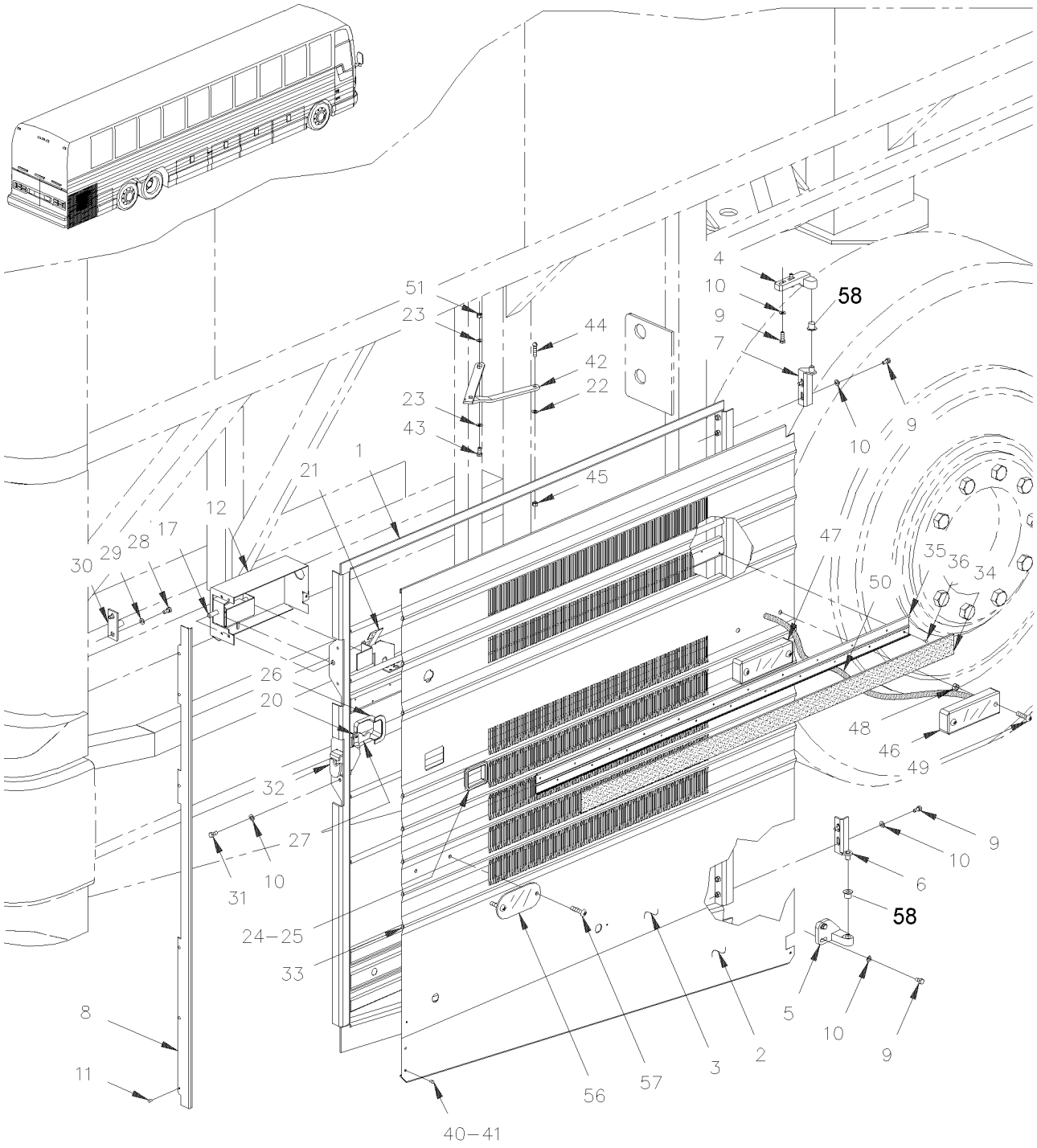

From Y-7046 Up to 3-8164	DATE: 01/2014	PAGE: Y2-1868-00

A/C COMPRESSOR DOOR ASSY

ITEM	PART	DESCRIPTION	XL45	MTH40	MTH45	MTH45S	NOTE
		ALL COMPRESSOR DOORS ASSY DO NOT INCLUDE					
		RUB-RAIL PLEASE ORDER SEPARATELY					
	286437P	COMPRESSOR DOOR ASSY / W/FLAT PANEL	1				
	286643P	COMPRESSOR DOOR ASSY / W/FLAT PANEL / AND ELECTRICAL LOCK	1				
	287349	COMPRESSOR DOOR ASSY / W/FLUTED LOWER MOULDING	1				A
	286433P	COMPRESSOR DOOR ASSY / W/FLUTED PANEL		1	1		
	286433P	COMPRESSOR DOOR ASSY / W/FLUTED PANEL Up to 1-7435				1	
	287933P	COMPRESSOR DOOR ASSY / W/FLUTED LOWER MOULDING From 1-7436				1	B
1	286083	FRAME ASSY / COMPRESSOR DOOR	1	1	1	1	
2	474235	PANEL, LOWER Up to 1-7726 / REPLACED BY: 475370	1				
2	475370	PANEL, LOWER From 1-7727	1				
2	473948	PANEL, LOWER / S.B.	AR				A
2	473948	PANEL, LOWER / S.B.		1	1	1	
3	474208	PANEL, UPPER / FLAT	1				
3	474862	PANEL, UPPER / W/FLUTED LOWER MOULDING / REPLACED BY: K474862	AR				A
3	473946	PANEL, UPPER / W/FLUTED		1	1		
3	473946	PANEL, UPPER / W/FLUTED Up to 1-7435				1	
3	474862	PANEL, UPPER / W/FLUTED LOWER MOULDING From 1-7436 / REPLACED BY: K474862				1	A,B
3	477490	PANEL, UPPER / W/FLUTED LOWER MOULDING / SERVICE	1			1	A,B
4	286085	UPPER HINGE	1	1	1	1	
5	286103	LOWER HINGE / REPLACED BY: 288945	1	1	1	1	
6	286102	ARM ASSY	1	1	1	1	
6	289150	ARM ASSY	1	1	1	1	
7	286098	ARM ASSY	1	1	1	1	
7	289149	ARM ASSY	1	1	1	1	
8	286225	FINISHING MOULDING 1110MM / S.B.	1	1	1	1	
9	502737	SCREW CAP HEX M6-1.0x25 SS EMN	4	4	4	4	
10	430406	WASHER FLAT	4	4	4	4	
11	504339	RIVET POP DOME OE 1/8x3/8 SS	6	6	6	6	
12	286223	CAP	1	1	1	1	
13	502577	SCREW MA PAN PH M3-0.5x16 ZP	2	2	2	2	
14	502579	NUT HEX M3-0.5 NP	2	2	2	2	
15	562096	MICRO SWITCH	1	1	1	1	
16	504477	RING RETAINER / EXT 14.0 X 13.4 X 1.0mm	1	1	1	1	
17	281498	PIVOT LOCK 3/8" OFFSET / REPLACED BY: 287406	1	1	1	1	
18	481564	ROD GUIDE	2	2	2	2	
19	502151	SPRING COMPRESSION / .300 O.D. x 1 x .032	2	2	2	2	
20	504379	RIVET POP DOME OE 3/16x1/4 SS	4	4	4	4	
21	780428	LOCK ACTUATOR / 12V	1	1	1	1	
. NS	562076	. CONNECTOR / PACK-CON I / FEMALE HOUSING / 2C / PED 8911772	1	1	1	1	
		A) BUS WITH "OPTION" FLUTED LOWER PANELLING					
		B) MTH ENT WITH UPPER FLAT SIDE PANELLING					

From Y-7046 Up to 3-8164	DATE: 01/2014	PAGE: Y2-1868-00

A/C COMPRESSOR DOOR ASSY

ITEM	PART	DESCRIPTION	XL45	MTH40	MTH45	MTH45S	NOTE
22	502573	WASHER FL 6.4x12.5x1.6 SS	1	1	1	1	
23	500270	WASHER FL .406x1.000x.063 SS	2	2	2	2	
24	286280	PROTECTOR	1	1	1	1	
25	683083	ADHESIVE SIKA #252 / BLACK / 600 ml SAUSAGE	AR	AR	AR	AR	
26	286171	PROTECTOR	1	1	1	1	
27	284749	LEVER	1	1	1	1	
28	502780	SCREW CAP HEX M8-1.25x25 SS EMN	2	2	2	2	
29	502584	WASHER LO SERR 8.2x26.3x1.8 ZP	2	2	2	2	
30	286203	STOPPER	1	1	1	1	
31	502563	SCREW CAP HEX M6-1.0x12 G8.8 ZP	2	2	2	2	
32	780587	LOCK SPAGNOLET L.H. / W/G-FITTING Up to 2-7755 / REPLACED BY: 780652	1	1	1	1	
32	780652	LOCK SPAGNOLET L.H. / W/G-FITTING From 2-7756	1	1	1	1	
. NS	780340	. CLIP, RETAINER ROD From 2-7756	1	1	1	1	
. NS	507607	. GREASE FITTING / From 2-7756	1	1	1	1	
33	682972	BLACK TAPE BUTYL 3/16"X3/8"X25'	AR	AR	AR	AR	
34	473830	FINISHING MOULDING SS / 1123MM		1	1	1	
34	474389	FINISHING MOULDING PLASTIC 1123MM	1			1	B
35	473826	MOULDING RETAINER / 1125MM		1	1	1	
36	504488	RIVET MGLP PRDG 3/16x17/64 SS		10	10	10	
37	064894	CABLE ASSY / COMPRESSOR DOOR LOCK	1	1	1	1	
38	502637	WASHER FL .200x.437x.037 SS	4	4	4	4	
39	504013	TIE MOUNT / 1/4" X 1/4" I.D.	4	4	4	4	
40	504334	BUMPER RUBBER / .625 OD x .406 TH x .156 HOLE	2	2	2	2	
41	504339	RIVET POP DOME OE 1/8x3/8 SS	2	2	2	2	
NS	504272	RIVET CHY Q BRAZ 3/16x1/8 SS / REPLACED BY: 504745	6	6	6	6	
42	281445	GUIDE ASSY / R.H. DOOR Up to 2-7831	1	1	1	1	
42	288031	GUIDE ASSY / R.H. DOOR From 2-7832	1	1	1	1	
43	502780	SCREW CAP HEX M8-1.25x25 SS EMN	1	1	1	1	
44	502568	SCREW MA PAN PH M6-1.0x20 EMN	1	1	1	1	
45	502511	NUT HEX NYRT M6-1.0 ZP	1	1	1	1	
46	Y2-0662-00	**CLEARANCE & MARKER LIGHT**					
47	Y2-0662-00	**CLEARANCE & MARKER LIGHT**					
48	502774	NUT WELL #10-32x.625	4	4	4	4	
49	5001042	SCREW MA RND PH #10-32x1 1/4 SS	4	4	4	4	
50	064990	CABLE ASSY / SIDE MARKER LAMP FOR DOORS / REPLACED BY: 067207	2	2	2	2	
. NS	473832	. GROMMET 2 HOLESx1.6x11.0MMx2.0MMx8.0MMx16MM	1	1	1	1	
50	067207	CABLE ASSY / SIDE MARKER LAMP FOR DOORS	2	2	2	2	
. NS	473832	. GROMMET 2 HOLESx1.6x11.0MMx2.0MMx8.0MMx16MM	1	1	1	1	
51	5001188	NUT HEX M8-1.25 SS	1	1	1	1	
52	683448	ACCELERATOR SIKA / 600ml SAUSAGE	AR	AR	AR	AR	
53	683447	ADHESIVE SIKATACK PLUS / BLACK / 23 Liters	AR	AR	AR	AR	
54	683097	CLEANER SIKA #205 / CLEAR / 1000ml	AR	AR	AR	AR	
		B) MTH ENT WITH UPPER FLAT SIDE PANELLING					

From Y-7046 Up to 3-8164	DATE: 01/2014	PAGE: Y2-1868-00

A/C COMPRESSOR DOOR ASSY

ITEM	PART	DESCRIPTION	XL45	MTH40	MTH45	MTH45S	NOTE
55	683446	PRIMER SIKA #206 / BLACK / 1000ml	AR	AR	AR	AR	
56	930320	REFLECTOR RED 1 3/16" x 4 7/16"	1	1	1	1	
57	500606	SCREW MA TR PH #10-24x3/4 SS	2	2	2	2	
58	284607	BUSHING, NYLON / (NOT INCLUDE W/HINGE)	2	2	2	2	
59	504637	CABLE TIE / 3/16" x 13"	4	4	4	4	
60	500786	NUT HEX #10-24 ZP	2	2	2	2	
65	5001030	WASHER LO EXTC 5.3x9.8x0.3 BK	4	4	4	4	
66	502698	SCREW MA PAN PH M4-0.7x16 SS EMN	4	4	4	4	
67	500470	WASHER LO SPT .193x.334x.047 ZP	2	2	2	2	

From 4-8165 Up to 8-9339	DATE: 01/2014	PAGE: Y2-1868-01

A/C COMPRESSOR DOOR ASSY

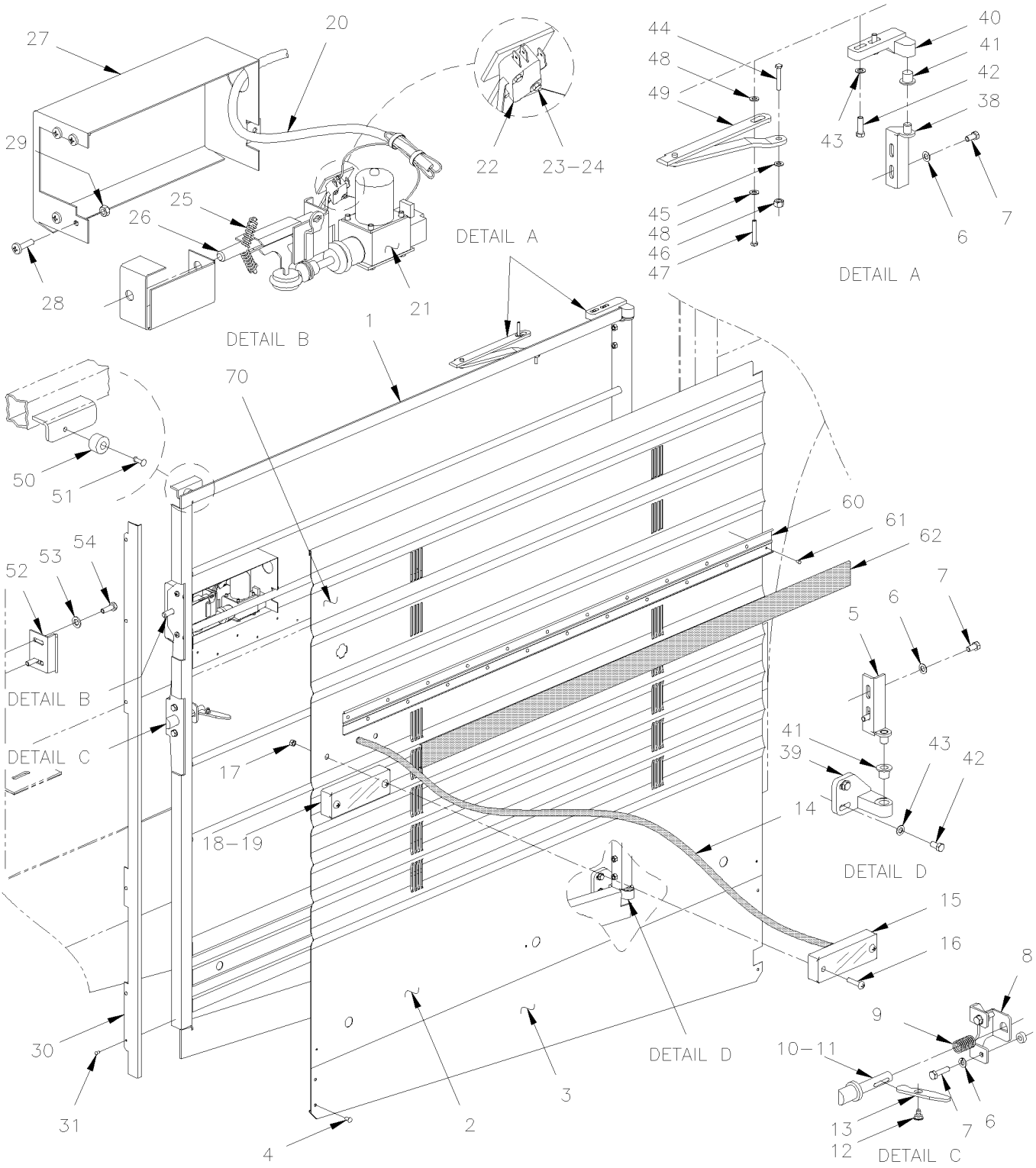

From 4-8165 Up to 8-9339	DATE: 01/2014	PAGE: Y2-1868-01

A/C COMPRESSOR DOOR ASSY

ITEM	PART	DESCRIPTION	XL45	MTH40	MTH45	MTH45S	NOTE
	288334	COMPRESSOR DOOR ASSY / W/FLAT PANEL Up to 6-8906	1				
	288335	COMPRESSOR DOOR ASSY / W/FLAT PANEL / AND ELECTRICAL LOCK Up to 6-8906	1				
	288336	COMPRESSOR DOOR ASSY / W/FLUTED PANEL Up to 6-8906	1				A
	288337	COMPRESSOR DOOR ASSY / W/FLUTED PANEL / AND ELECTRICAL LOCK Up to 6-8906	1				A
	288338	COMPRESSOR DOOR ASSY / W/FLUTED PANEL		1	1		
	288339	COMPRESSOR DOOR ASSY / W/FLUTED LOWER MOULDING				1	
1	286230	. FRAME ASSY / COMPRESSOR DOOR Up to 7-8932	1	1	1	1	
1	286474	. FRAME ASSY / COMPRESSOR DOOR From 7-8933		1	1	1	
2	473651	. PANEL, UPPER / FLAT Up to 4-8358 / REPLACED BY: K473651	1				
2	477484	. PANEL, UPPER / FLAT From 4-8359 Up to 6-8906	1				
2	475696	. PANEL, UPPER / W/FLUTED / S.B. Up to 4-8358 / REPLACED BY: 477665		1	1		
2	477492	. PANEL, UPPER / W/FLUTED / S.B. From 4-8359 Up to 5-8468 / REPLACED BY: 477665		1	1		
2	477665	. PANEL, UPPER / W/FLUTED / B.A. From 5-8469		1	1		
2	473734	. PANEL, UPPER / W/FLUTED / S.B. Up to 4-8358 / REPLACED BY: K473734				1	A
2	473734	. PANEL, UPPER / W/FLUTED / S.B. Up to 4-8358 / REPLACED BY: K473734	AR				A
2	477485	. PANEL, UPPER / W/FLUTED / S.B. From 4-8359 Up to 5-8468				1	
2	477485	. PANEL, UPPER / W/FLUTED / S.B. From 4-8359 Up to 6-8906	1				A
2	477680	. PANEL, UPPER / W/FLUTED / B.A. From 5-8469				1	
3	475370	. PANEL, LOWER Up to 6-8906	1				
3	473948	. PANEL, LOWER / S.B. Up to 5-8468	1				A
3	473948	. PANEL, LOWER / S.B. Up to 6-8906	AR				A
3	477664	. PANEL, LOWER / B.A. From 5-8469	1				
4	504272	. RIVET CHY Q BRAZ 3/16x1/8 SS / REPLACED BY: 504745	5				
5	286102	. ARM ASSY	1				
5	289150	. ARM ASSY	1				
6	500356	. WASHER LO SERR 6.1x16.0x0.9 ZG603	4				
7	502737	. SCREW CAP HEX M6-1.0x25 SS EMN	4				
8	288006	. GUIDE PIN HOLDER	1				
9	502910	. SPRING COMPRESSION / .720 O.D. 1.75 x .055	1				
10	284313	. CATCH PIN SS / 90MM / REPLACED BY: 289585	1				
10	289585	. CATCH PIN ACETAL / 90MM	1				
11	507212	. O-RING	1				
12	287271	. RIVET SHR FL 9.95x3.6{4.8x4.8 SS	1				
13	286612	. PIVOT	1				
14	064990	. CABLE ASSY / SIDE MARKER LAMP FOR DOORS / REPLACED BY: 067207	2				
. NS	473832	. . GROMMET 2 HOLESx1.6x11.0MMx2.0MMx8.0MMx16MM	1				
14	067207	. CABLE ASSY / SIDE MARKER LAMP FOR DOORS	2				
. NS	473832	. . GROMMET 2 HOLESx1.6x11.0MMx2.0MMx8.0MMx16MM	1				
NS	504273	. CABLE TIE / 1/8" X 3"1/2	2				
15	Y2-0662-00	**CLEARANCE & MARKER LIGHT**					
16	5001042	. SCREW MA RND PH #10-32x1 1/4 SS	4				
17	502774	. NUT WELL #10-32x.625	4				
18	930320	. REFLECTOR RED 1 3/16" x 4 7/16"	1				
		A) BUS WITH "OPTION" FLUTED LOWER PANELLING					

From 4-8165 Up to 8-9339	DATE: 01/2014	PAGE: Y2-1868-01

A/C COMPRESSOR DOOR ASSY

ITEM	PART	DESCRIPTION	XL45	MTH40	MTH45	MTH45S	NOTE
19	500510	. SCREW MA BDG PH #10-32x3/4 SS EMN	2				
19	500423	. NUT HEX NYRT #10-32 SS	2				
19	500787	. NUT HEX #10-24 SS	2				
20	064894	. CABLE ASSY / COMPRESSOR DOOR LOCK Up to 7-9095	1				
20	067119	. CABLE ASSY / COMPRESSOR DOOR LOCK From 7-9096 / REPLACED BY: 068084	1				
21	780428	. LOCK ACTUATOR / 12V	1				
. NS	562076	. . CONNECTOR / PACK-CON I / FEMALE HOUSING / 2C / PED 8911772	1				
22	562096	. MICRO SWITCH	1				
23	502577	. SCREW MA PAN PH M3-0.5x16 ZP	2				
24	502579	. NUT HEX M3-0.5 NP	2				
NS	502691	. WASHER LO SPT 3.6x6.7x0.8 ZP	2				
25	502151	. SPRING COMPRESSION / .300 O.D. x 1 x .032	2				
26	481564	. ROD GUIDE	1				
27	287400	. COVER / ACTUATOR PROTECTOR	1				
28	502698	. SCREW MA PAN PH M4-0.7x16 SS EMN	2				
29	5001544	. WASHER LO EXT .195x.410x.025 SS	2				
30	286225	. FINISHING MOULDING 1110MM / S.B. Up to 6-8906	1				
30	286225	. FINISHING MOULDING 1110MM / S.B. Up to 5-8468		1	1	1	
30	288527	. FINISHING MOULDING 1110MM / B.A. From 5-8469	1				
31	504339	. RIVET POP DOME OE 1/8x3/8 SS	4				
38	286098	. ARM ASSY	1				
38	289149	. ARM ASSY	1				
39	286103	LOWER HINGE / REPLACED BY: 288945	1				
40	286085	UPPER HINGE	1				
41	284607	BUSHING, NYLON / (NOT INCLUDE W/HINGE)	1				
42	502737	SCREW CAP HEX M6-1.0x25 SS EMN	4				
43	430406	WASHER FLAT	8				
44	502568	SCREW MA PAN PH M6-1.0x20 EMN	1				
45	502573	WASHER FL 6.4x12.5x1.6 SS	1				
46	502511	NUT HEX NYRT M6-1.0 ZP	1				
47	502686	SCREW CAP HEX M6-1.0x30 SS EMN	1				
48	5001468	SCREW CAP HEX 7/8-9x2 G8 ZP	2				
49	288031	GUIDE ASSY / R.H. DOOR	1				
50	504334	BUMPER RUBBER / .625 OD x .406 TH x .156 HOLE	1				
51	504339	RIVET POP DOME OE 1/8x3/8 SS	1				
52	287286	CATCH PIN / RETAINER 45MMx21MM 90°	1				
NS	287452	SHIM SPACER 70MM X 25 X 14GA	AR				
53	502857	WASHER LO SERR 8.2x26.3x1.8 ZG603	4				
54	502780	SCREW CAP HEX M8-1.25x25 SS EMN	4				
60	473826	MOULDING RETAINER / 1125MM		1	1		
61	504488	RIVET MGLP PRDG 3/16x17/64 SS		10	10		
62	473830	FINISHING MOULDING SS / 1123MM		1	1		
62	474389	FINISHING MOULDING PLASTIC 1123MM	1			1	

From 4-8165 Up to 8-9339	DATE: 01/2014	PAGE: Y2-1868-01

A/C COMPRESSOR DOOR ASSY

ITEM	PART	DESCRIPTION	XL45	MTH40	MTH45	MTH45S	NOTE
70	Y2-1867-00	**KEY & CYLINDER CODE "FORD"**					

From Y-7046 Up to 3-8164	DATE: 01/2014	PAGE: Y2-1869-00
RADIATOR DOOR ASSY		

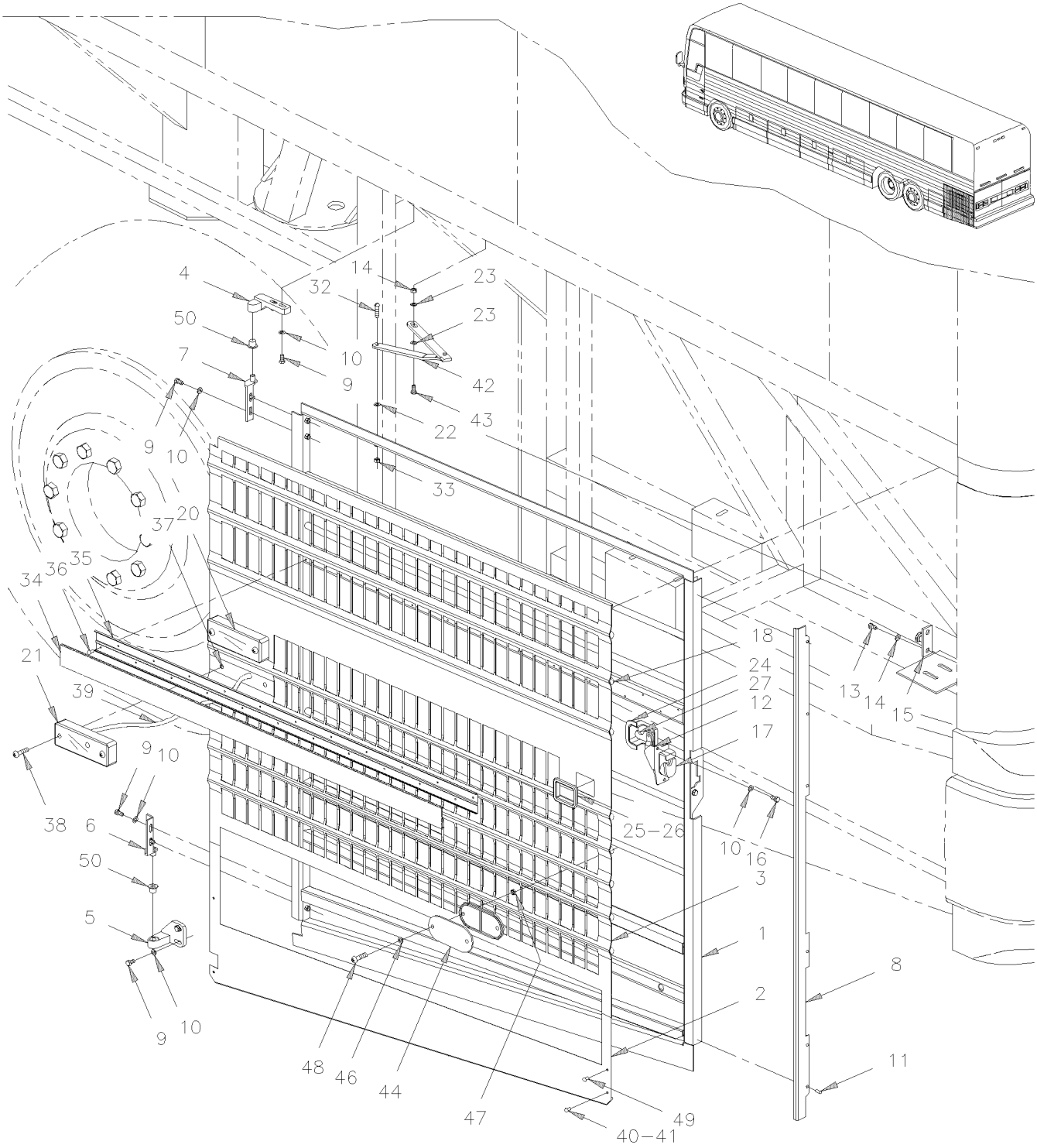

From Y-7046 Up to 3-8164	DATE: 01/2014	PAGE: Y2-1869-00

RADIATOR DOOR ASSY

ITEM	PART	DESCRIPTION	XL45	MTH40	MTH45	MTH45S	NOTE
		ALL RADIATOR DOORS ASSY DO NOT INCLUDE					
		RUB-RAIL PLEASE ORDER SEPARATELY					
	286645P	RADIATOR DOOR ASSY / W/FLAT PANEL	1				
	287936P	RADIATOR DOOR ASSY / W/FLUTED LOWER MOULDING	1				A
	286453P	RADIATOR DOOR ASSY / W/FLUTED PANEL		1	1		
	286453P	RADIATOR DOOR ASSY / W/FLUTED PANEL Up to 1-7435				1	
	287936P	RADIATOR DOOR ASSY / W/FLUTED LOWER MOULDING From 1-7436				1	
1	286134	FRAME ASSY / RADIATOR DOOR	1	1	1	1	
2	474236	PANEL, LOWER Up to 1-7726 / REPLACED BY: 475360	1				
2	475360	PANEL, LOWER From 1-7727	1				
2	473947	PANEL, LOWER / SB	AR				A
2	473947	PANEL, LOWER / SB		1	1	1	
3	474228	PANEL, UPPER / FLAT	1				
3	474856	PANEL, UPPER / W/FLUTED LOWER MOULDING	AR				A
3	473949	PANEL, UPPER / W/FLUTED		1	1		
3	473949	PANEL, UPPER / W/FLUTED Up to 1-7435				1	
3	474856	PANEL, UPPER / W/FLUTED LOWER MOULDING From 1-7436				1	B
4	286129	UPPER HINGE	1	1	1	1	
5	286128	LOWER HINGE / REPLACED BY: 288827	1	1	1	1	
6	286098	ARM ASSY	1	1	1	1	
6	289149	ARM ASSY	1	1	1	1	
7	286102	ARM ASSY	1	1	1	1	
7	289150	ARM ASSY	1	1	1	1	
8	286225	FINISHING MOULDING 1110MM / S.B.	1	1	1	1	
9	502737	SCREW CAP HEX M6-1.0x25 SS EMN	4	4	4	4	
10	430406	WASHER FLAT	4	4	4	4	
11	504339	RIVET POP DOME OE 1/8x3/8 SS	6	6	6	6	
12	504379	RIVET POP DOME OE 3/16x1/4 SS	1	1	1	1	
13	502780	SCREW CAP HEX M8-1.25x25 SS EMN	2	2	2	2	
14	502584	WASHER LO SERR 8.2x26.3x1.8 ZP	2	2	2	2	
15	286203	STOPPER	1	1	1	1	
16	502563	SCREW CAP HEX M6-1.0x12 G8.8 ZP	2	2	2	2	
17	780588	LOCK SPAGNOLET R.H. / W/G-FITTING Up to 2-7755 / REPLACED BY: 780653	1	1	1	1	
. NS	780340	. CLIP, RETAINER ROD Up to 2-7755	1	1	1	1	
. NS	507607	. GREASE FITTING / Up to 2-7755	1	1	1	1	
17	780653	LOCK SPAGNOLET R.H. / W/G-FITTING From 2-7756	1	1	1	1	
. NS	780340	. CLIP, RETAINER ROD From 2-7756	1	1	1	1	
. NS	507607	. GREASE FITTING / From 2-7756	1	1	1	1	
18	682972	BLACK TAPE BUTYL 3/16"X3/8"X25'	AR	AR	AR	AR	
19	5001188	NUT HEX M8-1.25 SS	1	1	1	1	
		A) BUS WITH "OPTION" FLUTED LOWER PANELLING					
		B) MTH ENT WITH UPPER FLAT SIDE PANELLING					

From Y-7046 Up to 3-8164	DATE: 01/2014	PAGE: Y2-1869-00

RADIATOR DOOR ASSY

ITEM	PART	DESCRIPTION	XL45	MTH40	MTH45	MTH45S	NOTE
20	Y2-0662-00	**CLEARANCE & MARKER LIGHT**					
21	Y2-0662-00	**CLEARANCE & MARKER LIGHT**					
22	502573	WASHER FL 6.4x12.5x1.6 SS	1	1	1	1	
23	500270	WASHER FL .406x1.000x.063 SS	2	2	2	2	
24	286280	PROTECTOR	1	1	1	1	
25	683083	ADHESIVE SIKA #252 / BLACK / 600 ml SAUSAGE	AR	AR	AR	AR	
26	286171	PROTECTOR	1	1	1	1	
27	284749	LEVER	1	1	1	1	
28	683448	ACCELERATOR SIKA / 600ml SAUSAGE	AR	AR	AR	AR	
29	683447	ADHESIVE SIKATACK PLUS / BLACK / 23 Liters	AR	AR	AR	AR	
30	683097	CLEANER SIKA #205 / CLEAR / 1000ml	AR	AR	AR	AR	
31	683446	PRIMER SIKA #206 / BLACK / 1000ml	AR	AR	AR	AR	
32	502568	SCREW MA PAN PH M6-1.0x20 EMN	1	1	1	1	
33	502511	NUT HEX NYRT M6-1.0 ZP	1	1	1	1	
34	473830	FINISHING MOULDING SS / 1123MM		1	1	1	
34	474389	FINISHING MOULDING PLASTIC 1123MM	1			1	B
35	473826	MOULDING RETAINER / 1125MM		1	1	1	
36	504488	RIVET MGLP PRDG 3/16x17/64 SS		10	10	10	
37	502774	NUT WELL #10-32x.625	4	4	4	4	
38	5001042	SCREW MA RND PH #10-32x1 1/4 SS	4	4	4	4	
39	064990	CABLE ASSY / SIDE MARKER LAMP FOR DOORS / REPLACED BY: 067207	2	2	2	2	
. NS	473832	. GROMMET 2 HOLESx1.6x11.0MMx2.0MMx8.0MMx16MM	1	1	1	1	
40	504334	BUMPER RUBBER / .625 OD x .406 TH x .156 HOLE	2	2	2	2	
41	504339	RIVET POP DOME OE 1/8x3/8 SS	2	2	2	2	
42	281444	GUIDE ASSY / L.H. DOOR Up to 2-7831	1	1	1	1	
42	281912	GUIDE ASSY / L.H. DOOR From 2-7832	1	1	1	1	
43	502780	SCREW CAP HEX M8-1.25x25 SS EMN	1	1	1	1	
44	930320	REFLECTOR RED 1 3/16" x 4 7/16"	1	1	1	1	
46	500470	WASHER LO SPT .193x.334x.047 ZP	2	2	2	2	
47	500786	NUT HEX #10-24 ZP	2	2	2	2	
48	500606	SCREW MA TR PH #10-24x3/4 SS	2	2	2	2	
49	504272	RIVET CHY Q BRAZ 3/16x1/8 SS / REPLACED BY: 504745	4	4	4	4	
50	284607	BUSHING, NYLON / (NOT INCLUDE W/HINGE)	2	2	2	2	
		B) MTH ENT WITH UPPER FLAT SIDE PANELLING					

From Y-7046 Up to 3-8164	DATE: 01/2014	PAGE: Y2-1869-00

RADIATOR DOOR ASSY

ITEM	PART	DESCRIPTION	XL45	MTH400	MTH445	MTH445S	NOTE

From 4-8165 Up to 6-8906	DATE: 01/2014	PAGE: Y2-1869-01

RADIATOR DOOR ASSY - BUS

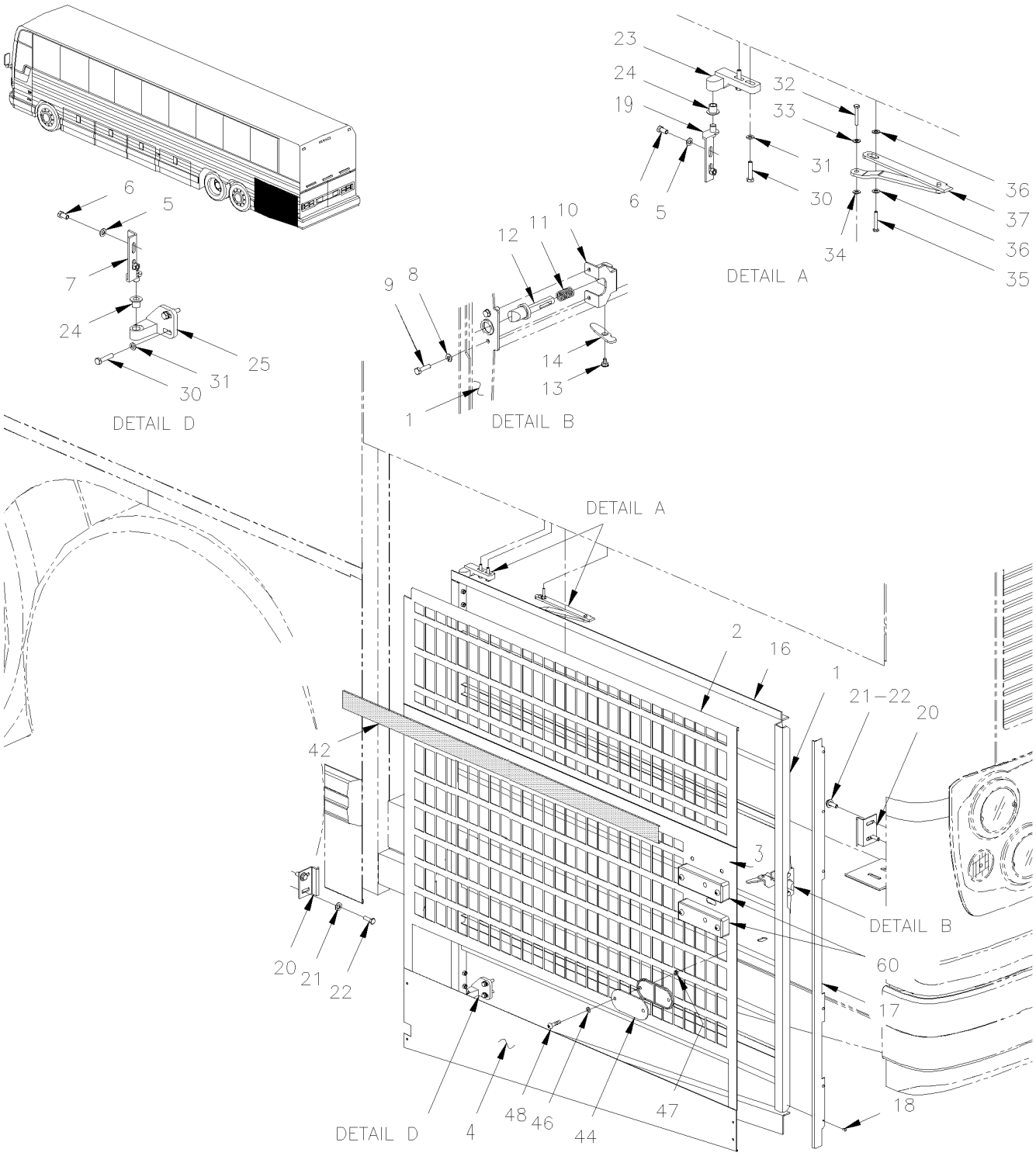

From 4-8165 Up to 6-8906	DATE: 01/2014	PAGE: Y2-1869-01

RADIATOR DOOR ASSY - BUS

ITEM	PART	DESCRIPTION	XL45	MTH40	MTH45	MTH45S	NOTE
	288332	RADIATOR DOOR ASSY / W/FLAT PANEL	1				
	288333	RADIATOR DOOR ASSY / W/FLUTED LOWER MOULDING	1				A
1	284778	FRAME ASSY / RADIATOR DOOR	1				
2	473796	PANEL, UPPER / FLAT Up to 4-8358 / REPLACED BY: K473796	1				
2	477488	PANEL, UPPER / FLAT From 4-8359	1				
2	473794	PANEL, UPPER / W/FLAT UPPER MOULDING / S.B. Up to 4-8358 / REPLACED BY: K473794	AR				A
2	477487	PANEL, UPPER / W/FLAT UPPER MOULDING / S.B. From 4-8359	AR				A
4	475360	PANEL, LOWER	1				
4	474457	PANEL, LOWER / S.B.	AR				A
4	504272	RIVET CHY Q BRAZ 3/16x1/8 SS / REPLACED BY: 504745	4				
5	502737	SCREW CAP HEX M6-1.0x25 SS EMN	4				
NS	430406	WASHER FLAT	4				
6	502686	SCREW CAP HEX M6-1.0x30 SS EMN	4				
7	286098	ARM ASSY	1				
7	289149	ARM ASSY	1				
8	500356	WASHER LO SERR 6.1x16.0x0.9 ZG603	6				
9	502737	SCREW CAP HEX M6-1.0x25 SS EMN	6				
10	288006	GUIDE PIN HOLDER	1				
11	502910	SPRING COMPRESSION / .720 O.D. 1.75 x .055	1				
12	284313	CATCH PIN SS / 90MM / REPLACED BY: 289585	1				
12	289585	CATCH PIN ACETAL / 90MM	1				
NS	507212	O-RING	1				
13	287271	RIVET SHR FL 9.95x3.6{4.8x4.8 SS	1				
14	286612	PIVOT	1				
16	504334	BUMPER RUBBER / .625 OD x .406 TH x .156 HOLE	1				
16	504339	RIVET POP DOME OE 1/8x3/8 SS	1				
17	286225	FINISHING MOULDING 1110MM / S.B.	1				
18	504339	RIVET POP DOME OE 1/8x3/8 SS	AR				
19	286102	ARM ASSY	1				
19	289150	ARM ASSY	1				
20	287286	CATCH PIN / RETAINER 45MMx21MM 90°	1				
NS	287452	SHIM SPACER 70MM X 25 X 14GA	AR				
21	502857	WASHER LO SERR 8.2x26.3x1.8 ZG603	4				
22	502780	SCREW CAP HEX M8-1.25x25 SS EMN	4				
23	286129	UPPER HINGE	1				
24	284607	BUSHING, NYLON / (NOT INCLUDE W/HINGE)	2				
25	286128	LOWER HINGE / REPLACED BY: 288827	1				
30	502737	SCREW CAP HEX M6-1.0x25 SS EMN	4				
31	430406	WASHER FLAT	4				
32	502568	SCREW MA PAN PH M6-1.0x20 EMN	1				
33	502573	WASHER FL 6.4x12.5x1.6 SS	1				
34	502511	NUT HEX NYRT M6-1.0 ZP	1				
35	502780	SCREW CAP HEX M8-1.25x25 SS EMN	1				
		A) BUS WITH "OPTION" FLUTED LOWER PANELLING					

From 4-8165 Up to 6-8906	DATE: 01/2014	PAGE: Y2-1869-01

RADIATOR DOOR ASSY - BUS

ITEM	PART	DESCRIPTION	XL45	MTH40	MTH45	MTH45S	NOTE
36	500270	WASHER FL .406x1.000x.063 SS	2				
37	281912	GUIDE ASSY / L.H. DOOR	1				
42	474389	FINISHING MOULDING PLASTIC 1123MM	1				
NS	683083	ADHESIVE SIKA #252 / BLACK / 600 ml SAUSAGE	AR				
NS	5060044	TAPE RUB ADH2 CC POL 1/4" X 1/4" X 50' / BLACK I1C-N-A	AR				
44	930320	REFLECTOR RED 1 3/16" x 4 7/16"	1				
46	500914	WASHER LO SPT .193x.334x.047 ZG603	2				
47	500787	NUT HEX #10-24 SS	2				
48	500606	SCREW MA TR PH #10-24x3/4 SS	2				
60	Y2-0662-00	**CLEARANCE & MARKER LIGHT**					

From 4-8165 Up to 6-8906	DATE: 01/2014	PAGE: Y2-1869-01

RADIATOR DOOR ASSY - BUS

ITEM	PART	DESCRIPTION	XL45	MTH400	MTH445	MTH445S	NOTE

From 4-8165 Up to 8-9339	DATE: 01/2014	PAGE: Y2-1869-50

RADIATOR DOOR ASSY - MTH-45' SMALL

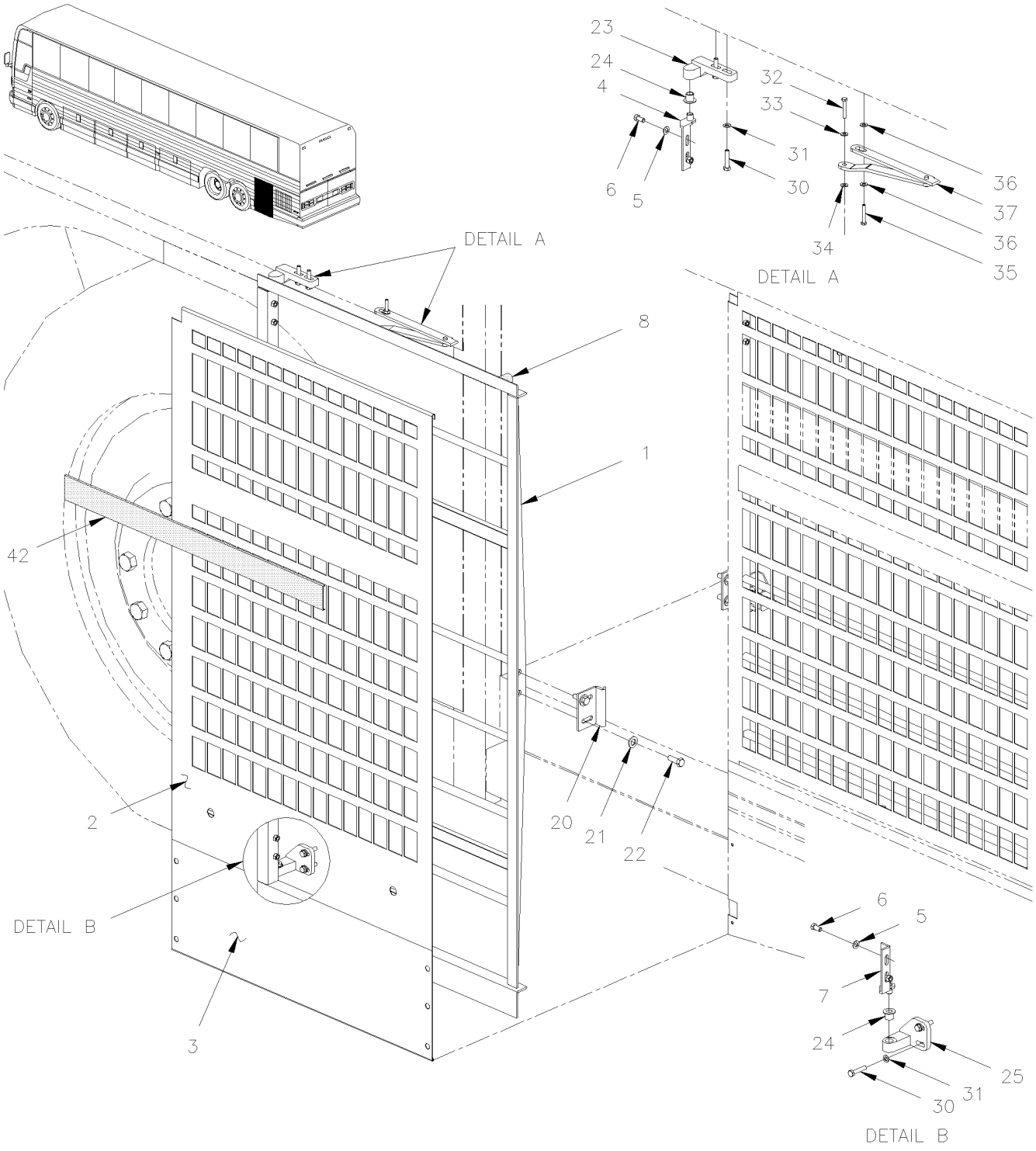

From 4-8165 Up to 8-9339	DATE: 01/2014	PAGE: Y2-1869-50

RADIATOR DOOR ASSY - MTH-45' SMALL

ITEM	PART	DESCRIPTION	XL45	MTH40	MTH45	MTH45S	NOTE
	288331	RADIATOR DOOR ASSY / W/FLUTED PANEL / SMALL			1		
1	285527	FRAME ASSY / RADIATOR DOOR / SMALL			1		
2	472997	PANEL, UPPER / W/FLUTED / S.B. / REPLACED BY: 477661			1		
2	477661	PANEL, UPPER / W/FLUTED / B.A. From 5-8469			1		
3	473508	PANEL, LOWER / S.B. Up to 5-8468 / REPLACED BY: 477660			1		
3	477660	PANEL, LOWER / B.A. From 5-8469			1		
NS	504272	RIVET CHY Q BRAZ 3/16x1/8 SS / REPLACED BY: 504745			6		
4	286102	ARM ASSY			1		
4	289150	ARM ASSY			1		
5	502570	WASHER LO SPT 6.1x11.8x1.6 SS			4		
6	502686	SCREW CAP HEX M6-1.0x30 SS EMN			4		
7	286098	ARM ASSY			1		
7	289149	ARM ASSY			1		
8	500356	WASHER LO SERR 6.1x16.0x0.9 ZG603			2		
9	502737	SCREW CAP HEX M6-1.0x25 SS EMN			2		
20	287286	CATCH PIN / RETAINER 45MMx21MM 90°			1		
NS	287452	SHIM SPACER 70MM X 25 X 14GA			AR		
21	502857	WASHER LO SERR 8.2x26.3x1.8 ZG603			2		
22	502780	SCREW CAP HEX M8-1.25x25 SS EMN			2		
23	286129	UPPER HINGE			1		
24	284607	BUSHING, NYLON / (NOT INCLUDE W/HINGE)			2		
25	286128	LOWER HINGE / REPLACED BY: 288827			1		
30	502737	SCREW CAP HEX M6-1.0x25 SS EMN			4		
31	430406	WASHER FLAT			4		
32	502568	SCREW MA PAN PH M6-1.0x20 EMN			1		
33	502573	WASHER FL 6.4x12.5x1.6 SS			1		
34	502511	NUT HEX NYRT M6-1.0 ZP			1		
35	502780	SCREW CAP HEX M8-1.25x25 SS EMN			1		
36	500270	WASHER FL .406x1.000x.063 SS			2		
37	281912	GUIDE ASSY / L.H. DOOR			1		
42	473800	FINISHING MOULDING SS / 630MM			1		
NS	683083	ADHESIVE SIKA #252 / BLACK / 600 ml SAUSAGE			AR		
NS	5060044	TAPE RUB ADH2 CC POL 1/4" X 1/4" X 50' / BLACK I1C-N-A			AR		

From 4-8165 Up to 8-9339	DATE: 01/2014	PAGE: Y2-1869-55

RADIATOR DOOR ASSY - MTH-40' & MTH-45' ENT

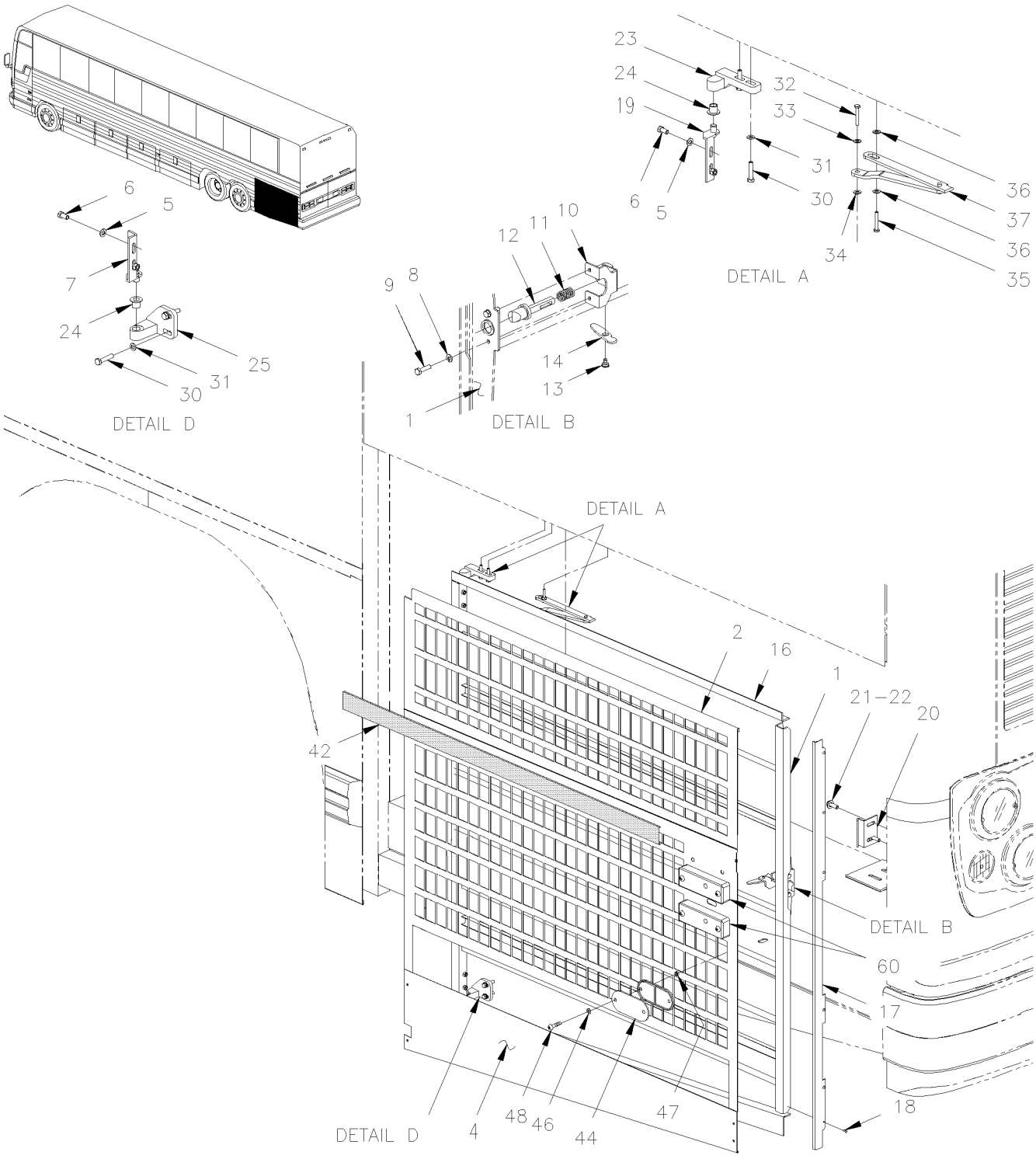

From 4-8165 Up to 8-9339	DATE: 01/2014	PAGE: Y2-1869-55

RADIATOR DOOR ASSY - MTH-40' & MTH-45' ENT

ITEM	PART	DESCRIPTION	XL45	MTH40	MTH45	MTH45S	NOTE
	288329	RADIATOR DOOR ASSY / W/FLUTED PANEL Up to 5-8813		1			
	288333	RADIATOR DOOR ASSY / W/FLUTED LOWER MOULDING Up to 5-8468				1	
1	284778	FRAME ASSY / RADIATOR DOOR		1		1	
2	473792	PANEL, UPPER / W/FLUTED / S.B. Up to 4-8358 / REPLACED BY: K473792		1			
2	477486	PANEL, UPPER / W/FLUTED / S.B. From 4-8359 Up to 5-8468 / REPLACED BY: K477486		1			
2	477663	PANEL, UPPER / W/FLUTED / B.A. From 5-8469 Up to 5-8813		1			
2	473794	PANEL, UPPER / W/FLAT UPPER MOULDING / S.B. Up to 4-8358 / REPLACED BY: K473794				1	
2	477487	PANEL, UPPER / W/FLAT UPPER MOULDING / S.B. From 4-8359 Up to 5-8468				1	
2	477662	PANEL, UPPER / W/FLAT UPPER MOULDING / B.A. From 5-8469				1	
4	474457	PANEL, LOWER / S.B. Up to 5-8468		1		1	
4	477659	PANEL, LOWER / B.A. From 5-8469		1		1	
4	504272	RIVET CHY Q BRAZ 3/16x1/8 SS / REPLACED BY: 504745		4		4	
5	502737	SCREW CAP HEX M6-1.0x25 SS EMN		4		4	
NS	430406	WASHER FLAT		4		4	
6	502686	SCREW CAP HEX M6-1.0x30 SS EMN		4		4	
7	286098	ARM ASSY		1		1	
7	289149	ARM ASSY		1		1	
8	500356	WASHER LO SERR 6.1x16.0x0.9 ZG603		6		6	
9	502737	SCREW CAP HEX M6-1.0x25 SS EMN		6		6	
10	288006	GUIDE PIN HOLDER		1		1	
11	502910	SPRING COMPRESSION / .720 O.D. 1.75 x .055		1		1	
12	284313	CATCH PIN SS / 90MM / REPLACED BY: 289585		1		1	
12	289585	CATCH PIN ACETAL / 90MM		1		1	
NS	507212	O-RING		1		1	
13	287271	RIVET SHR FL 9.95x3.6{4.8x4.8 SS		1		1	
14	286612	PIVOT		1		1	
16	504334	BUMPER RUBBER / .625 OD x .406 TH x .156 HOLE		1		1	
16	504339	RIVET POP DOME OE 1/8x3/8 SS		1		1	
16	504340	RIVET POP DOME OE 1/8x3/16 SS		7		7	
17	288527	FINISHING MOULDING 1110MM / B.A. From 5-8469		1		1	
18	504339	RIVET POP DOME OE 1/8x3/8 SS		AR		AR	
19	286102	ARM ASSY		1		1	
19	289150	ARM ASSY		1		1	
20	287286	CATCH PIN / RETAINER 45MMx21MM 90°		1		1	
NS	287452	SHIM SPACER 70MM X 25 X 14GA		AR		AR	
21	502857	WASHER LO SERR 8.2x26.3x1.8 ZG603		4		4	
22	502780	SCREW CAP HEX M8-1.25x25 SS EMN		4		4	
23	286129	UPPER HINGE		1		1	
24	284607	BUSHING, NYLON / (NOT INCLUDE W/HINGE)		2		2	
25	286128	LOWER HINGE / REPLACED BY: 288827		1		1	
30	502737	SCREW CAP HEX M6-1.0x25 SS EMN		4		4	
31	430406	WASHER FLAT		4		4	
32	502568	SCREW MA PAN PH M6-1.0x20 EMN		1		1	
33	502573	WASHER FL 6.4x12.5x1.6 SS		1		1	

From 4-8165 Up to 8-9339	DATE: 01/2014	PAGE: Y2-1869-55

RADIATOR DOOR ASSY - MTH-40' & MTH-45' ENT

ITEM	PART	DESCRIPTION	XL45	MTH40	MTH45	MTH45S	NOTE
34	502511	NUT HEX NYRT M6-1.0 ZP		1		1	
35	502780	SCREW CAP HEX M8-1.25x25 SS EMN		1		1	
36	500270	WASHER FL .406x1.000x.063 SS		2		2	
37	281912	GUIDE ASSY / L.H. DOOR		1		1	
42	473830	FINISHING MOULDING SS / 1123MM Up to 5-8813		1			
42	474389	FINISHING MOULDING PLASTIC 1123MM				1	
NS	683083	ADHESIVE SIKA #252 / BLACK / 600 ml SAUSAGE		AR		AR	
NS	5060044	TAPE RUB ADH2 CC POL 1/4" X 1/4" X 50' / BLACK I1C-N-A		AR		AR	
44	930320	REFLECTOR RED 1 3/16" x 4 7/16"		1		1	
46	500914	WASHER LO SPT .193x.334x.047 ZG603		2		2	
47	500787	NUT HEX #10-24 SS		2		2	
48	500606	SCREW MA TR PH #10-24x3/4 SS		2		2	
60	Y2-0662-00	**CLEARANCE & MARKER LIGHT**					

From 4-8165 Up to 8-9339	DATE: 01/2014	PAGE: Y2-1869-55

RADIATOR DOOR ASSY - MTH-40' & MTH-45' ENT

ITEM	PART	DESCRIPTION	XL45	MTH40	MTH45	MTH45S	NOTE

From 4-8165 Up to 8-9339	DATE: 01/2014	PAGE: Y2-1869-60

RADIATOR DOOR ASSY - MTH-45' LARGE

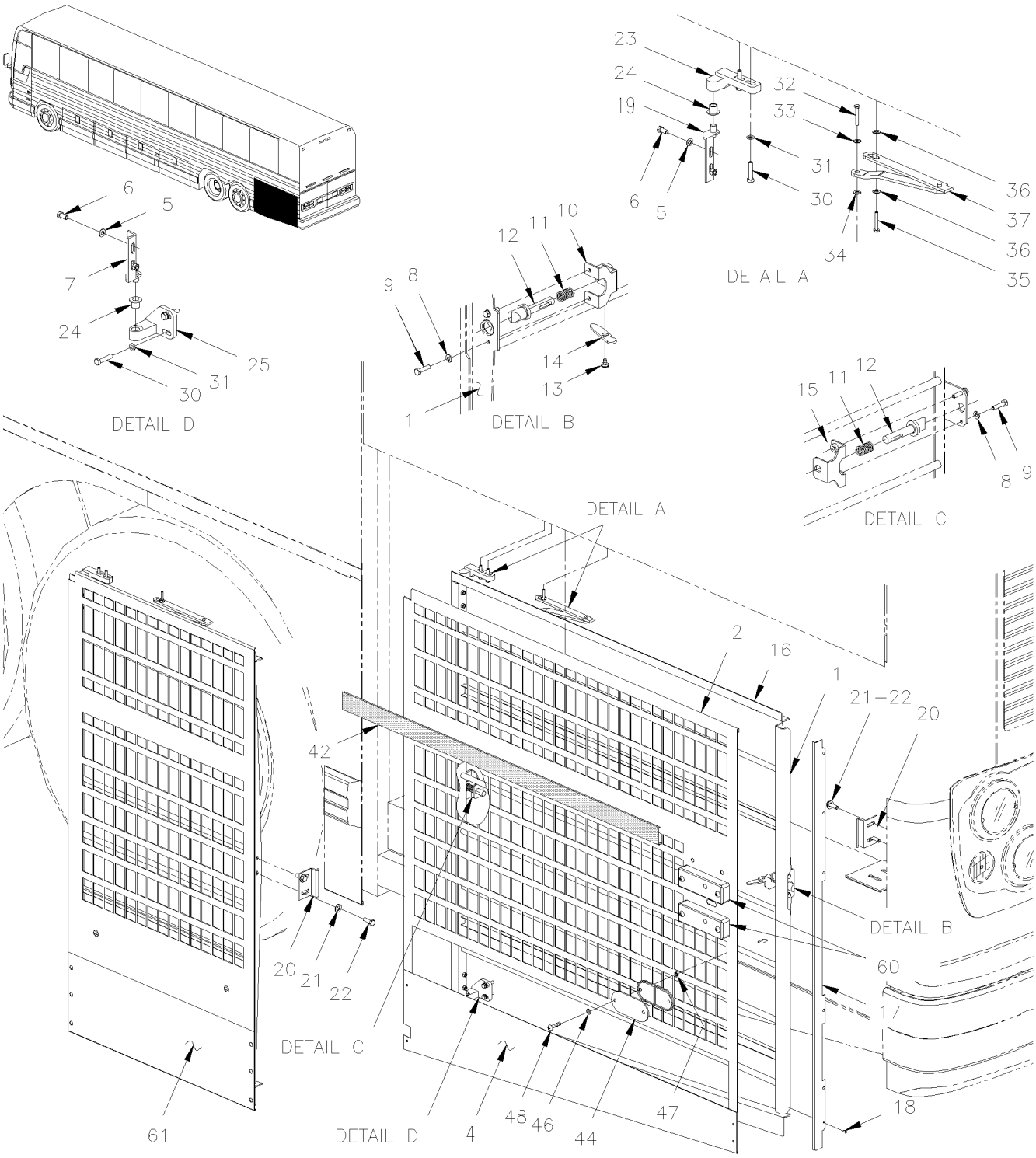

From 4-8165 Up to 8-9339	DATE: 01/2014	PAGE: Y2-1869-60

RADIATOR DOOR ASSY - MTH-45' LARGE

ITEM	PART	DESCRIPTION	XL45	MTH40	MTH45	MTH45S	NOTE
	288330	RADIATOR DOOR ASSY / W/FLUTED PANEL / LARGE			1		
1	284312	FRAME ASSY / RADIATOR DOOR / LARGE			1		
2	472638	PANEL, UPPER / W/FLUTED / S.B. Up to 4-8358 / REPLACED BY: K472638			1		
2	477483	PANEL, UPPER / W/FLUTED / S.B. Up to 5-8468 / REPLACED BY: K477483			1		
2	477658	PANEL, UPPER / W/FLUTED / B.A. From 5-8469			1		
4	474457	PANEL, LOWER / S.B.			1		
4	477659	PANEL, LOWER / B.A.			1		
NS	504272	RIVET CHY Q BRAZ 3/16x1/8 SS / REPLACED BY: 504745			4		
5	502737	SCREW CAP HEX M6-1.0x25 SS EMN			4		
NS	430406	WASHER FLAT			4		
6	502686	SCREW CAP HEX M6-1.0x30 SS EMN			4		
7	286098	ARM ASSY			1		
7	289149	ARM ASSY			1		
8	500356	WASHER LO SERR 6.1x16.0x0.9 ZG603			6		
9	502737	SCREW CAP HEX M6-1.0x25 SS EMN			6		
10	288006	GUIDE PIN HOLDER			1		
11	502910	SPRING COMPRESSION / .720 O.D. 1.75 x .055			2		
12	284313	CATCH PIN SS / 90MM / REPLACED BY: 289585			2		
12	289585	CATCH PIN ACETAL / 90MM			1		
NS	507212	O-RING			2		
13	287271	RIVET SHR FL 9.95x3.6{4.8x4.8 SS			1		
14	286612	PIVOT			1		
15	284625	GUIDE PIN HOLDER			1		
16	504334	BUMPER RUBBER / .625 OD x .406 TH x .156 HOLE			1		
16	504339	RIVET POP DOME OE 1/8x3/8 SS			1		
17	286225	FINISHING MOULDING 1110MM / S.B. Up to 5-8468			1		
17	288527	FINISHING MOULDING 1110MM / B.A. From 5-8469			1		
18	504339	RIVET POP DOME OE 1/8x3/8 SS			AR		
19	286102	ARM ASSY			1		
19	289150	ARM ASSY			1		
20	287286	CATCH PIN / RETAINER 45MMx21MM 90°			2		
NS	287452	SHIM SPACER 70MM X 25 X 14GA			AR		
21	502857	WASHER LO SERR 8.2x26.3x1.8 ZG603			4		
22	502780	SCREW CAP HEX M8-1.25x25 SS EMN			4		
23	286129	UPPER HINGE			1		
24	284607	BUSHING, NYLON / (NOT INCLUDE W/HINGE)			2		
25	286128	LOWER HINGE / REPLACED BY: 288827			1		
30	502737	SCREW CAP HEX M6-1.0x25 SS EMN			4		
31	430406	WASHER FLAT			4		
32	502568	SCREW MA PAN PH M6-1.0x20 EMN			1		
33	502573	WASHER FL 6.4x12.5x1.6 SS			1		
34	502511	NUT HEX NYRT M6-1.0 ZP			1		
35	502780	SCREW CAP HEX M8-1.25x25 SS EMN			1		
36	500270	WASHER FL .406x1.000x.063 SS			2		

From 4-8165 Up to 8-9339	DATE: 01/2014	PAGE: Y2-1869-60

RADIATOR DOOR ASSY - MTH-45' LARGE

ITEM	PART	DESCRIPTION	XL45	MTH40	MTH45	MTH45S	NOTE
37	281912	GUIDE ASSY / L.H. DOOR			1		
42	473830	FINISHING MOULDING SS / 1123MM			1		
NS	683083	ADHESIVE SIKA #252 / BLACK / 600 ml SAUSAGE			AR		
NS	5060044	TAPE RUB ADH2 CC POL 1/4" X 1/4" X 50' / BLACK I1C-N-A			AR		
44	930320	REFLECTOR RED 1 3/16" x 4 7/16"			1		
46	500914	WASHER LO SPT .193x.334x.047 ZG603			2		
47	500787	NUT HEX #10-24 SS			2		
48	500606	SCREW MA TR PH #10-24x3/4 SS			2		
60	Y2-0662-00	**CLEARANCE & MARKER LIGHT**					
61	Y2-1869-50	**RADIATOR DOOR ASSY - MTH-45' SMALL**					

From 4-8165 Up to 8-9339	DATE: 01/2014	PAGE: Y2-1869-60

RADIATOR DOOR ASSY - MTH-45' LARGE

ITEM	PART	DESCRIPTION	XL45	MTH40	MTH45	MTH45S	NOTE

From Y-7046 Up to 3-8164	DATE: 01/2014	PAGE: Y2-1870-00

ENGINE DOOR ASSY L.H.

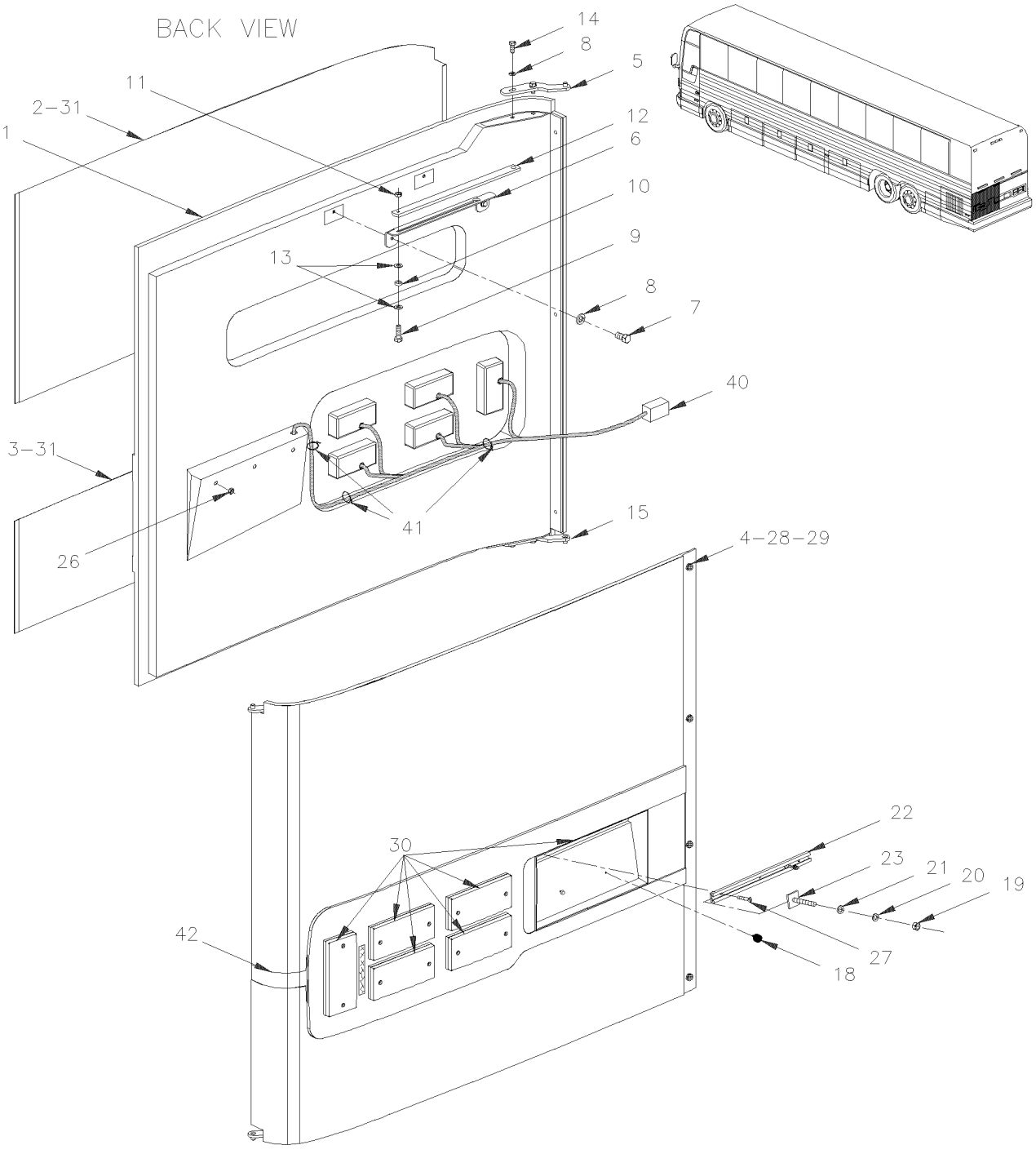

From Y-7046 Up to 3-8164	DATE: 01/2014	PAGE: Y2-1870-00

ENGINE DOOR ASSY L.H.

ITEM	PART	DESCRIPTION	XL45	MTH40	MTH45	MTH45S	NOTE
	286244P	ENGINE DOOR LH ASSY	1				
	287932P	ENGINE DOOR LH ASSY	AR				A
	286062P	ENGINE DOOR LH ASSY	AR				B
	288340	ENGINE DOOR LH ASSY / W"LED"	1				L
	286062P	ENGINE DOOR LH ASSY		1	1		
	286062P	ENGINE DOOR LH ASSY Up to 1-7435				1	
	287932P	ENGINE DOOR LH ASSY From 1-7436				1	C
1	285897	. ENGINE DOOR LH MOULDED		1	1	1	
1	287236	. ENGINE DOOR LH MOULDED	1				
1	287365	. ENGINE DOOR LH MOULDED / W/"LED"	1				L
2	285935	. UPPER PANEL	AR				B
2	285935	. UPPER PANEL		1	1		
2	285935	. UPPER PANEL Up to 1-7435				1	
3	285934	. LOWER PANEL	AR				A,B
3	285934	. LOWER PANEL		1	1	1	
4	504334	. BUMPER RUBBER / .625 OD x .406 TH x .156 HOLE	4	4	4	4	
5	285913	. ARM ASSY Up to 3-8106 / REPLACED BY: 287430	1	1	1	1	
5	287430	. ARM ASSY From 3-8107 / REPLACED BY: 289620	1	1	1	1	
6	283776	. GUIDE RETAINING ARM	1	1	1	1	
7	502790	. SCREW CAP HEX M8-1.25x20 G8.8 ZP	2	2	2	2	
8	502584	. WASHER LO SERR 8.2x26.3x1.8 ZP	6	6	6	6	
9	502625	. SCREW SHR HEXS 5/16x3/8 {1/4-20	1	1	1	1	
10	502768	. WASHER FL .312x.625x.125 NEO	1	1	1	1	
11	502819	. NUT HEX JAM 1/4-20 ZP	1	1	1	1	
12	283772	. ARM RETAINING	1	1	1	1	
13	500441	. WASHER FL .312x.734x.065 ZP	2	2	2	2	
14	502589	. SCREW CAP HEX M8-1.25x25 G8.8 ZP	4	4	4	4	
15	285907	. ARM ASSY Up to 3-8106 / REPLACED BY: 287429	1	1	1	1	
15	287429	. ARM ASSY From 3-8107 / REPLACED BY: 289617	1	1	1	1	
18	504498	. BUMPER PLUG / .406 ODx.218THx.250HOLEx.125	2	2	2	2	
19	500787	. NUT HEX #10-24 SS	2	2	2	2	
20	502570	. WASHER LO SPT 6.1x11.8x1.6 SS	2	2	2	2	
21	502637	. WASHER FL .200x.437x.037 SS	2	2	2	2	
22	286053	. TRACK / LICENCE PLATE HOLDER 326MM	1	1	1	1	
23	504286	. T SCREW 10-24 X 3/4" / SS / PLATE HOLDER	2	2	2	2	
26	500286	. NUT WELL #6-32x.437	3	3	3	3	
27	502666	. SCREW MA FL PH #6-32x3/4 SS EMN	3	3	3	3	
28	504339	. RIVET POP DOME OE 1/8x3/8 SS	4	4	4	4	
		A) BUS WITH "OPTION" FLUTED LOWER PANELLING					
		B) BUS WITH "OPTION" UPPER & LOWER SS REAR PANELLING					
		C) MTH ENT WITH UPPER FLAT SIDE PANELLING					
		L) BUS EQUIPPED WITH "LED" OBLONG LAMP					

From Y-7046 Up to 3-8164	DATE: 01/2014	PAGE: Y2-1870-00

ENGINE DOOR ASSY L.H.

ITEM	PART	DESCRIPTION	XL45	MTH40	MTH45	MTH45S	NOTE
29	5001008	. WASHER FL .218x.437x.062 RUB BK	4	4	4	4	
30	Y2-0664-00	**. REAR EXTERIOR LIGHTS & PLATE HOLDER**					
31	683097	. CLEANER SIKA #205 / CLEAR / 1000ml		AR	AR	AR	
40	064809	. CABLE / ENGINE DOOR REAR LAMP W/BULB	1	1	1	1	
NS	065712	. CABLE / ENGINE DOOR REAR LAMP W/LEDS	1	1	1	1	
41	504637	. CABLE TIE / 3/16" x 13"	5	5	5	5	
41	065655	CABLE / ENGINE DOOR REAR LAMP W/LEDS From 2-7889	1				L
42	286664	. FINISHING MOULDING SS		1	1	1	
42	286655	. FINISHING MOULDING L.H. / PLASTIC	1				
42	287888	. FINISHING MOULDING L.H. / PLASTIC / (LOWER 3MM THINER THAN UPPER	1			1	B
42	285899	FINISHING MOULDING L.H. / PLASTIC / (LOWER 3MM THINER THAN UPPER	1			1	D
NS	506769	. TAPE RUB ADH2 CC POL 1/8" x 1/4" x 60' / BLACK H1CC-N-#14	AR	AR	AR	AR	
50	506790	. TAPE RUB ADH2 CC POL 1/16" x 1/2" x 200' / BLACK I1C-N-A	AR	AR	AR	AR	
50	683084	. SEALANT SIKA #221 / GREY / 600 ml SAUSAGE	AR	AR	AR	AR	
60	Y2-1870-10	**ENGINE DOOR ASSY - INSTALLATION**					
		B) BUS WITH "OPTION" UPPER & LOWER SS REAR					
		PANELLING					
		D) BUS & MTH ENT WITH LOWER SS PANEL					
		L) BUS EQUIPPED WITH "LED" OBLONG LAMP					

From Y-7046 Up to 3-8164	DATE: 01/2014	PAGE: Y2-1870-00

ENGINE DOOR ASSY L.H.

ITEM	PART	DESCRIPTION	XL45	MTH40	MTH45	MTH45S	NOTE

From 4-8165 Up to 8-9339	DATE: 01/2014	PAGE: Y2-1870-01

ENGINE DOOR ASSY L.H.

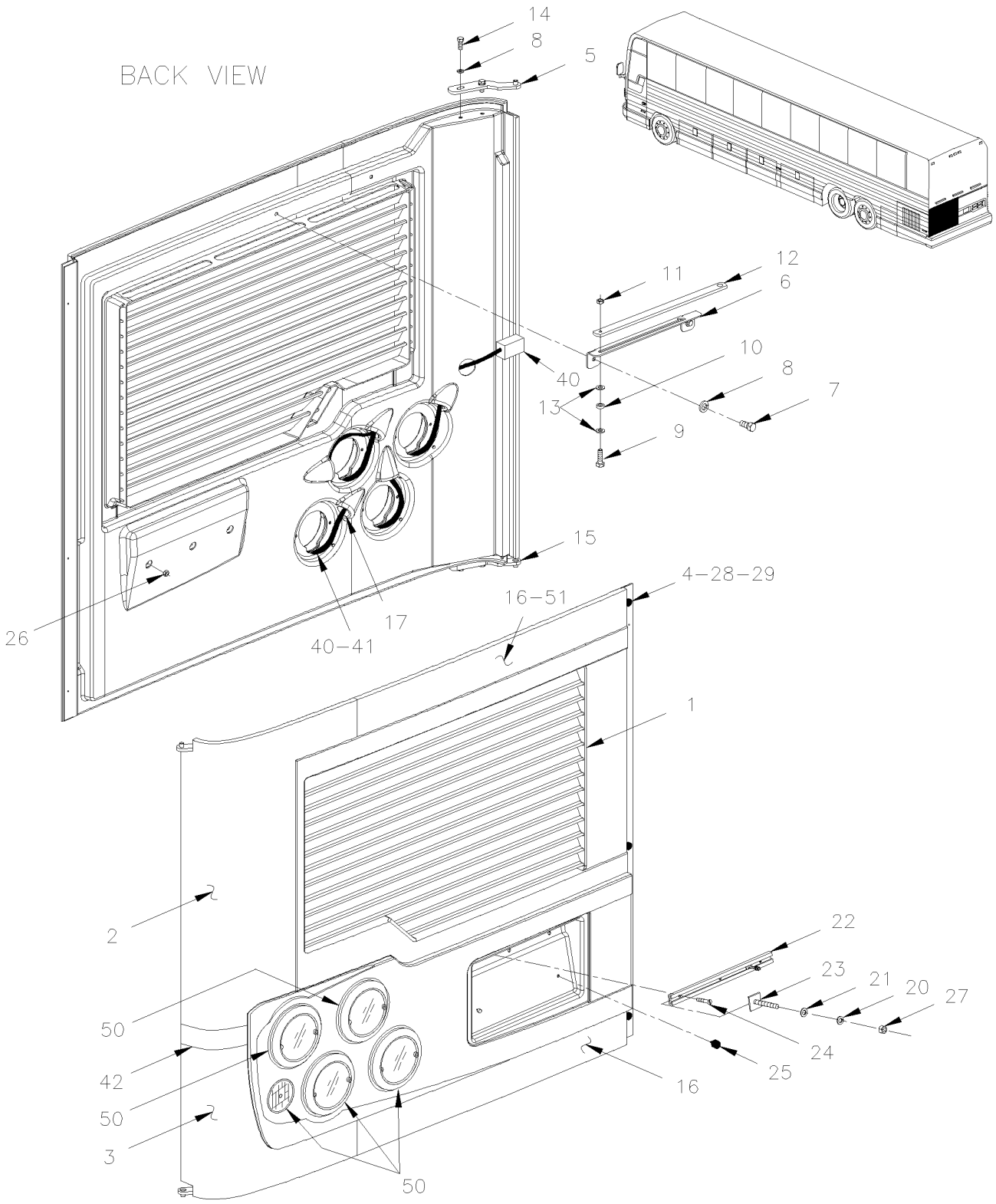

From 4-8165 Up to 8-9339	DATE: 01/2014	PAGE: Y2-1870-01

ENGINE DOOR ASSY L.H.

ITEM	PART	DESCRIPTION	XL45	MTH40	MTH45	MTH45S	NOTE
	288341	ENGINE DOOR LH ASSY Up to 6-8906	1				D
	288326	ENGINE DOOR LH ASSY Up to 6-8906	AR				A
	288325	ENGINE DOOR LH ASSY Up to 6-8906	AR				B,D
	288325	ENGINE DOOR LH ASSY		1	1		D
	288326	ENGINE DOOR LH ASSY				1	
1	285774	. ENGINE DOOR LH MOULDED VENTED Up to 5-8471 / REPLACED BY: 289306		1	1	1	
1	289306	. ENGINE DOOR LH MOULDED VENTED From 5-8472		1	1	1	
1	289431	. ENGINE DOOR LH MOULDED VENTED SERVICE		1	1	1	
1	286517	. ENGINE DOOR LH MOULDED VENTED Up to 5-8471 / REPLACED BY: 289308	1			1	
1	289308	. ENGINE DOOR LH MOULDED VENTED From 5-8472	1			1	
1	289433	. ENGINE DOOR LH MOULDED VENTED SERVICE	1			1	
2	285375	. UPPER PANEL / S.B. Up to 6-8906	AR				B
2	285375	. UPPER PANEL / S.B. Up to 5-8468		1	1		
2	288528	. UPPER PANEL / B.A. From 5-8469		1	1		
3	286046	. LOWER PANEL / S.B. Up to 6-8906	AR				A
3	286046	. LOWER PANEL / S.B. Up to 5-8468		1	1	1	
3	288529	. LOWER PANEL / B.A. From 5-8469		1	1	1	
4	509828	. BUMPER RUBBER / .750 OD x .312 TH x .125 HOLE	6	6	6	6	
5	287430	. ARM ASSY / REPLACED BY: 289620	1	1	1	1	
6	283776	. GUIDE RETAINING ARM	1	1	1	1	
7	955295	. SCREW CAP HEX M8-1.25x20 G8.8 ZG603	2	2	2	2	
8	502857	. WASHER LO SERR 8.2x26.3x1.8 ZG603	6	6	6	6	
9	5001560	. SCREW SHR HEXS 5/16x3/8 {1/4-20 SS	1	1	1	1	
10	502768	. WASHER FL .312x.625x.125 NEO	1	1	1	1	
11	500384	. NUT HEX JAM 1/4-20 DP	1	1	1	1	
12	283772	. ARM RETAINING	1	1	1	1	
13	502638	. WASHER FL .312x.734x.065 ZG603	2	2	2	2	
14	955297	. SCREW CAP HEX M8-1.25x25 G8.8 ZG603	4	4	4	4	
15	287429	. ARM ASSY / REPLACED BY: 289617	1	1	1	1	
16	285378	. PANEL UPPER & LOWER DOOR / S.B. Up to 5-8468		2	2		
16	288530	. PANEL UPPER & LOWER DOOR / B.A. From 5-8469		2	2		
16	285378	. PANEL UPPER & LOWER DOOR / S.B. Up to 5-8468				1	A
16	288530	. PANEL UPPER & LOWER DOOR / B.A. From 5-8469				1	
16	285378	. PANEL UPPER & LOWER DOOR / S.B. Up to 6-8906	1				A,B
17	504530	. GROMMET / .750x1.250x.125x.312x1.625	5	5	5	5	
20	502570	. WASHER LO SPT 6.1x11.8x1.6 SS	2	2	2	2	
21	502637	. WASHER FL .200x.437x.037 SS	2	2	2	2	
22	286053	. TRACK / LICENCE PLATE HOLDER 326MM	1	1	1	1	
23	504286	. T SCREW 10-24 X 3/4" / SS / PLATE HOLDER	2	2	2	2	
		A) BUS WITH "OPTION" FLUTED LOWER PANELLING					
		B) BUS WITH "OPTION" UPPER & LOWER SS REAR PANELLING					
		D) THIS DOOR ASSEMBLY DO NOT INCLUDE ITEM #40					

From 4-8165 Up to 8-9339	DATE: 01/2014	PAGE: Y2-1870-01

ENGINE DOOR ASSY L.H.

ITEM	PART	DESCRIPTION	XL45	MTH40	MTH45	MTH45S	NOTE
24	502666	. SCREW MA FL PH #6-32x3/4 SS EMN	3	3	3	3	
25	504498	. BUMPER PLUG / .406 ODx.218THx.250HOLEx.125	2	2	2	2	
26	500286	. NUT WELL #6-32x.437	3	3	3	3	
27	500787	. NUT HEX #10-24 SS	2	2	2	2	
28	509827	. SCREW MA RND PH M4-0.7x20 SS	3	3	3	3	
29	502557	. NUT HEX NYRT M4-0.7 SS	3	3	3	3	
31	683097	. CLEANER SIKA #205 / CLEAR / 1000ml		AR	AR	AR	
40	065712	. CABLE / ENGINE DOOR REAR LAMP W/LEDS Up to 7-9095	1	1	1	1	
40	066491	. CABLE / ENGINE DOOR REAR LAMP W/LEDS From 7-9096			1	1	
41	504637	. CABLE TIE / 3/16" x 13"	5	5	5	5	
42	285377	. FINISHING MOULDING SS / S.B. Up to 6-8906	AR				B
42	285377	. FINISHING MOULDING SS / S.B. Up to 5-8468		1	1	1	B
42	288531	. FINISHING MOULDING SS / B.A. From 5-8469		1	1	1	
42	285365	. FINISHING MOULDING / PLASTIC Up to 6-8906	1				
42	285899	. FINISHING MOULDING L.H. / PLASTIC / (LOWER 3MM THINER THAN UPPER Up to 6-8906	1				B
NS	506769	. TAPE RUB ADH2 CC POL 1/8" x 1/4" x 60' / BLACK H1CC-N-#14	AR	AR	AR	AR	
50	Y2-0664-01	**. REAR EXTERIOR LIGHTS & PLATE HOLDER**					
51	506790	. TAPE RUB ADH2 CC POL 1/16" x 1/2" x 200' / BLACK I1C-N-A	AR	AR	AR	AR	
51	683084	. SEALANT SIKA #221 / GREY / 600 ml SAUSAGE	AR	AR	AR	AR	
51	683083	. ADHESIVE SIKA #252 / BLACK / 600 ml SAUSAGE	AR	AR	AR	AR	
60	Y2-1870-10	**ENGINE DOOR ASSY - INSTALLATION**					
		B) BUS WITH "OPTION" UPPER & LOWER SS REAR					
		PANELLING					

From 4-8165 Up to 8-9339	DATE: 01/2014	PAGE: Y2-1870-01

ENGINE DOOR ASSY L.H.

ITEM	PART	DESCRIPTION	XL45	MTH40	MTH45	MTH45S	NOTE

From Y-7046 Up to 3-8164	DATE: 01/2014	PAGE: Y2-1870-05

ENGINE DOOR ASSY R.H.

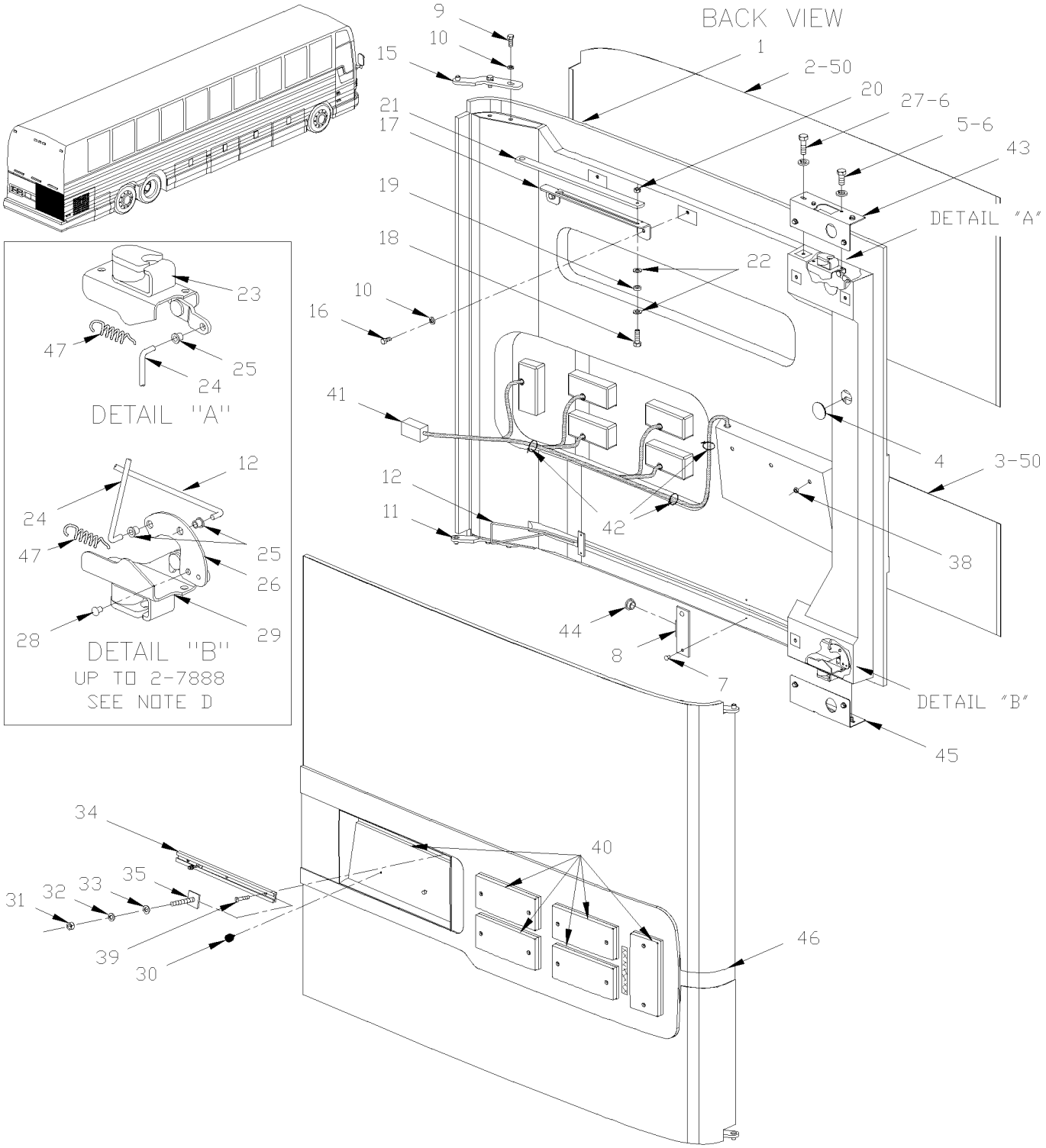

From Y-7046 Up to 3-8164	DATE: 01/2014	PAGE: Y2-1870-05

ENGINE DOOR ASSY R.H.

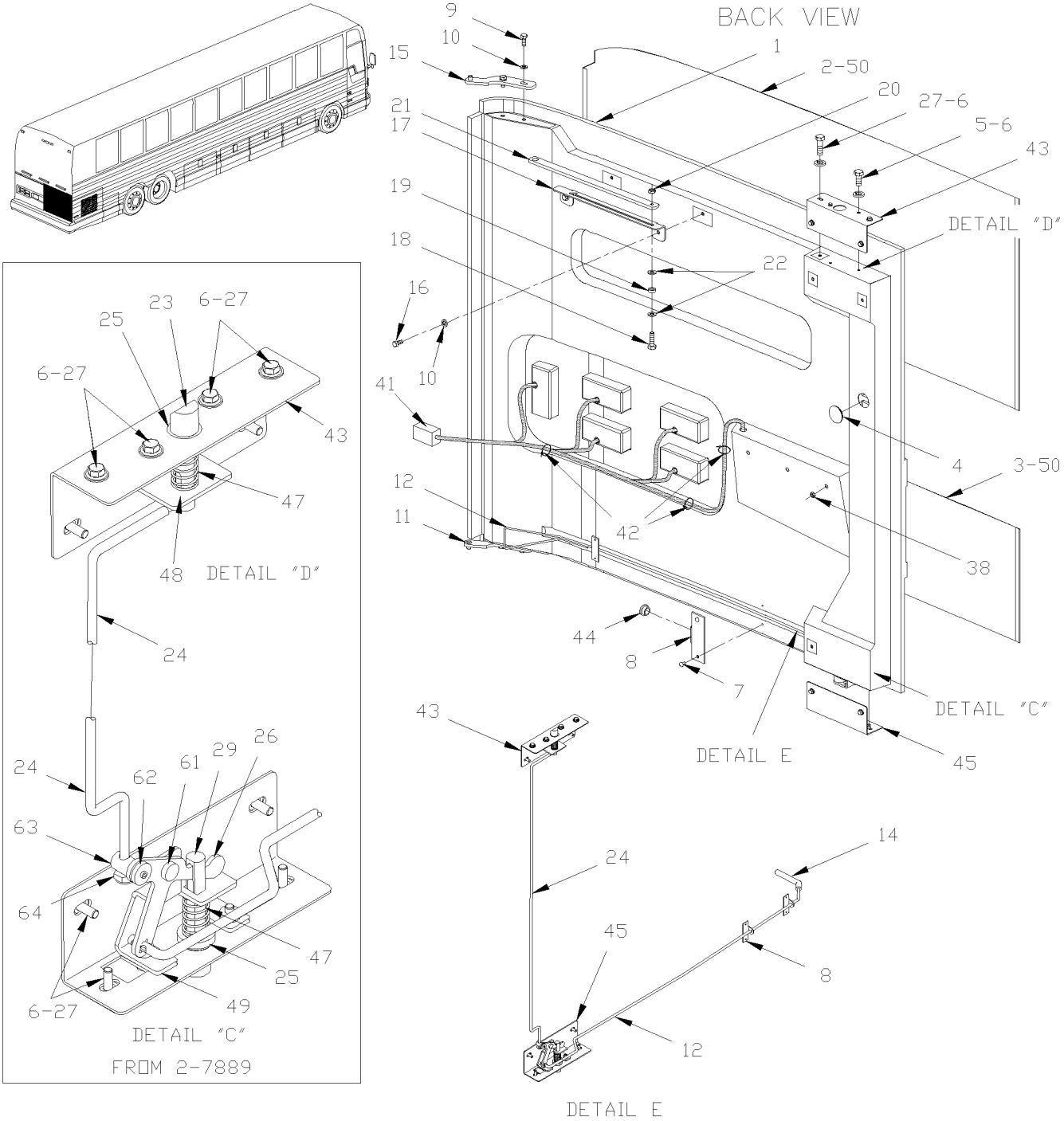

From Y-7046 Up to 3-8164	DATE: 01/2014	PAGE: Y2-1870-05

ENGINE DOOR ASSY R.H.

ITEM	PART	DESCRIPTION	XL45	MTH40	MTH45	MTH45S	NOTE
	286245P	ENGINE DOOR RH ASSY Up to 2-7888	1				
	287931P	ENGINE DOOR RH ASSY Up to 2-7888	AR				A
	288344	ENGINE DOOR RH ASSY From 2-7889	AR				A
	286059P	ENGINE DOOR RH ASSY Up to 2-7888	AR				B
	288816	ENGINE DOOR RH ASSY From 2-7889	AR				B
	286059P	ENGINE DOOR RH ASSY Up to 2-7888		1	1		
	288816	ENGINE DOOR RH ASSY From 2-7889		1	1		
	286059P	ENGINE DOOR RH ASSY Up to 1-7435				1	
	287931P	ENGINE DOOR RH ASSY From 1-7436 Up to 2-7888				1	C
	288344	ENGINE DOOR RH ASSY From 2-7889				1	C
	288342	ENGINE DOOR RH ASSY / W"LED"	1				L
1	287235	. ENGINE DOOR RH MOULDED	1				
1	287364	. ENGINE DOOR RH MOULDED / W"LED"	1				L
1	285896	. ENGINE DOOR RH MOULDED		1	1	1	
2	285886	. UPPER PANEL	AR				B
2	285886	. UPPER PANEL		1	1		
2	285886	. UPPER PANEL Up to 1-7435				1	
3	285885	. LOWER PANEL	AR				A,B
3	285885	. LOWER PANEL		1	1	1	
4	507295	. HOLE PLUG BUTTON / 1.375 O.D. BLACK	3	3	3	3	
5	502563	. SCREW CAP HEX M6-1.0x12 G8.8 ZP Up to 2-7888	4	4	4	4	D
6	502582	. WASHER LO SERR 6.1x16.2x0.9 ZP	12	12	12	12	
7	504339	. RIVET POP DOME OE 1/8x3/8 SS	4	4	4	4	
8	285882	. FIXTURE Up to 2-7888	2	2	2	2	D
8	280143	. FIXTURE / W/HOLE FOR ROD From 2-7889	2	2	2	2	E
9	502589	. SCREW CAP HEX M8-1.25x25 G8.8 ZP	4	4	4	4	
10	502584	. WASHER LO SERR 8.2x26.3x1.8 ZP	6	6	6	6	
11	285913	. ARM ASSY Up to 3-8106 / REPLACED BY: 287430	1	1	1	1	
11	287430	. ARM ASSY From 3-8107 / REPLACED BY: 289620	1	1	1	1	
12	285922	. CONTROL ROD Up to 2-7888	1	1	1	1	D
12	287314	. CONTROL ROD From 2-7889	1	1	1	1	E
14	506018	. HANDLE PLASTIC / 1/4" I.D. X 4" From 2-7889	1	1	1	1	E
15	285907	. ARM ASSY Up to 3-8106 / REPLACED BY: 287429	1	1	1	1	
15	287429	. ARM ASSY From 3-8107 / REPLACED BY: 289617	1	1	1	1	
		A) BUS WITH "OPTION" FLUTED LOWER PANELLING					
		B) BUS WITH "OPTION" UPPER & LOWER SS REAR PANELLING					
		C) MTH ENT WITH UPPER FLAT SIDE PANELLING					
		D) FOR PRODUCT IMPROVEMENT DOOR LOCK MECHANISM ASK FOR KIT #287225 Up to 2-7888					
		E) THOSE PART ARE INCLUDED IN KIT #287225					
		L) BUS EQUIPPED WITH "LED" OBLONG LAMP					

From Y-7046 Up to 3-8164	DATE: 01/2014	PAGE: Y2-1870-05

ENGINE DOOR ASSY R.H.

ITEM	PART	DESCRIPTION	XL45	MTH40	MTH45	MTH45S	NOTE
16	502790	. SCREW CAP HEX M8-1.25x20 G8.8 ZP	2	2	2	2	
17	283771	. GUIDE RETAINING ARM	1	1	1	1	
18	502625	. SCREW SHR HEXS 5/16x3/8 {1/4-20	1	1	1	1	
19	502768	. WASHER FL .312x.625x.125 NEO	1	1	1	1	
20	502819	. NUT HEX JAM 1/4-20 ZP	1	1	1	1	
21	283772	. ARM RETAINING	1	1	1	1	
22	500441	. WASHER FL .312x.734x.065 ZP	2	2	2	2	
23	780587	. LOCK SPAGNOLET L.H. / W/G-FITTING Up to 2-7888 / REPLACED BY: 780652	1	1	1	1	D
23	287381	. CATCH PIN SS / 80.5MM From 2-7889	1	1	1	1	E
24	285923	. ROD / JUNCTION Up to 2-7888	1	1	1	1	D
24	287276	. ROD / JUNCTION From 2-7889	1	1	1	1	E
25	504456	. CLIP / RETAINER ROD / WHITE OR RED Up to 2-7888	3	3	3	3	D
25	507212	. O-RING From 2-7889	2	2	2	2	E
26	285941	. PIVOT Up to 2-7755	1	1	1	1	D
26	288022	. PIVOT From 2-7756 Up to 2-7888	1	1	1	1	D
26	287277	. PIVOT From 2-7889	1	1	1	1	E
27	502531	. SCREW CAP HEX M6-1.0x16 G8.8 ZP	8	8	8	8	
28	504379	. RIVET POP DOME OE 3/16x1/4 SS	1	1	1	1	
29	780588	. LOCK SPAGNOLET R.H. / W/G-FITTING Up to 2-7755 / REPLACED BY: 780653	1	1	1	1	D
. NS	780340	. . CLIP, RETAINER ROD Up to 2-7755	1	1	1	1	
. NS	507607	. . GREASE FITTING / Up to 2-7755	1	1	1	1	
29	780653	. LOCK SPAGNOLET R.H. / W/G-FITTING From 2-7756 Up to 2-7888	1	1	1	1	D
. NS	780340	. . CLIP, RETAINER ROD From 2-7756 Up to 2-7888	1	1	1	1	
. NS	507607	. . GREASE FITTING / From 2-7756 Up to 2-7888	1	1	1	1	
29	287391	. CATCH PIN SS / 90.5MM From 2-7889 / REPLACED BY: 289636	1	1	1	1	E
30	504498	. BUMPER PLUG / .406 ODx.218THx.250HOLEx.125	2	2	2	2	
31	500787	. NUT HEX #10-24 SS	2	2	2	2	
32	502570	. WASHER LO SPT 6.1x11.8x1.6 SS	2	2	2	2	
33	502637	. WASHER FL .200x.437x.037 SS	2	2	2	2	
34	286053	. TRACK / LICENCE PLATE HOLDER 326MM	1	1	1	1	
35	504286	. T SCREW 10-24 X 3/4" / SS / PLATE HOLDER	2	2	2	2	
38	500286	. NUT WELL #6-32x.437	3	3	3	3	
39	502666	. SCREW MA FL PH #6-32x3/4 SS EMN	3	3	3	3	
40	Y2-0664-00	**REAR EXTERIOR LIGHTS & PLATE HOLDER**					
		D) FOR PRODUCT IMPROVEMENT DOOR LOCK MECHANISM					
		ASK FOR KIT #287225 Up to 2-7888					
		E) THOSE PART ARE INCLUDED IN KIT #287225					

From Y-7046 Up to 3-8164	DATE: 01/2014	PAGE: Y2-1870-05

ENGINE DOOR ASSY R.H.

ITEM	PART	DESCRIPTION	XL45	MTH40	MTH45	MTH45S	NOTE
41	064809	. CABLE / ENGINE DOOR REAR LAMP W/BULB	1	1	1	1	
41	065655	. CABLE / ENGINE DOOR REAR LAMP W/LEDS From 2-7889	1				L
42	504637	. CABLE TIE / 3/16" x 13"	5	5	5	5	
43	285764	. SUPPORT LOCK / UPPER Up to 2-7888	1	1	1	1	D
43	287270	. SUPPORT LOCK / UPPER From 2-7889	1	1	1	1	E
44	504083	. SNAP BUSHING / .250x.468.406 Up to 2-7888	2	2	2	2	D
45	285914	. SUPPORT LOCK / LOWER Up to 2-7888	1	1	1	1	D
45	287275	. SUPPORT LOCK / LOWER From 2-7889	1	1	1	1	E
46	286664	. FINISHING MOULDING SS		1	1	1	
46	286656	. FINISHING MOULDING R.H. / PLASTIC	1				
46	287887	. FINISHING MOULDING R.H. / PLASTIC / (LOWER 3MM THINER THAN UPPER	1			1	F
47	284914	. SPRING EXTENSION / .305 O.D. x 1.562 x .051 Up to 2-7888	2	2	2	2	D
47	502910	. SPRING COMPRESSION / .720 O.D. 1.75 x .055 From 2-7889	2	2	2	2	E
48	287382	. GUIDE PIN HOLDER UPPER From 2-7889	1	1	1	1	E
49	287291	. GUIDE PIN HOLDER LOWER From 2-7889	1	1	1	1	E
50	683097	. CLEANER SIKA #205 / CLEAR / 1000ml	AR	AR	AR	AR	
50	683084	. SEALANT SIKA #221 / GREY / 600 ml SAUSAGE	AR	AR	AR	AR	
50	506769	. TAPE RUB ADH2 CC POL 1/8" x 1/4" x 60' / BLACK H1CC-N-#14	AR	AR	AR	AR	
50	682176	. SEALANT SIKA #221 / BLACK / 310ml CARTRIDGE	AR	AR	AR	AR	
60	Y2-1870-10	**ENGINE DOOR ASSY - INSTALLATION**					
61	287271	. RIVET SHR FL 9.95x3.6{4.8x4.8 SS	1	1	1	1	E
62	280140	. RETAINING WASHER	1	1	1	1	E
63	280142	. ROD HOLDER	1	1	1	1	E
64	5001251	. NUT HEX NYRT 1/4-20 SS	1	1	1	1	E
NS	287225	KIT, R.H. ENGINE DOOR LOCK IMPROVEMENT Up to 2-7888	1	1	1	1	
. NS	WB02-01	. SEE WARRANTY BULLETIN Up to 2-7888	1	1	1	1	
		D) FOR PRODUCT IMPROVEMENT DOOR LOCK MECHANISM					
		ASK FOR KIT #287225 Up to 2-7888					
		E) THOSE PART ARE INCLUDED IN KIT #287225					
		F) BUS & MTH ENT WITH LOWER SS PANEL					
		L) BUS EQUIPPED WITH "LED" OBLONG LAMP					

From Y-7046 Up to 3-8164	DATE: 01/2014	PAGE: Y2-1870-05

ENGINE DOOR ASSY R.H.

ITEM	PART	DESCRIPTION	XL45	MTH40	MTH45	MTH45S	NOTE

From 4-8165 Up to 8-9339	DATE: 01/2014	PAGE: Y2-1870-06
ENGINE DOOR ASSY R.H.		

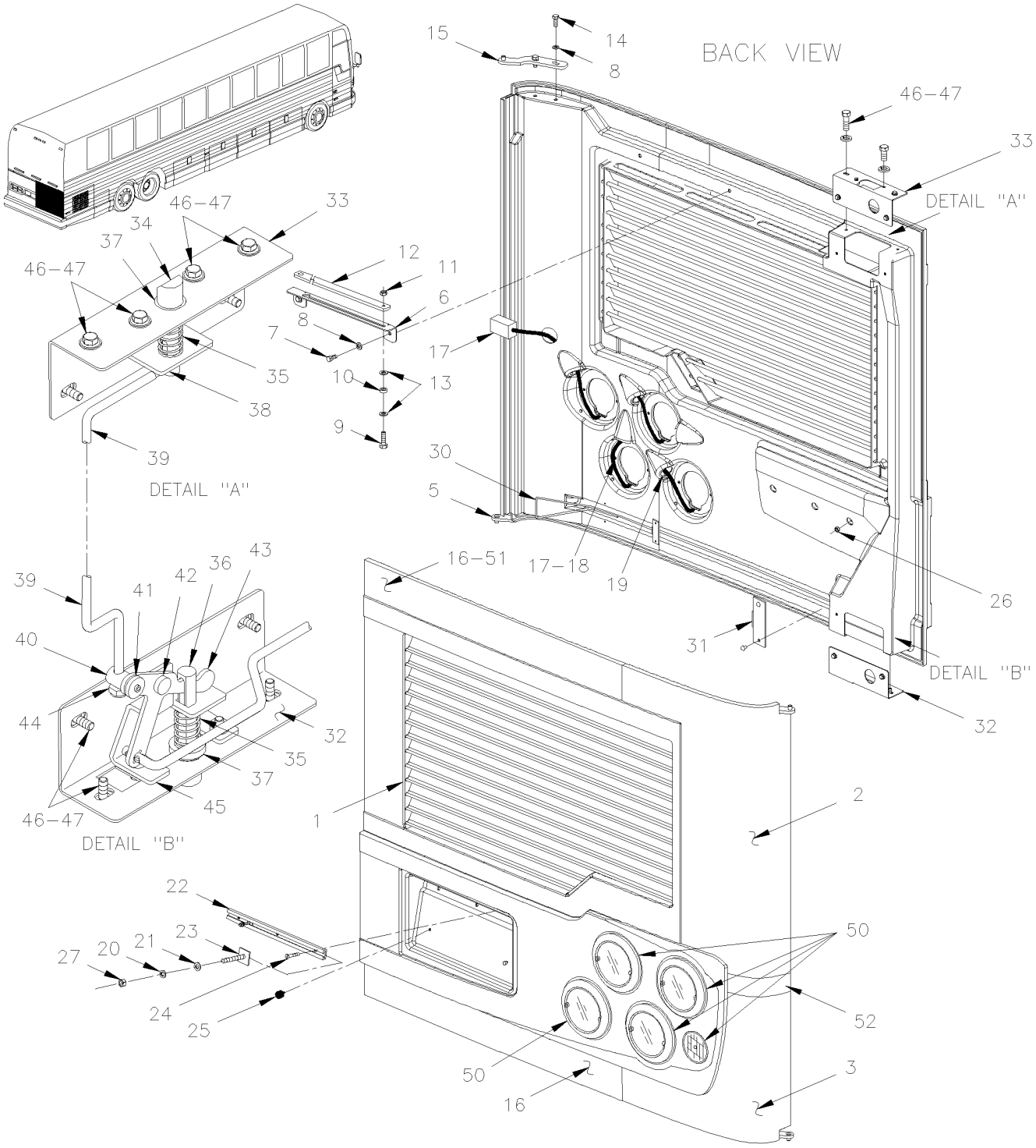

From 4-8165 Up to 8-9339	DATE: 01/2014	PAGE: Y2-1870-06

ENGINE DOOR ASSY R.H.

ITEM	PART	DESCRIPTION	XL45	MTH40	MTH45	MTH45S	NOTE
	288343	ENGINE DOOR RH ASSY Up to 6-8906	1				D
	288328	ENGINE DOOR RH ASSY Up to 6-8906	AR				A
	288327	ENGINE DOOR RH ASSY Up to 6-8906	AR				B,D
	288327	ENGINE DOOR RH ASSY		1	1		D
	288328	ENGINE DOOR RH ASSY				1	
1	286518	. ENGINE DOOR RH MOULDED VENTED Up to 5-8471 / REPLACED BY: 289307	1			1	
1	289307	. ENGINE DOOR RH MOULDED VENTED From 5-8472	1			1	
1	289432	. ENGINE DOOR RH MOULDED VENTED SERVICE	1			1	
1	285541	. ENGINE DOOR RH MOULDED VENTED Up to 5-8471 / REPLACED BY: 289305		1	1		
1	289305	. ENGINE DOOR RH MOULDED VENTED From 5-8472		1	1		
1	289430	. ENGINE DOOR RH MOULDED VENTED SERVICE		1	1		
2	285376	. UPPER PANEL / S.B. Up to 6-8906	AR				B
2	285376	. UPPER PANEL / S.B. Up to 5-8468		1	1		
2	288532	. UPPER PANEL / B.A. From 5-8469		1	1		
3	286047	. LOWER PANEL / S.B. Up to 6-8906	AR				A,B
3	286047	. LOWER PANEL / S.B. Up to 5-8468		1	1	1	
3	288533	. LOWER PANEL / B.A. From 5-8469		1	1	1	
5	287430	. ARM ASSY / REPLACED BY: 289620	1	1	1	1	
6	283771	. GUIDE RETAINING ARM	1	1	1	1	
7	955295	. SCREW CAP HEX M8-1.25x20 G8.8 ZG603	2	2	2	2	
8	502857	. WASHER LO SERR 8.2x26.3x1.8 ZG603	6	6	6	6	
9	5001560	. SCREW SHR HEXS 5/16x3/8 {1/4-20 SS	1	1	1	1	
10	502768	. WASHER FL .312x.625x.125 NEO	1	1	1	1	
11	500384	. NUT HEX JAM 1/4-20 DP	1	1	1	1	
12	283772	. ARM RETAINING	1	1	1	1	
13	502638	. WASHER FL .312x.734x.065 ZG603	2	2	2	2	
14	955297	. SCREW CAP HEX M8-1.25x25 G8.8 ZG603	4	4	4	4	
15	287429	. ARM ASSY / REPLACED BY: 289617	1	1	1	1	
16	285378	. PANEL UPPER & LOWER DOOR / S.B. Up to 5-8468				1	
16	288530	. PANEL UPPER & LOWER DOOR / B.A. From 5-8469				1	
16	285378	. PANEL UPPER & LOWER DOOR / S.B. Up to 5-8468		2	2		
16	288530	. PANEL UPPER & LOWER DOOR / B.A. From 5-8469		2	2		
16	285378	. PANEL UPPER & LOWER DOOR / S.B. Up to 6-8906	1				A,B
17	065712	. CABLE / ENGINE DOOR REAR LAMP W/LEDS Up to 7-9095	1	1	1	1	
17	066491	. CABLE / ENGINE DOOR REAR LAMP W/LEDS From 7-9096			1	1	
18	504637	. CABLE TIE / 3/16" x 13"	AR	AR	AR	AR	
19	504530	. GROMMET / .750x1.250x.125x.312x1.625	5	5	5	5	
20	502570	. WASHER LO SPT 6.1x11.8x1.6 SS	2	2	2	2	
		A) BUS WITH "OPTION" FLUTED LOWER PANELLING					
		B) BUS WITH "OPTION" UPPER & LOWER SS REAR PANELLING					
		D) THIS DOOR ASSEMBLY DO NOT INCLUDE ITEM #17					

From 4-8165 Up to 8-9339	DATE: 01/2014	PAGE: Y2-1870-06

ENGINE DOOR ASSY R.H.

ITEM	PART	DESCRIPTION	XL45	MTH40	MTH45	MTH45S	NOTE
21	502637	. WASHER FL .200x.437x.037 SS	2	2	2	2	
22	286053	. TRACK / LICENCE PLATE HOLDER 326MM	1	1	1	1	
23	504286	. T SCREW 10-24 X 3/4" / SS / PLATE HOLDER	2	2	2	2	
24	502666	. SCREW MA FL PH #6-32x3/4 SS EMN	3	3	3	3	
25	504498	. BUMPER PLUG / .406 ODx.218THx.250HOLEx.125	2	2	2	2	
26	500286	. NUT WELL #6-32x.437	3	3	3	3	
27	500787	. NUT HEX #10-24 SS	2	2	2	2	
30	287314	. CONTROL ROD	1	1	1	1	
NS	506018	. HANDLE PLASTIC / 1/4" I.D. X 4"	1	1	1	1	
31	280143	. FIXTURE / W/HOLE FOR ROD	2	2	2	2	
NS	504339	. RIVET POP DOME OE 1/8x3/8 SS	4	4	4	4	
32	285018	. SUPPORT LOCK / LOWER	1	1	1	1	
33	286581	. SUPPORT LOCK / UPPER	1	1	1	1	
34	287381	. CATCH PIN SS / 80.5MM	1	1	1	1	
NS	506225	. TAPE RUB ADH1 CC POL 1/16" x 1/4" x 100' / GREY 2520	AR	AR	AR	AR	
35	502910	. SPRING COMPRESSION / .720 O.D. 1.75 x .055	2	2	2	2	
36	287391	. CATCH PIN SS / 90.5MM / REPLACED BY: 289636	1	1	1	1	
37	507212	. O-RING	2	2	2	2	
38	287382	. GUIDE PIN HOLDER UPPER	1	1	1	1	
39	287276	. ROD / JUNCTION	1	1	1	1	
40	280142	. ROD HOLDER	1	1	1	1	
41	280140	. RETAINING WASHER	1	1	1	1	
42	287271	. RIVET SHR FL 9.95x3.6{4.8x4.8 SS	1	1	1	1	
43	287277	. PIVOT	1	1	1	1	
44	5001251	. NUT HEX NYRT 1/4-20 SS	1	1	1	1	
45	287291	. GUIDE PIN HOLDER LOWER	1	1	1	1	
46	955271	. SCREW CAP HEX M6-1.0x16 G8.8 ZG603	12	12	12	12	
47	500356	. WASHER LO SERR 6.1x16.0x0.9 ZG603	12	12	12	12	
50	Y2-0664-01	**. REAR EXTERIOR LIGHTS & PLATE HOLDER**					
51	506790	. TAPE RUB ADH2 CC POL 1/16" x 1/2" x 200' / BLACK I1C-N-A	AR	AR	AR	AR	
51	683084	. SEALANT SIKA #221 / GREY / 600 ml SAUSAGE	AR	AR	AR	AR	
51	683083	. ADHESIVE SIKA #252 / BLACK / 600 ml SAUSAGE	AR	AR	AR	AR	
52	285365	. FINISHING MOULDING / PLASTIC Up to 6-8906	1				
52	285377	. FINISHING MOULDING SS / S.B. Up to 6-8906	AR				A
52	285377	. FINISHING MOULDING SS / S.B. Up to 5-8468		1	1		A
52	288531	. FINISHING MOULDING SS / B.A. From 5-8469		1	1		
52	285900	. FINISHING MOULDING R.H. / PLASTIC / (LOWER 3MM THINER THAN UPPER	1			1	C
60	Y2-1870-10	**ENGINE DOOR ASSY - INSTALLATION**					
		A) BUS WITH "OPTION" FLUTED LOWER PANELLING					
		C) BUS & MTH ENT WITH LOWER SS PANEL					

From 4-8165 Up to 8-9339	DATE: 01/2014	PAGE: Y2-1870-06

ENGINE DOOR ASSY R.H.

ITEM	PART	DESCRIPTION	XL45	MTH40	MTH45	MTH45S	NOTE

From Y-7046 Up to 8-9339	DATE: 01/2014	PAGE: Y2-1870-10

ENGINE DOOR ASSY - INSTALLATION

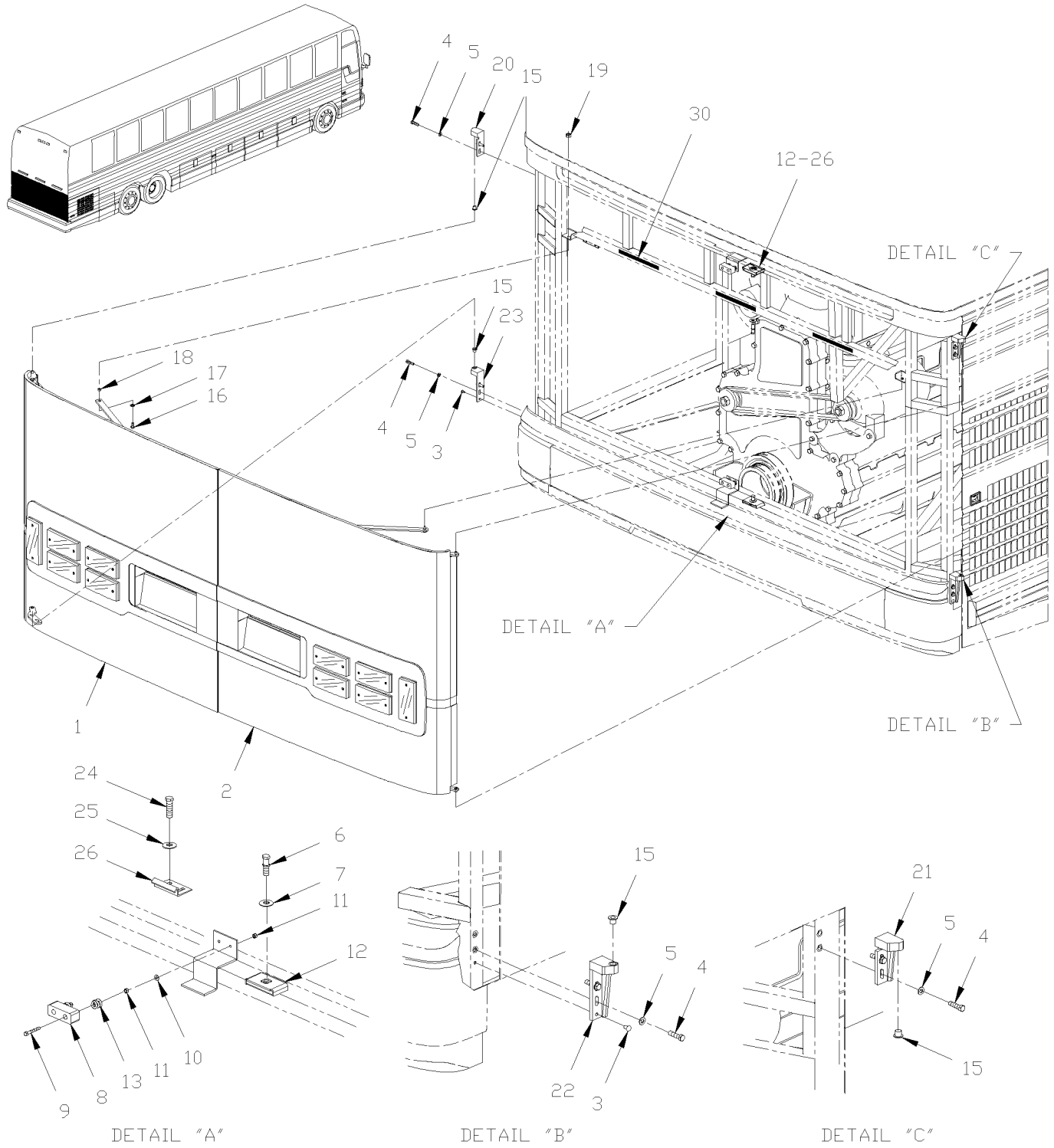

From Y-7046 Up to 8-9339	DATE: 01/2014	PAGE: Y2-1870-10

ENGINE DOOR ASSY - INSTALLATION

ITEM	PART	DESCRIPTION	XL45	MTH40	MTH45	MTH45S	NOTE
1	Y2-1870-00	**ENGINE DOOR ASSY L.H.**					
1	Y2-1870-01	**ENGINE DOOR ASSY L.H.**					
2	Y2-1870-05	**ENGINE DOOR ASSY R.H.**					
2	Y2-1870-06	**ENGINE DOOR ASSY R.H.**					
3	504122	RIVET POP DOME OE 1/4x3/8 AL	2	2	2	2	
4	502780	SCREW CAP HEX M8-1.25x25 SS EMN	5	5	5	5	
5	502584	WASHER LO SERR 8.2x26.3x1.8 ZP	8	8	8	8	
6	284438	PIN STRIKER Up to 2-7888	1	1	1	1	A
7	284447	WASHERS BELLEVILLE Up to 2-7888	1	1	1	1	A
8	506250	RUBBER BUMPER	1	1	1	1	
9	502708	SCREW CAP HEX M5-0.8x35 SS	2	2	2	2	
10	500411	WASHER FL .260x.697x.050 SS	2	2	2	2	
11	5001449	NUT HEX M5-0.8 SS	4	4	4	4	
12	282869	FLOATING NUT ASSY WITH CASE Up to 1-7627 / REPLACED BY: 287943	2	2	2	2	A
12	287943	FLOATING NUT ASSY WITH CASE From 1-7628 Up to 2-7888	2	2	2	2	A
13	502205	SPRING COMPRESSION / .850 O.D. x .750 x .072	2	2	2	2	
15	284607	BUSHING, NYLON / (NOT INCLUDE W/HINGE)	4	4	4	4	
16	502780	SCREW CAP HEX M8-1.25x25 SS EMN	10	10	10	10	
17	502583	WASHER LO SERR 8.15x22.3x1.0 ZP / REPLACED BY: 502856	2	2	2	2	
18	283770	SPACER / TO FIX RETAINING ARM	2	2	2	2	
19	966171	NUT HEX NYRT M8x1.25 SS	2	2	2	2	
20	285930	HINGE UPPER L.H.	1	1	1	1	
21	285854	HINGE UPPER R.H.	1	1	1	1	
22	285855	HINGE LOWER R.H.	1	1	1	1	
23	285931	HINGE LOWER L.H.	1	1	1	1	
24	500204	SCREW CAP HEX 7/16-14X1 1/4 SS Up to 2-7888	2	2	2	2	B
24	502780	SCREW CAP HEX M8-1.25x25 SS EMN From 2-7889	4	4	4	4	
25	502582	WASHER LO SERR 6.1x16.2x0.9 ZP Up to 2-7888	2	2	2	2	B
25	5001161	WASHER LO SPT 8.1x14.8x2.0 SS-304 From 2-7889	4	4	4	4	
26	280141	CATCH PIN / RETAINER Up to 2-7888	2	2	2	2	B
26	287286	CATCH PIN / RETAINER 45MMx21MM 90° From 2-7889	2	2	2	2	
30	920009	REFLECTOR STRIP RED	AR	AR	AR	AR	
NS	286688	DECAL DOOR OPEN	1	1	1	1	
NS	287225	KIT, R.H. ENGINE DOOR LOCK IMPROVEMENT Up to 2-7888	AR	AR	AR	AR	
. NS	WB02-01	. SEE WARRANTY BULLETIN Up to 2-7888	1	1	1	1	
		A) FOR PRODUCT IMPROVEMENT DOOR LOCK MECHANISM					
		ASK FOR KIT #287225					
		B) PART ARE INCLUDE IN KIT #287225					

From Y-7046 Up to 8-9339	DATE: 01/2014	PAGE: Y2-1875-00
FUEL TANK FILLING DOOR		

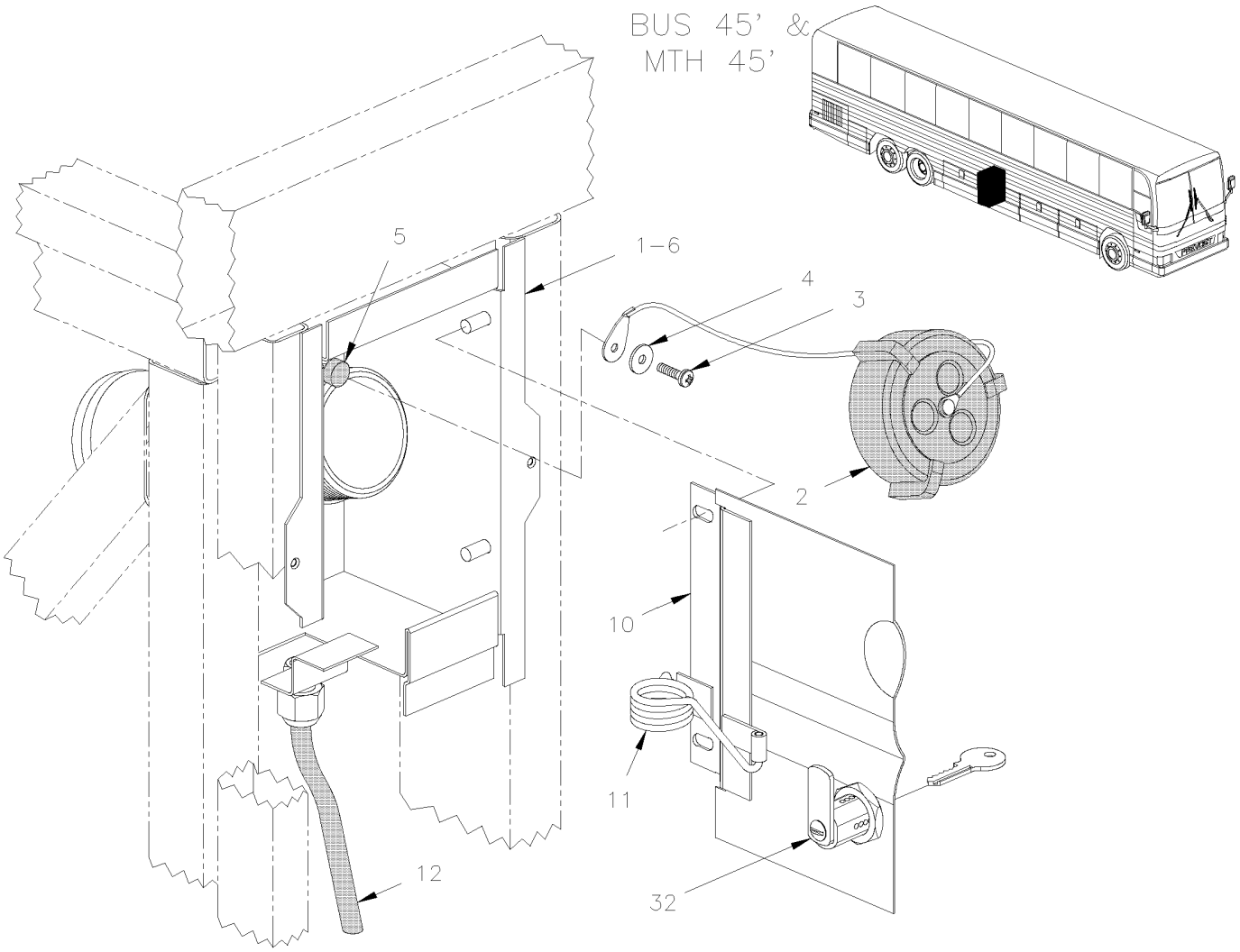

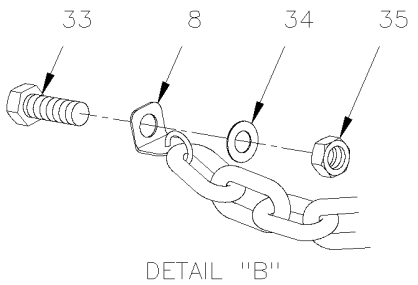

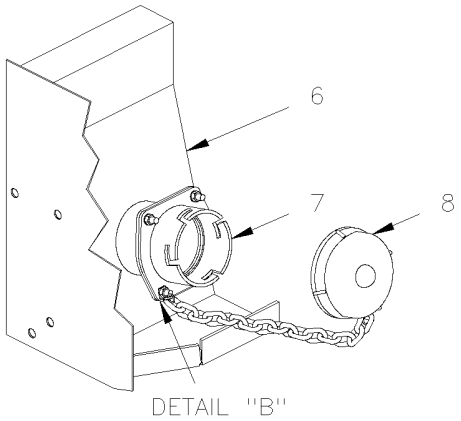

From Y-7046 Up to 8-9339	DATE: 01/2014	PAGE: Y2-1875-00

FUEL TANK FILLING DOOR

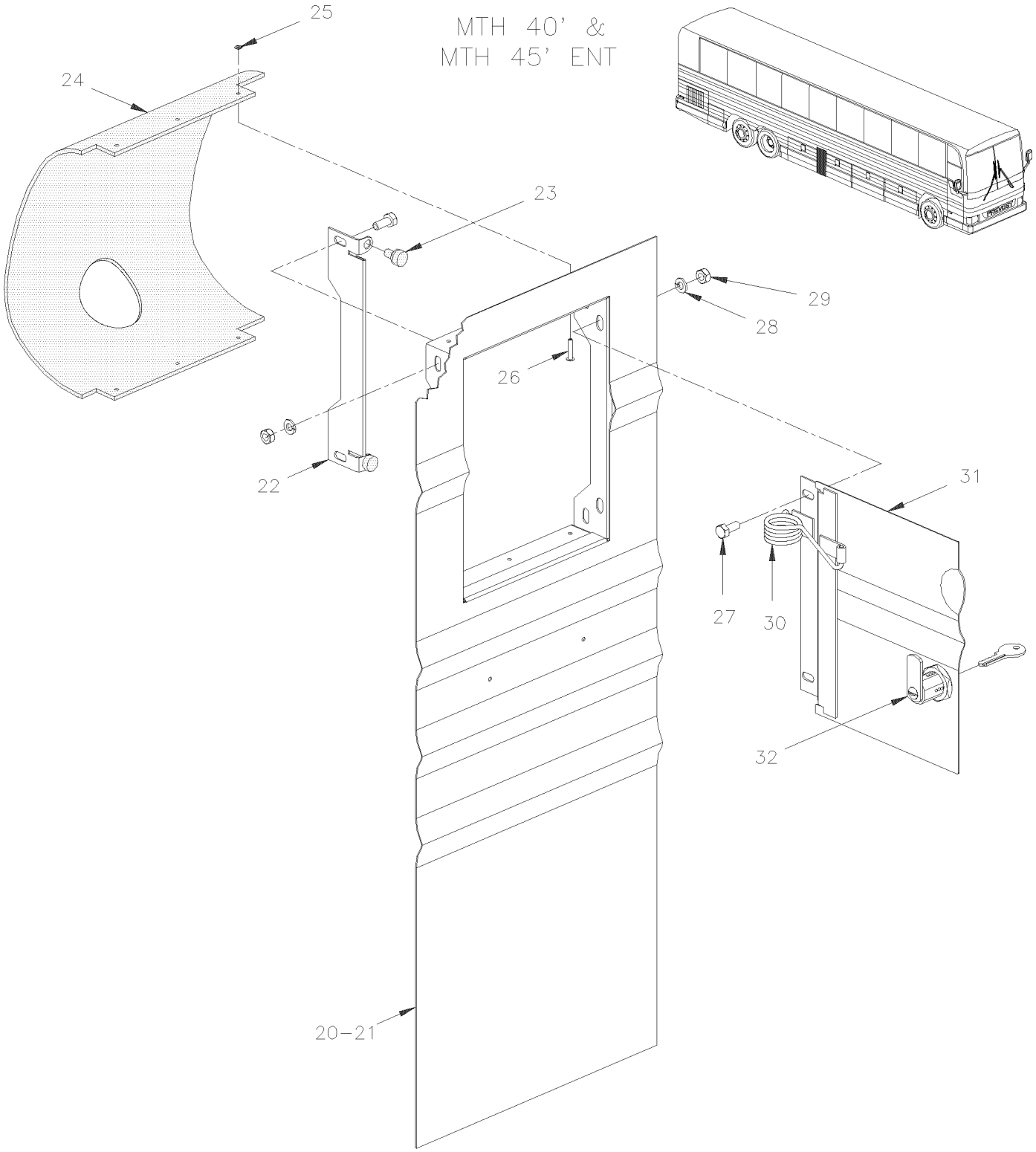

From Y-7046 Up to 8-9339	DATE: 01/2014	PAGE: Y2-1875-00

FUEL TANK FILLING DOOR

ITEM	PART	DESCRIPTION	XL45	MTH40	MTH45	MTH45S	NOTE
1	032232	BOX ASSY, L.H. Up to 1-7605 / REPLACED BY: 032418	1		1		
1	032418	BOX ASSY, L.H. From 1-7606	1		1		
1	032230	BOX ASSY, R.H. Up to 1-7605 / REPLACED BY: 032416	1		1		
1	032416	BOX ASSY, R.H. From 1-7606	1		1		
2	531424	FUEL FILLING CAP / SCREW TYPE CAP	1	1	1	1	
3	500572	SCREW MA TR PH #10-24x1/2 SS EMN	1	1	1	1	
4	500470	WASHER LO SPT .193x.334x.047 ZP	1	1	1	1	
5	470949	SPACER RUBBER 3/4" O.D. / S.Q.	1	1	1	1	
6	032389	BOX ASSY, R.H. Up to 6-8906	1				B
6	032390	BOX ASSY, L.H. Up to 6-8906	1				B
7	531413	. ADAPTOR Up to 6-8906	1				B
8	531412	. FUEL FILLING CAP / "EMCO WHEATON" TYPE Up to 6-8906	1				B
10	473356	DOOR ASSY, R.H. / W/LOCK / S.B. Up to Y-7379 / REPLACED BY: 474983			1		A
10	473356	DOOR ASSY, R.H. / W/LOCK / S.B. Up to Y-7379 / REPLACED BY: 474983	AR				A
10	474983	DOOR ASSY, R.H. / W/LOCK / S.B. From Y-7380 Up to 5-8468			1		A
10	477544	DOOR ASSY, R.H. / W/LOCK / B.A. From 5-8469			1		
10	474983	DOOR ASSY, R.H. / W/LOCK / S.B. From Y-7380 Up to 6-8906	AR				A
10	473358	DOOR ASSY, L.H. / W/LOCK / S.B. Up to Y-7379 / REPLACED BY: 474984			1		A
10	473358	DOOR ASSY, L.H. / W/LOCK / S.B. Up to Y-7379 / REPLACED BY: 474984	AR				A
10	474984	DOOR ASSY, L.H. / W/LOCK / S.B. From Y-7380 Up to 5-8468			1		A
10	477553	DOOR ASSY, L.H. / W/LOCK / B.A. From 5-8469			1		
10	474984	DOOR ASSY, L.H. / W/LOCK / S.B. From Y-7380 Up to 6-8906	AR				A
10	474394	DOOR ASSY, R.H. / W/LOCK Up to Y-7376 / REPLACED BY: 474981	1				
10	474981	DOOR ASSY, R.H. / W/LOCK From Y-7377 Up to 6-8906	1				
10	474395	DOOR ASSY, L.H. / W/LOCK Up to Y-7376 / REPLACED BY: 474986	1				
10	474986	DOOR ASSY, L.H. / W/LOCK From Y-7377 Up to 6-8906	1				
10	474397	DOOR ASSY, R.H. Up to Y-7376 / REPLACED BY: 474980	1				
10	474980	DOOR ASSY, R.H. From Y-7377 Up to 6-8906	1				
10	474396	DOOR ASSY, L.H. Up to Y-7376 / REPLACED BY: 474987	1				
10	474987	DOOR ASSY, L.H. From Y-7377 Up to 6-8906	1				
11	031175	SPRING, TORSION / 1 O.D. x .634 x .125	1		1		
12	503472	TUBE, NYLON 3/8 O.D. / GREY S.L.	AR		AR		
20	474430	PANEL R.H. UPPER ASSY W/FUEL DOOR RH / S.B. Up to Y-7439 / REPLACED BY: 474979		1		1	
20	474979	PANEL R.H. UPPER ASSY W/FUEL DOOR RH / S.B. From Y-7440 Up to 5-8468 / REPLACED BY: 477538				1	
20	477538	PANEL R.H. UPPER ASSY W/FUEL DOOR RH / B.A. From 5-8469		1		1	
21	474429	PANEL L.H. UPPER ASSY W/FUEL DOOR LH / S.B. Up to Y-7439 / REPLACED BY: 474646		1		1	
21	474646	PANEL L.H. UPPER ASSY W/FUEL DOOR LH / S.B. From Y-7440 Up to 5-8468 / REPLACED BY: 477549				1	
21	477549	PANEL L.H. UPPER ASSY W/FUEL DOOR LH / B.A. From 5-8469		1		1	
NS	473469	. DOOR STOPPER		1		1	
		A) COACH WITH STAINLESS STEEL SIDE LOWER					
		PANELLING					
		B) COACH WITH "EMCO WHEATON"					

From Y-7046 Up to 8-9339	DATE: 01/2014	PAGE: Y2-1875-00

FUEL TANK FILLING DOOR

ITEM	PART	DESCRIPTION	XL45	MTH40	MTH45	MTH45S	NOTE
22	474428	. PANEL 257MM X 690MM / S.B. Up to 5-8468 / REPLACED BY: 477539		1		1	
22	477539	. PANEL 257MM X 690MM / B.A. From 5-8469		1		1	
23	504654	. RUBBER BUMPER PLUG 7/8" X 15/32 X 3/64		2		2	
24	032175	. SPLASHGUARD / RUBBER		1		1	
25	5001067	. WASHER FL .128x.312x.032 SS		6		6	
26	504473	. RIVET POP DOME OE 1/8x1/4 SS		6		6	
27	5001181	SCREW CAP HEX M6-1.0x12 SS	4	4	4	4	
28	502570	WASHER LO SPT 6.1x11.8x1.6 SS	4	4	4	4	
29	502565	NUT HEX M6-1.0 SS	4	4	4	4	
30	031175	. SPRING, TORSION / 1 O.D. x .634 x .125		1		1	
31	474434	. DOOR ASSY, R.H. / W/LOCK / S.B. Up to Y-7439 / REPLACED BY: 474982		1		1	
31	474982	. DOOR ASSY, R.H. / W/LOCK / S.B. From Y-7440 Up to 5-8468 / REPLACED BY: 477541		1		1	
31	477541	. DOOR ASSY, R.H. / W/LOCK / B.A. From 5-8469		1		1	
31	474433	. DOOR ASSY, L.H. / W/LOCK / S.B. Up to Y-7439 / REPLACED BY: 474985		1		1	
31	474985	. DOOR ASSY, L.H. / W/LOCK / S.B. From Y-7440 Up to 5-8468 / REPLACED BY: 477550		1		1	
31	477550	. DOOR ASSY, L.H. / W/LOCK / B.A. From 5-8469		1		1	
32	780180	LOCK CYLINDER W/KEY / "VIRO"	1	1	1	1	
. NS	780501	. KEY	1	1	1	1	
32	780806	LOCK CYLINDER W/KEY / "VIRO"	1				
. NS	780501	. KEY	1				
NS	289549	PIVOT LOCK ACTUATOR 42.4MM / W/11MM OFFSET	1				S
33	5001433	SCREW CAP HEX M6-1.0x25 SS Up to 6-8906	4				B
34	502573	WASHER FL 6.4x12.5x1.6 SS Up to 6-8906	4				B
35	502511	NUT HEX NYRT M6-1.0 ZP Up to 6-8906	4				B
		B) COACH WITH "EMCO WHEATON"					
		S) REQUIERED ONLY IN SERVICE IF YOU NEED TO CHANGE YOUR OLD CYLINDER LOCK # 780180					

From Y-7046 Up to 8-9339	DATE: 01/2014	PAGE: Y2-1879-00

FRONT SERVICE DOOR ASSY

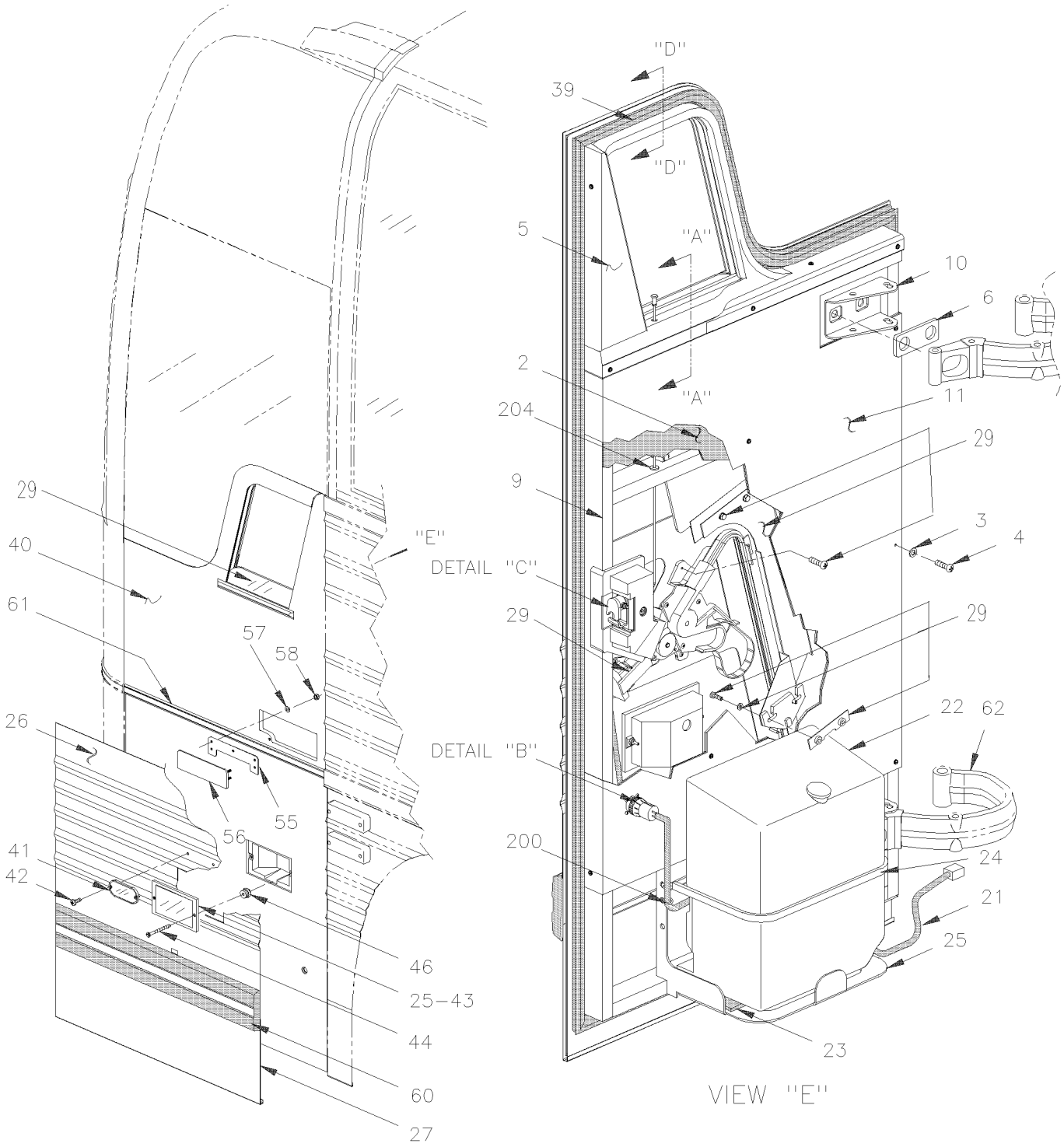

From Y-7046 Up to 8-9339	DATE: 01/2014	PAGE: Y2-1879-00

FRONT SERVICE DOOR ASSY

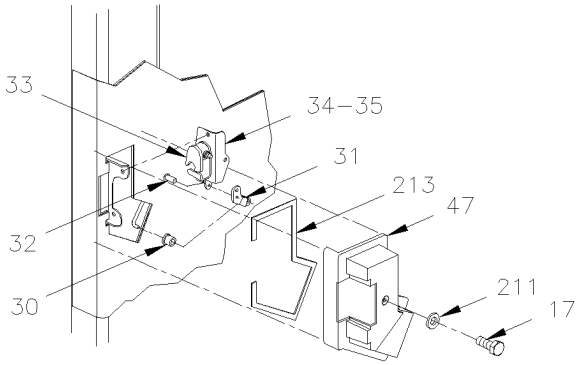

DETAIL "C"

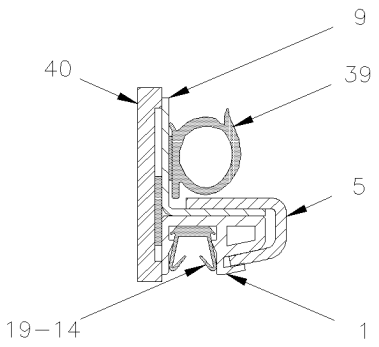

SECTION " D–D "

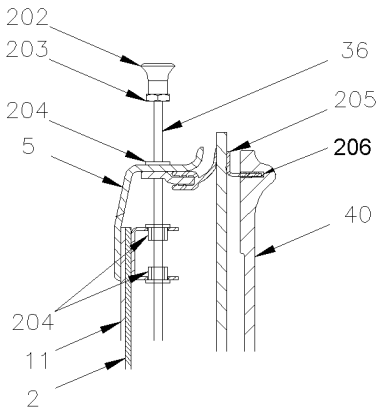

SECTION "A–A"

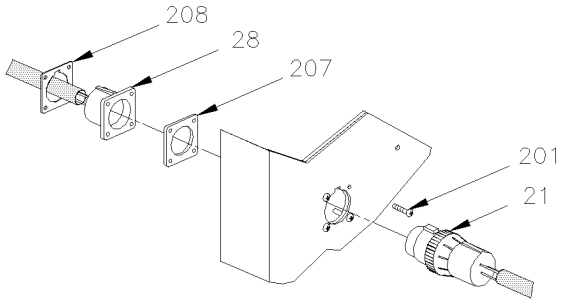

DETAIL "B"

From Y-7046 Up to 8-9339	DATE: 01/2014	PAGE: Y2-1879-00

FRONT SERVICE DOOR ASSY

ITEM	PART	DESCRIPTION	XL45	MTH40	MTH45	MTH45S	NOTE
		ALL FRONT SERVICE DOORS DO NOT INCLUDE					
		RUB-RAIL PLEASE ORDER SEPARATELY					
	287914P	FRONT SERVICE DOOR ASSY MTH 89"				1	
	286490P	FRONT SERVICE DOOR ASSY MTH 86"		1	1	1	
	285786P	FRONT SERVICE DOOR ASSY MTH 83" Up to Y-7128		1	1		
	286614P	FRONT SERVICE DOOR ASSY Up to 6-8906	1				
	287358	FRONT SERVICE DOOR ASSY W/FLUTED PANEL / S.B. Up to 4-8335	1				A
	287149P	FRONT SERVICE DOOR ASSY W/FLUTED PANEL / S.B. From 4-8336 Up to 6-8906	1				A
	287359	FRONT SERVICE DOOR ASSY W/FLUTED PANEL / S.B. Up to 4-8335	1				B
	287162P	FRONT SERVICE DOOR ASSY W/FLUTED PANEL / S.B. From 4-8336 Up to 6-8906	1				B
1	285983	WINDOW TRACK	1				
2	286601	INSULATING / 86"		1	1	1	
2	286426	INSULATING / 83" Up to Y-7128		1	1		
2	286606	INSULATING / COACH Up to 6-8906	1				
2	287906	INSULATING / 89"				1	
3	500463	WASHER FN CKF .187x.500x.090 BR NP	17				
4	502673	SCREW TC PAN PH #6-32x1/2 SS	2				
5	286491	INTERIOR FINISHING / 86" & 89"		1	1	1	
5	286451	INTERIOR FINISHING / 83"	1	1	1		
6	283402	SUPPORT PLATE		2	2	2	
6	286998	SUPPORT PLATE 134MM X 48MM Up to 6-8906	1				
7	502731	SCREW CAP HEX M12-1.75x40 G8.8 ZP	4				
8	500810	WASHER LO SPT 12.2x21.1x2.5 ZP	4				
9	286605P	DOOR FRAME ASSY / COACH Up to 6-8906	1				
9	Call Order Desk	DOOR FRAME ASSY / 83" Up to Y-7128		1	1		P
9	286488P	DOOR FRAME ASSY / 86"		1	1	1	
9	287478	DOOR FRAME ASSY / 89"				1	
10	286014	HINGE SUPPORT	2				
11	286607	INTERIOR PANEL / COACH Up to 6-8906	1				
11	287890	INTERIOR PANEL / COACH Up to 6-8906	1				B,F
11	286425	INTERIOR PANEL / 83" Up to Y-7128		1	1		
11	286602	INTERIOR PANEL / 86"		1	1	1	
11	287905	INTERIOR PANEL / 89"				1	
		P) CALL ORDER DESK FOR SPECIFIC APPLICATION					
		(V.I.N.)					
		A) USE WITH BUS WITH FLUTED LOWER PANELLING WITH					
		DOCKING LIGHT					
		B) USE WITH BUS WITH FLUTED LOWER PANELLING					
		W/OUT DOCKING LIGHT					
		F) USE WITH BUS WITH FLAT LOWER PANELLING WITH					
		DOCKING LIGHT					

From Y-7046 Up to 8-9339	DATE: 01/2014	PAGE: Y2-1879-00

FRONT SERVICE DOOR ASSY

ITEM	PART	DESCRIPTION	XL45	MTH40	MTH45	MTH45S	NOTE
NS	506790	TAPE RUB ADH2 CC POL 1/16" x 1/2" x 200' / BLACK I1C-N-A	4				
13	5001182	NUT HEX NYRT M6-1.0 SS	4				
13	502570	WASHER LO SPT 6.1x11.8x1.6 SS	2				
14	286440	FELT SLIDING 677MM	1				
15	284914	SPRING EXTENSION / .305 O.D. x 1.562 x .051	1				
16	286087	DIAGONNAL SUPPORT Up to 6-8901	1				
19	286439	FELT SLIDING 930MM	1				
21	064828	CABLE ASSY / WINDSHIELD WASHER PUMP Up to 7-9095	1				
21	066516	CABLE ASSY / WINDSHIELD WASHER PUMP From 7-9096	1				
21	067948	CABLE ASSY / ADAPTOR / (SERVICE ONLY) / NEW LEVEL	1				
22	Y2-2305-20	**WINDSHIELD WASHER - INSTALLATION**					
23	506339	TAPE RUB ADH1 NEO 1/4" x 1" x 35' / BLACK 1220	1				
24	504694	TIE RUBBER BELT, W/HOOK 21" Up to Y-7237	2				
24	287097	STRAP RETAINING SS / 330MM x 196MM From Y-7238	1				
24	288919	STRAP RETAINING SS / 330MM x 218MM	1				F
25	286422	SUPPORT / WINDSHIELD WASHER TANK / WELDED TO STRUCTURE	1				
25	288920	SUPPORT / WINDSHIELD WASHER TANK	1				A,F
26	286038	PANEL UPPER / S.B. Up to 5-8468 / REPLACED BY: 288525		1	1	1	
26	288525	PANEL UPPER / B.A. From 5-8469		1	1	1	
26	287889	PANEL UPPER / S.B. Up to 4-8335	1				A
26	281039	PANEL UPPER / S.B. From 4-8336 Up to 6-8906	1				A
26	287916	PANEL UPPER / S.B. Up to 4-8335	1				B
26	281038	PANEL UPPER / S.B. From 4-8336 Up to 6-8906	1				B
27	286130	PANEL LOWER / S.B. Up to 5-8468 / REPLACED BY: 288524		1	1	1	
27	288524	PANEL LOWER / B.A. From 5-8469		1	1	1	
27	287144	PANEL LOWER / S.B. Up to 6-8906	1				A
28	065005	CABLE ASSY / SERVICE DOOR Up to 6-8901	1				
28	066626	WIRING HARNESS SERVICE DOOR From 6-8902	1				
29	Y2-1886-00	**POWER WINDOW - ELECTRICAL INSTALLATION**					
29	Y2-1886-01	**POWER WINDOW - ELECTRICAL INSTALLATION**					
30	504456	CLIP / RETAINER ROD / WHITE OR RED Up to Y-7237	3				
30	780340	CLIP, RETAINER ROD From Y-7238	3				
31	286040	PIVOT Up to Y-7237	1				
31	287077	PIVOT From Y-7238	1				
32	504379	RIVET POP DOME OE 3/16x1/4 SS	1				
		A) USE WITH BUS WITH FLUTED LOWER PANELLING WITH					
		DOCKING LIGHT					
		B) USE WITH BUS WITH FLUTED LOWER PANELLING					
		W/OUT DOCKING LIGHT					
		F) USE WITH BUS WITH FLAT LOWER PANELLING WITH					
		DOCKING LIGHT					

From Y-7046 Up to 8-9339	DATE: 01/2014	PAGE: Y2-1879-00

FRONT SERVICE DOOR ASSY

ITEM	PART	DESCRIPTION	XL45	MTH40	MTH45	MTH45S	NOTE
33	780587	LOCK SPAGNOLET L.H. / W/G-FITTING Up to 2-7755 / REPLACED BY: 780652	1				
33	780652	LOCK SPAGNOLET L.H. / W/G-FITTING From 2-7756	1				
. NS	780340	. CLIP, RETAINER ROD From 2-7756	1				
. NS	507607	. GREASE FITTING / From 2-7756	1				
34	502563	SCREW CAP HEX M6-1.0x12 G8.8 ZP	2				
35	502582	WASHER LO SERR 6.1x16.2x0.9 ZP	2				
36	286489	OPENING ROD / 86" Up to Y-7237		1	1	1	
36	287086	OPENING ROD / 86" From Y-7238		1	1	1	
36	286424	OPENING ROD / 83" Up to Y-7128		1	1		
36	287085	OPENING ROD / 83"		1	1		
36	286610	OPENING ROD / COACH Up to Y-7237	1				
36	287084	OPENING ROD / COACH From Y-7238 Up to 6-8906	1				
36	287907	OPENING ROD / 89"				1	
37	500289	SCREW TC OV PH #6-32x3/4 SS410	15				
38	286212	GLASS ASSY W/SUPPORT	1				
39	286071	RUBBER SEAL EXTRUSION / SERVICE DOOR Up to 5-8650 / REPLACED BY: 287493	1				
39	287493	RUBBER SEAL EXTRUSION / SERVICE DOOR From 5-8651 Up to 6-8906 / REPLACED BY: 288910	1				
39	286068	RUBBER SEAL EXTRUSION / SERVICE DOOR MTH-83" Up to Y-7128 / REPLACED BY: 289939		1	1		
39	289939	RUBBER SEAL EXTRUSION / SERVICE DOOR MTH-83" / REPLACED BY: 288940		1	1		
39	286070	RUBBER SEAL EXTRUSION / SERVICE DOOR MTH-86" Up to 5-8650 / REPLACED BY: 289999		1	1	1	
39	289999	RUBBER SEAL EXTRUSION / SERVICE DOOR MTH-86" From 5-8651 / REPLACED BY: 288943		1	1	1	
39	286072	RUBBER SEAL EXTRUSION / SERVICE DOOR MTH-89" Up to 5-8650 / REPLACED BY: 289930				1	
39	289930	RUBBER SEAL EXTRUSION / SERVICE DOOR MTH-89" From 5-8651 / REPLACED BY: 288914				1	
40	286073	PANEL FIBERGLASS / 86"		1	1	1	
40	286037	PANEL FIBERGLASS / 83" Up to Y-7128		1	1		
40	286074	PANEL FIBERGLASS / COACH Up to 4-8335 / REPLACED BY: 281020	1				
40	281020	PANEL FIBERGLASS / COACH From 4-8336 Up to 6-8906	1				
40	289896	PANEL FIBERGLASS / COACH Up to 4-8335 / REPLACED BY: 281034	1				A
40	281034	PANEL FIBERGLASS / COACH From 4-8336	1				A
40	288627	PANEL FIBERGLASS / COACH	1				F
40	287164	PANEL FIBERGLASS / COACH Up to 4-8335 / REPLACED BY: 281035	1				B
40	281035	PANEL FIBERGLASS / COACH From 4-8336 Up to 6-8906	1				B
40	286075	PANEL FIBERGLASS / 89"				1	
41	930212	REFLECTOR AMBER 1 1/8" x 4 3/8"	1				
42	500124	SCREW TP TR PH #8x1/2 SS	2				
		A) USE WITH BUS WITH FLUTED LOWER PANELLING WITH					
		DOCKING LIGHT					
		B) USE WITH BUS WITH FLUTED LOWER PANELLING					
		W/OUT DOCKING LIGHT					
		F) USE WITH BUS WITH FLAT LOWER PANELLING WITH					
		DOCKING LIGHT					

From Y-7046 Up to 8-9339	DATE: 01/2014	PAGE: Y2-1879-00

FRONT SERVICE DOOR ASSY

ITEM	PART	DESCRIPTION	XL45	MTH40	MTH45	MTH45S	NOTE
43	286400	FRAME	1				
44	502530	SCREW MA OV PH M4-0.7x40 SS	2				
45	504473	RIVET POP DOME OE 1/8x1/4 SS	2				
46	500589	NUT WELL M4-0.7x13.5	2				
47	286456	LOCK CAP	1				
48	286705	LOCK PIVOT	1				
48	504542	RIVET SHR FL 9/32x3/32 STL	1				
49	286714	WASHER	1				
49	287073	ROD	1				
50	502094	PIN, COTTER 1/16 x 1/2 SS	1				
NS	287087	PIVOT	1				
51	504402	RING RETAINER / EXT .250 x .210 x .025"	1				
52	286713	ROD ASSY Up to Y-7237 / REPLACED BY: 286709	1				
52	286709	ROD ASSY From Y-7238	1				
55	283956	HANDLE ASSY / W/5 STUDS From 4-8336 Up to 6-8906	1				
56	283954	GASKET / <> HANDLE & BODY From 4-8336 Up to 6-8906	1				
57	502656	SCREW CAP HEX M6-1.0x50 SS From 4-8336 Up to 6-8906	5				
58	502557	NUT HEX NYRT M4-0.7 SS From 4-8336 Up to 6-8906	5				
60	Y2-1855-00	**RUB RAIL - CREST & TRIMS**					
61	286084	FINISHING MOULDING SS 800MM / S.B. Up to 5-8468		1	1	1	
61	288522	FINISHING MOULDING SS 800MM / B.A. From 5-8469		1	1	1	
61	287146	FINISHING MOULDING SS 800MM Up to 6-8906	1				A
NS	681051	TAPE RUB ADH2 URE .045" x 1/2" x 108' / WHITE 4085	AR				A
NS	682462	ADHESIVE SIKA #252 / BLACK / 310ml CARTRIDGE	AR				A
62	Y2-1879-10	**FRONT SERVICE DOOR - INSTALLATION**					
200	504637	CABLE TIE / 3/16" x 13"	2				
201	5001454	SCREW MA BDG PH #4-40x1/2 SS	4				
202	505504	KNOB, PULL / 8-32	1				
203	500764	NUT HEX #8-32 ZP	1				
204	504083	SNAP BUSHING / .250x.468.406	3				
NS	509808	HOLE PLUG BUTTON / .375 O.D. BLACK Up to 6-8906	1				C
205	286419	FLAP SEAL / 25MM x 260MM / W/FLOCKING	2				
206	506866	FLAP SEAL 3/4" x 7/8" / PVC / C.T.L. / RAW MATERIAL	AR				
NS	680030	GLUE	AR				
207	562946	GASKET MOUNTING / HD10 SERIES / 5C / DEUTSCH HD10-5-GKT	1				
		A) USE WITH BUS WITH FLUTED LOWER PANELLING WITH					
		DOCKING LIGHT					
		C) COACH W/OUT ROD OPENING SYSTEM					

From Y-7046 Up to 8-9339	DATE: 01/2014	PAGE: Y2-1879-00

FRONT SERVICE DOOR ASSY

ITEM	PART	DESCRIPTION	XL45	MTH40	MTH45	MTH45S	NOTE
208	561820	NUT, RING #13 / 1.125" I.D. W/4 4-40	1				
211	502570	WASHER LO SPT 6.1x11.8x1.6 SS	1				
213	506002	TAPE RUB ADH1 CC POL 3/16" x 1/2" x 40' / GREY 2520	AR				
300	683083	ADHESIVE SIKA #252 / BLACK / 600 ml SAUSAGE	AR				
301	683097	CLEANER SIKA #205 / CLEAR / 1000ml	AR				
302	683446	PRIMER SIKA #206 / BLACK / 1000ml	AR				
303	683084	SEALANT SIKA #221 / GREY / 600 ml SAUSAGE	AR				
304	683885	ADHESIVE SIKA TACK ULTRA FAST 2 / BLACK / 325ml	2				

From Y-7046 Up to 8-9339	DATE: 01/2014	PAGE: Y2-1879-00

FRONT SERVICE DOOR ASSY

ITEM	PART	DESCRIPTION	XL45	MTH400	MTH445	MTH445S	NOTE

From Y-7046 Up to 8-9339	DATE: 01/2014	PAGE: Y2-1879-10

FRONT SERVICE DOOR - INSTALLATION

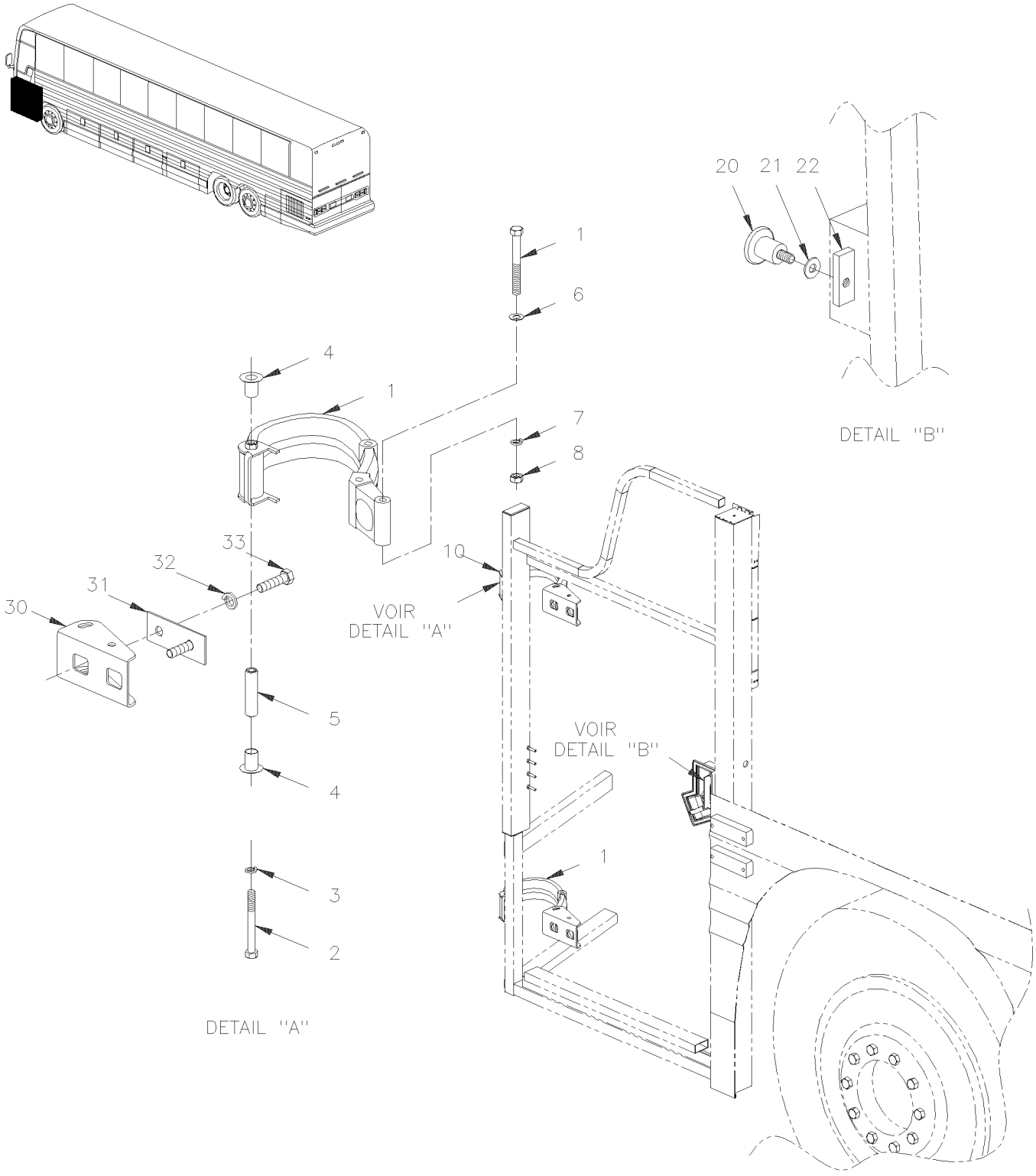

From Y-7046 Up to 8-9339	DATE: 01/2014	PAGE: Y2-1879-10

FRONT SERVICE DOOR - INSTALLATION

ITEM	PART	DESCRIPTION	XL45	MTH40	MTH45	MTH45S	NOTE
1	286477	HINGE Up to 2-7815 / REPLACED BY: 287341	2	2	2	2	
1	287341	HINGE From 2-7816	2	2	2	2	
2	5001016	SCREW CAP HEX M10-1.5x90 G8.8 ZP	4	4	4	4	
3	500257	WASHER LO SPT 10.2x18.1x2.2 ZP	2	2	2	2	
4	507326	BEARING FLANGE	2	2	2	2	
5	284285	SPACER / <> BEARING FLANGE Up to 2-7815 / REPLACED BY: 287337	1	1	1	1	
5	287337	SPACER / <> BEARING FLANGE From 2-7816	1	1	1	1	
6	500445	WASHER FL .437x1.000x.083 ZP	4	4	4	4	
7	502585	WASHER LO SERR 10.2x26.3x1.4 ZP	4	4	4	4	
8	500256	NUT HEX M10-1.5 ZP	4	4	4	4	
10	251186	STOPPER SERVICE DOOR	1	1	1	1	
NS	502622	SCREW CAP HEX M6-1.0x20 SS EMN	2	2	2	2	
NS	502570	WASHER LO SPT 6.1x11.8x1.6 SS	2	2	2	2	
20	284438	PIN STRIKER	1	1	1	1	
21	284447	WASHERS BELLEVILLE	1	1	1	1	
30	286014	HINGE SUPPORT	2	2	2	2	
31	283402	SUPPORT PLATE	2	2	2	2	
32	500810	WASHER LO SPT 12.2x21.1x2.5 ZP	4	4	4	4	
33	502731	SCREW CAP HEX M12-1.75x40 G8.8 ZP	4	4	4	4	

From Y-7046 Up to 3-8164	DATE: 01/2014	PAGE: Y2-1879-50

REAR SERVICE DOOR - L.H. SIDE

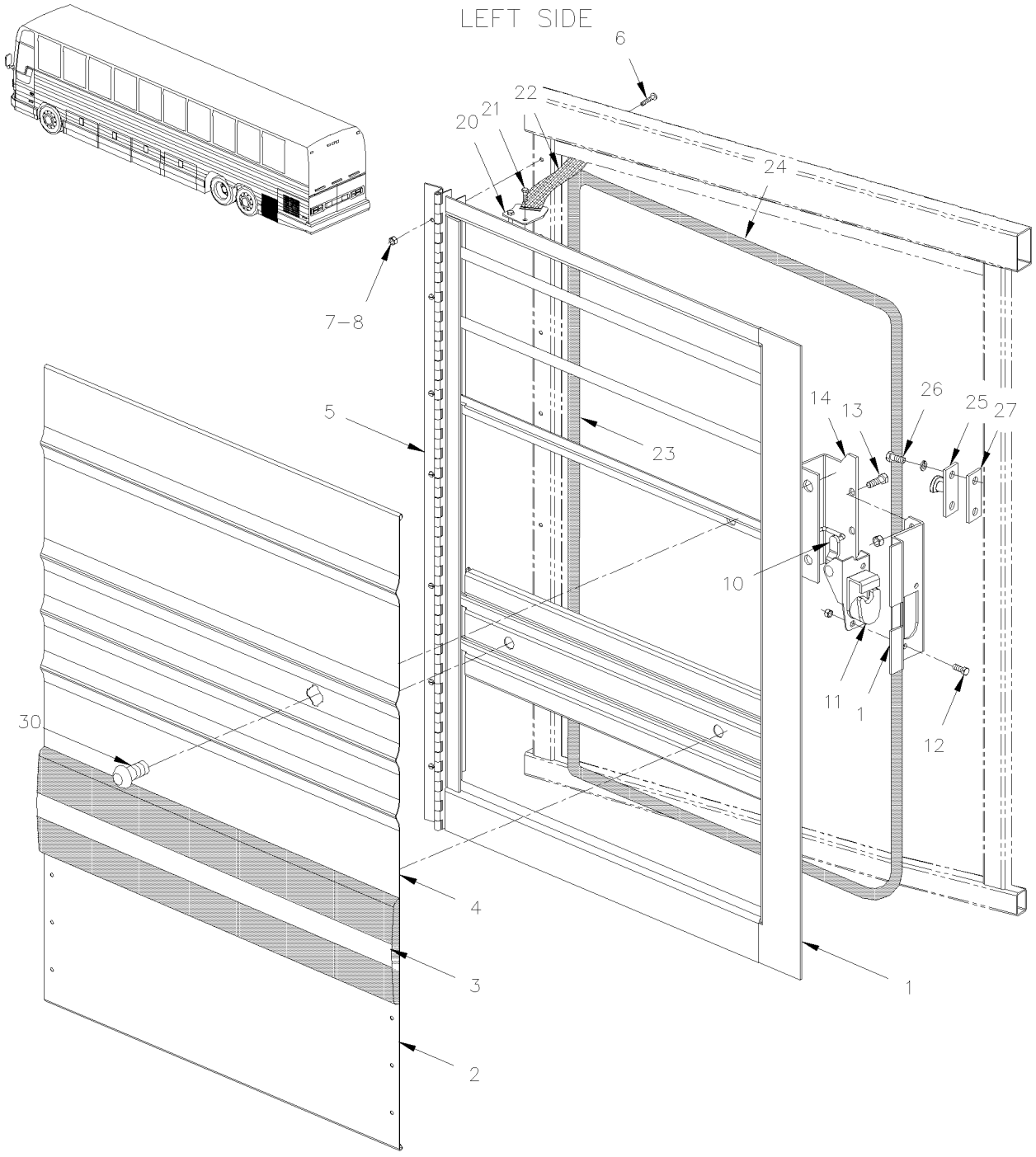

From Y-7046 Up to 3-8164	DATE: 01/2014	PAGE: Y2-1879-50

REAR SERVICE DOOR - L.H. SIDE

ITEM	PART	DESCRIPTION	XL45	MTH40	MTH45	MTH45S	NOTE
		ALL SERVICE DOORS LH ASSY DO NOT INCLUDE					
		RUB-RAIL PLEASE ORDER SEPARATELY					
		THE FOLLOWING DOORS ARE STANDARD WITH					
		PANEL W/O PERFORATED PANELS.					
		FOR SPECIAL PURPOSE DOOR ASSY REFER TO					
		PERFORATED & SPECIAL PANELS (BOOK PA-1108)					
	286633P	REAR SERVICE DOOR ASSY L.H / W/FLAT PANEL	1				
	287345	REAR SERVICE DOOR ASSY L.H / W/FLUTED PANEL / S.B.	1		1		A
1	286125	. FRAME ASSY L.H. / REPLACED BY: 289287	1		1		
2	473885	. LOWER PANEL SERVICE DOOR / S.B.	1		1		
2	473888	. LOWER PANEL SERVICE DOOR W/0.29 SQF / S.B.			AR		
NS	504272	. RIVET CHY Q BRAZ 3/16x1/8 SS / REPLACED BY: 504745	6		6		
3	Y2-1855-00	**. RUB RAIL - CREST & TRIMS**					
4	473890	. UPPER PANEL SERVICE DOOR L.H. W/0.79 SQF / S.B.			AR		
4	473889	UPPER PANEL SERVICE DOOR L.H. / FLAT / S.B.	AR		AR		A
4	474207	UPPER PANEL SERVICE DOOR L.H. / FLAT	1				
5	286152	. HINGE ASSY	1		1		
6	500148	. SCREW MA RND PH #6-32x1/2 SS	8		8		
7	500689	. NUT HEX #6-32 ZP	8		8		
NS	500470	. WASHER LO SPT .193x.334x.047 ZP	8		8		
8	284529	. ROD, 1 1/4" C/C / W/L.H. DOOR	1		1		
10	284531	. PIVOT LOCK ROD	1		1		
11	780588	. LOCK SPAGNOLET R.H. / W/G-FITTING Up to 2-7755 / REPLACED BY: 780653	1		1		
. NS	780340	. . CLIP, RETAINER ROD Up to 2-7755	1		1		
. NS	507607	. . GREASE FITTING / Up to 2-7755	1		1		
11	780653	. LOCK SPAGNOLET R.H. / W/G-FITTING From 2-7756	1		1		
. NS	780340	. . CLIP, RETAINER ROD From 2-7756	1		1		
. NS	507607	. . GREASE FITTING / From 2-7756	1		1		
12	502531	. SCREW CAP HEX M6-1.0x16 G8.8 ZP	2		2		
NS	502582	. WASHER LO SERR 6.1x16.2x0.9 ZP	2		2		
13	500163	. SCREW CAP HEX 1/4-20x3/4 G5 ZP	3		3		
NS	502583	. WASHER LO SERR 8.15x22.3x1.0 ZP / REPLACED BY: 502856	3		3		
14	284533	. SUPPORT, LOCK SPAGNOLET / W/L.H. DOOR	1		1		
20	284440	SUPPORT	1		1		
21	504379	RIVET POP DOME OE 3/16x1/4 SS	2		2		
22	505507	STRAP NYLON 1" WIDE / S.L.	AR		AR		
NS	284439	PLATE, STRAP RETAINING / OBLONG 16.5MM x 25.4MM W/2 HOLES	1		1		
23	506004	TAPE RUB ADH1 CC POL 3/8" x 1/2" x 20' / GREY 2520X	AR		AR		
		A) ALSO USE WITH COACH WITH FLUTED LOWER					
		PANELLING					

From Y-7046 Up to 3-8164	DATE: 01/2014	PAGE: Y2-1879-50

REAR SERVICE DOOR - L.H. SIDE

ITEM	PART	DESCRIPTION	XL45	MTH40	MTH45	MTH45S	NOTE
24	286141	RUBBER SEAL EXTRUSION / REAR SERVICE DOOR / REPLACED BY: 289941	1		1		
24	289941	RUBBER SEAL EXTRUSION / REAR SERVICE DOOR / REPLACED BY: 288942	1		1		
25	780278	PIN, STRIKER STUD	1		1		
26	500316	SCREW MA FL PH 1/4-28x3/4 SS	2		2		
27	283326	STRIKER PLATE, MOUNTING / 60MM X 25MM	1		1		
30	Y2-1867-00	**KEY & CYLINDER CODE "FORD"**					

From Y-7046 Up to 3-8164	DATE: 01/2014	PAGE: Y2-1879-50

REAR SERVICE DOOR - L.H. SIDE

ITEM	PART	DESCRIPTION	XL45	MTH400	MTH445	MTH445S	NOTE

From 4-8165 Up to 8-9339	DATE: 01/2014	PAGE: Y2-1879-51

REAR SERVICE DOOR - L.H. SIDE

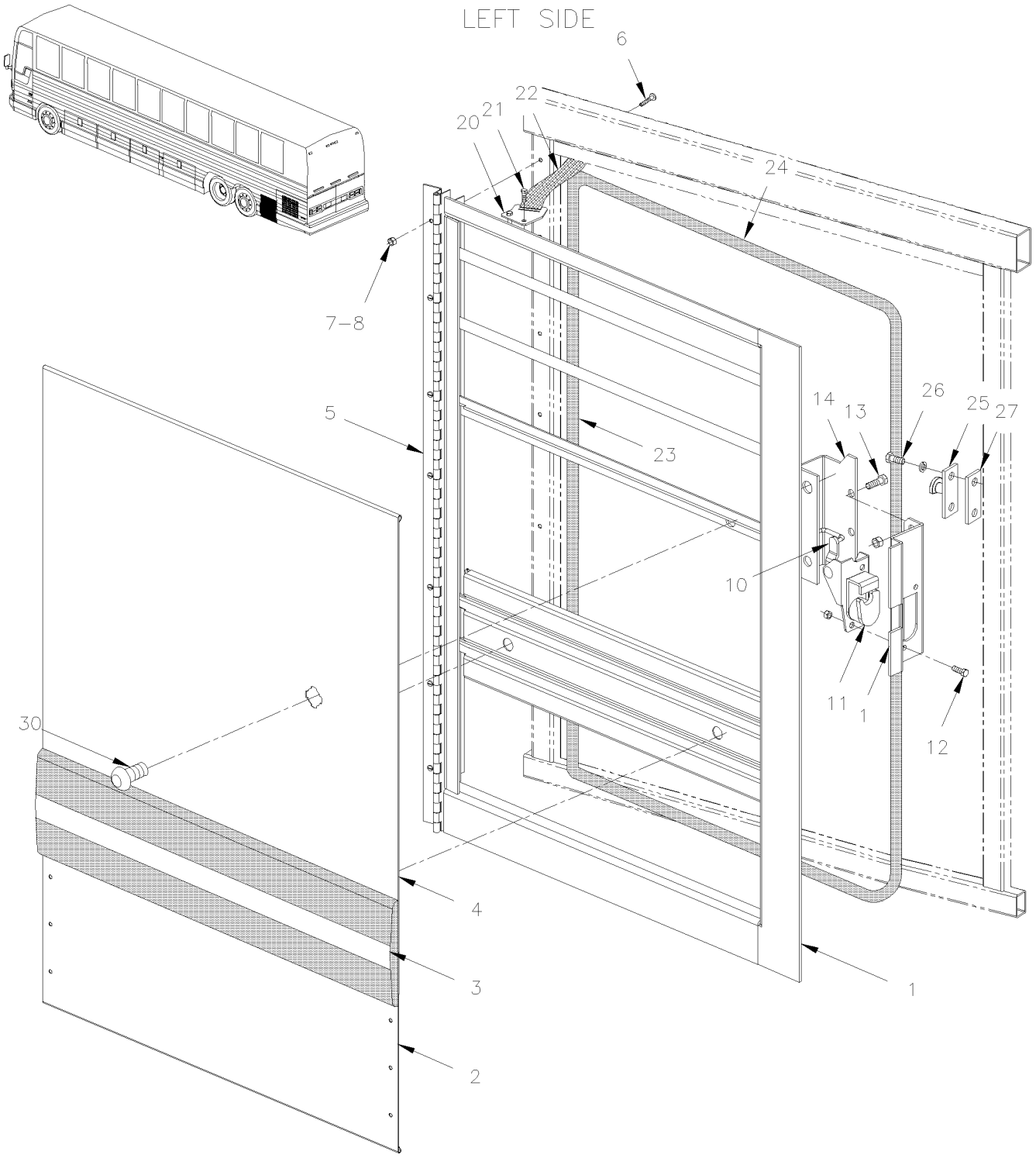

From 4-8165 Up to 8-9339	DATE: 01/2014	PAGE: Y2-1879-51

REAR SERVICE DOOR - L.H. SIDE

ITEM	PART	DESCRIPTION	XL45	MTH40	MTH45	MTH45S	NOTE
	286633P	REAR SERVICE DOOR ASSY L.H / W/FLAT PANEL	1				
	287345	REAR SERVICE DOOR ASSY L.H / W/FLUTED PANEL / S.B.	1				A
1	286125	. FRAME ASSY L.H. Up to 4-8273 / REPLACED BY: 289287	1				
1	289287	. FRAME ASSY L.H. From 4-8274	1				
2	473885	. LOWER PANEL SERVICE DOOR / S.B.	1				
NS	504272	. RIVET CHY Q BRAZ 3/16x1/8 SS / REPLACED BY: 504745	6				
3	Y2-1855-00	**. RUB RAIL - CREST & TRIMS**					
4	473889	UPPER PANEL SERVICE DOOR L.H. / FLAT / S.B.	AR				A
4	474207	UPPER PANEL SERVICE DOOR L.H. / FLAT	1				
5	286152	. HINGE ASSY	1				
6	500148	. SCREW MA RND PH #6-32x1/2 SS	8				
7	500689	. NUT HEX #6-32 ZP	8				
NS	500470	. WASHER LO SPT .193x.334x.047 ZP	8				
8	284529	. ROD, 1 1/4" C/C / W/L.H. DOOR	1				
10	284531	. PIVOT LOCK ROD	1				
11	780653	. LOCK SPAGNOLET R.H. / W/G-FITTING	1				
. NS	780340	. . CLIP, RETAINER ROD	1				
. NS	507607	. . GREASE FITTING /	1				
12	502531	. SCREW CAP HEX M6-1.0x16 G8.8 ZP	2				
NS	502582	. WASHER LO SERR 6.1x16.2x0.9 ZP	2				
13	500163	. SCREW CAP HEX 1/4-20x3/4 G5 ZP	3				
NS	502583	. WASHER LO SERR 8.15x22.3x1.0 ZP / REPLACED BY: 502856	3				
14	284533	. SUPPORT, LOCK SPAGNOLET / W/L.H. DOOR	1				
20	284440	SUPPORT	1				
21	504379	RIVET POP DOME OE 3/16x1/4 SS	2				
22	505507	STRAP NYLON 1" WIDE / S.L.	AR				
NS	284439	PLATE, STRAP RETAINING / OBLONG 16.5MM x 25.4MM W/2 HOLES	1				
23	506004	TAPE RUB ADH1 CC POL 3/8" x 1/2" x 20' / GREY 2520X	AR				
24	286141	RUBBER SEAL EXTRUSION / REAR SERVICE DOOR Up to 5-8650 / REPLACED BY: 289941	1				
24	289941	RUBBER SEAL EXTRUSION / REAR SERVICE DOOR From 5-8651 / REPLACED BY: 288942	1				
25	780278	PIN, STRIKER STUD	1				
26	500316	SCREW MA FL PH 1/4-28x3/4 SS	2				
27	283326	STRIKER PLATE, MOUNTING / 60MM X 25MM	1				
30	Y2-1867-00	**KEY & CYLINDER CODE "FORD"**					
		A) USE WITH COACH WITH FLUTED LOWER PANELLING					

From Y-7046 Up to 8-9339	DATE: 01/2014	PAGE: Y2-1879-60

REAR SERVICE DOOR - R.H. SIDE

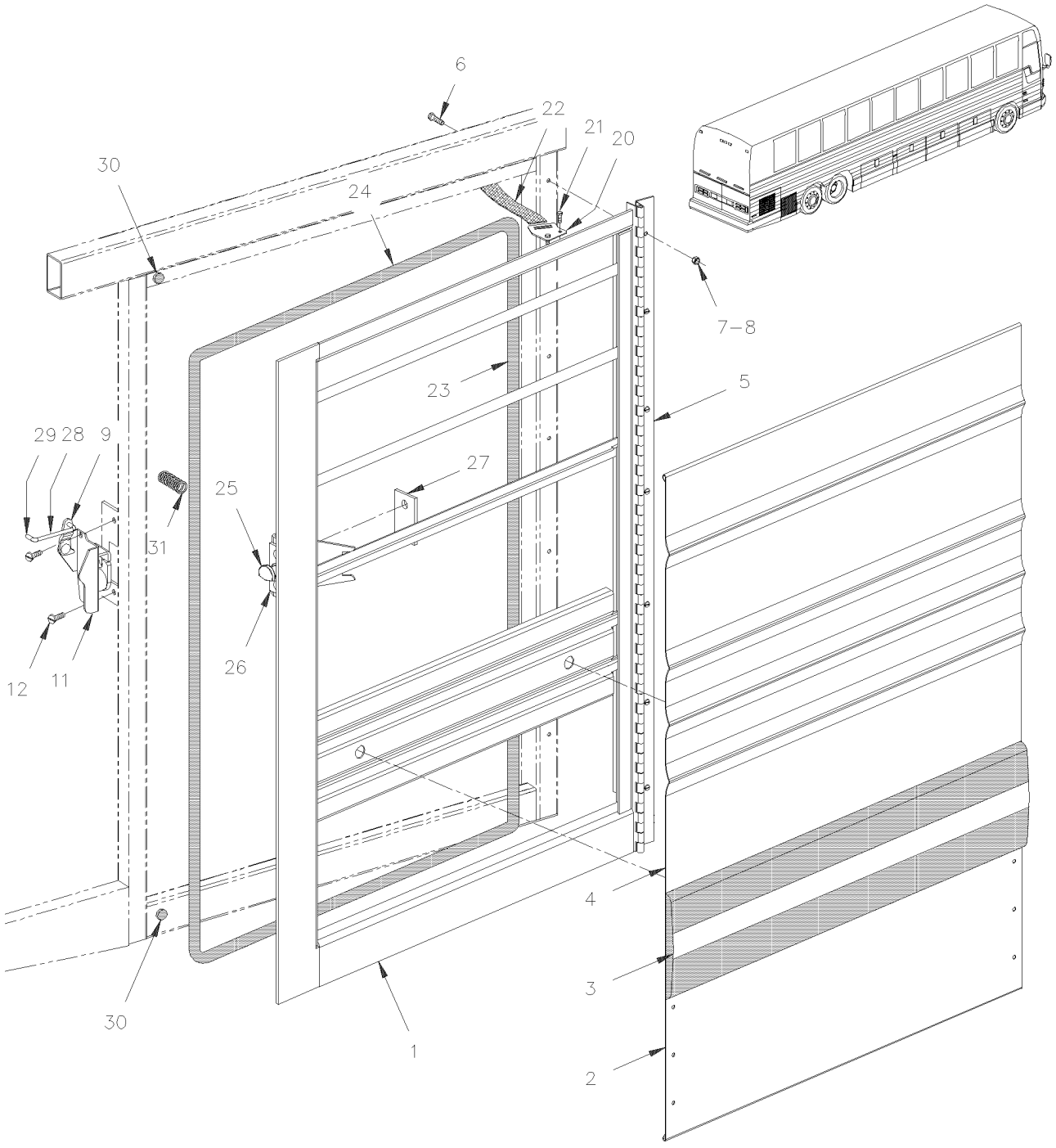

From Y-7046 Up to 8-9339	DATE: 01/2014	PAGE: Y2-1879-60

REAR SERVICE DOOR - R.H. SIDE

ITEM	PART	DESCRIPTION	XL45	MTH40	MTH45	MTH45S	NOTE
		ALL SERVICE DOORS RH ASSY DO NOT INCLUDE					
		RUB-RAIL PLEASE ORDER SEPARATELY					
		THE FOLLOWING DOORS ARE STANDARD WITH					
		PANEL W/O PERFORATED PANELS.					
		FOR SPECIAL PURPOSE DOOR ASSY REFER TO					
		PERFORATED & SPECIAL PANELS (BOOK PA-1108)					
	287360	REAR SERVICE DOOR ASSY R.H Up to 6-8906	1				C
	287346	REAR SERVICE DOOR ASSY R.H / W/FLAT PANEL Up to 6-8906	1				
	287320	REAR SERVICE DOOR ASSY R.H / W/FLAT PANEL Up to 6-8906	1				B
	287347	REAR SERVICE DOOR ASSY R.H Up to 6-8906	1				A
	287348	REAR SERVICE DOOR ASSY R.H			1		
1	286112	. FRAME ASSY R.H. Up to 4-8273 / REPLACED BY: 289288	1		1		
1	289288	. FRAME ASSY R.H. From 4-8274	1		1		
2	473885	. LOWER PANEL SERVICE DOOR / S.B. Up to 6-8906	1				A
2	473885	. LOWER PANEL SERVICE DOOR / S.B. Up to 5-8468			1		A
2	477655	. LOWER PANEL SERVICE DOOR / B.A. From 5-8469			1		
2	473888	. LOWER PANEL SERVICE DOOR W/0.29 SQF / S.B.			1		
NS	504272	. RIVET CHY Q BRAZ 3/16x1/8 SS / REPLACED BY: 504745	6		6		
3	Y2-1855-00	**. RUB RAIL - CREST & TRIMS**					
4	474209	. UPPER PANEL SERVICE DOOR / R.H. FLAT Up to 6-8906	1				
4	475056	. UPPER PANEL SERVICE DOOR / R.H. FLAT / W/100V OUTLET Up to 6-8906	1				B
4	473884	. UPPER PANEL SERVICE DOOR R.H. / S.B. Up to 6-8906	AR				A
4	473884	. UPPER PANEL SERVICE DOOR R.H. / S.B. Up to 5-8468			1		
4	477656	. UPPER PANEL SERVICE DOOR R.H. / B.A. From 5-8469			1		
4	473887	. UPPER PANEL SERVICE DOOR W/0.84 SQF / S.B. Up to 5-8468 / REPLACED BY: 477657			1		
4	477657	. UPPER PANEL SERVICE DOOR L.H. W/0.79 SQF / B.A. From 5-8469			1		
5	286143	. HINGE ASSY	1		1		
6	500148	. SCREW MA RND PH #6-32x1/2 SS	8		8		
7	500689	. NUT HEX #6-32 ZP	8		8		
8	500470	. WASHER LO SPT .193x.334x.047 ZP	1		1		
9	780340	CLIP, RETAINER ROD	1		1		
11	780282	LOCK SPAGNOLET L.H. Up to 2-7755	1		1		
11	780587	LOCK SPAGNOLET L.H. / W/G-FITTING From 2-7756 Up to 9-9095 / REPLACED BY: 780652	1		1		
11	780652	LOCK SPAGNOLET L.H. / W/G-FITTING From 9-9096			1		
. NS	780340	. CLIP, RETAINER ROD From 9-9096			1		
. NS	507607	. GREASE FITTING / From 9-9096			1		
		A) ALSO USE WITH COACH WITH FLUTED LOWER					
		PANELLING					
		B) COACH WITH BATTERIES CHARGER 110V OUTLET					
		C) COACH WITH BATTERIES CHARGER 110V OUTLET &					
		FLUTED LOWER PANELLING					

From Y-7046 Up to 8-9339	DATE: 01/2014	PAGE: Y2-1879-60

REAR SERVICE DOOR - R.H. SIDE

ITEM	PART	DESCRIPTION	XL45	MTH40	MTH45	MTH45S	NOTE
NS	287256	LEVER PIVOT Up to 9-9095 / REPLACED BY: 289496	1		1		
11	288892	LEVER PIVOT From 9-9096			1		
NS	504379	RIVET POP DOME OE 3/16x1/4 SS From 9-9096	1		1		
12	502531	SCREW CAP HEX M6-1.0x16 G8.8 ZP	1		1		
NS	502582	WASHER LO SERR 6.1x16.2x0.9 ZP	2		2		
20	284440	SUPPORT	1		1		
21	504379	RIVET POP DOME OE 3/16x1/4 SS	1		1		
22	505507	STRAP NYLON 1" WIDE / S.L.	1		1		
NS	284439	PLATE, STRAP RETAINING / OBLONG 16.5MM x 25.4MM W/2 HOLES	1		1		
NS	504379	RIVET POP DOME OE 3/16x1/4 SS	2		2		
23	506004	TAPE RUB ADH1 CC POL 3/8" x 1/2" x 20' / GREY 2520X	AR		AR		
24	286141	RUBBER SEAL EXTRUSION / REAR SERVICE DOOR Up to 5-8650 / REPLACED BY: 289941	1		1		
24	289941	RUBBER SEAL EXTRUSION / REAR SERVICE DOOR From 5-8651 / REPLACED BY: 288942	1		1		
25	780278	PIN, STRIKER STUD	1		1		
26	500316	SCREW MA FL PH 1/4-28x3/4 SS	1		1		
27	283326	STRIKER PLATE, MOUNTING / 60MM X 25MM	1		1		
28	282683	ROD, 72MM C/C / W/R.H. DOOR Up to 9-9095	1		1		
28	288824	ROD, 290.3MM C/C / W/R.H. DOOR From 9-9096			1		
29	507331	PROTECTOR CAP / BLACK / .137 I.D. x .500	1		1		
30	504334	BUMPER RUBBER / .625 OD x .406 TH x .156 HOLE	2		2		

From Y-7046 Up to 8-9339	DATE: 01/2014	PAGE: Y2-1879-60

REAR SERVICE DOOR - R.H. SIDE

ITEM	PART	DESCRIPTION	XL45	MTH400	MTH445	MTH455S	NOTE

From Y-7046 Up to 2-7913	DATE: 01/2014	PAGE: Y2-1880-00

WINDSHIELD & CHANNEL - W/1 LOCK

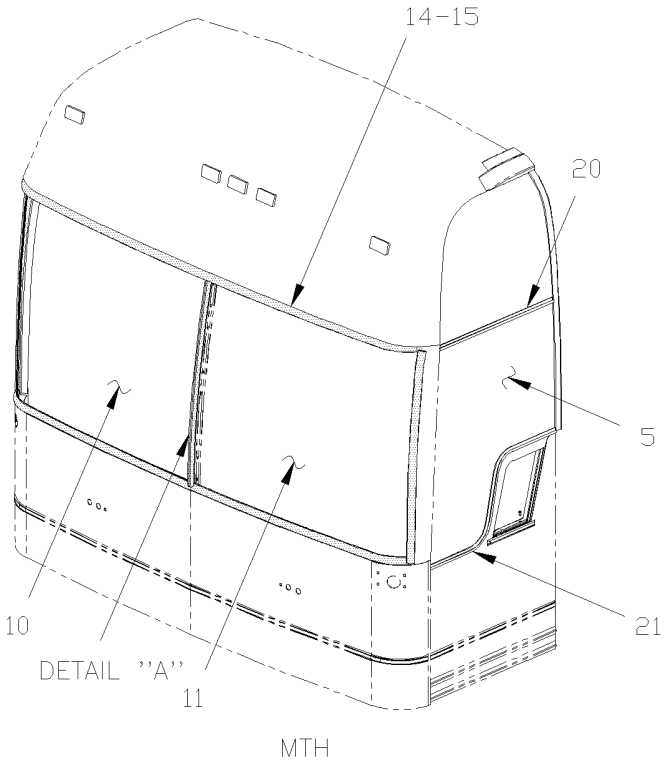

MTH

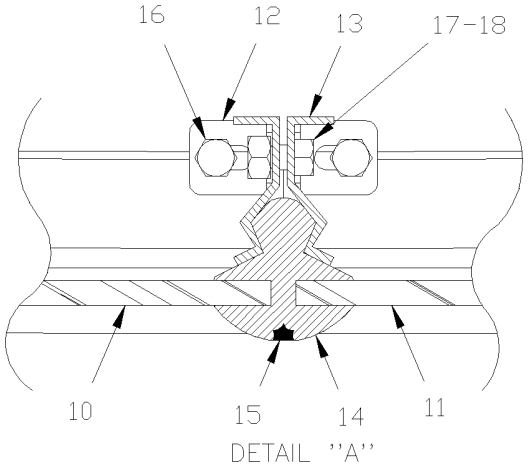

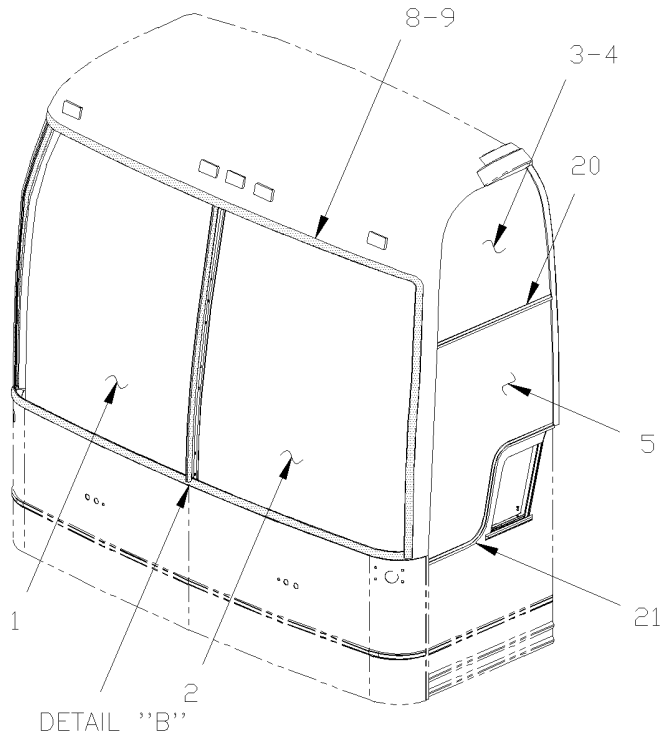

BUS + MTH

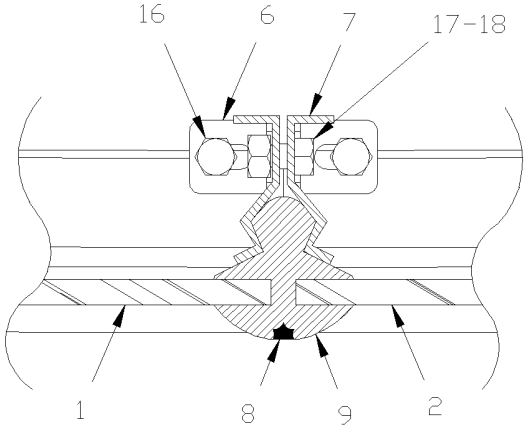

From Y-7046 Up to 2-7913	DATE: 01/2014	PAGE: Y2-1880-00

WINDSHIELD & CHANNEL - W/1 LOCK

ITEM	PART	DESCRIPTION	XL45	MTH40	MTH45	MTH45S	NOTE
1	300386	WINDSHIELD R.H.	1			1	A
1	300393	WINDSHIELD R.H. MTH83" LARGE Up to Y-7128		1	1		
1	300395	WINDSHIELD R.H. MTH86" LARGE		1	1	1	
2	300387	WINDSHIELD L.H.	1			1	A
2	300392	WINDSHIELD L.H. MTH83" LARGE Up to Y-7128		1	1		
2	300394	WINDSHIELD L.H. MTH86" LARGE		1	1	1	
3	293241	GLASS UPPER L.H. THERMOS	1				
3	293242	GLASS UPPER L.H. SINGLE	1				
3	293260	GLASS UPPER L.H. THERMOS		1	1	1	
3	293258	GLASS UPPER L.H. SINGLE		1	1	1	
4	293240	GLASS UPPER R.H. THERMOS	1				
4	293239	GLASS UPPER R.H. SINGLE	1				
4	293261	GLASS UPPER R.H. THERMOS		1	1	1	
4	293259	GLASS UPPER R.H. SINGLE		1	1	1	
5	293076	GLASS DRIVER`S WINDOW	1	1	1		
5	293081	GLASS DRIVER'S WINDOW / MTH 86" & 89"		1	1	1	
NS	506962	RUB POL 1/4 X 7/16 X 1 LG	AR				
6	293237	POST R.H. WINDSHIELD / WITH LARGE / REPLACED BY: 293070	1	1	1	1	
7	293236	POST L.H. WINDSHIELD / WITH LARGE / REPLACED BY: 293689	1	1	1	1	
8	293059	STRIP, LOCKING / S.L.	AR	AR	AR	AR	
9	293243	WINDSHIELD RUBBER SEAL / WITH LARGE / SINGLE LOCK Up to 1-7583 / REPLACED BY: 293394		1	1	1	
9	293394	WINDSHIELD RUBBER SEAL / WITH LARGE / SINGLE LOCK From 1-7584	1	1	1	1	
10	473614	WINDSHIELD R.H. MTH83" SMALL Up to Y-7128		1	1		
10	300388	WINDSHIELD R.H. MTH86" SMALL		1	1	1	
11	473613	WINDSHIELD L.H. MTH83" SMALL		1	1		
11	300389	WINDSHIELD L.H. MTH86" SMALL		1	1	1	
12	293058	POST L.H. WINDSHIELD / WITH SMALL		1	1	1	
13	293057	POST R.H. WINDSHIELD / WITH SMALL		1	1	1	
14	292914	WINDSHIELD RUBBER SEAL / WITH SMALL / SINGLE LOCK		1	1	1	
15	293059	STRIP, LOCKING / S.L.		AR	AR	AR	
16	500948	SCREW TC CAP HEX 1/4-20x1 ZP	4	4	4	4	
17	5001106	SCREW CAP HEX M6-1.0x10 G8.8 ZP	8	8	8	8	
18	502570	WASHER LO SPT 6.1x11.8x1.6 SS	8	8	8	8	
20	286454	DRIP MOULDING OVER DRIVER'S WINDOW	1	1	1	1	
20	474082	DRIP MOULDING OVER ENTRANCE DOOR / S.B.	1	1	1	1	
21	286448	DRIP MOULDING "S" BUS & MTH83"	1	1	1		
21	286646	DRIP MOULDING "S" MTH86" & MTH89"		1	1	1	
NS	293842	HANDLE ASSY (TO FIX FRONT GLASS CHANNEL)	1				
. NS	293843	. END TIP "PRÉVOST" AMP 548551-1	AR				
		A) ALSO USE WITH MTH 89"					

From 2-7914 Up to 8-9339	DATE: 01/2014	PAGE: Y2-1880-01
WINDSHIELD & CHANNEL - W/2 LOCK		

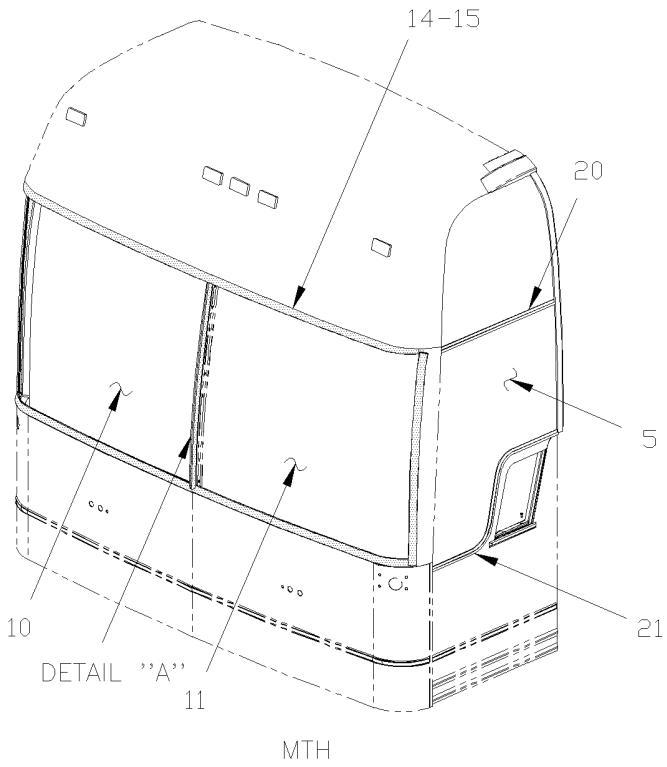

MTH

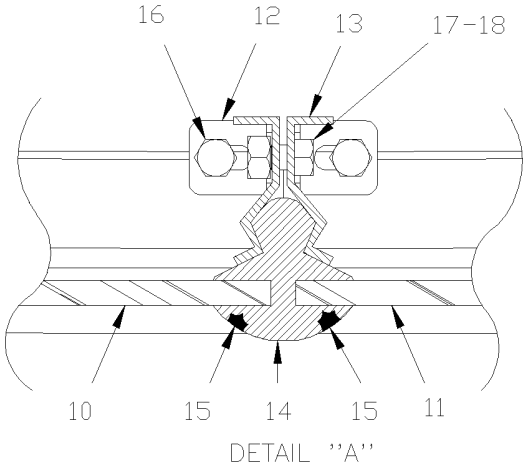

DETAIL ''A''

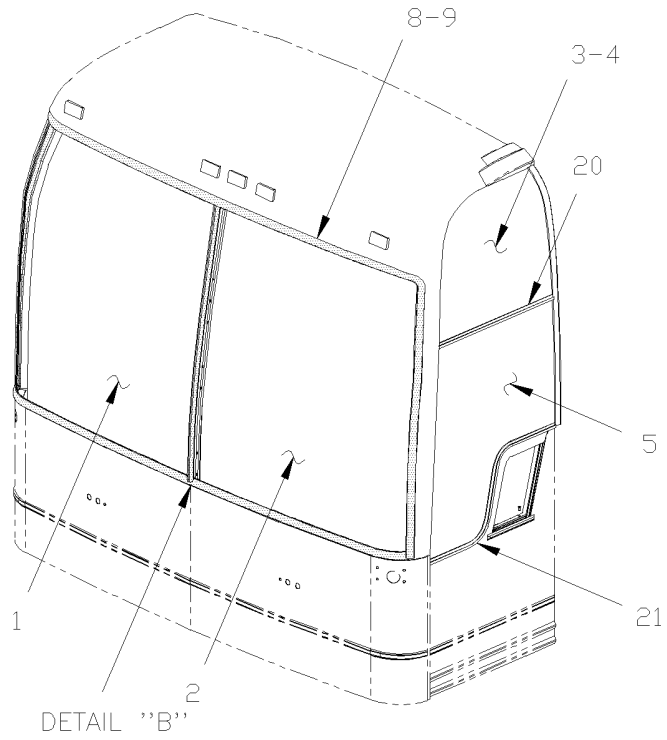

BUS + MTH

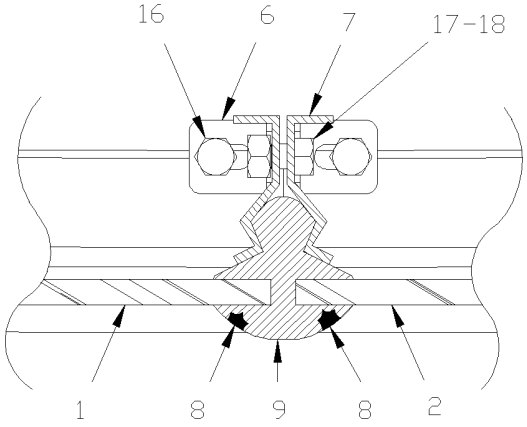

DETAIL ''B''

From 2-7914 Up to 8-9339	DATE: 01/2014	PAGE: Y2-1880-01

WINDSHIELD & CHANNEL - W/2 LOCK

ITEM	PART	DESCRIPTION	XL45	MTH40	MTH45	MTH45S	NOTE
1	300476	WINDSHIELD R.H.	1			1	A
1	300490	WINDSHIELD R.H MTH86" LARGE		1	1		
2	300475	WINDSHIELD L.H.	1			1	A
2	300489	WINDSHIELD L.H MTH86" LARGE		1	1		
3	293241	GLASS UPPER L.H. THERMOS Up to 6-8906	1				
3	293242	GLASS UPPER L.H. SINGLE Up to 6-8906	1				
3	293260	GLASS UPPER L.H. THERMOS Up to 4-4358		1	1	1	
3	293241	GLASS UPPER L.H. THERMOS From 4-4359		1	1	1	
3	293258	GLASS UPPER L.H. SINGLE Up to 4-8358		1	1	1	
4	293240	GLASS UPPER R.H. THERMOS Up to 6-8906	1				
4	293239	GLASS UPPER R.H. SINGLE Up to 6-8906	1				
4	293261	GLASS UPPER R.H. THERMOS Up to 4-8358		1	1	1	
4	293240	GLASS UPPER R.H. THERMOS From 4-8359		1	1	1	
4	293259	GLASS UPPER R.H. SINGLE Up to 4-8358		1	1	1	
5	293076	GLASS DRIVER`S WINDOW Up to 6-8906	1				
5	293081	GLASS DRIVER'S WINDOW / MTH 86" & 89"		1	1	1	
6	293070	POST R.H. WINDSHIELD / WITH LARGE	1				
7	293689	POST L.H. WINDSHIELD / WITH LARGE	1				
8	293059	STRIP, LOCKING / S.L.	AR				
9	293393	WINDSHIELD RUBBER SEAL / WITH LARGE / DOUBLE LOCK	1				
. NS	MI03-22	. SEE MAINTENANCE INFORMATION	1				
10	300491	WINDSHIELD R.H MTH86" SMALL		1	1		
11	300492	WINDSHIELD L.H MTH86" SMALL		1	1		
12	293691	POST L.H. WINDSHIELD / WITH SMALL		1	1		
13	293690	POST R.H. WINDSHIELD / WITH SMALL		1	1		
14	293641	WINDSHIELD RUBBER SEAL / WITH SMALL / DOUBLE LOCK		1	1		
. NS	MI03-22	. SEE MAINTENANCE INFORMATION		1	1		
15	293059	STRIP, LOCKING / S.L.		AR	AR	AR	
16	500948	SCREW TC CAP HEX 1/4-20x1 ZP	4				
17	5001106	SCREW CAP HEX M6-1.0x10 G8.8 ZP	8				
18	502570	WASHER LO SPT 6.1x11.8x1.6 SS	8				
20	286454	DRIP MOULDING OVER DRIVER'S WINDOW	1				
20	474082	DRIP MOULDING OVER ENTRANCE DOOR / S.B. Up to 5-8468	1				
20	477516	DRIP MOULDING OVER ENTRANCE DOOR / B.A. From 5-8469	1				
21	286448	DRIP MOULDING "S" BUS & MTH83"	1				
NS	293842	HANDLE ASSY (TO FIX FRONT GLASS CHANNEL)	1				
. NS	293843	. END TIP "PRÉVOST" AMP 548551-1	AR				
		A) ALSO USE WITH MTH 89"					

From Y-7046 Up to 6-8906	DATE: 01/2014	PAGE: Y2-1884-00
SIDE WINDOW - BUS		

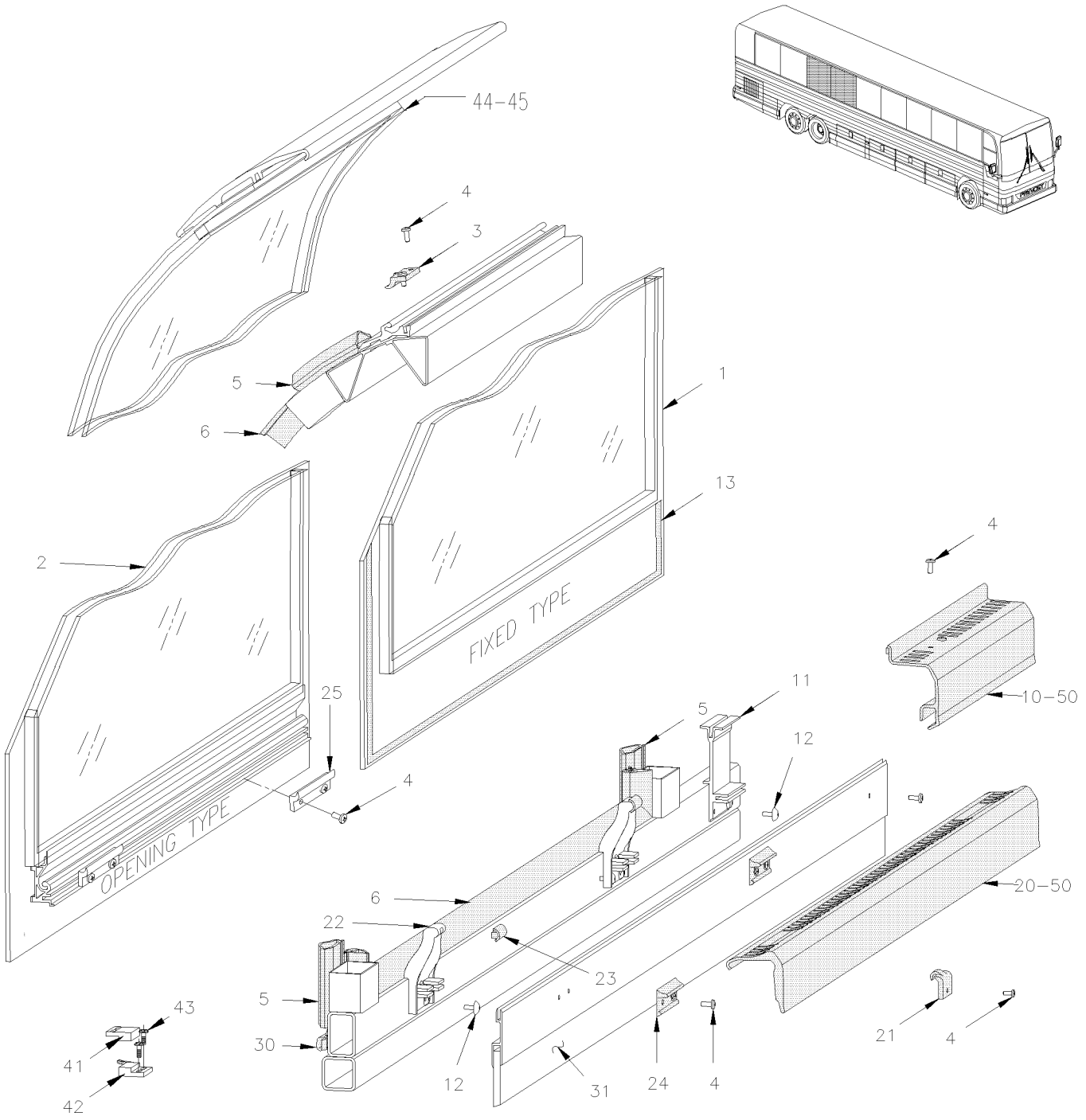

From Y-7046 Up to 6-8906	DATE: 01/2014	PAGE: Y2-1884-00

SIDE WINDOW - BUS

ITEM	PART	DESCRIPTION	XL45	MTH40	MTH45	MTH45S	NOTE
1	293272	GLASS ASSY, SINGLE 13% 1287.4MM / FIX TYPE Up to 4-8270 / REPLACED BY: 293829	11				
1	293711	GLASS ASSY, SINGLE 13% 1287.4MM / FIX TYPE From 4-8271 Up to 4-8320 / REPLACED BY: 293829	11				
1	293829	GLASS ASSY, SINGLE 13% 1287.4MM / FIX TYPE From 4-8321	11				
1	293274	GLASS ASSY, THERMO 13% 1287.4MM / FIX TYPE Up to 4-8270 / REPLACED BY: 297082	11				
1	293706	GLASS ASSY, THERMO 13% 1287.4MM / FIX TYPE From 4-8271 Up to 4-8320 / REPLACED BY: 297082	11				
1	297082	GLASS ASSY, THERMO 13% 1287.4MM / FIX TYPE From 4-8321	11				
2	293271	GLASS ASSY, SINGLE 13% 1287.4MM / OPEN TYPE Up to 4-8270 / REPLACED BY: 293827	7				
2	293710	GLASS ASSY, SINGLE 13% 1287.4MM / OPEN TYPE From 4-8271 Up to 4-8320 / REPLACED BY: 293827	7				
2	293827	GLASS ASSY, SINGLE 13% 1287.4MM / OPEN TYPE From 4-8321	7				
2	293273	GLASS ASSY, THERMO 13% 1287.4MM / OPEN TYPE Up to 4-8270 / REPLACED BY: 293828	7				
2	293708	GLASS ASSY, THERMO 13% 1287.4MM / OPEN TYPE From 4-8271 Up to 4-8320 / REPLACED BY: 293828	7				
2	293828	GLASS ASSY, THERMO 13% 1287.4MM / OPEN TYPE From 4-8321	7				
NS	405143	DECAL / BLACK STRIP W/DOTTED 1117MM x 118MM	1				B
NS	405067	DECAL / BLACK STRIP 3 1/2" x 46"	1				B
3	293124	STOPPER BLOCK	4				
3	293125	STOPPER BLOCK SEPARATOR / <> 2 GLASS	16				
4	500611	SCREW TC BDG PH #10-24x1/2 ZP	94				
5	293250	RUBBER SEAL 1292MM / <> EACH WINDOW	16				
5	293135	RUBBER SEAL 1315MM / W/83"	2				
NS	507000	TAPE RUB ADH2 POL 3/16" x 1/4" x 50' / BLACK V2206	AR				
6	293488	WINDOW SEAL 1249MM X 1219MM / WITH OPEN TYPE ONLY / REPLACED BY: 294048	7				
6	294048	KIT, WINDOW RETAINER SEAL INSTALLATION / WITH OPEN TYPE ONLY	7				
. NS	IS-07028	. SEE INSTRUCTION SHEET	1				
6	Call Order Desk	FRAME W/WINDOW SEAL ASSY / WITH OPEN TYPE ONLY SERVICE	7				P
. NS	293941	. FRAME FIBERGLASS SEAL SUPPORT	1				
. NS	293927	. WINDOW SEAL / WITH OPEN TYPE ONLY 1249MM X 1219MM / REPLACED BY: 290060	1				
. NS	290060	. WINDOW SEAL / WITH OPEN TYPE ONLY 1249MM X 1219MM / REPLACED BY: 297267	1				
. NS	297267	. WINDOW SEAL / WITH OPEN TYPE ONLY 1249MM X 1219MM	1				
. NS	506643	. TAPE RUB ADH1 CC NEO 1/8" x 1/2" x 60' / BLACK 2011	AR				
10	293286	FINISHING MOULDING 1098MM W/SINGLE GLASS	10				
10	293285	FINISHING MOULDING 1098MM W/THERMO GLASS	10				
10	293314	FINISHING MOULDING 227MM W/SINGLE GLASS	1				
10	293313	FINISHING MOULDING 227MM W/THERMO GLASS	1				
10	293388	FINISHING MOULDING 1098MM W/SINGLE GLASS W.C.L. SEAT LOCATION	1				
10	293387	FINISHING MOULDING 1098MM W/THERMO GLASS P.W.T.	1				
11	293276	SUPPORT MOULDING	21				
12	504249	RIVET CHY Q PRDG 3/16x3/8 SS / REPLACED BY: 504747	84				
		P) CALL ORDER DESK FOR SPECIFIC APPLICATION					
		(V.I.N.)					
		B) THIS ITEM IS LOCATED ON SIDE WINDOW FORWARD					
		W.C.L. DOOR					

From Y-7046 Up to 6-8906	DATE: 01/2014	PAGE: Y2-1884-00

SIDE WINDOW - BUS

ITEM	PART	DESCRIPTION	XL45	MTH40	MTH45	MTH45S	NOTE
13	683447	ADHESIVE SIKATACK PLUS / BLACK / 23 Liters	AR				
13	683448	ACCELERATOR SIKA / 600ml SAUSAGE	AR				
13	683097	CLEANER SIKA #205 / CLEAR / 1000ml	AR				
13	683446	PRIMER SIKA #206 / BLACK / 1000ml	AR				
13	684685	ADHESIVE SIMSON #ISR 70-03 / BLACK / 310ml CARTRIDGE	AR				
13	683083	ADHESIVE SIKA #252 / BLACK / 600 ml SAUSAGE	AR				
20	293284	HANDLE WINDOW OPENING 1098MM	7				
21	293353	SUPPORT "J" FORM / ALLUMINUM / REPLACED BY: 791007	14				
21	791007	SUPPORT W/STOPPER (ONE PIECE) SERVICE	14				
22	293235	SUPPORT	14				
23	292837	CUSHION 2.0MM TH / BLACK PLASTIC	14				
23	298215	CUSHION 1.5MM TH / BLACK PLASTIC	AR				
23	298225	CUSHION 2.5MM TH / BLACK PLASTIC	AR				
23	680066	GLUE / ADBOND 5014 ADH 23.6ML BOTTLE	AR				
24	293299	PROTECTOR	14				
25	293124	STOPPER BLOCK	14				
25	791007	SUPPORT W/STOPPER (ONE PIECE) SERVICE	14				
30	293281	RUBBER SEAL EXTRUSION / ADHESIVE / LOWER WINDOW	AR				
NS	293087	EMERGENCY PLEXIGLASS WINDOW	1				A
NS	293189	SUPPORT	2				A
NS	293216	DECAL	1				A
NS	504114	RIVET POP DOME OE 3/16x1/4 AL	4				A
NS	5001381	SCREW TC CAP HEX 1/4-20x1/2 ZP	2				A
NS	506004	TAPE RUB ADH1 CC POL 3/8" x 1/2" x 20' / GREY 2520X	AR				A
31	Y2-1833-00	**WINDOW FINISHING CAP & WALL**					
41	064679	MAGNET SENSOR ASSY W/TAPE DUAL LOCK	7				
42	064678	SWITCH MAGNETIC ASSY W/TAPE DUAL LOCK	7				
NS	293345	SUPPORT / SWITCH MAGNETIC	7				
43	504248	RIVET CHY Q PRDG 3/16x1/4 SS	14				
44	293647	INSILATING STRIP ASSY / ALUMINUM "OPTION"	7				O
45	5060037	TAPE RUB ADH1 CC POL 1/4" x 1/2" x 35' / BLACK H1C	AR				O
50	Y2-1829-00	**ACCESSORIES PASSENGER'S SEAT - "PREVOST"**					
		A) THIS ITEM IS LOCATED IN BAGGAGE COMPARTMENT					
		O) "OPTION" UPPER WINDOW					

From Y-7046 Up to 6-8906	DATE: 01/2014	PAGE: Y2-1884-00

SIDE WINDOW - BUS

ITEM	PART	DESCRIPTION	XL45	MTH400	MTH445	MTH445S	NOTE

From Y-7046 Up to 8-9339	DATE: 01/2014	PAGE: Y2-1884-50
SIDE WINDOW - MTH		

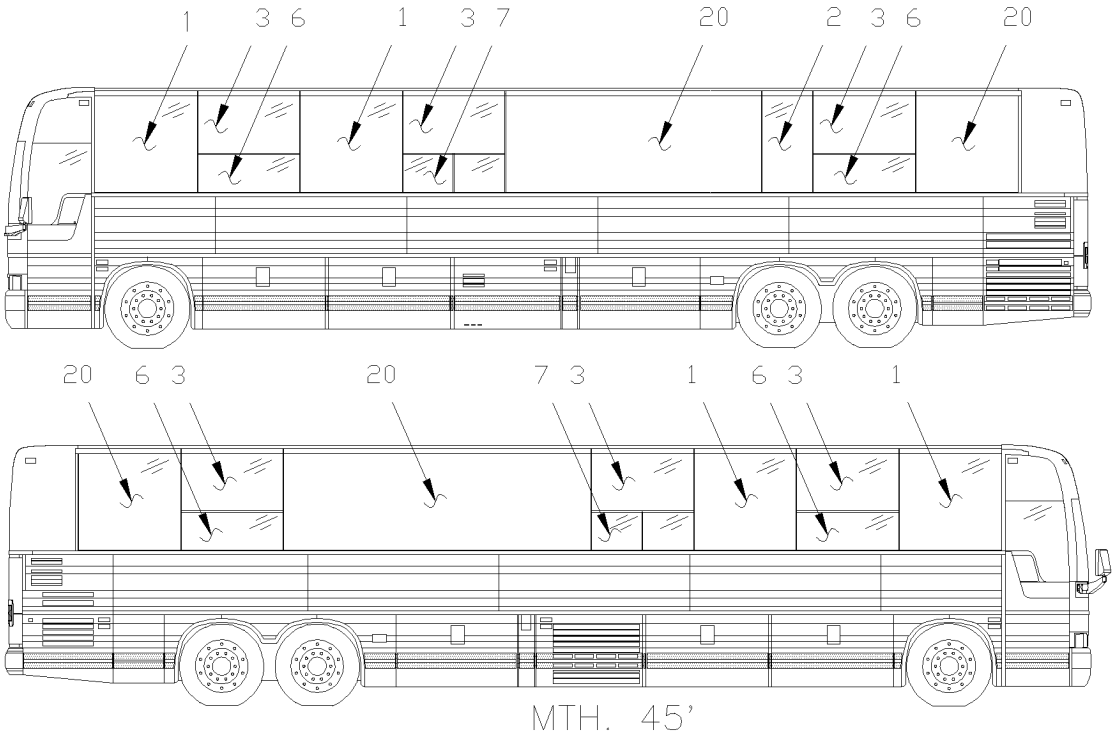

MTH. 45'

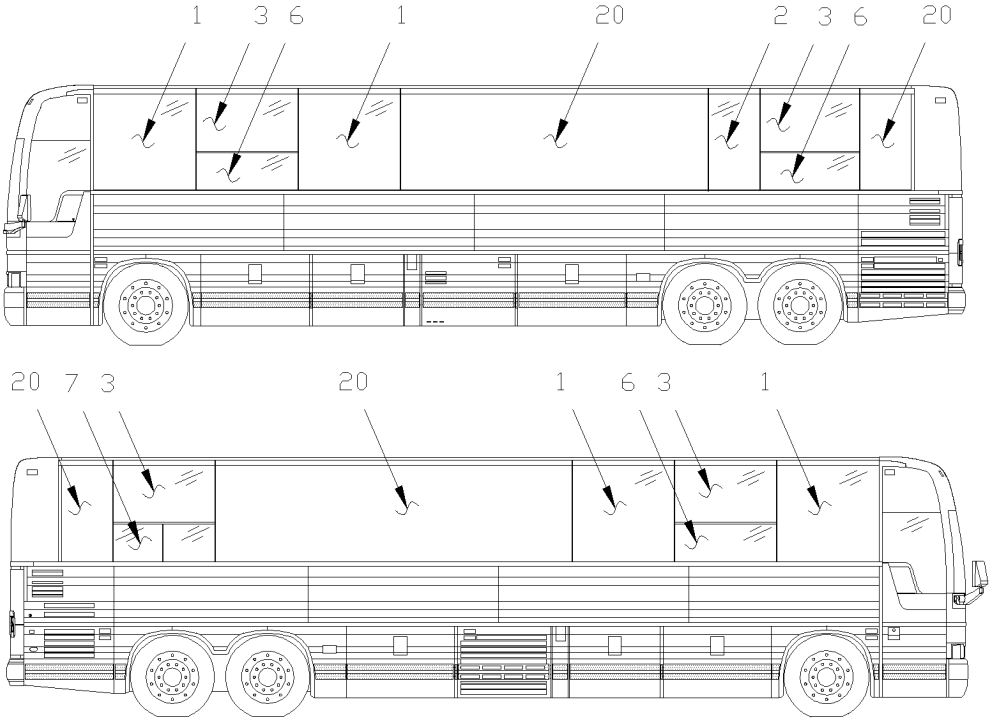

MTH. 40'

From Y-7046 Up to 8-9339	DATE: 01/2014	PAGE: Y2-1884-50
SIDE WINDOW - MTH		

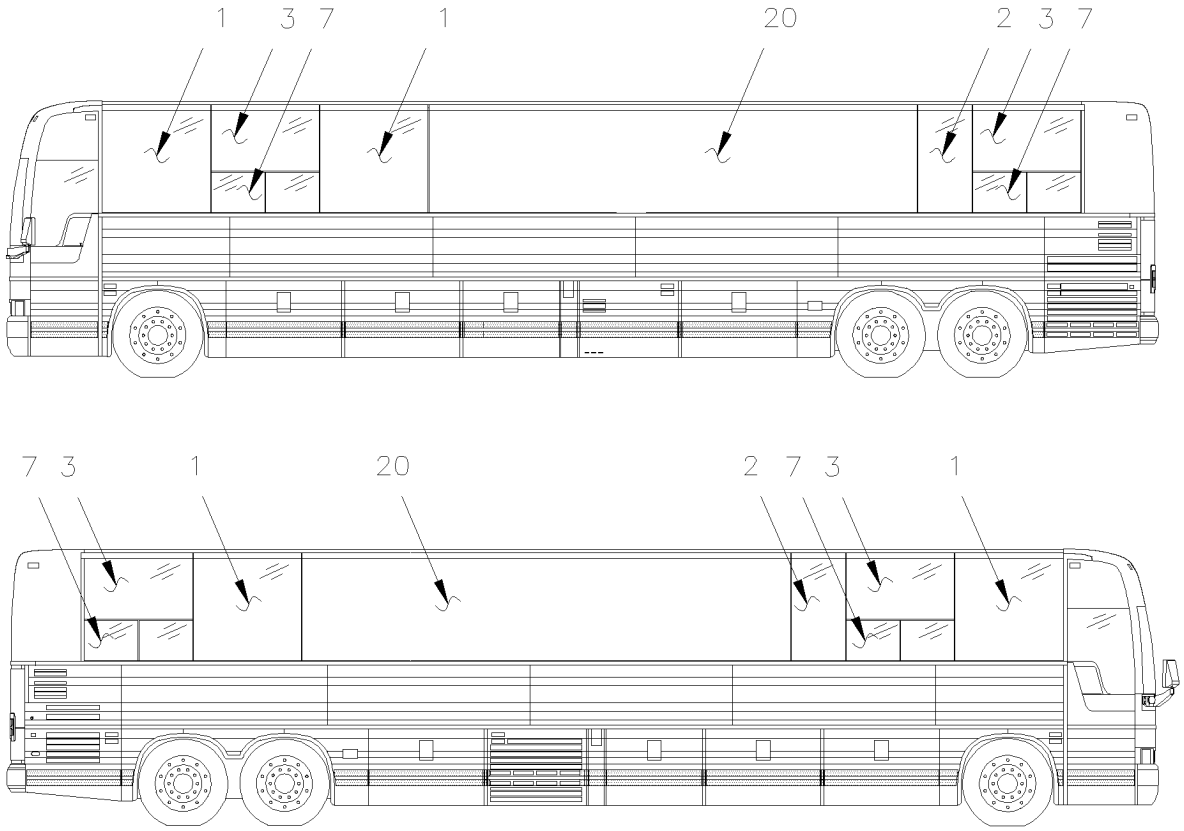

MTH 45' ENT.

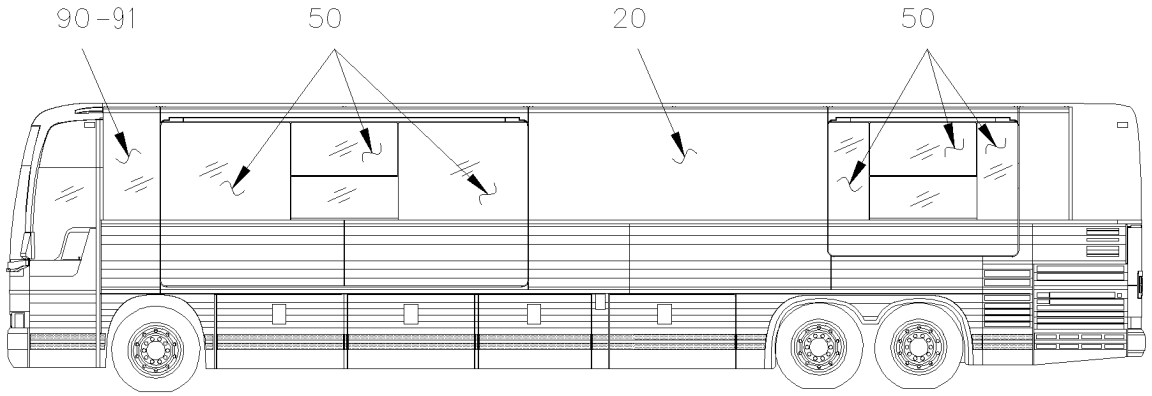

MTH. 45' WITH "SLIDE-OUT"

From Y-7046 Up to 8-9339	DATE: 01/2014	PAGE: Y2-1884-50
SIDE WINDOW - MTH		

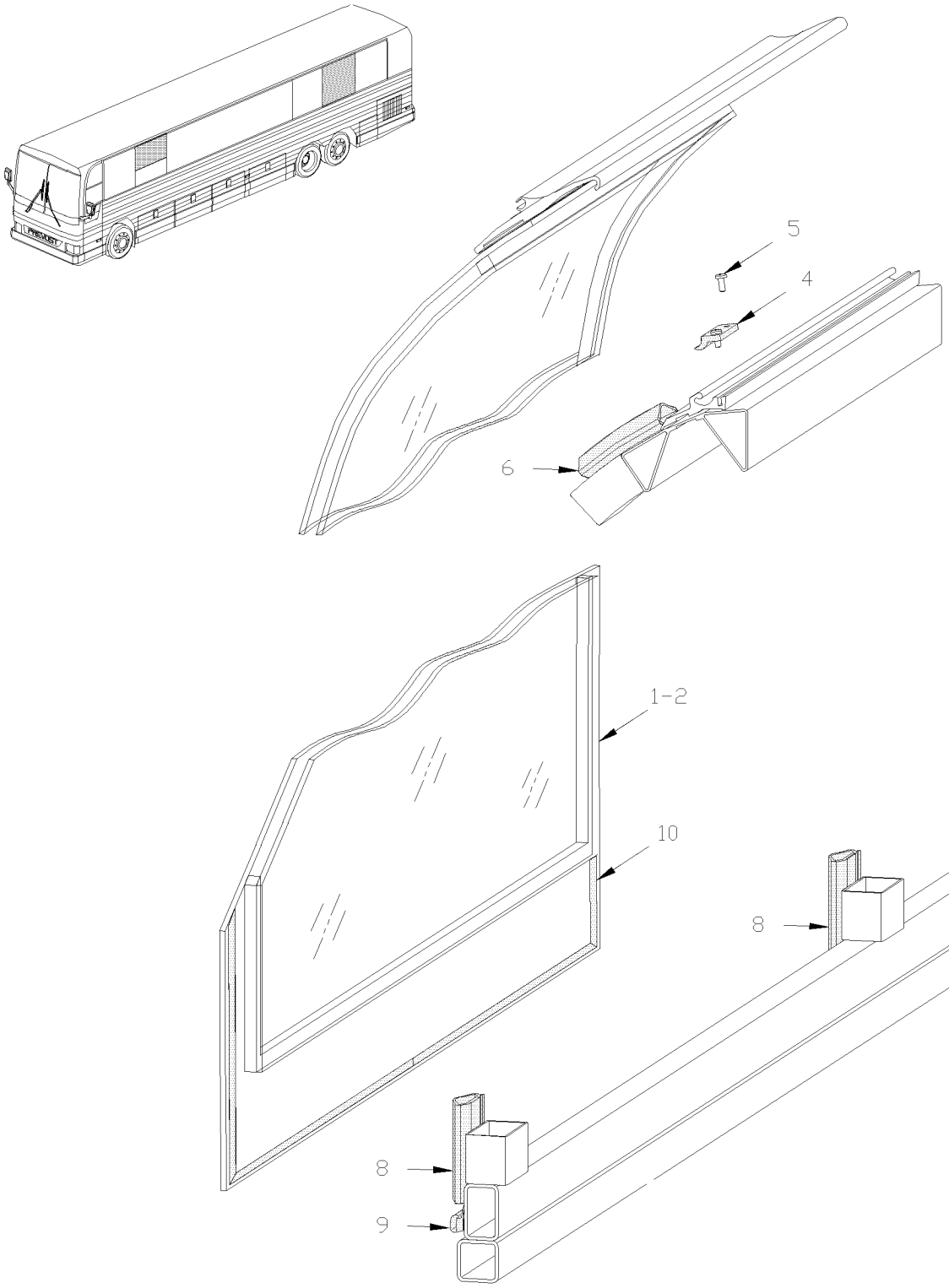

From Y-7046 Up to 8-9339	DATE: 01/2014	PAGE: Y2-1884-50
SIDE WINDOW - MTH		

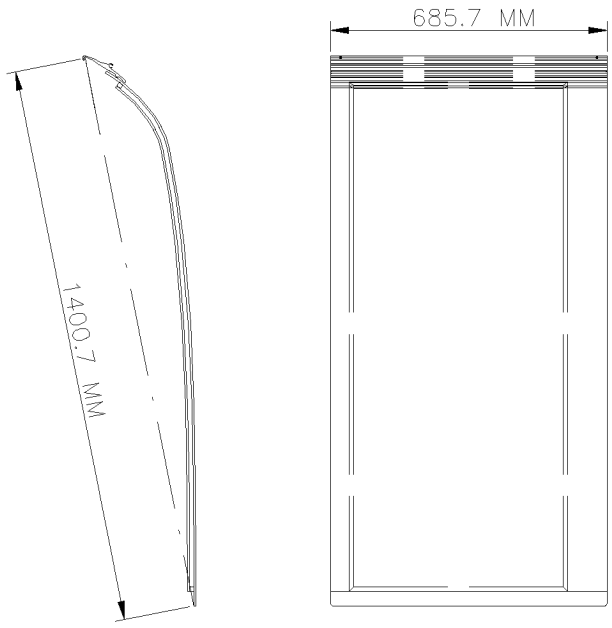

690038

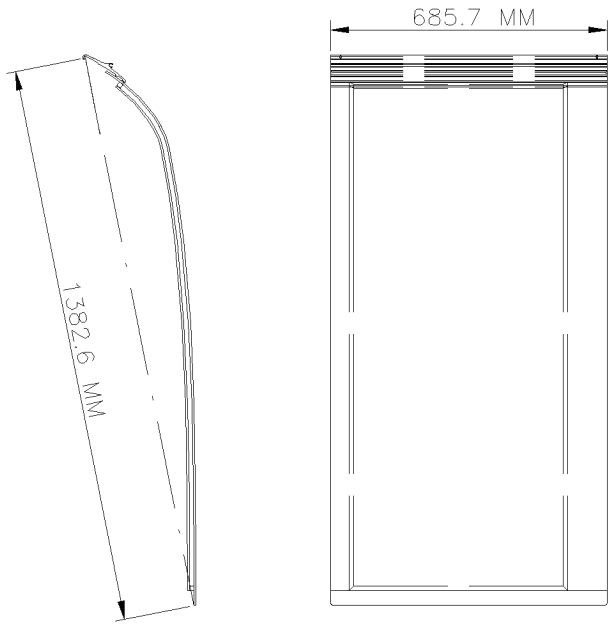

293736

From Y-7046 Up to 8-9339	DATE: 01/2014	PAGE: Y2-1884-50

SIDE WINDOW - MTH

ITEM	PART	DESCRIPTION	XL45	MTH40	MTH45	MTH45S	NOTE
1	293130	GLASS ASSY, SINGLE 13% 1287.4MM / W/83" MTH Up to Y-7128		AR	AR		
1	293132	GLASS ASSY, THERMO 13% 1287.4MM / W/83" MTH Up to Y-7128		AR	AR		
1	293177	GLASS ASSY, SINGLE 13% 1287.4MM / W/86" MTH Up to 4-8270 / REPLACED BY: 297084		AR	AR	AR	
1	297084	GLASS ASSY, SINGLE 13% 1287.4MM / W/86" MTH From 4-8271		AR	AR	AR	
1	293178	GLASS ASSY, THERMO 13% 1287.4MM / W/86" MTH Up to 4-8270 / REPLACED BY: 297083		AR	AR	AR	
1	297083	GLASS ASSY, THERMO 13% 1287.4MM / W/86" MTH From 4-8271		AR	AR	AR	
2	293327	GLASS ASSY, THERMO 13% 685.7MM / W/83" MTH Up to Y-7128		AR	AR		
2	293326	GLASS ASSY, SINGLE 13% 685.7MM / W/83" MTH Up to Y-7128		AR	AR		
2	293329	GLASS ASSY, THERMO 13% 685.7MM / W/86" MTH			AR	AR	
2	293328	GLASS ASSY, SINGLE 13% 685.7MM / W/86" MTH			AR	AR	
3	293133	GLASS ASSY, SINGLE 13% / UPPER 1287.4MM / W/83" MTH Up to Y-7128		AR	AR		
3	293134	GLASS ASSY, THERMO 13% / UPPER 1287.4MM / W/83" MTH Up to Y-7128		AR	AR		
3	293179	GLASS ASSY, SINGLE 13% / UPPER 1287.4MM / W/86" MTH Up to 4-8270 / REPLACED BY: 297085		AR	AR	AR	
3	297085	GLASS ASSY, SINGLE 13% / UPPER 1287.4MM / W/86" MTH From 4-8271		AR	AR	AR	
3	293180	GLASS ASSY, THERMO 13% / UPPER 1287.4MM / W/86" MTH Up to 4-8270 / REPLACED BY: 293942		AR	AR	AR	
3	297081	GLASS ASSY, THERMO 13% / UPPER 1287.4MM / W/86" MTH Up to 4-8270 / REPLACED BY: 293942		AR	AR	AR	
3	293942	GLASS ASSY, THERMO 13% / UPPER 1287.4MM / W/86" MTH From 4-8271		AR	AR	AR	
4	293125	STOPPER BLOCK SEPARATOR / <> 2 GLASS		AR	AR	AR	
4	293124	STOPPER BLOCK		AR	AR	AR	
5	500611	SCREW TC BDG PH #10-24x1/2 ZP		AR	AR	AR	
6	Y2-1884-60	**AWNING WINDOW - MTH**					
6	Y2-1884-65	**ELECTRICAL AWNING WINDOW ASSY**					
7	790458	**SLIDING WINDOW L.H. - MTH From Y-7046 Up to 7-9188**					
7	790459	**SLIDING WINDOW R.H. - MTH From Y-7046 Up to 7-9286**					
7	Y2-1884-80	**ELECTRICAL SLIDING WINDOW ASSY**					
8	293135	RUBBER SEAL 1315MM / W/83" Up to Y-7128		6	6		
8	293136	RUBBER SEAL 1391MM W/86" & 89"		6	6	6	
8	293250	RUBBER SEAL 1292MM / <> EACH WINDOW		8	8		
8	293251	RUBBER SEAL 1368MM / 86"		8	8	8	
9	293281	RUBBER SEAL EXTRUSION / ADHESIVE / LOWER WINDOW		AR	AR	AR	
10	683097	CLEANER SIKA #205 / CLEAR / 1000ml		AR	AR	AR	
10	683446	PRIMER SIKA #206 / BLACK / 1000ml		AR	AR	AR	
10	683447	ADHESIVE SIKATACK PLUS / BLACK / 23 Liters		AR	AR	AR	
10	683448	ACCELERATOR SIKA / 600ml SAUSAGE		AR	AR	AR	
20	Y2-1854-50	**SIDE PANELS - MTH**					
50	Y2-1884-90	**"SLIDE-OUT" - GLASS - MTH**					
50	Y2-1884-91	**"SLIDE-OUT" - GLASS - MTH**					
90	690015	GLASS ASSY SINGLE 685.7MM W/86" 685.7MM x 1400.7MM Up to 4-8251			1		A
90	690038	GLASS ASSY THERMO 685.7MM W/86" 685.7MM x 1400.7MM Up to 4-8251			1		A
90	293736	GLASS ASSY THERMO 685.7MM W/86" / STREETSIDE 685.7MM x 1382.6MM O.E.M. From 4-8252			1		A
		A) USE ONLY WITH FRONT "SLIDE-OUT"					

From Y-7046 Up to 8-9339	DATE: 01/2014	PAGE: Y2-1884-50

SIDE WINDOW - MTH

ITEM	PART	DESCRIPTION	XL45	MTH40	MTH45	MTH45S	NOTE
90	293993	GLASS ASSY THERMO 685.7MM W/86" / STREETSIDE 685.7MM x 1382.6MM SERVICE From 4-8252			1		A
91	293977	GLASS THERMO 685.7MM W/86" CURBSIDE CONVERTER'S OPTION			AR		B
		A) USE ONLY WITH FRONT "SLIDE-OUT"					
		B) SOME CONVERTER'S USE WITH FRONT "SLIDE-OUT" CURBSIDE "SPECIAL ORDER" / THIS IS NOT A PREVOST INSTALLATION.					

From Y-7046 Up to 7-9188	DATE: 01/2014	PAGE: 790458
SLIDING WINDOW L.H. - MTH		

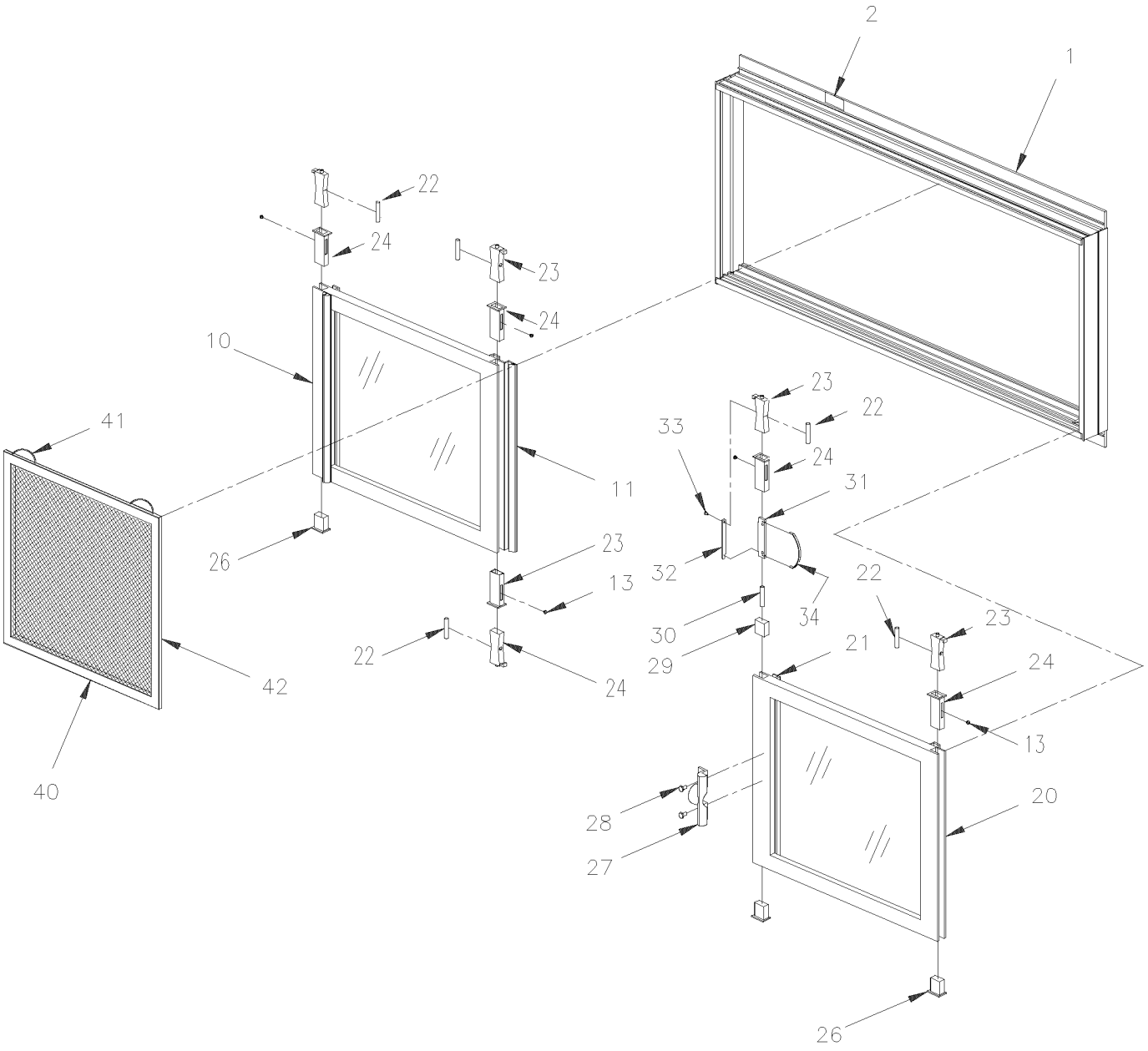

From Y-7046 Up to 7-9188	DATE: 01/2014	PAGE: 790458

SLIDING WINDOW L.H. - MTH

ITEM	PART	DESCRIPTION	XL45	MTH40	MTH45	MTH45S	NOTE
		SLIDING WINDOW L.H. - MTH				1	1
1	790509	. MAIN FRAME ASSY LEFT				1	1
NS	790488	. SEAL EXTERIOR				1	1
2	792993	. DECAL, EMERGENCY EXIT				1	1
10	790511	. WINDOW FIX / SLIDING LEFT				1	1
11	790519	. RUBBER				AR	AR
13	790517	. STOP				5	5
20	790513	. WINDOW SLIDING / SLIDING LEFT				1	1
21	790526	. GASKET CENTRAL				AR	AR
NS	791008	. KIT SLIDING LOCK PIN UPPER & LOWER				5	5
. 22	790518	. . SPRING				1	1
. 23	790489	. . LOCK PIN				1	1
. 24	790516	. . COVER, SPRING				1	1
. 25	790517	. . STOP				1	1
. 26	790515	. . POINT SLIDING				1	1
27	790522	. HANDLE				1	1
28	790524	. SCREW				2	2
29	790523	. BLOCK				1	1
30	790520	. SPRING, COMPRESSION				1	1
31	790491	. LOCK				1	1
32	790490	. ROD				1	1
33	790525	. SCREW				2	2
34	N.P.N.	. SPRING TENSIONER				1	14
40	790527	. SCREEN				1	1
41	790521	. . SPRING SCREEN				2	2
42	790528	. . SCHLEGEL BLACK 3/8" (20FT)				AR	AR
		4) NO PARTS NUMBER					

From Y-7046 Up to 7-9286	DATE: 01/2014	PAGE: 790459
SLIDING WINDOW R.H. - MTH		

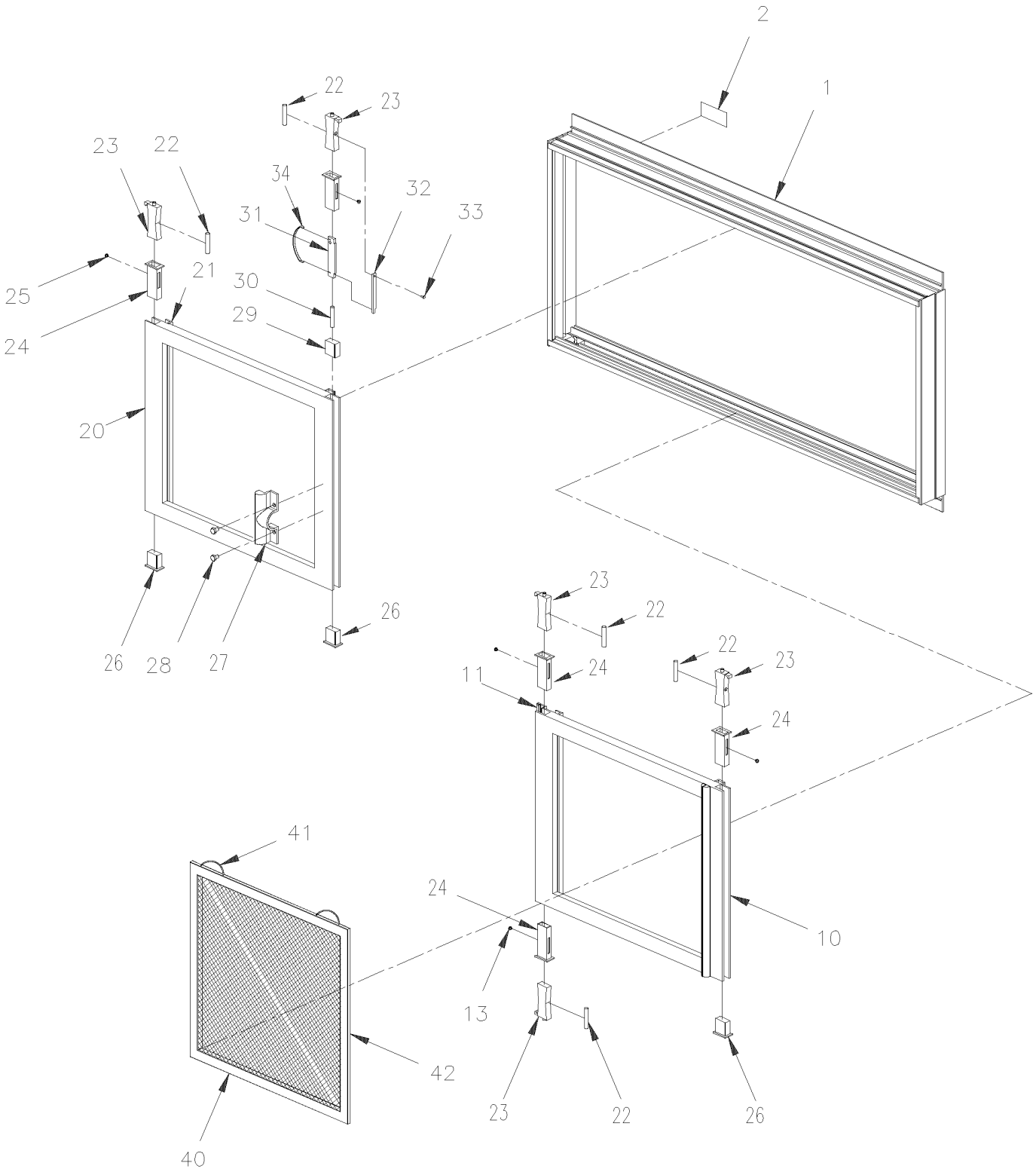

From Y-7046 Up to 7-9286	DATE: 01/2014	PAGE: 790459

SLIDING WINDOW R.H. - MTH

ITEM	PART	DESCRIPTION	XL45	MTH40	MTH45	MTH45S	NOTE
		SLIDING WINDOW R.H. - MTH				1	1
1	790510	. MAIN FRAME ASSY RIGHT				1	1
NS	790488	. SEAL EXTERIOR				1	1
2	792993	. DECAL, EMERGENCY EXIT				1	1
10	790512	. WINDOW FIX / SLIDING RIGHT				1	1
11	790519	. RUBBER				AR	AR
13	790517	. STOP				4	4
20	790514	. WINDOW SLIDING / SLIDING RIGHT				1	1
21	790526	. GASKET CENTRAL				AR	AR
21	791008	. KIT SLIDING LOCK PIN UPPER & LOWER				5	5
. 22	790518	. . SPRING				1	1
. 23	790489	. . LOCK PIN				1	1
. 24	790516	. . COVER, SPRING				1	1
. 25	790517	. . STOP				1	1
. 26	790515	. . POINT SLIDING				1	1
27	790522	. HANDLE				1	1
28	790524	. SCREW				2	2
29	790523	. BLOCK				1	1
30	790520	. SPRING, COMPRESSION				1	1
31	790491	. LOCK				1	1
32	790490	. ROD				1	1
33	790525	. SCREW				2	2
34	N.P.N.	. SPRING TENSIONER				1	14
40	790527	. SCREEN				1	1
41	790521	. . SPRING SCREEN				2	2
42	790528	. . SCHLEGEL BLACK 3/8" (20FT)				AR	AR
		4) NO PARTS NUMBER					

From Y-7046 Up to 8-9339	DATE: 01/2014	PAGE: Y2-1884-60
AWNING WINDOW - MTH		

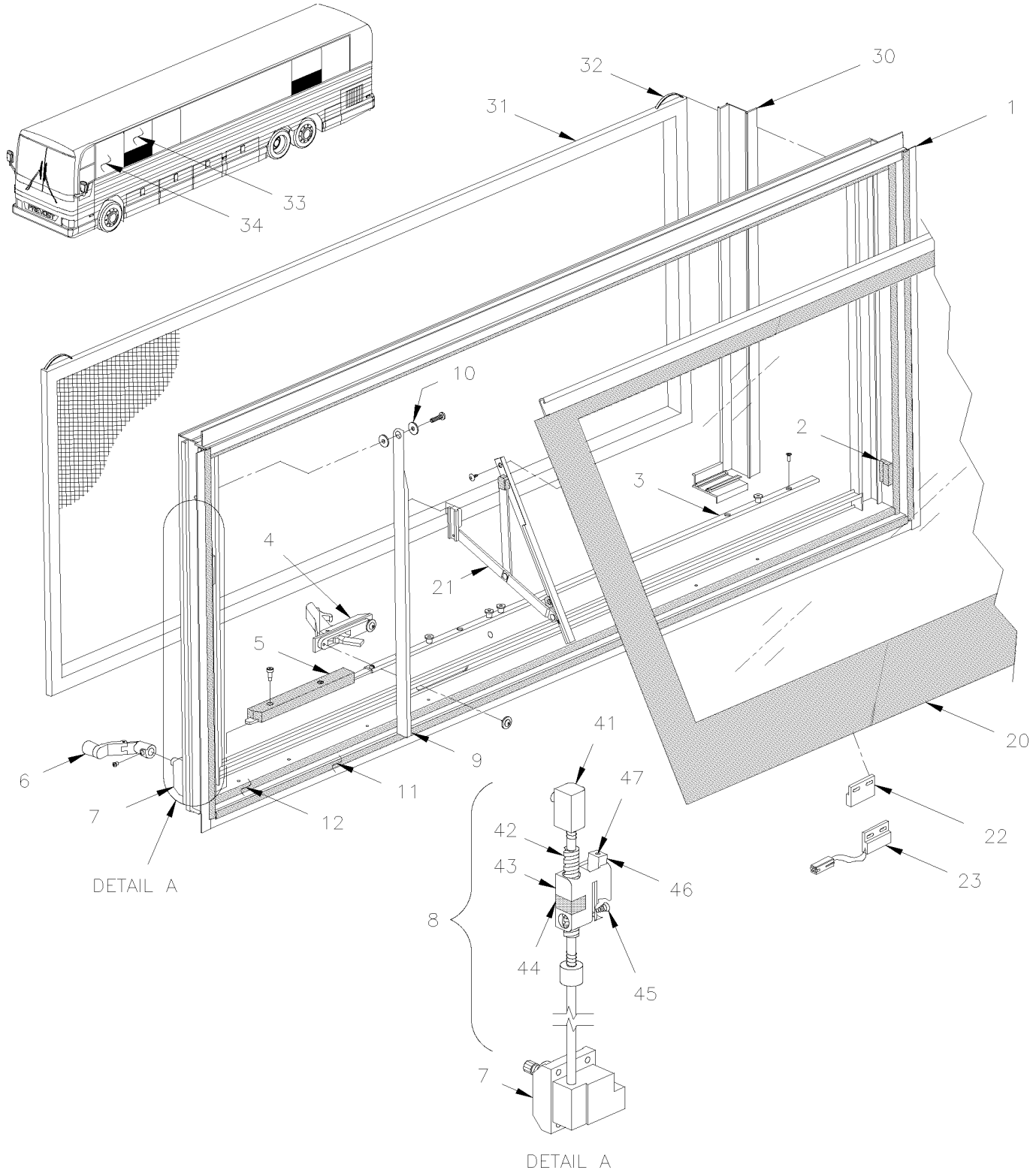

From Y-7046 Up to 8-9339	DATE: 01/2014	PAGE: Y2-1884-60

AWNING WINDOW - MTH

ITEM	PART	DESCRIPTION	XL45	MTH40	MTH45	MTH45S	NOTE
		"WARNING" - "WARNING" - "WARNING"					
		THIS WINDOW IT OBSOLETE,					
		ONLY SOME PARTS ARE AVALIABLE					
	790457	AWNING WINDOW ASSY / REPLACED BY: 790613		AR	AR	AR	
1	790480	. MAIN FRAME ASSY		1	1	1	
2	064360	. SWITCH MAGNETIC ASSY		1	1	1	
3	790493	. RELEASE BAR ASSY		1	1	1	
4	790471	. RELEASE HANDLE ASSY / REPLACED BY: 293526		1	1	1	
4	293526	. RELEASE HANDLE ASSY / RED		1	1	1	
5	790476	. RELEASE EMERGENCY MECHANISM		1	1	1	
6	790467	. CRANK HANDLE		1	1	1	
7	790477	. GEARBOX ASSY		1	1	1	
8	790478	. DRIVE SHAFT MECHANISM ASSY		1	1	1	
9	790492	. CHANNEL SS "V" SHAPE		1	1	1	
10	790487	. BUSHING NYLON		1	1	1	
11	790483	. GASKET EXTERIOR		1	1	1	
12	790484	. GASKET INTERIOR		1	1	1	
20	790481	. GLASS ASSY W/HINGE / REPLACED BY: 790469		1	1	1	
. NS	790469	. . GLASS ONLY		1	1	1	
20	790496	. . STRIKING PLATE		2	2	2	
20	N.P.N.	. . SCREW TC FL PH 8-32 X 5/16		4	4	4	4
21	790479	. . HINGE ASSY		1	1	1	
22	562641	. . MAGNET SENSOR		1	1	1	
23	064360	. SWITCH MAGNETIC ASSY		1	1	1	
30	790472	. INTERIOR MOULDING RETAINER		1	1	1	
31	790473	. SCREEN		1	1	1	
32	790521	. . SPRING SCREEN		2	2	2	
33	Y2-1884-50	**SIDE WINDOW - MTH**					
34	Y2-1884-50	**SIDE WINDOW - MTH**					
41	790532	BEARING BLOCK		1	1	1	
NS		SCREW MA FL PH SS 8-32 X 1/4 / (502715)		1	1	1	
42	790533	ROD ACME		1	1	1	
43	790534	CARRIER BLOCK		1	1	1	
44	790535	BLOCK ACME / PLASTIC		1	1	1	
45	790536	SPRING CONICAL		1	1	1	
46	790537	HOOK / SAFETY		1	1	1	
47	5001429	SCREW MA FL PH M4-0.7x25 EMN		1	1	1	
		4) NO PARTS NUMBER					

From Y-7046 Up to 8-9339	DATE: 01/2014	PAGE: Y2-1884-65
ELECTRICAL AWNING WINDOW ASSY		

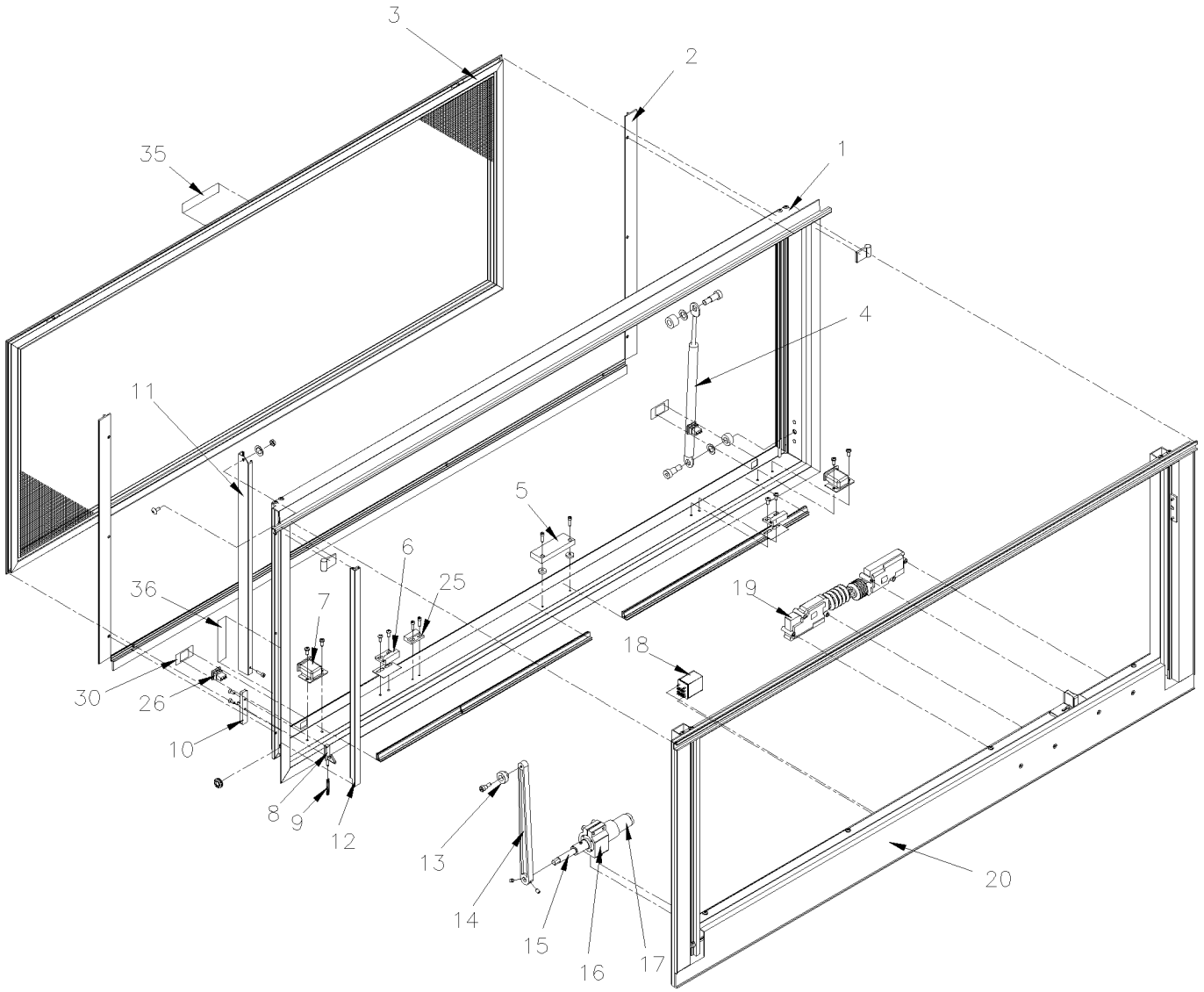

From Y-7046 Up to 8-9339	DATE: 01/2014	PAGE: Y2-1884-65
ELECTRICAL AWNING WINDOW ASSY		

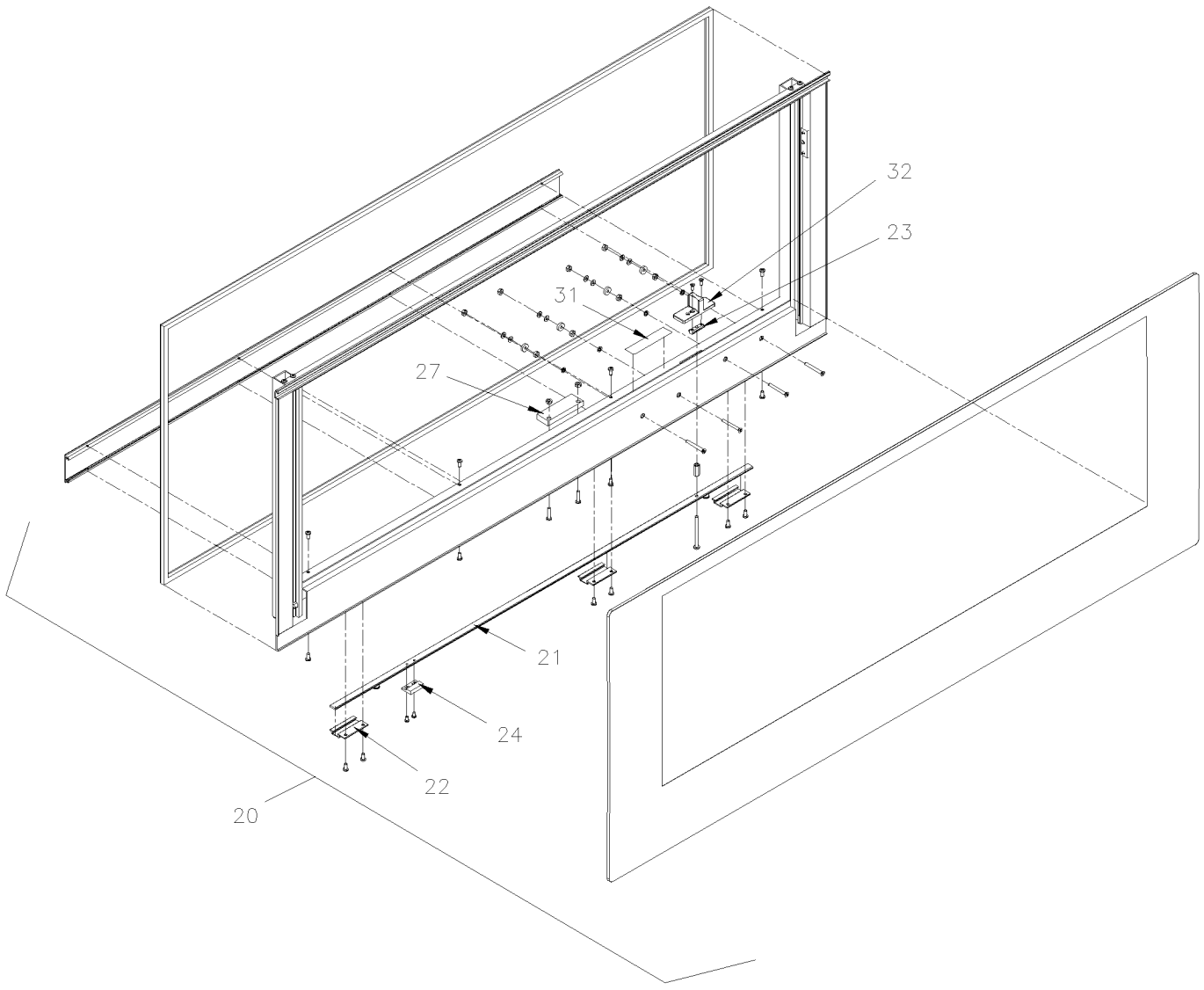

From Y-7046 Up to 8-9339	DATE: 01/2014	PAGE: Y2-1884-65
ELECTRICAL AWNING WINDOW ASSY		

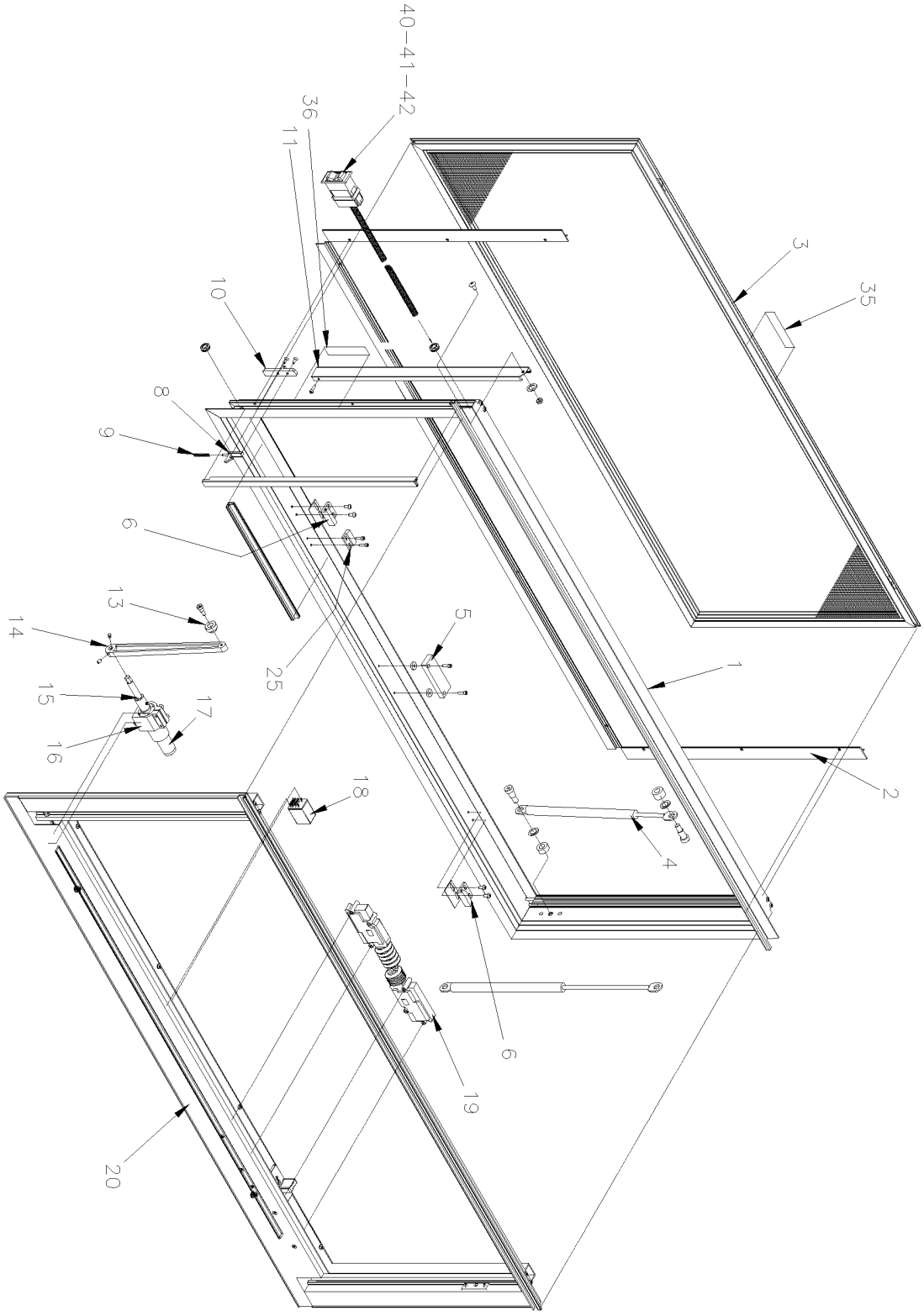

From Y-7046 Up to 8-9339	DATE: 01/2014	PAGE: Y2-1884-65

ELECTRICAL AWNING WINDOW ASSY

ITEM	PART	DESCRIPTION	XL45	MTH40	MTH45	MTH45S	NOTE
	790564	AWNING WINDOW ASSY Up to 5-8623 / REPLACED BY: 790613		1	1	1	C
	790607	AWNING WINDOW ASSY From 5-8624 Up to 5-8754		1	1	1	
	790613	AWNING WINDOW ASSY / W/REMOTE SWITCH OPERATING From 5-8755		1	1	1	
	790565	AWNING WINDOW ASSY Up to 5-8623 / REPLACED BY: 790614			1		A
	790608	AWNING WINDOW ASSY From 5-8624 Up to 5-8754			1		A
	790614	AWNING WINDOW ASSY / W/REMOTE SWITCH OPERATING From 5-8755			1		A
1	790566	. FRAME ASSY Up to 5-8623		1	1	1	
1	790547	. FRAME ASSY From 5-8624 Up to 5-8754		1	1	1	
1	790595	. FRAME ASSY From 5-8755		1	1	1	
2	790568	. RETAINING RING		1	1	1	
2	790569	. RETAINING RING			1		A
3	790571	. SCREEN / XL-II 45" x 18 ½" Up to 5-8623		1	1	1	
3	790604	. SCREEN / WRECESS FOR SWITCHES / XL-II From 5-8624		1	1	1	
3	790571	. SCREEN / XL-II 45" x 18 ½" From 5-8755		1	1	1	
4	790578	. CYLINDER		1	1	1	
5	563442	. PROXIMITY SWITCH MAGNET		1	1	1	
6	790577	. TIE BAR KEEPER Up to 5-8623 / REPLACED BY: 790609		1	1	1	
6	790609	. TIE BAR KEEPER From 5-8624		1	1	1	
NS	790611	. SHIM KEEPER From 5-8624		1	1	1	
7	790576	. COVER ROCKER SWITCH Up to 5-8754		2	2	2	
8	790574	. TRACK LATCH		1	1	1	
9	790575	. SPRING		1	1	1	
10	790582	. RELEASE LATCH HANDLE / RED / SASH		1	1	1	
11	790581	. TRACK ROLLER		1	1	1	
12	790579	. SEAL		12FT	12FT	12FT	
13	790586	. ROLLER		1	1	1	
14	790585	. ARM		1	1	1	
15	790587	. MOTOR COUPLER		1	1	1	
16	790588	. MOTOR MOUNT / LARGE O.D. Up to 5-8623 / REPLACED BY: 790619		1	1	1	D
16	N.P.N.	. MOTOR MOUNT / SMALL O.D. From 5-8624		1	1	1	4
17	790593	. MOTOR / LARGE O.D. Up to 5-8623 / REPLACED BY: 790619		1	1	1	D
17	N.P.N.	. MOTOR / SMALL O.D. From 5-8624		1	1	1	4
17	790619	. MOTOR ASSY W/MOTOR MOUNT / SMALL O.D. From 5-8624		1	1	1	E
18	563444	. RELAY 24V		1	1	1	
19	790592	. ACTUATOR		2	2	2	
		4) NO PARTS NUMBER					
		A) WITH "SLIDE-OUT"					
		C) FOR PRODUCT IMPROVEMENT, ASK KIT #293862 TO REPLACE THE KEEPERS.					
		D) THIS PART IT SUPPERSEEDED BY #790619					
		E) INCLUDE ITEMS # 15,16 & 17 WITH ELECTRICAL CONNECTOR					

From Y-7046 Up to 8-9339	DATE: 01/2014	PAGE: Y2-1884-65

ELECTRICAL AWNING WINDOW ASSY

ITEM	PART	DESCRIPTION	XL45	MTH40	MTH45	MTH45S	NOTE
20	790567	. GLASS ASSY W/AWNING FRAME Up to 5-8623		1	1	1	
20	790548	. GLASS ASSY W/AWNING FRAME From 5-8624		1	1	1	
21	790583	. TIE BAR XL		1	1	1	
22	790584	. GUIDE		2	2	2	
23	790580	. RELEASE LATCH GUIDE		1	1	1	
24	562641	. MAGNET SENSOR		.1	.1	.1	
25	562640	. SWITCH MAGNETIC		1	1	1	
26	066182	. CABLE ASSY WITH ROCKER SWITCH AND HARNESS / W/XL2 Up to 5-8623		1	1	1	
26	563441	. . SWITCH / M/ON-OFF-M/ON / S.P.D.T / BLACK Up to 5-8623		2	2	2	
26	563568	. CABLE ASSY WITH ROCKER SWITCH AND HARNESS / W/XL2 From 5-8624 Up to 5-8754		1	1	1	
27	563443	. PROXIMITY SWITCH SENSOR		1	1	1	
30	790598	. DECAL / OPEN-CLOSE		1	1	1	
31	790601	. DECAL / "EMERGENCY EXIT" # 3		1	1	1	
32	790620	. RELEASE LATCH HANDLE / RED / FRAME		1	1	1	
35	790599	. DECAL / "EMERGENCY EXIT" # 1 / PULL SCREEN		1	1	1	
36	790600	. DECAL / "EMERGENCY EXIT" # 2		1	1	1	
40	563570	. CABLE ASSY WITH ROCKER SWITCH AND HARNESS / W/XL2 & H3 From 5-8755		1	1	1	B
NS	293854	. SUPPORT SWITCH / REMOTE OPERATIONAL MODEL From 5-8755		1	1	1	
41	563571	. SWITCH / M/ON-OFF-M/ON S.P.D.T. From 5-8755		1	1	1	
42	563572	. CAP / OPEN - CLOSE From 5-8755		1	1	1	
NS	066029	CABLE ASSY / POWER AWNING EXTENTION 3 METERS From 5-8380		1	1	1	
NS	293862	KIT, RETROFIT TIE BAR KEEPER Up to 5-8623		1	1	1	
. NS	IS-04099	. SEE INSTRUCTION SHEET Up to 5-8623		1	1	1	
		B) THIS SWITCH ASSY COULD BE USE FROM 5-8624					

From Y-7046 Up to 8-9339	DATE: 01/2014	PAGE: Y2-1884-65

ELECTRICAL AWNING WINDOW ASSY

ITEM	PART	DESCRIPTION	XL45	MTH400	MTH445	MTH445S	NOTE

From 7-9287 Up to 8-9339	DATE: 01/2014	PAGE: Y2-1884-80
ELECTRICAL SLIDING WINDOW ASSY		

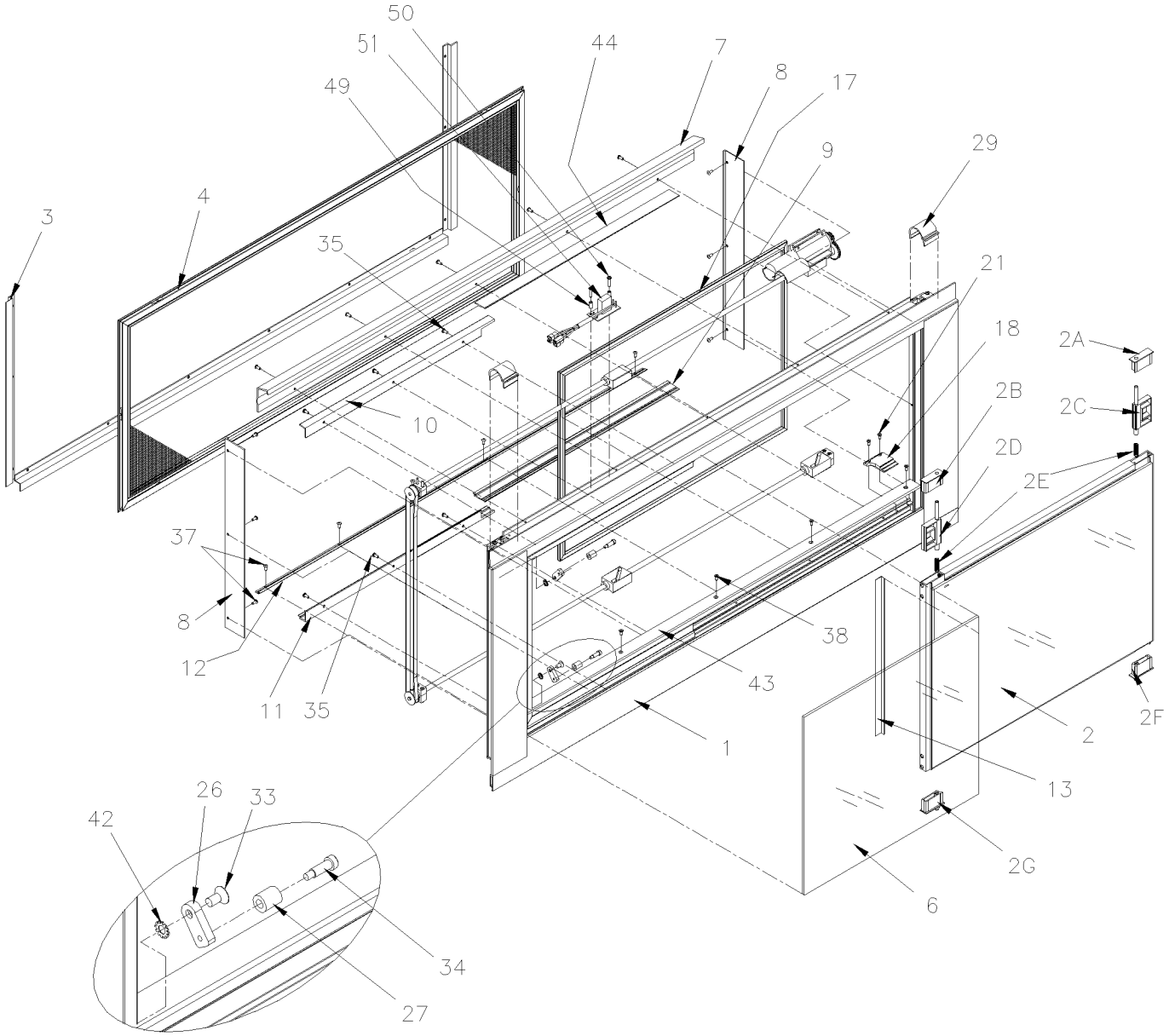

From 7-9287 Up to 8-9339	DATE: 01/2014	PAGE: Y2-1884-80
ELECTRICAL SLIDING WINDOW ASSY		

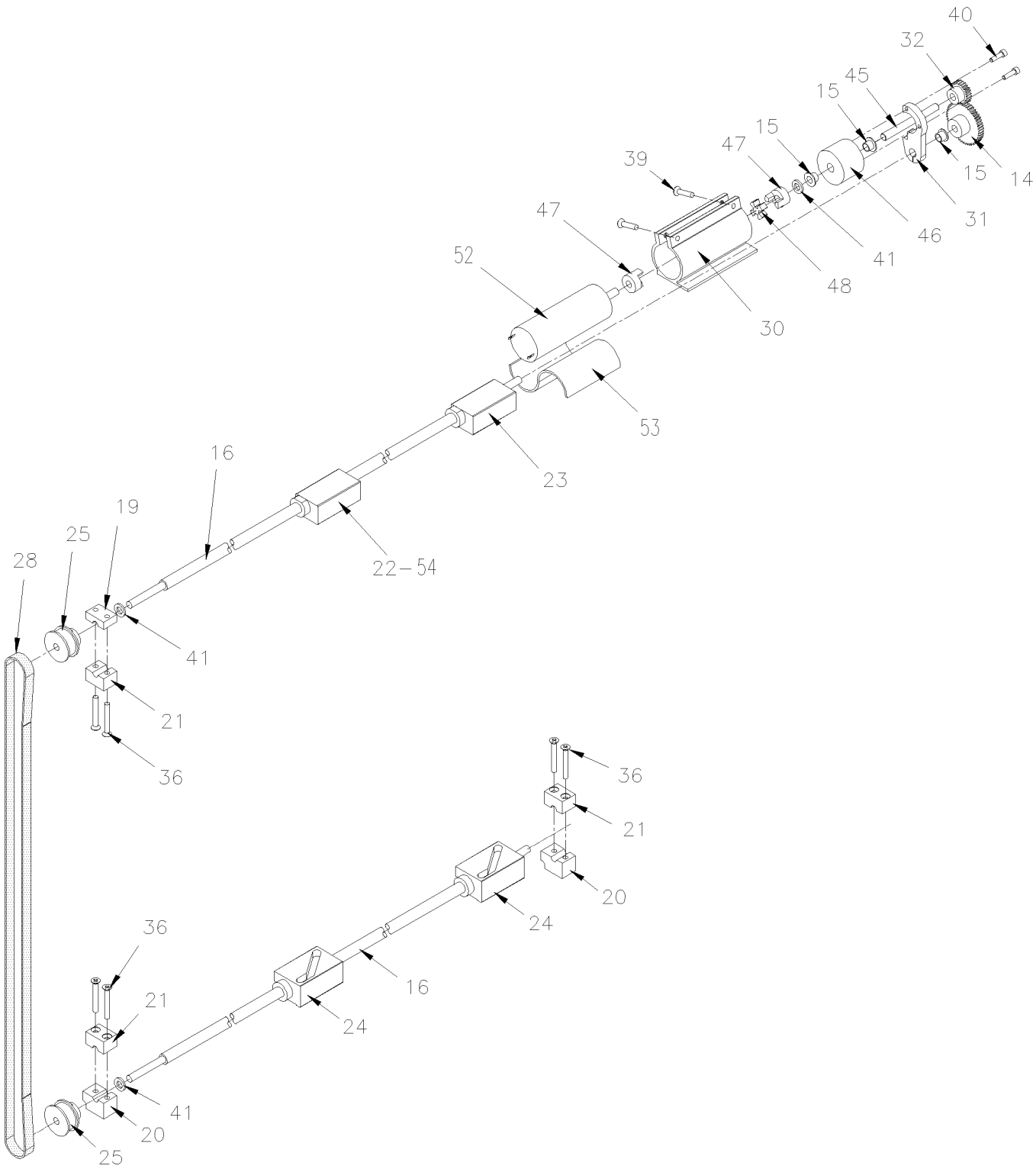

From 7-9287 Up to 8-9339	DATE: 01/2014	PAGE: Y2-1884-80

ELECTRICAL SLIDING WINDOW ASSY

ITEM	PART	DESCRIPTION	XL45	MTH40	MTH45	MTH45S	NOTE
		THIS ELECTRICAL WINDOW FIT ALSO ON MTH-40'					
	791001	ELECTRICAL SLIDING WINDOW ASSY / REPLACED BY: 791005			1	1	
1	790711	. FRAME COMPONENT ASSY			1	1	
2	790713	. SASH ASSY - 5mm T GRAY/4mm T CLR			1	1	
. A	790751	. . SASH INSERT - RH UPPER / LH LOWER			1	1	
. B	790750	. . SASH INSERT - LH UPPER / RH LOWER			1	1	
. C	790728	. . RELEASE LATCH ASSY - RH			1	1	
. D	790727	. . RELEASE LATCH ASSY - LH			1	1	
. E	790752	. . SPRING RELEASE LATCH			2	2	
. F	790732	. . FIXED SASH INSERT ASSY - RH			1	1	
. G	790730	. . FIXED SASH INSERT ASSY - LH			1	1	
3	790717	. CLAMPRING ASSY			1	1	
4	790719	. SCREEN ASSY			1	1	
6	790707	. GLASS ASSY-5mm T GRAY/4mm T CLR-XL2-FIXED			1	1	
7	790709	. COVER HEADER ACCESS			1	1	
8	790714	. JAMB COVER			2	2	
9	790729	. COVER SASH GUIDE - SILL			2	2	
10	790734	. COVER FIXED GUIDE - HEADER			1	1	
11	790737	. COVER FIXED GUIDE - SILL			1	1	
12	790758	. COVER INNER GUIDE			1	1	
13	790741	. FIXED GLAZING ANGLE			1	1	
14	790770	. SPUR GEAR - 1 1/2" - STAINLESS / W/24Volt Motor			1	1	
15	790743	. FLANGE BEARING 0.25" DEPTH			1	1	
16	790744	. DRIVE SHAFT			2	2	
17	790778	. D-SEAL EPDM SPONGE (PER FT)			AR	AR	
18	790746	. SASH END STOP			1	1	
19	790747	. BLOCK BASE SUPPORT SHAFT - UPPER			1	1	
20	790748	. BLOCK BASE SUPPORT SHAFT - LOWER			2	2	
21	790749	. CAP SUPPORT BLOCK SHAFT			3	3	
22	790724	. FOLLOWER CAM ASSY - UPPER w/ MAGNET			1	1	
23	790725	. FOLLOWER CAM ASSY - UPPER			1	1	
24	790726	. FOLLOWER CAM ASSY - LOWER			2	2	
25	790753	. PULLEY			2	2	
26	790754	. BRACKET TENSIONER			2	2	
27	790755	. ROLLER TENSIONER			2	2	
28	790756	. DRIVE BELT			1	1	
29	790757	. COVER, GEAR			1	1	
30	790740	. MOTOR MOUNT			1	1	
31	790742	. MOTOR MOUNT END PLATE			1	1	
32	790769	. SPUR GEAR - 3/4" - ACETAL / W/24Volt Motor			1	1	
33	N.P.N.	. SCREW CAP FL HEXS 1/4-20 x 1/2			2	2	4
34	N.P.N.	. SCREW SHR CAP HEX .250x.625			2	2	4
		4) NO PARTS NUMBER					

From 7-9287 Up to 8-9339	DATE: 01/2014	PAGE: Y2-1884-80

ELECTRICAL SLIDING WINDOW ASSY

ITEM	PART	DESCRIPTION	XL45	MTH40	MTH45	MTH45S	NOTE
35	500883	. SCREW TC PAN PH #8-32x3/8 ZP			6	6	
36	500887	. SCREW MA FL PH #8-32x1 1/4 SS			6	6	
37	790704	. SCREW CAP BUT HEXS #8-32x3/8 420 S/S BLACK OX			19	19	
38	790702	. SCREW MA FL PH #8-32x3/8 410 S/S BLACK OX			7	7	
39	790703	. SCREW MA FL PH #8-32x7/8 TYPE 23 410 SS			2	2	
40	790773	. SCREW CAP HEXS M3-0.5x9.5 SS			2	2	
41	790774	. WASHER FL .250x.470x .065			2	2	
42	790775	. WASHER LO EXT .250x.500x.187 SS			2	2	
43	790760	. STRIP ANTI FRICTION			1	1	
44	790762	. COVER SASH GUIDE - HEADER			1	1	
45	790767	. OUTPUT SHAFT			1	1	
46	790768	. SUPPORT OUTPUT SHAFT			1	1	
47	790766	. JAW COUPLER			2	2	
48	790765	. SPIDER			1	1	
49	790772	. SPACER SLEEVE			2	2	
50	790700	. SCREW MA PAN PH #8-32x7/8 TYPE 23 410 SS			1	1	
51	790764	. VOLTAGE REGULATOR			1	1	
52	790738	. MOTOR ELECTRIC 24V ASSY / W/CABLE			1	1	
NS	790736	. . CABLE ASSY W/CAPACITOR / MOTOR 24V			1	1	
53	790771	. PAD VIBRATION DAMPER			1	1	
54	790723	. PROXIMITY SENSOR ASSY			2	2	
NS	790788	. KIT ELECTRICAL WIRING HARNESS FOR WINDOW ASSY			1	1	
NS	790721	. . FRAME WIRING HARNESS ASSY			1	1	
NS	790722	. . POWER WIRING HARNESS ASSY			1	1	
NS	563570	. . CABLE ASSY WITH ROCKER SWITCH AND HARNESS / W/XL2 & H3			1	1	

From Y-7046 Up to 6-8805	DATE: 01/2014	PAGE: Y2-1884-90
"SLIDE-OUT" - GLASS - MTH		

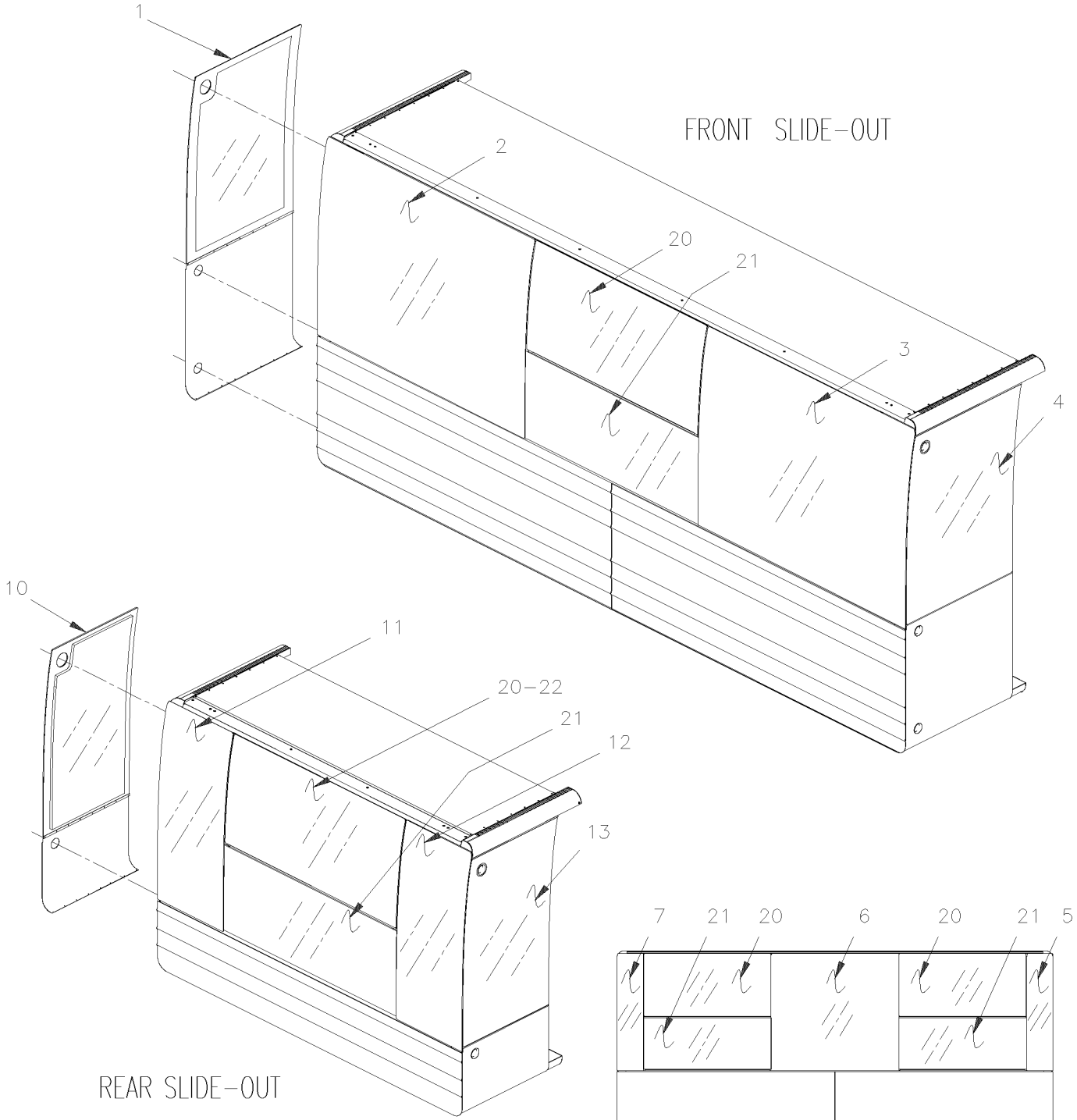

From Y-7046 Up to 6-8805	DATE: 01/2014	PAGE: Y2-1884-90

"SLIDE-OUT" - GLASS - MTH

ITEM	PART	DESCRIPTION	XL45	MTH40	MTH45	MTH45S	NOTE
1	690168	GLASS, THERMO 13% / FRONT SIDE Up to 3-8129 / REPLACED BY: 296974			1		
1	296974	GLASS, THERMO 13% / FRONT SIDE From 3-8130			1		
1	690167	GLASS, SINGLE 13% / FRONT SIDE Up to 3-8129 / REPLACED BY: 296982			1		
1	296982	GLASS, SINGLE 13% / FRONT SIDE From 3-8130			1		
2	690171	GLASS, THERMO 13% / FRONT 1561MM Up to 3-8129 / REPLACED BY: 296973			1		
2	296973	GLASS, THERMO 13% / FRONT 1561MM From 3-8130			1		
2	690154	GLASS, SINGLE 13% / FRONT 1561MM			1		
3	690172	GLASS, THERMO 13% / REAR 1561MM Up to 3-8129 / REPLACED BY: 296970			1		
3	296970	GLASS, THERMO 13% / REAR 1561MM From 3-8130			1		
3	690155	GLASS, SINGLE 13% / REAR 1561MM Up to 3-8129			1		
4	690166	GLASS, SINGLE 13% / REAR SIDE Up to 3-8129			1		
4	690169	GLASS, THERMO 13% / REAR SIDE Up to 3-8129 / REPLACED BY: 296969			1		
4	296969	GLASS, THERMO 13% / REAR SIDE From 3-8130			1		
5	690254	GLASS, SINGLE 13% / REAR 266MM Up to 3-8129			1		
6	690170	GLASS, THERMO 13% / CENTER 1287.4MM x 1191MM Up to 3-8129 / REPLACED BY: 296977			1		
6	296977	GLASS, THERMO 13% / CENTER 1287.4MM From 3-8130			1		
6	690151	GLASS, SINGLE 13% / CENTER 1287.4MM x 1191MM Up to 3-8129			1		
7	690253	GLASS, SINGLE 13% / FRONT 266MM Up to 3-8129			1		
10	690164	GLASS, THERMO 13% / FRONT SIDE Up to 3-8129 / REPLACED BY: 296979			1		
10	296979	GLASS, THERMO 13% / FRONT SIDE From 3-8130			1		
10	690162	GLASS, SINGLE 13% / FRONT SIDE Up to 3-8129 / REPLACED BY: 296981			1		
10	296981	GLASS, SINGLE 13% / FRONT SIDE From 3-8130			1		
11	690177	GLASS, THERMO 13% / FRONT 494MM Up to 3-8129 / REPLACED BY: 296976			1		
11	296976	GLASS, THERMO 13% / FRONT 494MM From 3-8130			1		
11	690173	GLASS, SINGLE 13% / FRONT 494MM Up to 3-8129			1		
12	690178	GLASS, THERMO 13% / REAR 494MM Up to 3-8129 / REPLACED BY: 296978			1		
12	296978	GLASS, THERMO 13% / REAR 494MM From 3-8130			1		
12	690174	GLASS, SINGLE 13% / REAR 494MM Up to 3-8129			1		
13	690165	GLASS, THERMO 13% / REAR SIDE Up to 3-8129 / REPLACED BY: 296980			1		
13	296980	GLASS, THERMO 13% / REAR SIDE From 3-8130			1		
13	690163	GLASS, SINGLE 13% / REAR SIDE Up to 3-8129			1		
20	690161	GLASS, THERMO 13% / UPPER 1287.4MM Up to 3-8129 / REPLACED BY: 296971			1		
20	296971	GLASS ASSY, THERMO 13% / UPPER 1287.4MM From 3-8130			1		
20	690160	GLASS, SINGLE 13% / UPPER 1287.4MM Up to 3-8129			1		
21	Y2-1884-60	**AWNING WINDOW - MTH**					
21	790458	**SLIDING WINDOW L.H. - MTH**					
22	690170	GLASS, THERMO 13% / CENTER 1287.4MM x 1191MM Up to 3-8129 / REPLACED BY: 296977			1		
22	296977	GLASS, THERMO 13% / CENTER 1287.4MM From 3-8130			1		
22	690151	GLASS, SINGLE 13% / CENTER 1287.4MM x 1191MM Up to 3-8129			1		

From 6-8806 Up to 8-9339	DATE: 01/2014	PAGE: Y2-1884-91
"SLIDE-OUT" - GLASS - MTH		

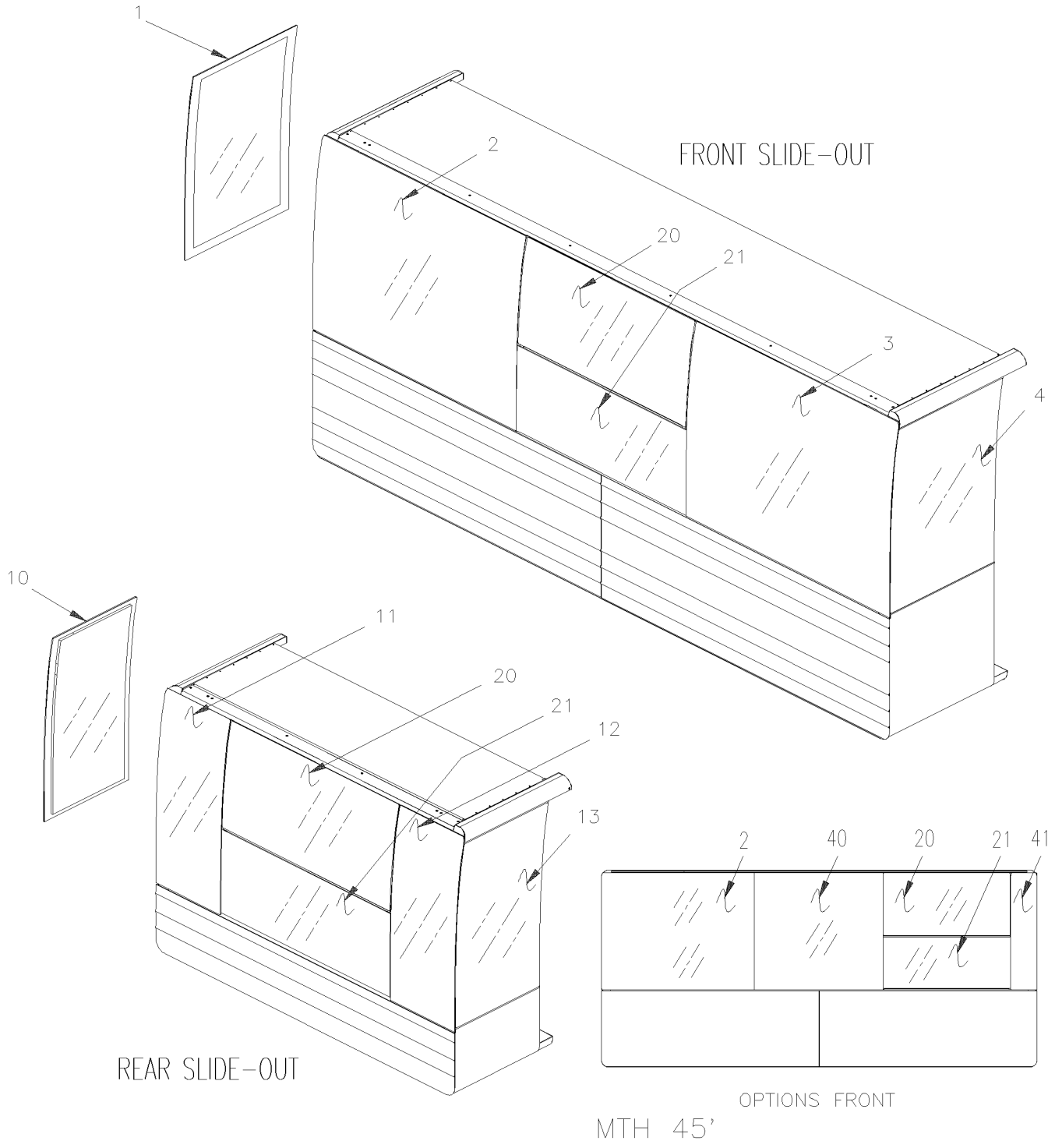

From 6-8806 Up to 8-9339	DATE: 01/2014	PAGE: Y2-1884-91
"SLIDE-OUT" - GLASS - MTH		

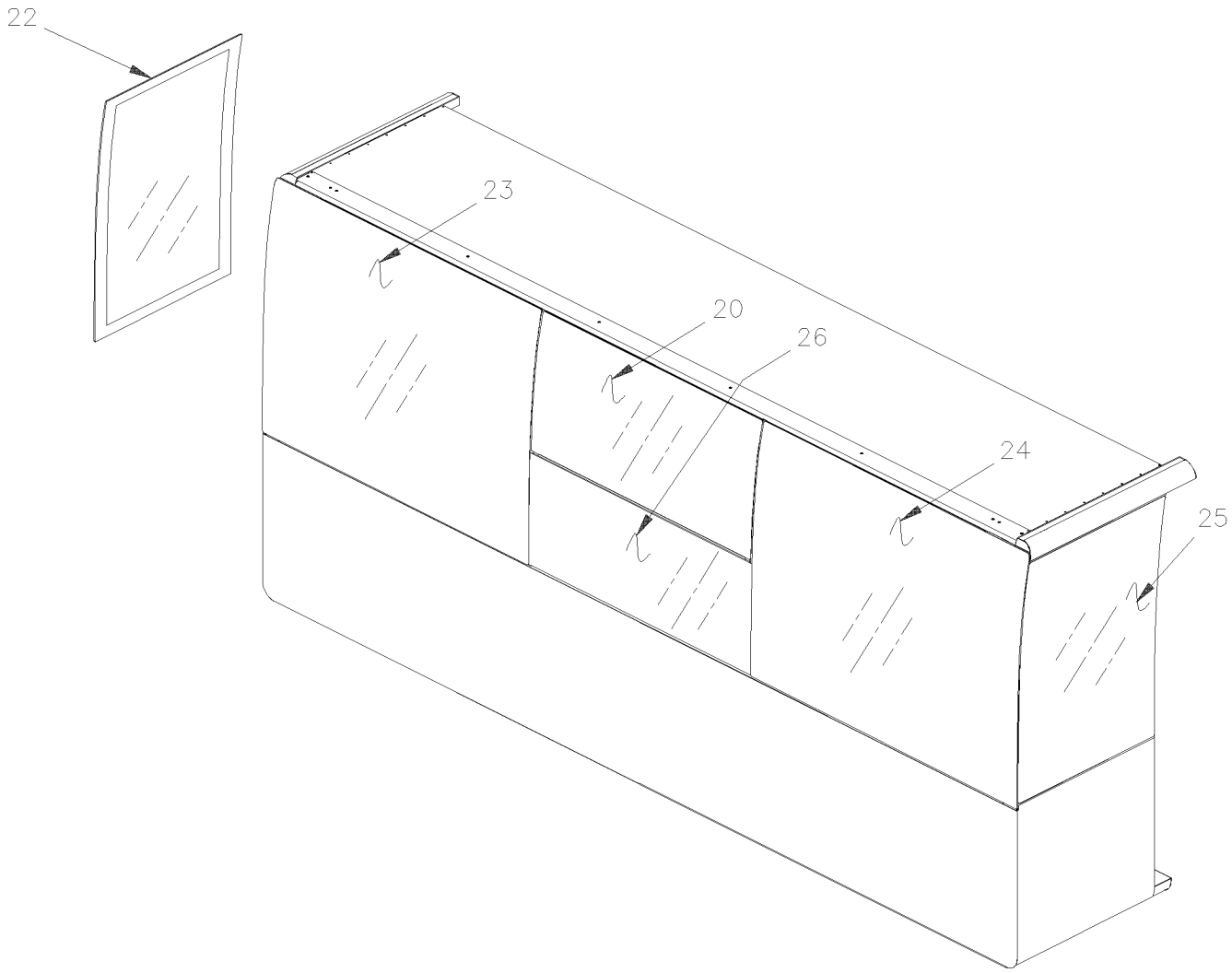

FRONT SLIDE-OUT

MTH 45' ENT.

From 6-8806 Up to 8-9339	DATE: 01/2014	PAGE: Y2-1884-91

"SLIDE-OUT" - GLASS - MTH

ITEM	PART	DESCRIPTION	XL45	MTH40	MTH45	MTH45S	NOTE
1	293411	GLASS, THERMO 13% / FRONT SIDE 800MM			1		
2	293412	GLASS, THERMO 13% / FRONT 1561MM			1		
3	293414	GLASS, THERMO 13% / REAR 1561MM			1		
4	293415	GLASS, THERMO 13% / REAR SIDE 800MM			1		
10	293418	GLASS, THERMO 13% / FRONT SIDE 648MM			1		
11	293419	GLASS, THERMO 13% / FRONT 495MM			1		
12	293420	GLASS, THERMO 13% / REAR 495MM			1		
13	293421	GLASS, THERMO 13% / REAR SIDE 648MM			1		
20	293413	GLASS ASSY, THERMO 13% / UPPER 1287.4MM Up to 7-9188			1	1	
20	293928	GLASS ASSY, THERMO 13% / UPPER 1287.4MM From 7-9189 Up to 7-9287			1	1	S
20	293929	GLASS ASSY, THERMO 13% / UPPER 1287.4MM From 7-9288			1	1	W
21	Y2-1884-65	**ELECTRICAL AWNING WINDOW ASSY**					
21	Y2-1884-80	**ELECTRICAL SLIDING WINDOW ASSY**					
22	293418	GLASS, THERMO 13% / FRONT SIDE 648MM				1	
23	293832	GLASS, THERMO 13% / FRONT 1125MM				1	
24	293833	GLASS, THERMO 13% / REAR 1125MM				1	
25	293421	GLASS, THERMO 13% / REAR SIDE 648MM				1	
26	790458	**SLIDING WINDOW L.H. - MTH**					
26	Y2-1884-80	**ELECTRICAL SLIDING WINDOW ASSY**					
30	293281	RUBBER SEAL EXTRUSION / ADHESIVE / LOWER WINDOW			AR	AR	
31	506002	TAPE RUB ADH1 CC POL 3/16" x 1/2" x 40' / GREY 2520			AR	AR	
32	506228	TAPE RUB ADH1 CC POL 1/4" x 1/2" x 37.5' / GREY 2520X			AR	AR	
33	683447	ADHESIVE SIKATACK PLUS / BLACK / 23 Liters			AR	AR	
40	293433	GLASS, THERMO 13% / CENTER 1287MM			1		
41	Y2-1854-91	**SIDE PANELS - "SLIDE-OUT"**					
		S) WITH 65MM BLOCK OFF LOWER 55 FULL + 10 DOT					
		W) WITH 80MM BLOCK OFF LOWER 70 FULL + 10 DOT					

From 6-8806 Up to 8-9339	DATE: 01/2014	PAGE: Y2-1884-91

"SLIDE-OUT" - GLASS - MTH

ITEM	PART	DESCRIPTION	XL45	MTH40	MTH45	MTH45S	NOTE

From Y-7046 Up to 6-8901	DATE: 01/2014	PAGE: Y2-1886-00

POWER WINDOW - ELECTRICAL INSTALLATION

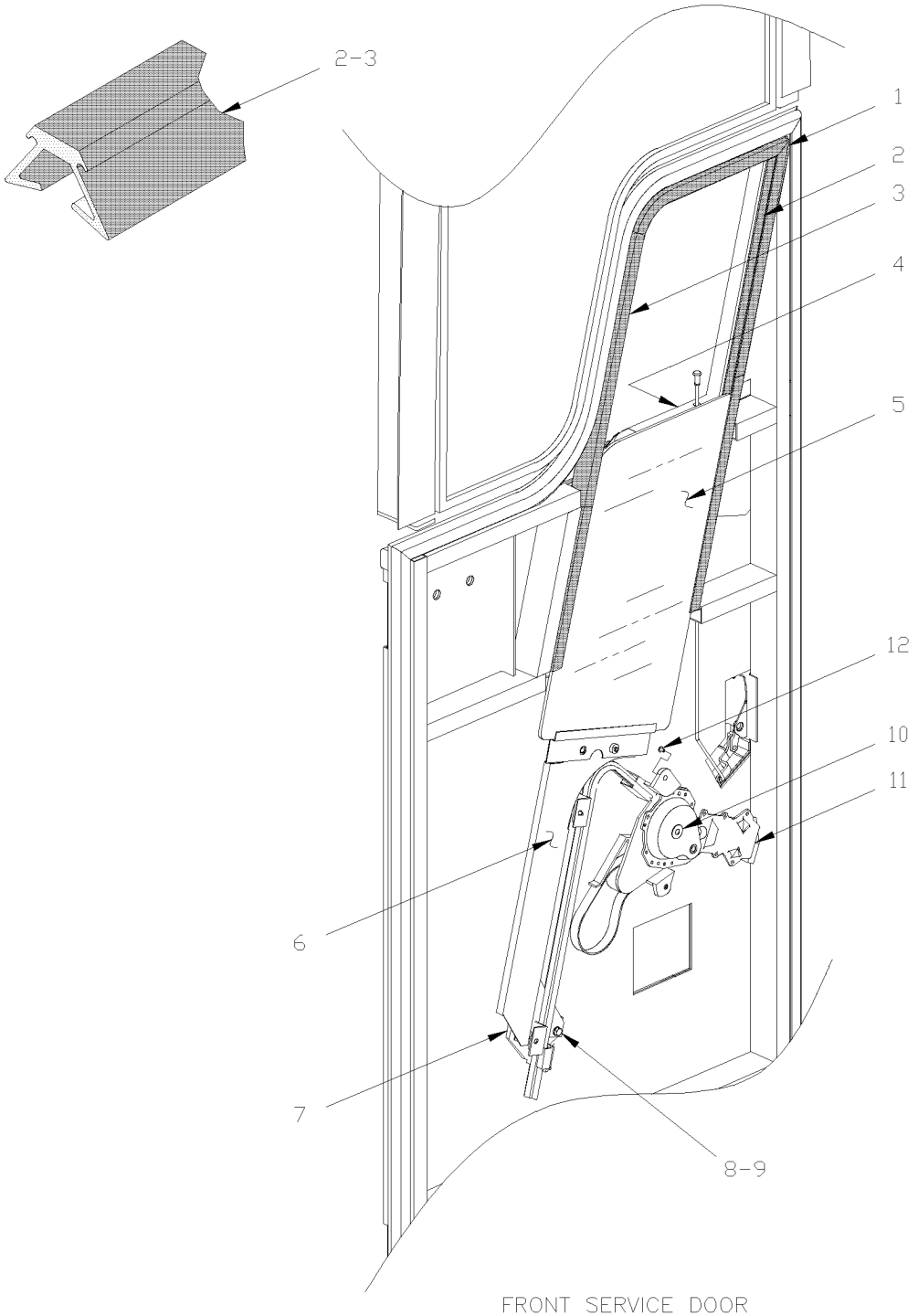

From Y-7046 Up to 6-8901	DATE: 01/2014	PAGE: Y2-1886-00
POWER WINDOW - ELECTRICAL INSTALLATION		

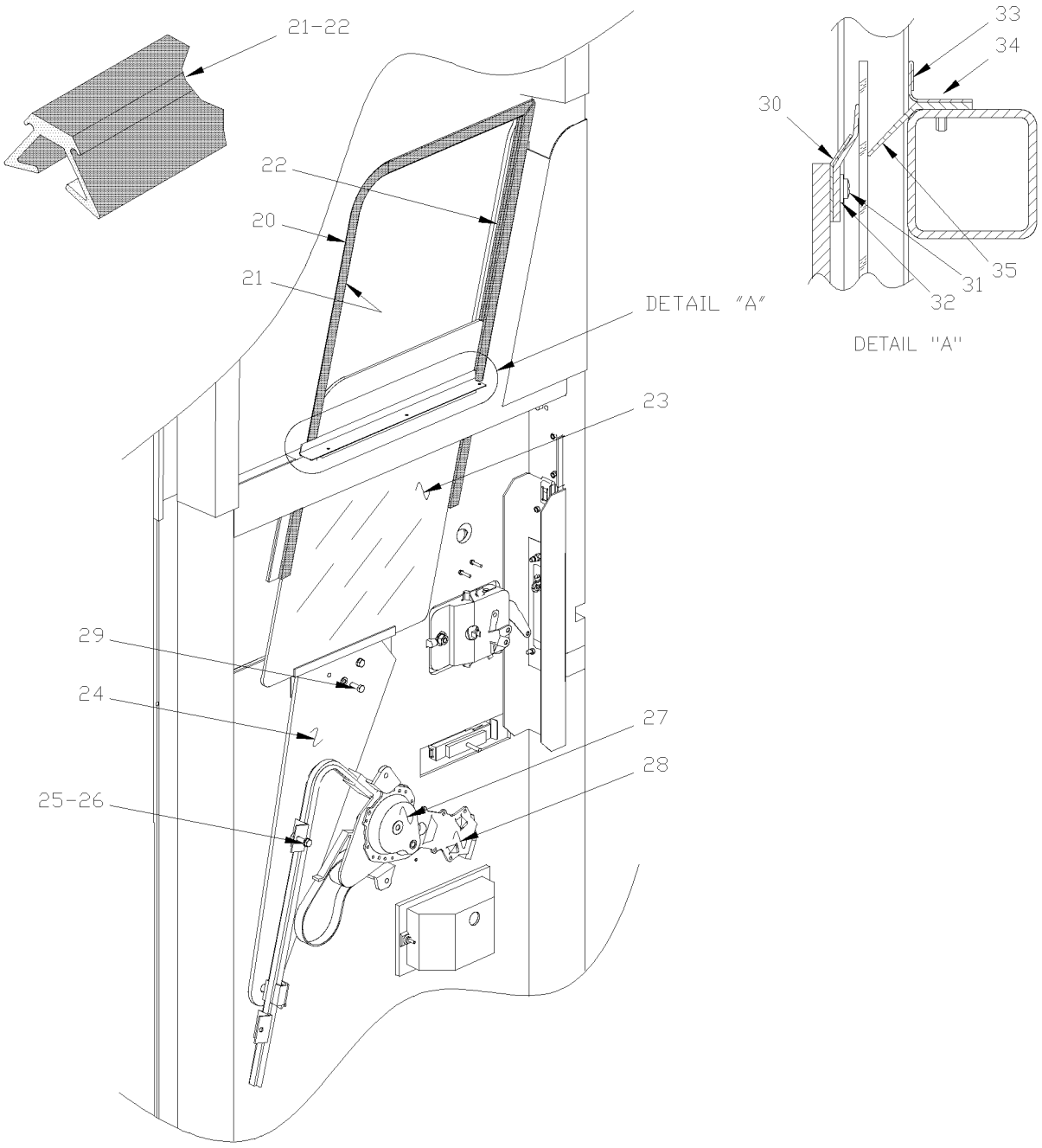

ENTRANCE DOOR – MTH

From Y-7046 Up to 6-8901	DATE: 01/2014	PAGE: Y2-1886-00

POWER WINDOW - ELECTRICAL INSTALLATION

ITEM	PART	DESCRIPTION	XL45	MTH40	MTH45	MTH45S	NOTE
1	285983	WINDOW TRACK	1	1	1	1	
2	286440	FELT SLIDING 677MM	1	1	1	1	
3	286439	FELT SLIDING 930MM	1	1	1	1	
4	286419	FLAP SEAL / 25MM x 260MM / W/FLOCKING	2	2	2	2	
5	286212	GLASS ASSY W/SUPPORT	1	1	1	1	
6	286087	DIAGONNAL SUPPORT	1	1	1	1	
6	287908	DIAGONNAL SUPPORT / 89" ONLY				1	
7	299048	PLATE, ANCHOR	1	1	1	1	
8	5001181	SCREW CAP HEX M6-1.0x12 SS	2	2	2	2	
9	502570	WASHER LO SPT 6.1x11.8x1.6 SS	2	2	2	2	
10	286415	MOTOR & REGULATOR ASSY	1	1	1	1	
11	790336	. MOTOR ASSY / 12V / WINDOW R / REPLACED BY: 197925	1	1	1	1	
11	197925	. MOTOR ASSY / 12V / WINDOW R	1	1	1	1	
12	5001182	NUT HEX NYRT M6-1.0 SS	4	4	4	4	
20	293088	MOULDING		1	1	1	
21	293211	FELT SLIDING 923MM		1	1	1	
22	293210	FELT SLIDING 597MM		1	1	1	
23	286196	GLASS ASSY W/SUPPORT		1	1	1	
24	286138	SUPPORT PLASTIC		1	1	1	
24	286738	SUPPORT PLASTIC / MTH 89" ONLY				1	
25	502622	SCREW CAP HEX M6-1.0x20 SS EMN		4	4	4	
26	502573	WASHER FL 6.4x12.5x1.6 SS		4	4	4	
27	286193	MOTOR & REGULATOR ASSY		1	1	1	
28	790336	. MOTOR ASSY / 12V / WINDOW R / REPLACED BY: 197925		1	1	1	
28	197925	. MOTOR ASSY / 12V / WINDOW R		1	1	1	
29	502806	SCREW MA FL PH M6-1.0x10 ZP		2	2	2	
30	286993	FLAP SEAL GLASS ASSY		1	1	1	
30	286992	. FLAP SUPPORT		1	1	1	
30	286235	. FLAP SEAL 3/4" x 7/8" / PVC / 335MM Up to 2-7799 / REPLACED BY: 288063		1	1	1	
30	288063	. FLAP SEAL / 37.6MM x 335MM / W/FLOCKING From 2-7800		1	1	1	
31	955223	SCREW CAP HEX M4-0.7x6 G8.8 ZP		4	4	4	
32	500989	WASHER FL .219x.875x.062 ZP		4	4	4	
33	286717	ANGLE SS 345MM		1	1	1	
34	500124	SCREW TP TR PH #8x1/2 SS		3	3	3	
35	286235	FLAP SEAL 3/4" x 7/8" / PVC / 335MM Up to 2-7799 / REPLACED BY: 288063		3	3	3	
35	288063	FLAP SEAL / 37.6MM x 335MM / W/FLOCKING From 2-7800		1	1	1	
40	680066	GLUE / ADBOND 5014 ADH 23.6ML BOTTLE		AR	AR	AR	

From Y-7046 Up to 6-8901	DATE: 01/2014	PAGE: Y2-1886-00

POWER WINDOW - ELECTRICAL INSTALLATION

ITEM	PART	DESCRIPTION	XL45	MTH400	MTH445	MTH445S	NOTE

From 6-8902 Up to 8-9339	DATE: 01/2014	PAGE: Y2-1886-01

POWER WINDOW - ELECTRICAL INSTALLATION

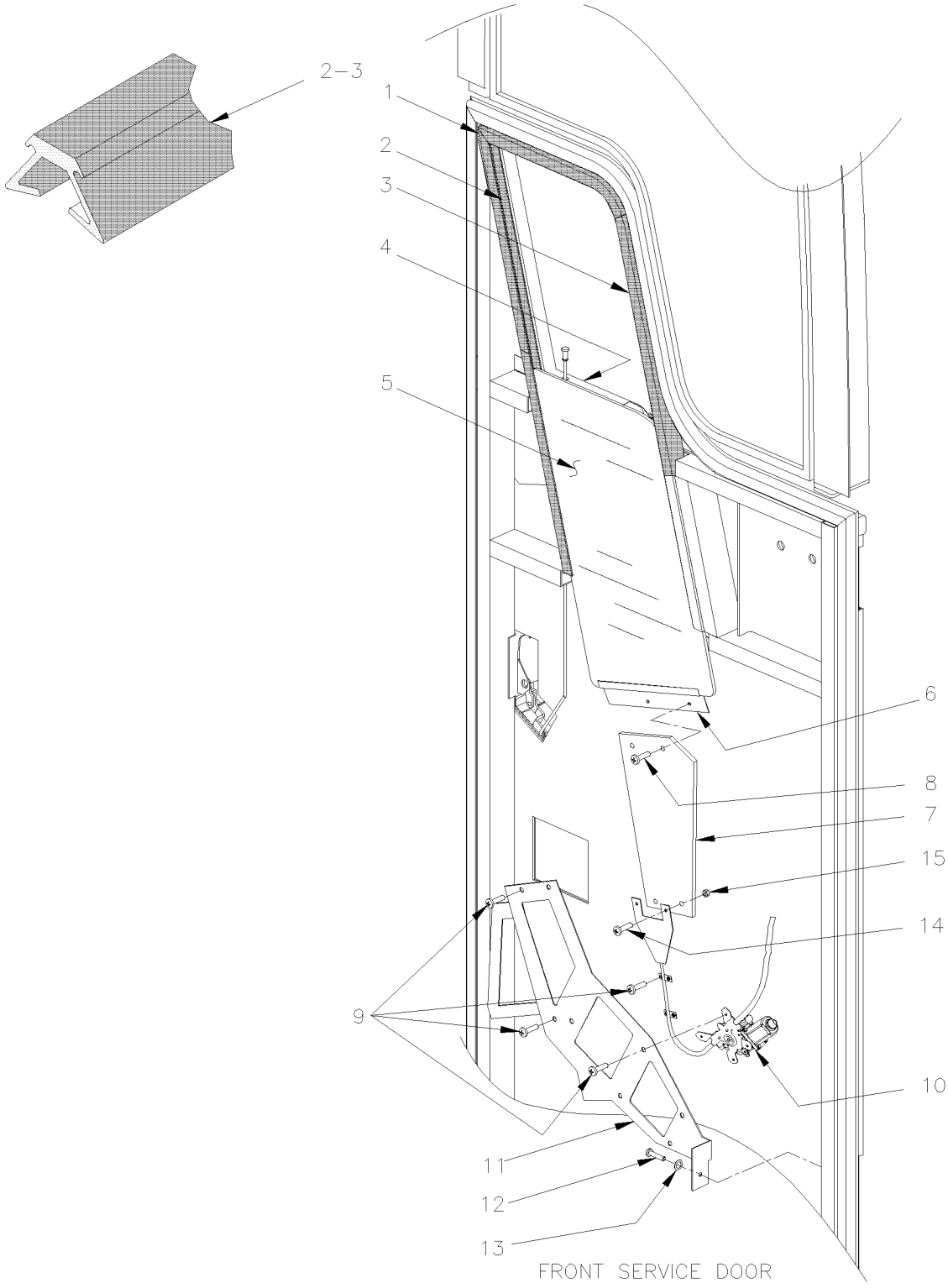

From 6-8902 Up to 8-9339	DATE: 01/2014	PAGE: Y2-1886-01

POWER WINDOW - ELECTRICAL INSTALLATION

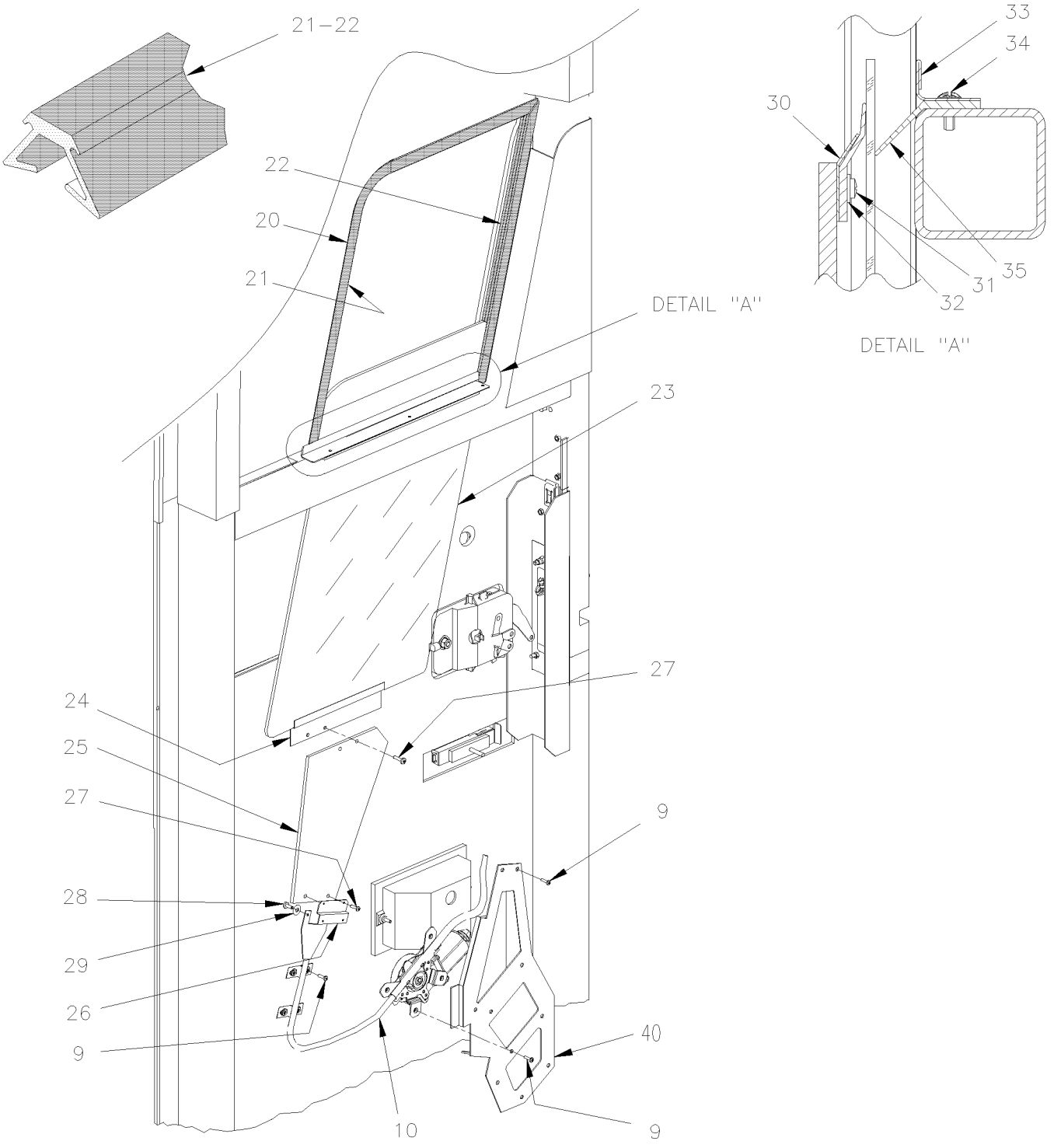

ENTRANCE DOOR – MTH

From 6-8902 Up to 8-9339	DATE: 01/2014	PAGE: Y2-1886-01

POWER WINDOW - ELECTRICAL INSTALLATION

ITEM	PART	DESCRIPTION	XL45	MTH40	MTH45	MTH45S	NOTE
		THIS POWER WINDOW FIT ALSO ON MTH-40' FOR SERVICE					
1	285983	WINDOW TRACK	1				
2	286440	FELT SLIDING 677MM	1				
3	286439	FELT SLIDING 930MM	1				
4	286419	FLAP SEAL / 25MM x 260MM / W/FLOCKING	2				
5	286212	GLASS ASSY W/SUPPORT	1				
6	293194	. SUPPORT ASSY	1				
7	293852	SUPPORT TRANSITION PLASTIC	1				
7	293857	SUPPORT TRANSITION PLASTIC / MTH 89" ONLY				1	
8	5001633	SCREW MA FL PH M6-1.0x12 ZP	2				
9	500541	SCREW MA FL PH 1/4-20x1/2 SS EMN	8				
10	790500	MOTOR & REGULATOR ASSY / SERIES "XL-II"	1				
11	293856	SUPPORT MOTOR SERVICE DOOR / BUS Up to 6-8906	1				
11	293850	SUPPORT MOTOR SERVICE DOOR / MTH 86" & 89"			1	1	
12	502857	WASHER LO SERR 8.2x26.3x1.8 ZG603	1				
13	5001433	SCREW CAP HEX M6-1.0x25 SS	1				
14	955271	SCREW CAP HEX M6-1.0x16 G8.8 ZG603	2				
15	5001182	NUT HEX NYRT M6-1.0 SS	2				
20	293088	MOULDING			1	1	
21	293211	FELT SLIDING 923MM			1	1	
22	293210	FELT SLIDING 597MM			1	1	
23	286196	GLASS ASSY W/SUPPORT			1	1	
24	299049	. SUPPORT ASSY			1	1	
25	293849	SUPPORT TRANSITION PLASTIC / MTH 86"			1	1	
25	293861	SUPPORT TRANSITION PLASTIC / MTH 89" ONLY				1	
26	293845	ATTACHMENT ASSY W/NUTS WINDOW "Z" SHAPE			1	1	
27	5001633	SCREW MA FL PH M6-1.0x12 ZP			4	4	
28	5001181	SCREW CAP HEX M6-1.0x12 SS			2	2	
NS	502570	WASHER LO SPT 6.1x11.8x1.6 SS			2	2	
30	286993	FLAP SEAL GLASS ASSY			1	1	
30	286992	. FLAP SUPPORT			1	1	
30	288063	. FLAP SEAL / 37.6MM x 335MM / W/FLOCKING			1	1	
31	955223	SCREW CAP HEX M4-0.7x6 G8.8 ZP			4	4	
32	500989	WASHER FL .219x.875x.062 ZP			4	4	
33	286717	ANGLE SS 345MM			1	1	
34	500124	SCREW TP TR PH #8x1/2 SS			3	3	
35	288063	FLAP SEAL / 37.6MM x 335MM / W/FLOCKING			1	1	
36	502622	SCREW CAP HEX M6-1.0x20 SS EMN			4	4	
36	502573	WASHER FL 6.4x12.5x1.6 SS			4	4	
39	502806	SCREW MA FL PH M6-1.0x10 ZP			2	2	
40	293848	SUPPORT MOTOR ENTRANCE DOOR / MTH 86" & 89"			1	1	
NS	680066	GLUE / ADBOND 5014 ADH 23.6ML BOTTLE	AR				

From 6-8902 Up to 8-9339	DATE: 01/2014	PAGE: Y2-1886-01

POWER WINDOW - ELECTRICAL INSTALLATION

ITEM	PART	DESCRIPTION	XL45	MTH40	MTH45	MTH45S	NOTE
50	685072	THREAD LOCKER LOCTITE #243 / BLUE / 5ml	AR				
NS	293873	KIT, RETROFIT ELECTRICAL DRIVER'S WINDOW / SERIES "XL-II" Up to 6-8901	1				
. NS	IS-05010	. SEE INSTRUCTION SHEET Up to 6-8901	1				
NS	293874	KIT, RETROFIT ELECTRICAL DOOR WINDOW / SERIES "XL-II" Up to 6-8901			1	1	
. NS	IS-05010	. SEE INSTRUCTION SHEET Up to 6-8901			1	1	
NS	563664	CONNECTOR "MUNCY" Up to 6-8901	1				
50	563623	BUTT SPLICE / 16-14 / BLUE / W/THERMORETRAC / PANDUIT BSH14-Q Up to 6-8901	2				

From Y-7046 Up to 8-9339	DATE: 01/2014	PAGE: Y2-1890-00
ROOF STRUCTURE		

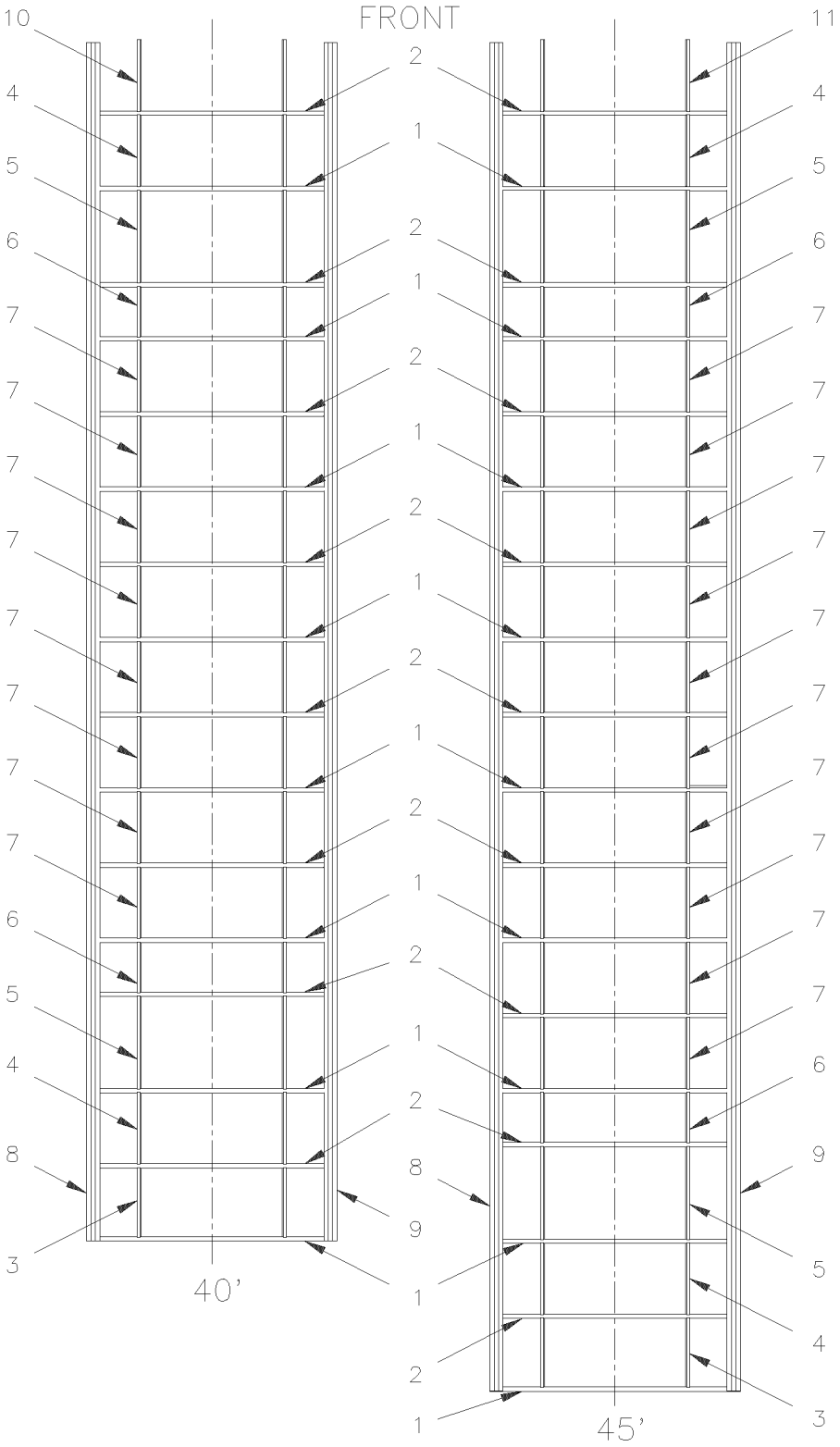

From Y-7046 Up to 8-9339	DATE: 01/2014	PAGE: Y2-1890-00

ROOF STRUCTURE

ITEM	PART	DESCRIPTION	XL45	MTH40	MTH45	MTH45S	NOTE
1	271290	ARCH / ROOF 1932.7MM (76") Up to 3-7990 / REPLACED BY: 271634		8			
1	271290	ARCH / ROOF 1932.7MM (76") Up to 3-7990 / REPLACED BY: 271634	9		9	9	
1	271634	ARCH / ROOF 1932.7MM (76") From 3-7991 Up to 5-8813		8			
1	271634	ARCH / ROOF 1932.7MM (76") From 3-7991	9		9	9	
2	271291	ARCH / ROOF 1932.7MM (76") Up to 1-7265 / REPLACED BY: 271420		8			
2	271420	ARCH / ROOF 1932.7MM (76") From 1-7266 / REPLACED BY: 271635		8			
2	271635	ARCH / ROOF 1932.7MM (76") From 3-7991 Up to 5-8813		8			
2	271291	ARCH / ROOF 1932.7MM (76") Up to 1-7265 / REPLACED BY: 271420	9		9	9	
2	271420	ARCH / ROOF 1932.7MM (76") From 1-7266 / REPLACED BY: 271635	9		9	9	
3	271074	FORM / BETWEEN ARCH 600.6MM (23.63") Up to 3-7990 / REPLACED BY: 271613	2	2	2	2	
3	271613	FORM / BETWEEN ARCH 600.6MM (23.64") From 3-7991	2	2	2	2	
4	271073	FORM / BETWEEN ARCH 619.6MM (24.39") Up to 3-7990 / REPLACED BY: 271612	4	4	4	4	
4	271612	FORM / BETWEEN ARCH 619.6MM (24.39") From 3-7991	4	4	4	4	
5	271082	FORM / BETWEEN ARCH 802.0MM (31.57") Up to 3-7990 / REPLACED BY: 271615	4	4	4	4	
5	271615	FORM / BETWEEN ARCH 802.0MM (31.57") From 3-7991	4	4	4	4	
6	271081	FORM / BETWEEN ARCH 437.3MM (17.21") Up to 3-7990 / REPLACED BY: 271614	4	4	4	4	
6	271614	FORM / BETWEEN ARCH 437.3MM (17.21") From 3-7991	4	4	4	4	
7	271156	FORM / BETWEEN ARCH 619.6MM (24.39") Up to 3-7990 / REPLACED BY: 271616		16			
7	271156	FORM / BETWEEN ARCH 619.6MM (24.39") Up to 3-7990 / REPLACED BY: 271616	20		20	20	
7	271616	FORM / BETWEEN ARCH 619.6MM (24.39") From 3-7991 Up to 5-8813		16			
7	271616	FORM / BETWEEN ARCH 619.6MM (24.39") From 3-7991	20		20	20	
8	271168	ROOF L.H. CORNER ASSY Up to 5-8813		1			
8	271170	ROOF L.H. CORNER ASSY	1		1	1	
9	271167	ROOF R.H. CORNER ASSY Up to 5-8813		1			
9	271169	ROOF R.H. CORNER ASSY	1		1	1	
10	271151	FORM / BETWEEN ARCH 595.5MM (23.42") / L.H. Up to 3-7990 / REPLACED BY: 271611	1	1	1	1	
10	271611	FORM / BETWEEN ARCH / L.H. 595.5MM (23.42") From 3-7991	1	1	1	1	
11	271223	FORM / BETWEEN ARCH 595.5MM (23.42") / R.H. Up to 3-7990 / REPLACED BY: 271610	1	1	1	1	
11	271610	FORM / BETWEEN ARCH / R.H. 595.5MM (23.42") From 3-7991	1	1	1	1	

From Y-7046 Up to 8-9339	DATE: 01/2014	PAGE: Y2-1890-10

STRUCTURE WALL - UPPER

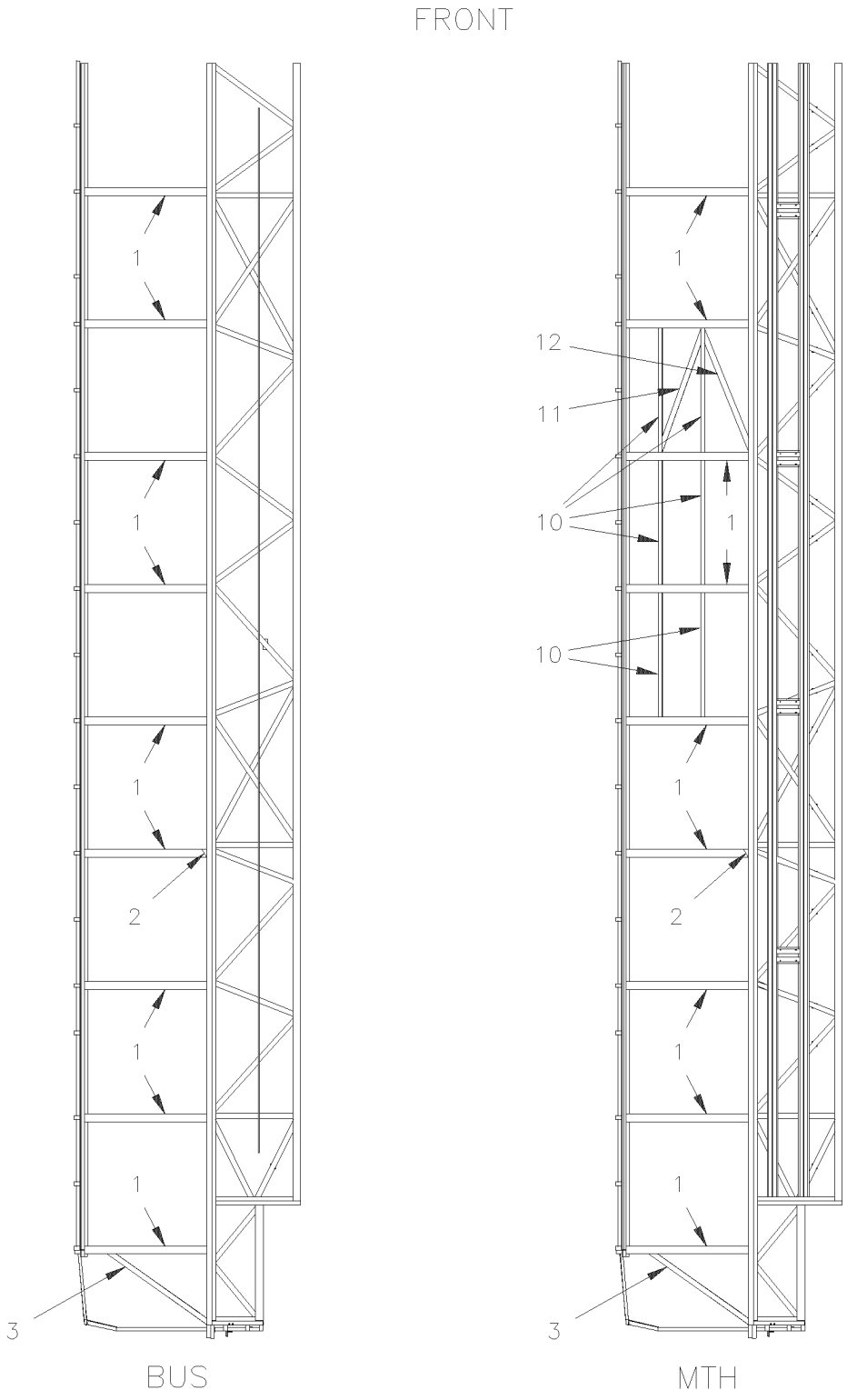

From Y-7046 Up to 8-9339	DATE: 01/2014	PAGE: Y2-1890-10

STRUCTURE WALL - UPPER

ITEM	PART	DESCRIPTION	XL45	MTH40	MTH45	MTH45S	NOTE
1	271264	POST BUS & MTH 83"	18		18		
1	271264	POST BUS & MTH 83" Up to Y-7128		16			
1	271263	POST MTH 86" Up to 5-8813		16			
1	271263	POST MTH 86"			18	18	
1	271265	POST MTH 89"				16	
1	271265	POST MTH 89"			18	18	
2	271130	REINFORCEMENT				16	
2	271130	REINFORCEMENT	18		18	18	
3	260772	REINFORCEMENT L.H.	1	1	1	1	
3	260773	REINFORCEMENT R.H.	1	1	1	1	
10	271133	TUBE 1219MM (47.99") / STD BETWEEN WINDOW POST		AR	AR	AR	
11	271191	TUBE		AR	AR	AR	
12	271190	TUBE		AR	AR	AR	
12	271380	TUBE MTH 89"		AR	AR	AR	

From Y-7046 Up to 6-8906	DATE: 01/2014	PAGE: Y2-1891-00
LOWER WALL STRUCTURE - BUS		

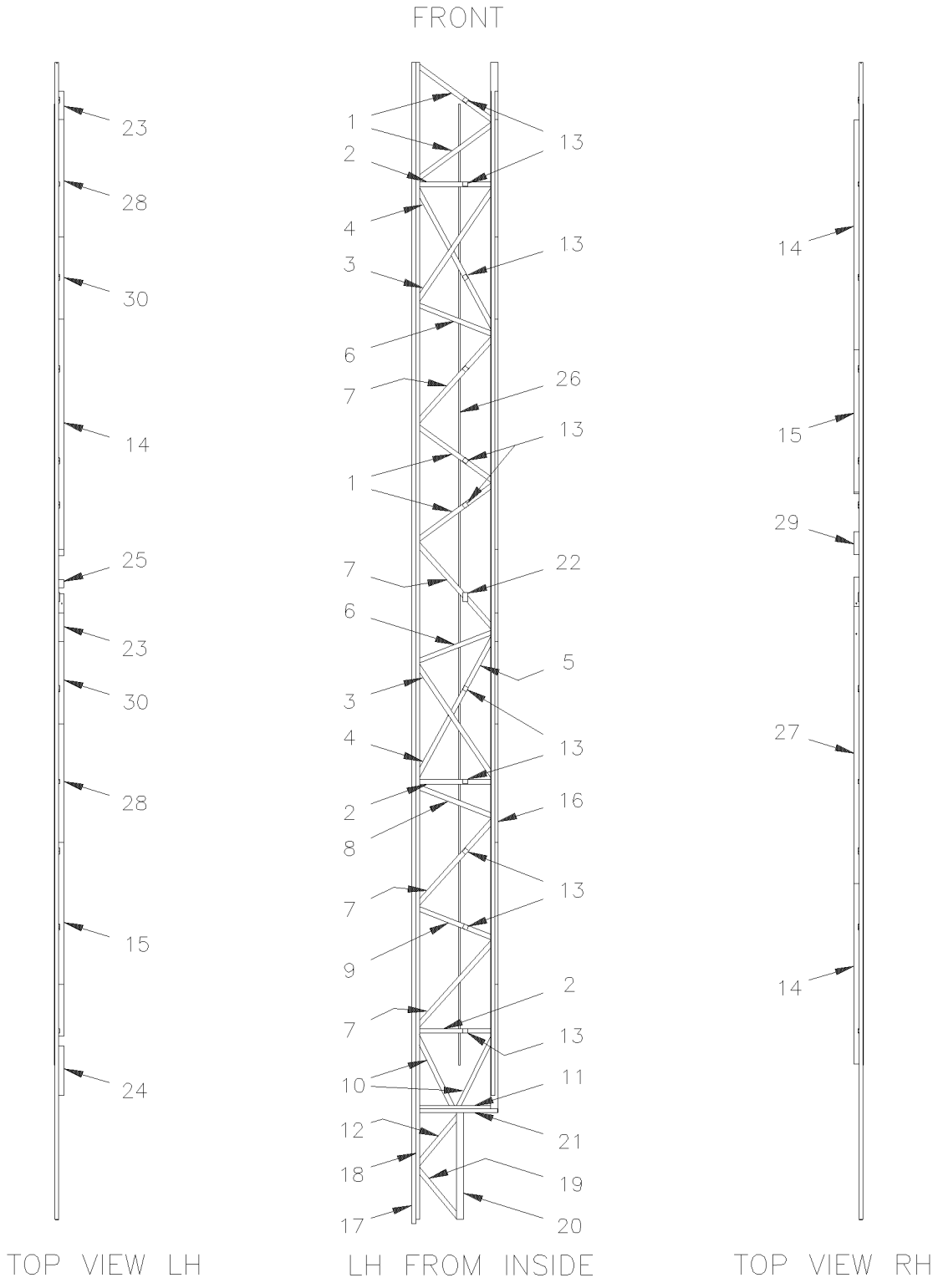

From Y-7046 Up to 6-8906	DATE: 01/2014	PAGE: Y2-1891-00

LOWER WALL STRUCTURE - BUS

ITEM	PART	DESCRIPTION	XL45	MTH40	MTH45	MTH45S	NOTE
1	231364	TUBE / REPLACED BY: 231566	4				
2	231366	TUBE / REPLACED BY: 231567	3				
3	231367	TUBE / REPLACED BY: 231559	2				
4	231368	TUBE / REPLACED BY: 231560	2				
5	231369	TUBE	2				
6	231370	TUBE	2				
7	231371	TUBE	4				
8	231372	TUBE	1				
9	231373	TUBE	1				
10	231374	TUBE	2				
11	231577	TUBE	1				
12	231377	TUBE	1				
13	231469	SUPPORT SINGLE	11				
14	231222	ANGLE	1				
15	231319	ANGLE	1				
16	231460	TUBE	AR				
17	231458	TUBE	AR				
18	231459	TUBE	AR				
19	231454	TUBE	1				
20	231215	TUBE / REPLACED BY: 231822	1				
21	231242	TUBE ASSY / REPLACED BY: 231692	1				
22	231470	DOUBLE SUPPORT	1				
23	231248	ANGLE	2				
24	231241	ANGLE	1				
25	231353	ANGLE	1				
26	231298	TUBE	AR				
27	231246	ANGLE	1				
28	231354	ANGLE	2				
29	231247	ANGLE	1				
30	231276	ANGLE	2				

From Y-7046 Up to 5-8813	DATE: 01/2014	PAGE: Y2-1891-50
LOWER WALL STRUCTURE - MTH 40'		

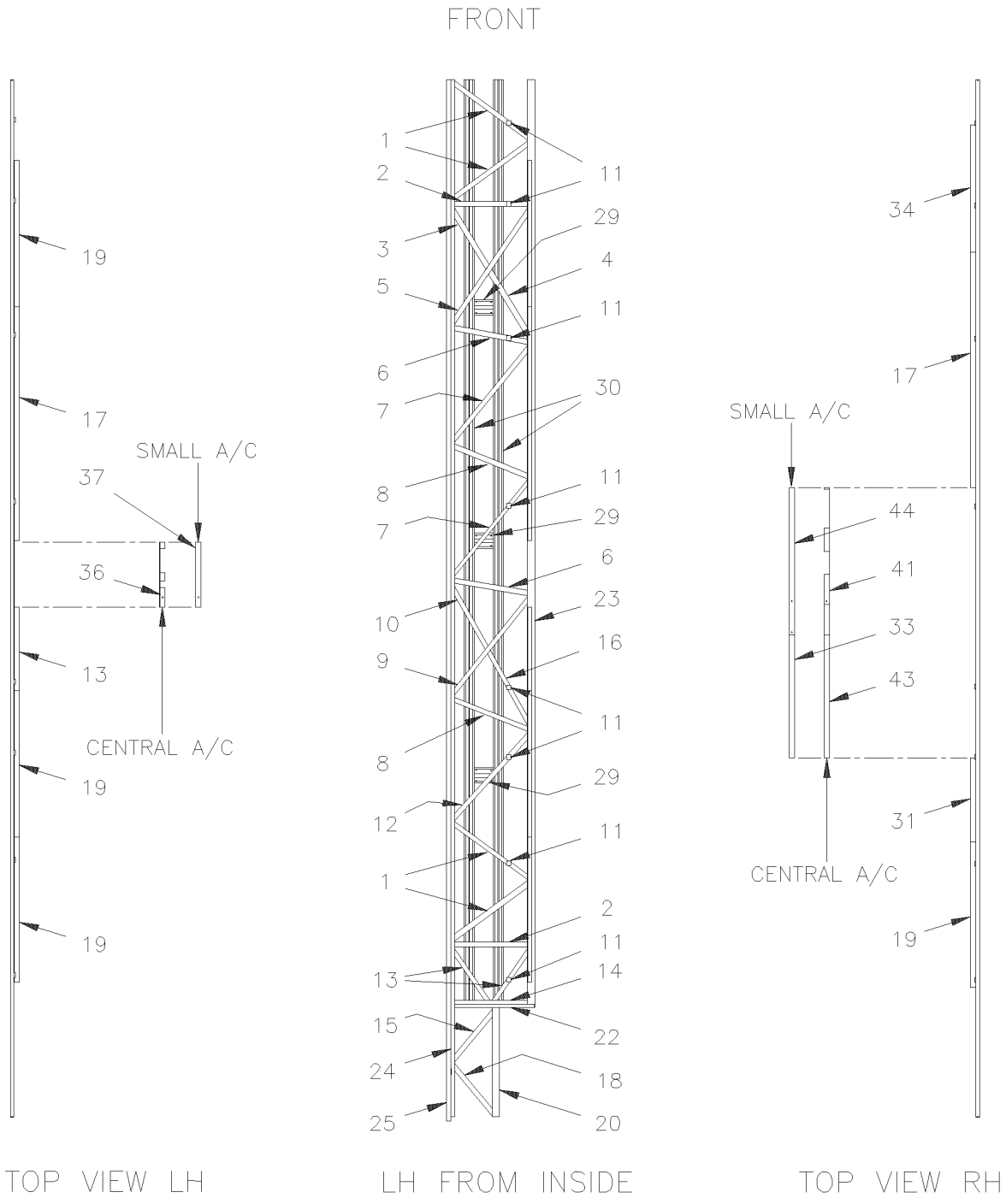

From Y-7046 Up to 5-8813	DATE: 01/2014	PAGE: Y2-1891-50

LOWER WALL STRUCTURE - MTH 40'

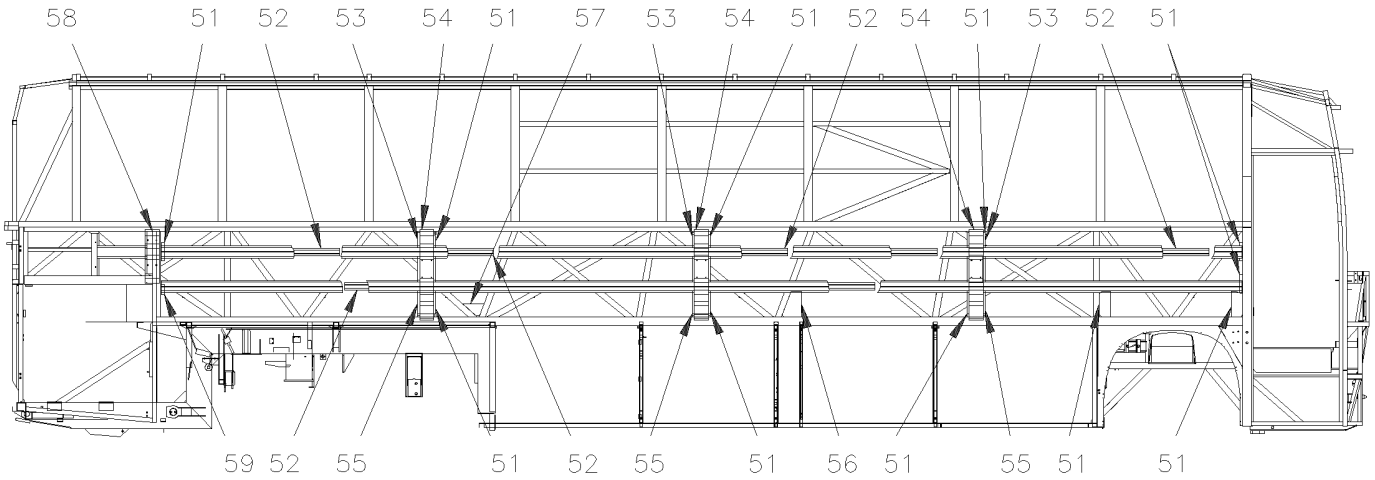

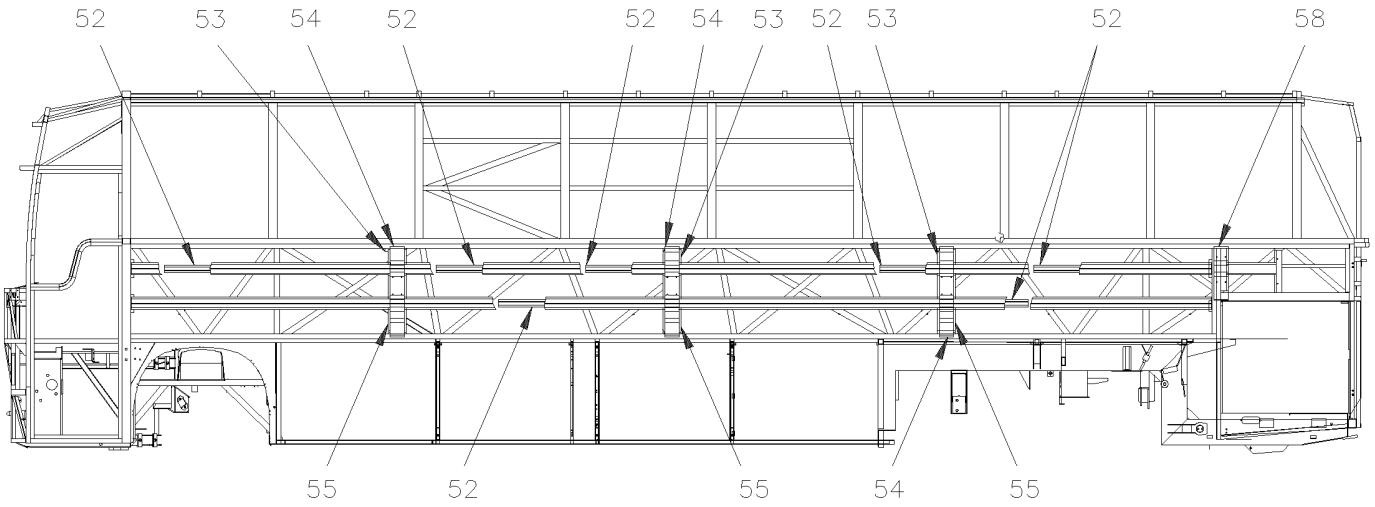

From Y-7046 Up to 5-8813	DATE: 01/2014	PAGE: Y2-1891-50

LOWER WALL STRUCTURE - MTH 40'

ITEM	PART	DESCRIPTION	XL45	MTH40	MTH45	MTH45S	NOTE
1	231200	TUBE		4			
2	231201	TUBE		2			
3	231356	TUBE		1			
4	231357	TUBE		1			
5	231202	TUBE		1			
6	231358	TUBE		2			
7	231359	TUBE		2			
8	231206	TUBE		2			
9	231360	TUBE		1			
10	231361	TUBE		1			
11	231217	FASTENER		8			
12	231207	TUBE		1			
13	231363	TUBE		2			
14	231209	TUBE		1			
15	231210	TUBE		1			
16	231362	TUBE		1			
17	231222	ANGLE		1			
18	231414	TUBE		1			
19	231319	ANGLE		1			
20	231215	TUBE / REPLACED BY: 231822		1			
22	231225	VERTICAL TUBE ASSY		1			
23	231457	TUBE		AR			
24	231456	TUBE		AR			
25	231455	TUBE		AR			
29	231272	CENTRAL FORM		3			
30	231490	HORIZONTAL FORM		AR			
31	231276	ANGLE		1			
33	231354	ANGLE		1			
34	231492	ANGLE		1			
36	231353	ANGLE		1			
37	231244	ANGLE		1			
41	231247	ANGLE		1			
43	231354	ANGLE		1			
44	231245	ANGLE		1			
51	231489	ANGLE 28.6MM X 28.6MM X 160MM		8			
52	231275	REINFORCEMENT		10			
53	231274	UPPER FORM		6			
54	473867	PANEL JUNCTION / S.B. Up to 5-8468 / REPLACED BY: 477610		6			
54	477610	PANEL JUNCTION / B.A. From 5-8469		6			
55	231273	LOWER FORM		6			
56	231504	ANCHOR PLATE / "ZIPDEE"		1			
57	231502	ANCHOR PLATE / "ZIPDEE"		1			
58	473868	PANEL JUNCTION / S.B. Up to 5-8468 / REPLACED BY: 477611		4			
58	477611	PANEL JUNCTION / B.A. From 5-8469		4			

From Y-7046 Up to 5-8813	DATE: 01/2014	PAGE: Y2-1891-50

LOWER WALL STRUCTURE - MTH 40'

ITEM	PART	DESCRIPTION	XL45	MTH40	MTH45	MTH45S	NOTE
59	231508	BRACKET		2			

From Y-7046 Up to 1-7631	DATE: 01/2014	PAGE: Y2-1891-55

LOWER WALL STRUCTURE - MTH 45' ENT 86"

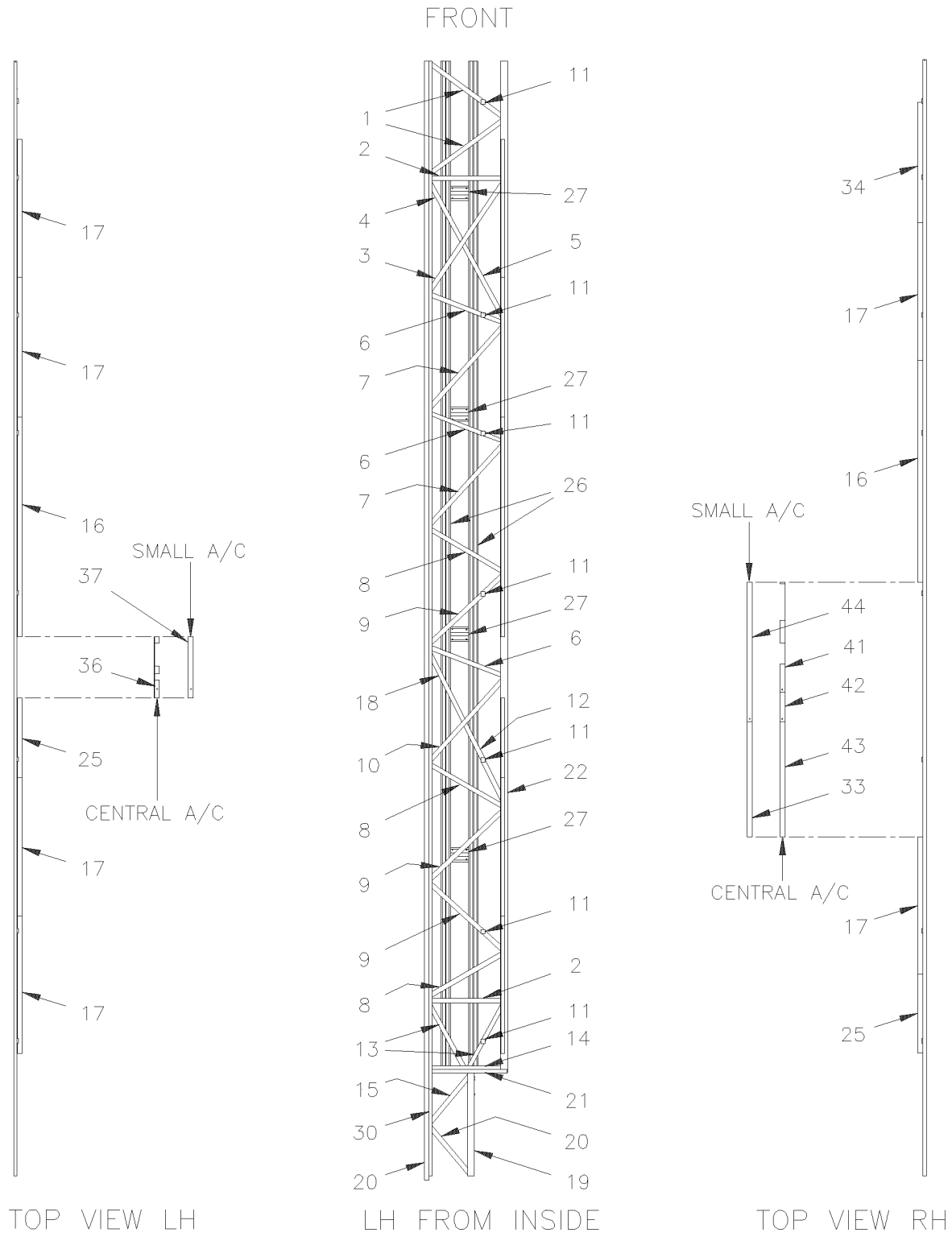

From Y-7046 Up to 1-7631	DATE: 01/2014	PAGE: Y2-1891-55

LOWER WALL STRUCTURE - MTH 45' ENT 86"

ITEM	PART	DESCRIPTION	XL45	MTH40	MTH45	MTH45S	NOTE
1	231200	TUBE				2	
2	231201	TUBE				2	
3	231202	TUBE				1	
4	231203	TUBE				1	
5	231204	TUBE				1	
6	231206	TUBE				3	
7	231207	TUBE				2	
8	231313	TUBE				3	
9	231314	TUBE				3	
10	231315	TUBE				1	
11	231217	FASTENER				8	
12	231317	TUBE				1	
13	231318	TUBE				2	
14	231209	TUBE				1	
15	231210	TUBE				1	
16	231222	ANGLE				2	
17	231319	ANGLE				4	
18	231316	TUBE				1	
19	231215	TUBE / REPLACED BY: 231822				1	
20	231458	TUBE				AR	
21	231459	TUBE				AR	
22	231460	TUBE				AR	
25	231276	ANGLE				1	
26	231488	HORIZONTAL FORM				1	
27	231272	CENTRAL FORM				4	
28	231460	TUBE				AR	
30	231459	TUBE				AR	
33	231354	ANGLE				1	
34	231492	ANGLE				1	
36	231353	ANGLE				1	
37	231244	ANGLE				1	
41	231247	ANGLE				1	
42	231277	ANGLE				1	
43	231354	ANGLE				1	
44	231245	ANGLE				1	

From Y-7046 Up to 8-9339	DATE: 01/2014	PAGE: Y2-1891-56

LOWER WALL STRUCTURE - MTH 45' ENT 89"

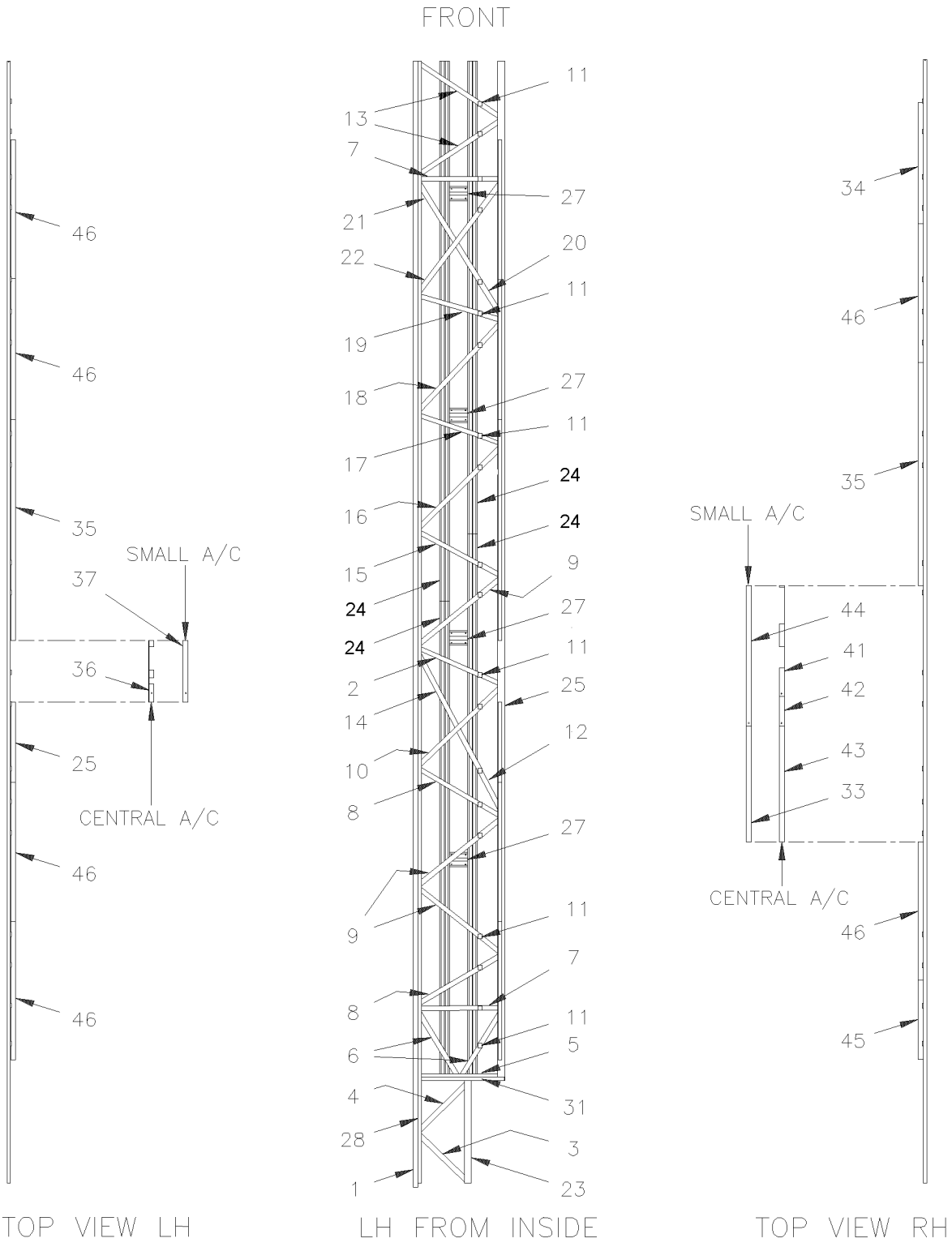

From Y-7046 Up to 8-9339	DATE: 01/2014	PAGE: Y2-1891-56

LOWER WALL STRUCTURE - MTH 45' ENT 89"

ITEM	PART	DESCRIPTION	XL45	MTH40	MTH45	MTH45S	NOTE
1	231458	TUBE				AR	
2	231426	TUBE				1	
3	231417	TUBE				1	
4	231418	TUBE				1	
5	231525	TUBE				1	
6	231421	TUBE				2	
7	231422	TUBE				2	
8	231423	TUBE				2	
9	231424	TUBE				3	
10	231425	TUBE				1	
11	231217	FASTENER				8	
12	231428	TUBE				1	
13	231429	TUBE				2	
14	231427	TUBE				1	
15	231430	TUBE				1	
16	231431	TUBE				1	
17	231432	TUBE				1	
18	231433	TUBE				1	
19	231434	TUBE				1	
20	231435	TUBE				1	
21	231436	TUBE				1	
22	231437	TUBE				1	
23	231215	TUBE / REPLACED BY: 231822				1	
24	231488	HORIZONTAL FORM				AR	
25	231460	TUBE				AR	
27	231272	CENTRAL FORM				4	
28	231459	TUBE				1	
31	231212	TUBE ASSY				1	
33	231354	ANGLE				1	
34	231492	ANGLE				1	
35	231222	ANGLE				2	
36	231353	ANGLE				1	
37	231244	ANGLE				1	
41	231247	ANGLE				1	
42	231277	ANGLE				1	
43	231354	ANGLE				1	
44	231245	ANGLE				1	
45	231276	ANGLE				1	
46	231319	ANGLE				4	

From Y-7046 Up to 8-9339	DATE: 01/2014	PAGE: Y2-1891-60
LOWER WALL STRUCTURE - MTH 45'		

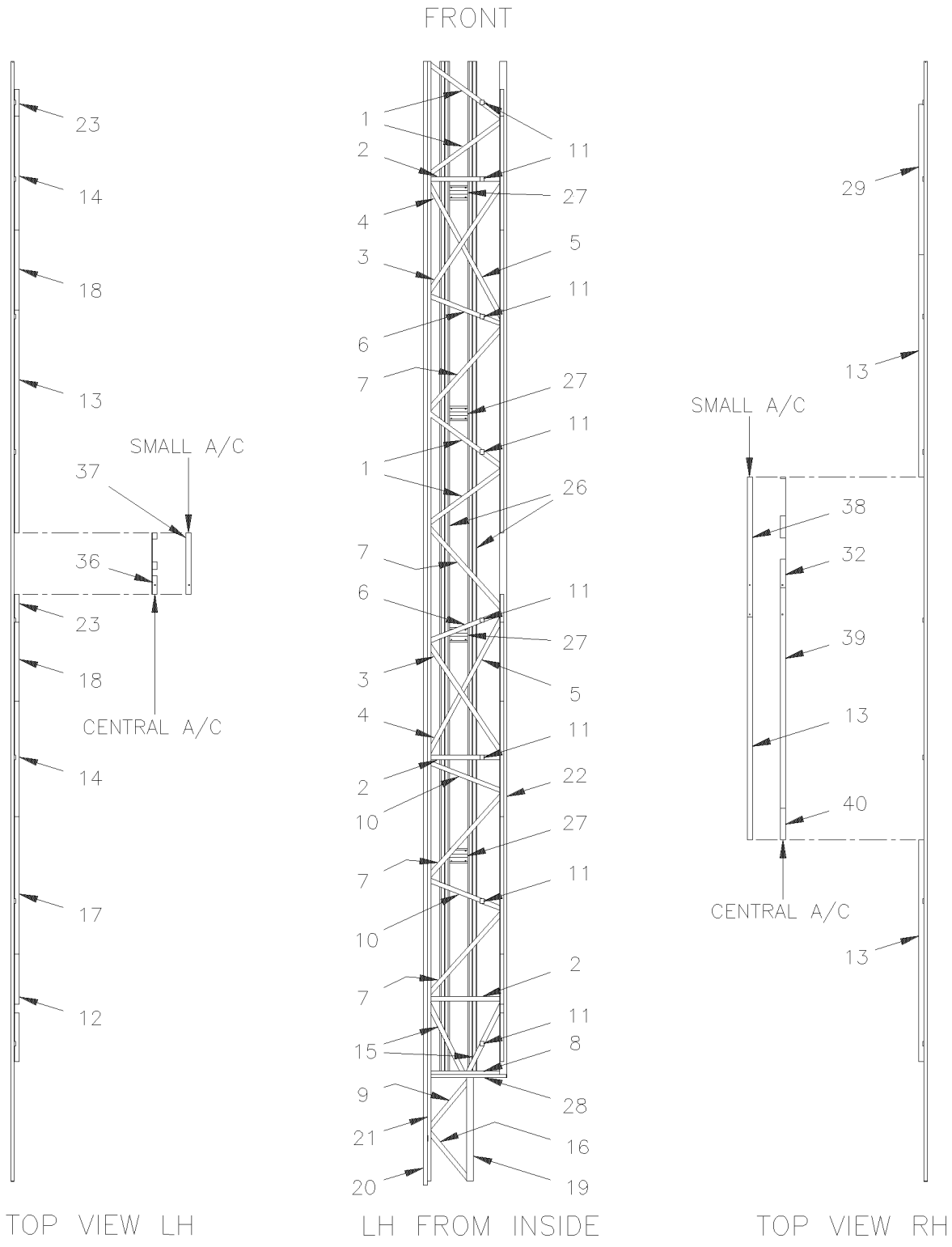

From Y-7046 Up to 8-9339	DATE: 01/2014	PAGE: Y2-1891-60
LOWER WALL STRUCTURE - MTH 45'		

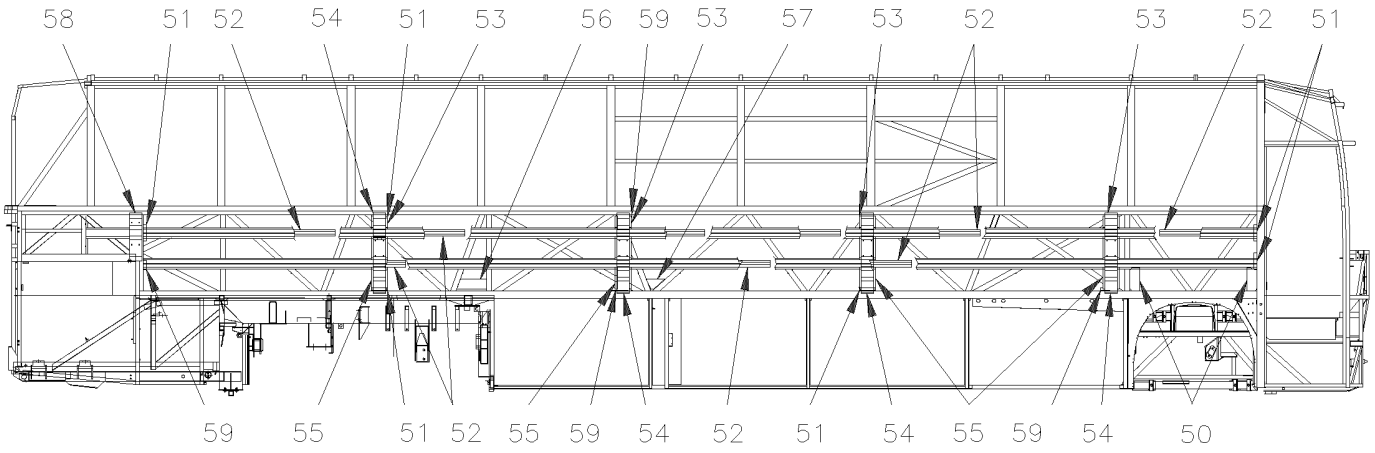

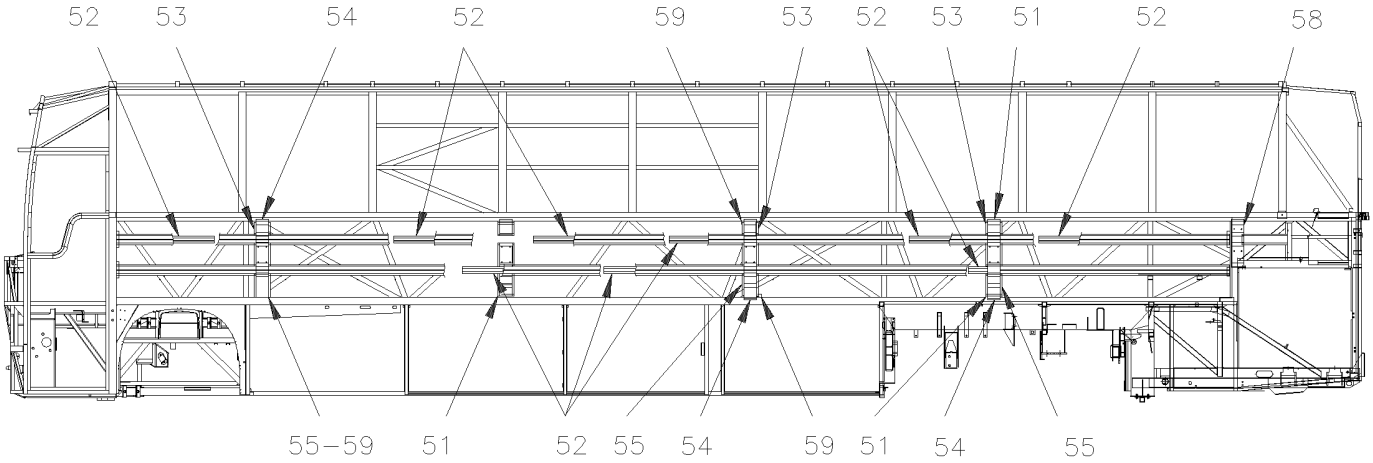

From Y-7046 Up to 8-9339	DATE: 01/2014	PAGE: Y2-1891-60

LOWER WALL STRUCTURE - MTH 45'

ITEM	PART	DESCRIPTION	XL45	MTH40	MTH45	MTH45S	NOTE
1	231200	TUBE			4		
1	231571	TUBE			4		A
2	231201	TUBE			3		
2	231516	TUBE			3		A
3	231202	TUBE			2		
3	231515	TUBE			2		A
4	231203	TUBE			2		
4	231511	TUBE			2		A
5	231204	TUBE			2		
5	231512	TUBE			2		A
6	231206	TUBE			2		
6	231513	TUBE			2		A
7	231207	TUBE			4		
7	231572	TUBE			4		A
8	231568	TUBE			1		
9	231210	TUBE			1		
10	231208	TUBE			2		
10	231574	TUBE			2		A
11	231217	FASTENER			8		
11	231248	ANGLE			2		A
12	231241	ANGLE			1		
13	231222	ANGLE			1		
14	231276	ANGLE			2		
14	231354	ANGLE			1		A
15	231223	TUBE			2		
15	231515	TUBE			2		A
16	231414	TUBE			1		
17	231319	ANGLE			1		
18	231354	ANGLE			2		
18	231276	ANGLE			1		A
19	231215	TUBE / REPLACED BY: 231822			1		
20	231458	TUBE			AR		
21	231459	TUBE			AR		
22	231460	TUBE			AR		
23	231248	ANGLE			2		
26	231488	HORIZONTAL FORM			AR		
27	231272	CENTRAL FORM			4		
28	231225	VERTICAL TUBE ASSY			1		
29	231491	ANGLE			1		
32	231247	ANGLE			1		
36	231353	ANGLE			1		
37	231244	ANGLE			1		
38	231245	ANGLE			1		
		A) WITH SLIDE OUT					

From Y-7046 Up to 8-9339	DATE: 01/2014	PAGE: Y2-1891-60

LOWER WALL STRUCTURE - MTH 45'

ITEM	PART	DESCRIPTION	XL45	MTH40	MTH45	MTH45S	NOTE
39	231246	ANGLE			1		
40	231277	ANGLE			1		
50	231501	ANCHOR PLATE / "ZIPDEE"			2		
51	231489	ANGLE 28.6MM X 28.6MM X 160MM			8		
52	231275	REINFORCEMENT			10		
53	231274	UPPER FORM			8		
54	473867	PANEL JUNCTION / S.B. Up to 5-8468 / REPLACED BY: 477610			8		
54	477610	PANEL JUNCTION / B.A. From 5-8469			8		
55	231273	LOWER FORM			8		
56	231503	ANCHOR PLATE			1		
57	231502	ANCHOR PLATE / "ZIPDEE"			1		
58	473868	PANEL JUNCTION / S.B. Up to 5-8468 / REPLACED BY: 477611			2		
58	477611	PANEL JUNCTION / B.A. From 5-8469			2		
59	231508	BRACKET			4		

From Y-7046 Up to 6-8906	DATE: 01/2014	PAGE: Y2-1893-00

BAGGAGE COMPARTMENT STRUCTURE

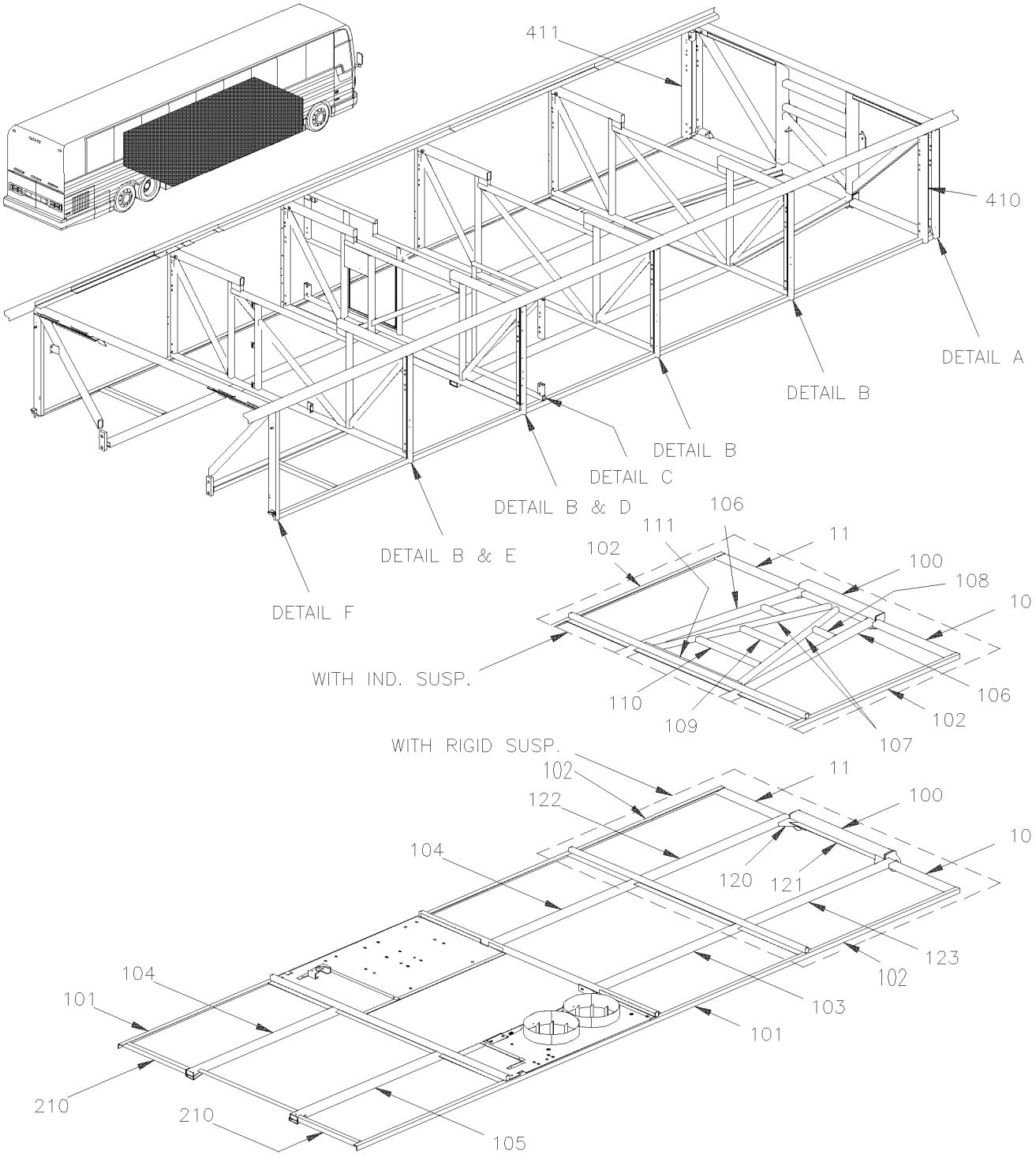

From Y-7046 Up to 6-8906	DATE: 01/2014	PAGE: Y2-1893-00

BAGGAGE COMPARTMENT STRUCTURE

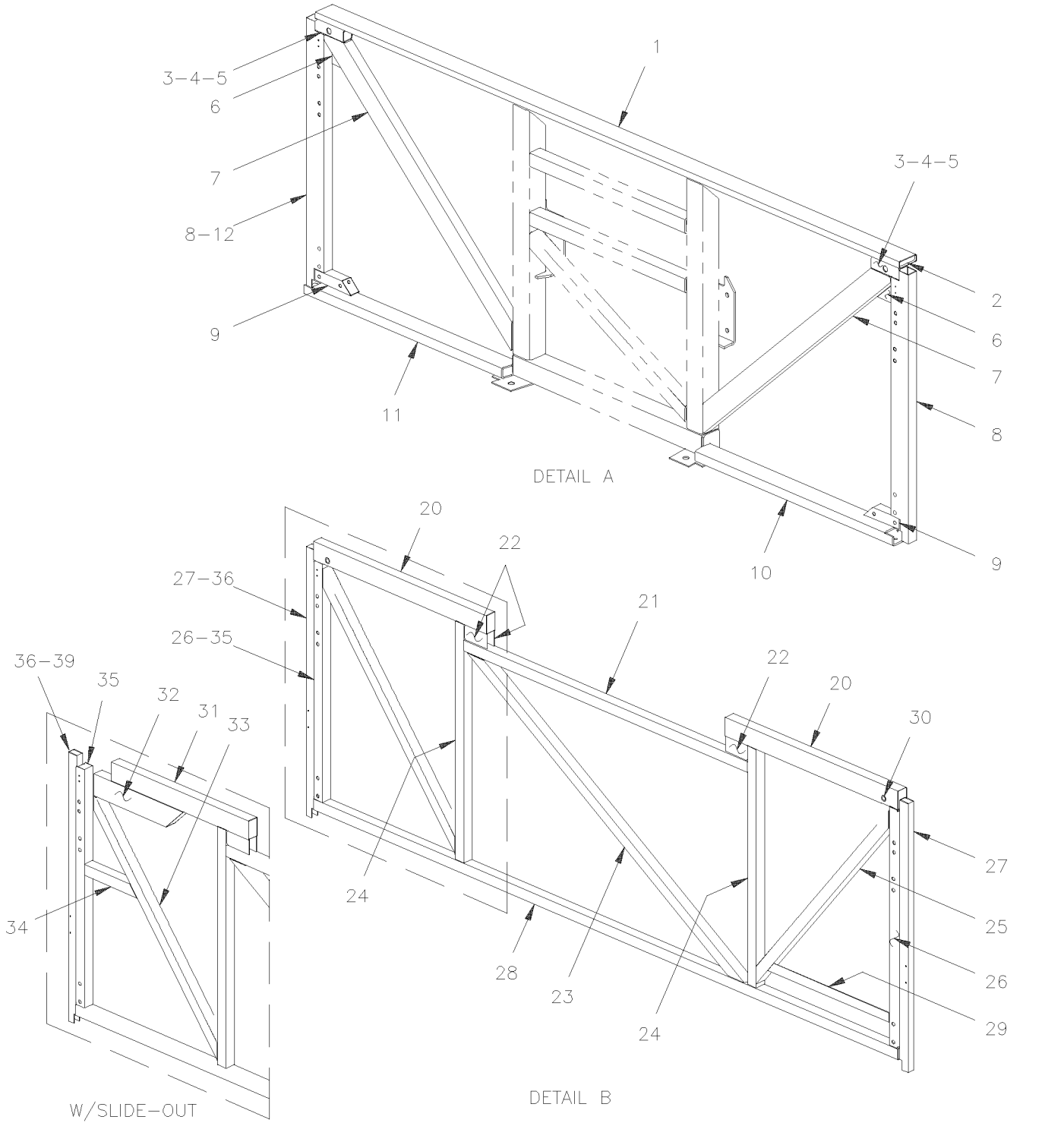

From Y-7046 Up to 6-8906	DATE: 01/2014	PAGE: Y2-1893-00
BAGGAGE COMPARTMENT STRUCTURE		

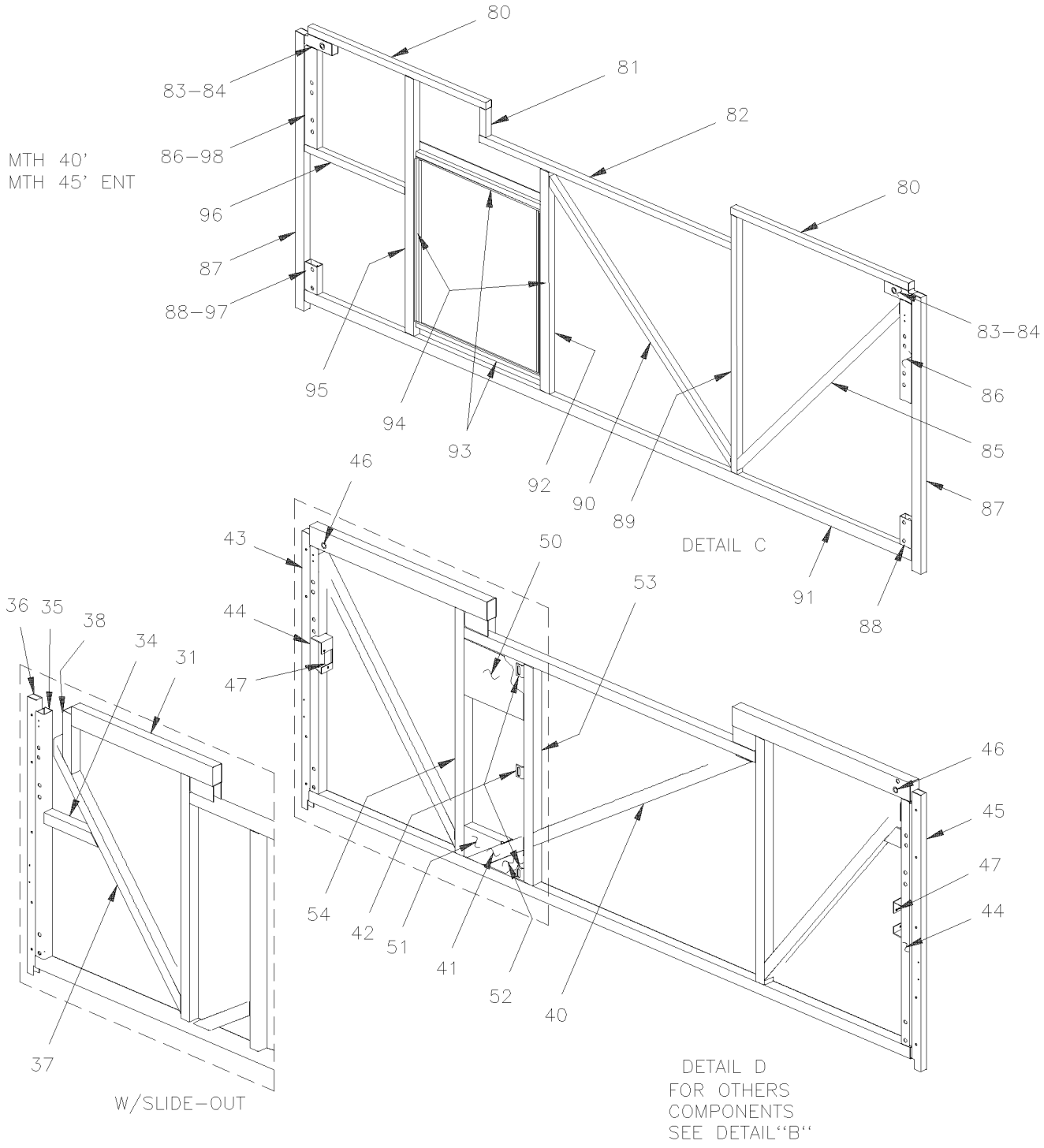

From Y-7046 Up to 6-8906	DATE: 01/2014	PAGE: Y2-1893-00

BAGGAGE COMPARTMENT STRUCTURE

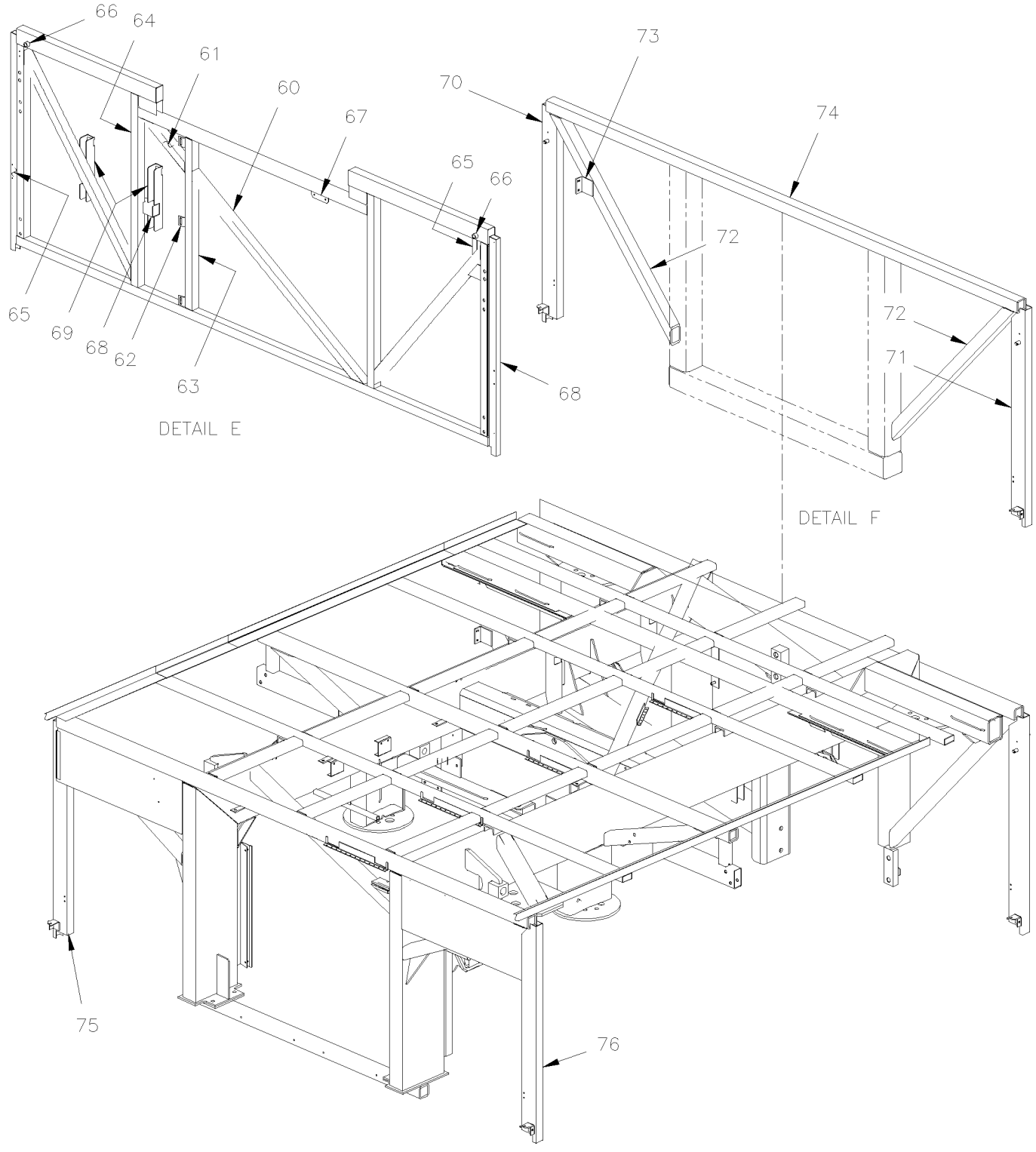

From Y-7046 Up to 6-8906	DATE: 01/2014	PAGE: Y2-1893-00

BAGGAGE COMPARTMENT STRUCTURE

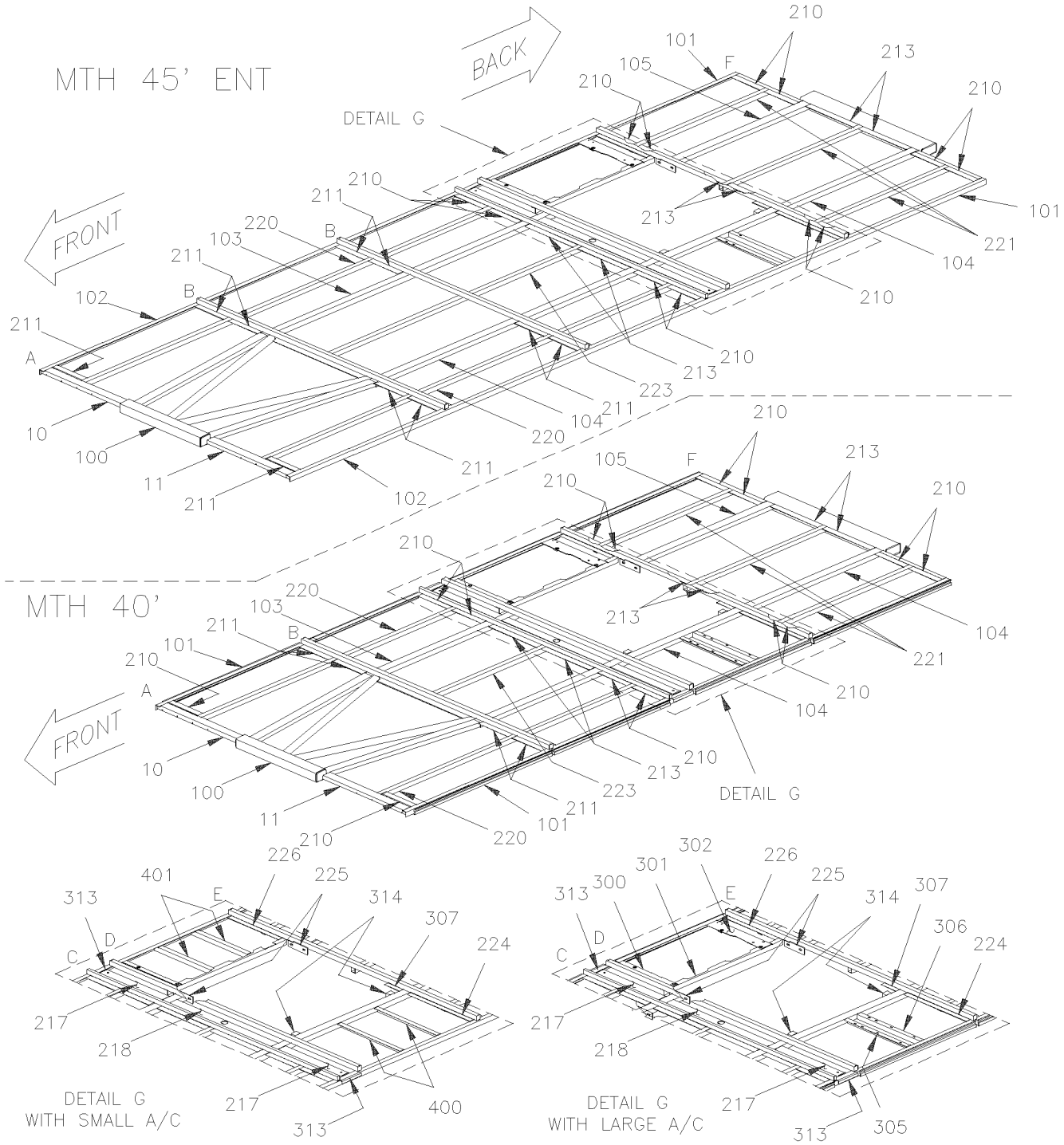

From Y-7046 Up to 6-8906	DATE: 01/2014	PAGE: Y2-1893-00
BAGGAGE COMPARTMENT STRUCTURE		

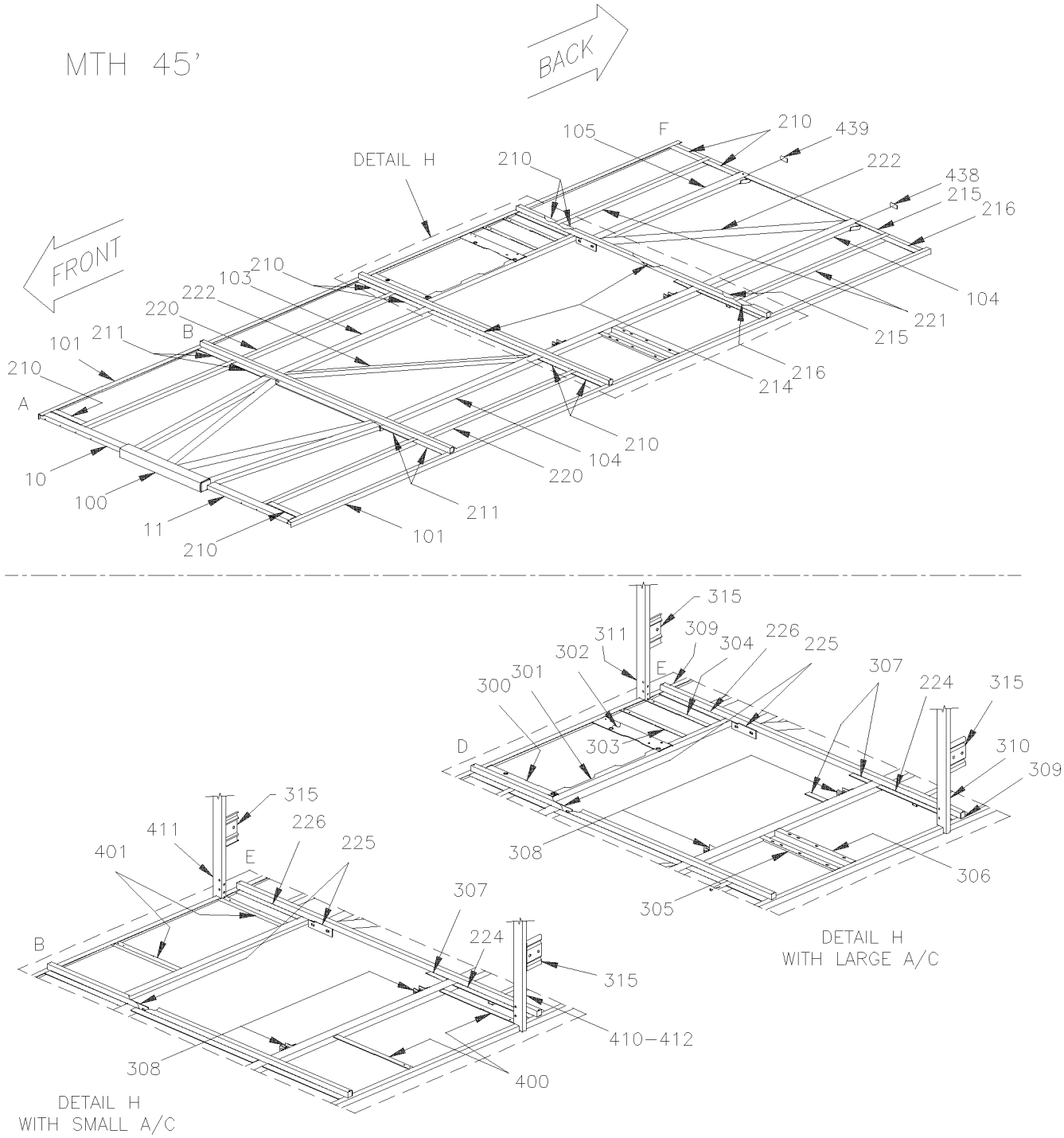

From Y-7046 Up to 6-8906	DATE: 01/2014	PAGE: Y2-1893-00
BAGGAGE COMPARTMENT STRUCTURE		

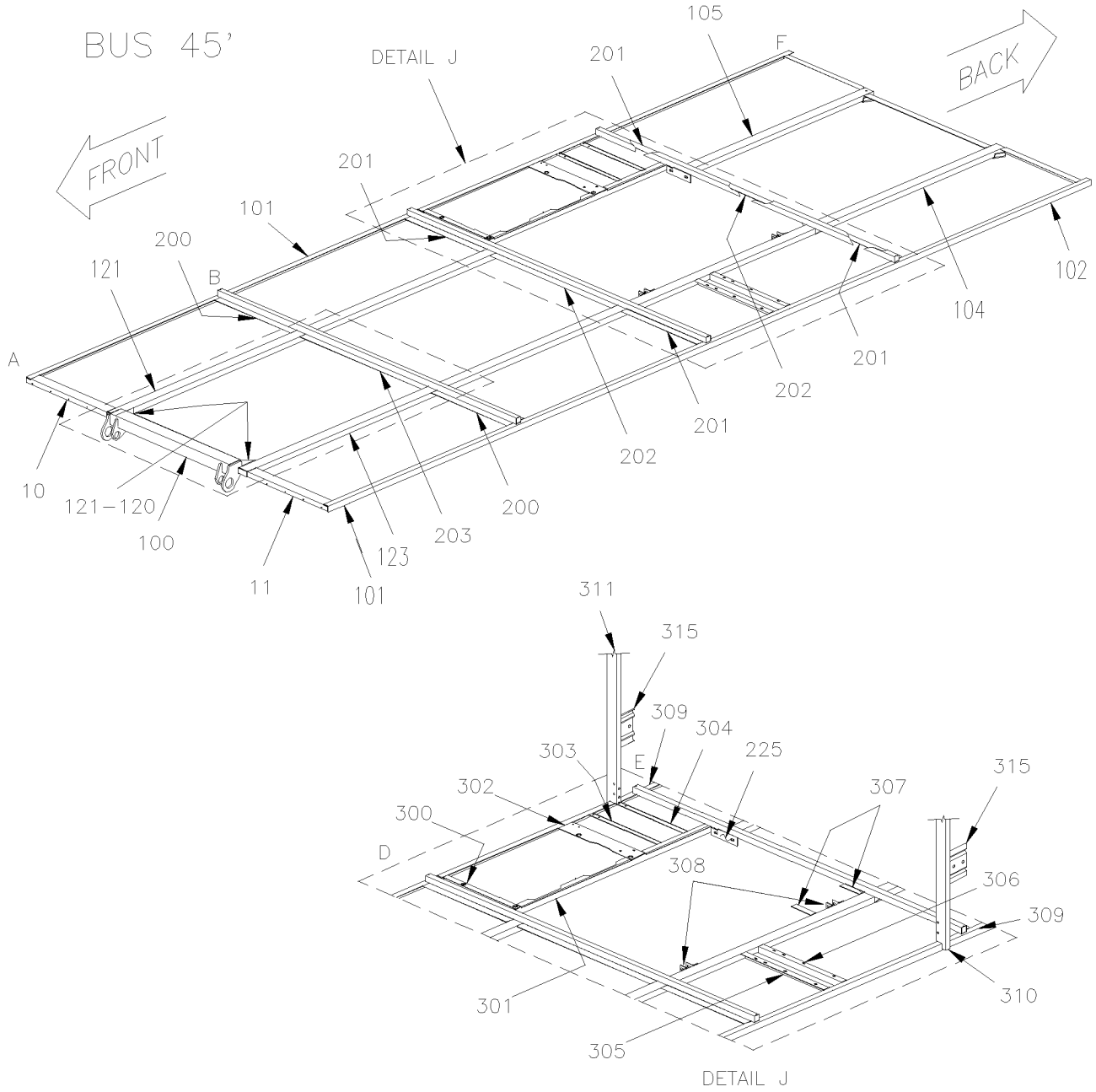

From Y-7046 Up to 6-8906	DATE: 01/2014	PAGE: Y2-1893-00

BAGGAGE COMPARTMENT STRUCTURE

ITEM	PART	DESCRIPTION	XL45	MTH40	MTH45	MTH45S	NOTE
1	213082	TUBE 2489MM	1				
2	214466	PLATE, CLOSING / TUBE 18MM x 69MM	2				
3	213149	TUBE 120MM	2				
4	260126	TUBE, VERTICAL FRAME / REAR ENGINE DOOR / 1524MM	2				
5	213891	INSERT 50MM LG	2				
NS	260120	PLATE, CLOSING / TUBE 33MM x 33MM	2				
6	213083	REINFORCEMENT 120MM x 109MM Up to Y-7720 / REPLACED BY: 214671	2				
6	214671	REINFORCEMENT 79MM x 90MM From Y-7721	2				
7	214306	TUBE 1122MM Up to 2-7751	2				
7	213080	TUBE 1121MM Up to 2-7751	2				
7	214650	TUBE 1126MM From 2-7752	2				
8	240491	POST 895MM L.H. & R.H. From 2-7894 / REPLACED BY: K240491	2				
8	214391	POST 895MM L.H. & R.H. Up to 1-7680	2				
8	240625	POST 895MM R.H. From 2-7894 Up to 3-7990 / REPLACED BY: 240434	1				
8	240434	POST 895MM R.H. From 3-7991 Up to 4-8193	1				
8	240638	POST 895MM R.H. From 4-8194	1				
9	210081	TUBE 6" LOWER ATTACHMENT	2				
10	214222	TUBE 669MM / REPLACED BY: 215254	1				R
10	213079	TUBE 847MM / REPLACED BY: 214265	1				I
11	214223	TUBE 669MM / REPLACED BY: 215273	1				R
11	213085	TUBE 847MM	1				I
13	214391	POST 895MM L.H. & R.H. Up to 1-7680	1				
13	240491	POST 895MM L.H. & R.H. From 1-7681 Up to 2-7893 / REPLACED BY: K240491	1				
13	240624	POST 895MM L.H. From 2-7894 Up to 3-7990 / REPLACED BY: 240605	1				
13	240605	POST 895MM L.H. From 3-7991 Up to 3-8164	1				
20	240115	TUBE 738MM x 1 1/2" 1 1/2" Up to 4-8244	2				
NS	240124	TUBE 738MM x 1" x 1 1/2" Up to 4-8244	1				
20	240634	TUBE 738MM x 1 1/2" 2 1/2" From 4-8245	2				
21	240113	TUBE 1209MM	1				
22	240117	CLOSING PLATE 51MM X 45MM	4				
23	240114	TUBE 1374MM	1				
24	240139	TUBE 794MM Up to 2-7751 / REPLACED BY: 240108	2				
24	240108	TUBE 794MM From 2-7752	2				
25	240116	TUBE 951MM	2				
26	240346	POST EXTERIOR Up to 1-7680	2				
26	240484	POST INTERIOR 794MM From 1-7681 Up to 3-7990 / REPLACED BY: 240608	2				
26	240608	POST INTERIOR 794MM From 3-7991	2				
27	240386	POST EXTERIOR 895MM	1				
28	240134	TUBE 2489MM Up to 1-7680	1				
28	240485	TUBE 2489MM From 1-7681	1				
29	240515	TUBE 515MM / HOSTESS SEAT SUPPORT	1				
30	480376	ATTACHMENT, DOOR ARM / 63.5MM	2				
		I) WITH INDEPENDANT SUSPENSION					
		R) WITH I BEAM RIGID SUSPENSION					

From Y-7046 Up to 6-8906	DATE: 01/2014	PAGE: Y2-1893-00

BAGGAGE COMPARTMENT STRUCTURE

ITEM	PART	DESCRIPTION	XL45	MTH40	MTH45	MTH45S	NOTE
40	240107	TUBE 1073MM	1				
41	240109	TUBE 277MM	1				
42	240451	ANGLE 22MM x 28MM x 38MM	3				
43	240390	POST EXTERIOR L.H. 895MM ASSY / WRETAINER STRIP	1				
44	240484	POST INTERIOR 794MM From 1-7681 Up to 3-7990 / REPLACED BY: 240608	2				
44	240608	POST INTERIOR 794MM From 3-7991	2				
45	240389	POST EXTERIOR R.H. 895MM ASSY / WRETAINER STRIP	1				
46	220424	ATTACHMENT, DOOR ARM / 58.8MM	2				
46	220424	ATTACHMENT, DOOR ARM / 58.8MM	2				
47	284555	LOCK SUPPORT / (WELDED TO STRUCTURE)	2				
53	240110	TUBE 705MM	1				
54	240108	TUBE 794MM	1				
60	240107	TUBE 1073MM	1				
61	240109	TUBE 277MM	1				
62	240451	ANGLE 22MM x 28MM x 38MM	3				
63	240110	TUBE 705MM	1				
64	240108	TUBE 794MM	1				
66	220424	ATTACHMENT, DOOR ARM / 58.8MM	2				
67	240314	ANCHOR PLATE 25MM x 90MM	1				
70	240422	POST ASSY FORWARD FENDER / STREETSIDE Up to 1-7680	1				
70	240488	POST ASSY FORWARD FENDER / STREETSIDE From 1-7681 Up to 3-7990 / REPLACED BY: 240603					
70	240603	POST ASSY FORWARD FENDER / STREETSIDE From 3-7991	1				
71	240421	POST ASSY FORWARD FENDER / CURBSIDE Up to 1-7680	1				
71	240490	POST ASSY FORWARD FENDER / CURBSIDE From 1-7681 Up to 3-7990 / REPLACED BY: 240606					
71	240606	POST ASSY FORWARD FENDER / CURBSIDE From 3-7991	1				
72	170262	TUBE 986MM	2				
73	172428	SUPPORT VALVE HEIGHT CONTROL	2				
74	170487	TUBE 98"	1				
75	214051	POST ASSY BACKWARD FENDER / STREETSIDE Up to 3-8164	1				
75	214626	POST ASSY BACKWARD FENDER / STREETSIDE From 4-8165	1				
. NS	213939	. CATCH FENDER LOWER From 4-8165	1				
. NS	5001337	. NUT INS FL HEX M8-1.25 0.5-3.0 ZP From 4-8165	2				
. NS	5001344	. NUT INS FL HEX M6-1.0 0.5-3.0 SS From 4-8165	2				
76	214052	POST ASSY BACKWARD FENDER / CURBSIDE Up to 3-8164	1				
. NS	260726	. TUBE Up to 3-8164	1				
. NS	213942	. CATCH FENDER LOWER Up to 3-8164	1				
76	214627	POST ASSY BACKWARD FENDER / CURBSIDE From 4-8165	1				
. NS	213942	. CATCH FENDER LOWER From 4-8165	1				
100	Y2-1897-00	**FRONT SUB-FRAME / W/I BEAM RIGID SUSPENSION**					
100	Y2-1897-50	**FRONT SUB-FRAME / W/INDEPENDENT SUSPENSION - 16500 LBS**					
100	Y2-1897-51	**FRONT SUB-FRAME / W/INDEPENDENT SUSPENSION - 18000 LBS**					
101	221136	ANGLE 1/8" x 1 1/2" X 6354MM (250") / SS	2				

From Y-7046 Up to 6-8906	DATE: 01/2014	PAGE: Y2-1893-00

BAGGAGE COMPARTMENT STRUCTURE

ITEM	PART	DESCRIPTION	XL45	MTH40	MTH45	MTH45S	NOTE
102	220872	ANGLE 1/8" x 1 1/2" X 1524MM (60") / SS	2				
103	221181	TUBE 1649MM	1				
104	221180	TUBE 4764MM	1				
105	221182	TUBE 1581MM	1				
106	221183	TUBE 1526MM	2				
107	221143	TUBE 1534MM Up to 1-7680	2				
107	221193	TUBE 1535MM From 1-7681	2				
108	221147	TUBE 228MM Up to 1-7680	2				
108	221197	TUBE 224MM From 1-7681	2				
109	221146	TUBE 446MM Up to 1-7680	1				
109	221196	TUBE 462MM From 1-7681	1				
110	221145	TUBE 1054MM Up to 1-7680	1				
110	221195	TUBE 668MM From 1-7681	1				
111	221144	TUBE 1018MM Up to 1-7680	1				
111	221194	TUBE 1018MM From 1-7681	1				
120	214287	REINFORCEMENT "TRIANGULAR SHAPE" Up to 1-7680	2				
120	213629	REINFORCEMENT "TRIANGULAR SHAPE" From 1-7681	2				
121	213630	TUBE 900MM	1				
122	221139	TUBE 6307MM Up to 1-7680	1				
122	221184	TUBE 6308MM From 1-7681	1				
123	221140	TUBE 3197MM Up to 1-7680	1				
123	221185	TUBE 3197MM From 1-7681	1				
200	221199	SUPPORT FLOOR 140MM X 636MM	2				
201	220958	SUPPORT FLOOR 101MM X 636MM Up to 1-7680	4				
201	221198	SUPPORT FLOOR 50MM X 638MM From 1-7681	4				
202	220957	SUPPORT FLOOR 50MM X 1016MM Up to 1-7680	2				
202	221201	SUPPORT FLOOR 50MM X 1218MM From 1-7681	2				
203	221202	SUPPORT FLOOR 140MM X 1018MM	1				
210	220286	SUPPORT FLOOR 101MM X 298MM Up to 2-7770 / REPLACED BY: 221243	1				
210	221243	SUPPORT FLOOR 50MM X 298MM From 2-7771	1				
211	220285	SUPPORT FLOOR 76MM X 298MM Up to 2-7770 / REPLACED BY: 221243	1				
211	221245	SUPPORT FLOOR 130MM X 299MM From 2-7771	1				
224	221106	FLOOR SUPPORT	1				
225	220834	PLATE UNION 7 3/4" X 2"	2				
226	221104	SUPPORT FLOOR 38MM X 515MM	1				
300	213244	SUPPORT	1				
301	213442	SUPPORT ANGLE 1606MM	1				
302	213243	SUPPORT	1				
303	220977	ANGLE 19MM X 38MM X 587MM	1				
304	215539	SUPPORT JACK / CURRENT DEC 2003	1				
305	213593	SUPPORT / JACK ACCESSORIES	1				
305	220401	ANGLE SUPPORT 668MM Up to 1-7408 / REPLACED BY: 221178	1				

From Y-7046 Up to 6-8906	DATE: 01/2014	PAGE: Y2-1893-00

BAGGAGE COMPARTMENT STRUCTURE

ITEM	PART	DESCRIPTION	XL45	MTH40	MTH45	MTH45S	NOTE
305	221178	ANGLE SUPPORT 668MM From 1-7409	1				
306	220400	ANGLE SUPPORT 668MM Up to 1-7408 / REPLACED BY: 221177	1				
306	221177	ANGLE SUPPORT 668MM From 1-7409	1				
307	214196	SHIM 38MM X 149MM GA11	2				
308	220854	ANGLE ST 2" X 1 1/2" Up to 5-8630 / REPLACED BY: 221440	2				
308	221440	ANGLE SS 2" X 1 1/2" From 5-8631	2				
309	210338	ANGLE 1" x 125MM / REPLACED BY: 214534	2				
309	214534	FORM "U" 125MM	2				
310	213578	POST ASSY L.H. / W/STRIKER ATTACHMENT Up to 1-7680	1				
310	213930	POST ASSY L.H. / W/STRIKER ATTACHMENT From 1-7681 Up to 3-7990 / REPLACED BY: 214728	1				
310	214728	POST ASSY L.H. / W/STRIKER ATTACHMENT From 3-7991	1				
311	213643	POST ASSY R.H. / W/STRIKER ATTACHMENT Up to 1-7680	1				
311	213931	POST ASSY R.H. / W/STRIKER ATTACHMENT From 1-7681 Up to 3-7990 / REPLACED BY: 214708	1				
311	214708	POST ASSY R.H. / W/STRIKER ATTACHMENT From 3-7991	1				
315	240457	REINFORCEMENT ASSY 125MM	2				
400	221000	SUPPORT	2				
401	220870	ANGLE SUPPORT 22 1/4"	2				

From Y-7046 Up to 6-8906	DATE: 01/2014	PAGE: Y2-1893-00

BAGGAGE COMPARTMENT STRUCTURE

ITEM	PART	DESCRIPTION	XL45	MTH400	MTH445	MTH445S	NOTE

From Y-7046 Up to 6-8805	DATE: 01/2014	PAGE: Y2-1893-50

BAGGAGE COMPARTMENT STRUCTURE

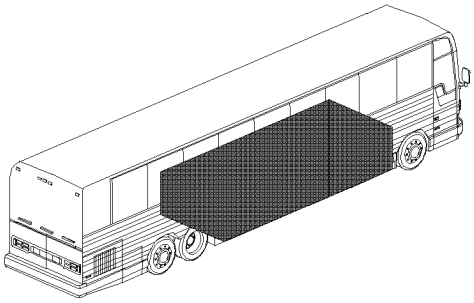

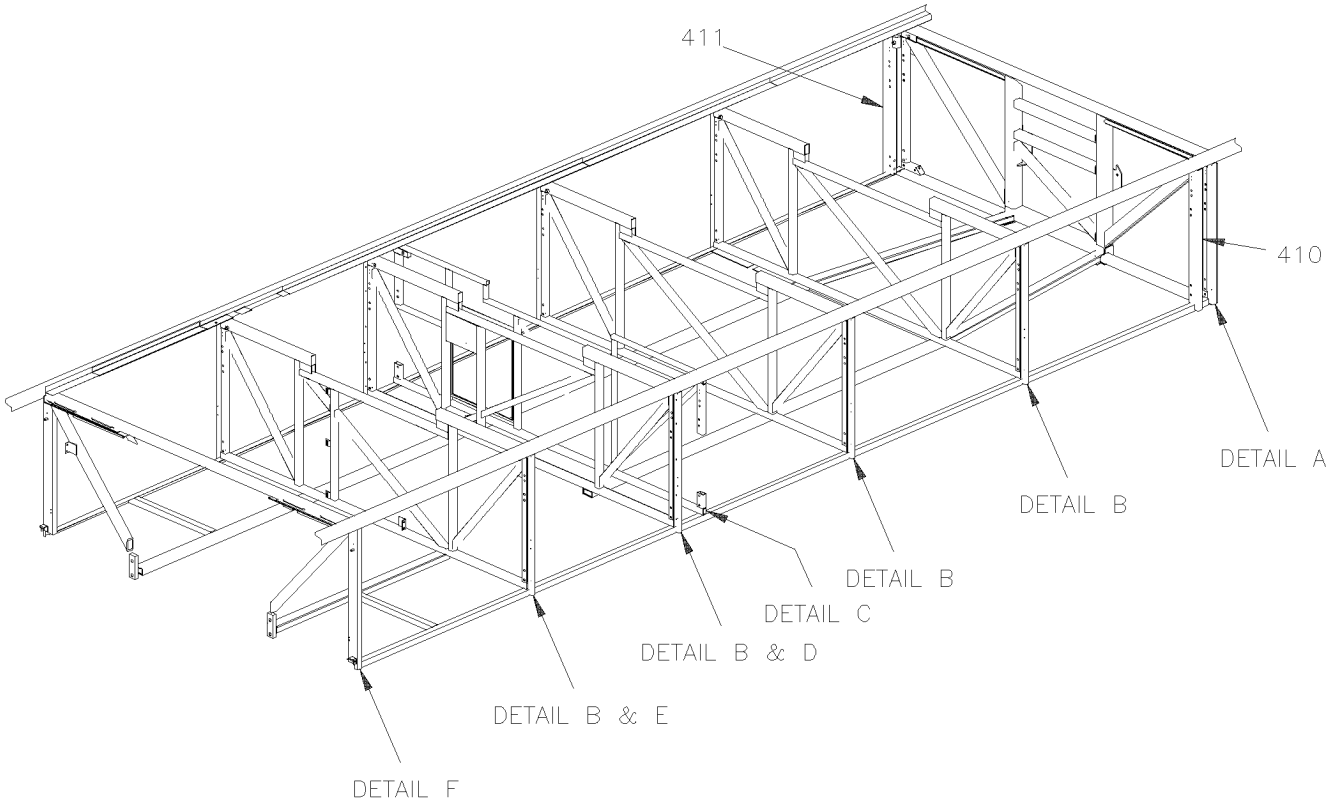

From Y-7046 Up to 6-8805	DATE: 01/2014	PAGE: Y2-1893-50

BAGGAGE COMPARTMENT STRUCTURE

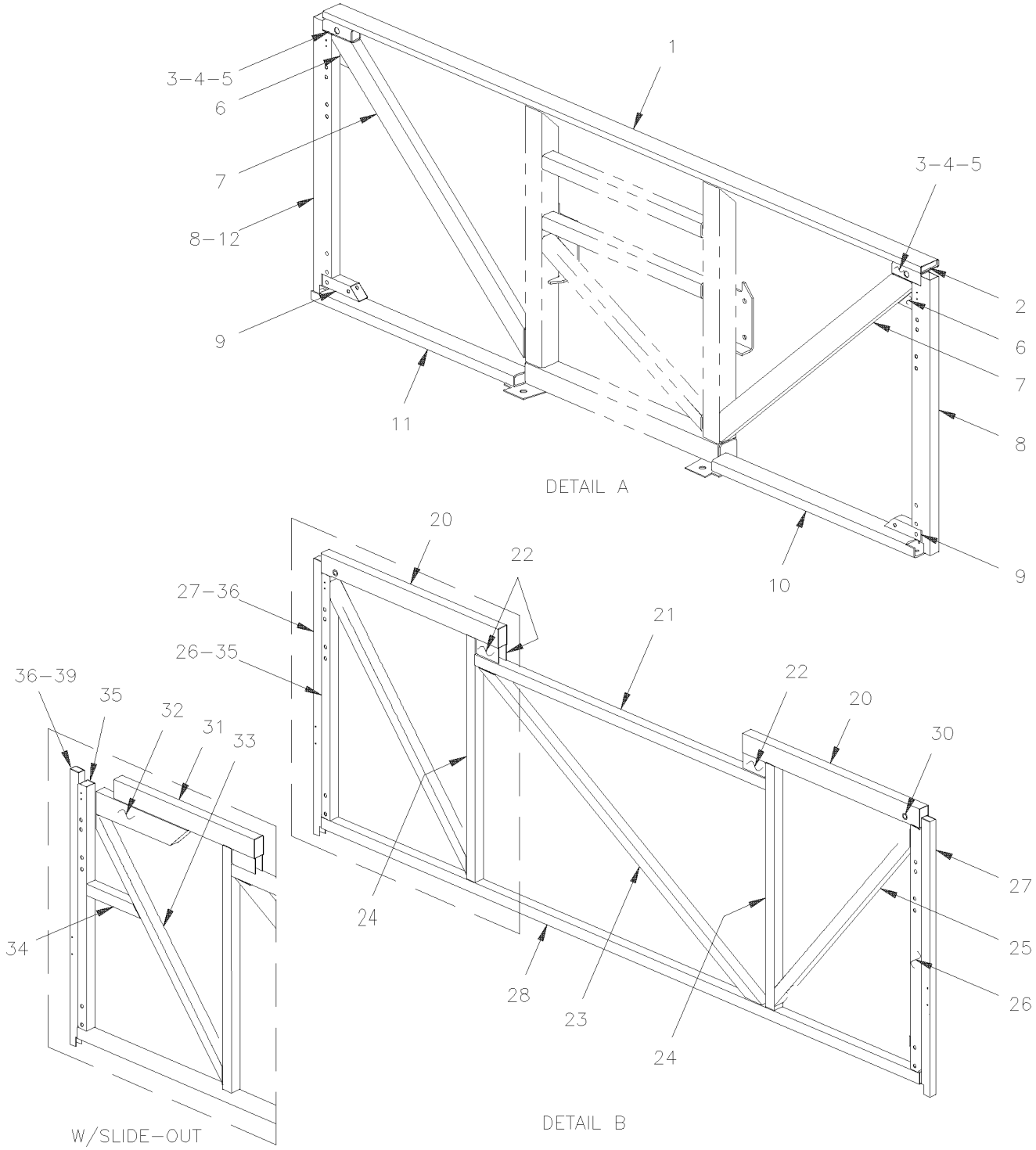

From Y-7046 Up to 6-8805	DATE: 01/2014	PAGE: Y2-1893-50

BAGGAGE COMPARTMENT STRUCTURE

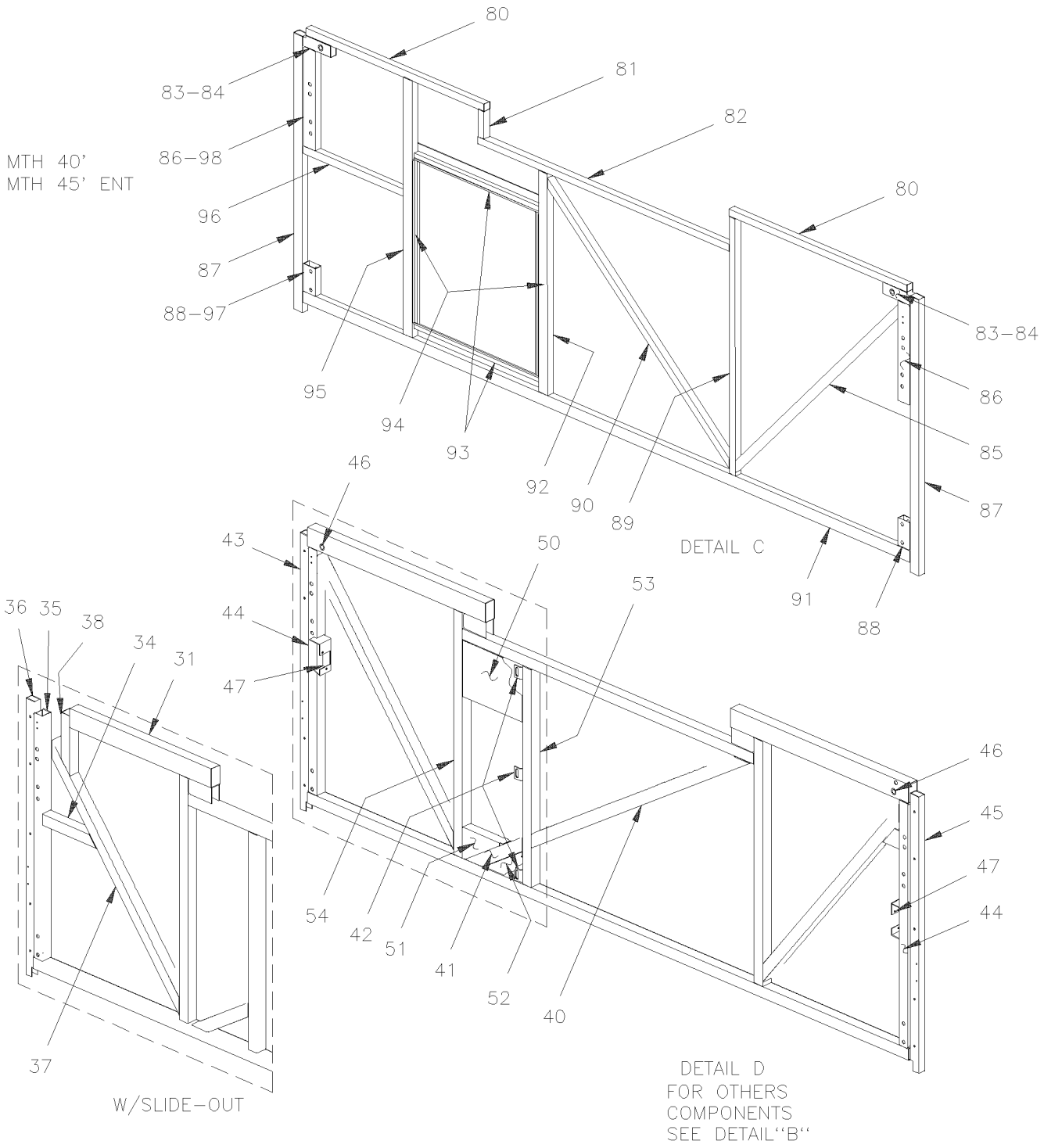

From Y-7046 Up to 6-8805	DATE: 01/2014	PAGE: Y2-1893-50

BAGGAGE COMPARTMENT STRUCTURE

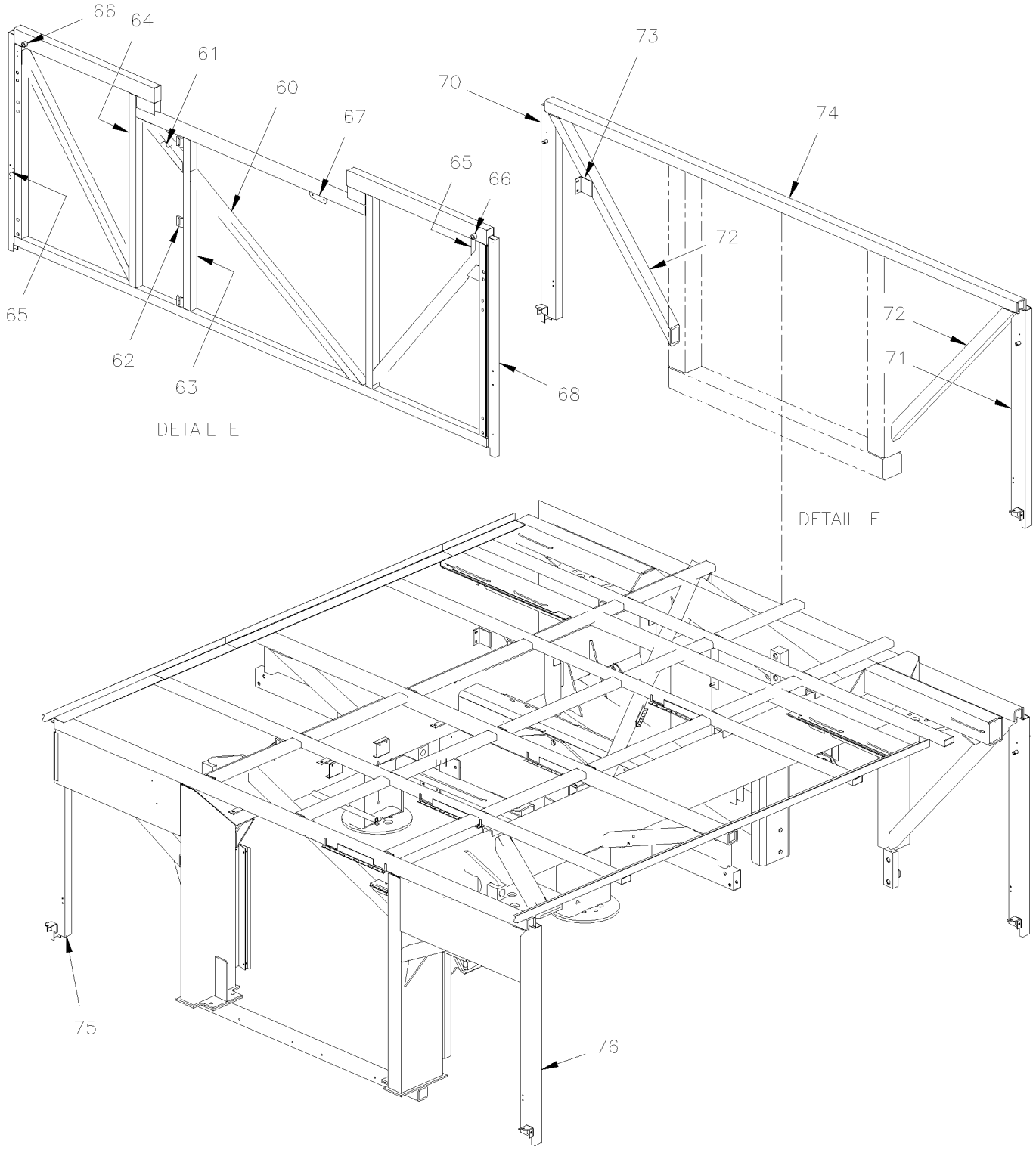

From Y-7046 Up to 6-8805	DATE: 01/2014	PAGE: Y2-1893-50

BAGGAGE COMPARTMENT STRUCTURE

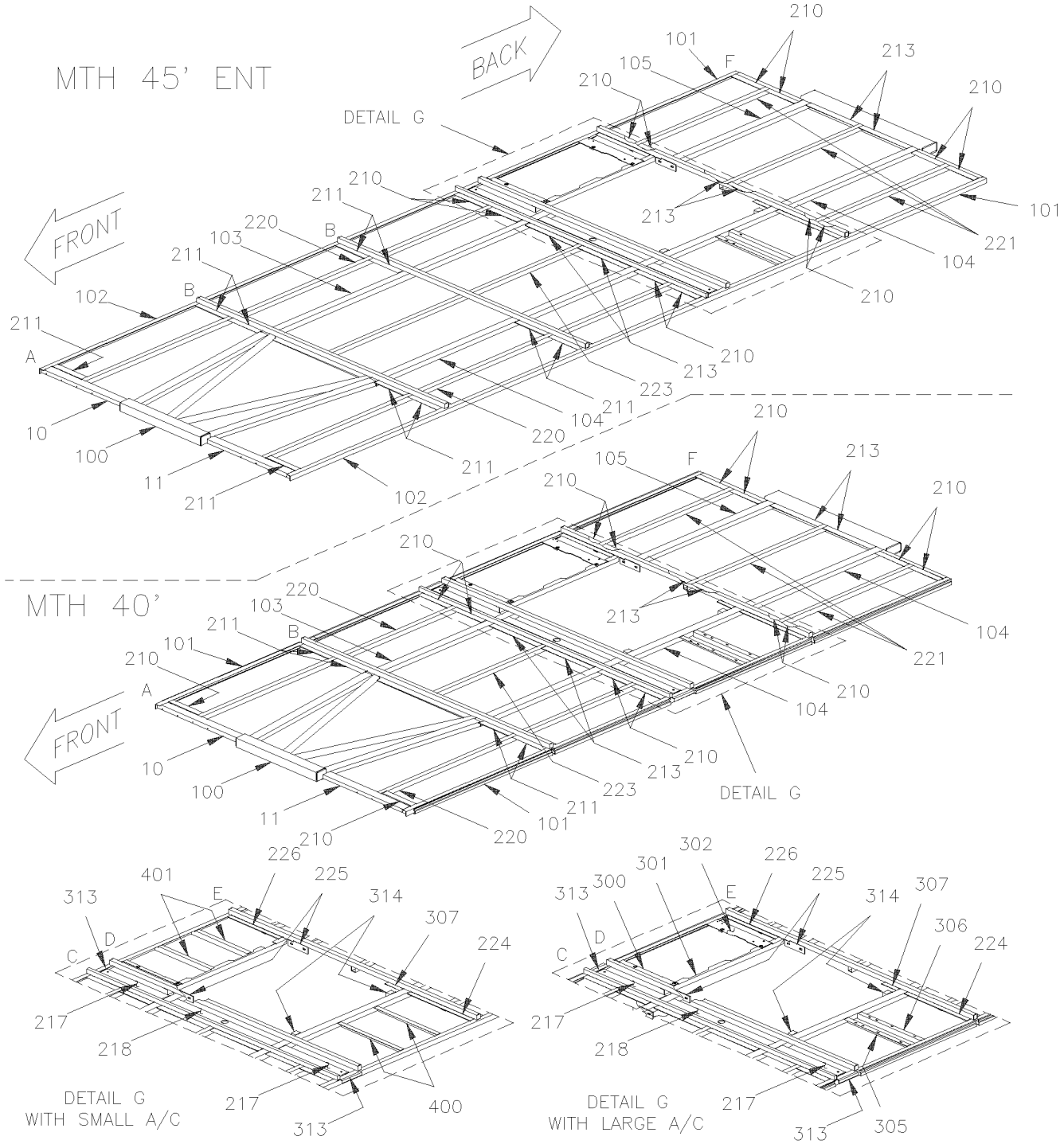

From Y-7046 Up to 6-8805	DATE: 01/2014	PAGE: Y2-1893-50

BAGGAGE COMPARTMENT STRUCTURE

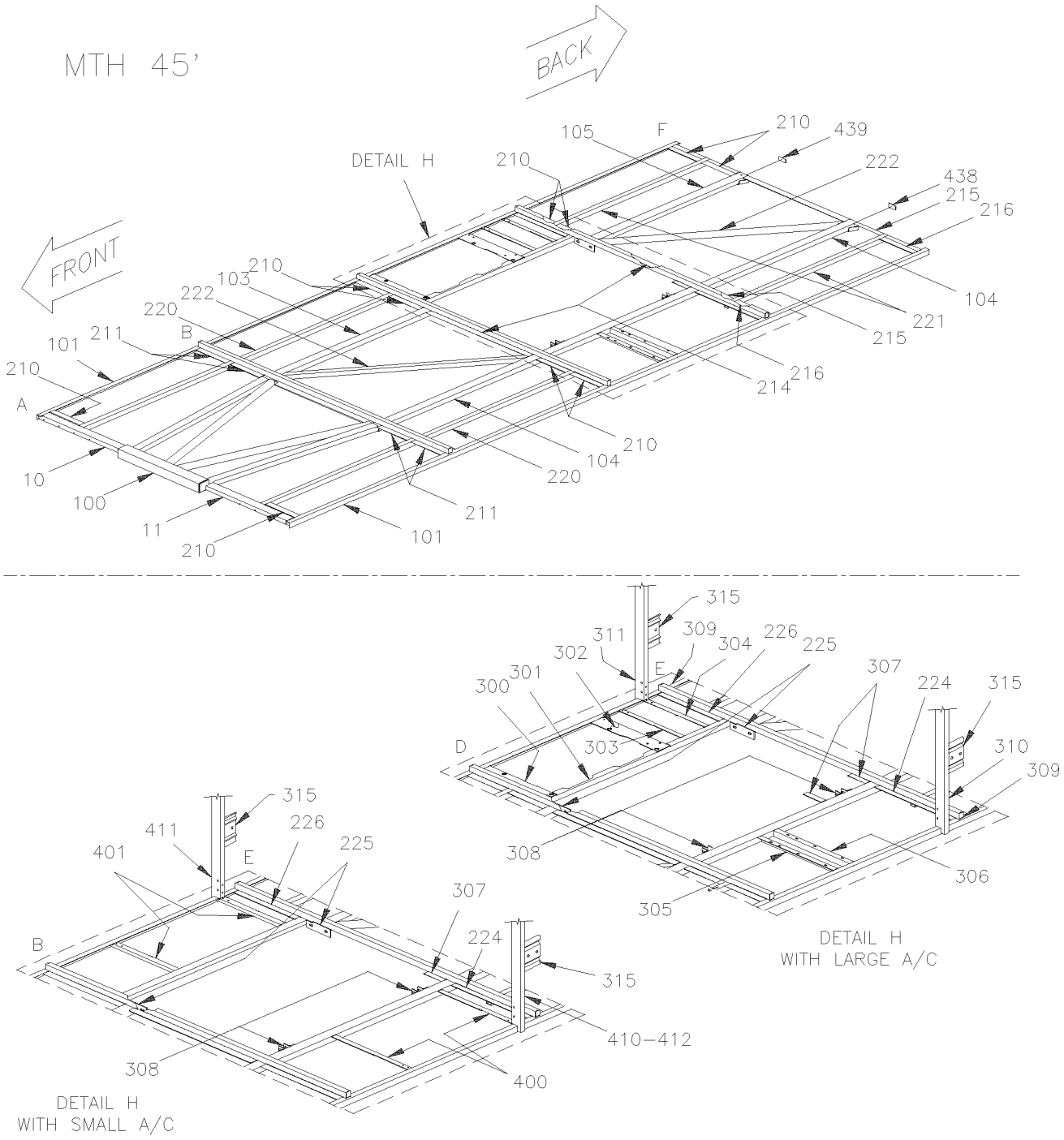

From Y-7046 Up to 6-8805	DATE: 01/2014	PAGE: Y2-1893-50

BAGGAGE COMPARTMENT STRUCTURE

ITEM	PART	DESCRIPTION	XL45	MTH40	MTH45	MTH45S	NOTE
1	213082	TUBE 2489MM		1	1	1	
2	214466	PLATE, CLOSING / TUBE 18MM x 69MM		2	2	2	
3	213149	TUBE 120MM		2	2	2	
4	260126	TUBE, VERTICAL FRAME / REAR ENGINE DOOR / 1524MM		2	2	2	
5	213891	INSERT 50MM LG		2	2	2	
NS	260120	PLATE, CLOSING / TUBE 33MM x 33MM		2	2	2	
6	213083	REINFORCEMENT 120MM x 109MM Up to Y-7720 / REPLACED BY: 214671		2	2	2	
6	214671	REINFORCEMENT 79MM x 90MM From Y-7721		2	2	2	
7	214306	TUBE 1122MM Up to 2-7751		2	2	2	
7	213080	TUBE 1121MM Up to 2-7751		2	2	2	
7	214650	TUBE 1126MM From 2-7752		2	2	2	
8	240491	POST 895MM L.H. & R.H. From 2-7894 / REPLACED BY: K240491		2	2		
8	214391	POST 895MM L.H. & R.H. Up to 1-7680		2	2		
8	240625	POST 895MM R.H. From 2-7894 Up to 3-7990 / REPLACED BY: 240434		1	1	1	
8	240434	POST 895MM R.H. From 3-7991 Up to 4-8193		1	1	1	
8	240638	POST 895MM R.H. From 4-8194		1	1	1	
9	210081	TUBE 6" LOWER ATTACHMENT		2	2	2	
10	213079	TUBE 847MM / REPLACED BY: 214265		1	1	1	
11	213085	TUBE 847MM		1	1	1	
12	214614	POST 895MM L.H. / W/SLIDE OUT From 2-7806 Up to 3-8164			1		
12	248453	POST 895MM L.H. / W/SLIDE OUT From 4-8165			1		
13	214391	POST 895MM L.H. & R.H. Up to 1-7680		1	1	1	
13	240491	POST 895MM L.H. & R.H. From 1-7681 Up to 2-7893 / REPLACED BY: K240491		1	1	1	
13	240624	POST 895MM L.H. From 2-7894 Up to 3-7990 / REPLACED BY: 240605		1	1	1	
13	240605	POST 895MM L.H. From 3-7991 Up to 3-8164		1	1	1	
20	240115	TUBE 738MM x 1 1/2" 1 1/2" Up to 4-8244		2	2	2	
NS	240124	TUBE 738MM x 1" x 1 1/2" Up to 4-8244		1	1	1	
20	240634	TUBE 738MM x 1 1/2" 2 1/2" From 4-8245		2	2	2	
21	240113	TUBE 1209MM		1	1	1	
22	240117	CLOSING PLATE 51MM X 45MM		4	4	4	
23	240114	TUBE 1374MM		1	1	1	
24	240139	TUBE 794MM Up to 2-7751 / REPLACED BY: 240108		2	2	2	
24	240108	TUBE 794MM From 2-7752		2	2	2	
25	240116	TUBE 951MM		2	2	2	
26	240346	POST EXTERIOR Up to 1-7680		2	2	2	
26	240484	POST INTERIOR 794MM From 1-7681 Up to 3-7990 / REPLACED BY: 240608		2	2	2	
26	240608	POST INTERIOR 794MM From 3-7991		2	2	2	
26	240497	TUBE 794MM		1	1	1	H
27	240386	POST EXTERIOR 895MM		1	1	1	
28	240134	TUBE 2489MM Up to 1-7680		1	1	1	
28	240485	TUBE 2489MM From 1-7681		1	1	1	
30	480376	ATTACHMENT, DOOR ARM / 63.5MM		2	2	2	
		H) WITH HINGE DOOR					

From Y-7046 Up to 6-8805	DATE: 01/2014	PAGE: Y2-1893-50

BAGGAGE COMPARTMENT STRUCTURE

ITEM	PART	DESCRIPTION	XL45	MTH40	MTH45	MTH45S	NOTE
31	240583	TUBE 584MM Up to 4-8244			1		
31	240635	TUBE 584MM From 4-8245			1		
32	214611	TUBE 408MM			1		
33	240581	TUBE 880MM			1		
34	240585	TUBE 223MM			1		
35	240584	POST EXTERIOR 808MM Up to 3-7990 / REPLACED BY: 240622			1		
35	240622	POST EXTERIOR 808MM From 3-7991			1		
36	240601	POST ASSY W/HINGE RETAINER STRIP / 859.5mm			1		
37	240587	TUBE			1		
38	240586	TUBE			1		
39	240503	POST EXTERIOR 860MM / W/7 HOLES 1/4-28 EXTRUD From 2-7764			1		
40	240107	TUBE 1073MM		1	1	1	
41	240109	TUBE 277MM		1	1	1	
42	240451	ANGLE 22MM x 28MM x 38MM			3		
43	240386	POST EXTERIOR 895MM		1	1	1	
43	240390	POST EXTERIOR L.H. 895MM ASSY / WRETAINER STRIP		1	1	1	
44	240484	POST INTERIOR 794MM From 1-7681 Up to 3-7990 / REPLACED BY: 240608		2	2	2	
44	240608	POST INTERIOR 794MM From 3-7991		2	2	2	
45	240386	POST EXTERIOR 895MM		1	1	1	
45	240389	POST EXTERIOR R.H. 895MM ASSY / WRETAINER STRIP		1	1	1	
46	480376	ATTACHMENT, DOOR ARM / 63.5MM		2	2	2	
46	220424	ATTACHMENT, DOOR ARM / 58.8MM		2		2	
46	220424	ATTACHMENT, DOOR ARM / 58.8MM			2		
47	284555	LOCK SUPPORT / (WELDED TO STRUCTURE)			2		
50	240379	UPPER SUPPORT PLATE "U"		1		1	
51	240380	LOWER SUPPORT R.H.		1		1	
52	240408	LOWER SUPPORT L.H.		1		1	
53	240382	TUBE 704MM		1		1	
53	240110	TUBE 705MM			1		
54	240381	TUBE 793MM		1		1	
54	240108	TUBE 794MM			1		
60	240107	TUBE 1073MM		1	1	1	
61	240109	TUBE 277MM		1	1	1	
62	240451	ANGLE 22MM x 28MM x 38MM		3	3	3	
63	240110	TUBE 705MM		1	1	1	
64	240108	TUBE 794MM		1	1	1	
65	240398	POST EXTERIOR L.H. 895MM		1	1	1	
65	240503	POST EXTERIOR 860MM / W/7 HOLES 1/4-28 EXTRUD		1	1		
66	220424	ATTACHMENT, DOOR ARM / 58.8MM		2	2	2	
66	480376	ATTACHMENT, DOOR ARM / 63.5MM		2		2	
67	240314	ANCHOR PLATE 25MM x 90MM		1	1	1	
68	240386	POST EXTERIOR 895MM		1	1	1	

From Y-7046 Up to 6-8805	DATE: 01/2014	PAGE: Y2-1893-50

BAGGAGE COMPARTMENT STRUCTURE

ITEM	PART	DESCRIPTION	XL45	MTH40	MTH45	MTH45S	NOTE
68	240397	POST EXTERIOR R.H. 895MM		1	1		
70	240422	POST ASSY FORWARD FENDER / STREETSIDE Up to 1-7680		1	1	1	
70	240488	POST ASSY FORWARD FENDER / STREETSIDE From 1-7681 Up to 3-7990 / REPLACED BY: 240603	1	1	1		
70	240603	POST ASSY FORWARD FENDER / STREETSIDE From 3-7991		1	1	1	
71	240421	POST ASSY FORWARD FENDER / CURBSIDE Up to 1-7680		1	1	1	
71	240490	POST ASSY FORWARD FENDER / CURBSIDE From 1-7681 Up to 3-7990 / REPLACED BY: 240606	1	1	1		
71	240606	POST ASSY FORWARD FENDER / CURBSIDE From 3-7991		1	1	1	
72	170262	TUBE 986MM		2	2	2	
73	172428	SUPPORT VALVE HEIGHT CONTROL		2	2	2	
74	170487	TUBE 98"		1	1	1	
75	214051	POST ASSY BACKWARD FENDER / STREETSIDE Up to 3-8164		1	1	1	
75	214626	POST ASSY BACKWARD FENDER / STREETSIDE From 4-8165		1	1	1	
. NS	213939	. CATCH FENDER LOWER From 4-8165		1	1	1	
. NS	5001337	. NUT INS FL HEX M8-1.25 0.5-3.0 ZP From 4-8165		2	2	2	
. NS	5001344	. NUT INS FL HEX M6-1.0 0.5-3.0 SS From 4-8165		2	2	2	
76	214052	POST ASSY BACKWARD FENDER / CURBSIDE Up to 3-8164		1	1	1	
. NS	260726	. TUBE Up to 3-8164		1	1	1	
. NS	213942	. CATCH FENDER LOWER Up to 3-8164		1	1	1	
76	214627	POST ASSY BACKWARD FENDER / CURBSIDE From 4-8165		1	1	1	
. NS	213942	. CATCH FENDER LOWER From 4-8165		1	1	1	
80	240463	TUBE 736MM		2		2	
81	240361	TUBE 89MM		2		2	
82	240363	TUBE 1042MM		1		1	
83	240365	TUBE 112MM		2		2	
83	240464	ATTACHMENT "U", DOOR HINGE / 112MM		2		2	
84	240371	INSERT 38.1MM		2		2	
85	240367	TUBE 1020MM		1		1	
86	240364	TUBE 323MM Up to 3-7990 / REPLACED BY: 240609		2		2	
86	240609	TUBE 323MM From 3-7991		2		2	
87	240394	TUBE 895MM		2		2	
88	240500	TUBE 90MM Up to 3-7990 / REPLACED BY: 240610		2		2	
88	240610	TUBE 90MM From 3-7991		2		2	
89	240362	TUBE 832MM		1		1	
90	240366	TUBE 1022MM		1		1	
91	240359	TUBE 2517MM Up to 3-7990		1		1	
91	240499	TUBE 2517MM From 3-7991		1		1	
92	240427	TUBE 717MM		1		1	
93	240409	REINFORCEMENT "Z" 522MM		2		2	
94	240429	REINFORCEMENT 525MM		2		2	
95	240428	TUBE 832MM		1		1	
96	240384	TUBE 414MM		1		1	
97	240531	TUBE 130MM Up to 5-8813		1			

From Y-7046 Up to 6-8805	DATE: 01/2014	PAGE: Y2-1893-50

BAGGAGE COMPARTMENT STRUCTURE

ITEM	PART	DESCRIPTION	XL45	MTH40	MTH45	MTH45S	NOTE
98	240532	TUBE 170MM Up to 5-8813		1			
100	Y2-1897-00	**FRONT SUB-FRAME / W/I BEAM RIGID SUSPENSION**					
100	Y2-1897-50	**FRONT SUB-FRAME / W/INDEPENDENT SUSPENSION - 16500 LBS**					
100	Y2-1897-51	**FRONT SUB-FRAME / W/INDEPENDENT SUSPENSION - 18000 LBS**					
101	221136	ANGLE 1/8" x 1 1/2" X 6354MM (250") / SS			2		
101	221135	ANGLE 1/8" x 1 1/2" X 5464MM (215") / SS		2		2	
102	220872	ANGLE 1/8" x 1 1/2" X 1524MM (60") / SS				2	
103	221081	TUBE 1478MM Up to 3-8164 / REPLACED BY: 221284		1			
103	221284	TUBE 1480MM From 4-8165 Up to 5-8813		1			
103	221022	TUBE 1647MM Up to 3-8164 / REPLACED BY: 221276			1		
103	221276	TUBE 1649MM From 4-8165			1		
103	221039	TUBE 2282MM Up to 3-8164 / REPLACED BY: 221280				1	
103	221280	TUBE 2885MM From 4-8165				1	
104	221046	TUBE 4044MM Up to 3-8164 / REPLACED BY: 221285		1			
104	221285	TUBE 4044MM From 4-8165 Up to 5-8813		1			
104	221021	TUBE 4759MM Up to 3-8164 / REPLACED BY: 221278			1		
104	221278	TUBE 4760MM From 4-8165			1		
104	221050	TUBE 5448MM Up to 3-8164 / REPLACED BY: 221281				1	
104	221281	TUBE 5450MM From 4-8165				1	
105	221032	TUBE 1409MM Up to 3-8164 / REPLACED BY: 221282		1			
105	211282	TUBE From 4-8165 Up to 5-8813		1			
105	220835	TUBE 1581MM Up to 3-8164 / REPLACED BY: 221277			1		
105	221277	TUBE 1581MM From 4-8165			1		
105	221032	TUBE 1409MM Up to 3-8164 / REPLACED BY: 221282				1	
105	221282	TUBE 1410MM From 4-8165				1	
106	221129	TUBE 1355MM Up to 3-8164 / REPLACED BY: 221286		2			
106	221286	TUBE 1656MM From 4-8165 Up to 5-8813		2			
106	221126	TUBE 1526MM Up to 3-8164 / REPLACED BY: 221279			2		
106	221279	TUBE 1526MM From 4-8165			2		
106	221132	TUBE 1474MM Up to 3-8164 / REPLACED BY: 221283				2	
106	221283	TUBE 1474MM From 4-8165				2	
107	214078	TUBE 1614MM Up to 3-8164			2		
107	221290	TUBE 1692MM From 4-8165			2		
107	214092	TUBE 1449MM Up to 3-8164		2			
107	221291	TUBE 1542MM From 4-8165 Up to 5-8813		2			
107	214104	TUBE 1562MM Up to 3-8164				2	
107	221292	TUBE 1642MM From 4-8165				2	
210	220286	SUPPORT FLOOR 101MM X 298MM Up to 2-7770 / REPLACED BY: 221243		AR	AR	AR	
210	221243	SUPPORT FLOOR 50MM X 298MM From 2-7771		AR	AR	AR	
211	220285	SUPPORT FLOOR 76MM X 298MM / REPLACED BY: 221243		AR	AR	AR	
211	221245	SUPPORT FLOOR 130MM X 299MM		AR	AR	AR	
212	220287	SUPPORT FLOOR 203MM X 299MM Up to 1-7680 / REPLACED BY: 221245		4			

From Y-7046 Up to 6-8805	DATE: 01/2014	PAGE: Y2-1893-50

BAGGAGE COMPARTMENT STRUCTURE

ITEM	PART	DESCRIPTION	XL45	MTH40	MTH45	MTH45S	NOTE
212	220287	SUPPORT FLOOR 203MM X 299MM Up to 1-7680 / REPLACED BY: 221245			2		
212	220287	SUPPORT FLOOR 203MM X 299MM Up to 1-7680 / REPLACED BY: 221245				6	
212	221245	SUPPORT FLOOR 130MM X 299MM From 1-7681 Up to 5-8813		4			
212	221245	SUPPORT FLOOR 130MM X 299MM From 1-7681			2		
212	221245	SUPPORT FLOOR 130MM X 299MM From 1-7681				6	
213	220464	SUPPORT FLOOR 76MM X 488MM Up to 2-7770		AR		AR	
213	221250	SUPPORT FLOOR 50MM X 488MM From 2-7771		AR		AR	
213	221162	SUPPORT FLOOR 76MM X 507MM Up to 2-7770		AR		AR	
213	221249	SUPPORT FLOOR 50MM X 507MM From 2-7771		AR		AR	
214	220850	SUPPORT FLOOR 76MM X 940MM			2		
214	221161	SUPPORT FLOOR 76MM X 1015MM Up to 2-7770			2		
214	221248	SUPPORT FLOOR 50MM X 1015MM From 2-7771			2		
215	220936	SUPPORT FLOOR 76MM X 222MM Up to 2-7770 / REPLACED BY: 221247			2		
215	221247	SUPPORT FLOOR 50MM X 222MM From 2-7771			2		
216	220935	SUPPORT FLOOR 100MM X 374MM Up to 2-7770 / REPLACED BY: 221246			2		
216	221246	SUPPORT FLOOR 50MM X 374MM From 2-7771			2		
217	213342	SUPPORT 660MM		2		2	
218	213343	SUPPORT 1016MM		1		1	
220	221083	TUBE 2578MM Up to 5-8813		2			
220	221153	TUBE 4077MM Up to 5-8813		2			
220	221134	TUBE 3119MM			2		
220	221086	TUBE 4102MM				2	
220	221153	TUBE 4077MM				2	
221	220466	TUBE 1403MM Up to 5-8813		3			
221	220829	TUBE 62MM			2		
221	220466	TUBE 1403MM				3	
222	220851	TUBE 1829MM Up to Y-7121			2		
222	221158	TUBE 1805MM From Y-7122			2		
223	221084	TUBE 1196MM Up to 5-8813		1			
223	221085	TUBE 2616MM				1	
224	221106	FLOOR SUPPORT		1	1	1	
225	220834	PLATE UNION 7 3/4" X 2"		2	2	2	
226	221104	SUPPORT FLOOR 38MM X 515MM		1	1	1	
300	213244	SUPPORT		1	1	1	
301	213245	SUPPORT ANGLE 1228MM		1		1	
301	213442	SUPPORT ANGLE 1606MM			1		
302	213243	SUPPORT		1		1	
303	214494	PANEL CONDENSOR SEPARATOR BACKWARD			1		
304	220977	ANGLE 19MM X 38MM X 587MM			1		
305	220401	ANGLE SUPPORT 668MM Up to 1-7408 / REPLACED BY: 221178		1	1	1	
305	221178	ANGLE SUPPORT 668MM From 1-7409		1	1	1	
306	220400	ANGLE SUPPORT 668MM Up to 1-7408 / REPLACED BY: 221177		1	1	1	

From Y-7046 Up to 6-8805	DATE: 01/2014	PAGE: Y2-1893-50

BAGGAGE COMPARTMENT STRUCTURE

ITEM	PART	DESCRIPTION	XL45	MTH40	MTH45	MTH45S	NOTE
306	221177	ANGLE SUPPORT 668MM From 1-7409		1	1	1	
307	214196	SHIM 38MM X 149MM GA11		2	2	2	
308	220854	ANGLE ST 2" X 1 1/2" / REPLACED BY: 221440			4		
309	210338	ANGLE 1" x 125MM / REPLACED BY: 214534			2		
309	214534	FORM "U" 125MM			2		
310	213578	POST ASSY L.H. / W/STRIKER ATTACHMENT Up to 1-7680			1		
310	213930	POST ASSY L.H. / W/STRIKER ATTACHMENT From 1-7681 Up to 3-7990 / REPLACED BY: 214728			1		
310	214728	POST ASSY L.H. / W/STRIKER ATTACHMENT From 3-7991			1		
NS	214318	ANGLE 450MM / REPLACED BY: 214773			1		
311	213643	POST ASSY R.H. / W/STRIKER ATTACHMENT Up to 1-7680			1		
311	213931	POST ASSY R.H. / W/STRIKER ATTACHMENT From 1-7681 Up to 3-7990 / REPLACED BY: 214708			1		
311	214708	POST ASSY R.H. / W/STRIKER ATTACHMENT From 3-7991			1		
313	221043	ANGLE 194MM		2		2	
314	213058	ATTACHMENT "HAT" FORM / FUEL TANK Up to 5-8637		2		2	
314	215720	ATTACHMENT ASSY / FUEL TANK From 5-8638		2		2	
315	240457	REINFORCEMENT ASSY 125MM			2		
400	221000	SUPPORT			2		
400	221034	ANGLE SUPPORT 668MM		2		2	
401	220870	ANGLE SUPPORT 22 1/4"		2	2	2	
402	221077	ANGLE 1606MM			1		
410	213352	POST ASSY W/INSERT TO FIX PANTO ARM / FIXED AT L.H. SIDE OF DOOR			1	1	
410	213579	POST ASSY W/INSERT TO FIX PANTO ARM / FIXED AT L.H. SIDE OF DOOR Up to 1-7680			1	1	
410	212926	POST ASSY W/INSERT TO FIX PANTO ARM / FIXED AT L.H. SIDE OF DOOR From 1-7681 Up to 3-7990 / REPLACED BY: 214707			1	1	
410	214707	POST ASSY W/INSERT TO FIX PANTO ARM / FIXED AT L.H. SIDE OF DOOR From 3-7991			1	1	
411	213353	POST ASSY W/INSERT TO FIX PANTO ARM / FIXED AT R.H. SIDE OF DOOR			1	1	
411	213580	POST ASSY W/INSERT TO FIX PANTO ARM / FIXED AT R.H. SIDE OF DOOR Up to 1-7680			1	1	
411	212851	POST ASSY W/INSERT TO FIX PANTO ARM / FIXED AT R.H. SIDE OF DOOR From 1-7681 Up to 3-7990 / REPLACED BY: 214706			1	1	
411	214706	POST ASSY W/INSERT TO FIX PANTO ARM / FIXED AT R.H. SIDE OF DOOR From 3-7991			1	1	
412	214594	POST / STREETSIDE W/SLIDE-OUT			1		S
438	229036	REINFORCEMENT L.H.			1		

S) WITH SLIDE-OUT

From Y-7046 Up to 8-9339	DATE: 01/2014	PAGE: Y2-1894-00
REAR CAP - STRUCTURE		

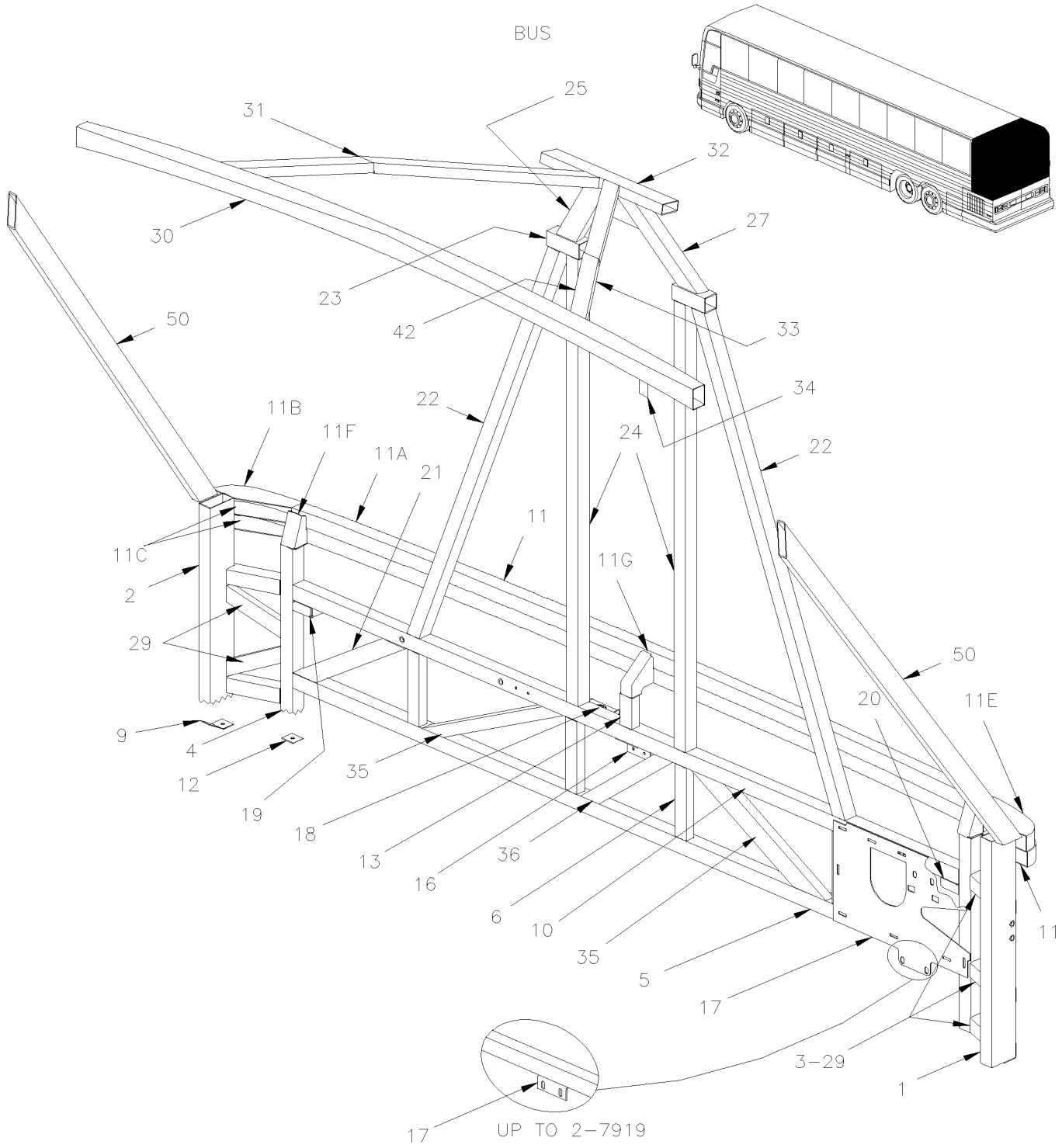

From Y-7046 Up to 8-9339	DATE: 01/2014	PAGE: Y2-1894-00
REAR CAP - STRUCTURE		

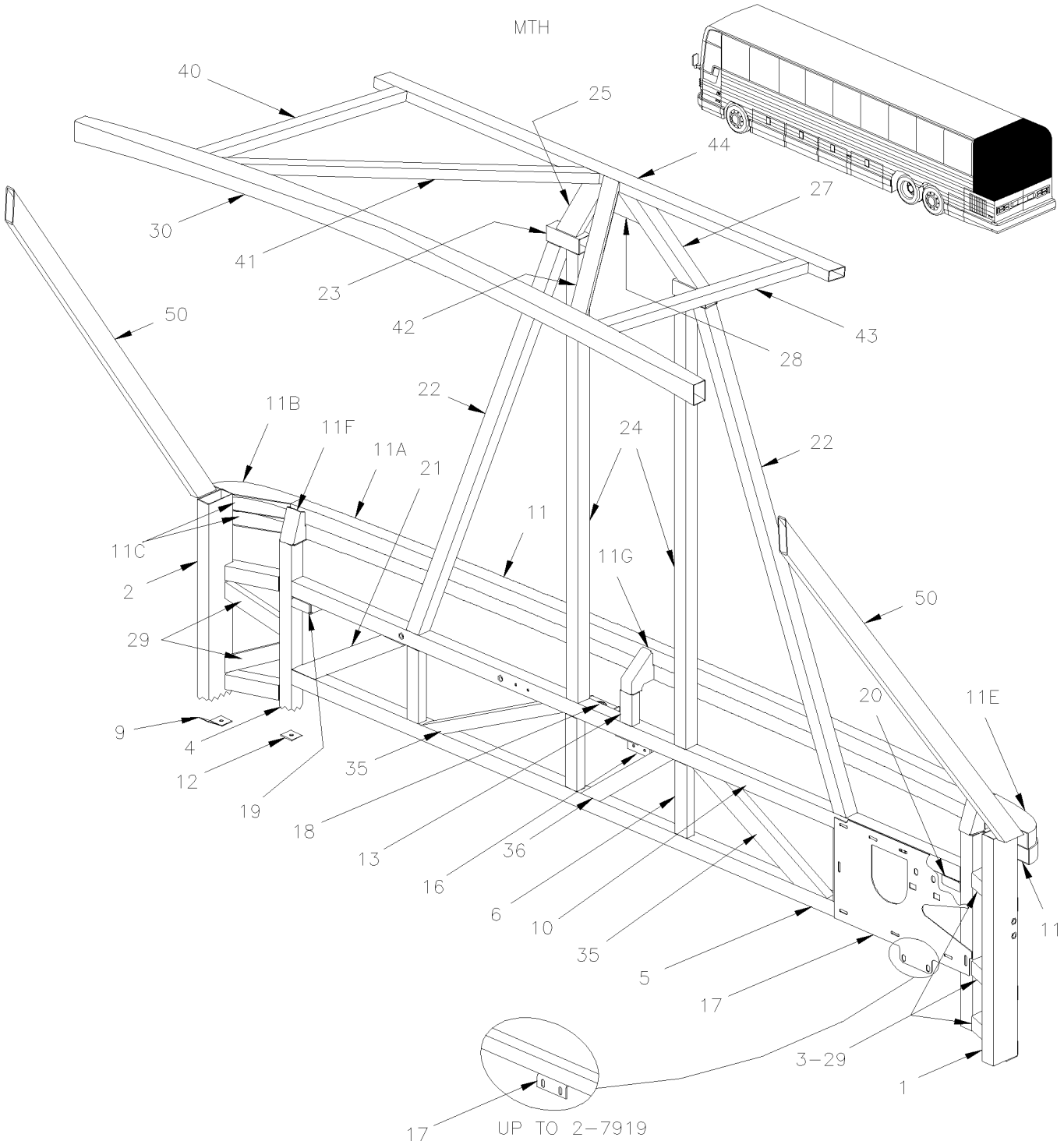

From Y-7046 Up to 8-9339	DATE: 01/2014	PAGE: Y2-1894-00

REAR CAP - STRUCTURE

ITEM	PART	DESCRIPTION	XL45	MTH40	MTH45	MTH45S	NOTE
1	260746	LEFT CORNER TUBE / MTH 89"				1	
1	260809	LEFT CORNER TUBE / BUS Up to 6-8906	1				
1	260752	LEFT CORNER TUBE / MTH 83" & MTH 86"		1	1	1	
1	214014	CLOSING PLATE From 2-7920	2	2	2	2	
2	260745	RIGHT CORNER TUBE / MTH 89"				1	
2	260810	RIGHT CORNER TUBE / BUS Up to 6-8906	1				
2	260754	RIGHT CORNER TUBE / MTH 83" & MTH 86"		1	1	1	
2	214014	CLOSING PLATE From 2-7920	2	2	2	2	
3	260740	TUBE 172MM	6	6	6	6	
4	260805	TUBE / MTH 89"				2	
4	260804	TUBE / BUS Up to 6-8906	2				
4	260747	TUBE / MTH 83" & MTH 86"		1	1	1	
5	260748	TUBE Up to 2-7888	1	1	1	1	
5	260919	TUBE From 2-7889 Up to 3-8164	1	1	1	1	
5	260942	TUBE From 4-8165	1	1	1	1	
6	260756	VERTICAL TUBE Up to 2-7888	4	4	4	4	
6	260921	TUBE VERTICAL From 2-7889	4	4	4	4	
9	260759	BUTT PLATE	2	2	2	2	
10	260793	TUBE Up to 2-7888	1	1	1	1	
10	260920	TUBE From 2-7889	1	1	1	1	
11	260781P	REAR FORMING TUBE ASSY	1	1	1	1	
. A	260852	. TUBE	1	1	1	1	
. B	261185	. CORNER ASSY	2	2	2	2	
. D	261186	. CORNER ASSY	2	2	2	2	
. F	260757	. SUPPORT SIDE POST	2	2	2	2	
. G	260813	. SUPPORT CENTER POST	1	1	1	1	
12	260760	BUTT PLATE	2	2	2	2	
13	260786	TUBE SUPPORT 152MM / MTH 89"				1	
13	260753	TUBE SUPPORT 76MM / MTH 83" & MTH86"		1	1	1	
16	285988	ANGLE STOPPER LH ENGINE DOOR Up to 2-7888	1	1	1	1	
16	287229	ANGLE STOPPER LH ENGINE DOOR From 2-7889	1	1	1	1	
17	260818	SUPPORT / SURGE TANK Up to 2-7919	1	1	1	1	
17	214908	SUPPORT / SURGE TANK From 2-7920	1	1	1	1	
18	282869	FLOATING NUT ASSY WITH CASE Up to 1-7627 / REPLACED BY: 287943	1	1	1	1	
18	287943	FLOATING NUT ASSY WITH CASE From 1-7628 Up to 2-7888	1	1	1	1	
18	287230	SUPPORT ASSY W/NUT From 2-7889	1	1	1	1	
19	285916	FIXATION PLATE	1	1	1	1	
20	285991	FIXATION PLATE	1	1	1	1	
21	260922	TUBE From 2-7889 Up to 3-8164	1	1	1	1	
21	260944	TUBE From 4-8165	1	1	1	1	
22	271226	TUBE	2	2	2	2	
23	271227	TUBE	2	2	2	2	
24	271225	TUBE	2	2	2	2	
25	271232	TUBE / MTH 83"		1	1		

From Y-7046 Up to 8-9339	DATE: 01/2014	PAGE: Y2-1894-00

REAR CAP - STRUCTURE

ITEM	PART	DESCRIPTION	XL45	MTH40	MTH45	MTH45S	NOTE
25	271233	TUBE / MTH 86"		1	1	1	
25	271234	TUBE / MTH 89"				1	
25	271236	TUBE / BUS Up to 6-8906	1				
27	271229	TUBE / MTH 83"		1	1		
27	271230	TUBE / MTH 86"		1	1	1	
27	271231	TUBE / MTH 89"				1	
27	271235	TUBE / BUS Up to 6-8906	1				
28	271228	REINFORCEMENT / MTH		1	1	1	
28	271253	REINFORCEMENT / BUS	1				
29	260960	TUBE 202MM	4	4	4	4	
30	271290	ARCH / ROOF 1932.7MM (76") / REPLACED BY: 271634	1	1	1	1	
31	260789	REAR TUBE Up to 6-8906	1				
32	260749	TUBE 400MM Up to 6-8906	1				
33	260751	REAR RIGHT TUBE Up to 6-8906	1				
34	214341	PIPE SUPPORT Up to 6-8906	1				
35	260962	TUBE	2	2	2	2	
36	260963	TUBE	1	1	1	1	
40	271120	TUBE		2	2	2	
41	271122	TUBE		1	1	1	
42	271121	TUBE		1	1	1	
43	271117	TUBE		1	1	1	
50	Y2-1890-10	**STRUCTURE WALL - UPPER**					

From Y-7046 Up to 3-8164	DATE: 01/2014	PAGE: Y2-1894-05
REAR LH - STRUCTURE		

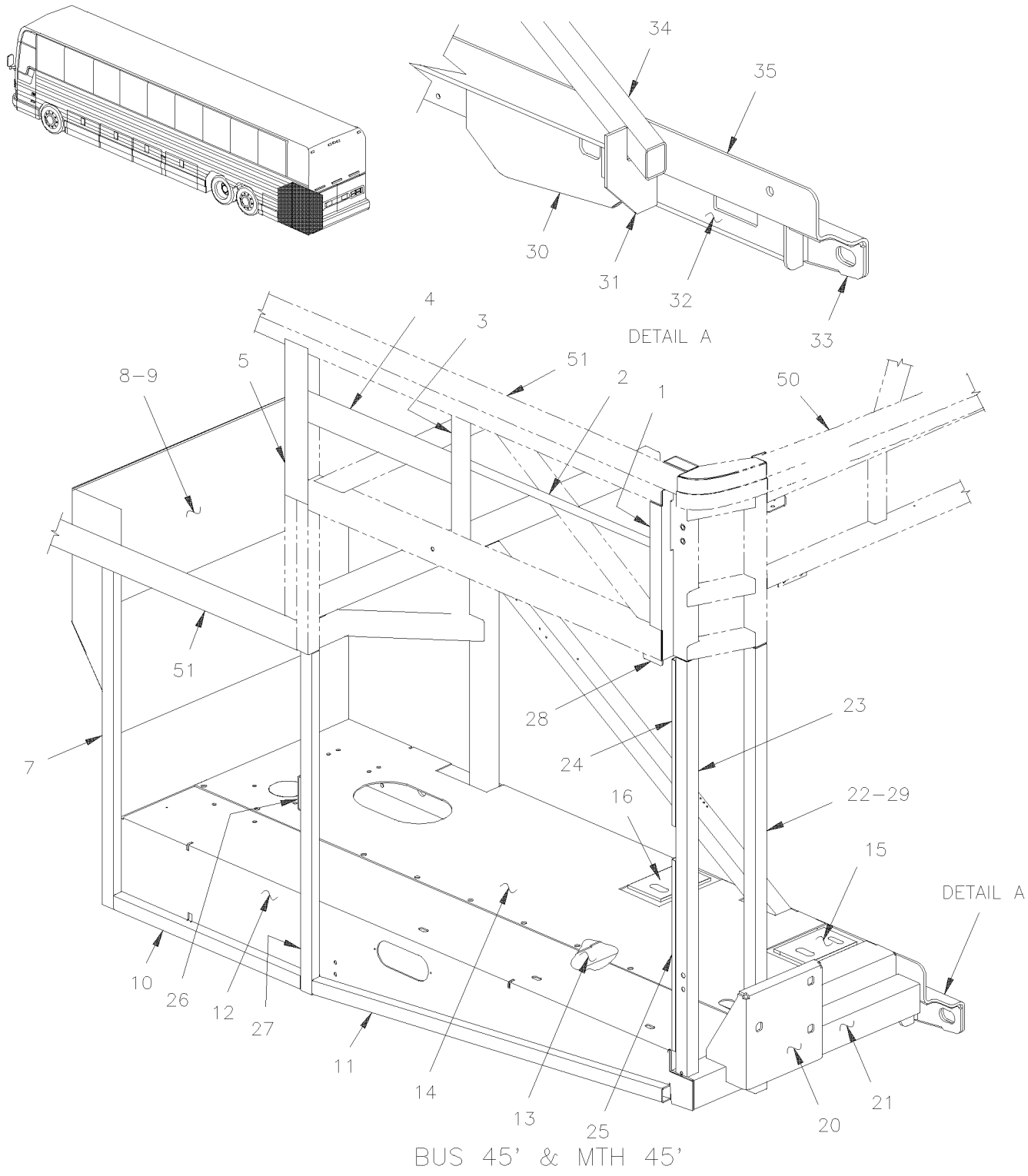

From Y-7046 Up to 3-8164	DATE: 01/2014	PAGE: Y2-1894-05
REAR LH - STRUCTURE		

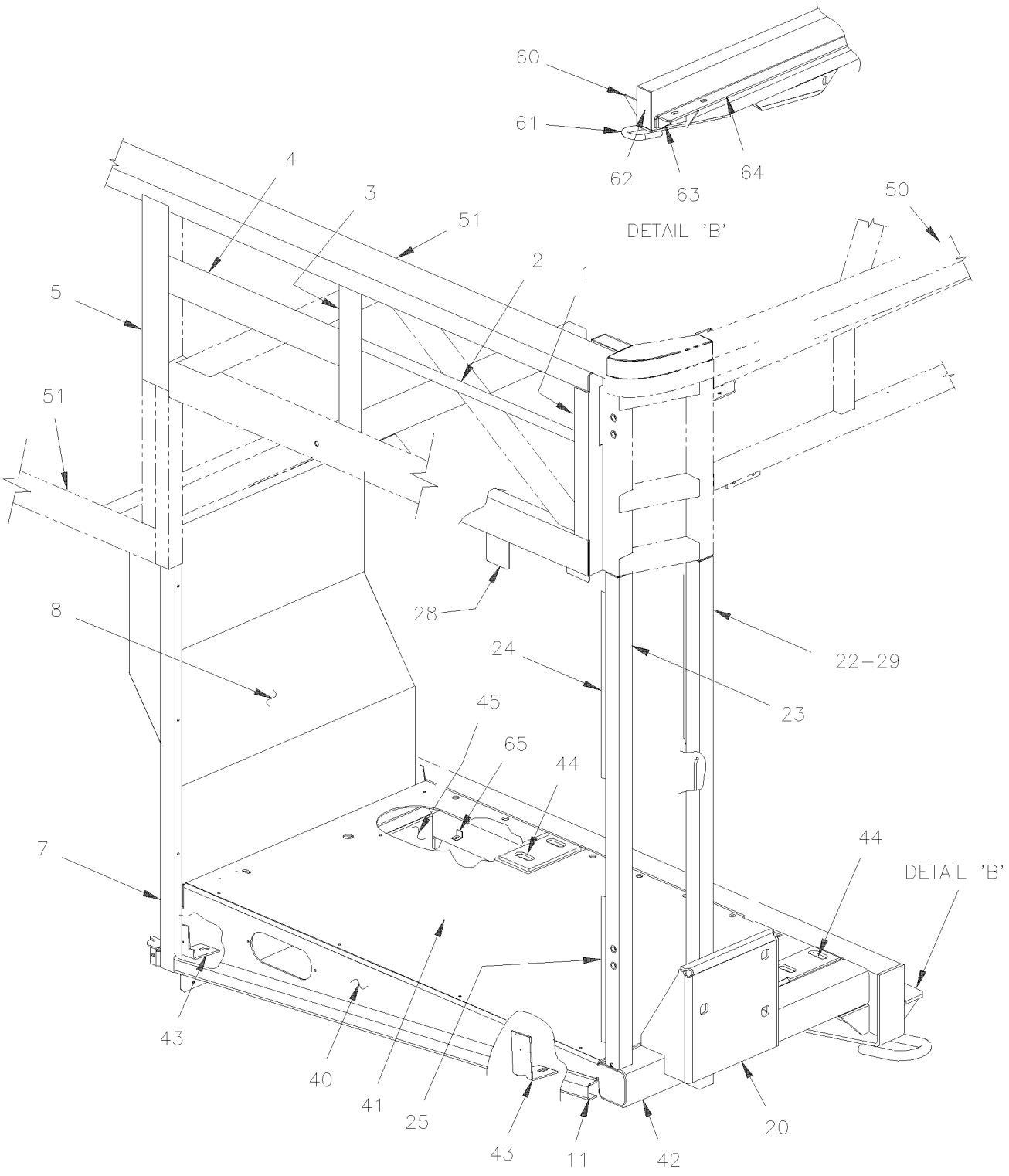

From Y-7046 Up to 3-8164	DATE: 01/2014	PAGE: Y2-1894-05

REAR LH - STRUCTURE

ITEM	PART	DESCRIPTION	XL45	MTH40	MTH45	MTH45S	NOTE
1	260811	ANGLE CURBSIDE	1				
1	260761	ANGLE CURBSIDE		1	1		
1	260806	ANGLE CURBSIDE				1	
2	231280	SHAPED BAR LH		1	1	1	
3	231493	ANGLE LH	1				
4	231281	SHAPED BAR Up to 3-8044		1	1	1	
4	231601	SHAPED BAR From 3-8045		1	1	1	
5	231581	SHAPED BAR LH VERTICAL Up to 3-8044		1	1	1	
5	231604	SHAPED BAR LH VERTICAL From 3-8045		1	1	1	
7	214051	POST ASSY BACKWARD FENDER / STREETSIDE	1				
8	260831	FENDER PANEL STREETSIDE Up to 2-7764 / REPLACED BY: 260860	1				
8	260860	FENDER PANEL STREETSIDE From 2-7765	1				
9	450119	SUPPORT RECEIVER TANK			1		
9	452375	SUPPORT RECEIVER TANK			1		
10	260742	TUBE 600MM Up to 2-7849	1		1		
11	260741	TUBE 1132MM Up to 2-7849	1				
12	260822	SIDE MEMBER RADIATOR FLOOR PANEL Up to 2-7849	1		1		
12	260912	SIDE MEMBER RADIATOR FLOOR PANEL From 2-7850	1		1		
13	260689	ANGLE MUFFLER SUPPORT 28 5/8" / BACKWARD	1		1		
13	260662	ANGLE MUFFLER SUPPORT 28 5/8" / FORWARD	1		1		
14	213749	FLOOR FAN RADIATOR Up to 2-7764	1		1		
14	214564	FLOOR FAN RADIATOR From 2-7765	1		1		
15	171792	SUPPORT FAN RADIATOR / BACKWARD	1		1		
15	212598	SUPPORT FAN RADIATOR	1		1		
16	171793	SUPPORT FAN RADIATOR / FORWARD	1		1		
20	213795	BRACKET BUMPER L.H. / (WELDED AT STRUCTURE) Up to 4-8181 / REPLACED BY: 214637	1				
20	214637	BRACKET BUMPER L.H. & R.H. / (WELDED AT STRUCTURE) From 4-8182	1				
20	216083	BRACKET BUMPER L.H. & R.H. / (WELDED AT STRUCTURE)	1				R
21	260640	TUBE 726MM	1		1		
22	260730	TUBE 1118MM INTERIOR	1				
23	260729	TUBE 1043MM / STREETSIDE CORNER / REPLACED BY: 260894	1				
24	260827	SPACER "U" 417MM	1		1		
25	260826	SPACER "U" 478MM	1				
26	284534	SUPPORT STRIKER PIN	1		1		
27	260843	POST BACKWARD L.H. SERVICE DOOR / STREETSIDE	1		1		
28	286161	STRICKING PLATE	1				
29	212655	ATTACHMENT ROD / 373MM x 11MM DEEP / WELDED (TO FIX ANYTHING)	AR				
30	171472	PROTECTOR L.H.	1		1		
31	260644	PLATE REINFORCEMENT	2		2		
32	172545	REINFORCEMENT L.H.	1		1		
		R) WITH OPTION REAR BUMPER "ROMEO RIM" SEE PAGE					
		Y2-1850-15					

From Y-7046 Up to 3-8164	DATE: 01/2014	PAGE: Y2-1894-05

REAR LH - STRUCTURE

ITEM	PART	DESCRIPTION	XL45	MTH40	MTH45	MTH45S	NOTE
33	172547	REINFORCEMENT L.H.	1		1		
34	171483	TUBE 1208MM	1		1		
35	172540	BEAM L.H. "Z" FORM	1		1		
36	215083	ANGLE 190MM	4		4		
40	260823	SIDE MEMBER RADIATOR FLOOR PANEL Up to 2-7849		1		1	
40	260909	SIDE MEMBER RADIATOR FLOOR PANEL From 2-7850		1		1	
41	213748	PLATE, SUPPORT / FAN GEARBOX		1		1	
42	260160	TUBE 656MM		1		1	
43	260632	SUPPORT, ANGLE / MUFFLER (WELDED) Up to 2-7849		2		2	
43	260913	SUPPORT, ANGLE / MUFFLER (WELDED) From 2-7850		2		2	
44	212598	SUPPORT FAN RADIATOR		2		2	
45	260846	FENDER PANEL LOWER		1		1	
50	Y2-1894-00	**REAR CAP - STRUCTURE**					
51	Y2-1891-00	**LOWER WALL STRUCTURE - BUS**					
51	Y2-1891-50	**LOWER WALL STRUCTURE - MTH 40'**					
51	Y2-1891-55	**LOWER WALL STRUCTURE - MTH 45' ENT 86"**					
51	Y2-1891-56	**LOWER WALL STRUCTURE - MTH 45' ENT 89"**					
51	Y2-1891-60	**LOWER WALL STRUCTURE - MTH 45'**					
60	260259	REINFORCEMENT		2		2	
61	410293	EYE, TOW		1		1	
62	Call Order Desk	BEAM LOWER ASSY 1209MM W/CLOSING END		1		1	P
63	010795	REINFORCEMENT, LOWER SUPPORT Up to Y-7279 / REPLACED BY: 172539		2		2	
NS	172539	REINFORCEMENT From Y-7280		2		2	
63	172536	REINFORCEMENT From Y-7280		1		1	
64	171475	SUPPORT ENGINE CRADLE Up to Y-7279		1		1	
64	172535	SUPPORT ENGINE CRADLE From Y-7280		1		1	
65	211564	SUPPORT, ANGLE / MUFFLER (WELDED)		2		2	
		P) CALL ORDER DESK FOR SPECIFIC APPLICATION					
		(V.I.N.)					

From 4-8165 Up to 8-9339	DATE: 01/2014	PAGE: Y2-1894-06
REAR LH - STRUCTURE		

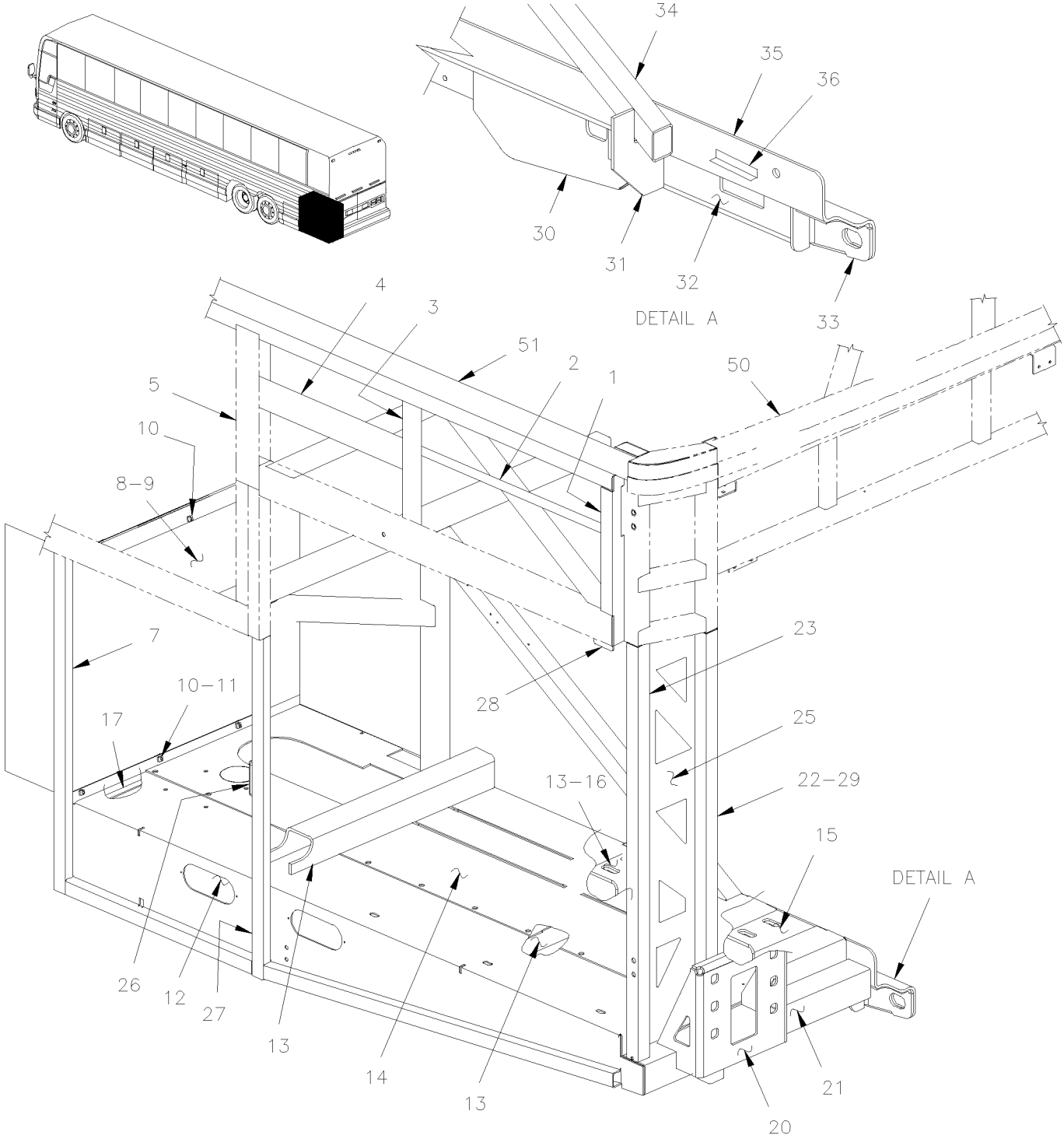

BUS 45' & MTH 45'

From 4-8165 Up to 8-9339	DATE: 01/2014	PAGE: Y2-1894-06
REAR LH - STRUCTURE		

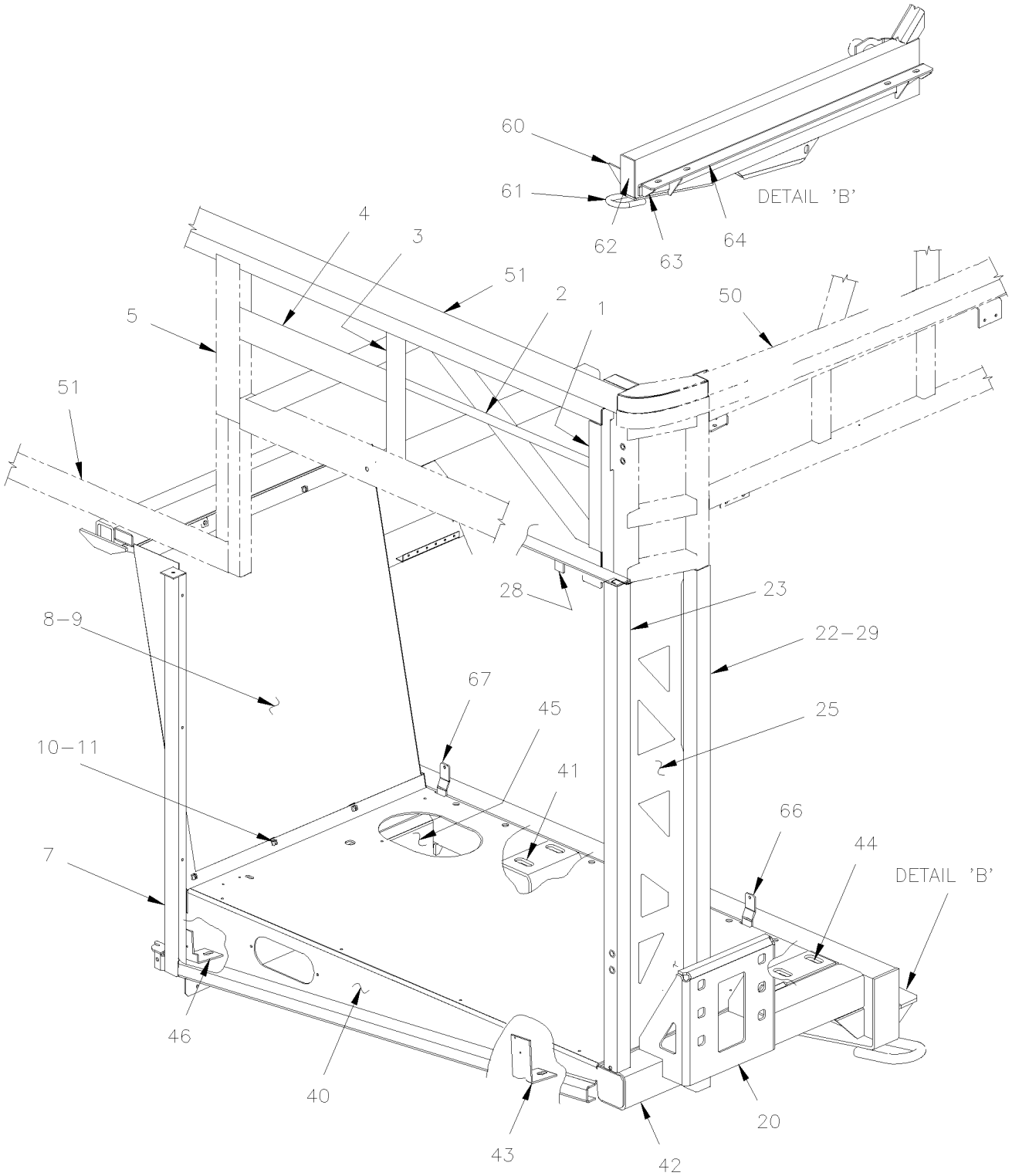

From 4-8165 Up to 8-9339	DATE: 01/2014	PAGE: Y2-1894-06

REAR LH - STRUCTURE

ITEM	PART	DESCRIPTION	XL45	MTH40	MTH45	MTH45S	NOTE
1	260811	ANGLE CURBSIDE Up to 6-8906	1				
1	260761	ANGLE CURBSIDE		1	1		
1	260806	ANGLE CURBSIDE				1	
2	231280	SHAPED BAR LH		1	1	1	
3	231493	ANGLE LH Up to 6-8906	1				
4	231601	SHAPED BAR		1	1	1	
5	231604	SHAPED BAR LH VERTICAL		1	1	1	
7	214626	POST ASSY BACKWARD FENDER / STREETSIDE	1				
. NS	213939	. CATCH FENDER LOWER	1				
. NS	5001337	. NUT INS FL HEX M8-1.25 0.5-3.0 ZP	2				
. NS	5001344	. NUT INS FL HEX M6-1.0 0.5-3.0 SS	2				
8	260860	FENDER PANEL STREETSIDE Up to 6-8906	1				
8	260373	FENDER PANEL ASSY / STREETSIDE Up to 4-8295			1		
. NS	260375	. FENDER ACCESS PANEL Up to 4-8295			1		
. NS	5001009	. NUT AN Up to 4-8295			12		
. NS	5001184	. SCREW TP PAN PH Up to 4-8295			12		
. NS	506002	. TAPE RUB ADH1 CC POL 3/16" x 1/2" x 40' / GREY 2520 Up to 4-8295			1		
8	215351	FENDER PANEL ASSY / STREETSIDE From 4-8296			1		
. NS	260375	. FENDER ACCESS PANEL From 4-8296			1		
. NS	955269	. SCREW CAP HEX M6-1.0x12 G8.8 ZG603 From 4-8296			12		
. NS	955920	. WASHER LO SPT 6.5x11.5x1.6 ZP From 4-8296			12		
. NS	506002	. TAPE RUB ADH1 CC POL 3/16" x 1/2" x 40' / GREY 2520 From 4-8296			1		
8	215074	FENDER PANEL ASSY / STREETSIDE Up to 4-8295		1		1	
. NS	260376	. FENDER ACCESS PANEL Up to 4-8295		1		1	
. NS	5001009	. NUT AN Up to 4-8295		12		12	
. NS	5001184	. SCREW TP PAN PH Up to 4-8295		12		12	
. NS	506002	. TAPE RUB ADH1 CC POL 3/16" x 1/2" x 40' / GREY 2520 Up to 4-8295		1		1	
8	215348	FENDER PANEL ASSY / STREETSIDE From 4-8296		1		1	
. NS	260376	. FENDER ACCESS PANEL From 4-8296		1		1	
. NS	955269	. SCREW CAP HEX M6-1.0x12 G8.8 ZG603 From 4-8296		12		12	
. NS	955920	. WASHER LO SPT 6.5x11.5x1.6 ZP From 4-8296		12		12	
. NS	506002	. TAPE RUB ADH1 CC POL 3/16" x 1/2" x 40' / GREY 2520 From 4-8296		1		1	
9	260375	. FENDER ACCESS PANEL	1		1		
9	260376	. FENDER ACCESS PANEL		1		1	
NS	506002	. TAPE RUB ADH1 CC POL 3/16" x 1/2" x 40' / GREY 2520	AR				
10	5001009	. NUT AN 1/4 NYL Up to 4-8295	12				
11	502848	. SCREW TC CAP HEX 1/4-20x3/4 ZG603 Up to 4-8295	12				
11	955269	. SCREW CAP HEX M6-1.0x12 G8.8 ZG603 From 4-8296	12				
	955920	. WASHER LO SPT 6.5x11.5x1.6 ZP From 4-8296	12				
12	260865	FLOOR FAN RADIATOR Up to 4-8295	1		1		

From 4-8165 Up to 8-9339	DATE: 01/2014	PAGE: Y2-1894-06

REAR LH - STRUCTURE

ITEM	PART	DESCRIPTION	XL45	MTH40	MTH45	MTH45S	NOTE
12	215375	SIDE MEMBER RADIATOR FLOOR PANEL From 4-8296	1		1		
13	260864	ANGLE MUFFLER SUPPORT 755MM BACKWARD	1		1		
13	260947	SUPPORT MUFFLE "U" SHAPE 727MM / FORWARD	1		1		
14	214770	FLOOR FAN RADIATOR Up to 6-8906	1				
14	214572	FLOOR FAN RADIATOR Up to 4-8295			1		
14	215373	FLOOR FAN RADIATOR From 4-8296 Up to 4-8364			1		
15	260873	SUPPORT FAN RADIATOR / BACKWARD	1		1		
15	212598	SUPPORT FAN RADIATOR	1		1		
16	260874	SUPPORT FAN RADIATOR / FORWARD	1		1		
17	260863	ANGLE SUPPORT 727MM Up to 5-8523	1		1		
17	261000	ANGLE SUPPORT 727MM From 5-8524	1		1		
20	214637	BRACKET BUMPER L.H. & R.H. / (WELDED AT STRUCTURE)	1				
20	216083	BRACKET BUMPER L.H. & R.H. / (WELDED AT STRUCTURE)	1				R
21	260640	TUBE 726MM	1		1		
22	260889	TUBE 1118MM INTERIOR	1				
23	260894	TUBE 1043MM / STREETSIDE CORNER	1				
25	260959	REINFORCEMENT / <> POST From 4-8264	2				
26	284534	SUPPORT STRIKER PIN Up to 6-8906	1				
27	260887	POST BACKWARD L.H. SERVICE DOOR / STREETSIDE Up to 6-8906	1				
28	286161	STRICKING PLATE Up to 6-8906	1				
29	212655	ATTACHMENT ROD / 373MM x 11MM DEEP / WELDED (TO FIX ANYTHING)	AR				
30	171472	PROTECTOR L.H. Up to 4-8345	1		1		
30	172650	PROTECTOR L.H. From 4-8346	1		1		
31	260891	FLOOR R.H.	1		1		
32	172545	REINFORCEMENT L.H.	1		1		
33	172547	REINFORCEMENT L.H.	1		1		
34	172655	TUBE 1224MM	1		1		
35	172540	BEAM L.H. "Z" FORM Up to 4-8345	1		1		
35	172853	BEAM L.H. "Z" FORM From 4-8346	1		1		
36	215083	ANGLE 190MM	4		4		
40	260964	SIDE MEMBER RADIATOR FLOOR PANEL		1		1	
41	172732	SUPPORT FAN RADIATOR / FORWARD		1		1	
42	260160	TUBE 656MM		1		1	
43	260936	SUPPORT, ANGLE / MUFFLER (WELDED)		1		1	
44	260931	SUPPORT FAN RADIATOR / BACKWARD		1		1	
45	260935	FENDER PANEL LOWER Up to 5-8523		1		1	
45	260999	FENDER PANEL LOWER From 5-8524		1		1	
46	260934	SUPPORT, ANGLE / MUFFLER (WELDED)		1		1	
46	260931	SUPPORT FAN RADIATOR / BACKWARD		1		1	
50	Y2-1894-00	**REAR CAP - STRUCTURE**					
		R) WITH OPTION REAR BUMPER "ROMEO RIM" SEE PAGE					
		Y2-1850-15					

From 4-8165 Up to 8-9339	DATE: 01/2014	PAGE: Y2-1894-06

REAR LH - STRUCTURE

ITEM	PART	DESCRIPTION	XL45	MTH40	MTH45	MTH45S	NOTE
51	Y2-1891-00	**LOWER WALL STRUCTURE - BUS**					
51	Y2-1891-50	**LOWER WALL STRUCTURE - MTH 40'**					
51	Y2-1891-55	**LOWER WALL STRUCTURE - MTH 45' ENT 86"**					
51	Y2-1891-56	**LOWER WALL STRUCTURE - MTH 45' ENT 89"**					
51	Y2-1891-60	**LOWER WALL STRUCTURE - MTH 45'**					
60	260259	REINFORCEMENT		2		2	
61	410293	EYE, TOW		1		1	
62	Call Order Desk	BEAM LOWER ASSY 1209MM W/CLOSING END		1		1	P
63	172539	REINFORCEMENT		2		2	
63	172536	REINFORCEMENT		1		1	
64	172535	SUPPORT ENGINE CRADLE Up to 4-8345		1		1	
64	172844	SUPPORT ENGINE CRADLE From 4-8346		1		1	
65	217912	SUPPORT, ANGLE / MUFFLER (WELDED)		2		2	
66	Call Order Desk	ANGLE SUPPORT / BACKWARD		1		1	P
67	215085	ANGLE SUPPORT / FORWARD		1		1	
		P) CALL ORDER DESK FOR SPECIFIC APPLICATION					
		(V.I.N.)					

From 4-8165 Up to 8-9339	DATE: 01/2014	PAGE: Y2-1894-06

REAR LH - STRUCTURE

ITEM	PART	DESCRIPTION	XL45	MTH40	MTH45	MTH45S	NOTE

From Y-7046 Up to 7-9095	DATE: 01/2014	PAGE: Y2-1894-10
REAR RH - STRUCTURE		

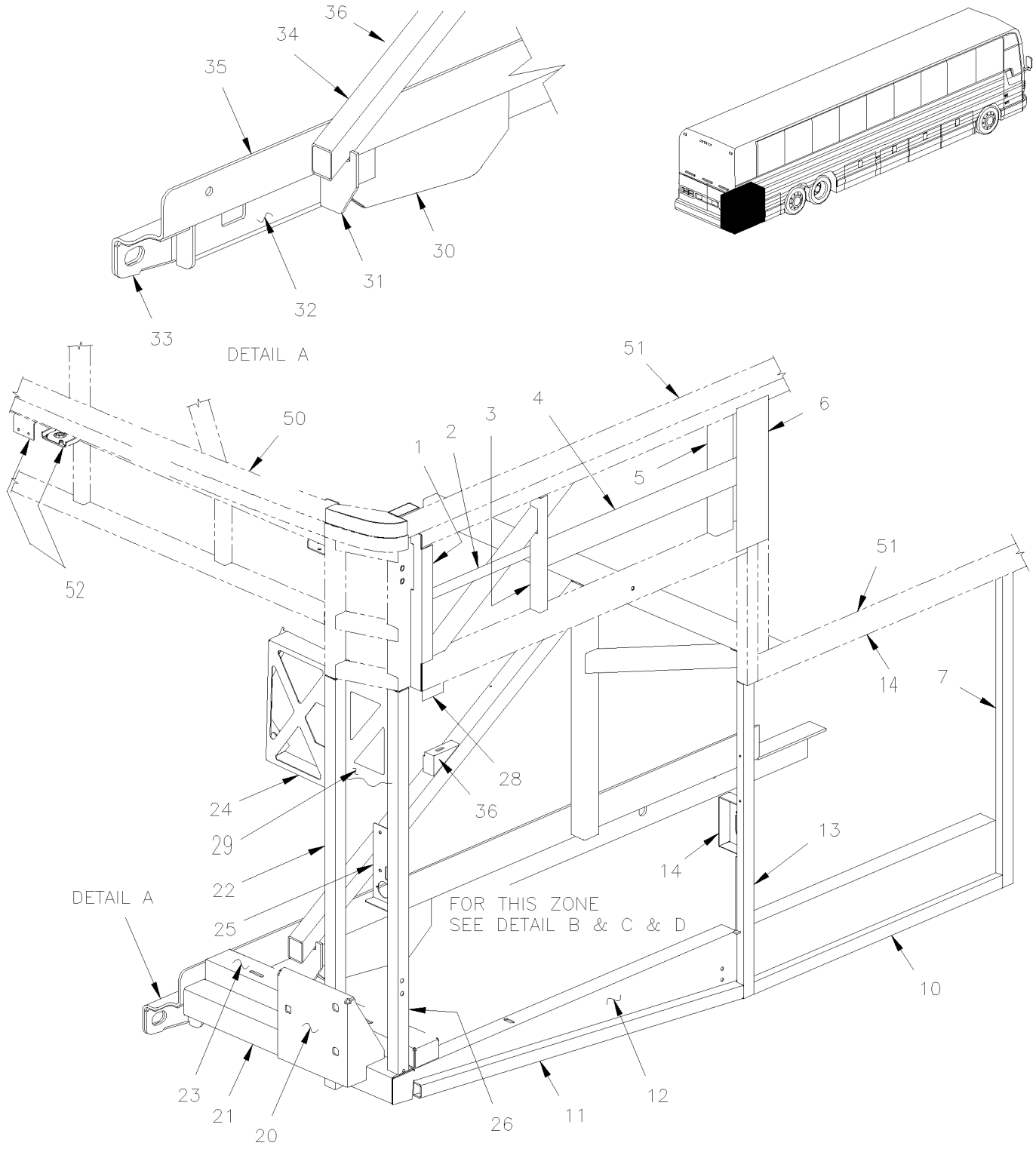

From Y-7046 Up to 7-9095	DATE: 01/2014	PAGE: Y2-1894-10
REAR RH - STRUCTURE		

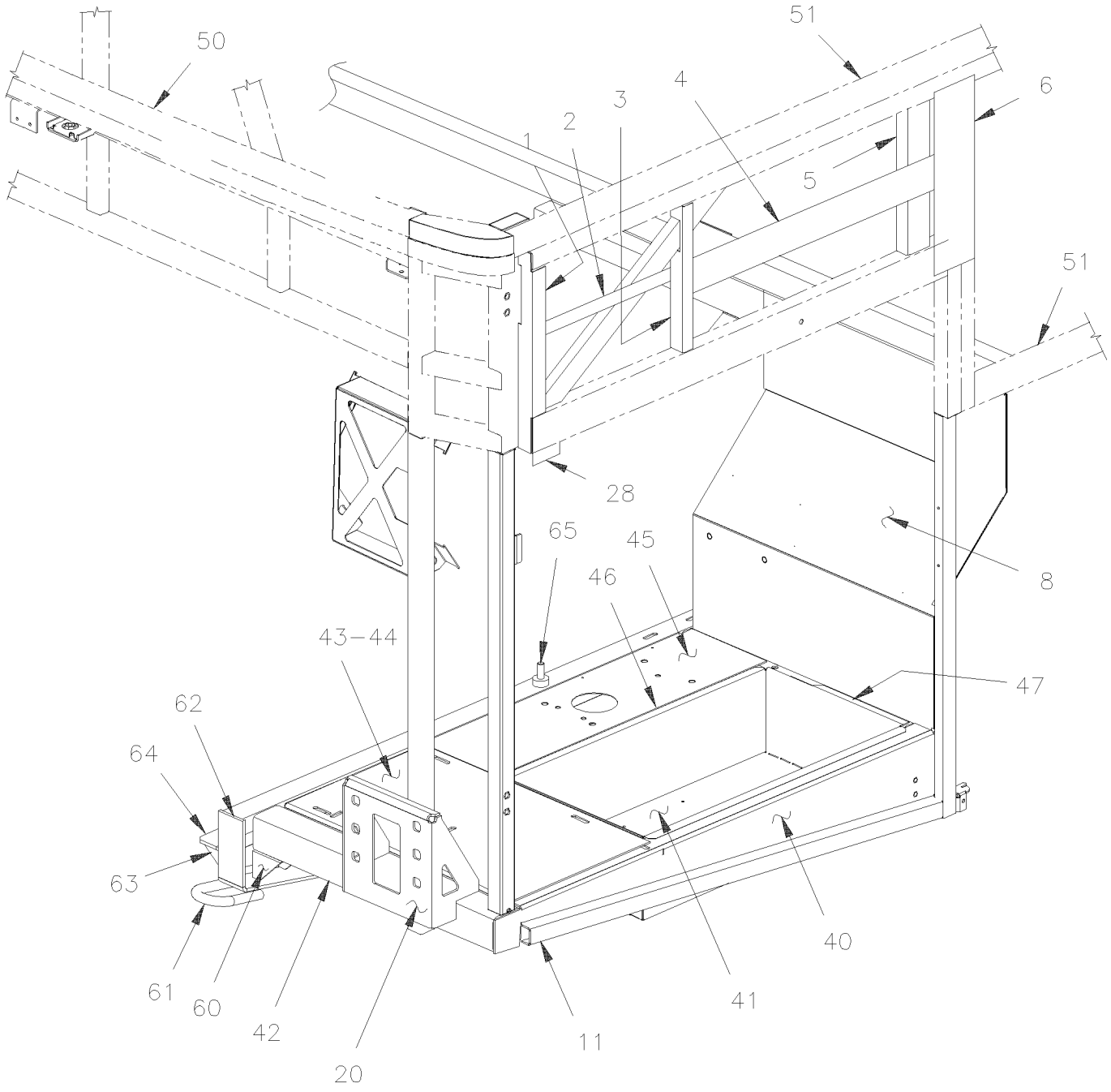

DETAIL ''D''

MTH 40' & MTH 45' ENT.

From Y-7046 Up to 7-9095	DATE: 01/2014	PAGE: Y2-1894-10
REAR RH - STRUCTURE		

MTH–45'

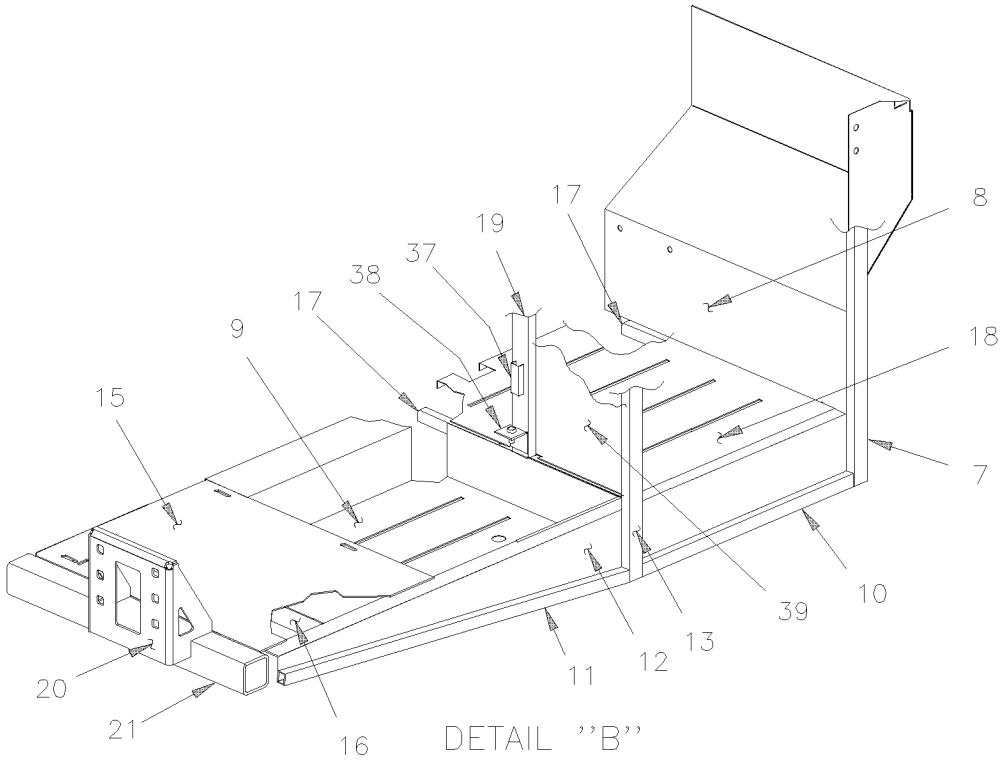

DETAIL ''B''

BUS–45'

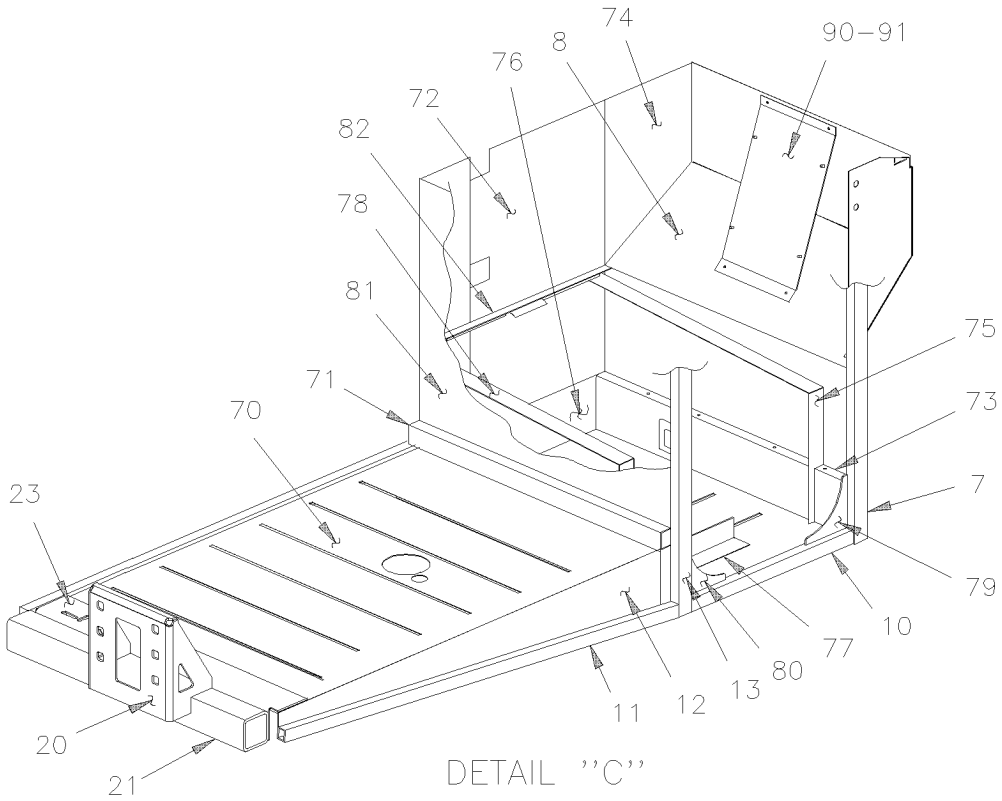

DETAIL ''C''

From Y-7046 Up to 7-9095	DATE: 01/2014	PAGE: Y2-1894-10

REAR RH - STRUCTURE

ITEM	PART	DESCRIPTION	XL45	MTH40	MTH45	MTH45S	NOTE
1	260812	ANGLE STREETSIDE Up to 6-8906	1				
1	260758	ANGLE STREETSIDE		1	1		
1	260801	ANGLE STREETSIDE				1	
2	231279	SHAPED BAR RH		1	1	1	
3	231494	ANGLE RH Up to 6-8906	1				
4	231281	SHAPED BAR Up to 3-8044		1	1	1	
4	231601	SHAPED BAR From 3-8045		1	1	1	
5	231278	SHAPED BAR		1	1		
5	231580	SHAPED BAR Up to 3-8044		1	1	1	
5	231604	SHAPED BAR LH VERTICAL From 3-8045		1	1		
6	473868	PANEL JUNCTION / S.B. / REPLACED BY: 477611		1	1		
7	214052	POST ASSY BACKWARD FENDER / CURBSIDE Up to 3-8164		1	1	1	
. NS	260726	. TUBE Up to 3-8164		1	1	1	
. NS	213942	. CATCH FENDER LOWER Up to 3-8164		1	1	1	
7	214627	POST ASSY BACKWARD FENDER / CURBSIDE From 4-8165	1				
. NS	213942	. CATCH FENDER LOWER From 4-8165	1				
8	260830	FENDER PANEL CURBSIDE	1				
9	260720	FLOOR BOX R.H. FOWARD COMPRESSOR BATTERIES SECTION			1		
10	260742	TUBE 600MM Up to 2-7849	1		1		
11	260741	TUBE 1132MM Up to 2-7849	1				
12	260820	SIDE MEMBER FLOOR SUPPORT R.H. Up to 2-7849	1		1		
12	260927	SIDE MEMBER FLOOR SUPPORT R.H. From 2-7850	1		1		
13	260726	TUBE 857MM	1		1		
14	284534	SUPPORT STRIKER PIN Up to 6-8906	1				
15	260819	SUPPORT FLOOR A/C COMPRESSOR Up to 3-8164			1		
15	260893	SUPPORT FLOOR A/C COMPRESSOR From 4-8165			1		
16	260706	REINFORCEMENT "U" 725MM x 44MM			1		
17	260744	REINFORCEMENT "U" 725MM x 38MM Up to 5-8523 / REPLACED BY: 261001			2		
17	261001	REINFORCEMENT "U" 725MM x 38MM From 8-8524			2		
18	260790	FLOOR R.H. / SERVICE COMPARTMENT			1		
19	260724	TUBE 712MM Up to 6-8805			1		
20	213755	BRACKET BUMPER R.H. / (WELDED AT STRUCTURE) Up to 4-8181 / REPLACED BY: 214637	1				
20	214637	BRACKET BUMPER L.H. & R.H. / (WELDED AT STRUCTURE) From 4-8182	1				
20	216083	BRACKET BUMPER L.H. & R.H. / (WELDED AT STRUCTURE)	1				R
21	260640	TUBE 726MM	1		1		
22	260730	TUBE 1118MM INTERIOR	1				
23	260824	SUPPORT REAR COMPRESSOR Up to 6-8906	1				
24	213702	SUPPORT AIR FILTER Up to 2-7767 / REPLACED BY: 213951	1				
24	213951	SUPPORT AIR FILTER From 2-7768	1				
25	213957	SUPPORT BACK-UP ALARM Up to 1-7694 / REPLACED BY: 214609	1				
25	214609	SUPPORT BACK-UP ALARM From 1-7695 Up to 2-7808 / REPLACED BY: 219045	1				
		R)					

From Y-7046 Up to 7-9095	DATE: 01/2014	PAGE: Y2-1894-10

REAR RH - STRUCTURE

ITEM	PART	DESCRIPTION	XL45	MTH40	MTH45	MTH45S	NOTE
25	219045	SUPPORT BACK-UP ALARM From 2-7809	1				
26	260750	TUBE 1043MM / CURBSIDE CORNER	1				
. NS	5001337	. NUT INS FL HEX M8-1.25 0.5-3.0 ZP	4				
. NS	286161	. STRICKING PLATE	1				
27	215278	SUPPORT BACK-UP ALARM	1				
28	286161	STRICKING PLATE Up to 3-8164	1				
29	260959	REINFORCEMENT / <> POST	1				
30	171473	PROTECTOR R.H.	1		1		
31	260644	PLATE REINFORCEMENT	1		1		
31	260718	PLATE REINFORCEMENT	1		1		
32	171476	REINFORCEMENT R.H. Up to Y-7279	1		1		
32	172546	REINFORCEMENT R.H. From Y-7280	1		1		
33	171469	REINFORCEMENT R.H. Up to Y-7279	1		1		
33	172548	REINFORCEMENT R.H. From Y-7280	1		1		
34	171483	TUBE 1208MM Up to 3-8164	1		1		
34	172655	TUBE 1224MM From 4-8165	1		1		
35	171444	BEAM R.H. "Z" FORM Up to Y-7279	1		1		
35	172544	BEAM R.H. "Z" FORM From Y-7280 Up to 4-8345	1		1		
35	172852	BEAM R.H. "Z" FORM From 4-8346	1		1		
36	260714	SUPPORT	1				
37	121507	SUPPORT "U" SHAPE 70MM Up to 6-8805			1		
38	212233	RETAINER BATERIE HOLDER Up to 6-8805			1		
39	260763	PANEL SUPPORT From 1-7441			1		
39	260858	PANEL SUPPORT From 1-7442 Up to 3-8164			1		
39	260940	PANEL SUPPORT From 4-8165 Up to 6-8805			1		
40	260821	SIDE MEMBER FLOOR SUPPORT R.H. Up to 2-7849		1		1	
40	260902	SIDE MEMBER FLOOR SUPPORT R.H. From 2-7850		1		1	
41	260837	FLOOR R.H. / BATTERIES COMPARTMENT		1		1	
42	260160	TUBE 656MM		1		1	
43	260851	SUPPORT FLOOR A/C COMPRESSOR		1		1	
44	260712	REINFORCEMENT 653MM x 44MM		1		1	
45	260838	FLOOR R.H. / REAR SIDE ENG CRADLE		1		1	
46	260850	SUPPORT "U" SHAPE 708MM		1		1	
47	260844	SUPPORT "U" SHAPE 655MM Up to 5-8523 / REPLACED BY: 261003		1		1	
47	261003	SUPPORT "U" SHAPE 655MM From 5-8524		1		1	
50	Y2-1894-00	**REAR CAP - STRUCTURE**					
51	Y2-1891-00	**LOWER WALL STRUCTURE - BUS**					
51	Y2-1891-50	**LOWER WALL STRUCTURE - MTH 40'**					
51	Y2-1891-55	**LOWER WALL STRUCTURE - MTH 45' ENT 86"**					
51	Y2-1891-56	**LOWER WALL STRUCTURE - MTH 45' ENT 89"**					
51	Y2-1891-60	**LOWER WALL STRUCTURE - MTH 45'**					

From Y-7046 Up to 7-9095	DATE: 01/2014	PAGE: Y2-1894-10

REAR RH - STRUCTURE

ITEM	PART	DESCRIPTION	XL45	MTH40	MTH45	MTH45S	NOTE
52	Y2-1870-10	**ENGINE DOOR ASSY - INSTALLATION**					
60	260259	REINFORCEMENT		2		2	
61	410293	EYE, TOW		1		1	
62	Call Order Desk	BEAM LOWER ASSY 1209MM W/CLOSING END		1		1	P
63	010795	REINFORCEMENT, LOWER SUPPORT Up to Y-7279 / REPLACED BY: 172539		2		2	
63	172539	REINFORCEMENT From Y-7280		2		2	
63	172536	REINFORCEMENT From Y-7280		1		1	
64	171474	SUPPORT R.H. Up to Y-7279		1		1	
64	172535	SUPPORT ENGINE CRADLE From Y-7280 Up to 4-8345		1		1	
64	172844	SUPPORT ENGINE CRADLE From 4-8346		1		1	
65	380360	STUD, GROUND (WELDED TO STRUCTURE) 1/2-13		1		1	
66	286133	ANGLE 12 x 20 x 595MM	1		1		
NS	286127	ANGLE 30 x 35 x 32MM	1		1		
70	260716	FLOOR R.H. / REAR Up to 3-8164	1				
70	260892	FLOOR R.H. / REAR From 4-8165 Up to 6-8906	1				
71	260842	SUPPORT SUMP TANK Up to 1-7590	1				
71	215487	SUPPORT SUMP TANK From 1-7591 Up to 6-8906	1				
72	260704	PANEL Up to 6-8906	1				
73	260698	REINFORCEMENT "U" 28 5/8" x 1 1/2" Up to 5-8523 / REPLACED BY: 261002	1				
73	261002	SUPPORT "U" SHAPE 728MM From 5-8524 Up to 6-8906	1				
74	260705	CLOSING PANEL SIDE FENDER Up to 6-8906	1				
75	212902	SUPPORT R.H. BATTERIES COVER Up to 6-8906	1				
76	212886	FLOOR R.H. / BATTERIES COMPARTMENT Up to 1-7590	1				
76	214542	FLOOR R.H. / BATTERIES COMPARTMENT From 1-7591 Up to 6-8906	1				
77	212657	SUPPORT FRONT COVER 523MM Up to 1-7590	1				
77	214536	ANGLE SUPPORT BATTERY COVER / FORWARD 200MM From 1-7591 Up to 6-8906	1				
78	212901	SUPPORT L.H. BATTERIES COVER Up to 6-8906	1				
79	214304	REINFORCEMENT "TRIANGULAR" 155MM Up to 6-8906	1				
80	260695	REINFORCEMENT "TRIANGULAR" 125MM Up to 6-8906	1				
81	260839	PANEL BACKWARD COMPATRMENT Up to 3-8020	1				
81	260859	PANEL BACKWARD COMPATRMENT From 3-8021 Up to 6-8906	1				
82	212658	SUPPORT BATTERY COVER / BACKWARD Up to 6-8906	1				
90	260686	SUPPORT "VANNER" Up to 6-8906	1				
90	065295	SUPPORT BATERIES CHARGER 110V Up to 6-8906	1				
		P) CALL ORDER DESK FOR SPECIFIC APPLICATION					
		(V.I.N.)					

From 7-9096 Up to 8-9339	DATE: 01/2014	PAGE: Y2-1894-11
REAR RH - STRUCTURE		

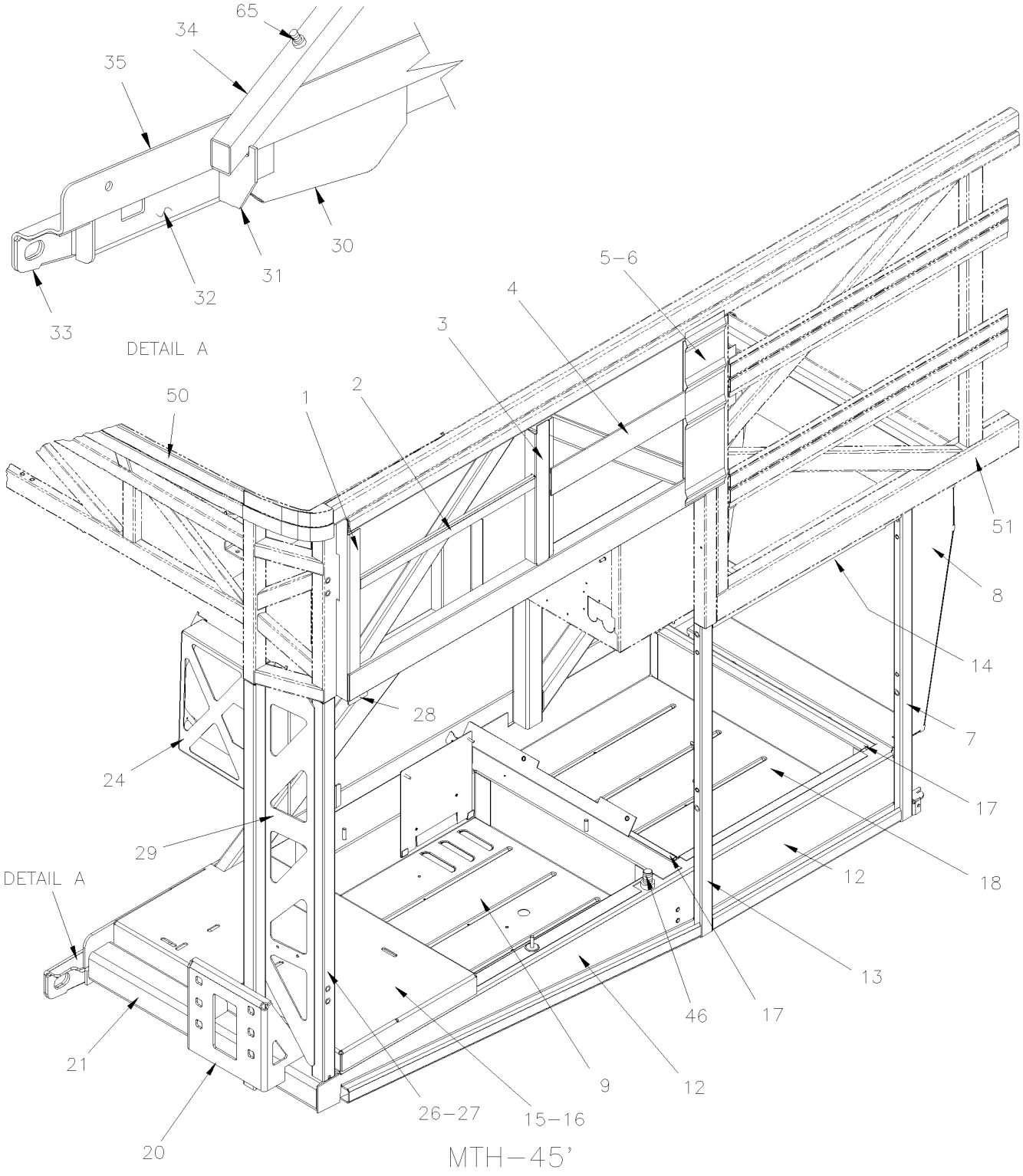

From 7-9096 Up to 8-9339	DATE: 01/2014	PAGE: Y2-1894-11
REAR RH - STRUCTURE		

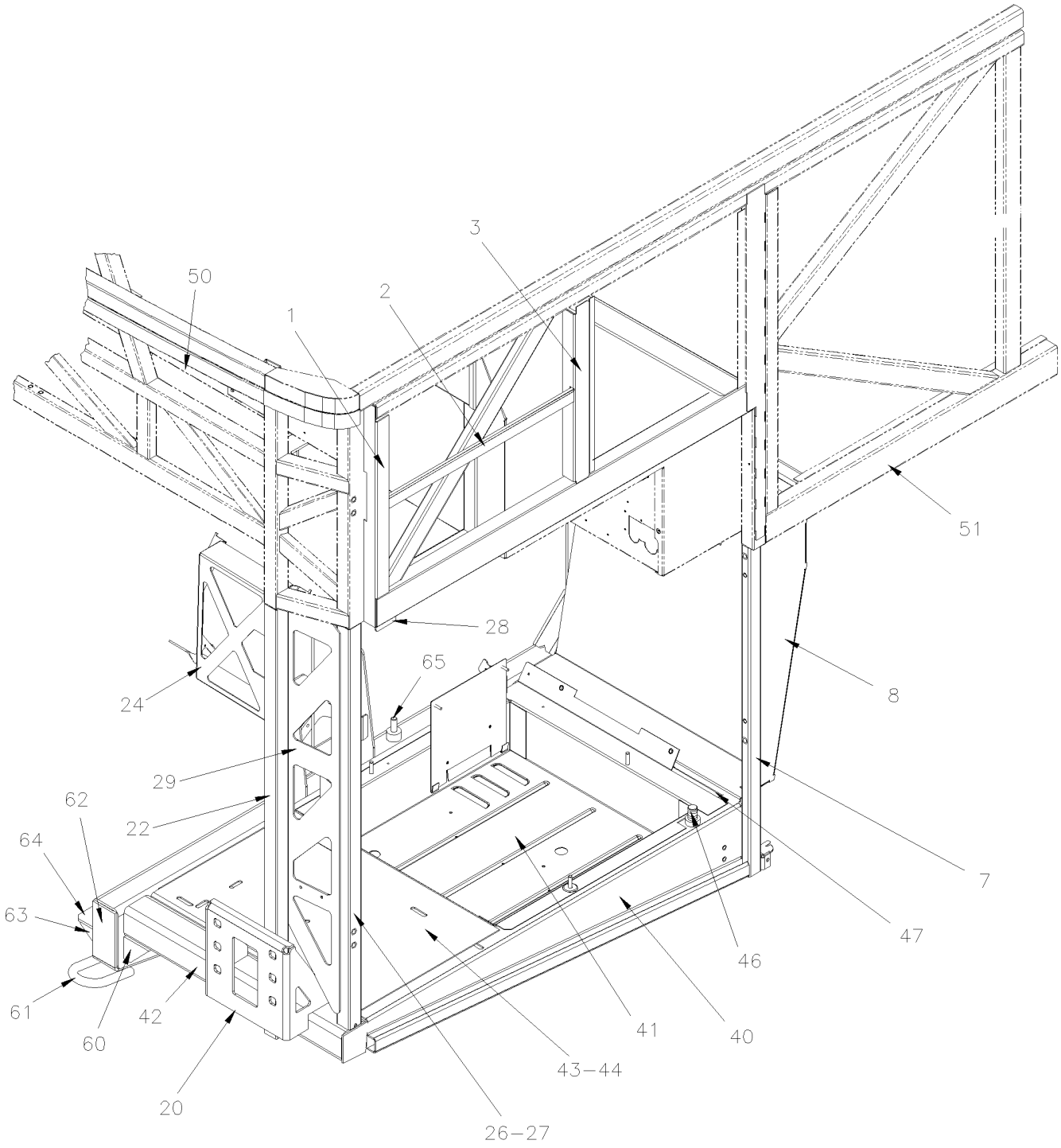

MTH–45' ENT.

From 7-9096 Up to 8-9339	DATE: 01/2014	PAGE: Y2-1894-11

REAR RH - STRUCTURE

ITEM	PART	DESCRIPTION	XL45	MTH40	MTH45	MTH45S	NOTE
1	260758	ANGLE STREETSIDE			1		
1	260801	ANGLE STREETSIDE				1	
2	231279	SHAPED BAR RH			1		
3	231602	SHAPED BAR			1		
4	231601	SHAPED BAR			1	1	
5	231580	SHAPED BAR			1		
5	231604	SHAPED BAR LH VERTICAL			1		
6	477611	PANEL JUNCTION / B.A.			1		
7	261151	POST ASSY BACKWARD FENDER / CURBSIDE			1	1	
. NS	213942	. CATCH FENDER LOWER			1	1	
. NS	5001337	. NUT INS FL HEX M8-1.25 0.5-3.0 ZP			2	2	
. NS	5001344	. NUT INS FL HEX M6-1.0 0.5-3.0 SS			2	2	
8	261145	FENDER PANEL CURBSIDE			1	1	
9	261156	FLOOR BOX R.H. FOWARD COMPRESSOR BATTERIES SECTION			1		
12	260927	SIDE MEMBER FLOOR SUPPORT R.H.			1		
13	261150	TUBE 857MM			1		
. NS	289416	. SUPPORT KETCH			1		
. NS	5001337	. NUT INS FL HEX M8-1.25 0.5-3.0 ZP			2		
. NS	5001344	. NUT INS FL HEX M6-1.0 0.5-3.0 SS			2		
14	286133	ANGLE 12 x 20 x 595MM			1		
14	286127	ANGLE 30 x 35 x 32MM			1		
15	Call Order Desk	SUPPORT FLOOR A/C COMPRESSOR Up to 8-9371			1		P
15	261171	SUPPORT FLOOR A/C COMPRESSOR From 8-9372			1		
16	260706	REINFORCEMENT "U" 725MM x 44MM			1		
17	261001	REINFORCEMENT "U" 725MM x 38MM Up to 8-9371			2		
17	261004	REINFORCEMENT "U" 655MM x 38MM From 8-9372			2		
18	261161	FLOOR R.H. / SERVICE COMPARTMENT Up to 8-9371			1		
18	261005	FLOOR R.H. / SERVICE COMPARTMENT From 8-9372			1		
20	214637	BRACKET BUMPER L.H. & R.H. / (WELDED AT STRUCTURE) Up to 8-9371			1	1	
20	216033	BRACKET BUMPER L.H. & R.H. / (WELDED AT STRUCTURE) From 8-9372			1	1	
21	260640	TUBE 726MM Up to 8-9371			1		
21	261159	TUBE 657MM From 8-9372			1		
22	260889	TUBE 1118MM INTERIOR			1	1	
24	213951	SUPPORT AIR FILTER			1	1	
26	260750	TUBE 1043MM / CURBSIDE CORNER Up to 8-9371			1	1	
. NS	5001337	. NUT INS FL HEX M8-1.25 0.5-3.0 ZP Up to 8-9371			4	4	
. NS	286161	. STRICKING PLATE Up to 8-9371			1	1	
26	261131	TUBE 1046MM / CURBSIDE CORNER From 8-9372			1	1	
. NS	5001337	. NUT INS FL HEX M8-1.25 0.5-3.0 ZP From 8-9372			2	2	
27	215278	SUPPORT BACK-UP ALARM Up to 8-9371			1	1	
27	216100	SUPPORT BACK-UP ALARM From 8-9372			1	1	
28	286161	STRICKING PLATE			1	1	
		P) CALL ORDER DESK FOR SPECIFIC APPLICATION					
		(V.I.N.)					

From 7-9096 Up to 8-9339	DATE: 01/2014	PAGE: Y2-1894-11

REAR RH - STRUCTURE

ITEM	PART	DESCRIPTION	XL45	MTH40	MTH45	MTH45S	NOTE
29	260959	REINFORCEMENT / <> POST Up to 8-9371			1	1	
29	261173	REINFORCEMENT / <> POST From 8-9372			1	1	
30	171473	PROTECTOR R.H.			1		
31	260939	PLATE REINFORCEMENT			1		
32	172546	REINFORCEMENT R.H.			1		
33	172548	REINFORCEMENT R.H.			1		
34	172655	TUBE 1224MM			1		
34	173354	TUBE 1248MM			1		
34	173357	TUBE 1159MM / W/SLIDE-OUT			1		
35	172852	BEAM R.H. "Z" FORM			1		
39	260763	PANEL SUPPORT			1		
40	260902	SIDE MEMBER FLOOR SUPPORT R.H.				1	
41	261143	FLOOR R.H. / BATTERIES COMPARTMENT				1	
42	261125	FORM R.H. SUPPORT 659MM x 90MM				1	
43	261144	SUPPORT FLOOR A/C COMPRESSOR Up to 8-9371				1	
43	261152	SUPPORT FLOOR A/C COMPRESSOR From 8-9372				1	
44	260712	REINFORCEMENT 653MM x 44MM				1	
46	382101	STUD, GROUND (WELDED TO STRUCTURE)			1	1	
47	261003	SUPPORT "U" SHAPE 655MM				1	
50	Y2-1894-00	**REAR CAP - STRUCTURE**					
51	Y2-1891-56	**LOWER WALL STRUCTURE - MTH 45' ENT 89"**					
51	Y2-1891-60	**LOWER WALL STRUCTURE - MTH 45'**					
52	Y2-1870-10	**ENGINE DOOR ASSY - INSTALLATION**					
60	260259	REINFORCEMENT				2	
61	410293	EYE, TOW				1	
62	Call Order Desk	BEAM LOWER ASSY 1209MM W/CLOSING END				1	P
63	172539	REINFORCEMENT				2	
63	172536	REINFORCEMENT				1	
64	172844	SUPPORT ENGINE CRADLE				1	
65	380360	STUD, GROUND (WELDED TO STRUCTURE) 1/2-13			1	1	
66	261005	FLOOR R.H. / SERVICE COMPARTMENT	1				
		P) CALL ORDER DESK FOR SPECIFIC APPLICATION					
		(V.I.N.)					

From Y-7046 Up to 8-9339	DATE: 01/2014	PAGE: Y2-1895-00
FRONT STRUCTURE		

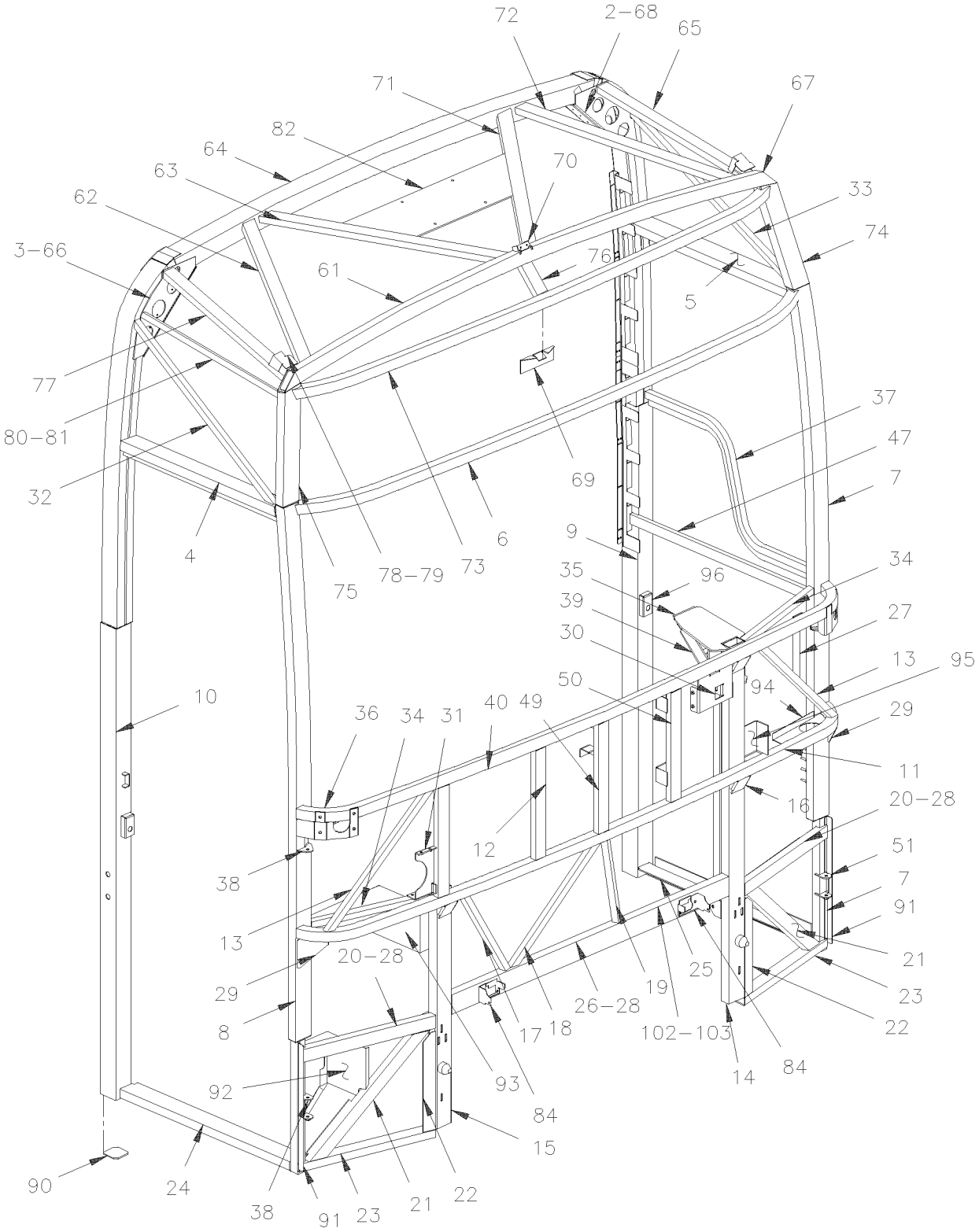

From Y-7046 Up to 8-9339	DATE: 01/2014	PAGE: Y2-1895-00

FRONT STRUCTURE

ITEM	PART	DESCRIPTION	XL45	MTH40	MTH45	MTH45S	NOTE
	251006P	FRONT STRUCTURE ASSY W/FRONT ROOF / 80" Up to 6-8906	1				
	251003P	FRONT STRUCTURE ASSY W/FRONT ROOF / 86"		1	1	1	
	250951P	FRONT STRUCTURE ASSY W/FRONT ROOF / 83"		1	1		
	251005P	FRONT STRUCTURE ASSY W/FRONT ROOF / 89"				1	
2	251092	. REAR REINFORCEMENT PLATE L.H.	1	1	1	1	
3	251093	. REAR REINFORCEMENT PLATE R.H.	1	1	1	1	
4	251074	. TUBE ASSY UPPER DOOR	1	1	1	1	
4	251214	. . TUBE	1	1	1	1	
4	251077	. . PLATE 743.6MM X 3/16"	1	1	1	1	
5	251064	. TUBE ASSY UPPER DRIVER WINDOW	1	1	1	1	
5	250952	. . TUBE	1	1	1	1	
5	251057	. . PLATE 743.6MM X 3/16"	1	1	1	1	
6	250928	. TUBE / WITH SMALL WINDSHIELD ONLY		1	1	1	
7	250985	. POST ASSY FRONT L.H. Up to 5-8358	1				
7	251217	. POST ASSY FRONT L.H. From 5-8359 Up to 6-8906	1				
. A	251553	. . TUBE LOWER 1"½ X 1"½ X 521MM From 5-8359 Up to 6-8906	1				
. B	251218	. . TUBE From 5-8359 Up to 6-8906	1				
. C	251055	. . SEAL DOOR BAR UPPER 974MM From 5-8359 Up to 6-8906	1				
. D	251033	. . HINGE SUPPORT LOWER From 5-8359 Up to 6-8906	1				
. E	250962	. . CLOSING PLATE / UPPER TUBE 33 X 71MM From 5-8359 Up to 6-8906	2				
. F	251096	. . SEAL DOOR BAR LOWER 1232MM From 5-8359 Up to 6-8906	1				
. G	251082	. . HINGE SUPPORT UPPER From 5-8359 Up to 6-8906	1				
. H	502737	. . SCREW CAP HEX M6-1.0x25 SS EMN From 5-8359 Up to 6-8906	4				
. I	251221	. . STOPPER DOOR From 5-8359 Up to 6-8906	1				
7	250997	. POST ASSY FRONT L.H. / MTH 83" Up to Y-7128		1	1		
7	250993	. POST ASSY FRONT L.H. / MTH 86" Up to 5-8358		1	1	1	
7	251551	. POST ASSY FRONT L.H. / MTH 86" From 5-8359		1	1	1	
7	250989	. POST ASSY FRONT L.H. / MTH 89" Up to 5-8358				1	
7	251558	. POST ASSY FRONT L.H. / MTH 89" From 5-8359				1	
7	250926	. . TUBE 1½" X 3" X 1883MM Up to 5-8358	1				
7	251218	. . TUBE 1½" X 3" X 1856MM From 5-8359 Up to 6-8906	1				
7	250920	. . TUBE 1½" X 3" X 1960MM / MTH 83" Up to Y-7128		1	1		
7	250922	. . TUBE 1½" X 3" X 2036MM / MTH 86" Up to 5-8358		1	1	1	
7	251554	. . TUBE 1½" X 3" X 2008MM / MTH 86" From 5-8359		1	1	1	
7	250924	. . TUBE 1½" X 3" X 2112MM / MTH 89" Up to 5-8358				1	
7	251559	. . TUBE 1½" X 3" X 2085MM / MTH 89" From 5-8359				1	
7	251096	. . SEAL DOOR BAR LOWER 1232MM Up to 6-8906	1				
7	251060	. . SEAL DOOR BAR LOWER 1309MM Up to Y-7128		1	1		
7	251071	. . SEAL DOOR BAR LOWER 1038MM		1	1	1	
7	251072	. . SEAL DOOR BAR LOWER 1461MM				1	
7	251055	. . SEAL DOOR BAR UPPER 974MM	1	1	1	1	

From Y-7046 Up to 8-9339	DATE: 01/2014	PAGE: Y2-1895-00

FRONT STRUCTURE

ITEM	PART	DESCRIPTION	XL45	MTH40	MTH45	MTH45S	NOTE
7	250962	. . CLOSING PLATE / UPPER TUBE 33 X 71MM	1	1	1	1	
7	251082	. . HINGE SUPPORT UPPER	1	1	1	1	
7	251033	. . HINGE SUPPORT LOWER	1	1	1	1	
7	250935	. . TUBE LOWER 1"½ X 1"½ X 497MM Up to 5-8358	1	1	1	1	
7	251553	. . TUBE LOWER 1"½ X 1"½ X 521MM From 5-8359	1	1	1	1	
7	251221	. . STOPPER DOOR From 5-8359	1	1	1	1	
7	502737	. SCREW CAP HEX M6-1.0x25 SS EMN	4	4	4	4	
8	250986	. POST ASSY FRONT R.H. Up to 5-8358	1				
8	251219	. POST ASSY FRONT R.H. From 5-8359 Up to 6-8906	1				
. A	251553	. . TUBE LOWER 1"½ X 1"½ X 521MM From 5-8359 Up to 6-8906	1				
. B	251220	. . TUBE 1½" X 3" X 1856MM From 5-8359 Up to 6-8906	1				
. C	251020	. . SEAL DOOR BAR 2272MM From 5-8359 Up to 6-8906	1				
. D	251001	. . HINGE SUPPORT / LOWER From 5-8359 Up to 6-8906	1				
. E	250962	. . CLOSING PLATE / UPPER TUBE 33 X 71MM From 5-8359 Up to 6-8906	2				
. F	251083	. . HINGE SUPPORT / UPPER From 5-8359 Up to 6-8906	1				
8	250998	. POST ASSY FRONT R.H. / MTH 83" Up to Y-7128		1	1		
8	250994	. POST ASSY FRONT R.H. / MTH 86" Up to 5-8358		1	1	1	
8	251552	. POST ASSY FRONT R.H. / MTH 86" From 5-8359		1	1	1	
8	250990	. POST ASSY FRONT R.H. / MTH 89" Up to 5-8358				1	
8	251557	. POST ASSY FRONT R.H. / MTH 89" From 5-8359				1	
8	250927	. . TUBE 1" X 3" X 1883MM Up to 5-8358	1				
8	251220	. . TUBE 1½" X 3" X 1856MM From 5-8359 Up to 6-8906	1				
8	250921	. . TUBE 1" X 3" X 1960MM / MTH 83" Up to Y-7128		1	1		
8	250923	. . TUBE 1" X 3" X 2036MM / MTH 86" Up to 5-8358		1	1	1	
8	251555	. . TUBE 1" X 3" X 2008MM / MTH 86" From 5-8359		1	1	1	
8	250925	. . TUBE 1" X 3" X 2112MM / MTH 89" Up to 5-8358				1	
8	251560	. . TUBE 1" X 3" X 2085MM / MTH 89" From 5-8359				1	
8	251020	. . SEAL DOOR BAR 2272MM Up to 6-8906	1				
8	251010	. . SEAL DOOR BAR 2355MM Up to Y-7128		1	1		
8	251016	. . SEAL DOOR BAR UPPER 1038MM		1	1	1	
8	251072	. . SEAL DOOR BAR LOWER 1461MM				1	
8	250962	. . CLOSING PLATE / UPPER TUBE 33 X 71MM	1	1	1	1	
8	251083	. . HINGE SUPPORT / UPPER	1	1	1	1	
8	251001	. . HINGE SUPPORT / LOWER	1	1	1	1	
8	250935	. TUBE LOWER 1"½ X 1"½ X 497MM Up to 5-8358	1	1	1	1	
8	251553	. TUBE LOWER 1"½ X 1"½ X 521MM From 5-8359	1	1	1	1	
9	250987	. POST ASSY REAR L.H. Up to 6-8906	1				
. A	250984	. . TUBE 3"X3" X 1684MM Up to 6-8906	1				
. B	271091	. . TUBE UPPER / BUS & MTH 83" Up to 6-8906	1				
. C	271088	. . PLATE JUNCTION 73MM X 76MM / CENTER OF PO Up to 6-8906	1				
. D	251094	. . DOUBLE Up to 6-8906	1				

From Y-7046 Up to 8-9339	DATE: 01/2014	PAGE: Y2-1895-00

FRONT STRUCTURE

ITEM	PART	DESCRIPTION	XL45	MTH40	MTH45	MTH45S	NOTE
. E	271187	. . CABLE SUPPORT Up to 6-8906	2				
. F	251056	. . SEAL DOOR BAR UPPER 579MM / BUS & MTH 83" Up to 6-8906	1				
. G	251114	. . SEAL DOOR BAR LOWER 1630MM Up to 6-8906	1				
. H	5001112	. . STUD WD WOC M6-1.0X12 SS Up to 6-8906	3				
. J	231497	. . PLATE WITH TOOTH 759MM x 23MM Up to 6-8906	1				
9	250999	. POST ASSY REAR L.H. / MTH 83" Up to Y-7128		1	1		
9	250995	. POST ASSY REAR L.H. / MTH 86"		1	1	1	
9	250982	. POST ASSY REAR L.H. / MTH 89"				1	
9	250984	. . TUBE 3"X3" X 1684MM Up to 6-8906	1				
9	271086	. . TUBE 3" X 3" X 1760MM / MTH 83" & MTH 86"		1	1	1	
9	271244	. . TUBE 3" X 3" X 1836MM / MTH 89"				1	
9	271091	. . TUBE UPPER / BUS & MTH 83"	1	1	1		
9	271090	. . TUBE UPPER 1352MM / MTH 86" & MTH 89"		1	1	1	
9	Call Order Desk	. . TUBE INTERIOR 1037MM / BUS & MTH 83"	1	1	1		P
9	251098	. . TUBE INTERIOR 1114MM / MTH 86" & MTH 89"		1	1	1	
9	251114	. . SEAL DOOR BAR LOWER 1630MM Up to 6-8906	1				
9	251059	. . SEAL DOOR BAR LOWER 1707MM /MTH 83" & MTH		1	1	1	
9	251113	. . SEAL DOOR BAR LOWER 1781MM / MTH 89"				1	
9	251056	. . SEAL DOOR BAR UPPER 579MM / BUS & MTH 83"	1	1	1		
9	251078	. . SEAL DOOR BAR UPPER 656MM / MTH 86" & MTH		1	1	1	
9	271088	. . PLATE JUNCTION 73MM X 76MM / CENTER OF PO	1	1	1	1	
9	271187	. . CABLE SUPPORT	2	2	2	2	
10	250988	. POST ASSY REAR R.H. Up to 6-8906	1				
. A	251167	. . TUBE ASSY 3" X 3" X 1684MM Up to 6-8906	1				
. B	271091	. . TUBE UPPER / BUS & MTH 83" Up to 6-8906	1				
. C	271088	. . PLATE JUNCTION 73MM X 76MM / CENTER OF PO Up to 6-8906	1				
. D	251094	. . DOUBLE Up to 6-8906	1				
. E	251021	. . SEAL DOOR BAR 2274MM Up to 6-8906	1				
. F	231497	. . PLATE WITH TOOTH 759MM x 23MM Up to 6-8906	1				
10	251000	. POST ASSY REAR R.H. / MTH 83" Up to Y-7128		1	1		
10	250996	. POST ASSY REAR R.H. / MTH 86"		1	1	1	
10	250983	. POST ASSY REAR R.H. / MTH 89"				1	
10	251167	. . TUBE ASSY 3" X 3" X 1684MM Up to 6-8906	1				
10	271086	. . TUBE 3" X 3" X 1760MM / MTH 83" & MTH 86"		1	1	1	
10	271244	. . TUBE 3" X 3" X 1836MM / MTH 89"				1	
10	271091	. . TUBE UPPER / BUS & MTH 83"	1	1	1		
10	271090	. . TUBE UPPER 1352MM / MTH 86" & MTH 89"		1	1	1	
10	Call Order Desk	. . TUBE INTERIOR 1037MM / BUS & MTH 83"	1	1	1		P
10	251098	. . TUBE INTERIOR 1114MM / MTH 86" & MTH 89"		1	1	1	
10	251021	. . SEAL DOOR BAR 2274MM	1	1	1		
10	251011	. . SEAL DOOR BAR / MTH 83" Up to Y-7128		1	1		
		P) CALL ORDER DESK FOR SPECIFIC APPLICATION					
		(V.I.N.)					

From Y-7046 Up to 8-9339	DATE: 01/2014	PAGE: Y2-1895-00

FRONT STRUCTURE

ITEM	PART	DESCRIPTION	XL45	MTH40	MTH45	MTH45S	NOTE
10	251016	. . SEAL DOOR BAR UPPER 1038MM	1	1	1		
10	251019	. . SEAL DOOR BAR / MTH 89"				1	
10	251463	. . SEAL DOOR BAR LOWER 1463MM / MTH 89"				1	
10	271088	. . PLATE JUNCTION 73MM X 76MM / CENTER OF PO	1	1	1	1	
10	251012	. . STRIKER PIN RETAINER		1	1	1	
10	251085	. . CATCH / DOOR LOCK RETAINER		1	1	1	
11	250929	. TUBE	1	1	1	1	
12	251031	. TUBE Up to 6-8906	1				
12	251028	. TUBE / MTH 83" Up to Y-7128		1	1		
12	251029	. TUBE / MTH 86"		1	1	1	
12	251030	. TUBE / MTH 89"				1	
13	251046	. TUBE Up to 6-8906	2				
13	251042	. TUBE / MTH 83" Up to Y-7128		2	2		
13	251044	. TUBE / MTH 86"		2	2	2	
13	251045	. TUBE / MTH 89"		2	2	2	
14	251039	. TUBE L.H. ASSY 1253MM Up to 6-8906	1				
14	251036	. TUBE L.H. ASSY 1329MM / MTH 83" Up to Y-7128		1	1		
14	251037	. TUBE L.H. ASSY 1405MM / MTH 86"		1	1	1	
14	251038	. TUBE L.H. ASSY 1482MM / MTH 89"				1	
14	251009	. . TUBE L.H .1253MM Up to 6-8906	1				
14	250943	. . TUBE L.H. 1329MM / MTH 83" Up to Y-7128		1	1		
14	251007	. . TUBE L.H. 1405MM / MTH 86"		1	1	1	
14	251008	. . TUBE L.H. 1482MM / MTH 89"				1	
14	251097	. . TUBE L.H. REAR 587MM Up to 6-8906	1				
14	251062	. . TUBE L.H. REAR 768MM		1	1	1	
14	281345	. . SUPPORT DOOR ARM	1	1	1	1	
14	161097	. . PLATE 150MM X 170MM	1	1	1	1	
14	161098	. . REINFORCEMENT	1	1	1	1	
14	410657	. . CENTER PIN Up to 2-7764	1	1	1	1	
14	410973	. . CENTER PIN From 2-7765	1	1	1	1	
15	251041	. TUBE R.H. ASSY 701MM Up to 6-8906	1				
15	251040	. TUBE R.H. ASSY 882MM		1	1	1	
15	251015	. . TUBE R.H. 701MM Up to 6-8906	1				
15	250970	. . TUBE R.H. 882MM		1	1	1	
15	281345	. . SUPPORT DOOR ARM	1	1	1	1	
15	251120	. . CLOSING PLATE	1	1	1	1	
15	410657	. . CENTER PIN		1	1	1	
16	250947	. SUPPORT	3	3	3	3	
17	251032	. TUBE		1	1	1	
18	251013	. TUBE		1	1	1	
19	251043	. TUBE		1	1	1	

From Y-7046 Up to 8-9339	DATE: 01/2014	PAGE: Y2-1895-00

FRONT STRUCTURE

ITEM	PART	DESCRIPTION	XL45	MTH40	MTH45	MTH45S	NOTE
20	250945	. TUBE	2	2	2	2	
21	250948	. TUBE	2	2	2	2	
22	251027	. PLATE Up to 3-8108	2	2	2	2	
22	251215	. PLATE From 3-8109	2	2	2	2	
23	172220	. TUBE	2	2	2	2	
24	251014	. TUBE LOWER STEP	1	1	1	1	
25	251070	. TUBE LOWER SERVICE DOOR ASSY	1	1	1	1	
25	172215	. . PROFILE	1	1	1	1	
25	251026	. . PLATE	1	1	1	1	
26	250946	. TUBE Up to 1-7378 / REPLACED BY: 251192	1	1	1	1	
26	251192	. TUBE From 1-7379 Up to 2-7764	1	1	1	1	
26	251212	. TUBE From 2-7765	1	1	1	1	
27	251105	. DASH SUPPORT	1	1	1	1	
27	251107	. DASH SUPPORT / MTH 89"				1	
28	212655	. ATTACHMENT ROD / 373MM x 11MM DEEP / WELDED (TO FIX ANYTHING)	5	5	5	5	
29	251047	. REINFORCEMENT	2	2	2	2	
30	251086	. SUPPORT WIPER L.H.	1	1	1	1	
31	251087	. SUPPORT WIPER R.H.	1	1	1	1	
32	251050	. TUBE / WITH SMALL WINDSHIELD ONLY		1	1	1	
33	251051	. TUBE / WITH SMALL WINDSHIELD ONLY		1	1	1	
34	251049	. TUBE	1	1	1	1	
35	161095	. REINFORCEMENT	1	1	1	1	
36	064901	. DOOR SWITCH SUPPORT		1	1	1	
37	251065	. TUBE ASSY "S" SHAPE / BUS & MTH 83"	1	1			
37	251054	. . TUBE "S" SHAPE / BUS & MTH 83"	1	1			
37	251058	. . PLATE "S" SHAPE / BUS & MTH 83"	1	1	1	1	
37	251073	. TUBE ASSY "S" SHAPE / MTH 86" & MTH 89"		1	1	1	
37	251075	. . TUBE "S" SHAPE / MTH 86" & MTH 89"		1	1	1	
37	251076	. . PLATE "S" SHAPE / MTH 86" & MTH 89"		1	1	1	
38	Y2-1862-60	**ENTRANCE DOOR FRAME - INSTALLATION**					
38	251083	. HINGE SUPPORT / UPPER	1	1	1	1	
38	251001	. HINGE SUPPORT / LOWER	1	1	1	1	
39	161096	. STEERING SUPPORT	1	1	1	1	
40	251184	. TUBE WINDSHIELD ASSY	1	1	1	1	
40	251181	. . SUPPORT L.H.	1	1	1	1	
40	251182	. . SUPPORT R.H.	1	1	1	1	
40	251183	. . TUBE	1	1	1	1	
41	251185	. STOPPER SERVICE DOOR	1	1	1	1	
47	251176	. TUBE	1	1	1	1	
48	251179	. TUBE ASSY / W/CYLINDER SUPPORT Up to 6-8906	1				
49	251153	. TUBE CENTER ASSY Up to 6-8906	1				

From Y-7046 Up to 8-9339	DATE: 01/2014	PAGE: Y2-1895-00

FRONT STRUCTURE

ITEM	PART	DESCRIPTION	XL45	MTH40	MTH45	MTH45S	NOTE
49	251147	. TUBE CENTER ASSY / MTH 83" Up to Y-7128		1	1		
49	251149	. TUBE CENTER ASSY / MTH 86"		1	1	1	
49	251151	. TUBE CENTER ASSY / MTH 89"		1	1	1	
49	251031	. . TUBE Up to 6-8906	1				
49	251028	. . TUBE / MTH 83"		1	1		
49	251029	. . TUBE / MTH 86"		1	1	1	
49	251030	. . TUBE / MTH 89"		1	1	1	
49	251104	. . SUPPORT	1	1	1	1	
50	251154	. TUBE ASSY L.H. Up to 6-8906	1				
50	251148	. TUBE ASSY L.H. / MTH 83" Up to Y-7128		1	1		
50	251150	. TUBE ASSY L.H. / MTH 86"		1	1	1	
50	251152	. TUBE ASSY L.H. / MTH 89"		1	1	1	
50	251031	. . TUBE Up to 6-8906	1				
50	251028	. . TUBE / MTH 83" Up to Y-7128		1	1		
50	251029	. . TUBE / MTH 86"		1	1	1	
50	251031	. . TUBE		1	1	1	
50	251103	. . SUPPORT	2	2	2	2	
51	251033	. HINGE SUPPORT LOWER	1	1	1	1	
61	271397	. TUBE	1	1	1	1	
62	271141	. TUBE R.H.	1	1	1	1	
63	271356	. TUBE R.H. CENTER	1	1	1	1	
64	Call Order Desk	. ARCH ASSY	1	1	1	1	P
64	251084	. . ARCH	1	1	1	1	
64	251117	. . REINFORCEMENT	2	2	2	2	
64	251088	. . JOINT	2	2	2	2	
64	251089	. . PLATE	2	2	2	2	
64	251135	. . ROD POSITION	1	1	1	1	
65	271142	. TUBE UPPER L.H.	1	1	1	1	
66	251090	. FRONT REINFORCEMENT PLATE L.H.	1	1	1	1	
67	271394	. PLATE / (EACH SIDE)	2	2	2	2	
68	251091	. FRONT REINFORCEMENT	1	1	1	1	
69	251155	. SUPPORT UPPER WINDSHIELD	1	1	1	1	
70	251145	. SUPPORT ROLLER BLIND / CENTER Up to Y-7244	1	1	1	1	
70	251541	. SUPPORT ROLLER BLIND / CENTER From Y-7245	1	1	1	1	
71	271357	. TUBE L.H. CENTER	1	1	1	1	
72	271204	. TUBE L.H.	1	1	1	1	
73	271205	. TUBE UPPER WINDSHIELD	1	1	1	1	
74	271395	. TUBE L.H. CORNER	1	1	1	1	
75	271396	. TUBE	1	1	1	1	
76	271216	. TUBE CENTER	1	1	1	1	
77	271218	. TUBE UPPER R.H.	1	1	1	1	
		P) CALL ORDER DESK FOR SPECIFIC APPLICATION					
		(V.I.N.)					

From Y-7046 Up to 8-9339	DATE: 01/2014	PAGE: Y2-1895-00

FRONT STRUCTURE

ITEM	PART	DESCRIPTION	XL45	MTH40	MTH45	MTH45S	NOTE
78	251146	. SUPPORT ROLLER BLIND L.H. Up to Y-7244	1	1	1	1	
78	251543	. SUPPORT ROLLER BLIND L.H. From Y-7245	1	1	1	1	
79	251159	. SUPPORT ROLLER BLIND R.H. Up to Y-7244	1	1	1	1	
79	251542	. SUPPORT ROLLER BLIND R.H. From Y-7245	1	1	1	1	
80	251161	. SUPPORT INTERIOR R.H. Up to 6-8906	1				
81	251160	. SUPPORT INTERIOR L.H. Up to 6-8906	1				
82	251157	. SUPPORT MONITOR CENTER Up to 6-8906	1				
82	256121	. SUPPORT MONITOR CENTER / W/FLAT SCREEN 10" Up to 6-8906	1				
82	251223	. SUPPORT MONITOR CENTER / W/FLAT SCREEN 15" Up to 6-8906	1				
84	287255	. SUPPORT SPAGNOLET Up to 3-8108 / REPLACED BY: 289497	2				
84	287423	. SUPPORT SPAGNOLET From 3-8109 Up to 6-8906	1				A
90	251119	. CLOSING PLATE 68MM X 68MM	2	2	2	2	
91	474103	. ANGLE / MOULDING SUPPORT	2	2	2	2	
92	172360	. PANEL HINGE BOX / SS	1	1	1	1	
93	172359	. PANEL FRONT CONER / SS	1	1	1	1	
94	214107	. PANEL FRONT CONER / SS	1	1	1	1	
95	251102	. SUPPORT / DASH	1	1	1	1	
96	287961	. SUPPORT	1	1	1	1	
102	214243	. TUBE 92MM x 1 1/2" x 3" / <> TUBE 26 AND DR Up to 6-8906	1				
103	251079	. PANEL FRONT / <> TUBE 26 & 11	1				

A) BUS ONLY RH SIDE ONLY

From Y-7046 Up to 6-8906	DATE: 01/2014	PAGE: Y2-1895-10

FRONT LOWER FLOOR STRUCTURE - BUS

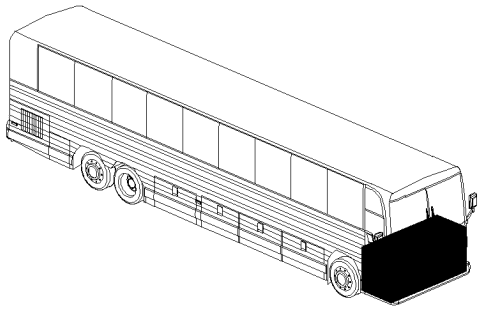

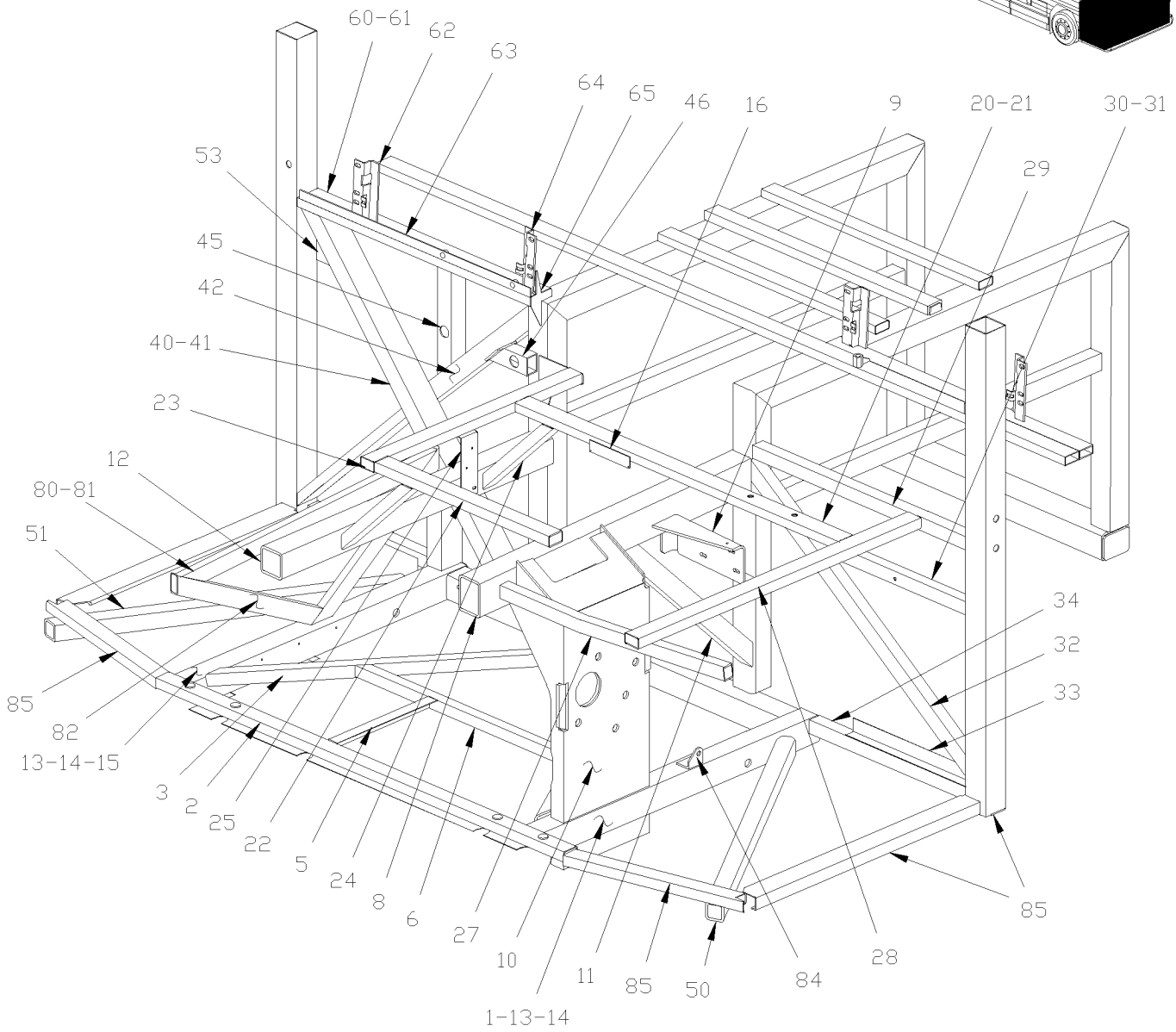

From Y-7046 Up to 6-8906	DATE: 01/2014	PAGE: Y2-1895-10

FRONT LOWER FLOOR STRUCTURE - BUS

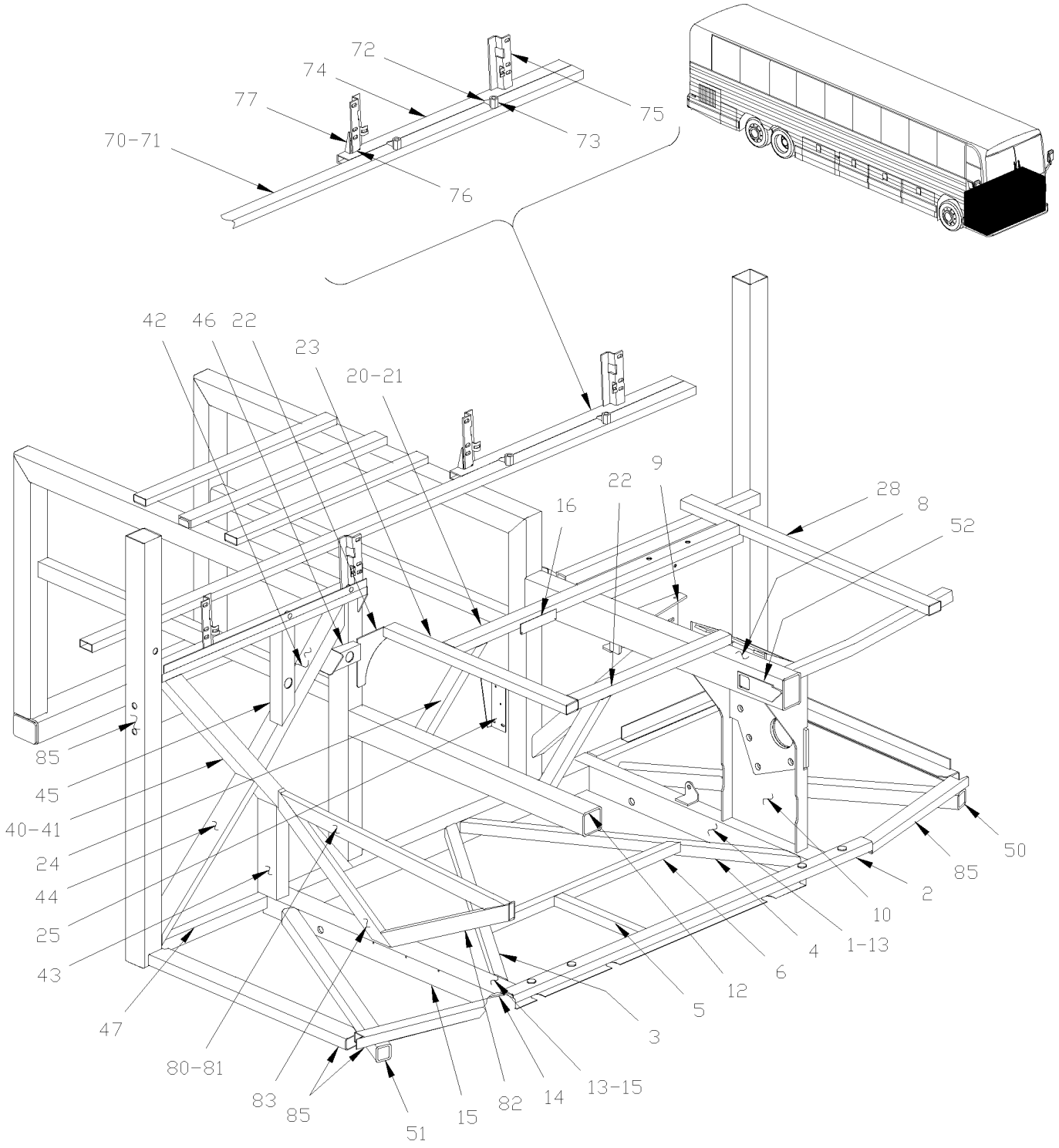

From Y-7046 Up to 6-8906	DATE: 01/2014	PAGE: Y2-1895-10

FRONT LOWER FLOOR STRUCTURE - BUS

ITEM	PART	DESCRIPTION	XL45	MTH40	MTH45	MTH45S	NOTE
1	172203	TUBE	1				
2	287937	TUBE / HINGE ASSY Up to 2-7763	1				
2	287317	TUBE / HINGE ASSY From 2-7764	1				
3	172255	TUBE	1				
4	172258	TUBE	1				
5	172227	ANGLE	1				
6	172257	TUBE	1				
8	172273	TUBE 1022MM	1				
9	172281	SUPPORT BRAKE VALVE	1				
10	172440	SUPPORT GEAR BOX STEERING / W/ "ZF" Up to 4-8250 / REPLACED BY: 172856	1				
10	172856	SUPPORT GEAR BOX STEERING / W/ "ZF" From 4-8251 Up to 6-8832 / REPLACED BY: 173095	1				
10	173095	SUPPORT GEAR BOX STEERING / W/ "ZF" From 6-8833	1				
10	172312	SUPPORT GEAR BOX STEERING / W/ "ZF" Up to 3-8164 / REPLACED BY: K172312		1	1	1	
10	172799	SUPPORT GEAR BOX STEERING / W/ "ZF" From 4-8165 Up to 4-8250		1	1	1	
10	172858	SUPPORT GEAR BOX STEERING / W/ "ZF" From 4-8251 Up to 6-8832		1	1	1	
11	214238	TUBE 691MM	1				
12	213855	TUBE 981MM Up to 2-7763 / REPLACED BY: 214598	1				
13	220944	CLOSING PLATE 67MM X 67MM	2				
14	172204	CLOSING PLATE 115MM X 68MM	2				
15	172525	TUBE	1				
16	172560	SUPPORT / PARKING BRAKE OVERRULE	1				
20	Call Order Desk	FLOOR ASSY / STEPWELL & DRIVER`S	1				P
20	172304P	FLOOR ASSY		1	1	1	
21	214140	. TUBE / BACKWARD	1				
22	214239	. TUBE / FORWARD	1				
23	214240	. TUBE / CURBSIDE	1				
24	214141	. TUBE	2				
25	453315	. SUPPORT / A/C VALVE	1				
26	214241	. PLATE SUPPORT	1				
27	213962	TUBE FRONT DRIVER`S FLOOR SUPPORT	1				
28	214138	TUBE STREETSIDE DRIVER`S FLOOR SUPPORT	1				
29	214266	TUBE DRIVER`S FLOOR REAR / W/IND SUSPENTION	1				
29	214139	TUBE DRIVER'S FLOOR REAR / W/RIGID SUSPENTION	1				
30	214300	"Z" FRAME ASSY Up to 2-7881 / REPLACED BY: 214772	1				
30	214772	"Z" FRAME ASSY From 2-7882	1				
31	214317	. TUBE ASSY UPPER	1				
32	214309	. TUBE TRANSVERSALE 1032MM / STREET SIDE	1				
NS	5001354	. STUD WD WOC M6-1.0X20 SS From 2-7882	1				
33	214318	. ANGLE 450MM Up to 2-7881 / REPLACED BY: 214773	1				
33	214773	. ANGLE 450MM From 2-7882	1				
		P) CALL ORDER DESK FOR SPECIFIC APPLICATION					
		(V.I.N.)					

From Y-7046 Up to 6-8906	DATE: 01/2014	PAGE: Y2-1895-10

FRONT LOWER FLOOR STRUCTURE - BUS

ITEM	PART	DESCRIPTION	XL45	MTH40	MTH45	MTH45S	NOTE
34	172267	TUBE 584MM	1				
40	Call Order Desk	"X" FRAME ASSY	1				P
41	214217	. TUBE 1152MM	1				
42	214216	. TUBE 549MM	1				
43	214219	. TUBE 303MM	1				
44	214218	. TUBE 551MM	1				
45	214433	TUBE / HOTESS SEAT CURBSIDE Up to 2-7881 / REPLACED BY: 214715	1				
45	214715	TUBE / HOTESS SEAT CURBSIDE From 2-7882	1				
46	214451	TUBE / HOTESS SEAT STREETSIDE	1				
47	172214	TUBE 569MM	1				
50	172268	TUBE 964MM/ STREETSIDE	1				
51	172213	TUBE 931MM / CURBSIDE	1				
52	251048	REINFORCEMENT	2				
53	214456	REINFORCEMENT Up to 2-7881	1				
53	214712	REINFORCEMENT From 2-7882	1				
60	214413	SUPPORT ASSY / MODESTY PANEL / CURBSIDE	1				
61	214136	. TUBE 842MM	1				
62	327276	. ATTACHMENT ASSY / MODESTY PANEL / CURBSIDE	1				
63	214411	. ANCHOR ASSY / HOSTESS SEAT	1				
64	327357	. ATTACHMENT ASSY / MODESTY PANEL / STREETSIDE	1				
65	214436	. REINFORCEMENT	1				
70	172504	SUPPORT ASSY / MODESTY PANEL / STREETSIDE	1				
71	170464	. SUPPORT, FLOOR	1				
72	214390	. REINFORCEMENT	2				
73	214389	. ANCHOR DRIVER SEAT	2				
74	172505	. TUBE	1				
75	327277	. ATTACHMENT	1				
76	327356	. ATTACHMENT ASS	1				
77	214437	. RENFORCMENT	1				
80	Call Order Desk	REINFORCEMENT ASSY / TRIANGULAR SHAPE	1				P
80	Call Order Desk	REINFORCEMENT ASSY / TRIANGULAR SHAPE		1	1	1	P
81	214135	. TUBE / UPPER	1				
82	214133	. TUBE / BACKWARD	1				
83	214134	. TUBE / FORWARD	1				
84	285155	ANGLE SUPPORT BUMPER SPRING	1				
85	Y2-1895-00	**FRONT STRUCTURE**					
86		SUPPORT ASSY / MODESTY PANEL / STREETSIDE	1				
		P) CALL ORDER DESK FOR SPECIFIC APPLICATION					
		(V.I.N.)					

From Y-7046 Up to 6-8906	DATE: 01/2014	PAGE: Y2-1895-50
FRONT LOWER FLOOR STRUCTURE - MTH		

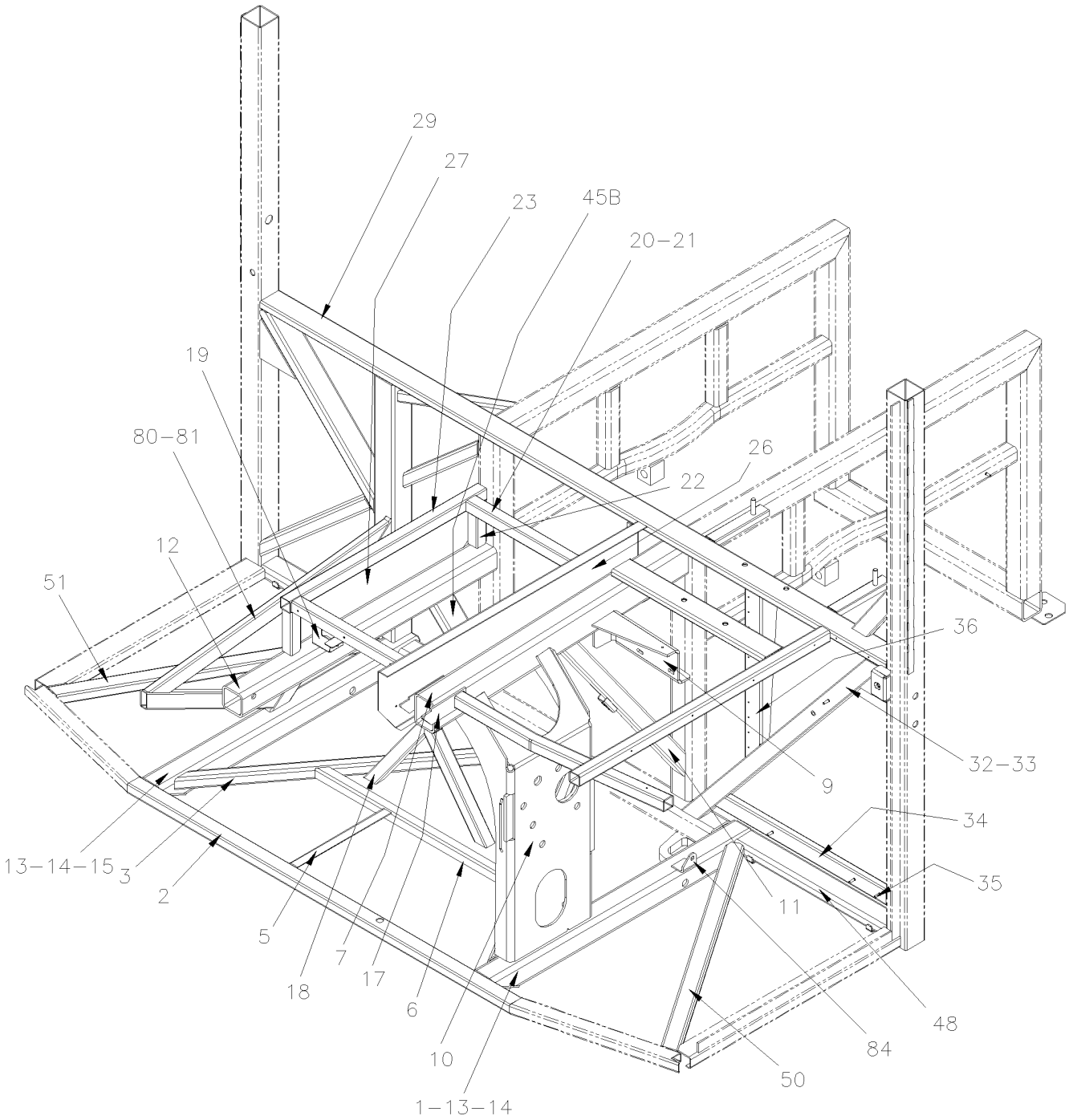

From Y-7046 Up to 6-8906	DATE: 01/2014	PAGE: Y2-1895-50

FRONT LOWER FLOOR STRUCTURE - MTH

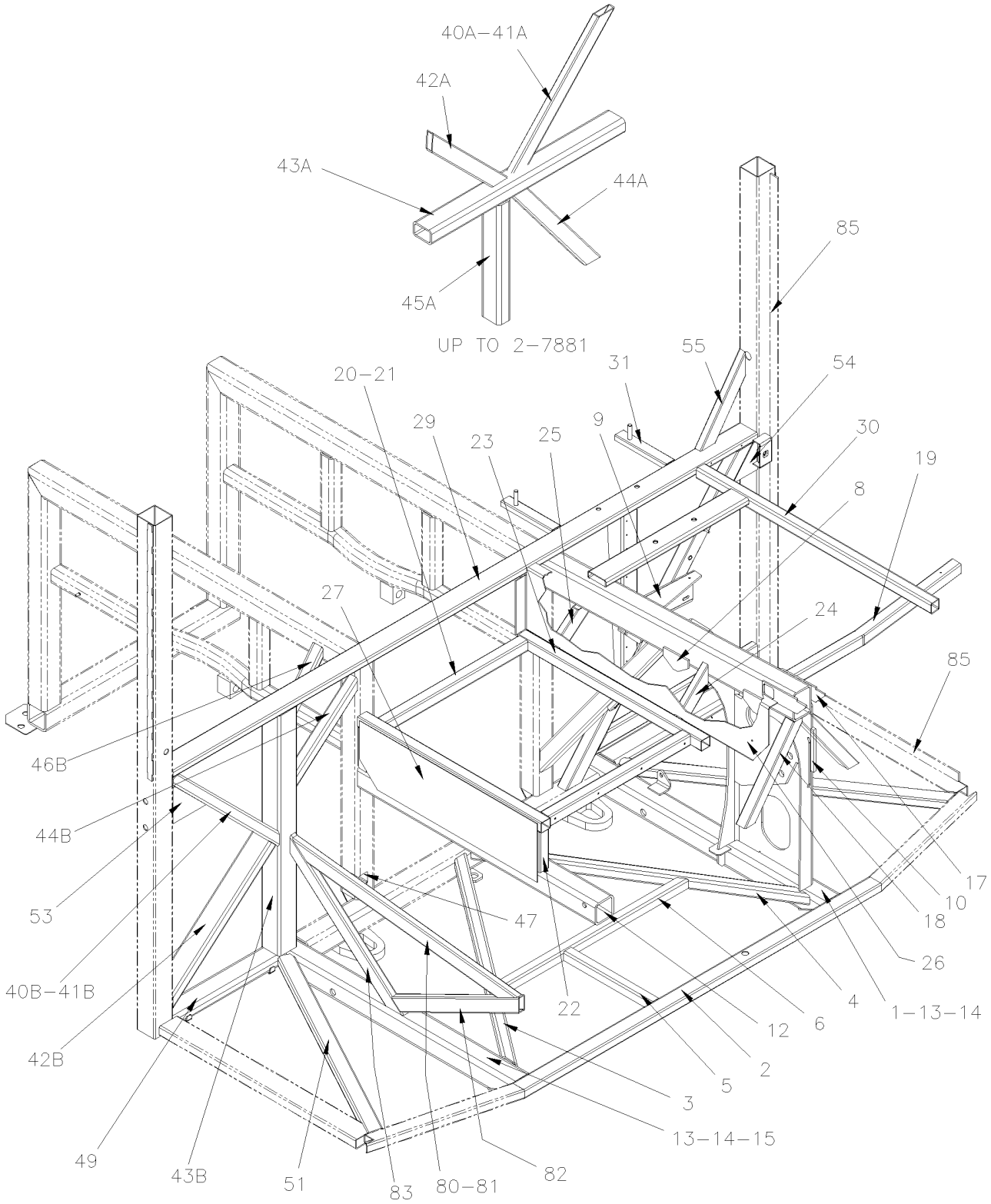

From Y-7046 Up to 6-8906	DATE: 01/2014	PAGE: Y2-1895-50

FRONT LOWER FLOOR STRUCTURE - MTH

ITEM	PART	DESCRIPTION	XL45	MTH40	MTH45	MTH45S	NOTE
1	172824	BRACE, GEAR BOX SUPPORT Up to 4-8193		1	1	1	
1	172862	BRACE, GEAR BOX SUPPORT From 4-8194 Up to 6-8832					
1	173140	BRACE, GEAR BOX SUPPORT From 6-8833		1	1	1	
2	286095	TUBE / HINGE ASSY Up to 1-7378		1	1	1	
2	287937	TUBE / HINGE ASSY From 1-7379 Up to 2-7764		1	1	1	
2	287317	TUBE / HINGE ASSY From 2-7765		1	1	1	
3	172255	TUBE		1	1	1	
4	172258	TUBE		1	1	1	
5	172227	ANGLE		1	1	1	
6	172257	TUBE		1	1	1	
7	172273	TUBE 1022MM		1	1	1	
8	172796	REINFORCMENT "TRIANGULAR SHAPE 100MM x60MM From 4-8165		2	2	2	
9	172281	SUPPORT BRAKE VALVE		1	1	1	
10	172312	SUPPORT GEAR BOX STEERING / W/ "ZF" Up to 4-8193 / REPLACED BY: K172312		1	1	1	
10	172799	SUPPORT GEAR BOX STEERING / W/ "ZF" From 4-8194 Up to 4-8237		1	1	1	
10	172858	SUPPORT GEAR BOX STEERING / W/ "ZF" From 4-8238 Up to 6-8832		1	1	1	
10	173092	SUPPORT GEAR BOX STEERING / W/ "ZF" From 6-8833		1	1	1	
11	213856	TUBE 837MM		1	1	1	
12	213855	TUBE 981MM Up to 2-7764 / REPLACED BY: 214598		1	1	1	
12	214598	TUBE 981MM From 2-7765		1	1	1	
13	220944	CLOSING PLATE 67MM X 67MM		2	2	2	
14	172204	CLOSING PLATE 115MM X 68MM		2	2	2	
15	172203	TUBE		1	1	1	
17	251048	REINFORCEMENT		2	2	2	
18	213847	TUBE		2	2	2	
19	373567	SUPPORT / WATER PUMP Up to 4-8298		1	1	1	
19	172870	SUPPORT / WATER PUMP From 4-8299		1	1	1	
20	172304P	FLOOR ASSY		1	1	1	
21	172285	. TUBE 584MM		2	2	2	
22	172288	. TUBE 144MM		2	2	2	
23	172289	. TUBE / CURBSIDE 758MM		2	2	2	
24	172299	TUBE / FORWARD / BETWEN FLOOR & TUBE #8		1	1	1	
25	172300	TUBE / BACWARD / BETWEN FLOOR & TUBE #8		1	1	1	
26	213934	SUPPORT FLOOR		1	1	1	
27	172351	PANEL		1	1	1	
28	213962	TUBE FRONT DRIVER`S FLOOR SUPPORT		1	1	1	
29	213929	TUBE ASSY		1	1	1	
30	218169	DRIVER'S FLOOR ASSY		1	1	1	
31	214284	ATTACHMENT SAFETY BELT		2	2	2	
32	214301	"Z" FRAME ASSY		1	1	1	
33	213964	. TUBE TRANSVERSALE 1154MM / STREET SIDE		1	1	1	
34	213965	. TUBE		1	1	1	

From Y-7046 Up to 6-8906	DATE: 01/2014	PAGE: Y2-1895-50

FRONT LOWER FLOOR STRUCTURE - MTH

ITEM	PART	DESCRIPTION	XL45	MTH40	MTH45	MTH45S	NOTE
35	5001354	. STUD WD WOC M6-1.0X20 SS		4	4	4	
36	214383	REINFORCEMENT / DRIVER'S SEAT		1	1	1	
40	Call Order Desk	"X" FRAME ASSY		1	1	1	P
40A	Call Order Desk	"X" FRAME ASSY Up to 2-7881		1	1	1	P
40B	Call Order Desk	"X" FRAME ASSY From 2-7882		1	1	1	P
41A	213849	. TUBE 567MM Up to 2-7881		1	1	1	
41B	214709	. TUBE 633MM From 2-7882		1	1	1	
42A	213850	. TUBE 502MM Up to 2-7881		1	1	1	
42B	214710	. TUBE 567MM From 2-7882		1	1	1	
43A	213851	. TUBE 799MM Up to 2-7881		1	1	1	
43B	214711	. TUBE 857MM From 2-7882		1	1	1	
44A	213852	. TUBE 575MM Up to 2-7881		1	1	1	
44B	214713	. TUBE 410MM From 2-7882		1	1	1	
45A	213925	. TUBE 426MM Up to 2-7881		1	1	1	
45B	214714	. TUBE 440MM From 2-7882		1	1	1	
46B	214716	. TUBE 350MM From 2-7882		1	1	1	
47	214717	SUPPORT From 2-7882		1	1	1	
48	172267	TUBE 584MM		1	1	1	
49	172214	TUBE 569MM		1	1	1	
50	172268	TUBE 964MM/ STREETSIDE		1	1	1	
51	172213	TUBE 931MM / CURBSIDE		1	1	1	
53	214456	REINFORCEMENT Up to 2-7881		1	1	1	
53	214712	REINFORCEMENT From 2-7882		1	1	1	
54	214113	REINFORCEMENT / TRIANGULAR SHAPE		1	1	1	
55	251080	TUBE		1	1	1	
80	Call Order Desk	REINFORCEMENT ASSY / TRIANGULAR SHAPE		1	1	1	P
80	Call Order Desk	REINFORCEMENT ASSY / TRIANGULAR SHAPE		1	1	1	P
81	214056	. TUBE / UPPER		1	1	1	
82	214057	. TUBE / BACKWARD		1	1	1	
83	213854	. TUBE / FORWARD		1	1	1	
84	285155	ANGLE SUPPORT BUMPER SPRING		1	1	1	
85	Y2-1895-00	**FRONT STRUCTURE**					
		P) CALL ORDER DESK FOR SPECIFIC APPLICATION					
		(V.I.N.)					

From Y-7046 Up to 6-8906	DATE: 01/2014	PAGE: Y2-1896-00
FRONT SHEATING - BUS		

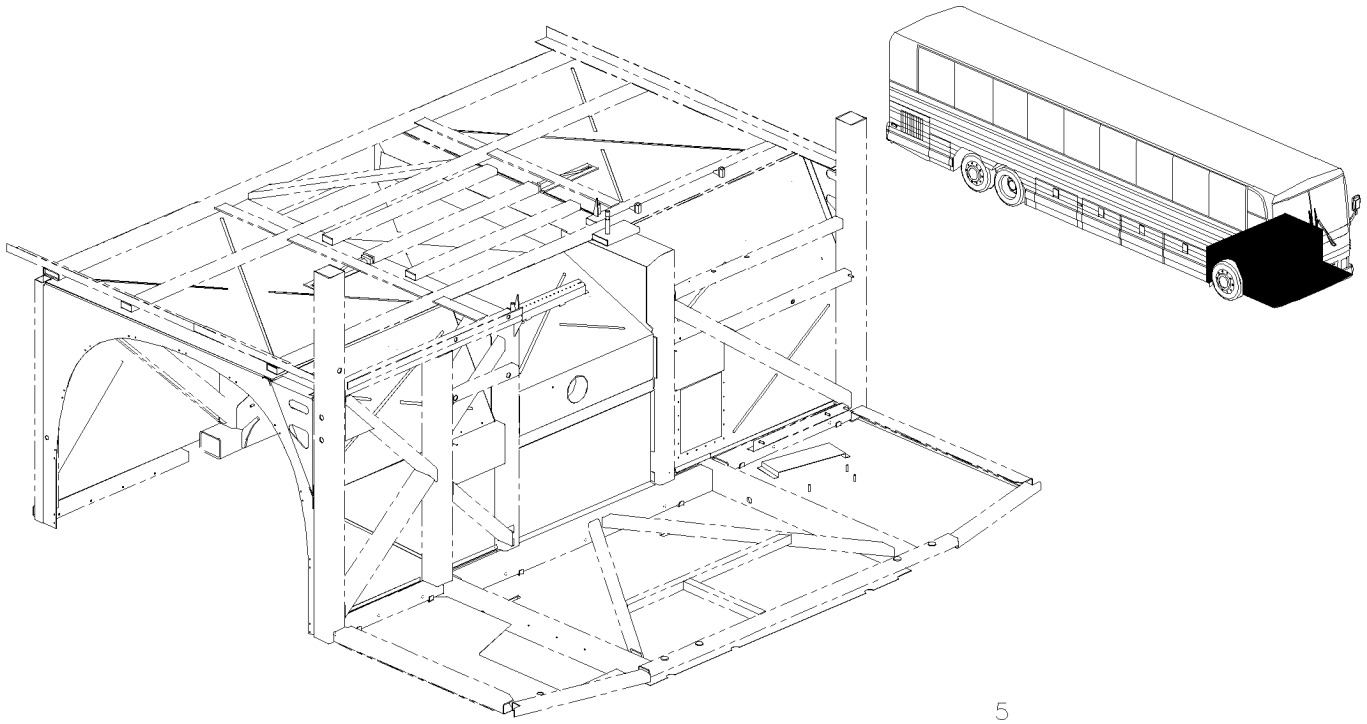

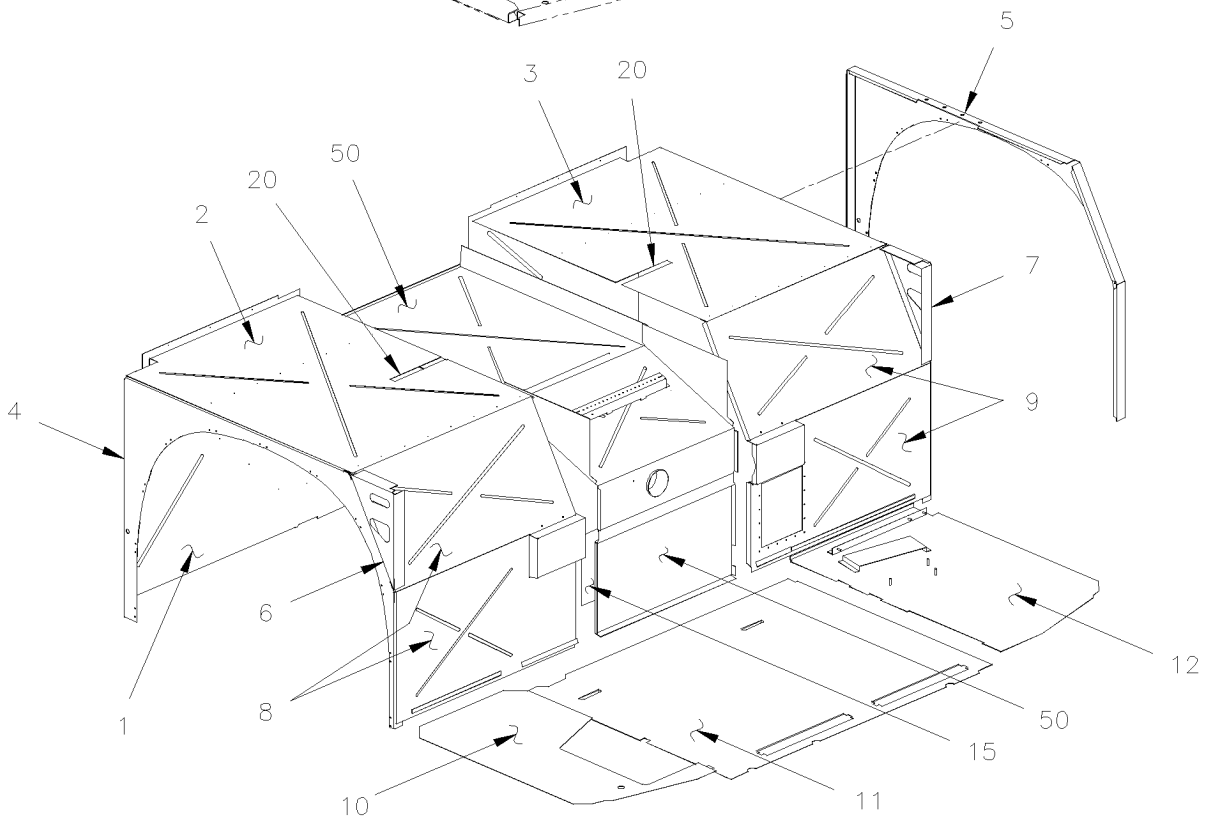

From Y-7046 Up to 6-8906	DATE: 01/2014	PAGE: Y2-1896-00

FRONT SHEATING - BUS

ITEM	PART	DESCRIPTION	XL45	MTH40	MTH45	MTH45S	NOTE
1	214271	PANEL BACKWARD W/TOP FRONT FENDER / CURBSIDE Up to 2-7805	1				R
1	214289	PANEL BACKWARD W/TOP FRONT FENDER / STREETSIDE Up to 2-7805	1				R
NS	214224	PANEL BACKWARD CENTER Up to 2-7805	1				R
1	214324	PANEL BACKWARD W/TOP FRONT FENDER / CURBSIDE Up to 2-7805	1				I
1	214323	PANEL BACKWARD W/TOP FRONT FENDER / STREETSIDE Up to 2-7805	1				I
1	212775	PANEL BACKWARD CENTER Up to 2-7805	1				I
1	214670	PANEL BACKWARD FRONT FENDER / ONE PIECE From 2-7806	1				I,R
2	214676	PANEL FENDER TOP / CURBSIDE Up to 2-7805	1				R
2	214702	PANEL FENDER TOP / CURBSIDE From 2-7806 Up to 4-8244	1				I
2	215335	PANEL FENDER TOP / CURBSIDE From 2-8245	1				I
3	214675	PANEL FENDER TOP / STREETSIDE From 2-7806	1				R
3	214701	PANEL FENDER TOP / STREETSIDE From 2-7806 Up to 4-8244	1				I
3	215334	PANEL FENDER TOP / STREETSIDE From 4-8245	1				I
4	214328	PANEL SIDE FENDER / CURBSIDE Up to 4-8193	1				
4	213700	PANEL SIDE FENDER / CURBSIDE From 4-8194	1				
5	214327	PANEL SIDE FENDER / STREETSIDE Up to 1-7507 / REPLACED BY: 214211	1				
5	214211	PANEL SIDE FENDER / STREETSIDE From 1-7508 Up to 4-8193	1				
5	213698	PANEL SIDE FENDER / STREETSIDE From 4-8194	1				
6	214393	CLOSING PLATE TRIANGULAR SHAPE / CURBSIDE Up to Y-7102	1				
6	214410	CLOSING PLATE TRIANGULAR SHAPE / CURBSIDE From Y-7103	1				
7	214392	CLOSING PLATE TRIANGULAR SHAPE / STREETSIDE Up to Y-7102	1				
7	214409	CLOSING PLATE TRIANGULAR SHAPE / STREETSIDE From Y-7103	1				
8	214303	PANEL FORWARD FRONT FENDER / CURBSIDE	1				R
8	214326	PANEL FORWARD FRONT FENDER / CURBSIDE Up to 2-7768 / REPLACED BY: 213651	1				I
8	213651	PANEL FORWARD FRONT FENDER / CURBSIDE From 2-7769	1				I
9	214302	PANEL FORWARD FRONT FENDER / STREETSIDE	1				R
9	214325	PANEL FORWARD FRONT FENDER / STREETSIDE Up to 2-7768 / REPLACED BY: 213631	1				I
9	213631	PANEL FORWARD FRONT FENDER / STREETSIDE From 2-7769 Up to 4-8193	1				I
9	213944	PANEL FORWARD FRONT FENDER / STREETSIDE From 4-8194	1				I
10	214244	FLOOR PANEL UNDER STEPWELL / CURBSIDE Up to 2-7881 / REPLACED BY: 214730	1				
10	214730	FLOOR PANEL UNDER STEPWELL / CURBSIDE From 2-7882	1				
11	172496	FLOOR PANEL CENTER PART W/SPARE TIRE Up to 2-7763	1				
11	172653	FLOOR PANEL CENTER PART W/SPARE TIRE From 2-7764 Up to 2-7881 / REPLACED BY: 173099	1				
11	172683	FLOOR PANEL CENTER PART W/SPARE TIRE From 2-7882 Up to 6-8832 / REPLACED BY: 173099	1				
11	173099	FLOOR PANEL CENTER PART W/SPARE TIRE From 6-8833	1				
12	172324	FLOOR PANEL STEERING COMPARTMENT / STREETSIDE Up to 2-7881 / REPLACED BY: 214729	1				
12	214729	FLOOR PANEL STEERING COMPARTMENT / STREETSIDE From 2-7882 Up to 3-8108	1				
12	215090	FLOOR PANEL STEERING COMPARTMENT / STREETSIDE From 3-8109	1				
20	214511	CLOSING PLATE "U" FORM / 270MM Up to 4-8244	2				I
20	215333	CLOSING PLATE "U" FORM / 154MM From 4-8245	2				I
50	Y2-1897-00	**FRONT SUB-FRAME / W/I BEAM RIGID SUSPENSION**					
50	Y2-1897-50	**FRONT SUB-FRAME / W/INDEPENDENT SUSPENSION - 16500 LBS**					
		I) WITH INDEPENDANT SUSPENSION					
		R) WITH I BEAM RIGID SUSPENSION					

From Y-7046 Up to 6-8906	DATE: 01/2014	PAGE: Y2-1896-00

FRONT SHEATING - BUS

ITEM	PART	DESCRIPTION	XL45	MTH40	MTH45	MTH45S	NOTE
50	Y2-1897-51	**FRONT SUB-FRAME / W/INDEPENDENT SUSPENSION - 18000 LBS**					

From Y-7046 Up to 6-8906	DATE: 01/2014	PAGE: Y2-1896-00

FRONT SHEATING - BUS

ITEM	PART	DESCRIPTION	XL45	MTH40	MTH45	MTH45S	NOTE

From Y-7046 Up to 8-9339	DATE: 01/2014	PAGE: Y2-1896-50
FRONT SHEATING - MTH		

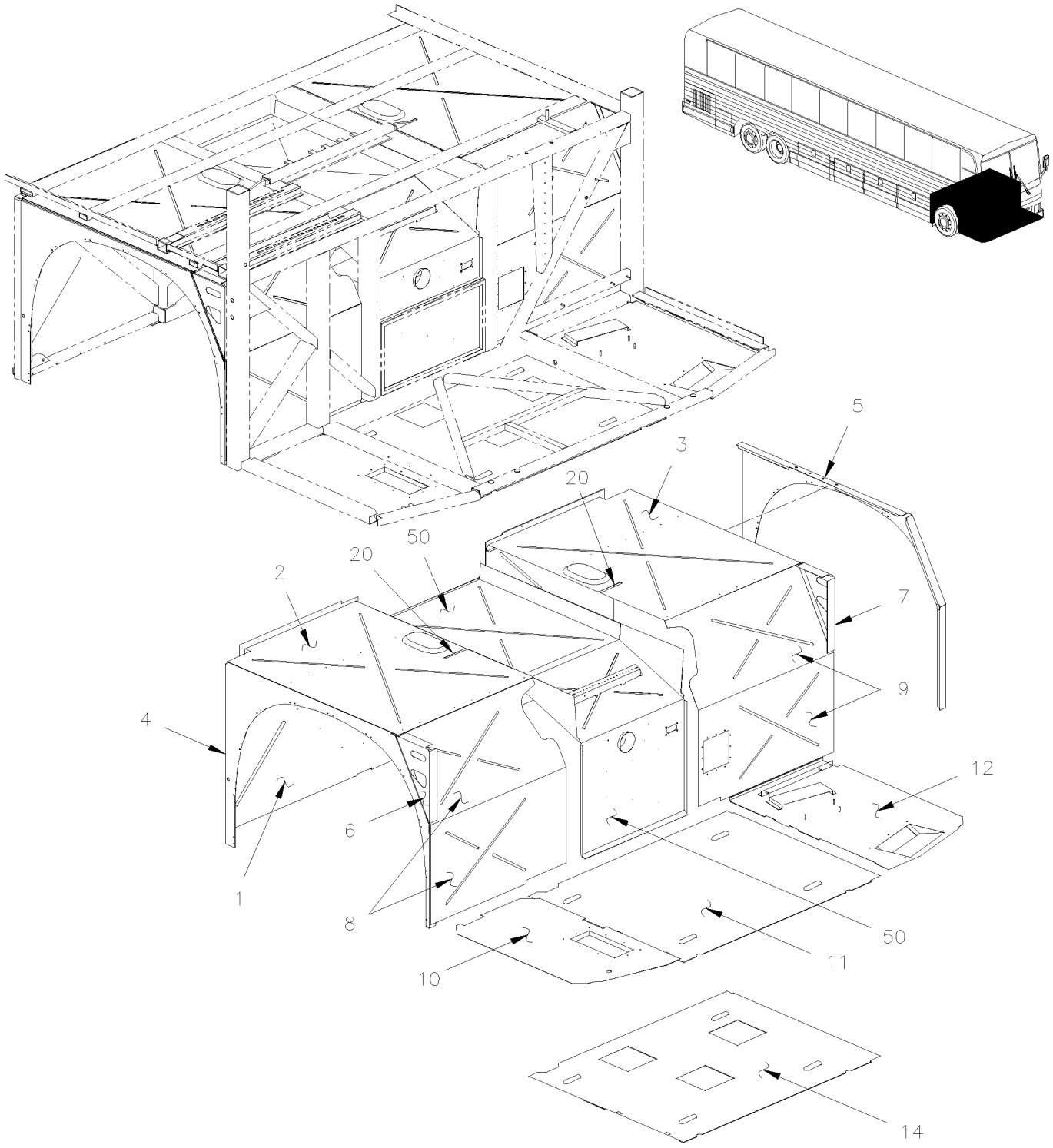

From Y-7046 Up to 8-9339	DATE: 01/2014	PAGE: Y2-1896-50

FRONT SHEATING - MTH

ITEM	PART	DESCRIPTION	XL45	MTH40	MTH45	MTH45S	NOTE
1	214324	PANEL BACKWARD W/TOP FRONT FENDER / CURBSIDE Up to 2-7805		1	1	1	
1	214323	PANEL BACKWARD W/TOP FRONT FENDER / STREETSIDE Up to 2-7805		1	1	1	
NS	212775	PANEL BACKWARD CENTER Up to 2-7805	1				
1	214670	PANEL BACKWARD FRONT FENDER / ONE PIECE From 2-7806	1				
2	214702	PANEL FENDER TOP / CURBSIDE From 2-7806 Up to 4-8244		1	1	1	
2	215335	PANEL FENDER TOP / CURBSIDE From 4-8245 Up to 7-8949		1	1	1	
2	216010	PANEL FENDER TOP / CURBSIDE From 7-8950		1	1	1	
3	214701	PANEL FENDER TOP / STREETSIDE From 2-7806 Up to 4-8244		1	1	1	
3	215334	PANEL FENDER TOP / STREETSIDE From 4-8245 Up to 7-8949		1	1	1	
3	216006	PANEL FENDER TOP / STREETSIDE From 7-8950		1	1	1	
3	214210	PANEL FENDER STOP / STREETSIDE / W/SLIDE-OUT From 1-7508 Up to 2-7805			1		S
3	214667	PANEL FENDER STOP / STREETSIDE / W/SLIDE-OUT From 2-7806 Up to 4-8244			1		S
3	215336	PANEL FENDER STOP / STREETSIDE / W/SLIDE-OUT From 4-8245			1		S
4	214328	PANEL SIDE FENDER / CURBSIDE Up to 2-7805		1	1	1	
4	213700	PANEL SIDE FENDER / CURBSIDE From 2-7806		1	1	1	
5	214327	PANEL SIDE FENDER / STREETSIDE Up to 1-7507 / REPLACED BY: 214211		1	1	1	
5	214211	PANEL SIDE FENDER / STREETSIDE From 1-7508 Up to 4-8193		1	1	1	
5	213698	PANEL SIDE FENDER / STREETSIDE From 4-8194		1	1	1	
5	214666	PANEL SIDE FENDER / STREETSIDE Up to 2-7805			1		S
5	213699	PANEL SIDE FENDER / STREETSIDE From 2-7806			1		
6	214393	CLOSING PLATE TRIANGULAR SHAPE / CURBSIDE Up to Y-7102		1	1	1	
6	214410	CLOSING PLATE TRIANGULAR SHAPE / CURBSIDE From Y-7103		1	1	1	
7	214392	CLOSING PLATE TRIANGULAR SHAPE / STREETSIDE Up to Y-7102		1	1	1	
7	214409	CLOSING PLATE TRIANGULAR SHAPE / STREETSIDE From Y-7103		1	1	1	
8	214326	PANEL FORWARD FRONT FENDER / CURBSIDE Up to 2-7768 / REPLACED BY: 213651		1	1	1	
8	213651	PANEL FORWARD FRONT FENDER / CURBSIDE From 2-7769 Up to 7-8949		1	1	1	
8	216008	PANEL FORWARD FRONT FENDER / CURBSIDE From 7-8950		1	1	1	
9	214325	PANEL FORWARD FRONT FENDER / STREETSIDE Up to 2-7768 / REPLACED BY: 213631		1	1	1	
9	213631	PANEL FORWARD FRONT FENDER / STREETSIDE From 2-7769 Up to 4-8193		1	1	1	
9	213944	PANEL FORWARD FRONT FENDER / STREETSIDE From 4-8194 Up to 7-8949		1	1	1	
9	216007	PANEL FORWARD FRONT FENDER / STREETSIDE From 7-8950		1	1	1	
10	172228	FLOOR PANEL UNDER STEPWELL / CURBSIDE Up to 2-7881 / REPLACED BY: 214731		1	1	1	
10	214731	FLOOR PANEL UNDER STEPWELL / CURBSIDE From 2-7882		1	1	1	
11	172222	FLOOR PANEL CENTER PART STD W/MTH Up to 2-7763		1	1	1	
11	172634	FLOOR PANEL CENTER PART STD W/MTH From 2-7764 Up to 2-7881		1	1	1	
11	172684	FLOOR PANEL CENTER PART STD W/MTH From 2-7882 Up to 4-8193		1	1	1	
11	172826	FLOOR PANEL CENTER PART STD W/MTH From 4-8194 Up to 6-8832		1	1	1	
11	173098	FLOOR PANEL CENTER PART STD W/MTH W/O SPARE TIRE From 6-8833		1	1	1	
11	173011	FLOOR PANEL CENTER PART WITHOUT HOLE From 4-8194		1	1	1	O
12	172324	FLOOR PANEL STEERING COMPARTMENT / STREETSIDE / REPLACED BY: 214729		1	1	1	
12	219915	FLOOR PANEL STEERING COMPARTMENT / STREETSIDE		1	1	1	
		O) WITHOUT PERFORATION					
		S) WITH "SLIDEOUT"					

From Y-7046 Up to 8-9339	DATE: 01/2014	PAGE: Y2-1896-50

FRONT SHEATING - MTH

ITEM	PART	DESCRIPTION	XL45	MTH40	MTH45	MTH45S	NOTE
14	214089	FLOOR PANEL CENTER PART "OPTION MARATHON" Up to 2-7763		1	1	1	M
14	214672	FLOOR PANEL CENTER PART "OPTION MARATHON" From 2-7764 Up to 2-7881		1	1	1	M
14	172685	FLOOR PANEL CENTER PART "OPTION MARATHON" From 2-7882 Up to 3-8164		1	1	1	M
14	172825	FLOOR PANEL CENTER PART "OPTION MARATHON" From 4-8165 Up to 6-8832		1	1	1	M
14	173100	FLOOR PANEL CENTER PART "OPTION MARATHON" From 6-8833		1	1	1	M
20	214511	CLOSING PLATE "U" FORM / 270MM Up to 4-8244		2	2	2	
20	215333	CLOSING PLATE "U" FORM / 154MM From 4-8245		2	2	2	
50	Y2-1897-50	**FRONT SUB-FRAME / W/INDEPENDENT SUSPENSION - 16500 LBS**					
50	Y2-1897-51	**FRONT SUB-FRAME / W/INDEPENDENT SUSPENSION - 18000 LBS**					
		M) WITH "MARATHON" CONVERTER'S					

From Y-7046 Up to 8-9339	DATE: 01/2014	PAGE: Y2-1896-50

FRONT SHEATING - MTH

ITEM	PART	DESCRIPTION	XL45	MTH40	MTH45	MTH45S	NOTE

From Y-7046 Up to 6-8906	DATE: 01/2014	PAGE: Y2-1897-00

FRONT SUB-FRAME / W/I BEAM RIGID SUSPENSION

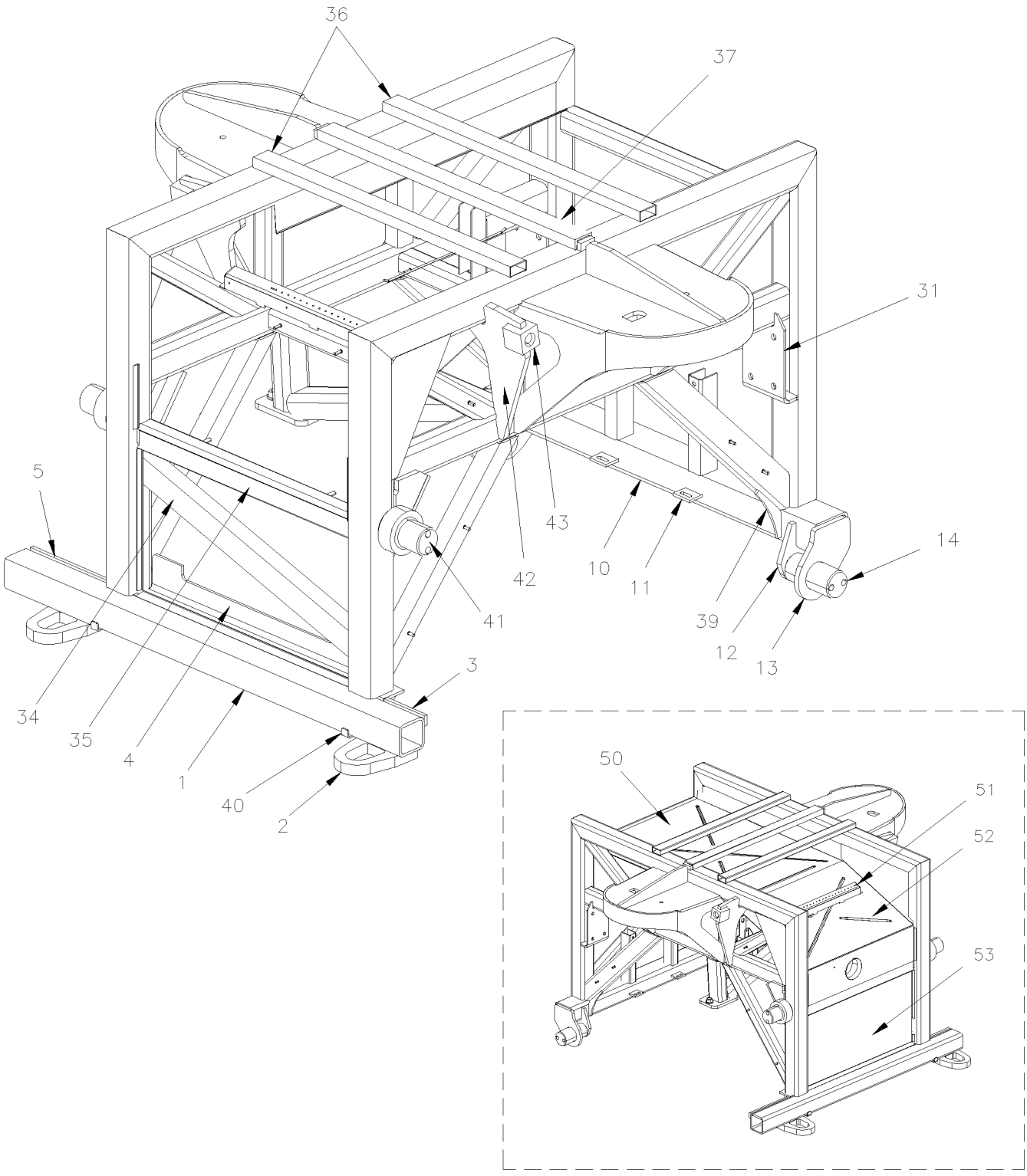

From Y-7046 Up to 6-8906	DATE: 01/2014	PAGE: Y2-1897-00
FRONT SUB-FRAME / W/I BEAM RIGID SUSPENSION		

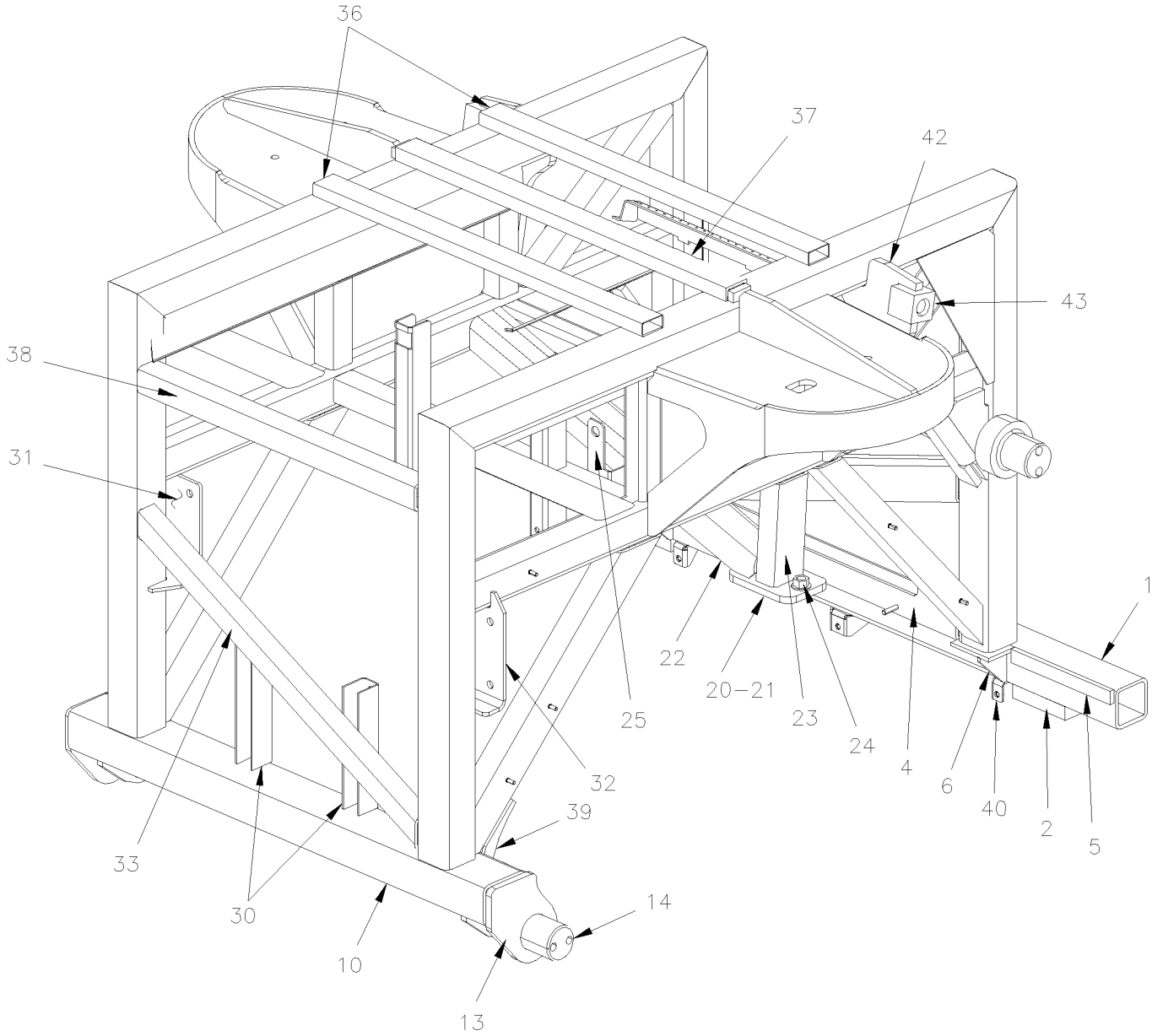

From Y-7046 Up to 6-8906	DATE: 01/2014	PAGE: Y2-1897-00

FRONT SUB-FRAME / W/I BEAM RIGID SUSPENSION

ITEM	PART	DESCRIPTION	XL45	MTH40	MTH45	MTH45S	NOTE
	172400P	FRONT SUBFRAME ASSY	1				
1	172467	FRONT LOWER TUBE ASSY	1				
1	172265	. TUBE 1206MM	1				
2	171991	. ATTACHMENT / TOWING	2				
3	172469	. SPACER 152MM	1				
4	172454	. ANGLE	1				
5	172468	. SPACER 50MM	1				
6	171709	. REINFORCEMENT	2				
10	172159	REAR LOWER TUBE ASSY	1				
11	141649	. ATTACHMENT / (WELDED TO FRAME)	2				
12	172528	. REINFORCEMENT	2				
13	172434	. REINFORCEMENT	2				
14	171049	. PIN ATTACHMENT / SUSPENSION ROD Up to 1-7594	2				
14	131695	. PIN RADIUS ROD (WELDED TO STRUCTURE) From 1-7597	1				
20	172416	. ATTACHMENT PANHARD / FRONT	1				
21	172417	. PLATE	1				
NS	502164	. PIN DOWEL M16 X 40MM	1				
22	172391	. TUBE	1				
23	172390	. TUBE	1				
24	5001474	. NUT HEXF M16-2.0 DP	2				
25	172493	. SUPPORT HEIGHT CONTROL VALVE (WELDED)	1				
30	172489	SUPPORT AIR TANK / WELDED TO STRUCTURE	2				
31	172398	ATTACHMENT SWAY BAR STREETSIDE	1				
32	172399	ATTACHMENT SWAY BAR CURBSIDE	1				
33	171713	TUBE 779MM	1				
34	172432	TUBE 721MM	1				
35	172395	TUBE 661MM	1				
36	171886	TUBE 785MM	2				
37	172410	U-BEAM 1" X 2" X 788MM	1				
38	171712	TUBE 661MM	2				
39	172474	REINFORCEMENT	2				
40	460441	SUPPORT / AIR SHIELD / CENTER	1				
41	172436	PIN RADIUS ROD (WELDED TO STRUCTURE)	2				
42	172397	ATTACHMENT SHOCK ABSORBER	2				
43	171032	ATTACHMENT PIN 1"-14 / SHOCK ABSORBER / 55MM	2				
50	212774	PANEL CENTRAL BACKWARD	1				
51	172235	SUPPORT PIPE & HARNESS	1				
52	172305	PANEL CENTRAL FORWARD	1				
53	214225	PANEL CENTRAL FRONT LOWER	1				
53	214771	PANEL CENTRAL FRONT LOWER / W/SPARE TIRE	1				

From Y-7046 Up to 6-8906	DATE: 01/2014	PAGE: Y2-1897-00

FRONT SUB-FRAME / W/I BEAM RIGID SUSPENSION

ITEM	PART	DESCRIPTION	XL45	MTH400	MTH445	MTH455S	NOTE

From Y-7046 Up to 8-9339	DATE: 01/2014	PAGE: Y2-1897-10
REAR SUB-FRAME BUS & MTH-45'		

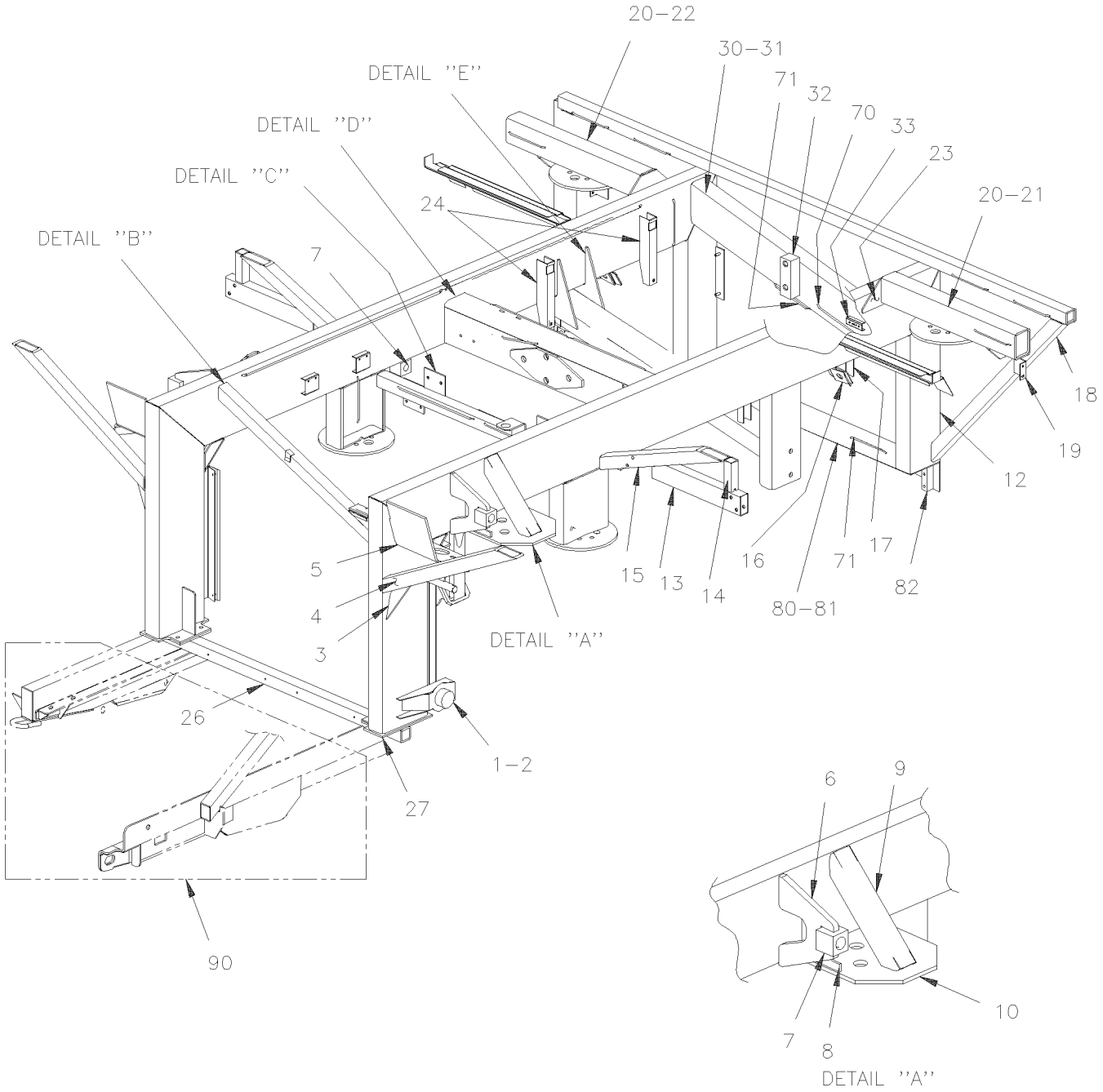

From Y-7046 Up to 8-9339	DATE: 01/2014	PAGE: Y2-1897-10

REAR SUB-FRAME BUS & MTH-45'

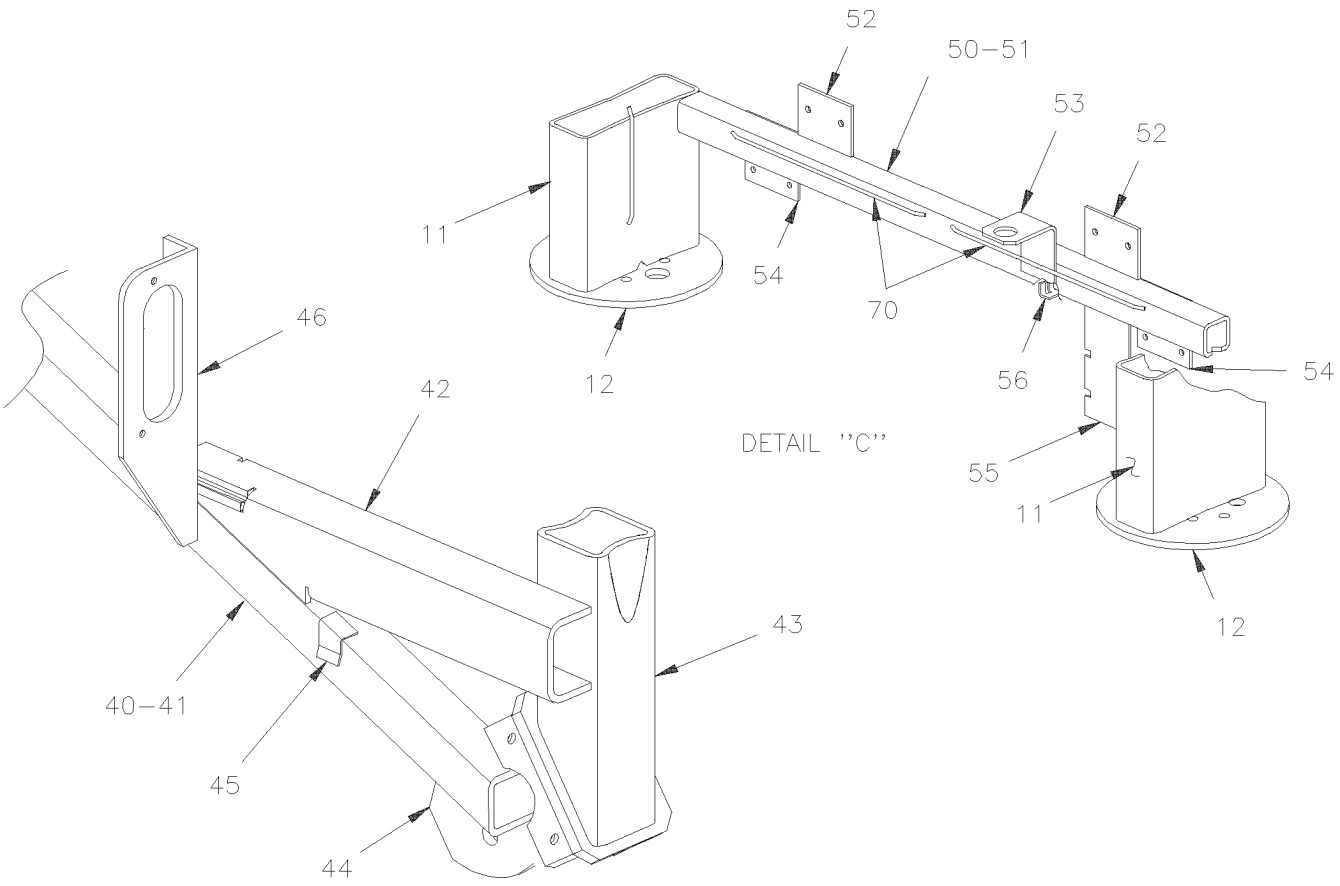

DETAIL ''B''

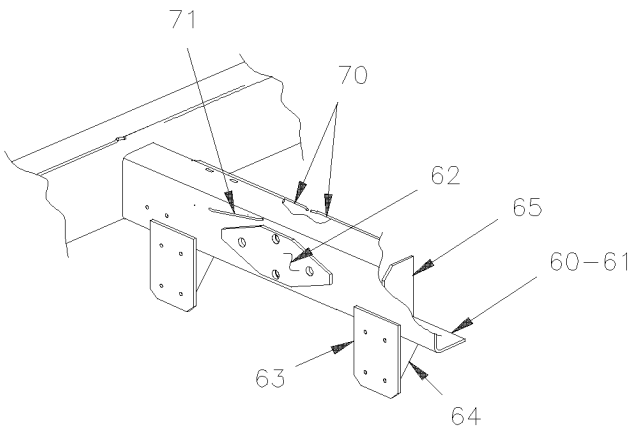

DETAIL ''D''

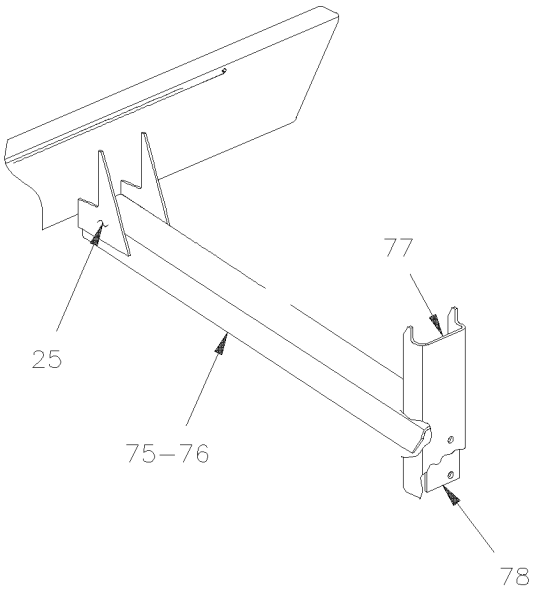

DETAIL ''E''

From Y-7046 Up to 8-9339	DATE: 01/2014	PAGE: Y2-1897-10

REAR SUB-FRAME BUS & MTH-45'

ITEM	PART	DESCRIPTION	XL45	MTH40	MTH45	MTH45S	NOTE
		"WARNING" - "WARNING" -"WARNING" - "WARNING"					
		FOR MTH-45 ENT FROM 7-9096				1	
		SEE NEXT PAGE Y2-1897-11				1	
1	171451	PIN ATTACHMENT / SUSPENSION ROD	2		2		
1	171049	PIN ATTACHMENT / SUSPENSION ROD Up to 7-9095		2		2	
2	171452	PLATE REINFORCEMENT L.H.	1		1		
2	171454	PLATE REINFORCEMENT R.H.	1		1		
2	171574	PLATE REINFORCEMENT Up to 7-9095		2		2	
2	171051	PLATE REINFORCEMENT Up to 7-9095		1		1	
3	170448	GUSSET, FLOOR TUBE REINFORCEMENT	2				
4	170261	TUBE 738MM	2				
5	172277P	BRACKET / R.H.	1				
5	172278P	BRACKET / L.H.	1				
6	Call Order Desk	SUPPORT SHOCK ASSY Up to 3-7987	2				P
6	Call Order Desk	SUPPORT SHOCK ASSY From 3-7988 Up to 4-8215	2				P
6	Call Order Desk	SUPPORT SHOCK ASSY From 4-8216	2				P
7	171032	. ATTACHMENT PIN 1"-14 / SHOCK ABSORBER / 55MM	1				
8	171392	REINFORCEMENT	4				
9	171389	REINFORCEMENT "U" 329MM Up to 2-7855	2				
9	172702	REINFORCEMENT "U" 313MM From 2-7856	2				
10	171390	SUPPORT	2				
11	131572	SUPPORT	1				
12	131356	BELLOW PLATE	2				
13	212606	TUBE 430MM	2		2		
13	212581	TUBE 675MM Up to 7-9095		2		2	
14	212605	TUBE 111MM	2		2		
14	212580	TUBE 162MM Up to 7-9095		2		2	
15	171505	TUBE 635MM	2		2		
16	214381	SUPPORT PROTECTOR BELLOW / REPLACED BY: 215239	1				
16	215239	SUPPORT PROTECTOR BELLOW / STREETSIDE	1				
16	215240	SUPPORT PROTECTOR BELLOW / CURBSIDE	1				
17	172147	SUPPORT "U" 263MM / AIR TANK	2				
18	170262	TUBE 986MM	2				
19	172428	SUPPORT VALVE HEIGHT CONTROL	2				
20	171398	TUBE	2				
21	121568	SUPPORT SHOCK ASSY CURB SIDE	1				
. NS	171032	. ATTACHMENT PIN 1"-14 / SHOCK ABSORBER / 55MM LONG	1				
22	121564	SUPPORT SHOCK ASSY STREET SIDE	1				
		P) CALL ORDER DESK FOR SPECIFIC APPLICATION					
		(V.I.N.)					

From Y-7046 Up to 8-9339	DATE: 01/2014	PAGE: Y2-1897-10

REAR SUB-FRAME BUS & MTH-45'

ITEM	PART	DESCRIPTION	XL45	MTH40	MTH45	MTH45S	NOTE
23	170254	ATTACHMENT PLATE	2				
24	171600	SUPPORT "U" 250MM / AIR TANK	2				
25	171501	REINFORCEMENT	2				
26	171605	BAR, TRANSMISSION PROTECTOR	1				
27	172482	ATTACHMENT PLATE	1				
30	Call Order Desk	BEAM, RADIUS ROD SUPPORT	1				P
31	130799	. TUBE 42 7/16"	1				
32	214126	. ANCHOR BLOCK / REPLACED BY: 215824	1				
33	121507	. SUPPORT "U" SHAPE 70MM	1				
40	Call Order Desk	ATTACHMENT LATERAL ROD ASSY Up to 5-8369	1				P
40	Call Order Desk	ATTACHMENT LATERAL ROD ASSY From 5-8370	1				P
41	171775	. TUBE 1122MM	1				
42	171774	. TUBE 453MM Up to 5-8369	1				
42	172973	. TUBE 454MM From 5-8370	1				
43	171773	. TUBE 265MM	1				
44	131297	. SUPPORT ASSY / (WELDED) Up to 1-7475	1				
44	131691	. SUPPORT ASSY / (WELDED) From 1-7476 Up to 6-8844 / REPLACED BY: 131785	1				
44	131785	. SUPPORT ASSY / (WELDED) From 6-8845	1				
45	071081	. SUPPORT	2				
46	142187	. SUPPORT PING TANK	1				
47	172972	. TUBE 111MM	1				
50	Call Order Desk	TUBE ASSY W/VALVE SUPPORT Up to 6-8906	1				P R
50	Call Order Desk	TUBE ASSY W/VALVE SUPPORT	1				P I
51	171373	. TUBE 1014MM	1				
52	171397	. SUPPORT VALVE	2				
53	171993	. SUPPORT VALVE INVERSION	2				I
54	171312	. SUPPORT, BULKHEAD ASSY / W/O ABS OPTION	1				
55	171973	. SUPPORT AIR TANK	2				
56	172991	. ATTACHMENT	2				
60	172987P	CHANNEL W/REINFORCEMENT / 1015MM WIDE / TRIPODE REAR AXLE Up to 6-8906	1				R
60	Call Order Desk	CHANNEL W/REINFORCEMENT / 1015MM WIDE / TRIPODE REAR AXLE		1	1	1	P I
61	172986	. REINFORCEMENT "C" 1015MM	1				
62	172307	. REINFORCEMENT PLATE (LOZANGE FORM)	1				
63	171978	. SUPPORT		2	2	2	
64	171976	. REINFORCEMENT		2	2	2	
65	171536	. REINFORCEMENT		2	2	2	
70	212655	ATTACHMENT ROD / 373MM x 11MM DEEP / WELDED (TO FIX ANYTHING)	AR				
71	214025	ATTACHMENT ROD / 177MM x 11MM DEEP / WELDED (TO FIX ANYTHING)	AR				
75	172425	ATTACHMENT LATERAL ROD ASSY Up to Y-7079 / REPLACED BY: 172509	1				
		P) CALL ORDER DESK FOR SPECIFIC APPLICATION					
		(V.I.N.)					
		I) WITH INDEPENDANT SUSPENSION					
		R) WITH I BEAM RIGID SUSPENSION					

From Y-7046 Up to 8-9339	DATE: 01/2014	PAGE: Y2-1897-10

REAR SUB-FRAME BUS & MTH-45'

ITEM	PART	DESCRIPTION	XL45	MTH40	MTH45	MTH45S	NOTE
75	172509	ATTACHMENT LATERAL ROD ASSY From Y-7080 Up to 1-7149	1				
75	Call Order Desk	ATTACHMENT LATERAL ROD ASSY From 1-7150	1				P
76	172426	. CHANNEL "C" 1115MM	1				
77	172427	. CHANNEL "C" 422MM Up to Y-7079	1				
77	172507	. CHANNEL "J" 422MM From Y-7080 Up to 1-7149	1				
77	172516	. CHANNEL "J" 422MM From 1-7650	1				
78	172226	. REINFORCEMENT SUPPORT	1				
80	Call Order Desk	REAR RADIUS ROD ATTACHMENT ANGLE ASSY Up to 3-8164	1				P
80	Call Order Desk	REAR RADIUS ROD ATTACHMENT ANGLE ASSY From 4-8165	1				P
80	Call Order Desk	REAR RADIUS ROD ATTACHMENT ANGLE ASSY			1		P S
81	214131	. ANGLE	1				
81	214577	. ANGLE	1				
81	172992	. ANGLE From 6-8906			1		S
82	214388	. ANCHOR BLOCK	1				
90	Y2-1894-05	**REAR LH - STRUCTURE**					
90	Y2-1894-06	**REAR LH - STRUCTURE**					
90	Y2-1894-10	**REAR RH - STRUCTURE**					
		P) CALL ORDER DESK FOR SPECIFIC APPLICATION					
		(V.I.N.)					
		S) WITH SLIDE-OUT					

From Y-7046 Up to 8-9339	DATE: 01/2014	PAGE: Y2-1897-10

REAR SUB-FRAME BUS & MTH-45'

ITEM	PART	DESCRIPTION	XL45	MTH40	MTH45	MTH45S	NOTE

From 7-9096 Up to 8-9339	DATE: 01/2014	PAGE: Y2-1897-11

REAR SUB-FRAME MTH-45' ENT

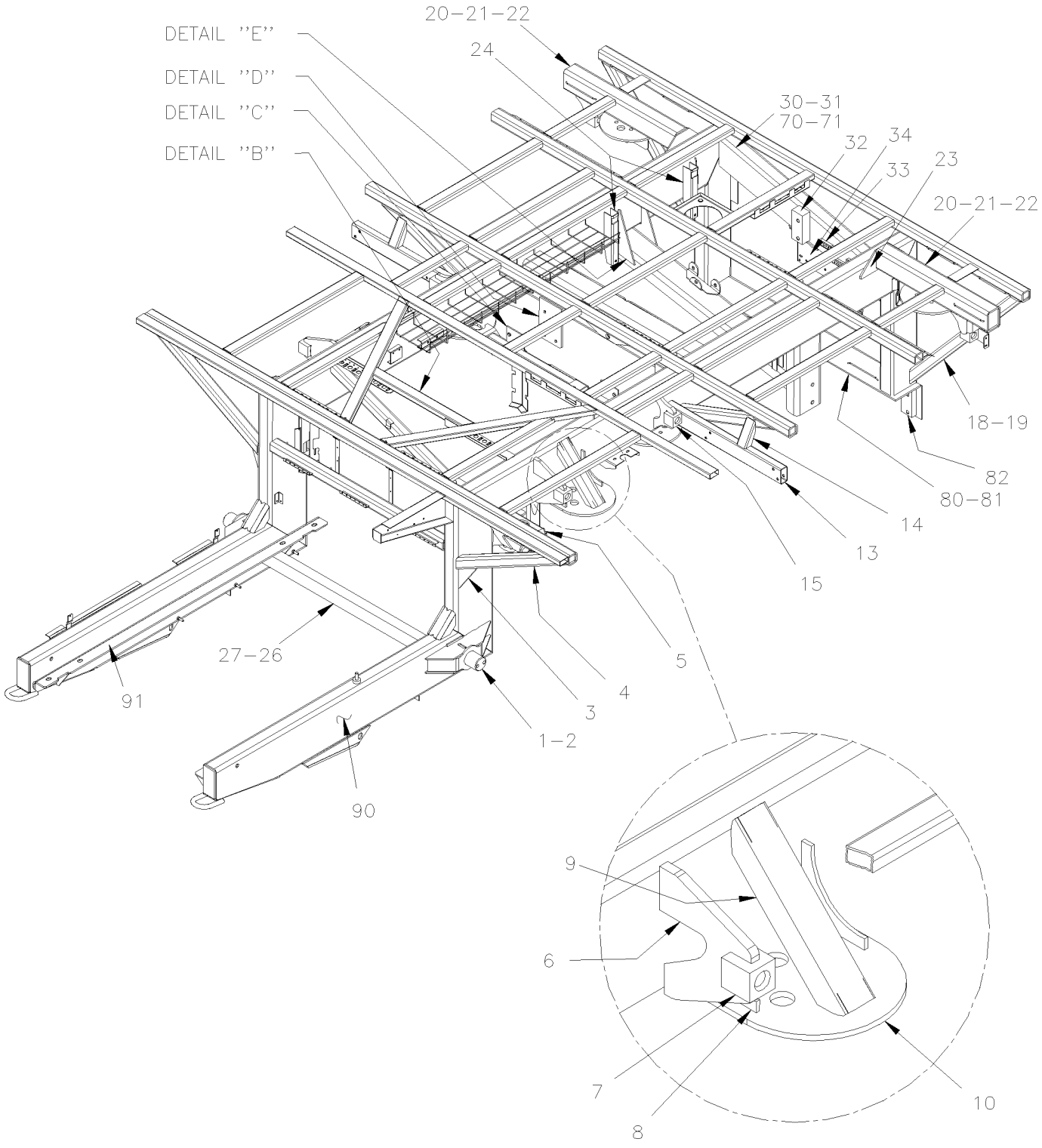

From 7-9096 Up to 8-9339	DATE: 01/2014	PAGE: Y2-1897-11
REAR SUB-FRAME MTH-45' ENT		

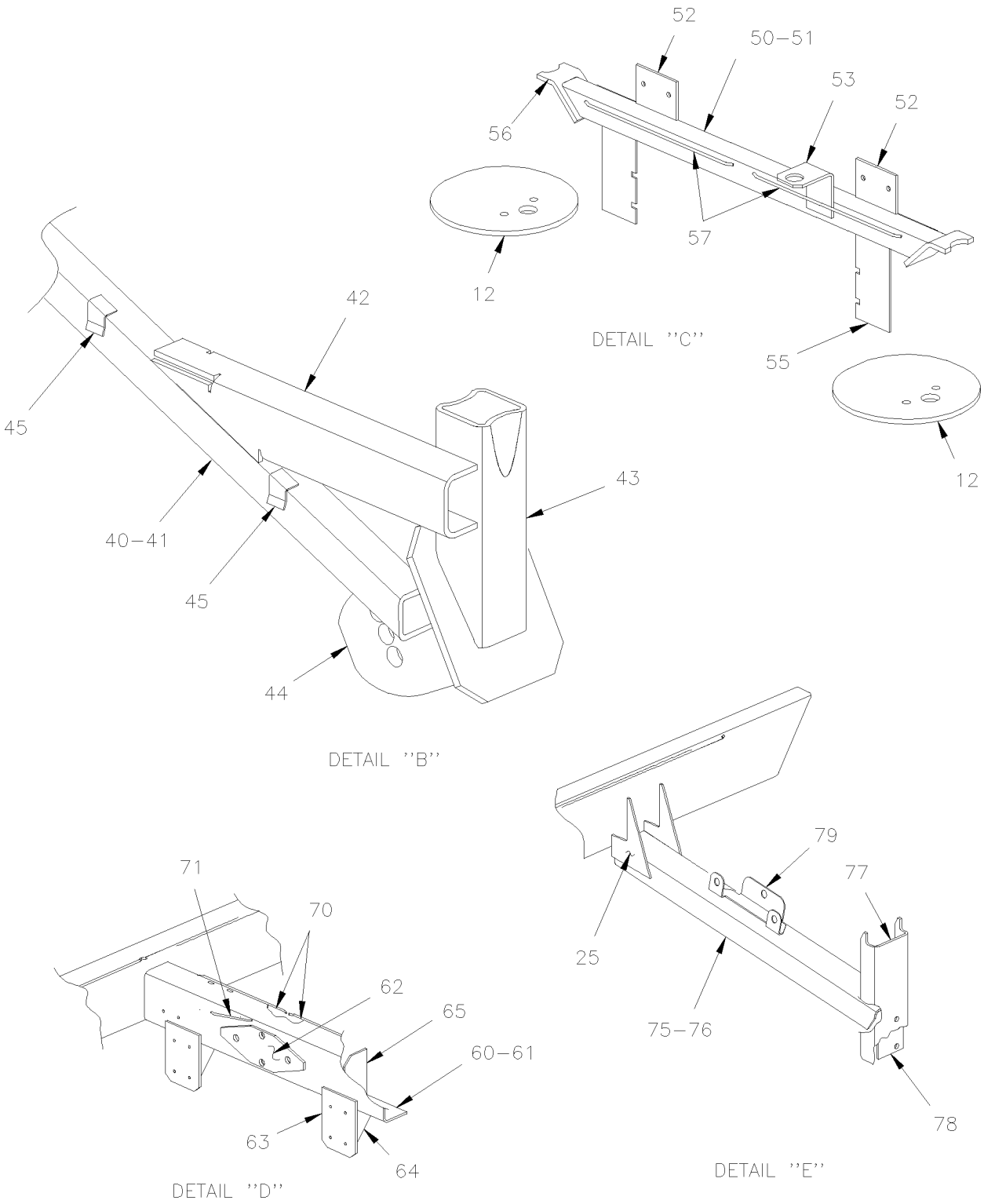

From 7-9096 Up to 8-9339	DATE: 01/2014	PAGE: Y2-1897-11

REAR SUB-FRAME MTH-45' ENT

ITEM	PART	DESCRIPTION	XL45	MTH40	MTH45	MTH45S	NOTE
1	173111P	PIN ATTACHMENT / SUSPENSION ROD				2	
2	171049	. PIN ATTACHMENT / SUSPENSION ROD				1	
2	173112	. PLATE REINFORCEMENT UPPER & LOWER				2	
2	173113	. PLATE REINFORCEMENT FRONT				1	
2	173189	. PLATE REAR				1	
3	170448	GUSSET, FLOOR TUBE REINFORCEMENT				2	
4	170261	TUBE 738MM				2	
5	173154	BRACKET / R.H.				1	
5	173155P	BRACKET / L.H.				1	
6	Call Order Desk	SUPPORT SHOCK ASSY				2	P T
7	171032	. ATTACHMENT PIN 1"-14 / SHOCK ABSORBER / 55MM				1	
8	171392	REINFORCEMENT				4	
9	172702	REINFORCEMENT "U" 313MM				2	
10	173156	BELLOW PLATE				2	
12	131356	BELLOW PLATE				2	
13	215498	TUBE SPLASHGUARD SUPPORT				2	
14	215497	REINFORCMENT				2	
15	173115	SUPPORT SHOCK ASSY				1	
18	170262	TUBE 986MM				2	
19	173146	SUPPORT VALVE HEIGHT CONTROL				2	
20	171398	TUBE				2	
21	173135	SUPPORT SHOCK ABSORBER BLOCK				1	
22	171032	ATTACHMENT PIN 1"-14 / SHOCK ABSORBER / 55MM				1	
23	170254	ATTACHMENT PLATE				2	
24	171600	SUPPORT "U" 250MM / AIR TANK				2	S
24	172147	SUPPORT "U" 263MM / AIR TANK				2	C
25	171501	REINFORCEMENT				2	
26	171605	BAR, TRANSMISSION PROTECTOR				1	
27	172482	ATTACHMENT PLATE				1	
30	Call Order Desk	BEAM, RADIUS ROD SUPPORT				1	P
31	130799	. TUBE 42 7/16"				1	
32	215824	. ANCHOR BLOCK				1	
33	121507	. SUPPORT "U" SHAPE 70MM				1	
34	173134	SUPPORT VALVE				1	
40	Call Order Desk	ATTACHMENT LATERAL ROD ASSY				1	P
41	173138	. TUBE				1	
42	173116	. TUBE				1	
43	173139	. TUBE				1	
44	131785	. SUPPORT ASSY / (WELDED)				1	
		P) CALL ORDER DESK FOR SPECIFIC APPLICATION					
		(V.I.N.)					
		C) CURBE SIDE					
		S) STREET SIDE					
		T) USE FOR TAG AXLE SHOCK					

From 7-9096 Up to 8-9339	DATE: 01/2014	PAGE: Y2-1897-11

REAR SUB-FRAME MTH-45' ENT

ITEM	PART	DESCRIPTION	XL45	MTH40	MTH45	MTH45S	NOTE
45	071081	. SUPPORT				2	
50	Call Order Desk	TUBE ASSY W/VALVE & TANK SUPPORT				1	P
51	173143	. TUBE				1	
52	171397	. SUPPORT VALVE				2	
53	171993	. SUPPORT VALVE INVERSION				1	
55	171973	. SUPPORT AIR TANK				2	
56	173145	. PLATE SUPPORT TUBE				2	
57	214025	ATTACHMENT ROD / 177MM x 11MM DEEP / WELDED (TO FIX ANYTHING)				4	
60	Call Order Desk	CHANNEL W/REINFORCEMENT / 1015MM WIDE / TRIPODE RR AXLE				1	P
61	172986	. REINFORCEMENT "C" 1015MM				1	
62	172307	. REINFORCEMENT PLATE (LOZANGE FORM)				1	
63	171978	. SUPPORT				2	
64	171976	. REINFORCEMENT				2	
65	171536	. REINFORCEMENT				2	
70	212655	ATTACHMENT ROD / 373MM x 11MM DEEP / WELDED (TO FIX ANYTHING)				AR	
71	214025	ATTACHMENT ROD / 177MM x 11MM DEEP / WELDED (TO FIX ANYTHING)				AR	
75	173149P	ATTACHMENT LATERAL ROD ASSY				1	
76	172426	. CHANNEL "C" 1115MM				1	
77	172516	. CHANNEL "J" 422MM				1	
78	172226	. REINFORCEMENT SUPPORT				1	
79	173171	. SUPPORT AIR DRYER				1	
80	Call Order Desk	REAR RADIUS ROD ATTACHMENT ANGLE ASSY				1	P
81	173290	. ANGLE				1	
82	173291	. ANCHOR BLOCK				1	
NS	173191	SUPPORT MULTI-FUNCTION 371MM Up to 8-9310				AR	
88	173403	SUPPORT MULTI-FUNCTION 395MM From 8-9311				1	
NS	173192	SUPPORT MULTI-FUNCTION 360MM				AR	
90	Y2-1894-11	**REAR RH - STRUCTURE**					
91	Y2-1894-06	**REAR LH - STRUCTURE**					
		P) CALL ORDER DESK FOR SPECIFIC APPLICATION					
		(V.I.N.)					

From Y-7046 Up to 3-8164	DATE: 01/2014	PAGE: Y2-1897-50
FRONT SUB-FRAME / W/INDEPENDENT SUSPENSION - 16500 LBS		

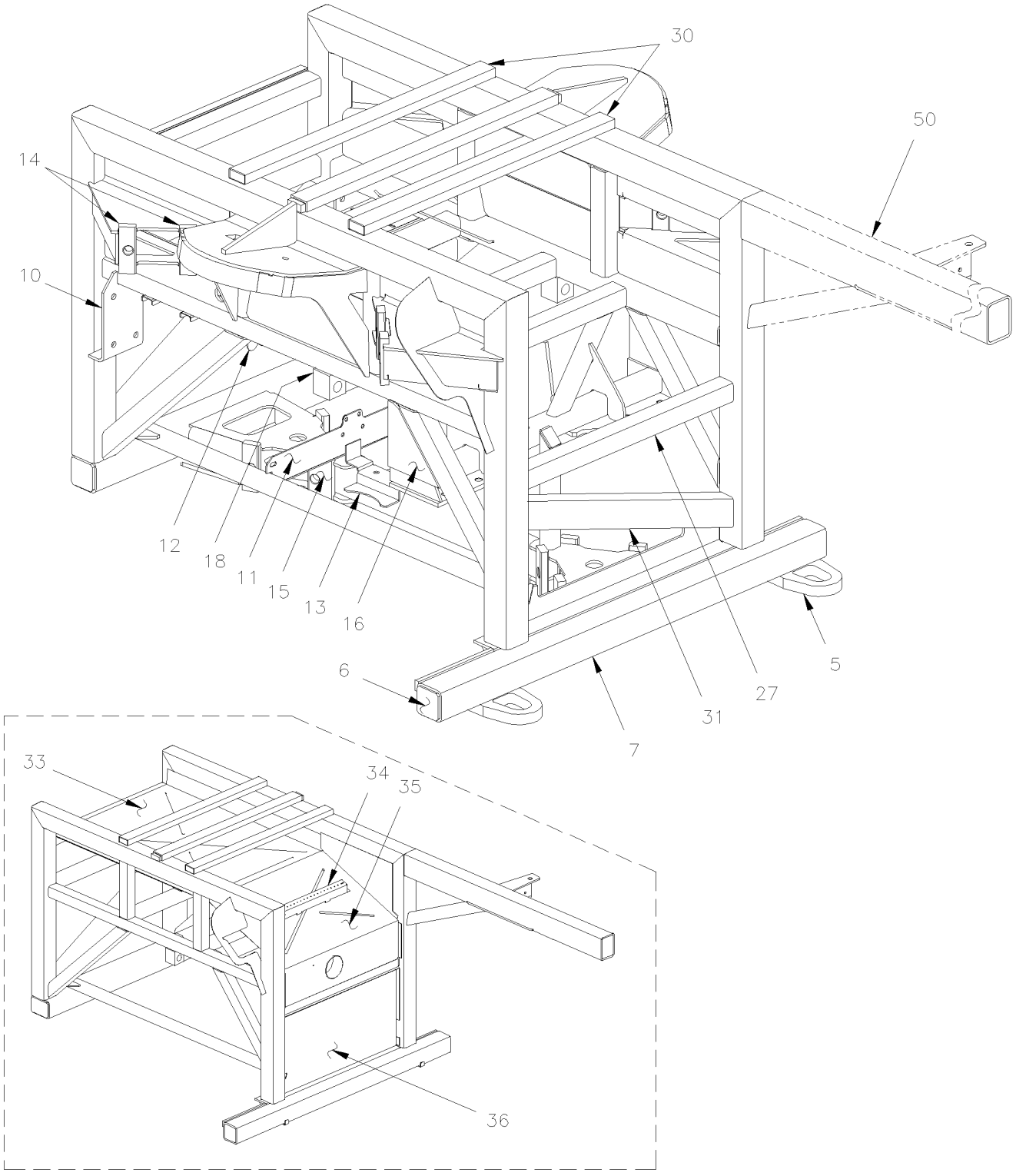

From Y-7046 Up to 3-8164	DATE: 01/2014	PAGE: Y2-1897-50
FRONT SUB-FRAME / W/INDEPENDENT SUSPENSION - 16500 LBS		

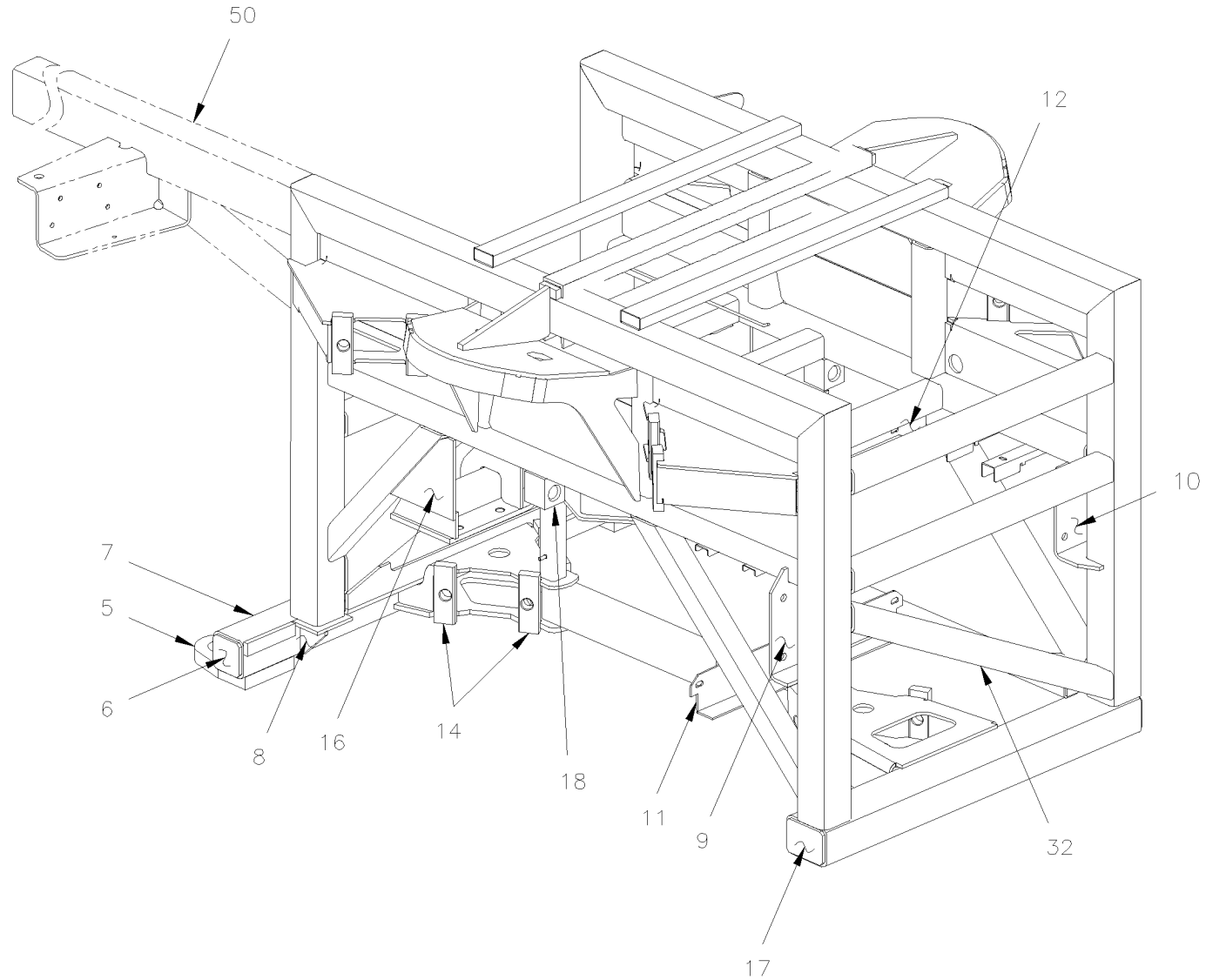

From Y-7046 Up to 3-8164	DATE: 01/2014	PAGE: Y2-1897-50

FRONT SUB-FRAME / W/INDEPENDENT SUSPENSION - 16500 LBS

ITEM	PART	DESCRIPTION	XL45	MTH40	MTH45	MTH45S	NOTE
	172522P	FRONT SUB-FRAME ASSY / XL-II BUS W/IND 16500	1				
	172301P	FRONT SUB-FRAME ASSY / XL-II MTH W/IND 16500		1	1	1	M
5	171991	. ATTACHMENT / TOWING	2	2	2	2	
6	220944	. CLOSING PLATE 67MM X 67MM	2	2	2	2	
7	172082	. TUBE 1095MM	1	1	1	1	
8	171709	. REINFORCEMENT	2	2	2	2	
9	171908	. ATTACHMENT SWAY BAR STREETSIDE	1	1	1	1	
10	171718	. ATTACHMENT SWAY BAR CURBSIDE	1	1	1	1	
11	171942	. SUPPORT AIR TANK / LOWER	1	1	1	1	
12	171815	. SUPPORT AIR TANK / UPPER	1	1	1	1	
13	172193	. SUPPORT AIR TANK / LOWER	1	1	1	1	
14	171789	. ATTACHMENT 38MM WIDE	14	14	14	14	
15	171710	. ATTACHMENT 57MM WIDE	2	2	2	2	
16	171856	. REINFORCEMENT	2	2	2	2	
17	171888	. CLOSING PLATE 67MM X 92MM	2	2	2	2	
18	110627	. ATTACHMENT PIN 1"-14 / SHOCK ABSORBER / 50.8MM LONG	2	2	2	2	
27	171712	. TUBE 661MM	5	5	5	5	
30	171886	. TUBE 785MM	2	2	2	2	
30	172410	. U-BEAM 1" X 2" X 788MM	1	1	1	1	
31	172432	. TUBE 721MM	1	1	1	1	
32	171713	. TUBE 779MM	1	1	1	1	
33	212774	. PANEL CENTRAL BACKWARD	1	1	1	1	
34	172235	. SUPPORT PIPE & HARNESS	1	1	1	1	
35	172305	PANEL CENTRAL FORWARD	1	1	1	1	
36	214762	PANEL CENTRAL FRONT LOWER / W/SPARE TIRE	1				
36	212773	PANEL CENTRAL FRONT LOWER		1	1	1	
36	213208	CLOSING PANEL REAR TIRE		1	1	1	M
50	Y2-1895-10	**FRONT LOWER FLOOR STRUCTURE - BUS**					
		M) WITH "MARATHON" CONVERTER'S					

From Y-7046 Up to 3-8164	DATE: 01/2014	PAGE: Y2-1897-50

FRONT SUB-FRAME / W/INDEPENDENT SUSPENSION - 16500 LBS

ITEM	PART	DESCRIPTION	XL45	MTH40	MTH45	MTH45S	NOTE

From 4-8165 Up to 8-9339	DATE: 01/2014	PAGE: Y2-1897-51

FRONT SUB-FRAME / W/INDEPENDENT SUSPENSION - 18000 LBS

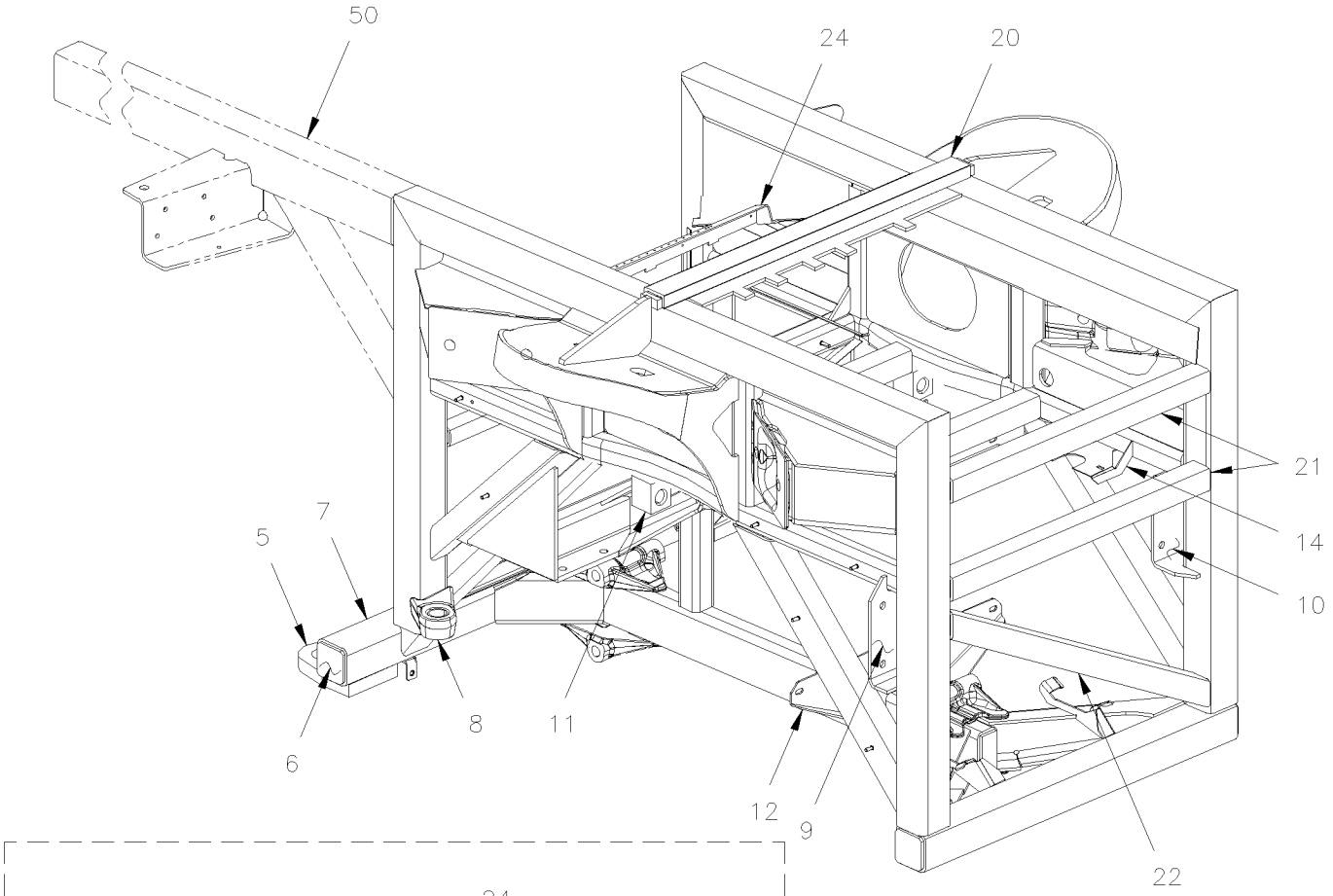

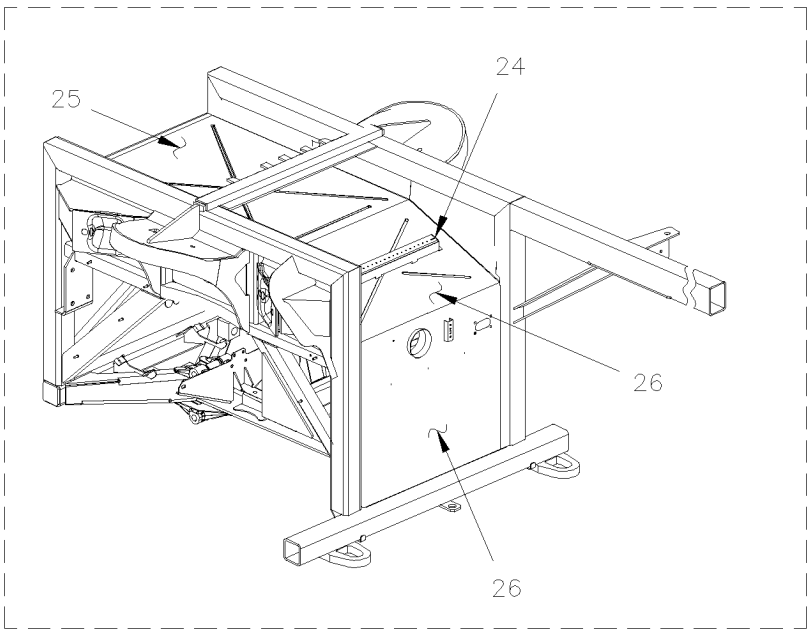

From 4-8165 Up to 8-9339	DATE: 01/2014	PAGE: Y2-1897-51
FRONT SUB-FRAME / W/INDEPENDENT SUSPENSION - 18000 LBS		

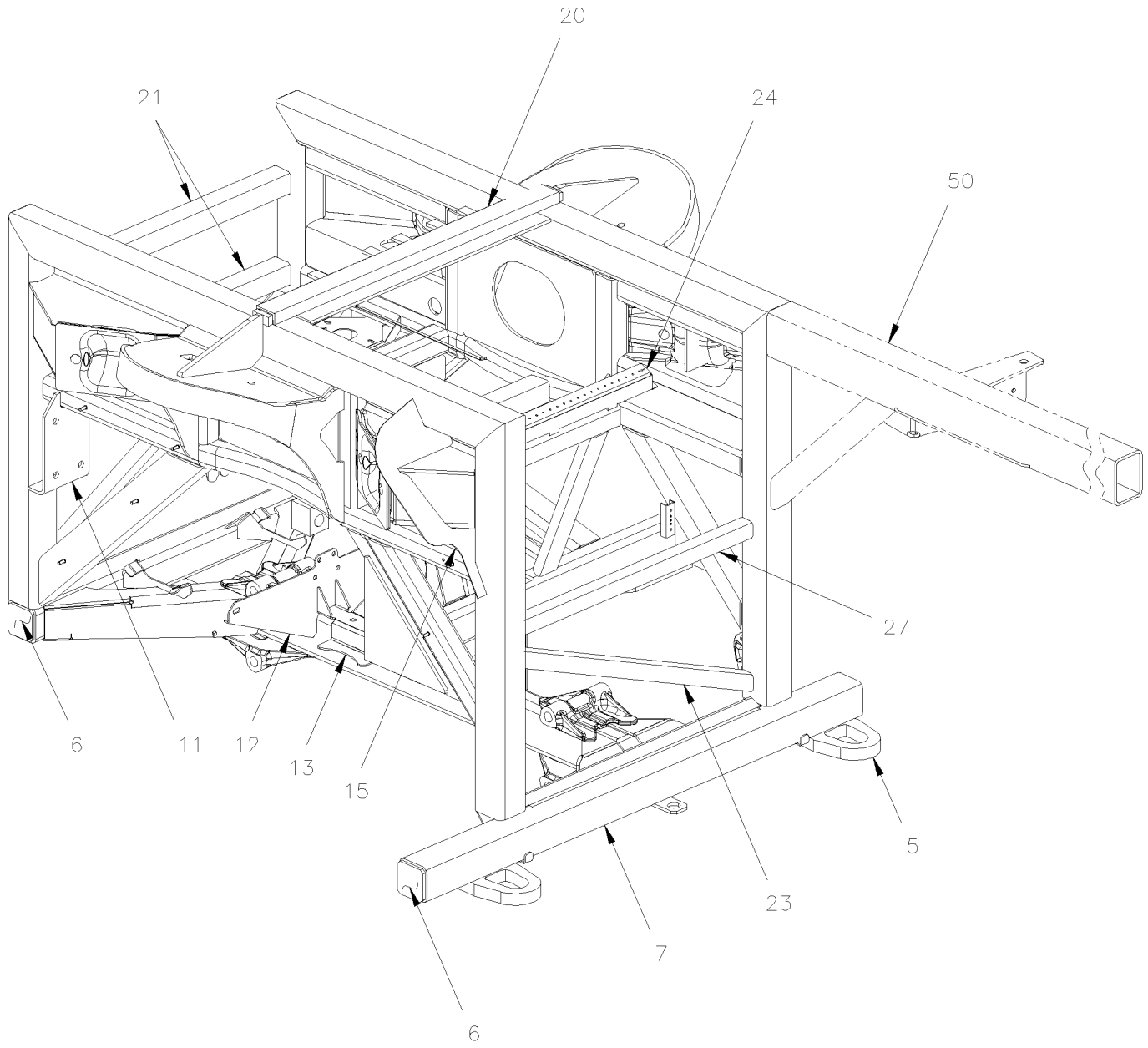

From 4-8165 Up to 8-9339	DATE: 01/2014	PAGE: Y2-1897-51

FRONT SUB-FRAME / W/INDEPENDENT SUSPENSION - 18000 LBS

ITEM	PART	DESCRIPTION	XL45	MTH40	MTH45	MTH45S	NOTE
	172792P	FRONT SUB-FRAME ASSY / XL-II BUS W/IND 18000 Up to 6-8906	1				
	172724P	FRONT SUB-FRAME ASSY / XL-II MTH W/IND 18000		1	1	1	
5	171991	. ATTACHMENT / TOWING	2	2	2	2	
6	220944	. CLOSING PLATE 67MM X 67MM	6	6	6	6	
7	172265	. TUBE 1206MM	1	1	1	1	
8	172731	. SUPPORT POWER STEERING CYLINDER		1	1	1	
9	171908	. ATTACHMENT SWAY BAR STREETSIDE	1	1	1	1	
10	171718	. ATTACHMENT SWAY BAR CURBSIDE	1	1	1	1	
11	110627	. ATTACHMENT PIN 1"-14 / SHOCK ABSORBER / 50.8MM LONG	2	2	2	2	
12	172704	. SUPPORT AIR TANK / LOWER	1	1	1	1	
13	172705	. SUPPORT AIR TANK / LOWER	1	1	1	1	
14	131746	. SUPPORT AIR TANK / BELLOW Up to 6-8805		2	2	2	
14	173028	. SUPPORT CURBSIDE From 6-8806		1	1	1	
14	173029	. SUPPORT STREET SIDE From 6-8806		1	1	1	
NS	131747	. SUPPORT L.H. "KNEELING" TANK Up to 6-8906	1				
NS	131748	. SUPPORT R.H. "KNEELING" TANK Up to 6-8906	1				
15	172868	. PLATE Up to 7-8949	2	2	2	2	
15	173282	. PLATE From 7-8950		2	2	2	
20	172736	. REINFORCEMENT SUPPORT	1	1	1	1	
21	171712	. TUBE 661MM	3	3	3	3	
22	171713	. TUBE 779MM	1	1	1	1	
23	172712	. TUBE 733MM	1	1	1	1	
24	172235	. SUPPORT PIPE & HARNESS	1	1	1	1	
25	212774	. PANEL CENTRAL BACKWARD	1	1	1	1	
26	172849	. PANEL CENTRAL FORWARD & LOWER Up to 6-8906	1				
26	172716	. PANEL CENTRAL FORWARD & LOWER		1	1	1	
26	172842	. PANEL CENTRAL FORWARD & LOWER		1	1	1	M
26	213802	. PANEL / CENTER / R.H. W/SMALL A/C SYSTEM		1	1	1	M
27	172719	. TUBE 661MM	1	1	1	1	
50	Y2-1895-10	**FRONT LOWER FLOOR STRUCTURE - BUS**					
		M) USE ONLY WITH "MARATHON" CONVERTER					

From 4-8165 Up to 8-9339	DATE: 01/2014	PAGE: Y2-1897-51

FRONT SUB-FRAME / W/INDEPENDENT SUSPENSION - 18000 LBS

ITEM	PART	DESCRIPTION	XL45	MTH40	MTH45	MTH45S	NOTE

From Y-7046 Up to 5-8699	DATE: 01/2014	PAGE: Y2-1898-00

ESCAPE HATCH - INSTALLATION

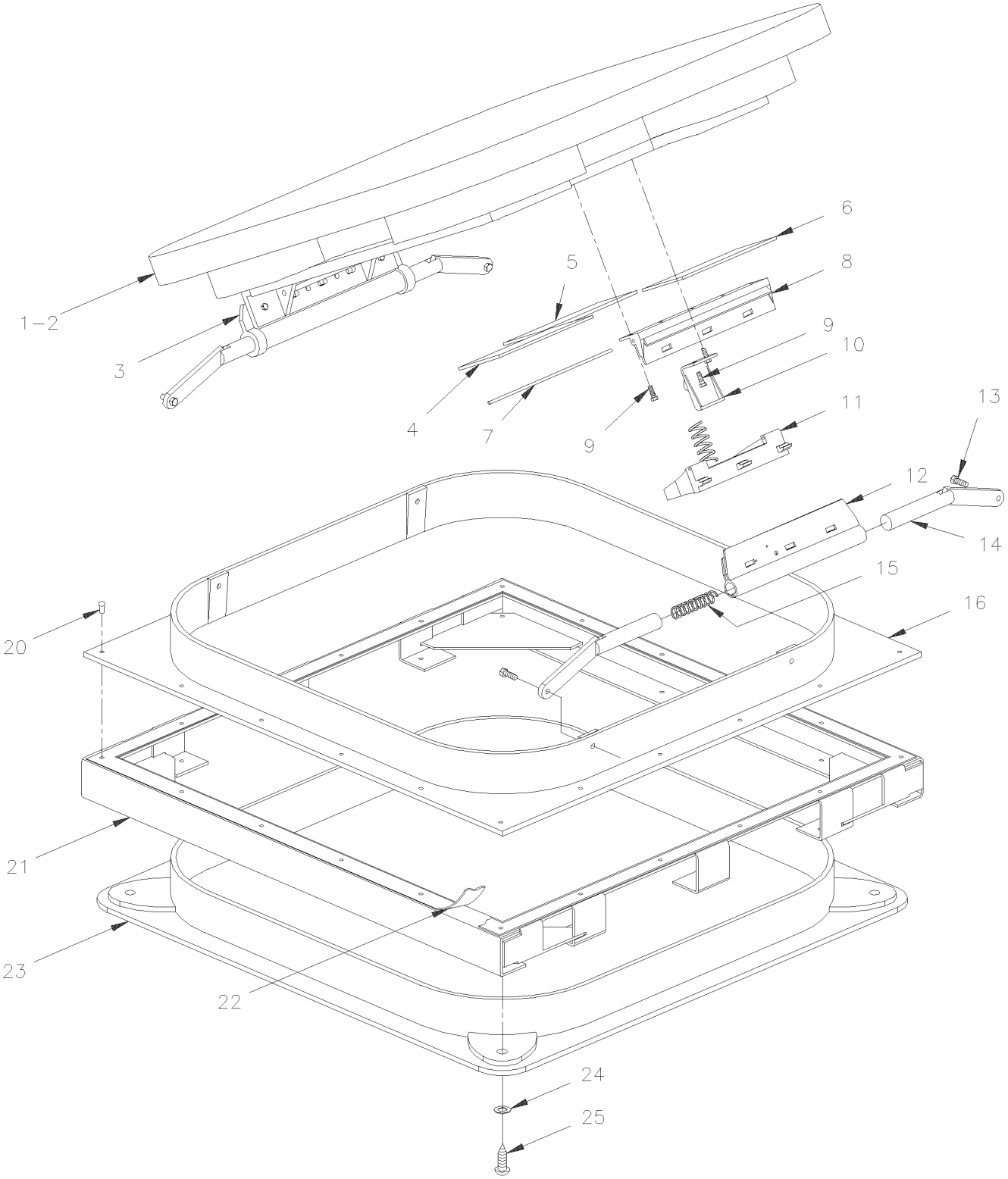

From Y-7046 Up to 5-8699	DATE: 01/2014	PAGE: Y2-1898-00

ESCAPE HATCH - INSTALLATION

ITEM	PART	DESCRIPTION	XL45	MTH40	MTH45	MTH45S	NOTE
1	950291	HATCH ASSY / 23" X 23" GREY / REPLACED BY: 950396	1	1	1	1	
2	950069	. SEAL, GASKET KIT	1	1	1	1	
3	N.S.S.	. HINGE	1	1	1	1	1
4	291263	. DECAL / "EMERGENCY..." ENG & FRENCH / REPLACED BY: 950229	1	1	1	1	
5	291265	. DECAL, "INSTRUCTION... FRENCH..." / REPLACED BY: 950229	1	1	1	1	
5	403651	. DECAL, "EMERGEGENCY... JAPAN"	1	1	1	1	
5	403696	. DECAL / BRAILLE / EMERGENCY EXIT ONLY	1	1	1	1	
6	291264	. DECAL, "SORTIE D'URGENCE..." / REPLACED BY: 950229	1	1	1	1	
7	950046	. DECAL "EMERGENCY..." / REPLACED BY: 950229	1	1	1	1	
8	790373	. BASE, RELEASE / GREY	1	1	1	1	
9	N.S.P.	. SCREW	AR	AR	AR	AR	2
10	790236	. TAB, BLACK	1	1	1	1	
11	790371	. HANDLE, RELEASE W/SPRING / GREY	1	1	1	1	
12	790375	. HINGE, RELEASE / GREY	1	1	1	1	
13	790372	. SCREW SHR HEXS 7/16x3/16 {5/16-18	4	4	4	4	
13	950449	. SCREW CAP BUT TORX 5/16-18x3/4 BK G8	4	4	4	4	
NS	950450	. SPACER BUSHING 5/16I.D.x 7/16O.D.x 3/16TH	4	4	4	4	
14	790436	. LINK & LEVER ASSY	4	4	4	4	
15	790449	. SPRING COMPRESSION / .549 O.D. x 2.590 x .078	4	4	4	4	
16	950205	. FRAME ASSY, EXTERIOR FIBERGLASS / 23" X 23" GREY	1	1	1	1	
NS	680532	. SEALANT SIKA #221 / GREY / 310ml CARTRIDGE	1	1	1	1	
17	N8891498	. HINGE COVER GREY	1	1	1	1	
18	790662	. RELEASE HINGE SHIELD ASSY GREY	1	1	1	1	
19	790663	. RELEASE KNOB W/SCREW / RED	1	1	1	1	
20	504546	RIVET CHY MONOLOK PRDG 1/4x5/8 CJ	AR	AR	AR	AR	
21	292398	FRAME ASSY, MOUNTING 23" X 23"	1	1	1	1	
22	680093	SEALANT TAPE BUTYL / GREY / 1/6"x1 1/2"x50' / 71079B11760	AR	AR	AR	AR	
23	291720	MOULDING, INTERIOR 23" X 23" GREY	1	1	1	1	
NS	504399	WASHER RETAINER SNAP CAP #10	4	4	4	4	
25	500641	SCREW TP BDG PH #8x3/4 ZP	4	4	4	4	
NS	504400	SNAP CAP #10 FINISHING BLACK	4	4	4	4	
		1) NOT SOLD SEPARATELY					
		2) NOT SOLD BY PREVOST (SEE MANUFACTURING PART					
		NUMBER AT END OF DESCRIPTION LINE)					

From 5-8700 Up to 8-9339	DATE: 01/2014	PAGE: Y2-1898-01

ESCAPE HATCH - INSTALLATION

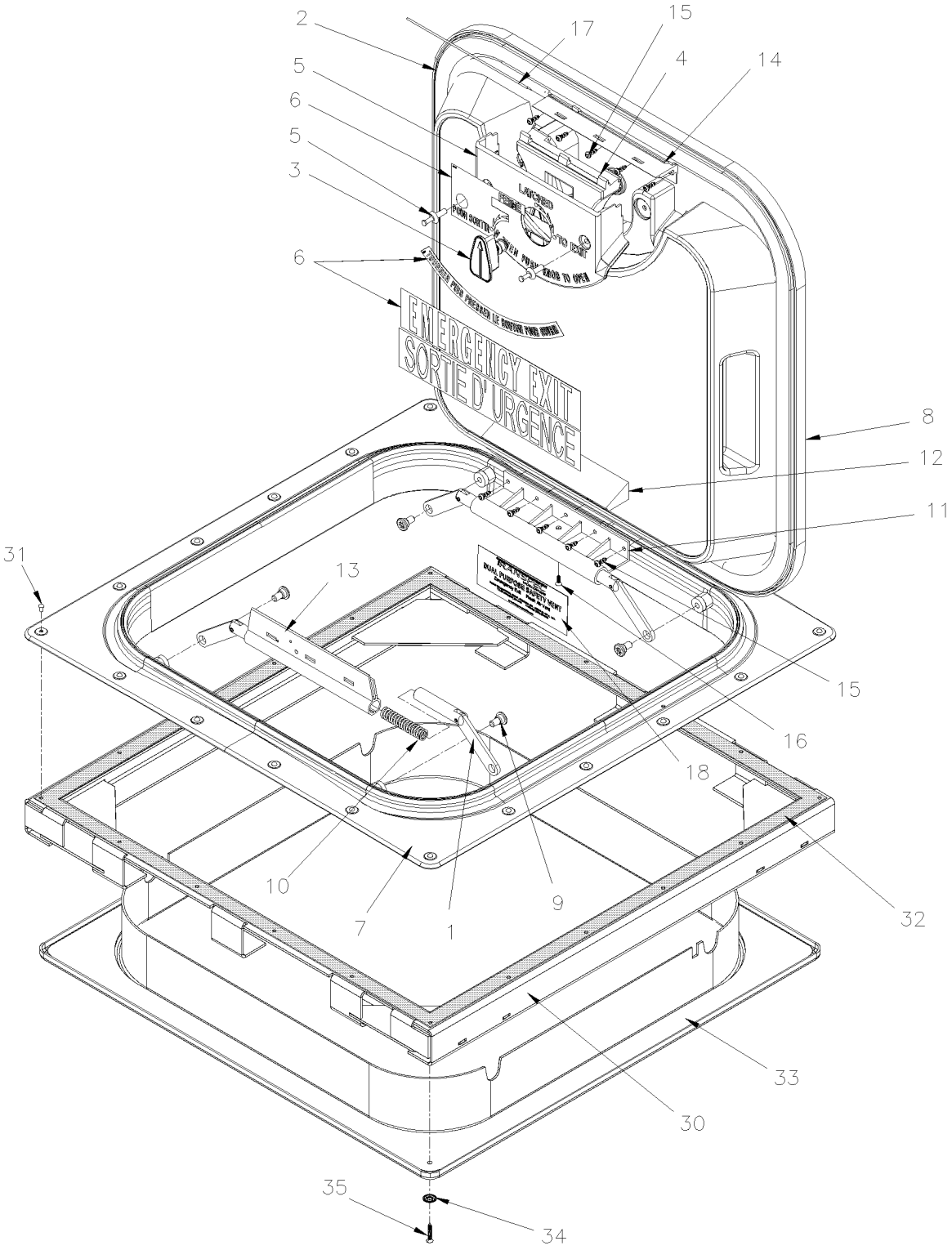

From 5-8700 Up to 8-9339	DATE: 01/2014	PAGE: Y2-1898-01

ESCAPE HATCH - INSTALLATION

ITEM	PART	DESCRIPTION	XL45	MTH40	MTH45	MTH45S	NOTE
	950396	HATCH ASSY / 23" X 23" GREY / LOW PROFILE GREY	1	1	1	1	
1	790436	. LINK & LEVER ASSY	4	4	4	4	
2	950069	. SEAL, GASKET KIT	1	1	1	1	
3	790663	. RELEASE KNOB W/SCREW / RED	1	1	1	1	
4	790664	. RELEASE HANDLE ASSY GREY	1	1	1	1	
4	790371	. HANDLE, RELEASE W/SPRING / GREY	1	1	1	1	
5	790662	. RELEASE HINGE SHIELD ASSY GREY	1	1	1	1	
6	N8893648	. DECAL KIT INSTRUCTION ENG & FRENCH	1	1	1	1	
NS	950229	. DECAL KIT INSTRUCTION ENG & FRENCH	1	1	1	1	
NS	403651	. DECAL, "EMERGEGENCY... JAPAN"	AR	AR	AR	AR	
NS	405775	. DECAL / BRAILLE / EMERGENCY EXIT ONLY	AR	AR	AR	AR	
7	950205	. FRAME ASSY, EXTERIOR FIBERGLASS / 23" X 23" GREY	1	1	1	1	
8	950464	. COVER ASSY / LOW PROFILE GREY	1	1	1	1	
9	790372	. SCREW SHR HEXS 7/16x3/16 {5/16-18	4	4	4	4	
9	950449	. SCREW CAP BUT TORX 5/16-18x3/4 BK G8	4	4	4	4	
NS	950450	. SPACER BUSHING 5/16I.D.x 7/16O.D.x 3/16TH	4	4	4	4	
10	790449	. SPRING COMPRESSION / .549 O.D. x 2.590 x .078	4	4	4	4	
11	N.S.S.	. HINGE COVER SECTION	1	1	1	1	1
12	N8891498	. HINGE COVER GREY	1	1	1	1	
13	790375	. HINGE, RELEASE / GREY	1	1	1	1	
14	6982866	. HANDLE BASE	1	1	1	1	
15	N8880007	. SPECIAL TORX SCREW	10	10	10	10	
16	N8893649	. SCREW FL PH # 8 x 1/2 SS	1	1	1	1	
17	6982869	. HINGE PIN SS	1	1	1	1	
18	N8891500	DECAL PURPOSE SAFETY VENT	1	1	1	1	
30	292398	FRAME ASSY, MOUNTING 23" X 23"	1	1	1	1	
NS	680532	SEALANT SIKA #221 / GREY / 310ml CARTRIDGE	1	1	1	1	
31	504546	RIVET CHY MONOLOK PRDG 1/4x5/8 CJ	20	20	20	20	
32	680093	SEALANT TAPE BUTYL / GREY / 1/6"x1 1/2"x50' / 71079B11760	AR	AR	AR	AR	
33	291720	MOULDING, INTERIOR 23" X 23" GREY	1	1	1	1	
NS	500464	WASHER FN CKF .210x.540 SS	4	4	4	4	
35	500629	SCREW TP OV PH #8x1 ZP	4	4	4	4	

1) NOT SOLD SEPARATELY

From Y-7046 Up to 8-9339	DATE: 01/2014	PAGE: Y2-22

HEATING & AIR CONDITIONING

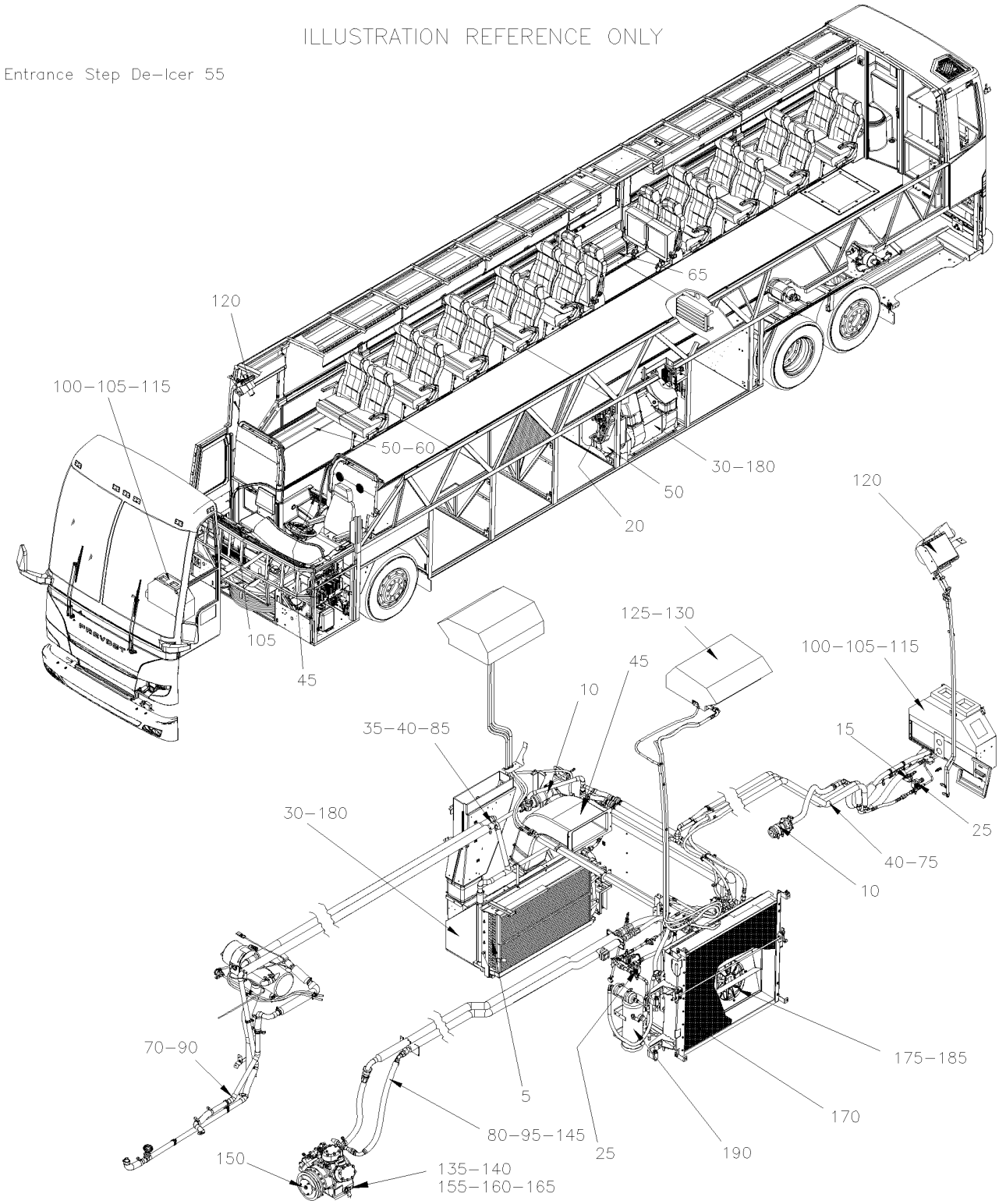

From Y-7046 Up to 8-9339	DATE: 01/2014	PAGE: Y2-22

HEATING & AIR CONDITIONING

ITEM	PART	DESCRIPTION	XL45	MTH40	MTH45	MTH45S	NOTE
1	Y2-2200-00	**AIR CONDITIONING SYSTEM From Y-7046 Up to 8-9339**					
2	Y2-2200-05	**HEATING SYSTEM From Y-7046 Up to 8-9339**					
3	Y2-2200-50	**AIR CONDITIONING SYSTEM From Y-7046 Up to 8-9339**					
5	Y2-2205-00	**HEATER & EVAPORATOR COIL - INSTALLATION From Y-7046 Up to 6-8906**					
5	Y2-2205-01	**HEATER & EVAPORATOR COIL - INSTALLATION From 6-8806 Up to 8-9339**					
10	Y2-2206-00	**WATER PUMP #871052 & #871204 From Y-7046 Up to 4-8205**					
10	Y2-2206-01	**WATER PUMP #871342 SEALLESS From 4-8206 Up to 8-9339**					
10	871327	**WATER PUMP / "ROTRON" 24 V "SPECIAL OPTION" From Y-7046 Up to 6-8906**					
10	Y2-2206-50	**WATER PUMP #871032 From Y-7046 Up to 8-9339**					
10	Y2-2206-99	**WATER PUMP #871342 SEALLESS "RETROFIT" From Y-7046 Up to 8-9339**					
15	Y2-2207-00	**WATER VALVE - W/MAIN HEATER From Y-7046 Up to 2-7881**					
15	Y2-2207-01	**WATER VALVE - HEATER From 2-7822 Up to 8-9339**					
15	Y2-2207-02	**WATER VALVE - HEATER From 6-8806 Up to 8-9339**					
15	Y2-2207-10	**WATER VALVE - W/DRIVER'S HEATER From Y-7046 Up to 8-9339**					
15	Y2-2207-20	**WATER VALVE - BYPASS W/WATER HEATER From Y-7046 Up to 6-8906**					
20	Y2-2208-00	**A/C EXPANSION VALVE From Y-7046 Up to 8-9339**					
25	Y2-2208-10	**REFRIGERANT SOLENOID VALVE From Y-7046 Up to 8-9339**					
30	Y2-2210-00	**HEATER & EVAPORATOR BLOWER - INSTALLATION From Y-7046 Up to 8-9339**					
30	Y2-2210-01	**HEATER & EVAPORATOR BLOWER - INSTALLATION From 6-8806 Up to 8-9339**					
35	Y2-2210-10	**WATER PUMP & FILTER - INSTALLATION From Y-7046 Up to 8-9339**					
35	Y2-2210-11	**WATER PUMP - INSTALLATION From 6-8806 Up to 8-9339**					
40	Y2-2210-20	**WATER PUMP & FILTER - W/SMALL A/C From Y-7046 Up to 8-9339**					
45	Y2-2221-00	**UNDER FLOOR AIR DUCTING From Y-7046 Up to 6-8906**					
45	Y2-2221-01	**UNDER FLOOR AIR DUCTING From 6-8806 Up to 8-9339**					
50	Y2-2221-10	**DUCTING HEATER & A/C - BUS FLOOR From Y-7046 Up to 6-8906**					
55	Y2-2221-20	**ENTRANCE STEP DE-ICER From Y-7046 Up to 6-8906**					
60	Y2-2221-50	**DUCTING HEATER & A/C - MTH FLOOR From Y-7046 Up to 8-9339**					
65	Y2-2221-80	**AIR DUCT W.C.L. DOOR "RICON" From Y-7046 Up to 6-8906**					
70	Y2-2222-00	**HEATER LINE REAR SECTION - BUS From Y-7046 Up to 2-7764**					
70	Y2-2222-01	**HEATER LINE REAR SECTION - BUS From 2-7765 Up to 3-8164**					
70	Y2-2222-02	**HEATER LINE REAR SECTION - BUS From 4-8165 Up to 6-8906**					
75	Y2-2222-10	**A/C & HEATING LINE FRONT SECTION From Y-7046 Up to 8-9339**					
80	Y2-2222-15	**A/C LINE REAR SECTION W/05G From Y-7046 Up to 8-9339**					
85	Y2-2222-20	**HEATER LINE & PIPING - CENTRAL SYSTEM From Y-7046 Up to 8-9339**					
90	Y2-2222-30	**HEATER LINE REAR SECTION - MTH From Y-7046 Up to 3-8164**					
90	Y2-2222-31	**HEATER LINE REAR SECTION - MTH From 4-8165 Up to 8-9339**					
95	Y2-2222-50	**SMALL A/C LINES & HOSES WITH DETROIT S-60 & R134A From Y-7046 Up to 3-8164**					
95	Y2-2222-51	**SMALL A/C LINES & HOSES WITH DETROIT S-60 & R134A From 4-8165 Up to 8-9339**					
100	Y2-2225-00	**DRIVER'S HEATER & DEFROSTER ASSY From Y-7046 Up to 5-8469**					
100	Y2-2225-01	**DRIVER'S HEATER & DEFROSTER ASSY From 5-8470 Up to 7-9095**					
100	Y2-2225-02	**DRIVER'S HEATER & DEFROSTER ASSY WITH MUX From 7-9096 Up to 8-9339**					
105	Y2-2230-00	**DEFROSTER - INSTALLATION From Y-7046 Up to 8-9339**					
115	870844	**BLOWER & MOTOR ASSY - "M.C.C." "CW" / FAN END From Y-7046 Up to 6-8906**					
115	871360	**BLOWER & MOTOR ASSY - "M.C.C." "CCW" / FAN END From 5-8470 Up to 8-9339**					

From Y-7046 Up to 8-9339	DATE: 01/2014	PAGE: Y2-22

HEATING & AIR CONDITIONING

ITEM	PART	DESCRIPTION	XL45	MTH40	MTH45	MTH45S	NOTE
120	Y2-2240-10	**UPPER WINDSHIELD FAN - INSTALLATION From 3-8131 Up to 8-9339**					
125	Y2-2240-20	**BLOWER VENTILATION - PARCEL RACK From Y-7046 Up to 6-8906**					
130	Y2-2240-25	**BLOWER ASSY - PARCEL RACK From Y-7046 Up to 6-8906**					
135	Y2-2245-00	**A/C COMPRESSOR 05G - INSTALLATION From Y-7046 Up to 8-9339**					
135	Y2-2245-01	**A/C COMPRESSOR "ROTOVANE" - INSTALLATION From Y-7046 Up to 7-9095**					
135	Y2-2245-03	**A/C COMPRESSOR 05G - INSTALLATION - MUX From 7-9096 Up to 8-9339**					
140	Y2-2245-10	**A/C COMPRESSOR SMALL - INSTALLATION From Y-7046 Up to 3-8164**					
140	Y2-2245-11	**A/C COMPRESSOR SMALL - INSTALLATION From 4-8165 Up to 8-9339**					
145	Y2-2245-30	**A/C AUXILIARY LINE / PARCEL RACK From Y-7046 Up to 3-8164**					
145	Y2-2245-31	**A/C AUXILIARY LINE / PARCEL RACK From 4-8165 Up to 6-8906**					
150	Y2-2246-00	**A/C CLUTCH 05G - HOUSING MOUNTED From Y-7046 Up to 8-9339**					
155	Y2-2250-00	**A/C COMPRESSOR ASSY 05G - THREE PORT From Y-7046 Up to 6-8795**					
155	Y2-2250-01	**A/C COMPRESSOR ASSY 05G - TWIN PORT From 5-8796 Up to 8-9339**					
160	Y2-2250-15	**A/C ELECTRIC UNLOADER - W/05G COMPRESSOR From Y-7046 Up to 8-9339**					
165	Y2-2251-00	**GASKET - 05G A/C COMPRESSOR From Y-7046 Up to 8-9339**					
170	Y2-2255-00	**CONDENSOR - INSTALLATION LARGE SYSTEM From Y-7046 Up to 6-8906**					
170	Y2-2255-10	**CONDENSOR - INSTALLATION SMALL SYSTEM From Y-7046 Up to 3-8164**					
170	Y2-2255-11	**CONDENSOR - INSTALLATION SMALL SYSTEM From 4-8165 Up to 8-9339**					
170	Y2-2255-50	**CONDENSOR - INSTALLATION LARGE SYSTEM From Y-7046 Up to 8-9339**					
175	Y2-2260-05	**CONDENSOR FAN - INSTALLATION From Y-7046 Up to 8-9339**					
175	Y2-2260-99	**CONDENSOR 4 FANS - INSTALLATION / "RETROFIT" From Y-7046 Up to 8-9339**					
180	Y2-2265-00	**MOTOR - "PREVOST" - T-17 From Y-7046 Up to 4-8212**					
180	Y2-2265-01	**MOTOR - "PREVOST" - T-17 - 2 SPEEDS From 3-8102 Up to 8-9339**					
180	Y2-2265-02	**MOTOR - EVAPORATOR BRUSHLESS From Y-7046 Up to 6-8906**					
185	Y2-2265-50	**MOTOR - "PREVOST" - TF-12 From Y-7046 Up to 2-7825**					
185	Y2-2265-51	**MOTOR - "PREVOST" - T11G From 2-7826 Up to 6-8855**					
185	Y2-2265-52	**MOTOR - "PREVOST" - T114 From 6-8856 Up to 8-9339**					
185	Y2-2265-53	**MOTOR - CONDENSOR BRUSHLESS From Y-7046 Up to 6-8906**					
190	Y2-2270-00	**RECEIVER TANK & FILTER DRYER From Y-7046 Up to 8-9339**					

From Y-7046 Up to 8-9339	DATE: 01/2014	PAGE: Y2-22

HEATING & AIR CONDITIONING

ITEM	PART	DESCRIPTION	XL45	MTH40	MTH45	MTH45S	NOTE

From Y-7046 Up to 8-9339	DATE: 01/2014	PAGE: Y2-2200-00
AIR CONDITIONING SYSTEM		

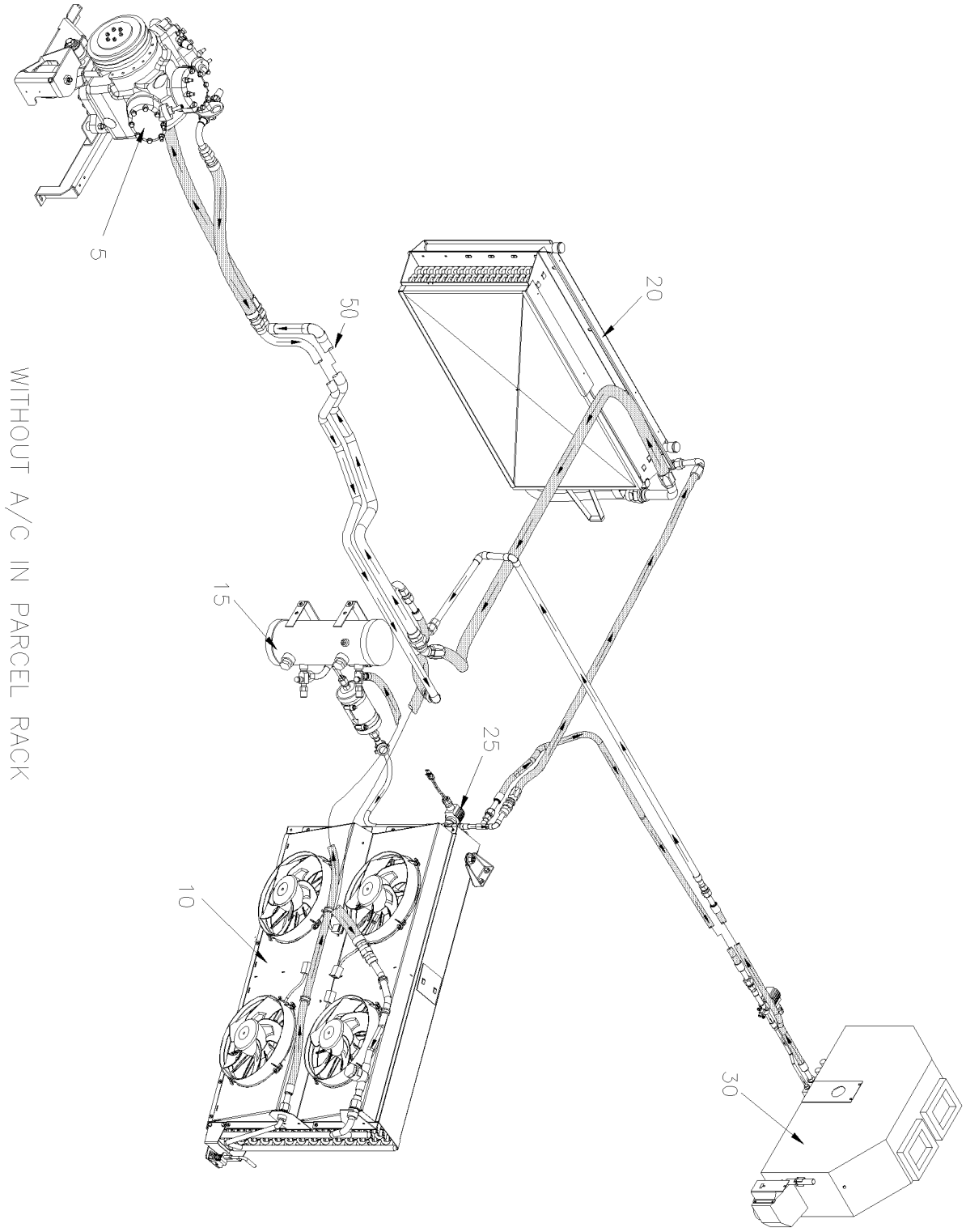

From Y-7046 Up to 8-9339	DATE: 01/2014	PAGE: Y2-2200-00

AIR CONDITIONING SYSTEM

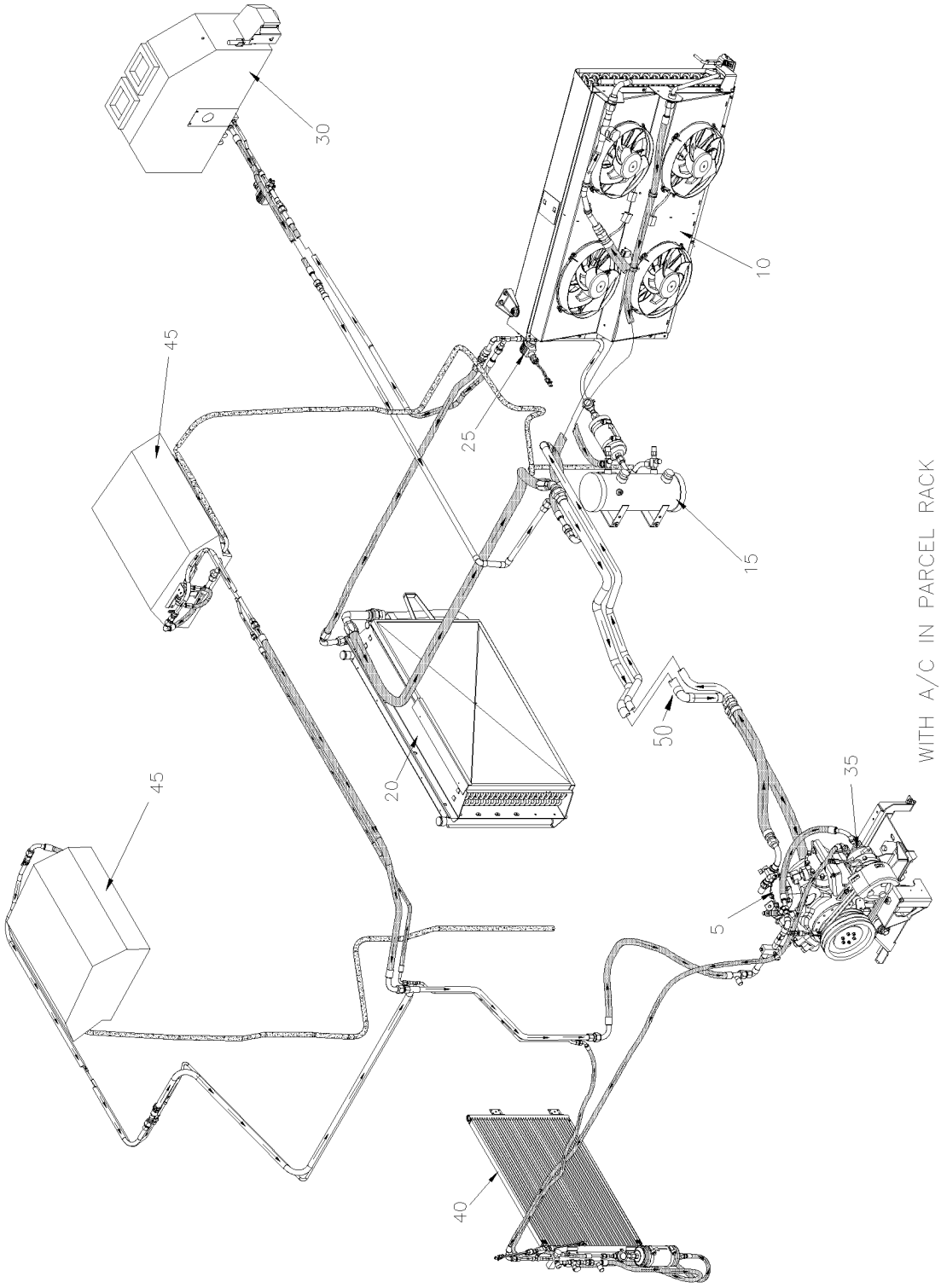

From Y-7046 Up to 8-9339	DATE: 01/2014	PAGE: Y2-2200-00

AIR CONDITIONING SYSTEM

ITEM	PART	DESCRIPTION	XL45	MTH40	MTH45	MTH45S	NOTE
5	Y2-2245-00	**A/C COMPRESSOR 05G - INSTALLATION**					
5	Y2-2250-00	**A/C COMPRESSOR ASSY 05G - THREE PORT**					
5	Y2-2250-01	**A/C COMPRESSOR ASSY 05G - TWIN PORT**					
10	Y2-2255-00	**CONDENSOR - INSTALLATION LARGE SYSTEM**					
10	Y2-2260-05	**CONDENSOR FAN - INSTALLATION**					
10	Y2-2260-99	**CONDENSOR 4 FANS - INSTALLATION / "RETROFIT"**					
15	Y2-2270-00	**RECEIVER TANK & FILTER DRYER**					
20	Y2-2205-00	**HEATER & EVAPORATOR COIL - INSTALLATION**					
20	Y2-2205-01	**HEATER & EVAPORATOR COIL - INSTALLATION**					
25	Y2-2208-10	**REFRIGERANT SOLENOID VALVE**					
30	Y2-2225-00	**DRIVER'S HEATER & DEFROSTER ASSY**					
30	Y2-2225-01	**DRIVER'S HEATER & DEFROSTER ASSY**					
30	Y2-2225-02	**DRIVER'S HEATER & DEFROSTER ASSY WITH MUX**					
35	Y2-2245-10	**A/C COMPRESSOR SMALL - INSTALLATION**					
35	Y2-2245-11	**A/C COMPRESSOR SMALL - INSTALLATION**					
40	Y2-2245-30	**A/C AUXILIARY LINE / PARCEL RACK**					
40	Y2-2245-31	**A/C AUXILIARY LINE / PARCEL RACK**					
45	Y2-2240-20	**BLOWER VENTILATION - PARCEL RACK**					
50	Y2-2222-15	**A/C LINE REAR SECTION W/05G**					

From Y-7046 Up to 8-9339	DATE: 01/2014	PAGE: Y2-2200-00

AIR CONDITIONING SYSTEM

ITEM	PART	DESCRIPTION	XL45	MTH40	MTH45	MTH45S	NOTE

From Y-7046 Up to 8-9339	DATE: 01/2014	PAGE: Y2-2200-05
HEATING SYSTEM		

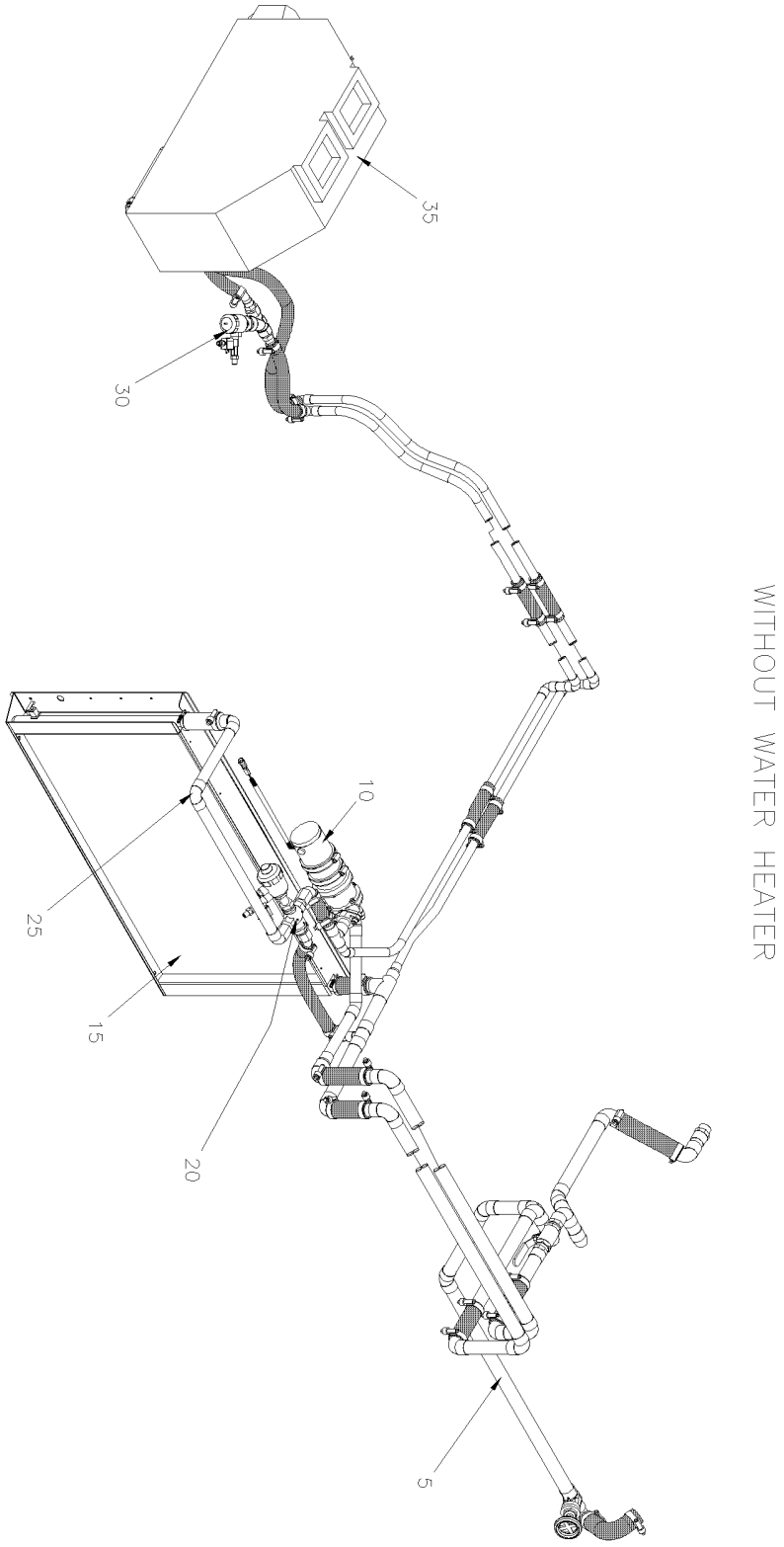

From Y-7046 Up to 8-9339	DATE: 01/2014	PAGE: Y2-2200-05
HEATING SYSTEM		

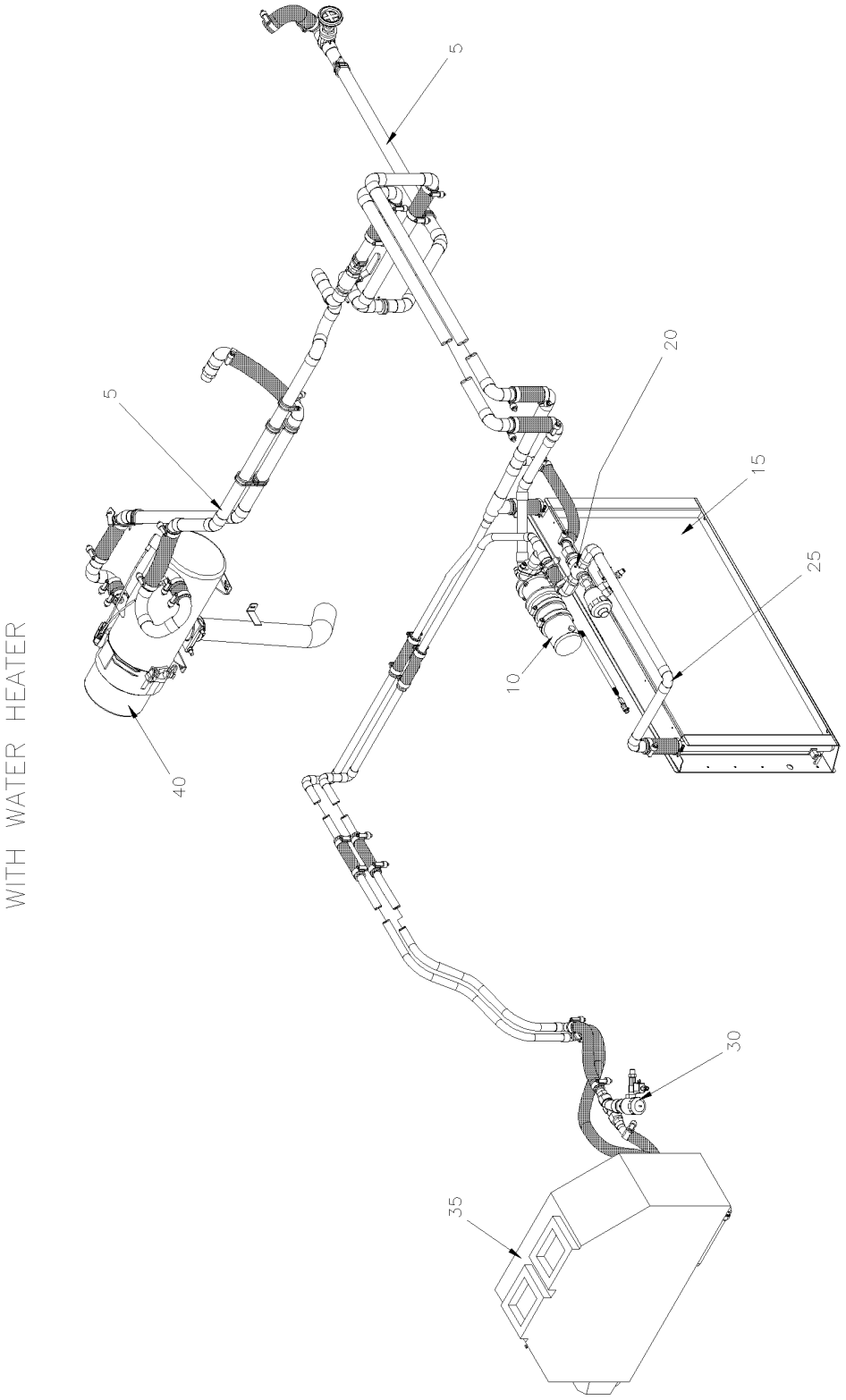

From Y-7046 Up to 8-9339	DATE: 01/2014	PAGE: Y2-2200-05

HEATING SYSTEM

ITEM	PART	DESCRIPTION	XL45	MTH40	MTH45	MTH45S	NOTE
5	Y2-2222-00	**HEATER LINE REAR SECTION - BUS**					
5	Y2-2222-01	**HEATER LINE REAR SECTION - BUS**					
5	Y2-2222-02	**HEATER LINE REAR SECTION - BUS**					
5	Y2-2222-30	**HEATER LINE REAR SECTION - MTH**					
5	Y2-2222-31	**HEATER LINE REAR SECTION - MTH**					
10	Y2-2206-00	**WATER PUMP #871052 & #871204**					
15	Y2-2205-00	**HEATER & EVAPORATOR COIL - INSTALLATION**					
15	Y2-2210-00	**HEATER & EVAPORATOR BLOWER - INSTALLATION**					
20	Y2-2207-00	**WATER VALVE - W/MAIN HEATER**					
20	Y2-2207-01	**WATER VALVE - HEATER**					
20	Y2-2207-02	**WATER VALVE - HEATER**					
25	Y2-2210-10	**WATER PUMP & FILTER - INSTALLATION**					
30	Y2-2207-10	**WATER VALVE - W/DRIVER'S HEATER**					
35	Y2-2230-00	**DEFROSTER - INSTALLATION**					
40	Y2-2350-10	**WATER HEATER - INSTALLATION**					
40	Y2-2350-11	**WATER HEATER - INSTALLATION**					

From Y-7046 Up to 8-9339	DATE: 01/2014	PAGE: Y2-2200-05

HEATING SYSTEM

ITEM	PART	DESCRIPTION	XL45	MTH40	MTH45	MTH45S	NOTE

From Y-7046 Up to 8-9339	DATE: 01/2014	PAGE: Y2-2200-50

AIR CONDITIONING SYSTEM

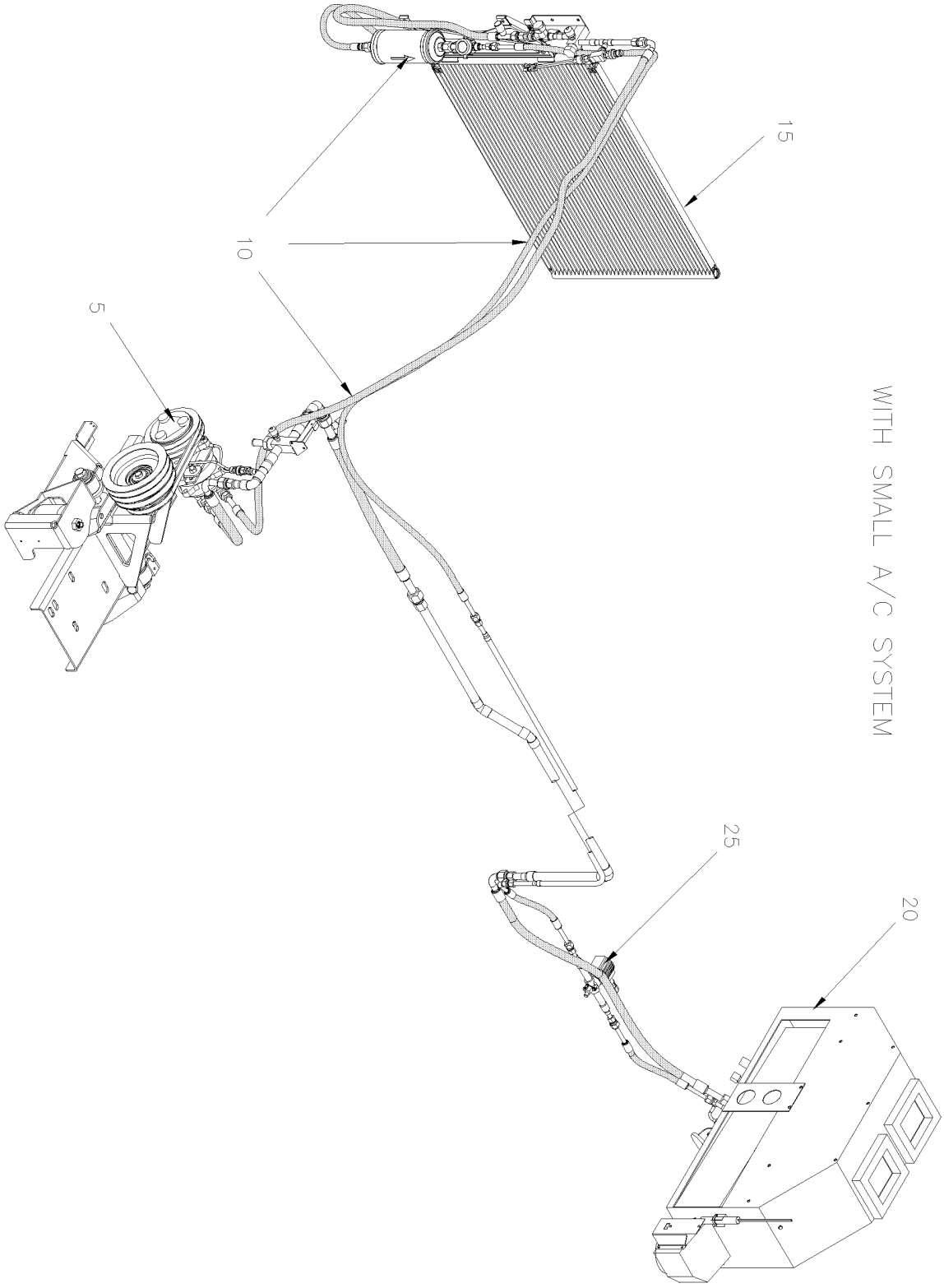

From Y-7046 Up to 8-9339	DATE: 01/2014	PAGE: Y2-2200-50
AIR CONDITIONING SYSTEM		

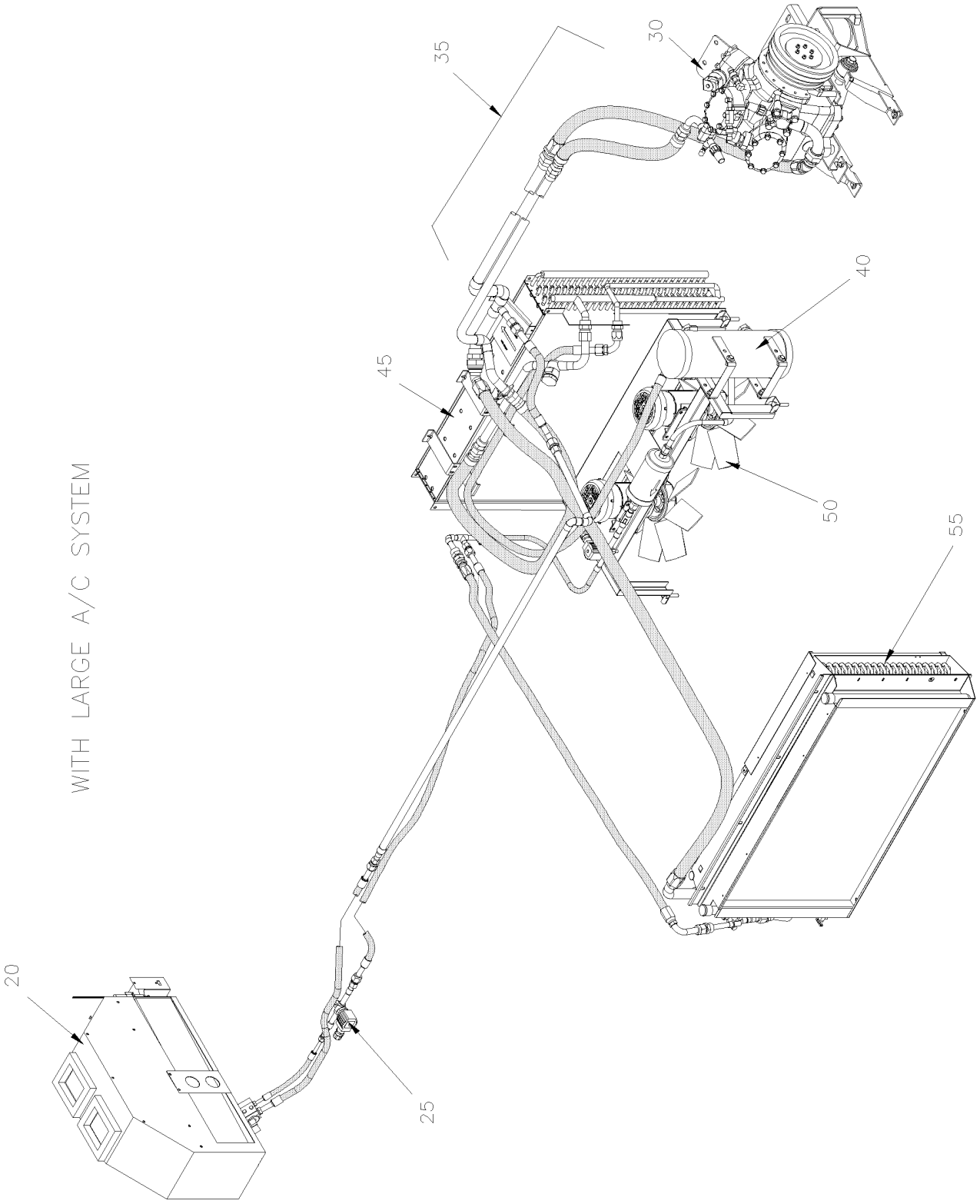

From Y-7046 Up to 8-9339	DATE: 01/2014	PAGE: Y2-2200-50

AIR CONDITIONING SYSTEM

ITEM	PART	DESCRIPTION	XL45	MTH40	MTH45	MTH45S	NOTE
5	Y2-2245-10	**A/C COMPRESSOR SMALL - INSTALLATION**					
5	Y2-2245-11	**A/C COMPRESSOR SMALL - INSTALLATION**					
10	Y2-2222-50	**SMALL A/C LINES & HOSES WITH DETROIT S-60 & R134A**					
10	Y2-2222-51	**SMALL A/C LINES & HOSES WITH DETROIT S-60 & R134A**					
15	Y2-2255-10	**CONDENSOR - INSTALLATION SMALL SYSTEM**					
15	Y2-2255-11	**CONDENSOR - INSTALLATION SMALL SYSTEM**					
20	Y2-2225-00	**DRIVER'S HEATER & DEFROSTER ASSY**					
20	Y2-2225-01	**DRIVER'S HEATER & DEFROSTER ASSY**					
20	Y2-2225-02	**DRIVER'S HEATER & DEFROSTER ASSY WITH MUX**					
20	Y2-2230-00	**DEFROSTER - INSTALLATION**					
25	Y2-2208-10	**REFRIGERANT SOLENOID VALVE**					
30	Y2-2245-00	**A/C COMPRESSOR 05G - INSTALLATION**					
30	Y2-2245-03	**A/C COMPRESSOR 05G - INSTALLATION - MUX**					
30	Y2-2250-00	**A/C COMPRESSOR ASSY 05G - THREE PORT**					
30	Y2-2250-01	**A/C COMPRESSOR ASSY 05G - TWIN PORT**					
35	Y2-2222-15	**A/C LINE REAR SECTION W/05G**					
40	Y2-2270-00	**RECEIVER TANK & FILTER DRYER**					
45	Y2-2255-00	**CONDENSOR - INSTALLATION LARGE SYSTEM**					
50	Y2-2260-05	**CONDENSOR FAN - INSTALLATION**					
55	Y2-2205-00	**HEATER & EVAPORATOR COIL - INSTALLATION**					
55	Y2-2205-01	**HEATER & EVAPORATOR COIL - INSTALLATION**					

From Y-7046 Up to 8-9339	DATE: 01/2014	PAGE: Y2-2200-50

AIR CONDITIONING SYSTEM

ITEM	PART	DESCRIPTION	XL45	MTH40	MTH45	MTH45S	NOTE

From Y-7046 Up to 6-8906	DATE: 01/2014	PAGE: Y2-2205-00
HEATER & EVAPORATOR COIL - INSTALLATION		

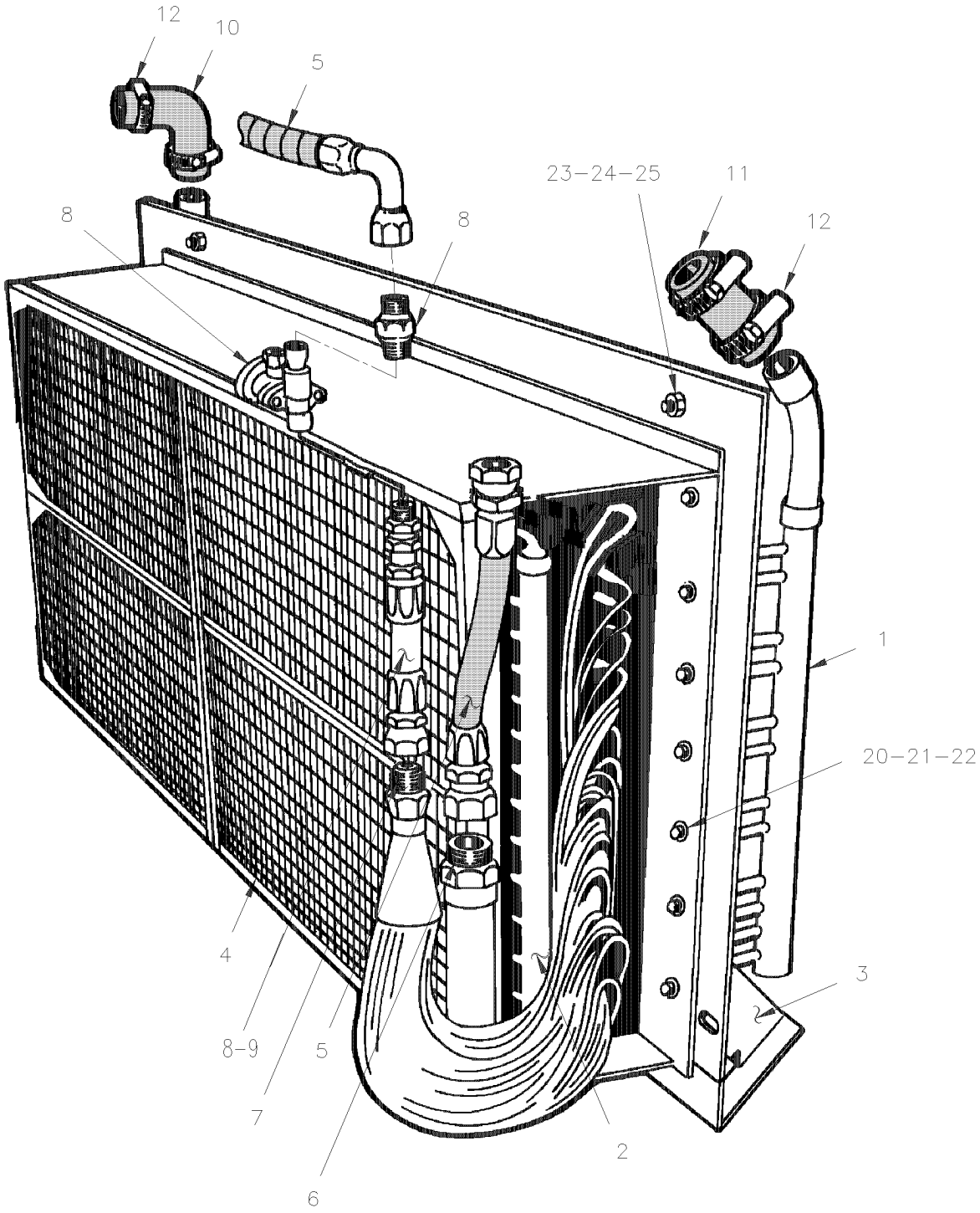

From Y-7046 Up to 6-8906	DATE: 01/2014	PAGE: Y2-2205-00

HEATER & EVAPORATOR COIL - INSTALLATION

ITEM	PART	DESCRIPTION	XL45	MTH40	MTH45	MTH45S	NOTE
1	870674	COIL HEATER	1				
. NS	501354	. NEEDLE VALVE	1				
1	870674	COIL HEATER	1				
. NS	501354	. NEEDLE VALVE	1				
NS	506337	RUBBER CHANNEL / 3/32" x 11/32" INT "U" SHAPE / ROUND C.T.L.	AR				
1	506337	RUBBER CHANNEL / 3/32" x 11/32" INT "U" SHAPE / ROUND C.T.L.	AR				
2	871070	COIL EVAPORATOR	1				
2	871070	COIL EVAPORATOR Up to 6-8805		1	1	1	
3	452096	SUPPORT ASSY / EVAPORATOR	1				
3	452096	SUPPORT ASSY / EVAPORATOR Up to 6-8805		1	1	1	
NS	371793	RUBBER 36" X 3/4" X 3/16" THICK	1				
3	371793	RUBBER 36" X 3/4" X 3/16" THICK Up to 6-8805		1	1	1	
NS	371735	RUBBER 4 3/4" X 2 7/8" X 3/16" THICK	2				
3	371735	RUBBER 4 3/4" X 2 7/8" X 3/16" THICK Up to 6-8805		1	1	1	
NS	506277	TAPE RUB ADH1 CC POL 1/2" x 3/4" x 15' / GREY 2520X	AR				
3	506277	TAPE RUB ADH1 CC POL 1/2" x 3/4" x 15' / GREY 2520X Up to 6-8805		AR	AR	AR	
4	Y2-2221-00	**UNDER FLOOR AIR DUCTING**					
5	Y2-2270-00	**RECEIVER TANK & FILTER DRYER**					
6	501803	O-RING / ORS FITTING / #20 NEO	AR	AR	AR	AR	
NS	501829	O-RING	AR	AR	AR	AR	
7	507209	O-RING .424 ID	1	1	1	1	
8	Y2-2208-00	**A/C EXPANSION VALVE**					
9	453072	TUBE STABILISATOR A/C PRESSURE	1				
9	453072	TUBE STABILISATOR A/C PRESSURE Up to 6-8905		1	1	1	
10	372131	ELBOW 90° REDUCER 1 1/8" I.D.W/3 1/4" x 1 3/8 I.D. W 5 1/4" C/C	1				
101	372131	ELBOW 90° REDUCER 1 1/8" I.D.W/3 1/4" x 1 3/8 I.D. W 5 1/4" C/C Up to 6-8805		1		1	
11	051383	HOSE / W/CENTRAL A/C SYSTEM / 1 3/8" I.D. X 150MM	1				
113	051383	HOSE / W/CENTRAL A/C SYSTEM / 1 3/8" I.D. X 150MM Up to 6-8805		1		1	
114	503392	. HOSE SILICONE 4 PLY 1 3/8" I.D. x 4'	AR	AR	AR	AR	
12	504292	HOSE CLAMP / 1"5/16-2"1/4 SS / E.T. 28	4	4	4	4	
20	500386	SCREW MA RND PH #10-24x1/2 ZP	20	20	20	20	
21	500470	WASHER LO SPT .193x.334x.047 ZP	20	20	20	20	
22	500964	WASHER FL .203x.500x.047 ZP	20	20	20	20	
23	500044	SCREW CAP HEX 3/8-24x3/4 G5 ZP	2	2	2	2	
24	500478	WASHER LO SPT .380x.683x.094 ZP	AR	AR	AR	AR	
25	500444	WASHER FL .406x.812x.065 ZP	2	2	2	2	

From 6-8806 Up to 8-9339	DATE: 01/2014	PAGE: Y2-2205-01

HEATER & EVAPORATOR COIL - INSTALLATION

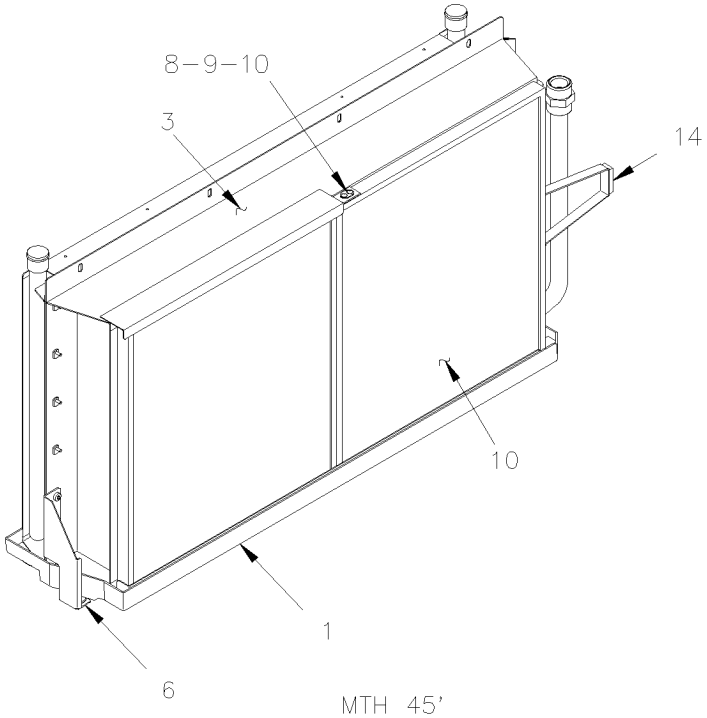

MTH 45'

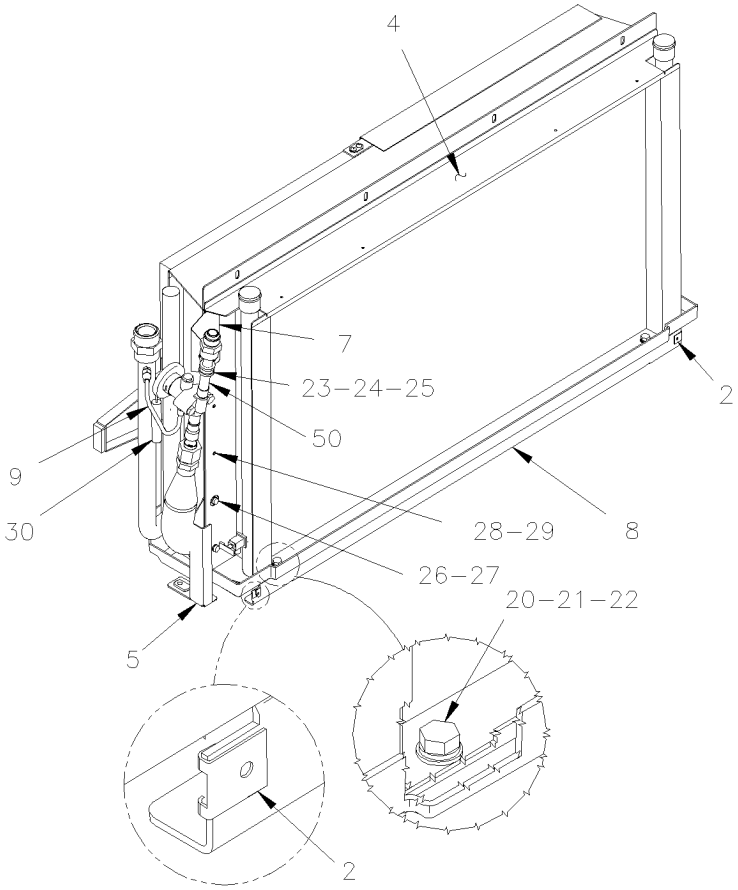

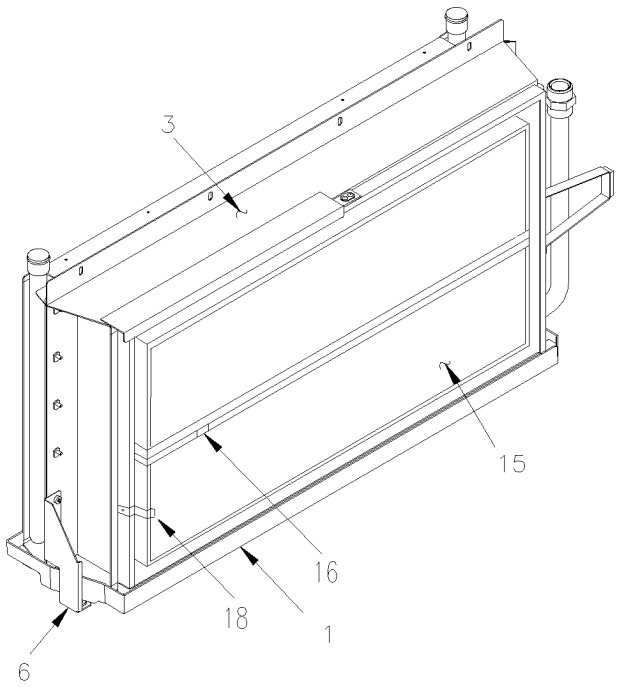

MTH 40' & MTH 45' ENT.

From 6-8806 Up to 8-9339	DATE: 01/2014	PAGE: Y2-2205-01

HEATER & EVAPORATOR COIL - INSTALLATION

ITEM	PART	DESCRIPTION	XL45	MTH40	MTH45	MTH45S	NOTE
1	453994	DRAIN PAN		1	1	1	
2	481249	NUT		2	2	2	
3	950390	COIL EVAPORATOR		1	1	1	
4	871372	COIL HEATER		1	1	1	
5	453983	SUPPORT EVAPORATOR / FORWARD		1	1	1	
6	453984	SUPPORT EVAPORATOR / BACKWARD		1	1	1	
7	454257	SUPPORT VALVE EXPANSION		1	1	1	
8	453982	SUPPORT HEATER CORE		1	1	1	
9	454256	TUBE STABILISATOR A/C PRESSURE		1	1	1	
10	374150P	FILTER ASSY			1		
. NS	871379	. FILTER 1" x 21" x 19"			2		
. NS	284439	. PLATE, STRAP RETAINING / OBLONG			2		
. NS	379060	. HANDLE 20" x 6"			1		
11	871379	. FILTER 1" x 21" x 19"			2		
11	284439	. PLATE, STRAP RETAINING / OBLONG 16.5MM x 25.4MM W/2 HOLES			4		
12	504379	. RIVET POP DOME OE 3/16x1/4 SS			AR		
12	505507	. STRAP NYLON 1" WIDE / S.L.			AR		
13	504340	. RIVET POP DOME OE 1/8x3/16 SS			AR		
NS	506040	. TAPE RUB ADH1 CC EPDM 5/16" x 3/4" x 25' / BLACK OR GREY 144X			AR		
14	372910	. HANDLE 6" x 6"			1		
15	871383	FILTER 1" x 38" x 10 1/2"		2		2	
16	374231	SLIDING GUIDE 55MM		1		1	
17	374228	HANDLE UPPER W/RETAINER SLOT		1		1	
18	374232	SUPPORT LOWER GUIDE		1		1	
20	502780	SCREW CAP HEX M8-1.25x25 SS EMN		1	1	1	
21	5001341	WASHER FL 8.4x17.0x1.6 SS		1	1	1	
23	952629	CLAMP / 5/8" I.D.		1	1	1	
24	500588	SCREW CAP HEX M4-0.7x20 G8.8 ZP / REPLACED BY: 500414		1	1	1	
25	500964	WASHER FL .203x.500x.047 ZP		1	1	1	
26	955269	SCREW CAP HEX M6-1.0x12 G8.8 ZG603		6	6	6	
27	502573	WASHER FL 6.4x12.5x1.6 SS		4	4	4	
28	500510	SCREW MA BDG PH #10-32x3/4 SS EMN		8	8	8	
29	500914	WASHER LO SPT .193x.334x.047 ZG603		8	8	8	
30	680091	TAPE INSULATING / A/C PIPE / 1/8" x 2" x 30' / BLACK PT-1		1	1	1	
50	Y2-2208-00	**A/C EXPANSION VALVE**	1				
NS	504340	RIVET POP DOME OE 1/8x3/16 SS		AR		AR	

From Y-7046 Up to 4-8205	DATE: 01/2014	PAGE: Y2-2206-00
WATER PUMP #871052 & #871204		

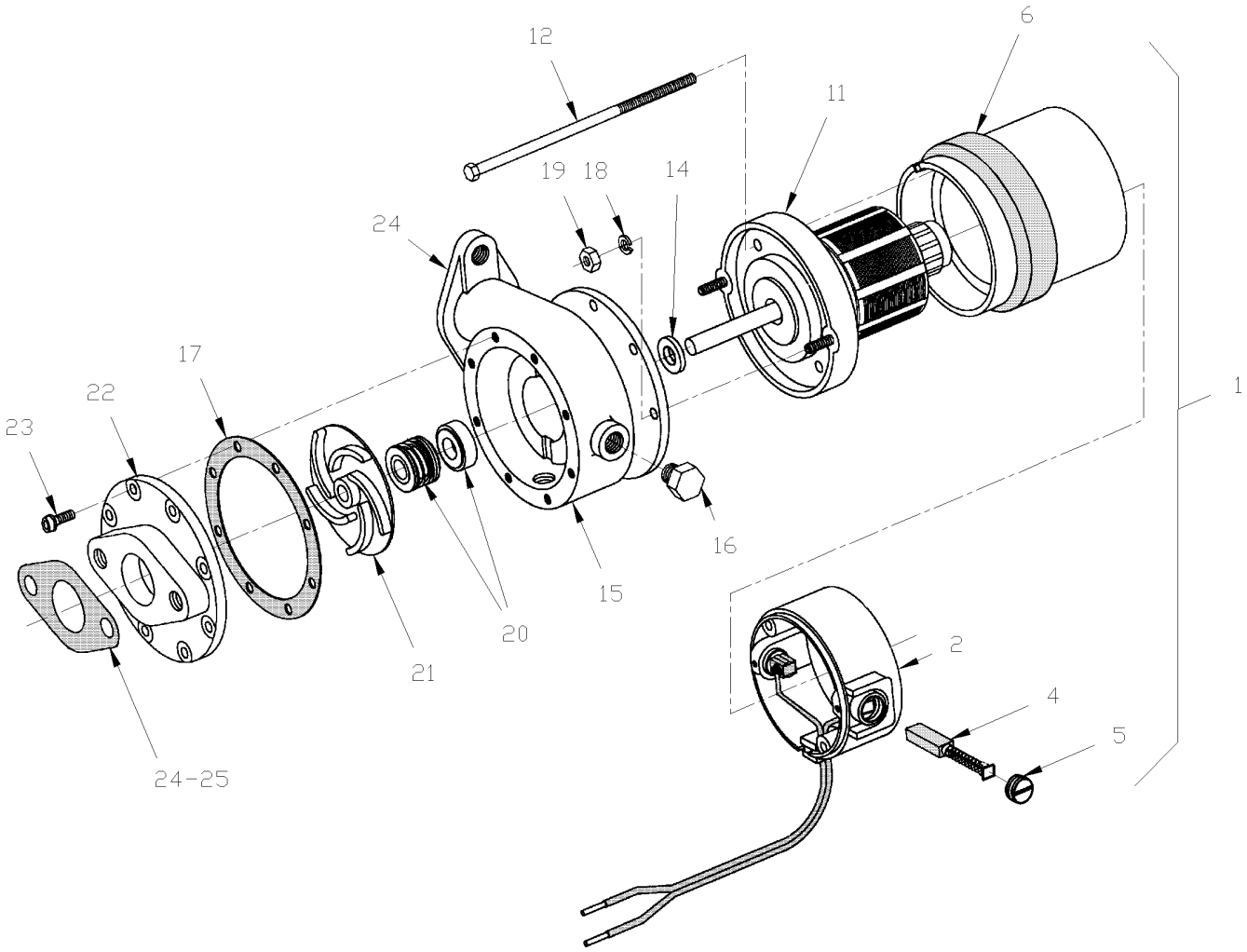

From Y-7046 Up to 4-8205	DATE: 01/2014	PAGE: Y2-2206-00

WATER PUMP #871052 & #871204

ITEM	PART	DESCRIPTION	XL45	MTH40	MTH45	MTH45S	NOTE
	372536	PUMP WATER ASSY W/CONNECTORS, RUBBER ADH & / REPLACED BY: 374027		1	1	1	A
NS	504026	. HOSE CLAMP / 2"13/16-3"3/4 SS / HS-52		2	2	2	
NS	506728	. TAPE RUB ADH1 NEO 1/4" x 3/4" x 10' / BLACK		AR	AR	AR	
NS	373222	. PUMP WATER ASSY W/CONNECTORS / REPLACED BY: K373222	1				B
NS	561566	. . CONNECTOR / WEATHER PACK / PH 2C / BLACK / PED 12010973	1				
NS	561568	. . PIN TERMINAL / 16-14 / PED 12089305	2				
NS	561786	. . CABLE SEAL / GRAY / PED 12010293	2				
	871204	. . WATER PUMP ASSY / 24V / (31726) / REPLACED BY: 374027	1	1	1	1	R
1		. . . MOTOR ASSY (28538)	1	1	1	1	
2	N.S.P.	. . . HEAD ASSY (28884)	1	1	1	1	2
NS	N.S.S.	. . . . BRUSH HOLDER	2	2	2	2	1
4	871062	. . . BRUSH	2	2	2	2	
5	871063	. . . CAP BRUSH	2	2	2	2	
6	N.S.P.	. . . STATOR ASSY (28883)	1	1	1	1	2
11	N.S.P.	. . . ARMATURE ADAPTOR ASSY (28882)	1	1	1	1	2
NS	N.S.S.	. . . BEARING	2	2	2	2	1
12	N.S.S.	. . . STUD CASE #10-32 X 5"	2	2	2	2	1
14	870440	. . SLINGER	1	1	1	1	
15	N.S.P.	. . CARRIER / PUMP (21586)	1	1	1	1	2
16	501303	. . PLUG SQUARE HEAD / PIPE FITTING / 1/8NPT-M BR	2	2	2	2	
17	870439	. . GASKET / CARRIER Up to 1-7409	1	1	1	1	
17	871205	. . GASKET / CARRIER From 1-7410	1	1	1	1	
18	500470	. . WASHER LO SPT .193x.334x.047 ZP	2	2	2	2	
19	500700	. . NUT HEX #10-32 ZP	2	2	2	2	
20	870437	. . KIT SEAL Up to 1-7409	1	1	1	1	
20	871310	. . KIT SEAL From 1-7410	1	1	1	1	
21	870436	. . IMPELLER	1	1	1	1	
22	N.S.P.	. . FLANGE ADAPTOR (21634)	1	1	1	1	2
23	N.S.P.	. . SCREW #8-32 X 1/2 / BRASS	8	8	8	8	2
24	870441	GASKET PUMP INLET & OUTLET	2	2	2	2	
25	871207	QUAD RING	1	1	1	1	
		1) NOT SOLD SEPARATELY					
		2) NOT SOLD BY PREVOST (SEE MANUFACTURING PART					
		NUMBER AT END OF DESCRIPTION LINE)					
		A) W/SMALL SYSTEM / UNDER DRIVER'S FLOOR					
		B) W/LARGE SYSTEM / IN EVAPORATOR COMPARTMENT					
		R) THOSE PUMP MAY BE SUPPERSEEDED BY KIT #374027					
		WITH "SEALLESS PUMP" SEE PAGE Y2-2206-99					

From 4-8206 Up to 8-9339	DATE: 01/2014	PAGE: Y2-2206-01
WATER PUMP #871342 SEALLESS		

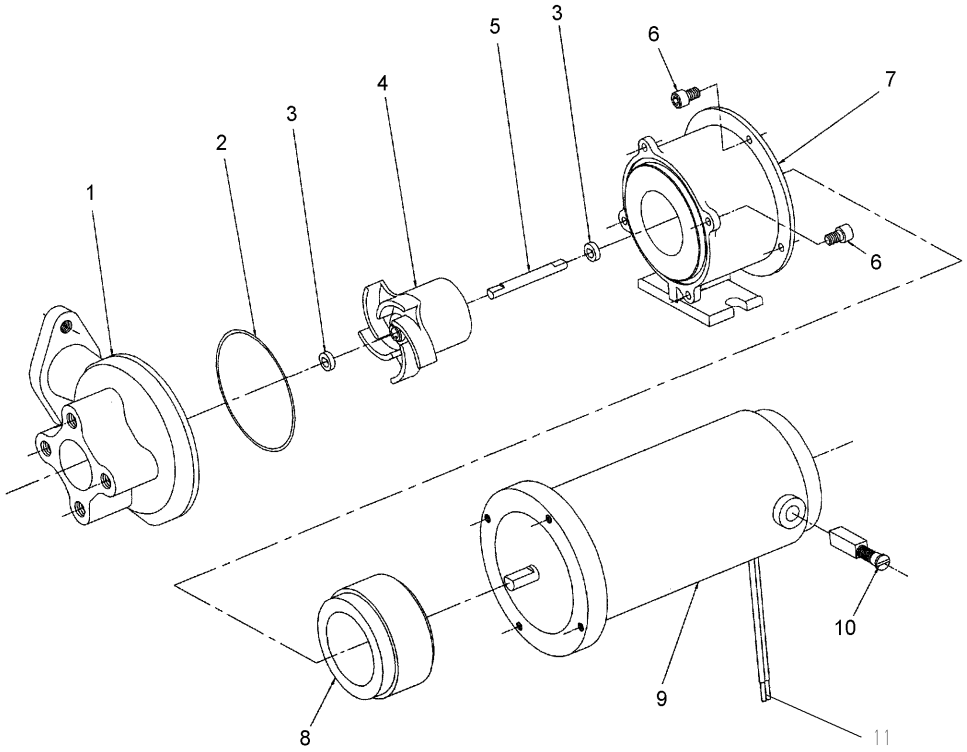

From 4-8206 Up to 8-9339	DATE: 01/2014	PAGE: Y2-2206-01
WATER PUMP #871342 SEALLESS		

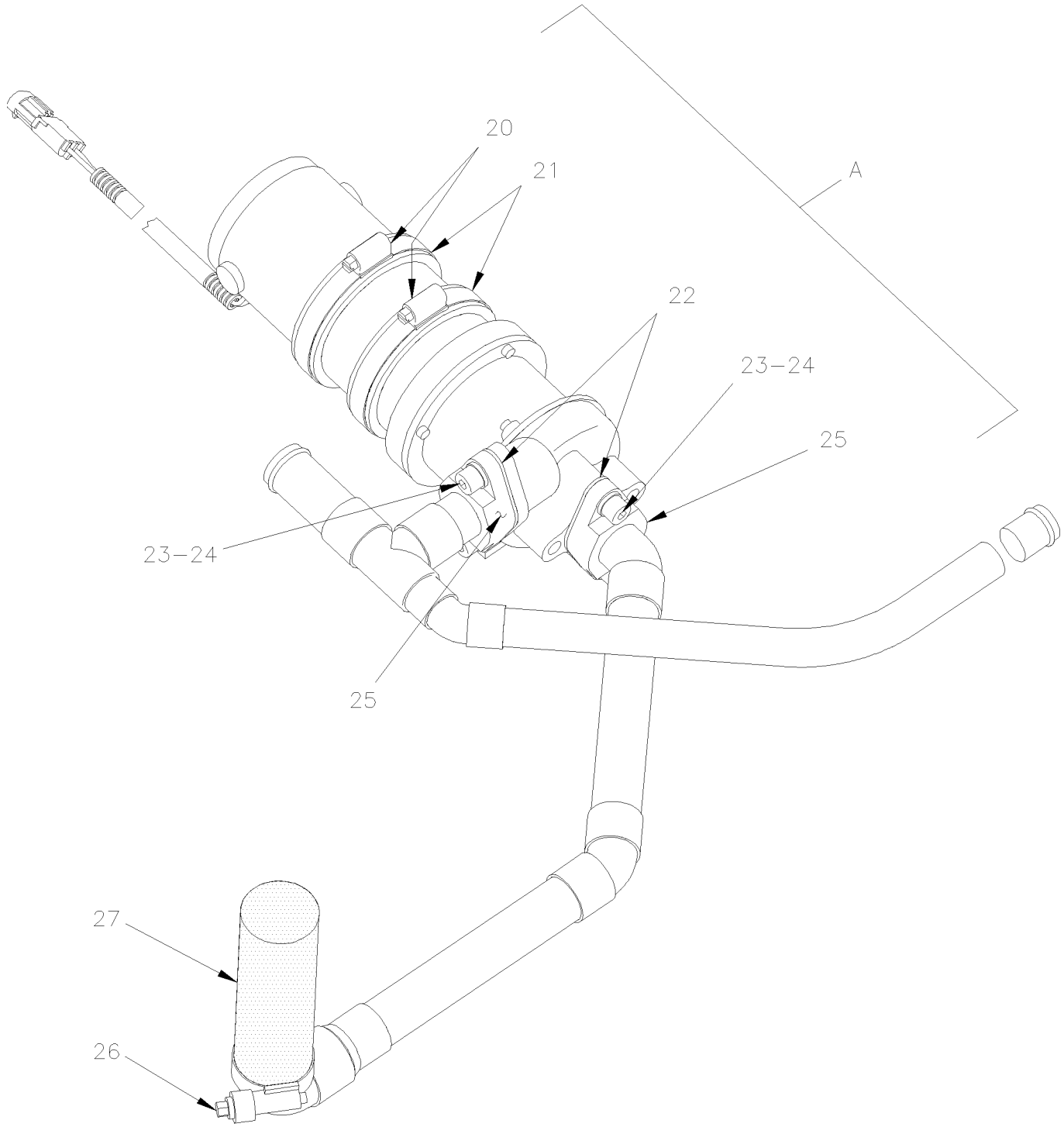

From 4-8206 Up to 8-9339	DATE: 01/2014	PAGE: Y2-2206-01

WATER PUMP #871342 SEALLESS

ITEM	PART	DESCRIPTION	XL45	MTH40	MTH45	MTH45S	NOTE
	374032	PUMP WATER ASSY WITH CONNECTOR / SEALLESS MODEL	1				
	374032	PUMP WATER ASSY WITH CONNECTOR / SEALLESS MODEL Up to 6-8805		1	1	1	
	871414	WATER PUMP ASSY / 24V / SEALLESS	1	1	1	1	A
	871342	. WATER PUMP ASSY / 24V / SEALLESS / REPLACED BY: 871414	1	1	1	1	
1	N.S.S.	. . HOUSING	1	1	1	1	1
2	871236	. . O-RING	1	1	1	1	
3	871239	. . WASHER SS	2	2	2	2	
4	871240	. . ROTOR ASSY	1	1	1	1	
5	871241	. . SHAFT SS	1	1	1	1	
6	N.S.S.	. . SCREW CAP HEXS 8-32x3/8	8	8	8	8	1
7	N.S.S.	. . ADAPTOR	1	1	1	1	1
8	871242	. . DRIVE MAGNET	1	1	1	1	
9	871322	. . MOTOR ASSY 24V	1	1	1	1	
10	871323	. . BRUSH	2	2	2	2	
11	561566	. CONNECTOR / WEATHER PACK / PH 2C / BLACK / PED 12010973	1	1	1	1	
NS	561568	. PIN TERMINAL / 16-14 / PED 12089305	2	2	2	2	
NS	561786	. CABLE SEAL / GRAY / PED 12010293	2	2	2	2	
20	504235	HOSE CLAMP / 3"9/16"-4"1/2 SS / HS-64 From 6-8806		2	2	2	
21	506728	TAPE RUB ADH1 NEO 1/4" x 3/4" x 10' / BLACK From 6-8806		AR	AR	AR	
22	870441	GASKET PUMP INLET & OUTLET From 6-8806		2	2	2	
23	5001580	SCREW CAP HEXS 3/8-16x7/8 From 6-8806		4	4	4	
24	500478	WASHER LO SPT .380x.683x.094 ZP From 6-8806		4	4	4	
25	871206	FLANGE ADAPTOR / W/QUAD RING From 6-8806		2	2	2	
26	504657	HOSE CLAMP / 1"1/16-2" C.T. 9424 From 6-8806		1	1	1	
27	503392	HOSE SILICONE 4 PLY 1 3/8" I.D. x 4' From 6-8806		AR	AR	AR	
A	Call Order Desk	PUMP WATER ASSY W/PIPE & CONNECTOR / SEALLESS MODEL From 6-8806		1	1	1	P
		1) NOT SOLD SEPARATELY					
		P) CALL ORDER DESK FOR SPECIFIC APPLICATION					
		(V.I.N.)					
		A) THIS PUMP IS PACKAGING INDIVIDUALLY WITHOUT					
		ELECTRICAL CONNECTORS					

From 4-8206 Up to 8-9339	DATE: 01/2014	PAGE: Y2-2206-01

WATER PUMP #871342 SEALLESS

ITEM	PART	DESCRIPTION	XL45	MTH40	MTH45	MTH45S	NOTE

From Y-7046 Up to 6-8906	DATE: 01/2014	PAGE: 871327
WATER PUMP / "ROTRON" 24 V "SPECIAL OPTION"		

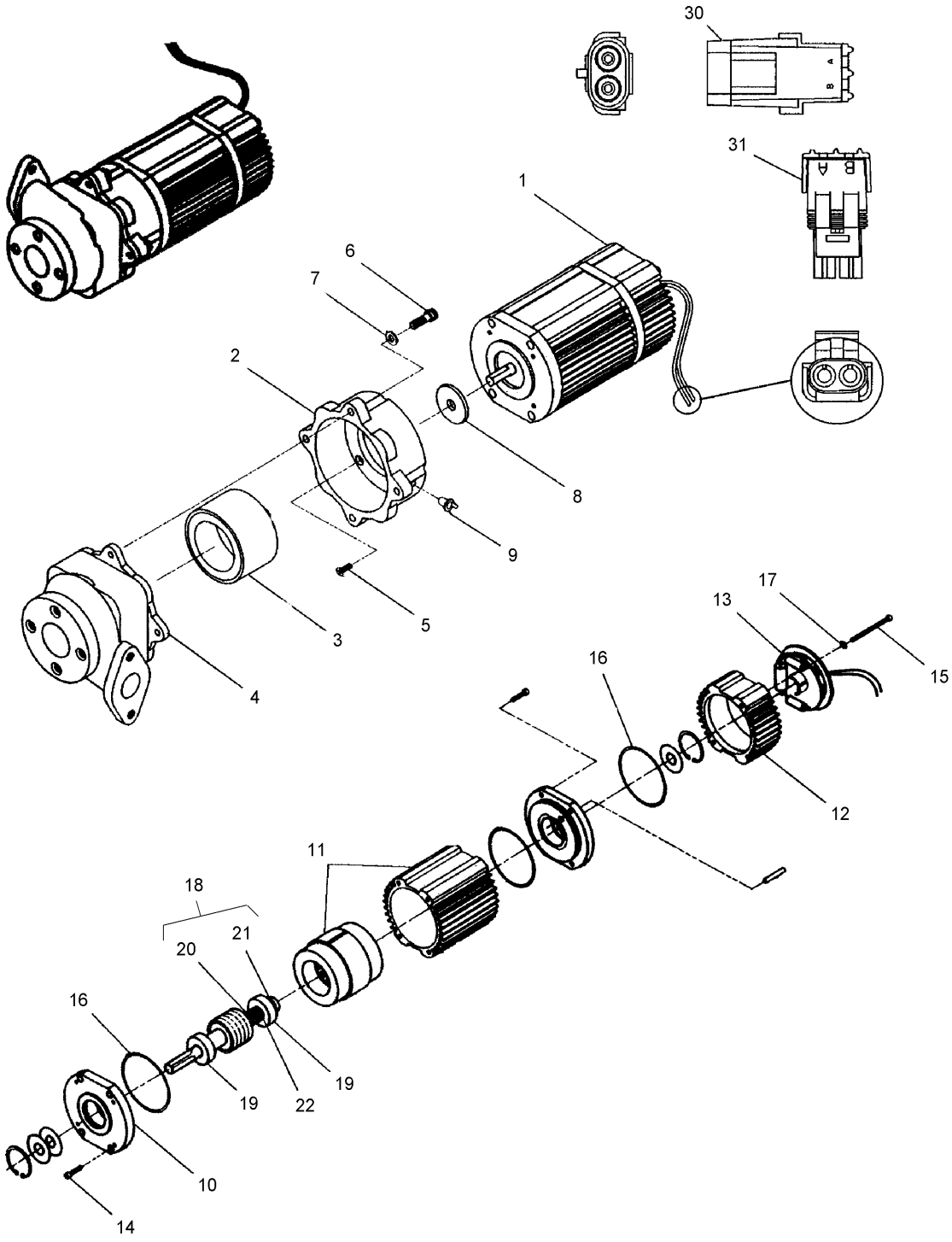

From Y-7046 Up to 6-8906	DATE: 01/2014	PAGE: 871327

WATER PUMP / "ROTRON" 24 V "SPECIAL OPTION"

ITEM	PART	DESCRIPTION	XL45	MTH40	MTH45	MTH45S	NOTE
		WATER PUMP ASSY / 24V / SEAL & BRUSHLESS	1				
	N14497	WATER PUMP ASSY / 24V / SEAL & BRUSHLESS / REPLACED BY: G1101105	AR				
	G1101105	WATER PUMP ASSY / 24V / SEAL & BRUSHLESS	AR				
	N55189	WATER PUMP ASSY / 24V / SEAL & BRUSHLESS / REPLACED BY: 871327	1				
1	N8881521	. MOTOR 24 V / REPLACED BY: G1017727	1				
1	G1017727	. MOTOR 24V	1				
2	N8881522	. CONNECTING HOUSING	1				
3	N8881523	. DRIVE MAGNET / REPLACED BY: G1017729	1				
3	G1017729	. DRIVE MAGNET	1				
4	N8881524	. SEALLESS PUMP HOUSING / REPLACED BY: G1017730	1				
4	G1017730	. PUMP ASSY	1				
5	N8881525	. SCREW #8-32 X 0.50	4				
6	N8881526	. SCREW 1/4-20 X 0.88	4				
7	N8881527	. WASHER / REPLACED BY: G1017733	4				
7	G1017733	. WASHER	1				
8	N8881528	. WASHER / REPLACED BY: G1014848	1				
8	G1014848	. WASHER	1				
9	N8881529	. PLUG	1				
9	195971	. PLUG	1				
10	G1017712	. ENDBELL	1				
11	N8881530	. FRONT HOUSING	1				
12	G1018142	. REAR HOUSING	1				
13	G1017716	. ENCODER 24 V	1				
14	G1017717	. SCREW #8-32 X 0.75	4				
15	G1017718	. SCREW #8-32 X 2.25	2				
16	G1017719	. O-RING	2				
17	G1017720	. WASHER #8	2				
18	G1017714	. SHAFT AND ROTOR ASM	1				
19	G1017721	. . BEARING	2				
19	19503536	. . BEARING	2				
19	N8881544	. . BEARING	2				
20	G1017723	. . SPRING	1				
21	G1017724	. . SNAP RING	1				
22	G1017725	. . SHIM BEARING	1				
30	561605	. CONNECTOR / WEATHER PACK / PH 1C / BLACK / PED 12010996	1				
31	561690	. CONNECTOR / WEATHER PACK / SH 2C / BLACK / PED 12015792	1				

From Y-7046 Up to 8-9339	DATE: 01/2014	PAGE: Y2-2206-50
WATER PUMP #871032		

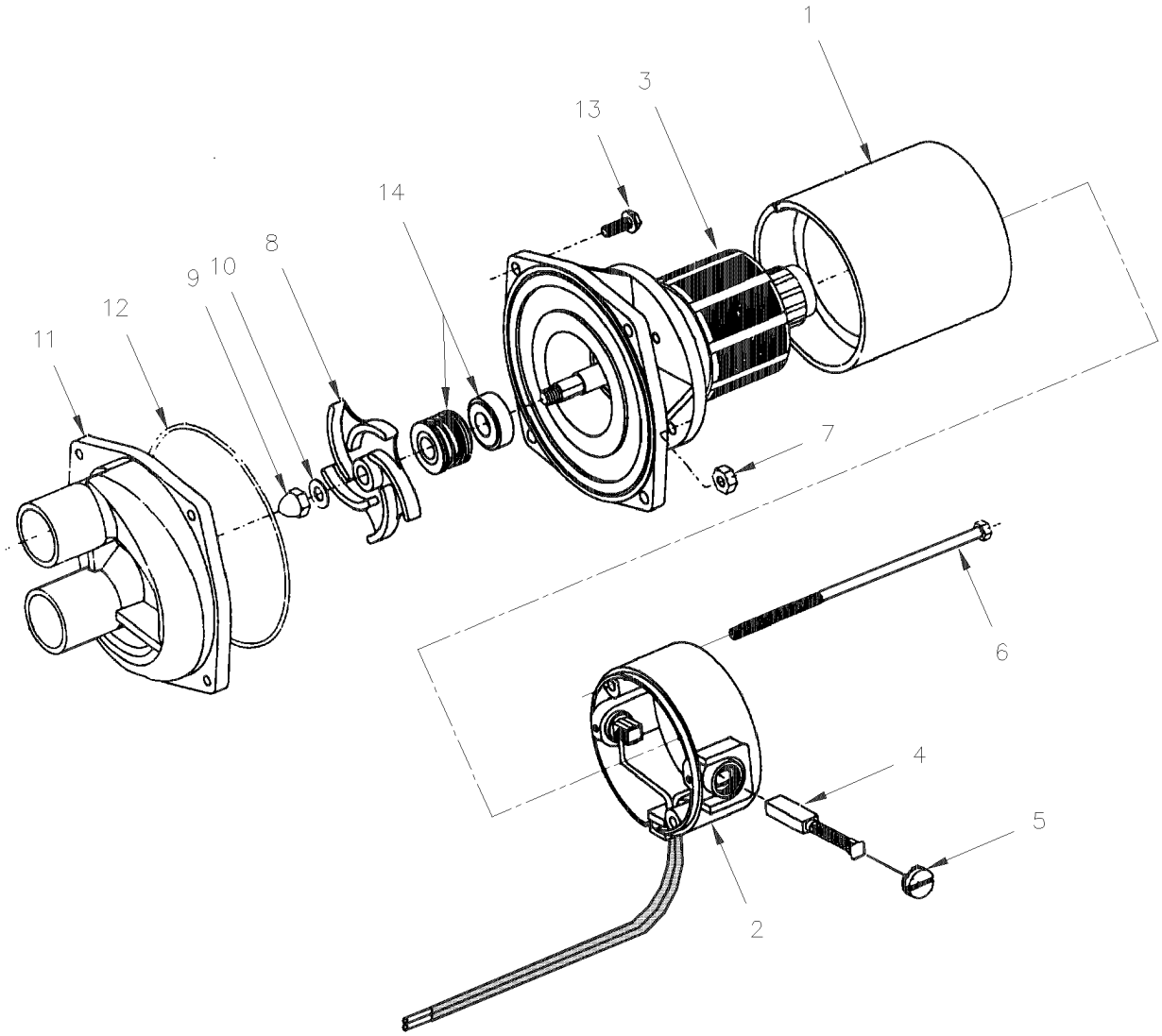

From Y-7046 Up to 8-9339	DATE: 01/2014	PAGE: Y2-2206-50

WATER PUMP #871032

ITEM	PART	DESCRIPTION	XL45	MTH40	MTH45	MTH45S	NOTE
	064174	PUMP WATER ASSY WITH CONNECTOR / REPLACED BY: 871032		1	1	1	
NS	561566	. CONNECTOR / WEATHER PACK / PH 2C / BLACK / PED 12010973		1	1	1	
NS	561568	. PIN TERMINAL / 16-14 / PED 12089305		1	1	1	
NS	561786	. CABLE SEAL / GRAY / PED 12010293		2	2	2	
NS	871032	. WATER PUMP ASSY / 24V / (29232)		1	1	1	
1	N.S.P.	. . STATOR ASSY (28840)		1	1	1	2
2	N.S.P.	. . HEAD ASSY (28836)		1	1	1	2
NS	N.S.S.	. . BRUSH HOLDER		2	2	2	1
3	N.S.P.	. . ARMATURE ADAPTOR ASSY (28839)		1	1	1	2
NS	N.S.S.	. . . BEARING		2	2	2	1
4	871062	. . BRUSH		2	2	2	
5	871063	. . CAP BRUSH		2	2	2	
6	N.S.P.	. . STUD CASE #10-32 X 5"		2	2	2	2
NS	500470	. . WASHER LO SPT .193x.334x.047 ZP		2	2	2	
7	500700	. . NUT HEX #10-32 ZP		2	2	2	
8	871066	. IMPELLER		1	1	1	
10	871068	. GASKET PUMP		2	2	2	
11	871047	. COVER		1	1	1	
12	871065	. O-RING		1	1	1	
13	N.S.P.	. SCREW #8-32 X 1/2 / BRASS		8	8	8	2
14	871064	. KIT SEAL		1	1	1	
14	N.S.P.	. MOTOR ASSY / (28748)		1	1	1	2
15	482616	SUPPORT WATER PUMP		1	1	1	
		1) NOT SOLD SEPARATELY					
		2) NOT SOLD BY PREVOST (SEE MANUFACTURING PART NUMBER AT END OF DESCRIPTION LINE)					

From Y-7046 Up to 8-9339	DATE: 01/2014	PAGE: Y2-2206-99
WATER PUMP #871342 SEALLESS "RETROFIT"		

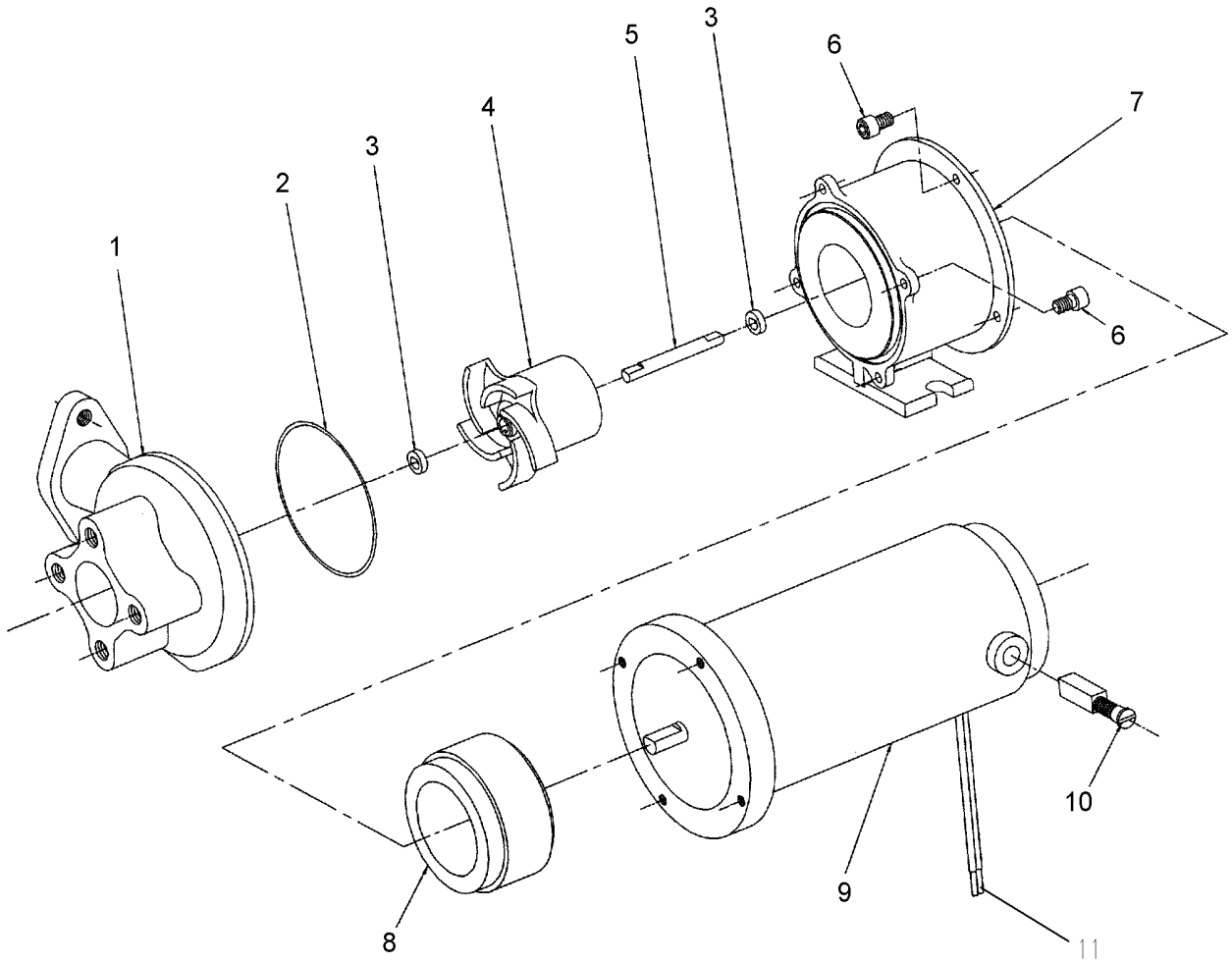

From Y-7046 Up to 8-9339	DATE: 01/2014	PAGE: Y2-2206-99

WATER PUMP #871342 SEALLESS "RETROFIT"

ITEM	PART	DESCRIPTION	XL45	MTH40	MTH45	MTH45S	NOTE
	374032	PUMP WATER ASSY WITH CONNECTOR / SEALLESS MODEL	1	1	1	1	
	871414	. WATER PUMP ASSY / 24V / SEALLESS	1	1	1	1	B
	871342	. WATER PUMP ASSY / 24V / SEALLESS / REPLACED BY: 871414	1	1	1	1	
1	N.S.S.	. . HOUSING	1	1	1	1	1
2	871236	. . O-RING	1	1	1	1	
3	871239	. . WASHER SS	2	2	2	2	
4	871240	. . ROTOR ASSY	1	1	1	1	
5	871241	. . SHAFT SS	1	1	1	1	
6	N.S.S.	. . SCREW CAP HEXS 8-32x3/8	8	8	8	8	1
7	N.S.S.	. . ADAPTOR	1	1	1	1	1
8	871242	. . DRIVE MAGNET	1	1	1	1	
9	871322	. . MOTOR ASSY 24V	1	1	1	1	
10	871323	. . . BRUSH	2	2	2	2	
11	561566	. CONNECTOR / WEATHER PACK / PH 2C / BLACK / PED 12010973	1	1	1	1	
NS	561568	. PIN TERMINAL / 16-14 / PED 12089305	2	2	2	2	
NS	561786	. CABLE SEAL / GRAY / PED 12010293	2	2	2	2	
NS	374027	KIT, RETROFIT SEALLESS WATER PUMP Up to 4-8205	1	1	1	1	
. NS	IS-03012A	. SEE INSTRUCTION SHEET Up to 4-8205	1	1	1	1	
NS	374053	WATER PUMP ASSY W/SUPPORT / W/"XL" / MTH Up to 4-8205		1	1	1	A
. NS	IS-03044	. SEE INSTRUCTION SHEET Up to 4-8205		1	1	1	

1) NOT SOLD SEPARATELY

A) WITH SMALL A/C SYSTEM

B) THIS PUMP IS PACKAGING INDIVIDUALLY WITHOUT ELECTRICAL CONNECTORS

From Y-7046 Up to 2-7881	DATE: 01/2014	PAGE: Y2-2207-00
WATER VALVE - W/MAIN HEATER		

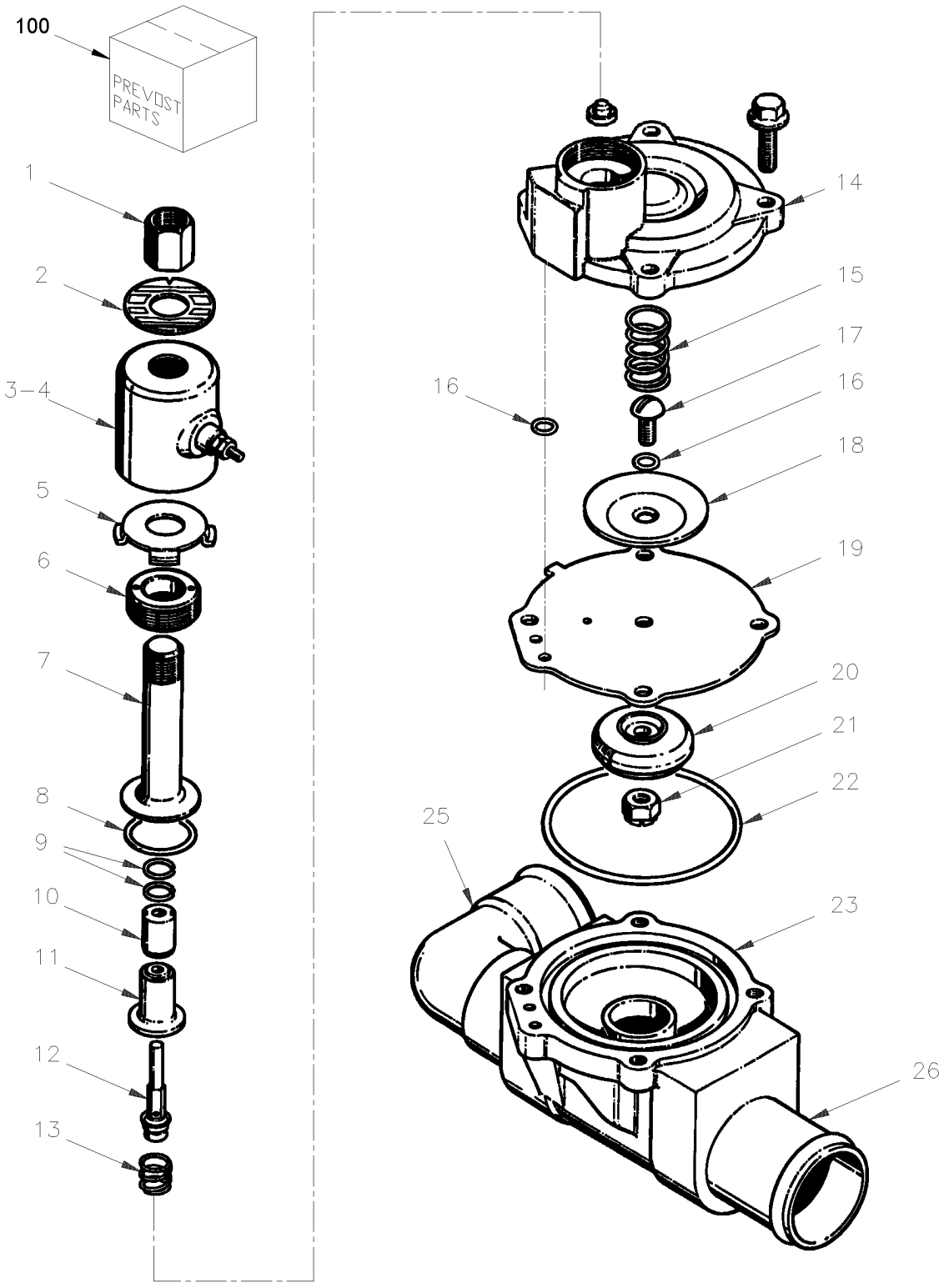

From Y-7046 Up to 2-7881	DATE: 01/2014	PAGE: Y2-2207-00

WATER VALVE - W/MAIN HEATER

ITEM	PART	DESCRIPTION	XL45	MTH40	MTH45	MTH45S	NOTE
	371798	WATER VALVE ASSY / REPLACED BY: K371798	1	1	1	1	
NS	870873	. VALVE WATER / 24 V	1	1	1	1	B
	374669	. VALVE WATER / 24 V / ASSY	1	1	1	1	B
1	870866	. . NUT, SKINNER VALVE COIL MOUNT	1	1	1	1	
2	N.S.S.	. . NAMEPLATE	1	1	1	1	1
3	N.S.S.	. . HOUSING	1	1	1	1	1
4	870865	. . COIL 24V	1	1	1	1	
5	N.S.S.	. . FLUX PLATE	1	1	1	1	1
6	N.S.S.	. . FLANGE	1	1	1	1	1
7	870968	. . SLEEVE ASSY	1	1	1	1	
8	870853	. . SEAL FLANGE / REPLACED BY: 870876	1	1	1	1	
9	870854	. . SNUBBER / REPLACED BY: 870876	1	1	1	1	
10	870855	. . PLUNGER ASSY / REPLACED BY: 870876	1	1	1	1	
11	N.S.S.	. . STOP	1	1	1	1	1
12	870852	. . SEAL RETAINER / REPLACED BY: 870876	1	1	1	1	
13	870851	. . SPRING / REPLACED BY: 870876	1	1	1	1	
14	N.S.S.	. . COVER	1	1	1	1	1
15	870856	. . SPRING / REPLACED BY: 870876	1	1	1	1	
16	870857	. . O-RING / REPLACED BY: 870876	1	1	1	1	
17	N.S.S.	. . SCREW	1	1	1	1	1
18	N.S.S.	. . SUPPORT PLATE	1	1	1	1	1
19	870859	. . DIAPHRAGM / REPLACED BY: 870876	1	1	1	1	
20	870860	. . SEAL / REPLACED BY: 870864	1	1	1	1	
21	N.S.S.	. . LOCK NUT	1	1	1	1	1
22	870822	. . O-RING	1	1	1	1	
23	N.S.S.	. . BODY	1	1	1	1	1
NS	371725	SUPPORT / WATER VALVE	1	1	1	1	
100	870876	KIT REPAIR	1	1	1	1	A
		1) NOT SOLD SEPARATELY					
		A) THIS KIT INCLUDES ITEMS #8,9,10,12,13,15,16					
		19,20,22					
		B) 870873 NO LONGER AVAILABLE REPLACE BY 374669					

From 2-7822 Up to 8-9339	DATE: 01/2014	PAGE: Y2-2207-01
WATER VALVE - HEATER		

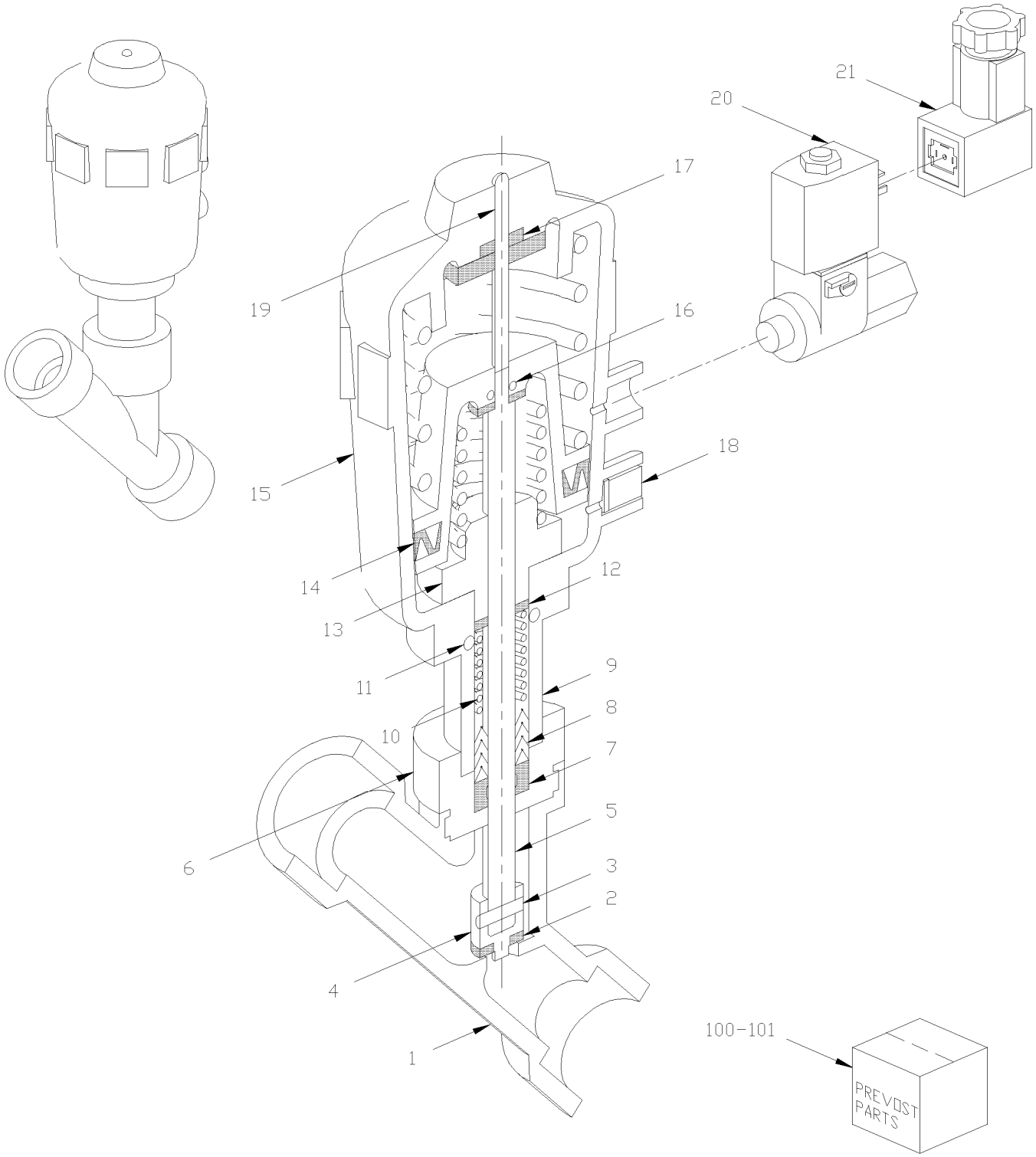

From 2-7822 Up to 8-9339	DATE: 01/2014	PAGE: Y2-2207-01
WATER VALVE - HEATER		

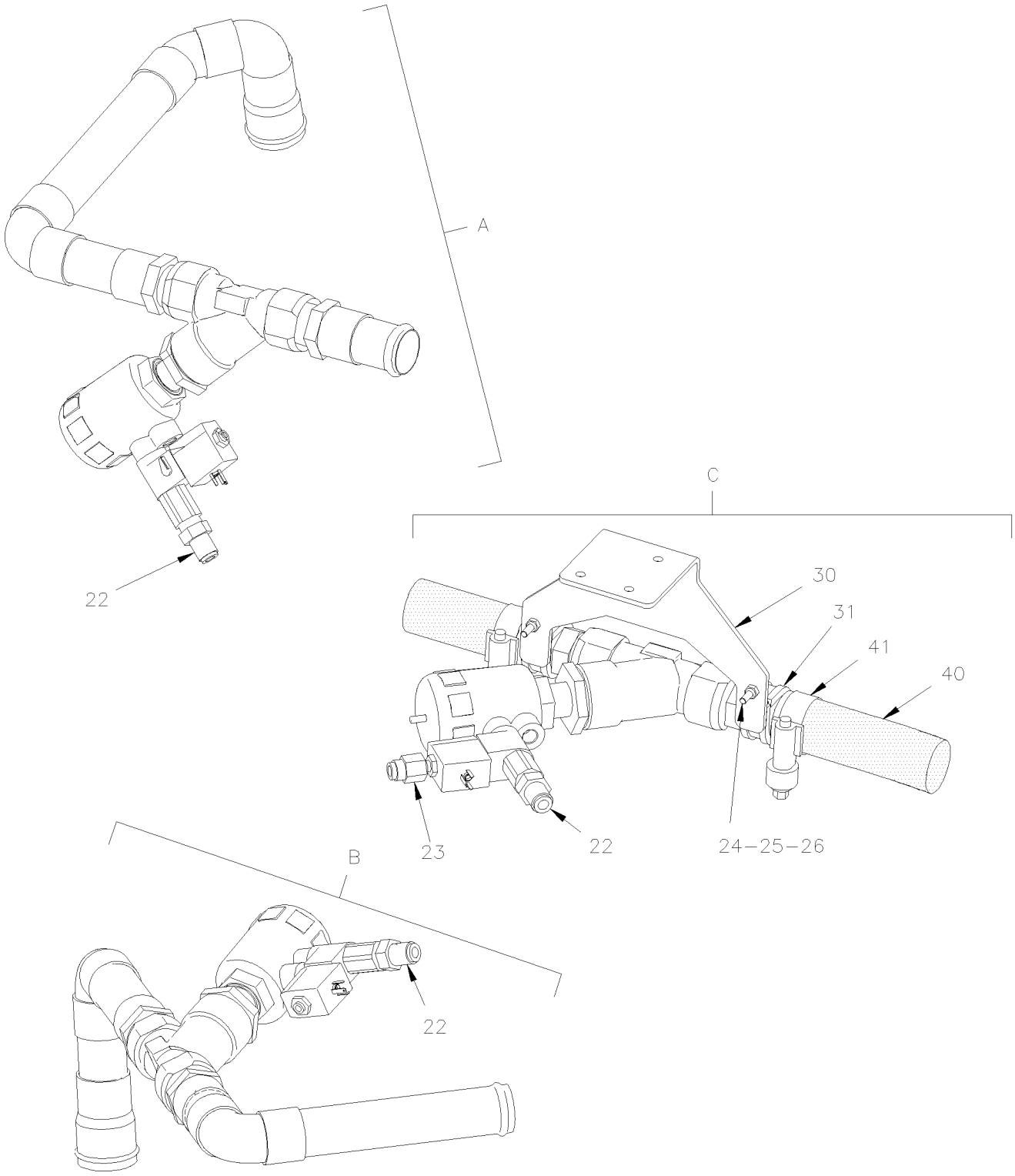

From 2-7822 Up to 8-9339	DATE: 01/2014	PAGE: Y2-2207-01

WATER VALVE - HEATER

ITEM	PART	DESCRIPTION	XL45	MTH40	MTH45	MTH45S	NOTE
	871252	. WATER VALVE ASSY / 24V	1	1	1	1	
1	N.S.S.	. . BODY	1	1	1	1	1
2	N.S.S.	. . SEAL	1	1	1	1	1
3	N.S.S.	. . PIN	1	1	1	1	1
4	N.S.S.	. . SWIVEL PLATE	1	1	1	1	1
5	N.S.S.	. . SPINDLE	1	1	1	1	1
6	N.S.S.	. . NIPPLE	1	1	1	1	1
7	N.S.S.	. . WIPER	1	1	1	1	1
8	N.S.S.	. . V-SEAL	3	3	3	3	1
9	N.S.S.	. . TUBE	1	1	1	1	1
10	N.S.S.	. . SPRING	1	1	1	1	1
11	N.S.S.	. . O-RING	1	1	1	1	1
12	N.S.S.	. . LIP SEAL	1	1	1	1	1
13	N.S.S.	. . SCREW	1	1	1	1	1
14	N.S.S.	. . CYLINDER SEAL	1	1	1	1	1
15	N.S.S.	. . ACTUATOR CASING	1	1	1	1	1
16	N.S.S.	. . O-RING	1	1	1	1	1
17	N.S.S.	. . LIP SEAL	1	1	1	1	1
18	N.S.S.	. . CONE GLAND 1/8"	2	2	2	2	1
19	N.S.S.	. . POSITION INDICATOR	1	1	1	1	1
20	871313	. SOLENOID VALVE 24V 4 WATTS 1/8SPT X 1/4NPT	1	1	1	1	
. NS	871391	. . COIL 24V 4 WATTS	1	1	1	1	
21	563204	. CONNECTOR / SOCKET HOUSING ASSY 4C / BURKET 008-402-A	1	1	1	1	
22	641332	MALE CONNECTOR / PUSH-IN FITTING / #4x1/4NPT-M BR	1	1	1	1	
23	642028	MALE CONNECTOR / PUSH-IN FITTING / 6mm x M5-0.8 BR	1	1	1	1	
24	500588	SCREW CAP HEX M4-0.7x20 G8.8 ZP / REPLACED BY: 500414	2	2	2	2	
25	500438	WASHER FL .187x.437x.050 ZP	2	2	2	2	
26	500540	SCREW TP CAP HEX 5/16x1/4 ZP	2	2	2	2	
30	374147	SUPPORT WATER VALVE From 6-8806		1	1	1	A
31	952635	CLAMP / 1" I.D.	2	2	2	2	
40	503684	HOSE SILICONE 1 PLY 7/8" I.D. x 100' / S.L.	AR	AR	AR	AR	
41	504646	HOSE CLAMP / 11/16"-1"1/4 / C.T. 9412	2	2	2	2	
100	871311	SEAL KIT / WATER SIDE	1	1	1	1	
101	871312	SEAL KIT / AIR PISTON SIDE	1	1	1	1	
A	373864	WATER VALVE ASSY W/PIPE From 2-7882 Up to 6-8805		1	1	1	
B	373889	WATER VALVE ASSY W/PIPE From 2-7876	1				
C	Call Order Desk	WATER VALVE ASSY W/PIPE & SUPPORT From 6-8806		1	1	1	P
		1) NOT SOLD SEPARATELY					
		P) CALL ORDER DESK FOR SPECIFIC APPLICATION					
		(V.I.N.)					
		A) IN SPARE COMPARTMENT					

From 2-7822 Up to 8-9339	DATE: 01/2014	PAGE: Y2-2207-01

WATER VALVE - HEATER

ITEM	PART	DESCRIPTION	XL45	MTH40	MTH45	MTH45S	NOTE

From 6-8806 Up to 8-9339	DATE: 01/2014	PAGE: Y2-2207-02

WATER VALVE - HEATER

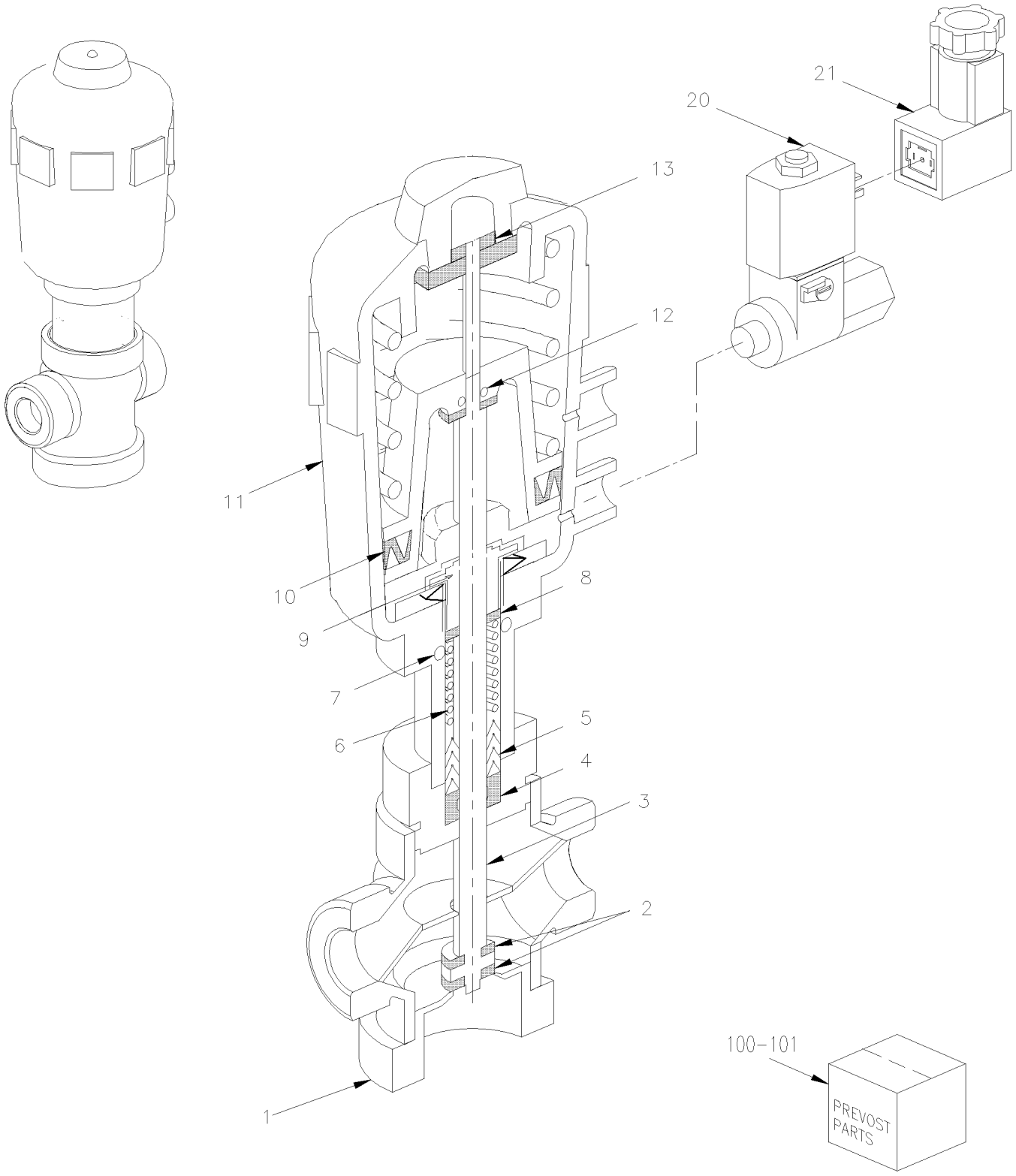

From 6-8806 Up to 8-9339	DATE: 01/2014	PAGE: Y2-2207-02
WATER VALVE - HEATER		

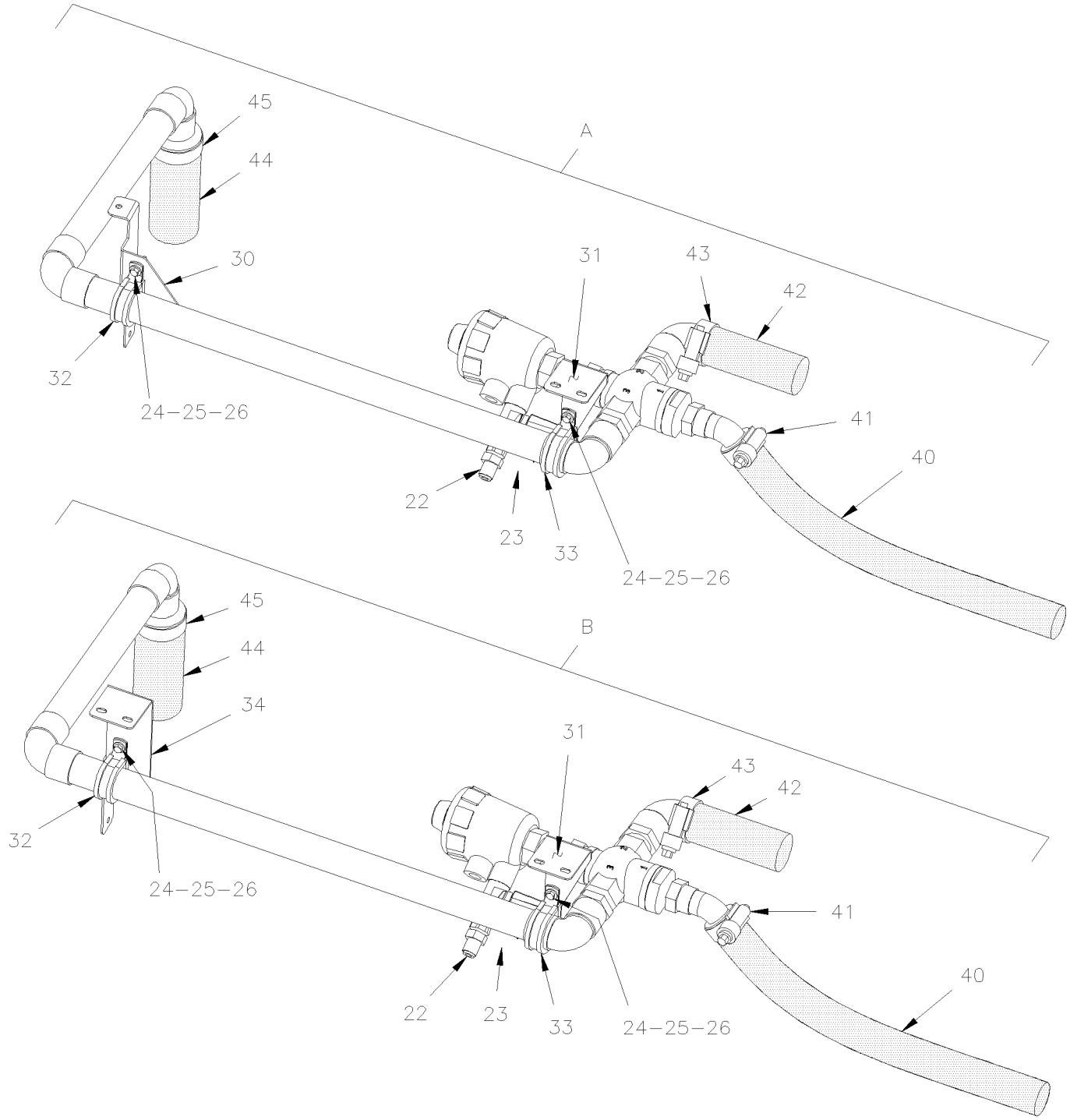

From 6-8806 Up to 8-9339	DATE: 01/2014	PAGE: Y2-2207-02

WATER VALVE - HEATER

ITEM	PART	DESCRIPTION	XL45	MTH40	MTH45	MTH45S	NOTE
	871381	. WATER VALVE ASSY / 24V / 3/WAY 3/4" NPT		1	1	1	
1	N.S.S.	. . BODY		1	1	1	1
2	N.S.S.	. . SEAL		1	1	1	1
3	N.S.S.	. . SPINDLE		1	1	1	1
4	N.S.S.	. . WIPER		1	1	1	1
5	N.S.S.	. . V-SEAL		3	3	3	1
6	N.S.S.	. . SPRING		1	1	1	1
7	N.S.S.	. . O-RING		1	1	1	1
8	N.S.S.	. . LIP SEAL		1	1	1	1
9	N.S.S.	. . SCREW PISTON		1	1	1	1
10	N.S.S.	. . CYLINDER SEAL		1	1	1	1
11	N.S.S.	. . ACTUATOR CASING		1	1	1	1
12	N.S.S.	. . O-RING.		1	1	1	1
13	N.S.S.	. . LIP SEAL		1	1	1	1
14	N.S.S.	. . CONE GLAND 1/8"		2	2	2	1
20	871390	. SOLENOID VALVE / 24V 4 WATTS		1	1	1	
. NS	871391	. . COIL 24V 4 WATTS		1	1	1	
21	563204	. CONNECTOR / SOCKET HOUSING ASSY 4C / BURKET 008-402-A		1	1	1	
22	641332	MALE CONNECTOR / PUSH-IN FITTING / #4x1/4NPT-M BR		1	1	1	
23	642028	MALE CONNECTOR / PUSH-IN FITTING / 6mm x M5-0.8 BR		1	1	1	
24	500588	SCREW CAP HEX M4-0.7x20 G8.8 ZP / REPLACED BY: 500414		2	2	2	
25	500438	WASHER FL .187x.437x.050 ZP		2	2	2	
26	500590	NUT HEX NYRT M4-0.7 ZP		2	2	2	
30	374194	SUPPORT WATER VALVE		1	1	1	
31	374217	SUPPORT WATER VALVE BACKWARD		1	1	1	
32	952637	CLAMP / 1"1/16 I.D.		1	1	1	
33	952639	CLAMP / 1"1/4 I.D.		1	1	1	
34	374195	SUPPORT WATER VALVE FORWARD		1		1	
40	503651	HOSE SILICONE 2PLY 7/8" I.D. x 3'		AR	AR	AR	
41	504646	HOSE CLAMP / 11/16"-1"1/4 / C.T. 9412		1	1	1	
42	503652	HOSE SILICONE 2PLY 1 1/8" I.D. x 3'		AR	AR	AR	
43	504658	HOSE CLAMP / 13/16"-1"3/4 / C.T. 9420		1	1	1	
44	503392	HOSE SILICONE 4 PLY 1 3/8" I.D. x 4'		AR	AR	AR	
45	504657	HOSE CLAMP / 1"1/16-2" C.T. 9424		1	1	1	
100	871389	SEAL KIT / WATER SIDE		1	1	1	
101	871388	SEAL KIT / AIR PISTON SIDE		1	1	1	
A	Call Order Desk	WATER VALVE ASSY W/PIPE & SUPPORT			1		P
. NS	374281	. ADAPTOR 7/8" I.D. WELDED x 3/4" B.P.T. MALE			1		
. NS	374282	. ADAPTOR 1 1/8" I.D. WELDED x 3/4" B.P.T. MALE			2		
B	374198P	WATER VALVE ASSY W/PIPE & SUPPORT		1		1	
		1) NOT SOLD SEPARATELY					
		P) CALL ORDER DESK FOR SPECIFIC APPLICATION					
		(V.I.N.)					

From 6-8806 Up to 8-9339	DATE: 01/2014	PAGE: Y2-2207-02

WATER VALVE - HEATER

ITEM	PART	DESCRIPTION	XL45	MTH400	MTH445	MTH445S	NOTE

From Y-7046 Up to 8-9339	DATE: 01/2014	PAGE: Y2-2207-10
WATER VALVE - W/DRIVER'S HEATER		

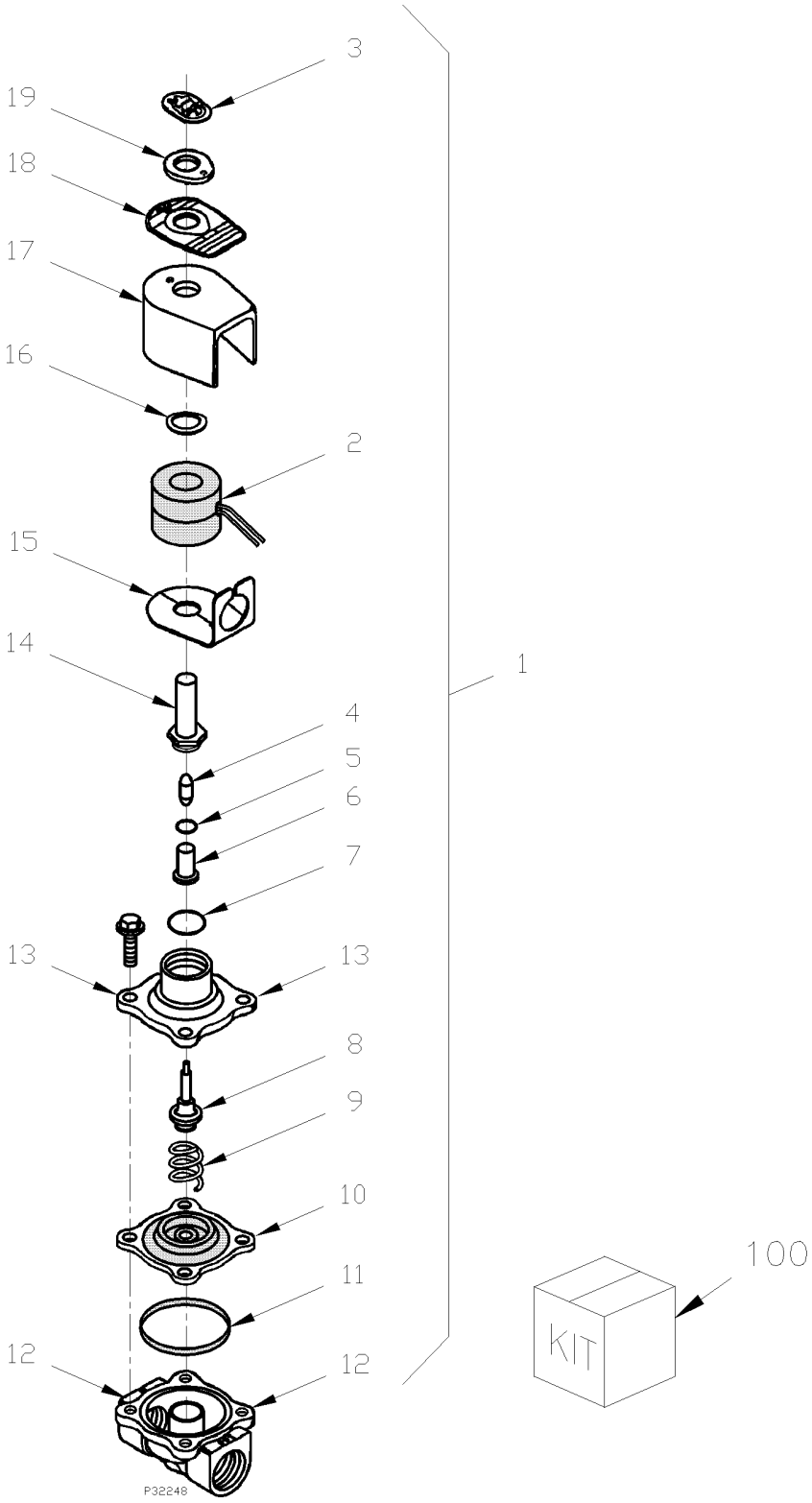

From Y-7046 Up to 8-9339	DATE: 01/2014	PAGE: Y2-2207-10
WATER VALVE - W/DRIVER'S HEATER		

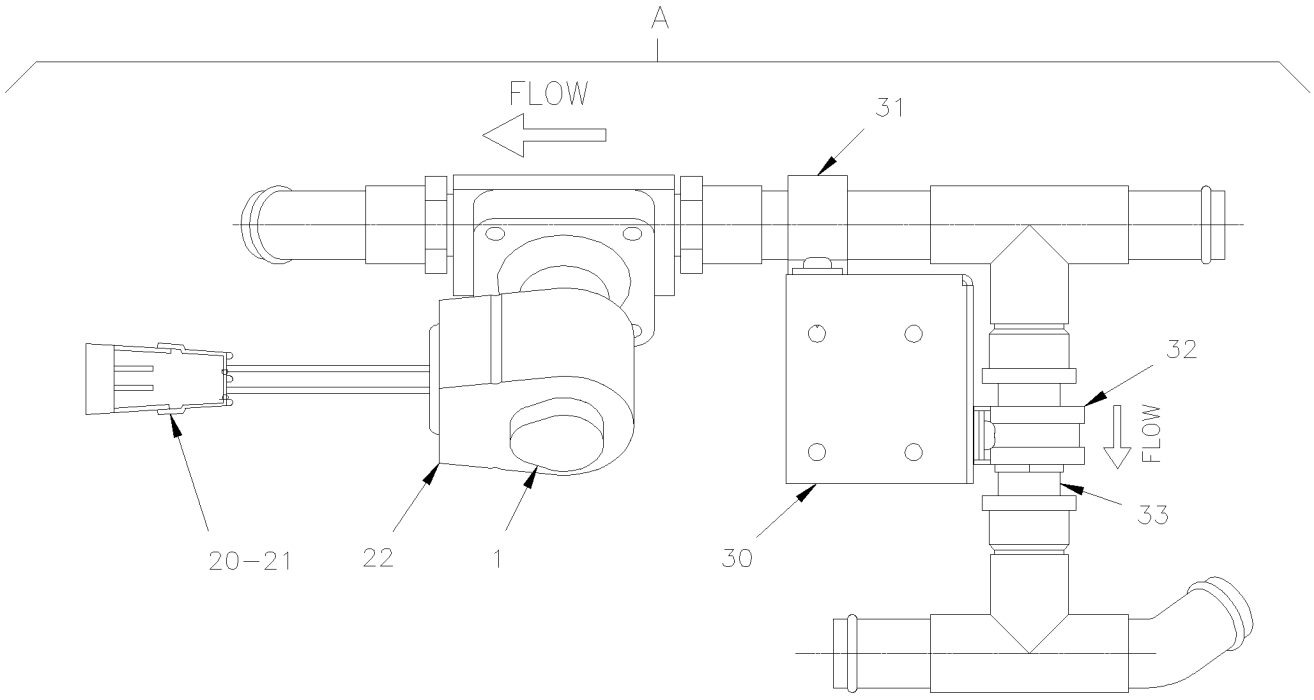

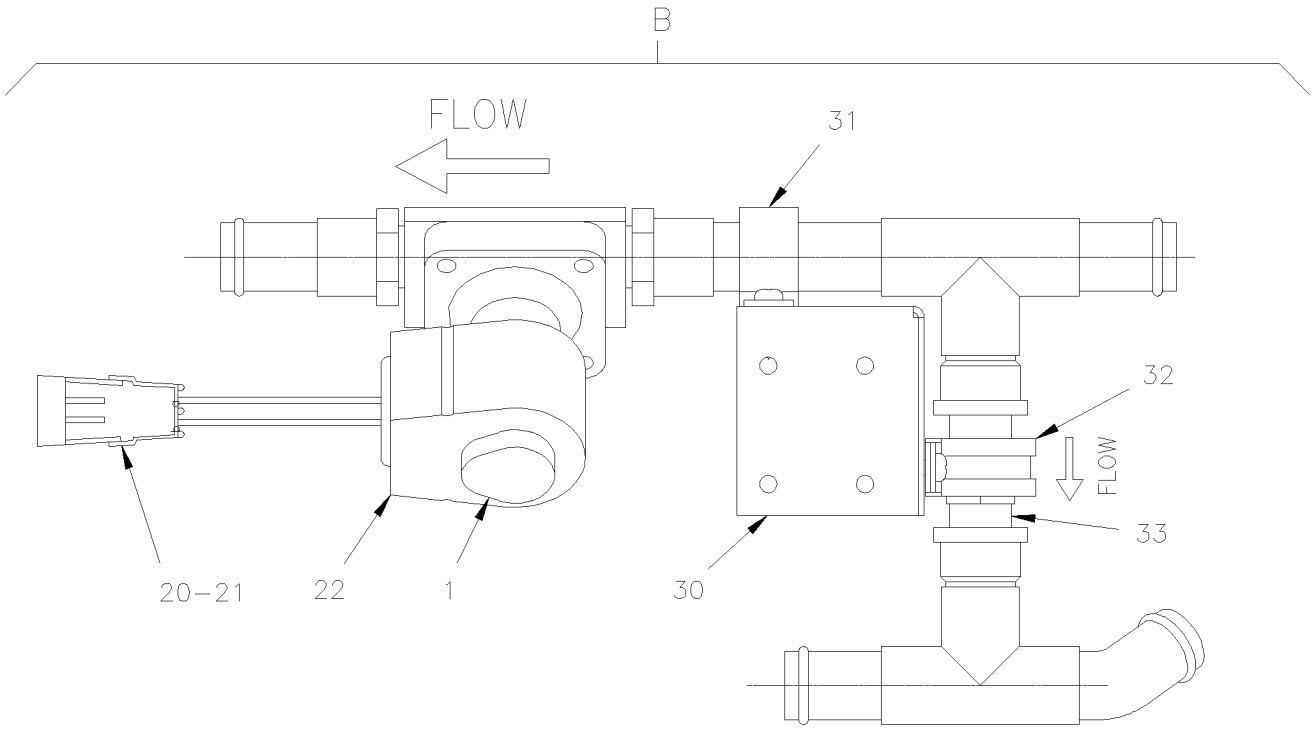

From Y-7046 Up to 8-9339	DATE: 01/2014	PAGE: Y2-2207-10

WATER VALVE - W/DRIVER'S HEATER

ITEM	PART	DESCRIPTION	XL45	MTH40	MTH45	MTH45S	NOTE
	372854	. VALVE ASSY / W/CONNECTOR	1	1	1	1	
1	870812	. . VALVE WATER ASSY / 24 V	1	1	1	1	
2	870960	. . . COIL 24V	1	1	1	1	
3	N.S.S.	. . . RETAINING CLIP	1	1	1	1	1
4	N.S.S.	. . . CORE	1	1	1	1	1
5	N.S.S.	. . . PLUG NUT GASKET	1	1	1	1	1
6	N.S.S.	. . . PLUG NUT ASSY	1	1	1	1	1
7	N.S.S.	. . . GASKET	1	1	1	1	1
8	N.S.S.	. . . DISC HOLDER	1	1	1	1	1
9	N.S.S.	. . . SPRING	1	1	1	1	1
10	N.S.S.	. . . DIAPHRAGM	1	1	1	1	1
11	N.S.S.	. . . GASKET	1	1	1	1	1
12	N.S.S.	. . . BODY	1	1	1	1	1
13	N.S.S.	. . . VALVE BONNET	1	1	1	1	1
14	N.S.S.	. . . SOLENOID BASE	1	1	1	1	1
15	N.S.S.	. . . HOUSING	1	1	1	1	1
16	N.S.S.	. . . SPRING WASHER	1	1	1	1	1
17	N.S.S.	. . . COVER	1	1	1	1	1
18	N.S.S.	. . . NAMEPLATE	1	1	1	1	1
19	N.S.S.	. . . SPACER	1	1	1	1	1
20	561566	. CONNECTOR / WEATHER PACK / PH 2C / BLACK / PED 12010973	1	1	1	1	
NS	561565	. CABLE SEAL / GREEN / PED 15324982	2	2	2	2	
NS	561568	. PIN TERMINAL / 16-14 / PED 12089305	2	2	2	2	
21	560931	. DIODE / 3AMPS	1	1	1	1	
22	504356	. GROMMET / .625x.875x.062x.312x1.125	1	1	1	1	
30	373642	. SUPPORT / WATER VALVE	1	1	1	1	
31	952633	. CLAMP / 7/8" I.D.	1	1	1	1	
32	952635	. CLAMP / 1" I.D.	1	1	1	1	
33	870727	. CHECK VALVE 1/2 NPT	1	1	1	1	
100	870872	KIT REPAIR	AR	AR	AR	AR	
A	Call Order Desk	WATER VALVE ASSY / W/PIPE	1				P
B	373645P	WATER VALVE ASSY / W/PIPE		1	1	1	
		1) NOT SOLD SEPARATELY					
		P) CALL ORDER DESK FOR SPECIFIC APPLICATION					
		(V.I.N.)					

From Y-7046 Up to 8-9339	DATE: 01/2014	PAGE: Y2-2207-10

WATER VALVE - W/DRIVER'S HEATER

ITEM	PART	DESCRIPTION	XL45	MTH400	MTH445	MTH445S	NOTE

From Y-7046 Up to 6-8906	DATE: 01/2014	PAGE: Y2-2207-20
WATER VALVE - BYPASS W/WATER HEATER		

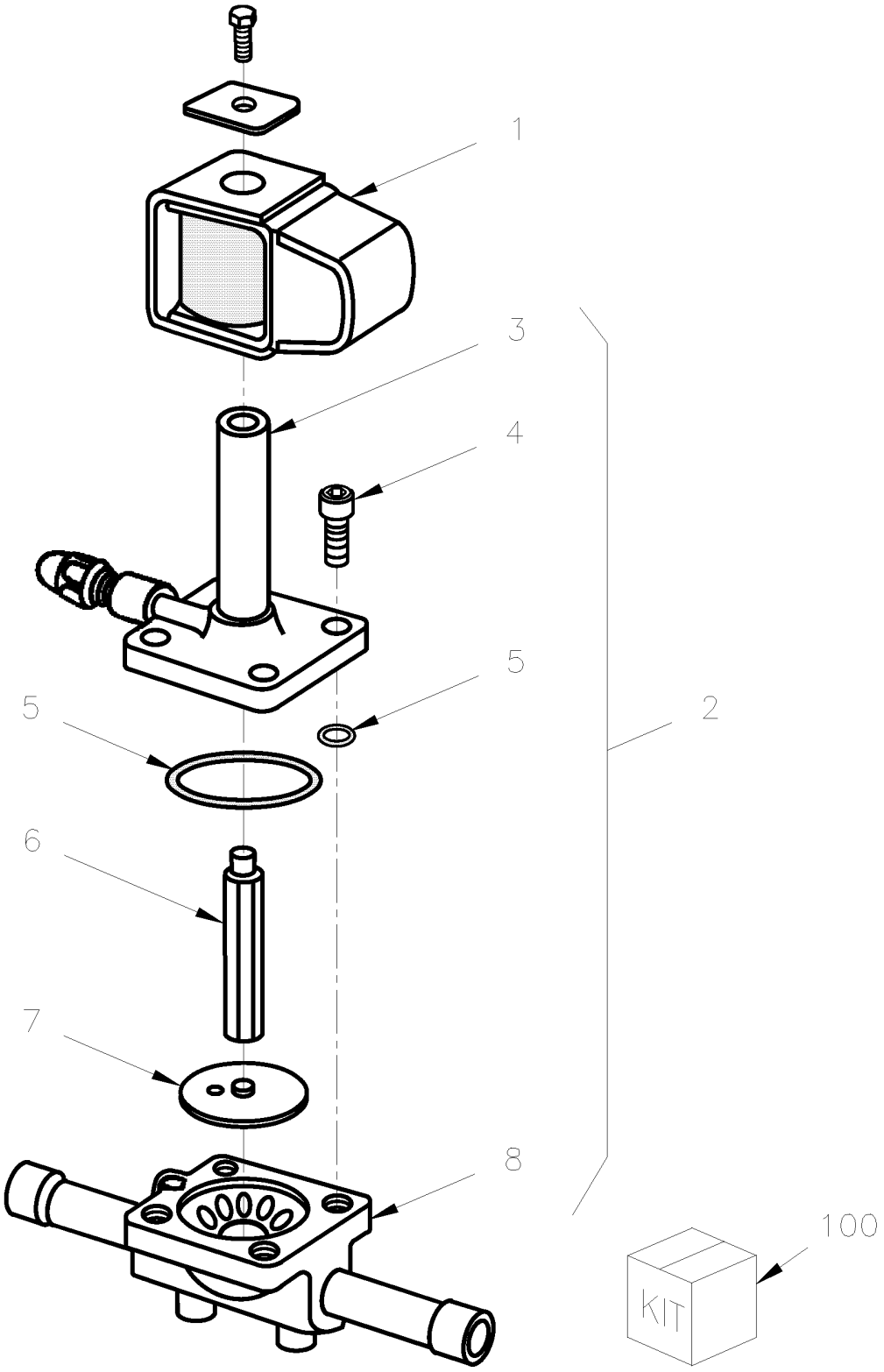

From Y-7046 Up to 6-8906	DATE: 01/2014	PAGE: Y2-2207-20
WATER VALVE - BYPASS W/WATER HEATER		

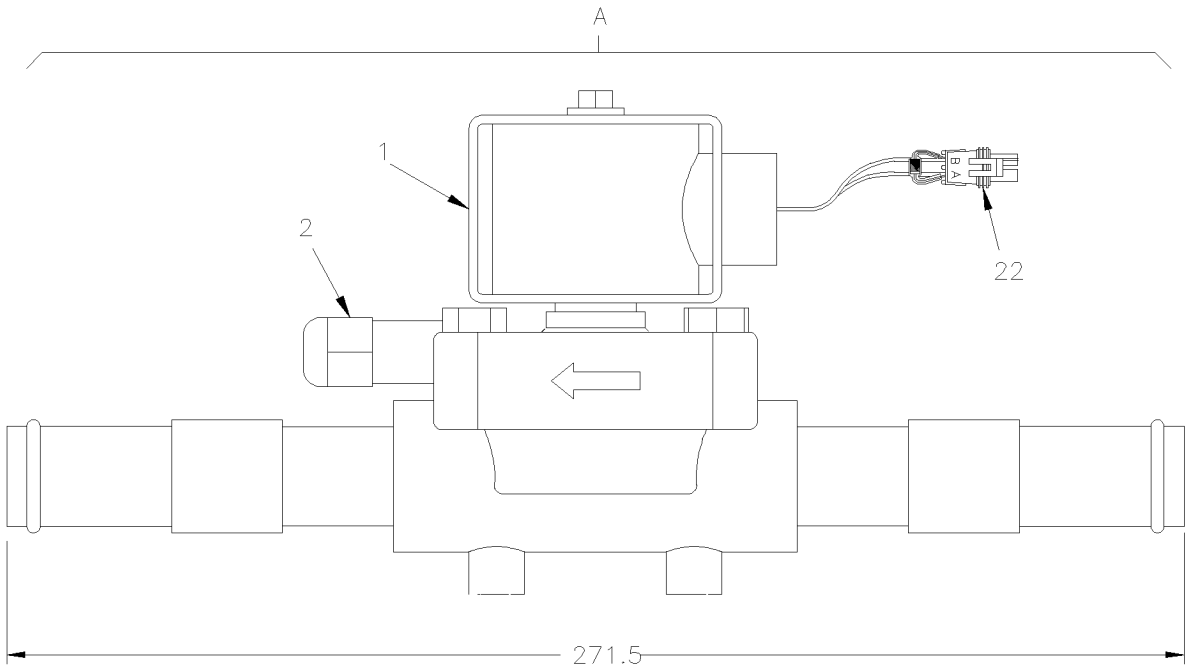

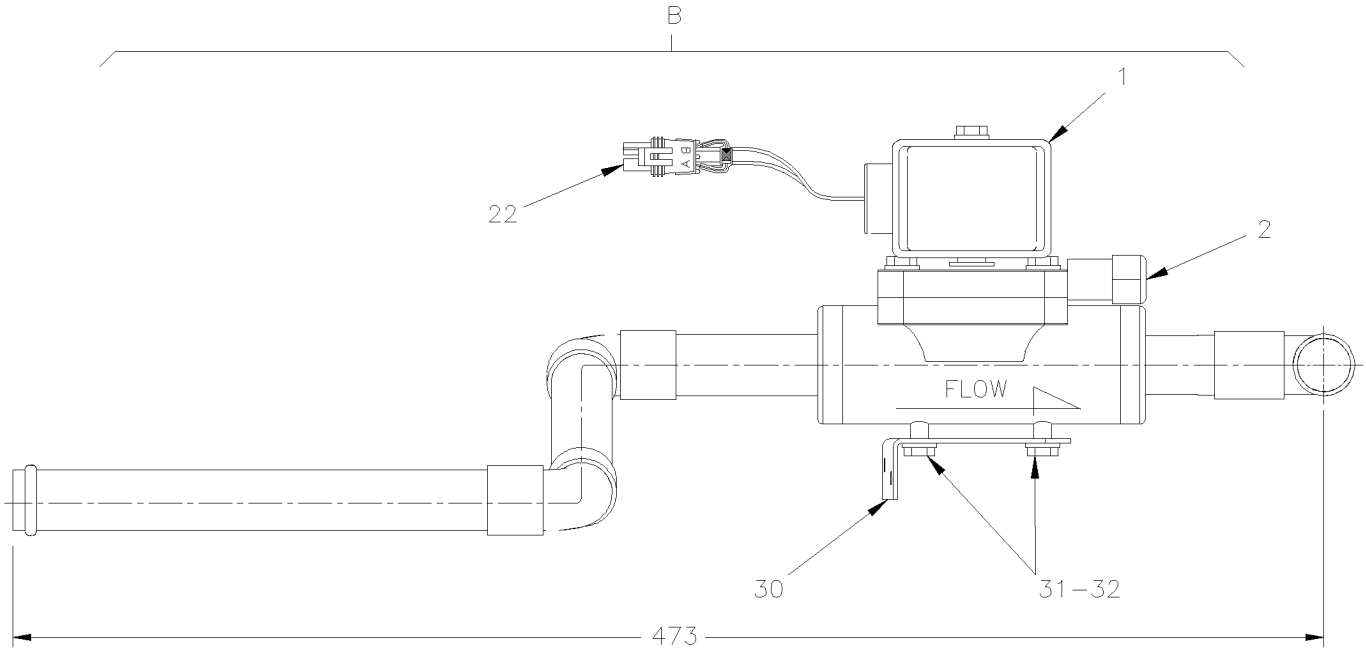

From Y-7046 Up to 6-8906	DATE: 01/2014	PAGE: Y2-2207-20

WATER VALVE - BYPASS W/WATER HEATER

ITEM	PART	DESCRIPTION	XL45	MTH40	MTH45	MTH45S	NOTE
1	950055	. COIL 24V Up to 7-9259	1	1	1	1	
1	950953	. COIL 24V / SERVICE From 7-9260	1	1	1	1	
2	870886	. VALVE WATER BYPASS Up to 7-9259	1	1	1	1	
2	950952	. VALVE WATER BYPASS / SERVICE From 7-9260	1	1	1	1	
3	N.S.S.	. . BONNET & ENCLOSING TUBE ASSY	1	1	1	1	1
4	500238	. . SCREW CAP HEXS 1/4-20x3/4 ZP / REPLACED BY: 500163	4	4	4	4	
5	N.S.S.	. . O-RING	1	1	1	1	1
6	N.S.S.	. . PLUNGER ASSY	1	1	1	1	1
7	N.S.S.	. . DIAPHRAGM ASSY	1	1	1	1	1
8	N.S.S.	. . BODY	1	1	1	1	1
22	561690	. CONNECTOR / WEATHER PACK / SH 2C / BLACK / PED 12015792	1	1	1	1	
NS	561689	. SOCKET TERMINAL / 20-18 / PED 12089188	2	2	2	2	
NS	561565	. CABLE SEAL / GREEN / PED 15324982	2	2	2	2	
30	373748	. SUPPORT / BY-PASS VALVE		1	1	1	
31	500162	. SCREW CAP HEX 1/4-20x1/2 G5 ZP		2	2	2	
32	500473	. WASHER LO SPT .262x.489x.062 ZP		2	2	2	
NS	373311	SUPPORT / BY-PASS VALVE	1				
100	870980	KIT REPAIR Up to 7-9259	AR	AR	AR	AR	
A	373310	WATER BY-PASS VALVE ASSY / W/TUBE & CONNECTOR	1				
B	373750	WATER BY-PASS VALVE ASSY / W/TUBE & CONNECTOR		1	1	1	
		1) NOT SOLD SEPARATELY					

From Y-7046 Up to 6-8906	DATE: 01/2014	PAGE: Y2-2207-20

WATER VALVE - BYPASS W/WATER HEATER

ITEM	PART	DESCRIPTION	XL45	MTH40	MTH45	MTH45S	NOTE

From Y-7046 Up to 8-9339	DATE: 01/2014	PAGE: Y2-2208-00
A/C EXPANSION VALVE		

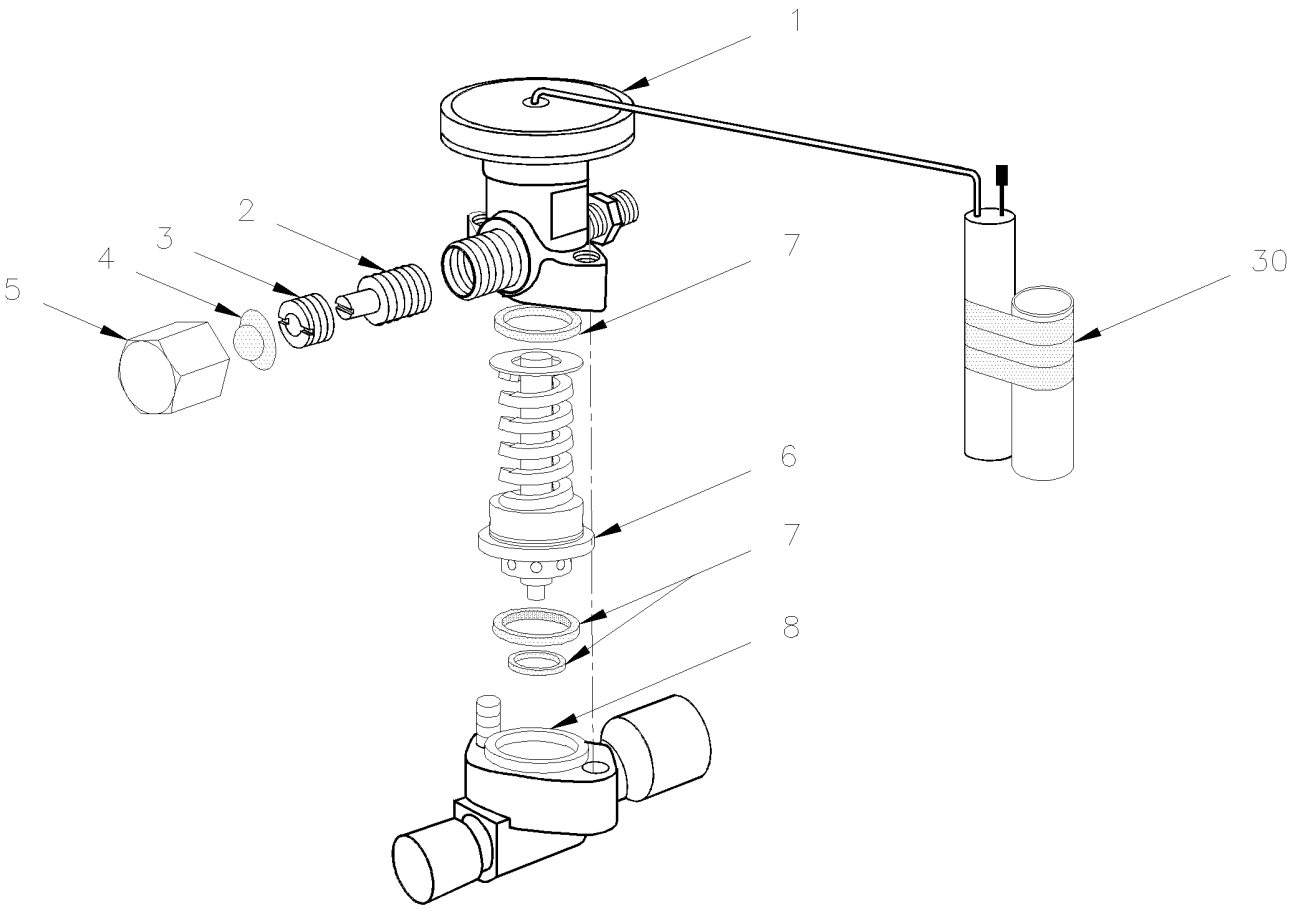

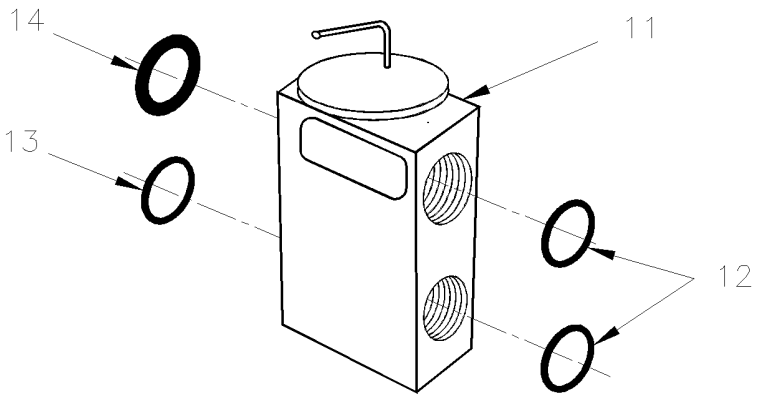

From Y-7046 Up to 8-9339	DATE: 01/2014	PAGE: Y2-2208-00
A/C EXPANSION VALVE		

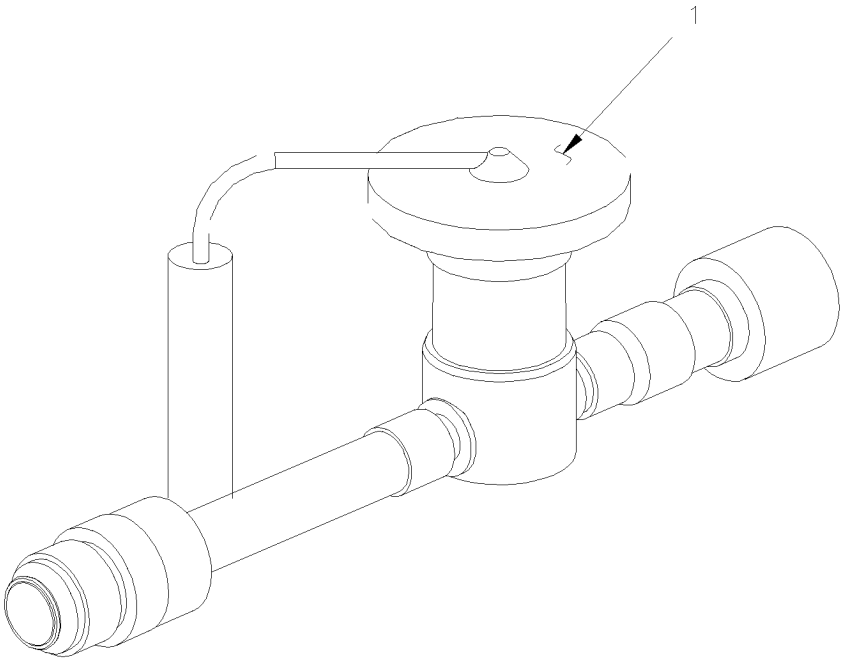

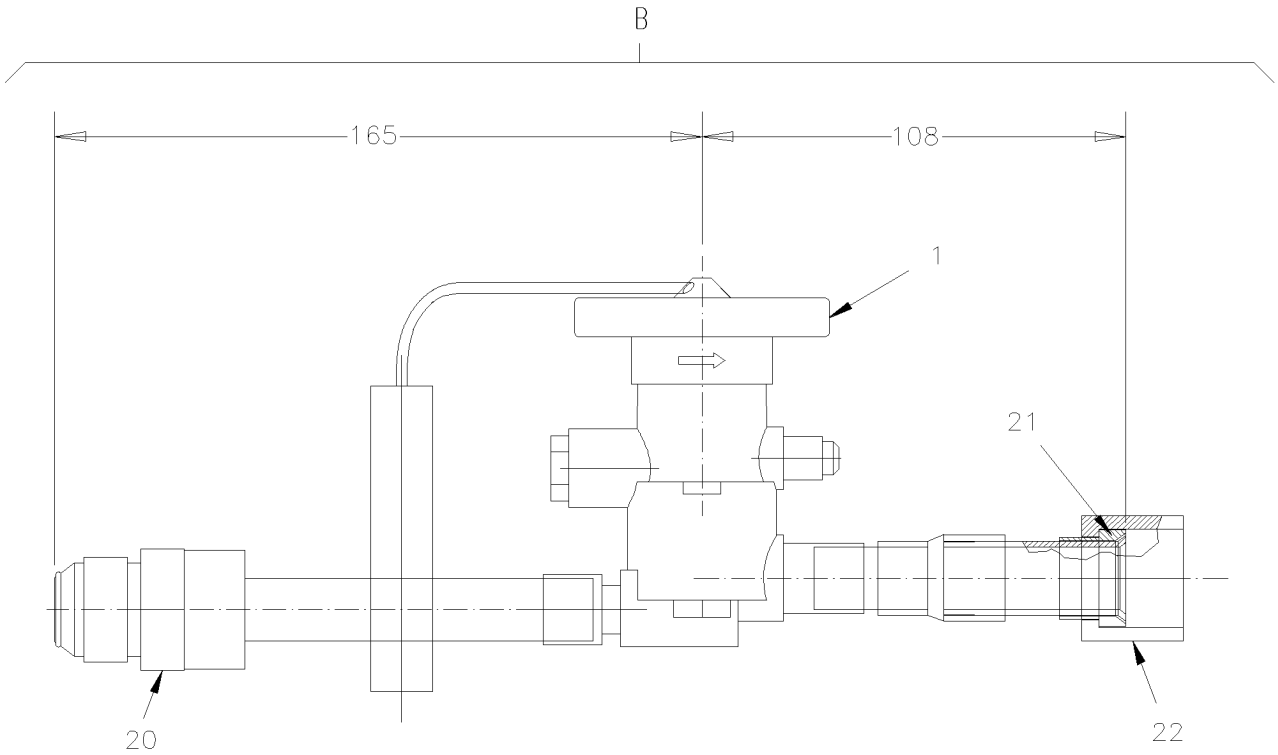

From Y-7046 Up to 8-9339	DATE: 01/2014	PAGE: Y2-2208-00
A/C EXPANSION VALVE		

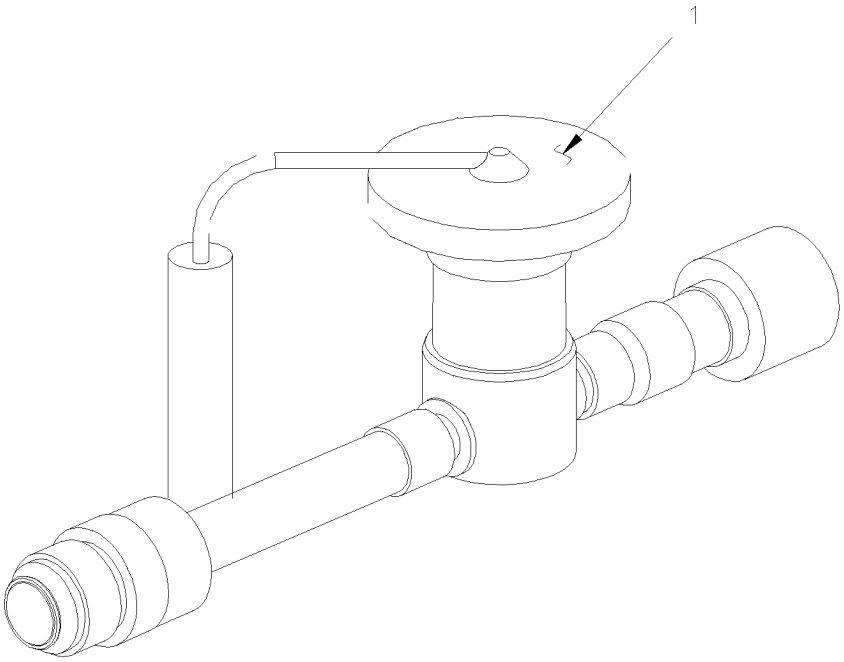

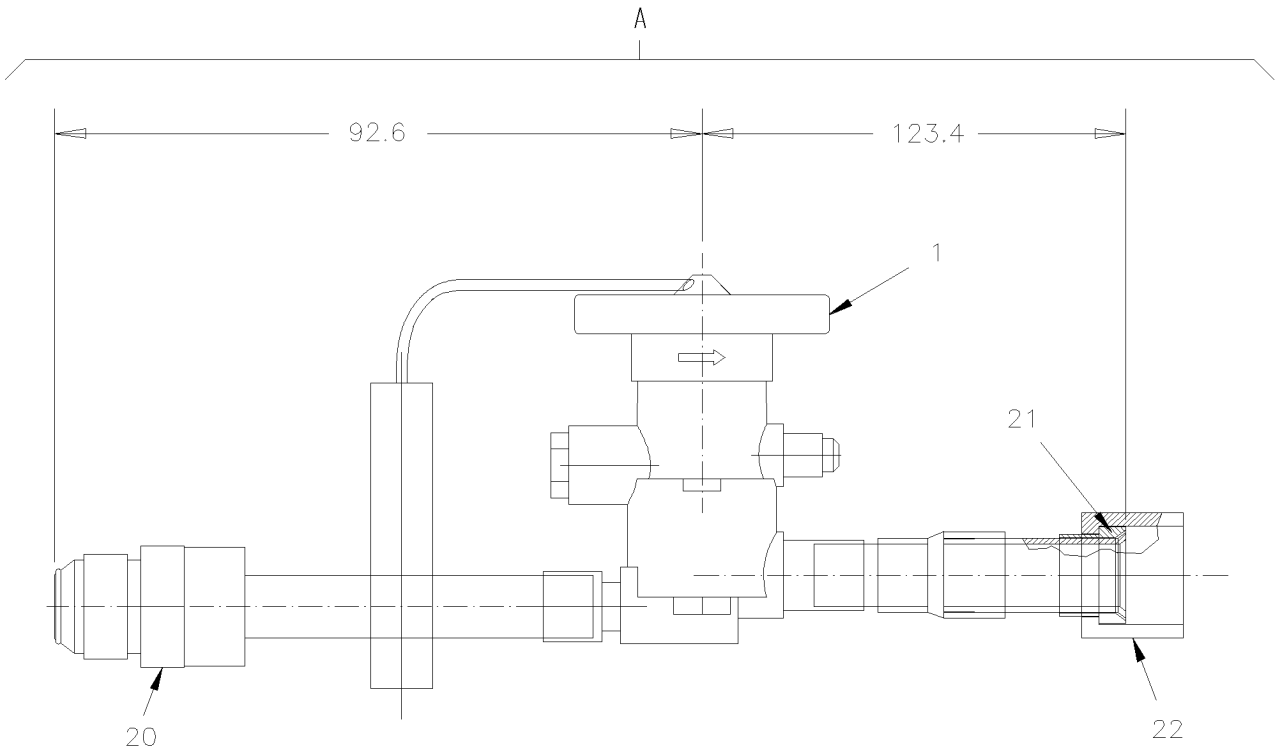

From Y-7046 Up to 8-9339	DATE: 01/2014	PAGE: Y2-2208-00

A/C EXPANSION VALVE

ITEM	PART	DESCRIPTION	XL45	MTH40	MTH45	MTH45S	NOTE
	871344	VALVE, EXPANSION ASSY / WITH PIPE From 4-8165		1	1	1	A
	950320	. VALVE, EXPANSION 5 1/2 TON	1	1	1	1	
1	950241	. . ELEMENT POWER R134A	1	1	1	1	
1	950241	. . ELEMENT POWER R134A From 4-8165		1	1	1	A
2	870622	. . ADJUSTING STEM & PACKING ASSY	1	1	1	1	
3	870621	. . NUT PACKING	1	1	1	1	
4	N.S.S.	. . SEAL	1	1	1	1	1
5	870619	. . NUT CAP	1	1	1	1	
6	950317	. . CAGE ASSY & SPRING / B6B	1	1	1	1	
6	950258	. . CAGE ASSY & SPRING / B3B From 4-8165		1	1	1	A
7	870709	. . SET GASKET	1	1	1	1	
8	N.S.S.	. . FLANGE BODY	1	1	1	1	1
8	504634	T-CLIP / 7/8" - 1"	1	1	1	1	
8	504637	CABLE TIE / 3/16" x 13"	1	1	1	1	
11	950221	VALVE, EXPANSION / DRIVER'S W/R134A	1	1	1	1	
NS	507279	O-RING / ORS FITTING / #8 NEO	1	1	1	1	
13	507278	O-RING / ORS FITTING / #4 NEO	1	1	1	1	
14	507344	O-RING / ORS FITTING / #10 NEO	1	1	1	1	
20	507525	ADAPTER JIC @ BRAZE W/O-RING / / #10JIC-Mx#12BRAZE-F BR	1	1	1	1	
. NS	501829	. O-RING	1	1	1	1	
21	507518	SLEEVE / JIC 37° FITTING / #12 STL	1	1	1	1	
22	507519	NUT / JIC 37° FITTING / #12JIC-F STL	1	1	1	1	
30	680091	TAPE INSULATING / A/C PIPE / 1/8" x 2" x 30' / BLACK PT-1	1	1	1	1	
A	453391	VALVE, EXPANSION ASSY / WITH PIPE	1				
A	453391	VALVE, EXPANSION ASSY / WITH PIPE Up to 6-8805		1	1	1	
B	453985	VALVE, EXPANSION ASSY / WITH PIPE From 6-8806		1	1	1	
		1) NOT SOLD SEPARATELY					
		A) WITH SMALL A/C SYSTEM INSTALL ON FRONT DEFROSTER ASSY					

From Y-7046 Up to 8-9339	DATE: 01/2014	PAGE: Y2-2208-10
REFRIGERANT SOLENOID VALVE		

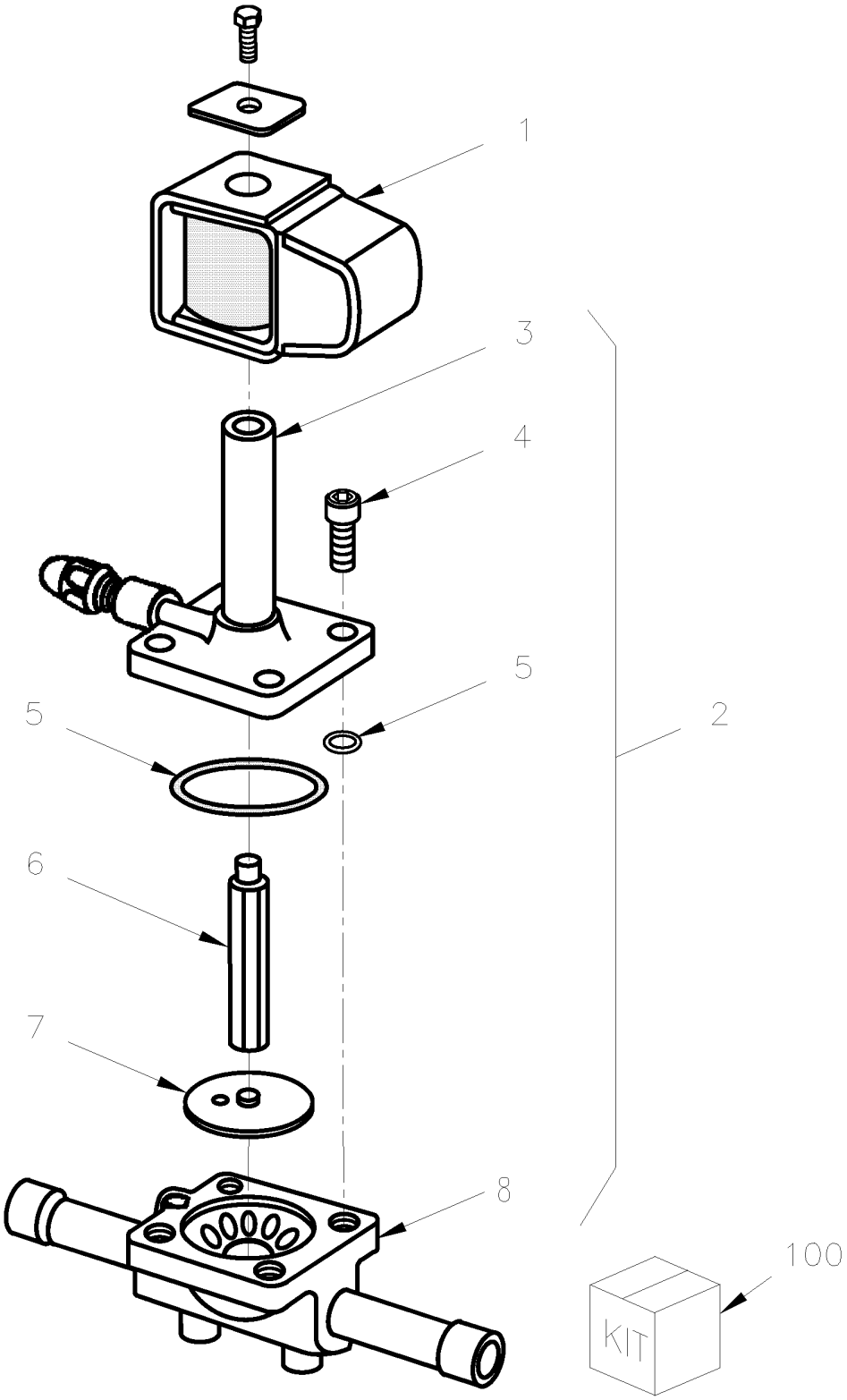

From Y-7046 Up to 8-9339	DATE: 01/2014	PAGE: Y2-2208-10
REFRIGERANT SOLENOID VALVE		

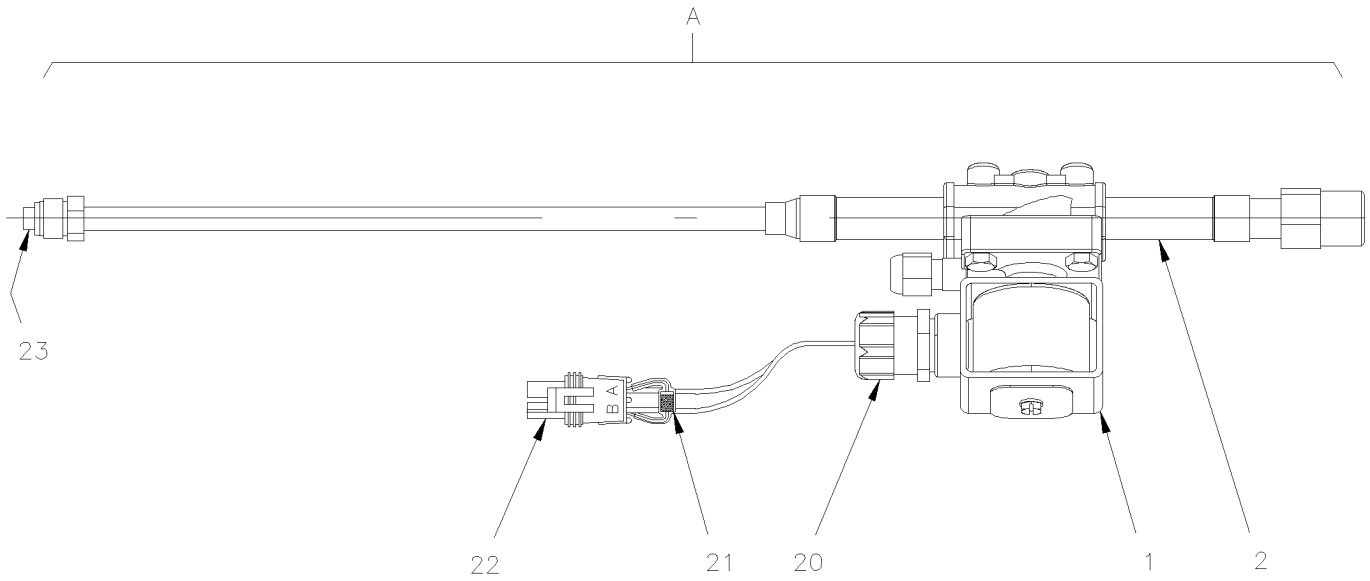

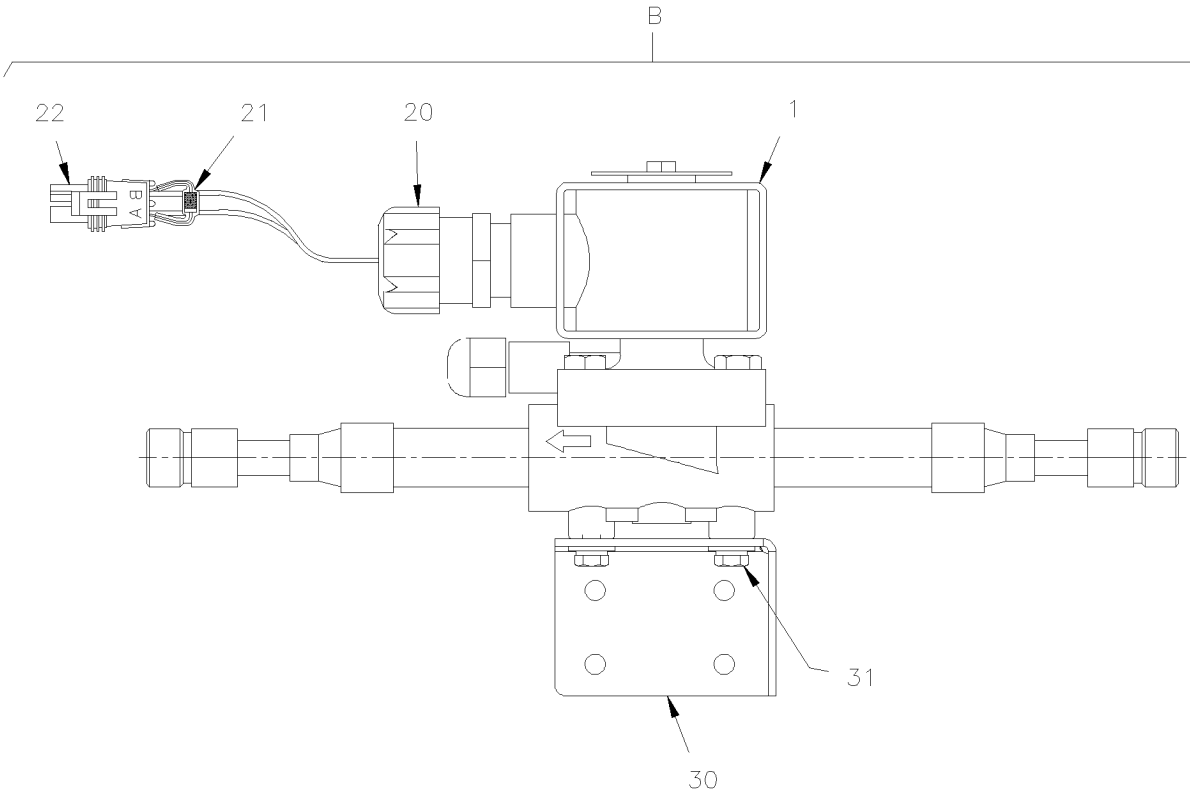

From Y-7046 Up to 8-9339	DATE: 01/2014	PAGE: Y2-2208-10
REFRIGERANT SOLENOID VALVE		

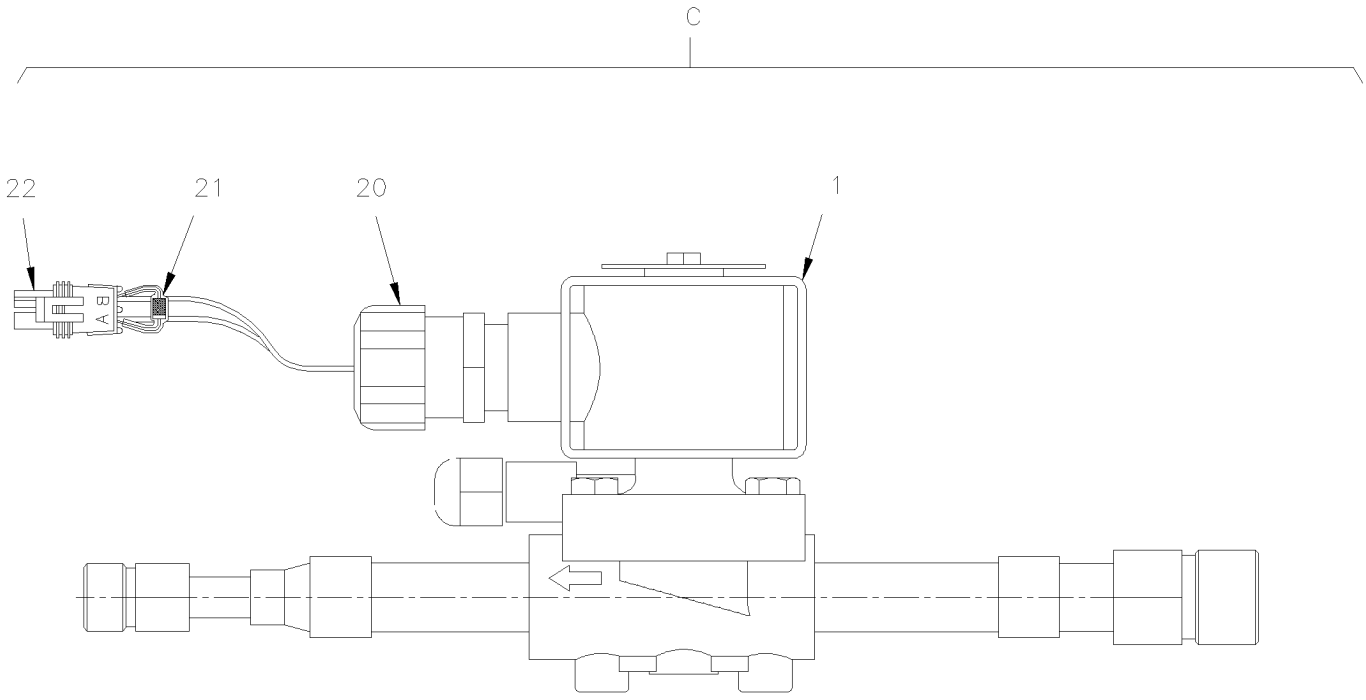

From Y-7046 Up to 8-9339	DATE: 01/2014	PAGE: Y2-2208-10

REFRIGERANT SOLENOID VALVE

ITEM	PART	DESCRIPTION	XL45	MTH40	MTH45	MTH45S	NOTE
1	950055	. COIL 24V Up to 7-9259	1	1	1	1	
1	950953	. COIL 24V / SERVICE From 7-9260	1	1	1	1	
2	950087	. VALVE REFRIGERANT SOLENOID Up to 7-9259	1	1	1	1	
2	950951	. VALVE REFRIGERANT SOLENOID From 7-9260	1	1	1	1	
3	N.S.S.	. . BONNET & ENCLOSING TUBE ASSY	1	1	1	1	1
4	500238	. . SCREW CAP HEXS 1/4-20x3/4 ZP / REPLACED BY: 500163	4	4	4	4	
5	N.S.S.	. . O-RING	1	1	1	1	1
6	N.S.S.	. . PLUNGER ASSY	1	1	1	1	1
7	N.S.S.	. . DIAPRAGM ASSY	1	1	1	1	1
8	N.S.S.	. . BODY	1	1	1	1	1
NS	500160	. SCREW CAP HEX #10-24x1/2 ZP	2	2	2	2	
20	560434	. CONNECTOR 1/2" PIPE	1	1	1	1	
21	560931	. DIODE / 3AMPS	1	1	1	1	
22	561690	. CONNECTOR / WEATHER PACK / SH 2C / BLACK / PED 12015792	1	1	1	1	
NS	561565	. CABLE SEAL / GREEN / PED 15324982	2	2	2	2	
NS	561578	. SOCKET TERMINAL / 16-14 / PED 12010182	2	2	2	2	
23	507278	. O-RING / ORS FITTING / #4 NEO	1				
30	453315	. SUPPORT / A/C VALVE		1	1	1	
31	500041	. SCREW CAP HEX #10-24x3/8 SS		2	2	2	
NS	500470	. WASHER LO SPT .193x.334x.047 ZP		2	2	2	
NS	500964	. WASHER FL .203x.500x.047 ZP		2	2	2	
100	950056	KIT REPAIR Up to 7-9259	AR	AR	AR	AR	
A	453422	VALVE ASSY / REFRIGERANT SOLENOID	1				A
B	453318	VALVE ASSY / REFRIGERANT SOLOLOID		1	1	1	B
C	453151	VALVE ASSY / REFRIGERANT SOLENOID		1	1	1	A
		1) NOT SOLD SEPARATELY					
		A) IN SPARE COMPARTMENT					
		B) IN SPARE COMPARTEMENT WITH SMALL A/C SYSTEM					

From Y-7046 Up to 8-9339	DATE: 01/2014	PAGE: Y2-2210-00

HEATER & EVAPORATOR BLOWER - INSTALLATION

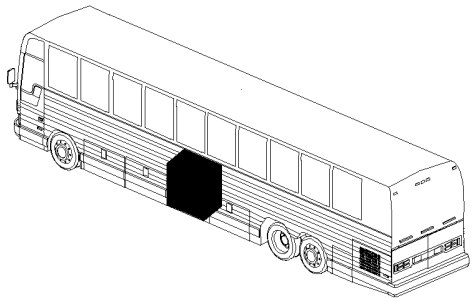

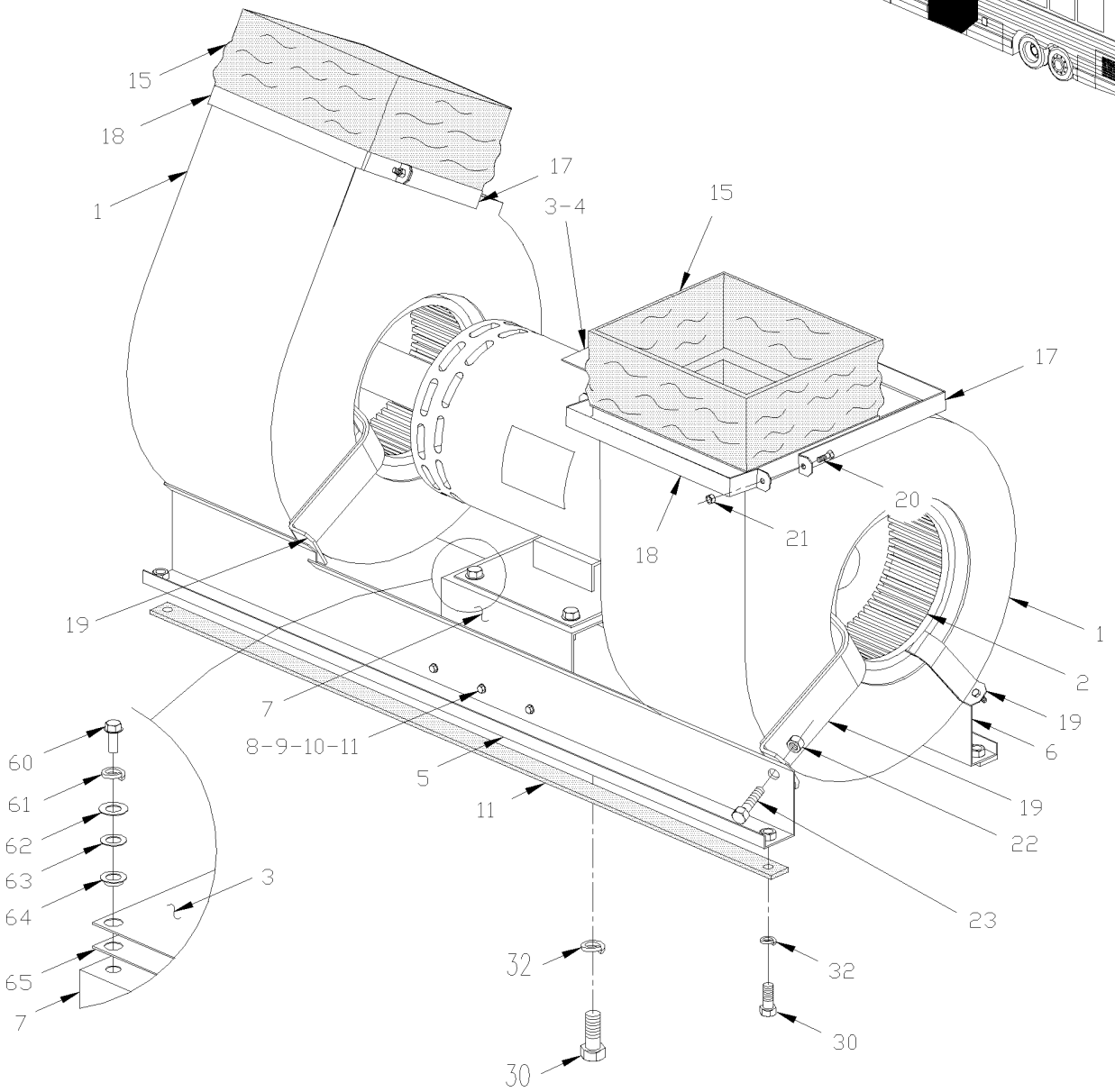

From Y-7046 Up to 8-9339	DATE: 01/2014	PAGE: Y2-2210-00

HEATER & EVAPORATOR BLOWER - INSTALLATION

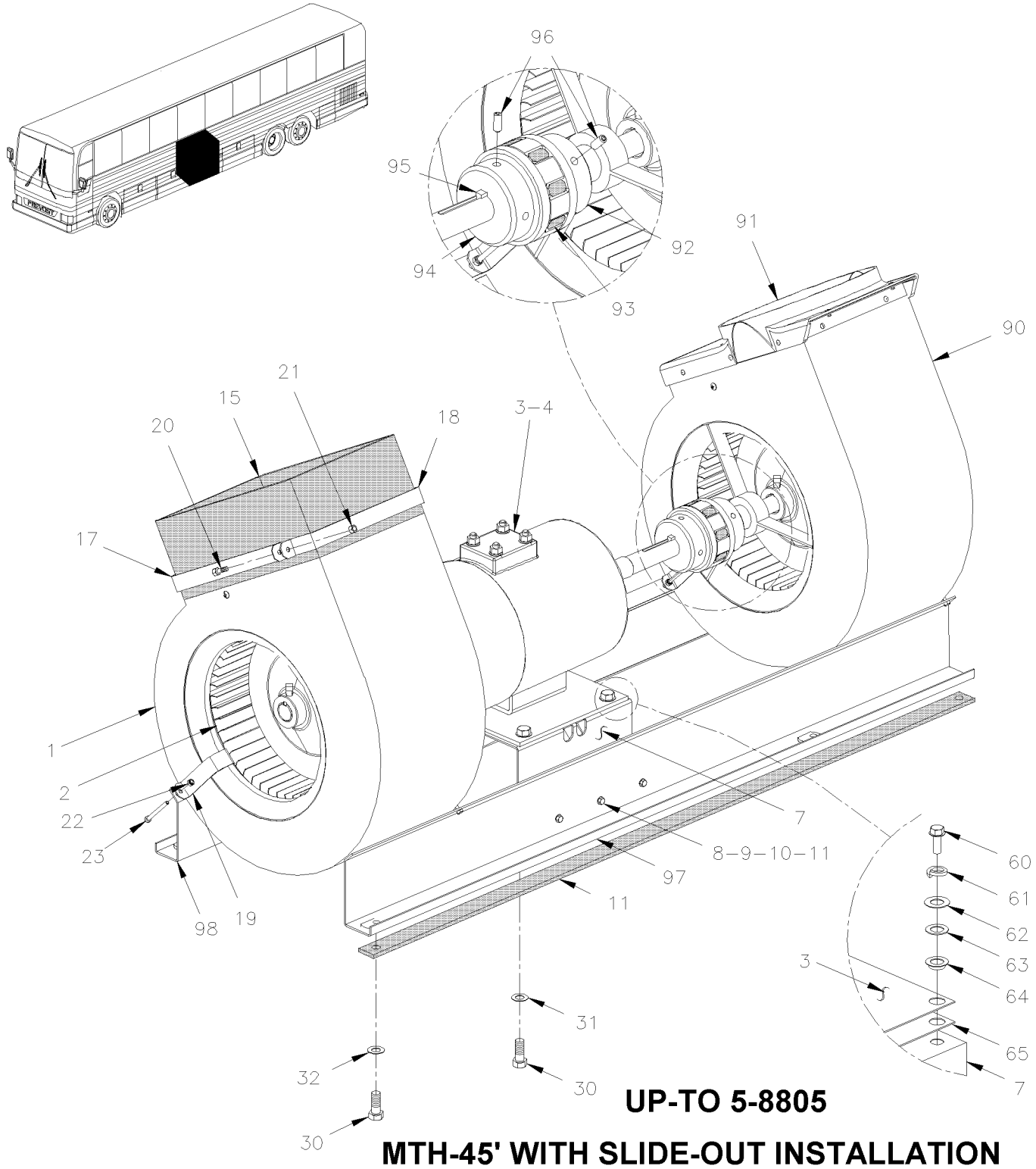

UP-TO 5-8805

MTH-45' WITH SLIDE-OUT INSTALLATION

From Y-7046 Up to 8-9339	DATE: 01/2014	PAGE: Y2-2210-00

HEATER & EVAPORATOR BLOWER - INSTALLATION

ITEM	PART	DESCRIPTION	XL45	MTH40	MTH45	MTH45S	NOTE
	450849P	MOTOR & BLOWER Up to 1-7456	1				A
	453700	MOTOR & BLOWER From 1-7457 Up to 3-8164	1				
	454049P	MOTOR & BLOWER From 4-8165	1				
	454049P	MOTOR & BLOWER From 4-8165 Up to 6-8805		1	1	1	
	Call Order Desk	MOTOR & BLOWER From 4-8165 Up to 6-8805			1		P S
	871008	. HOUSING FAN ASSY / HOUSING DEFLECTOR & BLOW Up to 1-7456 / REPLACED BY: K871008	2				
	871209	. HOUSING FAN ASSY / HOUSING DEFLECTOR & BLO From 1-7457	1				
	871209	. HOUSING FAN ASSY / HOUSING DEFLECTOR & BLO From 1-7457 Up to 6-8805		1	1	1	
1	870828	. . HOUSING DEFLECTOR & BLOWER Up to 1-7456 / REPLACED BY: 871210	1				
1	871210	. . HOUSING DEFLECTOR & BLOWER From 1-7457	1				
1	871210	. . HOUSING DEFLECTOR & BLOWER From 1-7457 Up to 6-8805		1	1	1	
2	870827	. . BLOWER WHEEL	1				
2	870827	. . BLOWER WHEEL Up to 6-8805		1	1	1	
NS	870879	. . DEFLECTOR / "J" SHAPE	1				
2	870879	. . DEFLECTOR / "J" SHAPE Up to 6-8805		1	1	1	
3	Y2-2265-00	**. MOTOR - "PREVOST" - T-17**					
3	Y2-2265-01	**. MOTOR - "PREVOST" - T-17 - 2 SPEEDS**					
NS	451131	. KEY SQ 3/16" x 3/16"x 2 7/8"	2				
NS	451173	. SHIM 1/8" TH.	AR				
NS	451172	. SHIM .074" TH.	AR				
NS	451124	. SHIM 3/8" TH.	AR				
4	453336	. BASE ASSY Up to 1-7456 / REPLACED BY: 453699	1				
4	453699	. BASE ASSY From 1-7457	1				
4	453699	. BASE ASSY From 1-7457 Up to 6-8805		1	1	1	
5	453287	. . SUPPORT Up to 1-7456 / REPLACED BY: 453698	1				
5	453697	. . SUPPORT From 1-7457	1				
5	453697	. . SUPPORT From 1-7457 Up to 6-8805		1	1	1	
6	453286	. . SUPPORT Up to 1-7456	1				
6	453698	. . SUPPORT From 1-7457	1				
6	453698	. . SUPPORT From 1-7457 Up to 6-8805		1	1	1	
7	453283	. . BASE SUB ASSY	1				
7	453283	. . BASE SUB ASSY Up to 6-8805		1	1	1	
NS	500297	. . . NUT WD FLRET 5/16-24	4				H
NS	500296	. . . NUT WD FLRET 3/8-24	4				H
8	5001447	. . SCREW CAP HEX #10-24x5/8 PT SS EMN	6				
9	5001180	. . NUT HEX NYRT #10-24 SS	6				
		P) CALL ORDER DESK FOR SPECIFIC APPLICATION					
		(V.I.N.)					
		A) THIS PART NUMBER INCLUDE MOTOR, SEE PAGE					
		Y2-2265-00					
		H) WELDED					
		S) WITH "SLIDE OUT"					

From Y-7046 Up to 8-9339	DATE: 01/2014	PAGE: Y2-2210-00

HEATER & EVAPORATOR BLOWER - INSTALLATION

ITEM	PART	DESCRIPTION	XL45	MTH40	MTH45	MTH45S	NOTE
10	5001137	. . WASHER FL .203x.438x.050 SS	6				
11	506071	. . TAPE RUB ADH1 CC POL 1/8" x 1/2" x 50' / GREY 2520X	AR				
NS	506207	. . TAPE RUB ADH1 CC POL 3/16" x 1" x 50' / GREY 2520X	AR				
15	450967	FLEXIBLE DUCT 76MM HEIGHT Up to 1-7456	2				
15	453679	FLEXIBLE DUCT 100MM HEIGHT From 1-7457	2				
15	453679	FLEXIBLE DUCT 100MM HEIGHT From 1-7457 Up to 6-8805		2	2	2	
16	500657	SCREW TC TR PH #10-24x1/2 ZP Up to 1-7456	AR				
16	500964	WASHER FL .203x.500x.047 ZP	AR				
17	453680	RETAINER STRAP / "U" SHAPE SS 183MM X 215MM	2				
17	453680	RETAINER STRAP / "U" SHAPE SS 183MM X 215MM Up to 6-8805		2	2	2	
18	453681	RETAINER STRAP / "U" SHAPE SS 183MM X 40MM	2				
18	453681	RETAINER STRAP / "U" SHAPE SS 183MM X 40MM Up to 6-8805		2	2	2	
NS	506210	TAPE RUB ADH1 URE 1/2" x 3/4" x 20' / GREY 1820	AR				
19	453689	HOOK ASSY	3				
20	502708	SCREW CAP HEX M5-0.8x35 SS	4				
21	502782	NUT HEX NYRT M5-0.8 CP	4				
22	500539	NUT HEX NYRT M4-0.7 ZG603	3				
23	70314700	SCREW CAP HEX M4-0.7X45 SS	3				
30	502905	SCREW CAP HEX 5/16-24x1 G5 ZG603	4				
31	5001448	WASHER FL .343x.875x.062 SS18-8	4				
32	500261	WASHER FL .390x1.500x.083 ZG603	4				
60	5001446	SCREW CAP HEX 5/16-24x1 SS EMN	4				
61	500035	WASHER LO SPT .317x.586x.078 SS	4				
62	5001448	WASHER FL .343x.875x.062 SS18-8	4				
63	502723	WASHER FL .386x.750x.050 NYL	4				
64	504503	BUSHING, NYLON 5/16 DIA.	4				
65	452896	INSULATED PAD	1				
NS	454001	SUPPORT / SPEED CONTROL / W/SLIDE OUT Up to 3-8164			2		B
NS	502556	WASHER FL 4.3x9.0X0.8 SS Up to 3-8164			10		B
NS	502636	WASHER LO SPT 4.1x7.6x0.9 ZP Up to 3-8164			10		B
NS	502685	SCREW CAP HEX M4-0.7x20 SS EMN Up to 3-8164			10		B
90	373994	HOUSING FAN ASSY / HOUSING DEFLECTOR & BLOW Up to 6-8805			1		
90	871334	. BLOWER ASSY W/FAN Up to 6-8805			1		
NS	871333	. TRANSITION ADAPTOR HOSE Up to 6-8805			1		
NS	504339	. RIVET POP DOME OE 1/8x3/8 SS Up to 6-8805			12		
NS	374012	ANGLE SUPPORT Up to 6-8805			1		
		B) FIXED ON MOTOR BASE WITH "SLIDE-OUT" ONLY					

From Y-7046 Up to 8-9339	DATE: 01/2014	PAGE: Y2-2210-00

HEATER & EVAPORATOR BLOWER - INSTALLATION

ITEM	PART	DESCRIPTION	XL45	MTH40	MTH45	MTH45S	NOTE
NS	504229	HOSE CLAMP / 6"1/2-8"1/2 SS / HS-100 Up to 6-8805			2		
92	871338	COUPLING 3/4" Up to 6-8805			1		
93	5061049	SPIDER 38 DURO 64 HYTREL Up to 6-8805			1		
94	871336	COUPLING 7/8" Up to 6-8805			1		
95	476039	STEP KEY Up to 6-8805			1		
96	5001282	SCREW SET HEXS CUP 1/4-20x5/8 Up to 6-8805			3		
97	454915	SUPPORT Up to 6-8805			1		S
98	454916	SUPPORT Up to 6-8805			1		S
		S) WITH "SLIDE OUT"					

From Y-7046 Up to 8-9339	DATE: 01/2014	PAGE: Y2-2210-00

HEATER & EVAPORATOR BLOWER - INSTALLATION

ITEM	PART	DESCRIPTION	XL45	MTH400	MTH445	MTH445S	NOTE

From 6-8806 Up to 8-9339	DATE: 01/2014	PAGE: Y2-2210-01

HEATER & EVAPORATOR BLOWER - INSTALLATION

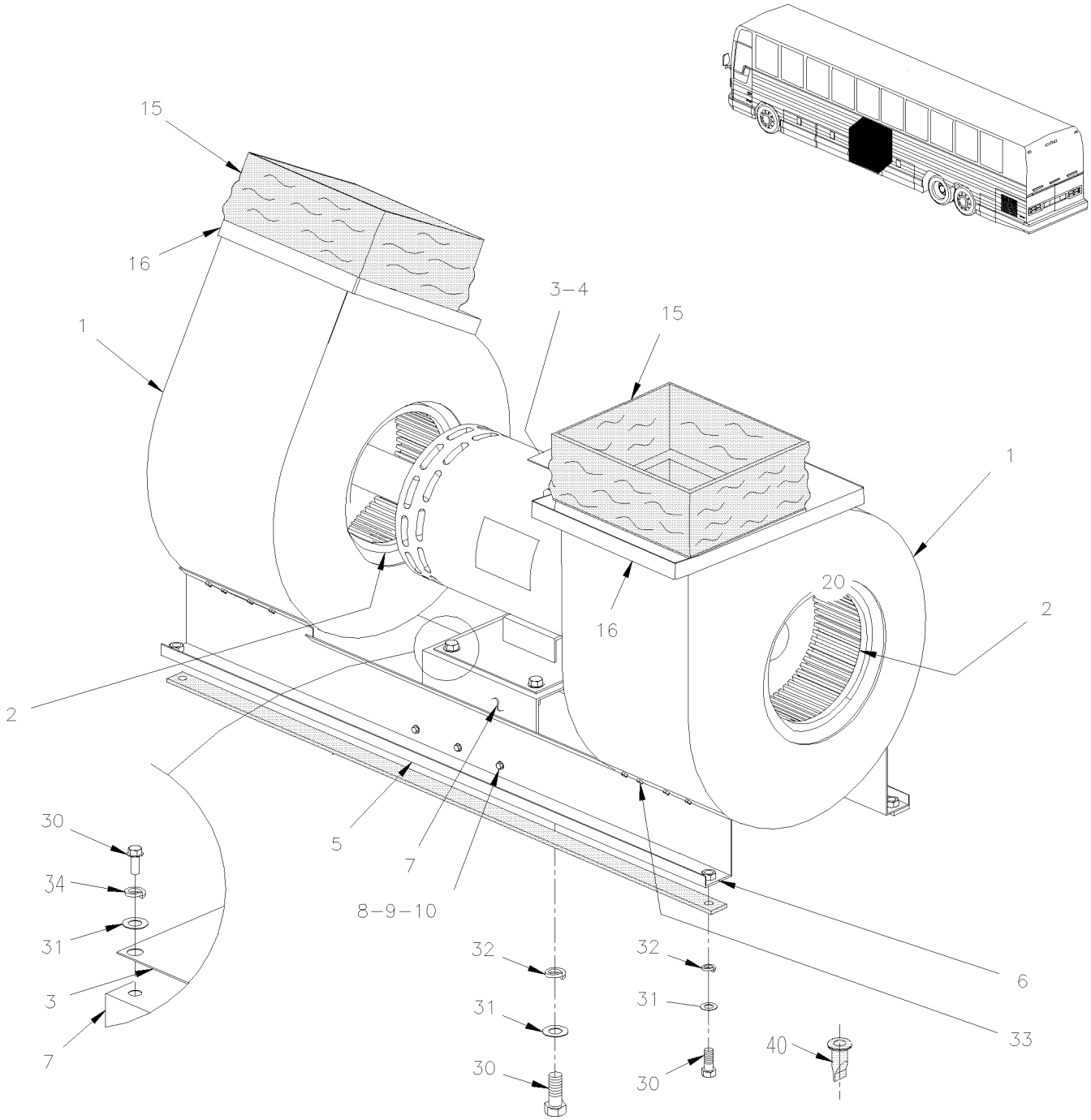

From 6-8806 Up to 8-9339	DATE: 01/2014	PAGE: Y2-2210-01

HEATER & EVAPORATOR BLOWER - INSTALLATION

ITEM	PART	DESCRIPTION	XL45	MTH40	MTH45	MTH45S	NOTE
1	871306	HOUSING ASSY W/BLOWER WHELL		2	2	2	
1	871308	. HOUSING ASSY, GALVANISED		1	1	1	
2	870956	. BLOWER WHEEL		1	1	1	
3	452085	KEY 3/16 X 82 MM		2	2	2	
4	Y2-2265-01	**MOTOR - "PREVOST" - T-17 - 2 SPEEDS**					
5	453990	SUPPORT		1	1	1	
6	453995	SUPPORT		1	1	1	
7	457414	BASE SUB ASSY		1	1	1	
8	5001447	SCREW CAP HEX #10-24x5/8 PT SS EMN		6	6	6	
9	5001180	NUT HEX NYRT #10-24 SS		6	6	6	
10	5001137	WASHER FL .203x.438x.050 SS		6	6	6	
15	453986	FLEXIBLE DUCT 140MM HEIGHT		2	2	2	
16	453992	TRANSITION ADAPTOR FLEXIBLE DUCT		2	2	2	
NS	504729	CLAMP HOSE SS/CR 203-279		2	2	2	
NS	500957	SCREW TP BDG PH #10x3/4 ZG603		10	10	10	
30	502780	SCREW CAP HEX M8-1.25x25 SS EMN		AR	AR	AR	
31	5001448	WASHER FL .343x.875x.062 SS18-8		AR	AR	AR	
32	500261	WASHER FL .390x1.500x.083 ZG603		AR	AR	AR	
33	502868	SCREW TC TR PH 10-24x1/2 ZG603		AR	AR	AR	
34	500035	WASHER LO SPT .317x.586x.078 SS		AR	AR	AR	
40	453981	DRAIN BOOT 1" I.D. W/GROOVE 1.5 x 35MM I.D. x 62MM		4	4	4	

From Y-7046 Up to 8-9339	DATE: 01/2014	PAGE: Y2-2210-10

WATER PUMP & FILTER - INSTALLATION

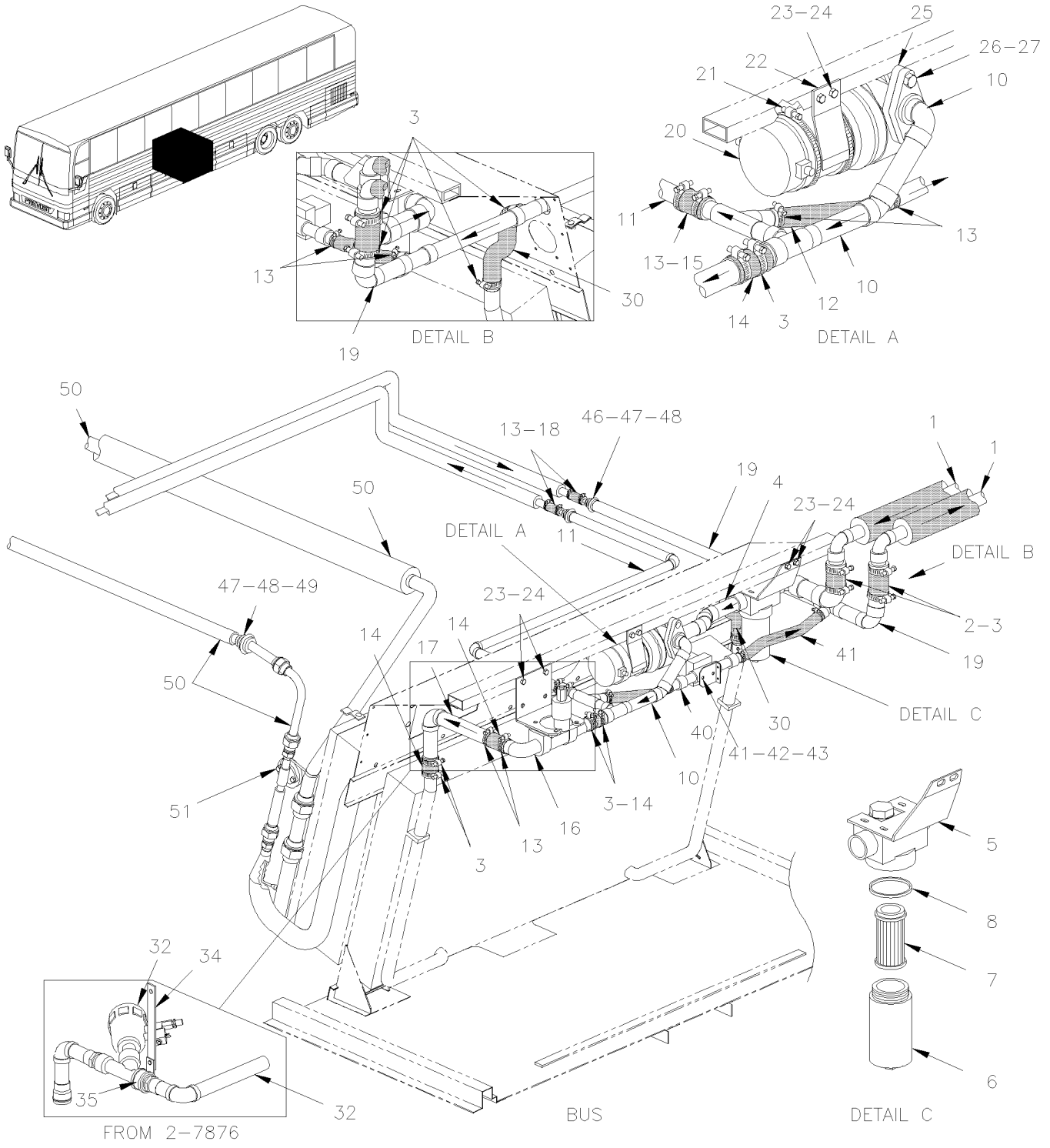

From Y-7046 Up to 8-9339	DATE: 01/2014	PAGE: Y2-2210-10

WATER PUMP & FILTER - INSTALLATION

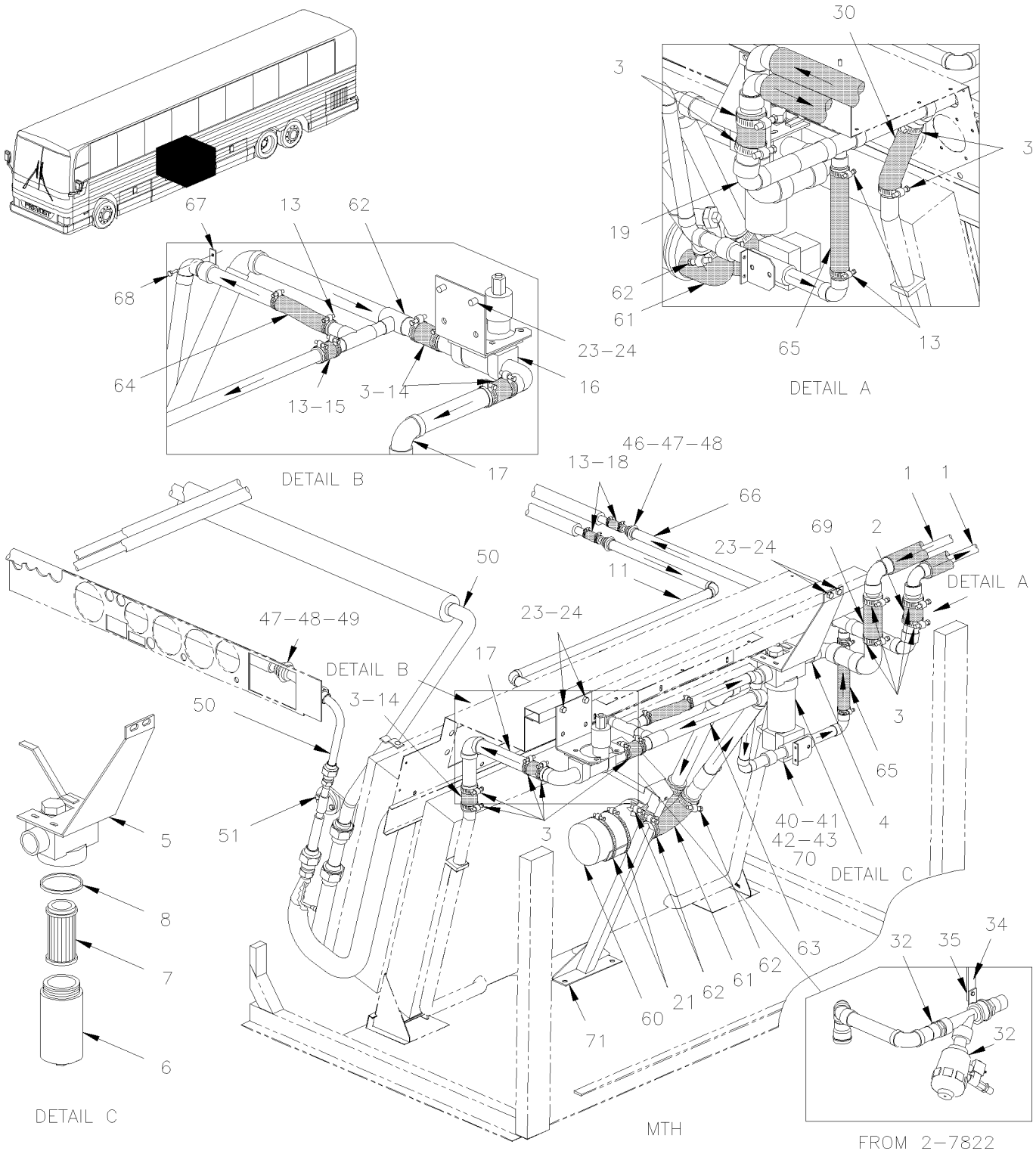

From Y-7046 Up to 8-9339	DATE: 01/2014	PAGE: Y2-2210-10

WATER PUMP & FILTER - INSTALLATION

ITEM	PART	DESCRIPTION	XL45	MTH40	MTH45	MTH45S	NOTE
1	Y2-2222-00	**HEATER LINE REAR SECTION - BUS**	1				
1	Y2-2222-01	**HEATER LINE REAR SECTION - BUS**	1				
1	Y2-2222-30	**HEATER LINE REAR SECTION - MTH**	1				
1	Y2-2222-31	**HEATER LINE REAR SECTION - MTH**	1				
2	371855	HOSE 1 3/8" I.D. 3"	2				
2	371855	HOSE 1 3/8" I.D. 3"		1	1	1	
3	504657	HOSE CLAMP / 1"1/16-2" C.T. 9424	AR	AR	AR	AR	
4	373684	FILTER ASSY W/TUBE	1				
4	373013	FILTER ASSY W/TUBE			1		
4	373333	FILTER ASSY W/TUBE		1		1	
4	373874	FILTER ASSY W/TUBE			1		D
4	374002	FILTER ASSY W/TUBE	1				E
5	372862	. SUPPORT / WATER FILTER	1				
5	372994	. SUPPORT / WATER FILTER		1	1	1	F
5	871028	. FILTER "PARKER" ASSY	1	1	1	1	
6	871043	. BOWL / REPLACED BY: 871028	1	1	1	1	
7	871029	. CARTRIDGE	1	1	1	1	
8	871044	. SEAL BOWL	1	1	1	1	
10	373683	PIPE ASSY / WATER PUMP OUTLET Up to 2-7875	1				B
10	373891	PIPE ASSY / WATER PUMP OUTLET From 2-7876 Up to 4-8205	1				B
10	374046	PIPE ASSY / WATER PUMP OUTLET From 4-8206	1				B
10	373685	PIPE ASSY / WATER PUMP OUTLET Up to 2-7875	1		1		C
10	373890	PIPE ASSY / WATER PUMP OUTLET From 2-7876 Up to 4-8205	1		1		C
10	374048	PIPE ASSY / WATER PUMP OUTLET From 4-8206	1		1		C
10	374001	PIPE ASSY / WATER PUMP OUTLET	1				E
11	371746	TUBE ASSY / TO DRIVER'S HEATER Up to 4-8205	1	1	1	1	
11	374047	TUBE ASSY / TO DRIVER'S HEATER From 4-8206	1	1	1	1	
12	372191	HOSE / <> PIPE & BYPASS / 7/8" I.D. 10" / REPLACED BY: 503651	2				
13	504646	HOSE CLAMP / 11/16"-1"1/4 / C.T. 9412	4				
14	051383	HOSE / W/CENTRAL A/C SYSTEM / 1 3/8" I.D. X 150MM	2		2		
15	372053	HOSE 7/8" I.D. X 6.5" Up to 4-8205	1		1		
15	372191	HOSE / <> PIPE & BYPASS / 7/8" I.D. 10" From 4-8206 / REPLACED BY: 503651	1		1		
16	Y2-2207-00	**WATER VALVE - W/MAIN HEATER**					
17	371745	PIPE ASSY / <> WATER VALVE OUTLET & HEATER Up to 2-7821	1	1	1	1	
18	371532	HOSE 7/8" I.D. 6"	2	2	2	2	
19	373308	RETURN JCT TUBE ASSY / W/BYPASS VALVE	1				
20	Y2-2206-00	**WATER PUMP #871052 & #871204**					
		B) WITH BY-PASS WATER VALVE					
		C) WITHOUT BYPASS WATER VALVE					
		D) USE WITH "SLIDE-OUT"					
		E) WITH ROTRON PUMP					
		F) USE ALSO FOR FEED LINE WITH MTH-40 & MTH-45					
		ENT					

From Y-7046 Up to 8-9339	DATE: 01/2014	PAGE: Y2-2210-10

WATER PUMP & FILTER - INSTALLATION

ITEM	PART	DESCRIPTION	XL45	MTH40	MTH45	MTH45S	NOTE
21	504025	HOSE CLAMP / 2"5/16-3"1/4 SS / HS-44	2	2	2	2	
22	373429	SUPPORT / WATER PUMP	1				
23	500536	SCREW TP HEXW SLT #14x1 ZP	6				
24	500473	WASHER LO SPT .262x.489x.062 ZP	6				
25	870441	GASKET PUMP INLET & OUTLET	1				
NS	871207	QUAD RING	1				A
26	500497	SCREW CAP HEXS 3/8-16x3/4 ZP	4				
27	500478	WASHER LO SPT .380x.683x.094 ZP	4				
30	372131	ELBOW 90° REDUCER 1 1/8" I.D.W/3 1/4" x 1 3/8 I.D. W 5 1/4" C/C	1				
32	Y2-2207-01	**WATER VALVE - HEATER**					
34	373884	ATTACHMENT WATER VALVE From 2-7822		1	1	1	
34	373893	ATTACHMENT WATER VALVE From 2-7876	1				
34	373876	ATTACHMENT WATER VALVE			1		D
35	952641	CLAMP / 1 5/16" I.D. From 2-7822		1	1	1	
40	Y2-2207-20	**WATER VALVE - BYPASS W/WATER HEATER**					
41	373311	SUPPORT / BY-PASS VALVE	1		1		
42	500162	SCREW CAP HEX 1/4-20x1/2 G5 ZP	1				
43	502709	WASHER FL .260x.687x.050 XLN BK	1				
44	500638	SCREW TP BDG PH #8x1/2 ZP	2				
45	500470	WASHER LO SPT .193x.334x.047 ZP	2				
46	504383	CUFF END BELLOW / 7/8" I.D. x 1 1/2" x 2 1/4"	2				
47	504022	HOSE CLAMP / 3/4"-1"3/4 SS / HS-20	4				
48	451075	PROTECTOR HOSE SPLIT / 7/8" O.D. x 3"	2				
49	504384	CUFF END BELLOW / 1 1/4" I.D. x 1 3/4" x 4"	2				
50	Y2-2222-10	**A/C & HEATING LINE FRONT SECTION**					
51	Y2-2208-00	**A/C EXPANSION VALVE**					
60	Y2-2206-50	**WATER PUMP #871032**					
61	372131	ELBOW 90° REDUCER 1 1/8" I.D.W/3 1/4" x 1 3/8 I.D. W 5 1/4" C/C		2	2	2	
62	504451	HOSE CLAMP STEPLESS SPRING SS / OETIKER / 1.3-1.6		2	2	2	
63	373744	PIPE ASSY / WATER PUMP OUTLET Up to 2-7821		1	1	1	B
63	373051	PIPE ASSY / WATER PUMP OUTLET Up to 2-7821		1	1	1	C
63	373869	PIPE ASSY / WATER PUMP OUTLET From 2-7822			1		C,D
64	373134	HOSE /<>WATER VALVE & HEATER / 7/8" I.D. 229MM		1	1	1	
65	371554	HOSE 7/8" I.D. X 7.5"			1		
65	371533	HOSE 7/8" I.D. X 5.25" / REPLACED BY: 503651		1		1	
66	373749	RETURN JCT TUBE ASSY / W/BYPASS VALVE Up to 2-7821			1		
66	372136	RETURN JCT TUBE ASSY / W/O BYPASS VALVE			1		
		A) INLET SIDE					
		B) WITH BY-PASS WATER VALVE					
		C) WITHOUT BYPASS WATER VALVE					
		D) USE WITH "SLIDE-OUT"					

From Y-7046 Up to 8-9339	DATE: 01/2014	PAGE: Y2-2210-10

WATER PUMP & FILTER - INSTALLATION

ITEM	PART	DESCRIPTION	XL45	MTH40	MTH45	MTH45S	NOTE
66	373875	RETURN JCT TUBE ASSY Up to 2-7909			1		D
66	373915	RETURN JCT TUBE ASSY From 2-7910			1		D
67	952633	CLAMP / 7/8" I.D.			1		
68	500642	SCREW TP BDG PH #10x3/4 ZP			3		
69	371858	HOSE 1 3/8" I.D. 7"		1	1	1	
70	373748	SUPPORT / BY-PASS VALVE			1		
71	482616	SUPPORT WATER PUMP		1	1	1	
		D) USE WITH "SLIDE-OUT"					

From Y-7046 Up to 8-9339	DATE: 01/2014	PAGE: Y2-2210-10

WATER PUMP & FILTER - INSTALLATION

ITEM	PART	DESCRIPTION	XL45	MTH40	MTH45	MTH45S	NOTE

From 6-8806 Up to 8-9339	DATE: 01/2014	PAGE: Y2-2210-11
WATER PUMP - INSTALLATION		

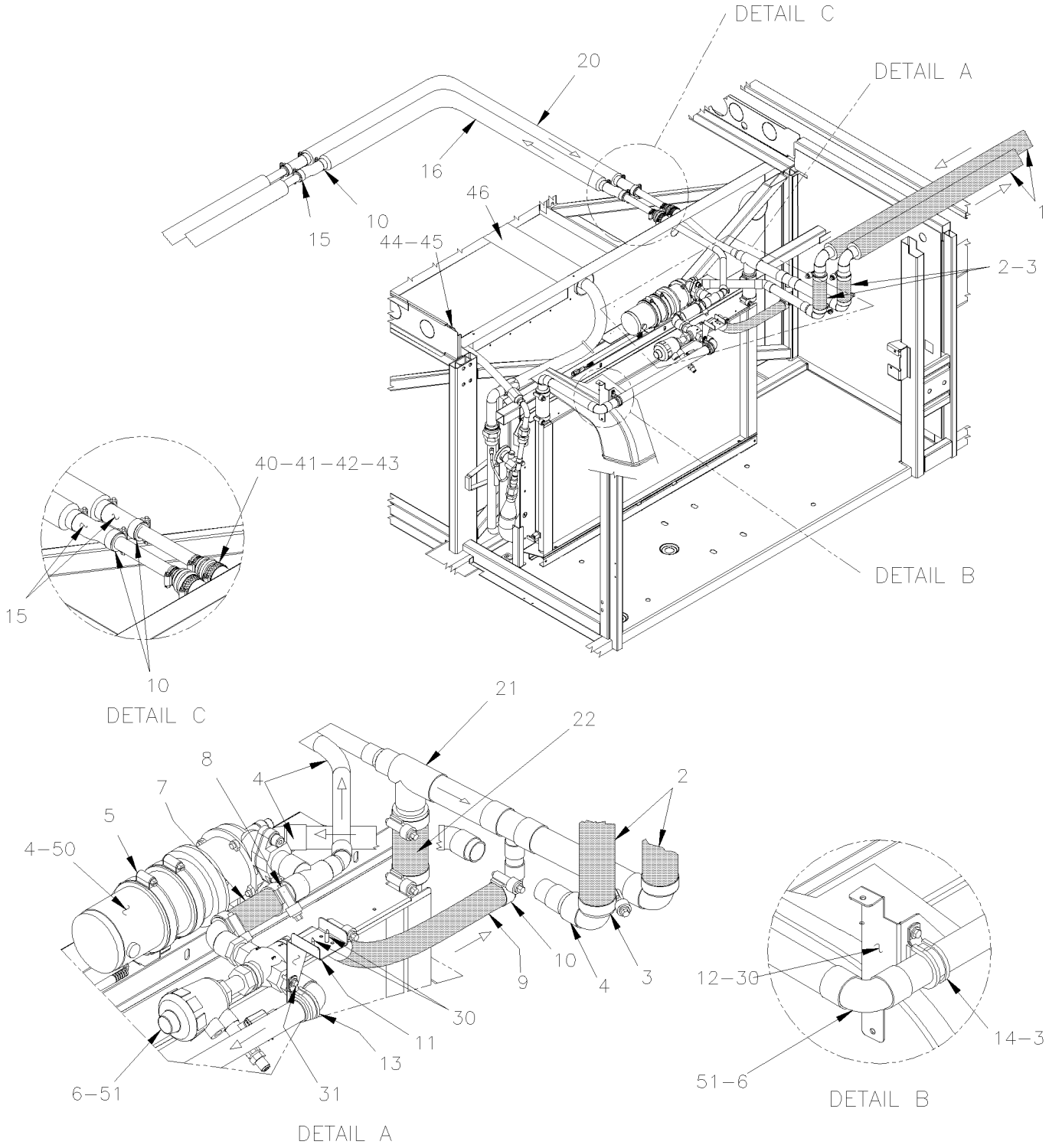

From 6-8806 Up to 8-9339	DATE: 01/2014	PAGE: Y2-2210-11

WATER PUMP - INSTALLATION

ITEM	PART	DESCRIPTION	XL45	MTH40	MTH45	MTH45S	NOTE
1	Y2-2222-31	**HEATER LINE REAR SECTION - MTH**	1				
2	503392	HOSE SILICONE 4 PLY 1 3/8" I.D. x 4'		AR	AR	AR	
3	504657	HOSE CLAMP / 1"1/16-2" C.T. 9424		AR	AR	AR	
4	Call Order Desk	PUMP WATER ASSY W/PIPE & CONNECTOR / SEALLESS MODEL		1	1	1	P
5	504235	HOSE CLAMP / 3"9/16"-4"1/2 SS / HS-64		2	2	2	
NS	506728	TAPE RUB ADH1 NEO 1/4" x 3/4" x 10' / BLACK		AR	AR	AR	
6	Call Order Desk	WATER VALVE ASSY W/PIPE & SUPPORT			1		P
. NS	374281	. ADAPTOR 7/8" I.D. WELDED x 3/4" B.P.T. MALE			1		
. NS	374282	. ADAPTOR 1 1/8" I.D. WELDED x 3/4" B.P.T. MALE			2		
6	374198P	WATER VALVE ASSY W/PIPE & SUPPORT		1		1	
7	503652	HOSE SILICONE 2PLY 1 1/8" I.D. x 3'		AR	AR	AR	
8	504658	HOSE CLAMP / 13/16"-1"3/4 / C.T. 9420		AR	AR	AR	
9	503651	HOSE SILICONE 2PLY 7/8" I.D. x 3'		AR	AR	AR	
10	504646	HOSE CLAMP / 11/16"-1"1/4 / C.T. 9412		AR	AR	AR	
11	374217	SUPPORT WATER VALVE BACKWARD		1	1	1	
12	374194	SUPPORT WATER VALVE		1	1	1	
12	374195	SUPPORT WATER VALVE FORWARD		1	1	1	
13	952639	CLAMP / 1"1/4 I.D.		1	1	1	
14	952637	CLAMP / 1"1/16 I.D.		1	1	1	
15	371532	HOSE 7/8" I.D. 6"		1	1	1	
16	Call Order Desk	PIPE ASSY / 1428MM BACKWARD SECTION		1	1	1	P
20	Call Order Desk	PIPE ASSY / 1432MM BACKWARD SECTION		1	1	1	P
21	374124	PIPE ASSY / RETURN LINE / W/BYPASS VALVE OR W/OUT BY PASS		1	1	1	
22	051383	HOSE / W/CENTRAL A/C SYSTEM / 1 3/8" I.D. X 150MM		1	1	1	
30	500957	SCREW TP BDG PH #10x3/4 ZG603		AR	AR	AR	
31	500588	SCREW CAP HEX M4-0.7x20 G8.8 ZP / REPLACED BY: 500414		2	2	2	
NS	500438	WASHER FL .187x.437x.050 ZP		2	2	2	
NS	500590	NUT HEX NYRT M4-0.7 ZP		2	2	2	
40	504383	CUFF END BELLOW / 7/8" I.D. x 1 1/2" x 2 1/4"		2	2	2	
41	451075	PROTECTOR HOSE SPLIT / 7/8" O.D. x 3"		2	2	2	
42	504022	HOSE CLAMP / 3/4"-1"3/4 SS / HS-20		AR	AR	AR	
43	504016	CABLE TIE / 5/16" X 14"1/2		AR	AR	AR	
44	504024	HOSE CLAMP / 1"13/16"-2"3/4 SS / HS-36		1	1	1	
45	504384	CUFF END BELLOW / 1 1/4" I.D. x 1 3/4" x 4"		1	1	1	
46	454238	TUBE PVC / 3" x 1137MM		1	1	1	
50	Y2-2206-01	**WATER PUMP #871342 SEALLESS**					
51	Y2-2207-02	**WATER VALVE - HEATER**					
52	Y2-2270-00	**RECEIVER TANK & FILTER DRYER**					
53	Y2-2208-00	**A/C EXPANSION VALVE**					
54	Y2-2205-01	**HEATER & EVAPORATOR COIL - INSTALLATION**					
		P) CALL ORDER DESK FOR SPECIFIC APPLICATION					
		(V.I.N.)					

From Y-7046 Up to 8-9339	DATE: 01/2014	PAGE: Y2-2210-20

WATER PUMP & FILTER - W/SMALL A/C

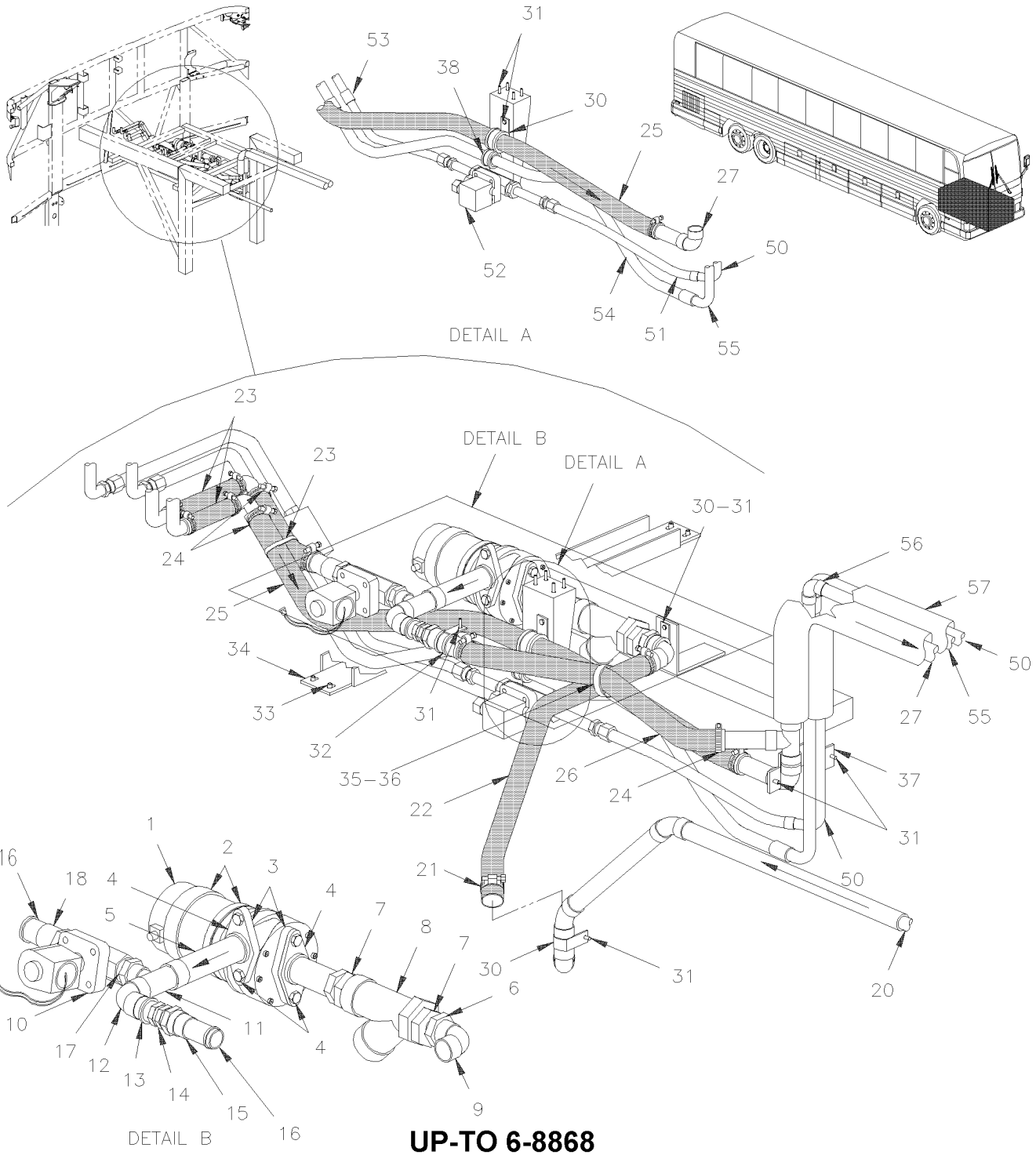

UP-TO 6-8868

From Y-7046 Up to 8-9339	DATE: 01/2014	PAGE: Y2-2210-20
WATER PUMP & FILTER - W/SMALL A/C		

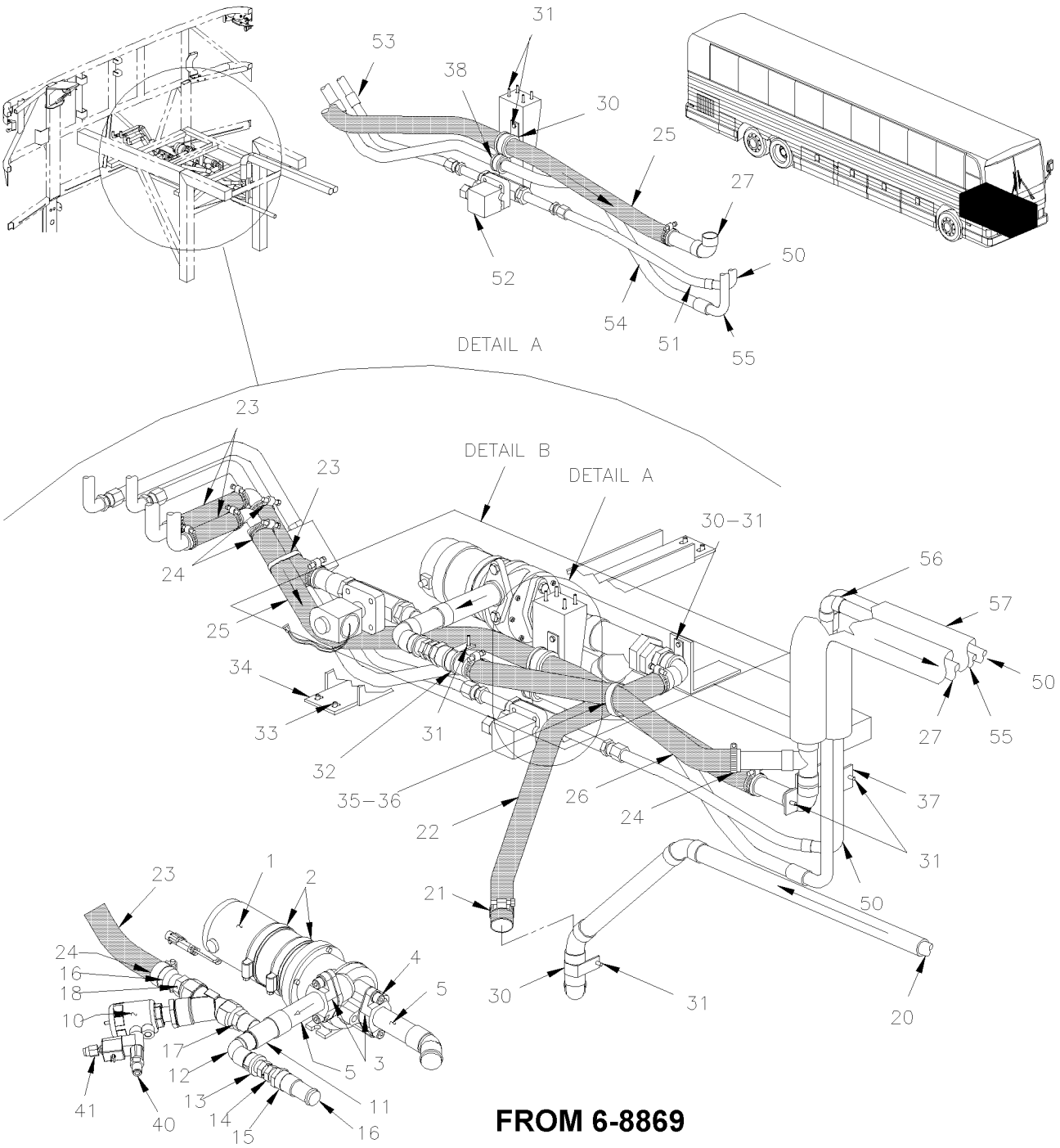

FROM 6-8869

From Y-7046 Up to 8-9339	DATE: 01/2014	PAGE: Y2-2210-20

WATER PUMP & FILTER - W/SMALL A/C

ITEM	PART	DESCRIPTION	XL45	MTH40	MTH45	MTH45S	NOTE
	Call Order Desk	WATER PUMP ASSY W/STRAINER & VALVE Up to 4-8228		1	1	1	P
	Call Order Desk	WATER PUMP ASSY W/STRAINER & VALVE From 4-8229 Up to 6-8868		1	1	1	P
	Call Order Desk	WATER PUMP ASSY W/WATER VALVE From 6-8869			1	1	P
1	Y2-2206-00	**WATER PUMP #871052 & #871204**					
1	Y2-2206-01	**WATER PUMP #871342 SEALLESS**					
2	504026	HOSE CLAMP / 2"13/16-3"3/4 SS / HS-52		2	2	2	
NS	506728	TAPE RUB ADH1 NEO 1/4" x 3/4" x 10' / BLACK		AR	AR	AR	
3	870862	FLANGE ADAPTOR / W/GASKET Up to 1-7409 / REPLACED BY: 871206		2	2	2	
3	871206	FLANGE ADAPTOR / W/QUAD RING From 1-7410		2	2	2	
NS	870441	GASKET PUMP INLET & OUTLET Up to 1-7409		2	2	2	
NS	871207	QUAD RING From 1-7410 Up to 4-8228		2	2	2	
NS	870441	GASKET PUMP INLET & OUTLET From 4-8229		2	2	2	
4	500695	SCREW CAP HEXS 3/8-16x1 ZP Up to 4-8228		4	4	4	
4	5001580	SCREW CAP HEXS 3/8-16x7/8 From 4-8229		4	4	4	
NS	500478	WASHER LO SPT .380x.683x.094 ZP		4	4	4	
5	503199	COPPER TUBE 1.125" O.D.x .050" x 240"		AR	AR	AR	
6	501794	ADAPTER / COPPER @ PIPE / 1Mx3/4NPT-M Up to 4-8228		2	2	2	
6	501553	ADAPTER / COPPER @ PIPE / 1Fx1NPT-M From 4-8229 Up to 6-8868		2	2	2	
7	501922	ADAPTER / PIPE FITTING / 3/4NPT-Fx1 1/4NPT-M BR Up to 4-8228		2	2	2	
8	870807	STRAINER FILTER, WATER 1" 1/4" N.P.T. Up to 4-8228		1	1	1	
8	871348	STRAINER FILTER, WATER 1" N.P.T. From 4-8229		1	1	1	
9	373617	ELBOW 90° W/BEAD Up to 6-8805		1	1	1	
9	372675	ELBOW 45° W/BEAD From 6-8806		1	1	1	
10	Y2-2207-10	**WATER VALVE - W/DRIVER'S HEATER**					
10	Y2-2207-01	**WATER VALVE - HEATER**					
11	501963	UNION TEE / COPPER TUBE / 1Fx3/4Fx3/4F		1	1	1	
12	501217	STREET ELBOW 90º SHORT RADIUS / COPPER TUBE / 3/4Mx3/4F		1	1	1	
13	501889	ADAPTER / COPPER @ PIPE / 3/4Mx1/2NPT-F		1	1	1	
14	870727	CHECK VALVE 1/2 NPT		1	1	1	
15	501568	ADAPTER / COPPER @ PIPE / 3/4Fx1/2NPT-F		1	1	1	
16	503198	COPPER TUBE .875" O.D. x .045" x 240"		AR	AR	AR	
17	501896	ADAPTER / COPPER @ PIPE / 3/4Fx3/4NPT-M		1	1	1	
18	501866	ADAPTER / COPPER @ PIPE / 3/4Fx3/4NPT-M		1	1	1	
20	Call Order Desk	PIPE ASSY / 6472MM Up to 5-8561		1			P
20	Call Order Desk	PIPE ASSY / 2905MM BACKWARD SECTION From 5-8562		1			P
20	Call Order Desk	PIPE ASSY / 3496MM FORWARD SECTION From 5-8562		1			P
20	Call Order Desk	PIPE ASSY / 7356MM Up to 5-8561			1		P
20	Call Order Desk	PIPE ASSY / 3289MM BACKWARD SECTION From 5-8562			1		P
20	Call Order Desk	PIPE ASSY / 3996MM FORWARD SECTION From 5-8562			1		P
20	Call Order Desk	PIPE ASSY / 7996MM Up to 5-8561				1	P
		P) CALL ORDER DESK FOR SPECIFIC APPLICATION					
		(V.I.N.)					

From Y-7046 Up to 8-9339	DATE: 01/2014	PAGE: Y2-2210-20

WATER PUMP & FILTER - W/SMALL A/C

ITEM	PART	DESCRIPTION	XL45	MTH40	MTH45	MTH45S	NOTE
20	Call Order Desk	PIPE ASSY / 4429MM BACKWARD SECTION From 5-8562				1	P
20	Call Order Desk	PIPE ASSY / 3496MM FORWARD SECTION From 5-8562				1	P
21	504658	HOSE CLAMP / 13/16"-1"3/4 / C.T. 9420		2	2	2	
22	373618	HOSE 1 1/8" I.D. X 605MM Up to 6-8868		1	1	1	
22	374220	HOSE 1 1/8" I.D. X 670MM From 6-8869		1	1	1	
23	Y2-2230-00	**DEFROSTER - INSTALLATION**					
24	504646	HOSE CLAMP / 11/16"-1"1/4 / C.T. 9412		AR	AR	AR	
25	373619	HOSE 7/8" I.D. X 855MM		1	1	1	
26	373674	HOSE 7/8" I.D. X 390MM		1	1	1	
. NS	503684	. HOSE SILICONE 1 PLY 7/8" I.D. x 100' / S.L.		AR	AR	AR	
27	Call Order Desk	PIPE ASSY / 6512MM Up to 5-8561		1			P
27	Call Order Desk	PIPE ASSY / 2963MM BACKWARD SECTION From 5-8562		1			P
27	Call Order Desk	PIPE ASSY / 3469MM FORWARD SECTION From 5-8562		1			P
27	Call Order Desk	PIPE ASSY / 7382MM Up to 5-8561			1		P
27	Call Order Desk	PIPE ASSY / 2963MM BACKWARD SECTION From 5-8562			1		P
27	Call Order Desk	PIPE ASSY / 4221MM FORWARD SECTION From 5-8562			1		P
27	Call Order Desk	PIPE ASSY / 8036MM Up to 5-8561				1	P
27	Call Order Desk	PIPE ASSY / 4037MM BACKWARD SECTION From 5-8562				1	P
27	Call Order Desk	PIPE ASSY / 3919MM FORWARD SECTION From 5-8562				1	P
30	952639	CLAMP / 1"1/4 I.D.		AR	AR	AR	
31	500642	SCREW TP BDG PH #10x3/4 ZP		AR	AR	AR	
32	952635	CLAMP / 1" I.D.		AR	AR	AR	
33	502526	SCREW TC BDG PH #12-24x3/4 ZP		4	4	4	
34	172355	SUPPORT / VALVE		1	1	1	
35	504637	CABLE TIE / 3/16" x 13"		AR	AR	AR	
36	504586	WASHER SPACER, NYLON .625 O.D.X.450		AR	AR	AR	
37	452906	SUPPORT		1	1	1	
38	952631	CLAMP / 3/4" I.D. / REPLACED BY: 977742		AR	AR	AR	
40	641332	MALE CONNECTOR / PUSH-IN FITTING / #4x1/4NPT-M BR From 6-8869			1	1	
41	642028	MALE CONNECTOR / PUSH-IN FITTING / 6mm x M5-0.8 BR From 6-8869			1	1	
50	453319	PIPE ASSY		1	1	1	
51	453333	HOSE ASSY / <> PIPE & VALVE #6 205MM		1	1	1	
. NS	507278	. O-RING / ORS FITTING /		2	2	2	
51	455212	HOSE ASSY / <> PIPE & VALVE #6 205MM		1	1	1	S
. NS	507278	. O-RING / ORS FITTING /		2	2	2	
52	Y2-2208-10	**REFRIGERANT SOLENOID VALVE**					
53	453331	HOSE ASSY / <> VALVE & EVAPORATOR / #6 250MM Up to 3-8164 / REPLACED BY: 455210		1	1	1	
. NS	507278	. O-RING / ORS FITTING / Up to 3-8164		2	2	2	
53	455210	HOSE ASSY / <> VALVE & EVAPORATOR / #6 250MM Up to 3-8164		1	1	1	S
. NS	507278	. O-RING / ORS FITTING / Up to 3-8164		2	2	2	
		P) CALL ORDER DESK FOR SPECIFIC APPLICATION					
		(V.I.N.)					
		S) SERVICE					

From Y-7046 Up to 8-9339	DATE: 01/2014	PAGE: Y2-2210-20

WATER PUMP & FILTER - W/SMALL A/C

ITEM	PART	DESCRIPTION	XL45	MTH40	MTH45	MTH45S	NOTE
53	454109	HOSE ASSY / <> VALVE & EVAPORATOR / #6 205MM		1	1	1	A
. NS	507278	. O-RING / ORS FITTING /		2	2	2	
53	455290	HOSE ASSY / <> VALVE & EVAPORATOR / #6 205MM		1	1	1	A,S
. NS	507278	. O-RING / ORS FITTING /		2	2	2	
54	453332	HOSE ASSY / <>EXPANSION VALVE OUTLET / #10 820MM Up to 3-8164		1	1	1	
. NS	507344	. O-RING / ORS FITTING / Up to 3-8164		2	2	2	
54	455211	HOSE ASSY / <>EXPANSION VALVE OUTLET / #10 820MM Up to 3-8164		1	1	1	S
. NS	507344	. O-RING / ORS FITTING / Up to 3-8164		2	2	2	
54	454107	HOSE ASSY / <>EXPANSION VALVE OUTLET / #10 875MM		1	1	1	A
. NS	507344	. O-RING / ORS FITTING /		2	2	2	
54	455289	HOSE ASSY / <>EXPANSION VALVE OUTLET / #10 875MM		1	1	1	A,S
. NS	507344	. O-RING / ORS FITTING /		2	2	2	
55	Call Order Desk	PIPE		1		1	P
55	Call Order Desk	PIPE ASSY			1		P
56	453704	PIPE		1	1	1	
57	506283	PIPE INSULATING / 1 5/8" I.D. X 1/2" TH. X 72 / APT15812		1	1	1	
		P) CALL ORDER DESK FOR SPECIFIC APPLICATION					
		(V.I.N.)					
		A) ALSO USE WITH "SELTEC" RETROFIT					
		S) SERVICE					

From Y-7046 Up to 8-9339	DATE: 01/2014	PAGE: Y2-2210-20

WATER PUMP & FILTER - W/SMALL A/C

ITEM	PART	DESCRIPTION	XL45	MTH40	MTH45	MTH45S	NOTE

From Y-7046 Up to 8-9096	DATE: 01/2014	PAGE: Y2-2221-00
UNDER FLOOR AIR DUCTING		

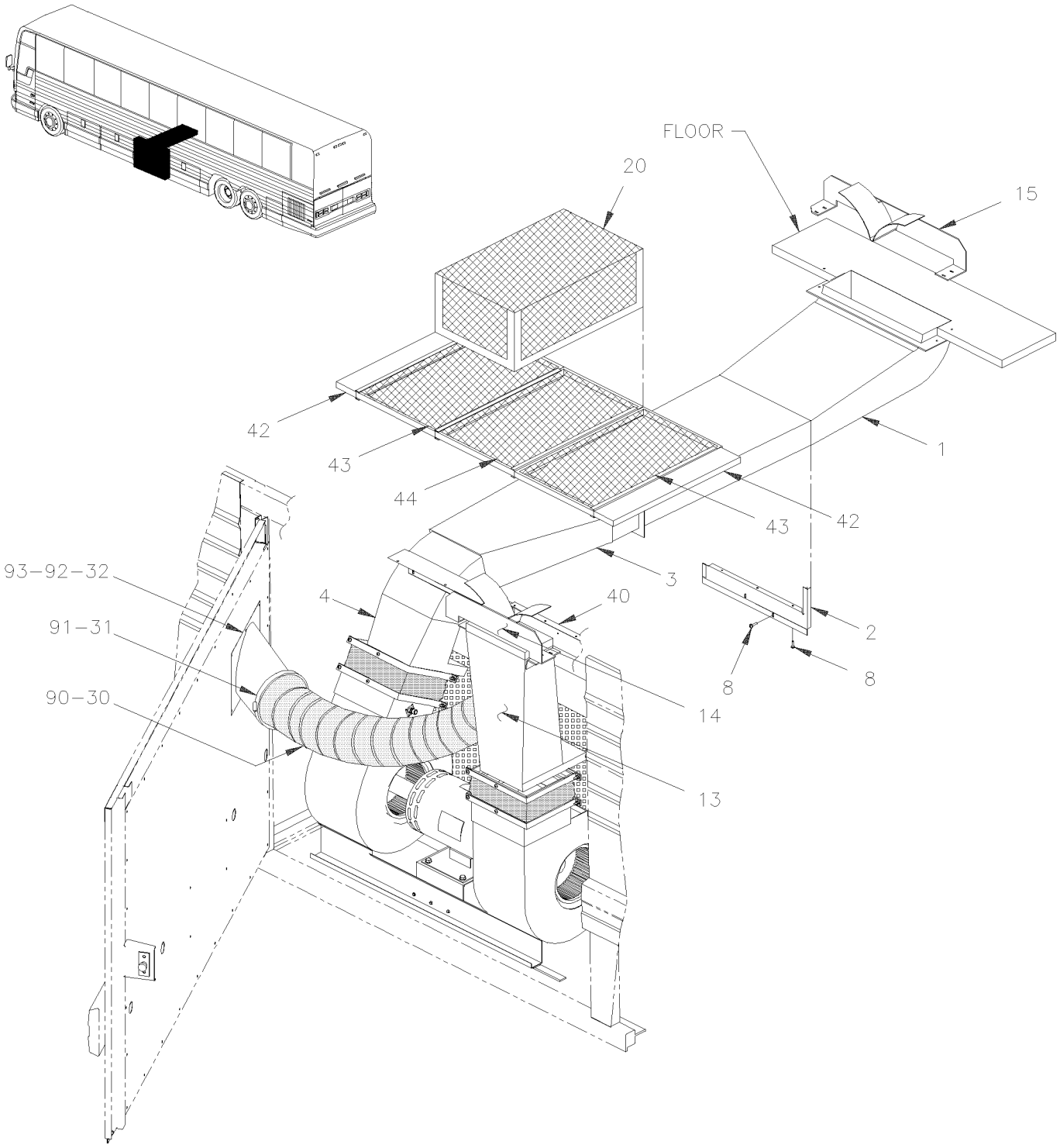

From Y-7046 Up to 8-9096	DATE: 01/2014	PAGE: Y2-2221-00
UNDER FLOOR AIR DUCTING		

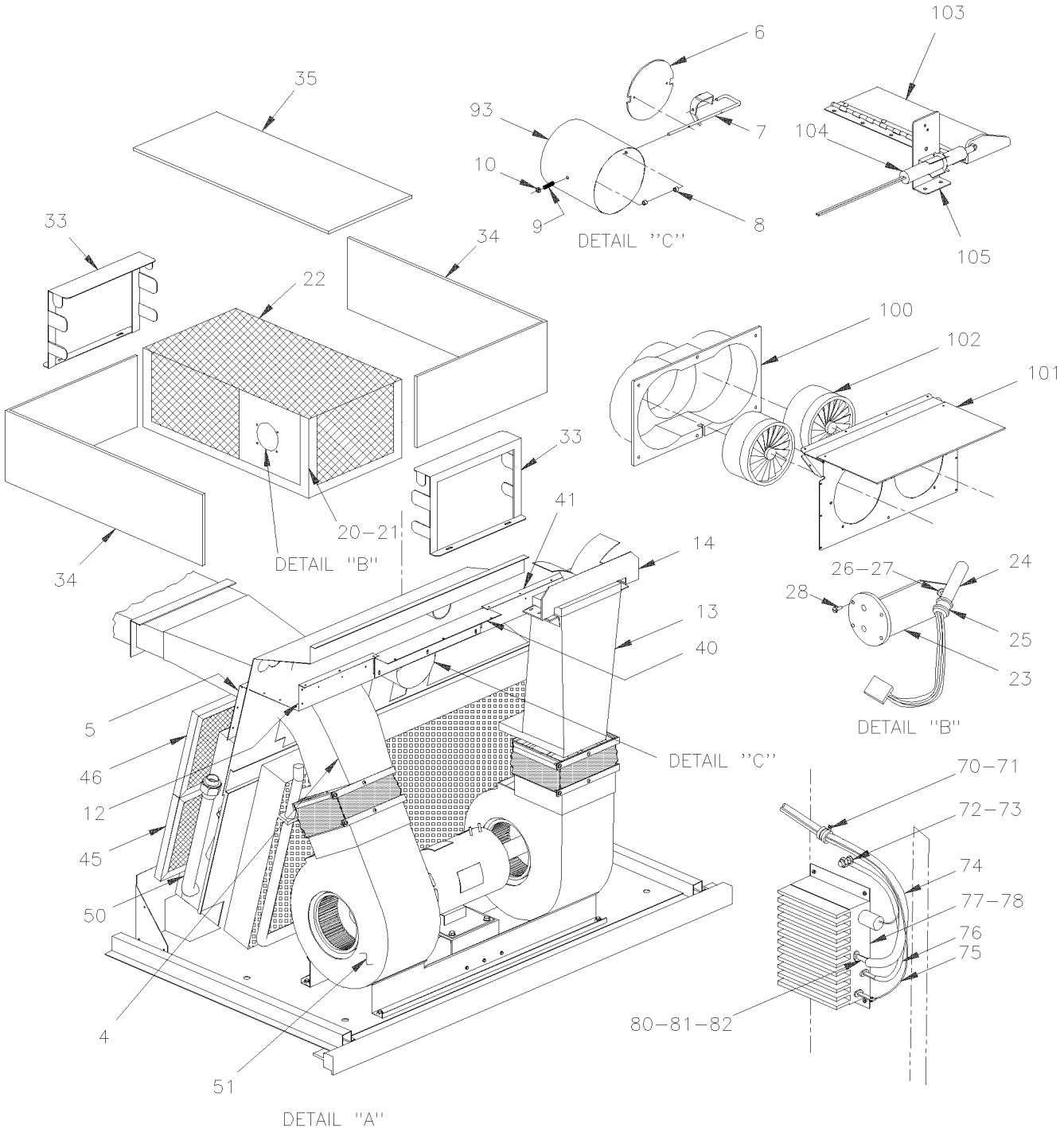

From Y-7046 Up to 8-9096	DATE: 01/2014	PAGE: Y2-2221-00

UNDER FLOOR AIR DUCTING

ITEM	PART	DESCRIPTION	XL45	MTH40	MTH45	MTH45S	NOTE
1	452923	DUCT ASSY Up to 6-8805		1		1	
1	453055	DUCT ASSY Up to Y-7207	1		1		
1	453603	DUCT ASSY From Y-7208	1				
1	453603	DUCT ASSY From Y-7208 Up to 6-8805			1		
2	452922	CLOSING PANEL ASSY	1				
2	452922	CLOSING PANEL ASSY Up to 6-8805		1	1	1	
3	452806	DUCT ASSY	1				
3	452806	DUCT ASSY Up to 6-8805		1	1	1	
4	450856	DUCT , L.H. OUTLET EVAPORATOR FAN	1				
4	450856	DUCT , L.H. OUTLET EVAPORATOR FAN Up to 6-8805		1	1	1	
5	453457	PANEL ASSY W/DAMPER / UPPER EVAPORATOR Up to 5-8644	1				D
5	Call Order Desk	PANEL ASSY W/DAMPER / UPPER EVAPORATOR From 5-8645	1				P
5	453458	PANEL ASSY W/DAMPER / UPPER EVAPORATOR Up to 6-8805		1	1	1	
5	485415	PANEL ASSY W/O DAMPER / UPPER EVAPORATOR / "SPECIAL OPTION" HYDRO QC	1				
6	452943	. DAMPER	1				
6	452943	. DAMPER Up to 6-8805		1	1	1	
7	452945	. PIVOT	1				
7	452945	. PIVOT Up to 6-8805		1	1	1	
NS	504107	. RIVET POP DOME OE 1/8x5/16 AL	1	1	1	1	
8	504083	. SNAP BUSHING / .250x.468.406	2				
8	504083	. SNAP BUSHING / .250x.468.406 Up to 6-8805		1	1	1	
9	502146	. SPRING COMPRESSION / .437 O.D. x .750 x .047	2				
9	502146	. SPRING COMPRESSION / .437 O.D. x .750 x .047 Up to 6-8805		1	1	1	
10	500770	. NUT HEX STO 1/4-20 ZP	1	1	1	1	
NS	500440	. WASHER FL .250x.562x.065 ZP	1	1	1	1	
13	452878	DUCT, R.H. OUTLET / EVAPORATOR FAN	1				
13	452878	DUCT, R.H. OUTLET / EVAPORATOR FAN Up to 6-8805		1	1	1	
14	453362	DEFLECTOR ASSY / EVAPORATOR SIDE	1				
14	453362	DEFLECTOR ASSY / EVAPORATOR SIDE Up to 6-8805		1	1	1	
15	453363	DEFLECTOR ASSY / CONDENSOR SIDE	1				
15	453363	DEFLECTOR ASSY / CONDENSOR SIDE Up to 6-8805		1	1	1	
20	453541	BOX ASSY / AIR RETURN Up to 1-7493	1				
20	453629	BOX ASSY / AIR RETURN From 1-7494	1				
		P) CALL ORDER DESK FOR SPECIFIC APPLICATION					
		(V.I.N.)					
		D) FOR PRODUCT IMPROVMENT, ASK KIT #453892					

From Y-7046 Up to 8-9096	DATE: 01/2014	PAGE: Y2-2221-00

UNDER FLOOR AIR DUCTING

ITEM	PART	DESCRIPTION	XL45	MTH40	MTH45	MTH45S	NOTE
20	453629	BOX ASSY / AIR RETURN From 1-7494 Up to 2-7877		1	1	1	
20	453791	. TEMPERATURE SENSOR ASSY W/SUPPORT From 2-7878		1	1	1	A
21	453032	. BASE / AIR RETURN	1				
21	453032	. BASE / AIR RETURN Up to 2-7877		1	1	1	
22	453031	. GRILL / AIR RETURN BOX	1				
22	453789	. GRILL / AIR RETURN From 2-7878		1	1	1	A
23	453033	. SUPPORT / TEMPERATURE SENSOR	1				
23	453033	. SUPPORT / TEMPERATURE SENSOR Up to 2-7877		1	1	1	
23	453792	. SUPPORT TERMISTOR From 2-7878		1	1	1	A
24	563026	. SENSOR THERMISTOR ASSY ("KEYSTONE") Up to 1-7493	1	1	1	1	
24	563063	. SENSOR THERMISTOR ASSY ("DELPHI") From 1-7494	1	1	1	1	
25	952624	. CLAMP / 1/4" I.D.	1	1	1	1	
26	500387	. SCREW MA RND PH #10-24x3/4 ZP	1	1	1	1	
27	500786	. NUT HEX #10-24 ZP	1	1	1	1	
28	500638	SCREW TP BDG PH #8x1/2 ZP	2	2	2	2	
30	452988	HOSE 6" I.D. 38"	1	1	1	1	
31	504324	HOSE CLAMP / 4"1/2-6"1/2 SS / HS-96	1	1	1	1	
32	452947	HOSE ADAPTOR, EVAPORATOR DOOR	1	1	1	1	
33	457420	SUPPORT RETURN AIR FILTER / "SPECIAL OPTION" HYDRO QC	2				
34	871377	FILTER ASSY RECIRCULATING ¼" X 6" X 27 1/8" / "SPECIAL OPTION" HYDRO QC	2				
35	871378	FILTER ASSY RECIRCULATING ¼" X9 3/8" X 17 3/4 / "SPECIAL OPTION" HYDRO QC	1				
40	482219	CLOSING PANEL ASSY Up to 6-8805		1	1	1	
41	482035	SLIDING TRACK 354MM / BACKWARD Up to 6-8805		1	1	1	
42	482047	PANEL ASSY W/SLIDING TRACK Up to 6-8805		1	1	1	
43	482049	FILTER ASSY W/SLIDING TRACK & RIVET Up to 6-8805		1	1	1	
44	871034	FILTER 13" x 21" Up to 6-8805		1	1	1	
45	373337	FILTER LOWER 10" X 37"	1				
46	373336	FILTER UPPER 10" X 37"	1				
47	482034	SLIDING TRACK 250MM / FORWARD Up to 6-8805		1	1	1	
50	Y2-2205-00	**HEATER & EVAPORATOR COIL - INSTALLATION**					
51	Y2-2210-00	**HEATER & EVAPORATOR BLOWER - INSTALLATION**					
70	952627	CLAMP / 1/2" I.D. Up to 4-8212		AR	AR	AR	
71	500638	SCREW TP BDG PH #8x1/2 ZP Up to 4-8212		AR	AR	AR	
		A) THIS MOUNTING IT FLAT ON FLOOR					

From Y-7046 Up to 8-9096	DATE: 01/2014	PAGE: Y2-2221-00

UNDER FLOOR AIR DUCTING

ITEM	PART	DESCRIPTION	XL45	MTH40	MTH45	MTH45S	NOTE
72	500998	NUT HEX 1/2-13 BR Up to 4-8212		1	1	1	
73	500857	WASHER LO INT .512x.900x.045 ZP Up to 4-8212		1	1	1	
74	063841	CABLE #0A / <> SPEED CONTROL & MOTOR Up to 4-8212		1	1	1	
75	063840	CABLE #166B / <> SPEED CONTROL & MOTOR Up to 4-8212		1	1	1	
76	063625	CABLE #0 / <> GROUND & SPEED CONTROL Up to 4-8212		1	1	1	
77	871086	CONTROL SPEED Up to 4-8212		1	1	1	
77	454001	SUPPORT / SPEED CONTROL / W/SLIDE OUT Up to 4-8212			2		B
77	502556	WASHER FL 4.3x9.0X0.8 SS Up to 4-8212			10		B
77	502636	WASHER LO SPT 4.1x7.6x0.9 ZP Up to 4-8212			10		B
77	502685	SCREW CAP HEX M4-0.7x20 SS EMN Up to 4-8212			10		B
78	500535	SCREW TP CAP HEX #14x3/4 ZP Up to 4-8212		4	4	4	
80	502531	SCREW CAP HEX M6-1.0x16 G8.8 ZP Up to 4-8212		3	3	3	
81	502621	NUT HEX STO M6-1.0 ZP Up to 4-8212		3	3	3	
82	500440	WASHER FL .250x.562x.065 ZP Up to 4-8212		3	3	3	
90	373999	HOSE 4" I.D. X 960MM Up to 6-8805			1		C
91	504235	HOSE CLAMP / 3"9/16"-4"1/2 SS / HS-64 Up to 6-8805			2		C
92	871337	HOSE ADAPTOR, EVAPORATOR DOOR Up to 6-8805			1		C
93	871332	ELBOW 20 DEG REDUCER / 156MM TO 100MM Up to 6-8805			1		C
93	682484	TAPE ALUMINUM ADH1 .005" x 3" x 300' ALUMINUM FSK3" Up to 6-8805			AR		C
100	453872	FRESCH AIR From 5-8645	1				E
101	453873	SUPPORT AXIAL FAN From 5-8645	1				E
102	871361	AXIAL FAN ASSY 12/28V / 230CFM From 5-8645	2				E
103	453887	FRESCH AIR DAMPER ASSY From 5-8645	1				E,F
104	405661	SUPPORT ACTUATOR From 5-8645	1				E,F
105	373415	ACTUATOR ASSY From 5-8645	1				E,F
NS	453892	KIT, RETROFIT FRESCH AIR DAMPER	1				
		B) FIXED ON MOTOR BASE WITH "SLIDE-OUT" ONLY					
		C) WITH "SLIDE OUT" ONLY					
		E) THOSE PARTS ARE ALSO INCLUDED IN KIT #453892					
		F) THOSE PARTS ARE LOCATED BACK OF MIRROR IN LAVATORY					

From Y-7046 Up to 8-9096	DATE: 01/2014	PAGE: Y2-2221-00

UNDER FLOOR AIR DUCTING

ITEM	PART	DESCRIPTION	XL45	MTH400	MTH445	MTH445S	NOTE

From 6-8806 Up to 8-9339	DATE: 01/2014	PAGE: Y2-2221-01

UNDER FLOOR AIR DUCTING

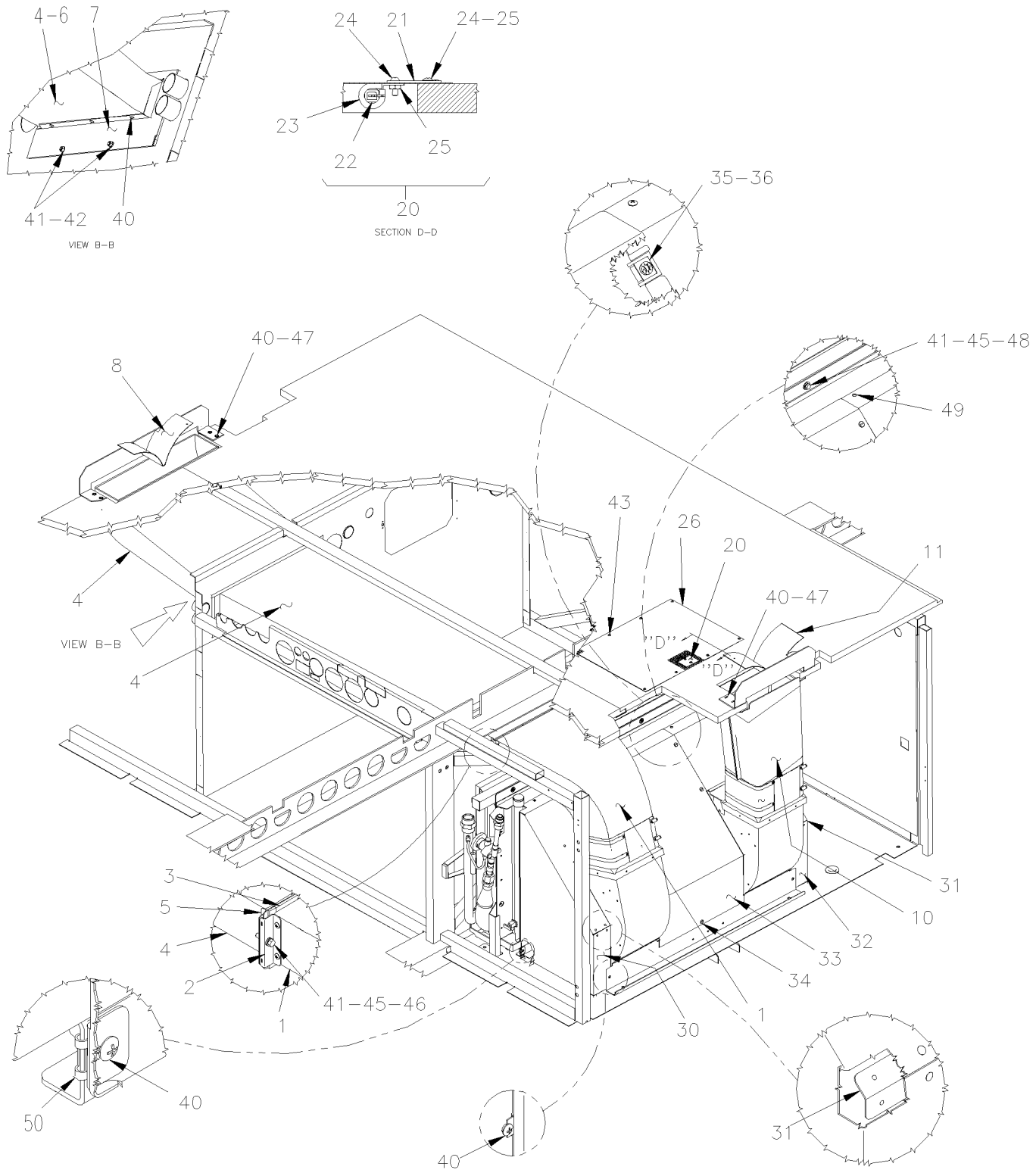

From 6-8806 Up to 8-9339	DATE: 01/2014	PAGE: Y2-2221-01

UNDER FLOOR AIR DUCTING

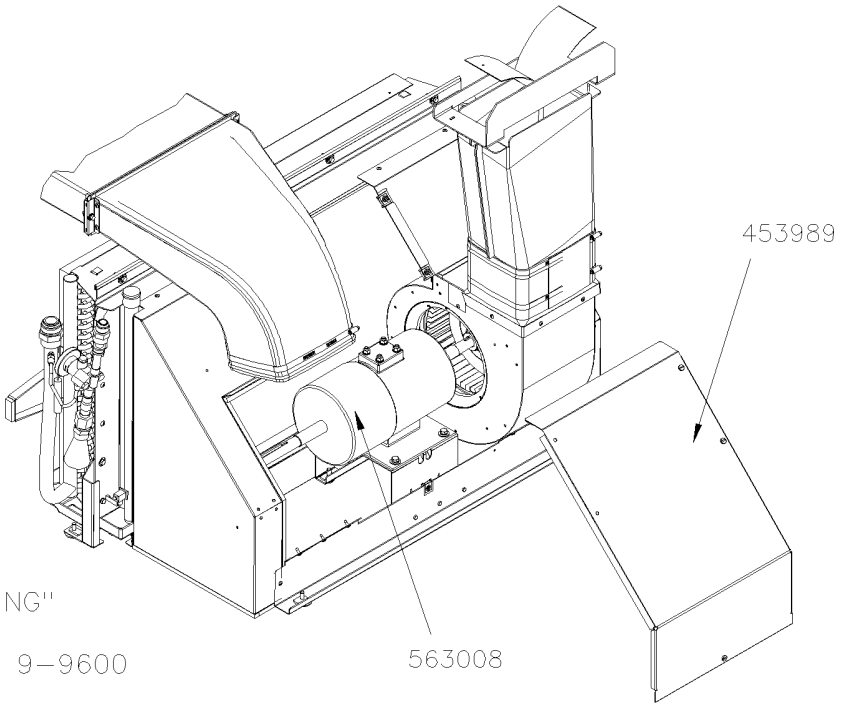

WARNING'' – ''WARNING'' –''WARNING''

FOR VEHICULE FROM 6–8806 TO 9–9600

IF YOU REPLACE THE EVAPORATOR MOTOR # 563008 WITH THE BRUSHLESS # 563586 YOU HAVE TO REPLACE # 453989 TO GIVE A CLEARENCE INSTALLATION FOR THE NEW MOTOR. THE NEW CENTRAL PLENUM COVER # 454671P WITH # 454648 CENTRAL SUPPORT

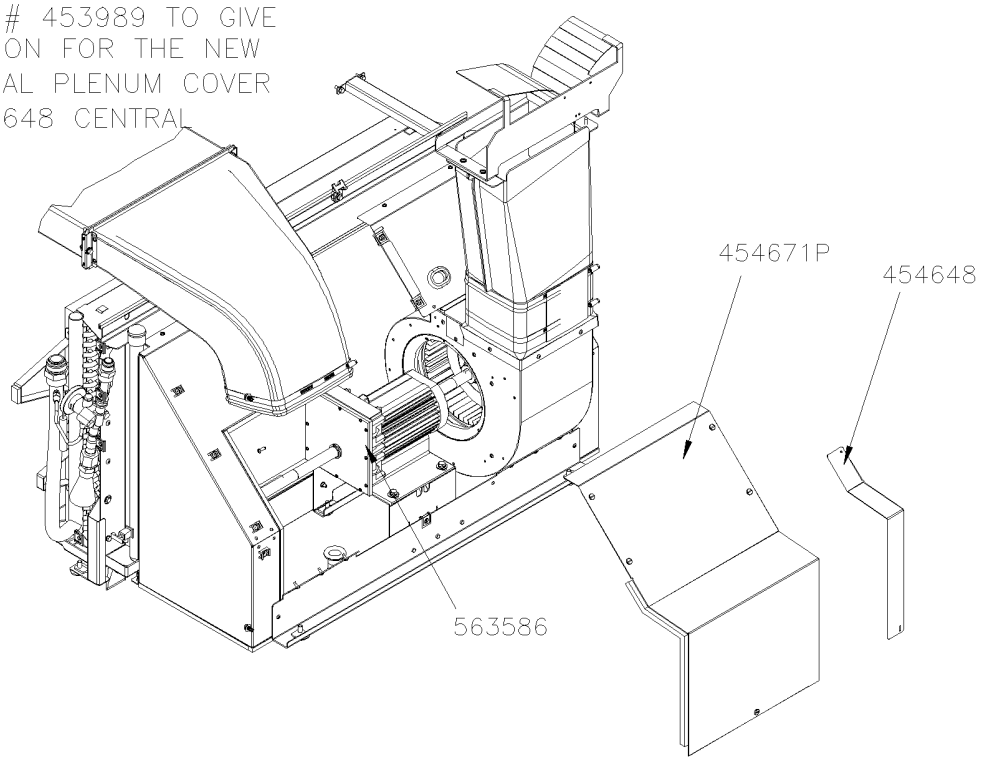

From 6-8806 Up to 8-9339	DATE: 01/2014	PAGE: Y2-2221-01

UNDER FLOOR AIR DUCTING

ITEM	PART	DESCRIPTION	XL45	MTH40	MTH45	MTH45S	NOTE
1	Call Order Desk	DUCT, L.H. OUTLET EVAPORATOR FAN		1	1	1	P
1	453978	. DUCT		1	1	1	
2	454236	. ATTACHMENT		2	2	2	
3	453997	. GASKET		1	1	1	
4	Call Order Desk	DUCT UNDER FLOOR ASSY		1	1	1	P
4	453976	. DUCT		4	4	4	
5	454235	. ATTACHMENT W/NUT		1	1	1	
NS	500957	. SCREW TP BDG PH #10x3/4 ZG603		4	4	4	
NS	506268	. TAPE RUB ADH1 URE 3/8" x 1/2" x 25' / GREY 1820		AR	AR	AR	
6	454306	. PLATE SEALING INSIDE		1	1	1	
7	454305	PLATE SEALING		1	1	1	
8	454253	DEFLECTOR ASSY CONDENSOR SIDE		1	1	1	
10	453979	DUCT, R,H, OUTLET EVAPORATOR FAN		1	1	1	
11	454284	DEFLECTOR ASSY EVAPORATOR SIDE		1	1	1	
20	453791	TEMPERATURE SENSOR ASSY W/SUPPORT		1	1	1	
21	453792	. SUPPORT TERMISTOR		1	1	1	
22	563063	. SENSOR THERMISTOR ASSY ("DELPHI")		1	1	1	
23	952637	. CLAMP / 1"1/16 I.D.		1	1	1	
24	500416	. SCREW MA BDG PH #10-32x1/2 BK		1	1	1	
25	500700	. NUT HEX #10-32 ZP		1	1	1	
26	453789	. GRILL / AIR RETURN		1	1	1	
30	453987	PLENUM FORWARD SECTION		1	1	1	
31	453991	REINFORCMENT		2	2	2	
31	504112	RIVET POP DOME OE 1/8x1/8 AL		8	8	8	
32	453988	PLENUM BACKWARD SECTION		1	1	1	
33	453989	PLENUM CENTRAL SECTION		1	1	1	
33A	454671P	PLENUM CENTRAL SECTION		1	1	1	
33B	454648	SUPPORT PLENUM CENTRAL SECTION		1	1	1	
34	504681	STUD 6MM (DZUS)		5	5	5	
35	504604	FASTENER		5	5	5	
36	504605	RECEPTACLE 6 MM		5	5	5	
40	500957	SCREW TP BDG PH #10x3/4 ZG603		17	17	17	
41	502737	SCREW CAP HEX M6-1.0x25 SS EMN		2	2	2	
42	502681	NUT HEX NYRT M6-1.0 ZG603		2	2	2	
43	500642	SCREW TP BDG PH #10x3/4 ZP		9	9	9	
44	502737	SCREW CAP HEX M6-1.0x25 SS EMN		2	2	2	
45	502573	WASHER FL 6.4x12.5x1.6 SS		2	2	2	
46	502853	WASHER LO SPT 6.1x11.8x1.6 ZG603		6	6	6	
47	500804	WASHER FL .203x.500x.047 ZG603		4	4	4	
48	500411	WASHER FL .260x.697x.050 SS		4	4	4	
49	502868	SCREW TC TR PH 10-24x1/2 ZG603		16	16	16	
50	502904	NUT SPR J #10A .035-.050 ZG603	AR				
		P) CALL ORDER DESK FOR SPECIFIC APPLICATION					
		(V.I.N.)					

From 6-8806 Up to 8-9339	DATE: 01/2014	PAGE: Y2-2221-01

UNDER FLOOR AIR DUCTING

ITEM	PART	DESCRIPTION	XL45	MTH40	MTH45	MTH45S	NOTE

From Y-7046 Up to 6-8906	DATE: 01/2014	PAGE: Y2-2221-10

DUCTING HEATER & A/C - BUS FLOOR

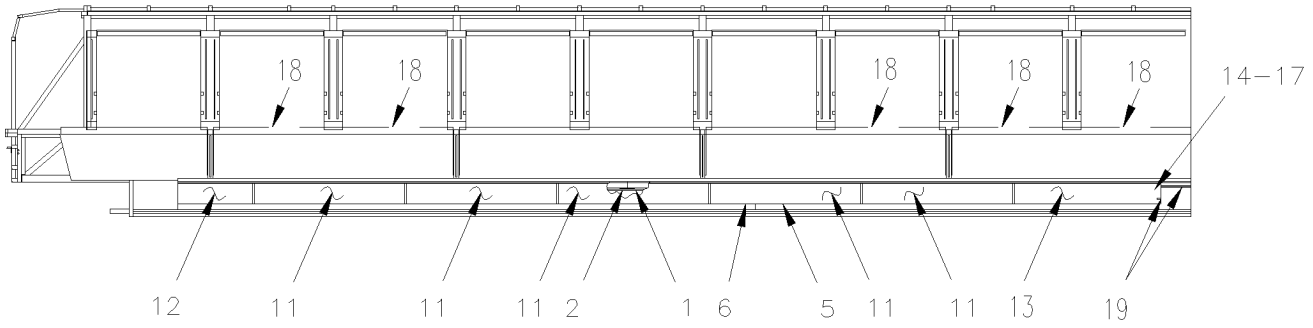

LEFT SIDE

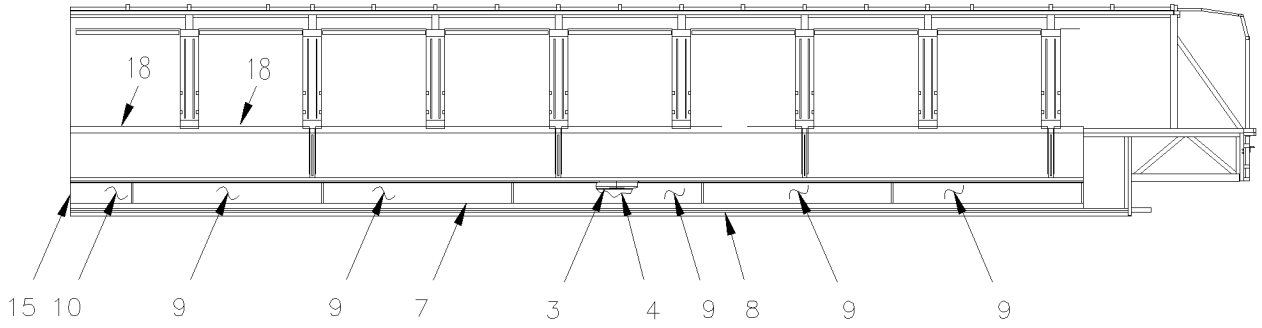

RIGHT SIDE

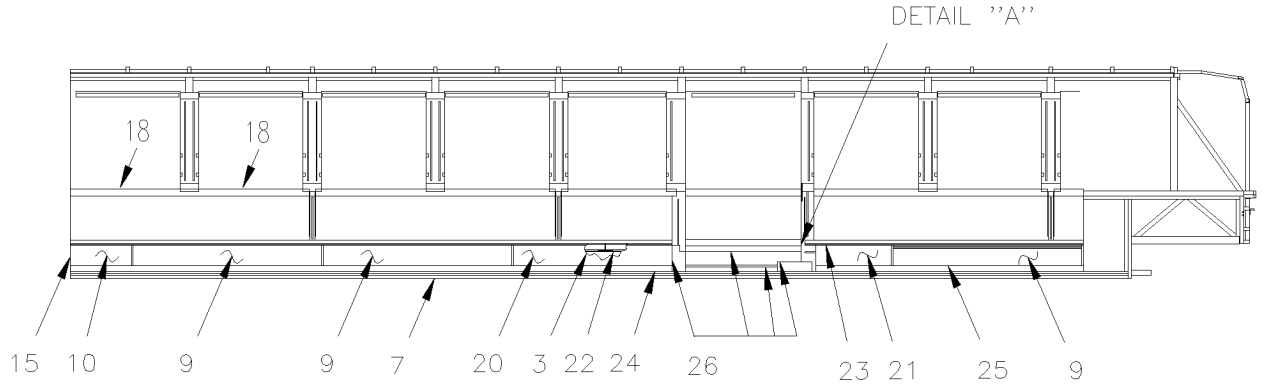

RIGHT SIDE WITH W.C.L.

From Y-7046 Up to 6-8906	DATE: 01/2014	PAGE: Y2-2221-10

DUCTING HEATER & A/C - BUS FLOOR

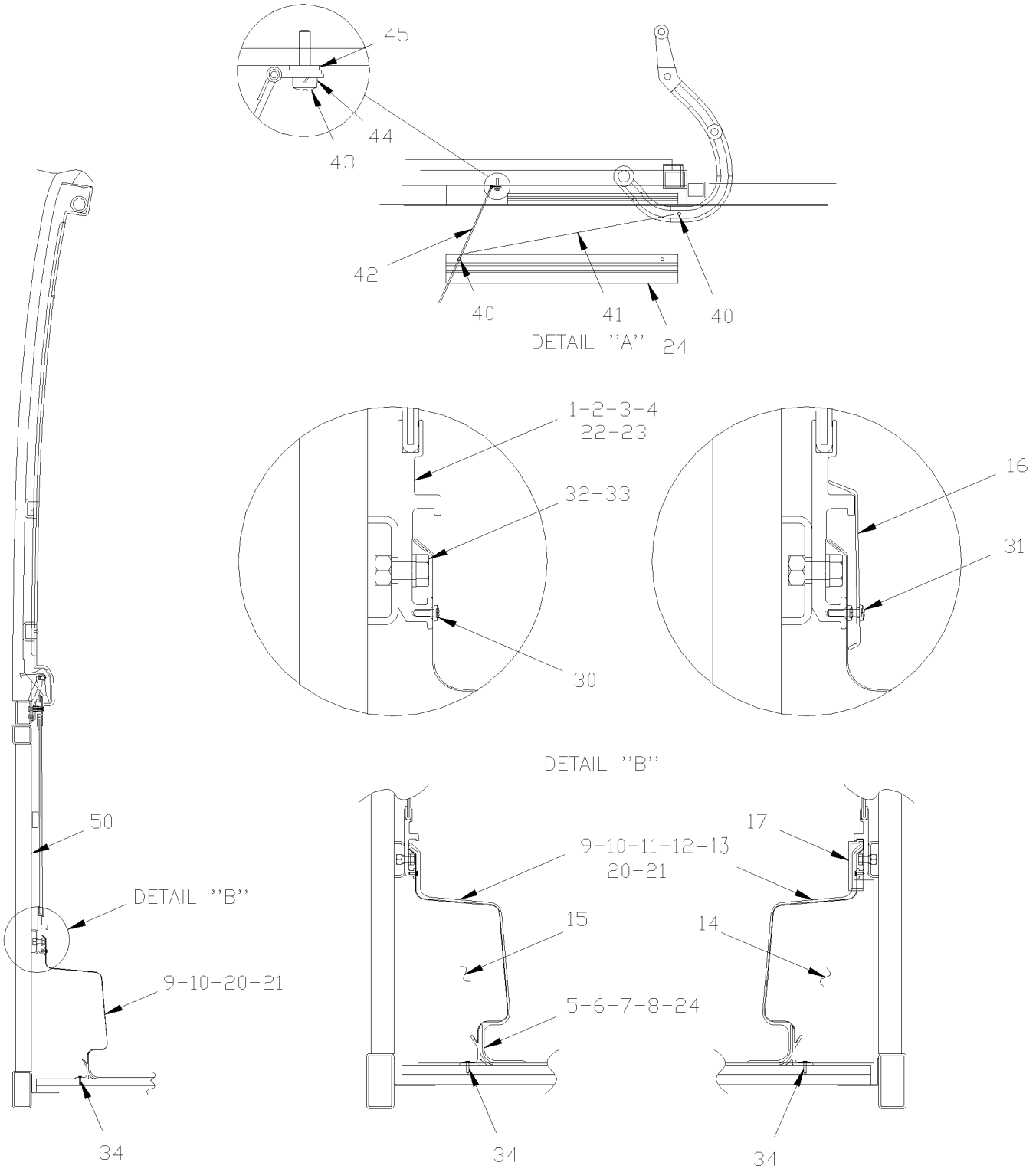

From Y-7046 Up to 6-8906	DATE: 01/2014	PAGE: Y2-2221-10

DUCTING HEATER & A/C - BUS FLOOR

ITEM	PART	DESCRIPTION	XL45	MTH40	MTH45	MTH45S	NOTE
1	327016	EXTRUSION, LOWER WALL 5651MM Up to 2-7761 / REPLACED BY: 327631	1				
1	327631	EXTRUSION, LOWER WALL / GREY 5651MM From 2-7762	1				
2	327017	EXTRUSION, LOWER WALL 5335MM Up to 2-7761 / REPLACED BY: 327632	1				
2	327632	EXTRUSION, LOWER WALL 5335MM / GREY From 2-7762	1				
3	327014	EXTRUSION, LOWER WALL 5651MM Up to 2-7761 / REPLACED BY: 327629	1				
3	327629	EXTRUSION, LOWER WALL / GREY 5651MM From 2-7762	1				
4	327015	EXTRUSION, LOWER WALL 4969.6MM Up to 2-7761 / REPLACED BY: 327630	1				
4	327630	EXTRUSION, LOWER WALL 4969.6MM / GREY From 2-7762	1				
5	326648	EXTRUSION, FLOOR 4512MM	1				
7	326847	EXTRUSION, FLOOR 6065MM	1				
8	326653	EXTRUSION, FLOOR 4272MM	1				
9	326696	DUCT, AIR 2000MM Up to 2-7850	3				
9	327688	DUCT, AIR 2000MM / GREY From 2-7851	3				
10	326834	DUCT, AIR 751MM Up to 2-7850	1				
10	327697	DUCT, AIR 751MM / GREY From 2-7851	1				
11	326758	DUCT, AIR 1615MM Up to 2-7850	5				
11	327695	DUCT, AIR 1615MM / GREY From 2-7851	1				
12	326761	DUCT, AIR 1130MM Up to 2-7850	1				
12	327696	DUCT, AIR 1130MM / GREY From 2-7851	1				
13	327267	DUCT, AIR 1691MM Up to 2-7850	1				
13	327698	DUCT, AIR 1691MM / GREY From 2-7851	1				
14	326841	CAP CLOSING / L.H. FRONT DUCT	1				
15	327345	CAP CLOSING / R.H. FRONT DUCT	1				
16	328984	MOULDING, COVER CABLE 203MM Up to 2-7850	1				
16	327742	MOULDING, COVER CABLE 203MM / GREY From 2-7851	1				
16	327436	MOULDING, COVER CABLE 330MM Up to 2-7850	1				
16	327709	MOULDING, COVER CABLE 330MM / GREY From 2-7851	1				
16	327073	MOULDING, COVER CABLE 360MM Up to 2-7850	1				
16	327706	MOULDING, COVER CABLE 360MM / GREY From 2-7851	1				
16	327074	MOULDING, COVER CABLE 390MM Up to 2-7850	1				
16	327707	MOULDING, COVER CABLE 390MM / GREY From 2-7851	1				
16	327075	MOULDING, COVER CABLE 465MM Up to 2-7850	1				
16	327708	MOULDING, COVER CABLE 465MM / GREY From 2-7851	1				
16	327072	MOULDING, COVER CABLE 530MM Up to 2-7850	1				
16	327705	MOULDING, COVER CABLE 530MM / GREY From 2-7851 / REPLACED BY: 329517	1				
17	327269	FINISHING MOULDING / PLASTIC CAP 200MM x 88MM	1				
18	453690	RESTRICTION AIR DIFFUSOR / "U" SHAPE 757MM	7				
19	506035	TAPE RUB ADH1 NEO 1/2" x 1" x 15' / BLACK 1220X	AR				
20	328766	DUCT 1741MM Up to 2-7850	1				
20	327699	DUCT 1741MM / GREY From 2-7851	1				
21	328767	DUCT 866MM Up to 2-7850	1				
21	327737	DUCT 866MM / GREY From 2-7851	1				
22	328762	EXTRUSION, LOWER WALL 775MM Up to 2-7843 / REPLACED BY: 327771	1				
22	327771	EXTRUSION, LOWER WALL / GREY 775MM From 2-7844	1				

From Y-7046 Up to 6-8906	DATE: 01/2014	PAGE: Y2-2221-10

DUCTING HEATER & A/C - BUS FLOOR

ITEM	PART	DESCRIPTION	XL45	MTH40	MTH45	MTH45S	NOTE
23	328763	EXTRUSION, LOWER WALL 2878MM Up to 2-7843 / REPLACED BY: 327772	1				
23	327772	EXTRUSION, LOWER WALL 2878MM From 2-7844	1				
24	328764	EXTRUSION, LOWER WALL / GREY 367MM	1				
25	328765	EXTRUSION, LOWER WALL 2817MM	1				
26	Y2-2221-80	**AIR DUCT W.C.L. DOOR "RICON"**	1				
30	500417	SCREW TP BDG PH #6x3/8 ZP	84				
31	500583	SCREW TP BDG PH #6x1/2 ZP	56				
32	5001473	SCREW CAP HEXS 5/16-18x3/4 NYRT	20				
33	500441	WASHER FL .312x.734x.065 ZP	20				
34	500552	SCREW TP OV PH #6x3/4 ZP	34				
NS	500463	WASHER FN CKF .187x.500x.090 BR NP	34				
40	504106	RIVET POP DOME OE 1/8x1/4 AL	1				
41	327522	WIRE ASSY	1				
42	328888	DUCT CLOSING TRAP ASSY	1				
43	500658	SCREW TC PAN PH #10-24x3/4 ZP	1				
44	500470	WASHER LO SPT .193x.334x.047 ZP	1				
45	5001137	WASHER FL .203x.438x.050 SS	1				
50	850073	ALUMINUM WALL COVERING ADHESIVE / 28 1/2" X 448" / REPLACED BY: 850094	2				
NS	862967	SAFETY BELT CUTTER / W.C.L. / EMERGENCY	1				

From Y-7046 Up to 6-8906	DATE: 01/2014	PAGE: Y2-2221-20
ENTRANCE STEP DE-ICER		

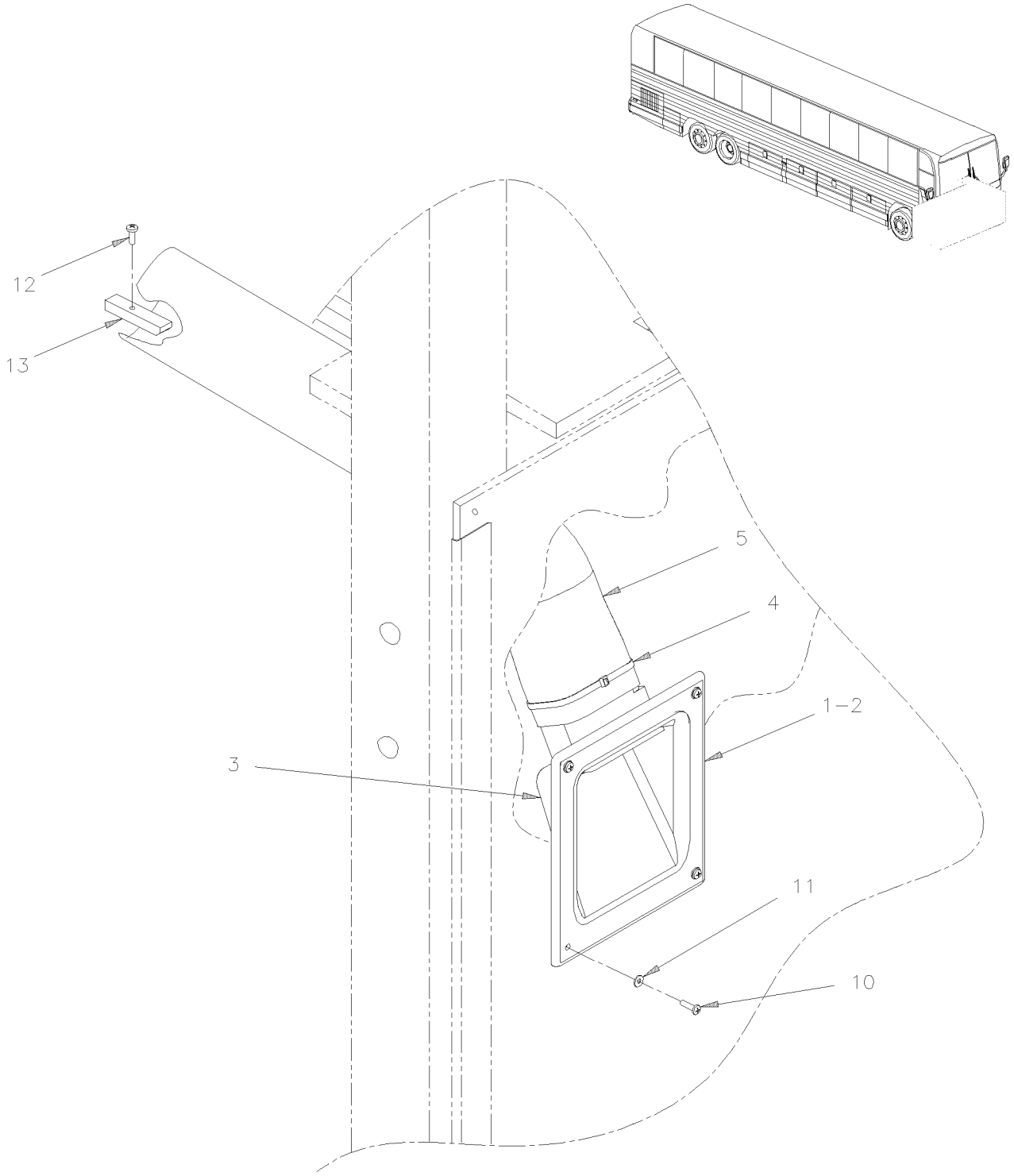

From Y-7046 Up to 6-8906	DATE: 01/2014	PAGE: Y2-2221-20

ENTRANCE STEP DE-ICER

ITEM	PART	DESCRIPTION	XL45	MTH40	MTH45	MTH45S	NOTE
1	373764	DIFFUSOR ASSY	1				
2	373689	. SUPPORT, DIFFUSOR	1				
3	871106	. LOUVER, ADJUSTABLE	1				
4	504637	. CABLE TIE / 3/16" x 13"	1				
NS	680319	. TAPE ADHESIF ELECTRIC / BLACK ¾"	AR				
5	373697	. HOSE 3" I.D. X 550MM	1				
NS	503695	. HOSE FLEXIBLE / AIR DUCT 3" I.D. X 25`/ PLASTIC	AR				
10	502774	NUT WELL #10-32x.625	4				
11	502735	SCREW MA BDG PH #10-32x1 SS EMN	4				
12	500432	SCREW TC BDG PH #8-32x3/4 ZP	1				
13	372343	HOSE RETAINER	1				

From Y-7046 Up to 8-9339	DATE: 01/2014	PAGE: Y2-2221-50
DUCTING HEATER & A/C - MTH FLOOR		

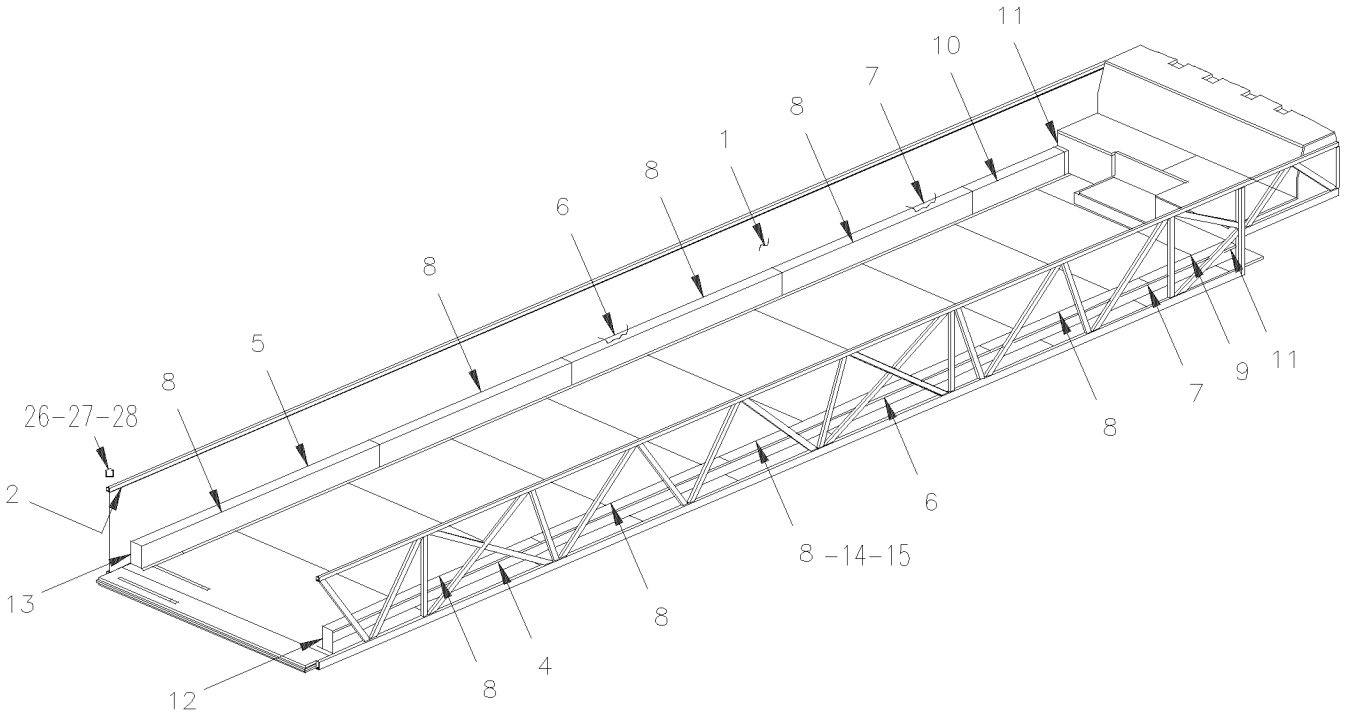

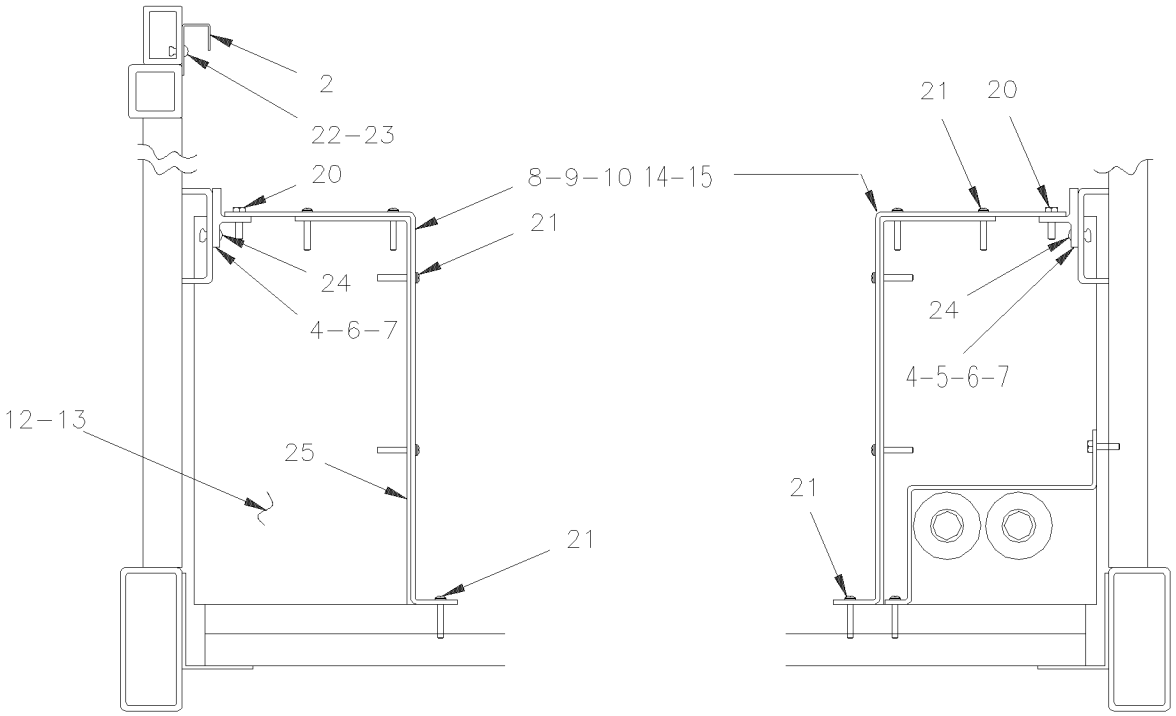

From Y-7046 Up to 8-9339	DATE: 01/2014	PAGE: Y2-2221-50

DUCTING HEATER & A/C - MTH FLOOR

ITEM	PART	DESCRIPTION	XL45	MTH40	MTH45	MTH45S	NOTE
1	850065	ALUMINUM WALL COVERING ADHESIVE / 32 1/4" X 455" / REPLACED BY: 850089		1	1	1	
2	320186	AIR GRILL & SPACER 48"LG / BELOW WINDOW		18			
2	320186	AIR GRILL & SPACER 48"LG / BELOW WINDOW			20	20	
2	378243	AIR GRILL & SPACER / BELOW WINDOW			1		
4	373706	"T" SUPPORT, AIR DUCT			1		
4	372602	"T" SUPPORT, AIR DUCT 3849MM				1	
4	373709	"T" SUPPORT, AIR DUCT		1			
5	373492	"T" SUPPORT, AIR DUCT			1		
5	373716	"T" SUPPORT, AIR DUCT				1	
5	373712	"T" SUPPORT, AIR DUCT		1			
6	373707	"T" SUPPORT, AIR DUCT			2		
6	373714	"T" SUPPORT, AIR DUCT				1	
6	373710	"T" SUPPORT, AIR DUCT		2			
7	373708	"T" SUPPORT, AIR DUCT			1		
7	373715	"T" SUPPORT, AIR DUCT				1	
7	373958	"T" SUPPORT, AIR DUCT 2815MM			1		
7	373711	"T" SUPPORT, AIR DUCT		2			
8	371712	DUCT, 2438MM		6			
8	371712	DUCT, 2438MM			8	8	
8	374202	DUCT, 1657MM From 6-8806			6		
8	374203	DUCT, 2046MM From 6-8806				3	
9	373631	DUCT, 1242MM / L.H. REAR			1	1	
9	373658	DUCT, 2121MM / L.H. REAR		1			
10	373632	DUCT, 1379MM / R.H. REAR			1	1	
10	373659	DUCT, 2267MM / R.H. REAR		1			
11	506025	RUBBER CHANNEL / 1/18" x 5/16" INT "U" SHAPE / SQUARE C.T.L.		AR	AR	AR	
12	371716	CAP L.H. / FRONT			1		
12	374218	CAP L.H. / FRONT / W/SLIDE OUT From 6-8806				1	
13	371715	CAP R.H. / FRONT			1		
14	373934	DUCT, 1090MM			1		
14	373631	DUCT, 1242MM / L.H. REAR From 1-7460 Up to 3-8164			1		
14	373957	DUCT, 590MM / W/SLIDE OUT From 4-8165 Up to 6-8805			1		
14	374180	DUCT, 450MM / W/SLIDE OUT From 6-8806			1		
15	374209	DUCT, 588MM / W/SUPPORT From 6-8806			1		
15	374181	DUCT, 1826MM / W/SLIDE OUT From 6-8806			1		
20	500657	SCREW TC TR PH #10-24x1/2 ZP		AR	AR	AR	
21	500641	SCREW TP BDG PH #8x3/4 ZP		AR	AR	AR	
22	500437	WASHER FL .125x.375x.040 ZP		AR	AR	AR	
23	504105	RIVET POP DOME OE 1/8x3/16 AL		AR	AR	AR	
24	504379	RIVET POP DOME OE 3/16x1/4 SS		AR	AR	AR	
25	506236	TAPE RUB ADH1 CC POL 1/16" x 1/2" x 100' / GREY 2520		AR	AR	AR	
26	293854	SUPPORT SWITCH / REMOTE OPERATIONAL MODEL From 7-9096		1	1	1	
27	562699	SWITCH / M/ON-OFF-M/ON / D.P.D.T. / W/GREEN LED From 7-9096		1	1	1	
28	563278	CAP / HI SPEED MAIN VENTILATION From 7-9096		1	1	1	

From Y-7046 Up to 6-8906	DATE: 01/2014	PAGE: Y2-2221-80
AIR DUCT W.C.L. DOOR "RICON"		

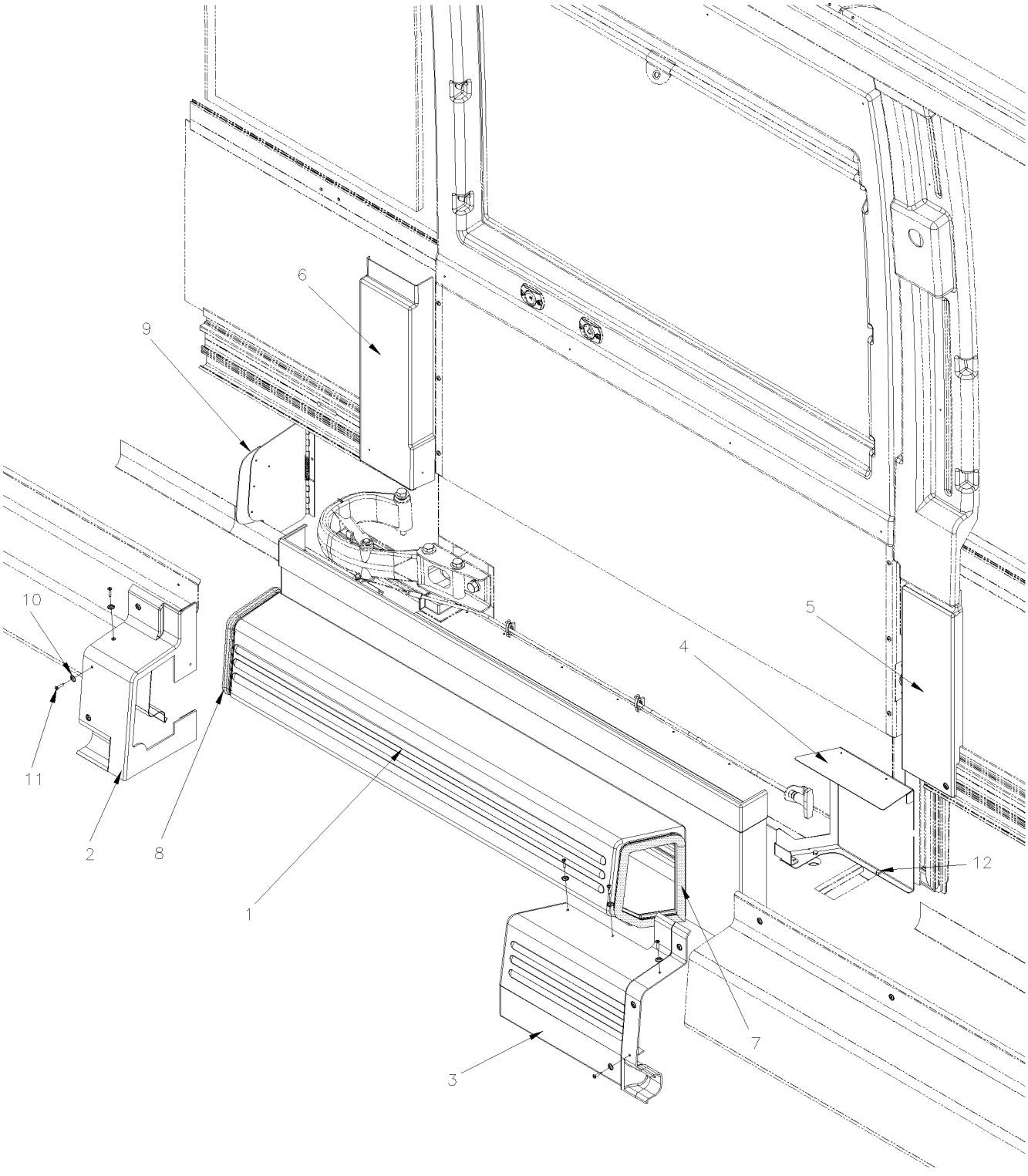

From Y-7046 Up to 6-8906	DATE: 01/2014	PAGE: Y2-2221-80

AIR DUCT W.C.L. DOOR "RICON"

ITEM	PART	DESCRIPTION	XL45	MTH40	MTH45	MTH45S	NOTE
1	328774	DUCT DOOR WCL	1				
2	328775	DUCT WCL FRONT CAP	1				
3	328771	DUCT REAR END TOP / W.C.L. DOOR Up to 4-8290	1				
3	327797	DUCT REAR END TOP / W.C.L. DOOR From 4-8291	1				
4	328782	DUCT REAR END BOTTOM / W.C.L. DOOR Up to 4-8290 / REPLACED BY: 327796	1				
4	327796	DUCT REAR END BOTTOM / W.C.L. DOOR From 4-8291	1				
5	329538	MOLDING, FINISHING	1				
6	327432	MOLDING, FINISHING	1				
7	327511	SEAL DUCT 546MM	1				
8	327519	SEAL DUCT 590MM	1				
NS	680030	GLUE	AR				
9	328888	DUCT CLOSING TRAP ASSY	1				
9	504106	RIVET POP DOME OE 1/8x1/4 AL	1				
9	327522	WIRE ASSY	1				
10	500643	SCREW TP BDG PH #12x3/4 ZP	AR				
11	500552	SCREW TP OV PH #6x3/4 ZP	AR				
12	5001169	SCREW TP CAP HEXW #12x3/4 SS410	3				

From Y-7046 Up to 2-7764	DATE: 01/2014	PAGE: Y2-2222-00

HEATER LINE REAR SECTION - BUS

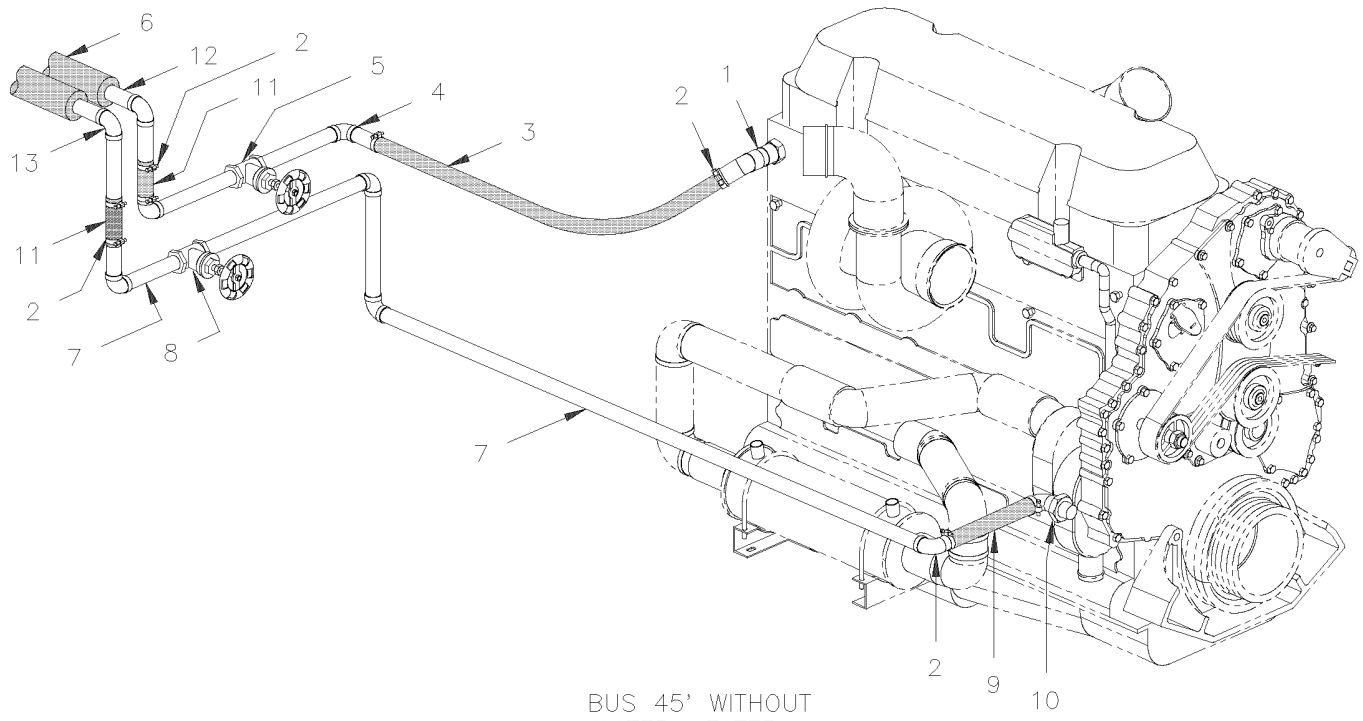

BUS 45' WITHOUT
WATER HEATER

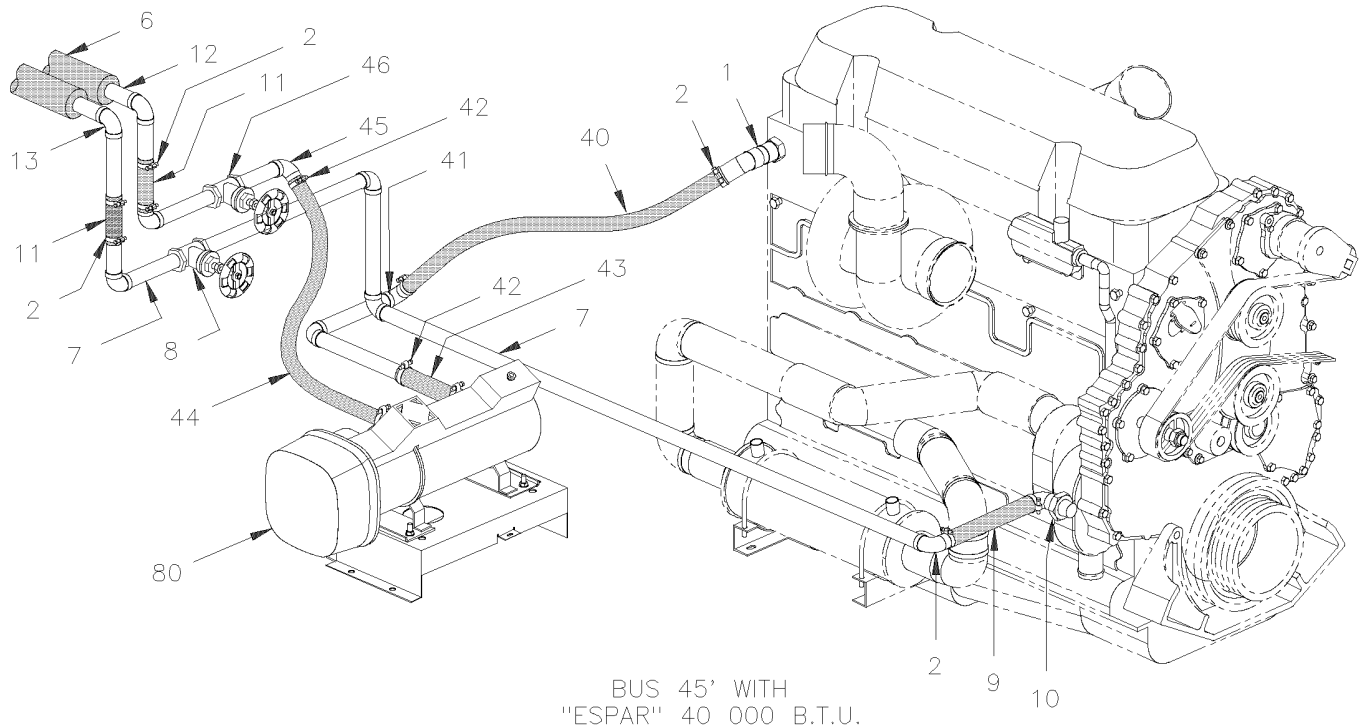

BUS 45' WITH
"ESPAR" 40 000 B.T.U.

From Y-7046 Up to 2-7764	DATE: 01/2014	PAGE: Y2-2222-00

HEATER LINE REAR SECTION - BUS

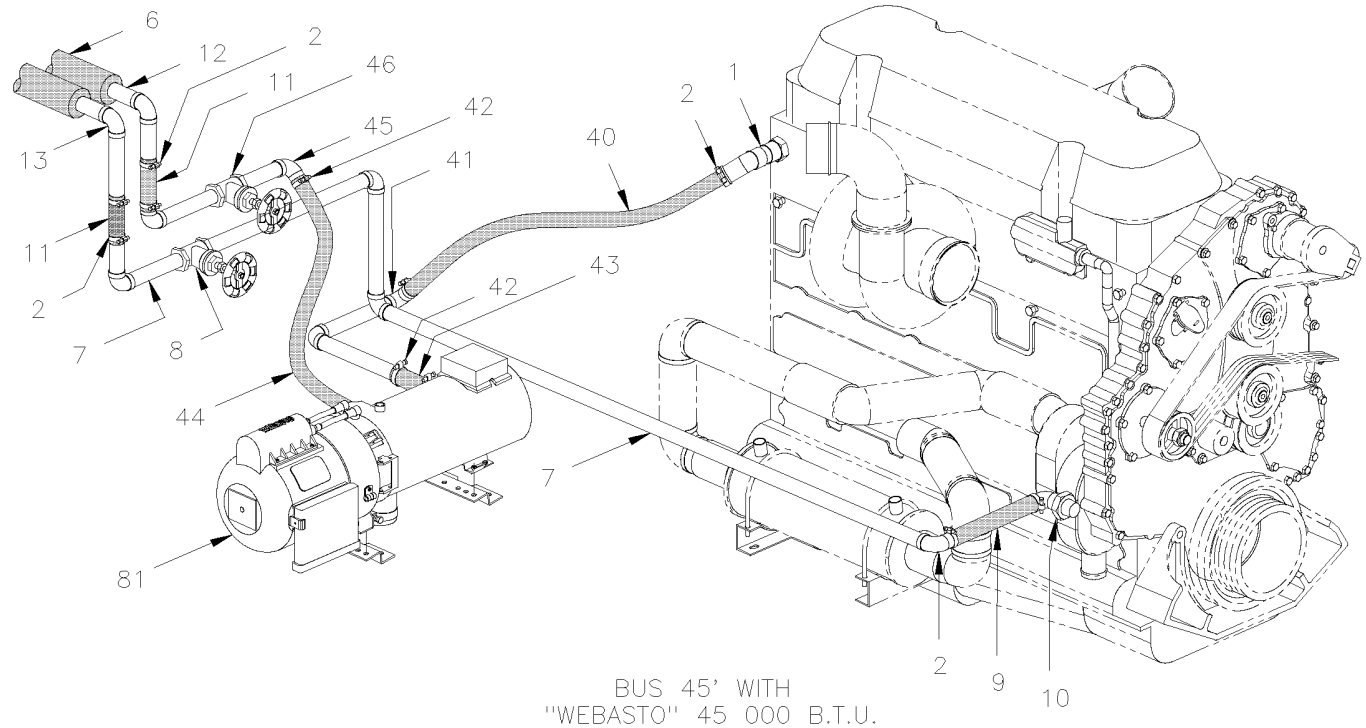

BUS 45' WITH
''WEBASTO'' 45 000 B.T.U.

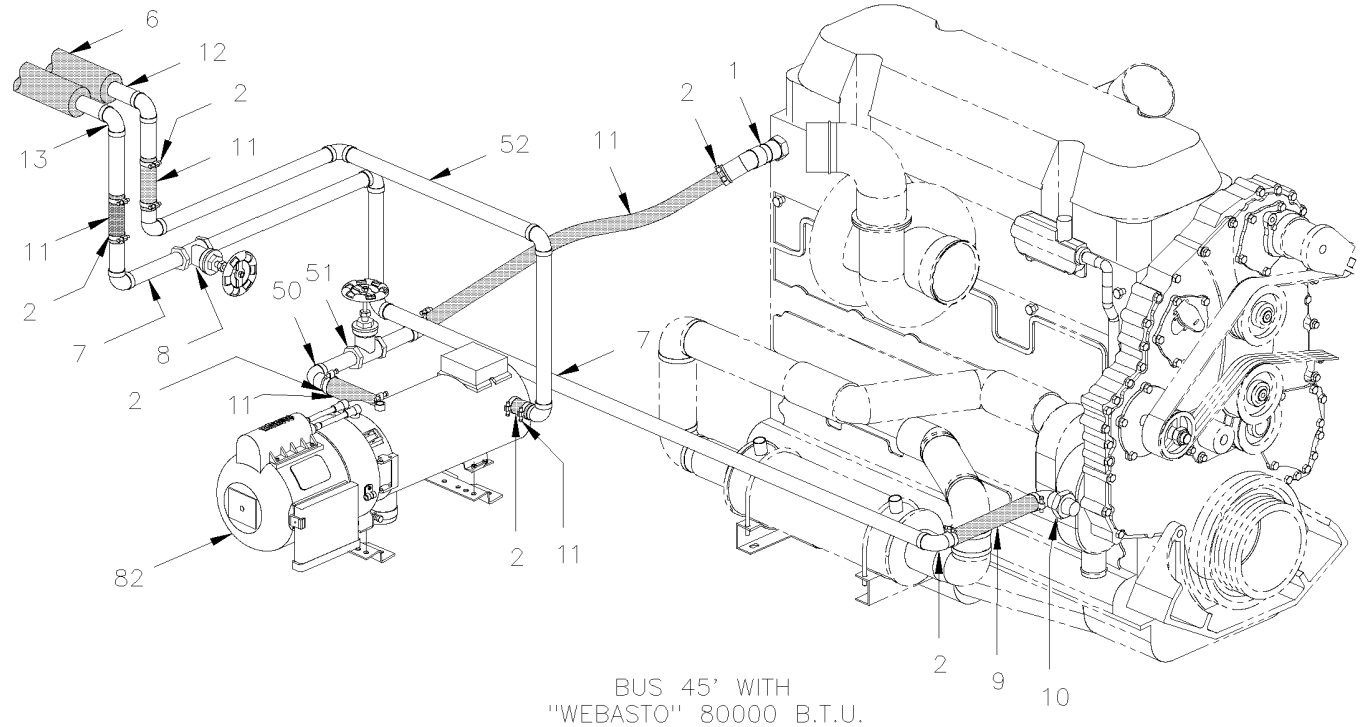

BUS 45' WITH
''WEBASTO'' 80000 B.T.U.

From Y-7046 Up to 2-7764	DATE: 01/2014	PAGE: Y2-2222-00

HEATER LINE REAR SECTION - BUS

ITEM	PART	DESCRIPTION	XL45	MTH40	MTH45	MTH45S	NOTE
1	373040	ADAPTOR ELBOW 45°/ CYLINDER HEAD EXIT	1				
2	504657	HOSE CLAMP / 1"1/16-2" C.T. 9424	AR				
3	373287	HOSE / ENGINE OUTLET / 1 3/8" I.D. 914MM	1				
4	373052	PIPE ASSY HEATING / FEED LINE	1				
5	501861	. GATE VALVE 1 ¼" (WELDED)	1				
6	506242	PIPE INSULATING / 1 3/8" I.D. X 1/2" TH. X 72 / APT13812	AR				
7	373014	PIPE RETURN / ENGINE WATER PUMP	1				
7	373895	PIPE RETURN / ENGINE WATER PUMP	1				B
8	501861	. GATE VALVE 1 ¼" (WELDED)	1				
9	371858	HOSE 1 3/8" I.D. 7"	1				
10	372958	ADAPTOR ELBOW 90° / WATER PUMP INLET	1				
11	371855	HOSE 1 3/8" I.D. 3"	2				
12	Call Order Desk	PIPE ASSY HEATING / FEED LINE	1				P
13	Call Order Desk	PIPE ASSY HEATING / RETURN LINE /W/"SLIDE-OUT"	1				P
40	373359	HOSE 1 3/8" I.D. 762MM	1				
. NS	503392	. HOSE SILICONE 4 PLY SILICONE 4 PLY	AR				
. NS	505111	. COIL PROTECTOR / PLASTIC / #22	AR				
41	373095	PIPE ASSY / WATER HEATER INLET	1				
42	504646	HOSE CLAMP / 11/16"-1"1/4 / C.T. 9412	2				
43	403641	HOSE 3/4" I.D. 53MM	1				
44	373481	HOSE 3/4" I.D. 533MM	1				
45	373094	PIPE	1				
46	501861	. GATE VALVE 1 ¼" (WELDED)	1				
50	373042	PIPE	1				
50	373779	PIPE	1				A
51	501861	. GATE VALVE 1 ¼" (WELDED)	1				
52	373041	PIPE	1				
52	373778	PIPE ASSY / W/GATE VALVE	1				A
80	871085	**WATER HEATER - "WEBASTO" 45,000 B.T.U.**					
81	871097	**WATER HEATER - "ESPAR" 41,000 B.T.U.**					
82	871036	**WATER HEATER - "WEBASTO" 80,000 B.T.U.**					
		P) CALL ORDER DESK FOR SPECIFIC APPLICATION					
		(V.I.N.)					
		A) WITH "PROHEAT" 80,000 B.T.U.					
		B) USE ONLY WITH "MODINE" OIL COOLER RETROFIT					
		KIT #071269					

From Y-7046 Up to 2-7764	DATE: 01/2014	PAGE: Y2-2222-00

HEATER LINE REAR SECTION - BUS

ITEM	PART	DESCRIPTION	XL45	MTH40	MTH45	MTH45S	NOTE

From 2-7765 Up to 3-8164	DATE: 01/2014	PAGE: Y2-2222-01

HEATER LINE REAR SECTION - BUS

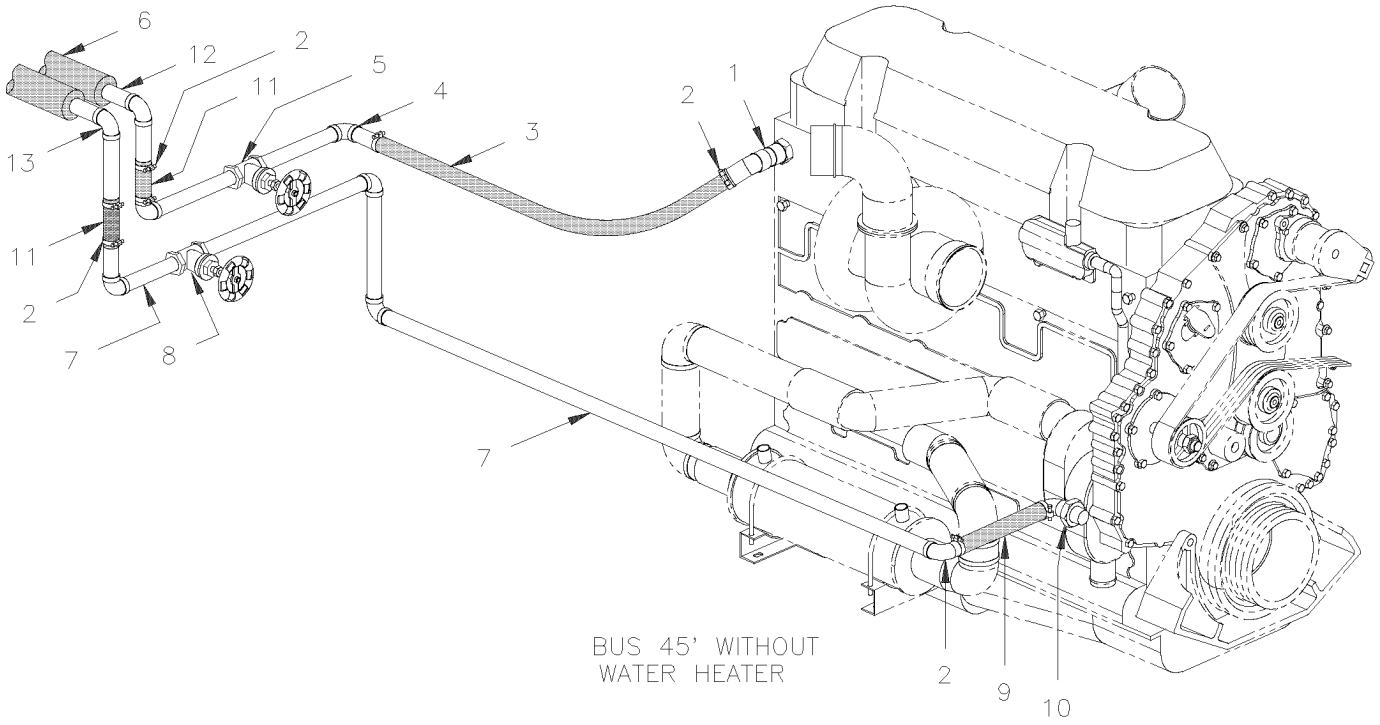

BUS 45' WITHOUT
WATER HEATER

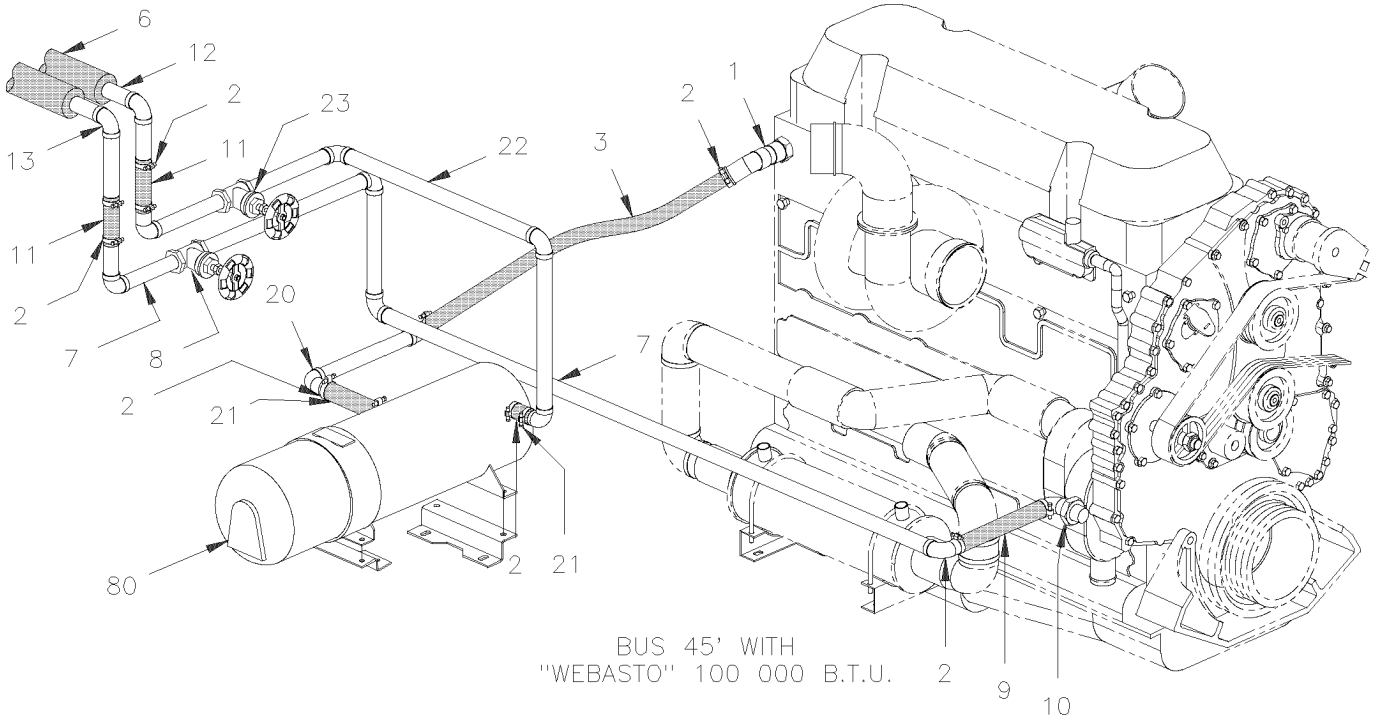

BUS 45' WITH
''WEBASTO'' 100 000 B.T.U.

From 2-7765 Up to 3-8164	DATE: 01/2014	PAGE: Y2-2222-01

HEATER LINE REAR SECTION - BUS

ITEM	PART	DESCRIPTION	XL45	MTH40	MTH45	MTH45S	NOTE
1	373040	ADAPTOR ELBOW 45°/ CYLINDER HEAD EXIT	1				
2	504657	HOSE CLAMP / 1"1/16-2" C.T. 9424	AR				
3	373287	HOSE / ENGINE OUTLET / 1 3/8" I.D. 914MM	1				
4	373052	PIPE ASSY HEATING / FEED LINE	1				
5	501861	. GATE VALVE 1 ¼" (WELDED)	1				
6	506242	PIPE INSULATING / 1 3/8" I.D. X 1/2" TH. X 72 / APT13812	AR				
7	373014	PIPE RETURN / ENGINE WATER PUMP	1				
7	373928	PIPE RETURN / ENGINE WATER PUMP	1				B
8	501861	. GATE VALVE 1 ¼" (WELDED)	1				
9	371858	HOSE 1 3/8" I.D. 7"	1				
10	372958	ADAPTOR ELBOW 90° / WATER PUMP INLET	1				
11	371855	HOSE 1 3/8" I.D. 3"	2				
12	Call Order Desk	PIPE ASSY HEATING / FEED LINE	1				P
13	Call Order Desk	PIPE ASSY HEATING / RETURN LINE /W/"SLIDE-OUT"	1				P
20	373785	PIPE ASSY	1				
21	373483	HOSE REDUCER / 1 1/2" I.D.x1 3/8" I.D. x 76MM	2				
22	373784	PIPE ASSY	1				
23	501861	. GATE VALVE 1 ¼" (WELDED)	1				
80	871202	**WATER HEATER - "WEBASTO" 100,000 B.T.U.**					
80	871100	**WATER HEATER - "PROHEAT" 80,000 B.T.U.**					
		P) CALL ORDER DESK FOR SPECIFIC APPLICATION					
		(V.I.N.)					
		B) USE ONLY WITH "MODINE" OIL COOLER RETROFIT					
		KIT #071269					

From 4-8165 Up to 6-8906	DATE: 01/2014	PAGE: Y2-2222-02

HEATER LINE REAR SECTION - BUS

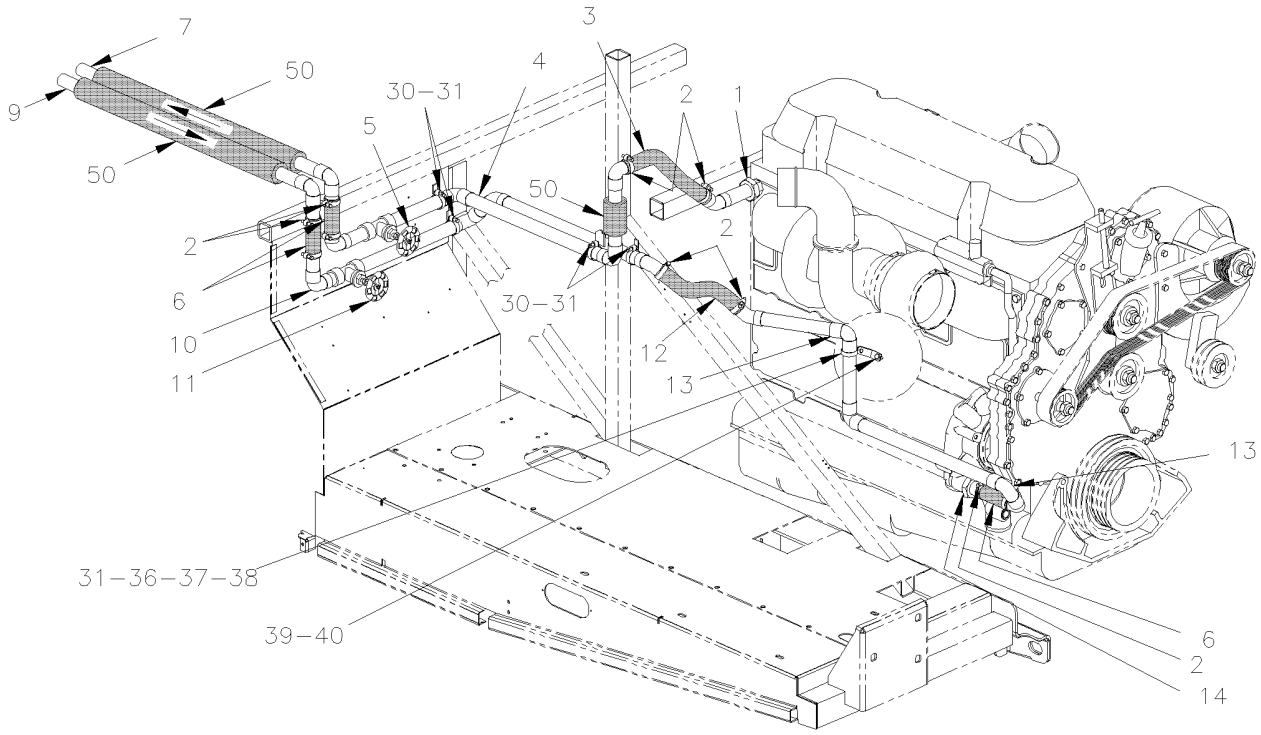

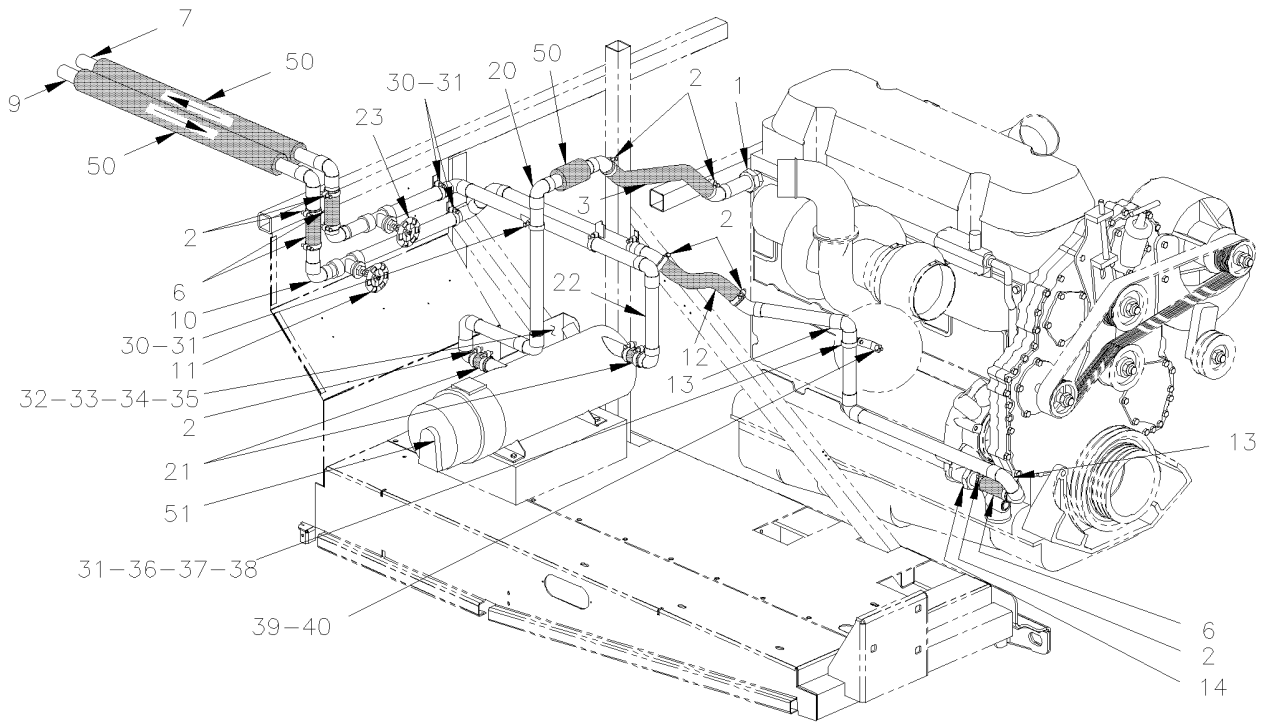

From 4-8165 Up to 6-8906	DATE: 01/2014	PAGE: Y2-2222-02

HEATER LINE REAR SECTION - BUS

ITEM	PART	DESCRIPTION	XL45	MTH40	MTH45	MTH45S	NOTE
1	373888	HOSE ADAPTOR ELBOW 45° 1 3/8" X 1" NPT / CYLINDER HEAD EXIT	1				
2	504657	HOSE CLAMP / 1"1/16-2" C.T. 9424	AR				
3	503392	HOSE SILICONE 4 PLY 1 3/8" I.D. x 4'	1				
4	Call Order Desk	PIPE ASSY HEATING / FEED LINE	1				P
5	501861	. GATE VALVE 1 ¼" (WELDED)	1				
6	371855	HOSE 1 3/8" I.D. 3"	2				
7	Call Order Desk	PIPE ASSY HEATING / FEED LINE	2				P
9	Call Order Desk	PIPE ASSY HEATING / RETURN LINE /W/"SLIDE-OUT"	1				P
10	373857P	PIPE ASSY HEATING / RETURN LINE	1				
11	501861	. GATE VALVE 1 ¼" (WELDED)	1				
12	503392	HOSE SILICONE 4 PLY 1 3/8" I.D. x 4'	1				
13	Call Order Desk	PIPE ASSY HEATING / RETURN LINE Up to 5-8592	1				P A
13	374153P	PIPE ASSY HEATING / RETURN LINE From 5-8593	1				
14	373894	ADAPTOR STRAIGHT 86MM / WATER PUMP INLET	1				
20	373861P	PIPE ASSY / "WEBASTO" / FEED LINE	1				
20	Call Order Desk	PIPE ASSY / "PROHEAT" / FEED LINE From 5-8453	1				P
21	373483	HOSE REDUCER / 1 1/2" I.D.x1 3/8" I.D. x 76MM	2				
22	373852P	PIPE ASSY TO HEATING / FEED LINE	1				
22	Call Order Desk	PIPE ASSY TO HEATING / FEED LINE "/ W/"PROHEAT" From 5-8453	1				P
23	501861	. GATE VALVE 1 ¼" (WELDED)	1				
30	500642	SCREW TP BDG PH #10x3/4 ZP	AR				
31	952641	CLAMP / 1 5/16" I.D.	AR				
32	500946	SCREW TP BDG PH #8x1/2 ZG603	1				
33	955271	SCREW CAP HEX M6-1.0x16 G8.8 ZG603	1				
34	502853	WASHER LO SPT 6.1x11.8x1.6 ZG603	3				
35	500855	WASHER FL .188x.438x.049 ZG603	1				
36	502841	NUT HEX NYRT M5-0.8 ZG603	1				
37	502746	SCREW MA PAN PH M5-0.8x20 SS EMN	1				
38	500804	WASHER FL .203x.500x.047 ZG603	1				
39	500820	SCREW CAP HEX M8-1.25x16 G10.9 ZG603	1				
NS	502889	WASHER LO SPT 8.1x12.7x2.0 ZG603	1				
40	373905	SUPPORT, PIPE HEATER LINE RETURN Up to 5-8592 / REPLACED BY: 374154	1				
40	374154	SUPPORT, PIPE HEATER LINE RETURN From 5-8593	1				
50	506242	PIPE INSULATING / 1 3/8" I.D. X 1/2" TH. X 72 / APT13812	AR				
51	871202	**WATER HEATER - "WEBASTO" 100,000 B.T.U.**					
NS	871370	ELBOW 90° SHORT / EXHAUST "PROHEAT" From 5-8453	1				
NS	871371	ELBOW 90° LONG / EXHAUST "PROHEAT" From 5-8453	1				
NS	540061	U-CLAMP / 2 3/4" I.D. From 5-8453	1				
		P) CALL ORDER DESK FOR SPECIFIC APPLICATION					
		(V.I.N.)					
		A) FOR PRODUCT IMPROVEMENT IT SUPPERSEEDED BY					
		374153P					

From Y-7046 Up to 8-9339	DATE: 01/2014	PAGE: Y2-2222-10

A/C & HEATING LINE FRONT SECTION

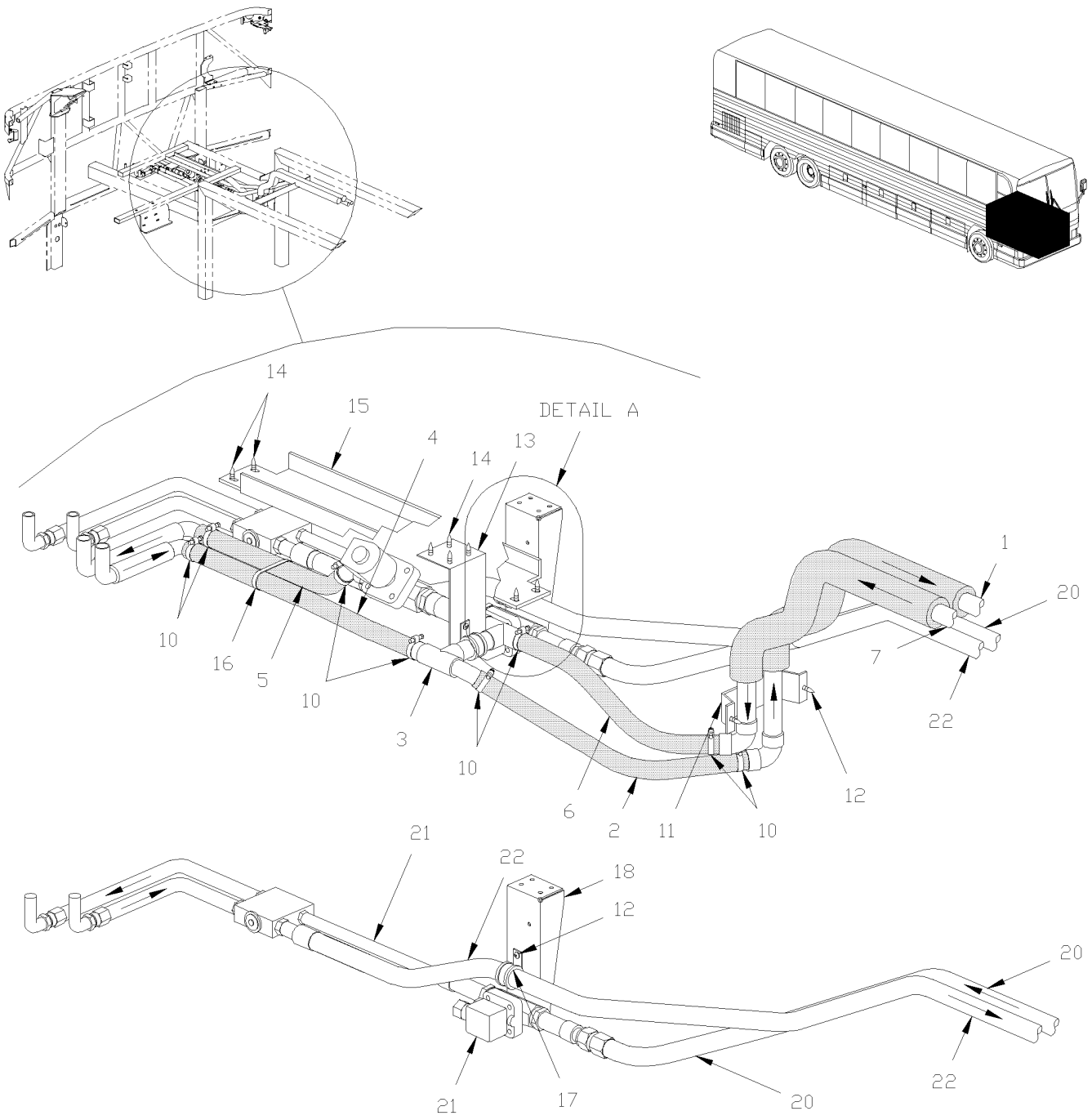

From Y-7046 Up to 8-9339	DATE: 01/2014	PAGE: Y2-2222-10

A/C & HEATING LINE FRONT SECTION

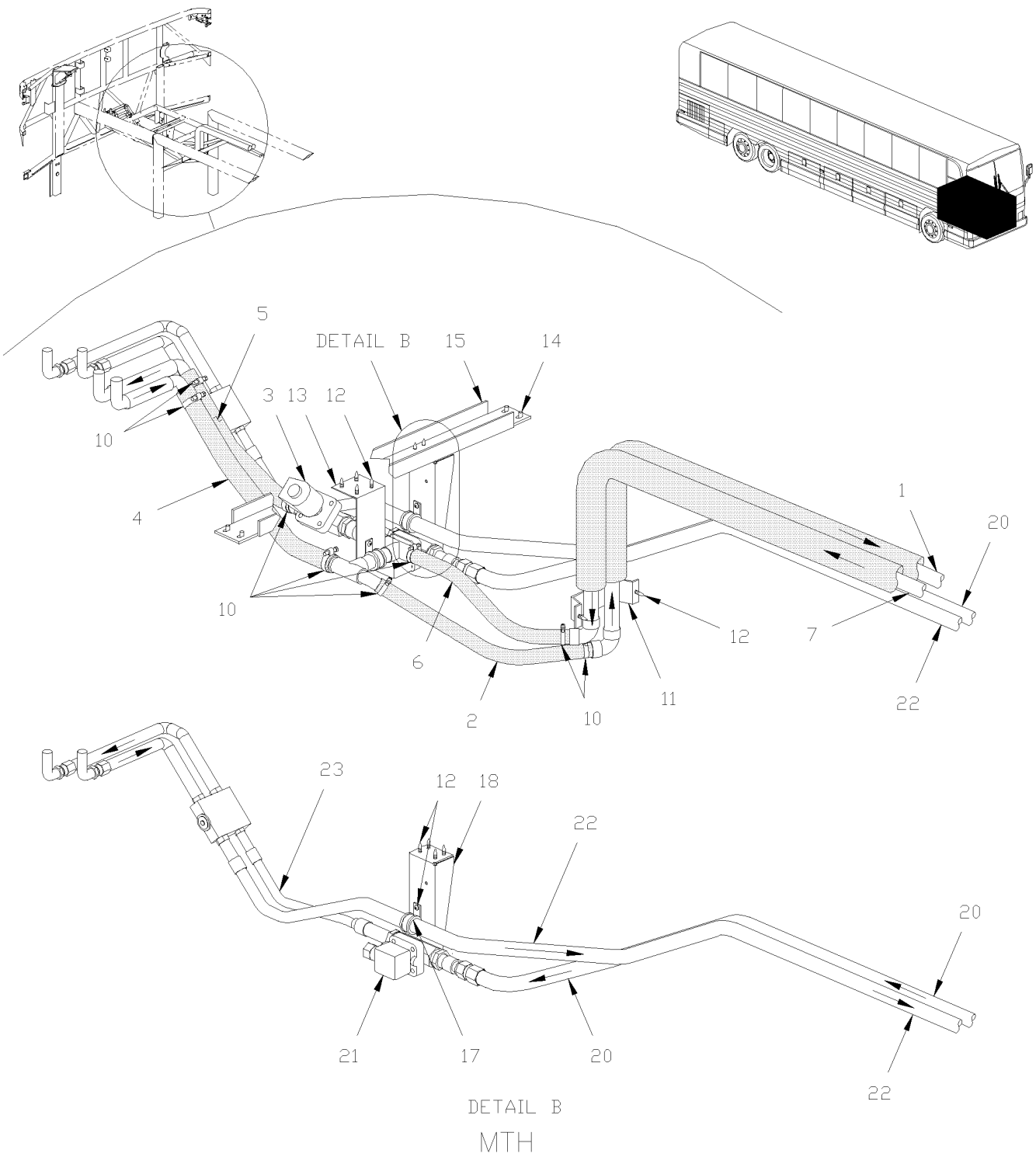

From Y-7046 Up to 8-9339	DATE: 01/2014	PAGE: Y2-2222-10

A/C & HEATING LINE FRONT SECTION

ITEM	PART	DESCRIPTION	XL45	MTH40	MTH45	MTH45S	NOTE
1	Call Order Desk	PIPE ASSY / 5626MM Up to 5-8561	1				P
1	Call Order Desk	PIPE ASSY / 4094MM From 5-8562	1				P
1	Call Order Desk	PIPE ASSY / 3496MM FORWARD SECTION From 5-8562	1				P
1	Call Order Desk	PIPE ASSY / 5295MM Up to 5-8561		1			P
1	374099P	PIPE ASSY / 3377MM BACKWARD SECTION From 5-8562		1			
1	374100P	PIPE ASSY / 1844MM FORWARD SECTION From 5-8562		1			
1	Call Order Desk	PIPE ASSY / 5526MM Up to 5-8561			1		P
1	Call Order Desk	PIPE ASSY / 4119MM FORWARD SECTION From 5-8562			1		P
1	Call Order Desk	PIPE ASSY / 1432MM BACKWARD SECTION From 5-8562			1		P
1	Call Order Desk	PIPE ASSY / 6819MM Up to 5-8561				1	P
1	Call Order Desk	PIPE ASSY / 4998MM FORWARD SECTION From 5-8562				1	P
1	Call Order Desk	PIPE ASSY / 1744MM BACKWARD SECTION From 5-8562				1	P
2	373653	HOSE 7/8" I.D. 515MM	1	1	1	1	
. NS	503684	. HOSE SILICONE 1 PLY 7/8" I.D. x 100' / S.L.	AR	AR	AR	AR	
3	Call Order Desk	WATER VALVE ASSY / W/PIPE	1				P
3	373645P	WATER VALVE ASSY / W/PIPE Up to 6-8805		1	1	1	
3	Call Order Desk	WATER VALVE ASSY W/PIPE & SUPPORT From 6-8806		1	1	1	P
4	373791	HOSE 7/8" I.D. 450MM	1				
4	373652	HOSE 7/8" I.D. 500MM		1	1	1	
. NS	503684	. HOSE SILICONE 1 PLY 7/8" I.D. x 100' / S.L.		AR	AR	AR	
5	373688	HOSE 7/8" I.D. 260MM	1				
5	373651	HOSE 7/8" I.D. 320MM		1	1	1	
. NS	503684	. HOSE SILICONE 1 PLY 7/8" I.D. x 100' / S.L.		AR	AR	AR	
6	373654	HOSE 7/8" I.D. 365MM	1	1	1	1	
. NS	503684	. HOSE SILICONE 1 PLY 7/8" I.D. x 100' / S.L.	AR	AR	AR	AR	
7	Call Order Desk	PIPE ASSY / 5572MM Up to 5-8561	1				P
7	Call Order Desk	PIPE ASSY / FORWARD SECTION From 5-8562	1				P
7	Call Order Desk	PIPE ASSY / 1453MM BACKWARD SECTION From 5-8562	1				P
7	Call Order Desk	PIPE ASSY / 5228MM Up to 5-8561		1			P
7	374097P	PIPE ASSY / 3309MM FORWARD SECTION From 5-8562		1			
7	374098P	PIPE ASSY / 1843MM BACKWARD SECTION From 5-8562		1			
7	Call Order Desk	PIPE ASSY / 5572MM Up to 5-8561			1		P
7	Call Order Desk	PIPE ASSY / 4069MM FORWARD SECTION From 5-8562			1		P
7	Call Order Desk	PIPE ASSY / 1428MM BACKWARD SECTION From 5-8562			1		P
7	Call Order Desk	PIPE ASSY / 6752MM Up to 5-8561				1	P
7	Call Order Desk	PIPE ASSY / 4829MM FORWARD SECTION From 5-8562				1	P
7	Call Order Desk	PIPE ASSY / 1849MM BACKWARD SECTION From 5-8562				1	P
10	504646	HOSE CLAMP / 11/16"-1"1/4 / C.T. 9412	8	8	8	8	
11	452906	SUPPORT	1		1		
12	500642	SCREW TP BDG PH #10x3/4 ZP	AR		AR		
13	373642	SUPPORT / WATER VALVE	1				
		P) CALL ORDER DESK FOR SPECIFIC APPLICATION					
		(V.I.N.)					

From Y-7046 Up to 8-9339	DATE: 01/2014	PAGE: Y2-2222-10

A/C & HEATING LINE FRONT SECTION

ITEM	PART	DESCRIPTION	XL45	MTH40	MTH45	MTH45S	NOTE
NS	374147	SUPPORT WATER VALVE From 6-8806		1	1	1	
14	502526	SCREW TC BDG PH #12-24x3/4 ZP	AR	AR	AR	AR	
15	373686	SUPPORT / VALVE	1				
15	172355	SUPPORT / VALVE		1	1	1	
16	504637	CABLE TIE / 3/16" x 13"	AR				
17	952631	CLAMP / 3/4" I.D. / REPLACED BY: 977742	1	1	1	1	
18	453315	SUPPORT / A/C VALVE		1	1	1	
20	453389	HOSE ASSY / #10 5970MM	1		1		
. NS	507344	. O-RING / ORS FITTING /	2		2		
20	455218	HOSE ASSY / #10 5970MM	1		1		S
. NS	507344	. O-RING / ORS FITTING /	2		2		
20	453488	HOSE ASSY / #10 5075MM		1			
. NS	507344	. O-RING / ORS FITTING /		2			
20	455251	HOSE ASSY / #10 5075MM		1			S
. NS	507344	. O-RING / ORS FITTING /		2			
20	453482	HOSE ASSY / #10 7160MM				1	
. NS	507344	. O-RING / ORS FITTING /				2	
20	455248	HOSE ASSY / #10 6795MM				1	S
. NS	507344	. O-RING / ORS FITTING /				2	
21	453422	VALVE ASSY / REFRIGERANT SOLENOID	1				
21	453151	VALVE ASSY / REFRIGERANT SOLENOID	1				
22	453390	HOSE ASSY / #10 4560MM	1		1		
. NS	507344	. O-RING / ORS FITTING /	2		2		
22	455219	HOSE ASSY / #10 4560MM	1		1		S
. NS	507344	. O-RING / ORS FITTING /	2		2		
22	453487	HOSE ASSY / #10 4220MM		1			
. NS	507344	. O-RING / ORS FITTING /		2			
22	455250	HOSE ASSY / #10 4220MM		1			S
. NS	507344	. O-RING / ORS FITTING /		2			
22	453476	HOSE ASSY / #10 5745MM				1	
. NS	507344	. O-RING / ORS FITTING /				2	
22	455246	HOSE ASSY / #10 5745MM				1	S
. NS	507344	. O-RING / ORS FITTING /				2	
23	453331	HOSE ASSY / <> VALVE & EVAPORATOR / #6 250MM / REPLACED BY: 455210		1	1	1	
. NS	507278	. O-RING / ORS FITTING /		2	2	2	
23	455210	HOSE ASSY / <> VALVE & EVAPORATOR / #6 250MM		1	1	1	S
. NS	507278	. O-RING / ORS FITTING /		2	2	2	

S) SERVICE

From Y-7046 Up to 8-9339	DATE: 01/2014	PAGE: Y2-2222-15

A/C LINE REAR SECTION W/05G

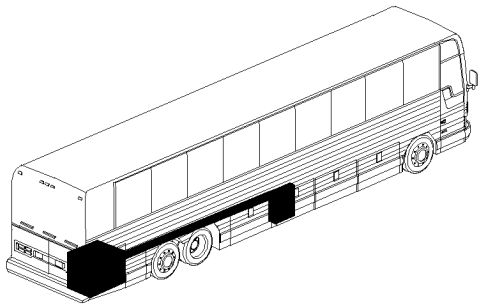

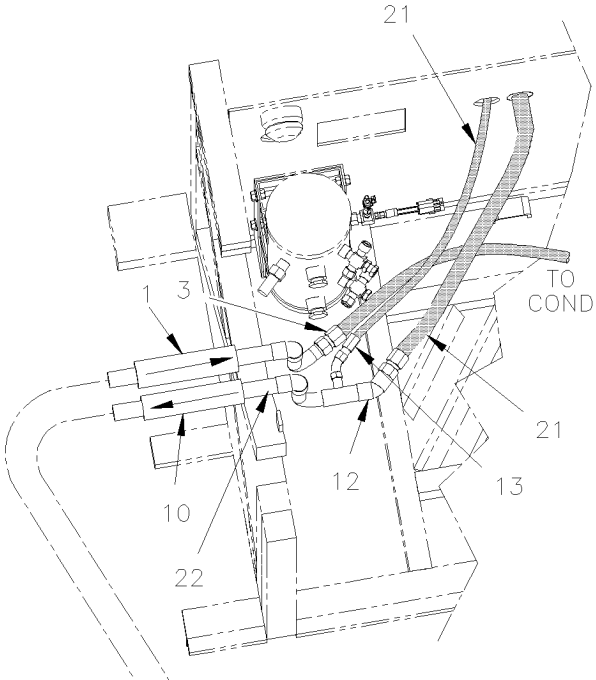

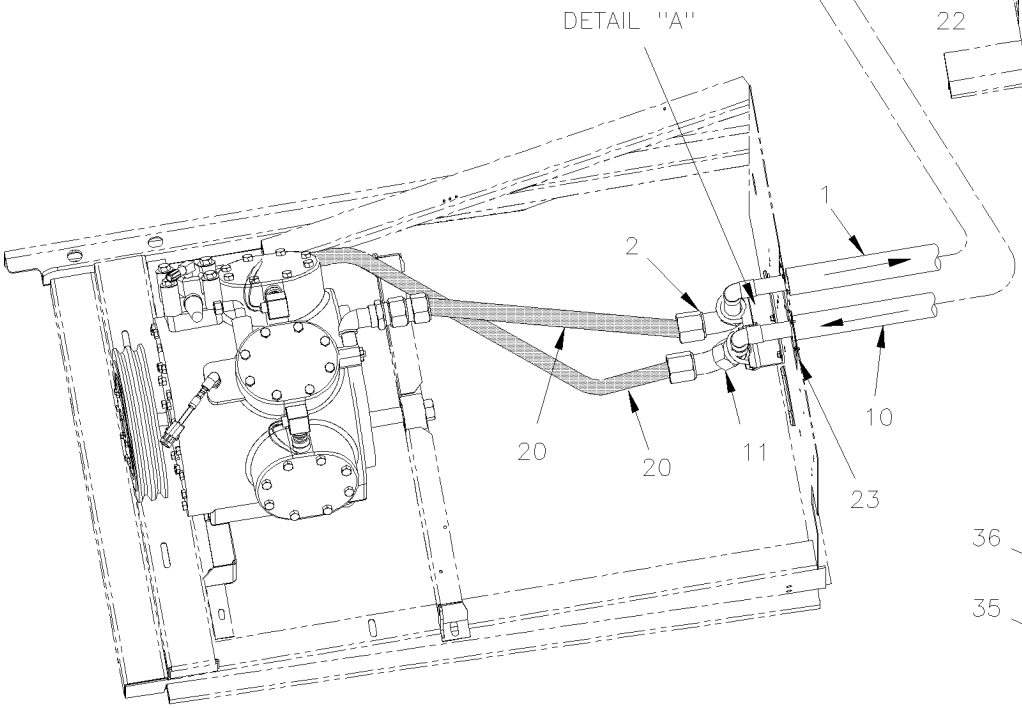

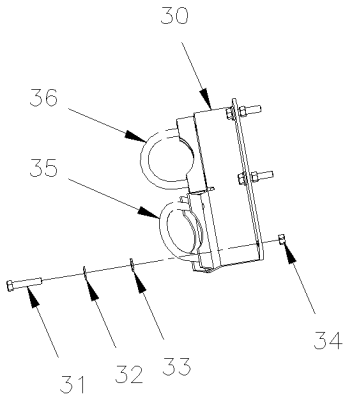

DETAIL "A"

From Y-7046 Up to 8-9339	DATE: 01/2014	PAGE: Y2-2222-15

A/C LINE REAR SECTION W/05G

ITEM	PART	DESCRIPTION	XL45	MTH40	MTH45	MTH45S	NOTE
1	453539	TUBE ASSY, PRESSURE / A/C COMPRESSOR Up to 2-7762 / REPLACED BY: K453539	1				
1	454016	TUBE ASSY, PRESSURE / A/C COMPRESSOR From 2-7763	1				
1	453601	TUBE ASSY, PRESSURE / A/C COMPRESSOR / W/"RICON"	1				R
1	453608	TUBE ASSY, PRESSURE / A/C COMPRESSOR / W/"RICON" Up to 2-7863 / REPLACED BY: K453608					F
1	453793	TUBE ASSY, PRESSURE / A/C COMPRESSOR W/"RICON" From 2-7864	1				F
1	453540	TUBE ASSY, PRESSURE / A/C COMPRESSOR		1		1	
1	453538	TUBE ASSY, PRESSURE / A/C COMPRESSOR			1		
2	501718	ADAPTER JIC @ BRAZE W/O-RING / / #16JIC-Mx#18BRAZE-F BR	1	1	1	1	
. NS	501802	. O-RING / ORS FITTING / #16 NEO	1	1	1	1	
3	501718	ADAPTER JIC @ BRAZE W/O-RING / / #16JIC-Mx#18BRAZE-F BR	1	1	1	1	
. NS	501802	. O-RING / ORS FITTING / #16 NEO	1	1	1	1	
10	Call Order Desk	TUBE ASSY, VACUUM / A/C COMPRESSOR	1				P
10	453600	TUBE ASSY, VACUUM / A/C COMPRESSOR / W/"RICON" Up to 4-8278	1				R
10	453871P	TUBE ASSY, VACUUM / A/C COMPRESSOR / W/"RICON" From 4-8279	1				R
10	453609	TUBE ASSY, VACUUM / A/C COMPRESSOR / W/"RICON" Up to 4-8278	1				F
10	453870	TUBE ASSY, VACUUM / A/C COMPRESSOR / W/"RICON" From 4-8279	1				F
10	453467P	TUBE ASSY, VACUUM / A/C COMPRESSOR		1		1	
10	Call Order Desk	TUBE ASSY, VACUUM / A/C COMPRESSOR Up to 6-8805			1		P
10	454244	TUBE ASSY, VACUUM / A/C COMPRESSOR From 6-8806			1		
NS	453723	SUPPORT PIPE From 2-7864	1				
11	501717	. ADAPTER JIC @ BRAZE W/O-RING / / #20JIC-Mx#22BRAZE-F BR	1	1	1	1	
. NS	501803	. . O-RING / ORS FITTING / #20 NEO	1	1	1	1	
12	501717	. ADAPTER JIC @ BRAZE W/O-RING / / #20JIC-Mx#22BRAZE-F BR	1	1	1	1	
. NS	501803	. . O-RING / ORS FITTING / #20 NEO	1	1	1	1	
13	5011099	. ADAPTER "TUBE-O" @ BRAZE / #12TUBE-O-Mx#14 BR	1	1	1	1	
20	Y2-2245-00	**A/C COMPRESSOR 05G - INSTALLATION**					
21	Y2-2270-00	**RECEIVER TANK & FILTER DRYER**					
22	326738	PLATE CLOSING AROUND PIPE / SMALL	1		1		
22	453677	PLATE CLOSING AROUND PIPES / W/"RICON"	1		1		F
23	483041	PLATE CLOSING AROUND PIPE		1	1	1	
30	457411	SUPPORT	1				
31	502758	SCREW CAP HEX M6-1.0x30 G8.8 ZG603	3				
32	500411	WASHER FL .260x.697x.050 SS	3				
33	502768	WASHER FL .312x.625x.125 NEO	3				
34	5001182	NUT HEX NYRT M6-1.0 SS	3				
35	540057	U-CLAMP / 1 3/8"	1				
36	540058	U-CLAMP / 1 5/8"	1				
		P) CALL ORDER DESK FOR SPECIFIC APPLICATION					
		(V.I.N.)					
		F) FRONT SECTION WITH W.C.L. "RICON"					
		R) REAR SECTION WITH W.C.L. "RICON"					

From Y-7046 Up to 8-9339	DATE: 01/2014	PAGE: Y2-2222-20

HEATER LINE & PIPING - CENTRAL SYSTEM

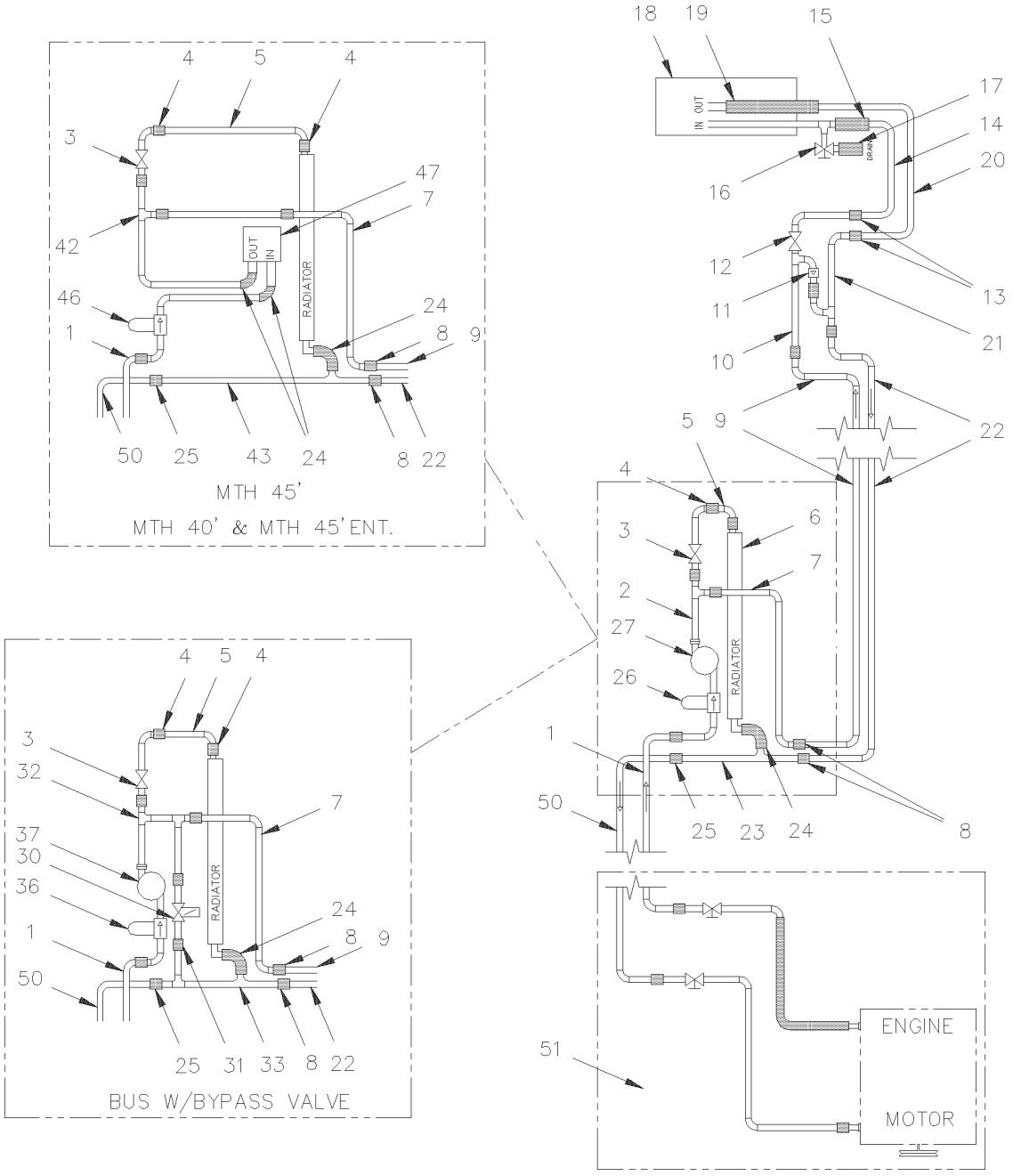

From Y-7046 Up to 8-9339	DATE: 01/2014	PAGE: Y2-2222-20

HEATER LINE & PIPING - CENTRAL SYSTEM

ITEM	PART	DESCRIPTION	XL45	MTH40	MTH45	MTH45S	NOTE
1	Call Order Desk	PIPE ASSY HEATING / RETURN LINE		1		1	P S
1	372029	PIPE ASSY HEATING / FEED LINE	1		1		
2	371744	PIPE ASSY / WATER PUMP OUTLET	1				C
3	Y2-2207-00	**WATER VALVE - W/MAIN HEATER**					
4	051383	HOSE / W/CENTRAL A/C SYSTEM / 1 3/8" I.D. X 150MM	2	2	2	2	
5	371745	PIPE ASSY / <> WATER VALVE OUTLET & HEATER	1	1	1	1	
6	Y2-2205-00	**HEATER & EVAPORATOR COIL - INSTALLATION**					
7	371746	TUBE ASSY / TO DRIVER'S HEATER Up to 4-8205	1	1	1	1	
7	374047	TUBE ASSY / TO DRIVER'S HEATER From 4-8206	1	1	1	1	
8	371532	HOSE 7/8" I.D. 6"	2	2	2	2	
9	372816	TUBE ASSY, HEATING		1			
9	373194	TUBE ASSY, HEATING	1		1		
9	373196	TUBE ASSY, HEATING				1	
10	372814	TUBE ASSY, DEFROSTER	1	1	1	1	
11	870807	STRAINER FILTER, WATER 1" 1/4" N.P.T.	1	1	1	1	
12	Y2-2207-10	**WATER VALVE - W/DRIVER'S HEATER**					
13	372053	HOSE 7/8" I.D. X 6.5" Up to 4-8205	2	2	2	2	
13	372191	HOSE / <> PIPE & BYPASS / 7/8" I.D. 10" From 4-8206 / REPLACED BY: 503651	1	1	1	1	
14	372755	TUBE ASSY	1	1	1	1	
15	372751	HOSE 3/4" I.D.	1				
15	372758	HOSE 3/4" I.D. 19"		1		1	
17	560384	PLASTIC TUBING / 3/8" / CLEAR	AR	AR	AR	AR	
NS	504656	RBP PLUG 3/8x41/64x1/4	1	1	1	1	
19	372750	HOSE 3/4" I.D.	1				
19	372759	HOSE 3/4" I.D.		1	1	1	
20	372843	TUBE ASSY	1	1	1	1	
20	372754	TUBE ASSY / REPLACED BY: 372843	1	1	1	1	
21	372815	TUBE ASSY, DEFROSTER	1	1	1	1	
22	372817	TUBE ASSY, HEATING		1			
22	373197	TUBE ASSY, HEATING				1	
22	373192	TUBE ASSY, HEATING	1		1		
23	372136	RETURN JCT TUBE ASSY / W/O BYPASS VALVE	1	1	1	1	
24	372131	ELBOW 90° REDUCER 1 1/8" I.D.W/3 1/4" x 1 3/8 I.D. W 5 1/4" C/C	1	1	1	1	Q
25	371855	HOSE 1 3/8" I.D. 3"	2	2	2	2	
26	Y2-2222-00	**HEATER LINE REAR SECTION - BUS**					
27	Y2-2206-00	**WATER PUMP #871052 & #871204**					
30	373110	WATER BYPASS VALVE /. (2222-00 & 20)	1				

P) CALL ORDER DESK FOR SPECIFIC APPLICATION
(V.I.N.)

C) W/O WATER BYPASS VALVE

Q) <> TUBE & HEATER COIL

S) FEED LINE

From Y-7046 Up to 8-9339	DATE: 01/2014	PAGE: Y2-2222-20

HEATER LINE & PIPING - CENTRAL SYSTEM

ITEM	PART	DESCRIPTION	XL45	MTH40	MTH45	MTH45S	NOTE
31	372191	HOSE / <> PIPE & BYPASS / 7/8" I.D. 10" / REPLACED BY: 503651	2				
32	373307	PIPE ASSY / WATER PUMP OUTLET	1				B
33	373308	RETURN JCT TUBE ASSY / W/BYPASS VALVE	1				B
36	373329	FILTER ASSY W/TUBE	1				
37	Y2-2206-00	**WATER PUMP #871052 & #871204**					
42	373051	PIPE ASSY / WATER PUMP OUTLET		1		1	
43	373316	RETURN JCT TUBE ASSY / W/O BYPASS VALVE		1		1	
43	373316	RETURN JCT TUBE ASSY / W/O BYPASS VALVE			1		
46	373013	FILTER ASSY W/TUBE			1		
46	373333	FILTER ASSY W/TUBE		1		1	
47	Y2-2206-50	**WATER PUMP #871032**					
50	Call Order Desk	PIPE ASSY HEATING / RETURN LINE		1		1	P T
50	Call Order Desk	PIPE ASSY HEATING / RETURN LINE /W/"SLIDE-OUT"	1		1		P
51	Y2-2222-00	**HEATER LINE REAR SECTION - BUS**					
		P) CALL ORDER DESK FOR SPECIFIC APPLICATION					
		(V.I.N.)					
		B) W/WATER BYPASS VALVE					
		T) RETURN LINE					

From Y-7046 Up to 8-9339	DATE: 01/2014	PAGE: Y2-2222-20

HEATER LINE & PIPING - CENTRAL SYSTEM

ITEM	PART	DESCRIPTION	XL45	MTH400	MTH445	MTH445S	NOTE

From Y-7046 Up to 3-8164	DATE: 01/2014	PAGE: Y2-2222-30

HEATER LINE REAR SECTION - MTH

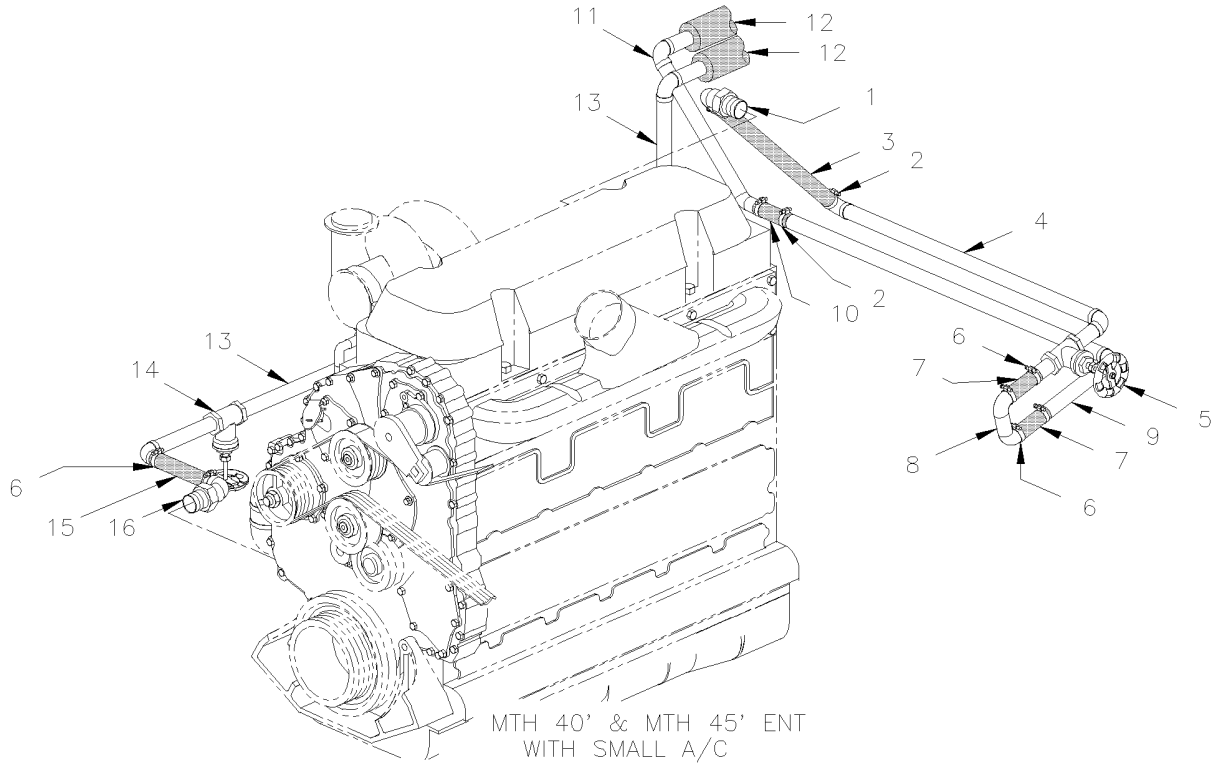

MTH 40' & MTH 45' ENT
WITH SMALL A/C

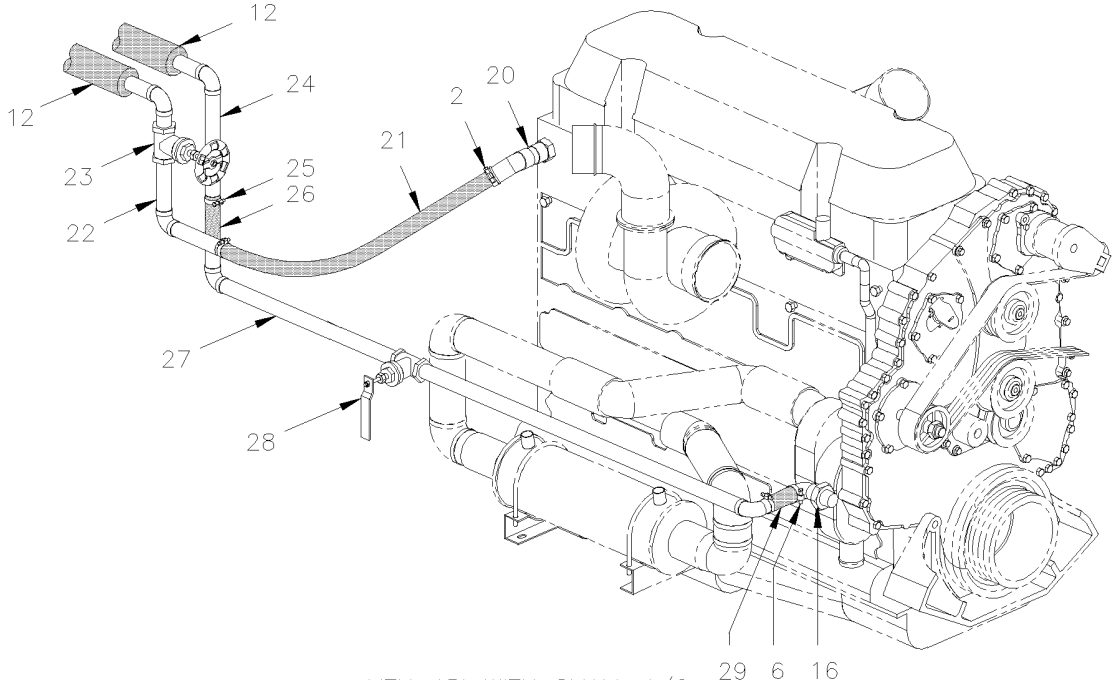

MTH 45' WITH SMALL A/C

From Y-7046 Up to 3-8164	DATE: 01/2014	PAGE: Y2-2222-30

HEATER LINE REAR SECTION - MTH

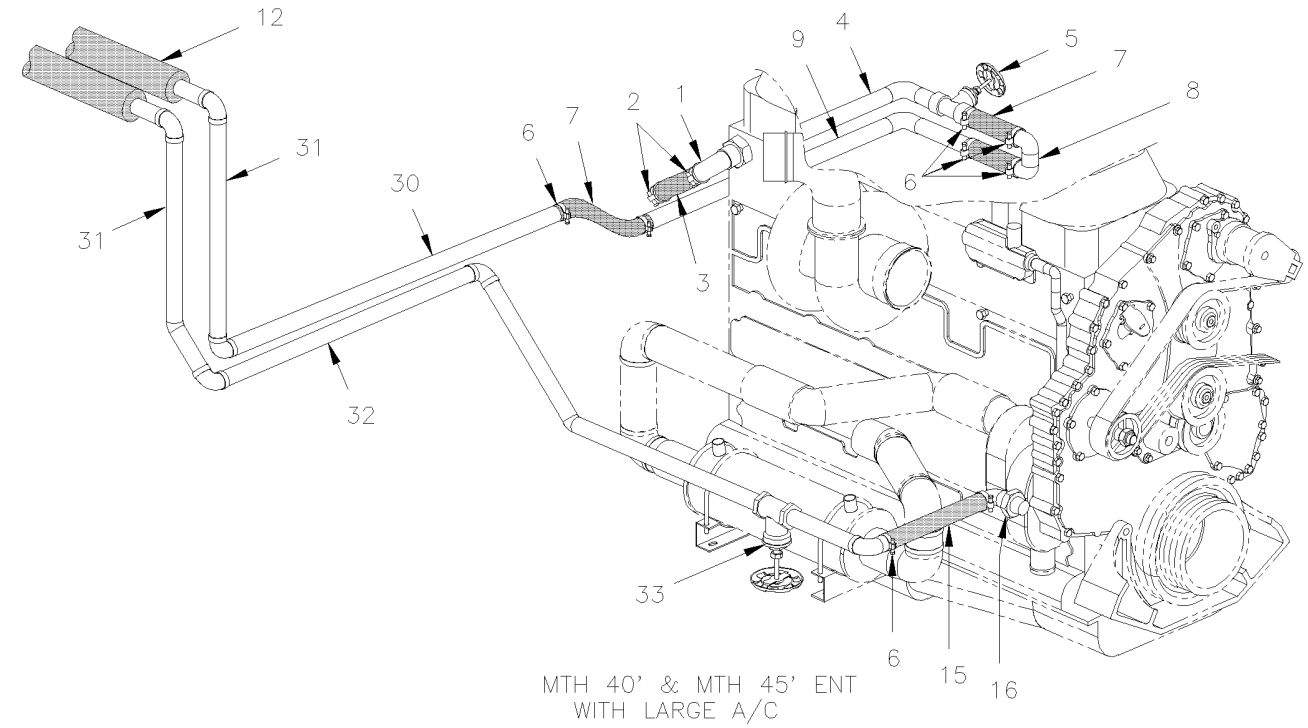

MTH 40' & MTH 45' ENT
WITH LARGE A/C

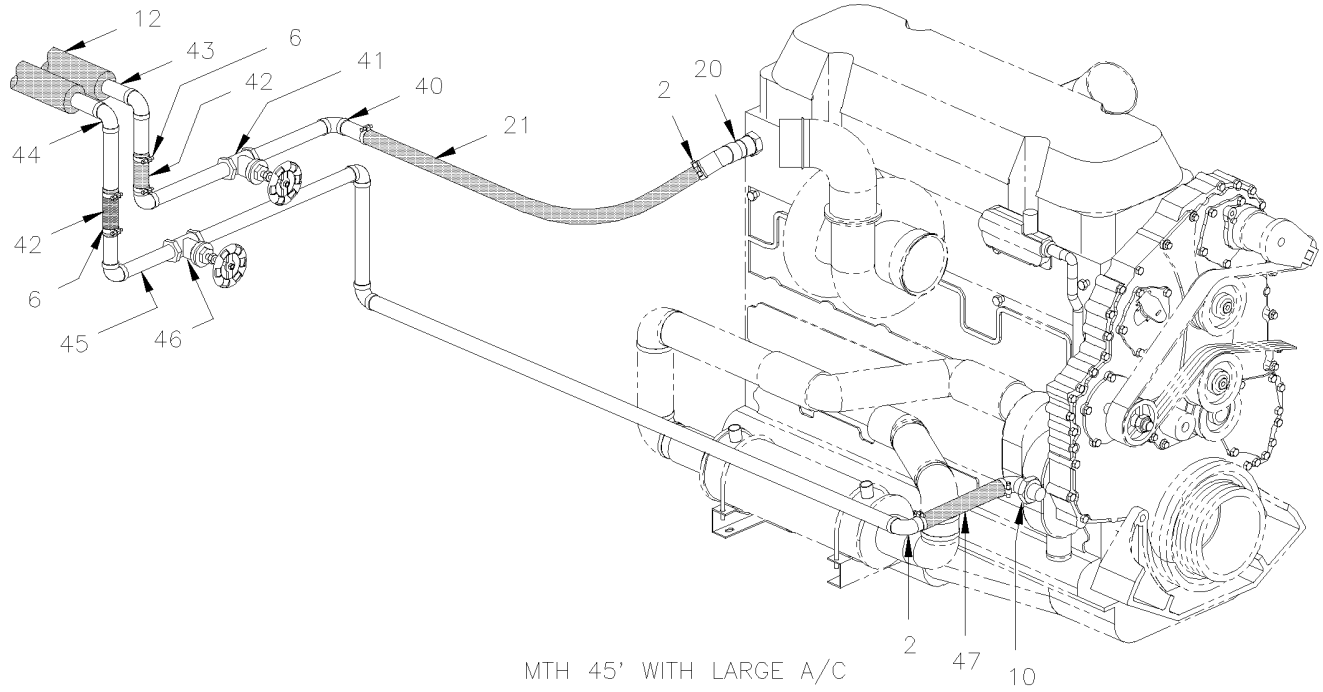

MTH 45' WITH LARGE A/C

From Y-7046 Up to 3-8164	DATE: 01/2014	PAGE: Y2-2222-30

HEATER LINE REAR SECTION - MTH

ITEM	PART	DESCRIPTION	XL45	MTH40	MTH45	MTH45S	NOTE
1	373217	ADAPTOR ELBOW 90° / CYLINDER HEAD EXIT / STD		1		1	
2	504319	HOSE CLAMP / 1"-1"1/2 SS / E.T. 16		AR		AR	
3	373298	HOSE 1 3/8" I.D. 216MM		1		1	
4	373224	PIPE		1		1	
5	501861	. GATE VALVE 1 ¼" (WELDED)		1		1	
6	504657	HOSE CLAMP / 1"1/16-2" C.T. 9424		AR		AR	
7	371855	HOSE 1 3/8" I.D. 3"		2		2	
8	373225	PIPE "U" SHAPE		1		1	
9	373226	PIPE		1		1	
10	371885	PIPE		1		1	
11	373398	PIPE		1		1	
12	506242	PIPE INSULATING / 1 3/8" I.D. X 1/2" TH. X 72 / APT13812		AR		AR	
13	373399	PIPE		1		1	
14	501861	. GATE VALVE 1 ¼" (WELDED)		1		1	
15	373145	HOSE 1 3/8" I.D. 260MM		1		1	
16	372958	ADAPTOR ELBOW 90° / WATER PUMP INLET		1		1	
20	373040	ADAPTOR ELBOW 45°/ CYLINDER HEAD EXIT			1		
21	373287	HOSE / ENGINE OUTLET / 1 3/8" I.D. 914MM			1		
22	373396	PIPE			1		
23	501861	. GATE VALVE 1 ¼" (WELDED)			1		
24	373397	PIPE			1		
25	504646	HOSE CLAMP / 11/16"-1"1/4 / C.T. 9412			2		
26	372053	HOSE 7/8" I.D. X 6.5"			1		
27	373066	PIPE / ENGINE INLET			1		
28	501958	. GATE VALVE 7/8" (WELDED)			1		
29	373236	HOSE / ENGINE INLET / 1 3/8" I.D. 195MM			1		
30	373101	PIPE / W/O HEATER		1		1	
31	Call Order Desk	PIPE ASSY HEATING / RETURN LINE		2		2	P
32	373079	PIPE RETURN / ENGINE WATER PUMP		1		1	
33	501861	. GATE VALVE 1 ¼" (WELDED)		1		1	
40	373052	PIPE ASSY HEATING / FEED LINE			1		
41	501861	. GATE VALVE 1 ¼" (WELDED)			1		
42	051383	HOSE / W/CENTRAL A/C SYSTEM / 1 3/8" I.D. X 150MM			2		
43	Call Order Desk	PIPE ASSY HEATING / FEED LINE			1		P
43	Call Order Desk	PIPE ASSY HEATING / FEED LINE /W/"SLIDE-OUT" Up to 2-7908			1		P
43	Call Order Desk	PIPE ASSY HEATING / FEED LINE /W/"SLIDE-OUT" From 2-7909			1		P
44	Call Order Desk	PIPE ASSY HEATING / RETURN LINE /W/"SLIDE-OUT"			1		P
44	Call Order Desk	PIPE ASSY HEATING / RETURN LINE /W/"SLIDE-OUT" Up to 2-7908			1		P
44	Call Order Desk	PIPE ASSY HEATING / RETURN LINE /W/"SLIDE-OUT" From 2-7909			1		P
45	373014	PIPE RETURN / ENGINE WATER PUMP			1		
46	501861	. GATE VALVE 1 ¼" (WELDED)			1		
47	371858	HOSE 1 3/8" I.D. 7"			1		
		P) CALL ORDER DESK FOR SPECIFIC APPLICATION					
		(V.I.N.)					

From Y-7046 Up to 3-8164	DATE: 01/2014	PAGE: Y2-2222-30

HEATER LINE REAR SECTION - MTH

ITEM	PART	DESCRIPTION	XL45	MTH40	MTH45	MTH45S	NOTE

From 4-8165 Up to 8-9339	DATE: 01/2014	PAGE: Y2-2222-31

HEATER LINE REAR SECTION - MTH

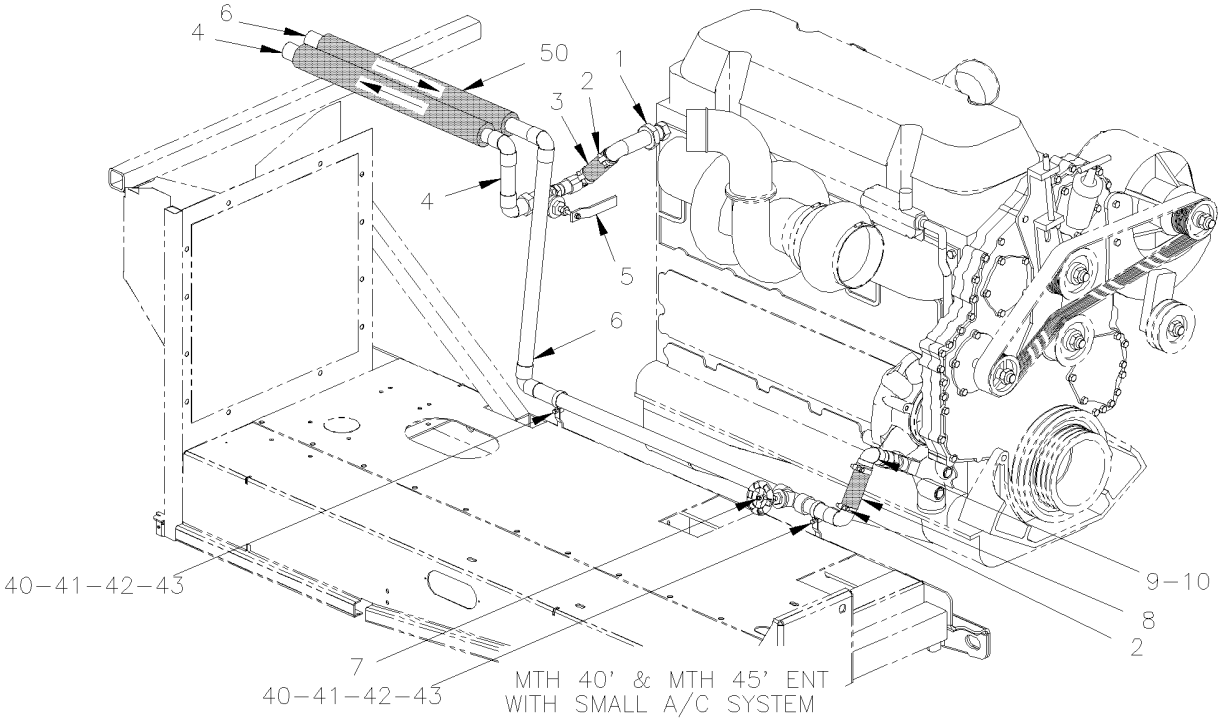

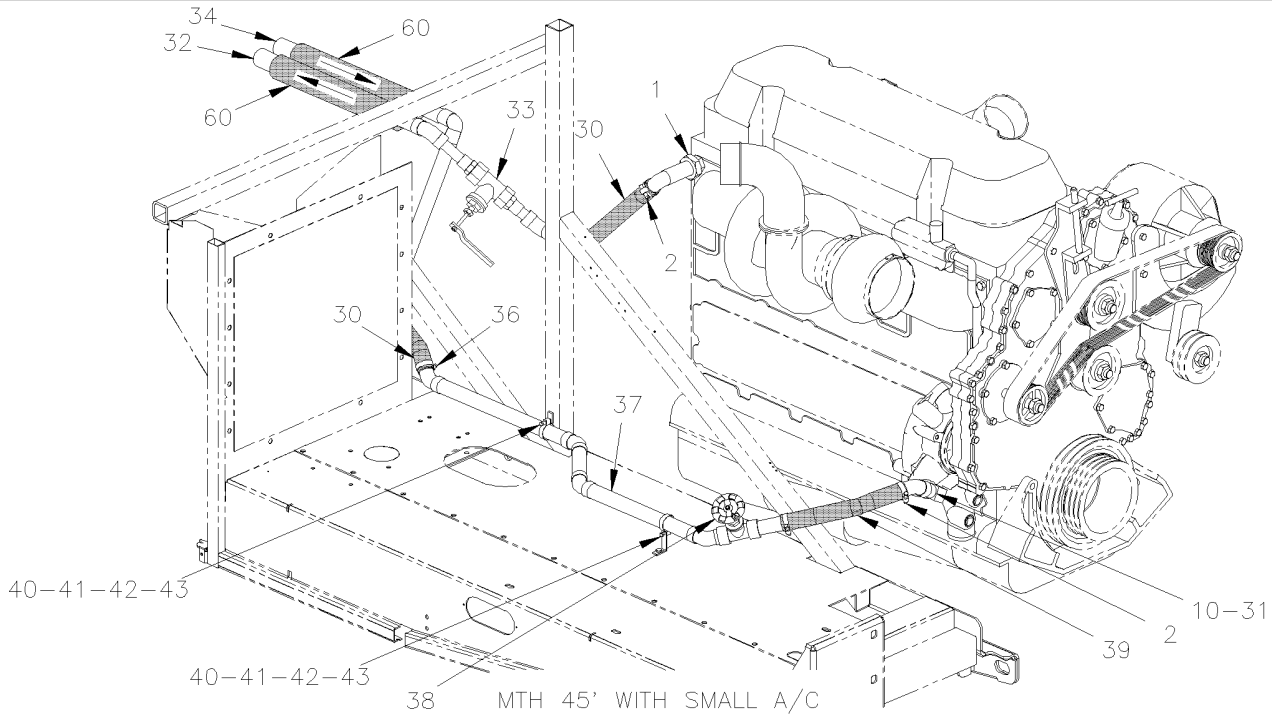

From 4-8165 Up to 8-9339	DATE: 01/2014	PAGE: Y2-2222-31

HEATER LINE REAR SECTION - MTH

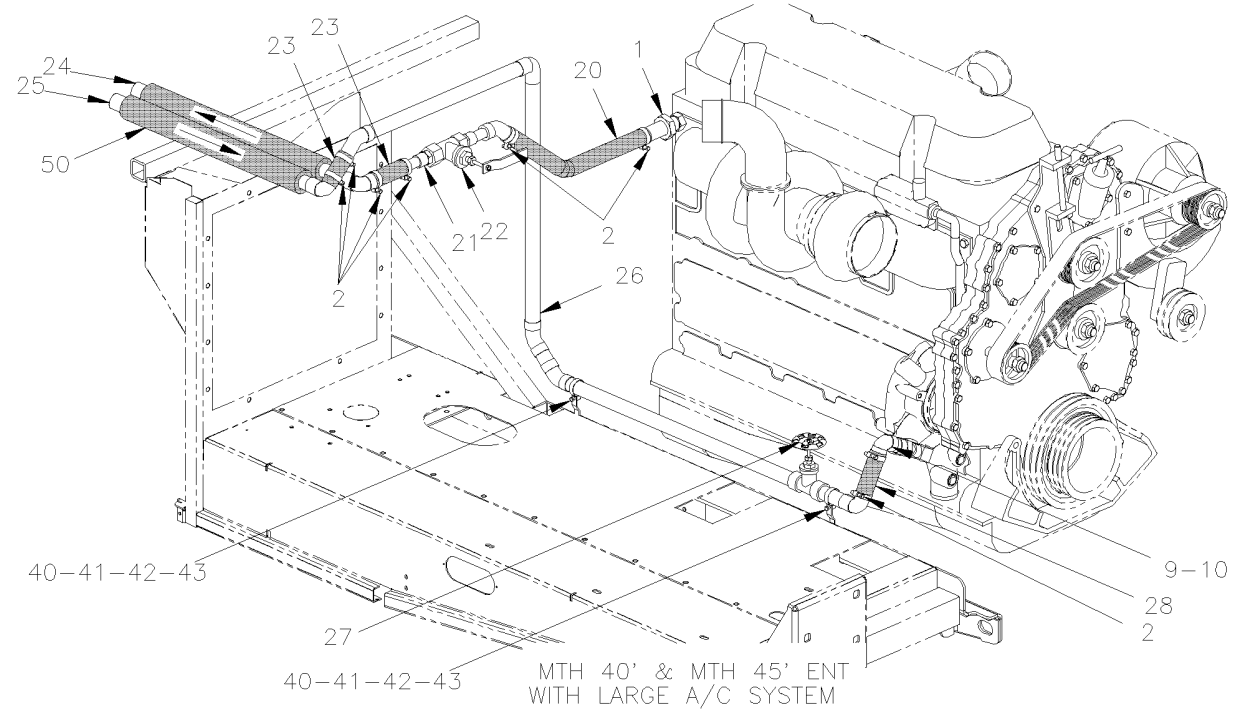

MTH 40' & MTH 45' ENT WITH LARGE A/C SYSTEM

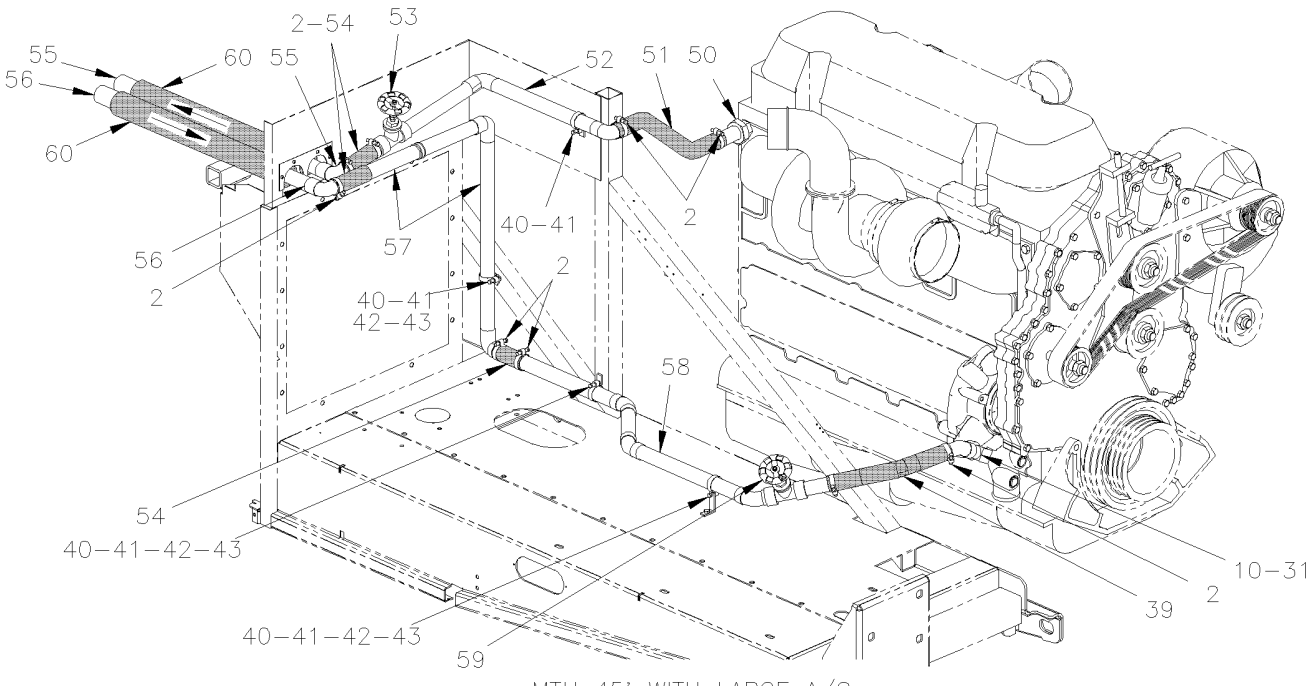

MTH 45' WITH LARGE A/C

From 4-8165 Up to 8-9339	DATE: 01/2014	PAGE: Y2-2222-31

HEATER LINE REAR SECTION - MTH

ITEM	PART	DESCRIPTION	XL45	MTH40	MTH45	MTH45S	NOTE
1	373866	HOSE ADAPTOR ELBOW 90° 1 3/8" X 1" NPT / CYLINDER HEAD EXIT		1		1	
1	373902	HOSE ADAPTOR STRAIGHT 1 3/8" X 1" NPT / CYLINDER HEAD EXIT		1		1	
2	504657	HOSE CLAMP / 1"1/16-2" C.T. 9424		1		1	
3	373298	HOSE 1 3/8" I.D. 216MM		1		1	
4	Call Order Desk	PIPE ASSY HEATING / FEED LINE / W/SMALL AC SYSTEM Up to 5-8561		1		1	P
4	Call Order Desk	PIPE ASSY HEATING / FEED LINE / W/SMALL A/C SYSTHEM From 5-8562 Up to 7-9095		1		1	P
4	Call Order Desk	PIPE ASSY HEATING / FEED LINE / W/SMALL A/C SYSTHEM From 7-9096				1	P
5	870966	. BALL VALVE 1" NPT-F Up to 8-9174		1		1	
5	871419	. BALL VALVE 1" NPT-F From 8-9175		1		1	
6	Call Order Desk	PIPE ASSY HEATING / RETURN LINE / W/SMALL A/C SYSTHEM Up to 7-9095		1		1	P
6	Call Order Desk	PIPE ASSY HEATING / RETURN LINE / W/SMALL A/C SYSTHEM From 7-9096				1	P
7	501958	. GATE VALVE 7/8" (WELDED)		1		1	
8	371535	. HOSE 1 3/8" I.D. X 127MM Up to 5-8492		1		1	
8	374136	. ELBOW 90° X 1 3/8" I.D. / 75MM x 194MM C/C / SILICONE From 5-8493		1		1	
9	373944	ADAPTOR ELBOW 90° 137MM / WATER PUMP INLET / W/SMALL A Up to 5-8492		1		1	F
9	373894	ADAPTOR STRAIGHT 86MM / WATER PUMP INLET From 5-8493		1		1	
10	507339	STREET ELBOW 90º / PIPE FITTING / 3/4NPT-Mx3/4NPT-F BR		1		1	
20	373954	HOSE 1 3/8" I.D. 610MM		1		1	
21	373945	PIPE ASSY HEATING / FEED LINE		1		1	
22	870966	. BALL VALVE 1" NPT-F Up to 8-9174		1		1	
22	871419	. BALL VALVE 1" NPT-F From 8-9175				1	
23	051383	. HOSE / W/CENTRAL A/C SYSTEM / 1 3/8" I.D. X 150MM		1		1	
24	373946P	PIPE ASSY HEATING / FEED LINE Up to 6-8805		1		1	
24	Call Order Desk	PIPE ASSY HEATING / FEED LINE From 6-8806		1		1	P
25	372670P	PIPE ASSY HEATING / RETURN LINE Up to 6-8805		1		1	
25	Call Order Desk	PIPE ASSY HEATING / RETURN LINE From 6-8806		1		1	P
26	372753	PIPE ASSY HEATING / RETURN LINE		1		1	
27	501861	. GATE VALVE 1 ¼" (WELDED)		1		1	
28	371858	. HOSE 1 3/8" I.D. 7" Up to 5-8492		1		1	F
28	374136	. ELBOW 90° X 1 3/8" I.D. / 75MM x 194MM C/C / SILICONE From 5-8493		1		1	
30	373942	HOSE 1 3/8" x 305MM			1		
31	373907	ADAPTOR ELBOW 45° / WATER PUMP INLET			1		
32	Call Order Desk	PIPE ASSY HEATING / FEED LINE Up to 5-8561			1		P
32	Call Order Desk	PIPE ASSY HEATING / FEED LINE From 5-8562			1		P
33	870966	. BALL VALVE 1" NPT-F Up to 8-9174			1		
33	871419	. BALL VALVE 1" NPT-F From 8-9175			1		
34	Call Order Desk	PIPE ASSY HEATING / RETURN LINE			1		P
35	372837	HOSE 7/8" I.D. 16 1/2"			1		
36	504646	HOSE CLAMP / 11/16"-1"1/4 / C.T. 9412			4		
37	Call Order Desk	PIPE RETURN / ENGINE WATER PUMP			1		P
		P) CALL ORDER DESK FOR SPECIFIC APPLICATION					
		(V.I.N.)					
		F) FOR PRODUCT IMPROVEMENT, ASK PARTS #373894 &					
		#374136. SEE WARRANTY BULLETIN					

From 4-8165 Up to 8-9339	DATE: 01/2014	PAGE: Y2-2222-31

HEATER LINE REAR SECTION - MTH

ITEM	PART	DESCRIPTION	XL45	MTH40	MTH45	MTH45S	NOTE
38	501861	. GATE VALVE 1 ¼" (WELDED)			1		
39	373145	HOSE 1 3/8" I.D. 260MM		1	1	1	
40	952633	CLAMP / 7/8" I.D.		AR	AR	AR	
40	952641	CLAMP / 1 5/16" I.D.		AR	AR	AR	
41	502746	SCREW MA PAN PH M5-0.8x20 SS EMN		AR	AR	AR	
42	500804	WASHER FL .203x.500x.047 ZG603		AR	AR	AR	
43	502841	NUT HEX NYRT M5-0.8 ZG603		AR	AR	AR	
50	373888	HOSE ADAPTOR ELBOW 45° 1 3/8" X 1" NPT / CYLINDER HEAD EXIT			1		
51	503392	HOSE SILICONE 4 PLY 1 3/8" I.D. x 4'			AR		
52	Call Order Desk	PIPE ASSY HEATING / FEED LINE			1		P
52	Call Order Desk	PIPE ASSY HEATING / FEED LINE			1		P
53	501861	. GATE VALVE 1 ¼" (WELDED)			1		
54	371855	HOSE 1 3/8" I.D. 3"			2		
55	Call Order Desk	PIPE ASSY HEATING / FEED LINE			1		P
55	Call Order Desk	PIPE ASSY HEATING / FEED LINE /W/"SLIDE-OUT" Up to 6-8805			1		P
56	Call Order Desk	PIPE ASSY HEATING / RETURN LINE			1		P
56	Call Order Desk	PIPE ASSY HEATING / RETURN LINE /W/"SLIDE-OUT" Up to 6-8805			1		P
57	Call Order Desk	PIPE ASSY HEATING / RETURN LINE			1		P
58	373901P	PIPE RETURN / ENGINE WATER PUMP			1		
59	501861	. GATE VALVE 1 ¼" (WELDED)			1		
60	506242	PIPE INSULATING / 1 3/8" I.D. X 1/2" TH. X 72 / APT13812		AR	AR	AR	
NS	WB04-09	SEE WARRANTY BULLETIN	1				
		P) CALL ORDER DESK FOR SPECIFIC APPLICATION					
		(V.I.N.)					

From Y-7046 Up to 3-8164	DATE: 01/2014	PAGE: Y2-2222-50

SMALL A/C LINES & HOSES WITH DETROIT S-60 & R134A

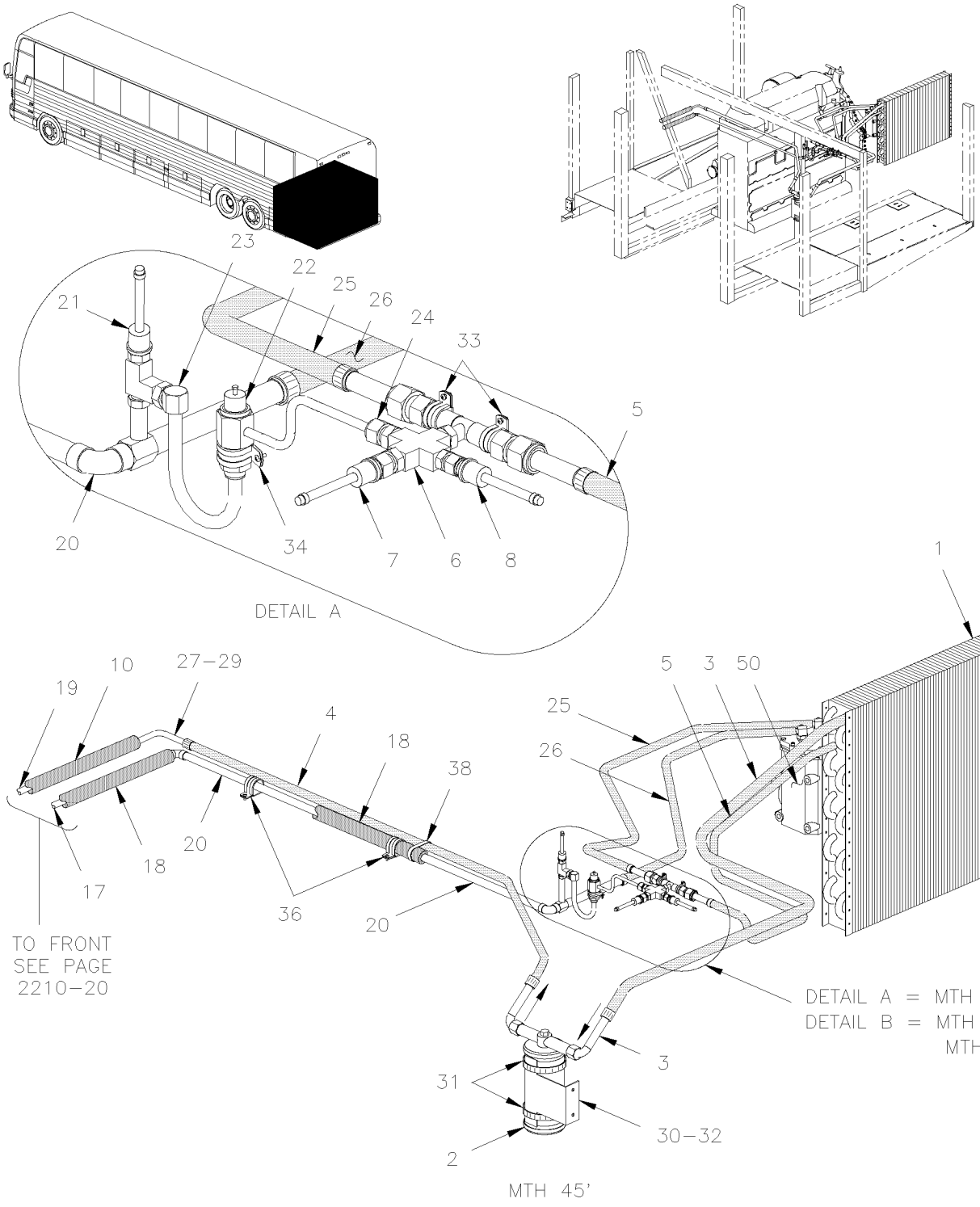

From Y-7046 Up to 3-8164	DATE: 01/2014	PAGE: Y2-2222-50
SMALL A/C LINES & HOSES WITH DETROIT S-60 & R134A		

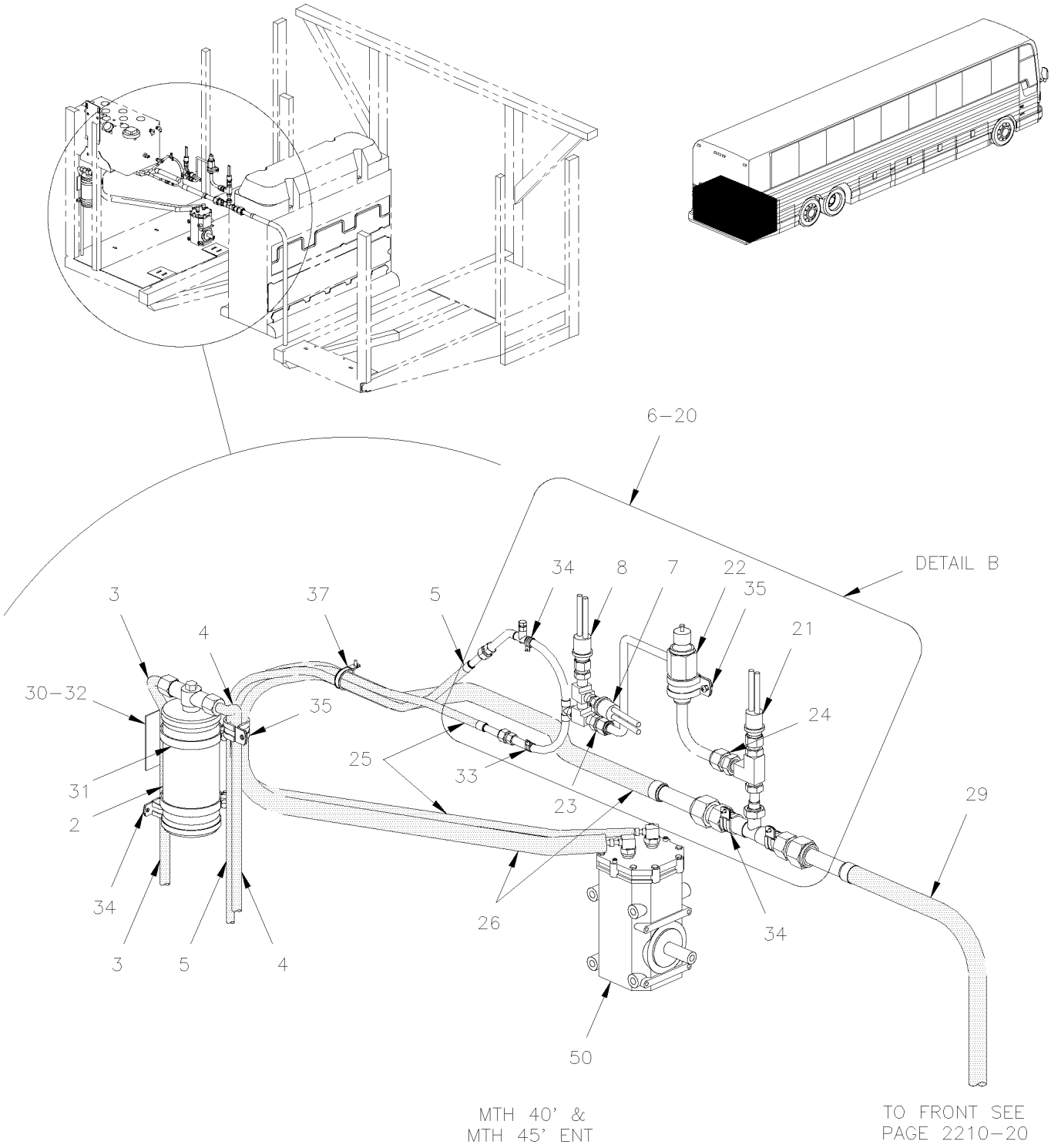

From Y-7046 Up to 3-8164	DATE: 01/2014	PAGE: Y2-2222-50
SMALL A/C LINES & HOSES WITH DETROIT S-60 & R134A		

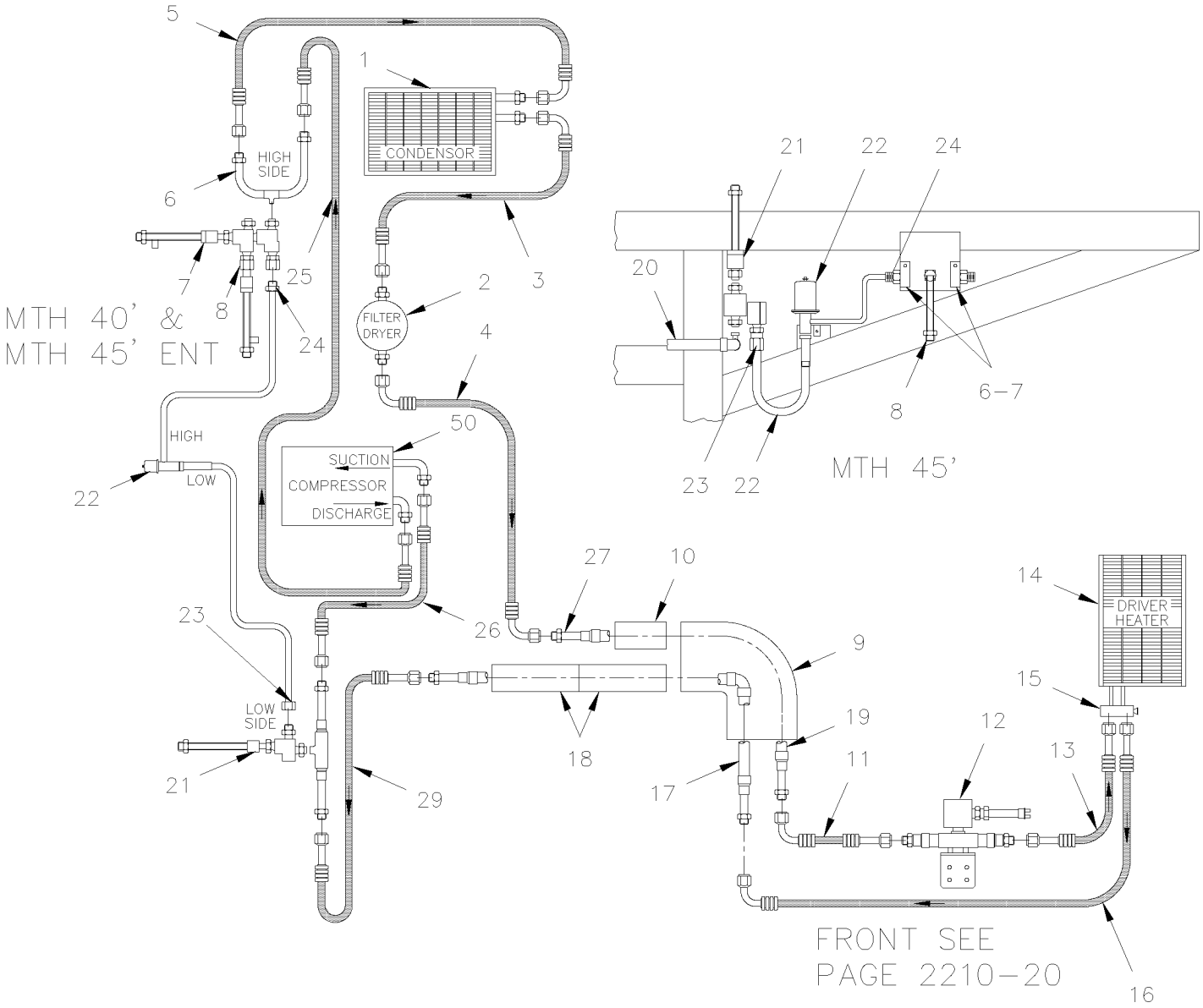

From Y-7046 Up to 3-8164	DATE: 01/2014	PAGE: Y2-2222-50

SMALL A/C LINES & HOSES WITH DETROIT S-60 & R134A

ITEM	PART	DESCRIPTION	XL45	MTH40	MTH45	MTH45S	NOTE
1	950018	CONDENSOR COIL Up to Y-7367		1	1	1	
1	950335	CONDENSER COIL From Y-7368		1	1	1	
2	950220	DRYER, RECEIVER TANK		1	1	1	
3	453474	HOSE ASSY / <> CONDENSER & RECEIVER / #6 3900MM / REPLACED BY: 455245		1		1	
. NS	507278	. O-RING / ORS FITTING /		2		2	
3	455245	HOSE ASSY / <> CONDENSER & RECEIVER / #6 3900MM		1		1	S
. NS	507278	. O-RING / ORS FITTING /		2		2	
3	453170	HOSE ASSY / <> CONDENSER & RECEIVER / #6 1100MM / REPLACED BY: 455191			1		
. NS	507278	. O-RING / ORS FITTING /			2		
3	455191	HOSE ASSY / <> CONDENSER & RECEIVER / #6 1100MM			1		S
. NS	507278	. O-RING / ORS FITTING /			2		
4	453469	HOSE ASSY / DRYER OUTLET / #6 3850MM / REPLACED BY: 455240		1		1	
. NS	507278	. O-RING / ORS FITTING /		2		2	
4	455240	HOSE ASSY / DRYER OUTLET / #6 3850MM		1		1	S
. NS	507278	. O-RING / ORS FITTING /		2		2	
4	453313	HOSE ASSY / DRYER OUTLET / W/R-134a / #6 1664MM / REPLACED BY: 455209			1		
. NS	507278	. O-RING / ORS FITTING /			2		
4	455209	HOSE ASSY / DRYER OUTLET / W/R-134a / #6 1664MM			1		S
. NS	507278	. O-RING / ORS FITTING /			2		
5	453471	HOSE ASSY /<>COND INLET & HI-SIDE / W/R-134a/ #8 4750MM / REPLACED BY: 455242		1		1	
. NS	507343	. O-RING / ORS FITTING /		2		2	
5	455242	HOSE ASSY /<>COND INLET & HI-SIDE / W/R-134a/ #8 4750MM		1		1	S
. NS	507343	. O-RING / ORS FITTING /		2		2	
5	453169	HOSE ASSY /<>COND INLET & HI-SIDE / W/R-134a/ #8 860MM / REPLACED BY: 455190			1		
. NS	507343	. O-RING / ORS FITTING /			2		
5	455190	HOSE ASSY /<>COND INLET & HI-SIDE / W/R-134a/ #8 860MM			1		S
. NS	507343	. O-RING / ORS FITTING /			2		
6	453437	TUBE ASSY / HI&LOW SIDE W/PLATE HOLDER		1		1	
6	453383	TUBE ASSY / HI-SIDE W/R134A			1		
7	453380	. PRESSURE SWITCH N.C. 350-245 20PS001MB350K245R		1	1	1	
8	452832	. PRESSURE SWITCH N.O. 170-130 20SP001MA170J130J		1	1	1	
NS	950249	. SCHROUDER VALVE 1/4NPT-M		2	2	2	
9	506283	PIPE INSULATING / 1 5/8" I.D. X 1/2" TH. X 72 / APT15812		AR	AR	AR	
10	506215	PIPE INSULATING / 1/2" I.D. X 1/2" TH. X 72" / APT01212		AR	AR	AR	
11	453333	HOSE ASSY / <> PIPE & VALVE #6 205MM		1	1	1	
. NS	507278	. O-RING / ORS FITTING /		2	2	2	
11	455212	HOSE ASSY / <> PIPE & VALVE #6 205MM		1	1	1	S
. NS	507278	. O-RING / ORS FITTING /		2	2	2	
12	Y2-2208-10	**REFRIGERANT SOLENOID VALVE**					
		S) SERVICE					

From Y-7046 Up to 3-8164	DATE: 01/2014	PAGE: Y2-2222-50

SMALL A/C LINES & HOSES WITH DETROIT S-60 & R134A

ITEM	PART	DESCRIPTION	XL45	MTH40	MTH45	MTH45S	NOTE
13	453331	HOSE ASSY / <> VALVE & EVAPORATOR / #6 250MM / REPLACED BY: 455210		1	1	1	
. NS	507278	. O-RING / ORS FITTING /		2	2	2	
13	455210	HOSE ASSY / <> VALVE & EVAPORATOR / #6 250MM		1	1	1	S
. NS	507278	. O-RING / ORS FITTING /		2	2	2	
14	Y2-2225-00	**DRIVER'S HEATER & DEFROSTER ASSY**					
15	Y2-2208-00	**A/C EXPANSION VALVE**					
16	453332	HOSE ASSY / <>EXPANSION VALVE OUTLET / #10 820MM		1		1	
. NS	507344	. O-RING / ORS FITTING /		2		2	
16	455211	HOSE ASSY / <>EXPANSION VALVE OUTLET / #10 820MM		1		1	S
. NS	507344	. O-RING / ORS FITTING /		2		2	
17	Call Order Desk	PIPE ASSY		1	1	1	P
18	506276	PIPE INSULATING / 7/8" I.D. X 1/2" TH. X 72 / APT07812		AR	AR	AR	
19	453319	PIPE ASSY		1	1	1	
20	453437	TUBE ASSY / HI&LOW SIDE W/PLATE HOLDER Up to 2-7888		1		1	
20	453727	TUBE ASSY / HI&LOW SIDE W/PLATE HOLDER From 2-7889		1		1	
20	452843	TUBE ASSY W/LOW PRESSURE SWITCH			1		
21	452831	. PRESSURE SWITCH N.O. 30-5 20SP001MA030C005C		1	1	1	
NS	950249	SCHROUDER VALVE 1/4NPT-M		1	1	1	
22	452586	VALVE, BYPASS ASSY / W/R134A "U" SHAPE			1		
22	452434	VALVE, BYPASS ASSY / W/R134A		1		1	
22	950065	. BYPASS VALVE		1		1	
23	5011080	MALE CONNECTOR / ORS FITTING / #6ORS-Mx1/4NPT-M STL		1	1	1	L
23	5011082	ADAPTOR / ORS@COPPER TUBE / #6ORS-Fx#6COPPER TUBE		1	1	1	L
24	5011079	MALE CONNECTOR / ORS FITTING / #4ORS-Mx1/4NPT-M STL		1	1	1	H
NS	5011081	ADAPTOR / ORS@COPPER TUBE / #4ORS-Fx#4COPPER TUBE		1	1	1	H
25	453472	HOSE ASSY / #8 1500MM		1		1	
25	455243	HOSE ASSY / #8 1500MM		1		1	S
. NS	507343	. O-RING / ORS FITTING /		2		2	
. NS	950358	. PROTECTOR CAP LOW PRESSURE PORT / "TUBE-O" / PLASTIC BLACK		1		1	
25	453409	HOSE ASSY / #8 1055MM			1		
. NS	507343	. O-RING / ORS FITTING /			2		
. NS	950358	. PROTECTOR CAP LOW PRESSURE PORT / "TUBE-O" / PLASTIC BLACK			1		
25	455225	HOSE ASSY / #8 1055MM			1		S
. NS	507343	. O-RING / ORS FITTING /			2		
. NS	950358	. PROTECTOR CAP LOW PRESSURE PORT / "TUBE-O" / PLASTIC BLACK			1		
26	453473	HOSE ASSY / #12 1850MM / REPLACED BY: 455244		1		1	
. NS	507344	. O-RING / ORS FITTING /		2		2	
. NS	950367	. PROTECTOR CAP HIGH PRESSURE PORT / "TUBE-O" / PLASTIC BLACK		1		1	
26	455244	HOSE ASSY / #12 1850MM		1		1	S
		P) CALL ORDER DESK FOR SPECIFIC APPLICATION					
		(V.I.N.)					
		H) TO FIX BY PASS TO HIGH PRESSURE SIDE					
		L) TO FIX BY PASS TO LOW PRESSURE SIDE					
		S) SERVICE					

From Y-7046 Up to 3-8164	DATE: 01/2014	PAGE: Y2-2222-50

SMALL A/C LINES & HOSES WITH DETROIT S-60 & R134A

ITEM	PART	DESCRIPTION	XL45	MTH40	MTH45	MTH45S	NOTE
26	453408	HOSE ASSY / COMPRESSOR INLET/W/R-134a / #12 654MM			1		
. NS	507344	. O-RING / ORS FITTING /			2		
. NS	950367	. PROTECTOR CAP HIGH PRESSURE PORT / "TUBE-O" / PLASTIC BLACK			1		
26	455224	HOSE ASSY / COMPRESSOR INLET/W/R-134a / #12 654MM			1		S
. NS	507344	. O-RING / ORS FITTING /			2		
. NS	950367	. PROTECTOR CAP HIGH PRESSURE PORT / "TUBE-O" / PLASTIC BLACK			1		
27	452437	PIPE ASSY		1	1	1	
29	453470	HOSE ASSY / #12 1725MM		1		1	
. NS	507344	. O-RING / ORS FITTING /		2		2	
29	455241	HOSE ASSY / #12 1725MM		1		1	S
. NS	507344	. O-RING / ORS FITTING /		2		2	
30	452375	SUPPORT RECEIVER TANK			1		
31	504025	HOSE CLAMP / 2"5/16-3"1/4 SS / HS-44		2	2	2	
32	500923	SCREW TC CAP HEX 1/4-20x3/4 ZP / REPLACED BY: 5001515		2	2	2	
33	952627	CLAMP / 1/2" I.D.		AR	AR	AR	
34	952629	CLAMP / 5/8" I.D.		AR	AR	AR	
35	952637	CLAMP / 1"1/16 I.D.		AR	AR	AR	
36	952639	CLAMP / 1"1/4 I.D.		AR	AR	AR	
37	562060	CLAMP / 1 3/4" I.D.		AR	AR	AR	
38	504637	CABLE TIE / 3/16" x 13"		AR	AR	AR	
NS	500642	SCREW TP BDG PH #10x3/4 ZP		AR	AR	AR	
NS	500613	SCREW TP PAN PH #10x1/2 ZP		AR	AR	AR	
NS	500657	SCREW TC TR PH #10-24x1/2 ZP		AR	AR	AR	
50	Y2-2245-10	**A/C COMPRESSOR SMALL - INSTALLATION**					
		S) SERVICE					

From 4-8165 Up to 8-9339	DATE: 01/2014	PAGE: Y2-2222-51
SMALL A/C LINES & HOSES WITH DETROIT S-60 & R134A		

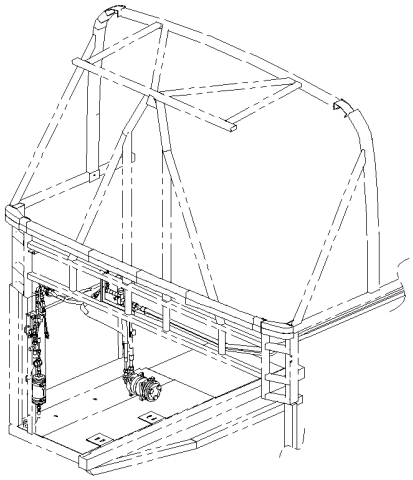

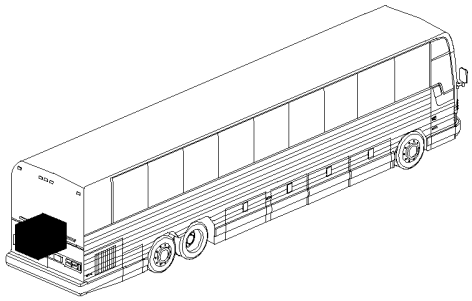

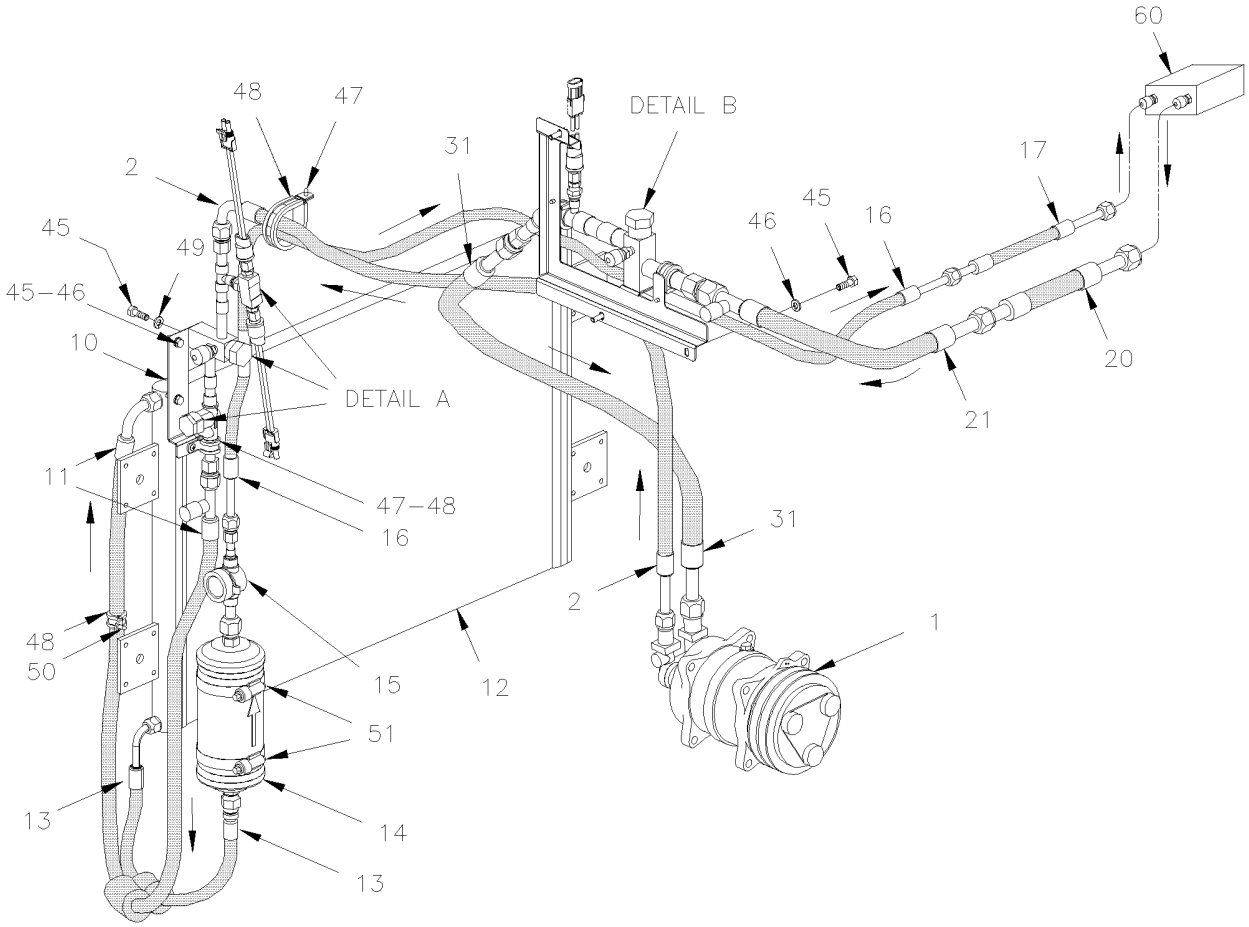

From 4-8165 Up to 8-9339	DATE: 01/2014	PAGE: Y2-2222-51
SMALL A/C LINES & HOSES WITH DETROIT S-60 & R134A		

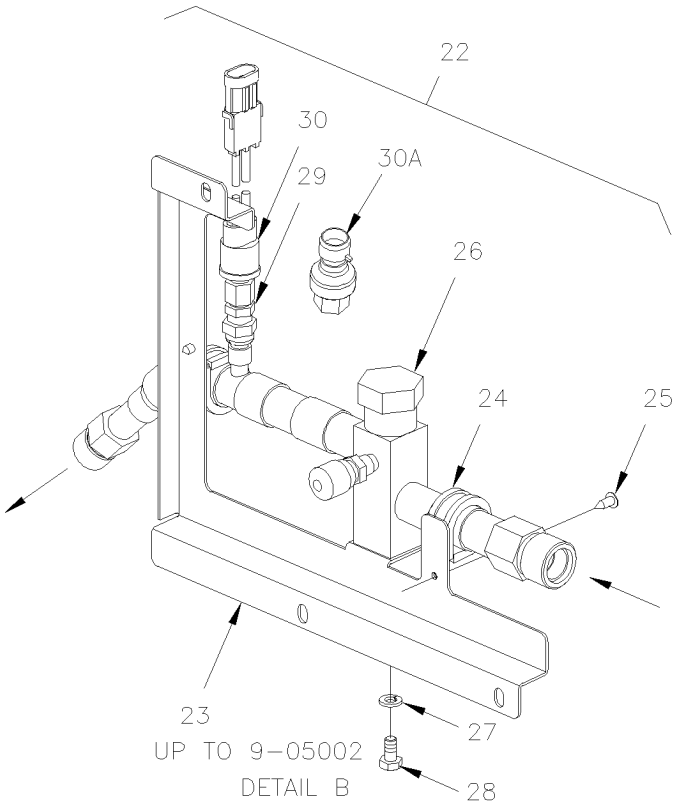

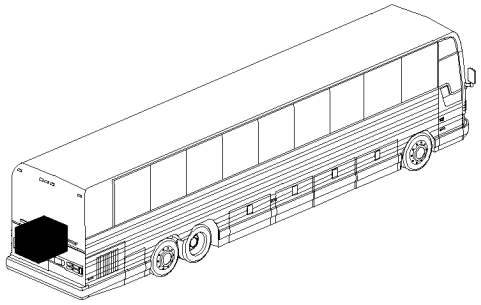

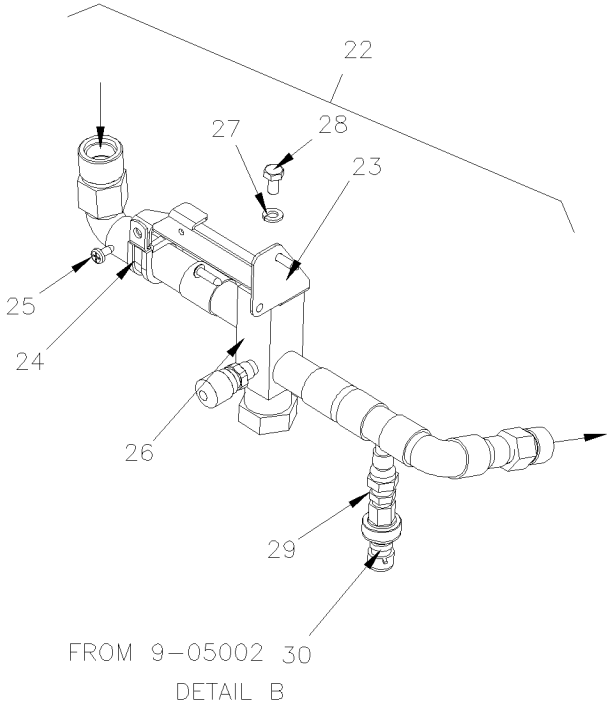

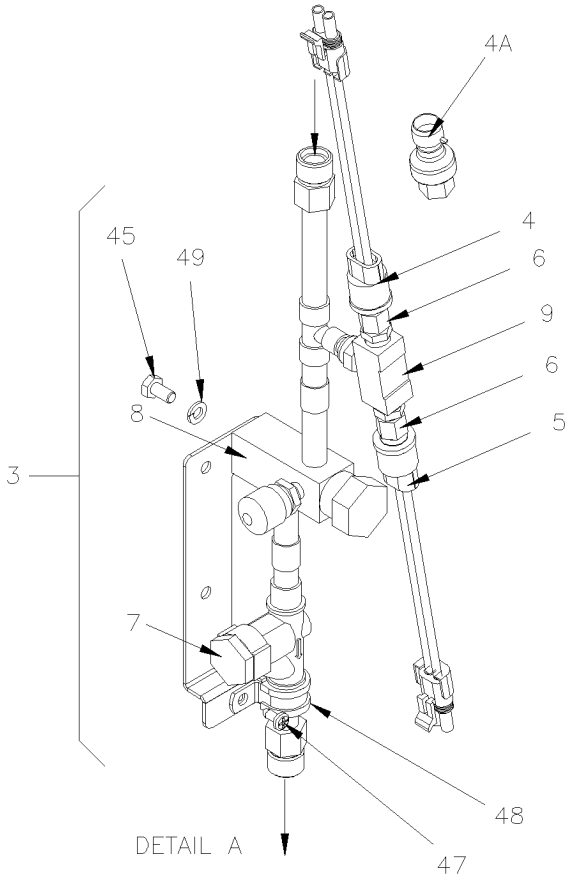

From 4-8165 Up to 8-9339	DATE: 01/2014	PAGE: Y2-2222-51

SMALL A/C LINES & HOSES WITH DETROIT S-60 & R134A

ITEM	PART	DESCRIPTION	XL45	MTH40	MTH45	MTH45S	NOTE
1	Y2-2245-11	**A/C COMPRESSOR SMALL - INSTALLATION**					
2	454067	HOSE ASSY / #8 960MM Up to 7-9095		1		1	C
. NS	507343	. O-RING / ORS FITTING / Up to 7-9095		2		2	
2	455276	HOSE ASSY / #8 960MM Up to 7-9095		1		1	C,S
. NS	507343	. O-RING / ORS FITTING / Up to 7-9095		2		2	
2	454353	HOSE ASSY / #8 2482MM From 7-9096				1	
. NS	507343	. O-RING / ORS FITTING / From 7-9096				2	
2	455302	HOSE ASSY / #8 2482MM From 7-9096				1	S
. NS	507343	. O-RING / ORS FITTING / From 7-9096				2	
2	454098	HOSE ASSY / #8 875MM Up to 7-9095			1		
. NS	507343	. O-RING / ORS FITTING / Up to 7-9095			2		
2	455288	HOSE ASSY / #8 875MM Up to 7-9095			1		S
. NS	507343	. O-RING / ORS FITTING / Up to 7-9095			2		
2	453899	HOSE ASSY / #8 1257MM Up to 3-8164			1		A
. NS	507343	. O-RING / ORS FITTING / Up to 3-8164			2		
2	455272	HOSE ASSY / #8 1257MM Up to 3-8164			1		A,S
. NS	507343	. O-RING / ORS FITTING / Up to 3-8164			2		
3	454066	VALVE ASSY / HI-SIDE		1	1	1	
4	454084	. PRESSURE SWITCH N.O. 195-150 20PS001MA195K150K Up to 7-9095		1	1	1	
4A	563423	. TRANSDUSER -6.7 to 420 LBS / 1/8 NPT-F From 7-9096			1	1	
. NS	563159	. . CONNECTOR / METRI-PACK 150 / SH 3C / PED 12065287 From 7-9096			1	1	
5	453380	. PRESSURE SWITCH N.C. 350-245 20PS001MB350K245R		1	1	1	
6	950249	. SCHROUDER VALVE 1/4NPT-M		2	2	2	
7	950326	. CHECK VALVE		1	1	1	
8	950376	. VALVE SERVICE HIGHT PRESSURE		1	1	1	
9	501894	. MALE BRANCHE TEE / PIPE FITTING / 1/4NPT-Fx1/4NPT-Fx1/4NPT-M BR		1	1	1	
10	454072	SUPPORT / HIGHT PRESSURE VALVE		1	1	1	
11	454070	HOSE ASSY / #8 1325MM		1		1	
. NS	507343	. O-RING / ORS FITTING /		2		2	
11	455278	HOSE ASSY / #8 1325MM		1		1	S
. NS	507343	. O-RING / ORS FITTING /		2		2	
11	454074	HOSE ASSY / #8 1175MM			1		
. NS	507343	. O-RING / ORS FITTING /			2		
11	455280	HOSE ASSY / #8 1175MM			1		S
. NS	507343	. O-RING / ORS FITTING /			2		
11	453900	HOSE ASSY / #8 685MM Up to 3-8164			1		A
		A) USE ONLY WITH RETROFIT KIT #453897					
		C) USE ALSO WITH RETROFIT KIT #454222 & #454223					
		S) SERVICE					

From 4-8165 Up to 8-9339	DATE: 01/2014	PAGE: Y2-2222-51

SMALL A/C LINES & HOSES WITH DETROIT S-60 & R134A

ITEM	PART	DESCRIPTION	XL45	MTH40	MTH45	MTH45S	NOTE
11	455273	HOSE ASSY / #8 685MM Up to 3-8164			1		A,S
. NS	507343	. O-RING / ORS FITTING / Up to 3-8164			2		
11	454142	HOSE ASSY / #8 1215MM Up to 3-8164		1		1	B
. NS	507343	. O-RING / ORS FITTING / Up to 3-8164		2		2	
11	455291	HOSE ASSY / #8 1215MM Up to 3-8164		1		1	B,S
. NS	507343	. O-RING / ORS FITTING / Up to 3-8164		2		2	
11	453643	HOSE ASSY / #8 2220MM From 4-7937 Up to 4-7937			1		
. NS	507343	. O-RING / ORS FITTING / #8 NEO From 4-7937 Up to 4-7937			2		
11	455262	HOSE ASSY / #8 2220MM From 4-7937 Up to 4-7937			1		S
. NS	507343	. O-RING / ORS FITTING / #8 NEO From 4-7937 Up to 4-7937			2		
12	Y2-2255-11	**CONDENSOR - INSTALLATION SMALL SYSTEM**					
13	454069	HOSE ASSY / #6 515MM		1		1	
. NS	507278	. O-RING / ORS FITTING /		1		1	
13	454077	HOSE ASSY / #6 475MM			1		
. NS	507278	. O-RING / ORS FITTING /			2		
13	453901	HOSE ASSY / #6 1257MM Up to 3-8164			1		A
. NS	507278	. O-RING / ORS FITTING / Up to 3-8164			1		
13	454141	HOSE ASSY / #6 375MM Up to 3-8164		1		1	B
13	453642	HOSE ASSY / #6 600MM From 4-7937 Up to 4-7937			1		
. NS	507278	. O-RING / ORS FITTING / #4 NEO From 4-7937 Up to 4-7937			2		
14	950370	FILTER DRYER		1	1	1	
. NS	507085	. O-RING 7/16" I.D X 1/32"		1	1	1	
15	453514	MOISTURE INDICATOR ASSY / REPLACED BY: 455356		1	1	1	
. NS	950379	. MOISTURE INDICATOR		1	1	1	
15	950379	. MOISTURE INDICATOR		1	1	1	
15	950029	. CAP, MOISTURE INDICATOR		1	1	1	
16	454075	HOSE ASSY / #6 2690MM		1	1	1	
. NS	507278	. O-RING / ORS FITTING /		2	2	2	
16	455281	HOSE ASSY / #6 2690MM		1	1	1	S
. NS	507278	. O-RING / ORS FITTING /		2	2	2	
16	453641	HOSE ASSY / #6 3000MM From 4-7937 Up to 4-7937			1		
. NS	507278	. O-RING / ORS FITTING / #4 NEO From 4-7937 Up to 4-7937			2		
16	455261	HOSE ASSY / #6 3000MM From 4-7937 Up to 4-7937			1		S
. NS	507278	. O-RING / ORS FITTING / #4 NEO From 4-7937 Up to 4-7937			2		
17	453319	PIPE ASSY		1	1	1	
20	Call Order Desk	PIPE ASSY		1			P
		P) CALL ORDER DESK FOR SPECIFIC APPLICATION					
		(V.I.N.)					
		A) USE ONLY WITH RETROFIT KIT #453897					
		B) USE ONLY WITH RETROFIT KIT #454222 & #454223					
		S) SERVICE					

From 4-8165 Up to 8-9339	DATE: 01/2014	PAGE: Y2-2222-51

SMALL A/C LINES & HOSES WITH DETROIT S-60 & R134A

ITEM	PART	DESCRIPTION	XL45	MTH40	MTH45	MTH45S	NOTE
20	Call Order Desk	PIPE ASSY			1		P
20	Call Order Desk	PIPE ASSY				1	P
21	454097	HOSE ASSY / #12 1895MM Up to 7-9095		1		1	C
. NS	507280	. O-RING / ORS FITTING / Up to 7-9095		2		2	
21	455287	HOSE ASSY / #12 1895MM Up to 7-9095		1		1	C,S
. NS	507280	. O-RING / ORS FITTING / Up to 7-9095		2		2	
21	454351	HOSE ASSY / #12 847MM From 7-9096		1		1	
. NS	507280	. O-RING / ORS FITTING / From 7-9096		2		2	
21	455300	HOSE ASSY / #12 847MM From 7-9096		1		1	S
. NS	507280	. O-RING / ORS FITTING / From 7-9096		2		2	
21	454097	HOSE ASSY / #12 1895MM			1		C
. NS	507280	. O-RING / ORS FITTING /			2		
21	455287	HOSE ASSY / #12 1895MM			1		C,S
. NS	507280	. O-RING / ORS FITTING /			2		
21	453470	HOSE ASSY / #12 1725MM From 4-7937 Up to 4-7937			1		
. NS	507344	. O-RING / ORS FITTING / From 4-7937 Up to 4-7937			2		
21	455241	HOSE ASSY / #12 1725MM From 4-7937 Up to 4-7937			1		S
. NS	507344	. O-RING / ORS FITTING / From 4-7937 Up to 4-7937			2		
22	454061	VALVE ASSY W/SUPPORT / LOW SIDE		1	1	1	
22	455143	VALVE ASSY W/SUPPORT / LOW SIDE From 7-9096			1		
22	Call Order Desk	VALVE ASSY W/SUPPORT / LOW SIDE From 7-9096				1	P
23	454063	. SUPPORT / LOW PRESSURE VALVE		1	1	1	
23	454354	. SUPPORT / LOW PRESSURE VALVE From 7-9096				1	
24	952635	. CLAMP / 1" I.D.		1	1	1	
25	509805	. SCREW TP PAN PH #10x1/2 BK		1	1	1	
26	950377	. VALVE SERVICE LOW PRESSURE Up to 7-9109		1	1	1	
26	950950	. VALVE SERVICE LOW PRESSURE	1				
. NS	950235	. . GAUGE ADAPTOR ASSY / W/BLUE CAP FOR R-134A / SUCTION SIDE	1				
27	955920	. WASHER LO SPT 6.5x11.5x1.6 ZP		1	1	1	
28	502772	. SCREW CAP HEX 1/4-20x1/2 G5 ZG603		1	1	1	
29	950249	. SCHROUDER VALVE 1/4NPT-M		1	1	1	
30	452831	. PRESSURE SWITCH N.O. 30-5 20SP001MA030C005C Up to 7-9095		1	1	1	
30A	563423	. TRANSDUSER -6.7 to 420 LBS / 1/8 NPT-F From 7-9096			1	1	
. NS	563159	. . CONNECTOR / METRI-PACK 150 / SH 3C / PED 12065287 From 7-9096			1	1	
31	454071	HOSE ASSY / #12 780MM Up to 7-9095		1	1	1	C
. NS	507344	. O-RING / ORS FITTING / Up to 7-9095		2	2	2	
		P) CALL ORDER DESK FOR SPECIFIC APPLICATION					
		(V.I.N.)					
		C) USE ALSO WITH RETROFIT KIT #454222 & #454223					
		S) SERVICE					

From 4-8165 Up to 8-9339	DATE: 01/2014	PAGE: Y2-2222-51

SMALL A/C LINES & HOSES WITH DETROIT S-60 & R134A

ITEM	PART	DESCRIPTION	XL45	MTH40	MTH45	MTH45S	NOTE
31	455279	HOSE ASSY / #12 780MM Up to 7-9095		1	1	1	C,S
. NS	507344	. O-RING / ORS FITTING / Up to 7-9095		2	2	2	
31	454352	HOSE ASSY / #12 475MM From 7-9096				1	
. NS	507344	. O-RING / ORS FITTING / From 7-9096				2	
31	455301	HOSE ASSY / #12 475MM From 7-9096				1	S
. NS	507344	. O-RING / ORS FITTING / From 7-9096				2	
31	453898	HOSE ASSY / #10 890MM Up to 3-8164			1		A
. NS	507344	. O-RING / ORS FITTING / Up to 3-8164			2		
31	455271	HOSE ASSY / #10 890MM Up to 3-8164			1		A,S
. NS	507344	. O-RING / ORS FITTING / Up to 3-8164			2		
40	504586	WASHER SPACER, NYLON .625 O.D.X.450		1	1	1	
41	504637	CABLE TIE / 3/16" x 13"		AR	AR	AR	
42	504458	CLAMP / 1 5/8" I.D.		AR	AR	AR	
43	500642	SCREW TP BDG PH #10x3/4 ZP		AR	AR	AR	
45	955920	WASHER LO SPT 6.5x11.5x1.6 ZP		AR	AR	AR	
46	502830	SCREW CAP HEX M6-1.0x20 G8.8 ZG603		AR	AR	AR	
47	952629	CLAMP / 5/8" I.D.		AR	AR	AR	
48	509805	SCREW TP PAN PH #10x1/2 BK		3	3	3	
49	502772	SCREW CAP HEX 1/4-20x1/2 G5 ZG603		1	1	1	
50	952629	CLAMP / 5/8" I.D.		1	1	1	
51	504026	HOSE CLAMP / 2"13/16-3"3/4 SS / HS-52		1	1	1	
60	Y2-2240-20	**BLOWER VENTILATION - PARCEL RACK**					
NS	454222	KIT, RETROFIT "SELTEC" COMPRESSOR / W/MTH 40' Up to 3-8164		1			
. NS	IS-04009	. SEE INSTRUCTION SHEET Up to 3-8164		1			
NS	454223	KIT, RETROFIT "SELTEC" COMPRESSOR / W/MTH 45' Up to 3-8164				1	
. NS	IS-04009	. SEE INSTRUCTION SHEET Up to 3-8164				1	
NS	453897	KIT, RETROFIT "SELTEC" COMPRESSOR /W/W5 ONLY Up to 3-8164			1		
. NS	IS-03152	. SEE INSTRUCTION SHEET Up to 3-8164			1		
		A) USE ONLY WITH RETROFIT KIT #453897					
		C) USE ALSO WITH RETROFIT KIT #454222 & #454223					
		S) SERVICE					

From Y-7046 Up to 5-8469	DATE: 01/2014	PAGE: Y2-2225-00

DRIVER'S HEATER & DEFROSTER ASSY

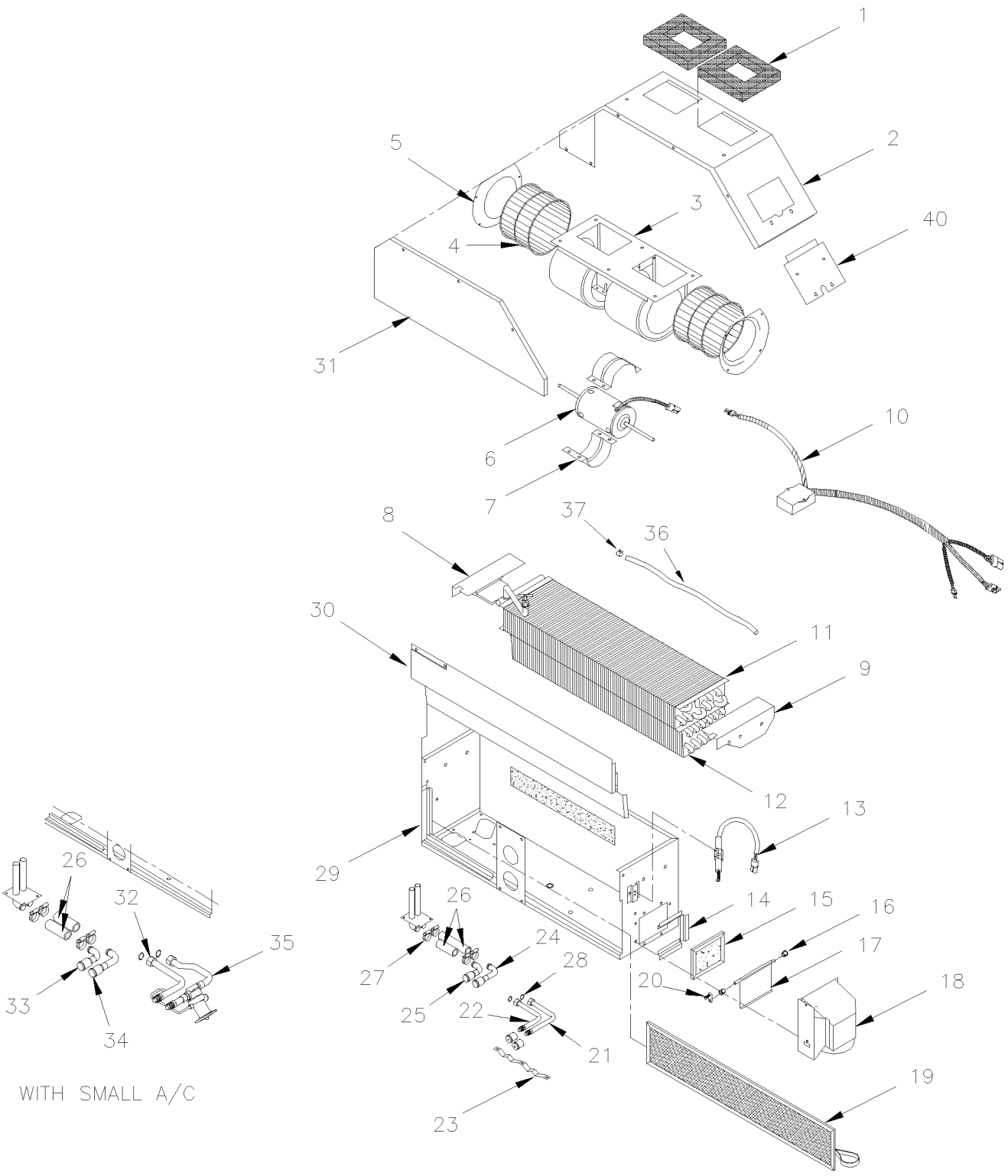

From Y-7046 Up to 5-8469	DATE: 01/2014	PAGE: Y2-2225-00

DRIVER'S HEATER & DEFROSTER ASSY

ITEM	PART	DESCRIPTION	XL45	MTH40	MTH45	MTH45S	NOTE
	871182	DEFROSTER & A/C UNIT ASSY Up to 3-8108	1				
	871325	DEFROSTER & A/C UNIT ASSY From 3-8109	1				
	871178	DEFROSTER & A/C UNIT ASSY		1	1	1	
	871339	DEFROSTER & A/C UNIT ASSY From 4-8165		1	1	1	A
1	871129	. SEAL	1	1	1	1	
2	871223	. COVER	1	1	1	1	
3	871131	. BLOWER ASSY 24V / W/SINGLE MOTOR MOUNT / WITH CONNECTOR	1	1	1	1	C
3	N8893462	. BLOWER ASSY 24V / W/SINGLE MOTOR MOUNT / WITH CONNECTOR / REPLACED BY: 871131	1	1	1	1	
3	871132	. . BLOWER HOUSING	1	1	1	1	
4	871133	. . BLOWER WHEEL / PLASTIC 5 1/8" x 3 1/2" x 5/16" x I.D.	2	2	2	2	
	N8888160	. . SPRING CLIP	2	2	2	2	
5	871134	. . VENTURI	2	2	2	2	
6	871135	. . MOTOR ASSY / 24V / REPLACED BY: N8893990	1	1	1	1	
6	N8893990	. . MOTOR ASSY / 24V / WITH CONNECTOR	1	1	1	1	
7	871136	. . MOTOR MOUNTING	2	2	2	2	
8	871137	. BRACKET L.H.	1	1	1	1	
9	871138	. BRACKET R.H.	1	1	1	1	
10	871139	. MODULE CONTROL FAN SPEED /W/SINGLE MOTOR / (STAMPED 35-0060)	1	1	1	1	
11	871140	. HEATER COIL	1	1	1	1	
12	871141	. EVAPORATOR COIL	1	1	1	1	
13	871142	. ACTUATOR, THERMAL	1	1	1	1	
14	871143	. CHANNEL, FILTER F/A	1	1	1	1	
15	871144	. FILTER / FRESH AIR 1/4" x 3 5/8" x 5 1/4"	1	1	1	1	
16	871025	. BUSHING / CABLE PIVOT	2	2	2	2	
17	871145	. DAMPER TRAP	1	1	1	1	
18	871224	. BOX, FRESH AIR Up to 3-8108 / REPLACED BY: 871402	1				
18	871225	. BOX, FRESH AIR From 3-8109	1				
18	871225	. BOX, FRESH AIR		1	1	1	
19	871147	. FILTER / RECIRCULATING 1/4" x 6 1/4" x 28"	1	1	1	1	
20	871148	. LEVER , F/A DAMPER	1	1	1	1	
20	5001410	. SCREW MA CHE PH M4-0.7x16 SS	1	1	1	1	
20	502557	. NUT HEX NYRT M4-0.7 SS	1	1	1	1	
21	871229	. TUBE, A/C		1	1	1	
21	871233	. TUBE, A/C	1				
22	871228	. TUBE, A/C		1	1	1	
22	871232	. TUBE, A/C	1				
23	871226	. TUBE SUPPORT	1	1	1	1	
NS	871238	. TUBE SUPPORT	2				
		A) WITH SMALL A/C SYSTEM AND "SELTEC"					
		COMPRESSOR					
		C) FOR PRODUCT IMPROVMENT, ASK #871359 AS SHOWN					
		AT PAGE Y2-2225-01					

From Y-7046 Up to 5-8469	DATE: 01/2014	PAGE: Y2-2225-00

DRIVER'S HEATER & DEFROSTER ASSY

ITEM	PART	DESCRIPTION	XL45	MTH40	MTH45	MTH45S	NOTE
NS	871237	. TUBE SUPPORT	1	1	1	1	
24	871231	. TUBE HEATER		1	1	1	
24	871235	. TUBE HEATER	1				
25	871230	. TUBE HEATER		1	1	1	
25	871234	. TUBE HEATER	1				
26	503007	. HOSE 2 PLY / RADIATOR HOSE / 5/8" I.D. / S.L.	AR	AR	AR	AR	
27	504646	. HOSE CLAMP / 11/16"-1"1/4 / C.T. 9412	4	4	4	4	
28	507279	. O-RING / ORS FITTING / #8 NEO	2	2	2	2	
28	Y2-2208-00	**. A/C EXPANSION VALVE**					
29	N.P.N.	. CASING	1	1	1	1	4
30	871155	. COVER	1	1	1	1	
31	871156	. COVER / BLOWER ACCESS	1	1	1	1	
NS	5001047	. . SCREW TC PAN PH M5-0.8X10 ZP	17	17	17	17	
32	871343	. TUBE A/C From 4-8165		1	1	1	A,B
33	871230	. TUBE HEATER From 4-8165		1	1	1	A
34	871231	. TUBE HEATER From 4-8165		1	1	1	A
35	871344	. VALVE, EXPANSION ASSY / WITH PIPE From 4-8165		1	1	1	A,B
36	8860148	. TUBE, NYLON 5/16 O.D. / BLACK S.L.	AR	AR	AR	AR	
37	N8888160	. SPRING CLIP	1	1	1	1	
40	871227	. HARNESS COVER	1	1	1	1	
		4) NO PARTS NUMBER					
		A) WITH SMALL A/C SYSTEM AND "SELTEC"					
		COMPRESSOR					
		B) USE ALSO WITH KIT #453897					

From Y-7046 Up to 5-8469	DATE: 01/2014	PAGE: Y2-2225-00

DRIVER'S HEATER & DEFROSTER ASSY

ITEM	PART	DESCRIPTION	XL45	MTH400	MTH445	MTH445S	NOTE

From 5-8470 Up to 7-9095	DATE: 01/2014	PAGE: Y2-2225-01
DRIVER'S HEATER & DEFROSTER ASSY		

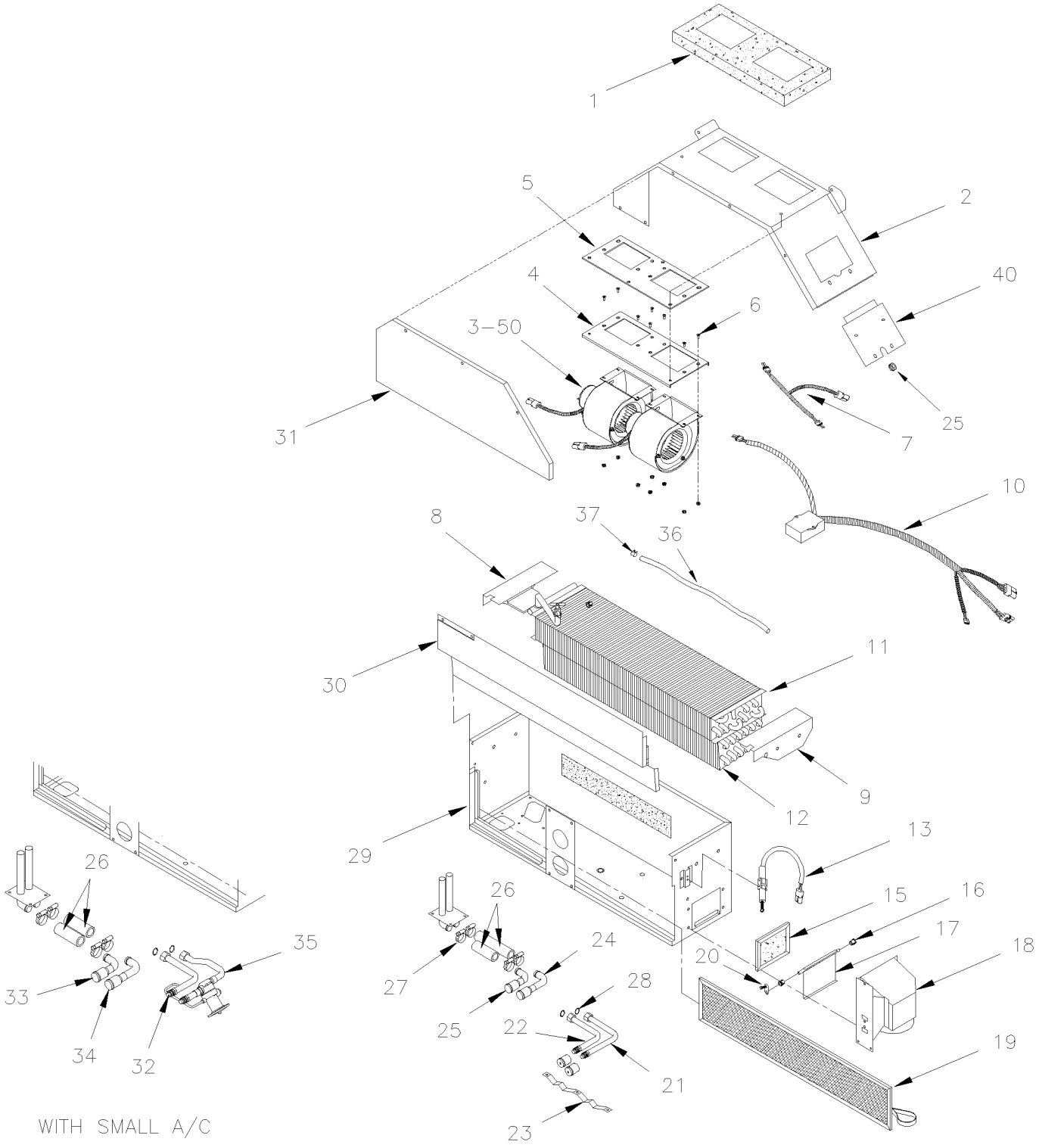

From 5-8470 Up to 7-9095	DATE: 01/2014	PAGE: Y2-2225-01

DRIVER'S HEATER & DEFROSTER ASSY

ITEM	PART	DESCRIPTION	XL45	MTH40	MTH45	MTH45S	NOTE
	871357	DEFROSTER & A/C UNIT ASSY Up to 6-8906	1				
	871356	DEFROSTER & A/C UNIT ASSY		1	1	1	
	871358	DEFROSTER & A/C UNIT ASSY		1	1	1	A
1	871129	. SEAL	1	1	1	1	
2	871223	. COVER	1	1	1	1	
3	871359	. BLOWER ASSY 24V / W/DOUBLE MOTOR MOUNT	2	2	2	2	
3	871360	**. . BLOWER & MOTOR ASSY - "M.C.C." "CCW" / FAN END**	2	2	2	2	
4	871362	. . PLATE MOUNTING	1	1	1	1	
5	871363	. . FOAM ASSY	1	1	1	1	
6	500749	. . NUT HEX THK 1-14x1 5/16	8	8	8	8	
NS	500423	. . NUT HEX NYRT #10-32 SS	8	8	8	8	
7	871364	. . CABLE HARNESS	1	1	1	1	
8	871137	. BRACKET L.H.	1	1	1	1	
9	871138	. BRACKET R.H.	1	1	1	1	
10	871380	. MODULE CONTROL FAN SPEED / W/DOUBLE MOTOR (STAMPED 35-0520)	1	1	1	1	
11	871140	. HEATER COIL	1	1	1	1	
12	871141	. EVAPORATOR COIL	1	1	1	1	
13	871142	. ACTUATOR, THERMAL	1	1	1	1	
15	871144	. FILTER / FRESH AIR 1/4" x 3 5/8" x 5 1/4"	1	1	1	1	
16	871025	. BUSHING / CABLE PIVOT	2	2	2	2	
17	871145	. DAMPER TRAP	1	1	1	1	
18	871225	. BOX, FRESH AIR	1	1	1	1	
19	871147	. FILTER / RECIRCULATING 1/4" x 6 1/4" x 28"	1	1	1	1	
20	871148	. LEVER , F/A DAMPER	1	1	1	1	
20	5001410	. SCREW MA CHE PH M4-0.7x16 SS	1	1	1	1	
20	502557	. NUT HEX NYRT M4-0.7 SS	1	1	1	1	
21	871229	. TUBE, A/C		1	1	1	
21	871233	. TUBE, A/C Up to 6-8906	1				
22	871228	. TUBE, A/C		1	1	1	
22	871232	. TUBE, A/C Up to 6-8906	1				
23	871226	. TUBE SUPPORT		1	1	1	
NS	871238	. TUBE SUPPORT Up to 6-8906	2				
NS	871237	. TUBE SUPPORT Up to 6-8906	1				
24	871231	. TUBE HEATER Up to 6-8906	1				
24	871235	. TUBE HEATER Up to 6-8906	1				
25	871230	. TUBE HEATER		1	1	1	
25	871234	. TUBE HEATER Up to 6-8906	1				
26	503007	. HOSE 2 PLY / RADIATOR HOSE / 5/8" I.D. / S.L.	AR	AR	AR	AR	
27	504646	. HOSE CLAMP / 11/16"-1"1/4 / C.T. 9412	4	4	4	4	
28	507279	. O-RING / ORS FITTING / #8 NEO	2	2	2	2	
28	Y2-2208-00	**. A/C EXPANSION VALVE**					
29	N.P.N.	. CASING	1	1	1	1	4
		4) NO PARTS NUMBER					
		A) WITH SMALL A/C SYSTEM					

From 5-8470 Up to 7-9095	DATE: 01/2014	PAGE: Y2-2225-01

DRIVER'S HEATER & DEFROSTER ASSY

ITEM	PART	DESCRIPTION	XL45	MTH40	MTH45	MTH45S	NOTE
30	871155	. COVER	1	1	1	1	
31	871156	. COVER / BLOWER ACCESS	1	1	1	1	
NS	5001047	. . SCREW TC PAN PH M5-0.8X10 ZP	17	17	17	17	
32	871343	. TUBE A/C		1	1	1	A
33	871230	. TUBE HEATER		1	1	1	A
34	871231	. TUBE HEATER		1	1	1	A
35	871344	. VALVE, EXPANSION ASSY / WITH PIPE		1	1	1	A
36	8860148	. TUBE, NYLON 5/16 O.D. / BLACK S.L.	1	1	1	1	
37	N8888160	. SPRING CLIP	1	1	1	1	
40	871227	. HARNESS COVER	1	1	1	1	
		A) WITH SMALL A/C SYSTEM					

From 5-8470 Up to 7-9095	DATE: 01/2014	PAGE: Y2-2225-01

DRIVER'S HEATER & DEFROSTER ASSY

ITEM	PART	DESCRIPTION	XL45	MTH40	MTH45	MTH45S	NOTE

From 5-8470 Up to 8-9339	DATE: 01/2014	PAGE: 871360
BLOWER & MOTOR ASSY - "M.C.C." "CCW" / FAN END		

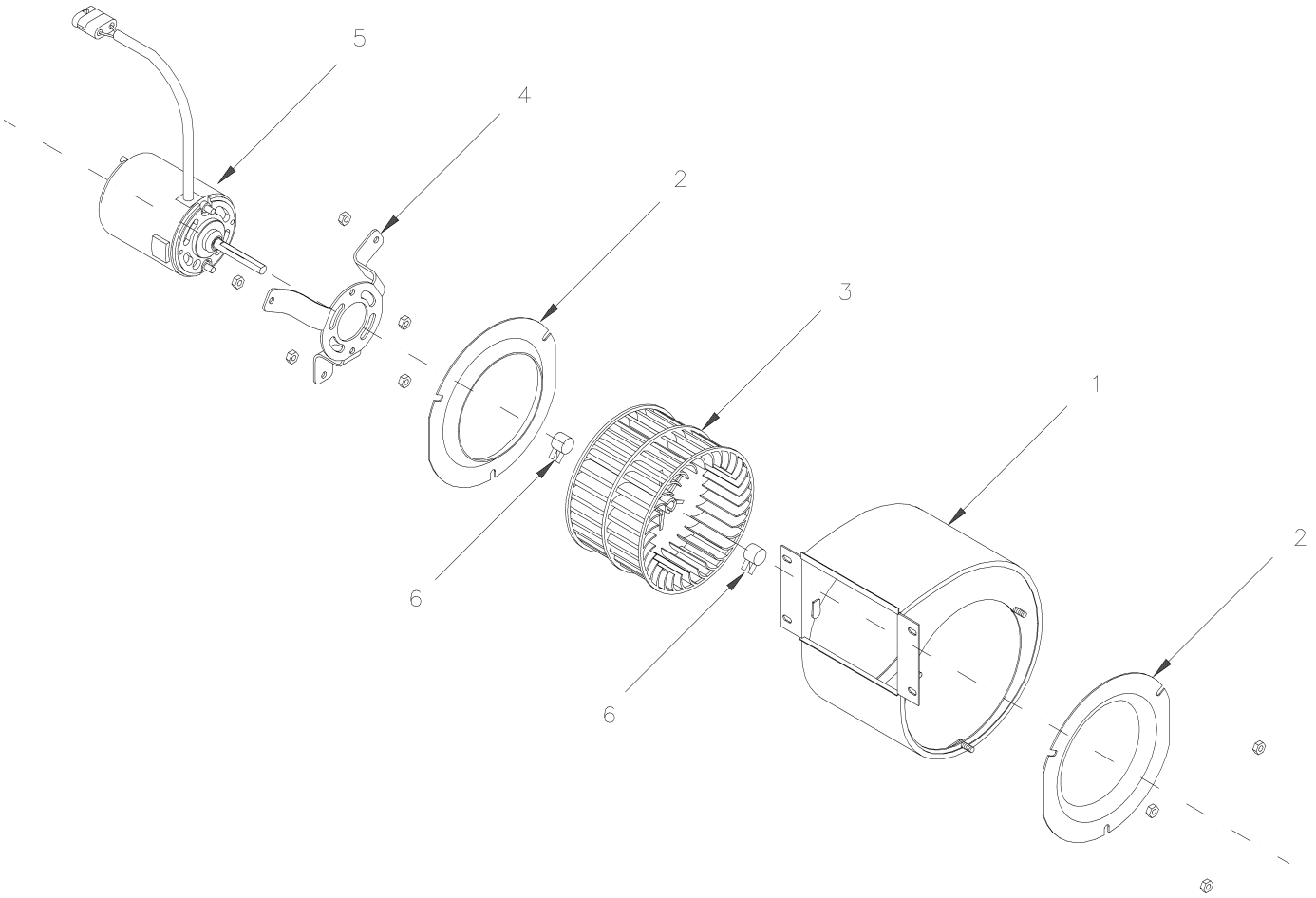

From 5-8470 Up to 8-9339	DATE: 01/2014	PAGE: 871360

BLOWER & MOTOR ASSY - "M.C.C." "CCW" / FAN END

ITEM	PART	DESCRIPTION	XL45	MTH40	MTH45	MTH45S	NOTE
		BLOWER ASSY 24V / CCW	1				
1	871365	. BLOWER HOUSING	1				
2	N8889479	. VENTURY	2				
3	871133	. BLOWER WHEEL / PLASTIC 5 1/8" x 3 1/2" x 5/16" x I.D.	1				
4	N8890530	. MOUNTING MOTOR BRACKET	1				
5	871366	. MOTOR ASSY 24V / CCW	1				
6	N8888160	. SPRING CLIP	2				

From 7-9096 Up to 8-9339	DATE: 01/2014	PAGE: Y2-2225-02
DRIVER'S HEATER & DEFROSTER ASSY WITH MUX		

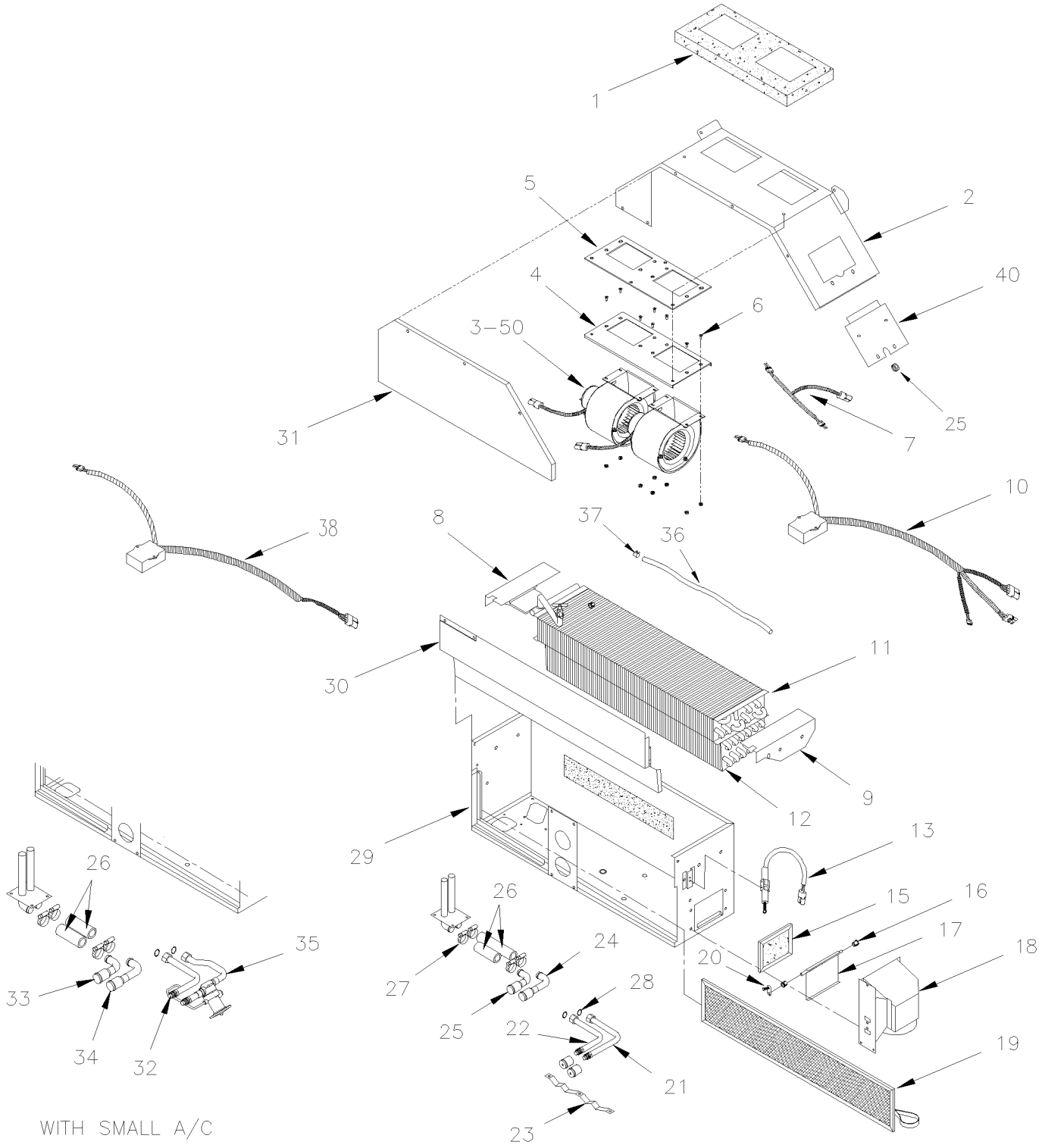

From 7-9096 Up to 8-9339	DATE: 01/2014	PAGE: Y2-2225-02

DRIVER'S HEATER & DEFROSTER ASSY WITH MUX

ITEM	PART	DESCRIPTION	XL45	MTH40	MTH45	MTH45S	NOTE
	871415	DEFROSTER & A/C UNIT ASSY			1	1	
	871416	DEFROSTER & A/C UNIT ASSY			1	1	A
1	871129	. SEAL			1	1	
2	871223	. COVER			1	1	
3	871359	. BLOWER ASSY 24V / W/DOUBLE MOTOR MOUNT			2	2	
3	871360	**. . BLOWER & MOTOR ASSY - "M.C.C." "CCW" / FAN END**			2	2	
4	871362	. . PLATE MOUNTING			1	1	
5	871363	. . FOAM ASSY			1	1	
6	500749	. . NUT HEX THK 1-14x1 5/16			8	8	
NS	500423	. . NUT HEX NYRT #10-32 SS			8	8	
7	871364	. . CABLE HARNESS			1	1	
8	871137	. BRACKET L.H.			1	1	
9	871138	. BRACKET R.H.			1	1	
10	871353	. MODULE CONTROL FAN SPEED / W/DOUBLE MOTOR W/MUX (STAMPED 35-0531)			1	1	
11	871140	. HEATER COIL			1	1	
12	871141	. EVAPORATOR COIL			1	1	
13	871142	. ACTUATOR, THERMAL			1	1	
15	871144	. FILTER / FRESH AIR 1/4" x 3 5/8" x 5 1/4"			1	1	
16	871025	. BUSHING / CABLE PIVOT			2	2	
17	871145	. DAMPER TRAP			1	1	
18	871225	. BOX, FRESH AIR			1	1	
19	871147	. FILTER / RECIRCULATING 1/4" x 6 1/4" x 28"			1	1	
20	871148	. LEVER , F/A DAMPER			1	1	
20	5001410	. SCREW MA CHE PH M4-0.7x16 SS			1	1	
20	502557	. NUT HEX NYRT M4-0.7 SS			1	1	
21	871229	. TUBE, A/C			1	1	
22	871228	. TUBE, A/C			1	1	
23	871226	. TUBE SUPPORT			1	1	
NS	871237	. TUBE SUPPORT			1	1	
24	871231	. TUBE HEATER			1	1	
25	871230	. TUBE HEATER			1	1	
26	503007	. HOSE 2 PLY / RADIATOR HOSE / 5/8" I.D. / S.L.			AR	AR	
27	504646	. HOSE CLAMP / 11/16"-1"1/4 / C.T. 9412			4	4	
28	507279	. O-RING / ORS FITTING / #8 NEO			2	2	
28	Y2-2208-00	**. A/C EXPANSION VALVE**					
29	N.P.N.	. CASING			1	1	4
30	871155	. COVER			1	1	
31	871156	. COVER / BLOWER ACCESS			1	1	
NS	5001047	. . SCREW TC PAN PH M5-0.8X10 ZP			17	17	
32	871343	. TUBE A/C			1	1	A
33	871230	. TUBE HEATER			1	1	A
34	871231	. TUBE HEATER			1	1	A
		4) NO PARTS NUMBER					
		A) WITH SMALL A/C SYSTEM					

From 7-9096 Up to 8-9339	DATE: 01/2014	PAGE: Y2-2225-02

DRIVER'S HEATER & DEFROSTER ASSY WITH MUX

ITEM	PART	DESCRIPTION	XL45	MTH40	MTH45	MTH45S	NOTE
35	871344	. VALVE, EXPANSION ASSY / WITH PIPE			1	1	A
36	8860148	. TUBE, NYLON 5/16 O.D. / BLACK S.L.			1	1	
37	N8888160	. SPRING CLIP			1	1	
40	871227	. HARNESS COVER			1	1	
		A) WITH SMALL A/C SYSTEM					

From 7-9096 Up to 8-9339	DATE: 01/2014	PAGE: Y2-2225-02

DRIVER'S HEATER & DEFROSTER ASSY WITH MUX

ITEM	PART	DESCRIPTION	XL45	MTH40	MTH45	MTH45S	NOTE

From 5-8470 Up to 8-9339	DATE: 01/2014	PAGE: 871360
BLOWER & MOTOR ASSY - "M.C.C." "CCW" / FAN END		

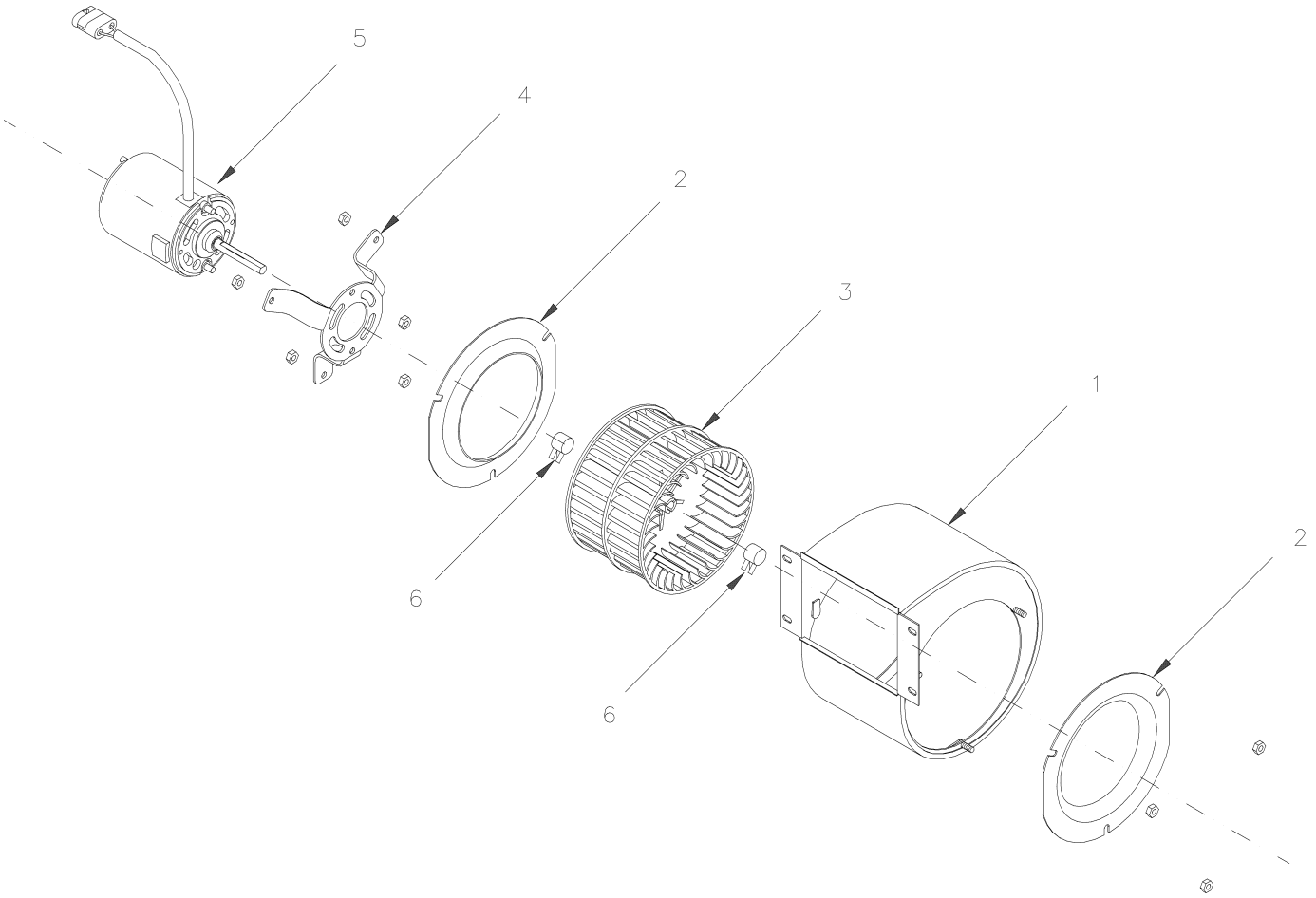

From 5-8470 Up to 8-9339	DATE: 01/2014	PAGE: 871360

BLOWER & MOTOR ASSY - "M.C.C." "CCW" / FAN END

ITEM	PART	DESCRIPTION	XL45	MTH40	MTH45	MTH45S	NOTE
		BLOWER ASSY 24V / CCW	1				
1	871365	. BLOWER HOUSING	1				
2	N8889479	. VENTURY	2				
3	871133	. BLOWER WHEEL / PLASTIC 5 1/8" x 3 1/2" x 5/16" x I.D.	1				
4	N8890530	. MOUNTING MOTOR BRACKET	1				
5	871366	. MOTOR ASSY 24V / CCW	1				
6	N8888160	. SPRING CLIP	2				

From Y-7046 Up to 8-9339	DATE: 01/2014	PAGE: Y2-2230-00

DEFROSTER - INSTALLATION

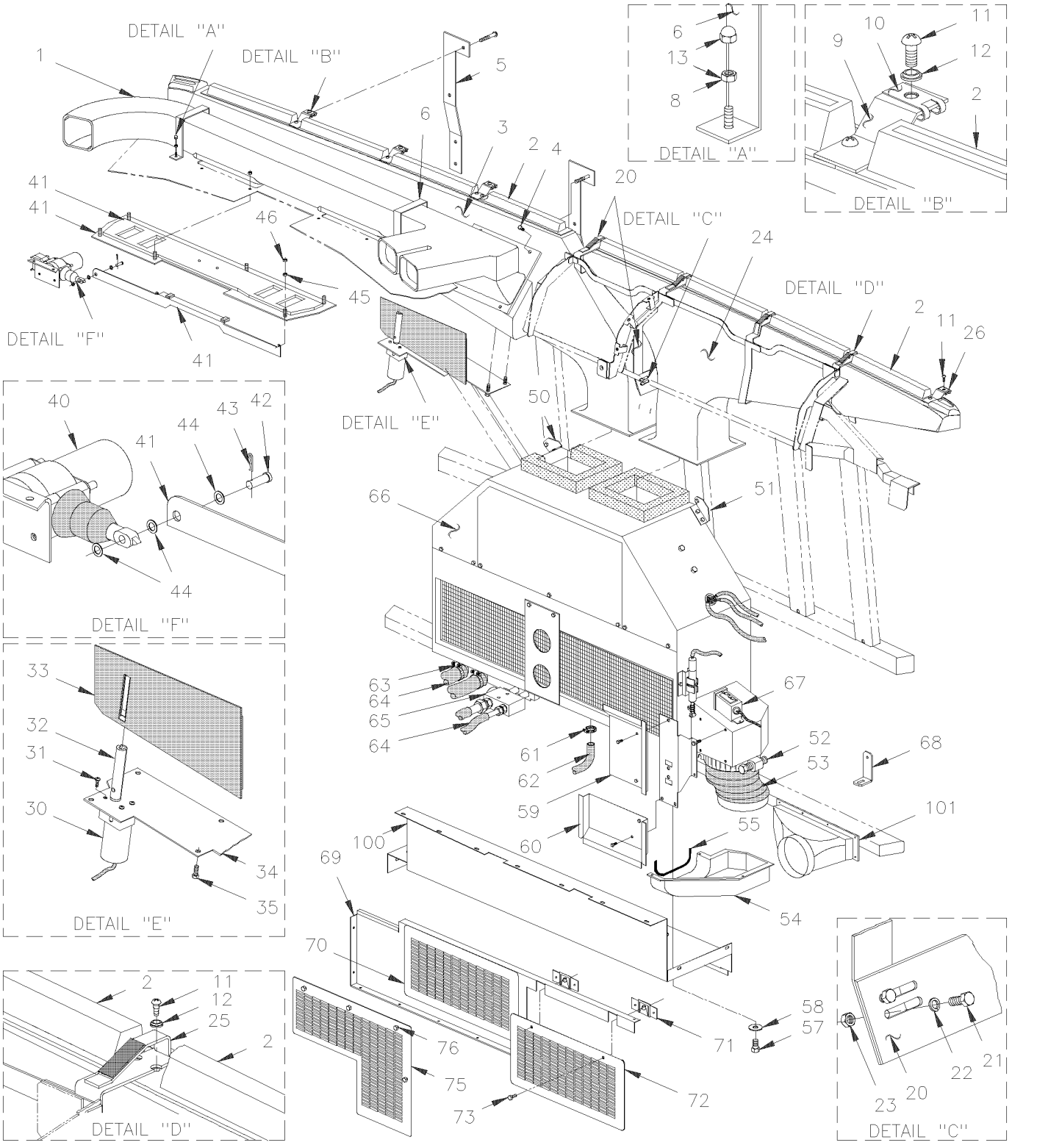

From Y-7046 Up to 8-9339	DATE: 01/2014	PAGE: Y2-2230-00

DEFROSTER - INSTALLATION

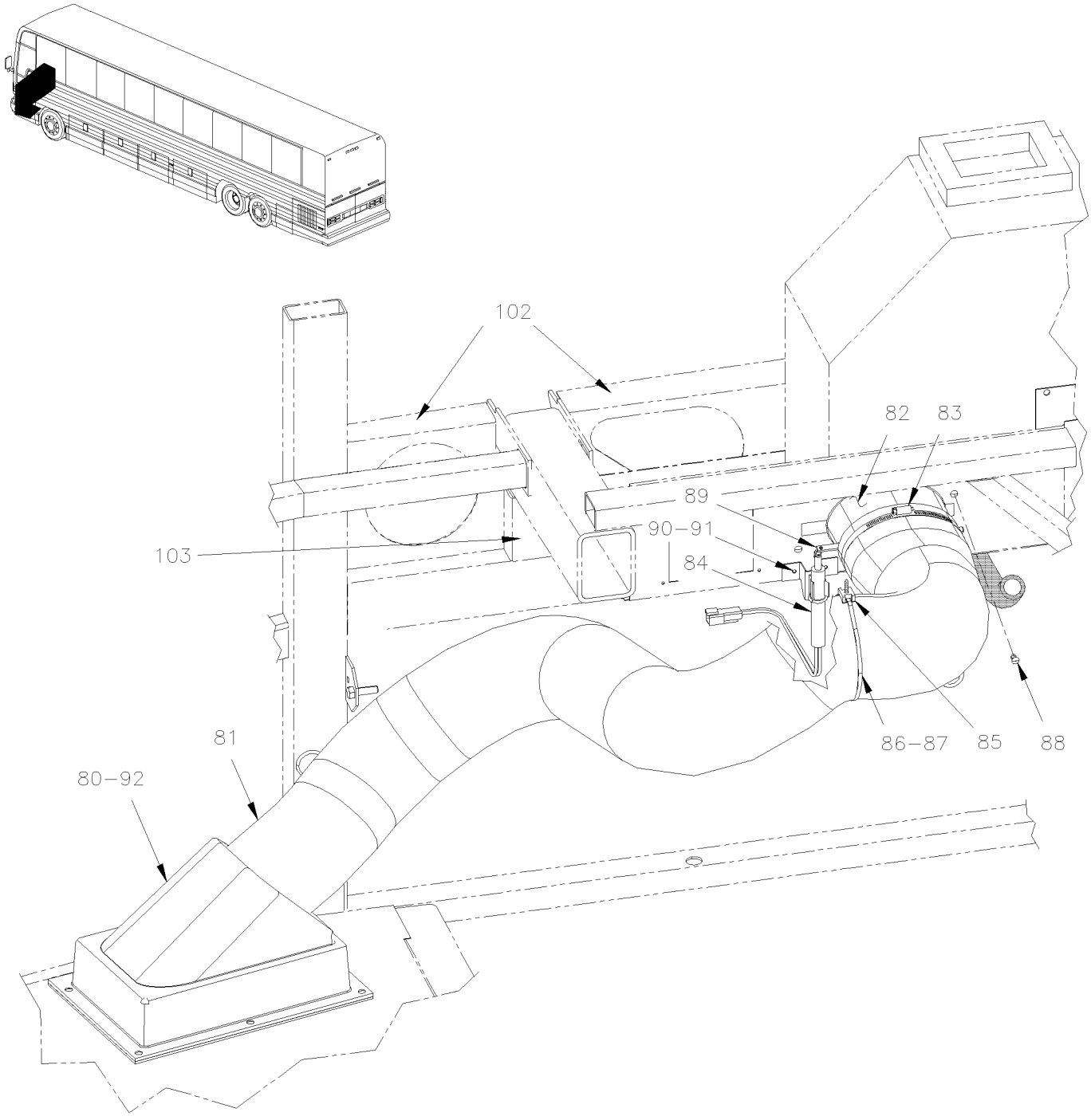

From Y-7046 Up to 8-9339	DATE: 01/2014	PAGE: Y2-2230-00

DEFROSTER - INSTALLATION

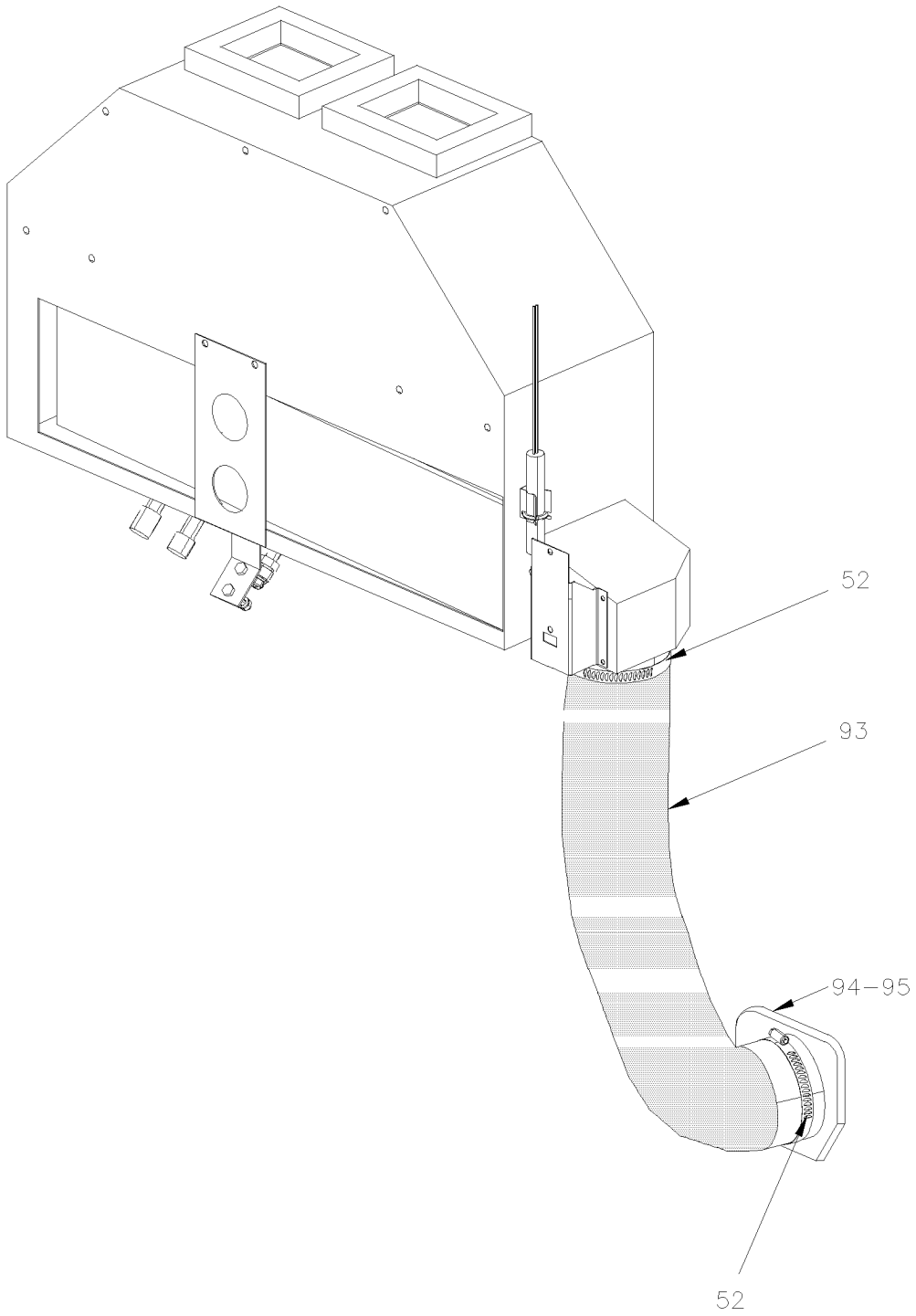

From Y-7046 Up to 8-9339	DATE: 01/2014	PAGE: Y2-2230-00

DEFROSTER - INSTALLATION

ITEM	PART	DESCRIPTION	XL45	MTH40	MTH45	MTH45S	NOTE
1	392057	DUCT DRIVER LH SECTION Up to 2-7864	1	1	1	1	G
1	392211	DUCT DRIVER LH SECTION From 2-7865	1	1	1	1	G
1	392084	DUCT DRIVER RH SECTION Up to 2-7864	1	1	1	1	G
1	392212	DUCT DRIVER RH SECTION From 2-7865	1	1	1	1	G
NS	392064	SUPPORT	1	1	1	1	
NS	392085	. DEFLECTOR (INSIDE DUCT)	1	1	1	1	
2	392045	LOUVER Up to 5-8532	8				
2	392045	LOUVER From 5-8533 Up to 6-8906	2				
2	392276	LOUVER From 5-8533 Up to 6-8906	6				
2	392045	LOUVER		8	8	8	
NS	392046	LOUVER CORNER	2	2	2	2	
3	392014	DEFROSTER DUCT ASSY STREETSIDE Up to 6-8906	1				B
3	391925	DEFROSTER DUCT STREETSIDE Up to 6-8906	1				
3	392044	DEFROSTER DUCT STREETSIDE		1	1	1	
NS	392292	GASKET / <> DRIVER'S DUCT & WINDSHIELD DUCT	1				
NS	391979	DEFLECTOR / (INSIDE OF DUCT)	1	1	1	1	
NS	392160	SUPPORT / DEFROSTER DUCT		1	1	1	
NS	392161	SUPPORT / DEFROSTER DUCT MTH 89"				1	
4	500641	SCREW TP BDG PH #8x3/4 ZP	1	1	1	1	
4	500841	SCREW TP BDG PH #14x3/4 ZP					
5	392016	STRAP / TO FIX DUCT LH TO STRUCTURE	2	2	2	2	
6	392015	STRAP / TO FIX DUCT DRIVER TO STRUCTURE	2	2	2	2	
8	502557	NUT HEX NYRT M4-0.7 SS	4	4	4	4	
10	5001405	NUT SPR U M4-.7 0.8-4.0x9.5	AR	AR	AR	AR	
11	5001411	SCREW MA FL PH M4-0.7x20 EMN	AR	AR	AR	AR	
12	500345	WASHER FN CKF .187x.500x.090 BR BK	AR	AR	AR	AR	
13	5001404	NUT HEX CAP M4-0.7 SS	4	4	4	4	
20	391956	STRUCTURE / R.H. Up to 6-8906	1				
20	391996	STRUCTURE / R.H.		1	1	1	
21	502529	SCREW MA BDG PH M5-0.8x12 BZC	2	2	2	2	
22	500440	WASHER FL .250x.562x.065 ZP	2	2	2	2	
23	502782	NUT HEX NYRT M5-0.8 CP	2	2	2	2	
24	391923	DEFROSTER DUCT CURBSIDE Up to Y-7133	1				
24	392049	DEFROSTER DUCT CURBSIDE From Y-7134	1				
		B) INCLUDE ITEMS 2, 3, & 30 TO 35					
		G) FOR PRODUCT IMPROVEMENT, USE KIT #871318 AND					
		SEE INSTRUCTION SHEET IS-04902					

From Y-7046 Up to 8-9339	DATE: 01/2014	PAGE: Y2-2230-00

DEFROSTER - INSTALLATION

ITEM	PART	DESCRIPTION	XL45	MTH40	MTH45	MTH45S	NOTE
NS	453585	HOSE ADAPTOR / CURBSIDE DUCT From Y-7134	1	1	1	1	C
NS	453584	HOSE ADAPTOR / WINDSHIELD From Y-7134	1	1	1	1	C
NS	453588	HOSE 510MM From Y-7134	1	1	1	1	C
NS	392268	DEFLECTOR From 5-8361 Up to 6-8906	1				
25	392018	STRAP R.H. / TO FIX DUCT TO STRUCTURE	1	1	1	1	
25	392019	STRAP L.H. / TO FIX DUCT TO STRUCTURE	1	1	1	1	
26	392017	SUPPORT / R.H. WINDSHIELD	1	1	1	1	
30	391962	DAMPER	1	1	1	1	
30	392282	DAMPER / W/MUX From 6-8906			1	1	
30	871424	. MOTOR	1	1	1	1	
31	N.P.N.	. SCREW	7	7	7	7	4
32	N.P.N.	. SHAFT	1	1	1	1	4
33	N.P.N.	. TRAP ASSY	1	1	1	1	4
34	N.P.N.	. PLATE	1	1	1	1	4
35	N.P.N.	SCREW	4	4	4	4	4
NS	563429	SWITCH MAGNETIC ASSY	1	1	1	1	
. NS	562641	. MAGNET SENSOR	1	1	1	1	
40	780428	LOCK ACTUATOR / 12V	1	1	1	1	
. NS	562076	. CONNECTOR / PACK-CON I / FEMALE HOUSING / 2C / PED 8911772	1	1	1	1	
41	392063	DAMPER, FOOT ASSY	1	1	1	1	
42	502023	. PIN, CLEVIS 1/4 x 51/64	1	1	1	1	
43	502180	. PIN HITCH CLIP .042 X 3/8 ZP	1	1	1	1	
44	500411	. WASHER FL .260x.697x.050 SS	2	2	2	2	
NS	563429	. SWITCH MAGNETIC ASSY	1	1	1	1	
. NS	562641	. . MAGNET SENSOR	1	1	1	1	
45	N.P.N.	SPACER	6	6	6	6	4
46	5001036	SCREW MA PAN PH M4-0.7x10 ZP	6	6	6	6	
50	373551	ATTACHMENT L.H.	1	1	1	1	
51	373552	ATTACHMENT R.H.	1	1	1	1	
NS	500642	SCREW TP BDG PH #10x3/4 ZP	2	2	2	2	
NS	504114	RIVET POP DOME OE 3/16x1/4 AL	4	4	4	4	
52	504235	HOSE CLAMP / 3"9/16"-4"1/2 SS / HS-64	2	2	2	2	
53	373630	HOSE 4" I.D. X 350MM Up to 4-8207		1	1	1	
53	373955	HOSE 4" I.D. X 500MM From 3-8109 Up to 6-8906	1				
		4) NO PARTS NUMBER					
		C) FEED AIR TO CENTER POST WINDSHIELD					

From Y-7046 Up to 8-9339	DATE: 01/2014	PAGE: Y2-2230-00

DEFROSTER - INSTALLATION

ITEM	PART	DESCRIPTION	XL45	MTH40	MTH45	MTH45S	NOTE
53	503434	. HOSE FLEXIBLE / AIR DUCT 4" I.D. X 12`/ RUBBER / REPLACED BY: K503434	AR	AR	AR	AR	
54	373681	DUCT FRESH AIR Up to 3-8108	1				D
55	373727	RUBBER SEAL 7/16 O.D. W/"U" SHAPE CLIP 180MM Up to 3-8108	1				D
55	373738	RUBBER SEAL 7/16 O.D. W/"U" SHAPE CLIP 2500MM Up to 3-8108	1				D
55	506302	RUBBER EXTRUSION TRIM SEAL / GRIP .024 / 7/16" HOLLOW BULB C.T.L. Up to 3-8108	AR				D
57	500179	SCREW CAP HEX 5/16-18x3/4 G5 ZP	3	3	3	3	
58	500462	WASHER FL .343x1.500x.083 ZP	3	3	3	3	
NS	500476	WASHER LO SPT .317x.586x.078 ZP	3	3	3	3	
59	453430	DEFLECTOR, UPPER Up to 6-8906	1				
59	453343	DEFLECTOR, UPPER		1	1	1	
NS	453345	FOAM 5" X 3" X 1"		1	1	1	
60	453431	DEFLECTOR, LOWER Up to 6-8906	1				
NS	502761	SCREW TP BDG PH #10x3/4 SS EMN	5	5	5	5	
NS	500803	NUT SPR J #10A .035-.050	5	5	5	5	
NS	506268	TAPE RUB ADH1 URE 3/8" x 1/2" x 25' / GREY 1820	AR	AR	AR	AR	
61	504014	HOSE CLAMP / 1/4"-5/8" SS / HM-4	2	2	2	2	
62	373424	HOSE 1/2" I.D. X 985MM Up to 6-8906	1				
62	373680	HOSE 1/2" I.D. X 1135MM		1	1	1	
62	503666	HOSE 1/2" I.D. 100' / S.L.	AR	AR	AR	AR	
NS	504356	GROMMET / .625x.875x.062x.312x1.125	1	1	1	1	
NS	590286	DRAIN BOOT 1 1/4" I.D. X 4" / FLAT	1	1	1	1	
63	504646	HOSE CLAMP / 11/16"-1"1/4 / C.T. 9412	2	2	2	2	
64	Y2-2222-10	**A/C & HEATING LINE FRONT SECTION**					
65	Y2-2208-00	**A/C EXPANSION VALVE**					
66	Y2-2225-00	**DRIVER'S HEATER & DEFROSTER ASSY**					
66	Y2-2225-01	**DRIVER'S HEATER & DEFROSTER ASSY**					
66	Y2-2225-02	**DRIVER'S HEATER & DEFROSTER ASSY WITH MUX**					
67	950035	THERMOSTAT		1	1	1	A
NS	500583	SCREW TP BDG PH #6x1/2 ZP		2	2	2	A
68	373754	ANGLE SUPPORT 25MM X 35MM X 65MM / CURBSIDE	1	1	1	1	
69	373640	GRILLE ASSY W/SUPPORT		1	1	1	
69	373633	. SUPPORT		1	1	1	
70	453338	. GRILL AIR / FRONT STEPWELL / RETURN / 200MM X 408MM		1	1	1	
71	504605	. RECEPTACLE 6 MM		2	2	2	
		A) WITH SMALL A/C SYSTEM ONLY					
		D) FOR PRODUCT IMPROVEMENT "WINDSHEILD DEFROSTER" ASK KIT# 373998					

From Y-7046 Up to 8-9339	DATE: 01/2014	PAGE: Y2-2230-00

DEFROSTER - INSTALLATION

ITEM	PART	DESCRIPTION	XL45	MTH40	MTH45	MTH45S	NOTE
NS	681283	. TAPE RUB ADH2 ACRYLIC .045" x 1/2" x 108' / WHITE 4945		AR	AR	AR	
NS	506268	. TAPE RUB ADH1 URE 3/8" x 1/2" x 25' / GREY 1820		AR	AR	AR	
72	453341	GRILL AIR / FRONT STEPWELL / RETURN / 197MM X 408MM		1	1	1	
73	504681	. STUD 6MM (DZUS)		2	2	2	
NS	504604	. FASTENER		2	2	2	
75	453428	GRILL AIR / FRONT STEPWELL / RETURN / 309MM X 424MM Up to 6-8906	1				
76	504681	. STUD 6MM (DZUS) Up to 6-8906	4				
76	504604	. FASTENER Up to 6-8906	4				
80	373990	AIR INLET ASSY Up to 6-8906	1				
. NS	373952	. AIR INLET Up to 6-8906	1				
. NS	373989	. SCREEN SS 171MM X 284MM Up to 6-8906	1				
81	373993	HOSE 5" I.D. 1600MM 5" I.D. 1600MM Up to 6-8906	1				
. NS	503741	. HOSE FLEXIBLE / AIR DUCT 5" I.D. X 12`/ PLASTIC Up to 6-8906	AR				
82	373984	AIR INLET ASSY W/ DAMPER Up to 6-8906	1				
. NS	373969	. AIR INLET Up to 6-8906	1				
. NS	453954	. DAMPER TRAP Up to 6-8906	1				
. NS	453953	. SHAFT Up to 6-8906	1				
83	504324	HOSE CLAMP / 4"1/2-6"1/2 SS / HS-96 Up to 6-8906	1				
84	373415	ACTUATOR ASSY Up to 6-8906	1				
85	500235	SCREW TP BDG PH #6x3/4 ZG603 Up to 6-8906	1				
86	504013	TIE MOUNT / 1/4" X 1/4" I.D. Up to 6-8906	1				
87	504637	CABLE TIE / 3/16" x 13" Up to 6-8906	4				
88	504379	RIVET POP DOME OE 3/16x1/4 SS Up to 6-8906	10				
89	503402	TUBE, NYLON 1/4 O.D. / BLACK S.L. Up to 6-8906	AR				
90	172780	SUPPORT / ACTUATOR Up to 6-8906	1				
91	504104	RIVET POP DOME OE 1/8x1/8 SS Up to 6-8906	2				
92	215126	ATTACHMENT STRIP / 25MM X 115MM "Z" SHAPE Up to 6-8906	2				
93	374010	HOSE 4" I.D. X 650MM From 4-8208		1	1	1	
94	373930	HOSE ADAPTOR 4" From 4-8208		1	1	1	
95	373997	GRILL 111MM X 111MM		1	1	1	
95	476156	CLOSING PLATE 39MM X 257MM		1	1	1	
95	476159	CLOSING PLATE 55MM X 257MM		1	1	1	
95	373996	HOSE ADAPTOR 4" O.D.	1				
100	172356	SUPPORT / DEFROST & A/C UNIT Up to 3-8108	1				

From Y-7046 Up to 8-9339	DATE: 01/2014	PAGE: Y2-2230-00

DEFROSTER - INSTALLATION

ITEM	PART	DESCRIPTION	XL45	MTH40	MTH45	MTH45S	NOTE
100	172753	SUPPORT / DEFROST & A/C UNIT From 3-8109 Up to 6-8906	1				
100	172316	SUPPORT / DEFROST & A/C UNIT		1	1	1	
101	Y2-1851-00	**FRONT CAP - INSTALLATION**					
102	251079	PANEL FRONT / <> TUBE 26 & 11 Up to 6-8906	1				
103	214243	TUBE 92MM x 1 1/2" x 3" / <> TUBE 26 AND DR Up to 6-8906	1				
NS	373998	KIT, ADAPTOR HEATER HOSE / NEW AIR INLET STREETSIDE Up to 3-8109	AR				E
. NS	IS-02086	. SEE INSTRUCTION SHEET Up to 3-8109	1				
NS	374011	KIT, ADAPTOR HEATER HOSE / NEW AIR INLET CURBSIDE Up to 3-8109		1	1	1	F
. NS	IS-02113	. SEE INSTRUCTION SHEET Up to 3-8109		1	1	1	
NS	373995	KIT, ADAPTOR HEATER HOSE / NEW AIR INLET CURBSIDE Up to 3-8109	1	1	1	1	
. NS	IS-02054	. SEE INSTRUCTION SHEET Up to 3-8109	1	1	1	1	
NS	871318	DEFROSTER DUCT DEFLECTOR REPLACEMENT KIT Up to 5-8469	1				
. NS	IS-04902	. SEE INSTRUCTION SHEET Up to 5-8469	1				
		E) KIT INCLUDES ALL ITEMS 80 TO 92					
		F) KIT INCLUDES ALL ITEMS 93 -94 & 95					

From Y-7046 Up to 6-8906	DATE: 01/2014	PAGE: 870844
BLOWER & MOTOR ASSY - "M.C.C." "CW" / FAN END		

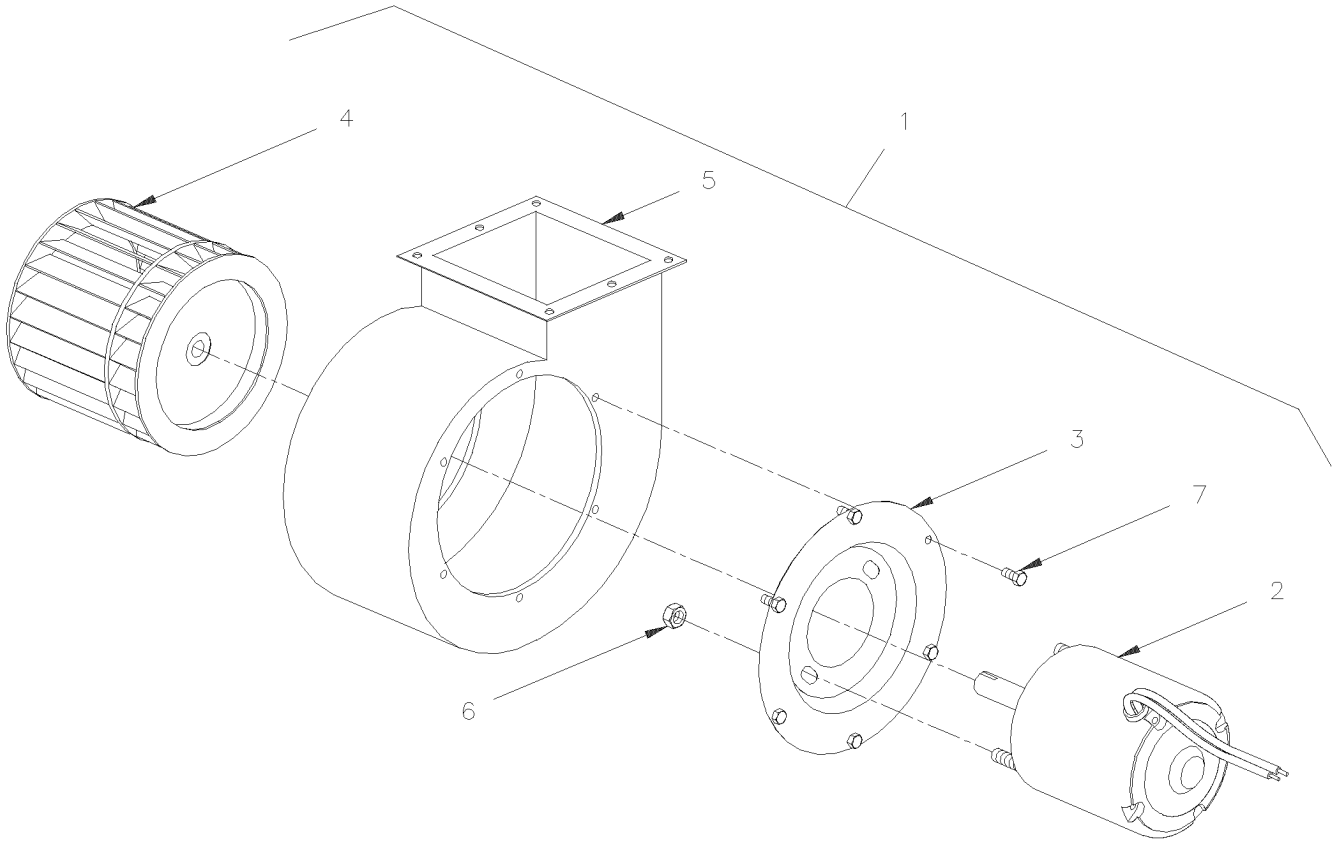

From Y-7046 Up to 6-8906	DATE: 01/2014	PAGE: 870844

BLOWER & MOTOR ASSY - "M.C.C." "CW" / FAN END

ITEM	PART	DESCRIPTION	XL45	MTH40	MTH45	MTH45S	NOTE
1		BLOWER ASSY 24V / CW	1				
2	562167	. MOTOR ASSY / 24V	1				
3	871020	. PLATE MOUNTING / MOTOR	1				
4	871017	. BLOWER WHEEL / STEEL	1				
5	871440	. HOUSING BLOWER	1				
6	500786	. NUT HEX #10-24 ZP	2				
7	500978	. SCREW CAP HEX #10-24x3/4 ZP	6				

From 5-8470 Up to 8-9339	DATE: 01/2014	PAGE: 871360
BLOWER & MOTOR ASSY - "M.C.C." "CCW" / FAN END		

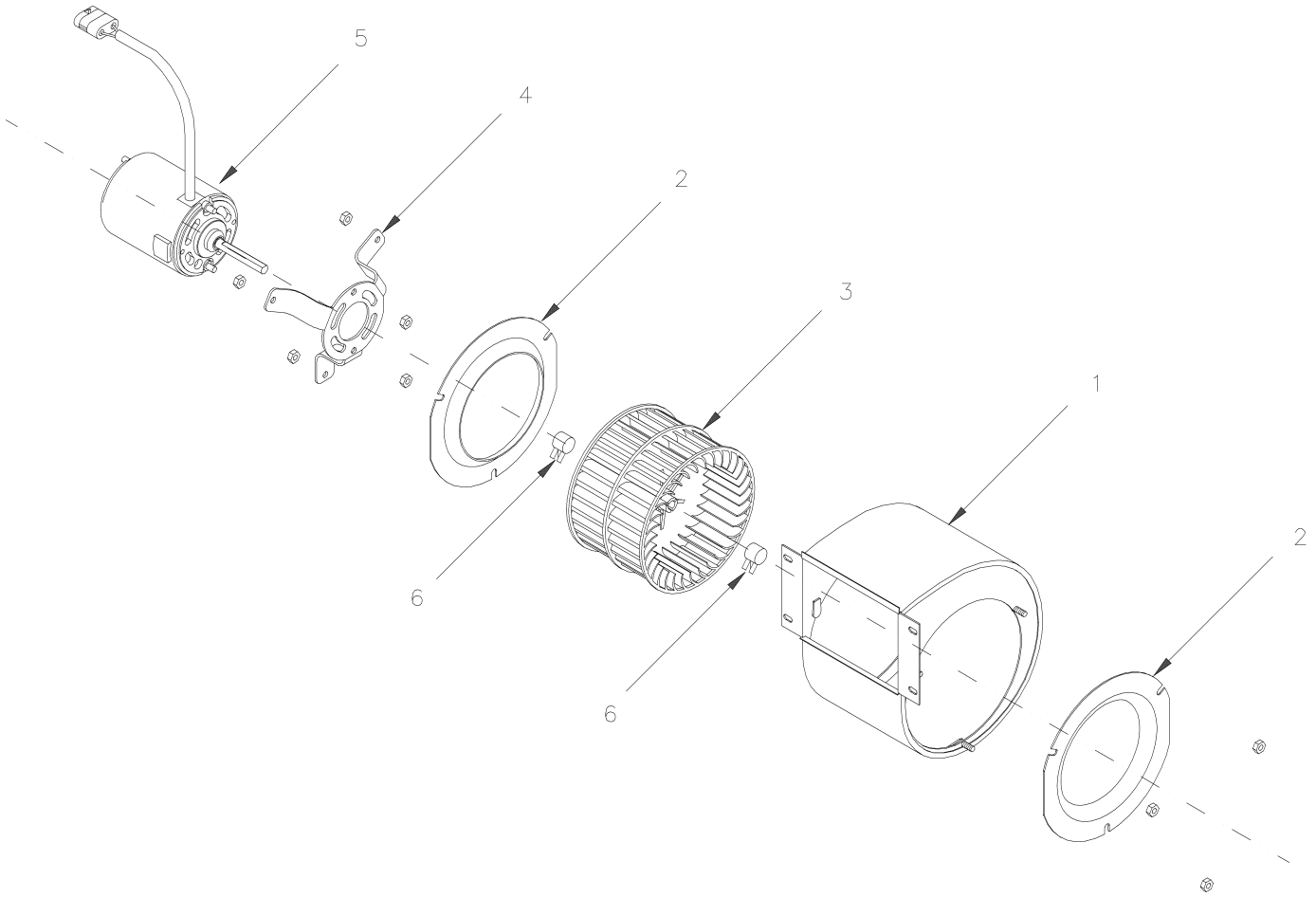

From 5-8470 Up to 8-9339	DATE: 01/2014	PAGE: 871360

BLOWER & MOTOR ASSY - "M.C.C." "CCW" / FAN END

ITEM	PART	DESCRIPTION	XL45	MTH40	MTH45	MTH45S	NOTE
		BLOWER ASSY 24V / CCW	1				
1	871365	. BLOWER HOUSING	1				
2	N8889479	. VENTURY	2				
3	871133	. BLOWER WHEEL / PLASTIC 5 1/8" x 3 1/2" x 5/16" x I.D.	1				
4	N8890530	. MOUNTING MOTOR BRACKET	1				
5	871366	. MOTOR ASSY 24V / CCW	1				
6	N8888160	. SPRING CLIP	2				

From 3-8131 Up to 8-9339	DATE: 01/2014	PAGE: Y2-2240-10

UPPER WINDSHIELD FAN - INSTALLATION

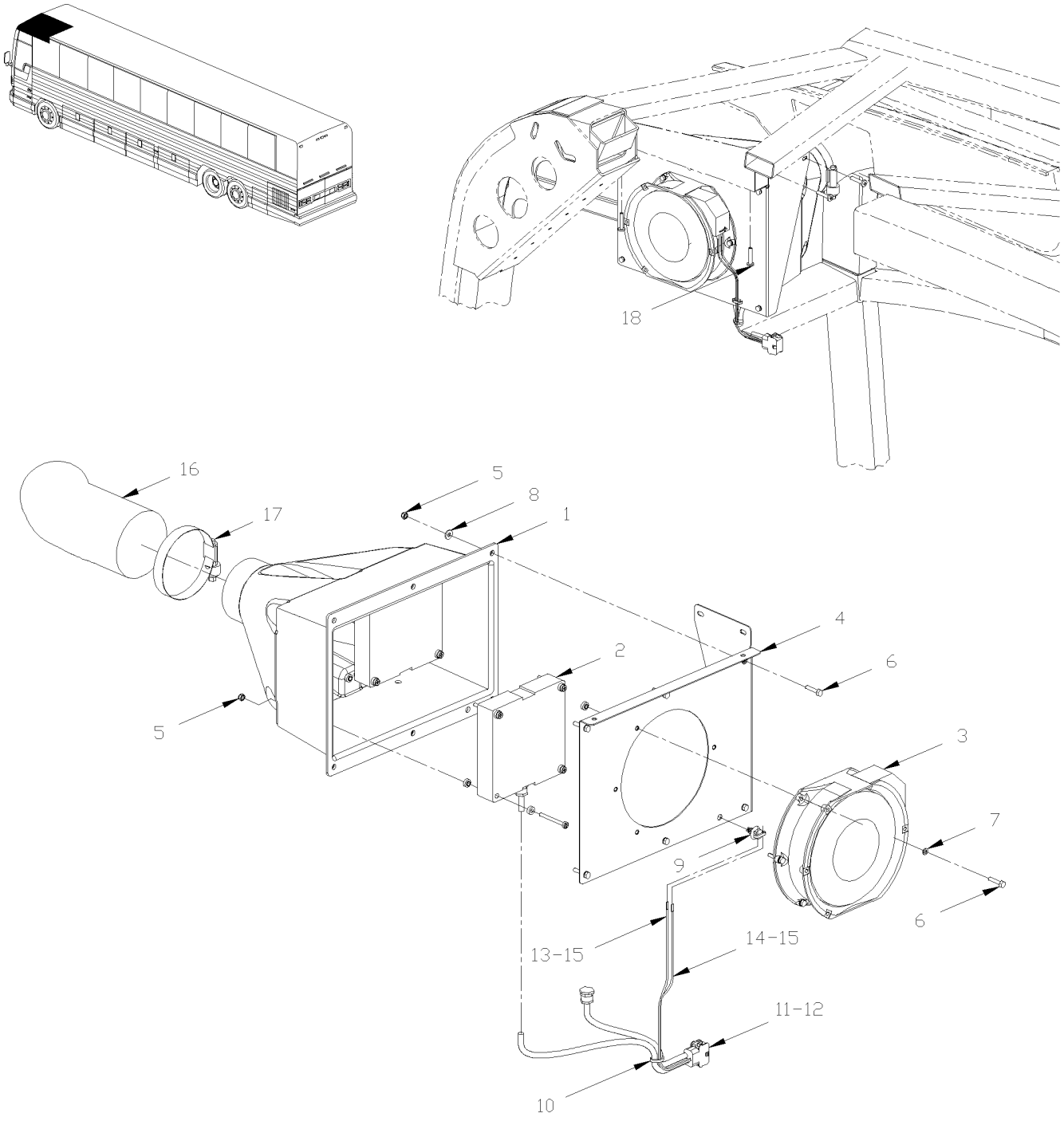

From 3-8131 Up to 8-9339	DATE: 01/2014	PAGE: Y2-2240-10

UPPER WINDSHIELD FAN - INSTALLATION

ITEM	PART	DESCRIPTION	XL45	MTH40	MTH45	MTH45S	NOTE
	373936P	HEATER FAN ASS	1			1	
1	373938	. SHROUD	1			1	
2	871324	. HEATER COIL 300W	1			1	
3	871326	. FAN AXIAL 12/28V 230CFM	1			1	
4	373939	. SUPPORT, FAN TOP WINDSHIELD	1			1	
5	500590	. NUT HEX NYRT M4-0.7 ZP	11			11	
6	500588	. SCREW CAP HEX M4-0.7x20 G8.8 ZP / REPLACED BY: 500414	7			7	
7	502636	. WASHER LO SPT 4.1x7.6x0.9 ZP	7			7	
8	500438	. WASHER FL .187x.437x.050 ZP	3			3	
9	509815	. TIE MOUNT / ATTACHMENT W/TREE MOUNT	1			1	
10	504637	. CABLE TIE / 3/16" x 13"	2			2	
11	561552	. CONNECTOR / UNIVERSAL MATE-N-LOK / PH 6C / AMP 1-480705-0	1			1	
12	561671	. PIN TERMINAL / 24-18 / AMP 350690-1	6			6	
13	562588	. WIRE CABLE 14 / RED / TXL	AR			AR	
14	562585	. WIRE CABLE 14 / BLACK / TXL	AR			AR	
15	561625	. TAB RECEPTACLE TERMINAL INSUL. NYLON / 16-1 / AMP 3-520125-2	2			2	
16	373941	. HOSE 200MM X 3" I.D.	1			1	
17	504026	. HOSE CLAMP / 2"13/16-3"3/4 SS / HS-52	1			1	
18	500642	SCREW TP BDG PH #10x3/4 ZP	4			4	

From Y-7046 Up to 6-8906	DATE: 01/2014	PAGE: Y2-2240-20

BLOWER VENTILATION - PARCEL RACK

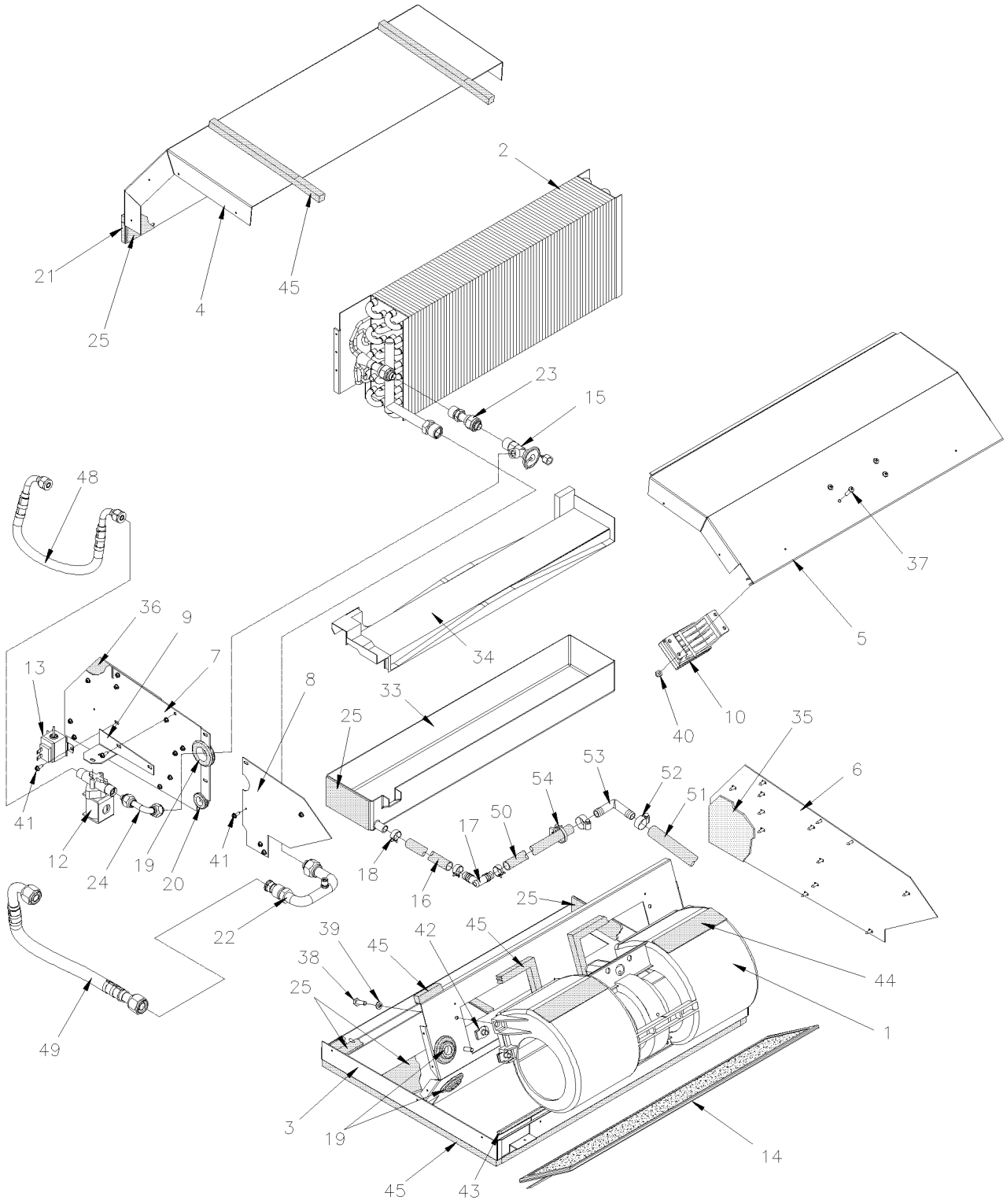

From Y-7046 Up to 6-8906	DATE: 01/2014	PAGE: Y2-2240-20

BLOWER VENTILATION - PARCEL RACK

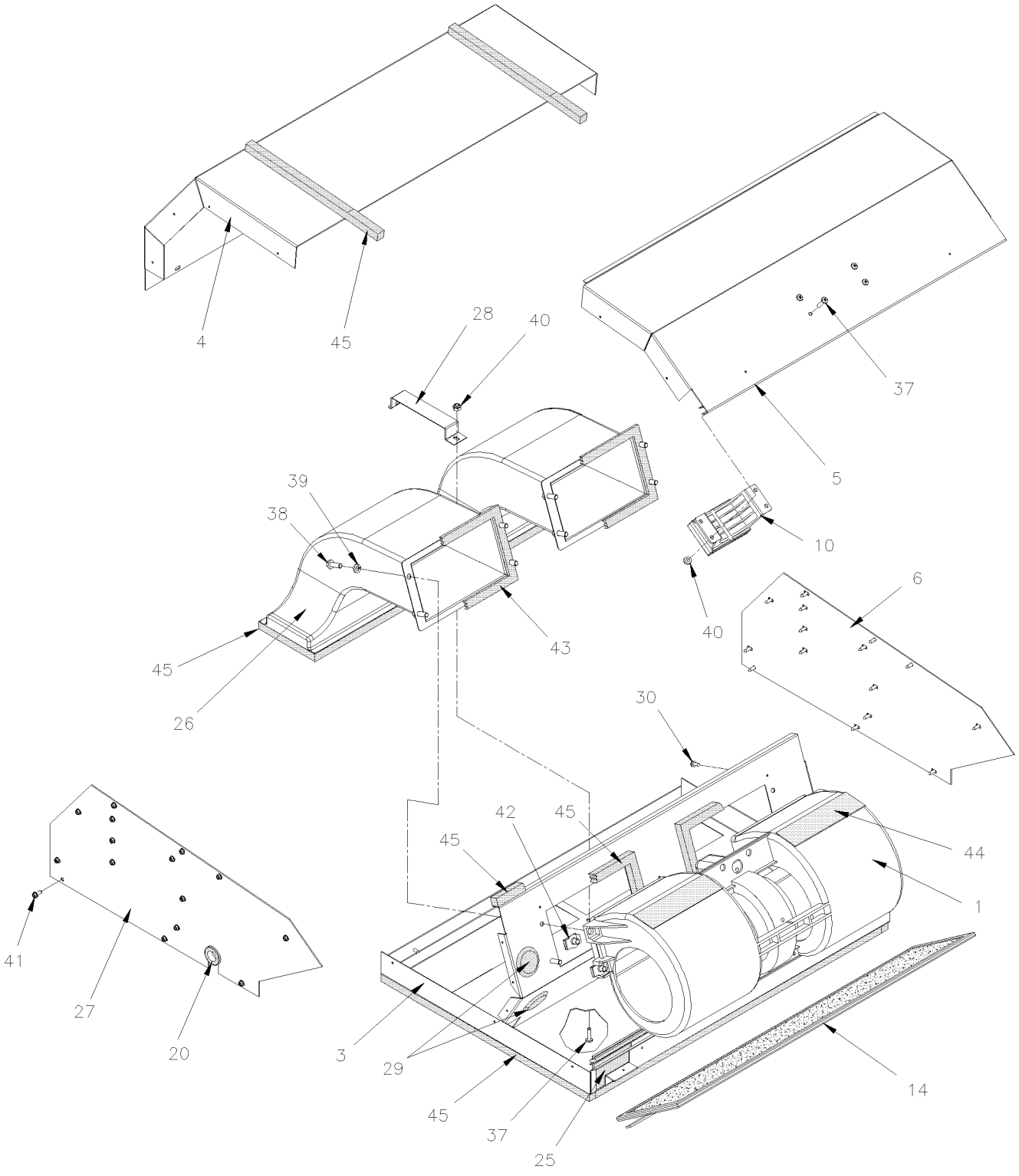

From Y-7046 Up to 6-8906	DATE: 01/2014	PAGE: Y2-2240-20

BLOWER VENTILATION - PARCEL RACK

ITEM	PART	DESCRIPTION	XL45	MTH40	MTH45	MTH45S	NOTE
	950328	VENTILATION UNIT ASSY W/A/C SYSTEM	1				
	871173	VENTILLATION UNIT ASSY	1				
1	Y2-2240-25	**. BLOWER ASSY - PARCEL RACK**					
2	950321	. EVAPORATOR COIL	1				
3	871266	. BASE PLATE ASSY	1				
4	871189	. TOP COVER	1				
5	871268	. BLOWER COVER	1				
6	871267	. LEFT SIDE PANEL	1				
7	871278	. RIGHT SIDE PANEL FRONT	1				
8	871279	. RIGHT SIDE PANEL REAR	1				
9	871280	. SOLENOID MOUNTING BRACKET	1				
10	871261	. RESISTOR 100 WATT	1				
11	871264	. WIRE HARNESS	1				
12	871282	. LIQUID FREON SOLENOID	1				
13	871283	. THERMOSTAT	1				
14	871159	. FILTER 1/4" x 5 3/4" x 23"	1				
15	871277	. EXPANSION VALVE	1				
16	503707	. HOSE PVC REINFORCED 1/2	2				
17	5011230	. UNION ELBOW 90º / HOSE BARB FITTING / #8x#8 PLAS	1				
18	Call Order Desk	. HOSE CLAMP 1/2"	3				P
19	G5009550	. GROMMET 5/8"	3				
20	N8889852	. GROMMET	1				
21	Call Order Desk	. MOLDING 5/16x172	AR				P
22	871276	. LO-SIDE TAIL PIPE ELBOW	1				
23	871275	. HARDLINE - TXV TO COIL	1				
24	871281	. HARDLINE - TXV TO SOLENOID	1				
25	Call Order Desk	. NEOPRENE / 1/8"	AR				P
26	871262	. DUCT ASSY	2				
27	871265	. RIGHT SIDE PANEL	1				
28	Call Order Desk	. BRACKET	1				P
29	Call Order Desk	. HOLE PLUG 1 1/4"	2				P
30	Call Order Desk	. SCREW TP PAN PH #8x1/2	4				P
33	871273	. DRAIN PAN	1				
34	Call Order Desk	. INSERT / DRAIN PAN	1				P
35	Call Order Desk	. FOAM / 1/8"	1				P
36	Call Order Desk	. FOAM / 1/8"	1				P
37	N8890509	. SCREW MA PAN PH #10-32X3/4 ZN	4				
38	Call Order Desk	. SCREW CAP HEX 1/4-20x3/4	4				P
39	N8892465	. WASHER LO SPT 1/4	4				
		P) CALL ORDER DESK FOR SPECIFIC APPLICATION					
		(V.I.N.)					

From Y-7046 Up to 6-8906	DATE: 01/2014	PAGE: Y2-2240-20

BLOWER VENTILATION - PARCEL RACK

ITEM	PART	DESCRIPTION	XL45	MTH40	MTH45	MTH45S	NOTE
40	Call Order Desk	. NUT HEX NYRT #10-32	4				P
41	Call Order Desk	. SCREW TC CAP HEXW SLT #8-32 X 1/2"	35				P
42	Call Order Desk	. NUT SPR U 1 /4-20	4				P
43	N8889679	. FOAM / 3/16"x1 /2"	AR				
44	Call Order Desk	. FOAM / 1/16"x5"	AR				P
45	Call Order Desk	. FOAM / 1/2"x1/2"	AR				P
48	453493	HOSE ASSY / #6 245MM	1				
. NS	507278	. O-RING / ORS FITTING / #4 NEO	2				
48	455253	HOSE ASSY / #6 245MM	1				S
. NS	507278	. O-RING / ORS FITTING / #4 NEO	2				
49	453492	HOSE ASSY / #10 250MM	1				
. NS	507344	. O-RING / ORS FITTING / #10 NEO	2				
49	455252	HOSE ASSY / #10 250MM	1				S
. NS	507344	. O-RING / ORS FITTING / #10 NEO	2				
50	453800	HOSE 1/2" I.D. X 560MM From 4-8228	1				C
50	453801	HOSE 1/2" I.D. x 380MM From 4-8228	1				ST
50	503707	HOSE PVC REINFORCED 1/2 From 4-8228	AR				
51	453495	HOSE 1/2" I.D. X 3800MM Up to 4-8227	1				
51	453802	HOSE 1/2" I.D. x 3400MM From 4-8228	1				
51	503707	. HOSE PVC REINFORCED 1/2	AR				
52	504230	HOSE CLAMP / 3/8"-7/8" SS / HS-6	2				
53	5011230	UNION ELBOW 90º / HOSE BARB FITTING / #8x#8 PLAS	1				
54	504013	TIE MOUNT / 1/4" X 1/4" I.D.	AR				
54	504273	CABLE TIE / 1/8" X 3"1/2	AR				
54	504118	RIVET POP DOME OE 3/16x3/8 AL	AR				
60	Y2-2245-30	**A/C AUXILIARY LINE / PARCEL RACK**					
60	Y2-2245-31	**A/C AUXILIARY LINE / PARCEL RACK**					
		P) CALL ORDER DESK FOR SPECIFIC APPLICATION					
		(V.I.N.)					
		C) CURB SIDE					
		S) SERVICE					
		ST) STREET SIDE					

From Y-7046 Up to 6-8906	DATE: 01/2014	PAGE: Y2-2240-25
BLOWER ASSY - PARCEL RACK		

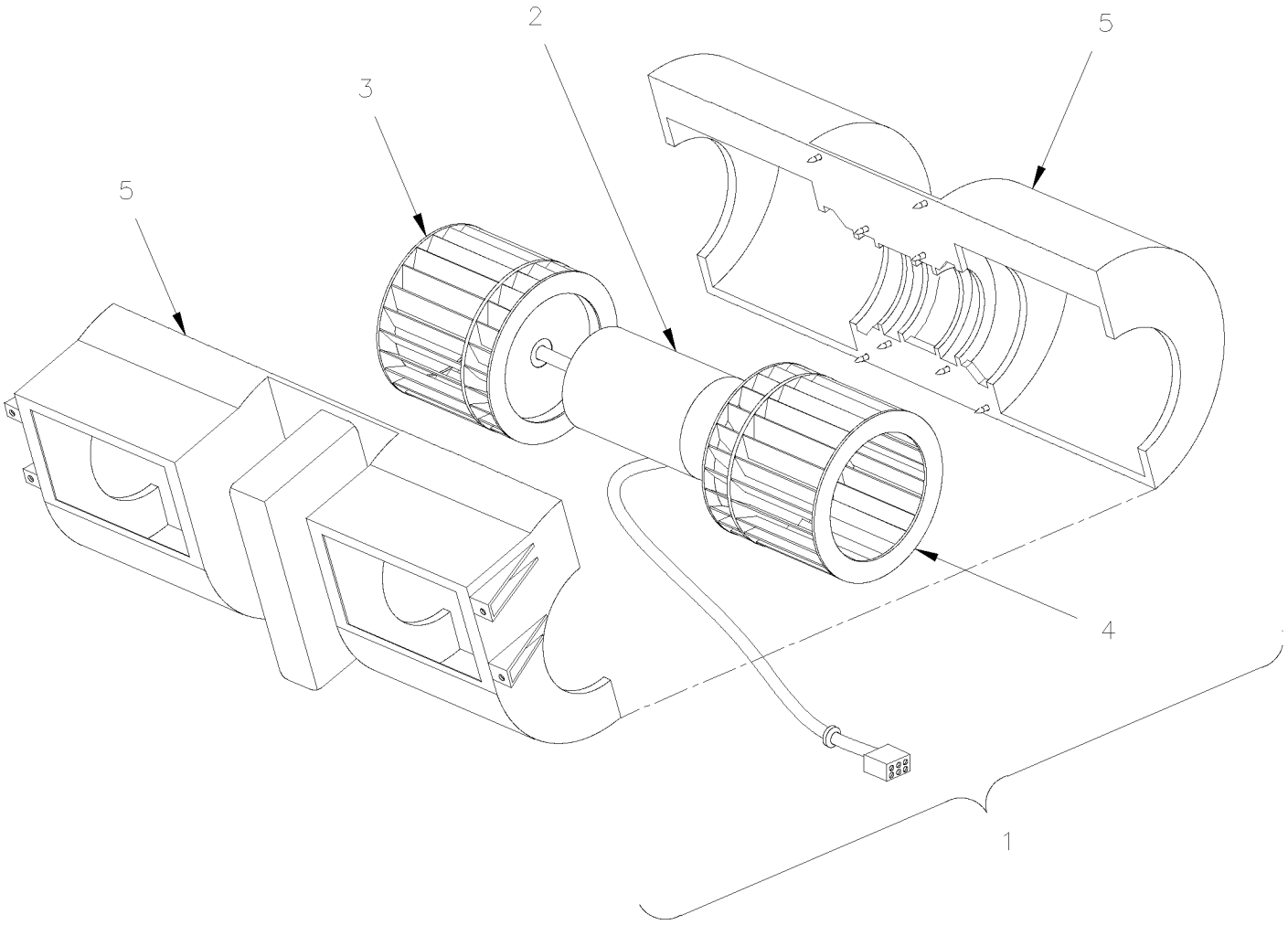

From Y-7046 Up to 6-8906	DATE: 01/2014	PAGE: Y2-2240-25

BLOWER ASSY - PARCEL RACK

ITEM	PART	DESCRIPTION	XL45	MTH40	MTH45	MTH45S	NOTE
1	871157	BLOWER ASSY 24V	2				
2	N.P.N.	. MOTOR 24V	1				4
3	N.P.N.	. BLOWER WHEEL	1				4
4	N.P.N.	. BLOWER WHEEL	1				4
5	N.P.N.	. HOUSING	1				4
		4) NO PARTS NUMBER					

From Y-7046 Up to 8-9339	DATE: 01/2014	PAGE: Y2-2245-00

A/C COMPRESSOR 05G - INSTALLATION

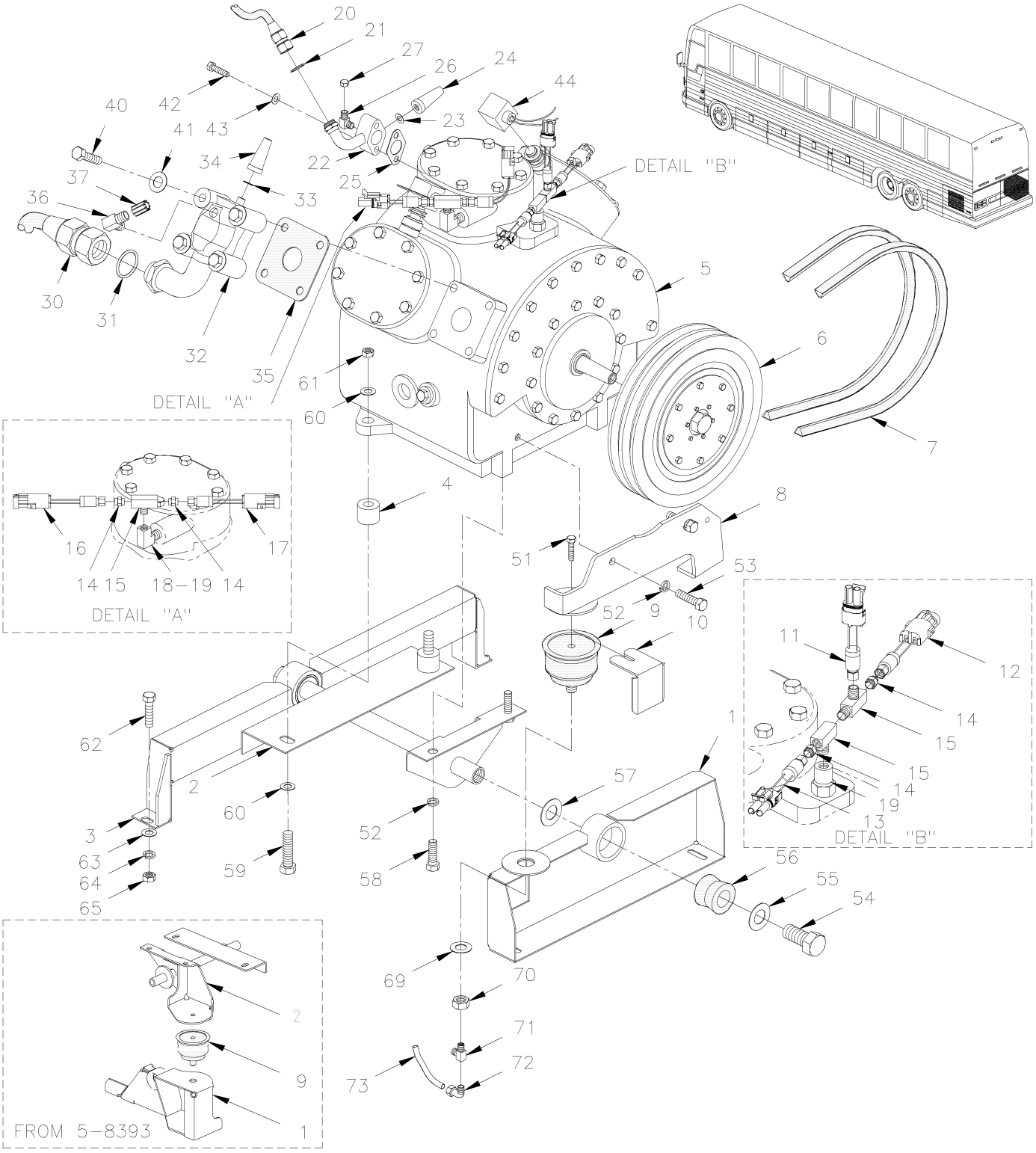

From Y-7046 Up to 8-9339	DATE: 01/2014	PAGE: Y2-2245-00

A/C COMPRESSOR 05G - INSTALLATION

ITEM	PART	DESCRIPTION	XL45	MTH40	MTH45	MTH45S	NOTE
1	453041	SUPPORT ASSY Up to 2-7809 / REPLACED BY: 451082	1	1	1	1	
1	451082	SUPPORT ASSY From 2-7810 Up to 4-8197	1	1	1	1	
1	453655	SUPPORT ASSY From 4-8198 Up to 4-8358	1	1	1	1	
1	454190	SUPPORT ASSY From 5-8359	1	1	1	1	
2	452733	SUPPORT ASSY Up to 2-7809 / REPLACED BY: 451086	1	1	1	1	
2	451086	SUPPORT ASSY From 2-7810 Up to 4-8197	1	1	1	1	
2	453656	SUPPORT ASSY From 4-8198 Up to 4-8358	1	1	1	1	
2	453651	SUPPORT ASSY From 5-8359	1	1	1	1	
3	453312	SUPPORT ASSY / W/60 Up to 2-7809 / REPLACED BY: 451073	1				
3	451073	SUPPORT ASSY / W/60 From 2-7810	1				
3	452732	SUPPORT ASSY / W/60 Up to 2-7809 / REPLACED BY: 451053		1	1	1	
3	451053	SUPPORT ASSY / W/60 From 2-7810 Up to 4-8197		1	1	1	
3	453649	SUPPORT OPPOSITE PULLEY SIDE W/60 From 4-8198	1	1	1	1	
4	452268	SLEEVE SPACER	2	2	2	2	
5	Y2-2250-00	**A/C COMPRESSOR ASSY 05G - THREE PORT**	1				
5	Y2-2250-01	**A/C COMPRESSOR ASSY 05G - TWIN PORT**	1				
6	Y2-2246-00	**A/C CLUTCH 05G - HOUSING MOUNTED**					
7	506664	V-BELT / BX-97 / SET OF 2 9212-0390		1	1	1	
7	506681	V-BELT / BX-100 9013-2100 / REPLACED BY: 506864	1				
8	453040	TENSIONER FOR BELLOW Up to 2-7809 / REPLACED BY: 452050	1	1	1	1	
8	452050	TENSIONER FOR BELLOW From 2-7810 Up to 4-8197	1	1	1	1	
8	453647	TENSIONER FOR BELLOW From 4-8198 Up to 4-8358	1	1	1	1	
9	950208	BELLOW ASSY 3" O.D. / BELT TENSIONER Up to 4-8358	1	1	1	1	
. NS	504695	. HOSE CLAMP STEPLESS SPRING SS / Up to 4-8358	1	1	1	1	
9	550840	BELLOW ASSY 4" O.D. / BELT TENSIONER From 5-8359	1	1	1	1	
10	453059	BELLOW PROTECTOR Up to 4-8358	1	1	1	1	
11	950246	PRESSURE SWITCH N.C. 25-37 LO-UNLOAD W/WIRE BLACK	1	1	1	1	
12	452831	PRESSURE SWITCH N.O. 30-5 20SP001MA030C005C	1	1	1	1	
13	950245	PRESSURE SWITCH N.C. 20-30 LO-UNLOAD W/WIRE BLACK	1	1	1	1	
14	950249	SCHROUDER VALVE 1/4NPT-M	1	1	1	1	
15	501894	MALE BRANCHE TEE / PIPE FITTING / 1/4NPT-Fx1/4NPT-Fx1/4NPT-M BR	1	1	1	1	
NS	501338	MALE RUN TEE / PIPE FITTING / 1/4NPT-Mx1/4NPT-Fx1/4NPT-F BR	1	1	1	1	
16	453380	PRESSURE SWITCH N.C. 350-245 20PS001MB350K245R	1	1	1	1	
17	452421	PRESSURE SWITCH N.O. 280-220 20SP001MA280K220R	1	1	1	1	
17	950250	HARNESS CABLE ASSY / <> SWITCHES & CLUTCH	1	1	1	1	
18	501332	STREET ELBOW 90° / PIPE FITTING / 1/4NPT-Mx1/4NPT-F BR	1	1	1	1	
19	5011184	FEMALE CONNECTOR / PIPE @ ORB / 1/4NPT-Fx#4ORB-M STL	AR	AR	AR	AR	
20	452625	HOSE ASSY / DISCHARGE W/R-134a / #16 485MM Up to Y-7143 / REPLACED BY: 453571		1	1	1	
20	453571	HOSE ASSY / DISCHARGE W/R-134a / #16 485MM From Y-7144 Up to 1-7560 / REPLACED BY: 453718		1	1	1	
20	453718	HOSE ASSY / DISCHARGE W/R-134a / #16 583MM / SS BELLOW From 1-7561		1	1	1	
20	452725	HOSE ASSY / DISCHARGE W/R-134a / #16 630MM Up to Y-7143 / REPLACED BY: 453572	1				
20	453572	HOSE ASSY / DISCHARGE W/R-134a / #16 630MM From Y-7144 Up to 1-7560 / REPLACED BY: 453719					
20	453719	HOSE ASSY / DISCHARGE W/R-134a / #16 737MM / SS BELLOW From 1-7561	1				
20	505182	. COIL PROTECTOR / PLASTIC / #16	AR	AR	AR	AR	

From Y-7046 Up to 8-9339	DATE: 01/2014	PAGE: Y2-2245-00

A/C COMPRESSOR 05G - INSTALLATION

ITEM	PART	DESCRIPTION	XL45	MTH40	MTH45	MTH45S	NOTE
21	501802	O-RING / ORS FITTING / #16 NEO	2	2	2	2	
22	950267	VALVE ASSY / DISCHARGE / W/R134A / REPLACED BY: 950281	1	1	1	1	
22	950281	VALVE ASSY / DISCHARGE / W/R134A	1	1	1	1	
23	870751	. GASKET	1	1	1	1	
24	870752	. GASKET, CAP SEAL / REPLACED BY: 870446	1	1	1	1	
25	870753	GASKET / DISCHARGE VALVE	1	1	1	1	
26	5011133	ELBOW 90° 1/8 NPT X M15 / W/R134A	1	1	1	1	
NS	5011134	GAUGE ADAPTOR ASSY M15 / W/BLACK CAP W/R134A	1	1	1	1	
27	950287	SCHROUDER CAP / HIGH PRESSURE	1	1	1	1	
28	5011184	FEMALE CONNECTOR / PIPE @ ORB / 1/4NPT-Fx#4ORB-M STL	AR	AR	AR	AR	
30	452528	HOSE ASSY / SUCTION W/R-134a / #20 1040MM	1				
30	453353	HOSE ASSY / SUCTION W/R-134a / #20 1100MM Up to 7-9095		1	1	1	
30	454304	HOSE ASSY / SUCTION W/R-134a / #20 1000MM From 7-9096		1	1	1	
31	501803	O-RING / ORS FITTING / #20 NEO	2	2	2	2	
32	950265	VALVE ASSY / SUCTION / W/R134A	1	1	1	1	
33	870751	. GASKET	1	1	1	1	
34	870752	. GASKET, CAP SEAL / REPLACED BY: 870446	1	1	1	1	
35	870754	GASKET / SUCTION VALVE	1	1	1	1	
36	5011131	ELBOW 90° 1/4 NPT X M13 / W/R134A	1	1	1	1	
NS	5011132	GAUGE ADAPTOR ASSY M13 / W/BLACK CAP W/R134A	1	1	1	1	
37	950288	SCHROUDER CAP / LOW PRESSURE	1	1	1	1	
40	870755	SCREW CAP HEX 1/2-13x2 1/2 G5 ZP	4	4	4	4	
41	870756	GASKET	4	4	4	4	
42	870877	SCREW CAP HEX 5/16-18x2 G5 ZP	2	2	2	2	
43	870750	GASKET	2	2	2	2	
44	Y2-2250-15	**A/C ELECTRIC UNLOADER - W/05G COMPRESSOR**					
45	501037	MALE ELBOW 90º / SAE 45º FITTING / #4FL-Mx1/4NPT-M BR	1	1	1	1	
NS	5011184	FEMALE CONNECTOR / PIPE @ ORB / 1/4NPT-Fx#4ORB-M STL	AR	AR	AR	AR	
51	500845	SCREW CAP HEX 5/16-18x1/2 G5 ZP Up to 4-8358	1	1	1	1	
51	502926	SCREW CAP HEX 3/8-16x7/8 G5 ZG603 From 5-8359	1				
NS	500832	WASHER FL .406x.812x.065 ZG603 From 5-8359	1				
52	500478	WASHER LO SPT .380x.683x.094 ZP Up to 4-8358	2	2	2	2	
53	500191	SCREW CAP HEX 3/8-16x1 G5 ZP Up to 4-8358	2	2	2	2	
54	500225	SCREW CAP HEX 5/8-11x1 G5 ZP	2	2	2	2	
55	5001151	WASHER CON 16.5x50.0x4.5 ZP	2	2	2	2	
56	630062	BUSHING / RUBBER / (ONE PIECE) 2" x 1.005" I.D.	2	2	2	2	
57	500997	WASHER FL 1.062x2.500x.125 SS	2	2	2	2	
58	500192	SCREW CAP HEX 3/8-16x1 1/4 G5 ZP	2	2	2	2	
59	500096	SCREW CAP HEX 1/2-20x3 G5 ZP	2	2	2	2	
60	500446	WASHER FL .531x1.250x.125 ZP	4	4	4	4	
61	500718	NUT HEX STO 1/2-20 ZP	2	2	2	2	
62	502549	SCREW CAP HEX M10-1.5x35 G8.8 ZP	5	5	5	5	
63	500445	WASHER FL .437x1.000x.083 ZP	5	5	5	5	
64	502616	WASHER LO SPT 10.2x18.1x2.2 SS	5	5	5	5	

From Y-7046 Up to 8-9339	DATE: 01/2014	PAGE: Y2-2245-00

A/C COMPRESSOR 05G - INSTALLATION

ITEM	PART	DESCRIPTION	XL45	MTH40	MTH45	MTH45S	NOTE
65	500680	NUT HEX STO M10-1.5 ZP	5	5	5	5	
69	5001150	WASHER FL 17.0x30.0x3.0 ZP Up to 4-8358	1	1	1	1	
69	500218	WASHER LO SPT .380x.683x.098 DP320 From 5-8359	1				
70	500792	NUT HEX 5/8-11 ZP Up to 4-8358	1	1	1	1	
70	502917	NUT HEX JAM 3/4-16 G2 ZG603 From 5-8359	1				
71	501707	ADAPTER TEE / SAE 45º FITTING / #4FL-Mx1/8NPT-Mx1/8NPT-F BR	1	1	1	1	
72	641369	MALE ELBOW 90° NON-SWIVEL / PUSH-IN FITTING #4x1/8NPT-M BR	1	1	1	1	
73	503402	TUBE, NYLON 1/4 O.D. / BLACK S.L.	AR	AR	AR	AR	

From Y-7046 Up to 7-9095	DATE: 01/2014	PAGE: Y2-2245-01

A/C COMPRESSOR "ROTOVANE" - INSTALLATION

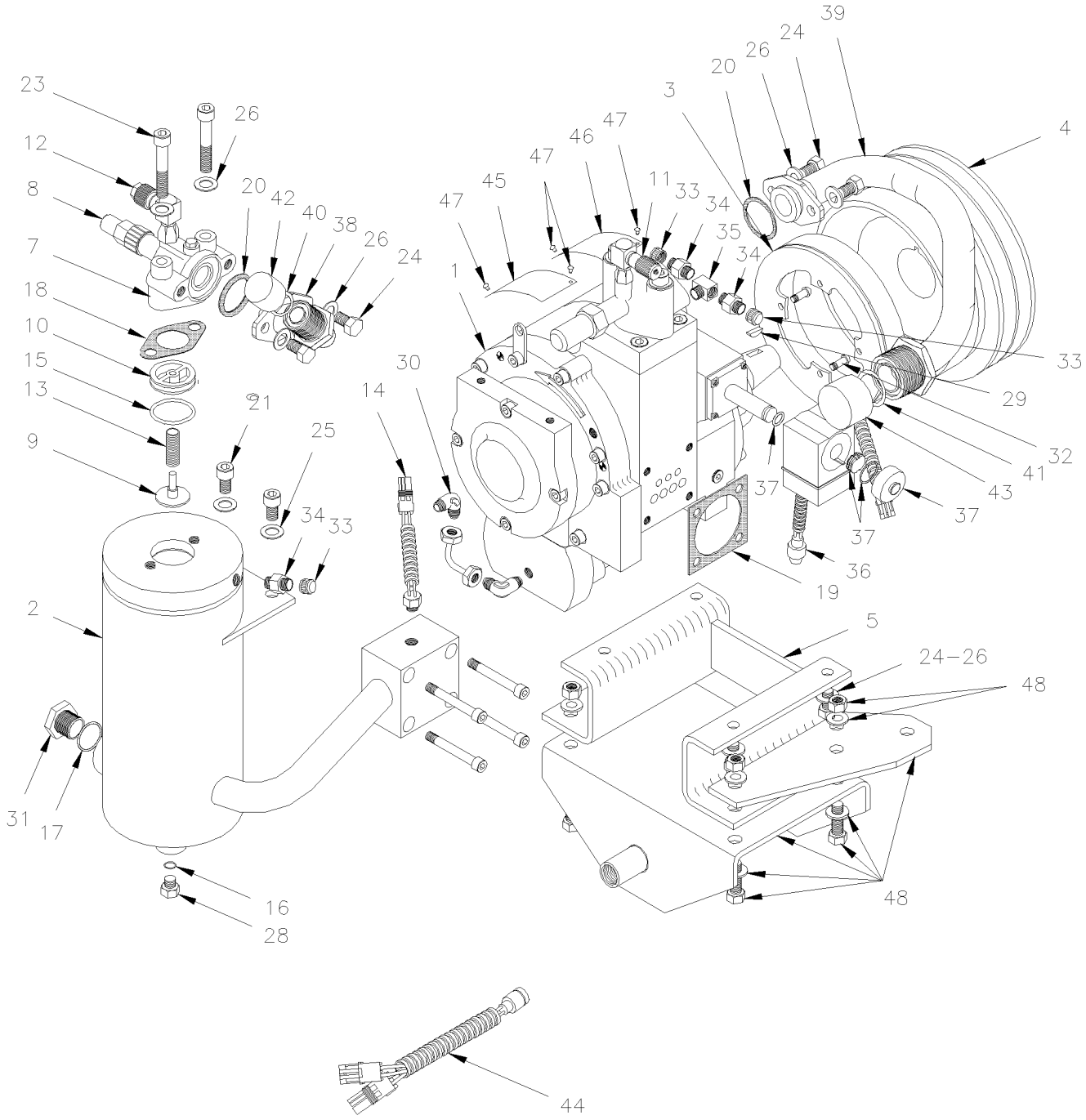

From Y-7046 Up to 7-9095	DATE: 01/2014	PAGE: Y2-2245-01

A/C COMPRESSOR "ROTOVANE" - INSTALLATION

ITEM	PART	DESCRIPTION	XL45	MTH40	MTH45	MTH45S	NOTE
1	950331	A/C COMPRESSOR ASSY "ROTO-VANE"	1				
2	950337	. OIL SEPARATOR ASSY	1				
3	950338	. CLUTCH COIL 24V ASSY	1				
4	950339	. CLUTCH PULLEY ASSY	1				
5	950340	. STAND	1				
6	950341	. OIL LINE ASSY	1				
7	950342	. VALVE - SHUT OFF	1				
8	950343	. VALVE STEM CAP	1				
9	950344	. VALVE - DISHARGE - NON RETURN	1				
10	950345	. VALVE BRIDGE - DISCHARGE	1				
11	950346	. LOW PRESSURE ADAPTOR HFC-134A-90°	1				
12	950347	. HIGH PRESSURE ADAPTOR HFC-134A-90°	1				
13	950348	. SPRING - NON RETURN VALVE	1				
14	950349	. TEMPERATURE SWITCH	1				
15	950350	. O-RING NO.2-220 - VITON V0747	1				
16	950351	. O-RING NO.3-906 - VITON V0747	1				
17	950352	. O-RING NO. -024 - TEFLON Z1415-95	1				
18	950354	. GASKET - FLANGE	1				
19	950353	. GASKET - DISCHARGE MANIFOLD	1				
20	950355	. GASKET - 42 O.D. X 35 I.D.	2				
21	502755	. SCREW CAP HEXS M8-1.25x20 PT ZP	2				
22	70314704	. SCREW CAP HEXS M8-1.25X50 G8.8 ZP	4				
23	70314705	. SCREW CAP HEXS M10-1.5x60 G8.8 ZP	2				
24	N.P.N.	. HEX. CAP SCREW (M10X1.5) X 20	8				4
25	N.P.N.	. WASHER - PLAIN M8	2				4
26	N.P.N.	. WASHER - PLAIN M10	10				4
27	N.P.N.	. PLUG 1/8" NPT	1				4
28	N.P.N.	. PLUG 9/16" - 18	1				4
29	950356	. KEY - WOODRUFF 5 X 6.5	1				
30	N.P.N.	. ELBOW 1/4" X 1/8" NPT	2				4
31	950357	. SIGHTGLASS 1-1/8" UNEF	1				
32	70314706	. SCREW MA PAN PH M6-1.0x10 ZP	4				
33	N.P.N.	. PLASTIC CAP	3				4
34	950030	. SCHROUDER VALVE 1/8NPT-M	3				
35	N.P.N.	. PIPE FITTING TEE 1/8" NPT	1				4
36	950359	. SOLENOID COIL 24V ASSY	1				
37	950360	. SEAL KIT	1				
38	950361	. DISCHARGE TUBE ASSY	1				
39	950362	. SUCTION TUBE ASSY	1				
40	950363	. O-RING	1				
41	950364	. O-RING	1				
42	N.P.N.	. PLASTIC CAP TS-16	1				4
43	N.P.N.	. PLASTIC CAP TS-20	1				4
		4) NO PARTS NUMBER					

From Y-7046 Up to 7-9095	DATE: 01/2014	PAGE: Y2-2245-01

A/C COMPRESSOR "ROTOVANE" - INSTALLATION

ITEM	PART	DESCRIPTION	XL45	MTH40	MTH45	MTH45S	NOTE
44	950365	. WIRING HARNESS	1				
45	N.P.N.	. LABEL - PART NO.	1				4
46	N.P.N.	. LABEL - ALUMINUM	1				4
47	5001197	. SCREW DRV RND #4x1/4 ZP	4				
48	950366	. MOUNTING BASE - KIT	1				
		4) NO PARTS NUMBER					

From Y-7046 Up to 7-9095	DATE: 01/2014	PAGE: Y2-2245-01

A/C COMPRESSOR "ROTOVANE" - INSTALLATION

ITEM	PART	DESCRIPTION	XL45	MTH40	MTH45	MTH45S	NOTE

From 7-9096 Up to 8-9339	DATE: 01/2014	PAGE: Y2-2245-03

A/C COMPRESSOR 05G - INSTALLATION - MUX

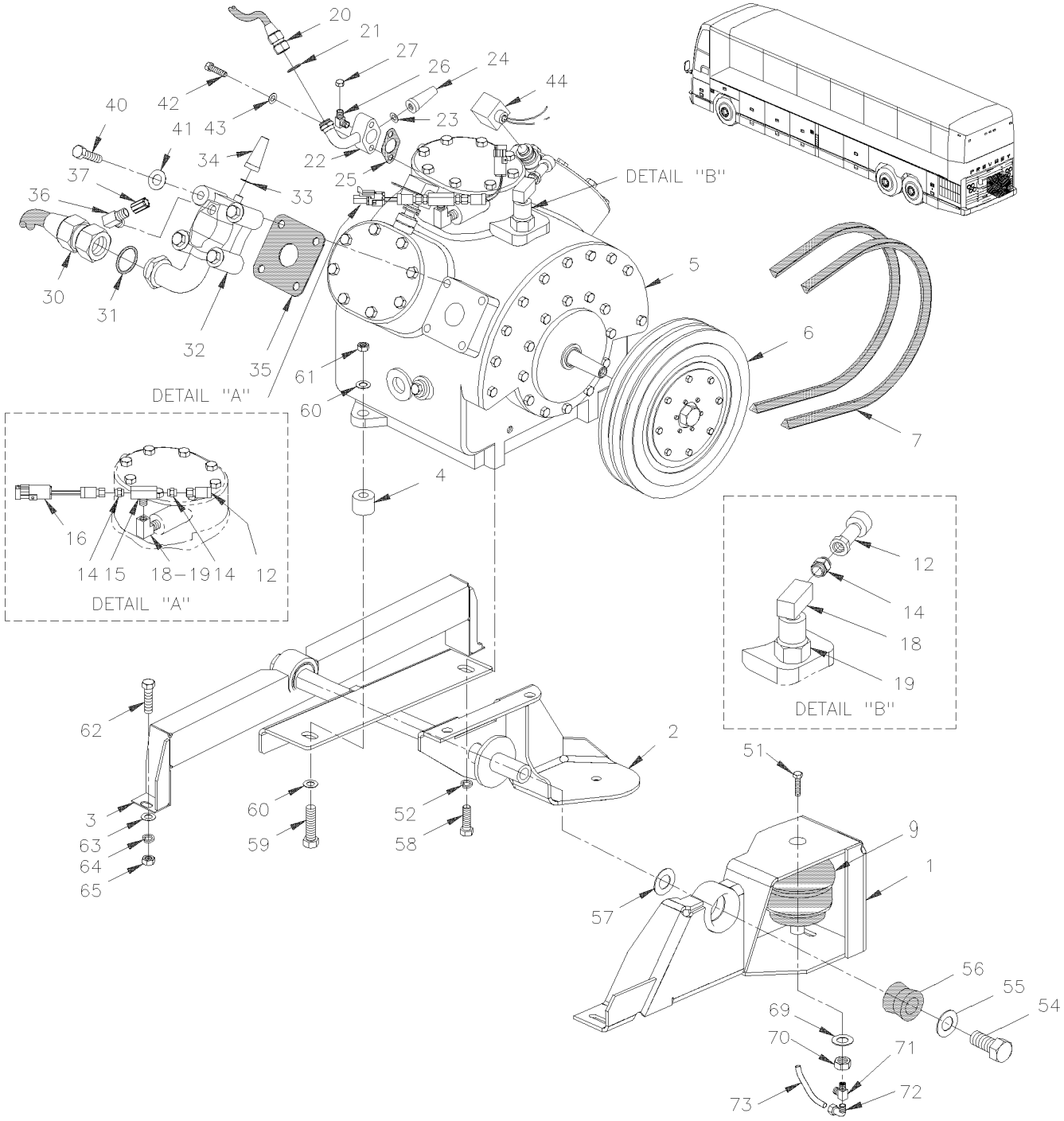

From 7-9096 Up to 8-9339	DATE: 01/2014	PAGE: Y2-2245-03

A/C COMPRESSOR 05G - INSTALLATION - MUX

ITEM	PART	DESCRIPTION	XL45	MTH40	MTH45	MTH45S	NOTE
1	454190	SUPPORT ASSY			1	1	
2	453651	SUPPORT ASSY			1	1	
3	453649	SUPPORT OPPOSITE PULLEY SIDE W/60			1	1	
4	452268	SLEEVE SPACER			2	2	
5	Y2-2250-00	**A/C COMPRESSOR ASSY 05G - THREE PORT**					
6	Y2-2246-00	**A/C CLUTCH 05G - HOUSING MOUNTED**					
7	506864	V-BELT / BX-100 / SET OF 2 9212-0404			1	1	
7	506681	V-BELT / BX-100 9013-2100 / REPLACED BY: 506864			AR	AR	
9	550840	BELLOW ASSY 4" O.D. / BELT TENSIONER			1	1	
11	950246	PRESSURE SWITCH N.C. 25-37 LO-UNLOAD W/WIRE BLACK			1	1	
12	563423	TRANSDUSER -6.7 to 420 LBS / 1/8 NPT-F			2	2	
. NS	563159	. CONNECTOR / METRI-PACK 150 / SH 3C / PED 12065287			1	1	
13	950245	PRESSURE SWITCH N.C. 20-30 LO-UNLOAD W/WIRE BLACK			1	1	
NS	501338	MALE RUN TEE / PIPE FITTING / 1/4NPT-Mx1/4NPT-Fx1/4NPT-F BR			1	1	
14	950249	SCHROUDER VALVE 1/4NPT-M			1	1	
15	501894	MALE BRANCHE TEE / PIPE FITTING / 1/4NPT-Fx1/4NPT-Fx1/4NPT-M BR			1	1	
16	453380	PRESSURE SWITCH N.C. 350-245 20PS001MB350K245R			1	1	
18	501332	STREET ELBOW 90º / PIPE FITTING / 1/4NPT-Mx1/4NPT-F BR			1	1	
19	5011184	FEMALE CONNECTOR / PIPE @ ORB / 1/4NPT-Fx#4ORB-M STL			AR	AR	
20	454275	HOSE ASSY / DISCHARGE W/R-134a / #16 687MM / SS BELLOW			1	1	
21	507345	O-RING / ORS FITTING / #16 NEO			2	2	
22	950378	VALVE ASSY / DISCHARGE / W/R134A			1	1	
23	870751	. GASKET			1	1	
24	870752	. GASKET, CAP SEAL / REPLACED BY: 870446			1	1	
25	870753	GASKET / DISCHARGE VALVE			1	1	
26	5011133	ELBOW 90° 1/8 NPT X M15 / W/R134A			1	1	
NS	5011134	GAUGE ADAPTOR ASSY M15 / W/BLACK CAP W/R134A			1	1	
27	950287	SCHROUDER CAP / HIGH PRESSURE			1	1	
30	454304	HOSE ASSY / SUCTION W/R-134a / #20 1000MM			1	1	
31	507346	O-RING / ORS FITTING / #24 NEO			2	2	
32	950264	VALVE ASSY / SUCTION / W/R134A			1	1	
33	870751	. GASKET			1	1	
34	870752	. GASKET, CAP SEAL / REPLACED BY: 870446			1	1	
35	870754	GASKET / SUCTION VALVE			1	1	
36	5011131	ELBOW 90° 1/4 NPT X M13 / W/R134A			1	1	
NS	5011132	GAUGE ADAPTOR ASSY M13 / W/BLACK CAP W/R134A			1	1	
37	950288	SCHROUDER CAP / LOW PRESSURE			1	1	
40	870755	SCREW CAP HEX 1/2-13x2 1/2 G5 ZP			4	4	
41	870756	GASKET			4	4	
42	870877	SCREW CAP HEX 5/16-18x2 G5 ZP			2	2	
43	870750	GASKET			2	2	
44	Y2-2250-15	**A/C ELECTRIC UNLOADER - W/05G COMPRESSOR**					
45	501037	MALE ELBOW 90º / SAE 45º FITTING / #4FL-Mx1/4NPT-M BR			1	1	
NS	5011184	FEMALE CONNECTOR / PIPE @ ORB / 1/4NPT-Fx#4ORB-M STL			AR	AR	

From 7-9096 Up to 8-9339	DATE: 01/2014	PAGE: Y2-2245-03

A/C COMPRESSOR 05G - INSTALLATION - MUX

ITEM	PART	DESCRIPTION	XL45	MTH40	MTH45	MTH45S	NOTE
51	502926	SCREW CAP HEX 3/8-16x7/8 G5 ZG603			1	1	
NS	500832	WASHER FL .406x.812x.065 ZG603			1	1	
52	500478	WASHER LO SPT .380x.683x.094 ZP			4	4	
54	500225	SCREW CAP HEX 5/8-11x1 G5 ZP			2	2	
55	5001151	WASHER CON 16.5x50.0x4.5 ZP			2	2	
56	630062	BUSHING / RUBBER / (ONE PIECE) 2" x 1.005" I.D.			2	2	
57	500997	WASHER FL 1.062x2.500x.125 SS			2	2	
58	500192	SCREW CAP HEX 3/8-16x1 1/4 G5 ZP			2	2	
59	500096	SCREW CAP HEX 1/2-20x3 G5 ZP			2	2	
60	500446	WASHER FL .531x1.250x.125 ZP			4	4	
61	500718	NUT HEX STO 1/2-20 ZP			2	2	
62	502549	SCREW CAP HEX M10-1.5x35 G8.8 ZP			5	5	
63	500445	WASHER FL .437x1.000x.083 ZP			5	5	
64	502616	WASHER LO SPT 10.2x18.1x2.2 SS			5	5	
65	500680	NUT HEX STO M10-1.5 ZP			5	5	
69	5001150	WASHER FL 17.0x30.0x3.0 ZP			1	1	
69	500218	WASHER LO SPT .380x.683x.098 DP320			1	1	
70	500792	NUT HEX 5/8-11 ZP			1	1	
70	502917	NUT HEX JAM 3/4-16 G2 ZG603			1	1	
71	501707	ADAPTER TEE / SAE 45º FITTING / #4FL-Mx1/8NPT-Mx1/8NPT-F BR			1	1	
72	641369	MALE ELBOW 90° NON-SWIVEL / PUSH-IN FITTING #4x1/8NPT-M BR			1	1	
73	503402	TUBE, NYLON 1/4 O.D. / BLACK S.L.			AR	AR	

From 7-9096 Up to 8-9339	DATE: 01/2014	PAGE: Y2-2245-03

A/C COMPRESSOR 05G - INSTALLATION - MUX

ITEM	PART	DESCRIPTION	XL45	MTH40	MTH45	MTH45S	NOTE

From Y-7046 Up to 3-8164	DATE: 01/2014	PAGE: Y2-2245-10

A/C COMPRESSOR SMALL - INSTALLATION

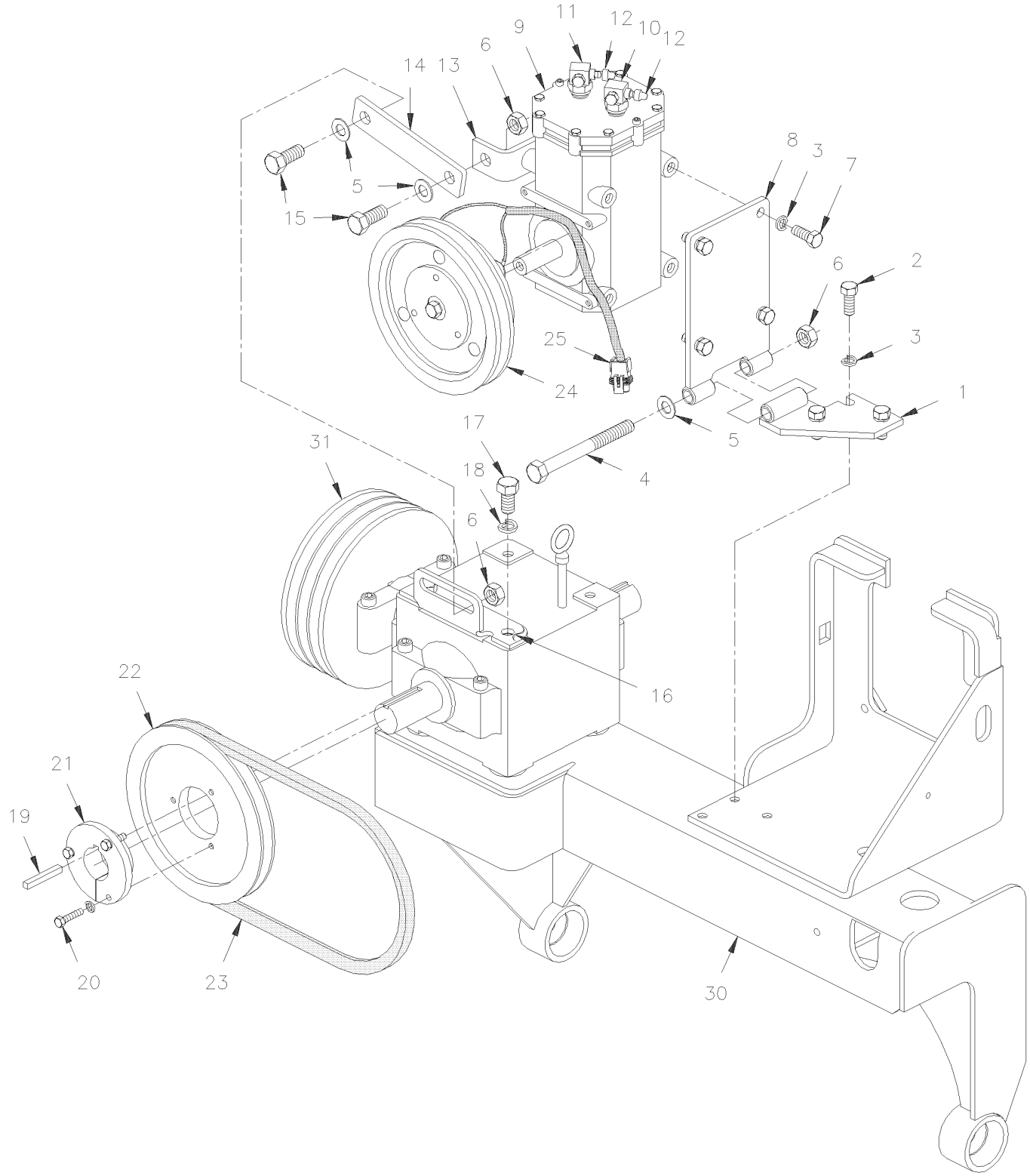

From Y-7046 Up to 3-8164	DATE: 01/2014	PAGE: Y2-2245-10

A/C COMPRESSOR SMALL - INSTALLATION

ITEM	PART	DESCRIPTION	XL45	MTH40	MTH45	MTH45S	NOTE
1	452444	PIVOT ASSY / SUPPORT	1				
2	502559	SCREW CAP HEX M10-1.5x25 G8.8 ZP	3				
3	500257	WASHER LO SPT 10.2x18.1x2.2 ZP	9				
4	500105	SCREW CAP HEX 1/2-20x5 1/2 G5 ZP	1				
5	571351	WASHER, 1/2" I.D. FLAT / REPLACED BY: 500958	5				
6	500718	NUT HEX STO 1/2-20 ZP	5				
7	500191	SCREW CAP HEX 3/8-16x1 G5 ZP	6				
8	452471	PIVOT ASSY / COMPRESSOR	1				
9	950219	A/C COMPRESSOR ASSY "TECUMSEH" / R-134A / REPLACED BY: 950393	1				
9	950393	A/C COMPRESSOR ASSY "CCI" / R-134A	1				S
9	950487	KEY / SHAFT	1				
10	950076	VALVE ASSY / DISCHARGE / W/O-RING 1/2" / W/"TECUMSEH" COMPRESSOR	1				
10	950235	GAUGE ADAPTOR ASSY / W/BLUE CAP FOR R-134A / SUCTION SIDE (ALUMINUM)	1				
NS	950368	ADAPTOR FITTING / O-RING PORT TO ROTOLOCK	2				A
NS	950369	SEAL TEFLON / O-RING PORT TO ROTOLOCK	2				A
NS	950383	SEAL TEFLON / O-RING PORT TO ROTOLOCK	2				A
11	950077	VALVE ASSY / SUCTION / W/O-RING 5/8" / W/"TECUMSEH" COMPRESSOR	1				
11	950234	GAUGE ADAPTOR ASSY / W/RED CAP FOR R-134A / DISCHARGE SIDE (ALUMINUM)	1				
12	950157	. CAP VALVE / PROTECTOR / STEEL	1				
13	453122	TENSIONNER SUPPORT	1				
14	452442	TENSIONNER	2				
15	500086	SCREW CAP HEX 1/2-20x1 1/4 G5 ZP	4				
16	452443	TENSIONER BRACKET / GEARBOX	2				
17	500213	SCREW CAP HEX 1/2-13x1 G5 ZP	4				
18	500482	WASHER LO SPT .506x.873x.125 ZP	4				
19	550186	KEY 1/4" X 1/4" X 1 1/4"	1				
20	500167	SCREW CAP HEX 1/4-20x1 1/4 G5 PT ZP	3				
NS	500473	WASHER LO SPT .262x.489x.062 ZP	3				
21	950230	CONE BUSHING 1 1/4 I.D X 2 1/8 O.D. X 3 5/16 / REPLACED BY: 950387	1				
22	950211	PULLEY DRIVE 7.15 O.D. / SINGLE "V" / REPLACED BY: 950386	1				
23	506685	V-BELT / A-35 9002-2035	1				
24	950079	PULLEY ASSY W/COIL 24V	1				
25	561566	CONNECTOR / WEATHER PACK / PH 2C / BLACK / PED 12010973	1				
NS	561568	PIN TERMINAL / 16-14 / PED 12089305	2				
NS	561565	CABLE SEAL / GREEN / PED 15324982	2				
30	Y2-0520-00	**FAN DRIVE - INSTALLATION - SHORT**					
31	Y2-0520-00	**FAN DRIVE - INSTALLATION - SHORT**					
		A) SOME COMPRESSOR MODEL REQUIRES ALL THOSES					
		ITEMS TO INSTALL SERVICING VALVE INLET AND					
		OUTLET					
		S) SERVICE AFTERMARKET					

From Y-7046 Up to 3-8164	DATE: 01/2014	PAGE: Y2-2245-10

A/C COMPRESSOR SMALL - INSTALLATION

ITEM	PART	DESCRIPTION	XL45	MTH40	MTH45	MTH45S	NOTE
NS	451144	OIL DIPSTICK / (REQUIRED TO CHANGE)	1				
NS	454222	KIT, RETROFIT "SELTEC" COMPRESSOR / W/MTH 40' Up to 3-8164		1			C
. NS	IS-04009	. SEE INSTRUCTION SHEET Up to 3-8164		1			
NS	454223	KIT, RETROFIT "SELTEC" COMPRESSOR / W/MTH 45' Up to 3-8164				1	
. NS	IS-04009	. SEE INSTRUCTION SHEET Up to 3-8164				1	
NS	454140	KIT, RETROFIT "SELTEC" COMPRESSOR / W/A/C IN PARCEL RACK ONLY Up to 3-8164	1				B
. NS	IS-03045	. SEE INSTRUCTION SHEET Up to 3-8164	1				
NS	453897	KIT, RETROFIT "SELTEC" COMPRESSOR /W/W5 ONLY Up to 3-8164			1		
. NS	IS-03152	. SEE INSTRUCTION SHEET Up to 3-8164			1		
		B) THIS KIT INCLUDES ALL COMPONENTS FOR BUS					
		EQUIPPED WITH A/C IN PARCEL RACK					
		C) THIS KIT INCLUDES ALL COMPONENTS FOR MTH					

From Y-7046 Up to 3-8164	DATE: 01/2014	PAGE: Y2-2245-10

A/C COMPRESSOR SMALL - INSTALLATION

ITEM	PART	DESCRIPTION	XL45	MTH400	MTH445	MTH445S	NOTE

From 4-8165 Up to 8-9339	DATE: 01/2014	PAGE: Y2-2245-11

A/C COMPRESSOR SMALL - INSTALLATION

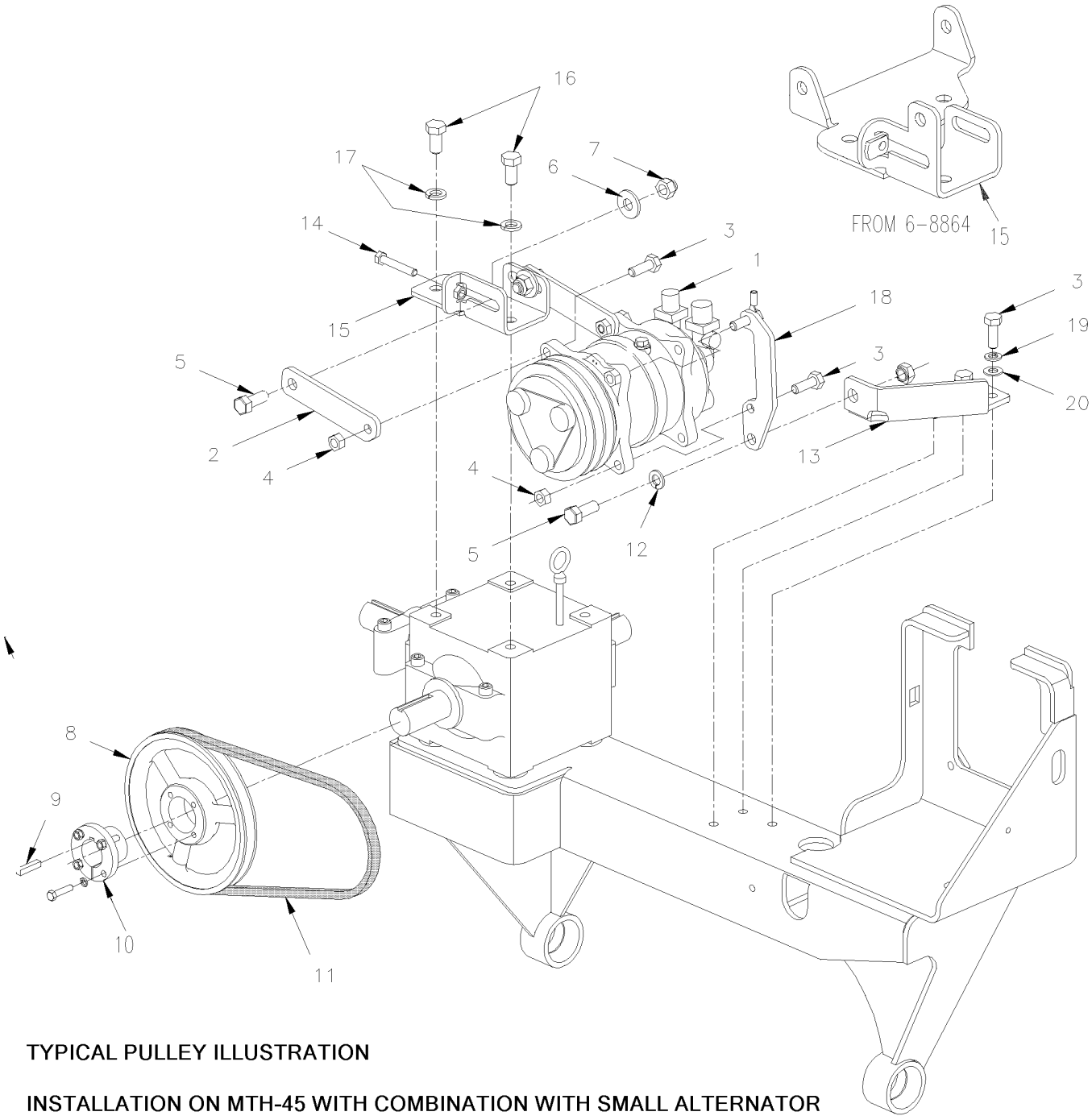

TYPICAL PULLEY ILLUSTRATION

INSTALLATION ON MTH-45 WITH COMBINATION WITH SMALL ALTERNATOR

SEE PAGE Y2-0610-54

From 4-8165 Up to 8-9339	DATE: 01/2014	PAGE: Y2-2245-11

A/C COMPRESSOR SMALL - INSTALLATION

ITEM	PART	DESCRIPTION	XL45	MTH40	MTH45	MTH45S	NOTE
1	950372	A/C COMPRESSOR ASSY "TH16HD"	1	1	1	1	
. NS	950445	. MANIFOLD FITTING 3/4-16 & 7/8-14	1	1	1	1	
2	454060	TENSIONER 116.6MM C/C Up to 4-8228 / REPLACED BY: 454143	2	2	2	2	
2	454143	TENSIONER 122.7MM C/C From 4-8229	2	2		2	
2	454143	TENSIONER 122.7MM C/C From 4-8829 Up to 6-8863			2		
2	454316	TENSIONER 122.7MM C/C / OFFSET From 6-8864			2		
3	500603	SCREW CAP HEX SLT #10-24x2 ZP	7	7	7	7	
4	5001758	NUT HEX STO M10-1.5 ZG603	4	4	4	4	
5	970970	SCREW CAP HEX M12-1.75x30 G8.8 ZG603	3	3	3	3	
6	971084	NUT HEX STO M12-1.75 ZG603	2	2	2	2	
7	500211	WASHER FL .531x1.250x.125 N500	2	2	2	2	
8	950374	PULLEY DRIVE 7.25 O.D. / SINGLE "V" Up to 4-4952 / REPLACED BY: 950392	1	1	1	1	
8	950388	PULLEY DRIVE 7.25 O.D. / SINGLE "V" From 4-4953 Up to 5-8631 / REPLACED BY: 950392	1	1	1	1	
8	950392	PULLEY DRIVE 7.25 O.D. / DOUBLE "V" From 5-8632	1	1		1	
8	950392	PULLEY DRIVE 7.25 O.D. / DOUBLE "V" Up to 6-8863			1		
8	950397	PULLEY DRIVE 7.15 O.D. / TRIPLE "V" From 6-8864			1		
9	550186	KEY 1/4" X 1/4" X 1 1/4"	1	1		1	
9	550186	KEY 1/4" X 1/4" X 1 1/4" Up to 6-8863			1		
9	550293	KEY 1/4" X 1/4" X 1 13/16" From 6-8864			1		
10	950375	CONE BUSHING 1 1/4 I.D X 2 1/8 O.D. X 3 5/16 Up to 4-4952 / REPLACED BY: 950389	1	1	1	1	
10	950389	CONE BUSHING 1 1/4 I.D X 2 1/8 O.D. X 3 5/16 From 4-4953	1	1		1	
10	950389	CONE BUSHING 1 1/4 I.D X 2 1/8 O.D. X 3 5/16 From 4-4953 Up to 6-8863			1		
10	950398	CONE BUSHING 1 1/4 I.D X 2 1/8 O.D. X 3 5/16 From 6-8864			1		
11	506685	V-BELT / A-35 9002-2035	2	2	2	2	
12	500747	WASHER LO SPT 12.2x21.1x2.5 ZG603	1	1	1	1	
13	454057	PIVOT ASSY / SUPPORT Up to 4-8228	1	1	1	1	
13	454137	PIVOT ASSY / SUPPORT From 4-8229	1	1		1	
13	454137	PIVOT ASSY / SUPPORT From 4-8229 Up to 6-8863			1		
13	454318	PIVOT ASSY / SUPPORT From 6-8863			1		
14	502757	SCREW CAP HEX M8-1.25x50 G8.8 ZG603	1	1	1	1	
15	454059	TENSIONNER SUPPORT Up to 4-8228	1	1	1	1	
15	454127	TENSIONNER SUPPORT From 4-8229	1	1		1	
15	454127	TENSIONNER SUPPORT Up to 6-8863			1		
15	066496	SUPPORT ALTERNATOR & A/C COMPRESSOR From 6-8864			1		
16	5001565	SCREW CAP HEX 1/2-13x1 G5 ZG603	2	2	2	2	
17	500944	WASHER LO SPT .506x.873x.125 ZG603	2	2	2	2	
18	454058	PIVOT ASSY / COMPRESSOR Up to 4-8228	1	1	1	1	
18	454138	PIVOT ASSY / COMPRESSOR From 4-8229	2	2	2	2	
19	3852496	WASHER LO SPT 10.2x18.1x2.2 ZG603	3	3	3	3	
20	500832	WASHER FL .406x.812x.065 ZG603	3	3	3	3	
50	Y2-0610-54	**ALTERNATOR MOUNTING / "BOSCH" - 24V/140A / GEARBOX INSTAL**					

From Y-7046 Up to 3-8164	DATE: 01/2014	PAGE: Y2-2245-30

A/C AUXILIARY LINE / PARCEL RACK

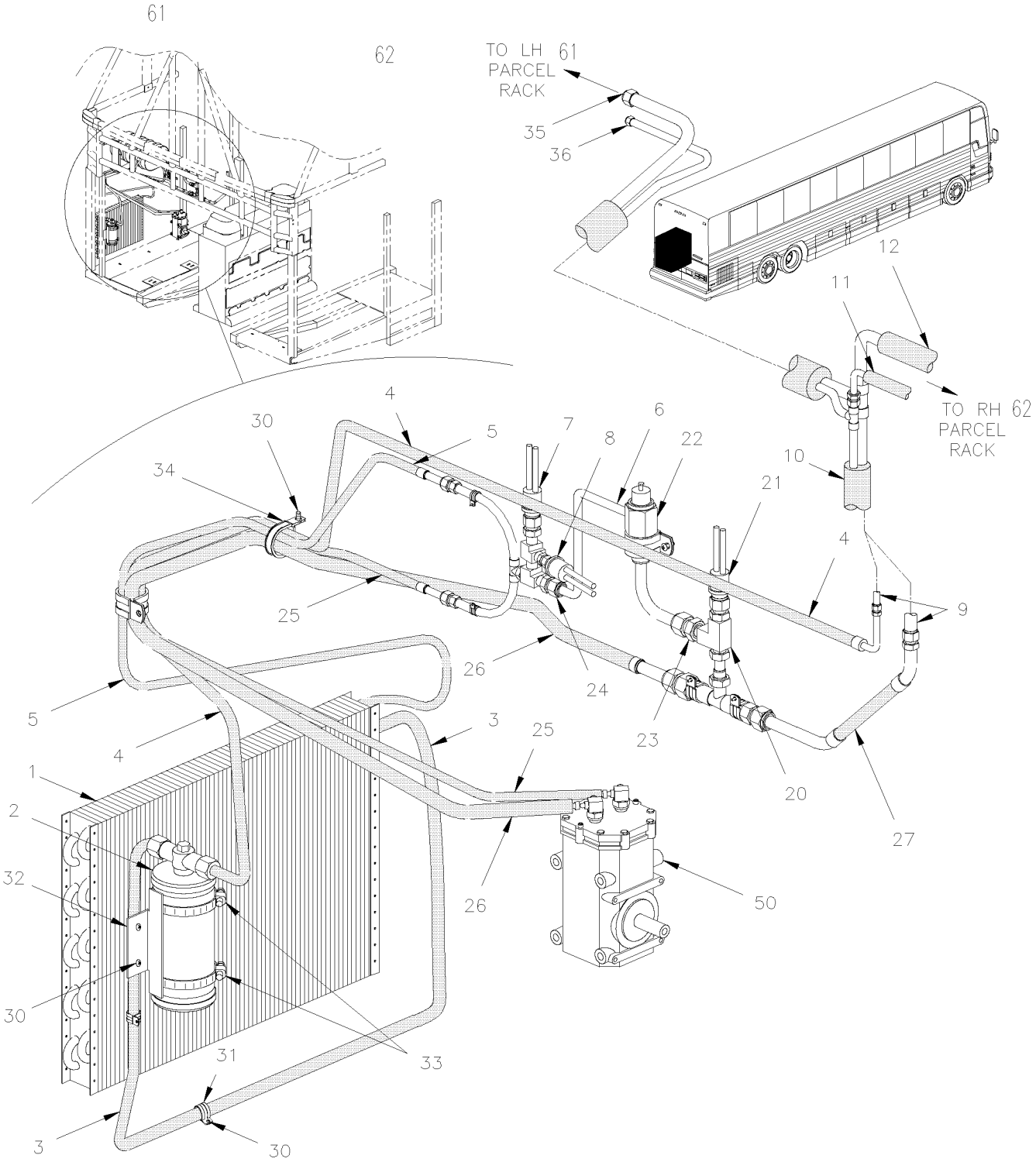

From Y-7046 Up to 3-8164	DATE: 01/2014	PAGE: Y2-2245-30

A/C AUXILIARY LINE / PARCEL RACK

ITEM	PART	DESCRIPTION	XL45	MTH40	MTH45	MTH45S	NOTE
1	950018	CONDENSOR COIL Up to Y-7367	1				
1	950336	CONDENSOR COIL From Y-7368	1				
2	950220	DRYER, RECEIVER TANK	1				
3	453449	HOSE ASSY / <> CONDENSER & RECEIVER / #6 2370MM	1				
. NS	507278	. O-RING / ORS FITTING /	2				
3	455236	HOSE ASSY / <> CONDENSER & RECEIVER / #6 2370MM	1				S
. NS	507278	. O-RING / ORS FITTING /	2				
4	453446	HOSE ASSY / DRYER OUTLET / #6 1965MM	1				
. NS	507278	. O-RING / ORS FITTING /	2				
4	455233	HOSE ASSY / DRYER OUTLET / #6 1965MM	1				S
. NS	507278	. O-RING / ORS FITTING /	2				
5	453450	HOSE ASSY /<>COND INLET & HI-SIDE / W/R-134a/ #8 1800MM	1				
. NS	507343	. O-RING / ORS FITTING /	2				
5	455237	HOSE ASSY /<>COND INLET & HI-SIDE / W/R-134a/ #8 1800MM	1				S
. NS	507343	. O-RING / ORS FITTING /	2				
6	453437	TUBE ASSY / HI&LOW SIDE W/PLATE HOLDER	1				
7	453380	. PRESSURE SWITCH N.C. 350-245 20PS001MB350K245R	1				
8	452832	. PRESSURE SWITCH N.O. 170-130 20SP001MA170J130J	1				
NS	950030	. SCHROUDER VALVE 1/8NPT-M	AR				
NS	950249	. SCHROUDER VALVE 1/4NPT-M	AR				
9	Call Order Desk	PIPE ASSY / <> ENGINE COMPARTMENT & PARCEL R	1				P
10	506267	PIPE INSULATING / 1 1/8" I.D. X 1/2" TH. X / APT11812	AR				
11	453455	HOSE ASSY / <> PIPE & R.H. PARCEL RACK #6 1850MM	1				
. NS	507278	. O-RING / ORS FITTING /	2				
11	455239	HOSE ASSY / <> PIPE & R.H. PARCEL RACK #6 1850MM	1				S
. NS	507278	. O-RING / ORS FITTING /	2				
12	453454	HOSE ASSY / #12 1800MM	1				
. NS	507344	. O-RING / ORS FITTING /	1				
. NS	507280	. O-RING / ORS FITTING /	1				
12	455238	HOSE ASSY / #12 1800MM	1				S
. NS	507344	. O-RING / ORS FITTING /	1				
. NS	507280	. O-RING / ORS FITTING /	1				
20	453437	TUBE ASSY / HI&LOW SIDE W/PLATE HOLDER Up to 2-7888	1				
20	453727	TUBE ASSY / HI&LOW SIDE W/PLATE HOLDER From 2-7889	1				
21	452831	. PRESSURE SWITCH N.O. 30-5 20SP001MA030C005C	1				
22	452434	. VALVE, BYPASS ASSY / W/R134A	1				
		P) CALL ORDER DESK FOR SPECIFIC APPLICATION					
		(V.I.N.)					
		S) SERVICE					

From Y-7046 Up to 3-8164	DATE: 01/2014	PAGE: Y2-2245-30

A/C AUXILIARY LINE / PARCEL RACK

ITEM	PART	DESCRIPTION	XL45	MTH40	MTH45	MTH45S	NOTE
22	950065	. . BYPASS VALVE	1				
23	5011080	. MALE CONNECTOR / ORS FITTING / #6ORS-Mx1/4NPT-M STL	1				L
23	5011082	. ADAPTOR / ORS@COPPER TUBE / #6ORS-Fx#6COPPER TUBE	1				L
24	5011079	. MALE CONNECTOR / ORS FITTING / #4ORS-Mx1/4NPT-M STL	1				H
24	5011081	. ADAPTOR / ORS@COPPER TUBE / #4ORS-Fx#4COPPER TUBE	1				H
25	453448	HOSE ASSY / #8 1530MM	1				
. NS	507343	. O-RING / ORS FITTING /	2				
. NS	950358	. PROTECTOR CAP LOW PRESSURE PORT / "TUBE-O" / PLASTIC BLACK	1				
25	455235	HOSE ASSY / #8 1530MM	1				S
. NS	507343	. O-RING / ORS FITTING /	2				
. NS	950358	. PROTECTOR CAP LOW PRESSURE PORT / "TUBE-O" / PLASTIC BLACK	1				
26	453447	HOSE ASSY / #12 1900MM	1				
. NS	507344	. O-RING / ORS FITTING /	2				
. NS	950367	. PROTECTOR CAP HIGH PRESSURE PORT / "TUBE-O" / PLASTIC BLACK	1				
26	455234	HOSE ASSY / #12 1900MM	1				S
. NS	507344	. O-RING / ORS FITTING /	2				
. NS	950367	. PROTECTOR CAP HIGH PRESSURE PORT / "TUBE-O" / PLASTIC BLACK	1				
27	453445	HOSE ASSY / <>LOW PRES. TUBE & PIPE / #12 400MM	1				
. NS	507280	. O-RING / ORS FITTING /	2				
27	455232	HOSE ASSY / <>LOW PRES. TUBE & PIPE / #12 400MM	1				S
. NS	507280	. O-RING / ORS FITTING /	2				
30	500642	SCREW TP BDG PH #10x3/4 ZP	AR				
31	560481	CLAMP / 5/8" I.D. / REPLACED BY: 952629	AR				
31	560483	CLAMP / 7/8" I.D. / REPLACED BY: 952633	AR				
31	504458	CLAMP / 1 5/8" I.D.	AR				
32	451510	SUPPORT / DRYER	1				
33	504025	HOSE CLAMP / 2"5/16-3"1/4 SS / HS-44	2				
34	562060	CLAMP / 1 3/4" I.D.	AR				
35	507343	O-RING / ORS FITTING / #8 NEO	1				
36	507278	O-RING / ORS FITTING / #4 NEO	1				
50	Y2-2245-10	**A/C COMPRESSOR SMALL - INSTALLATION**					
51	Y2-2240-20	**BLOWER VENTILATION - PARCEL RACK**					
NS	454140	KIT, RETROFIT "SELTEC" COMPRESSOR / W/A/C IN PARCEL RACK ONLY Up to 3-8164	1				A
. NS	IS-03045	. SEE INSTRUCTION SHEET Up to 3-8164	1				
NS							
NS		FOR VEHICLE 4-7965 SEE PAGE Y2-2245-31					
		A) THIS KIT INCLUDES ALL COMPONENTS REQUIRED TO					
		MAKE CHANGE					
		H) TO FIX BY PASS TO HIGH PRESSURE SIDE					
		L) TO FIX BY PASS TO LOW PRESSURE SIDE					
		S) SERVICE					

From Y-7046 Up to 3-8164	DATE: 01/2014	PAGE: Y2-2245-30

A/C AUXILIARY LINE / PARCEL RACK

ITEM	PART	DESCRIPTION	XL45	MTH40	MTH45	MTH45S	NOTE
NS		FOR HOSES INSTALLATION					
NS	Y2-2245-31	**A/C AUXILIARY LINE / PARCEL RACK**					
61	453451	PIPE ASSY A/C L.H. PARCEL RACK					
62	453452	PIPE ASSY A/C R.H. PARCEL RACK					
70		FOR VEHICLE 4-7965					
		USE WITH NEXT FOLLOWING PARTS					
70	453413	HOSE ASSY / #8 1500MM From 4-7965 Up to 4-7965	1				
. NS	507343	. O-RING / ORS FITTING / #8 NEO From 4-7965 Up to 4-7965	2				
70	455228	HOSE ASSY / #8 1500MM From 4-7965 Up to 4-7965	1				S
. NS	507343	. O-RING / ORS FITTING / #8 NEO From 4-7965 Up to 4-7965	2				
70	453447	HOSE ASSY / #12 1900MM From 4-7965 Up to 4-7965	1				
. NS	507344	. O-RING / ORS FITTING / From 4-7965 Up to 4-7965	2				
. NS	950367	. PROTECTOR CAP HIGH PRESSURE PORT / "TUBE-O" / PLASTIC BLACK From 4-7965 Up to 4-7965					
70	455234	HOSE ASSY / #12 1900MM From 4-7965 Up to 4-7965	1				S
. NS	507344	. O-RING / ORS FITTING / From 4-7965 Up to 4-7965	2				
. NS	950367	. PROTECTOR CAP HIGH PRESSURE PORT / "TUBE-O" / PLASTIC BLACK From 4-7965 Up to 4-7965					
70	453514	MOISTURE INDICATOR ASSY From 4-7965 Up to 4-7965 / REPLACED BY: 455356	1				
. NS	950379	. MOISTURE INDICATOR From 4-7965 Up to 4-7965	1				
70	453642	HOSE ASSY / #6 600MM From 4-7965 Up to 4-7965	1				
. NS	507278	. O-RING / ORS FITTING / #4 NEO From 4-7965 Up to 4-7965	2				
70	N.P.N.	HOSE ASSY / #6 600MM From 4-7965 Up to 4-7965	1				4 S
70	453643	HOSE ASSY / #8 2220MM From 4-7965 Up to 4-7965	1				
. NS	507343	. O-RING / ORS FITTING / #8 NEO From 4-7965 Up to 4-7965	2				
70	455262	HOSE ASSY / #8 2220MM From 4-7965 Up to 4-7965	1				S
. NS	507343	. O-RING / ORS FITTING / #8 NEO From 4-7965 Up to 4-7965	2				
70	453730	HOSE ASSY / #6 1595MM From 4-7965 Up to 4-7965	1				
. NS	507278	. O-RING / ORS FITTING / #4 NEO From 4-7965 Up to 4-7965	2				
70	455265	HOSE ASSY / #6 1595MM From 4-7965 Up to 4-7965	1				S
. NS	507278	. O-RING / ORS FITTING / #4 NEO From 4-7965 Up to 4-7965	2				
70	950381	CONDENSOR COIL From 4-7965 Up to 4-7965	1				
70	950467	CONDENSOR COIL E-COAT LT-8 From 4-7965 Up to 4-7965	1				
70	950370	FILTER DRYER From 4-7965 Up to 4-7965	1				
. NS	507085	. O-RING 7/16" I.D X 1/32" From 4-7965 Up to 4-7965	1				
70	504026	HOSE CLAMP / 2"13/16-3"3/4 SS / HS-52 From 4-7965 Up to 4-7965	2				
		4) NO PARTS NUMBER					
		S) SERVICE					

From 4-8165 Up to 6-8906	DATE: 01/2014	PAGE: Y2-2245-31

A/C AUXILIARY LINE / PARCEL RACK

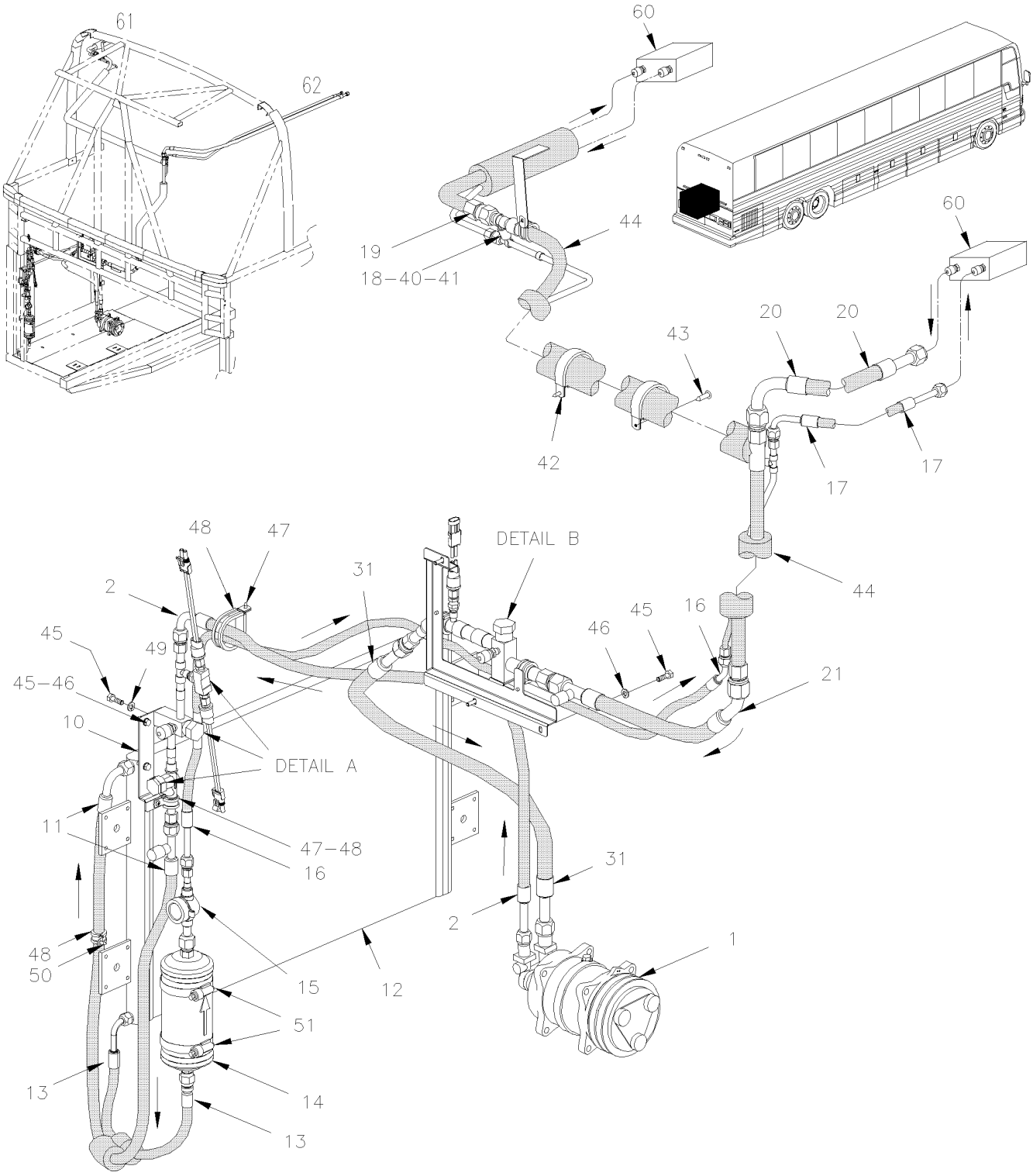

From 4-8165 Up to 6-8906	DATE: 01/2014	PAGE: Y2-2245-31
A/C AUXILIARY LINE / PARCEL RACK		

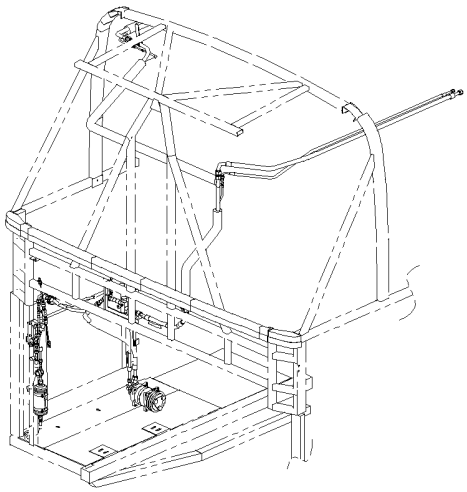

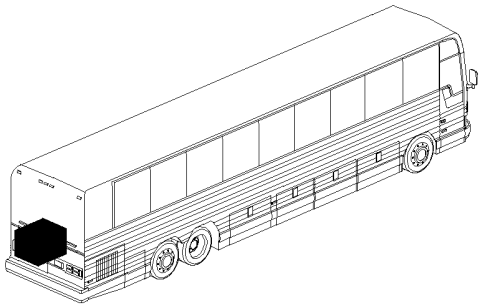

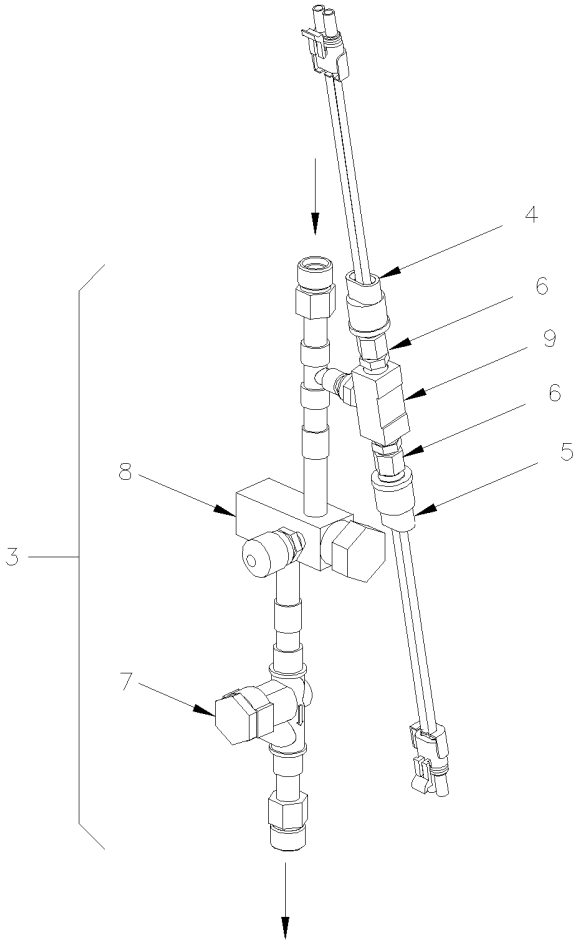

DETAIL A

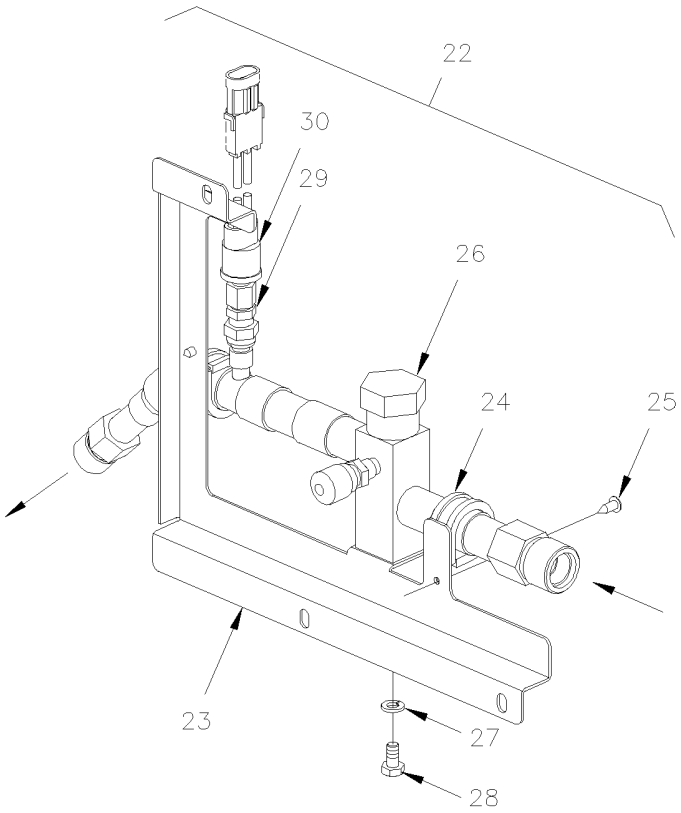

DETAIL B

From 4-8165 Up to 6-8906	DATE: 01/2014	PAGE: Y2-2245-31

A/C AUXILIARY LINE / PARCEL RACK

ITEM	PART	DESCRIPTION	XL45	MTH40	MTH45	MTH45S	NOTE
1	Y2-2245-11	**A/C COMPRESSOR SMALL - INSTALLATION**					
2	454067	HOSE ASSY / #8 960MM	1				A
. NS	507343	. O-RING / ORS FITTING /	2				
2	455276	HOSE ASSY / #8 960MM	1				A,S
. NS	507343	. O-RING / ORS FITTING /	2				
3	454066	VALVE ASSY / HI-SIDE	1				
4	454084	. PRESSURE SWITCH N.O. 195-150 20PS001MA195K150K	1				
5	453380	. PRESSURE SWITCH N.C. 350-245 20PS001MB350K245R	1				
6	950249	. SCHROUDER VALVE 1/4NPT-M	2				
7	950326	. CHECK VALVE	1				
8	950376	. VALVE SERVICE HIGHT PRESSURE	1				
9	501894	. MALE BRANCHE TEE / PIPE FITTING / 1/4NPT-Fx1/4NPT-Fx1/4NPT-M BR	1				
10	454072	SUPPORT / HIGHT PRESSURE VALVE	1				
11	454070	HOSE ASSY / #8 1325MM	1				
. NS	507343	. O-RING / ORS FITTING /	2				
11	455278	HOSE ASSY / #8 1325MM	1				S
. NS	507343	. O-RING / ORS FITTING /	2				
12	Y2-2255-11	**CONDENSOR - INSTALLATION SMALL SYSTEM**					
13	454069	HOSE ASSY / #6 515MM	1				
. NS	507278	. O-RING / ORS FITTING /	1				
14	950370	FILTER DRYER	1				
. NS	507085	. O-RING 7/16" I.D X 1/32"	1				
15	453514	MOISTURE INDICATOR ASSY / REPLACED BY: 455356	1				
. NS	950379	. MOISTURE INDICATOR	1				
15	950379	. MOISTURE INDICATOR	1				
15	950029	. CAP, MOISTURE INDICATOR	1				
16	454068	HOSE ASSY / #6 1675MM	1				A
. NS	507278	. O-RING / ORS FITTING /	1				
16	455277	HOSE ASSY / #6 1675MM	1				S
. NS	507278	. O-RING / ORS FITTING /	1				
17	453454	HOSE ASSY / #12 1800MM	1				
. NS	507344	. O-RING / ORS FITTING /	1				
. NS	507280	. O-RING / ORS FITTING /	1				
17	455238	HOSE ASSY / #12 1800MM	1				S
. NS	507344	. O-RING / ORS FITTING /	1				
. NS	507280	. O-RING / ORS FITTING /	1				
18	507278	O-RING / ORS FITTING / #4 NEO	1				
19	507343	O-RING / ORS FITTING / #8 NEO	1				
20	453455	HOSE ASSY / <> PIPE & R.H. PARCEL RACK #6 1850MM	1				
		A) USE ALSO WITH RETROFIT KIT # 454140 UP TO					
		3-8164					
		S) SERVICE					

From 4-8165 Up to 6-8906	DATE: 01/2014	PAGE: Y2-2245-31

A/C AUXILIARY LINE / PARCEL RACK

ITEM	PART	DESCRIPTION	XL45	MTH40	MTH45	MTH45S	NOTE
20	455239	HOSE ASSY / <> PIPE & R.H. PARCEL RACK #6 1850MM	1				S
. NS	507278	. O-RING / ORS FITTING /	2				
21	454062	HOSE ASSY / #12 355MM	1				
. NS	507280	. O-RING / ORS FITTING /	2				
21	455275	HOSE ASSY / #12 355MM	1				S
. NS	507280	. O-RING / ORS FITTING /	2				
22	454061	VALVE ASSY W/SUPPORT / LOW SIDE	1				
23	454063	. SUPPORT / LOW PRESSURE VALVE	1				
24	952635	. CLAMP / 1" I.D.	1				
25	509805	. SCREW TP PAN PH #10x1/2 BK	1				
26	950377	. VALVE SERVICE LOW PRESSURE O.E.M.	1				
26	950950	. VALVE SERVICE LOW PRESSURE	1				
. NS	950235	. . GAUGE ADAPTOR ASSY / W/BLUE CAP FOR R-134A / SUCTION SIDE	1				
27	955920	. WASHER LO SPT 6.5x11.5x1.6 ZP	1				
28	502772	. SCREW CAP HEX 1/4-20x1/2 G5 ZG603	1				
29	950249	. SCHROUDER VALVE 1/4NPT-M	1				
30	452831	. PRESSURE SWITCH N.O. 30-5 20SP001MA030C005C	1				
31	454071	HOSE ASSY / #12 780MM	1				A
. NS	507344	. O-RING / ORS FITTING /	2				
31	455279	HOSE ASSY / #12 780MM	1				A,S
. NS	507344	. O-RING / ORS FITTING /	2				
40	504586	WASHER SPACER, NYLON .625 O.D.X.450	1				
41	504637	CABLE TIE / 3/16" x 13"	AR				
42	504458	CLAMP / 1 5/8" I.D.	AR				
43	500642	SCREW TP BDG PH #10x3/4 ZP	AR				
44	Call Order Desk	PIPE ASSY / <> ENGINE COMPARTMENT & PARCEL R	1				P
45	955920	WASHER LO SPT 6.5x11.5x1.6 ZP	AR				
46	502830	SCREW CAP HEX M6-1.0x20 G8.8 ZG603	AR				
47	952629	CLAMP / 5/8" I.D.	AR				
48	509805	SCREW TP PAN PH #10x1/2 BK	3				
49	502772	SCREW CAP HEX 1/4-20x1/2 G5 ZG603	1				
50	952629	CLAMP / 5/8" I.D.	1				
51	504026	HOSE CLAMP / 2"13/16-3"3/4 SS / HS-52	1				
60	Y2-2240-20	**BLOWER VENTILATION - PARCEL RACK**					
61	453451	PIPE ASSY A/C L.H. PARCEL RACK	1				
62	453452	PIPE ASSY A/C R.H. PARCEL RACK	1				
		P) CALL ORDER DESK FOR SPECIFIC APPLICATION					
		(V.I.N.)					
		A) USE ALSO WITH RETROFIT KIT # 454140 UP TO					
		3-8164					
		S) SERVICE					

From Y-7046 Up to 8-9339	DATE: 01/2014	PAGE: Y2-2246-00

A/C CLUTCH 05G - HOUSING MOUNTED

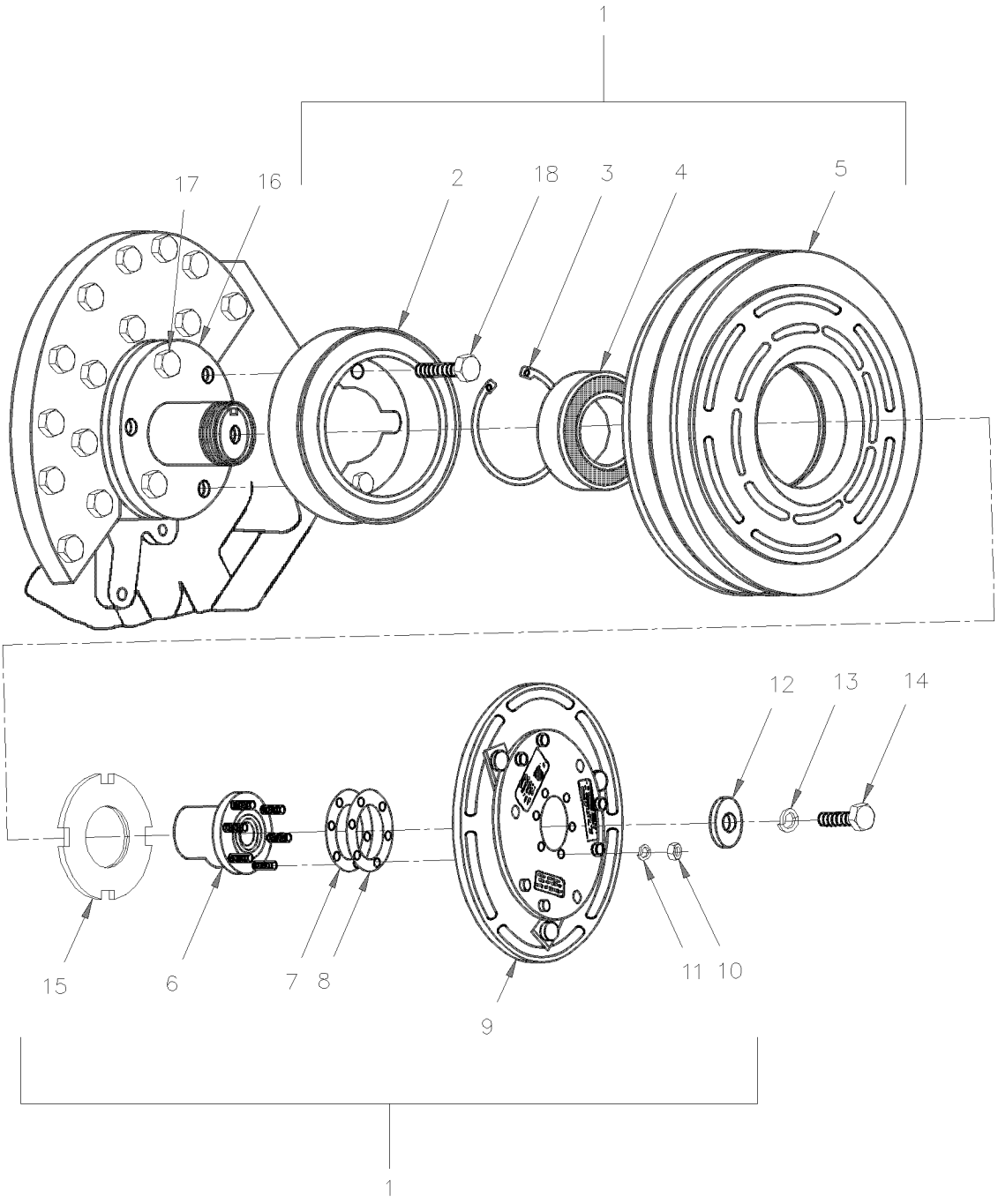

From Y-7046 Up to 8-9339	DATE: 01/2014	PAGE: Y2-2246-00

A/C CLUTCH 05G - HOUSING MOUNTED

ITEM	PART	DESCRIPTION	XL45	MTH40	MTH45	MTH45S	NOTE
1	950204	CLUTCH HOUSING-MOUNTED/24V DC 9" DIA 2B GROVE	1	1	1	1	
2	950156	COIL 24V	1	1	1	1	A
3	950146	. CIRCLIP INTERNAL	1	1	1	1	
4	950141	. BEARING	1	1	1	1	
5	N.S.S.	. PULLEY	1	1	1	1	1
6	N.S.S.	. HUB DRIVE	1	1	1	1	1
7	950104	. SHIM 0.010	1	1	1	1	
8	950103	. SHIM 0.020	5	5	5	5	
9	N.S.S.	. ARMATURE	1	1	1	1	1
10	500769	. NUT HEX 1/4-20 ZP	6	6	6	6	
11	500473	. WASHER LO SPT .262x.489x.062 ZP	6	6	6	6	
NS	561813	CONNECTOR / SURE-SEAL / FEMALE HOUSING 2C / ITT CANNON 120-1804-000	1	1	1	1	
NS	561023	PIN TERMINAL / 18-14 / ITT CANNON 030-2196-001	1	1	1	1	
NS	561024	SOCKET TERMINAL / 18-14 / ITT CANNON 031-1267-001	1	1	1	1	
NS	561815	CLAMP W/ 2 / ITT CANNON 029-0263-000	1	1	1	1	
12	870784	WASHER 13/32" I.D. X 1 1/2" O.D. X 3/16" TH	1	1	1	1	
13	500478	WASHER LO SPT .380x.683x.094 ZP	1	1	1	1	
14	870785	SCREW CAP HEX 3/8-24x7/8 G8 ZP	1	1	1	1	
15	950093	NUT / W/HUB MOUNTING ONLY	1	1	1	1	
16	950092	HUB HOUSING MOUNT Up to 6-8795	1	1	1	1	
16	950408	HUB HOUSING MOUNT W/GROOVE FOR TWIN PORT From 6-8796	1	1	1	1	
. NS	950409	. SEAL, LIP, SHAFT SEAL / W/TWIN PORT ONLY From 6-8796	1	1	1	1	
. NS	870795	. GASKET, HUB BEARING From 6-8796	1	1	1	1	
17	500192	SCREW CAP HEX 3/8-16x1 1/4 G5 ZP	6	6	6	6	
18	0186679	SCREW CAP HEX 3/8-16x1 1/4 G8 ZP	1	1	1	1	
NS	950105	SOCKET / TOOL FOR INSTALLATION					
NS	950106	PUSHER ROTOR / TOOL					
NS	950107	SPANNER WRENCH / TOOL					
		1) NOT SOLD SEPARATELY					
		A) THIS COIL IS NOT INCLUDE WITH #950204					

From Y-7046 Up to 6-8795	DATE: 01/2014	PAGE: Y2-2250-00
A/C COMPRESSOR ASSY 05G - THREE PORT		

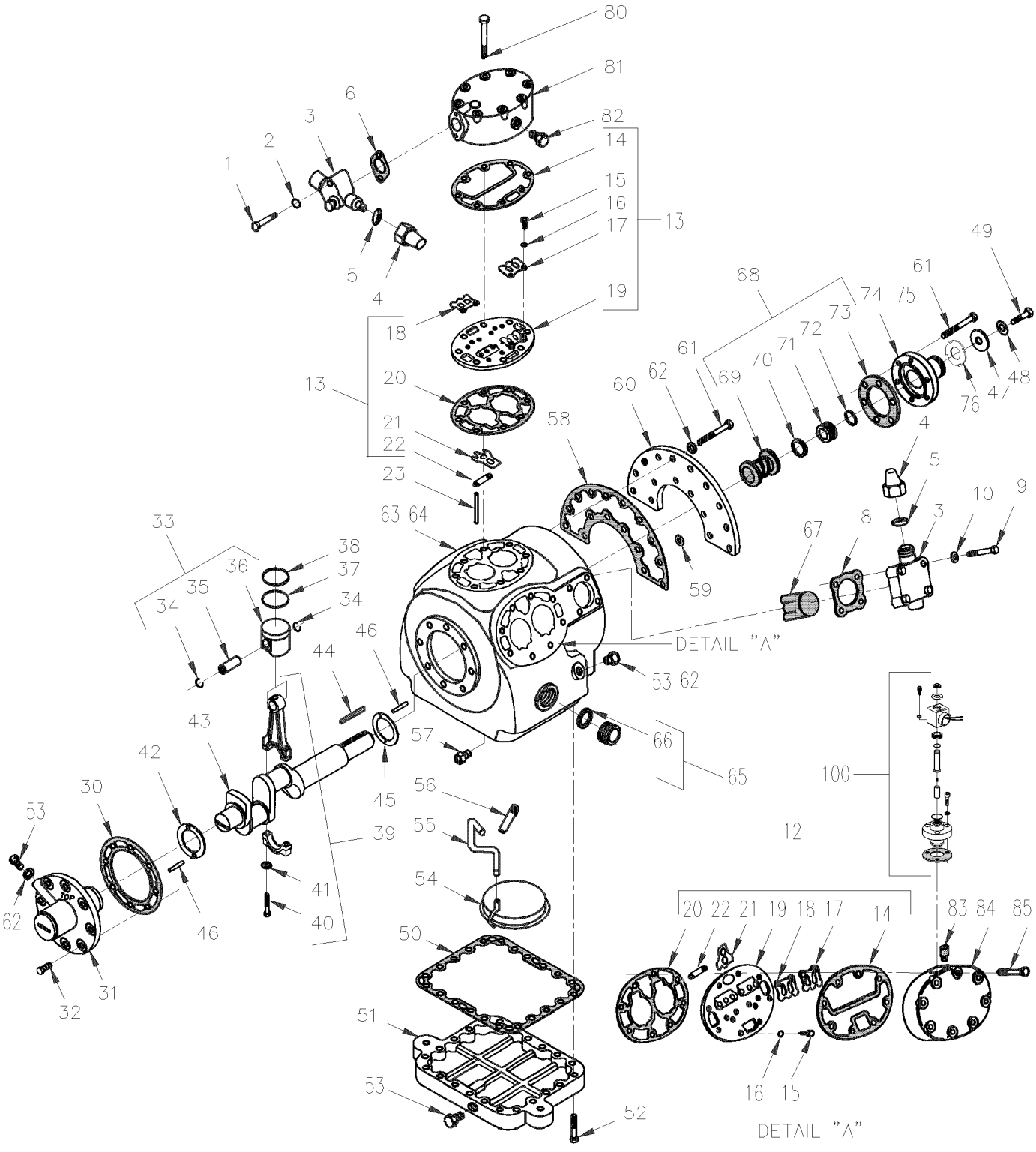

From Y-7046 Up to 6-8795	DATE: 01/2014	PAGE: Y2-2250-00

A/C COMPRESSOR ASSY 05G - THREE PORT

ITEM	PART	DESCRIPTION	XL45	MTH40	MTH45	MTH45S	NOTE
NS	950298D	A/C COMPRESSOR ASSY / W/41 C.F.M. / REMAN / W/O OIL & ACCESSORIES					
NS							
1	870877	. SCREW CAP HEX 5/16-18x2 G5 ZP	2				
2	870750	. GASKET	2				
3	Y2-2245-00	**. A/C COMPRESSOR 05G - INSTALLATION**					
4	870446	. . CAP SEAL	1				
5	870752	. . . GASKET, CAP SEAL / REPLACED BY: 870446	1				
6	870753	. GASKET / DISCHARGE VALVE	1				
8	870754	. GASKET / SUCTION VALVE	1				
9	870755	. SCREW CAP HEX 1/2-13x2 1/2 G5 ZP	4				
10	870756	. GASKET	4				
12	950325	. VALVE PLATE ASSY / SIDE BANK	4				
12	870800	. . CHECK VALVE ASSY / UNLOADER	2				
13	950324	. VALVE PLATE ASSY / CENTER BANK	1				
14	870760	. . GASKET, CENTER CYLINDER HEAD	1				
15	870761	. . BOLT ALLEN 1/4-28 X 3/8"	4				
16	500473	. . WASHER LO SPT .262x.489x.062 ZP	4				
17	870762	. . VALVE STOP DISCHARGE	2				
18	870763	. . VALVE DISCHARGE	2				
19	N.S.S.	. . PLATE VALVE	1				1
20	870764	. . GASKET, VALVE PLATE	1				
21	950276	. . VALVE SUCTION	2				
22	870766	. . SPRING / SUCTION VALVE	2				
23	870767	. PIN DOWEL VALVE PLATE	4				
30	870771	. GASKET / OIL PUMP	1				
31	950286	. OIL PUMP ASSY / (LOW PROFIL)	1				
32	500192	. SCREW CAP HEX 3/8-16x1 1/4 G5 ZP	8				
33	950272	. PISTON & PIN ASSY / STANDARD / W/41 CFM	6				
33	950274	. PISTON & PIN ASSY/.020" OVERSIZE / W/41 CFM	6				
34	N.S.S.	. . RETAINER	2				1
35	N.S.S.	. . PIN	1				1
36	N.S.S.	. . PISTON SINGLE RING	1				1
37	870774	. RING / W/DOUBLE RING PISTON ONLY	6				
38	870775	. RING COMPRESSION / STANDARD	6				
38	870815	. RING COMPRESSION / .020" OVERSIZE	6				
39	870776	. CONNECTING ROD & CLIP ASSY / STANDARD	6				
39	870816	. CONNECTING ROD & CLIP ASSY / .010" OVERSIZE	6				
NS	870767	. . PIN DOWEL VALVE PLATE	2				
40	870777	. . BOLT	2				
41	500440	. . WASHER FL .250x.562x.065 ZP	1				
42	870778	. WASHER THRUST / PUMP END	1				
43	950273	. CRANKSHAFT ASSY / W/41 CFM	1				
44	950140	. KEY CRANKSHAFT / W/HOUSING-MOUNTED CLUTCH	1				
		1) NOT SOLD SEPARATELY					

From Y-7046 Up to 6-8795	DATE: 01/2014	PAGE: Y2-2250-00

A/C COMPRESSOR ASSY 05G - THREE PORT

ITEM	PART	DESCRIPTION	XL45	MTH40	MTH45	MTH45S	NOTE
45	870781	. WASHER THRUST	1				
46	870782	. PIN STRAIGHT 1/8" DIA. X 1/2"	2				
NS	870783	. PIN STRAIGHT .094" X 5/16"	2				
47	870784	. WASHER 13/32" I.D. X 1 1/2" O.D. X 3/16" TH	1				
48	500478	. WASHER LO SPT .380x.683x.094 ZP	1				
49	870785	. SCREW CAP HEX 3/8-24x7/8 G8 ZP	1				
50	870786	. GASKET, BOTTOM PLATE	1				
51	950444	. PLATE BOTTOM	1				
52	500191	. SCREW CAP HEX 3/8-16x1 G5 ZP	22				
NS	950303	. PLUG, O-RING / (CURRENT)	2				
54	870787	. SCREEN ASSY / OIL FILTER	1				
55	870788	. TUBE / OIL SUCTION	1				
56	870789	. VALVE / OIL RELIEF	1				
57	870790	. CHECK VALVE ASSY / OIL RETURN	2				
58	870791	. GASKET, SHAFT END COVER	1				
59	950139	. WASHER	2				
60	870792	. FLANGE	1				
61	500192	. SCREW CAP HEX 3/8-16x1 1/4 G5 ZP	21				
62	950139	. WASHER	21				
63	N.S.S.	. CRANKCASE	1				1
64	950283	. . BEARING, MAIN SEAL END	1				
65	870768	. SIGHT GLASS ASSY	2				
66	870769	. . GASKET, SIGHT GLASS	2				
67	870770	. STRAINER SUCTION	1				
68	950327	. SHAFT SEAL ASSY / W/HOUSING-MOUNTED CLUTCH / REPLACED BY: 950407	1				
69	N.S.S.	. . SEAL / SHAFT	1				1
70	870794	. . RING CARBON	1				
71	N.S.S.	. . RING WEAR	1				1
72	N.S.S.	. . O-RING	1				1
73	870795	. . GASKET, HUB BEARING	1				
74	950092	. HUB HOUSING MOUNT	1				
NS	N.S.S.	. . RING FELT & RETAINING	1				1
76	950093	. NUT / W/HUB MOUNTING ONLY	1				
80	G1091280	. SCREW CAP HEX 3/8-16 X 3"1/4	8				
81	870757	. HEAD CYLINDER / CENTER BANK	1				
82	501303	. PLUG SQUARE HEAD / PIPE FITTING / 1/8NPT-M BR	1				
83	870799	. STRAINER	1				
84	870798	HEAD CYLINDER / UNLOADER	1				
85	502694	SCREW CAP HEX 3/8-16x3 1/4 G5 ZP	1				
100	Y2-2250-15	**A/C ELECTRIC UNLOADER - W/05G COMPRESSOR**	1				
		1) NOT SOLD SEPARATELY					

From Y-7046 Up to 6-8795	DATE: 01/2014	PAGE: Y2-2250-00

A/C COMPRESSOR ASSY 05G - THREE PORT

ITEM	PART	DESCRIPTION	XL45	MTH40	MTH45	MTH45S	NOTE

From 5-8796 Up to 8-9339	DATE: 01/2014	PAGE: Y2-2250-01

A/C COMPRESSOR ASSY 05G - TWIN PORT

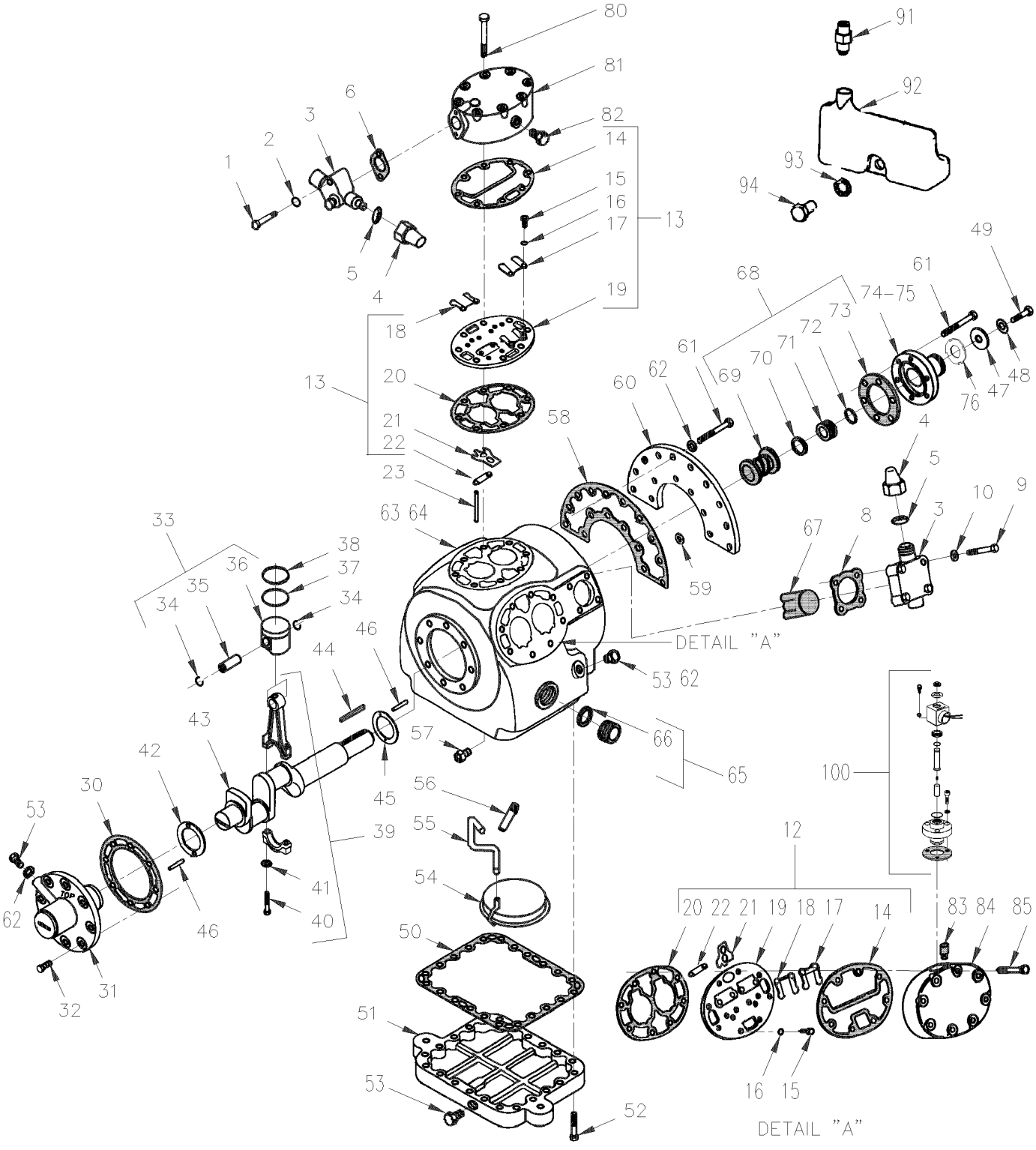

From 5-8796 Up to 8-9339	DATE: 01/2014	PAGE: Y2-2250-01

A/C COMPRESSOR ASSY 05G - TWIN PORT

ITEM	PART	DESCRIPTION	XL45	MTH40	MTH45	MTH45S	NOTE
NS	950401	A/C COMPRESSOR ASSY REBUILT / W/41 C.F.M W/O ACCESSORIES TWIN PORT					
NS							
1	870877	. SCREW CAP HEX 5/16-18x2 G5 ZP	2				
2	870750	. GASKET	2				
3	Y2-2245-00	**. A/C COMPRESSOR 05G - INSTALLATION**					
4	870446	. . CAP SEAL	1				
5	870752	. . . GASKET, CAP SEAL / REPLACED BY: 870446	1				
6	950425	. GASKET / DISCHARGE VALVE / (METAL)	1				
8	950423	. GASKET / SUCTION VALVE / (METAL)	1				
9	870755	. SCREW CAP HEX 1/2-13x2 1/2 G5 ZP	4				
10	870756	. GASKET	4				
12	950415	. VALVE PLATE ASSY / SIDE BANK / W/TWIN PORT ONLY	2				
NS	870800	. . CHECK VALVE ASSY / UNLOADER	2				
13	950414	. VALVE PLATE ASSY / CENTER BANK / W/TWIN PORT ONLY	1				
14	950421	. . GASKET, CYLINDER HEAD / W/TWIN PORT ONLY	1				
15	870761	. . BOLT ALLEN 1/4-28 X 3/8"	4				
16	500473	. . WASHER LO SPT .262x.489x.062 ZP	4				
17	950416	. . VALVE DISCHARGE / W/TWIN PORT ONLY	2				
18	950417	. . BACKER VALVE DISCHARGE / W/TWIN PORT ONLY	2				
19	N.S.S.	. . PLATE VALVE	1				1
20	950420	. . GASKET, VALVE PLATE / W/TWIN PORT ONLY	1				
21	950418	. . VALVE SUCTION / W/TWIN PORT ONLY	2				
22	950419	. . SPRING / SUCTION VALVE / W/TWIN PORT ONLY	2				
23	870767	. PIN DOWEL VALVE PLATE	4				
30	870771	. GASKET / OIL PUMP	1				
31	950403	. OIL PUMP ASSY / W/TWIN PORT ONLY	1				
32	500192	. SCREW CAP HEX 3/8-16x1 1/4 G5 ZP	8				
33	950272	. PISTON & PIN ASSY / STANDARD / W/41 CFM	6				
33	950274	. PISTON & PIN ASSY/.020" OVERSIZE / W/41 CFM	6				
34	N.S.S.	. . RETAINER	2				1
35	N.S.S.	. . PIN	1				1
36	N.S.S.	. . PISTON SINGLE RING	1				1
37	870774	. RING / W/DOUBLE RING PISTON ONLY	6				
38	870775	. RING COMPRESSION / STANDARD	6				
38	870815	. RING COMPRESSION / .020" OVERSIZE	6				
39	870776	. CONNECTING ROD & CLIP ASSY / STANDARD	6				
39	870816	. CONNECTING ROD & CLIP ASSY / .010" OVERSIZE	6				
NS	870767	. . PIN DOWEL VALVE PLATE	2				
40	870777	. . BOLT	2				
41	500440	. . WASHER FL .250x.562x.065 ZP	1				
42	870778	. WASHER THRUST / PUMP END	1				
		1) NOT SOLD SEPARATELY					

From 5-8796 Up to 8-9339	DATE: 01/2014	PAGE: Y2-2250-01

A/C COMPRESSOR ASSY 05G - TWIN PORT

ITEM	PART	DESCRIPTION	XL45	MTH40	MTH45	MTH45S	NOTE
43	950406	. CRANKSHAFT ASSY / W/41 CFM / W/TWIN PORT ONLY	1				
44	950140	. KEY CRANKSHAFT / W/HOUSING-MOUNTED CLUTCH	1				
45	870781	. WASHER THRUST	1				
46	870782	. PIN STRAIGHT 1/8" DIA. X 1/2"	2				
NS	870783	. PIN STRAIGHT .094" X 5/16"	2				
47	870784	. WASHER 13/32" I.D. X 1 1/2" O.D. X 3/16" TH	1				
48	500478	. WASHER LO SPT .380x.683x.094 ZP	1				
49	870785	. SCREW CAP HEX 3/8-24x7/8 G8 ZP	1				
50	950402	. GASKET, BOTTOM PLATE / (METAL)	1				
51	950444	. PLATE BOTTOM	1				
52	500191	. SCREW CAP HEX 3/8-16x1 G5 ZP	22				
NS	950303	. PLUG, O-RING / (CURRENT)	2				
54	870787	. SCREEN ASSY / OIL FILTER	1				
55	870788	. TUBE / OIL SUCTION	1				
56	870789	. VALVE / OIL RELIEF	1				
57	870790	. CHECK VALVE ASSY / OIL RETURN	2				
58	950412	. GASKET, SHAFT END COVER / W/TWIN PORT ONLY	1				
59	950139	. WASHER	2				
60	870792	. FLANGE	1				
61	500192	. SCREW CAP HEX 3/8-16x1 1/4 G5 ZP	21				
62	950139	. WASHER	21				
63	N.S.S.	. CRANKCASE	1				1
64	950283	. . BEARING, MAIN SEAL END	1				
65	870768	. SIGHT GLASS ASSY	2				
66	870769	. . GASKET, SIGHT GLASS	2				
67	870770	. STRAINER SUCTION	1				
68	950407	. SHAFT SEAL ASSY / W/HOUSING-MOUNTED CLUTCH / W/TWIN PORT ONLY	1				
69	N.S.S.	. . SEAL / SHAFT	1				1
70	870794	. . RING CARBON	1				
71	N.S.S.	. . RING WEAR	1				1
72	N.S.S.	. . O-RING	1				1
73	870795	. . GASKET, HUB BEARING	1				
74	950408	. HUB HOUSING MOUNT W/GROOVE FOR TWIN PORT	1				
. NS	950409	. . SEAL, LIP, SHAFT SEAL / W/TWIN PORT ONLY	1				
. NS	870795	. . GASKET, HUB BEARING	1				
75	950409	. SEAL, LIP, SHAFT SEAL / W/TWIN PORT ONLY	1				
76	950093	. NUT / W/HUB MOUNTING ONLY	1				
80	G1091280	. SCREW CAP HEX 3/8-16 X 3"1/4	8				
81	870757	. HEAD CYLINDER / CENTER BANK	1				
82	501303	. PLUG SQUARE HEAD / PIPE FITTING / 1/8NPT-M BR	1				
83	870799	. STRAINER	1				
		1) NOT SOLD SEPARATELY					

From 5-8796 Up to 8-9339	DATE: 01/2014	PAGE: Y2-2250-01

A/C COMPRESSOR ASSY 05G - TWIN PORT

ITEM	PART	DESCRIPTION	XL45	MTH40	MTH45	MTH45S	NOTE
84	950426	HEAD CYLINDER / UNLOADER / W/TWIN PORT ONLY	1				
85	502694	SCREW CAP HEX 3/8-16x3 1/4 G5 ZP	1				
91	950410	ACCESS VALVE / W/TWIN PORT ONLY	1				
92	950411	RESERVOIR / W/TWIN PORT ONLY	1				
93	500856	WASHER LO INT .384x.692x.040 ZP	1				
94	Call Order Desk	SCREW CAP HEX 3/8-16 X 3/4 G8	1				P
100	Y2-2250-15	**A/C ELECTRIC UNLOADER - W/05G COMPRESSOR**	1				
		P) CALL ORDER DESK FOR SPECIFIC APPLICATION (V.I.N.)					

From Y-7046 Up to 8-9339	DATE: 01/2014	PAGE: Y2-2250-15
A/C ELECTRIC UNLOADER - W/05G COMPRESSOR		

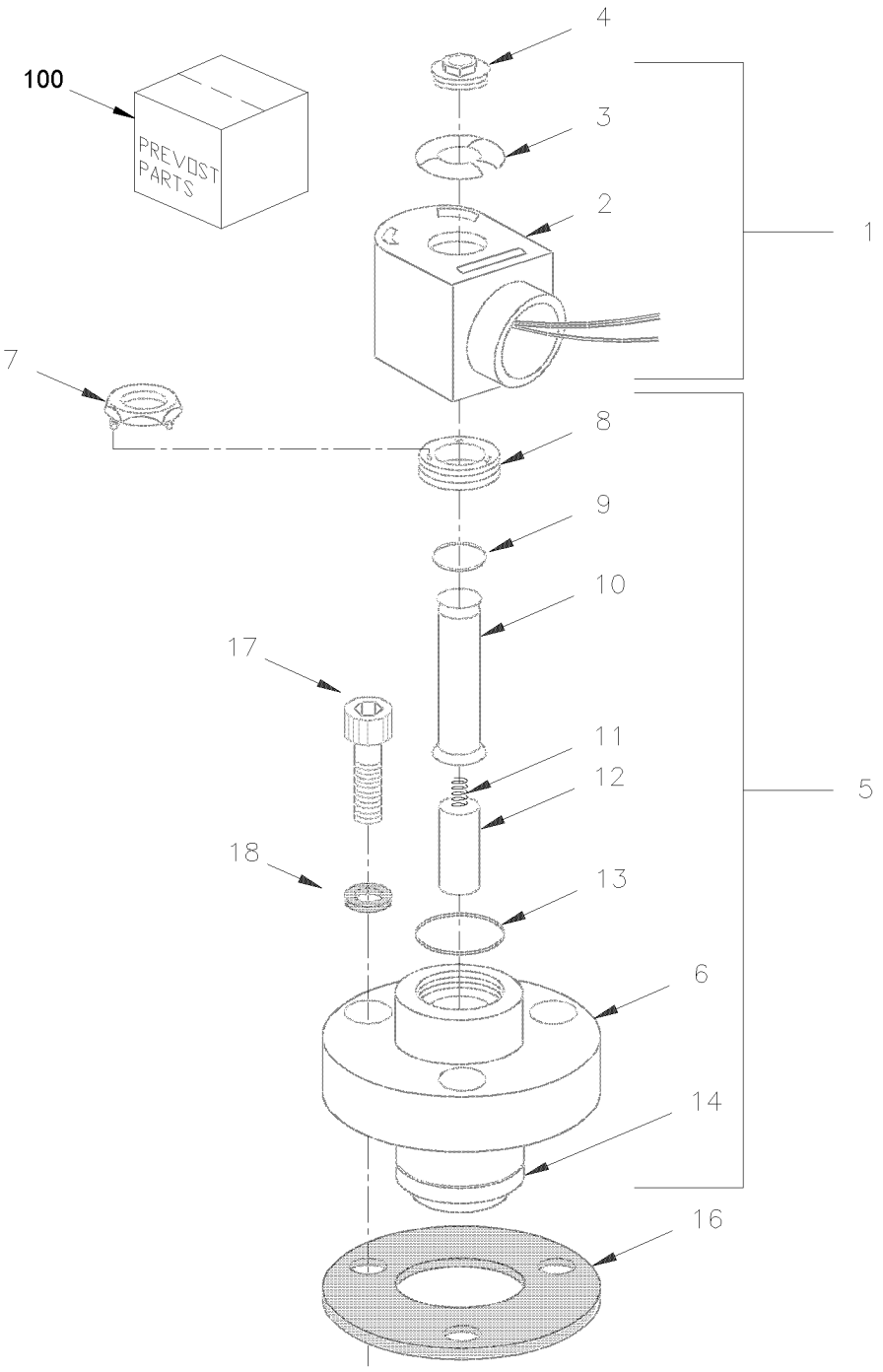

From Y-7046 Up to 8-9339	DATE: 01/2014	PAGE: Y2-2250-15

A/C ELECTRIC UNLOADER - W/05G COMPRESSOR

ITEM	PART	DESCRIPTION	XL45	MTH40	MTH45	MTH45S	NOTE
	063969	COIL ASSY W/CONNECTOR	2	2	2	2	
1	950096	. COIL 24V	1	1	1	1	
2	N.S.S.	. . COIL	1	1	1	1	1
3	N.S.S.	. . NAMEPLATE / VOLTAGE	1	1	1	1	1
4	N.S.S.	. . CAP, SNAP	1	1	1	1	1
4	N.S.S.	. . CAP, SNAP	1	1	1	1	1
NS	561566	. . CONNECTOR / WEATHER PACK / PH 2C / BLACK / PED 12010973	1	1	1	1	
NS	561578	. . SOCKET TERMINAL / 16-14 / PED 12010182	2	2	2	2	
NS	561786	. . CABLE SEAL / GRAY / PED 12010293	2	2	2	2	
5	950095	BODY / UNLOADER VALVE	1	1	1	1	
6	N.S.S.	. BODY, VALVE	1	1	1	1	1
7	N.S.S.	. NUT / FOR REMOVING OR REPLACING TUBE COLLAR	1	1	1	1	1
8	N.S.S.	. COLLAR / TUBE	1	1	1	1	1
9	N.S.S.	. O-RING	1	1	1	1	1
10	N.S.S.	. TUBE	1	1	1	1	1
11	N.S.S.	. SPRING, PLUNGER	1	1	1	1	1
12	N.S.S.	. PLUNGER	1	1	1	1	1
13	N.S.S.	. O-RING	1	1	1	1	1
14	870818	. RING, PISTON	1	1	1	1	
16	870820	GASKET, UNLOADER	1	1	1	1	
17	5001415	SCREW CAP HEXS 1/4-28x3/4 ZP	3	3	3	3	
18	950305	GASKET / W/ALLEN BOLT	3	3	3	3	
100	950413	KIT, STEM REPAIR	1	1	1	1	B
		1) NOT SOLD SEPARATELY					
		B) INCLUDE ITEMS # 7, 10, 11,12 & 13					

From Y-7046 Up to 8-9339	DATE: 01/2014	PAGE: Y2-2251-00

GASKET - 05G A/C COMPRESSOR

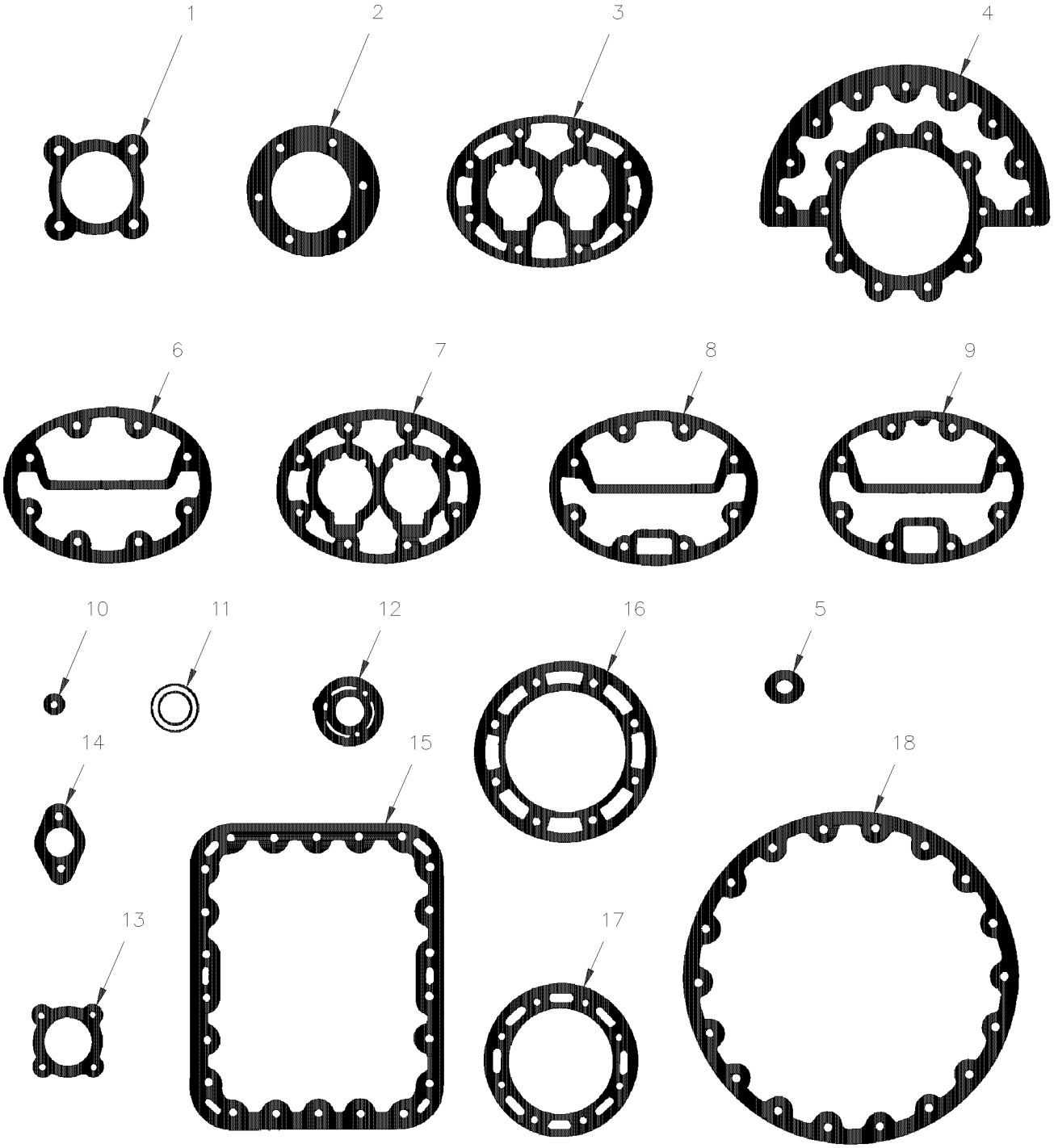

From Y-7046 Up to 8-9339	DATE: 01/2014	PAGE: Y2-2251-00

GASKET - 05G A/C COMPRESSOR

ITEM	PART	DESCRIPTION	XL45	MTH40	MTH45	MTH45S	NOTE
	870829	KIT GASKET	1	1	1	1	
1	870754	. GASKET / SUCTION VALVE	1	1	1	1	
2	870795	. GASKET, HUB BEARING	1	1	1	1	
3	870764	. GASKET, VALVE PLATE	3	3	3	3	
4	N.S.S.	. GASKET, END FLANGE	1	1	1	1	1
5	870791	. GASKET, SHAFT END COVER	2	2	2	2	
6	N.S.S.	. GASKET, LEFT & RIGHT CYLINDER HEAD - STANDARDS	2	2	2	2	1
7	N.S.S.	. GASKET, VALVE PLATE	3	3	3	3	1
8	870760	. GASKET, CENTER CYLINDER HEAD	1	1	1	1	
9	870797	. GASKET, L.H & R.H CYLINDER HEAD	2	2	2	2	
10	N.S.S.	. GASKET, OIL SUPPLY TUBE	1	1	1	1	1
11	870769	. GASKET, SIGHT GLASS	2	2	2	2	
12	870820	. GASKET, UNLOADER	2	2	2	2	
13	N.S.S.	. GASKET, OIL PUMP COVER	1	1	1	1	1
14	870753	. GASKET / DISCHARGE VALVE	2	2	2	2	
15	870786	. GASKET, BOTTOM PLATE	1	1	1	1	
16	870771	. GASKET / OIL PUMP	1	1	1	1	
17	N.S.S.	. GASKET, SHAFT	1	1	1	1	1
18	N.S.S.	. GASKET, MOTOR END COVER	1	1	1	1	1
NS	870791	. GASKET, SHAFT END COVER	1	1	1	1	
		1) NOT SOLD SEPARATELY					

From Y-7046 Up to 6-8906	DATE: 01/2014	PAGE: Y2-2255-00

CONDENSOR - INSTALLATION LARGE SYSTEM

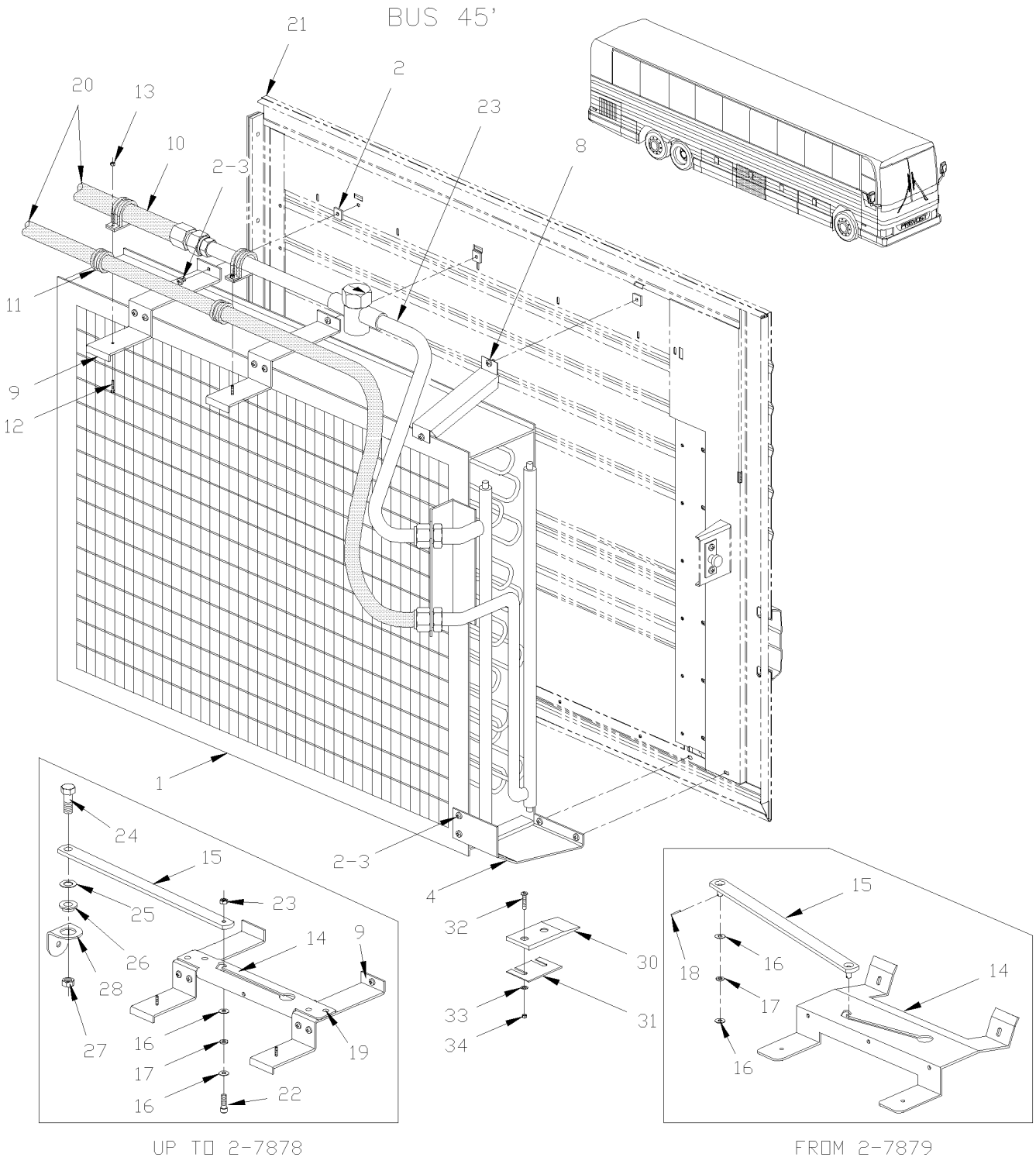

From Y-7046 Up to 6-8906	DATE: 01/2014	PAGE: Y2-2255-00

CONDENSOR - INSTALLATION LARGE SYSTEM

ITEM	PART	DESCRIPTION	XL45	MTH40	MTH45	MTH45S	NOTE
1	950259	CONDENSOR ALUMINUM	1				
1	453279	CORE, ALUMINUM / W/BLACK E-COAT	1				
1	950260	CONDENSOR COPPER	1				
1	453278	CORE, COPPER / W/BLACK E-COAT	1				
NS	370357	DECAL "CLEAN REGULARY"	1				
2	481249	NUT Up to 2-7753	37				
2	483107	SUPPORT / HOSE & STRAP RETAINER From 2-7754	2				
3	5001087	SCREW TP BDG PH #10x1/2 SS Up to 2-7753	37				
3	5001181	SCREW CAP HEX M6-1.0x12 SS From 2-7754	37				
NS	500411	WASHER FL .260x.697x.050 SS From 2-7754	37				
4	482322	SUPPORT	1				
8	480908	REINFORCEMENT, UPPER	1				
9	450970	SUPPORT / HOSE CLAMP Up to 2-7752	2				
9	483107	SUPPORT / HOSE & STRAP RETAINER From 2-7753 Up to 2-7878	2				
9	453607	SUPPORT / HOSE CLAMP Up to 2-7878	2				A
10	952637	CLAMP / 1"1/16 I.D.	2				
11	952633	CLAMP / 7/8" I.D.	2				
11	952641	CLAMP / 1 5/16" I.D.	2				
12	500603	SCREW CAP HEX SLT #10-24x2 ZP	2				
13	500767	NUT HEX #10-24 ZP	2				
14	288141	ARM GUIDE RETAINER Up to 2-7878	1				
14	483684	SUPPORT & ARM GUIDE RETAINER From 2-7879	1				
15	283772	ARM RETAINING Up to 2-7878	1				
15	288811	ARM DOOR RETAINER From 2-7879	1				
16	5001448	WASHER FL .343x.875x.062 SS18-8 From 2-7879	1				
17	502768	WASHER FL .312x.625x.125 NEO From 2-7879	1				
18	502094	PIN, COTTER 1/16 x 1/2 SS From 2-7879	1				
19	500260	SCREW TC FL PH #8-32x3/4 BK Up to 2-7878	1				
20	Y2-2270-00	**RECEIVER TANK & FILTER DRYER**					
21	Y2-1863-00	**CONDENSOR DOOR ASSY - BUS**					
22	502625	SCREW SHR HEXS 5/16x3/8 {1/4-20 Up to 2-7878	1				
23	500771	NUT HEX 1/4-20 SS Up to 2-7878	1				
24	500046	SCREW CAP HEX 3/8-24x1 G5 ZP Up to 2-7878	1				
25	500270	WASHER FL .406x1.000x.063 SS Up to 2-7878	1				
26	507254	BUSHING NYLINER W/SHOULDER Up to 2-7878	1				
27	500704	NUT HEX STO 3/8-24 ZP Up to 2-7878	1				
28	288142	SUPPORT Up to 2-7878	1				
30	482328	BLOCK SUPPORT	1				
31	482329	SHIM	AR				
32	500346	SCREW MA FL PH 1/4-20x1 SS EMN	2				
33	500473	WASHER LO SPT .262x.489x.062 ZP	2				
34	500771	NUT HEX 1/4-20 SS	2				
		A) COACH EQUIPPED WITH AUXILIARY SUPPORT					

From Y-7046 Up to 3-8164	DATE: 01/2014	PAGE: Y2-2255-10

CONDENSOR - INSTALLATION SMALL SYSTEM

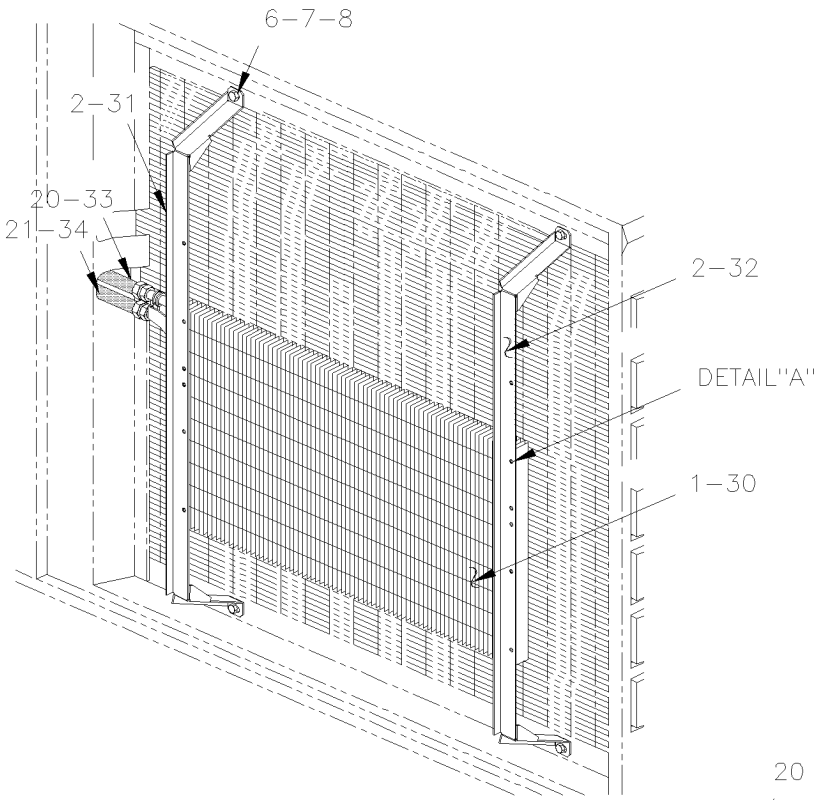

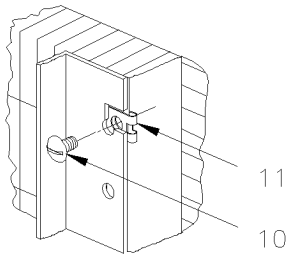

DETAIL"A"

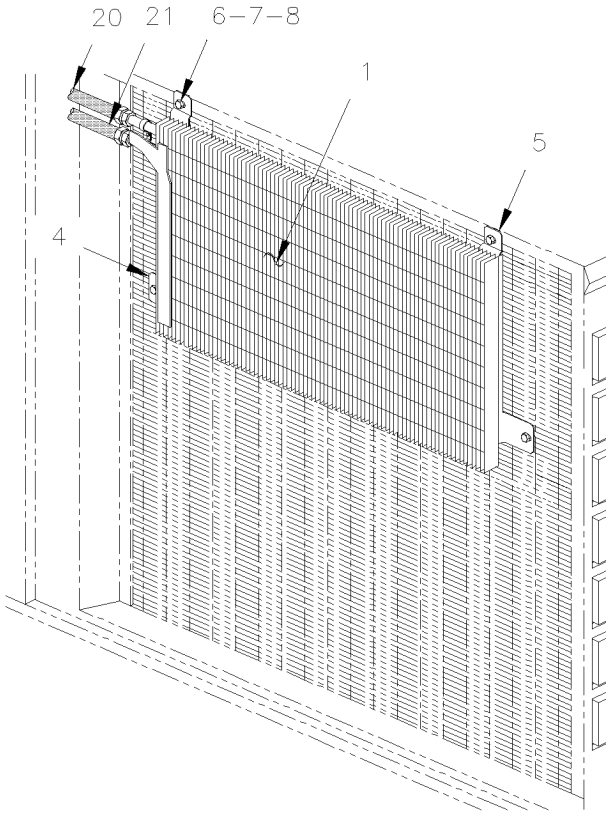

From Y-7046 Up to 3-8164	DATE: 01/2014	PAGE: Y2-2255-10

CONDENSOR - INSTALLATION SMALL SYSTEM

ITEM	PART	DESCRIPTION	XL45	MTH40	MTH45	MTH45S	NOTE
1	950018	CONDENSOR COIL Up to Y-7367	1	1	1	1	
1	950335	CONDENSER COIL From Y-7368 Up to 3-8164		1	1	1	
1	950336	CONDENSOR COIL From Y-7368 Up to 3-8164	1				
2	052258	SUPPORT Up to Y-7142 / REPLACED BY: 052382	2				
2	052382	SUPPORT From Y-7143	2				
4	453138	SUPPORT FORWARD Up to Y-7142		1	1	1	
4	453586	SUPPORT FORWARD From Y-7143		1	1	1	
5	453181	SUPPORT BACKWARD Up to Y-7142		1	1	1	
5	453587	SUPPORT BACKWARD From Y-7143		1	1	1	
6	500179	SCREW CAP HEX 5/16-18x3/4 G5 ZP	4	4	4	4	
7	502583	WASHER LO SERR 8.15x22.3x1.0 ZP / REPLACED BY: 502856	4	4	4	4	
8	500985	WASHER FL .343x.875x.125 ZP	4	4	4	4	
10	5001087	SCREW TP BDG PH #10x1/2 SS	6	6	6	6	
11	500981	NUT SPR U #10-23/32x5/8	6	6	6	6	
20	453450	HOSE ASSY /<>COND INLET & HI-SIDE / W/R-134a/ #8 1800MM	1				
. NS	507343	. O-RING / ORS FITTING /	2				
20	455237	HOSE ASSY /<>COND INLET & HI-SIDE / W/R-134a/ #8 1800MM	1				S
. NS	507343	. O-RING / ORS FITTING /	2				
20	453471	HOSE ASSY /<>COND INLET & HI-SIDE / W/R-134a/ #8 4750MM / REPLACED BY: 455242		1		1	
. NS	507343	. O-RING / ORS FITTING /		2		2	
20	455242	HOSE ASSY /<>COND INLET & HI-SIDE / W/R-134a/ #8 4750MM		1		1	S
. NS	507343	. O-RING / ORS FITTING /		2		2	
20	453169	HOSE ASSY /<>COND INLET & HI-SIDE / W/R-134a/ #8 860MM / REPLACED BY: 455190			1		
. NS	507343	. O-RING / ORS FITTING /			2		
20	455190	HOSE ASSY /<>COND INLET & HI-SIDE / W/R-134a/ #8 860MM			1		S
. NS	507343	. O-RING / ORS FITTING /			2		
NS	505181	. COIL PROTECTOR / PLASTIC / #8	AR	AR	AR	AR	
NS	560479	CLAMP / 3/8" I.D. / REPLACED BY: 952625	1	1	1	1	
21	453170	HOSE ASSY / <> CONDENSER & RECEIVER / #6 1100MM / REPLACED BY: 455191			1		
. NS	507278	. O-RING / ORS FITTING /			2		
21	455191	HOSE ASSY / <> CONDENSER & RECEIVER / #6 1100MM			1		S
. NS	507278	. O-RING / ORS FITTING /			2		
		S) SERVICE					

From Y-7046 Up to 3-8164	DATE: 01/2014	PAGE: Y2-2255-10

CONDENSOR - INSTALLATION SMALL SYSTEM

ITEM	PART	DESCRIPTION	XL45	MTH40	MTH45	MTH45S	NOTE
21	453474	HOSE ASSY / <> CONDENSER & RECEIVER / #6 3900MM / REPLACED BY: 455245		1		1	
. NS	507278	. O-RING / ORS FITTING /		2		2	
21	455245	HOSE ASSY / <> CONDENSER & RECEIVER / #6 3900MM		1		1	S
. NS	507278	. O-RING / ORS FITTING /		2		2	
21	453449	HOSE ASSY / <> CONDENSER & RECEIVER / #6 2370MM	1				
. NS	507278	. O-RING / ORS FITTING /	2				
21	455236	HOSE ASSY / <> CONDENSER & RECEIVER / #6 2370MM	1				S
. NS	507278	. O-RING / ORS FITTING /	2				
NS	560480	CLAMP / 1/2" I.D. / REPLACED BY: 952627	1	1	1	1	
NS	500638	SCREW TP BDG PH #8x1/2 ZP	2	2	2	2	
21	052252	CLOSING RUBBER PAD / 85MM x 110MM x 1/16"	1	1	1	1	
		NEXT FOLLOWING ITEMS ARE RELATED					
		WITH RETROFIT W/"SELTEC" COMPRESSOR					
30	950381	CONDENSOR COIL	1				E
30	950467	CONDENSOR COIL E-COAT LT-8	1				E
31	454230	SUPPORT FORWARD Up to 3-8164		1	1		A,D
32	454133	SUPPORT / BACKWARD Up to 3-8164	1			1	B,C
32	454229	SUPPORT BACKWARD Up to 3-8164		1	1		A,D
33	454134	SUPPORT / FORWARD Up to 3-8164	1			1	B,C
33	453900	HOSE ASSY / #8 685MM Up to 3-8164			1		A
. NS	507343	. O-RING / ORS FITTING / Up to 3-8164			2		
33	455273	HOSE ASSY / #8 685MM Up to 3-8164			1		A,S
. NS	507343	. O-RING / ORS FITTING / Up to 3-8164			2		
33	454142	HOSE ASSY / #8 1215MM Up to 3-8164		1		1	F
. NS	507343	. O-RING / ORS FITTING / Up to 3-8164		2		2	
33	455291	HOSE ASSY / #8 1215MM Up to 3-8164		1		1	F,S
. NS	507343	. O-RING / ORS FITTING / Up to 3-8164		2		2	
34	454109	HOSE ASSY / <> VALVE & EVAPORATOR / #6 205MM Up to 3-8164			1		A
. NS	507278	. O-RING / ORS FITTING / Up to 3-8164			2		
		A) USE ONLY WITH RETROFIT KIT #453897 W /					
		MTH-45					
		B) USE ONLY WITH RETROFIT KIT #454140 W / BUS					
		C) USE ONLY WITH RETROFIT KIT #454223 W /					
		MTH-45S					
		D) USE ONLY WITH RETROFIT KIT #454222 W /					
		MTH-40					
		E) USE WITH ALL RETROFIT KITS					
		F) USE ONLY WITH RETROFIT KIT #454140, #454222 &					
		#454223					
		S) SERVICE					

From Y-7046 Up to 3-8164	DATE: 01/2014	PAGE: Y2-2255-10

CONDENSOR - INSTALLATION SMALL SYSTEM

ITEM	PART	DESCRIPTION	XL45	MTH40	MTH45	MTH45S	NOTE
34	455290	HOSE ASSY / <> VALVE & EVAPORATOR / #6 205MM Up to 3-8164			1		A,S
. NS	507278	. O-RING / ORS FITTING / Up to 3-8164			2		
34	454141	HOSE ASSY / #6 375MM Up to 3-8164		1		1	F
NS	453897	KIT, RETROFIT "SELTEC" COMPRESSOR /W/W5 ONLY	1				
. NS	IS-03152	. SEE INSTRUCTION SHEET	1				
NS	454140	KIT, RETROFIT "SELTEC" COMPRESSOR / W/A/C IN PARCEL RACK ONLY Up to 3-8164	1				
. NS	IS-03045	. SEE INSTRUCTION SHEET Up to 3-8164	1				
NS	454222	KIT, RETROFIT "SELTEC" COMPRESSOR / W/MTH 40' Up to 3-8164		1			
. NS	IS-04009	. SEE INSTRUCTION SHEET Up to 3-8164		1			
NS	454223	KIT, RETROFIT "SELTEC" COMPRESSOR / W/MTH 45' Up to 3-8164				1	
. NS	IS-04009	. SEE INSTRUCTION SHEET Up to 3-8164				1	
NS							
		A) USE ONLY WITH RETROFIT KIT #453897 W /					
		MTH-45					
		F) USE ONLY WITH RETROFIT KIT #454140, #454222 &					
		#454223					
		S) SERVICE					

From 4-8165 Up to 8-9339	DATE: 01/2014	PAGE: Y2-2255-11
CONDENSOR - INSTALLATION SMALL SYSTEM		

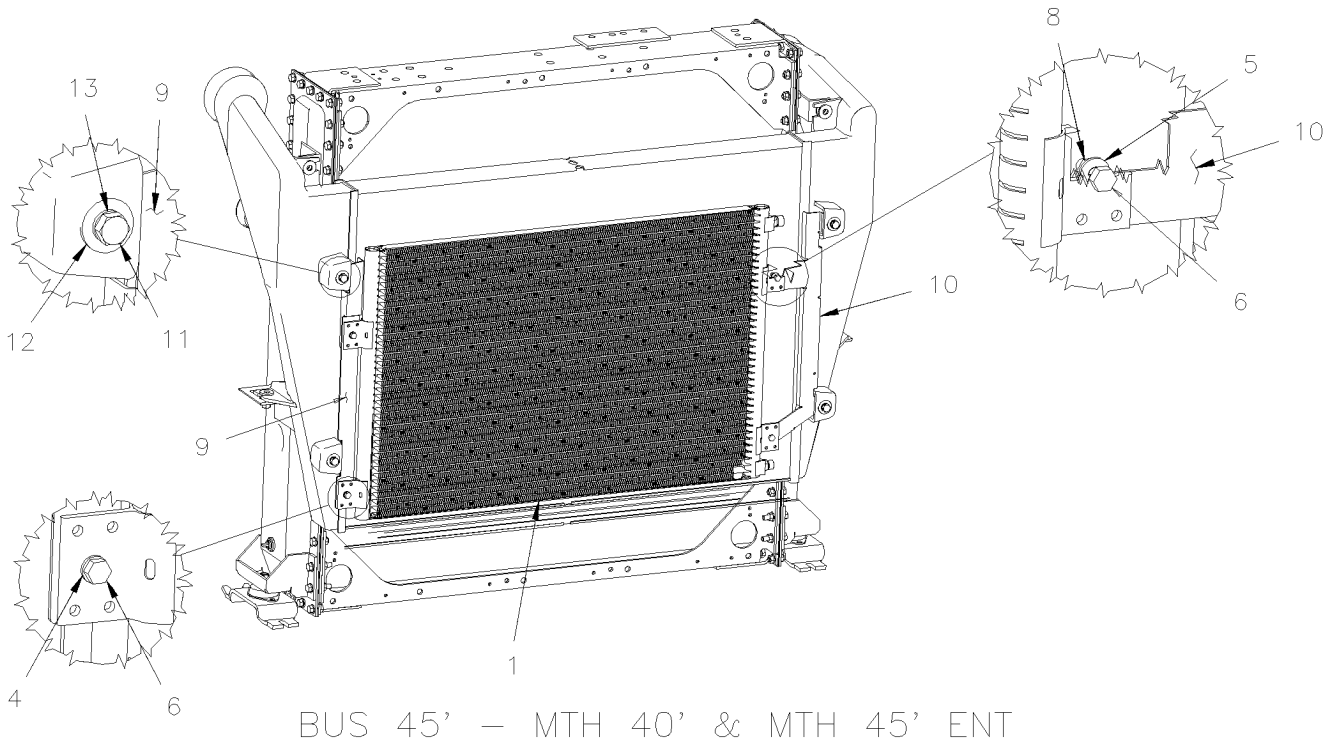

BUS 45' – MTH 40' & MTH 45' ENT

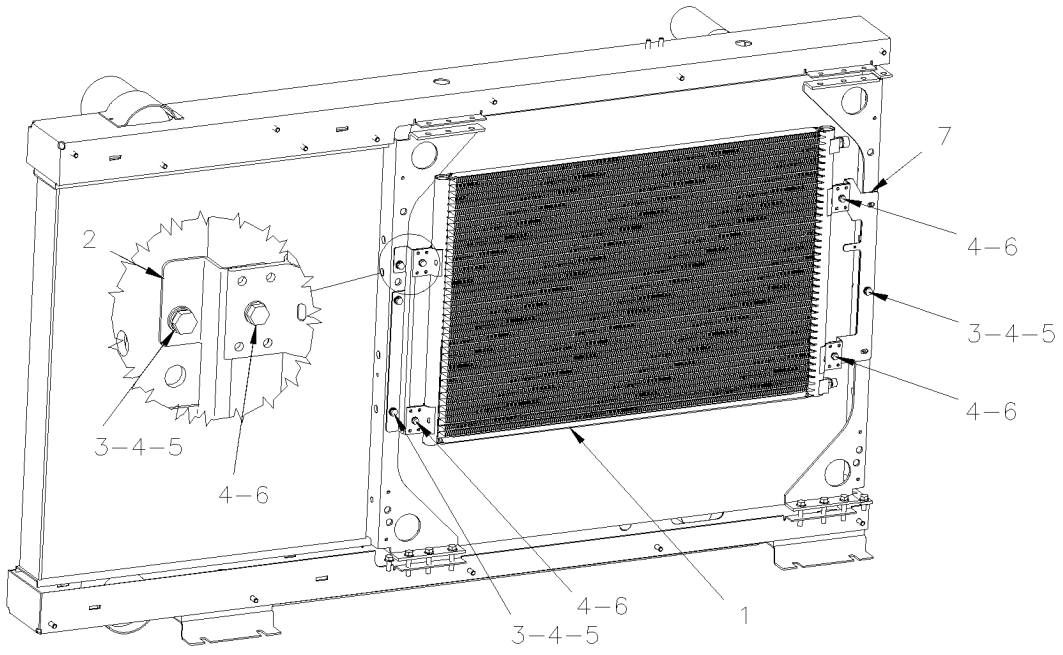

MTH 45'

From 4-8165 Up to 8-9339	DATE: 01/2014	PAGE: Y2-2255-11

CONDENSOR - INSTALLATION SMALL SYSTEM

ITEM	PART	DESCRIPTION	XL45	MTH40	MTH45	MTH45S	NOTE
1	950381	CONDENSOR COIL			1		
1	950467	CONDENSOR COIL E-COAT LT-8			1		
2	454050	SUPPORT FORWARD			1		
3	502848	SCREW TC CAP HEX 1/4-20x3/4 ZG603			AR		
4	955920	WASHER LO SPT 6.5x11.5x1.6 ZP			AR		
5	500877	WASHER FL .250x.562x.065 ZG603			AR		
6	502830	SCREW CAP HEX M6-1.0x20 G8.8 ZG603			AR		
7	454051	SUPPORT BACKWARD			1		
8	502681	NUT HEX NYRT M6-1.0 ZG603	2	2		2	
9	454047	SUPPORT FORWARD	1	1		1	
10	454048	SUPPORT BACKWARD	1	1		1	
11	502862	SCREW CAP HEX M8-1.25x20 G8.8 ZG603	4	4		4	
12	500381	WASHER FL 8.4x25.0x2.0 ZG603	4	4		4	
13	500942	WASHER LO SPT .317x.586x.078 ZG603	4	4		4	

From Y-7046 Up to 8-9339	DATE: 01/2014	PAGE: Y2-2255-50

CONDENSOR - INSTALLATION LARGE SYSTEM

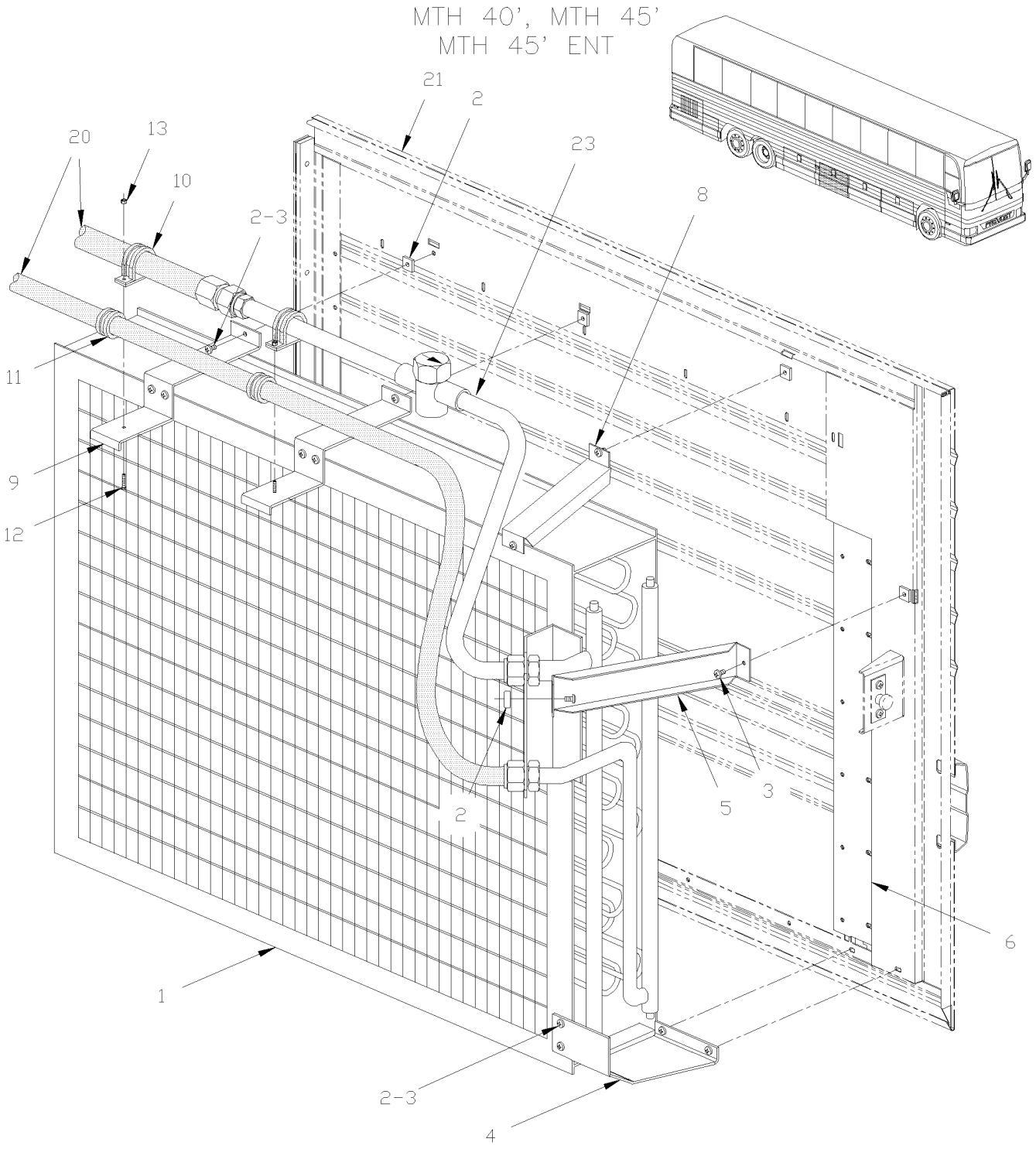

From Y-7046 Up to 8-9339	DATE: 01/2014	PAGE: Y2-2255-50

CONDENSOR - INSTALLATION LARGE SYSTEM

ITEM	PART	DESCRIPTION	XL45	MTH40	MTH45	MTH45S	NOTE
1	870654	CONDENSOR ALUMINUM 36 1/2" x 28" x 6"		1	1	1	
1	453277	CONDENSOR ALUMINUM / W/BLACK E-COAT 36 1/2" x 28" x 6"		1	1	1	
1	870729	CONDENSOR COPPER 36 1/2" x 28" x 6"		1	1	1	
1	453276	CONDENSOR COPPER / W/BLACK E-COAT 36 1/2" x 28" x 6"		1	1	1	
NS	370357	DECAL "CLEAN REGULARY"		1	1	1	
2	481249	NUT		39	39	39	
3	500524	SCREW TP PAN PH #12x5/8 SS		39	39	39	
4	480909	REINFORCEMENT, LOWER		1	1	1	
5	481054	REINFORCEMENT, SIDE		1	1	1	
6	480912	REINFORCEMENT, VERTICAL		1	1	1	
8	480908	REINFORCEMENT, UPPER		1	1	1	
9	450970	SUPPORT / HOSE CLAMP		2	2	2	
10	504458	CLAMP / 1 5/8" I.D.		2	2	2	
11	560872	CLAMP / 1"1/16 I.D. / REPLACED BY: 952637		2	2	2	
NS	501801	O-RING / ORS FITTING / #8 NEO		1	1	1	A
NS	507169	O-RING 1/2 I.D.		1	1	1	B
NS	501802	O-RING / ORS FITTING / #16 NEO		2	2	2	A
12	500603	SCREW CAP HEX SLT #10-24x2 ZP		2	2	2	
13	500767	NUT HEX #10-24 ZP		2	2	2	
20	Y2-2222-10	**A/C & HEATING LINE FRONT SECTION**					
21	Y2-1863-51	**CONDENSOR DOOR ASSY**					
21	Y2-1863-50	**CONDENSOR DOOR ASSY**					
23	Y2-2270-00	**RECEIVER TANK & FILTER DRYER**					
		A) <> HOSE & CONDENSER					
		B) TO HOSE #11 / <> HOSE & RECEIVER TANK					

From Y-7046 Up to 8-9339	DATE: 01/2014	PAGE: Y2-2260-05
CONDENSOR FAN - INSTALLATION		

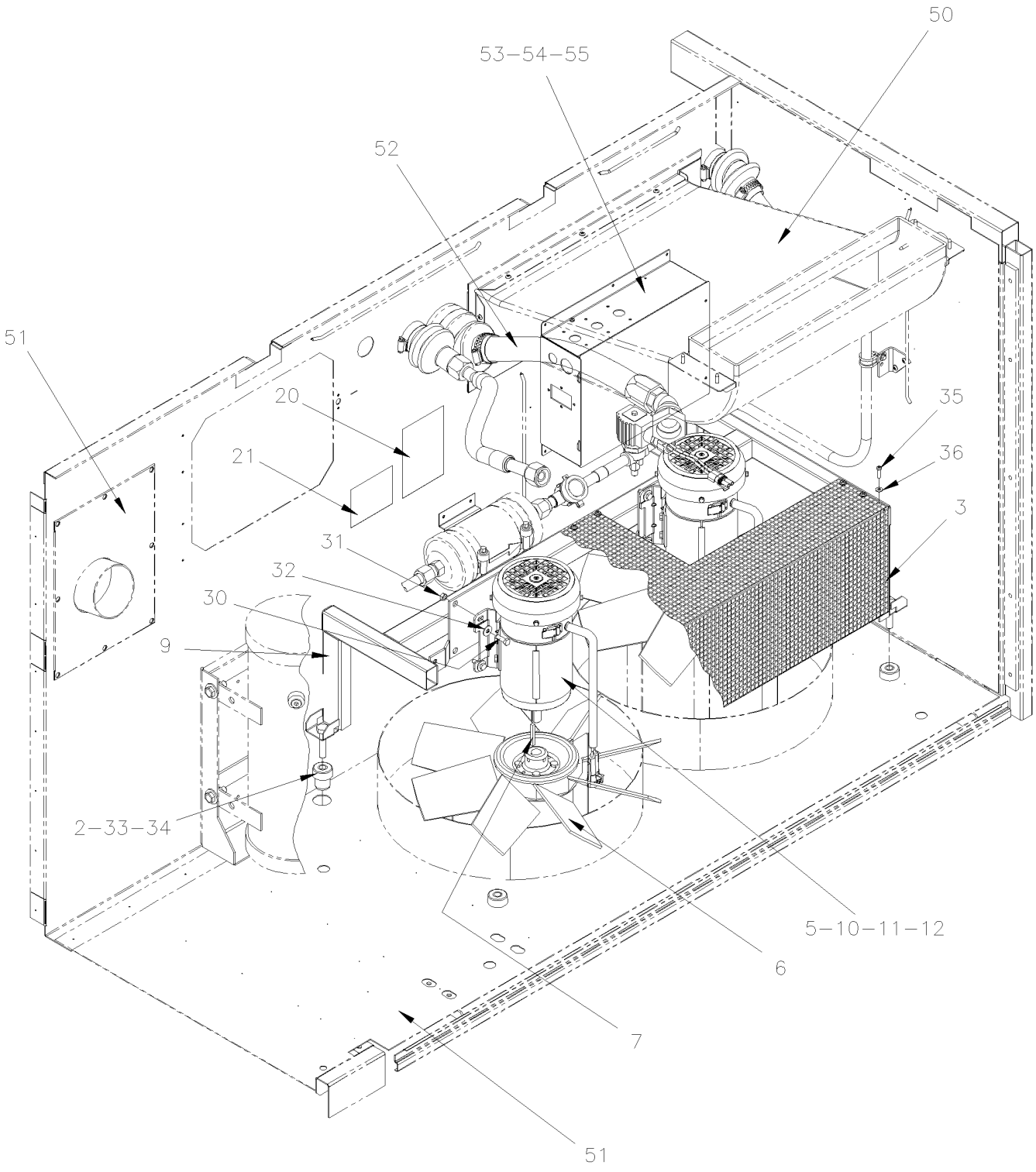

From Y-7046 Up to 8-9339	DATE: 01/2014	PAGE: Y2-2260-05

CONDENSOR FAN - INSTALLATION

ITEM	PART	DESCRIPTION	XL45	MTH40	MTH45	MTH45S	NOTE
2	510342	INSULATOR, RUBBER MOUNT	4	4	4	4	
3	452929	PROTECTOR GRILL	1	1	1	1	
5	Y2-2265-50	**MOTOR - "PREVOST" - TF-12 Up to 2-7825**					
5	Y2-2265-51	**MOTOR - "PREVOST" - T11G From 2-7826 Up to 6-8855**					
5	Y2-2265-52	**MOTOR - "PREVOST" - T114 From 6-8856**					
5	Y2-2265-53	**MOTOR - CONDENSOR BRUSHLESS From RETROFIT**					
6	372612	FAN BLADE AXIAL 8 BLADES	2	2	2	2	
7	452069	KEY	2	2	2	2	
9	452898	FAN MOTOR SUPPORT	1	1	1	1	
9	453618	FAN MOTOR SUPPORT	1	1	1	1	
10	452011	PROTECTOR MOTOR COVER PLASTIC Up to 6-8855	2	2	2	2	
11	502568	SCREW MA PAN PH M6-1.0x20 EMN Up to 6-8855	4	4	4	4	
12	500468	WASHER FL .281x1.250x.065 ZP Up to 6-8855	4	4	4	4	
20	402792	DECAL / "DANGER" SHUT DOWN A/C BEFORE SERVI. ENG & FRENCH	1	1	1	1	
20	405637	DECAL / "DANGER" SHUT DOWN A/C BEFORE SERVI. ENG & SPANISH	1	1	1	1	
21	453066	DECAL R134A / 24LBS / ENGLISH & FRENCH	1	1	1	1	
21	454180	DECAL R134A / 24LBS / ENGLISH & SPANISH	1	1	1	1	
30	502830	SCREW CAP HEX M6-1.0x20 G8.8 ZG603	8	8	8	8	
31	502860	NUT HEX STO M6-1.0 ZG603	8	8	8	8	
32	500411	WASHER FL .260x.697x.050 SS	8	8	8	8	
33	502859	NUT HEX NYRT M10-1.5 ZG603	8	8	8	8	
34	500897	WASHER FL .437x1.000x.083 ZG603	1	1	1	1	
35	500623	SCREW TC PAN PH #10-24x3/4 ZG603	10	10	10	10	
36	5001137	WASHER FL .203x.438x.050 SS	10	10	10	10	
50	Y2-2221-00	**UNDER FLOOR AIR DUCTING Up to 8-9096**					
50	Y2-2221-01	**UNDER FLOOR AIR DUCTING From 8-9096**					
51	Y2-1865-20	**EVAPORATOR & CONDENSOR WALL**					
52	Y2-2270-00	**RECEIVER TANK & FILTER DRYER**					
53	Y2-0621-00	**A/C JUNCTION BOX ASSY Up to 8-9095**					
53	Y2-0621-50	**A/C CONDENSOR MOTOR RELAY From 8-9096**					
54	063211	CABLE ASSY	1	1	1	1	
55	064383	CABLE ASSY / TO A/C PRESSURE SWITCH	1	1	1	1	
NS	504397	GROMMET / .750x1.062x.062x.375x1.375	1	1	1	1	
NS	504398	GROMMET / 1.000x1.375x.062x.437x1.750	1	1	1	1	
NS	680096	SEALANT BUTYL ALUM / GREY / 310ml CARTRIDGE	1	1	1	1	
NS	500658	SCREW TC PAN PH #10-24x3/4 ZP	4	4	4	4	

From Y-7046 Up to 8-9339	DATE: 01/2014	PAGE: Y2-2260-99
CONDENSOR 4 FANS - INSTALLATION / "RETROFIT"		

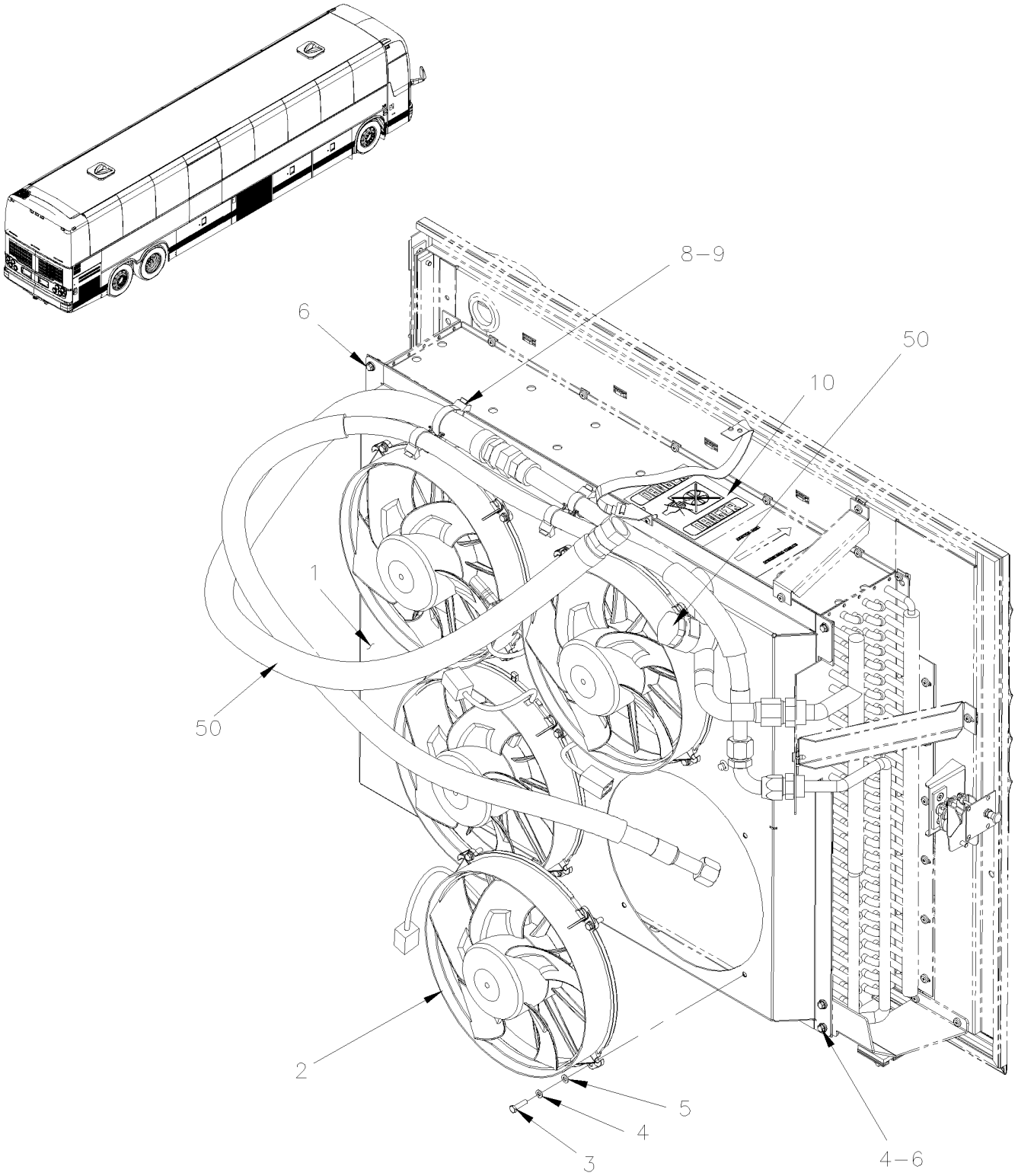

From Y-7046 Up to 8-9339	DATE: 01/2014	PAGE: Y2-2260-99

CONDENSOR 4 FANS - INSTALLATION / "RETROFIT"

ITEM	PART	DESCRIPTION	XL45	MTH40	MTH45	MTH45S	NOTE
		THIS LIST ARE FOR REFERENCE ONLY					
		"WARNING" - "WARNING" - "WARNING"					
		KEEP HOSE APPART WHEN DOOR IS CLOSE					
		TO PREVENT FRICTION BETWEEN HOSES					
1	454264	SHROULD FAN	1				B
1	455153	SHROUD FAN		1	1	1	
2	563461	CONDENSOR FAN ASSY 24V / REPLACED BY: 565881	4	4	4	4	
. NS	563691	. CONNECTOR / JUNIOR POWER TIMER / SH 6C / AMP 1-963212-1	1	1	1	1	
2	565881	CONDENSOR FAN ASSY 24V	4				
. NS	563691	. CONNECTOR / JUNIOR POWER TIMER / SH 6C / AMP 1-963212-1	1				
3	5001433	SCREW CAP HEX M6-1.0x25 SS	18	18	18	18	
4	502570	WASHER LO SPT 6.1x11.8x1.6 SS	20	20	20	20	
5	502573	WASHER FL 6.4x12.5x1.6 SS	18	18	18	18	
6	5001730	SCREW CAP HEXF M6-1.0x16 G10.9 N500	5	5	5	5	
NS	5001654	WASHER FL 6.4x17.0x3.0 SS	3	3	3	3	
NS	5001182	NUT HEX NYRT M6-1.0 SS	3	3	3	3	
7	509815	TIE MOUNT / ATTACHMENT W/TREE MOUNT	4	4	4	4	
8	509490	ATTACHMENT DOUBLE USE WITH CABLE TIE	2	2	2	2	
9	509491	CABLE TIE / 13MM x 383MM	4	4	4	4	
10	402792	DECAL / "DANGER" SHUT DOWN A/C BEFORE SERVI. ENG & FRENCH	1	1	1	1	
10	405637	DECAL / "DANGER" SHUT DOWN A/C BEFORE SERVI. ENG & SPANISH	1	1	1	1	
10	370357	DECAL "CLEAN REGULARY"	1	1	1	1	
11	066875	CABLE RJB TO CONDENSOR FANS & FUEL SESOR	1	1	1	1	A
11	563691	. CONNECTOR / JUNIOR POWER TIMER / SH 6C / AMP 1-963212-1	4	4	4	4	
11	563692	. SOCKET TERMINAL / 20-16 / AMP 964285-2	24	24	24	24	
11	562590	. WIRE CABLE 18 / RED / TXL	AR	AR	AR	AR	
11	562587	. WIRE CABLE 18 / BLACK / TXL	AR	AR	AR	AR	
49	504751	ROTATIF SPACER DOUBLE / SMALL	AR				
49	504752	ROTATIF SPACER DOUBLE / LARGE	AR				
50	Y2-2270-00	**RECEIVER TANK & FILTER DRYER**					
		A) WHIT THIS CABLE YOU MAY BE USE ONLY FANS					
		MOTORS SECTIONS OR ORDER CONNECTORS BELOOW					
		SEPARATELY					
		B) FOR BUS XL-45 YOU RQUIRE TO BE CUT IN CENTER					
		WITH OVERLAPS 47MM WITH RIVETS ON TOTAL					
		LENGHT					

From Y-7046 Up to 4-8212	DATE: 01/2014	PAGE: Y2-2265-00
MOTOR - "PREVOST" - T-17		

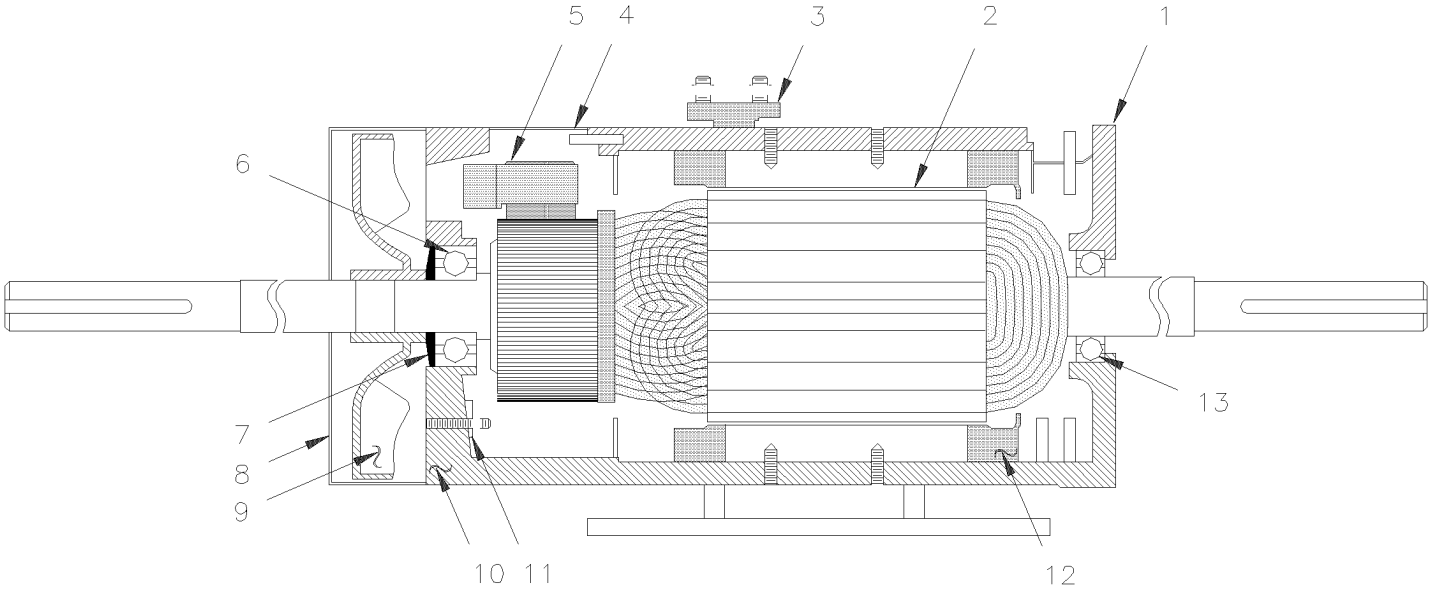

From Y-7046 Up to 4-8212	DATE: 01/2014	PAGE: Y2-2265-00

MOTOR - "PREVOST" - T-17

ITEM	PART	DESCRIPTION	XL45	MTH40	MTH45	MTH45S	NOTE
	562374	MOTOR "PREVOST" / 1.5 HP / 1750 RPM Up to 3-8101 / REPLACED BY: 066754	1				
	562374	MOTOR "PREVOST" / 1.5 HP / 1750 RPM / REPLACED BY: 066754		1	1	1	
1	562523	. COVER	1	1	1	1	
2	562524	. ARMATURE MOTOR	1	1	1	1	
3	561209	. BLOCK TERMINAL	1	1	1	1	
. NS	502543	. . NUT HEX	2	2	2	2	
. NS	500874	. . WASHER FL	2	2	2	2	
. NS	500588	. . SCREW CAP HEX / REPLACED BY: 500414	2	2	2	2	
. NS	500438	. . WASHER FL	2	2	2	2	
4	562527	. GRILLE PROTECTOR	1	1	1	1	
5	562951	. BRUSH	1	1	1	1	
6	562520	. BALL BEARING	1	1	1	1	
7	561211	. WASHER SPRING	1	1	1	1	
8	562521	. COVER / FAN END	1	1	1	1	
9	562526	. FAN	1	1	1	1	
10	562522	. COVER / COMMUTATOR END	1	1	1	1	
11	561208	. BRUSH HOLDER ASSY / W/SPRING / REPLACED BY: 563081	1	1	1	1	
11	562546	. . SPRING, TORSION / .750 O.D. x .322 x .020	4	4	4	4	
12	562528	. STATOR WOUND / COMPLETE	1	1	1	1	
13	561210	. BALL BEARING	2	2	2	2	
NS	453830	KIT, SERVICE, REMPLACEMENT BRUSH MOTOR	1				
. NS	IS-05903	. SEE INSTRUCTION SHEET	1				
. NS	562951	. BRUSH	4				
. NS	680309	. HONING / STONE (FOR CLEAN COMMUTATOR) 423-004M	2				

From 3-8102 Up to 8-9339	DATE: 01/2014	PAGE: Y2-2265-01
MOTOR - "PREVOST" - T-17 - 2 SPEEDS		

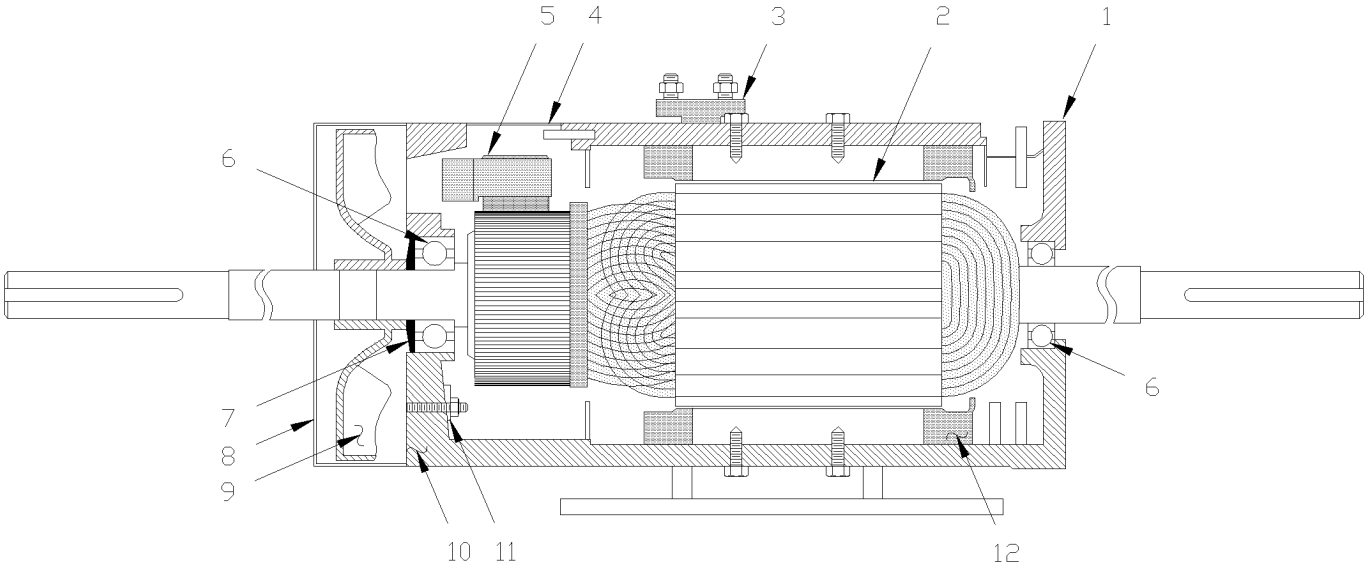

From 3-8102 Up to 8-9339	DATE: 01/2014	PAGE: Y2-2265-01

MOTOR - "PREVOST" - T-17 - 2 SPEEDS

ITEM	PART	DESCRIPTION	XL45	MTH40	MTH45	MTH45S	NOTE
	563008	MOTOR "PREVOST" / 2.1 HP / 1400 & 1880 RPM / (STAMPED T-17)	1				
	563008	MOTOR "PREVOST" / 2.1 HP / 1400 & 1880 RPM / (STAMPED T-17) From 4-8213		1	1	1	
1	563079	. COVER	1	1	1	1	
2	563077	. ARMATURE MOTOR	1	1	1	1	
3	563122	. BLOCK, RECEPTACLE	1	1	1	1	
4	562527	. GRILLE PROTECTOR	1	1	1	1	
5	562951	. BRUSH	4	4	4	4	
6	561210	. BALL BEARING	2	2	2	2	
7	561211	. WASHER SPRING	1	1	1	1	
8	562521	. COVER / FAN END	1	1	1	1	
9	562526	. FAN	1	1	1	1	
10	563078	. COVER / COMMUTATOR END	1	1	1	1	
11	563081	. BRUSH HOLDER ASSY / W/SPRING	1	1	1	1	
11	562546	. . SPRING, TORSION / .750 O.D. x .322 x .020	4	4	4	4	
12	563080	. STATOR WOUND / COMPLETE	1	1	1	1	
NS	453830	KIT, SERVICE, REMPLACEMENT BRUSH MOTOR	1				
. NS	IS-05903	. SEE INSTRUCTION SHEET	1				
. NS	562951	. BRUSH	4				
. NS	680309	. HONING / STONE (FOR CLEAN COMMUTATOR) 423-004M	2				
50	066754	KIT, SERVICE, MOTOR T17 REPLACEMENT MTH From 4-8200 Up to 4-8227		1	1	1	
. NS	IS-02050A	. SEE INSTRUCTION SHEET From 4-8200 Up to 4-8227		1	1	1	
51	066714	. BUS BAR 100MM From 4-8200 Up to 4-8227		1	1	1	

From Y-7046 Up to 6-8906	DATE: 01/2014	PAGE: Y2-2265-02

MOTOR - EVAPORATOR BRUSHLESS

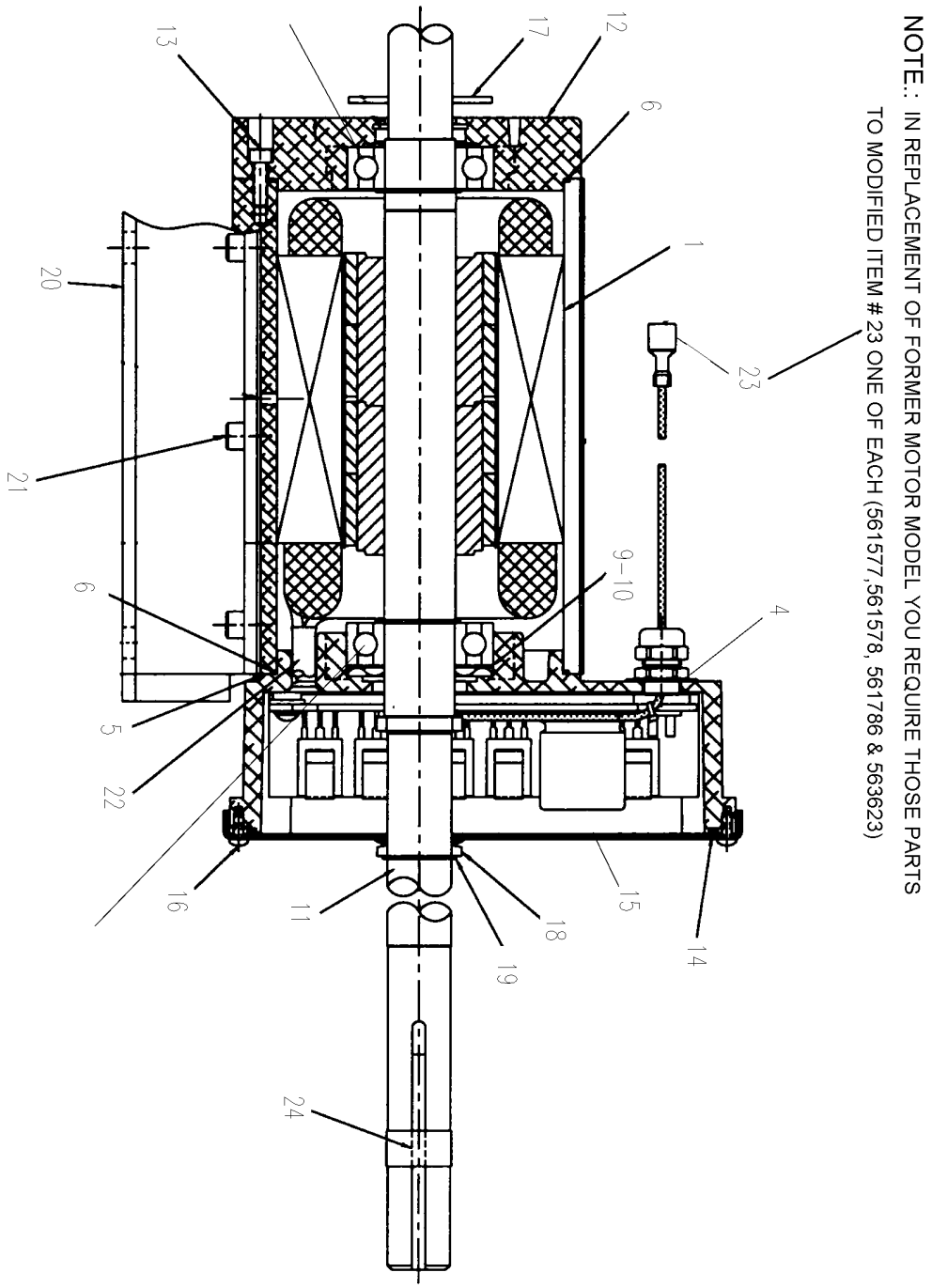

NOTE:: IN REPLACEMENT OF FORMER MOTOR MODEL YOU REQUIRE THOSE PARTS TO MODIFIED ITEM # 23 ONE OF EACH (561577,561578, 561786 & 563623)

From Y-7046 Up to 6-8906	DATE: 01/2014	PAGE: Y2-2265-02

MOTOR - EVAPORATOR BRUSHLESS

ITEM	PART	DESCRIPTION	XL45	MTH40	MTH45	MTH45S	NOTE
	563586	MOTOR EVAPORATOR BRUSHLESS / (E-50348-0A)	1				S
	564216	MOTOR EVAPORATOR BRUSHLESS / 2 SPEEDS	1				
		"WARNING" - "WARNING" -"WARNING" - "WARNING"					
		THE FOLLOWING PARTS NUMBER ARE NOT					
		"PREVOST" NUMBER AND IT NOT IN S.A.P. SYSTEM					
		THEY ARE O.E.M. MFG NUMBER					
1	Call Order Desk	. MOTOR ASSY / COMPLETE	1				P
4	Call Order Desk	. ELECTRONIC ASSY WITH COVER, DECAL & HARDWARE	1				P
5	Call Order Desk	. GASKET	1				P
6	Call Order Desk	. O-RING 3.989" x .070"	1				P
7	Call Order Desk	. SCREW MA PAN 8-32 x ?	1				P
8	Call Order Desk	. HEAT-SHRINK TUBING	1				P
9	Call Order Desk	. WAVE SPRING	1				P
10	Call Order Desk	. SHIM	1				P
11	Call Order Desk	. SHAFT / ROTOR ASSY W/KEYS	1				P
12	Call Order Desk	. ENDBELL	1				P
13	Call Order Desk	. SCREW MA PAN 8-32 x .875"	1				P
14	Call Order Desk	. O-RING SEAL	1				P
15	Call Order Desk	. COVER	1				P
16	Call Order Desk	. SCREW MA PAN #6-32	1				P
17	Call Order Desk	. SLINGER	1				P
18	Call Order Desk	. V-SEAL	1				P
19	Call Order Desk	. EXTERNAL RETAINING RING	1				P
20	Call Order Desk	. BASE PLATE	1				P
21	Call Order Desk	. SCREW CAP HEXS 1/4-20 x ?	1				P
22	Call Order Desk	. TUBING	1				P
23	Call Order Desk	. TERMINAL (0.032 x 0.25)	1				P
24	Call Order Desk	. KEY SQUARE 3/16" x 3"	1				P
30	032937	KIT / SHAFT SHIELD	1				S
. NS	033188	. SHIELD / SHAFT	1				
. NS	500443	. SCREW TP PAN PH #8x1/2 ZG603	5				
. NS	IS-10125	. SEE INSTRUCTION SHEET	1				
		P) CALL ORDER DESK FOR SPECIFIC APPLICATION					
		(V.I.N.)					
		S) USE WITH OLD MOTOR 563586 WITHOUT SEAL ON THE					
		SHAFT					

From Y-7046 Up to 2-7825	DATE: 01/2014	PAGE: Y2-2265-50
MOTOR - "PREVOST" - TF-12		

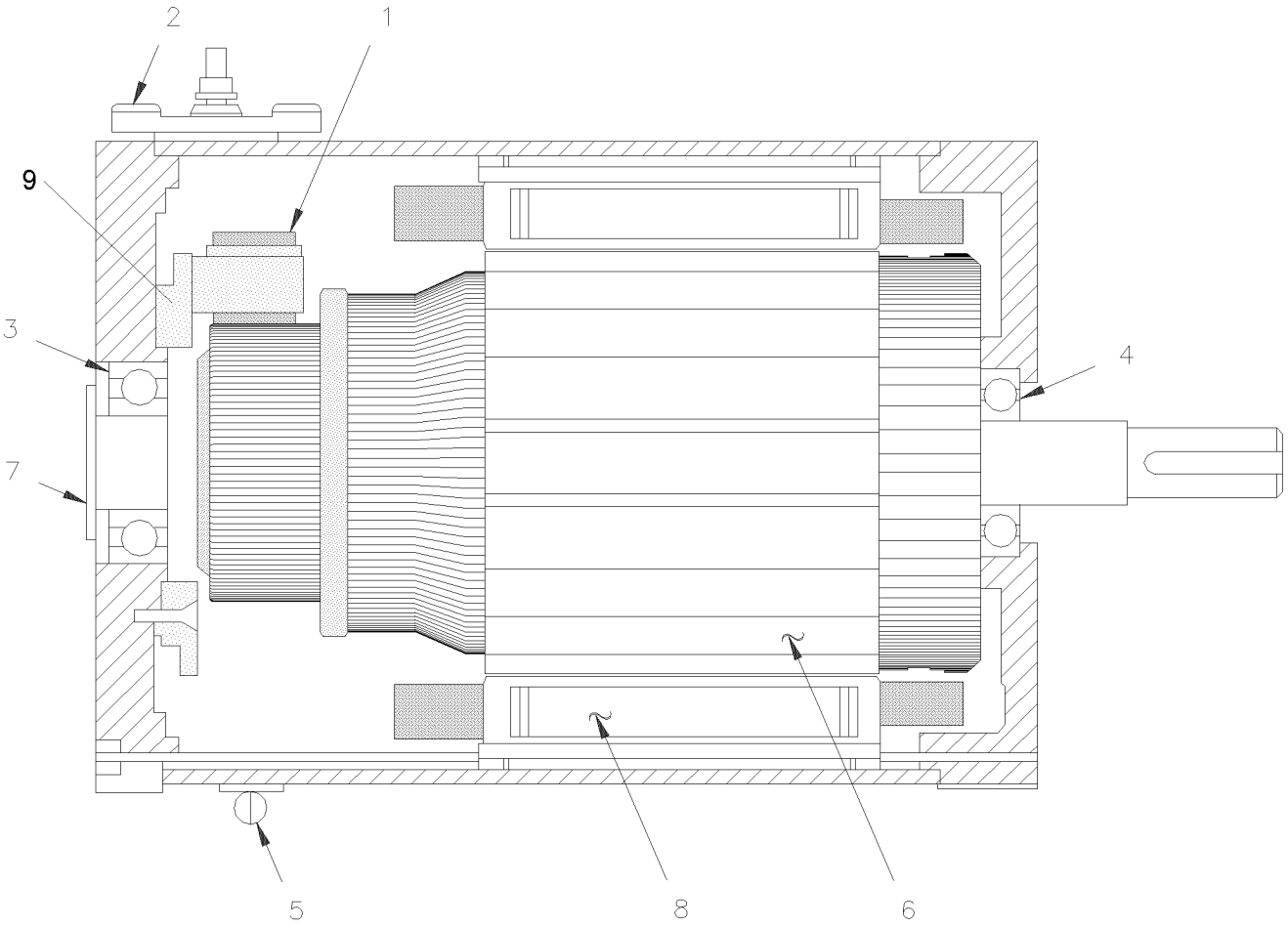

From Y-7046 Up to 2-7825	DATE: 01/2014	PAGE: Y2-2265-50

MOTOR - "PREVOST" - TF-12

ITEM	PART	DESCRIPTION	XL45	MTH40	MTH45	MTH45S	NOTE
	562579	MOTOR / .57 HP / 1950 RPM / MODEL TF-12 / W/2" SHAFT / REPLACED BY: 453625	2	2		2	A
1	561914	. BRUSH	4	4		4	
2	561913	. BOARD, TERMINAL	1	1		1	
NS	502581	. NUT HEX M6-1.0 ZP	2	2		2	
3	507226	. BALL BEARING	1	1		1	
4	507308	. BALL BEARING	1	1		1	
5	562097	. STRAP ASSY W/HOOK	1	1		1	
6	563119	. ARMATURE / TF12 / W/2" SHAFT / REPLACED BY: 066644	1	1		1	
7	562653	. CAP PROTECTOR	1	1		1	
8	563121	. FIELD COIL ASSY	2	2		2	
9	563072	. COVER ASSY / WITH BRUSH HOLDER	1	1		1	
NS	562545	. . SPRING, TORSION / .875 O.D. x .317 x .0	4	4		4	
50	066644	KIT RETROFIT MOTOR T114 W/CONNECTORS / W/2" SHAFT	1	1		1	
NS	563595	PIN TERMINAL / 12-10 / PED 12052139	2	2		2	
NS	563596	SOCKET TERMINAL 12 / PED 12065197	2	2		2	
NS	563597	CABLE SEAL / PURPLE / PED 15324990	4	4		4	
NS	563599	CAP LOCK CONNECTOR / GRAY / PED 12020833	1	1		1	
NS	563600	CONNECTOR / METRI-PACK 480 / 2C PH / PED 12052613	1	1		1	
NS	563601	CONNECTOR / METRI-PACK 480 / 2C SH / PED 12065863	1	1		1	
NS	563602	SECONDARY LOCK / METRI-PACK 480 / 2C / BLACK / PED 12059897	2	2		2	
		A) THIS MOTORS IT SUPPERSEEDED BY KIT # 066644					

From 2-7826 Up to 6-8855	DATE: 01/2014	PAGE: Y2-2265-51
MOTOR - "PREVOST" - T11G		

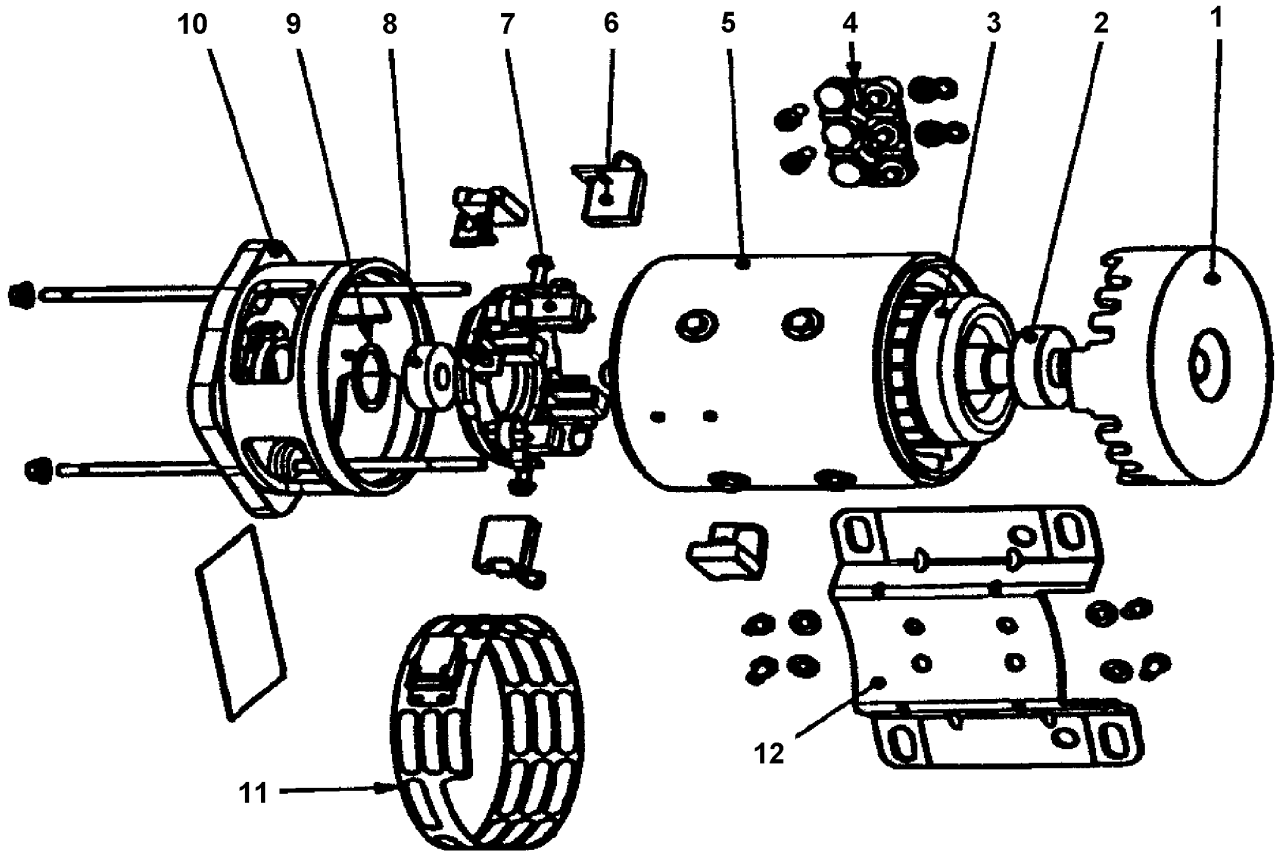

From 2-7826 Up to 6-8855	DATE: 01/2014	PAGE: Y2-2265-51

MOTOR - "PREVOST" - T11G

ITEM	PART	DESCRIPTION	XL45	MTH40	MTH45	MTH45S	NOTE
	563051	MOTOR / .57 HP / 1950 RPM / MODEL TF-11G / W/2" SHAFT / REPLACED BY: 563454	2	2	2	2	A,B
1	563114	. COVER	1	1	1	1	
2	507226	. BALL BEARING	1	1	1	1	
3	563112	. ARMATURE / T11G / W/2" SHAFT	1	1	1	1	
4	563117	. BLOCK TERMINAL	1	1	1	1	
5	563110	. FIELD COIL ASSY	1	1	1	1	
6	561914	. BRUSH	4	4	4	4	
7	563111	. BRUSH HOLDER ASSY	1	1	1	1	
7	562545	. . SPRING, TORSION / .875 O.D. x .317 x .0	4	4	4	4	
8	560974	. BALL BEARING	1	1	1	1	
9	561211	. WASHER SPRING	1	1	1	1	
10	563113	. COVER COMUTATOR END	1	1	1	1	
11	563116	. GRILL PROTECTOR	1	1	1	1	
12	563115	. REMOVABLE SOCKET	1	1	1	1	
50	453625	KIT RETROFIT MOTOR / W/2" SHAFT	1	1	1	1	
. NS	IS-04063A	. SEE INSTRUCTION SHEET	1	1	1	1	
50	066644	KIT RETROFIT MOTOR T114 W/CONNECTORS / W/2" SHAFT	1	1	1	1	
NS	563595	PIN TERMINAL / 12-10 / PED 12052139	2	2	2	2	
NS	563596	SOCKET TERMINAL 12 / PED 12065197	2	2	2	2	
NS	563597	CABLE SEAL / PURPLE / PED 15324990	4	4	4	4	
NS	563599	CAP LOCK CONNECTOR / GRAY / PED 12020833	1	1	1	1	
NS	563600	CONNECTOR / METRI-PACK 480 / 2C PH / PED 12052613	1	1	1	1	
NS	563601	CONNECTOR / METRI-PACK 480 / 2C SH / PED 12065863	1	1	1	1	
NS	563602	SECONDARY LOCK / METRI-PACK 480 / 2C / BLACK / PED 12059897	2	2	2	2	
		A) THIS MOTOR IS INCLUDE IN KIT #453625					
		B) THIS MOTORS IT SUPPERSEEDED BY KIT # 066644					

From 6-8856 Up to 8-9339	DATE: 01/2014	PAGE: Y2-2265-52
MOTOR - "PREVOST" - T114		

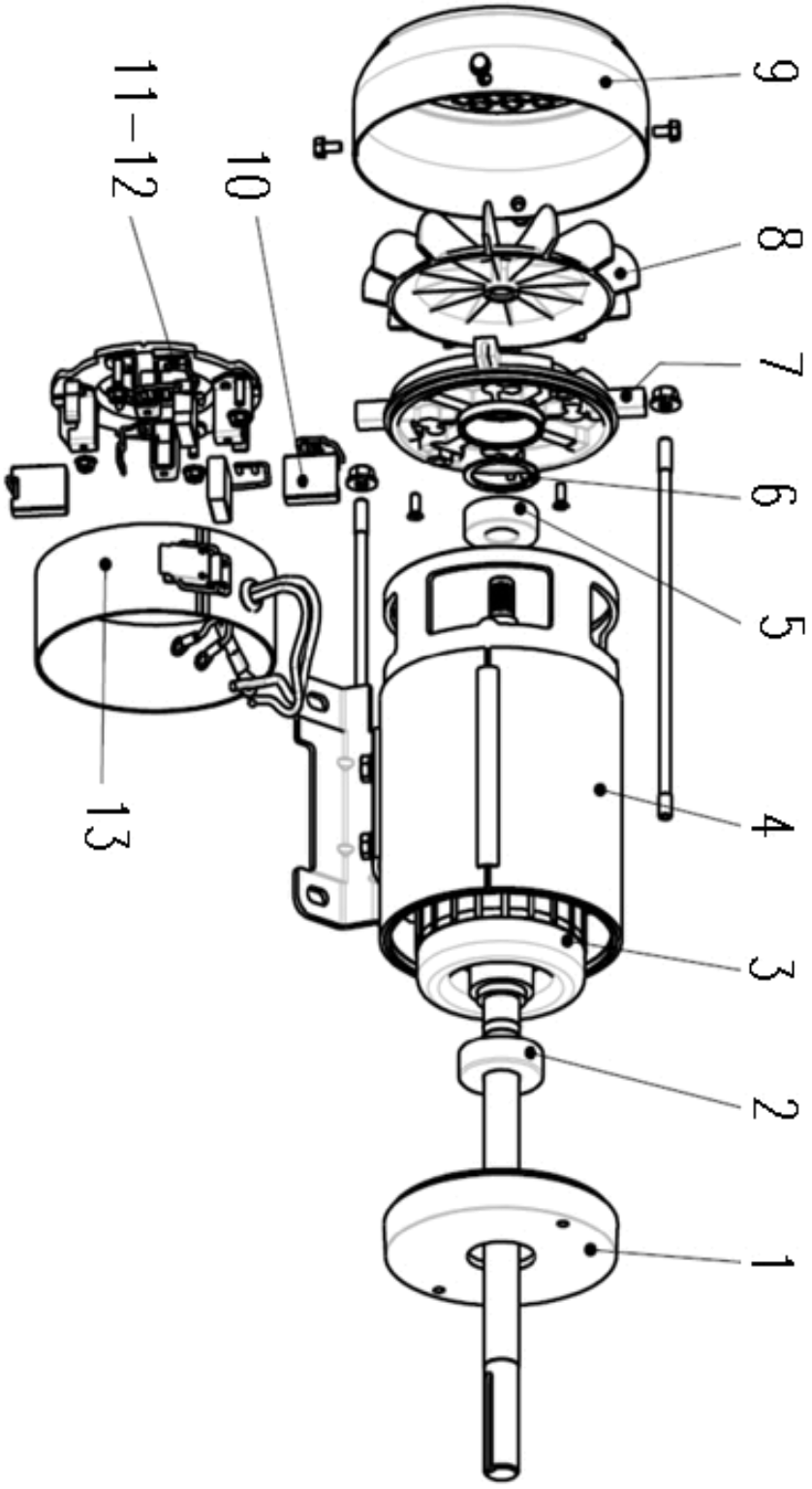

From 6-8856 Up to 8-9339	DATE: 01/2014	PAGE: Y2-2265-52

MOTOR - "PREVOST" - T114

ITEM	PART	DESCRIPTION	XL45	MTH40	MTH45	MTH45S	NOTE
	Call Order Desk	MOTOR / .57 HP / 1950 RPM / MODEL T114 / W/2" SHAFT & CONNECTORS			1	1	P
	563454	. MOTOR / .57 HP / 1950 RPM / MODEL T114 / W/2" SHAFT			2	2	
1	563729	. . COVER					
2	560974	. . BALL BEARING			1	1	
3	563726	. . ARMATURE / T114 / W/2" SHAFT					
4	563727	. . PERMANENT MAGNET / ASSY W/CASE					
5	0907240	. . BALL BEARING			1	1	
6	N.P.N.	. . PRELOAD WASHER			1	1	4
7	563728	. . COVER COMMUTATOR END					
8	563730	. . FAN					
9	563732	. . COVER FAN PROTECTOR					
10	561914	. . BRUSH			4	4	
11	563111	. . BRUSH HOLDER ASSY			1	1	
12	562545	. . . SPRING, TORSION / .875 O.D. x .317 x .0			4	4	
13	563731	. . PROTECTOR GRILL					
NS	563595	. PIN TERMINAL / 12-10 / PED 12052139			2	2	
NS	563596	. SOCKET TERMINAL 12 / PED 12065197			2	2	
NS	563597	. CABLE SEAL / PURPLE / PED 15324990			4	4	
NS	563599	. CAP LOCK CONNECTOR / GRAY / PED 12020833			1	1	
NS	563600	. CONNECTOR / METRI-PACK 480 / 2C PH / PED 12052613			1	1	
NS	563601	. CONNECTOR / METRI-PACK 480 / 2C SH / PED 12065863			1	1	
NS	563602	. SECONDARY LOCK / METRI-PACK 480 / 2C / BLACK / PED 12059897			2	2	
		4) NO PARTS NUMBER					
		P) CALL ORDER DESK FOR SPECIFIC APPLICATION					
		(V.I.N.)					

From RETROFIT Up to 6-8906	DATE: 01/2014	PAGE: Y2-2265-53
MOTOR - CONDENSOR BRUSHLESS		

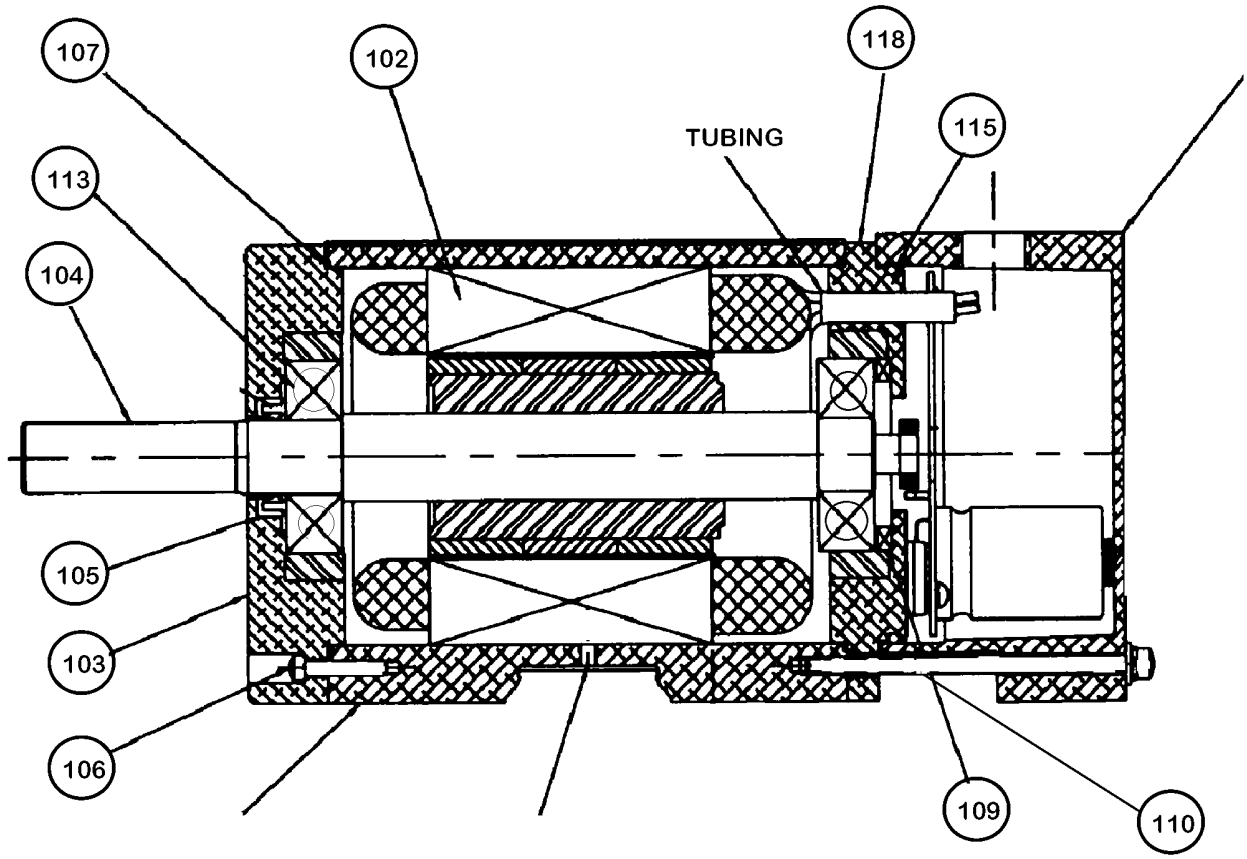

From RETROFIT Up to 6-8906	DATE: 01/2014	PAGE: Y2-2265-53
MOTOR - CONDENSOR BRUSHLESS		

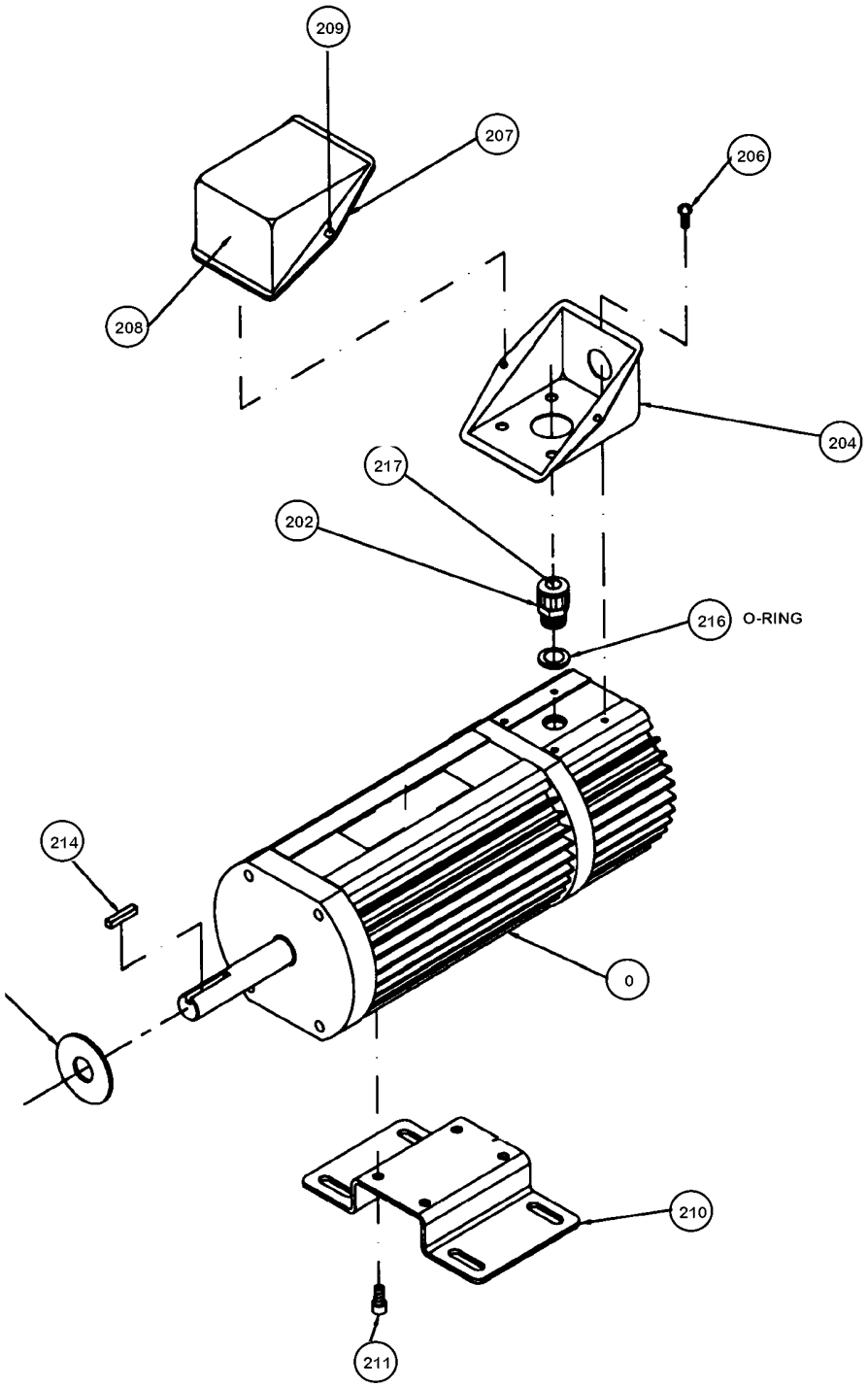

From RETROFIT Up to 6-8906	DATE: 01/2014	PAGE: Y2-2265-53

MOTOR - CONDENSOR BRUSHLESS

ITEM	PART	DESCRIPTION	XL45	MTH40	MTH45	MTH45S	NOTE
	563585	MOTOR CONDENSOR BRUSHLESS / (E-50599-0)	2				
102	Call Order Desk	. STATOR/HOUSING ASSY	1				P
103	Call Order Desk	. REAR ENDBELL	1				P
104	Call Order Desk	. SHAFT / ROTOR ASSY W/BEARING & KEY	1				P
105	Call Order Desk	. LIP SEAL	1				P
106	Call Order Desk	. SCREW MA PAN 8-32 x .875"	1				P
107	Call Order Desk	. O-RING 3.989" x .070"	1				P
109	Call Order Desk	. SHIM 1.56" I.D. x 2.04 O.D.	1				P
110	Call Order Desk	. WAVE SPRING	1				P
113	Call Order Desk	. BEARING	1				P
115	Call Order Desk	. O-RING 3.737" x .103"	1				P
116	Call Order Desk	. ELECTRONICS HOUSING	1				P
118	Call Order Desk	. ENDCAP / ELECTRONICS ASSY	1				P
120	Call Order Desk	. WASHER FLAT #10	1				P
121	Call Order Desk	. WASHER LOCK #10	1				P
122	Call Order Desk	. SCREW FIL HEAD #10	1				P
125	Call Order Desk	. SCREW CAP HEXS 10-24 x .062"	1				P
202	Call Order Desk	. STRAIN-RELIEF KIT	1				P
204	Call Order Desk	. JUNCTION BOX / (BOTTOM HALF)	1				P
206	Call Order Desk	. SCREW MA PAN 10-24	1				P
207	Call Order Desk	. GASKET JCT BOX	1				P
208	Call Order Desk	. JUNCTION BOX / (TOP HALF)	1				P
209	Call Order Desk	. SCREW 6-32	1				P
210	Call Order Desk	. BASE PLATE	1				P
211	Call Order Desk	. SCREW CAP HEXS 1/4-20 x ?	1				P
214	Call Order Desk	. KEY	1				P
		P) CALL ORDER DESK FOR SPECIFIC APPLICATION					
		(V.I.N.)					

From RETROFIT Up to 6-8906	DATE: 01/2014	PAGE: Y2-2265-53

MOTOR - CONDENSOR BRUSHLESS

ITEM	PART	DESCRIPTION	XL45	MTH40	MTH45	MTH45S	NOTE

From Y-7046 Up to 8-9339	DATE: 01/2014	PAGE: Y2-2270-00
RECEIVER TANK & FILTER DRYER		

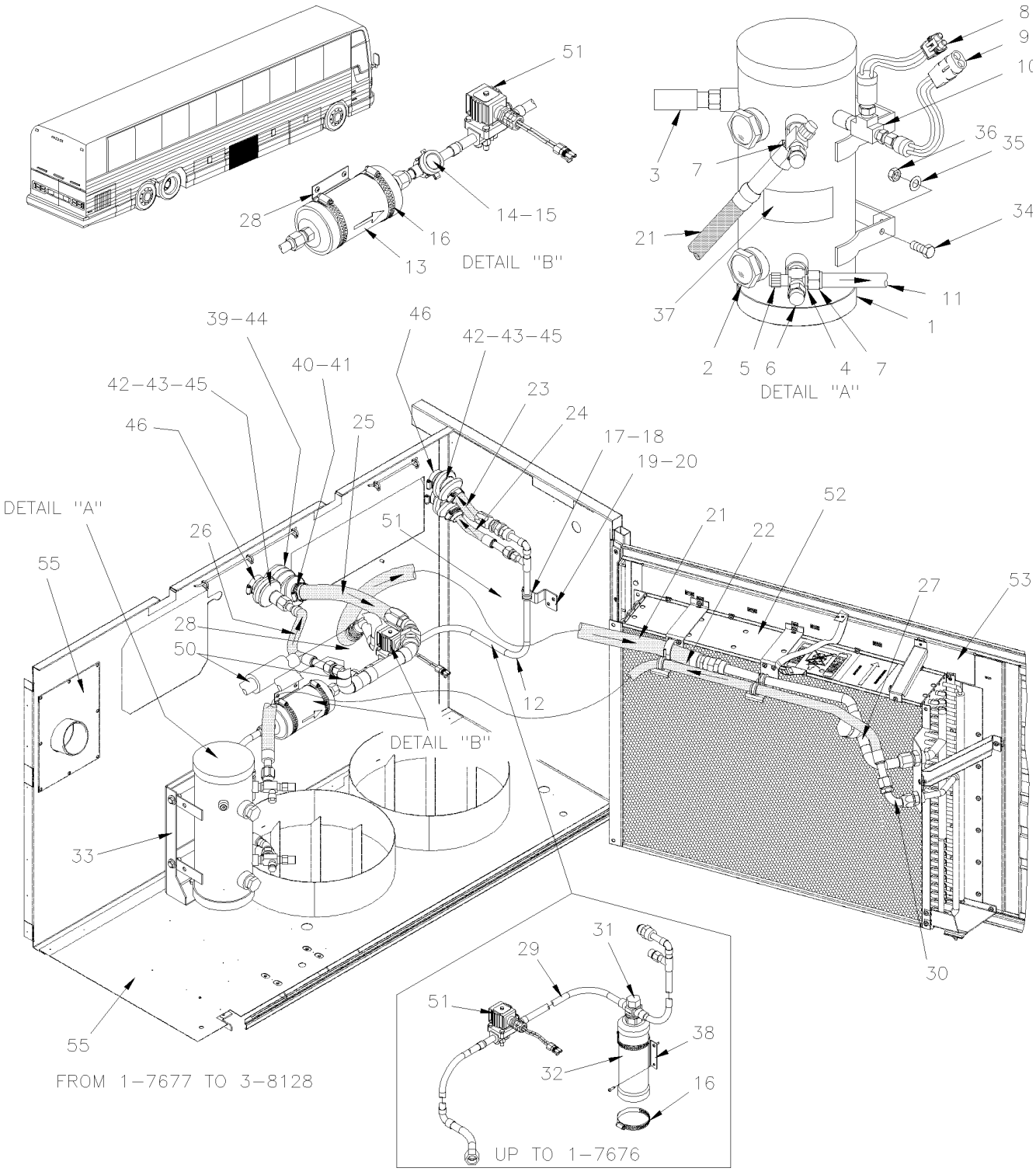

From Y-7046 Up to 8-9339	DATE: 01/2014	PAGE: Y2-2270-00
RECEIVER TANK & FILTER DRYER		

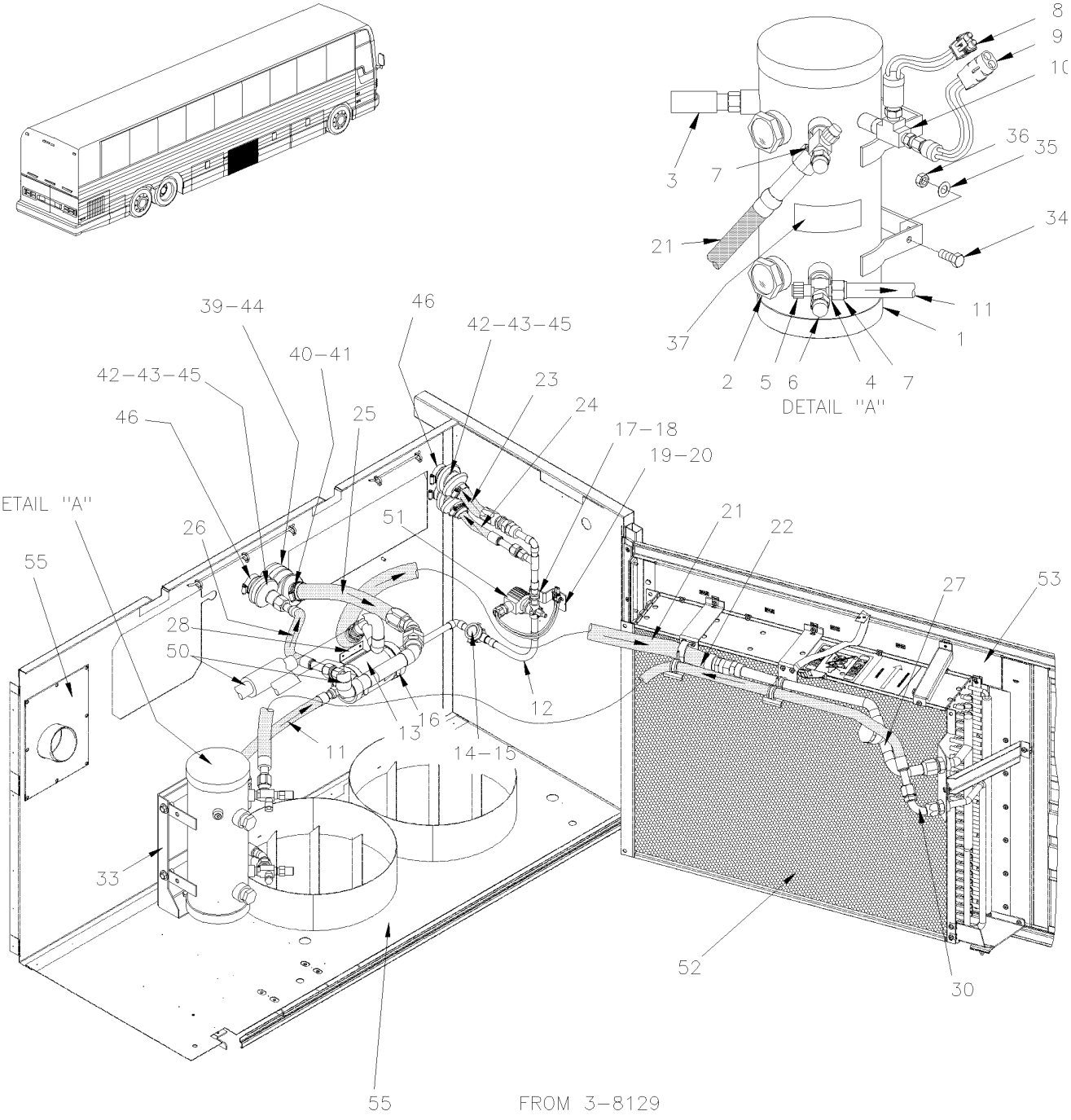

From Y-7046 Up to 8-9339	DATE: 01/2014	PAGE: Y2-2270-00

RECEIVER TANK & FILTER DRYER

ITEM	PART	DESCRIPTION	XL45	MTH40	MTH45	MTH45S	NOTE
1	950261	RECEIVER TANK ASSY	1	1	1	1	
. NS	950428	. SIGHTGLASS / W/BALL	1	1	1	1	
2	871001	. SIGHT GLASS ASSY 1 NPT	2	2	2	2	
3	870890	VALVE, SAFETY 450 PSI	1	1	1	1	
4	950228	VALVE ASSY / SERVICE / INLET & OUTLET	2	2	2	2	
. NS	950284	. CAP / PROTECTOR / FOR GAUGE	1	1	1	1	
. NS	507169	. O-RING 1/2 I.D.	1	1	1	1	
5	950284	CAP / PROTECTOR / FOR GAUGE	1	1	1	1	
6	950285	CAP VALVE / PROTECTOR / PLASTIC	1	1	1	1	
7	507169	O-RING 1/2 I.D.	2	2	2	2	
8	452832	PRESSURE SWITCH N.O. 170-130 20SP001MA170J130J	1	1	1	1	
9	062644	PRESSURE SWITCH N.O. 120-90 20SP001AA120G090E	1	1	1	1	
NS	950249	SCHROUDER VALVE 1/4NPT-M	2	2	2	2	
10	501338	MALE RUN TEE / PIPE FITTING / 1/4NPT-Mx1/4NPT-Fx1/4NPT-F BR	1	1	1	1	
11	454043	HOSE ASSY / #12 565MM From 3-8129	1	1	1	1	
NS	507370	O-RING From 3-8129	1	1	1	1	
12	453678P	FILTER DRYER ASSY From 1-7677 Up to 3-8128	1		1		
. NS	457419	. PIPE ASSY / FILTER DRIER "INLET SECTION" From 1-7677 Up to 3-8128	1		1		
12	Call Order Desk	FILTER DRYER ASSY From 3-8129 Up to 4-8205	1		1		P
12	Call Order Desk	FILTER DRYER ASSY From 4-8206	1		1		P
12	Call Order Desk	FILTER DRYER ASSY From 1-7677 Up to 3-8128		1		1	P
12	454045P	FILTER DRYER ASSY From 3-8129 Up to 4-8205				1	
13	950332	. FILTER DRYER From 1-7677	1		1	1	
. NS	507370	. . O-RING From 1-7677	1		1	1	
14	950334	. MOISTURE INDICATOR From 1-7677	1		1	1	
15	950029	. . CAP, MOISTURE INDICATOR	1		1	1	
16	504025	HOSE CLAMP / 2"5/16-3"1/4 SS / HS-44	2	2	2	2	
17	952629	CLAMP / 5/8" I.D.	1	1	1	1	
18	500588	SCREW CAP HEX M4-0.7x20 G8.8 ZP / REPLACED BY: 500414	1	1	1	1	
18	502834	WASHER LO SPT 4.1x7.6x0.9 ZG603	1	1	1	1	
18	500438	WASHER FL .187x.437x.050 ZP	1	1	1	1	
18	500590	NUT HEX NYRT M4-0.7 ZP	1	1	1	1	
19	452077	ANGLE SUPPORT, FILTER ASSY	1	1	1	1	
20	500957	SCREW TP BDG PH #10x3/4 ZG603	2	2	2	2	
21	453602	HOSE ASSY / <>PIPE TO COND / #16 1143MM Up to 1-7560 / REPLACED BY: 453779	1	1	1	1	
21	453779	HOSE ASSY / <>PIPE TO COND / #16 1143MM / SS BELLOW From 1-7561	1	1	1	1	
NS	501802	O-RING / ORS FITTING / #16 NEO	1	1	1	1	
NS	507169	O-RING 1/2 I.D.	1	1	1	1	
22	453048	HOSE ASSY / #12 2350MM	1				
22	453394	HOSE ASSY / #12 1830MM		1	1	1	
		P) CALL ORDER DESK FOR SPECIFIC APPLICATION					
		(V.I.N.)					

From Y-7046 Up to 8-9339	DATE: 01/2014	PAGE: Y2-2270-00

RECEIVER TANK & FILTER DRYER

ITEM	PART	DESCRIPTION	XL45	MTH40	MTH45	MTH45S	NOTE
22	455220	HOSE ASSY / #12 1830MM SERVICE		1	1	1	S
23	453397	HOSE ASSY / #12 1340MM	1				
23	453397	HOSE ASSY / #12 1340MM Up to 6-8805		1	1	1	
23	454240	HOSE ASSY / #12 1579MM From 6-8806			1	1	
. NS	505182	. COIL PROTECTOR / PLASTIC / #16 From 6-8806			AR	AR	
24	453389	HOSE ASSY / #10 5970MM	1		1		
. NS	507344	. O-RING / ORS FITTING /	2		2		
24	455218	HOSE ASSY / #10 5970MM SERVICE	1		1		S
. NS	507344	. O-RING / ORS FITTING /	2		2		
24	453488	HOSE ASSY / #10 5075MM Up to Y-7128		1			
. NS	507344	. O-RING / ORS FITTING / Up to Y-7128		2			
24	455251	HOSE ASSY / #10 5075MM SERVICE Up to Y-7128		1			S
. NS	507344	. O-RING / ORS FITTING / Up to Y-7128		2			
24	453482	HOSE ASSY / #10 7160MM Up to 6-8805				1	
. NS	507344	. O-RING / ORS FITTING / Up to 6-8805				2	
24	455248	HOSE ASSY / #10 6795MM SERVICE Up to 6-8805				1	S
. NS	507344	. O-RING / ORS FITTING / Up to 6-8805				2	
24	453476	HOSE ASSY / #10 5745MM From 6-8806				1	
. NS	507344	. O-RING / ORS FITTING / From 6-8806				2	
24	455246	HOSE ASSY / #10 5745MM SERVICE From 6-8806				1	S
. NS	507344	. O-RING / ORS FITTING / From 6-8806				2	
25	453347	HOSE ASSY / #20 84"	1				
. NS	504442	. CUFF END BELLOW /	1				
25	453347	HOSE ASSY / #20 84" Up to 6-8805			1		
. NS	504442	. CUFF END BELLOW / Up to 6-8805			1		
25	454239	HOSE ASSY / #20 2210MM From 6-8806			1		
25	452556	HOSE ASSY / #20 95" Up to 6-8805		1		1	
25	454289	HOSE ASSY / #20 95" From 6-8806				1	
26	453628	HOSE ASSY / #12 270MM	1		1		
. NS	507280	. O-RING / ORS FITTING /	2		2		
26	455260	HOSE ASSY / #12 270MM SERVICE	1		1		S
. NS	507280	. O-RING / ORS FITTING /	2		2		
26	453702	HOSE ASSY / #12 280MM	1				W
. NS	507280	. O-RING / ORS FITTING /	2				
26	455264	HOSE ASSY / #12 280MM SERVICE	1				W,S
. NS	507280	. O-RING / ORS FITTING /	2				
26	453483	HOSE ASSY / #12 385MM		1		1	
. NS	507280	. O-RING / ORS FITTING /		2		2	
26	455249	HOSE ASSY / #12 316MM SERVICE		1		1	S
. NS	507280	. O-RING / ORS FITTING /		2		2	
		S) SERVICE					
		W) WITH W.C.L.					

From Y-7046 Up to 8-9339	DATE: 01/2014	PAGE: Y2-2270-00

RECEIVER TANK & FILTER DRYER

ITEM	PART	DESCRIPTION	XL45	MTH40	MTH45	MTH45S	NOTE
27	453543	PIPE ASSY WITH CHECK VALVE From Y-7191	1				
27	453542	PIPE ASSY WITH CHECK VALVE From Y-7191		1	1	1	
28	453711	BRACKET, FILTER From 1-7677			1	1	
29	453376P	FILTER DRYER ASSY Up to Y-7307	1		1		
29	Call Order Desk	FILTER DRYER ASSY From Y-7308 Up to 1-7676	1		1		P
29	Call Order Desk	FILTER DRYER ASSY Up to 1-7676		1		1	P
30	507544	SWIVEL NUT ELBOW 90º SHORT / JIC 37° FITTING/ #12JIC-Fx#12JIC-Mx1.82 STL From Y-7191			1	1	
31	870646	MOISTURE INDICATOR Up to 1-7676	1				
32	950262	FILTER DRYER ASSY / W/R134a Up to 1-7676	1				
. NS	951196	. O-RING TEFLON 1 3/8" I.D. x 1 5/8" O.D. Up to 1-7676	1				
33	454044	SUPPORT RECEIVER TANK			1	1	
34	500065	SCREW CAP HEX M10-1.5x30 G10.9 DP			4	4	
35	500897	WASHER FL .437x1.000x.083 ZG603			4	4	
36	5001760	NUT HEXF STO M10-1.5 G8 ZP / REPLACED BY: 5001727			6	6	
37	453066	DECAL R134A / 24LBS / ENGLISH & FRENCH			1	1	
37	454180	DECAL R134A / 24LBS / ENGLISH & SPANISH			1	1	
38	452547	BRACKET, FILTER Up to 1-7676	1				
39	504442	CUFF END BELLOW / 1 1/4" I.D. x 3 1/2" x 4 1/2"			1	1	
40	504026	HOSE CLAMP / 2"13/16-3"3/4 SS / HS-52			1	1	
41	504022	HOSE CLAMP / 3/4"-1"3/4 SS / HS-20			1	1	
42	372103	PROTECTOR HOSE SPLIT / 1 1/8" O.D. x 3"			3	3	
43	504016	CABLE TIE / 5/16" X 14"1/2			AR	AR	
44	451075	PROTECTOR HOSE SPLIT / 7/8" O.D. x 3"			1	1	
45	504384	CUFF END BELLOW / 1 1/4" I.D. x 1 3/4" x 4"	3				
46	504024	HOSE CLAMP / 1"13/16"-2"3/4 SS / HS-36	6				
50	Y2-2222-15	**A/C LINE REAR SECTION W/05G**					
51	Y2-2208-10	**REFRIGERANT SOLENOID VALVE**					
52	Y2-2255-00	**CONDENSOR - INSTALLATION LARGE SYSTEM**					
53	Y2-1863-00	**CONDENSOR DOOR ASSY - BUS**					
53	Y2-1863-50	**CONDENSOR DOOR ASSY**					
53	Y2-1863-51	**CONDENSOR DOOR ASSY**					
55	Y2-1865-20	**EVAPORATOR & CONDENSOR WALL**					
		P) CALL ORDER DESK FOR SPECIFIC APPLICATION					
		(V.I.N.)					

From Y-7046 Up to 8-9339	DATE: 01/2014	PAGE: Y2-2270-00

RECEIVER TANK & FILTER DRYER

ITEM	PART	DESCRIPTION	XL45	MTH400	MTH445	MTH445S	NOTE

From Y-7046 Up to 8-9339	DATE: 01/2014	PAGE: Y2-23

ACCESSORIES

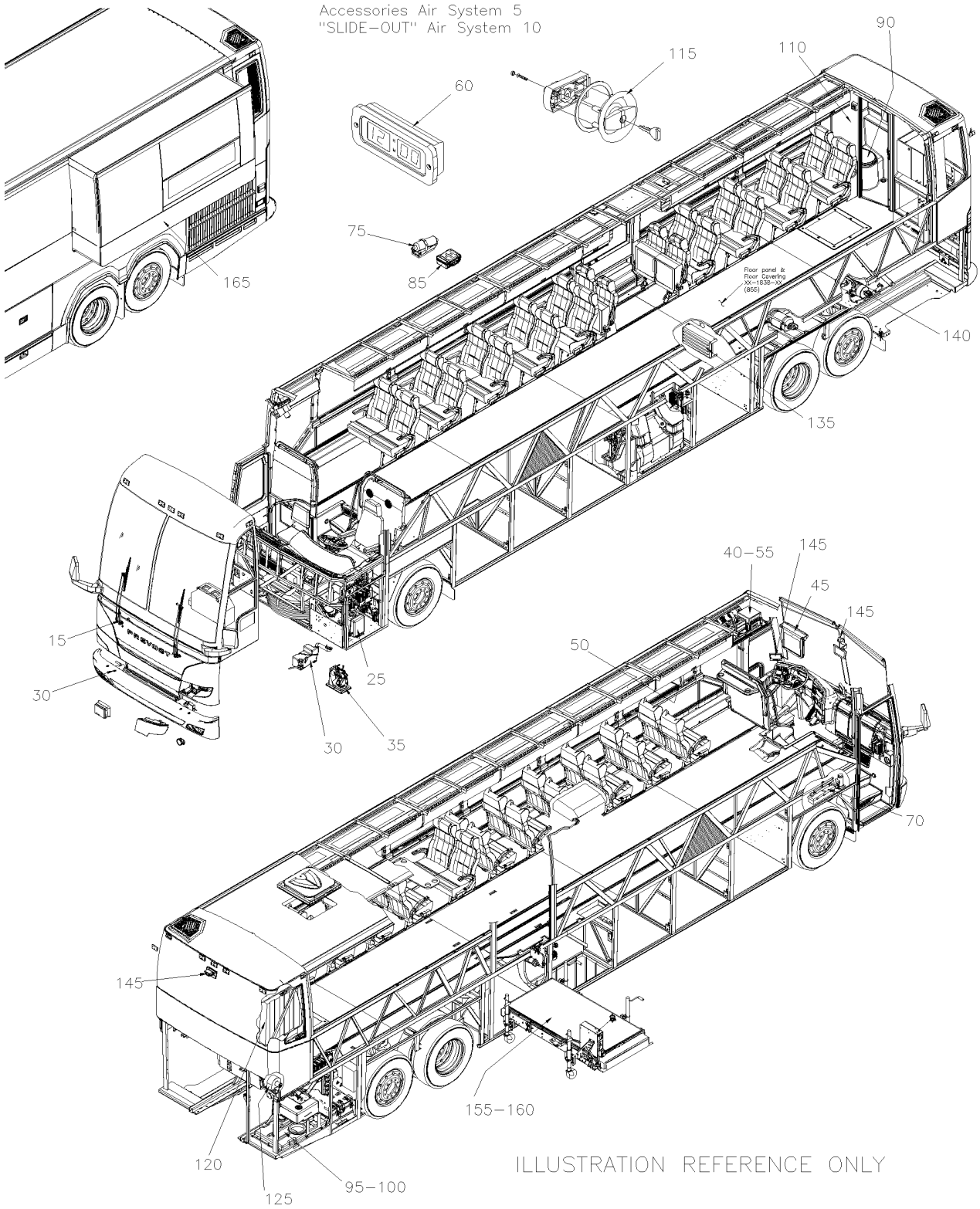

From Y-7046 Up to 8-9339	DATE: 01/2014	PAGE: Y2-23

ACCESSORIES

ITEM	PART	DESCRIPTION	XL45	MTH40	MTH45	MTH45S	NOTE
5	Y2-2300-00	**ACCESSORIES AIR SYSTEM From Y-7046 Up to 7-9095**					
5	Y2-2300-50	**ACCESSORIES AIR SYSTEM - MTH From 7-9096 Up to 8-9339**					
10	Y2-2300-90	**"SLIDE-OUT" AIR SYSTEM From Y-7046 Up to 6-8805**					
15	Y2-2305-00	**LOWER WINDSHIELD WIPER From Y-7046 Up to 8-9339**					
15	Y2-2305-05	**LOWER WINDSHIELD WIPER - INSTALLATION From Y-7046 Up to 8-9339**					
25	Y2-2305-20	**WINDSHIELD WASHER - INSTALLATION From Y-7046 Up to 8-9339**					
30	Y2-2305-25	**HEAD LAMP CLEANING WASHER TANK From 7-9003 Up to 8-9339**					
35	Y2-2310-00	**HORN - INSTALLATION From Y-7046 Up to 8-9339**					
40	Y2-2315-00	**SOUND SYSTEM & ACCESSORIES - "R.E.I." From Y-7046 Up to 6-8906**					
40	Y2-2315-20	**INDIVIDUAL STATIONS - "R.E.I." From Y-7046 Up to 6-8906**					
40	Y2-2315-30	**SOUND SYSTEM - "KARAOKE" & DVD From Y-7046 Up to 4-8270**					
40	Y2-2315-60	**ROOF ANTENNA & WIRING "R.E.I." From Y-7046 Up to 6-8906**					
40	Y2-2315-99	**SUBWOOFER - INSTALLATION From RETROFIT**					
45	Y2-2317-00	**FRONT MONITOR - VIDEO - "R.E.I." From Y-7046 Up to 6-8578**					
45	Y2-2317-01	**FRONT MONITOR FLAT SCREEN - VIDEO - "R.E.I." From 5-8579 Up to 6-8906**					
50	Y2-2317-10	**SIDE MONITOR - VIDEO - "R.E.I." From Y-7046 Up to 6-8906**					
50	Y2-2317-11	**SIDE MONITOR FLAT SCREEN - VIDEO -"R.E.I." From Y-7046 Up to 6-8906**					
55	Y2-2317-12	**BACK SEAT MONITOR SCREEN - VIDEO -"R.E.I." From 5-8678 Up to 6-8906**					
55	Y2-2317-20	**VIDEO VHS PLAYER - INSTALLATION "R.E.I." From Y-7046 Up to 6-8906**					
55	Y2-2317-30	**VIDEO & AUDIO SYSTEM - INSTALLATION From 4-8271 Up to 5-8592**					
55	Y2-2317-31	**VIDEO & AUDIO SYSTEM - INSTALLATION From 5-8593 Up to 6-8906**					
55	Y2-2317-99	**VIDEO & AUDIO SYSTEM - INSTALLATION From RETROFIT**					
60	Y2-2318-00	**CLOCK (DIGITAL) From Y-7046 Up to 6-8906**					
70	Y2-2320-00	**JACK & FLARE KIT - INSTALLATION From Y-7046 Up to 8-9339**					
75	Y2-2320-30	**EXTINGUISHER - INSTALLATION From Y-7046 Up to 8-9339**					
85	Y2-2320-40	**FIRST AID KIT & AXE - INSTALLATION From Y-7046 Up to 6-8906**					
90	Y2-2325-00	**LAVATORY - ACCESSORIES From Y-7046 Up to 6-8906**					
95	Y2-2326-00	**TOILET PUMP ASSY From Y-7046 Up to 6-8906**					
100	Y2-2327-00	**SUMP TANK - PLASTIC From Y-7046 Up to 6-8906**					
110	Y2-2328-00	**LAVATORY WALL - INSTALLATION From Y-7046 Up to 6-8906**					
115	Y2-2329-00	**LAVATORY DOOR LOCK & SWITCH From Y-7046 Up to 6-8906**					
120	Y2-2330-00	**WATER & SUMP TANK - INSTALLATION From Y-7046 Up to 6-8906**					
125	Y2-2337-00	**LAVATORY FAN - INSTALLATION From Y-7046 Up to 6-8906**					
135	Y2-2345-40	**POWERVERTER - 24/110 VOLTS - 1000 WATTS From Y-7046 Up to 6-8906**					
135	Y2-2345-41	**POWERVERTER - 24/110 VOLTS - 5000 WATTS From Y-7046 Up to 6-8906**					
135	Y2-2345-42	**POWERVERTER - 24/110 VOLTS - 1800 WATTS From Y-7046 Up to 6-8906**					
135	Y2-2345-43	**110 VOLT - OUTLET From Y-7046 Up to 6-8906**					
135	Y2-2345-99	**110 VOLT - OUTLET / "RETROFIT" From Y-7046 Up to 6-8906**					
140	Y2-2350-10	**WATER HEATER - INSTALLATION From Y-7046 Up to 2-7764**					
140	Y2-2350-11	**WATER HEATER - INSTALLATION From 2-7765 Up to 6-8906**					
145	Y2-2355-00	**BACK-UP CAMERA & MONITOR - INSTALLATION From Y-7046 Up to 6-8906**					
145	Y2-2355-10	**FRONT CAMERA - INSTALLATION From Y-7046 Up to 6-8906**					
155	Y2-2370-10	**W.C.L. - DECAL From Y-7046 Up to 6-8906**					
155	Y2-2370-20	**W.C.L. SEAT BELTS From Y-7046 Up to 6-8906**					

From Y-7046 Up to 8-9339	DATE: 01/2014	PAGE: Y2-23

ACCESSORIES

ITEM	PART	DESCRIPTION	XL45	MTH40	MTH45	MTH45S	NOTE
160	Y2-2380-00	**W.C.L. "RICON" - INSTALLATION MODEL "F9A" From Y-7046 Up to 1-7680**					
160	Y2-2380-01	**W.C.L. "RICON" - INSTALLATION MODEL "HC-L002" From 1-7681 Up to 4-8330**					
160	Y2-2380-02	**W.C.L. "RICON" REMOVABLE - INSTALLATION MODEL "F9T" & "F9TF" From 4-8331 Up to 6-8906**					
160	Y2-2380-05	**W.C.L. "RICON" MODEL "F9A" From Y-7046 Up to 1-7680**					
160	Y2-2380-06	**W.C.L. "RICON" MODEL "HC-L002" From 1-7681 Up to 4-8278**					
160	Y2-2380-07	**W.C.L. "RICON" REMOVABLE MODEL "F9T" From 4-8279 Up to 5-8605**					
160	Y2-2380-08	**W.C.L. "RICON" REMOVABLE MODEL "F9TF" From 5-8606 Up to 6-8906**					
160	Y2-2380-10	**W.C.L. "RICON" - LIFT ENCLOSURE ASSY MODEL "F9A" From Y-7046 Up to 1-7680**					
160	Y2-2380-11	**W.C.L. "RICON" - LIFT ENCLOSURE ASSY MODEL "HC-L002" From 1-7681 Up to 4-8278**					
160	Y2-2380-12	**W.C.L. "RICON" - LIFT ENCLOSURE ASSY MODEL "F9T" & "F9TF" From 4-8279 Up to 6-8906**					
160	Y2-2380-20	**W.C.L. "RICON" - PLATFORM ASSY MODEL "F9A" From Y-7046 Up to 1-7680**					
160	Y2-2380-21	**W.C.L. "RICON" - PLATFORM ASSY MODEL "HC-L002" From 1-7681 Up to 4-8278**					
160	Y2-2380-22	**W.C.L. "RICON" - PLATFORM ASSY MODEL "F9T" From 4-8279 Up to 5-8605**					
160	Y2-2380-23	**W.C.L. "RICON" - PLATFORM ASSY MODEL "F9TF" From 5-8606 Up to 6-8906**					
160	Y2-2380-30	**W.C.L. "RICON" - TRAVELING FRAME ASSY MODEL "F9A" From Y-7046 Up to 1-7680**					
160	Y2-2380-31	**W.C.L. "RICON" - TRAVELING FRAME ASSY MODEL "HC-L002" From 1-7681 Up to 4-8278**					
160	Y2-2380-32	**W.C.L. "RICON" - TRAVELING FRAME ASSY MODEL "F9T" & "F9TF" From 1-8279 Up to 6-8906**					
160	Y2-2380-40	**W.C.L. "RICON" - CARRIAGE ASSY MODEL "F9A" From Y-7046 Up to 1-7680**					
160	Y2-2380-41	**W.C.L. "RICON" - CARRIAGE ASSY MODEL "HC-L002" From 1-7681 Up to 4-8278**					
160	Y2-2380-42	**W.C.L. "RICON" - CARRIAGE ASSY MODEL "F9T" & "F9TF" From 4-8279 Up to 6-8906**					
160	Y2-2380-50	**W.C.L. "RICON" - BRIDGE PLATE ASSY 9" MODEL "F9A" From Y-7046 Up to 1-7680**					
160	Y2-2380-51	**W.C.L. "RICON" - BRIDGE PLATE ASSY 9" MODEL "HC-L002" From 1-7681 Up to 4-8278**					
160	Y2-2380-52	**W.C.L. "RICON" - BRIDGE PLATE ASSY 9" MODEL "F9T" & "F9TF" From 4-8279 Up to 6-8906**					
160	Y2-2380-60	**W.C.L. "RICON" - PUMP INSTALLATION MODEL "F9A" From Y-7046 Up to 1-7680**					
160	Y2-2380-61	**W.C.L. "RICON" - PUMP INSTALLATION MODEL "HC-L002" From 1-7681 Up to 4-8278**					
160	Y2-2380-62	**W.C.L. "RICON" - PUMP INSTALLATION MODEL "F9T" & "F9TF" From 4-8279 Up to 6-8906**					
160	Y2-2380-65	**W.C.L. "RICON" - PUMP ASSY From Y-7046 Up to 6-8906**					
160	Y2-2380-70	**W.C.L. "RICON" - RELEASE HANDLE MODEL "HC-L002" From 1-7681 Up to 4-8278**					
165	Y2-2390-00	**"SLIDE-OUT" INFLATED SEAL & LOCKING PIN From Y-7046 Up to 6-8805**					
165	Y2-2390-01	**"SLIDE-OUT" INFLATED SEAL From 6-8806 Up to 8-9339**					
165	Y2-2390-05	**"SLIDE-OUT" CONTROL INSTALLATION From Y-7046 Up to 6-8805**					
165	Y2-2390-06	**"SLIDE-OUT" CONTROL PANEL - INSTALLATION From Y-7046 Up to 2-7780**					
165	Y2-2390-10	**"SLIDE-OUT" AIR CONTROL PANEL From Y-7046 Up to 2-7780**					
165	Y2-2390-11	**"SLIDE-OUT" AIR CONTROL PANEL From 2-7781 Up to 6-8805**					
165	Y2-2390-12	**"SLIDE-OUT" AIR CONTROL PANEL - MUX From 6-8806 Up to 8-9339**					
165	Y2-2390-20	**"SLIDE-OUT" - FRONT MECHANISM INSTALLATION From Y-7046 Up to 6-8805**					
165	Y2-2390-21	**"SLIDE-OUT" - FRONT MECHANISM INSTALLATION From 6-8806 Up to 8-9339**					
165	Y2-2390-30	**"SLIDE-OUT" - REAR MECHANISM INSTALLATION From Y-7046 Up to 6-8805**					
165	Y2-2390-31	**"SLIDE-OUT" - REAR MECHANISM INSTALLATION From 6-8806 Up to 8-9339**					
165	Y2-2390-40	**"SLIDE-OUT" - BED SUPPORT From Y-7046 Up to 6-8805**					
165	Y2-2390-41	**"SLIDE-OUT" - BED SUPPORT From 6-8806 Up to 8-9339**					
165	Y2-2390-50	**"SLIDE-OUT" - CYLINDER LOCK PIN ASSY From Y-7046 Up to 6-8805**					

From Y-7046 Up to 8-9339	DATE: 01/2014	PAGE: Y2-23

ACCESSORIES

ITEM	PART	DESCRIPTION	XL45	MTH400	MTH445	MTH455S	NOTE

From Y-7046 Up to 7-9095	DATE: 01/2014	PAGE: Y2-2300-00

ACCESSORIES AIR SYSTEM

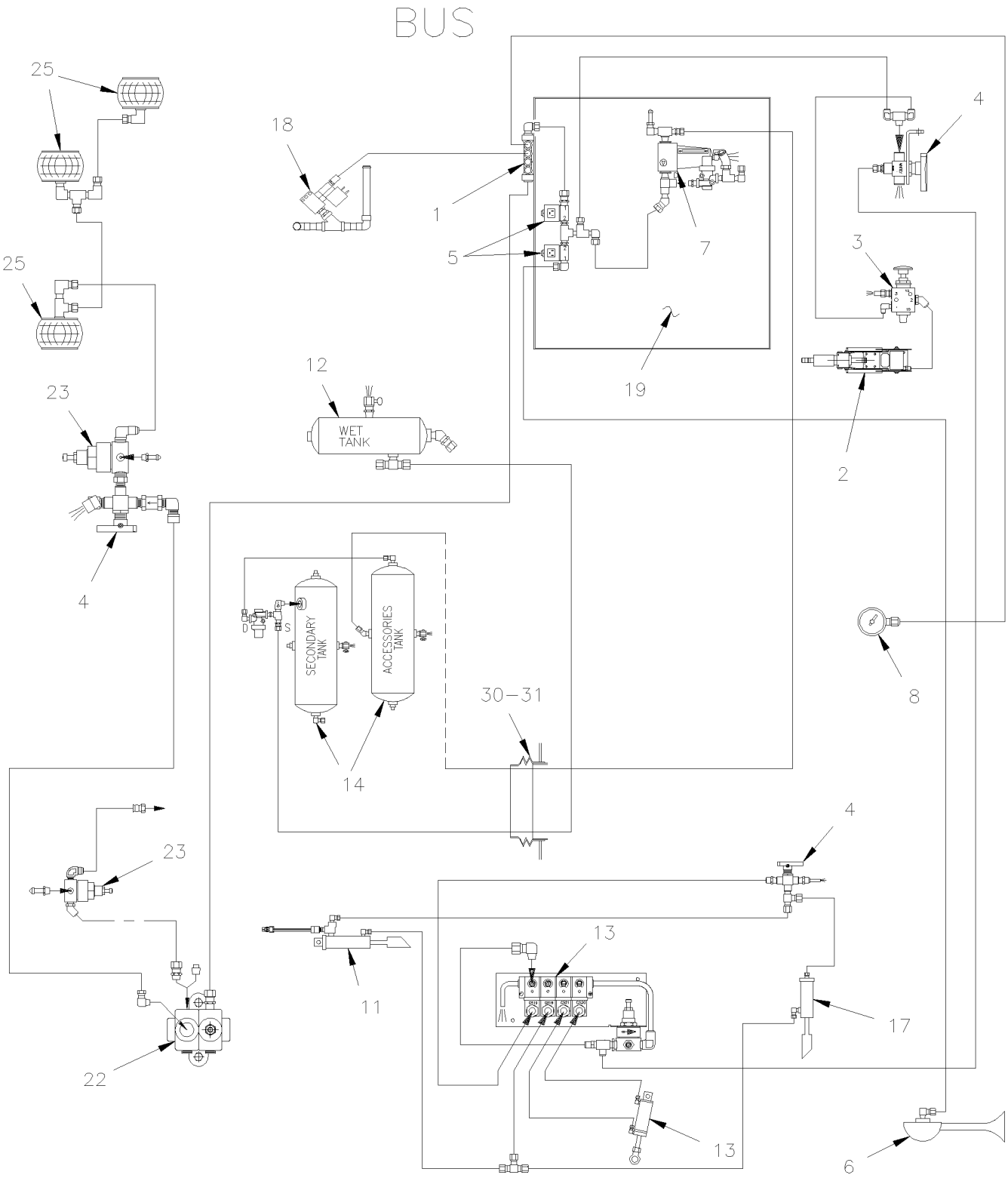

From Y-7046 Up to 7-9095	DATE: 01/2014	PAGE: Y2-2300-00

ACCESSORIES AIR SYSTEM

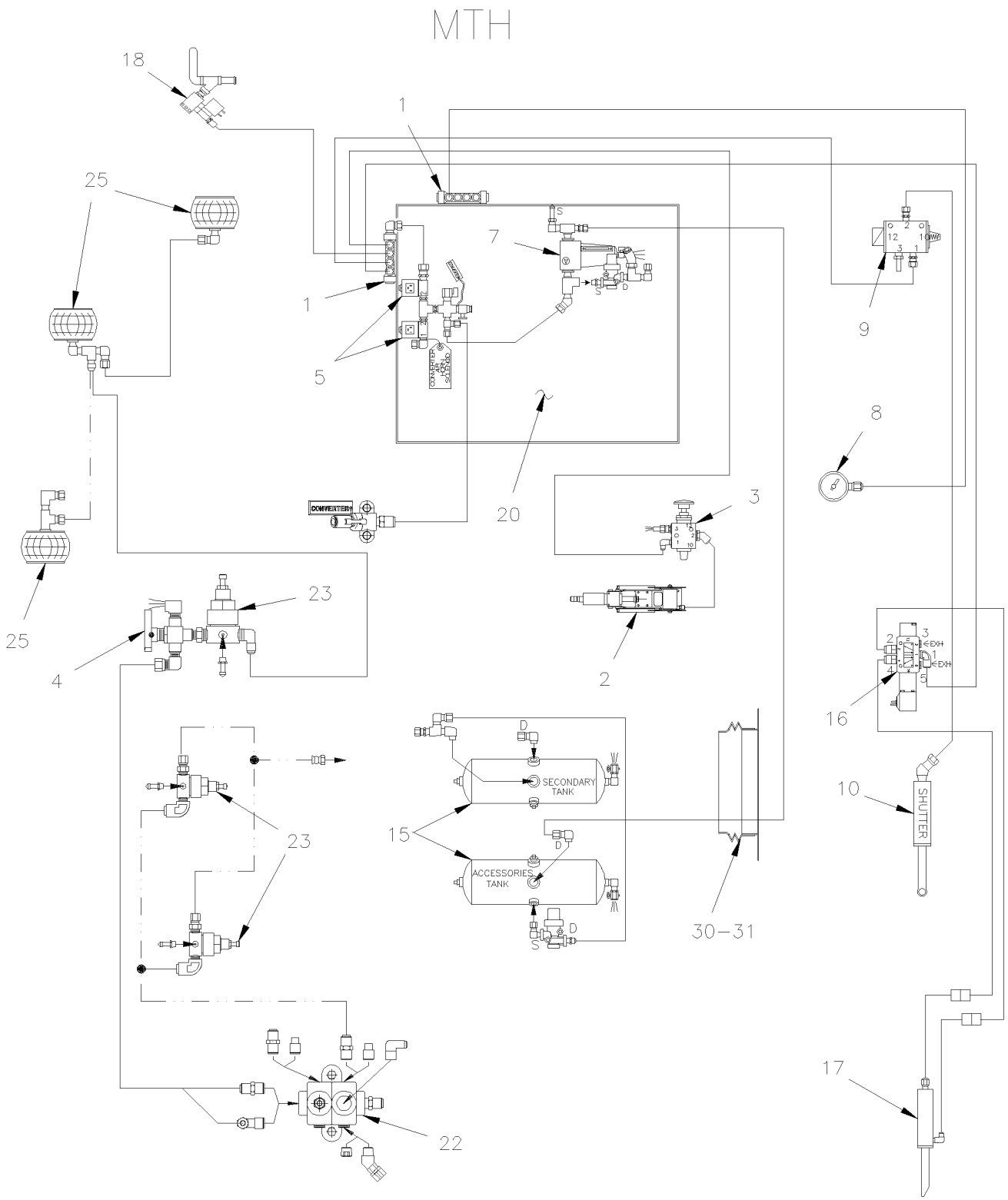

From Y-7046 Up to 7-9095	DATE: 01/2014	PAGE: Y2-2300-00

ACCESSORIES AIR SYSTEM

ITEM	PART	DESCRIPTION	XL45	MTH40	MTH45	MTH45S	NOTE
1	641415	MANIFOLD / PUSH-IN FITTING / 2x#6 / 4x#4 PLAS / REPLACED BY: 641897	1				
2	Y2-1405-00	**STEERING WHEEL & COLUMN ASSY**					
3	641445	VALVE, 3 WAYS, 2 POSITIONS MECHANICAL	1				
. NS	641992	. KNOB	1				
4	641417	VALVE, 3 WAYS 1/8NPT-Fx1/8NPT-Fx1/8NPT-F BR Up to 6-8906 / REPLACED BY: 642161	1				
. NS	642014	. HANDLE / RED Up to 6-8906	1				
4	642161	VALVE, 3 WAYS 1/8NPT-Fx1/8NPT-Fx1/8NPT-F BR / SERVICE Up to 6-8906	1				
5	562804	VALVE, 2 WAYS N.C.	2				
6	640093	HORN AIR Up to 6-8906	1				
7	Y2-1220-15	**AIR FILTER - ACCESSORIES**					
8	Y2-0645-20	**CENTER DASHBOARD PANEL**					
9	N.P.N.	SUPPLIED BY CONVERTER		1	1	1	4
10	051570	SHUTTER ASSY		1	1	1	
. NS	550568	. CYLINDER AIR / SHUTTER / W/4" MOUNT		1	1	1	
. NS	550569	. BOOT RUBBER		1	1	1	
. NS	550577	. SPRING EXTENSION / .350 O.D. x 6.875 x .069		1	1	1	
. NS	550179	. BUSHING 5/16" I.D. / NYLON		AR	AR	AR	
11	Y2-1804-00	**ENTRANCE DOOR LOCK**					
12	140869	AIR TANK / 1791 IN° / 9 1/2" O.D. X 27"	1				
13	Y2-1802-00	**ENTRANCE DOOR CONTROL**					
14	641583	AIR TANK / 1508 IN° / 9" 1/2 O.D. X 24" Up to 6-8906	2				
15	141834	AIR TANK / 1303 IN° / 8" O.D. X 27"1/2		2	2	2	
16	Y2-1804-50	**ENTRANCE DOOR - VALVE - MTH**					
17	287012	UPPER LOCK ASSY Up to 6-8906	1				
18	Y2-2207-01	**WATER VALVE - HEATER**					
19	Y2-1630-02	**FRONT KNEELING - CONTROL PANEL**					
19	Y2-1630-01	**FRONT KNEELING - CONTROL PANEL**					
19	Y2-1630-02	**FRONT KNEELING - CONTROL PANEL**					
20	Y2-1640-50	**LEVEL-LOW - CONTROL PANEL & VALVES**					
20	Y2-1640-51	**LEVEL-LOW - CONTROL PANEL & VALVES**					
20	Y2-1640-52	**LEVEL-LOW - CONTROL PANEL & VALVES**					
22	640055	MANIFOLD / PIPE FITTING / 7 PORTS 1/4NPT-F STL	1				
23	641472	AIR PRESSURE REGULATOR 1/4" NPT / COPPER	1				
25	550840	BELLOW ASSY 4" O.D. / BELT TENSIONER	AR				
25	950208	BELLOW ASSY 3" O.D. / BELT TENSIONER	AR				
. NS	504695	. HOSE CLAMP STEPLESS SPRING SS /	1				
30	504499	CUFF END BELLOW / 2 7/8" I.D. x 3 5/8" x 4 7/16	1				
31	141567	PROTECTOR RUBBER 100MM	1				
		4) NO PARTS NUMBER					

From Y-7046 Up to 7-9095	DATE: 01/2014	PAGE: Y2-2300-00

ACCESSORIES AIR SYSTEM

ITEM	PART	DESCRIPTION	XL45	MTH40	MTH45	MTH45S	NOTE

From 7-9096 Up to 8-9339	DATE: 01/2014	PAGE: Y2-2300-50

ACCESSORIES AIR SYSTEM - MTH

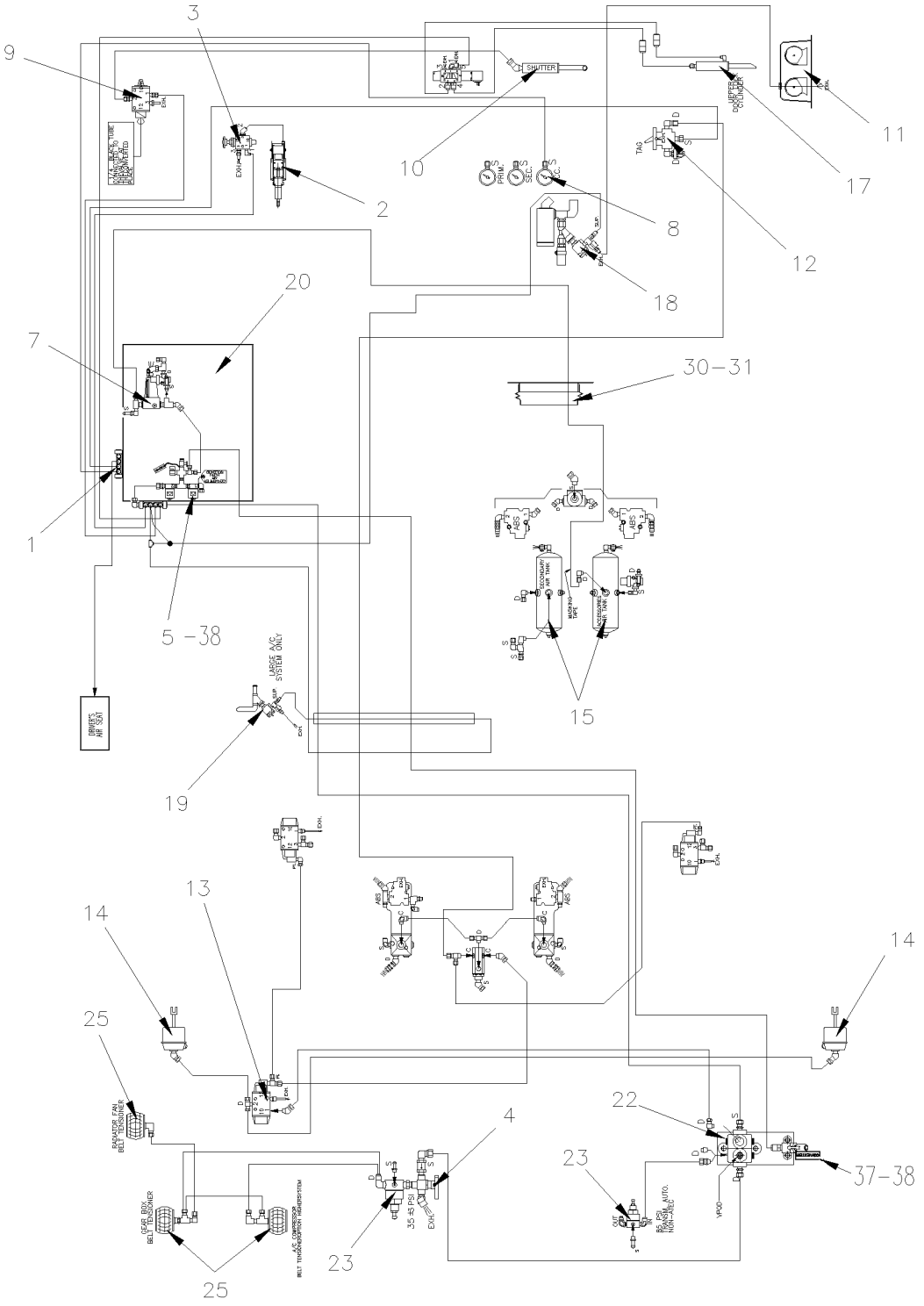

From 7-9096 Up to 8-9339	DATE: 01/2014	PAGE: Y2-2300-50

ACCESSORIES AIR SYSTEM - MTH

ITEM	PART	DESCRIPTION	XL45	MTH40	MTH45	MTH45S	NOTE
1	641415	MANIFOLD / PUSH-IN FITTING / 2x#6 / 4x#4 PLAS / REPLACED BY: 641897		1	1	1	
2	Y2-1405-00	**STEERING WHEEL & COLUMN ASSY**					
3	641445	VALVE, 3 WAYS, 2 POSITIONS MECHANICAL		1	1	1	
. NS	641992	. KNOB		1	1	1	
4	641417	VALVE, 3 WAYS 1/8NPT-Fx1/8NPT-Fx1/8NPT-F BR / REPLACED BY: 642161		1	1	1	
. NS	642014	. HANDLE / RED		1	1	1	
4	642161	VALVE, 3 WAYS 1/8NPT-Fx1/8NPT-Fx1/8NPT-F BR / SERVICE		1	1	1	
5	562804	VALVE, 2 WAYS N.C.		2	2	2	
7	Y2-1220-15	**AIR FILTER - ACCESSORIES**					
8	Y2-0645-20	**CENTER DASHBOARD PANEL**					
9	N.P.N.	SUPPLIED BY CONVERTER					4
10	051570	SHUTTER ASSY		1	1	1	
. NS	550568	. CYLINDER AIR / SHUTTER / W/4" MOUNT		1	1	1	
. NS	550569	. BOOT RUBBER		1	1	1	
. NS	550577	. SPRING EXTENSION / .350 O.D. x 6.875 x .069		1	1	1	
. NS	550179	. BUSHING 5/16" I.D. / NYLON		AR	AR	AR	
11	Y2-2310-00	**HORN - INSTALLATION**					
12	640136	VALVE, CONTROL TW-1		1	1	1	
. NS	641156	. REPAIR KIT / TW-1		1	1	1	
13	641274	VALVE, 3 WAYS, 2 POSITIONS N.C.		1	1	1	
14	Y2-1615-10	**TAG AXLE - LIFTING**					
15	141834	AIR TANK / 1303 IN° / 8" O.D. X 27"1/2		2	2	2	
17	287012	UPPER LOCK ASSY		1	1	1	
18	Y2-2207-01	**WATER VALVE - HEATER**					
19	Y2-2207-02	**WATER VALVE - HEATER**					
20	Y2-1640-52	**LEVEL-LOW - CONTROL PANEL & VALVES**					
22	640055	MANIFOLD / PIPE FITTING / 7 PORTS 1/4NPT-F STL		1	1	1	
23	641472	AIR PRESSURE REGULATOR 1/4" NPT / COPPER		2	2	2	
25	550840	BELLOW ASSY 4" O.D. / BELT TENSIONER		3	3	3	
30	504499	CUFF END BELLOW / 2 7/8" I.D. x 3 5/8" x 4 7/16		1	1	1	
31	141567	PROTECTOR RUBBER 100MM		1	1	1	
37	640488	VALVE, AIR FILL 1/8" NPT		1	1	1	
. NS	650164	. CAP VALVE / CHROME		1	1	1	
38	5011129	NEEDLE VALVE 1/4 NPT M x 1/4 NPT F		1	1	1	
		4) NO PARTS NUMBER					

From Y-7046 Up to 6-8805	DATE: 01/2014	PAGE: Y2-2300-90

"SLIDE-OUT" AIR SYSTEM

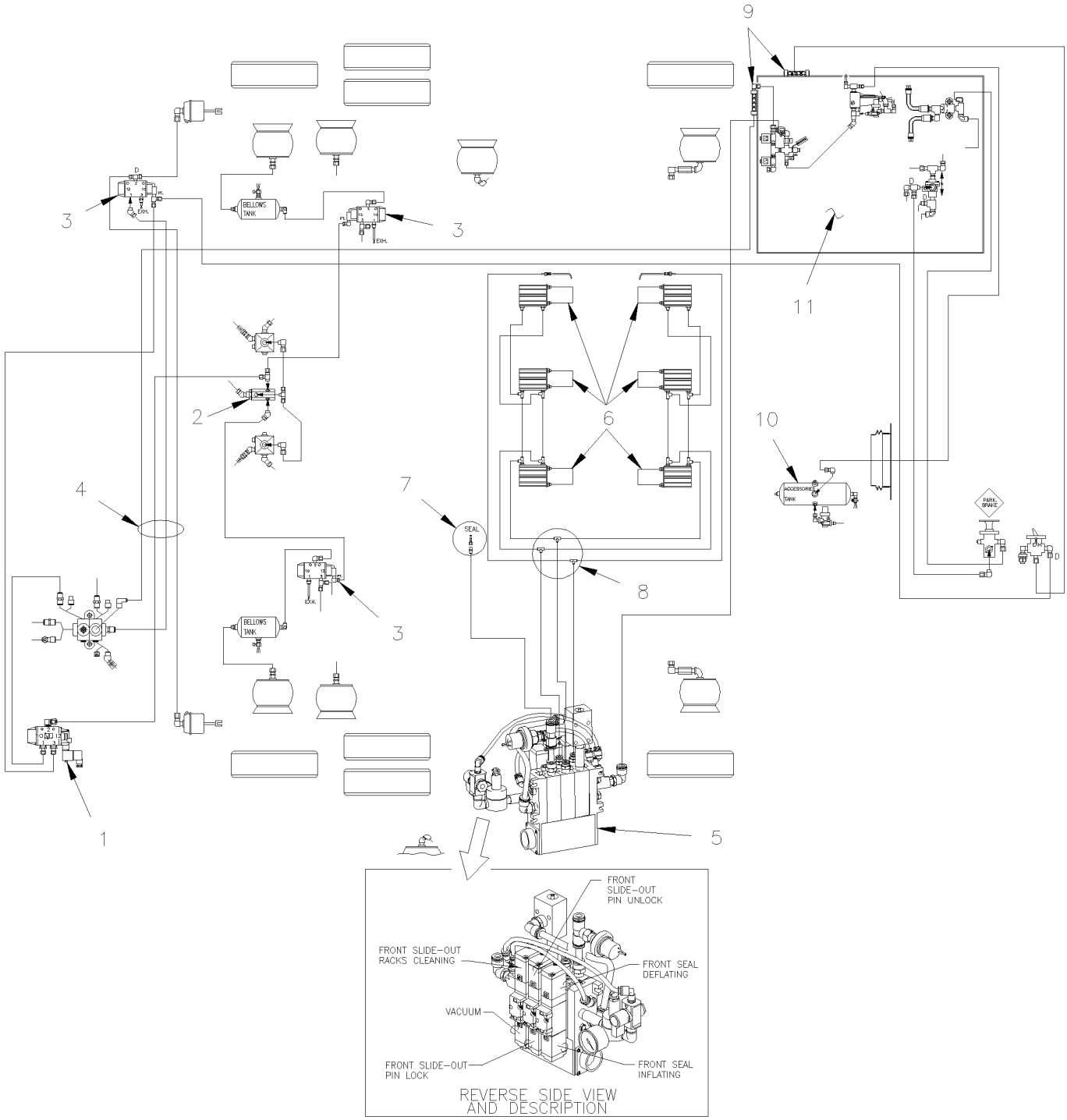

From Y-7046 Up to 6-8805	DATE: 01/2014	PAGE: Y2-2300-90

"SLIDE-OUT" AIR SYSTEM

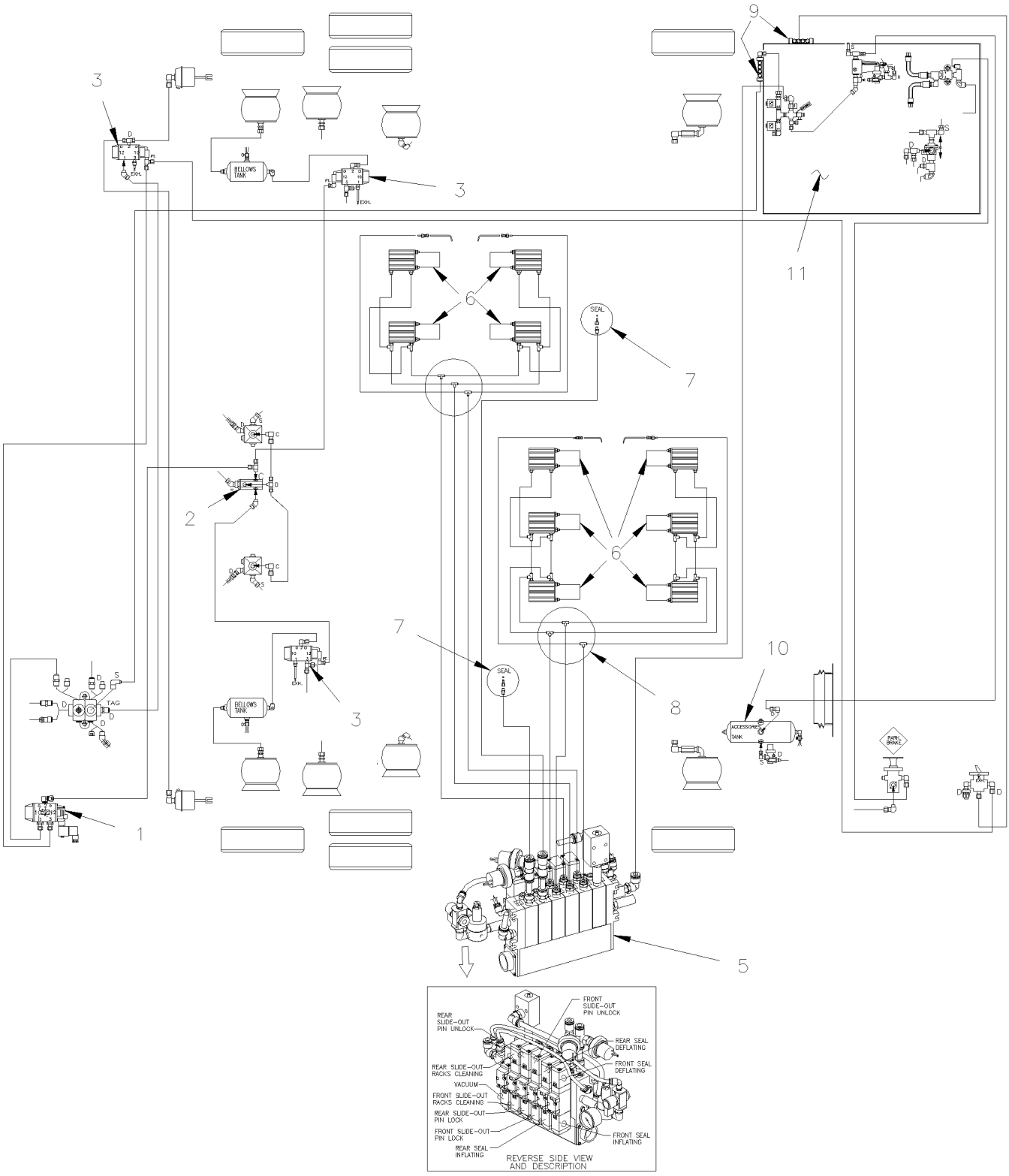

From Y-7046 Up to 6-8805	DATE: 01/2014	PAGE: Y2-2300-90

"SLIDE-OUT" AIR SYSTEM

ITEM	PART	DESCRIPTION	XL45	MTH40	MTH45	MTH45S	NOTE
1	641937	VALVE, 3 WAYS, 2 POSITIONS N.C. / W/MAN OVERRIDE			1	1	
. NS	641929	. COIL 24V			1	1	
. NS	641385	. CONNECTOR / SOCKET HOUSING ASSY 3C / PNEUMAC 54934-01			1	1	
2	640442	VALVE, INVERSION TR-2			1	1	
3	641274	VALVE, 3 WAYS, 2 POSITIONS N.C.			3	3	
4	Y2-1202-00	**TUBES PLASTIC / AIR D.O.T.**					
5	Y2-2390-10	**"SLIDE-OUT" AIR CONTROL PANEL**					
5	Y2-2390-11	**"SLIDE-OUT" AIR CONTROL PANEL**					
6	Y2-2390-50	**"SLIDE-OUT" - CYLINDER LOCK PIN ASSY**					
7	Y2-2390-00	**"SLIDE-OUT" INFLATED SEAL & LOCKING PIN**					
8	641955	UNION TEE / PUSH-IN FITTING / #4x#4x#4 BR			AR	AR	
9	641897	MANIFOLD / PUSH-IN FITTING / 2x#6 / 4x#4 PLAS			2	2	
10	141834	AIR TANK / 1303 IN° / 8" O.D. X 27"1/2			1	1	
11	Y2-1640-50	**LEVEL-LOW - CONTROL PANEL & VALVES**					
11	Y2-1640-51	**LEVEL-LOW - CONTROL PANEL & VALVES**					
11	Y2-1640-52	**LEVEL-LOW - CONTROL PANEL & VALVES**					

From Y-7046 Up to 6-8805	DATE: 01/2014	PAGE: Y2-2300-90

"SLIDE-OUT" AIR SYSTEM

ITEM	PART	DESCRIPTION	XL45	MTH40	MTH45	MTH45S	NOTE

From Y-7046 Up to 8-9339	DATE: 01/2014	PAGE: Y2-2305-00
LOWER WINDSHIELD WIPER		

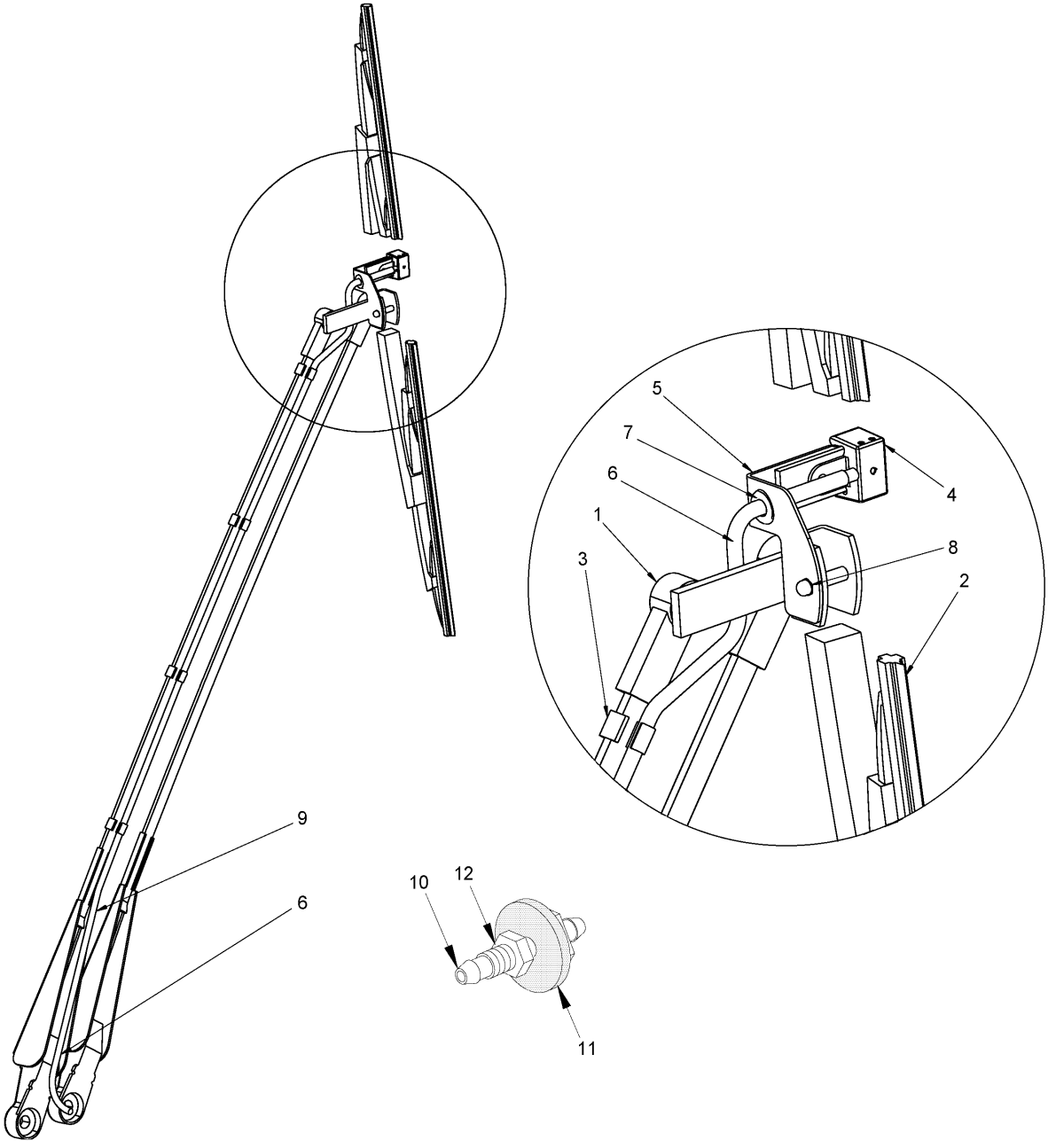

From Y-7046 Up to 8-9339	DATE: 01/2014	PAGE: Y2-2305-00

LOWER WINDSHIELD WIPER

ITEM	PART	DESCRIPTION	XL45	MTH40	MTH45	MTH45S	NOTE
1	800331	ARM WIPER ASSY "BOSCH" Up to 5-8609 / REPLACED BY: 800359	1				
1	800359	ARM WIPER ASSY "DOGA" From 5-8610	1				
. NS	800362	. CAP CLOSING LOWER MAIN ARM From 5-8610	1				
. NS	800363	. CAP CLOSING LOWER IDLER ARM From 5-8610	1				
2	800329	WIPER BLADE 700MM / "BOSCH" Up to 5-8609 / REPLACED BY: 800378	1				
NS	191660	. RUBBER BLADE REFILL 700MM w/"BOSCH" BLADE ONLY Up to 5-8609	AR				
2	800360	WIPER BLADE 700MM From 5-8610 / REPLACED BY: 800378	1				
2	800378	WIPER BLADE 700MM	1				
3	800332	HOSE CLIP Up to Y-7380 / REPLACED BY: 300432	4				
3	300432	HOSE CLIP From Y-7381 Up to 5-8609	4				
4	800330	NOZZLE, WINDSHIELD WASHER / "BOSCH" Up to 5-8609	1				
4	800361	NOZZLE, WINDSHIELD WASHER "DOGA"	1				
5	300383	NOZZLE SUPPORT / PASSENGER'S SIDE Up to 2-7775	1				
5	300382	NOZZLE SUPPORT / DRIVER'S SIDE Up to 2-7775 / REPLACED BY: 300461	1				
5	300461	NOZZLE SUPPORT / DRIVER`S SIDE From 2-7776 Up to 5-8609	1				
5	300552	NOZZLE SUPPORT / DRIVER`S SIDE From 5-8610	1				
6	Call Order Desk	HOSE 1/8" I.D	1				P
NS	503696	. HOSE 1/8" I.D	AR				
7	504529	GROMMET / .250x.375x.062x.281x.625	1				
8	800345	SCREW SHR CAP HEX M6X25 [M4-0.7	1				
NS	502557	NUT HEX NYRT M4-0.7 SS	1				
NS	680038	THREAD LOCKER LOCTITE #243 / BLUE / 50ml	AR				
9	948702	TIE CABLE BK 85 X 2.5	1				
10	300384	ADAPTOR HOSE #3 / WET ARM Up to 2-7775 / REPLACED BY: 300469	1				
10	300469	ADAPTOR HOSE #3 / WET ARM From 2-7776	1				
11	502220	WASHER FL .375x1.000x.125 RUB	1				
12	502543	NUT HEX M8-1.25 ZP	1				
		P) CALL ORDER DESK FOR SPECIFIC APPLICATION					
		(V.I.N.)					

From Y-7046 Up to 8-9339	DATE: 01/2014	PAGE: Y2-2305-05

LOWER WINDSHIELD WIPER - INSTALLATION

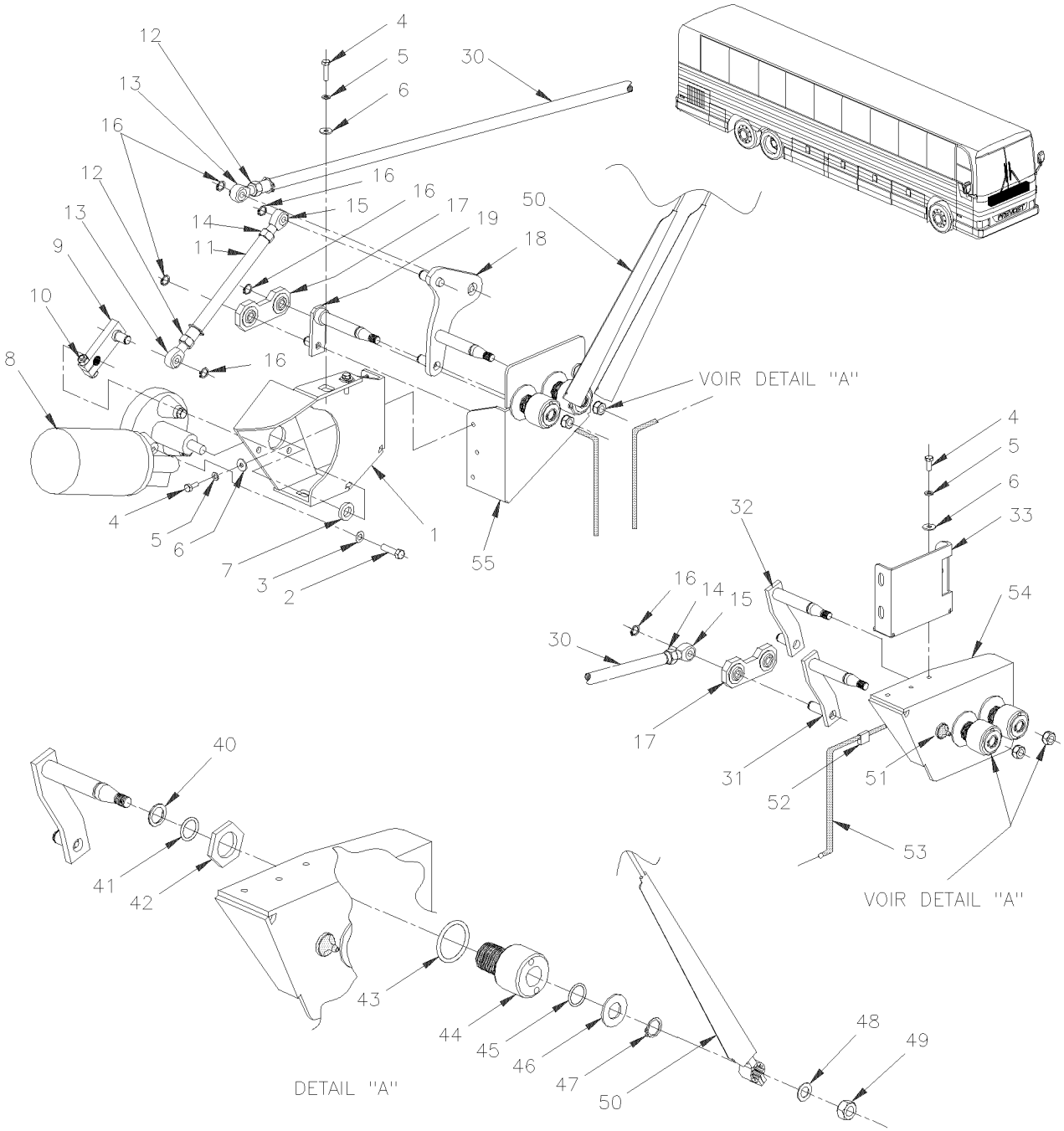

From Y-7046 Up to 8-9339	DATE: 01/2014	PAGE: Y2-2305-05

LOWER WINDSHIELD WIPER - INSTALLATION

ITEM	PART	DESCRIPTION	XL45	MTH40	MTH45	MTH45S	NOTE
1	300415	SUPPORT ELECTRIC MOTOR	1	1	1	1	
2	5001217	SCREW CAP HEX M8-1.25x20 G10.9 ZP	3	3	3	3	
3	5001003	WASHER LO SPT 8.1x12.7x2.0 ZP	3	3	3	3	
4	502531	SCREW CAP HEX M6-1.0x16 G8.8 ZP	13	13	13	13	
5	502564	WASHER LO SPT 6.1x11.8x1.6 ZP	13	13	13	13	
6	5001462	WASHER FL 6.4x18.0x1.6 ZP	13	13	13	13	
7	300424	WASHER	1	1	1	1	
8	800328	MOTOR WIPER ASSY / 24V / BOSCH	1	1	1	1	
9	300406	CRANK ARM Up to 1-7605 / REPLACED BY: K300406	1	1	1	1	
9	300445	CRANK ARM From 1-7606	1	1	1	1	
10	502651	. SCREW CAP HEX M8-1.25x35 G8.8 ZP	1	1	1	1	
NS	500868	. NUT HEX NYRT M8-1.25 CP	1	1	1	1	
11	300363	ROD ASSY 254MM C/C	1	1	1	1	
11	300344	. ROD 179MM	1	1	1	1	
12	5001466	NUT HEX LH M12-1.75 ZP	1	1	1	1	
13	502253	ROD END MALE L.H. M12-1.75-L.HH / 12MM I.D.	1	1	1	1	
14	5001465	NUT HEX M12-1.75 YZ	1	1	1	1	
15	502252	ROD END MALE M12-1.75 / 12MM I.D.	1	1	1	1	
16	504680	RING RETAINER / EXT 12 x 11.35 x 0.60 Up to 1-7605	6	6	6	6	
16	507613	SCREW CAP HEX M6-1.0x12 / W/17mm HEAD ZP From 1-7606	6	6	6	6	
17	300338	DOUBLE LINK 60MM Up to 1-7605 / REPLACED BY: 502256	2	2	2	2	
17	502256	DOUBLE LINK 60MM From 1-7606	1	1	1	1	
18	300416	COUPLING PLATE ASSY Up to 1-7605 / REPLACED BY: K300416	1	1	1	1	
18	300442	COUPLING PLATE ASSY From 1-7606 Up to 3-8088 / REPLACED BY: 300496	1	1	1	1	
18	300496	COUPLING PLATE ASSY From 3-8089	1	1	1	1	
18	300515	COUPLING PLATE ASSY	1	1	1	1	
19	300412	DRIVE LEVER ASSY EXT Up to 1-7605 / REPLACED BY: K300412	1	1	1	1	
19	300443	DRIVE LEVER ASSY EXT From 1-7606 Up to 3-8088 / REPLACED BY: K300443	1	1	1	1	
19	300497	DRIVE LEVER ASSY EXT From 3-8089	1	1	1	1	
19	300519	DRIVE LEVER ASSY EXT	1	1	1	1	
21	502220	WASHER FL .375x1.000x.125 RUB	2	2	2	2	
22	502543	NUT HEX M8-1.25 ZP	2	2	2	2	
29	5001460	WASHER FL .640x1.188x0.073 SS	4	4	4	4	
30	300362	ROD ASSY 1168MM C/C	1	1	1	1	
30	300332	. ROD 1093MM	1	1	1	1	
31	300345	DRIVE LEVER ASSY INT. Up to 1-7605 / REPLACED BY: 300498	1	1	1	1	
31	300436	DRIVE LEVER ASSY INT. From 1-7606 Up to 3-8088 / REPLACED BY: 300498	1	1	1	1	
31	300498	DRIVE LEVER ASSY INT. From 3-8089	1	1	1	1	
31	300524	DRIVE LEVER ASSY INT.	1	1	1	1	
32	300378	DRIVE LEVER ASSY EXT. Up to 1-7605 / REPLACED BY: K300378	1	1	1	1	
32	300435	DRIVE LEVER ASSY EXT. From 1-7606 Up to 3-8088 / REPLACED BY: 300500	1	1	1	1	

From Y-7046 Up to 8-9339	DATE: 01/2014	PAGE: Y2-2305-05

LOWER WINDSHIELD WIPER - INSTALLATION

ITEM	PART	DESCRIPTION	XL45	MTH40	MTH45	MTH45S	NOTE
32	300500	DRIVE LEVER ASSY EXT. From 3-8089	1	1	1	1	
32	300521	DRIVE LEVER ASSY EXT.	1	1	1	1	
33	300336	TRANSITION SUPPORT	1	1	1	1	
40	5001471	WASHER SPR WAVE .855x.650x.015	4	4	4	4	
41	5001459	WASHER SPR WAVE 16.0x22.0x1.5	4	4	4	4	
42	5001463	NUT HEX JAM 1-14 ZP	4	4	4	4	
43	507366	O-RING	4	4	4	4	
44	300333	CAP-HOUSING	4	4	4	4	
. NS	5001455	. BUSHING BRASS 16X20X20	2	2	2	2	
NS	680739	GREASE SYNTHETIC / RED (20KL)	AR	AR	AR	AR	
45	507369	O-RING W/BACKING	4	4	4	4	
46	5001460	WASHER FL .640x1.188x0.073 SS	4	4	4	4	
47	504691	RING RETAINER / EXT .625 x .588 x .035" / SS	4	4	4	4	
48	500823	WASHER LO INT 10.5x18.0x0.9 BK	4	4	4	4	
49	502567	NUT HEX M10-1.5 SS	4	4	4	4	
50	Y2-2305-00	**LOWER WINDSHIELD WIPER**					
51	300384	ADAPTOR HOSE #3 / WET ARM From 2-7761 / REPLACED BY: 300469	2	2	2	2	
51	300469	ADAPTOR HOSE #3 / WET ARM Up to 2-7762	2	2	2	2	
52	504536	CABLE CLIP ½" / ADHESIVE	1	1	1	1	
53	503002	HOSE RUBBER 5/32" I.D. / S.L.	AR	AR	AR	AR	
53	561681	CONVOLUTED TUBING / .350" / SLIT / BL.&GR.	AR	AR	AR	AR	
54	N.S.S.	SUPPORT L.H.	1	1	1	1	1 A
55	N.S.S.	SUPPORT R.H.	1	1	1	1	1 A
99	680038	THREAD LOCKER LOCTITE #243 / BLUE / 50ml	AR	AR	AR	AR	
		1) NOT SOLD SEPARATELY					
		A) THIS PART IS FIXED IN FRONT FIBERGLASS CAP					

From Y-7046 Up to 8-9339	DATE: 01/2014	PAGE: Y2-2305-05

LOWER WINDSHIELD WIPER - INSTALLATION

ITEM	PART	DESCRIPTION	XL45	MTH40	MTH45	MTH45S	NOTE

From Y-7046 Up to 8-9339	DATE: 01/2014	PAGE: Y2-2305-20

WINDSHIELD WASHER - INSTALLATION

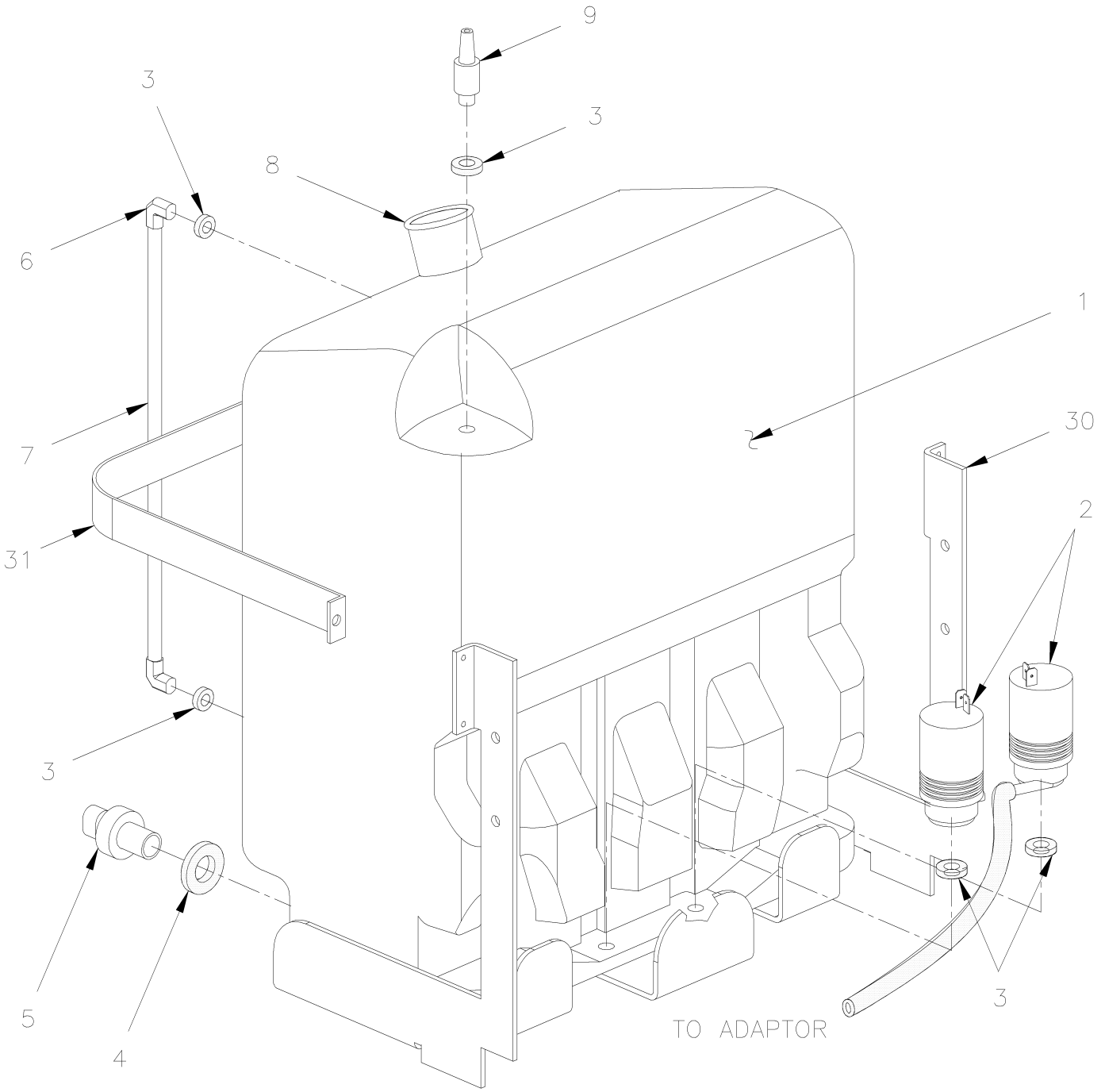

From Y-7046 Up to 8-9339	DATE: 01/2014	PAGE: Y2-2305-20

WINDSHIELD WASHER - INSTALLATION

ITEM	PART	DESCRIPTION	XL45	MTH40	MTH45	MTH45S	NOTE
1	800326	WINDSHIELD WASHER TANK	1	1	1	1	
2	800346	. PUMP WINDSHIELD WASHER 24V	2	2	2	2	
3	800348	. SEAL RETAINER	5	5	5	5	
4	800349	. SEAL RETAINER	1	1	1	1	
5	800347	. SENSOR LEVEL-LOW / "BOSCH" / REPLACED BY: 800364	1	1	1	1	S
. NS	562426	. . CONNECTOR / METRI-PACK 150.2 P2S / SH 2C / PED 12162193	1	1	1	1	
. NS	562857	. . SOCKET TERMINAL / 18-16 / PED 12089340	2	2	2	2	
6	800352	. ELBOW 90°	2	2	2	2	
7	560382	. PLASTIC TUBING / 1/4" / CLEAR	AR	AR	AR	AR	
8	800350	. COVER WASHER RESERVOIR	1	1	1	1	
9	800351	. CHECK VALVE	1	1	1	1	
20	503002	HOSE RUBBER 5/32" I.D. / S.L.	AR	AR	AR	AR	
30	288920	SUPPORT / WINDSHIELD WASHER TANK	1				A
31	288919	STRAP RETAINING SS / 330MM x 218MM	1				A
32	800364	SENSOR LEVEL-LOW / "DOGA"	1				
. NS	563409	. CONNECTOR / SUPERSEAL 1.5 SERIES / SH 2C / AMP 282080-1	1				
. NS	562607	. SOCKET TERMINAL 20-16 / AMP 183025-1	2				
33	066561	CABLE ASSY / ADAPTOR / (SERVICE ONLY) / <> FORMER LEVEL & NEW LEVEL	1				
		A) "OPTION"					
		S) THIS SENSOR LEVEL IT SUPPERSEEDED BY # 800364					
		AND YOU NEED CABLE ADAPTOR # 066561TO REPLACE					

From 7-9003 Up to 8-9339	DATE: 01/2014	PAGE: Y2-2305-25

HEAD LAMP CLEANING WASHER TANK

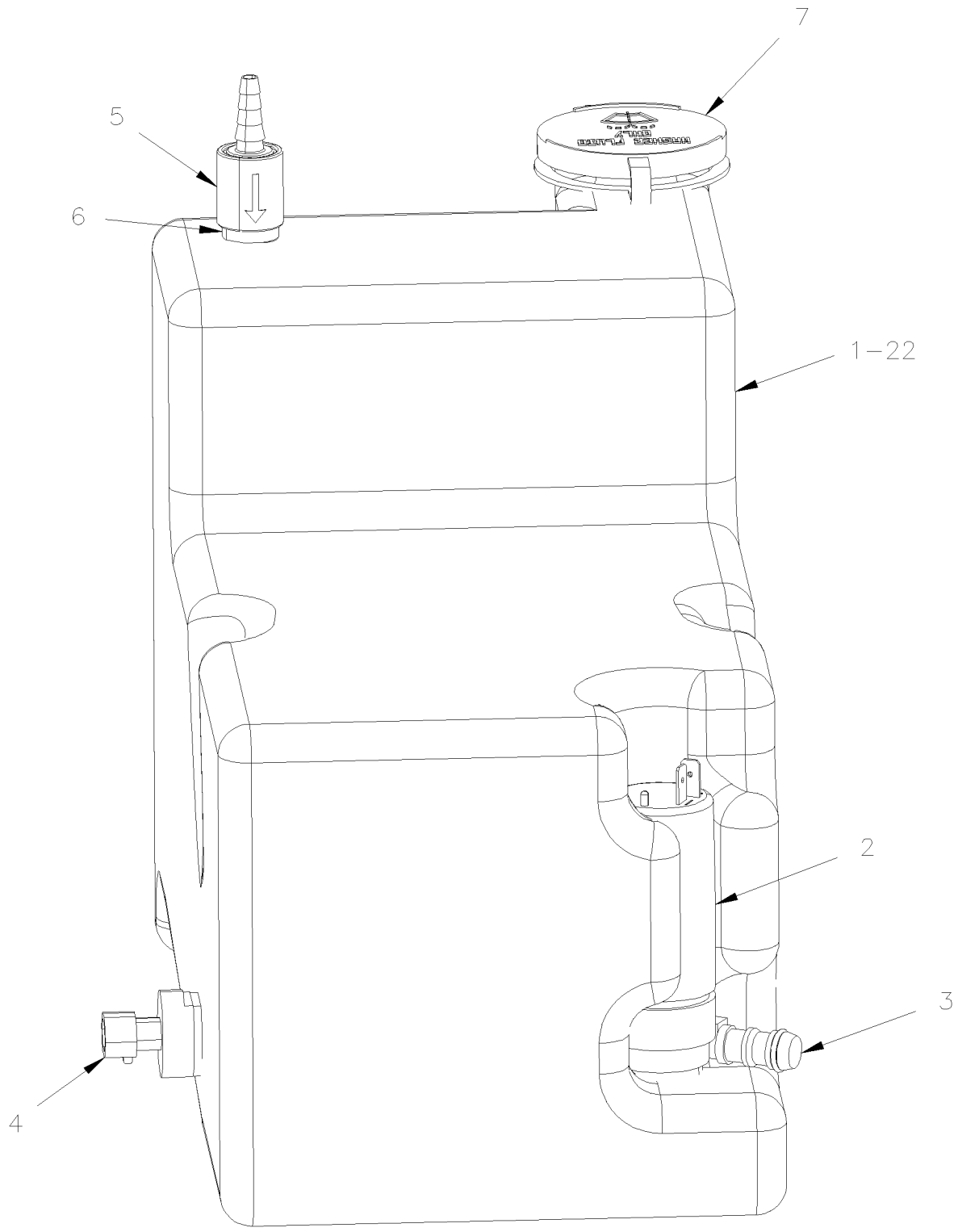

From 7-9003 Up to 8-9339	DATE: 01/2014	PAGE: Y2-2305-25

HEAD LAMP CLEANING WASHER TANK

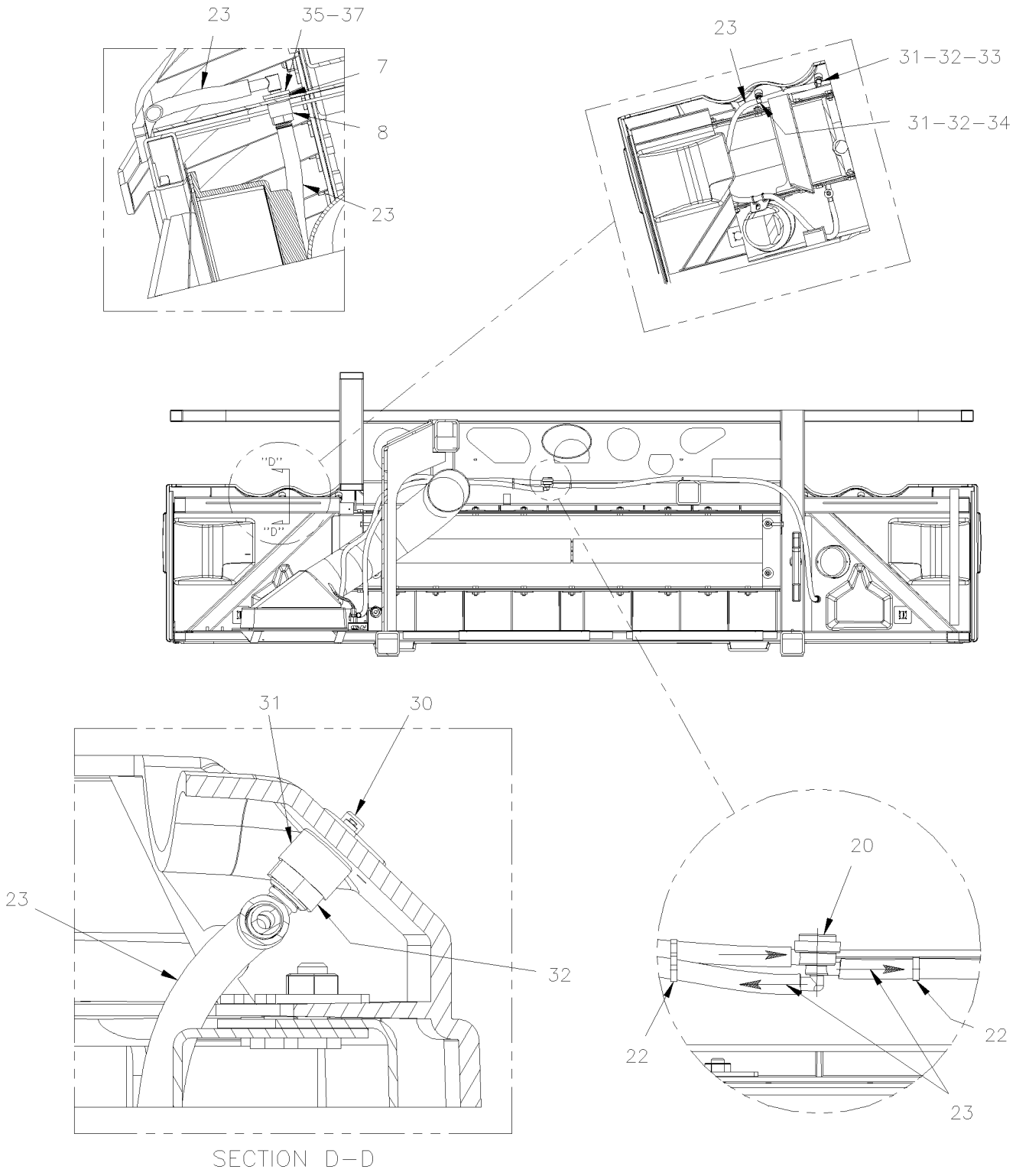

From 7-9003 Up to 8-9339	DATE: 01/2014	PAGE: Y2-2305-25

HEAD LAMP CLEANING WASHER TANK

ITEM	PART	DESCRIPTION	XL45	MTH40	MTH45	MTH45S	NOTE
	Call Order Desk	HEADLAMP WASHER TANK ASSY	1				P
1	Call Order Desk	. HEADLAMP WASHER TANK	1				P
2	800367	. PUMP SEALBEAM WASHER	1				
3	800368	. GROMMET PUMP	1				
4	800364	. SENSOR LEVEL-LOW / "DOGA"	1				
. NS	563409	. . CONNECTOR / SUPERSEAL 1.5 SERIES / SH 2C / AMP 282080-1	1				
. NS	562607	. . SOCKET TERMINAL 20-16 / AMP 183025-1	2				
5	800351	. CHECK VALVE	1				
6	800348	. SEAL RETAINER	1				
7	20462640	. COVER WASHER RESERVOIR	1				
8	800373	NUT NOZZLE ADAPTOR	4				
20	800371	VALVE CENTRAL	1				
21	504731	TIE RUBBER BELT, W/HOOK 15"	1				
22	504637	CABLE TIE / 3/16" x 13"	1				
23	800376	HOSE HEADLAMP WASHER / 5M	AR				
30	800372	NOZZLE SEALBEAM WASHER	4				
31	800374	SPACER NOZZLE WASHER	4				
32	502881	NUT HEX JAM THN 5/8-18x3/8 ZG603	4				
33	800369	ELBOW NOZZLE ADAPTOR	6				
34	800370	TEE CONNECTOR	2				
35	800375	ADAPTOR WALL / FRONT FACE	2				
36	800373	NUT NOZZLE ADAPTOR	2				
37	507214	O-RING	2				
NS	300563	RESERVOIR SUPPORT FOR HOOK / HEADLAMP WASH.	2				
NS	300570	RESERVOIR SUPPORT SIDE	4				
41	509815	TIE MOUNT / ATTACHMENT W/TREE MOUNT	4				
50	430632	RETROFIT KIT, HEADLAMP WASHER / SERIES "XLII" & "X3"	1				
		P) CALL ORDER DESK FOR SPECIFIC APPLICATION					
		(V.I.N.)					

From 7-9003 Up to 8-9339	DATE: 01/2014	PAGE: Y2-2305-25

HEAD LAMP CLEANING WASHER TANK

ITEM	PART	DESCRIPTION	XL45	MTH40	MTH45	MTH45S	NOTE

From Y-7046 Up to 8-9339	DATE: 01/2014	PAGE: Y2-2310-00
HORN - INSTALLATION		

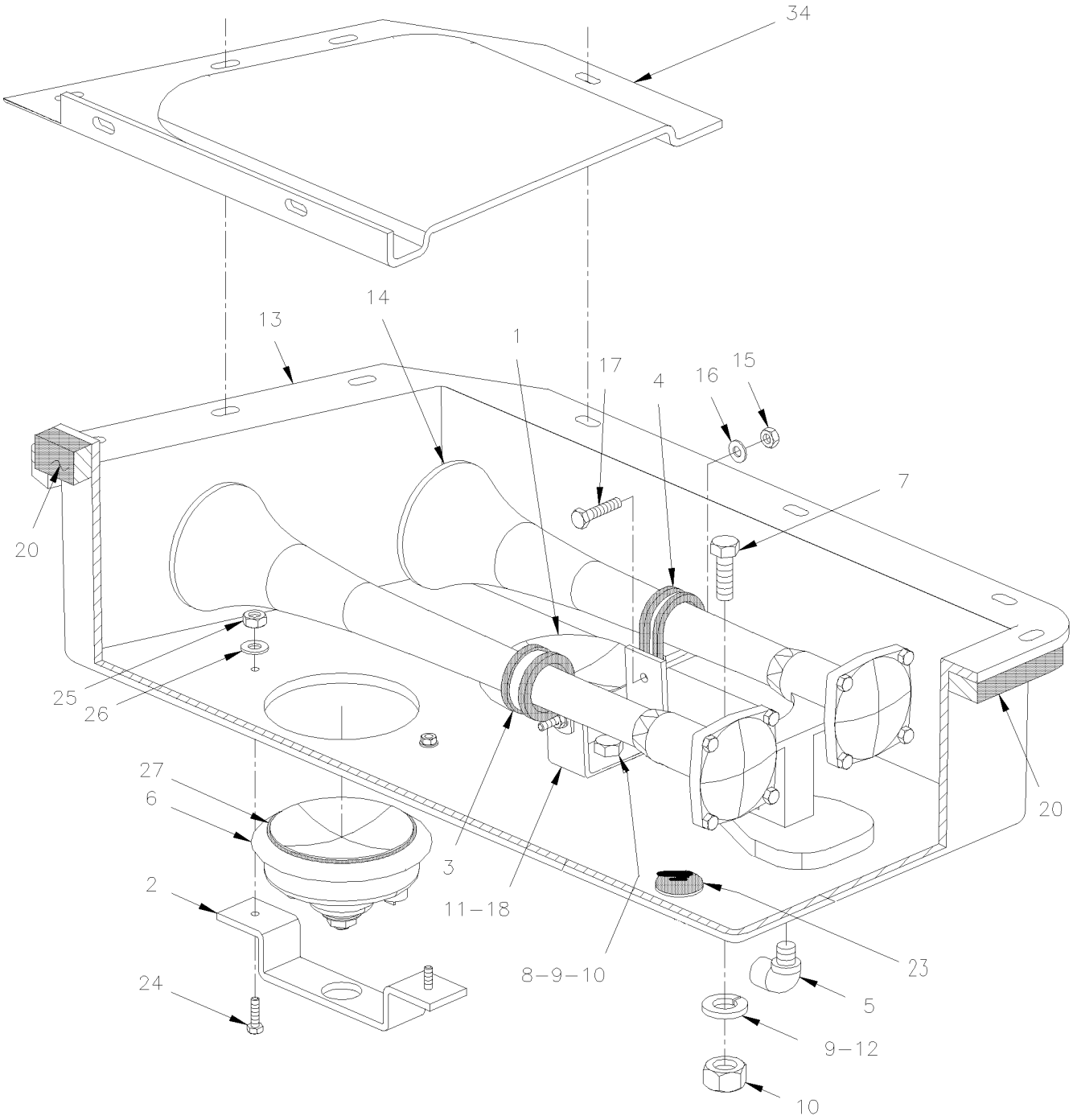

From Y-7046 Up to 8-9339	DATE: 01/2014	PAGE: Y2-2310-00

HORN - INSTALLATION

ITEM	PART	DESCRIPTION	XL45	MTH40	MTH45	MTH45S	NOTE
1	563036	HORN 12V-445HZ	1	1	1	1	
2	142094	SUPPORT Up to 3-8077	1	1	1	1	
2	142283	SUPPORT From 3-8078	1	1	1	1	
NS	680066	GLUE / ADBOND 5014 ADH 23.6ML BOTTLE From 3-8078	AR	AR	AR	AR	
3	952635	CLAMP / 1" I.D.	1	1	1	1	
4	952639	CLAMP / 1"1/4 I.D.	1	1	1	1	
5	641369	MALE ELBOW 90° NON-SWIVEL / PUSH-IN FITTING #4x1/8NPT-M BR	1	1	1	1	
NS	680098	THREAD SEALANT LOCTITE #567 / WHITE / 250ml	AR	AR	AR	AR	
6	563035	HORN 12V-335HZ	1	1	1	1	
7	500182	SCREW CAP HEX 5/16-18x1 1/4 G5 PT ZP Up to 3-8077	1	1	1	1	
7	500544	SCREW CAP HEX M8-1.25x30 G8.8 ZP From 3-8078	1	1	1	1	
8	500179	SCREW CAP HEX 5/16-18x3/4 G5 ZP Up to 3-8077	1	1	1	1	
8	502790	SCREW CAP HEX M8-1.25x20 G8.8 ZP From 3-8078	1	1	1	1	
9	500476	WASHER LO SPT .317x.586x.078 ZP Up to 3-8077	2	2	2	2	
10	500778	NUT HEX 5/16-18 ZP Up to 3-8077	2	2	2	2	
11	141122	REINFORCEMENT Up to 3-8077	1	1	1	1	
12	141121	REINFORCEMENT Up to 3-8077	1	1	1	1	
13	142098	PLASTIC BOX, HORN Up to 3-8077	1	1	1	1	
13	142286	PLASTIC BOX, HORN From 3-8078	1	1	1	1	
14	640093	HORN AIR	1	1	1	1	
15	500590	NUT HEX NYRT M4-0.7 ZP	2	2	2	2	
16	500591	WASHER FL 4.3x9.0x0.8 ZP	2	2	2	2	
17	500588	SCREW CAP HEX M4-0.7x20 G8.8 ZP / REPLACED BY: 500414	2	2	2	2	
18	141120	SUPPORT / AIR HORN	1	1	1	1	
20	506339	TAPE RUB ADH1 NEO 1/4" x 1" x 35' / BLACK 1220	AR	AR	AR	AR	
21	065593	ALARM "KNEELING" Up to 6-8906	1				
. NS	563164	. ALARM "KNEELING" Up to 6-8906	1				
22	502631	SCREW CAP HEX M6-1.0x20 G8.8 ZP Up to 6-8906	2				
23	504625	GROMMET / .250x.750x.250x.437x1.000 Up to 6-8906	1				
NS	504317	PLUG BUTTON / .718 O.D. / NICKEL		1	1	1	
24	5001036	SCREW MA PAN PH M4-0.7x10 ZP Up to 3-8077	4	4	4	4	
25	500590	NUT HEX NYRT M4-0.7 ZP Up to 3-8077	4	4	4	4	
26	500964	WASHER FL .203x.500x.047 ZP Up to 3-8077	8	8	8	8	
27	142135	GASKET	2	2	2	2	
31	065593	ALARM "KNEELING" From 3-8078	1	1	1	1	
. NS	563164	. ALARM "KNEELING" From 3-8078	1	1	1	1	
32	504317	PLUG BUTTON / .718 O.D. / NICKEL From 3-8078	1	1	1	1	
33	502631	SCREW CAP HEX M6-1.0x20 G8.8 ZP From 3-8078	2	2	2	2	
34	142309	DEFLECTOR From 3-8138	1	1	1	1	
NS	500658	SCREW TC PAN PH #10-24x3/4 ZP From 3-8138	13	13	13	13	
NS	500964	WASHER FL .203x.500x.047 ZP From 3-8138	13	13	13	13	
NS	065257	HARNESS / <> HORN & CONNECTOR	1	1	1	1	
NS	680111	GREASE PROTECTIVE / NYK77 (8 oz)	AR	AR	AR	AR	
NS	680065	TAPE COMPOUND / BLACK / 1/32" X 1" X 33' / L163-2400	AR	AR	AR	AR	

From Y-7046 Up to 6-8906	DATE: 01/2014	PAGE: Y2-2315-00

SOUND SYSTEM & ACCESSORIES - "R.E.I."

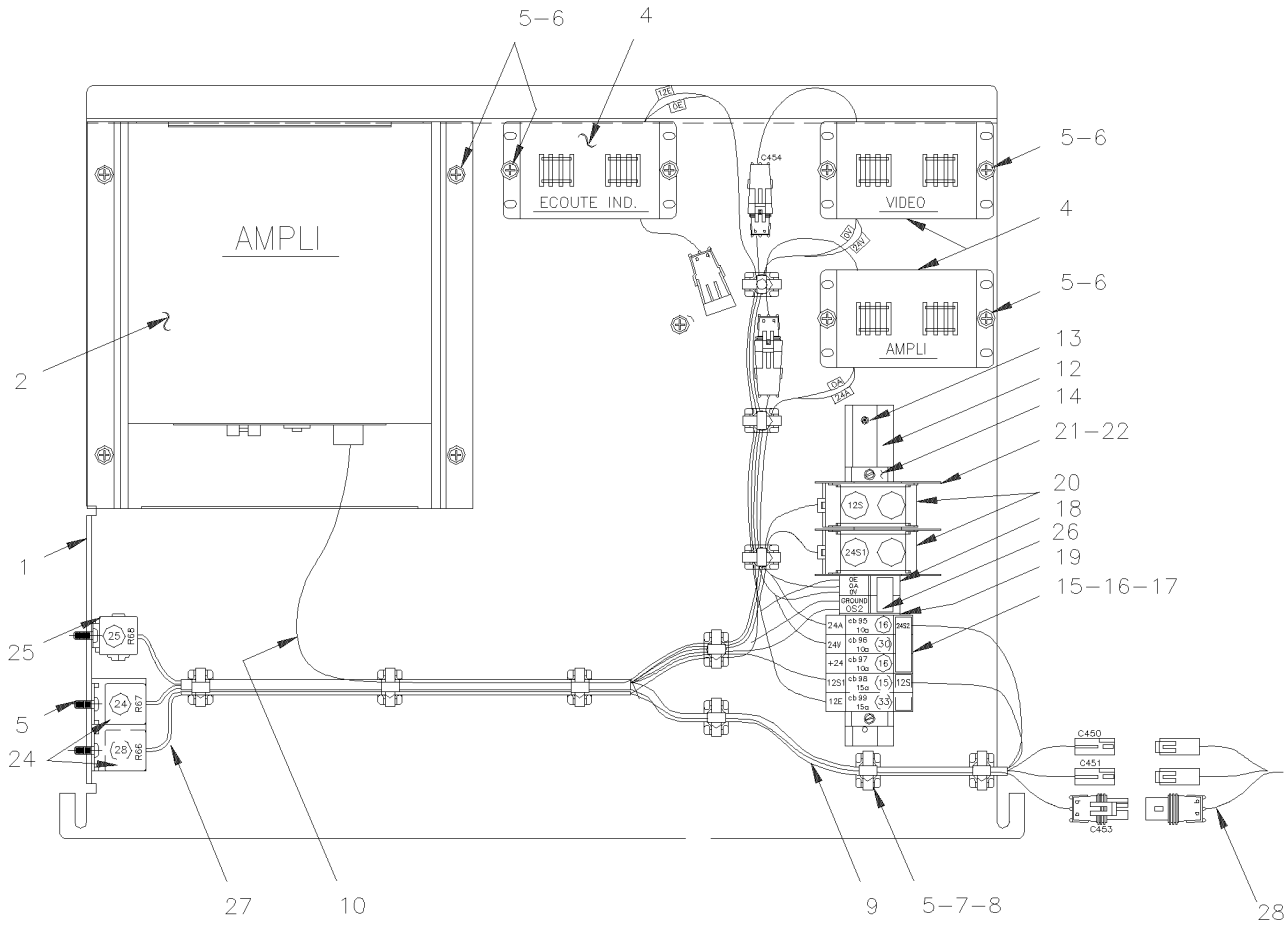

From Y-7046 Up to 6-8906	DATE: 01/2014	PAGE: Y2-2315-00
SOUND SYSTEM & ACCESSORIES - "R.E.I."		

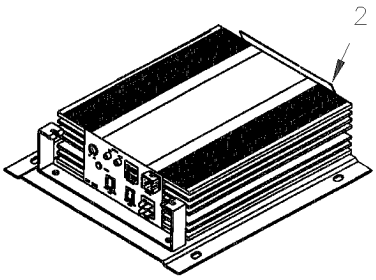

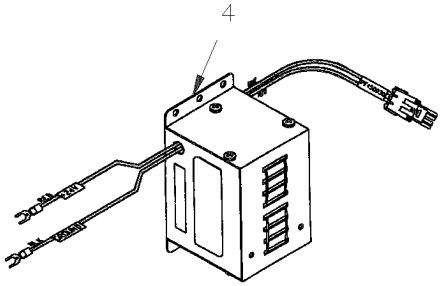

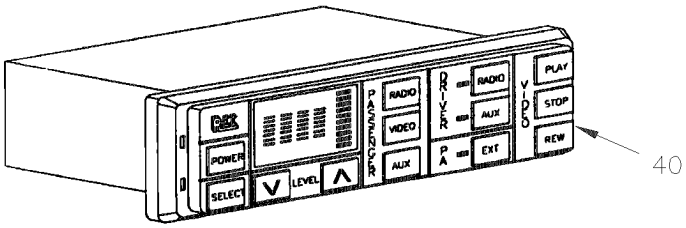

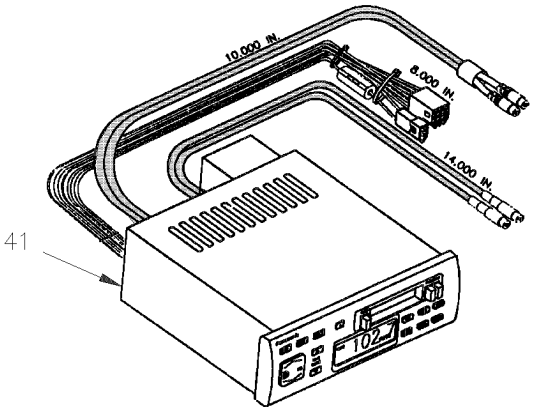

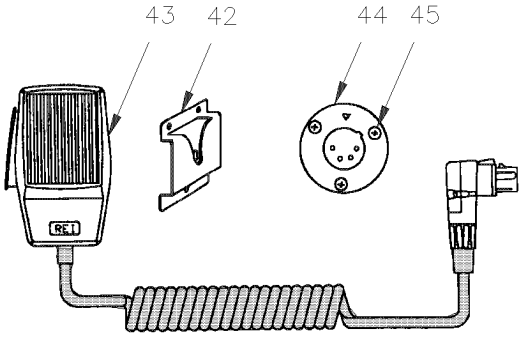

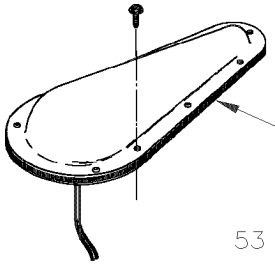

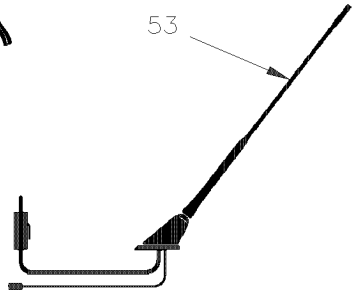

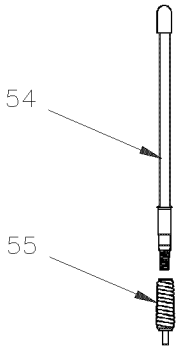

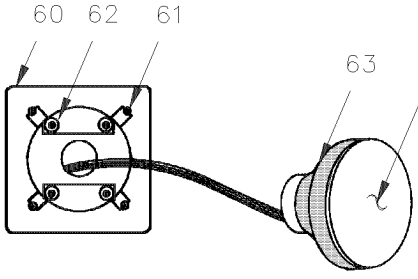

From Y-7046 Up to 6-8906	DATE: 01/2014	PAGE: Y2-2315-00

SOUND SYSTEM & ACCESSORIES - "R.E.I."

ITEM	PART	DESCRIPTION	XL45	MTH40	MTH45	MTH45S	NOTE
		PA & AMPLI PLATE ASSY / SOUND SYSTEM	1				E
1	404296	. PLATE MOUNTING	1				E
2	900802	. AMPLI AUDIO & VIDEO / SYST 2000 Up to 2-7807 / REPLACED BY: K900802	1				G
2	901056	. AMPLI AUDIO & VIDEO / SYST 3000 From 2-7808	1				
2	901491	. ADAPATER / AMPLI AUDIO & VIDEO / SYST 3000 Up to 2-7807	1				G
4	404225	. NOISE FILTER / P/A, VIDEO & HOOKUP INDIVIDU / 450030	AR				
5	500657	. SCREW TC TR PH #10-24x1/2 ZP	AR				
6	500964	. WASHER FL .203x.500x.047 ZP	AR				
7	504013	. TIE MOUNT / 1/4" X 1/4" I.D.	10				
8	504637	. CABLE TIE / 3/16" x 13"	AR				
9	404252	. CABLE ASSY / MASTER	1				
10	404256	. CABLE ASSY 28" / <> FILTER & AMPLI Up to 2-7807	1				
10	405314	. CABLE ASSY 28" / <> FILTER & AMPLI From 2-7808	1				
12	380885	. RAIL SUPPORT / 225MM	1				
13	504006	. RIVET POP CK OE 1/8x5/16 AL	3				
14	561729	. STOPPER	2				
NS	405134	. HEAD PROTECTOR ASSY 700MM	1				F
NS	404402	. SUPPORT / PLATE ASSY	1				
NS	404579	. DECAL "SOUND SYSTEM"	1				
15	561793	. BREAKER 15AMPS / 24V /	1				
16	561792	. BREAKER 10AMPS / 24V /	2				
17	380887	. BUS BAR / W/3 HOLES 38MM / REPLACED BY: 381814	2				
NS	381236	. DUMMY ASSY W/SCREW	1				
17	502531	. SCREW CAP HEX M6-1.0x16 G8.8 ZP	3				
18	561726	. BLOCK JUNCTION	2				
19	561728	. END CLOSING	1				
20	561727	. SCREW MA PAN PH	2				
21	561731	. COVER SUPPORT	3				
22	561732	. COVER / PROTECTOR / 2 BLOCKS	1				
24	561707	. RELAY 24V S.P.D.T. W/RESISTOR / Up to 5-8577	2				
24	563332	. RELAY 24V S.P.D.T. W/RESISTOR / "VOLVO" (20374662) From 5-8578	2				
25	561991	. RELAY 24V S.P.S.T. / 70 AMPS N.O.	1				
26	380886	. BUS BAR / W/2 HOLES 25MM / REPLACED BY: 381813	2				
27	404284	CABLE ASSY / <> VIDEO FILTERS VCP & AMPLI	1				
		E) THIS PLATE IS LOCATED IN 1ST L.H. BAGGAGE					
		COMPARTMENT					
		F) "OPTION" ORLEAN EXPRESS					
		G) THIS AMPLI IT SUPPERSEEDED BY #901056 +					
		#405320 + #405321 + 405319 + 405314 & 901491					

From Y-7046 Up to 6-8906	DATE: 01/2014	PAGE: Y2-2315-00

SOUND SYSTEM & ACCESSORIES - "R.E.I."

ITEM	PART	DESCRIPTION	XL45	MTH40	MTH45	MTH45S	NOTE
28	404876	. CABLE ASSY / <> DASH & PLATE IN BAGGAGE Up to 1-7436	1				
28	405183	. CABLE ASSY / <> DASH & PLATE IN BAGGAGE From 1-7437 Up to 2-7807	1				
28	405315	. CABLE ASSY / <> DASH & PLATE IN BAGGAGE From 2-7808 Up to 4-8270	1				
28	405484	CABLE ASSY / <> DASH & PLATE IN BAGGAGE From 4-8271 Up to 5-8592	1				
28	409124	CABLE ASSY / <> DASH & PLATE IN BAGGAGE From 5-8593 Up to 6-8797	1				
28	409148	CABLE ASSY / <> DASH & PLATE IN BAGGAGE From 6-8798	1				
40	900803	CONTROL HEAD / "R.E.I." SYSTEM 2000	1				
. NS	563064	. BULB (CONTROL HEAD GREEN) /	1				
41	900984	RADIO "PANASONIC" CQ-DP22 / AM/FM/CD / 700717 Up to 2-7809 / REPLACED BY: 901053	1				
41	901053	RADIO "PANASONIC" CD-DF401U (CQ-DP102U) / AM/ / (700721 or 700788) From 2-7810 Up to 6-8797 / REPLACED BY: K901053	1				
41	901179	RADIO "PANASONIC" CQ-C3301U / AM/FM/CD & XM / 700966 >> 710171 From 6-8798	1				
41	903302	RADIO "R.E.I." R805 MOD2000 / AM/FM/CD/MP3 / 710152	1				
41	900917	RADIO "PANASONIC" CQ-R 115 SEUC / 700590 Up to 1-7450 / REPLACED BY: 901032	1				
41	901032	RADIO "PANASONIC" CQ-R 145 CAHH / 700760 or 700914 From 1-7451	1				
42	900859	BRACKET, MOUNTING / MICROPHONE	1				
NS	500638	SCREW TP BDG PH #8x1/2 ZP	3				
43	900808	MICROPHONE / W/6' CORD / "REI" TYPE C.B.	1				
. NS	900721	. CONNECTOR MICROPHONE 90° / R4F	1				
43	900829	MICROPHONE / W/10' CORD / "REI" TYPE C.B.	1				
. NS	900721	. CONNECTOR MICROPHONE 90° / R4F	1				
. NS	900900	. CABLE MICROPHONE 10' / "REI" A VOIR / 511229	1				
43	901286	MICROPHONE / W/10' CORD / "REI" TYPE C.B.	1				
44	404226	OUTLET, MICROPHONE / 12" W/CONNECTOR	AR				
44	900247	. OUTLET / MICROPHONE	1				
NS	404239	CABLE ASSY / "Y" FOR MICROPONE 9" / 1F/2M	1				
45	504108	RIVET POP DOME OE 1/8x1/2 AL	3				
52	900668	ANTENNA ASSY / CELLULAR / "TEARDROP" Up to 5-8465 / REPLACED BY: 901124	1				
52	901124	ANTENNA ASSY / CELLULAR From 5-8466	1				
53	900661	ANTENNA, RADIO / W/AMPLIFIER	1				
. NS	901068	. ANTENNA STICK / REPLACEMENT	1				
NS	900663	ADAPTOR / <> RADIO & ANTENNA CABLE / MOTOROLA MALE to EURO FEMA	1				
NS	900875	CABLE RADIO ANTENNA / M/F 6`	1				
NS	900775	Y RADIO ANTENNA CABLE / TO USE W/2 RADIOS	AR				
54	900472	ANTENNA ASSY 25" / C.B.	1				

From Y-7046 Up to 6-8906	DATE: 01/2014	PAGE: Y2-2315-00

SOUND SYSTEM & ACCESSORIES - "R.E.I."

ITEM	PART	DESCRIPTION	XL45	MTH40	MTH45	MTH45S	NOTE
55	900895	SPRING EXTENSION / .828 O.D. x 3.010 X .104 W/3/8	1				
NS	900889	CABLE, ANTENNA 22' LONG / 511386	1				
60	405063	RECEPTACLE ASSY / DRIVER'S Up to 1-7428	2				
61	502811	NUT SPR J #8A-B .168-.198 / REPLACED BY: 500996	8				
NS	500360	SCREW TP FL PH #8x1 1/4 BK	8				
62	500643	SCREW TP BDG PH #12x3/4 ZP	8				
NS	500440	WASHER FL .250x.562x.065 ZP	8				
63	900874	SPEAKER / 5 1/4" DRIVER'S Up to 1-7428 / REPLACED BY: K900874	2				A
63	901050	SPEAKER "JVC" 30WATTS / REPLACED BY: K901050	2				B
63	901025	SPEAKER / 4" DRIVER`S From 1-7429 Up to 3-8067 / REPLACED BY: 901050	2				
63	901050	SPEAKER "JVC" 30WATTS From 3-8068 / REPLACED BY: K901050	2				
64	900873	GRILLE / 5 1/4" SPEAKER Up to 1-7428 / REPLACED BY: K900873	2				A
64	901024	GRILL SPEAKER "JVC" From 1-7429 Up to 1-7695	2				B
64	901038	GRILLE / SPEAKER STAMPED "PREVOST" From 1-7696	1				
NS	500649	SCREW TP BDG PH #6x3/4 BK Up to 1-7428 / REPLACED BY: 500640	AR				
NS	502665	SCREW TP OV PH #6x3/4 SS EMN From 1-7429	4				
NS	404762	CABLE ASSY / <> DRIVER'S SPEAKER & CONSOLE Up to 1-7428	1				
NS	405181	CABLE ASSY / <> DRIVER'S SPEAKER & CONSOLE From 1-7429	1				
NS	900976	MICROPHONE / W/GOOSE NECK 37" Up to 1-7691 / REPLACED BY: 901045	1				
70	901045	MICROPHONE / W/GOOSE NECK 36" From 1-7992	1				
NS	504234	SPRING CLIP 5/16"	2				D
NS	500409	SCREW TP PAN PH #8x1/2 BK	2				
NS	404430	SUPPORT GOOSE NECK	1				
NS	500576	SCREW TC BDG PH #6-32x1/2 ZP	3				
NS	404285	HARNESS ASSY / MAIN CONTROL 2000 SYSTEM / REPLACED BY: 404429	1				
NS	404302	CABLE ASSY 20' / 510520	1				
NS	404283	CABLE ASSY 20' / <> FILTER VCP & CONTROL HEAD	1				
NS	404251	CABLE ASSY 16' / <> AMPLI & SPEAKER / REPLACED BY: 404200	1				
NS	404255	CABLE ASSY 13" / 24V POWER	1				
NS	404291	CABLE ASSY 12" / <> MASTER P/A & BACK-UP P/A	1				
NS	404231	CABLE ASSY 10' / MICRO M/F	1				
NS	404289	CABLE ASSY 20' / MICRO M/M	1				
NS	404239	CABLE ASSY / "Y" FOR MICROPONE 9" / 1F/2M	1				
NS	405314	CABLE ASSY 28" / <> FILTER & AMPLI	1				H
		A) SOLD ALSO IN KIT 900887					
		B) USE WITH "ORLEAN OPTION"					
		D) TO FIX GOOSE NECK TO POST					
		H) FOR SERVICE ONLY					

From Y-7046 Up to 6-8906	DATE: 01/2014	PAGE: Y2-2315-00

SOUND SYSTEM & ACCESSORIES - "R.E.I."

ITEM	PART	DESCRIPTION	XL45	MTH40	MTH45	MTH45S	NOTE
NS	405319	CABLE ASSY / RCA TO AMPLI / SERVICE	1				H
NS	405320	CABLE ASSY / POWER 9 CIRC TO 8 CIRC / SERVICE	1				H
NS	405321	CABLE ASSY SPEAKER / CINCH TO MOLEX / SERVICE	1				H
		H) FOR SERVICE ONLY					

From Y-7046 Up to 6-8906	DATE: 01/2014	PAGE: Y2-2315-20

INDIVIDUAL STATIONS - "R.E.I."

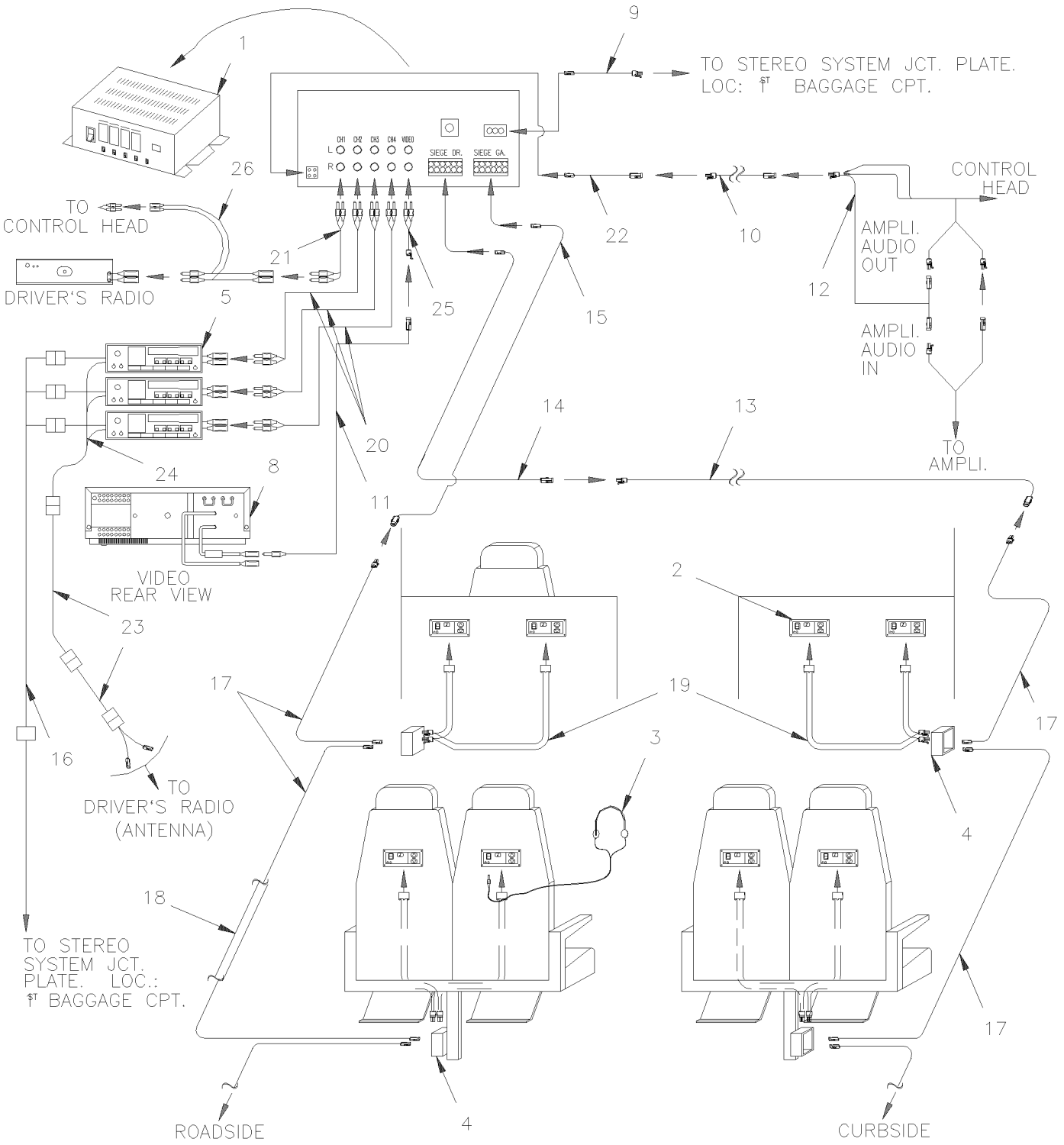

NOTE: RADIOS, ITEM #1, ARE LOCATED IN THE PARCEL RACK ON LEFT SIDE (2 DOOR).

From Y-7046 Up to 6-8906	DATE: 01/2014	PAGE: Y2-2315-20

INDIVIDUAL STATIONS - "R.E.I."

ITEM	PART	DESCRIPTION	XL45	MTH40	MTH45	MTH45S	NOTE
1	900845	ENTERTAINER CONTROL MODULE / REPLACED BY: 901102	1				
NS	404542	SIDE PANEL FINISHING	2				
2	900827	SELECTOR HEAD SET MODULE Up to 1-7296	AR				
2	901006	SELECTOR HEAD SET MODULE From 1-7297	AR				
NS	363644	HEADREST REINFORCEMENT	AR				B
3	900881	HEAD SET EARPHONE	AR				
. NS	900882	. FOAM CUSHION PAD / (SET OF 2) / FOR 900881	1				
4	900828	JUNCTION BOX MODULE SINGLE Up to 1-7296	AR				
4	900899	JUNCTION BOX MODULE DOUBLE Up to 1-7296	AR				
4	901007	JUNCTION BOX MODULE SINGLE From 1-7297	AR				
NS	405197	SUPPORT CONTROLE AUDIO	AR				
NS	502631	SCREW CAP HEX M6-1.0x20 G8.8 ZP	4				
NS	5001432	WASHER LO INT .256x.478x.028 SS 410	4				
NS	502511	NUT HEX NYRT M6-1.0 ZP	4				
NS	504622	GROMMET / 1.500x1.750x.062x.437x2.125	1				
NS	952624	CLAMP / 1/4" I.D.	1				
5	900853	RADIO "SONY" XR350MK2 AM/FM/CASS. / REPLACED BY: 900915	1				
5	900869	RADIO "SONY" CDX2160 AM/FM/CD Up to 1-7667 / REPLACED BY: 901046	1				
5	901046	RADIO "SONY" CDXL550X AM/FM/CD From 1-7668	1				
5	900849	PLATE RADIO "DUMMY"	AR				
5	404488	SUPPORT, RADIO	1				
NS	502698	SCREW MA PAN PH M4-0.7x16 SS EMN	1				
NS	500022	WASHER LO INT .168x.340x.023 ZP	1				
8	Y2-2317-20	**VIDEO VHS PLAYER - INSTALLATION "R.E.I."**					
8	900842	CD CHARGER / 6 DISCS / "PANASONIC" CX-DP 601 Up to 1-7138 / REPLACED BY: K900842	1				
8	900911	. CARTRIDGE 6 DISCS Up to Y-7138	1				
8	900987	CD CHARGER / 8 DISCS / "PANASONIC" CX-DP801 / MODIFIED From Y-7139 Up to 2-7869 / REPLACED BY: 901060					
8	901057	CD CHARGER / 8 DISCS / "PANASONIC" CX-DP88 / MODIFIED From 2-7870	1				
9	064486	CABLE ASSY 33.5` 24V POWER / ENT MODULE	1				
10	404302	CABLE ASSY 20' / 510520	1				
11	404380	CABLE ASSY RCA / M/M / USE WITH 2 VIDEOS / 510300	1				
NS	900857	CABLE ASSY /<> CD & RADIO IN DASH Up to Y-7138	1				
11	900988	CABLE ASSY /<> CD & RADIO IN DASH From Y-7139 Up to 2-7869	1				
11	901058	CABLE ASSY CD / DIN / 280" From 2-7870	1				
11	901059	CABLE RCA / 2M/2M / 23' From 2-7870 / REPLACED BY: 901110	1				
12	404288	CABLE ASSY / "Y" 9" <> CONTROL HEAD & ENTERTAINMENT MODULE	1				
13	404363	CABLE ASSY 14.5' Up to 1-7196	1				
13	901021	CABLE ASSY From 1-7197	1				
14	404499	CABLE ASSY / ENTERTAINMENT MODULE <> RIGHT SEAT Up to 1-7196	1				
14	901020	CABLE ASSY / ENTERTAINMENT MODULE <> RIGHT SE From 1-7197	1				
15	404497	CABLE ASSY / ENTERTAINMENT MODULE <> LEFT SEAT Up to 1-7196	1				
		B) USE WITH SELECTOR HEAD SET MODULE FIX ON THE					
		HEADREST					

From Y-7046 Up to 6-8906	DATE: 01/2014	PAGE: Y2-2315-20

INDIVIDUAL STATIONS - "R.E.I."

ITEM	PART	DESCRIPTION	XL45	MTH40	MTH45	MTH45S	NOTE
15	901019	CABLE ASSY / ENTERTAINMENT MODULE <> LEFT SEA From 1-7197	1				
16	404504	CABLE ASSY / RADIO POWER Up to 5-8592	1				
17	404275	CABLE ASSY / <> JCT BOX MODULE & JCT BOX MODULE Up to 1-7196	2				
17	901018	CABLE ASSY / <> 2 JCT BOX MODULES From 1-7197	1				
17	065567	CABLE ASSY / <> 2 JCT BOX MODULES / 511541	1				
18	325056	PROTECTOR MOULDING	1				
19	404269	CABLE SEAT ASSY "Y" 40" / <> JCT BOX & CHANNEL SELECTOR Up to 1-7196	2				
19	901008	CABLE SEAT ASSY / <> JCT BOX & CHAN. SELECTOR From 1-7197	1				
19	404501	CABLE SEAT ASSY / <> JCT BOX & CHANNEL SELECTOR	1				A
20	900856	CABLE RCA / 2M/2M / 3'	1				
21	900855	CABLE RCA / 2M/2M / 20'	1				
22	404498	CABLE ADAPTOR INTER. MODULE / 511211	1				
23	900774	CABLE, ANTENNA EXTENSION / 12'	1				
24	900775	Y RADIO ANTENNA CABLE / TO USE W/2 RADIOS	AR				
25	900758	ADAPTOR "Y" RCA / 1F/2M / 9"	1				
26	900671	ADAPTOR "Y" RCA / 1M/2F / 4"	1				
NS	404525	INSULATING, NOISE	1				
		A) USE WITH SINGLE SEAT ONLY					

From Y-7046 Up to 6-8906	DATE: 01/2014	PAGE: Y2-2315-20

INDIVIDUAL STATIONS - "R.E.I."

ITEM	PART	DESCRIPTION	XL45	MTH400	MTH445	MTH445S	NOTE

From Y-7046 Up to 4-8270	DATE: 01/2014	PAGE: Y2-2315-30

SOUND SYSTEM - "KARAOKE" & DVD

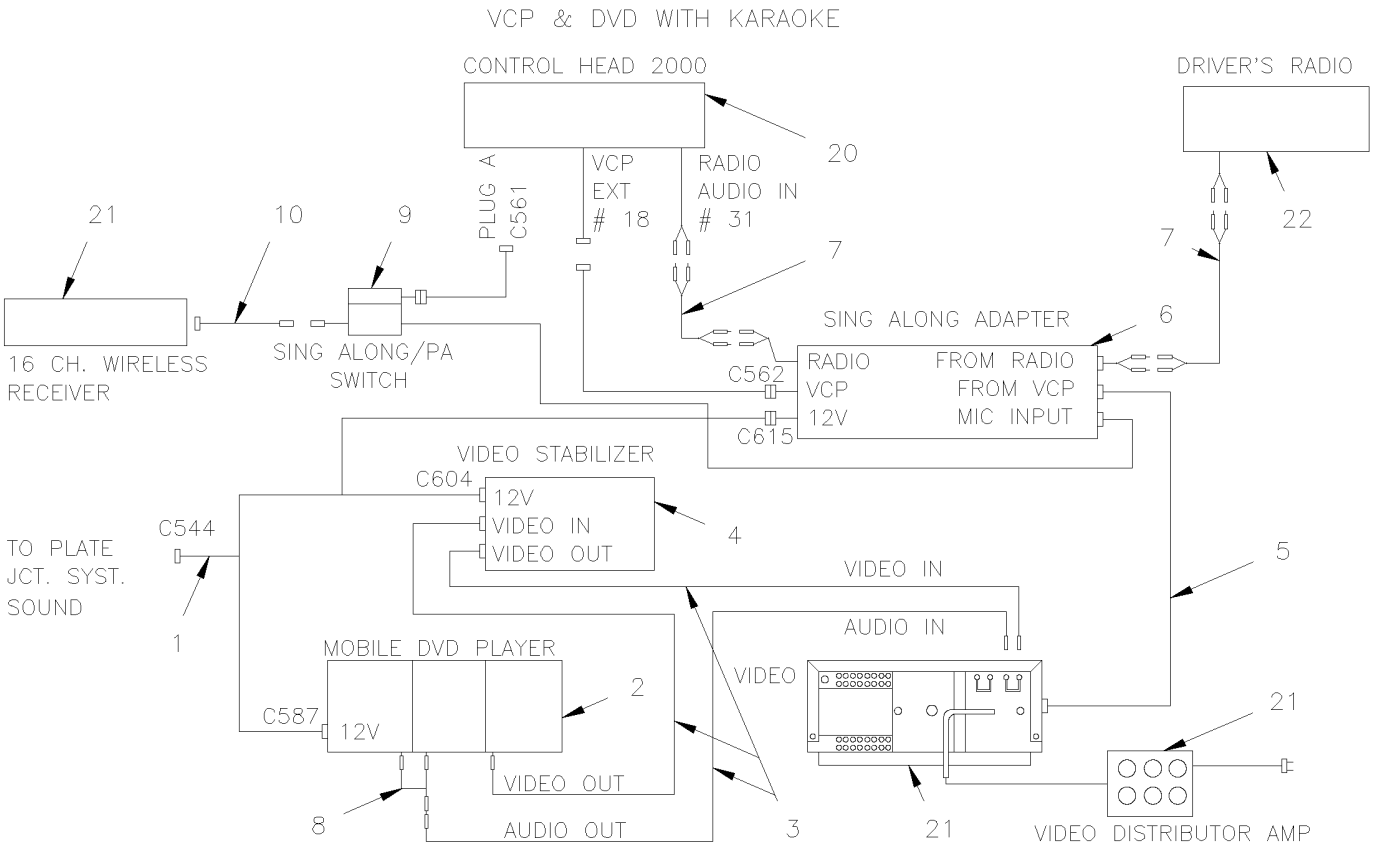

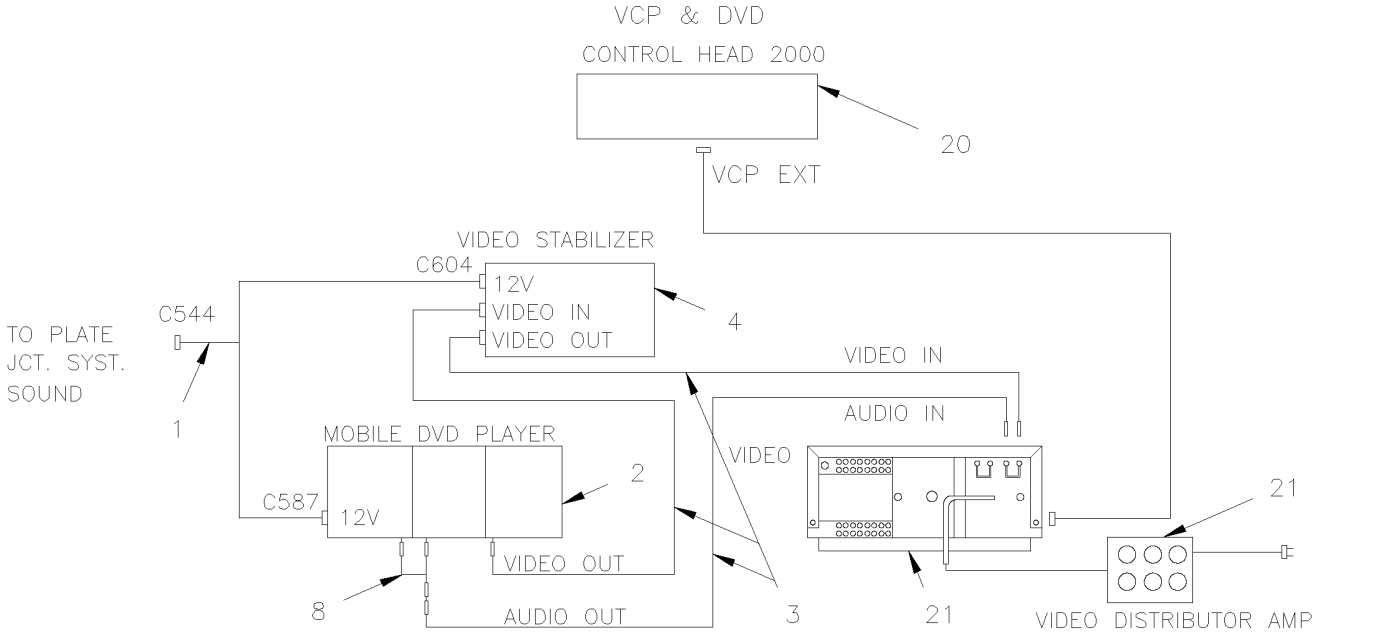

From Y-7046 Up to 4-8270	DATE: 01/2014	PAGE: Y2-2315-30

SOUND SYSTEM - "KARAOKE" & DVD

ITEM	PART	DESCRIPTION	XL45	MTH40	MTH45	MTH45S	NOTE
1	405187	CABLE ASSY DVD	1				
2	901033	DVD REI Up to 3-8022 / REPLACED BY: 901069	1				
2	901069	DVD REI / MP3 From 3-8023 / REPLACED BY: 405660	1				
3	404380	CABLE ASSY RCA / M/M / USE WITH 2 VIDEOS / 510300	1				
4	901034	STABILIZER VIDEO MODIFIED / REPLACED BY: 405659	1				A
5	405190	HARNESS INTERFACE VIDEO/SING ALONE ADAP	1				
6	901035	ADAPTOR KARAOKE	1				
7	900855	CABLE RCA / 2M/2M / 20'	1				
8	900758	ADAPTOR "Y" RCA / 1F/2M / 9"	1				
9	901036	SWITCH KARAOKE	1				
10	405191	HARNESS WIRE LESS MIC/SING ALONE ADAPTOR / REPLACED BY: 900957	1				
20	900803	CONTROL HEAD / "R.E.I." SYSTEM 2000	1				
. NS	563064	. BULB (CONTROL HEAD GREEN) /	1				
21	Y2-2317-20	**VIDEO VHS PLAYER - INSTALLATION "R.E.I."**					
22	Y2-2315-00	**SOUND SYSTEM & ACCESSORIES - "R.E.I."**					
NS	405660	KIT, DVD REPLACMENT	AR				
. NS	IS-04036	. SEE INSTRUCTION SHEET	1				
NS	405659	KIT, VIDEO STABILIZATOR REPLACMENT	AR				
. NS	IS-03099	. SEE INSTRUCTION SHEET	1				
		A) THIS PART IS SUPERSEEDED BY KIT #405659					

From Y-7046 Up to 6-8906	DATE: 01/2014	PAGE: Y2-2315-60

ROOF ANTENNA & WIRING "R.E.I."

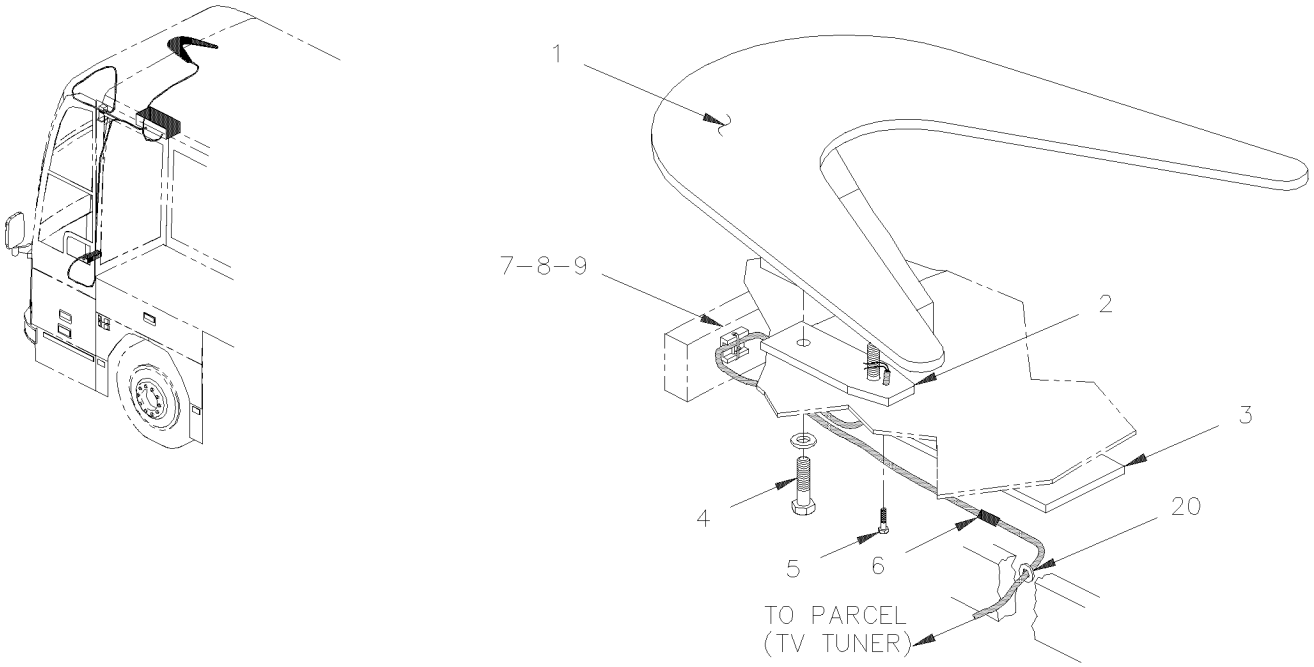

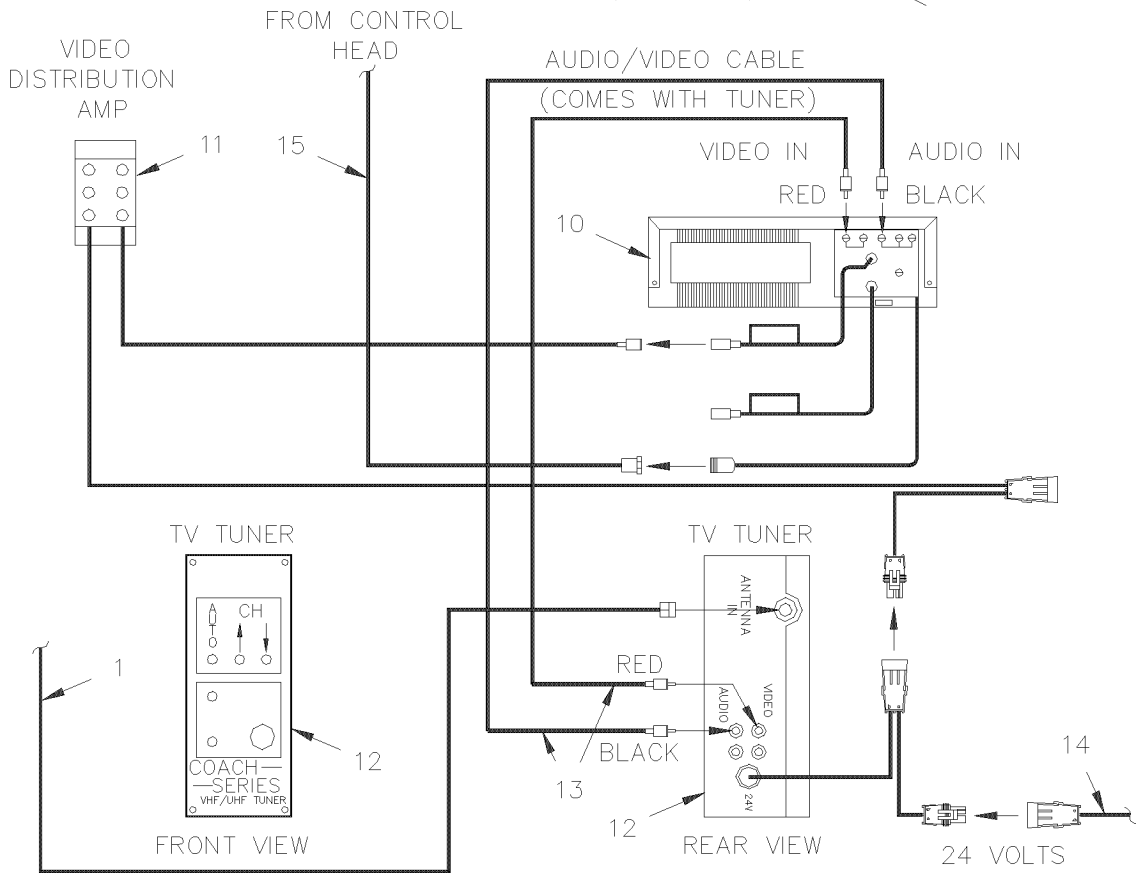

From Y-7046 Up to 6-8906	DATE: 01/2014	PAGE: Y2-2315-60

ROOF ANTENNA & WIRING "R.E.I."

ITEM	PART	DESCRIPTION	XL45	MTH40	MTH45	MTH45S	NOTE
1	900794	ANTENNA, ROOF 2 3/4" HIGHT / "WINTENNA" MODEL	1				
NS	403355	DECAL / VEHICLE HEIGHT 11' 9"	1				
NS	901071	SATELLITE RADIO RECEIVER	1				S
NS	901072	ADAPTOR "Y" RCA / 1M/2M / ??"	1				S
NS	901073	CABLE RCA / 1M/1F / 6'	1				S
NS	901062	CABLE RCA / 2M/2F / 23'	1				S
NS	900758	ADAPTOR "Y" RCA / 1F/2M / 9"	1				S
2	403298	GASKET, ANTENNA	1				
3	404345	PLATE, REINFORCEMENT / ROOF	1				
4	5001209	SCREW CAP HEX M6-1.0x25 G8.8 ZP	1				
NS	500441	WASHER FL .312x.734x.065 ZP	1				
5	500617	SCREW TP BDG PH #8x1 ZP	1				
5	5001209	SCREW CAP HEX M6-1.0x25 G8.8 ZP	1				
5	500441	WASHER FL .312x.734x.065 ZP	1				
6	560786	SHRINK TUBING / .500" - .250" / BLACK / ALPHA FIT-300-1/2-4B	AR				
7	504006	RIVET POP CK OE 1/8x5/16 AL	4				
8	504013	TIE MOUNT / 1/4" X 1/4" I.D.	4				
9	504637	CABLE TIE / 3/16" x 13"	4				
10	Y2-2317-20	**VIDEO VHS PLAYER - INSTALLATION "R.E.I."**					
12	900814	TUNER TV 24V Up to 2-7744 / REPLACED BY: K900814	1				
12	901054	TUNER TV 24V From 2-7745	1				
NS	404589	PROTECTOR VIDEO BOX	1				
NS	405186	INTERFACE CABLE ASSY	1				A
13	900785	CABLE RCA / 2M/2M / 10'	1				
14	404572	CABLE ASSY / <> DASH COMPONENT & HARNESS ABOV Up to 1-7436	1				
14	405183	CABLE ASSY / <> DASH & PLATE IN BAGGAGE From 1-7437 Up to 2-7807	1				
14	405315	CABLE ASSY / <> DASH & PLATE IN BAGGAGE From 2-7808 Up to 4-8270	1				
14	405484	CABLE ASSY / <> DASH & PLATE IN BAGGAGE From 4-8271	1				
14	404571	CABLE ASSY / <> DASH & PARCEL RACK Up to 6-8797	1				
14	409149	CABLE ASSY / <> DASH & PARCEL RACK / AUDIO From 6-8798	1				
15	404283	CABLE ASSY 20' / <> FILTER VCP & CONTROL HEAD	1				
20	504063	GROMMET / .562x.812x.062x.312x1.062	1				
		A) USE WITH #901054 UP TO 2-7744					
		S) WITH SATELLITE RADIO RECIEVER					

From RETROFIT	DATE: 01/2014	PAGE: Y2-2315-99
SUBWOOFER - INSTALLATION		

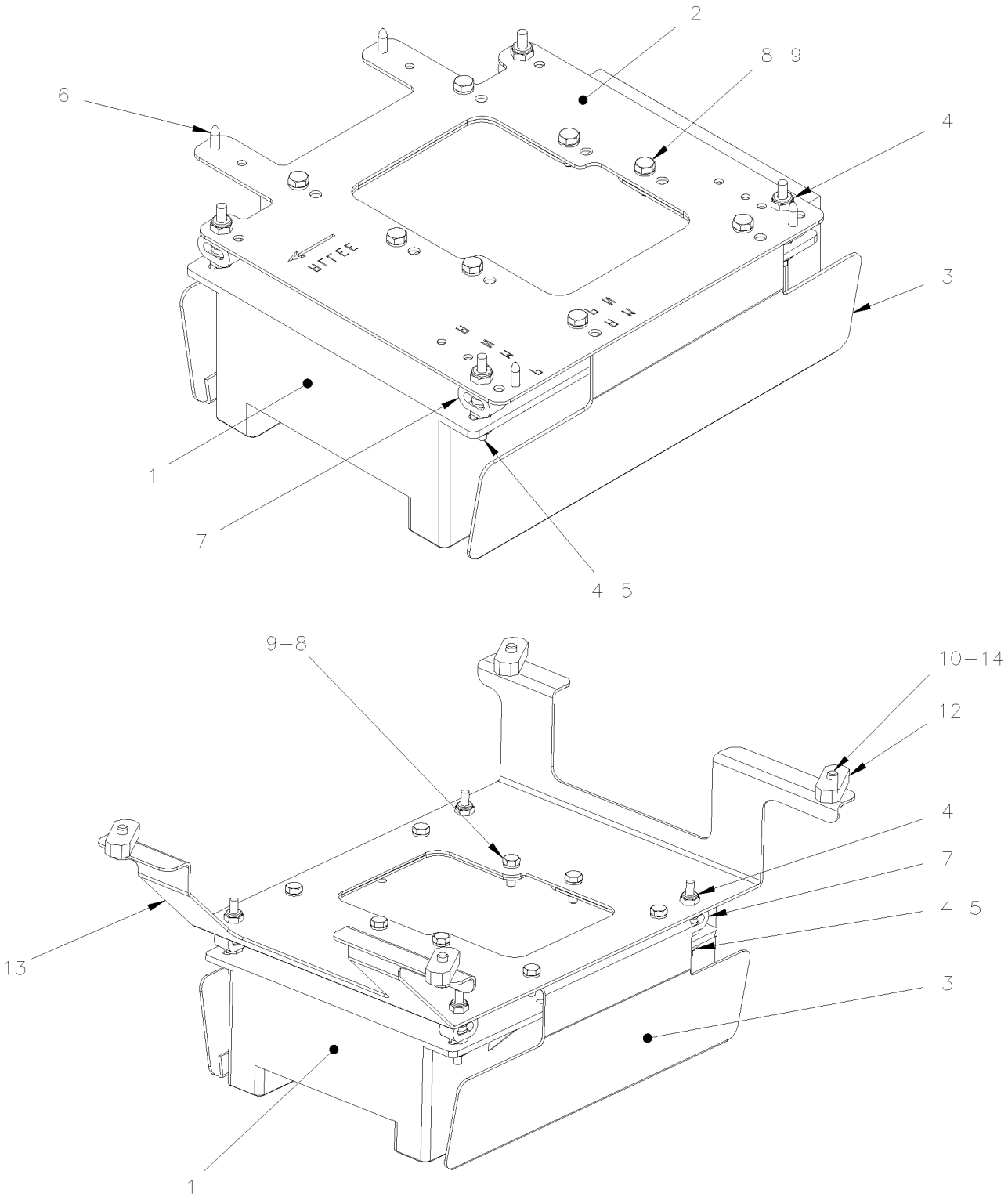

From RETROFIT	DATE: 01/2014	PAGE: Y2-2315-99

SUBWOOFER - INSTALLATION

ITEM	PART	DESCRIPTION	XL45	MTH40	MTH45	MTH45S	NOTE
1	901193	SUBWOOFER ASSY	1				
2	405780	PLATE MOUNTING	1				
3	405829	DEFLECTOR SPEAKER	2				
4	502874	NUT HEX NYRT 1/4-20 ZG603	8				
5	500877	WASHER FL .250x.562x.065 ZG603	8				
6	500526	SCREW TP CAP HEXW #12x3/4 ZG603	4				
7	5060076	RUBBER CUSHION ABSORBANT	4				
8	500163	SCREW CAP HEX 1/4-20x3/4 G5 ZP	16				
9	500473	WASHER LO SPT .262x.489x.062 ZP	16				
10	500476	WASHER LO SPT .317x.586x.078 ZP	4				A
12	5001642	T NUT 5/16-18	4				A
13	405787	PLATE MOUNTING "AMERICAN SEATING ONLY"	1				A
14	500179	SCREW CAP HEX 5/16-18x3/4 G5 ZP	4				A
NS	405851	KIT , SUBWOOFER ASSY / SERIES "XL"	1				B,C
NS	066743	. CABLE EXTENSION 2M / <> SUBWOOFER	2				
NS	066817	. CABLE ASSY W/SUBWOOFER / SERIES "XL"	1				
		A) USE ONLY WITH "AMERICAN SEATING" ONLY					
		B) THIS KIT DO NOT INCLUDE FOLLOWING ITEMS.: #					
		2 OR 13 & 10, 12 & 14					
		C) WITH THIS KIT YOU REQUIRE ALSO KIT 405844 AS					
		SHOW AT PAGE Y2-2317-99					

From Y-7046 Up to 6-8578	DATE: 01/2014	PAGE: Y2-2317-00

FRONT MONITOR - VIDEO - "R.E.I."

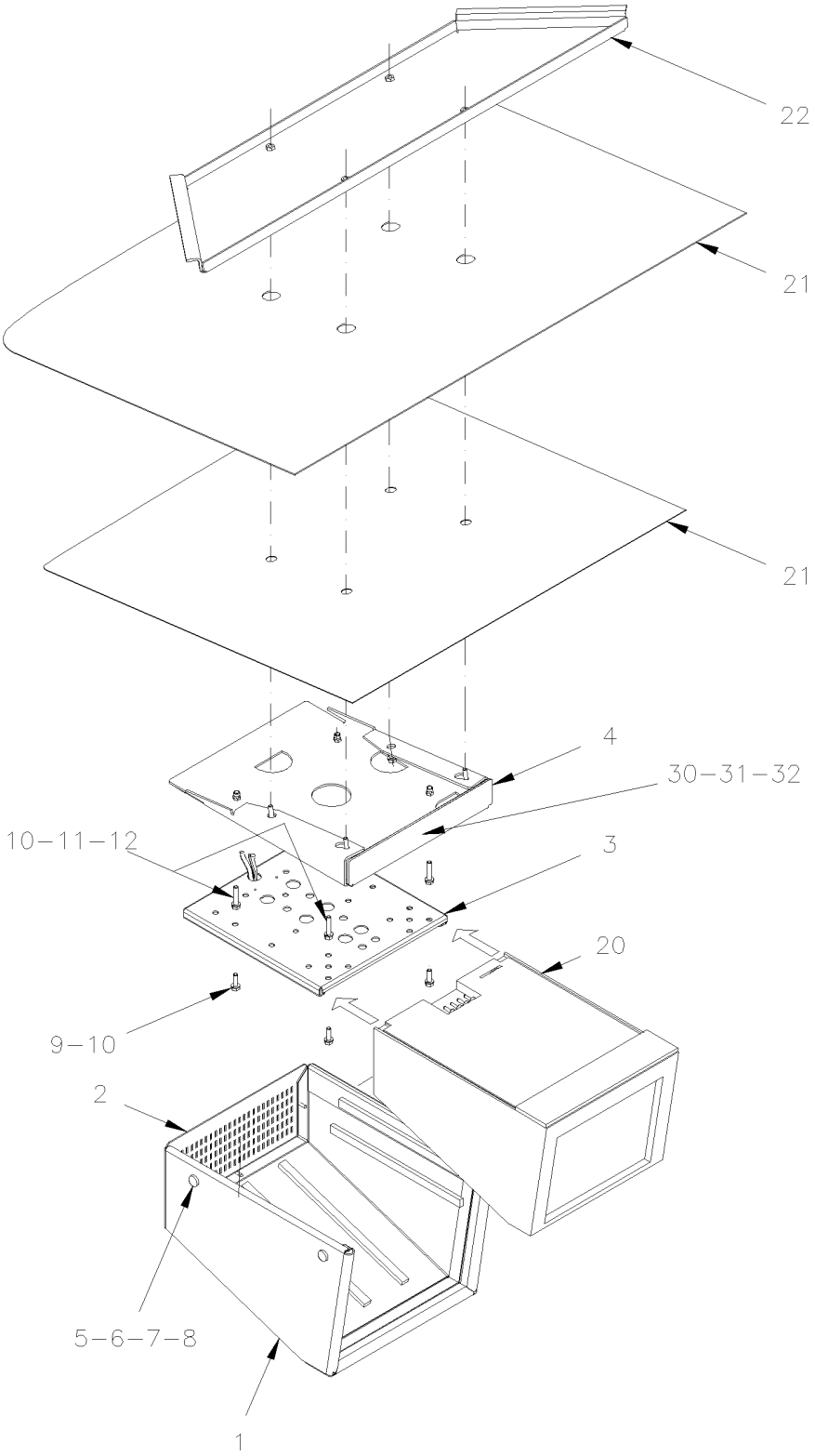

From Y-7046 Up to 6-8578	DATE: 01/2014	PAGE: Y2-2317-00

FRONT MONITOR - VIDEO - "R.E.I."

ITEM	PART	DESCRIPTION	XL45	MTH40	MTH45	MTH45S	NOTE
1	404395P	BOX COVER ASSY / W/TISSUS / S.C.C.	1				
1	404369	. BOX	1				
2	404393	. GRILLE	1				
2	405054	. FOAM SIDE	2				
2	405055	. FOAM BOTTOM SHORT	1				
2	405056	. FOAM BOTTOM LONG	1				
NS	500409	SCREW TP PAN PH #8x1/2 BK	3				
NS	506228	TAPE RUB ADH1 CC POL 1/4" x 1/2" x 37.5' / GREY 2520X	AR				
3	404306	MONITOR SLIDE BRACKET Up to 4-8270 / REPLACED BY: K404306	1				
. NS	900862	. KEY MONITOR LOCK Up to 4-8270	1				
3	405496	MONITOR SLIDE BRACKET From 4-8271	1				
. NS	900862	. KEY MONITOR LOCK From 4-8271	1				
3	900862	. KEY MONITOR LOCK	1				
4	405031P	SUPPORT ASSY / W/TISSUS / S.C.C.	1				
NS	405174	. DECAL "EMPTYING PLUG"	1				
5	403497	SPACER	4				
6	500640	SCREW TP BDG PH #6x3/4 ZP	4				
7	504399	WASHER RETAINER SNAP CAP #10	4				
8	504400	SNAP CAP #10 FINISHING BLACK	4				
9	502631	SCREW CAP HEX M6-1.0x20 G8.8 ZP	4				
10	502564	WASHER LO SPT 6.1x11.8x1.6 ZP	10				
11	502818	SCREW CAP HEX M6-1.0x35 G8.8 ZP	4				
12	500411	WASHER FL .260x.697x.050 SS	4				
20	900809	MONITOR 2000 24V Up to 3-8057 / REPLACED BY: 901070	1				
20	901070	MONITOR 2000 24V From 3-8058	1				
21	Y2-1837-00	**CEILING PANELS & MOULDING - BUS**					
22	Y2-1895-00	**FRONT STRUCTURE**					
30	405425	DECAL MOUNTING PLATE / 275MM X 46MM Up to 5-8605 / REPLACED BY: 405707	1				
30	405707	DECAL MOUNTING PLATE / 250MM X 46MM From 5-8606	1				
31	404636	DECAL / "WATCH YOUR STEP" Up to 5-8605 / REPLACED BY: 405708	1				
31	405708	DECAL / "WATCH YOUR STEP" From 5-8606 Up to 6-8843	1				
31	409155	DECAL / "WATCH YOUR STEP" From 6-8843	1				
31	404637	DECAL / "ATTENTION À LA MARCHE" / BILINGUAL Up to 5-8456 / REPLACED BY: 409156	1				
31	405689	DECAL / "ATTENTION À LA MARCHE" / BILINGUAL From 5-8457 Up to 5-8605 / REPLACED BY: 409156	1				
31	405709	DECAL / "ATTENTION À LA MARCHE" / BILINGUAL From 5-8606 Up to 6-8843 / REPLACED BY: 409156	1				
31	409156	DECAL / "ATTENTION À LA MARCHE" / BILINGUAL From 6-8843	1				
31	405648	DECAL / "WATCH YOUR STEP" / "CUINDADO CON EL Up to 5-8605	1				
31	405710	DECAL / "WATCH YOUR STEP" / "CUINDADO CON EL From 5-8606 Up to 6-8843	1				
31	409157	DECAL / "WATCH YOUR STEP" / "CUINDADO CON EL ENG & SPANISH From 6-8843	1				
32	504108	RIVET POP DOME OE 1/8x1/2 AL	2				

From 5-8579 Up to 6-8906	DATE: 01/2014	PAGE: Y2-2317-01
FRONT MONITOR FLAT SCREEN - VIDEO - "R.E.I."		

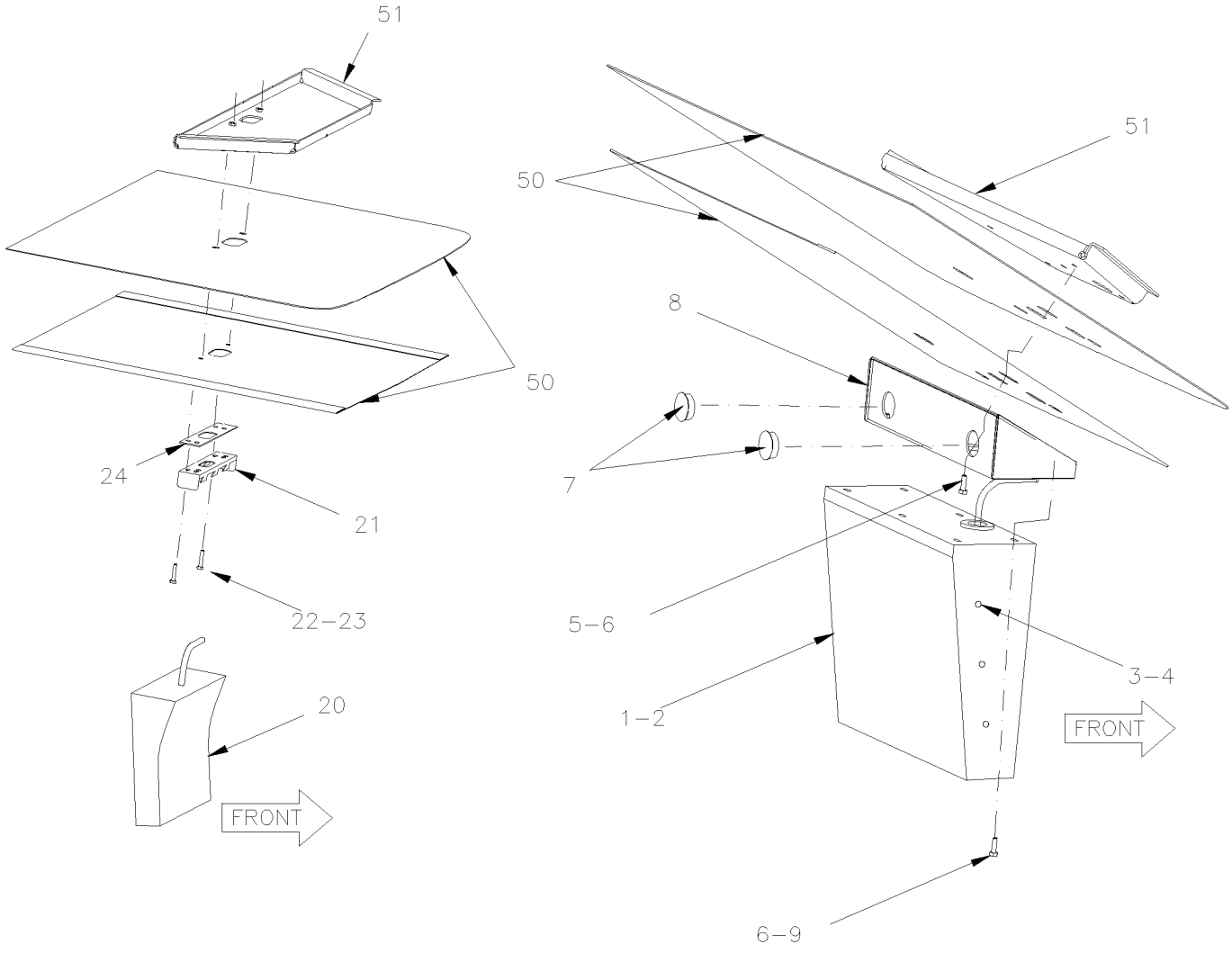

From 5-8579 Up to 6-8906	DATE: 01/2014	PAGE: Y2-2317-01

FRONT MONITOR FLAT SCREEN - VIDEO - "R.E.I."

ITEM	PART	DESCRIPTION	XL45	MTH40	MTH45	MTH45S	NOTE
1	901084	MONITOR 15" LCD	1				
2	901085	SUPPORT CENTRAL MONITOR / W/FLAT SCREEN 15"	1				
2	502843	SCREW CAP HEX M6-1.0x45 G8.8 ZG603	2				
3	500697	SCREW TP BDG PH M5x8 BK	6				
4	500840	WASHER LO EXT .195x.410x.025 ZG603	6				
5	502533	SCREW CAP HEX M6-1.0x30 G8.8 ZP	5				
6	502582	WASHER LO SERR 6.1x16.2x0.9 ZP	AR				
7	507295	HOLE PLUG BUTTON / 1.375 O.D. BLACK	2				
8	251224	SUPPORT MONITOR	1				
9	502631	SCREW CAP HEX M6-1.0x20 G8.8 ZP	1				
		MONITOR 10"					
20	901130	MONITOR 10" LCD 24V Up to 6-8843	1				
. NS	901138	. PLUG CAP 12.51MM O.D. / GREY OVER SCREW Up to 6-8843	1				
20	903214	MONITOR 10" LCD 24V From 6-8844	1				
. NS	901243	. PLUG CAP 9.31MM O.D. / GREY OVER SCREW From 6-8844	1				
NS	409160	DECAL MOUNTING PLATE From 6-8844	1				
21	407590	SUPPORT CENTRAL MONITOR / W/FLAT SCREEN 10" Up to 6-8843	1				
21	407599	SUPPORT CENTRAL MONITOR / W/FLAT SCREEN 10" From 6-8844	1				
22	502533	SCREW CAP HEX M6-1.0x30 G8.8 ZP Up to 6-8843	2				
22	502843	SCREW CAP HEX M6-1.0x45 G8.8 ZG603 From 6-8844	2				
23	955920	WASHER LO SPT 6.5x11.5x1.6 ZP	2				
24	341117	SHIM Up to 6-8843	1				
24	341124	SHIM From 6-8844	1				
25	405858	SHIELD SCREEN DEFLECTOR / W/10" SCREEN / PLASTIC GREY	1				
50	Y2-1837-00	**CEILING PANELS & MOULDING - BUS**					
51	Y2-1895-00	**FRONT STRUCTURE**					

From Y-7046 Up to 6-8906	DATE: 01/2014	PAGE: Y2-2317-10
SIDE MONITOR - VIDEO - "R.E.I."		

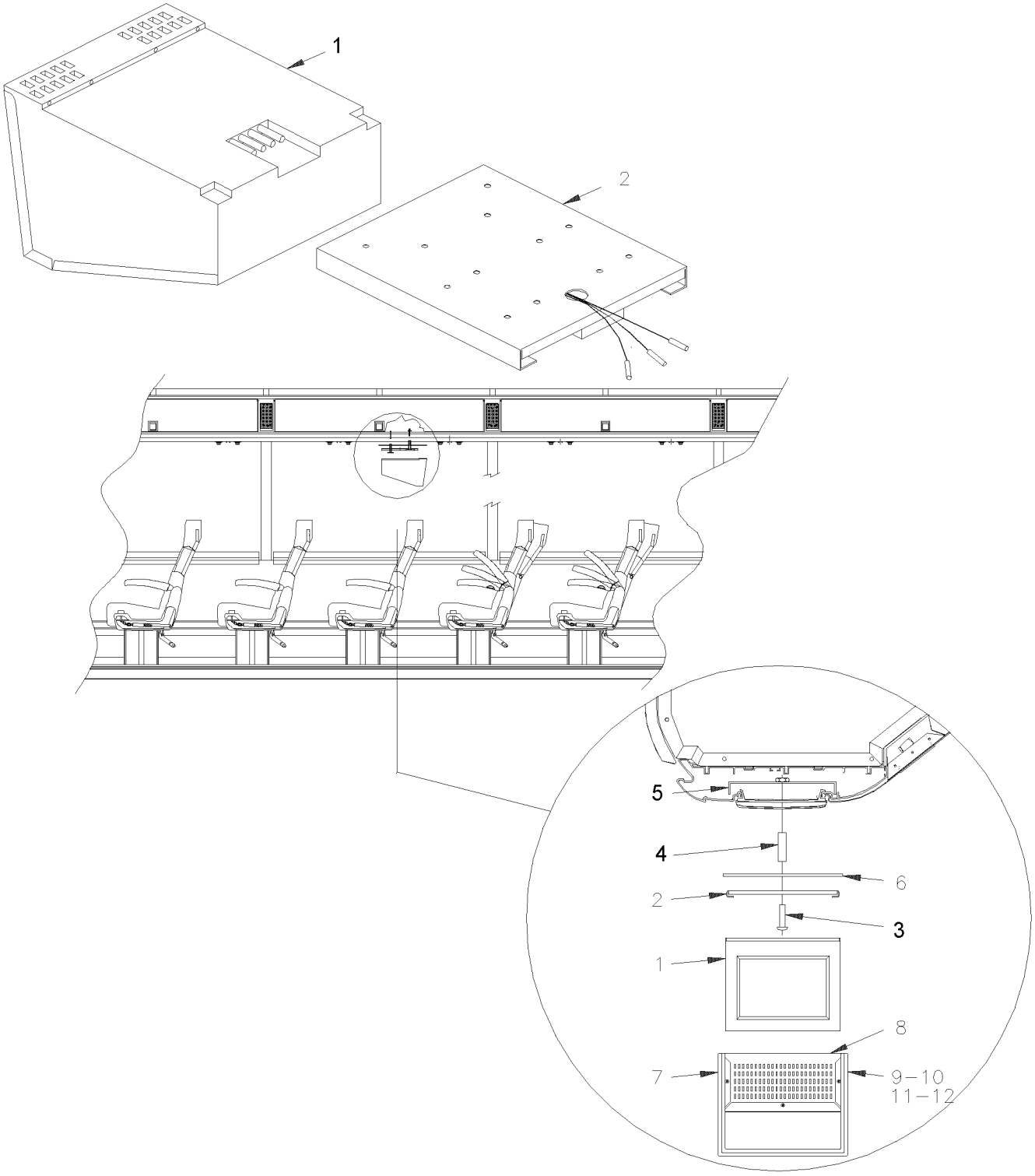

From Y-7046 Up to 6-8906	DATE: 01/2014	PAGE: Y2-2317-10

SIDE MONITOR - VIDEO - "R.E.I."

ITEM	PART	DESCRIPTION	XL45	MTH40	MTH45	MTH45S	NOTE
1	900809	MONITOR 2000 24V Up to 3-8057 / REPLACED BY: 901070	AR				
1	901070	MONITOR 2000 24V From 3-8058	AR				
2	404306	MONITOR SLIDE BRACKET Up to 4-8270 / REPLACED BY: K404306	AR				
. NS	900862	. KEY MONITOR LOCK Up to 4-8270	1				
2	405496	MONITOR SLIDE BRACKET From 4-8271	AR				
. NS	900862	. KEY MONITOR LOCK From 4-8271	1				
2	900862	. KEY MONITOR LOCK	1				
3	5001485	SCREW CAP HEX M10-1.5x60 G8.8 ZP	2				
4	404610	SPACER 5/8" O.D. TUBE X 35MM	1				
5	404611	. SUPPORT	1				
6	404388P	COVER ASSY	1				
7	404370P	BOX COVER ASSY / W/TISSUS / S.C.C.	1				
7	404369	. BOX	1				
8	404371	. GRILLE	1				
NS	500409	. SCREW TP PAN PH #8x1/2 BK	3				
9	500640	SCREW TP BDG PH #6x3/4 ZP	4				
10	504399	WASHER RETAINER SNAP CAP #10	4				
11	504400	SNAP CAP #10 FINISHING BLACK	4				
12	403497	SPACER	4				A
20	Y2-2317-20	**VIDEO VHS PLAYER - INSTALLATION "R.E.I."**					
		A) <> SUPPORT & CEILING					

From Y-7046 Up to 6-8906	DATE: 01/2014	PAGE: Y2-2317-11
SIDE MONITOR FLAT SCREEN - VIDEO -"R.E.I."		

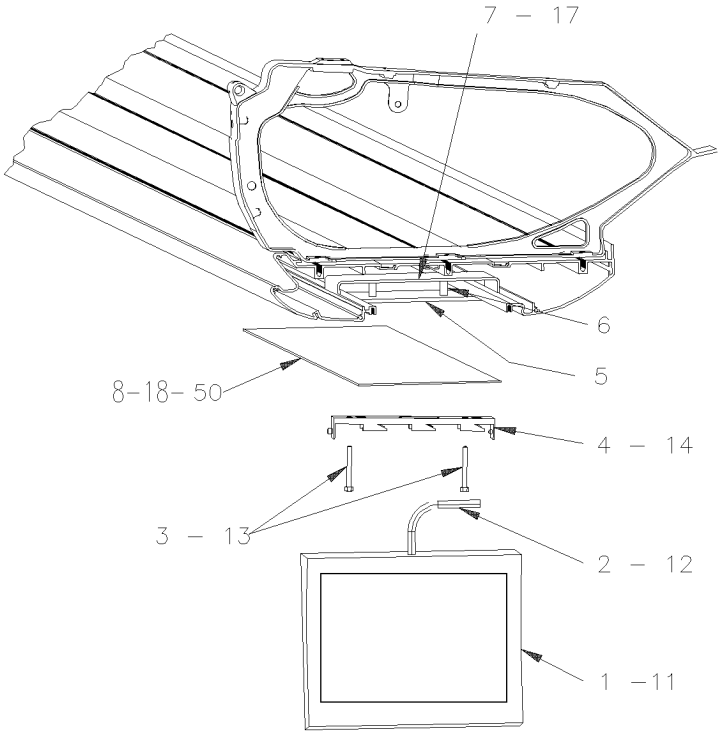

From Y-7046 Up to 6-8906	DATE: 01/2014	PAGE: Y2-2317-11

SIDE MONITOR FLAT SCREEN - VIDEO -"R.E.I."

ITEM	PART	DESCRIPTION	XL45	MTH40	MTH45	MTH45S	NOTE
1	901130	MONITOR 10" LCD 24V Up to 6-8843	AR				
. NS	901138	. PLUG CAP 12.51MM O.D. / GREY OVER SCREW Up to 6-8843	1				
1	903214	MONITOR 10" LCD 24V From 6-8844	1				
. NS	901243	. PLUG CAP 9.31MM O.D. / GREY OVER SCREW From 6-8844	1				
2	561681	CONVOLUTED TUBING / .350" / SLIT / BL.&GR.	1				
3	502541	SCREW CAP HEX M6-1.0x65 G8.8 ZP	2				
4	901131	SUPPORT MONITOR / W/FLAT SCREEN 10" Up to 6-8843 / REPLACED BY: 903213	AR				
4	903213	SUPPORT CENTRAL MONITOR / W/FLAT SCREEN 10" From 6-8844	1				
5	407564	SHIM 50MM X 207MM / BLACK PLASTIC	AR				
6	407561	SPACER 5/8" O.D. TUBE X 24MM / W/FL 6MM	AR				
7	407562	SUPPORT MONITOR R.H. Up to 6-8843 / REPLACED BY: 409150	AR				
7	409151	SUPPORT MONITOR R.H. From 6-8844	1				
7	407563	SUPPORT MONITOR L.H. Up to 6-8843 / REPLACED BY: 409151	AR				
7	409150	SUPPORT MONITOR L.H. From 6-8844	1				
8	310653P	PANEL 655MM / 382MM POSITION SCREEN / L.H. W/10" LCD SCREEN	1				
8	310654P	PANEL 655MM / 382MM POSITION SCREEN / R.H. W/ LCD SCREEN	1				
NS							
11	901086	MONITOR 12" LCD / FOLDING	AR				
12	405461	CABLE ASSY 10' / 24V POWER / W/12" MONITOR / 511824	AR				
12	405462	CABLE ASSY 15' / 24V POWER / W/12" MONITOR / 511693	AR				
12	405463	CABLE ASSY 35' / 24V POWER / W/12" MONITOR / 511825	AR				
NS	500195	SCREW CAP HEX 3/8-16x2 1/2 G5 ZP	AR				
NS	502510	WASHER FL .375x.875x.083	AR				
13	500478	WASHER LO SPT .380x.683x.094 ZP	AR				
14	901089	SUPPORT MONITOR / W/FLAT SCREEN 12" FOLDING	AR				
17	901087	SUPPORT SIDE MONITOR TRANSITION L.H.	AR				
17	901088	SUPPORT SIDE MONITOR TRANSITION R.H.	AR				
18	Call Order Desk	PANEL 315MM	1				P
18	312840P	PANEL 753MM	1				
18	Call Order Desk	PANEL 243MM	1				P
18	Call Order Desk	PANEL 388MM	1				P
50	Y2-1836-00	**PARCEL RACK**					
		P) CALL ORDER DESK FOR SPECIFIC APPLICATION					
		(V.I.N.)					

From 5-8678 Up to 6-8906	DATE: 01/2014	PAGE: Y2-2317-12
BACK SEAT MONITOR SCREEN - VIDEO -"R.E.I."		

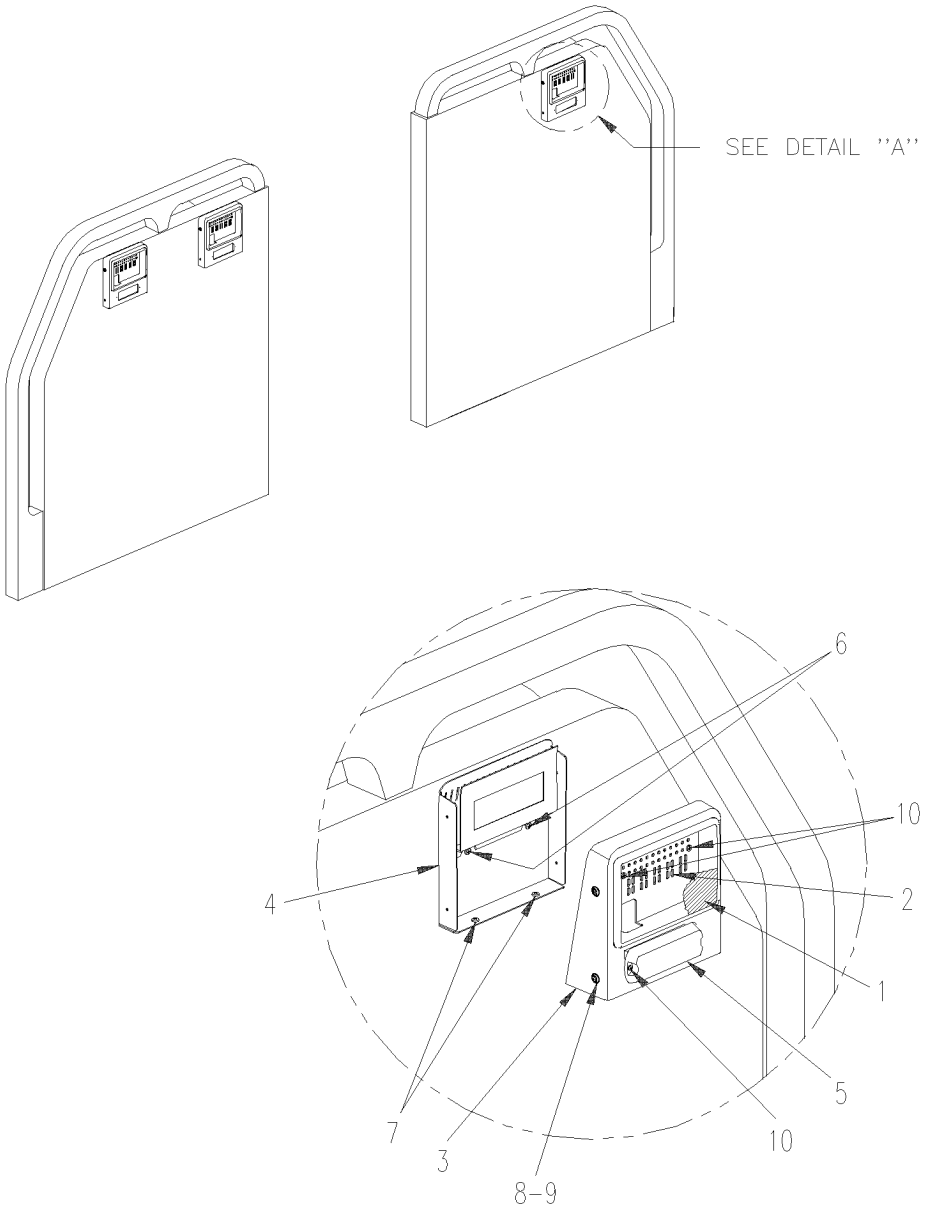

From 5-8678 Up to 6-8906	DATE: 01/2014	PAGE: Y2-2317-12

BACK SEAT MONITOR SCREEN - VIDEO -"R.E.I."

ITEM	PART	DESCRIPTION	XL45	MTH40	MTH45	MTH45S	NOTE
NS		FLAT SCREEN 5" HEADREST AND FRONT MODESTY					
NS							
1	901160	MONITOR 5" LCD 24V / HEADREST	AR				
2	901159	BOX LCD HEADREST	AR				
NS	901158	CONTROL BOX HEADREST	1				
3	405736	COVER MONITOR 5" LCD / MODESTY PANEL / FIXEX ON MODESTY PANEL	A				
4	405740	SUPPORT ASSY MONITOR 5" LCD / MODESTY PANEL / FIXEX ON MODESTY PANEL	1				
5	901006	SELECTOR HEAD SET MODULE	1				
6	500617	SCREW TP BDG PH #8x1 ZP	2				
7	500638	SCREW TP BDG PH #8x1/2 ZP	2				
8	500504	SCREW TC OV PH #6-32x1/2 BK	4				
9	500345	WASHER FN CKF .187x.500x.090 BR BK	4				
10	5001479	SCREW TP BDG PH #6x3/8 SS EMN	4				
11	500604	SCREW TC TR PH #10-24x1/2	4				
		ALLS FOLLOWING ITEMS ARE RELATED WITH "FIRTS CLASS TOURS"					
		WITH "V.I.N." 5-8678 / 5-8687 & 5-8692					
NS	901151	ANTENNA ROOF / XM RADIO	3				
NS	901149	RECEIVER / XM "SATELLITE"	3				
NS	901150	CABLE / <> XM TUNER & RADIO	3				
NS	901148	RADIO "PANASONIC" CQ-C3301U / AM/FM/CD & XM / 700972	3				
NS	901153	BOX MODULE ENTERTAINER / 3XM RADIO	1				
NS	901178	CABLE POWER 12' ENTERTAINER MODULE BOX	1				
NS	901111	KIT, DSS SATELLITE TV RECEIVER	1				
NS	901147	RECEIVER / "SATELLITE" LOW PROFILE	1				
NS	405754	SUPPORT ANTENNA "DSS"	1				
NS	901174	CABLE POWER 10'	2				
NS	901175	CABLE POWER 60'	3				
NS	901158	CONTROL BOX HEADREST	3				
NS	901161	CABLE INTERFACE 6' / <> INTERFACE BOX & LCD S	3				
NS	901162	CABLE INTERFACE EXTENTION / CONT / CCD	3				
NS	901177	CABLE POWER INTERFACE 12' / <> SEATS	10				
NS	901155	CABLE AUDIO RJ45 14'	3				
NS	901168	CABLE COAX 3' RG6	3				
NS	901167	CABLE COAX 9' RG6	20				
NS	901169	CABLE COAX 35' RG6	2				
NS	901154	SELECTOR 4 CHANNELS	1				
NS	901156	CABLE AUDIO 8 CIRCUITS	1				
NS	901157	CABLE COAX 3' BNC	5				
NS	901173	CABLE INTERFACE AMPLI / 8 CHANELS MODULATOR	1				
NS	901163	MODULATOR VIDEO 3 CHANNELS	3				

From 5-8678 Up to 6-8906	DATE: 01/2014	PAGE: Y2-2317-12

BACK SEAT MONITOR SCREEN - VIDEO -"R.E.I."

ITEM	PART	DESCRIPTION	XL45	MTH40	MTH45	MTH45S	NOTE
NS	901164	DIVIDER 3 VIDEOS	2				
NS	901165	AMPLI VIDEO	3				
NS	901166	SPLITER VIDEO 2 WAY	13				
NS	901172	CONNECTOR ADAPTOR / RCA F/GP / 110716	6				
NS	901152	CD CHARGER MODEL CX-DP880U	2				
NS	404225	NOISE FILTER / P/A, VIDEO & HOOKUP INDIVIDU / 450030	7				
NS	404288	CABLE ASSY / "Y" 9" <> CONTROL HEAD & ENTERTAINMENT MODULE	1				
NS	405753	SUPPORT DVD / USE WITH 3 DVD	1				
NS	901116	DVD REI / MP3	3				
. NS	901264	. REMOTE CONTROL / DVD REI	1				
NS	409125	MOUNTING PLATE	2				
NS	901082	CABLE RCA / 1M/1M / 6'	7				
NS	901102	8 CHANNEL AMPLIFIER MODULE	1				
NS	901106	AUDIO FILTER	4				
NS	901135	CABLE RCA / 3M/3M / 3'	7				
NS	901117	VIDEO DISTRIBUTION AMPLI W/BNC	1				
. NS	901119	. CABLE POWER DVA/VIDEO / 511867	1				
87	901403	VIDEO DISTRIBUTION AMPLI W/BNC	1				S
NS	562207	CONNECTOR / BNC / FEMALE / RCA MALE / AMP 12343	5				
NS	901107	CABLE ADAPTOR RCA TO MOLEX / 4"	3				
NS	901106	AUDIO FILTER	6				
NS	900881	HEAD SET EARPHONE	AR				
. NS	900882	. FOAM CUSHION PAD / (SET OF 2) / FOR 900881	1				
NS	D060993	DIAGRAM PAGE 28.1 SP4 & SP5 WIRING INSTALL	1				
NS	D.060993	DIAGRAM PAGE 28.3 SP2 WIRING INSTALL	1				
NS	D..060993	DIAGRAM PAGE 28.6 SP2 WIRING INSTALL	1				
		S) FOR SERVICE					

From 5-8678 Up to 6-8906	DATE: 01/2014	PAGE: Y2-2317-12

BACK SEAT MONITOR SCREEN - VIDEO -"R.E.I."

ITEM	PART	DESCRIPTION	XL45	MTH400	MTH445	MTH445S	NOTE

From Y-7046 Up to 6-8906	DATE: 01/2014	PAGE: Y2-2317-20
VIDEO VHS PLAYER - INSTALLATION "R.E.I."		

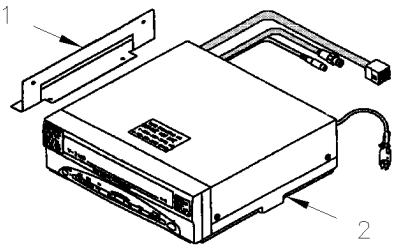

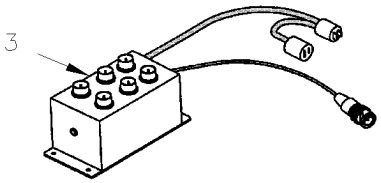

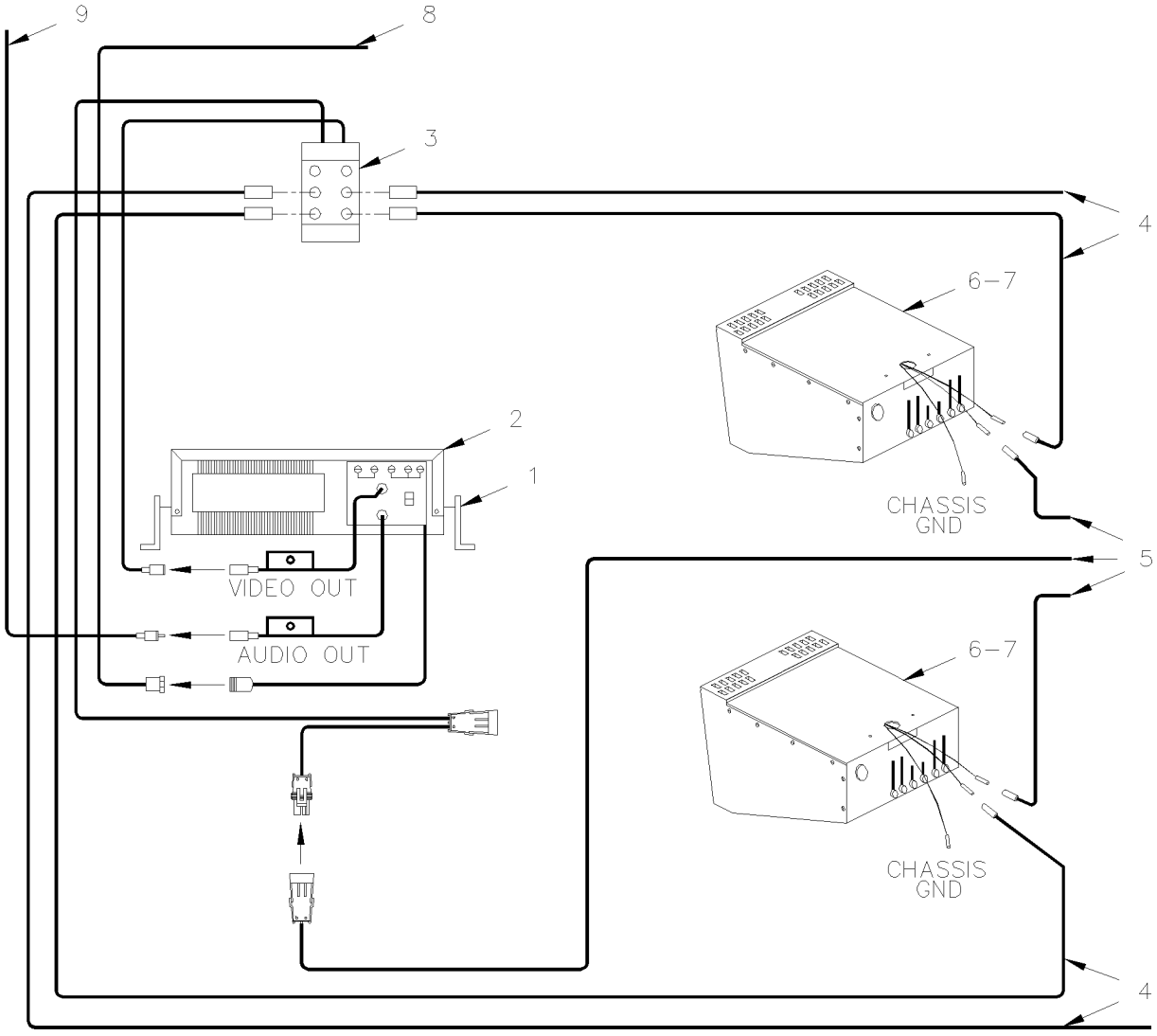

From Y-7046 Up to 6-8906	DATE: 01/2014	PAGE: Y2-2317-20

VIDEO VHS PLAYER - INSTALLATION "R.E.I."

FOR INSTALLATION FROM 4-8271
SEE PAGE Y2-2317-30 & Y2-2317-31

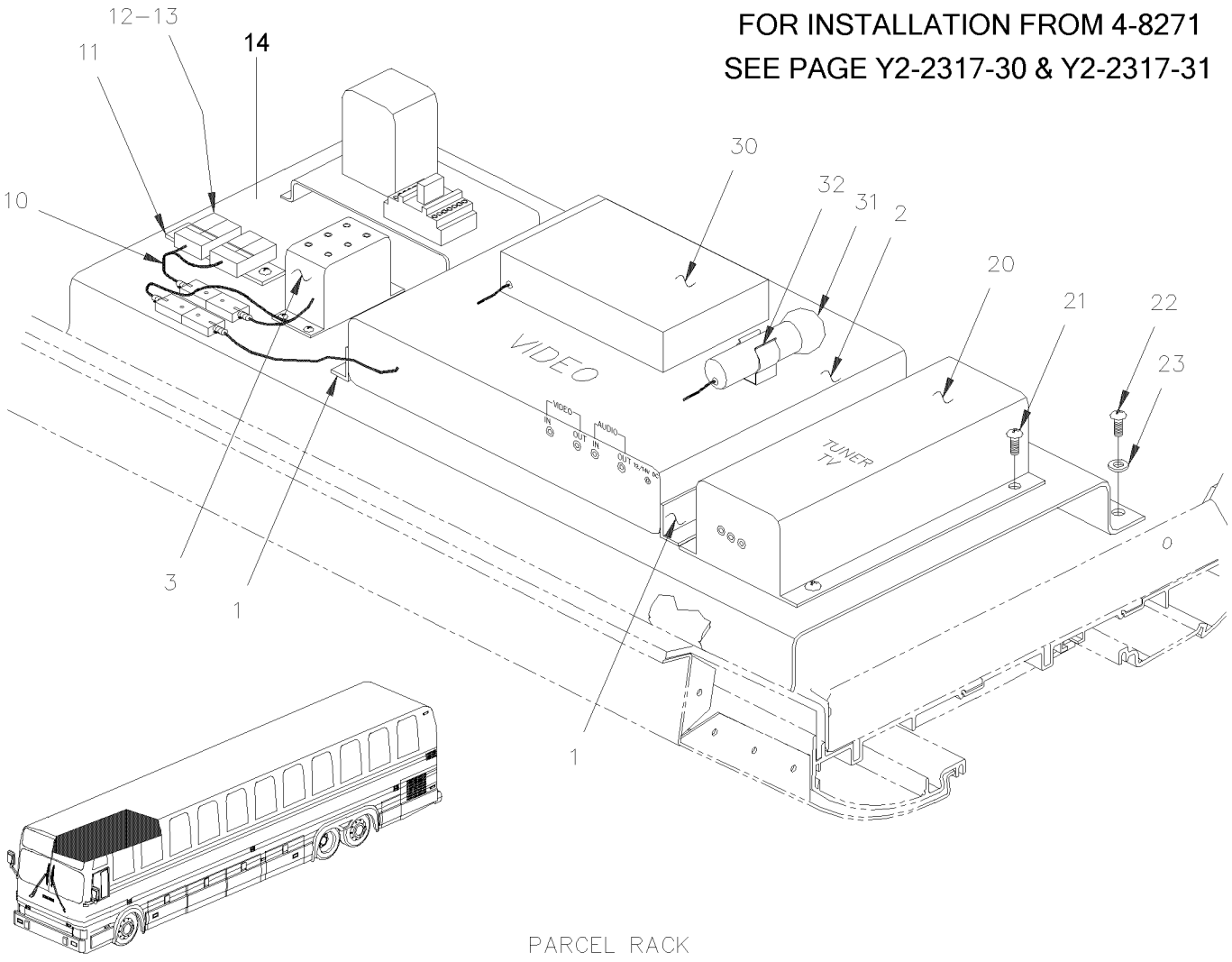

PARCEL RACK

From Y-7046 Up to 6-8906	DATE: 01/2014	PAGE: Y2-2317-20

VIDEO VHS PLAYER - INSTALLATION "R.E.I."

ITEM	PART	DESCRIPTION	XL45	MTH40	MTH45	MTH45S	NOTE
1	900823	VCP R.H. ADAPTOR BRACKET Up to 1-7436	1				
1	900824	VCP L.H. ADAPTOR BRACKET Up to 1-7436	1				
1	901028	VCP R.H. ADAPTOR BRACKET From 1-7437 Up to 4-8270	1				
1	901029	VCP L.H. ADAPTOR BRACKET From 1-7437 Up to 4-8270	1				
1	405500	VCP R.H. ADAPTOR BRACKET From 4-8271	1				
1	405501	VCP L.H. ADAPTOR BRACKET From 4-8271	1				
2	900806	VIDEO V-2100 VCP, SYS 2000 24V Up to 1-7436 / REPLACED BY: K900806	1				
2	901030	VIDEO V-3000 VCP, SYS 2000 24V From 1-7437	1				
. NS	901065	. REMOTE CONTROL / VDO REI V-3000 From 1-7437	1				
NS	900884	SWITCH VIDEO / USE WITH 2 VIDEO	1				
NS	404380	CABLE ASSY RCA / M/M / USE WITH 2 VIDEOS / 510300	1				
3	900807	VIDEO DISTRIBUTION AMPLI W/BNC Up to 2-7744 / REPLACED BY: K900807	1				
3	901055	VIDEO DISTRIBUTION AMPLI W/BNC From 2-7745 Up to 5-8437 / REPLACED BY: 901117	1				
3	901117	VIDEO DISTRIBUTION AMPLI W/BNC From 5-8438	1				
. NS	901119	. CABLE POWER DVA/VIDEO / 511867 From 5-8438	1				
3	901403	VIDEO DISTRIBUTION AMPLI W/BNC	1				S
4	404232	CABLE ASSY COAX / RG-59 / 10' / 510443	AR				
4	404233	CABLE ASSY COAX / RG-59 / 15' / 511062	AR				
4	404234	CABLE ASSY COAX / RG-59 / 20' / 510407	AR				
4	404235	CABLE ASSY COAX / RG-59 / 24' / 510414	AR				
4	404236	CABLE ASSY COAX / RG-59 / 33' / 510928	AR				
4	404237	CABLE ASSY COAX / RG-59 / 44' / 510929	AR				
5	404244	CABLE ASSY 10' / 24V POWER Up to 4-8270	AR				RC
5	405487	CABLE ASSY 10' / 24V POWER From 4-8271	AR				R
5	404245	CABLE ASSY 15` / 24V POWER Up to 4-8270	AR				RC
5	405488	CABLE ASSY 15' / 24V POWER From 4-8271	AR				R
5	404246	CABLE ASSY 20` / 24V POWER Up to 4-8270	AR				RC
5	405489	CABLE ASSY 20' / 24V POWER From 4-8271	AR				R
5	404247	CABLE ASSY 25` / 24V POWER Up to 4-8270	AR				RC
5	405490	CABLE ASSY 25' / 24V POWER From 4-8271	AR				R
5	404248	CABLE ASSY 30` / 24V POWER Up to 4-8270	AR				RC
5	405491	CABLE ASSY 30' / 24V POWER From 4-8271	AR				R
5	404249	CABLE ASSY 35` / 24V POWER Up to 4-8270	AR				RC
5	405492	CABLE ASSY 35' / 24V POWER From 4-8271	AR				R
5	404250	CABLE ASSY 40` / 24V POWER Up to 4-8270	AR				RC
5	405493	CABLE ASSY 40' / 24V POWER From 4-8271	AR				R
5	405379	CABLE ASSY 60' / 24V POWER Up to 4-8270	AR				RC
		R) CABLE W/R.E.I. MONITOR USE W/CON 1 # 563071 &					
		3 TERM # 562483					
		RC) CABLE W/R.E.I. MONITOR USE W/CON 1 # 562554					
		S) FOR SERVICE					

From Y-7046 Up to 6-8906	DATE: 01/2014	PAGE: Y2-2317-20

VIDEO VHS PLAYER - INSTALLATION "R.E.I."

ITEM	PART	DESCRIPTION	XL45	MTH40	MTH45	MTH45S	NOTE
5	405494	CABLE ASSY 60' / 24V POWER From 4-8271	AR				R
6	Y2-2317-00	**FRONT MONITOR - VIDEO - "R.E.I."**					
7	Y2-2317-10	**SIDE MONITOR - VIDEO - "R.E.I."**					
8	404283	CABLE ASSY 20' / <> FILTER VCP & CONTROL HEAD	1				
9	900783	CABLE RCA / 2M/2M / 10'	1				
10	404255	CABLE ASSY 13" / 24V POWER	1				
11	380904	RAIL SUPPORT / 80MM	1				
12	561726	BLOCK JUNCTION	4				
12	381813	BUS BAR / W/2 HOLES 25MM	1				
13	561728	END CLOSING	1				
14	404588	MOUNTING PLATE Up to 4-8270	1				
14	405482	MOUNTING PLATE From 4-8271 Up to 5-8592	1				
14	409125	MOUNTING PLATE From 5-8593	1				
NS	404589	PROTECTOR VIDEO BOX	1				
14	Y2-2317-30	**VIDEO & AUDIO SYSTEM - INSTALLATION**	1				
20	900814	TUNER TV 24V Up to 2-7744 / REPLACED BY: K900814	1				
20	901054	TUNER TV 24V From 2-7745	1				
NS	405186	INTERFACE CABLE ASSY	1				B
21	500654	SCREW TC BDG PH #8-32x1/2 ZP	4				
22	500841	SCREW TP BDG PH #14x3/4 ZP	6				
23	500441	WASHER FL .312x.734x.065 ZP	6				
30	900952	RECEIVER WIRELESS MICROPHONE / 16-CHANNEL Up to 5-8412 / REPLACED BY: 901201	1				A
. NS	901300	. ANTENNA RIGID / REAR OF RECEIVER Up to 5-8412	1				
30	901201	RECEIVER WIRELESS MICROPHONE / 16-CHANNEL From 5-8413	1				
31	900954	MICROPHONE, WIRELESS / 16-CHANNEL	1				A
. NS	685199	. BATTERY 1.5V / TYPE "AA" / RECHARGEABLE	AR				
32	900953	STATION WIRELESS BATTERY CHARGING 16CH	1				
		A) 170,3 MHZ TO 174,8 MHZ					
		B) USE WITH #901054 UP TO 2-7744					
		R) CABLE W/R.E.I. MONITOR USE W/CON 1 # 563071 &					
		3 TERM # 562483					

From 4-8271 Up to 5-8592	DATE: 01/2014	PAGE: Y2-2317-30

VIDEO & AUDIO SYSTEM - INSTALLATION

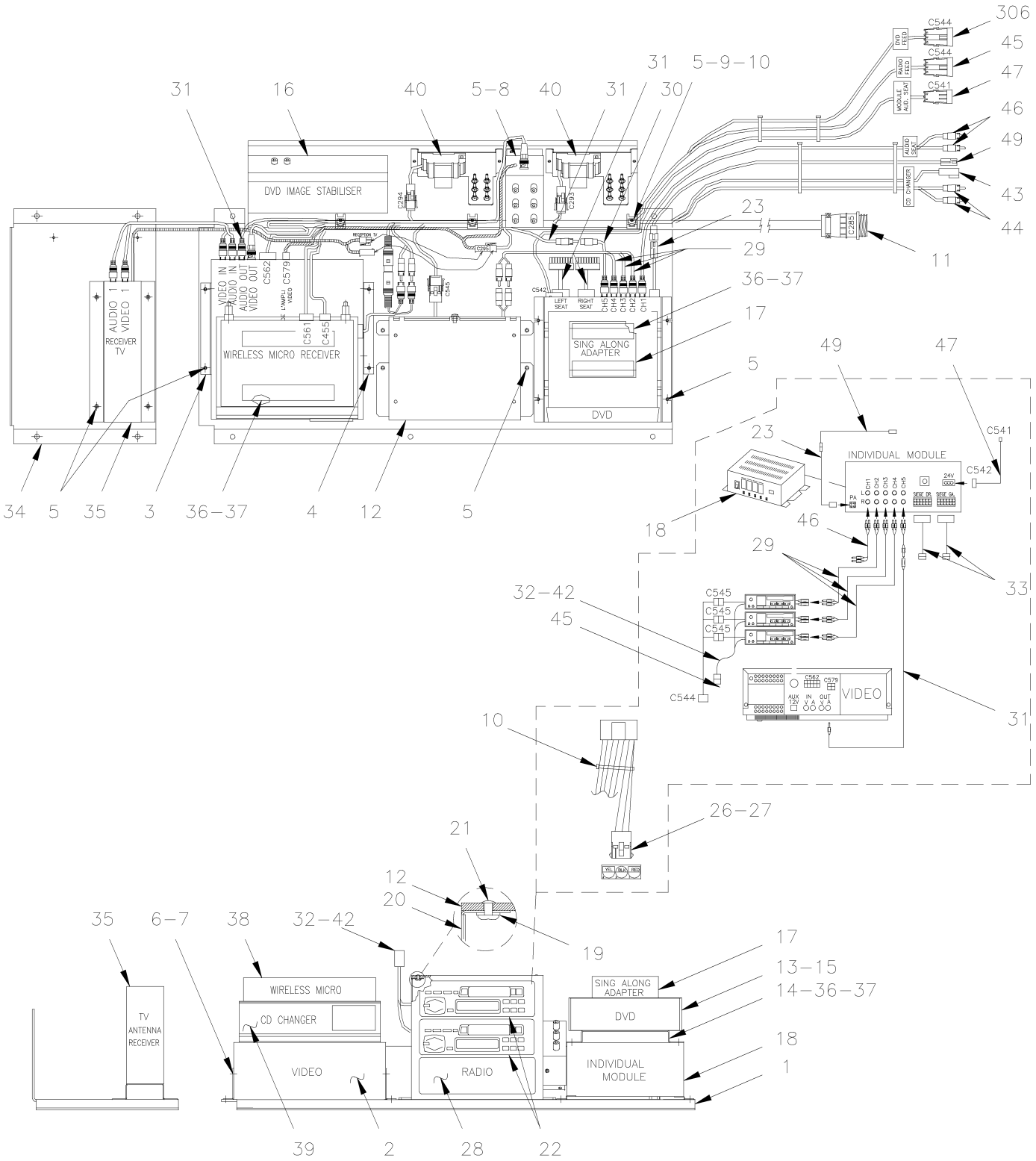

From 4-8271 Up to 5-8592	DATE: 01/2014	PAGE: Y2-2317-30

VIDEO & AUDIO SYSTEM - INSTALLATION

COMPONENTS POSITION
W/O INDIVIDUAL LISTENING

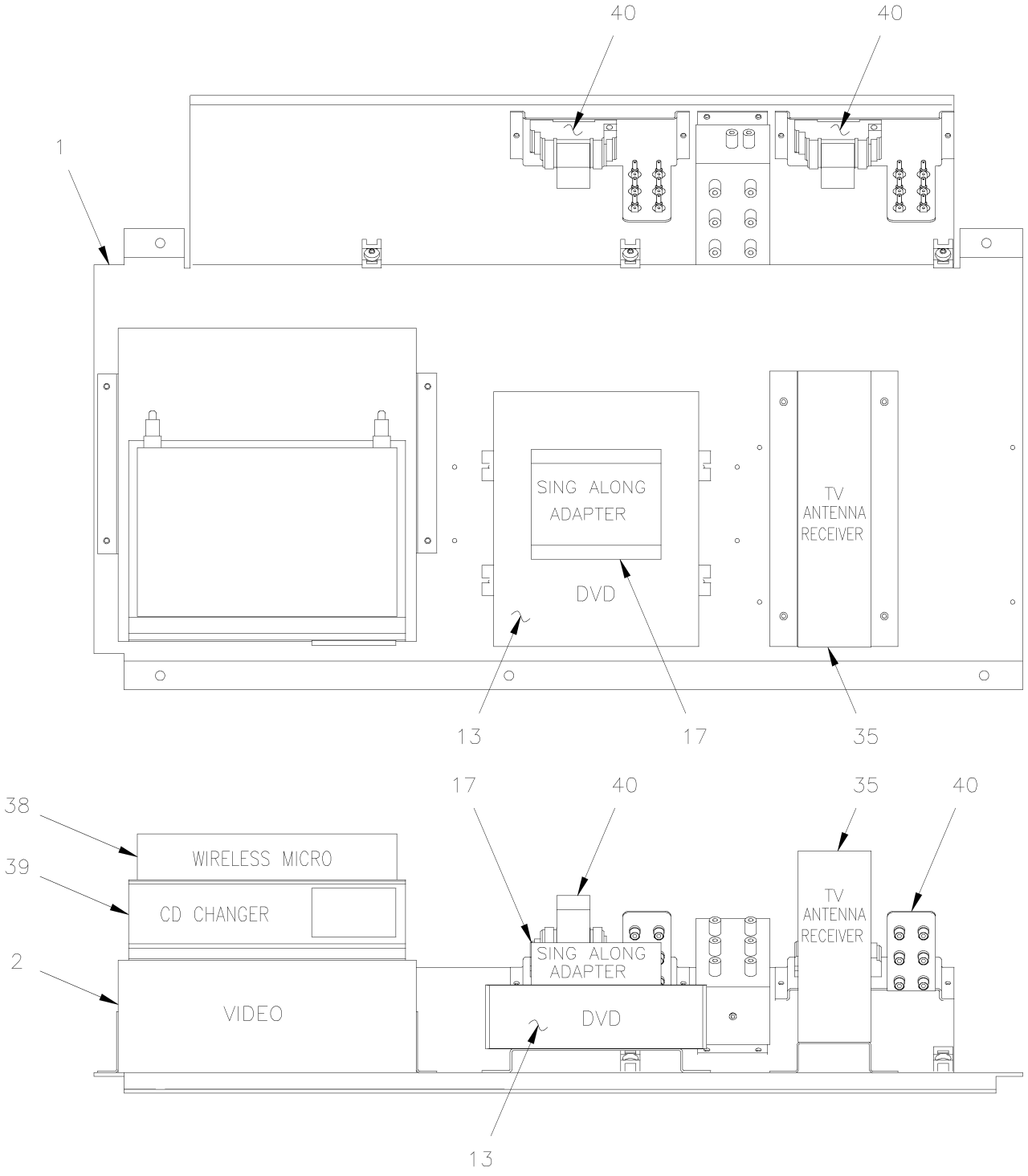

From 4-8271 Up to 5-8592	DATE: 01/2014	PAGE: Y2-2317-30

VIDEO & AUDIO SYSTEM - INSTALLATION

VCP, DVD SING ALONG WITH OR WITHOUT CAMERA

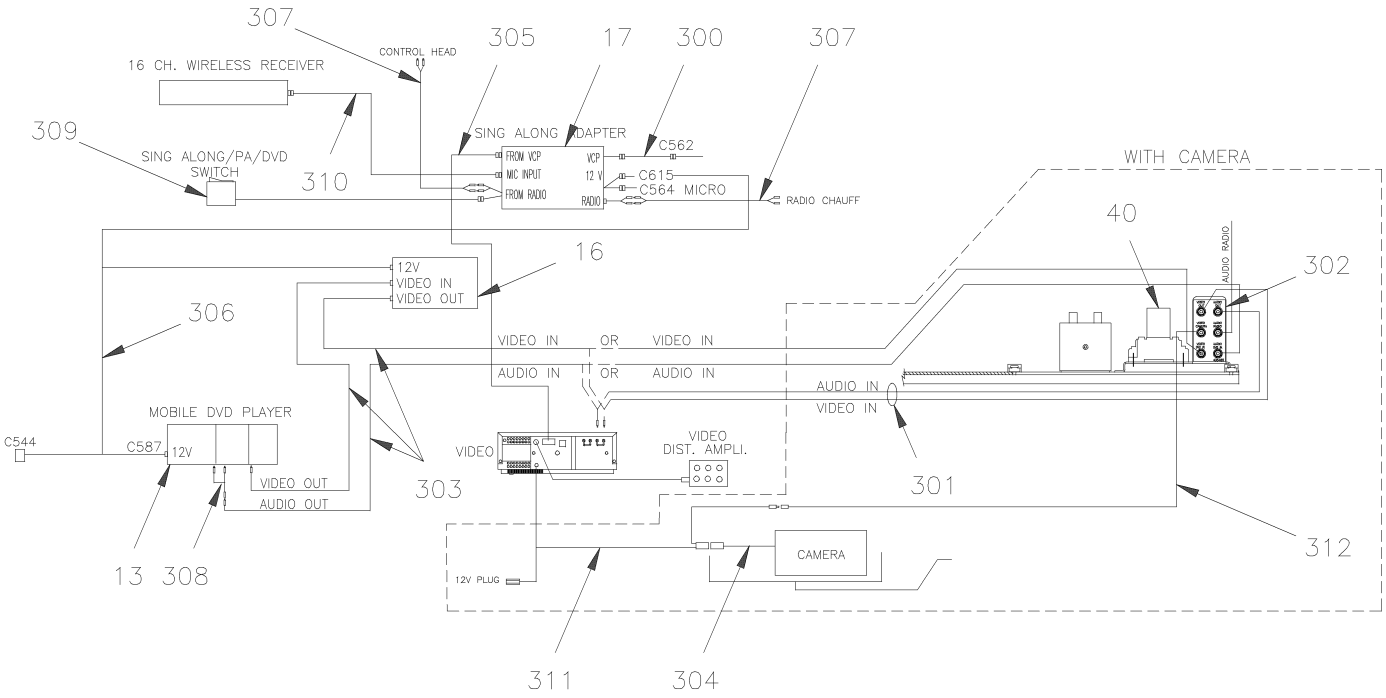

VCP, DVD WITH OR WITHOUT CAMERA

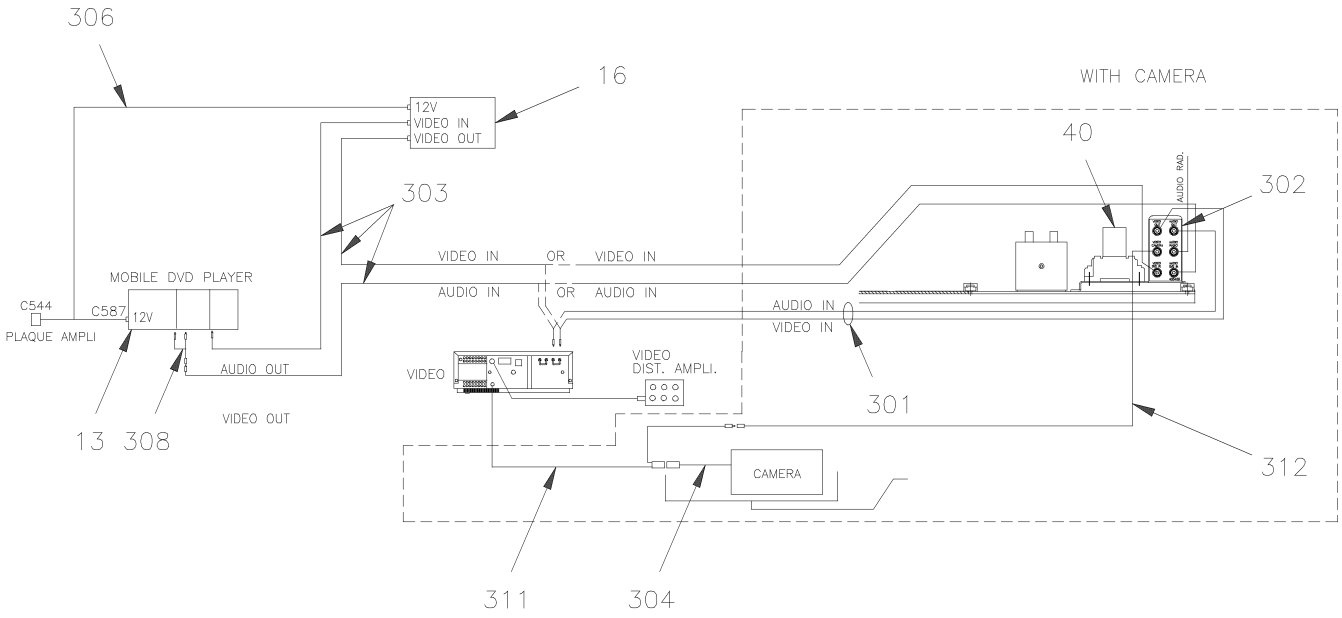

From 4-8271 Up to 5-8592	DATE: 01/2014	PAGE: Y2-2317-30

VIDEO & AUDIO SYSTEM - INSTALLATION

VCP, DVD SING ALONG, CAMERA AND TV RECPTION

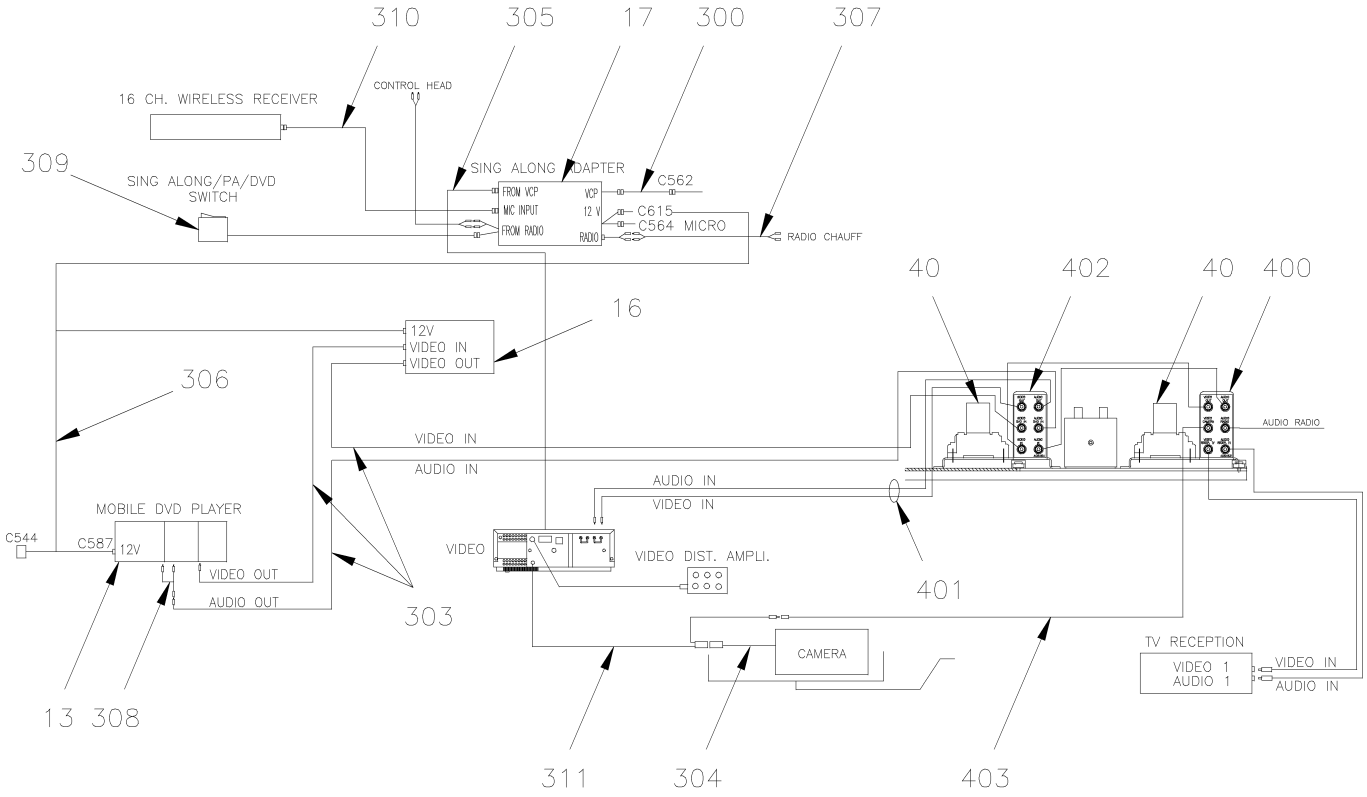

VCP, DVD, CAMERA AND TV RECEPTION

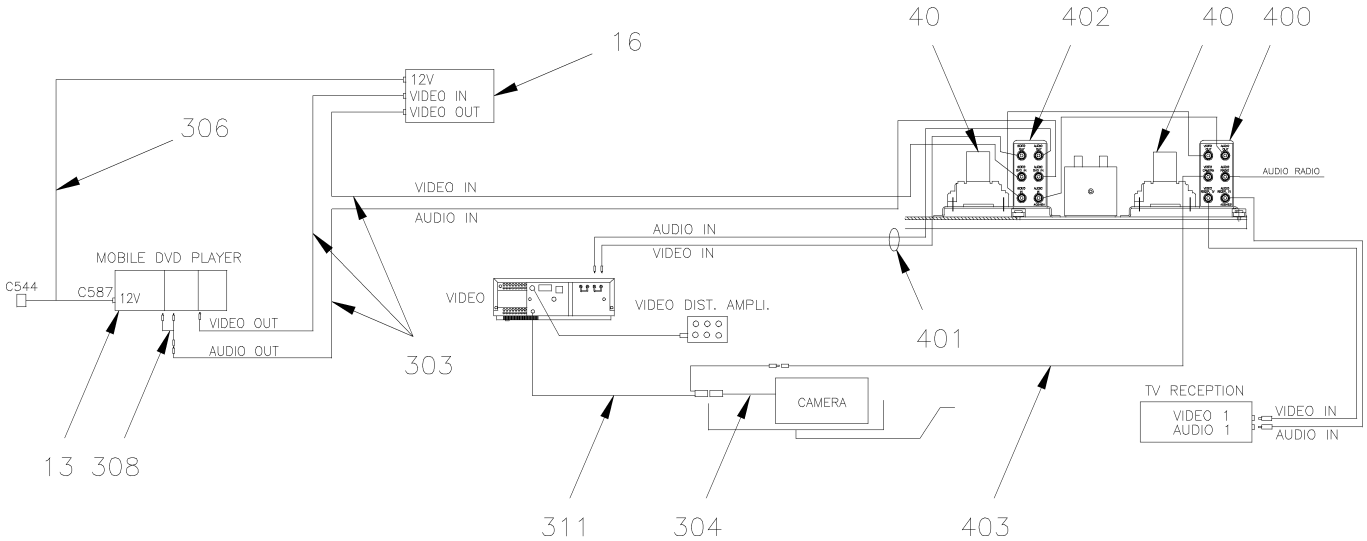

From 4-8271 Up to 5-8592	DATE: 01/2014	PAGE: Y2-2317-30

VIDEO & AUDIO SYSTEM - INSTALLATION

VCP, TV RECEPTION WITH OR WITHOUT CAMERA

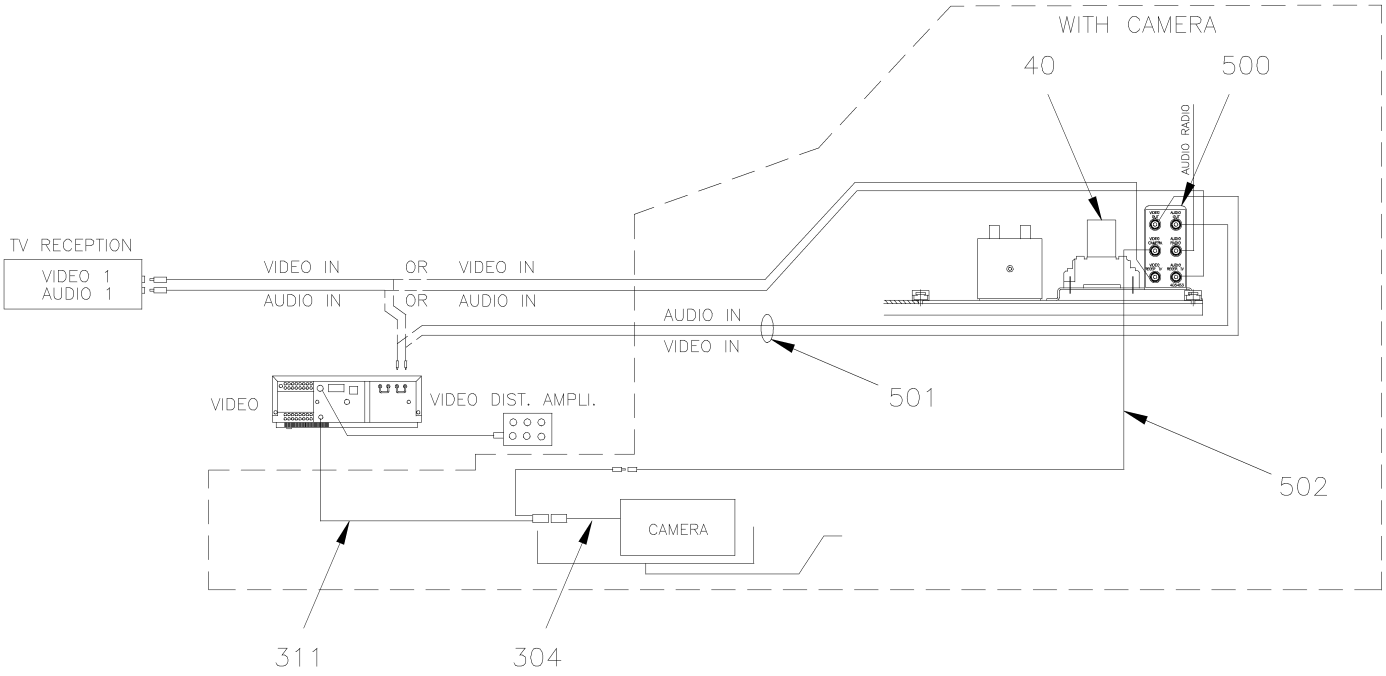

VCP WITH CAMERA

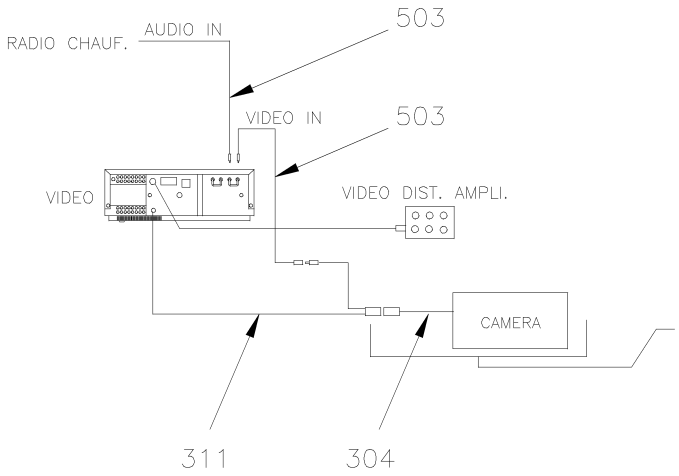

From 4-8271 Up to 5-8592	DATE: 01/2014	PAGE: Y2-2317-30

VIDEO & AUDIO SYSTEM - INSTALLATION

ITEM	PART	DESCRIPTION	XL45	MTH40	MTH45	MTH45S	NOTE
1	405482	MOUNTING PLATE	1				
2	901030	VIDEO V-3000 VCP, SYS 2000 24V	1				
. NS	901065	. REMOTE CONTROL / VDO REI V-3000	1				
3	405501	VCP L.H. ADAPTOR BRACKET	1				
4	405500	VCP R.H. ADAPTOR BRACKET	1				
5	500654	SCREW TC BDG PH #8-32x1/2 ZP	AR				
6	5001036	SCREW MA PAN PH M4-0.7x10 ZP	4				
7	502636	WASHER LO SPT 4.1x7.6x0.9 ZP	4				
8	901055	VIDEO DISTRIBUTION AMPLI W/BNC Up to 5-8437 / REPLACED BY: 901117	1				
8	901117	VIDEO DISTRIBUTION AMPLI W/BNC From 5-8438	1				
. NS	901119	. CABLE POWER DVA/VIDEO / 511867 From 5-8438	1				
8	901403	VIDEO DISTRIBUTION AMPLI W/BNC	1				S
9	504013	TIE MOUNT / 1/4" X 1/4" I.D.	3				
10	504637	CABLE TIE / 3/16" x 13"	AR				
11	405486	HARNESS, VIDEO PANEL	1				
12	404488	SUPPORT, RADIO	1				
13	901069	DVD REI / MP3 Up to 4-8290 / REPLACED BY: 405660	1				
13	901096	DVD REI / MP3 From 4-8291 Up to 5-8437 / REPLACED BY: 405660	1				
. NS	901098	. REMOTE CONTROL "MP3" DVD From 4-8291 Up to 5-8437	1				
13	901116	DVD REI / MP3 From 5-8438	1				
. NS	901264	. REMOTE CONTROL / DVD REI From 5-8438	1				
14	405499	SUPPORT DVD	2				
15	901074	KIT, TRIM PANEL DVD	1				
16	901034	STABILIZER VIDEO MODIFIED / REPLACED BY: 405659	1				A
17	901035	ADAPTOR KARAOKE	1				
18	900845	ENTERTAINER CONTROL MODULE / REPLACED BY: 901102	1				
19	500437	WASHER FL .125x.375x.040 ZP	8				
20	404542	SIDE PANEL FINISHING	2				
21	504475	RIVET POP CK OE 1/8x3/16 AL	8				
22	901078	RADIO "PIONEER" KEH-P1010 AM/FM/CASS.	1				
22	901046	RADIO "SONY" CDXL550X AM/FM/CD	1				
23	404498	CABLE ADAPTOR INTER. MODULE / 511211	1				
24	5001036	SCREW MA PAN PH M4-0.7x10 ZP	1				
25	500022	WASHER LO INT .168x.340x.023 ZP	1				
26	561667	CONNECTOR / UNIVERSAL MATE-N-LOK / PH 3C / AMP 1-480701-0	1				
27	562122	PIN TERMINAL / 20-14 / AMP 350547-1	2				
28	900849	PLATE RADIO "DUMMY"	AR				
29	900856	CABLE RCA / 2M/2M / 3'	1				
30	900758	ADAPTOR "Y" RCA / 1F/2M / 9"	1				
31	404380	CABLE ASSY RCA / M/M / USE WITH 2 VIDEOS / 510300	1				
32	900775	Y RADIO ANTENNA CABLE / TO USE W/2 RADIOS	1				
33	901022	CABLE SEAT AUDIO	2				
		A) THIS PART IS SUPERSEEDED BY KIT #405659					
		S) FOR SERVICE					

From 4-8271 Up to 5-8592	DATE: 01/2014	PAGE: Y2-2317-30

VIDEO & AUDIO SYSTEM - INSTALLATION

ITEM	PART	DESCRIPTION	XL45	MTH40	MTH45	MTH45S	NOTE
34	405483	PANEL TV RECEIVER	1				
35	901054	TUNER TV 24V	1				
36	506755	VELCRO / HOOK ADHESIF 1" x 75'	AR				
37	506756	VELCRO / LOOP ADHESIF 1" x 75'	AR				
38	900952	RECEIVER WIRELESS MICROPHONE / 16-CHANNEL Up to 5-8412 / REPLACED BY: 901201	1				
. NS	901300	. ANTENNA RIGID / REAR OF RECEIVER Up to 5-8412	1				
38	901201	RECEIVER WIRELESS MICROPHONE / 16-CHANNEL From 5-8413	1				
39	901057	CD CHARGER / 8 DISCS / "PANASONIC" CX-DP88 / MODIFIED	1				
40	Y2-2355-10	**FRONT CAMERA - INSTALLATION**					
42	900663	ADAPTOR / <> RADIO & ANTENNA CABLE / MOTOROLA MALE to EURO FEMA	1				
43	901058	CABLE ASSY CD / DIN / 280"	1				
44	901059	CABLE RCA / 2M/2M / 23' / REPLACED BY: 901110	1				
45	404504	CABLE ASSY / RADIO POWER Up to 5-8592	1				
46	900855	CABLE RCA / 2M/2M / 20'	1				
47	064486	CABLE ASSY 33.5` 24V POWER / ENT MODULE Up to 5-8592	1				
49	404302	CABLE ASSY 20' / 510520	1				
300	405326	WIRING HARNESS	1				
301	900856	CABLE RCA / 2M/2M / 3'	1				
302	405455	DECAL, VCR CAMERA & DVD RELAY	1				
303	404380	CABLE ASSY RCA / M/M / USE WITH 2 VIDEOS / 510300	2				
304	900912	CABLE ASSY / FRONT CAMERA	1				
305	405190	HARNESS INTERFACE VIDEO/SING ALONE ADAP	1				
306	405657	CABLE ASSY DVD	1				
307	900855	CABLE RCA / 2M/2M / 20'	2				
308	900758	ADAPTOR "Y" RCA / 1F/2M / 9"	1				
309	901036	SWITCH KARAOKE	1				
310	405191	HARNESS WIRE LESS MIC/SING ALONE ADAPTOR / REPLACED BY: 900957	1				
311	900913	CABLE ASSY / <> VIDEO & FRONT CAMERA	1				
312	900918	CABLE RCA / 1M/1F/ 3'	1				
400	405453	DECAL, VCR, CAMERA & TV RELAY	1				
401	900856	CABLE RCA / 2M/2M / 3'	1				
402	405454	DECAL, VCR & DVD RELAY	1				
403	900918	CABLE RCA / 1M/1F/ 3'	1				
500	405453	DECAL, VCR, CAMERA & TV RELAY	1				
501	900856	CABLE RCA / 2M/2M / 3'	1				
502	900918	CABLE RCA / 1M/1F/ 3'	1				
503	900866	CABLE RCA / 1M/1M / 25'	1				
NS	405660	KIT, DVD REPLACMENT	1				
. NS	IS-04036	. SEE INSTRUCTION SHEET	1				
NS	405659	KIT, VIDEO STABILIZATOR REPLACMENT	1				
. NS	IS-03099	. SEE INSTRUCTION SHEET	1				

From 4-8271 Up to 5-8592	DATE: 01/2014	PAGE: Y2-2317-30

VIDEO & AUDIO SYSTEM - INSTALLATION

ITEM	PART	DESCRIPTION	XL45	MTH400	MTH445	MTH455S	NOTE

From 5-8593 Up to 6-8906	DATE: 01/2014	PAGE: Y2-2317-31

VIDEO & AUDIO SYSTEM - INSTALLATION

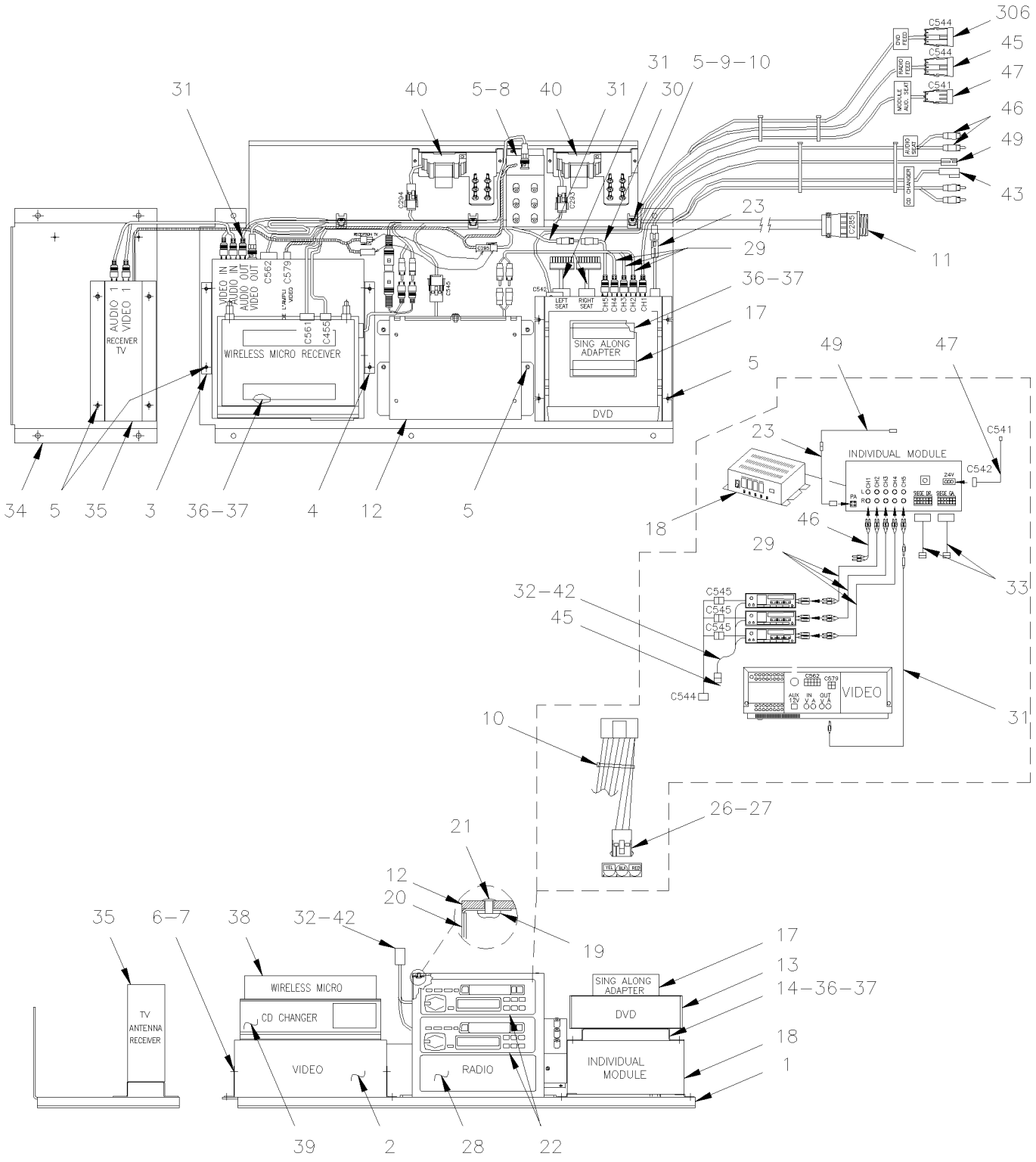

From 5-8593 Up to 6-8906	DATE: 01/2014	PAGE: Y2-2317-31

VIDEO & AUDIO SYSTEM - INSTALLATION

COMPONENTS POSITION
W/O INDIVIDUAL LISTENING

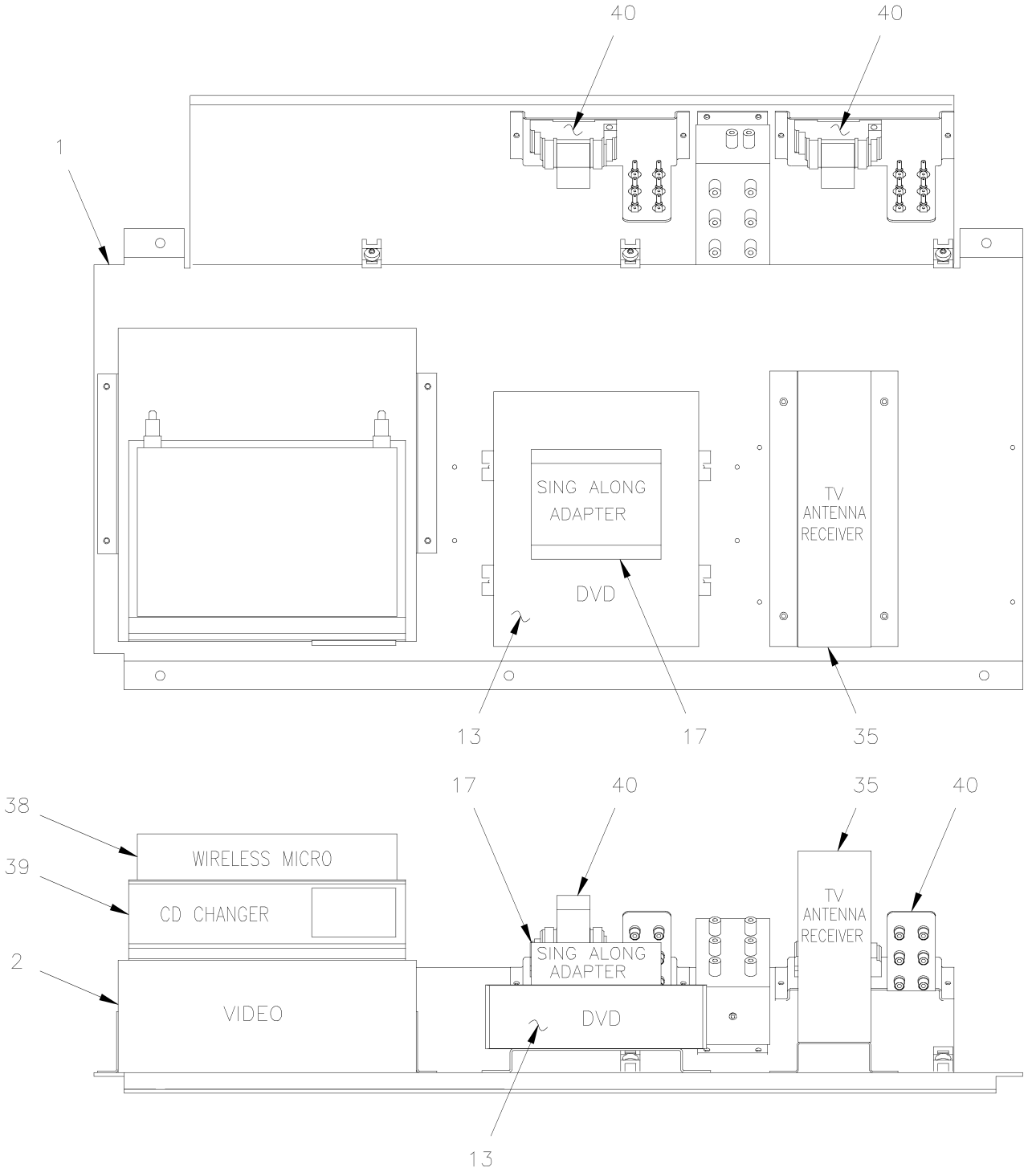

From 5-8593 Up to 6-8906	DATE: 01/2014	PAGE: Y2-2317-31

VIDEO & AUDIO SYSTEM - INSTALLATION

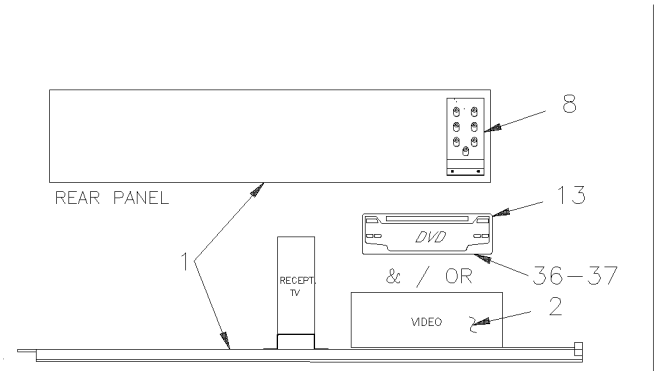

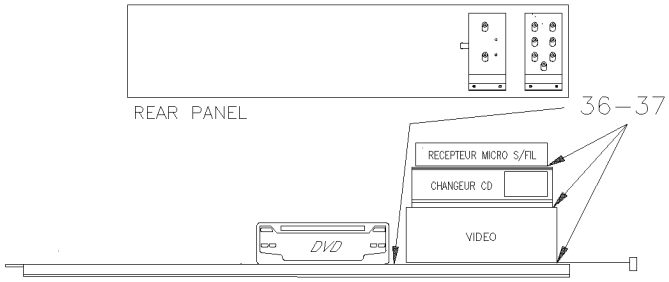

VIDEO WITH CHARGER CD & WIRELESS MICROPHONE (WITH OR WITHOUT DVD)

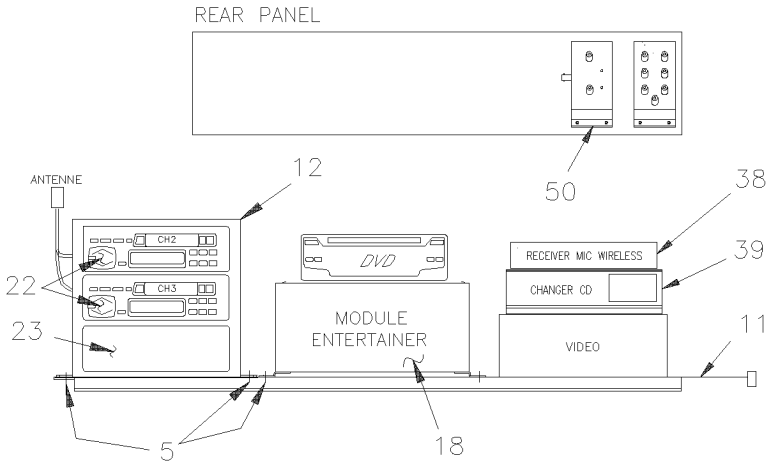

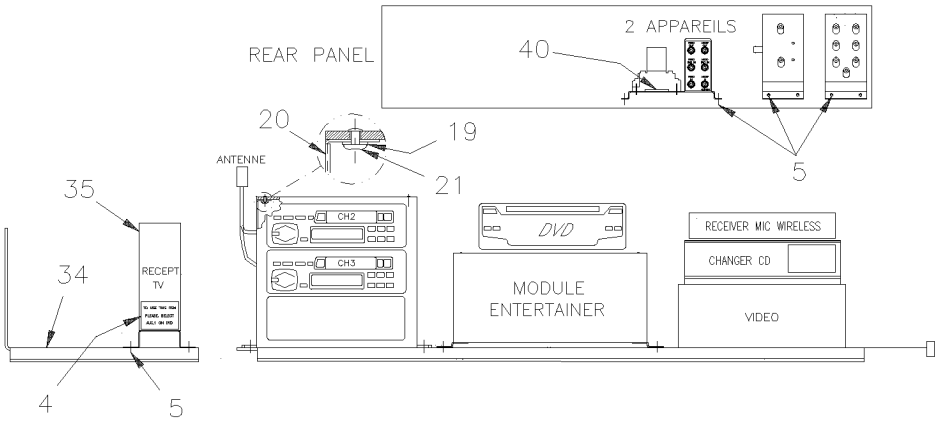

From 5-8593 Up to 6-8906	DATE: 01/2014	PAGE: Y2-2317-31

VIDEO & AUDIO SYSTEM - INSTALLATION

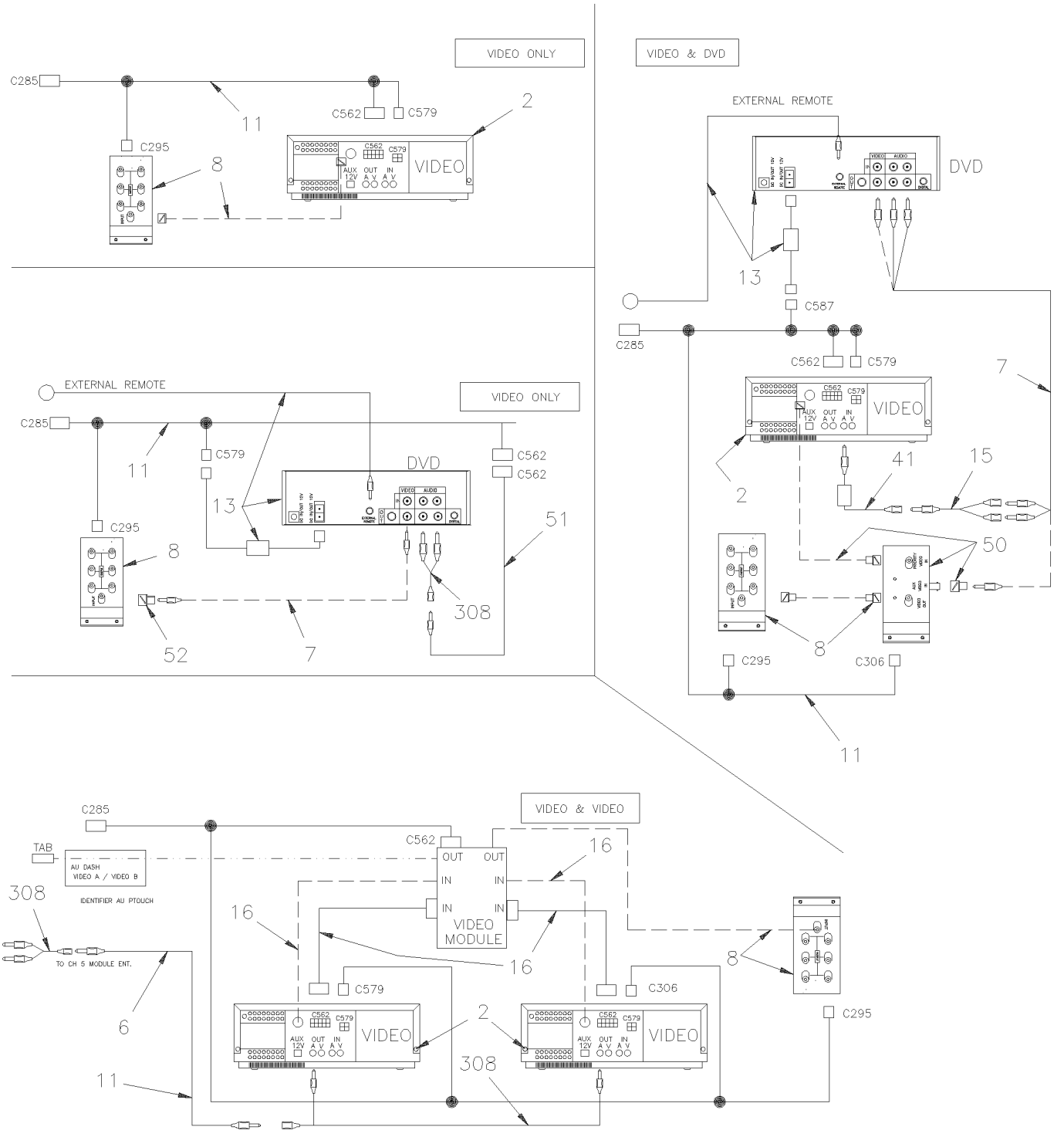

From 5-8593 Up to 6-8906	DATE: 01/2014	PAGE: Y2-2317-31

VIDEO & AUDIO SYSTEM - INSTALLATION

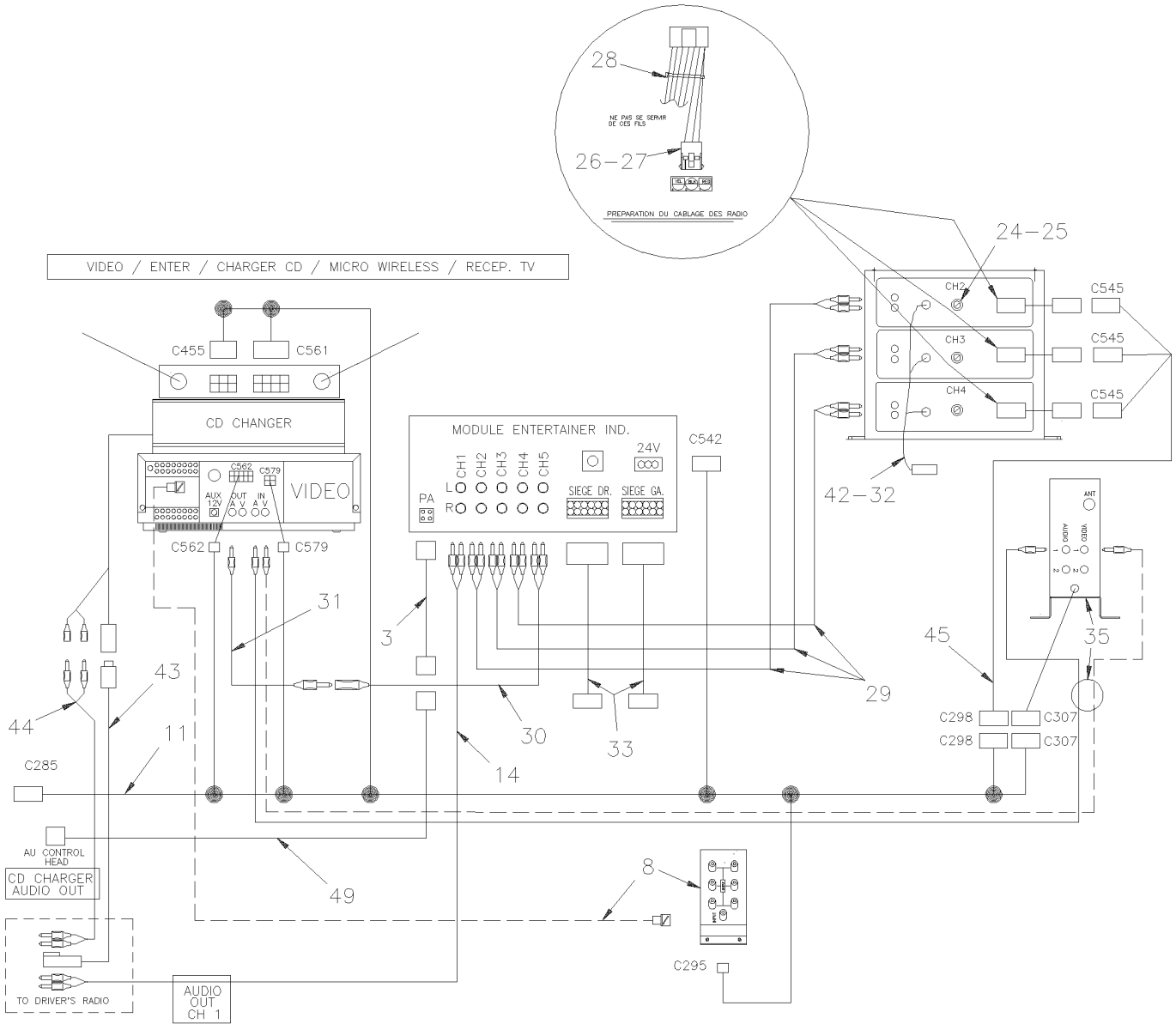

From 5-8593 Up to 6-8906	DATE: 01/2014	PAGE: Y2-2317-31

VIDEO & AUDIO SYSTEM - INSTALLATION

VIDEO / RECEP.TV OR FRONT CAMERA

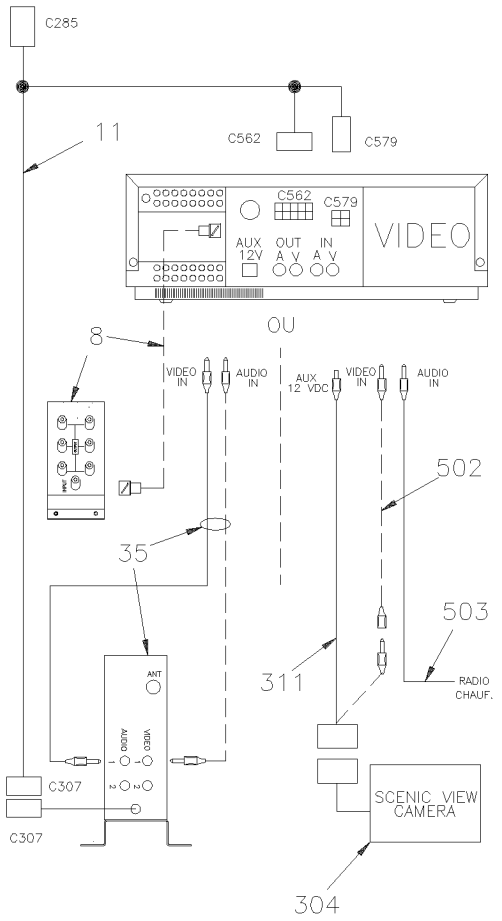

VIDEO / RECEP.TV / FRONT CAMERA

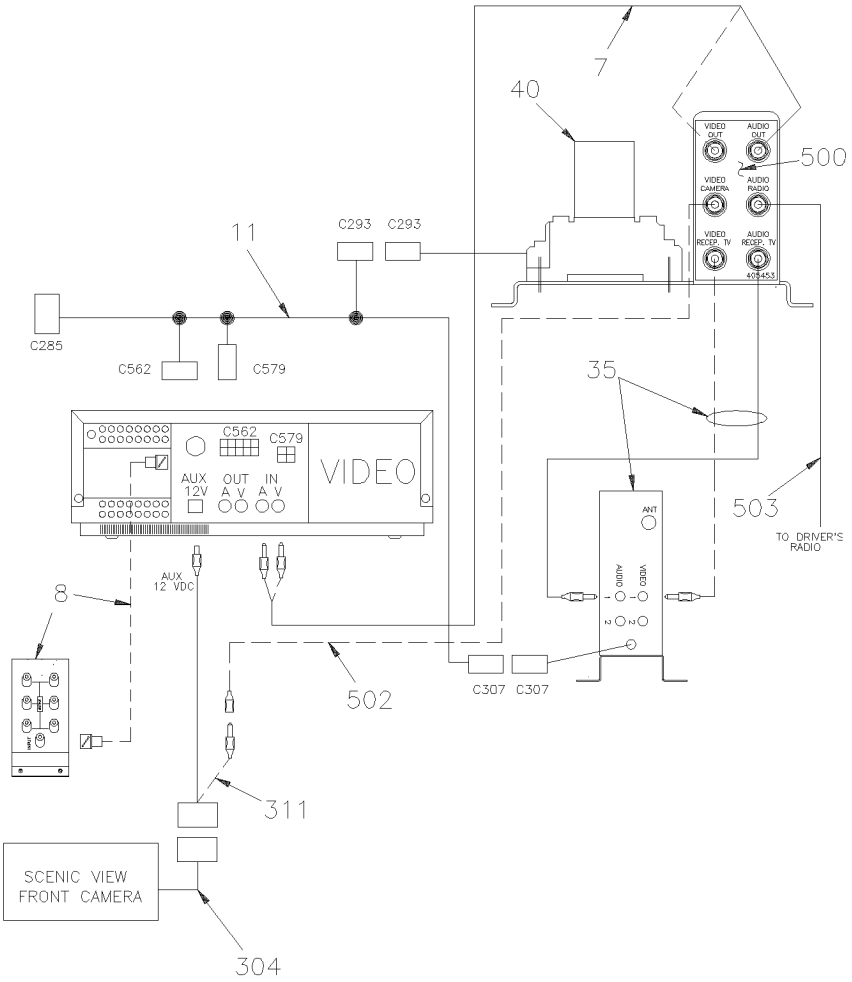

From 5-8593 Up to 6-8906	DATE: 01/2014	PAGE: Y2-2317-31

VIDEO & AUDIO SYSTEM - INSTALLATION

VIDEO / DVD / RECEP.TV OR FRONT CAMERA

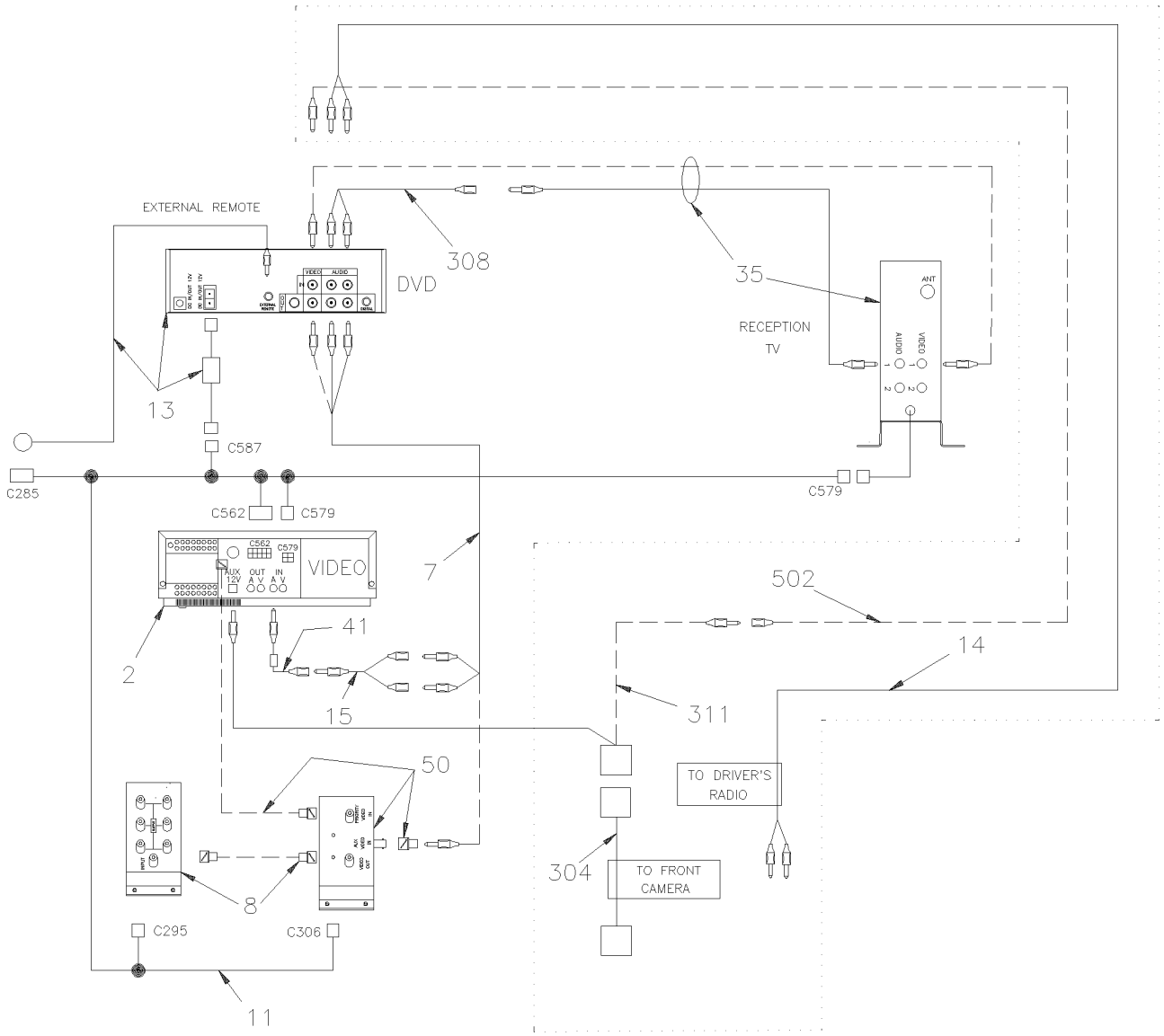

From 5-8593 Up to 6-8906	DATE: 01/2014	PAGE: Y2-2317-31

VIDEO & AUDIO SYSTEM - INSTALLATION

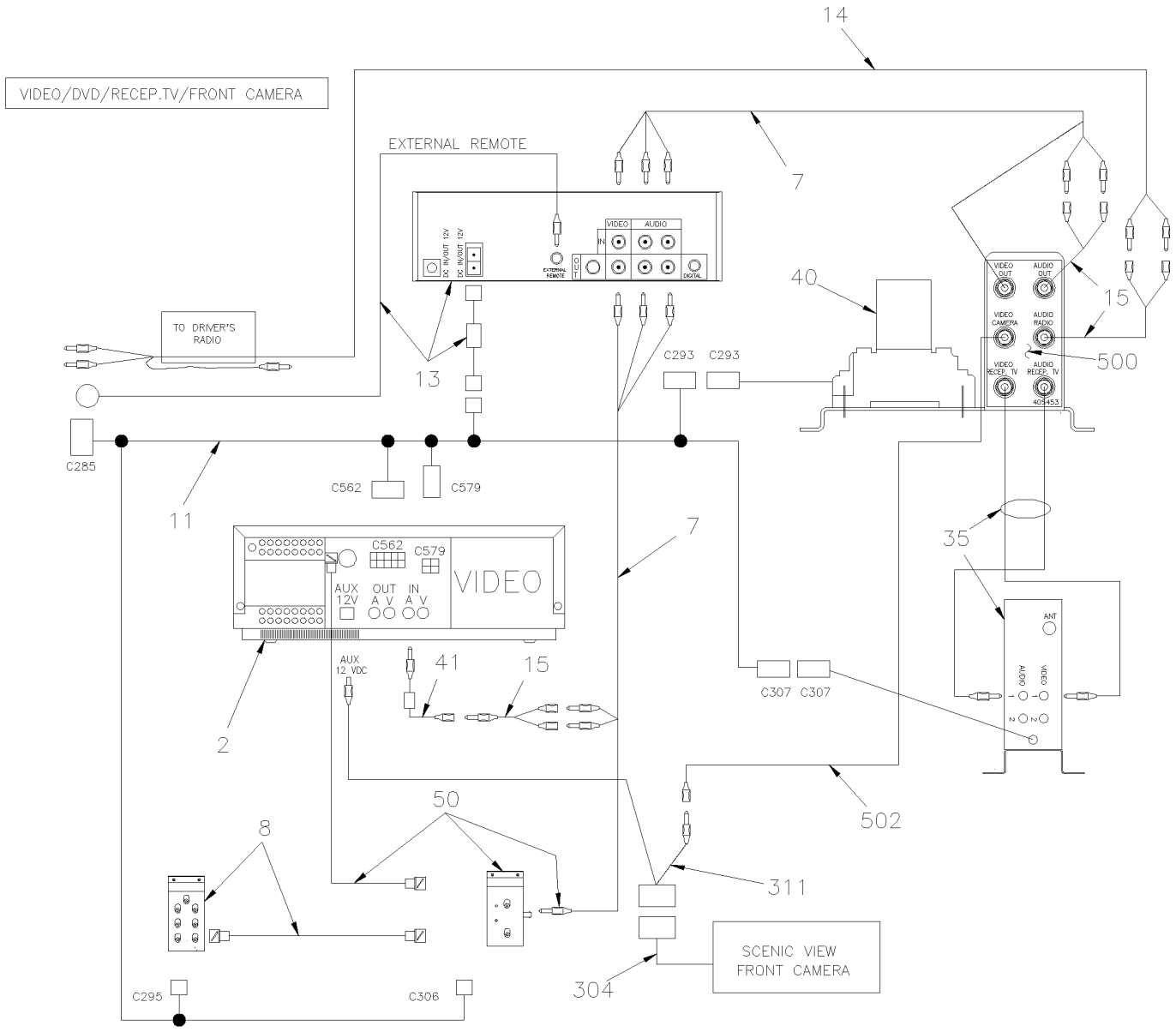

From 5-8593 Up to 6-8906	DATE: 01/2014	PAGE: Y2-2317-31

VIDEO & AUDIO SYSTEM - INSTALLATION

ITEM	PART	DESCRIPTION	XL45	MTH40	MTH45	MTH45S	NOTE
1	409125	MOUNTING PLATE	1				
2	901030	VIDEO V-3000 VCP, SYS 2000 24V	1				
. NS	901065	. REMOTE CONTROL / VDO REI V-3000	1				
3	405501	VCP L.H. ADAPTOR BRACKET	1				
4	405500	VCP R.H. ADAPTOR BRACKET	1				
5	500654	SCREW TC BDG PH #8-32x1/2 ZP	AR				
6	5001036	SCREW MA PAN PH M4-0.7x10 ZP	4				
7	502636	WASHER LO SPT 4.1x7.6x0.9 ZP	4				
8	901117	VIDEO DISTRIBUTION AMPLI W/BNC	1				
. NS	901119	. CABLE POWER DVA/VIDEO / 511867	1				
8	901403	VIDEO DISTRIBUTION AMPLI W/BNC	1				S
9	504013	TIE MOUNT / 1/4" X 1/4" I.D.	3				
10	504637	CABLE TIE / 3/16" x 13"	AR				
11	409122	HARNESS, VIDEO PANEL Up to 6-8797	1				
11	409146	HARNESS, VIDEO PANEL From 6-8798	1				
12	404488	SUPPORT, RADIO	1				
13	901116	DVD REI / MP3	1				
. NS	901264	. REMOTE CONTROL / DVD REI	1				
14	405499	SUPPORT DVD	2				
15	900671	ADAPTOR "Y" RCA / 1M/2F / 4"	1				
16	901119	CABLE POWER DVA/VIDEO	1				
17	901035	ADAPTOR KARAOKE	1				
18	900845	ENTERTAINER CONTROL MODULE / REPLACED BY: 901102	1				
19	500437	WASHER FL .125x.375x.040 ZP	8				
20	404542	SIDE PANEL FINISHING	2				
21	504475	RIVET POP CK OE 1/8x3/16 AL	8				
22	901078	RADIO "PIONEER" KEH-P1010 AM/FM/CASS.	1				
22	901046	RADIO "SONY" CDXL550X AM/FM/CD	1				
23	404498	CABLE ADAPTOR INTER. MODULE / 511211	1				
24	5001036	SCREW MA PAN PH M4-0.7x10 ZP	1				
25	500022	WASHER LO INT .168x.340x.023 ZP	1				
26	561667	CONNECTOR / UNIVERSAL MATE-N-LOK / PH 3C / AMP 1-480701-0	1				
27	562122	PIN TERMINAL / 20-14 / AMP 350547-1	2				
28	900849	PLATE RADIO "DUMMY"	AR				
29	900856	CABLE RCA / 2M/2M / 3'	1				
30	900758	ADAPTOR "Y" RCA / 1F/2M / 9"	1				
31	404380	CABLE ASSY RCA / M/M / USE WITH 2 VIDEOS / 510300	1				
32	900775	Y RADIO ANTENNA CABLE / TO USE W/2 RADIOS	1				
33	901022	CABLE SEAT AUDIO	2				
34	405483	PANEL TV RECEIVER	1				
35	901054	TUNER TV 24V	1				
36	506755	VELCRO / HOOK ADHESIF 1" x 75'	AR				
37	506756	VELCRO / LOOP ADHESIF 1" x 75'	AR				
		S) FOR SERVICE					

From 5-8593 Up to 6-8906	DATE: 01/2014	PAGE: Y2-2317-31

VIDEO & AUDIO SYSTEM - INSTALLATION

ITEM	PART	DESCRIPTION	XL45	MTH40	MTH45	MTH45S	NOTE
38	901201	RECEIVER WIRELESS MICROPHONE / 16-CHANNEL	1				
39	901057	CD CHARGER / 8 DISCS / "PANASONIC" CX-DP88 / MODIFIED	1				
40	Y2-2355-10	**FRONT CAMERA - INSTALLATION**					
41	901106	AUDIO FILTER	1				
42	900663	ADAPTOR / <> RADIO & ANTENNA CABLE / MOTOROLA MALE to EURO FEMA	1				
43	901058	CABLE ASSY CD / DIN / 280"	1				
44	901059	CABLE RCA / 2M/2M / 23' / REPLACED BY: 901110	1				
44	901110	CABLE RCA / 2M/2M / 25'	1				
46	900855	CABLE RCA / 2M/2M / 20'	1				
47	064486	CABLE ASSY 33.5` 24V POWER / ENT MODULE Up to 5-8592	1				
49	404302	CABLE ASSY 20' / 510520	1				
50	901120	VIDEO SIGNAL DETECTOR / USE W/2 SIGNALS	1				
300	405326	WIRING HARNESS	1				
301	900856	CABLE RCA / 2M/2M / 3'	1				
302	405455	DECAL, VCR CAMERA & DVD RELAY	1				
303	404380	CABLE ASSY RCA / M/M / USE WITH 2 VIDEOS / 510300	2				
304	900912	CABLE ASSY / FRONT CAMERA	1				
305	405190	HARNESS INTERFACE VIDEO/SING ALONE ADAP	1				
306	405657	CABLE ASSY DVD	1				
307	900855	CABLE RCA / 2M/2M / 20'	2				
308	900758	ADAPTOR "Y" RCA / 1F/2M / 9"	1				
309	901036	SWITCH KARAOKE	1				
310	405191	HARNESS WIRE LESS MIC/SING ALONE ADAPTOR / REPLACED BY: 900957	1				
311	900913	CABLE ASSY / <> VIDEO & FRONT CAMERA	1				
312	900918	CABLE RCA / 1M/1F/ 3'	1				
400	405453	DECAL, VCR, CAMERA & TV RELAY	1				
401	900856	CABLE RCA / 2M/2M / 3'	1				
402	405454	DECAL, VCR & DVD RELAY	1				
403	900918	CABLE RCA / 1M/1F/ 3'	1				
500	405453	DECAL, VCR, CAMERA & TV RELAY	1				
501	900856	CABLE RCA / 2M/2M / 3'	1				
502	900918	CABLE RCA / 1M/1F/ 3'	1				
503	900866	CABLE RCA / 1M/1M / 25'	1				

From RETROFIT	DATE: 01/2014	PAGE: Y2-2317-99

VIDEO & AUDIO SYSTEM - INSTALLATION

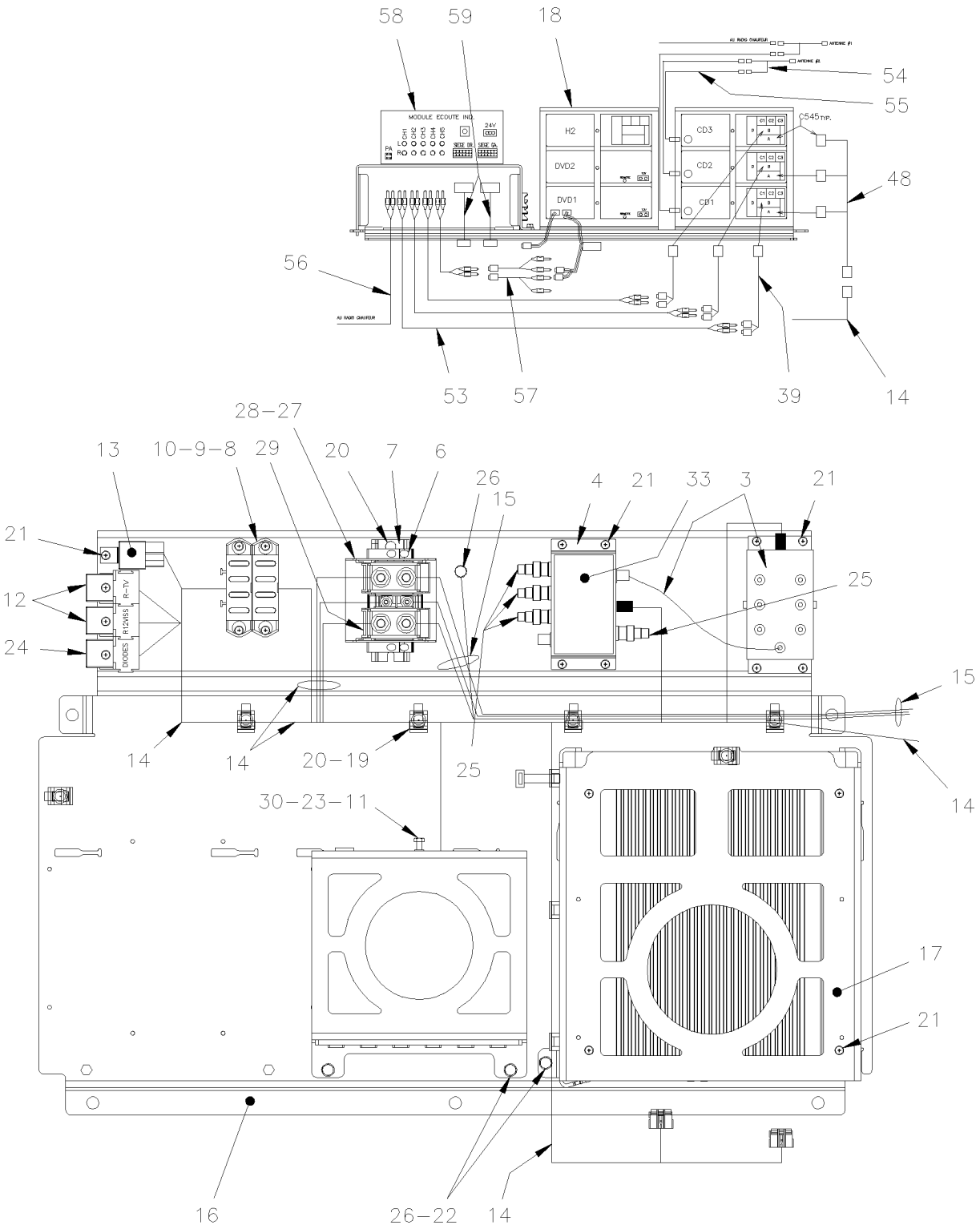

From RETROFIT	DATE: 01/2014	PAGE: Y2-2317-99

VIDEO & AUDIO SYSTEM - INSTALLATION

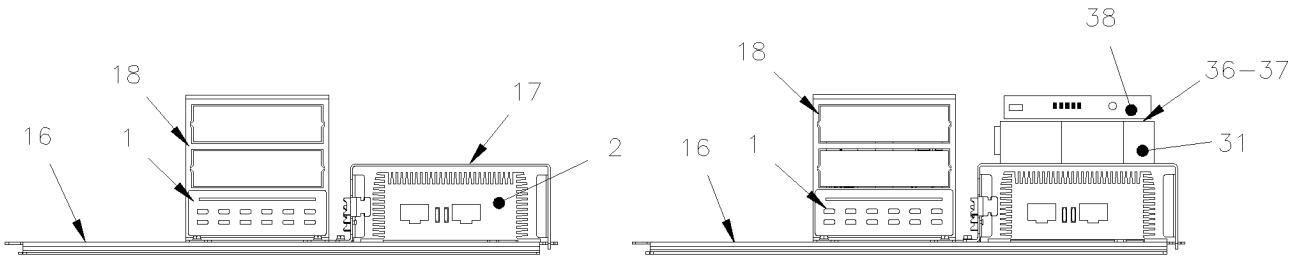

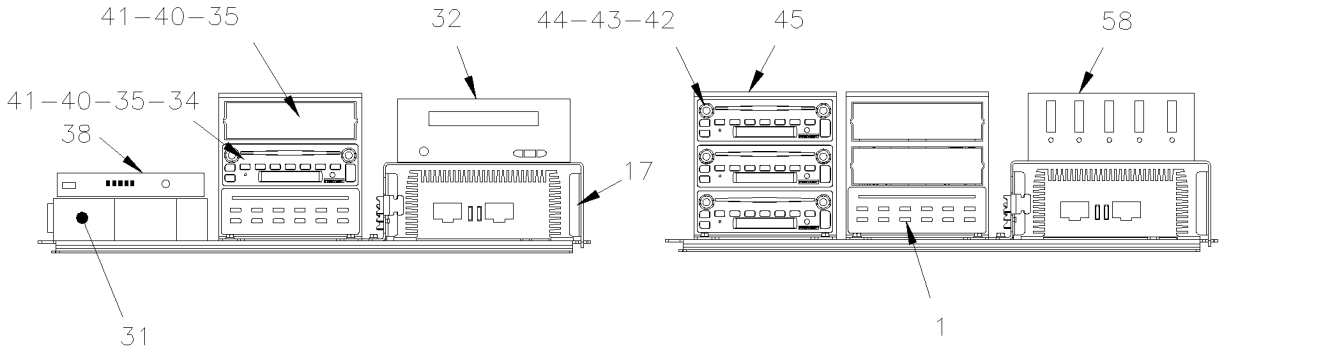

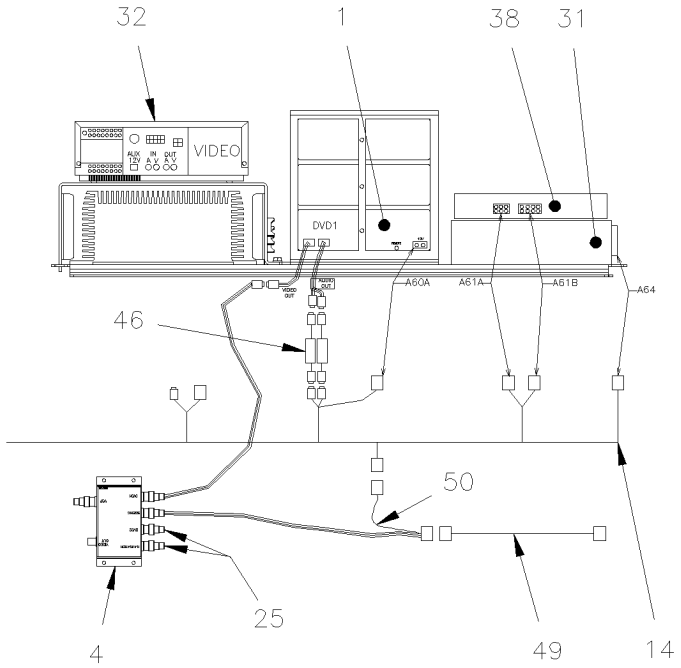

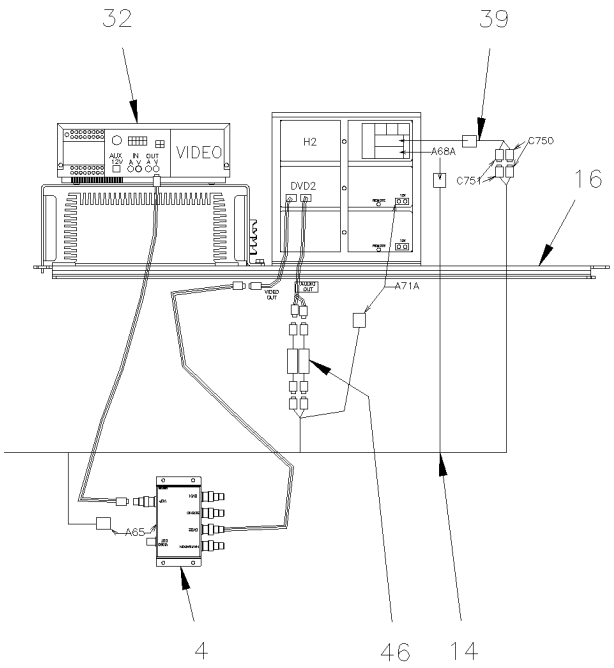

From RETROFIT	DATE: 01/2014	PAGE: Y2-2317-99

VIDEO & AUDIO SYSTEM - INSTALLATION

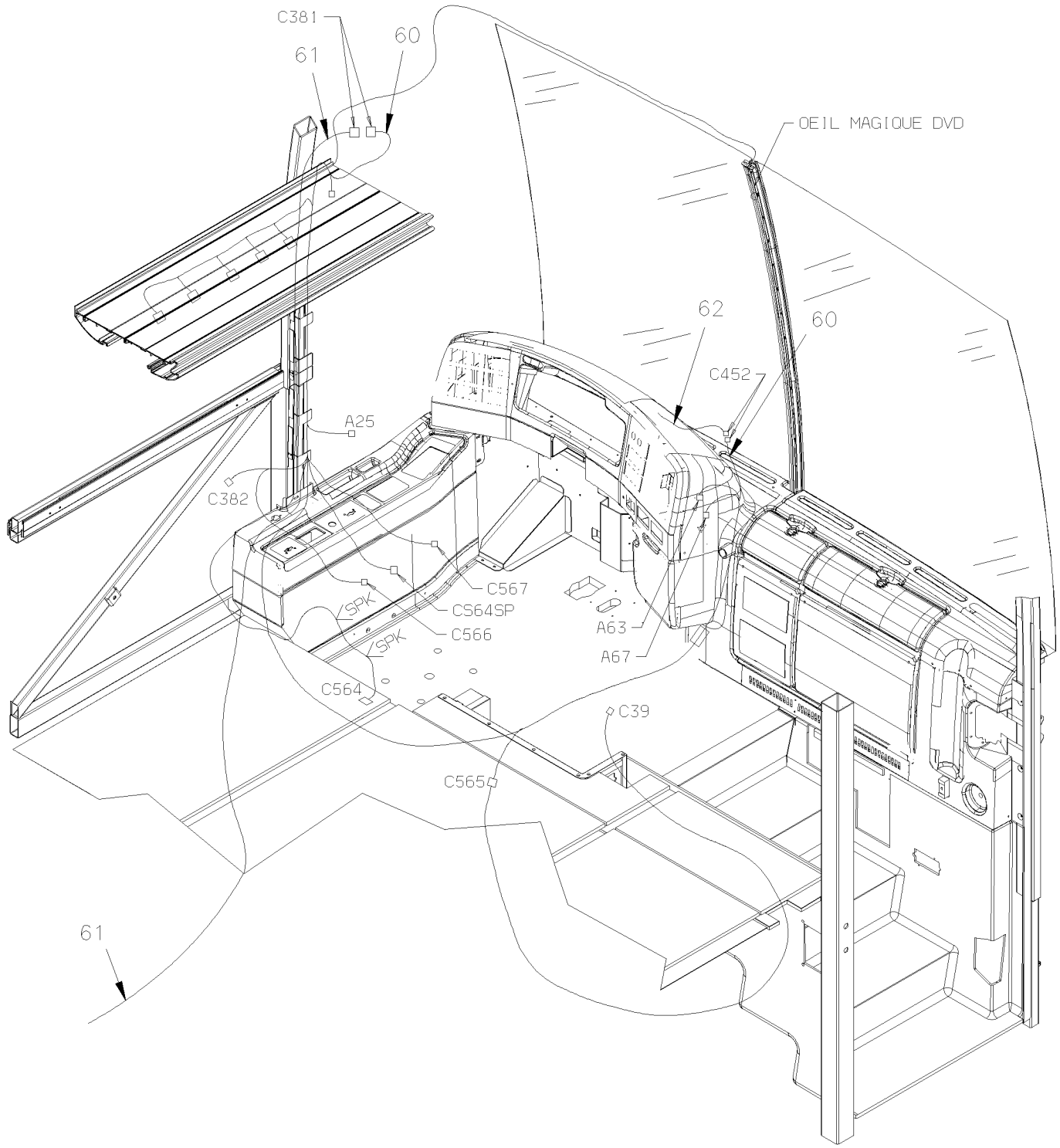

From RETROFIT	DATE: 01/2014	PAGE: Y2-2317-99

VIDEO & AUDIO SYSTEM - INSTALLATION

ITEM	PART	DESCRIPTION	XL45	MTH40	MTH45	MTH45S	NOTE
	405845	PLATE AUDIO ASSY WITH COMPONENTS	1				
1	901198	. DVD PLAYER 12V (VOLVO) VD-404 / REPLACED BY: 430669	1				
. NS	901265	. . REMOTE CONTROL / DVD VOLVO	1				
. NS	901302	. . SENSOR ASSY W/CABLE / DVD REMOTE CONTROL	1				
1	901339	. DVD PLAYER 12V (R.E.I.)	1				
. NS	901377	. . REMOTE CONTROL / DVD R.E.I. / 690548	1				
NS	409294	. CABLE INTERFACE DVD "VOLVO" to DVD "REI" 4 CONN. to 6 CONN.	1				T
2	901191	. AMPLIFICATOR AUDIO / 400 WATTS	1				
3	901117	. VIDEO DISTRIBUTION AMPLI W/BNC	1				
. NS	901119	. . CABLE POWER DVA/VIDEO / 511867	1				
3	901403	. VIDEO DISTRIBUTION AMPLI W/BNC	1				T
4	901199	. SCREEN PLAY SELECTOR	1				
5	561726	. BLOCK JUNCTION	1				
6	562645	. STOPPER "U" RAIL	2				
7	382184	. RAIL SUPPORT 112MM "U" SHAPE	1				
8	562598	. FUSE / ATO 2 AMPS GREY	1				
8	562407	. FUSE / ATO 10 AMPS RED	4				
9	562396	. FUSE / ATO 30 AMPS GREEN	1				
10	562605	. FUSE / ATO 20 AMPS YELLOW	1				
11	500470	. WASHER LO SPT .193x.334x.047 ZP	1				
12	563337	. RELAY 12V S.P.D.T. W/RESISTOR /	2				
13	561991	. RELAY 24V S.P.S.T. / 70 AMPS N.O.	1				
14	066770	. CABLE ASSY / <> DASH & PARCEL RACK	1				
15	066866	. CABLE POWER	1				
16	405884	. PLATE SUPPORT MAIN SYSTEM	1				
17	405921	. SUPPORT VIDEO OVER AMPLI	1				
18	405922	. SUPPORT, RADIO (MORE THAN 3 RADIO) & DVD VOLVO	1				
18	406361	. SUPPORT, RADIO (MORE THAN 3 RADIO) & DVD REI	1				
18	406360	. SUPPORT, RADIO (1RADIO) & DVD REI	1				
19	504013	. TIE MOUNT / 1/4" X 1/4" I.D.	9				
20	504347	. RIVET POP DOME OE 3/16x1/4 AL	9				
21	500564	. SCREW MA RND PH #8-32x3/4 ZP	16				
		T) FOR SERVICE					

From RETROFIT	DATE: 01/2014	PAGE: Y2-2317-99

VIDEO & AUDIO SYSTEM - INSTALLATION

ITEM	PART	DESCRIPTION	XL45	MTH40	MTH45	MTH45S	NOTE
22	502631	. SCREW CAP HEX M6-1.0x20 G8.8 ZP	8				
23	502561	. NUT HEX M5-0.8 ZP	1				
24	901200	. DIODE BLOCK ON RELAY BASE	1				
25	900777	. CONNECTOR BNC PLUG TO RCA ADAPTOR / ELEC 21-142-0 / REPLACED BY: 901363	AR				
26	502564	. WASHER LO SPT 6.1x11.8x1.6 ZP	1				
27	562024	. COVER / PROTECTOR / 3 BLOCKS	1				
28	561731	. COVER SUPPORT	2				
29	561727	. SCREW MA PAN PH	2				
30	5001146	. SCREW CAP HEX M5-0.8x20 SS EMN	1				
31	901116	DVD REI / MP3	1				
. NS	901264	. REMOTE CONTROL / DVD REI	1				
32	901030	VIDEO V-3000 VCP, SYS 2000 24V	1				
. NS	901065	. REMOTE CONTROL / VDO REI V-3000	1				
33	066733	. DECAL "VIDEO DISTRIBUTION"	1				
34	901198	DVD PLAYER 12V (VOLVO) VD-404 / REPLACED BY: 430669	AR				S
. NS	901265	. REMOTE CONTROL / DVD VOLVO	1				
. NS	901302	. SENSOR ASSY W/CABLE / DVD REMOTE CONTROL	1				
34	901339	DVD PLAYER 12V (R.E.I.)	1				
. NS	901377	. REMOTE CONTROL / DVD R.E.I. / 690548	1				
NS	409294	CABLE INTERFACE DVD "VOLVO" to DVD "REI" 4 CONN. to 6 CONN.	1				
35	901190	RADIO AM-FM-CD-CDX / "PRÉVOST" MP3 VR-300	1				
36	506755	VELCRO / HOOK ADHESIF 1" x 75'	AR				
37	506756	VELCRO / LOOP ADHESIF 1" x 75'	AR				
38	901201	RECEIVER WIRELESS MICROPHONE / 16-CHANNEL	1				
39	066804	ADAPTOR AUDIO SIRIUS SH 8C x 2F RCA	1				
. NS	903217	. CONVERTISSOR AUDIO	1				
40	901209	RADIO "PREVOST" AM-FM-CD / "XM" READY (DELPHI)	1				
41	901218	RADIO "PREVOST" AM-FM-CD / "SIRIUS" READY (DELPHI)	1				
42	901190	RADIO AM-FM-CD-CDX / "PRÉVOST" MP3 VR-300	1				
43	901218	RADIO "PREVOST" AM-FM-CD / "SIRIUS" READY (DELPHI)	1				
44	901209	RADIO "PREVOST" AM-FM-CD / "XM" READY (DELPHI)	1				
45	N.P.N.	BOX	1				4

4) NO PARTS NUMBER

S) THIS DVD MAY BY REPLACE BY ONE # 901339 AND ONE CABLE # 409294

From RETROFIT	DATE: 01/2014	PAGE: Y2-2317-99

VIDEO & AUDIO SYSTEM - INSTALLATION

ITEM	PART	DESCRIPTION	XL45	MTH40	MTH45	MTH45S	NOTE
46	901106	. AUDIO FILTER	2				
47	901106	AUDIO FILTER	1				
49	900912	CABLE ASSY / FRONT CAMERA	1				
50	066822	CABLE ASSY / <> VIDEO & FRONT CAMERA	1				
53	900856	CABLE RCA / 2M/2M / 3'	1				
54	900775	Y RADIO ANTENNA CABLE / TO USE W/2 RADIOS	AR				
55	900774	CABLE, ANTENNA EXTENSION / 12'	AR				
56	901110	CABLE RCA / 2M/2M / 25'	1				
57	900671	ADAPTOR "Y" RCA / 1M/2F / 4"	AR				
58	900845	ENTERTAINER CONTROL MODULE / REPLACED BY: 901102	1				
59	900671	ADAPTOR "Y" RCA / 1M/2F / 4"	AR				
60	066770	. CABLE ASSY / <> DASH & PARCEL RACK	1				
61	066748	. CABLE POWER AUDIO	1				
62	066731	. WIRING HARNESS DASHBOARD CENTRAL MODULE / MUX	1				
NS	405844	KIT, RETROFIT "VOLVO" SOUND SYSTEM "XL"	1				A,B
NS	066746	. CABLE HARNESS / SPEAKER CURBSIDE RR / 7 SP / W/W.C.L.	1				
NS	066744	. CABLE HARNESS / SPEAKER STREETSIDE / 16 SP	1				
NS	066745	. CABLE HARNESS / SPEAKER CURBSIDE FRT / 10 / W/W.C.L.	1				
NS	066864	. CABLE POWER AUDIO	1				
75	066796	. RESISTOR 4 OHMS 25W W/CONNECTOR	5				
NS	066704	. CABLE SPEAKER / <> JCT & LH & RH	1				
NS	319034	. COVER L.H. ASSY / W/LIGHT & VENT HOLE	1				
. NS	313882	. . COVER L.H. / W/VENT HOLE	1				
NS	901175	. CABLE POWER 60'	1				
NS	901176	. CABLE POWER INTERFACE 9'	1				
NS	901190	. RADIO AM-FM-CD-CDX / "PRÉVOST" MP3 VR-300	1				
NS	901192	. CONTROL HEAD / "VOLVO" (VSS-04)	1				E
. NS	901266	. . REMOTE CONTROL / CONTROL HEAD VOLVO	1				
82	409439	. SOUND SELECTOR REPLACEMENT, VSS04 VS VSS05	1				E
. 01	21285274	. . CABLE INTERFACE VSS04 to VSS05	1				
. 02	IS-08080	. . INSTRUCTION SHEET	1				
		A) THIS KIT INCLUDE ALLS ITEMS LISTED BELOW THIS					
		LINE AND PLATE AUDIO ASSY # 405845 ABOVE					
		B) WITH THIS KIT YOU NEED ALSO READING LIGHT #					
		830186 OR 330379					
		E) IF YOU CHANGE VSS04 TO VSS05 YOU NEED CONTROL					
		HEAD 21516503 & HARNESS KIT 409439 & NEW					
		RADIO					

From RETROFIT	DATE: 01/2014	PAGE: Y2-2317-99

VIDEO & AUDIO SYSTEM - INSTALLATION

ITEM	PART	DESCRIPTION	XL45	MTH40	MTH45	MTH45S	NOTE
NS	392305	. ADAPTOR RADIO TO STRUCTURE	1				
NS	392312	. PARTIAL STRUCTURE TO FIT "VOLVO" AUDIO SOUND	1				
NS	312596	. COVER R.H. / PLAIN	1				
NS	392304	. PANEL / FRONT INSTRUMENTATION	1				
88	066863	. CABLE GROUND	1				
90	430669	KIT, REPLACEMENT DVD "VOLVO" TO "REI"	1				
. NS	409294	. CABLE INTERFACE DVD "VOLVO" to DVD "REI" 4 CONN. to 6 CONN.	1				
. NS	901339	. DVD PLAYER 12V (R.E.I.) / 769002	1				
. . NS	901377	. . REMOTE CONTROL / DVD R.E.I. / 690548	1				
. NS	901347	. CABLE ASSY/ W/2 BNC FEMALE/ FEMALE 1"	1				
. NS	IS-09048	. SEE INSTRUCTION SHEET	1				

From RETROFIT	DATE: 01/2014	PAGE: Y2-2317-99

VIDEO & AUDIO SYSTEM - INSTALLATION

ITEM	PART	DESCRIPTION	XL45	MTH400	MTH445	MTH445S	NOTE

From Y-7046 Up to 6-8906	DATE: 01/2014	PAGE: Y2-2318-00
CLOCK (DIGITAL)		

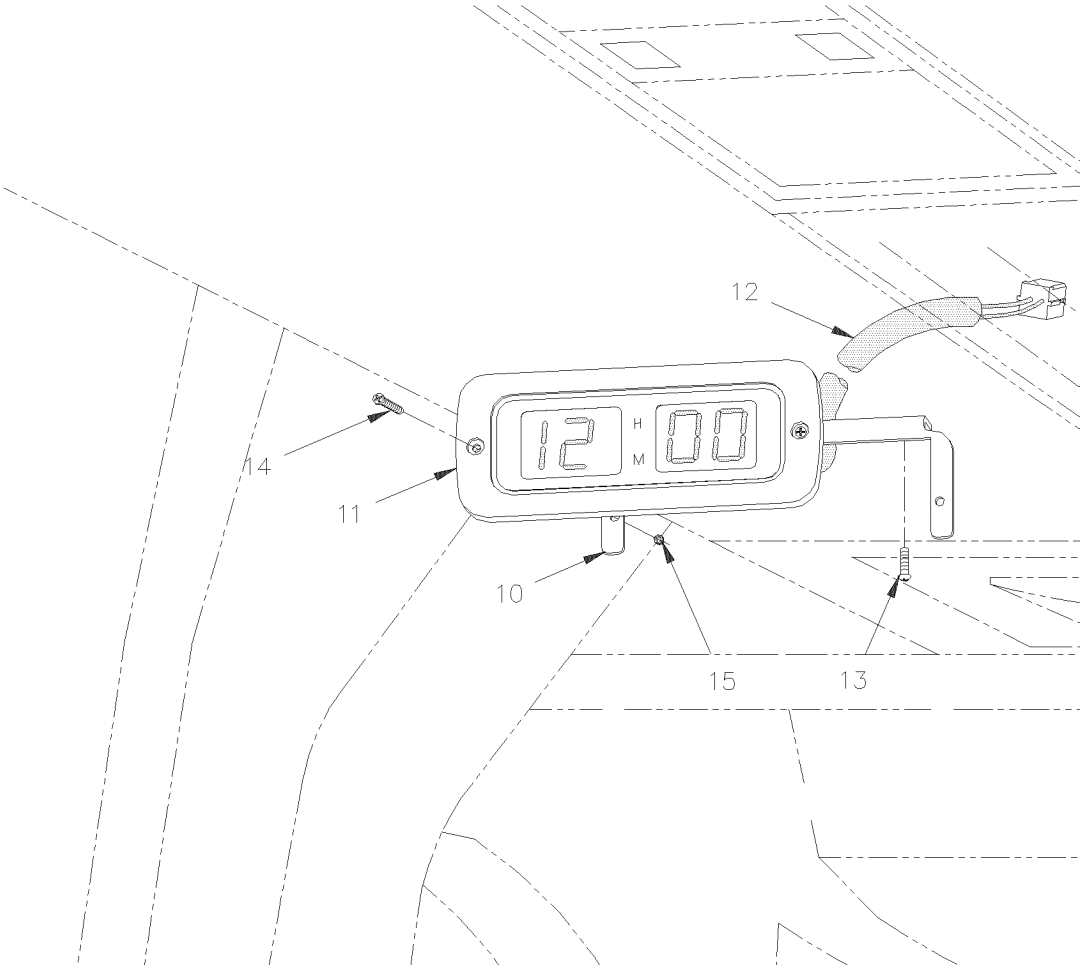

From Y-7046 Up to 6-8906	DATE: 01/2014	PAGE: Y2-2318-00

CLOCK (DIGITAL)

ITEM	PART	DESCRIPTION	XL45	MTH40	MTH45	MTH45S	NOTE
10	404546	SUPPORT	1				
11	404547	DIGITAL CLOCK / 12HRS Up to 5-8426 / REPLACED BY: 901123	1				
11	404551	DIGITAL CLOCK / 24HRS Up to 5-8426 / REPLACED BY: 901123	1				
11	407502	DIGITAL CLOCK / 12/24HRS From 5-8427	1				
NS	900867	. DIGITAL CLOCK Up to 5-8426 / REPLACED BY: 901123	1				
NS	901123	. DIGITAL CLOCK From 5-8427	1				
NS	561476	. CONNECTOR / (.062) / SH 4C / MOLEX 03-06-1044	1				
NS	561478	. SOCKET TERMINAL / 24-18 / MOLEX 02-06-1103	3				
11	562387	CONVOLUTED TUBING / .250" / SLIT / BLACK	AR				
12	064199	CABLE ASSY / <> CLOCK & FRONT JCT PANEL	1				
13	500409	SCREW TP PAN PH #8x1/2 BK	3				
14	500260	SCREW TC FL PH #8-32x3/4 BK	2				
15	500670	NUT HEX NYRT #8-32 ZP	2				

From Y-7046 Up to 8-9339	DATE: 01/2014	PAGE: Y2-2320-00

JACK & FLARE KIT - INSTALLATION

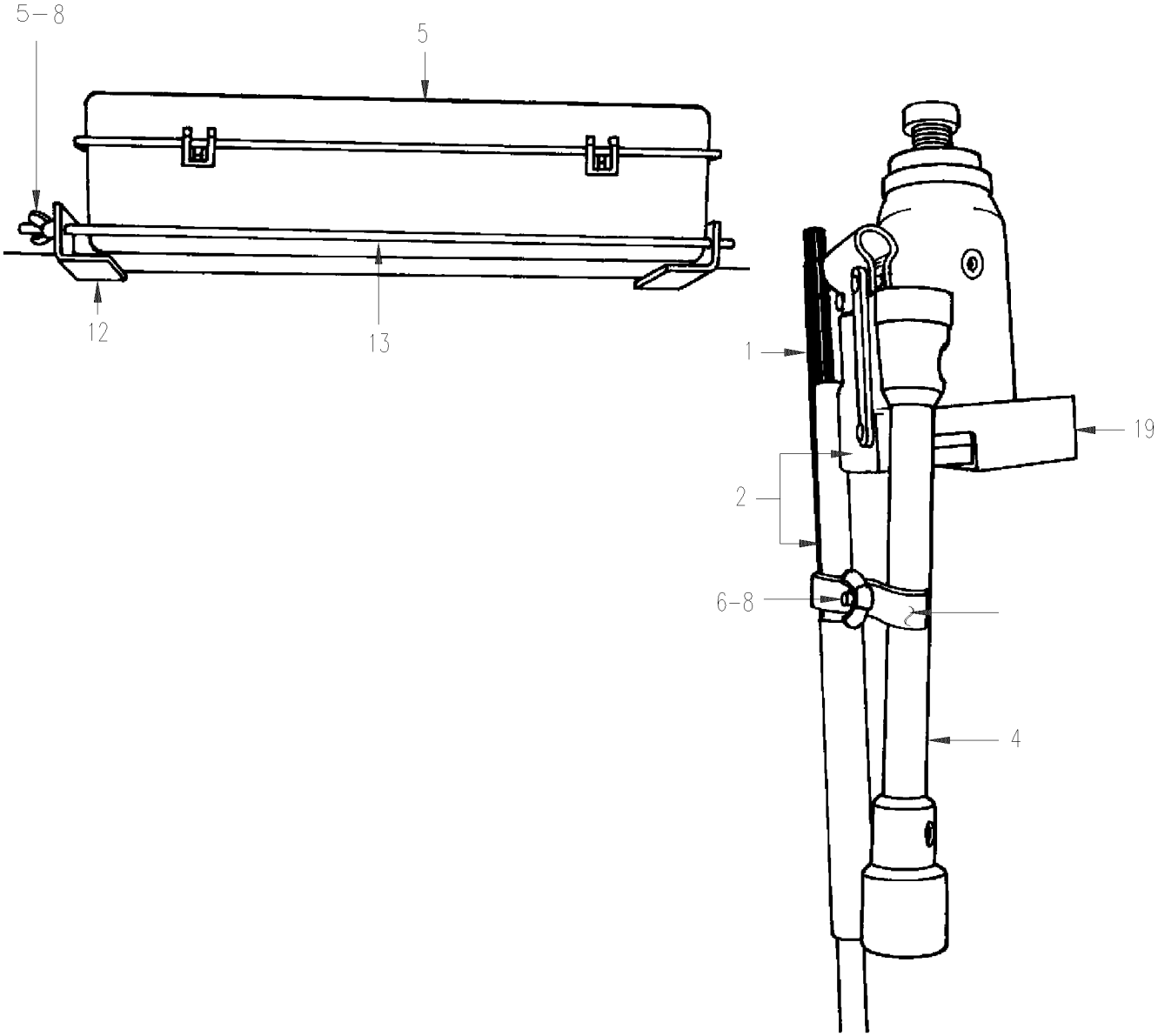

From Y-7046 Up to 8-9339	DATE: 01/2014	PAGE: Y2-2320-00

JACK & FLARE KIT - INSTALLATION

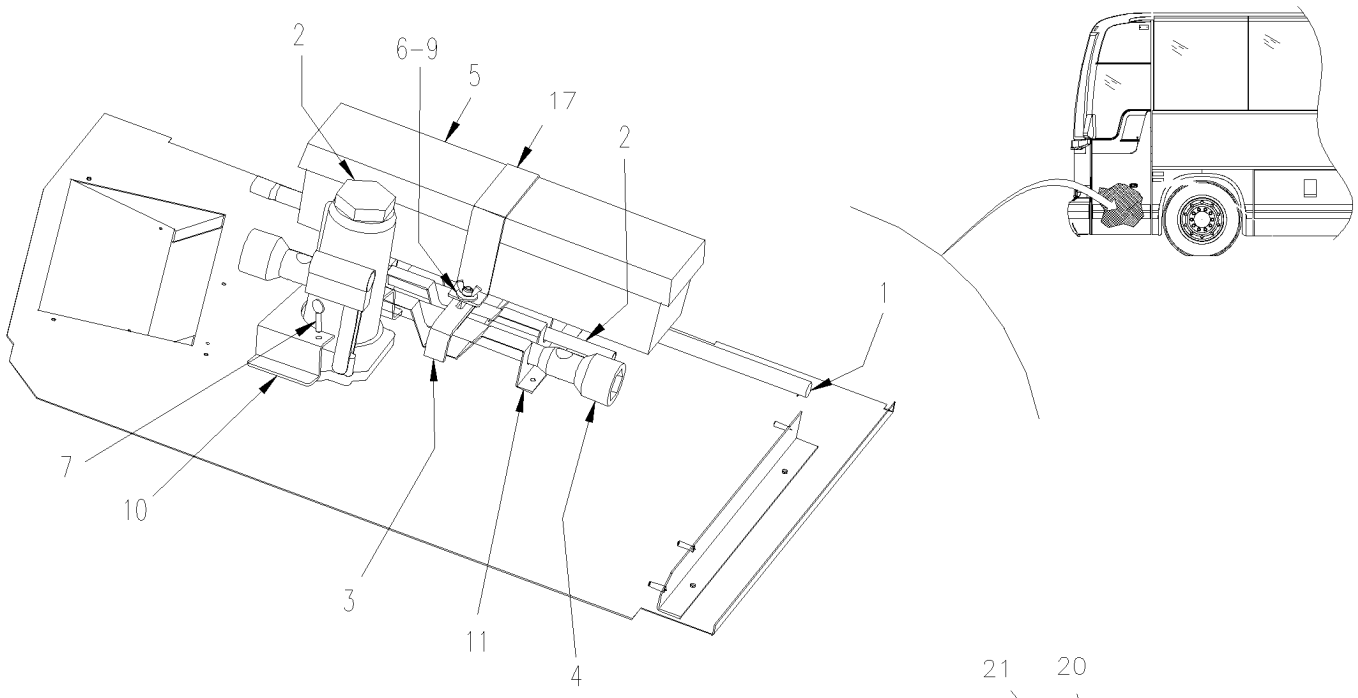

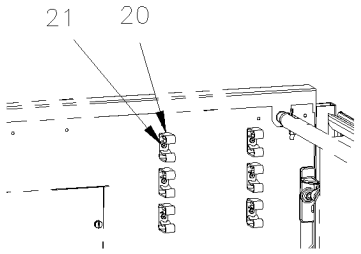

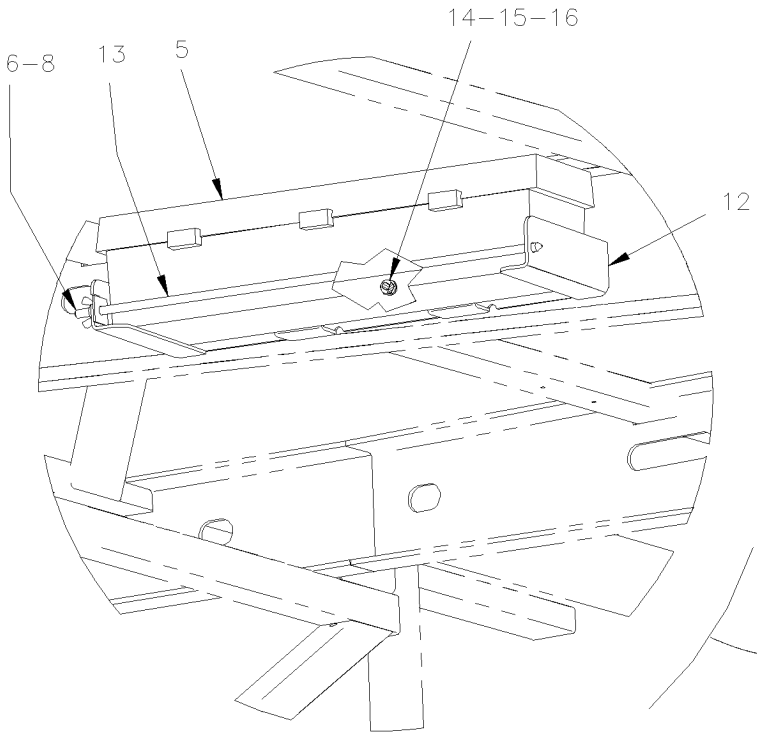

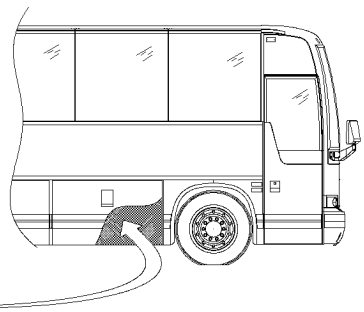

From Y-7046 Up to 8-9339	DATE: 01/2014	PAGE: Y2-2320-00

JACK & FLARE KIT - INSTALLATION

ITEM	PART	DESCRIPTION	XL45	MTH40	MTH45	MTH45S	NOTE
1	690002	HANDLE, W/WRENCH WHEEL NUT	1	1	1	1	
2	505505	JACK, 12TONS	1	1	1	1	
3	410556	KEY (FOR FRONT BUMPER NUT) Up to 6-8906	1				
. NS	410545	. KEY Up to 6-8906	1				
. NS	410557	. RUBBER Up to 6-8906	1				
4	690001	WRENCH, WHEEL NUT 1 1/2" & 13/16 SQUARE	1	1	1	1	
4	690005	WRENCH, WHEEL 33 MM Up to 6-8906	1				
5	930283	FLARE KIT, TRIANGULAR	1	1	1	1	
5	930442	FLARE KIT, TRIANGULAR	1	1	1	1	S
6	500782	NUT WING 5/16-18 ZP Up to 6-8906	1				B
7	5001012	SCREW TH 5/16-18x1 1/2 BZC	2				
8	502584	WASHER LO SERR 8.2x26.3x1.8 ZP	2				
9	502220	WASHER FL .375x1.000x.125 RUB	2				
10	251226	SUPPORT, JACK / WELDED TO STRUCTURE	1				
11	251227	ATTACHMENT / HANDLE & WRENCH	1				
12	211010	SUPPORT, FLARE KIT / BOLTED TO STRUCTURE Up to 6-8906	1				
12	211220	SUPPORT, FLARE KIT / BOLTED TO STRUCTURE	1				S
13	210280	ROD, RETAINING / FLARE KIT	1	1	1	1	
14	500440	WASHER FL .250x.562x.065 ZP	3				
15	502511	NUT HEX NYRT M6-1.0 ZP	11				
16	500771	NUT HEX 1/4-20 SS	3				
17	407501	STRAP RETAINER SS / FLARE KIT Up to 6-8906	1				B
19	211525	SUPPORT, JACK / WELDED TO STRUCTURE Up to 6-8906	1				
19	211528	SUPPORT, JACK / BOLTED TO STRUCTURE		1	1	1	
20	504585	SPRING CLIP 3/4"	6				C
21	500654	SCREW TC BDG PH #8-32x1/2 ZP	6				C
NS	404670	SUPPORT FLARE KIT / 312MM x 123MM Up to 6-8906	1				A
NS	860489	VELCRO / HOOK BLACK / 3/4" X 75' Up to 6-8906	AR				A
NS	860490	VELCRO / LOOP BLACK / 3/4" X 75' Up to 6-8906	AR				A
NS	5001454	SCREW MA BDG PH #4-40x1/2 SS Up to 6-8906	4				A
NS	502520	NUT HEX #4-40 ZP Up to 6-8906	4				A
NS	500581	WASHER LO SPT .141x.250x.031 SS Up to 6-8906	4				A
NS	500437	WASHER FL .125x.375x.040 ZP Up to 6-8906	4				A
24	210275	BRACKET, RETAINING / HANDLE & WRENCH	1	1	1	1	
NS	210264	SUPPORT / (WELDED TO STRUCTURE) Up to 6-8906	1				
		A) COACH WITH FLARE KIT FIXED EVAPORATOR WALL					
		B) COACH WITH FLARE KIT FIXED WITH SS STRAP					
		C) COACH WITH FLARE KIT & TORCH					
		S) SERVICE					

From Y-7046 Up to 8-9339	DATE: 01/2014	PAGE: Y2-2320-00

JACK & FLARE KIT - INSTALLATION

ITEM	PART	DESCRIPTION	XL45	MTH400	MTH445	MTH455S	NOTE

From Y-7046 Up to 8-9339	DATE: 01/2014	PAGE: Y2-2320-30

EXTINGUISHER - INSTALLATION

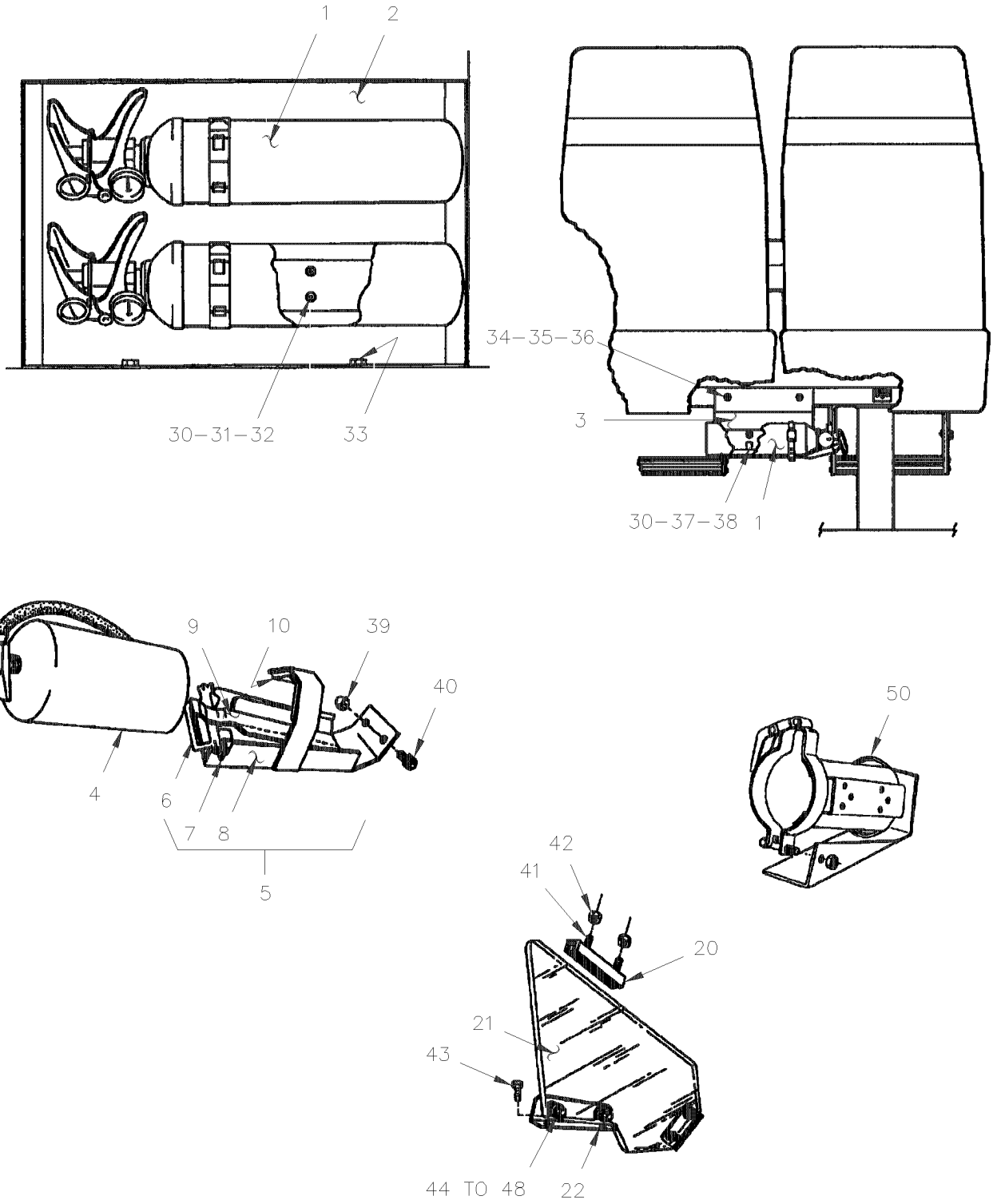

From Y-7046 Up to 8-9339	DATE: 01/2014	PAGE: Y2-2320-30

EXTINGUISHER - INSTALLATION

POUR DELITER

From Y-7046 Up to 8-9339	DATE: 01/2014	PAGE: Y2-2320-30

EXTINGUISHER - INSTALLATION

ITEM	PART	DESCRIPTION	XL45	MTH40	MTH45	MTH45S	NOTE
1	900702	EXTINGUISHER 2.5 LBS / W/PLASTIC HANDLE		2	2	2	
1	901001	EXTINGUISHER 2.5 LBS / W/METAL HANDLE	2				
2	324391	SUPPORT ASSY / EXTINGUISHER		1	1	1	
3	324349	SUPPORT ASSY / EXTINGUISHER		2	2	2	
NS	470949	SPACER RUBBER 3/4" O.D. / S.Q.	2				
NS	900651	EXTINGUISHER 20 LBS	1				
NS	403465	SUPPORT / FOR EXTINGUISHER 20 LBS / UNDER SEAT	1				
4	900449	EXTINGUISHER 10 LBS	1				
. NS	900618	. SUPPORT	1				
4	900618	. SUPPORT	1				
5	403581	SUPPORT ASSY / 10 LBS INTINGUISHER / IN PARCEL RACK	1				
6	402575	. HANDLE ASSY / TILTING SUPPORT	1				
7	402571	. CLIP, SPRING	2				
8	402569	. BRACKET ASSY / TILTING SUPPORT	1				
9	402567	. SUPPORT, TILTING	1				
9	505188	. PIN, SPRING 1/4" X 7/8"	1				
9	470949	. SPACER RUBBER 3/4" O.D. / S.Q.	2				
10	506235	. TAPE RUB ADH1 PVC.NITRIL 1/2" x 1" x 15' / BLACK 1210	AR				
20	402555	FIXTURE, UPPER	2				
21	404645	GUARD, PLEXIGLASS	1				
22	404644	FIXTURE, LOWER	1				
30	500572	SCREW MA TR PH #10-24x1/2 SS EMN	8				
31	500470	WASHER LO SPT .193x.334x.047 ZP	8				
32	500786	NUT HEX #10-24 ZP	8				
33	500535	SCREW TP CAP HEX #14x3/4 ZP	4				
34	500559	SCREW MA TR PH 1/4-20x1 1/2 SS EMN	4				
35	500468	WASHER FL .281x1.250x.065 ZP	4				
36	500770	NUT HEX STO 1/4-20 ZP	4				
37	500964	WASHER FL .203x.500x.047 ZP	8				
38	500767	NUT HEX #10-24 ZP	8				
39	500772	NUT HEX CAP 1/4-20 NP	2				
40	500394	SCREW MA TR SLT 1/4-20x1/2 ZP	2				
41	500510	SCREW MA BDG PH #10-32x3/4 SS EMN	4				
42	500519	NUT WELL #10-32x.518	4				
43	500657	SCREW TC TR PH #10-24x1/2 ZP	2				
44	500607	SCREW MA TR PH #10-24x1 SS	4				
45	500891	NUT HEX CAP #10-24 ZP	6				
46	900251	BUSHING, RUBBER	8				
47	400380	SPACER 5/16 O.D. x 17/32" x 18GA / REPLACED BY: 505539	4				
48	500989	WASHER FL .219x.875x.062 ZP	4				
50	401821	SUPPORT / FOR EXTINGUISHER 10 LBS	AR				
NS	323290	DECAL / FIRE EXTINGUISHER	1				
NS	402763	DECAL / UNDER SEAT EXTINGUISHER	1				
50	327523	DECAL / FIRE EXTINGUISHER / (PARCEL RACK DOOR	1				

From Y-7046 Up to 8-9339	DATE: 01/2014	PAGE: Y2-2320-30

EXTINGUISHER - INSTALLATION

ITEM	PART	DESCRIPTION	XL45	MTH40	MTH45	MTH45S	NOTE
60	405273	COVER, EXTINGUISHER 10 LBS	1				
61	405274	BASE SUPPORT EXTINGUISHER 10LBS	1				
62	405276	CORD, RUBBER 370MM	1				
. NS	506066	. CORD, RUBBER EXTRUSION NEO 7/16" O.D. / C.T.L.	AR				
63	504452	CLAMP "E-Z CLIP" / "TUBE-O" / 7/16" / HC9-7	3				
64	5001458	WASHER FL 12.0x24.0x2.5 NYL	2				
65	506466	TAPE RUB ADH1 CC POL 1/16" x 1 1/2" x 100 / GREY 2520	AR				
66	504637	CABLE TIE / 3/16" x 13"	AR				
67	502706	SCREW TP PAN PH #14x1 SS	4				
68	500411	WASHER FL .260x.697x.050 SS	4				

From Y-7046 Up to 6-8906	DATE: 01/2014	PAGE: Y2-2320-40

FIRST AID KIT & AXE - INSTALLATION

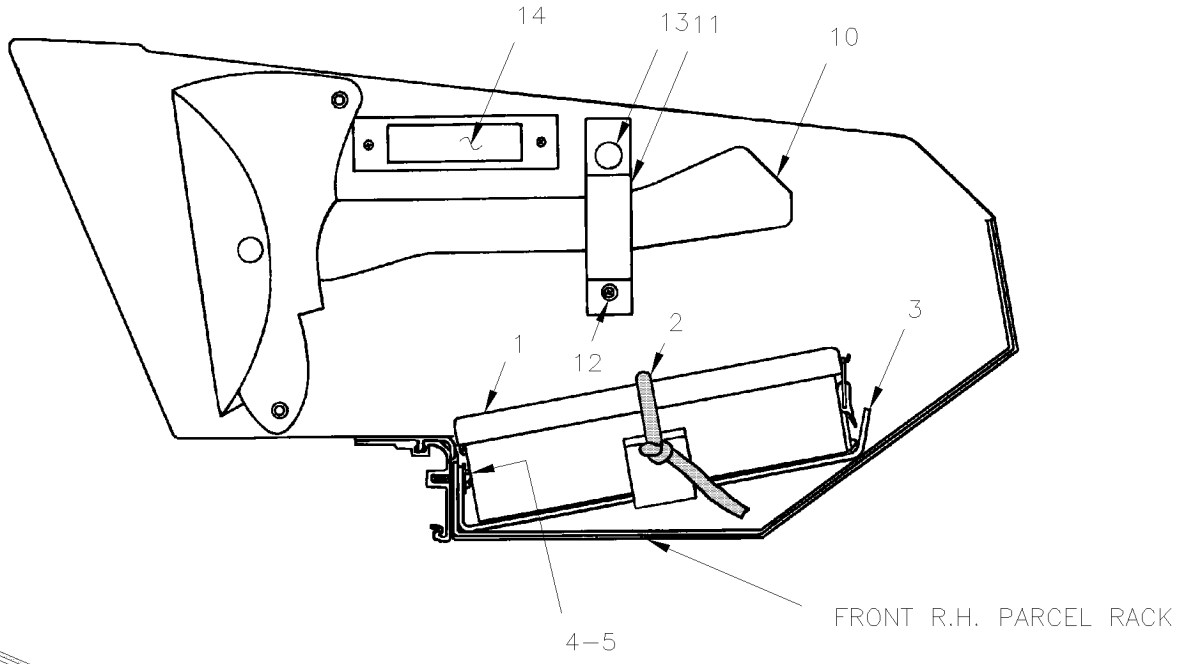

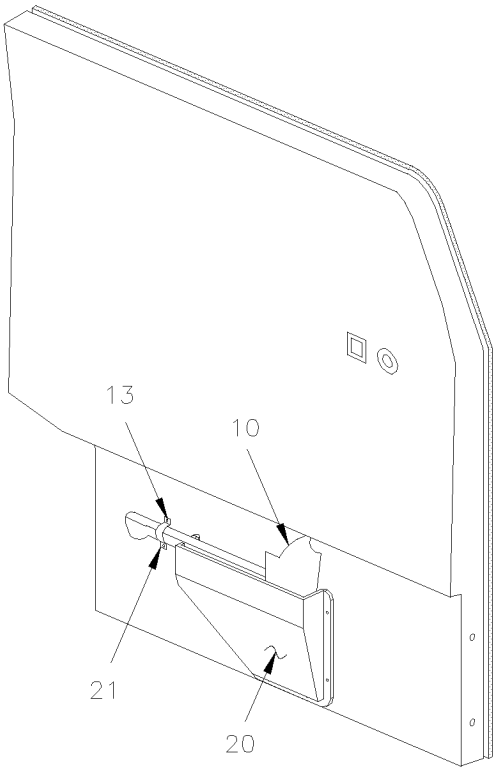

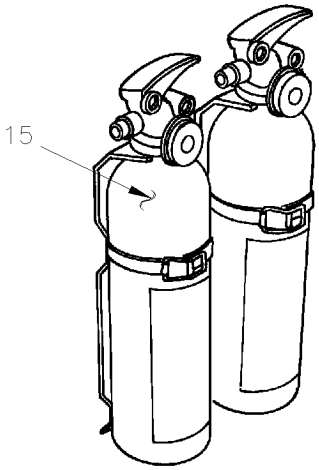

From Y-7046 Up to 6-8906	DATE: 01/2014	PAGE: Y2-2320-40

FIRST AID KIT & AXE - INSTALLATION

ITEM	PART	DESCRIPTION	XL45	MTH40	MTH45	MTH45S	NOTE
1	900289	KIT, FIRST AID (LARGE) / MODEL #36 / REPLACED BY: 900996	1				
1	900767	KIT, FIRST AID (EXTRA LARGE) / W / W.C.L.	1				
1	900990	KIT, FIRST AID / SASKATCHEWAN MODEL From Y-7155	1				
1	900991	KIT, FIRST AID / MANITOBA & N-BRUNSWICK MODEL From Y-7155	1				
1	900992	KIT, FIRST AID / NOVA-SCOTIA MODEL From Y-7155	1				
1	900993	KIT, FIRST AID / ALBERTA MODEL From Y-7155 / REPLACED BY: 901388	1				
1	900994	KIT, FIRST AID / NEWFUNLAND MODEL From Y-7155	1				
1	900995	KIT, FIRST AID / QUEBEC & BRI. COLUMBIA MODEL From Y-7155	1				
1	900996	KIT, FIRST AID / ONTARIO, I.P.E. & USA MODEL From Y-7155	1				
NS	323292	DECAL / FIRST AID	1				
NS	327524	DECAL / FIRST AID / (PARCEL RACK DOOR)	1				
1	195889	KIT "EMERGENCY CLEANING" BIOHAZARD CASE OF 25	AR				
1	19503251	KIT "EMERGENCY CLEANING" STANDARD	AR				
2	506621	STRAP, RUBBER / S.L.	AR				
NS	504452	CLAMP "E-Z CLIP" / "TUBE-O" / 7/16" / HC9-7	2				
NS	502525	WASHER FL .484x.750x.031 NP	2				
3	312806	SUPPORT ASSY / W/FIRST AID KIT (LARGE) / 205MM	1				
3	312807	SUPPORT ASSY / W/FIRST AID KIT (SMALL) / 139MM	1				
4	500841	SCREW TP BDG PH #14x3/4 ZP	4				
5	500473	WASHER LO SPT .262x.489x.062 ZP	4				
10	900046	FIRE AXE Up to 5-8520	1				
10	901132	FIRE AXE From 5-8521	1				
10	901134	FIRE AXE CASE LEATHER From 5-8521	1				
NS	323291	DECAL / AXE	1				
11	403582	STRAP / TO FIX AXE	1				
NS	506236	TAPE RUB ADH1 CC POL 1/16" x 1/2" x 100' / GREY 2520	AR				
12	504106	RIVET POP DOME OE 1/8x1/4 AL	1				
NS	500157	WASHER FL .125x.375x.032 SS	3				
13	504003	FASTENER RIVET BASE	3				
NS	504107	RIVET POP DOME OE 1/8x5/16 AL	1				
14	Y2-0655-00	**INTERIOR LIGHTING**					
15	Y2-2320-30	**EXTINGUISHER - INSTALLATION**					
20	405180	SUPPORT ASSY W/BUMPER	1				
20	405115	. SUPPORT / PLASTIC	1				A
20	405179	. PROTECTOR, BOTTOM	1				
NS	500333	. SCREW TP OV PH #6x3/4 BK	1				
NS	500345	. WASHER FN CKF .187x.500x.090 BR BK	1				
21	404922	STRAP / TO FIX AXE	1				A
		A) COACH WITH AXE INSTALLATION REAR DRIVER'S					
		SEAT					

From Y-7046 Up to 6-8906	DATE: 01/2014	PAGE: Y2-2325-00

LAVATORY - ACCESSORIES

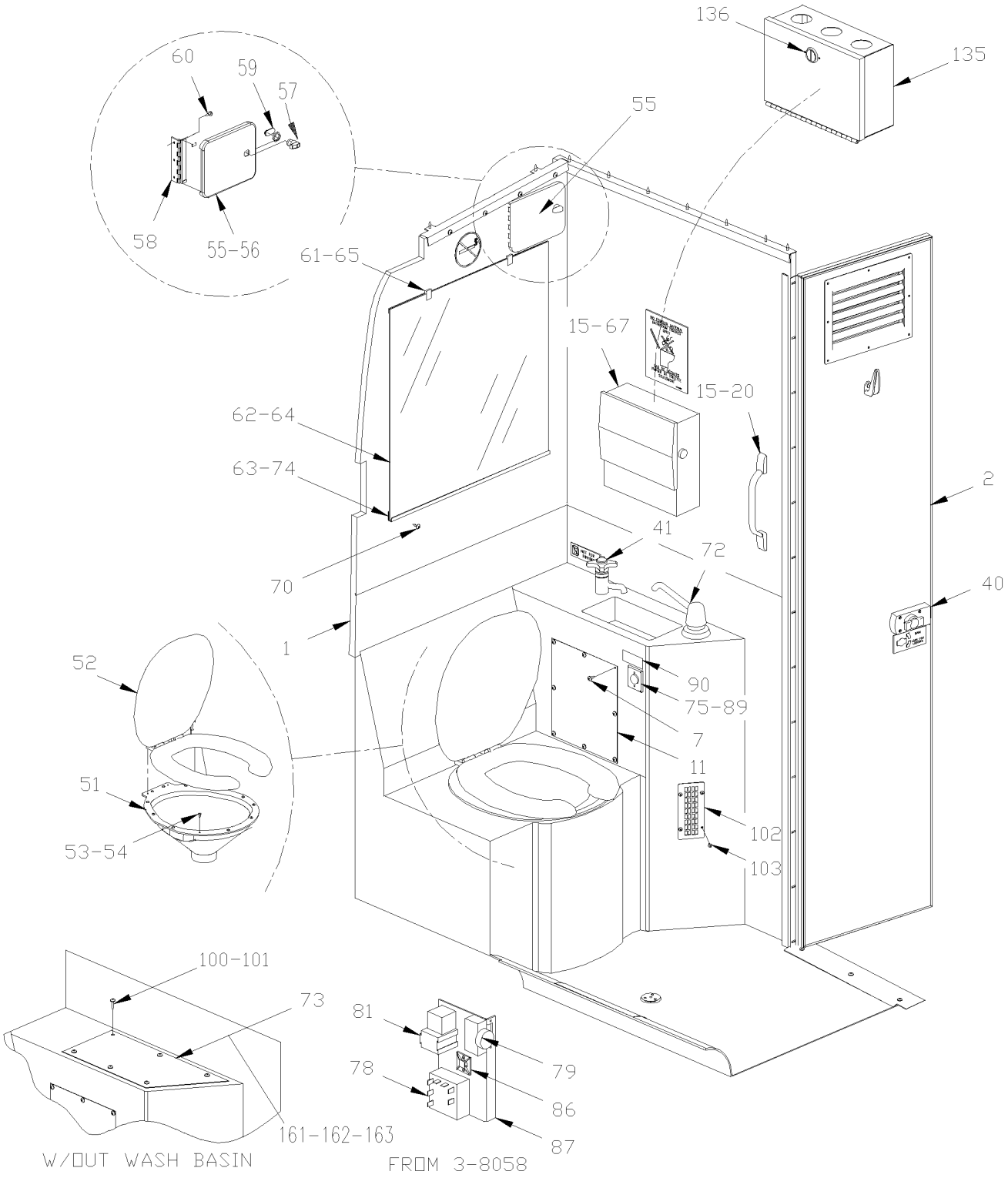

From Y-7046 Up to 6-8906	DATE: 01/2014	PAGE: Y2-2325-00

LAVATORY - ACCESSORIES

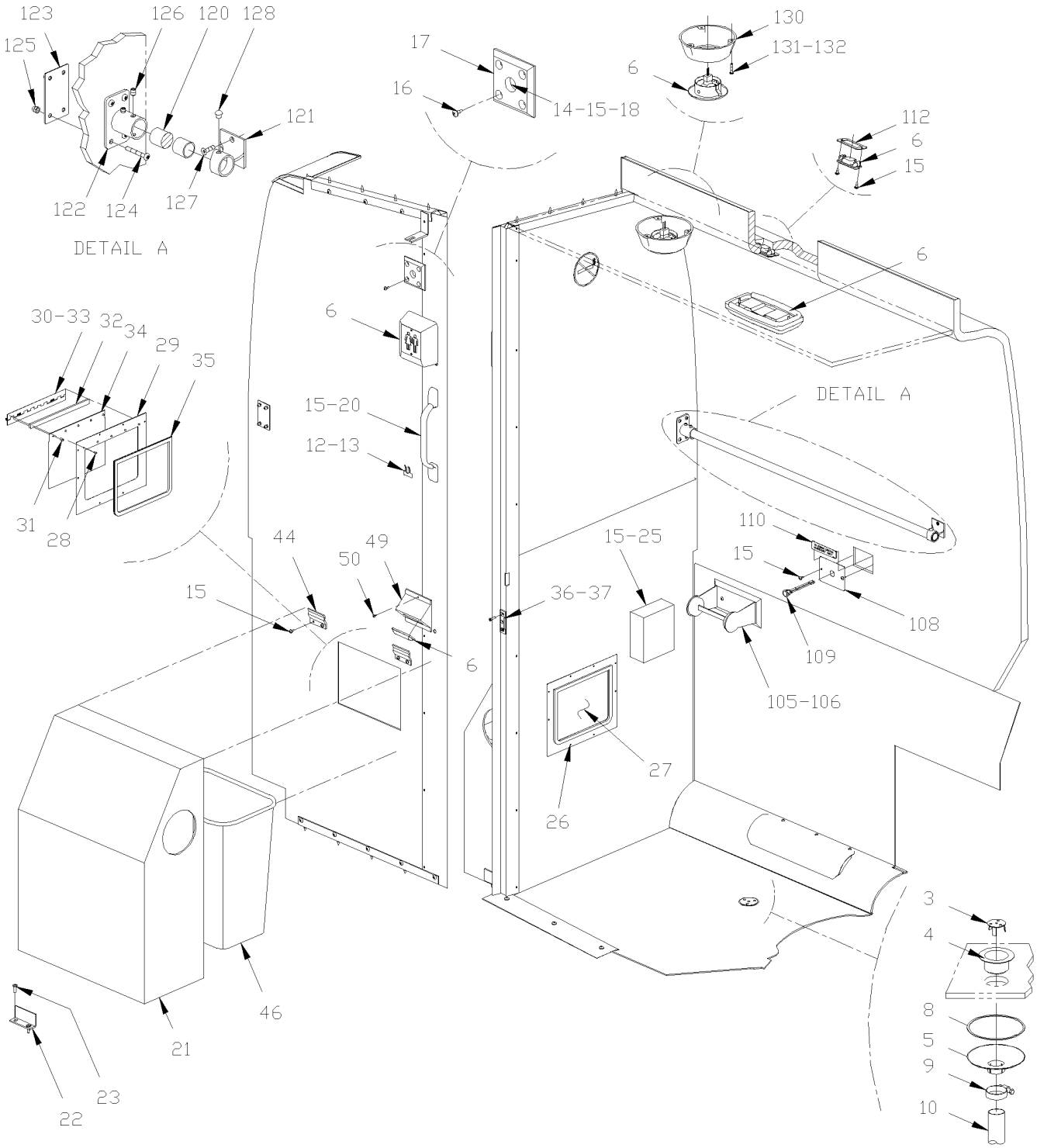

From Y-7046 Up to 6-8906	DATE: 01/2014	PAGE: Y2-2325-00

LAVATORY - ACCESSORIES

ITEM	PART	DESCRIPTION	XL45	MTH40	MTH45	MTH45S	NOTE
1	404923	LAVATORY, FIBERGLASS Up to 3-8057 / REPLACED BY: 405412	1				
1	405412	LAVATORY, FIBERGLASS From 3-8058	1				
2	Y2-2328-00	**LAVATORY WALL - INSTALLATION**					
3	401927	GRILLE ASSY, STRAINER	1				
4	900219	STRAINER ASSY, FLOOR	1				
NS	680025	CAULKING STRIP 3/16" O.D. X 14'	AR				
5	900861	PIGTAIL / DRAIN TUBE	1				
6	Y2-0655-00	**INTERIOR LIGHTING**					
7	500583	SCREW TP BDG PH #6x1/2 ZP	8				
8	401737	SEAL PLASTIC 1 11/16" I.D.	1				
9	504023	HOSE CLAMP / 1"5/16-2"1/4 SS / HS-28	1				
10	590109	DRAIN BOOT 1" I.D. X 5" / AS SHOWN	1				
11	400807	PLATE, CLOSING	1				
12	500417	SCREW TP BDG PH #6x3/8 ZP	2				
13	900859	BRACKET, MOUNTING / MICROPHONE	1				
14	404226	OUTLET, MICROPHONE / 12" W/CONNECTOR	1				
NS	562507	CONNECTOR / (.093) / PH 4C / MOLEX 03-09-2049	1				
15	500641	SCREW TP BDG PH #8x3/4 ZP	AR				
16	500663	SCREW MA FL PH #6-32x3/4 ZP	4				
17	400686	ADAPTOR, PLATE CLEAR PLASTIC 3"X3" / TO USE W/OUTLET ON PARCEL RACK	1				
18	500552	SCREW TP OV PH #6x3/4 ZP	AR				
20	900308	HANDLE / LONG Up to 1-7715 / REPLACED BY: 901047	1				
20	901047	HANDLE / SHORT From 1-7716	1				
21	404450	COVER, BASKET	1				
22	400860	ANGLE 3" / TO FIX DUSTBIN TO FLOOR	1				
23	500841	SCREW TP BDG PH #14x3/4 ZP	2				
25	900083	DISPENSER / TOILET PAPER / (CHROME)	1				
NS	900085	PAPER, TOILET / BOX OF 96 PACK	AR				
26	500640	SCREW TP BDG PH #6x3/4 ZP	12				
27	400768	TRAP ASSY, ACCESS	1				
28	504339	. RIVET POP DOME OE 1/8x3/8 SS	5				
29	400742	. FRAME / WASTE CONTAINER TRAP	1				
30	400739	. SPRING, TORSION / .375 I.D. x .437 x .032	2				
31	504104	. RIVET POP DOME OE 1/8x1/8 SS	5				
32	400740	. SPACER / HINGE	1				
33	400741	. HINGE / WASTE CONTAINER ACCESS TRAP	1				

From Y-7046 Up to 6-8906	DATE: 01/2014	PAGE: Y2-2325-00

LAVATORY - ACCESSORIES

ITEM	PART	DESCRIPTION	XL45	MTH40	MTH45	MTH45S	NOTE
34	400743	. TRAP, ACCESS / WASTE CONTAINER	1				
35	509558	. WEATHERSEAL SNAP-ON 1/8" / SINGLE LIP / WH / C.T.L.	AR				
NS	404634	CLOSING PLATE / TO USE W/O WASTE CONTAINER	1				
36	400706	CATCH PLATE 7/8" X 4 1/4" Up to 2-7922	1				
36	405295	CATCH PLATE From 2-7923	1				
37	500354	SCREW MA FL SLT #10-24x1/2 ZP Up to 2-7922	2				
37	500353	SCREW TP FL PH #8x3/4 BK From 2-7923	2				
37	500786	NUT HEX #10-24 ZP Up to 2-7922	2				
40	Y2-2329-00	**LAVATORY DOOR LOCK & SWITCH**					
41	Y2-2330-00	**WATER & SUMP TANK - INSTALLATION**					
44	404459	BRACKET, RETAINING / TO FIX CONTAINER TO WALL	2				
46	900605	TRASH CAN / BLACK PLASTIC	1				
49	327378	LAMP SUPPORT	1				
50	500814	SCREW TP BDG PH #6x3/4 BK	2				
51	405064	BOWL ASSY, TOILET / GREY SS	1				
. NS	900759	. SPRING / TRAP	1				
. NS	900760	. TRAP W/HINGE	1				
52	900338	SEAT & COVER ASSY, TOILET / "BEMIS"	1				
NS	504427	NUT WELL 1/4-20	2				
NS	500610	SCREW MA RND PH 1/4x1 3/4 SS	2				
53	500574	SCREW MA TR PH #10-24x1 1/4 SS	12				
54	500888	NUT AN JK #10-24	12				
55	404482	ACCES DOOR ASSY Up to 2-7922 / REPLACED BY: 405366	1				K
55	405366	ACCES DOOR ASSY / PLASTIC GREY From 2-7923	1				
56	405364	. ACCES DOOR / PLASTIC GREY From 2-7923	1				
57	780538	. LOCK From 2-7923	1				
58	405365	. HINGE From 2-7923	1				
58	506785	. TAPE RUB ADH2 CC POL 1/16" x 1/4" x 200' / BLACK I1C-N-A From 2-7923	AR				
NS	682462	. ADHESIVE SIKA #252 / BLACK / 310ml CARTRIDGE From 2-7923	AR				
59	288755	. PIVOT LOCK ACTUATOR 33.5MM From 2-7923	1				
60	5001155	SCREW TP PAN PH #8x3/4 BK Up to 2-7922	8				
60	500120	SCREW TP BDG PH #6x1/2 SS From 2-7923	3				
61	500495	SCREW TP BDG PH #6x1 ZP	4				
62	506071	TAPE RUB ADH1 CC POL 1/8" x 1/2" x 50' / GREY 2520X	AR				
62	506236	TAPE RUB ADH1 CC POL 1/16" x 1/2" x 100' / GREY 2520	AR				
63	401134	MOULDING, RETAINING / MIRROR	1				
		K) THIS PART IS SUPERSEEDED BY KIT #405368					

From Y-7046 Up to 6-8906	DATE: 01/2014	PAGE: Y2-2325-00

LAVATORY - ACCESSORIES

ITEM	PART	DESCRIPTION	XL45	MTH40	MTH45	MTH45S	NOTE
64	402398	MIRROR ASSY / REAR WALL	1				
65	504049	CLIP, RETAINING / MIRROR	4				
67	900327	DISPENSER / PAPER TOWELS	1				
NS	900328	TOWEL, PAPER	AR				
70	500614	SCREW TP FL PH #6x3/4 ZP	4				
72	900084	DISPENSER / SOAP	1				
NS	19501055	SOAP BASE ANGLED COUNTER MOUNT ROUND 2" O.D. / WHITE	AR				
NS	19503252	SOAP BASE ANGLED COUNTER MOUNT ROUND 2" O.D. / BLACK	AR				
NS	19501054	SOAP BASE 12° ANGLED COUNTER MOUNT ROUND 2" 5/8" / BLACK	AR				
NS	19503186	HAND SANITIZER WATERLESS ALCOHOLIC SCREWABLE BOTTLE	AR				
NS	19503185	HAND SANITIZER WATERLESS NON-ALCOHOLIC SCREWABLE BOTTLE	AR				
NS	19503187	HAND & FACE REFRESHER TOWELLETTES	AR				
73	402002	PLATE COVERING, WASHBASIN FORMICA	1				
74	500614	SCREW TP FL PH #6x3/4 ZP	4				
75	900349	PUSH BUTTON, OPERATOR Up to 3-8057	1				
NS	900348	SWITCH, TIMER Up to 3-8057 / REPLACED BY: 065896	1				A
NS	900350	BRACKET, MOUNTING Up to 3-8057 / REPLACED BY: 065896	1				
NS	065237	CABLE ASSY / TIMER FLUSH PUMP Up to 3-8020	1				
NS	065470	CABLE ASSY / TIMER FLUSH PUMP From 3-8021 Up to 3-8057	1				
75	382030	FLUSH PUMP SWITCH ASSY From 3-8058	1				
78	563327	. TIME DELAY OFF From 3-8058	1				
NS	065830	. RESISTOR ASSY 1M OHMS 1/2 W From 3-8058	1				
79	563326	. PUSH BUTTON / OPERATOR / BLACK From 3-8058	1				
81	561707	. RELAY 24V S.P.D.T. W/RESISTOR / From 3-8058 Up to 5-8577	1				
81	563332	. RELAY 24V S.P.D.T. W/RESISTOR / "VOLVO" (20374662) From 5-8578	1				
NS	502691	. WASHER LO SPT 3.6x6.7x0.8 ZP From 3-8058	4				
NS	502630	. WASHER FL .156x.375x.049 ZP From 3-8058	1				
NS	500852	. SCREW TP BDG PH #6x3/8 ZG603 From 3-8058	1				
NS	5001085	. SCREW TP PAN PH #6x1 1/4 ZP From 3-8058	1				
86	562679	. 4 WAY ADH. BACKED MOUNTS 1.000 x 1.000 x .200 From 3-8058	1				
NS	504273	. CABLE TIE / 1/8" X 3"1/2 From 3-8058	1				
87	382031	. SUPPORT From 3-8058	1				
NS	065813	. CABLE ASSY / TIMER FLUSH PUMP From 3-8058	1				
NS	504226	SNAP BUSHING / .391x.578x.406	1				
89	403040	PROTECTOR / EMERGENCY SWITCH 44MM X 54MM" / PLASTIC GREY From 3-8058	1				
89	500148	SCREW MA RND PH #6-32x1/2 SS From 3-8058	1				
		A) THIS TIMER & SUPPORT ARE SUPPERSEEDED BY					
		KIT#065896 FOR VEHICULE EQUIPPED WITH ONE					
		INSIDE OPERATING SWITCH OR BY KIT #065898					
		FOR VEHICULE EQUIPPED WITH EXTERIOR AUXILIARY					
		SWITCH IN REAR ENGINE COMPARTMENT					

From Y-7046 Up to 6-8906	DATE: 01/2014	PAGE: Y2-2325-00

LAVATORY - ACCESSORIES

ITEM	PART	DESCRIPTION	XL45	MTH40	MTH45	MTH45S	NOTE
89	500120	SCREW TP BDG PH #6x1/2 SS From 3-8058	2				
89	502691	WASHER LO SPT 3.6x6.7x0.8 ZP From 3-8058	2				
90	900351	PLATE, ENGRAVED / "TO FLUSH..." BILINGUAL Up to 3-8057	1				
90	402744	DECAL / LAVATORY PUMP FLUSH ENGLISH From 3-8058	1				
90	405414	DECAL / "FLUSH" ENG & FRENCH From 3-8058	1				
100	500465	WASHER FN CKF .278x.729x.119 SS	6				
101	500552	SCREW TP OV PH #6x3/4 ZP	6				
102	404103	GRILLE SS / 160MM X 70MM Up to 5-8512 / REPLACED BY: 405700	1				
102	405700	GRILLE SS / 160MM X 70MM From 5-8513	1				
103	500638	SCREW TP BDG PH #8x1/2 ZP	4				
105	900656	DISPENSER / TOILET PAPER ASSY (TO USE W/STD ROLL)	1				
NS	900657	PAPER, TOILET / ROLL S.Q.	AR				
106	500642	SCREW TP BDG PH #10x3/4 ZP	2				
108	325061	PLATE / SS / SUPPORT / EMERGENCY SWITCH (2" X 3")	1				
109	401896	KNOB EMERGENCY Up to 4-8216	1				
109	561124	. SWITCH / S.P.S.T. / N.O. / RED PUSH BUTTON Up to 4-8216	1				
109	561676	BUTTON / EMERGENCY From 4-8217	1				
110	325062	DECAL / "TO SIGNAL DRIVER..." / BILINGUAL Up to 4-8216	1				
110	405452	DECAL / "EMERGENCY CALL" ENG & FRENCH From 4-8217	1				
110	325063	DECAL / "TO SIGNAL DRIVER EMERGENCY" Up to 4-8216	1				
110	402745	DECAL / "EMERGENCY CALL" ENGLISH From 4-8217	1				
112	324944	PLATE Up to 5-8592	1				
120	403697	TUBE 956MM	1				
121	900334	BRACKET / TO FIX GRAB HANDLE	1				
122	900331	BRACKET, MOUNTING / FRONT WALL HANDRAIL TUBE	1				
123	403538	PLATE, FIXTURE / INTERIOR HANDRAIL	1				
124	5001071	SCREW MA OV PH #10-32x1 1/2 ZP	4				
125	500995	NUT HEX CAP #10-32 ZP	4				
126	500870	SCREW SET HEXS CUP 1/4-28x3/16	2				
127	500616	SCREW TP FL PH #10x3/4 ZP	2				
128	504340	RIVET POP DOME OE 1/8x3/16 SS	1				
130	405244	LAMP SUPPORT / LAVATORY Up to 2-7892	1				
130	405371	LAMP SUPPORT / LAVATORY GREY PLATINE From 2-7893 / REPLACED BY: 409270	1				
131	500564	SCREW MA RND PH #8-32x3/4 ZP From 2-7923	3				
132	500678	NUT WELL #8-32x.450 From 2-7923	3				
135	404999	DISPENSER SS / WET TOWELS	1				

From Y-7046 Up to 6-8906	DATE: 01/2014	PAGE: Y2-2325-00

LAVATORY - ACCESSORIES

ITEM	PART	DESCRIPTION	XL45	MTH40	MTH45	MTH45S	NOTE
135	402026	. BOX / REPLACED BY: 401760	1				
136	900447	. LOCK Up to 2-7726 / REPLACED BY: 901051	1				
136	900659	. . KEY Up to 2-7726	1				
136	901051	. LOCK From 2-7727	1				
136	N.S.S.	. . KEY From 2-7727	1				1
NS	500525	. SCREW MA RND SLT #5-40x1/2 SS	2				
NS	500555	. NUT HEX #5-40 SS	2				
NS	502649	. WASHER LO EXT .141x.320x.022 ZP	2				
NS	502556	. WASHER FL 4.3x9.0X0.8 SS	4				
NS							
NS	900329	CHEMICAL PACK / "INCA GOLD" / S.Q.	AR				
NS							
NS		. . . . NEXT PACKS ARE NO-FORMALDEHYDE					
NS							
NS	900654	CHEMICAL PACK / "INCA" FORMULE 104 / S.Q.	AR				
NS	900655	CHEMICAL PACK / "TIMSEN-AIR" / (BOX OF 960)	AR				
NS	403678	CHEMICAL PACK / "TIMSEN-AIR" / (BOX OF 40)	AR				
NS	900893	CHEMICAL PACK / "CELESTE INDUSTRIE" / S.Q.	AR				
NS	900894	CHEMICAL PACK / "CELESTE INDUSTRIE" / (BOX OF 100) OF 100)	AR				
NS							
NS	065896	KIT, RETROFIT / FLUSH PUMP W/1 SWITCH Up to 3-8058	1				
. NS	IS-02112	. SEE INSTRUCTION SHEET Up to 3-8058	1				
NS	065898	KIT, RETROFIT / FLUSH PUMP W/2 SWITCH / SERIE "XL" Up to 3-8058	1				
. NS	IS-02112	. SEE INSTRUCTION SHEET Up to 3-8058	1				
NS	405368	KIT, CLEANING DOOR LAVATORY Up to 2-7923	1				
. NS	IS-02026	. SEE INSTRUCTION SHEET Up to 2-7923	1				
161	405303	DISPENSER PLASTIC / WET TOWELS	1				
. NS	780538	. LOCK	1				
162	500463	WASHER FN CKF .187x.500x.090 BR NP	4				
163	500356	WASHER LO SERR 6.1x16.0x0.9 ZG603	4				
		1) NOT SOLD SEPARATELY					

From Y-7046 Up to 6-8906	DATE: 01/2014	PAGE: Y2-2325-00

LAVATORY - ACCESSORIES

ITEM	PART	DESCRIPTION	XL45	MTH40	MTH45	MTH45S	NOTE

From Y-7046 Up to 6-8906	DATE: 01/2014	PAGE: Y2-2326-00
TOILET PUMP ASSY		

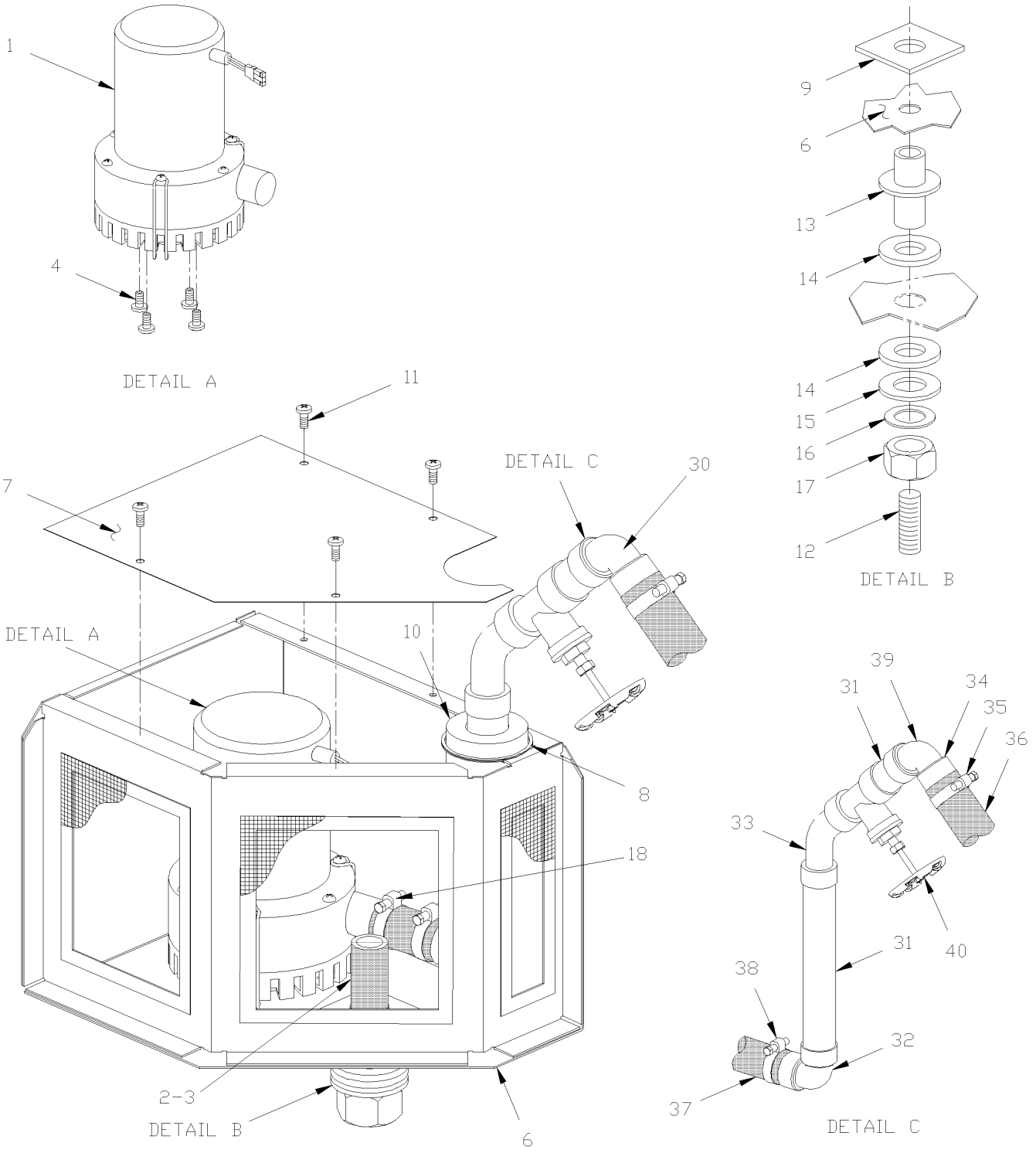

From Y-7046 Up to 6-8906	DATE: 01/2014	PAGE: Y2-2326-00

TOILET PUMP ASSY

ITEM	PART	DESCRIPTION	XL45	MTH40	MTH45	MTH45S	NOTE
1	900960	PUMP TOILET	1				
1	901421	. BASE, STRAINER	1				
2	503455	HOSE RADIATOR / 7/8" I.D. X 3`/ "GREEN STRIPE"	AR				
3	504319	HOSE CLAMP / 1"-1"1/2 SS / E.T. 16	1				
4	500952	SCREW TP BDG PH #8x1/2 SS	4				
6	404915	BOX	1				
7	404133	COVER ASSY	1				
8	506338	RUBBER CHANNEL / 1/16" x 1/4" INT "U" SHAPE / ROUND C.T.L.	AR				
8	680096	SEALANT BUTYL ALUM / GREY / 310ml CARTRIDGE	AR				
9	402652	SEAL, RUBBER / LEVEL TUBE / 1/16" THICK / S.D.	1				
10	402653	SEAL, RUBBER / <> TUBE & COVER	1				
11	502526	SCREW TC BDG PH #12-24x3/4 ZP	4				
12	501426	NIPPLE / PIPE FITTING / 1/2NPT-Mx1/2NPT-Mx2 1/2 STL	1				
13	401748	FLANGE ASSY	1				
13	408251	FLANGE ASSY SERVICE	1				
14	400296	SEAL NEOPRENE	2				
15	500456	WASHER FL 1.062x2.000x.134 ZP	1				
16	500491	WASHER LO INT 1.019x1.637x.067 ZP	1				
17	500746	NUT HEX JAM 1-14 ZP	1				
18	504413	HOSE CLAMP / 1"1/16-2" SS / HAS-24	1				
30	402377	TUBE ASSY W/GATE VALVE	1				
31	503198	. COPPER TUBE .875" O.D. x .045" x 240"	AR				
32	501222	. FEMALE ELBOW 90º SHORT RADIUS / COPPER TUBE / 1Fx3/4F	1				
33	501863	. STREET ELBOW 45º / COPPER TUBE / 3/4Mx3/4F	1				
34	501193	. COUPLING REDUCER / COPPER TUBE / 3/4Fx1/2F	1				
35	504019	. HOSE CLAMP / 9/16"-1"1/16 SS / HS-10	1				
36	900220	. TUBE PVC / 5/8" I.D. / S.L.	1				
37	050937	. HOSE / W/O BYPASS VALVE / 1 1/8" I.D. X 3"	1				
38	504022	. HOSE CLAMP / 3/4"-1"3/4 SS / HS-20	1				
39	501217	. STREET ELBOW 90º SHORT RADIUS / COPPER TUBE / 3/4Mx3/4F	1				
40	501958	. GATE VALVE 7/8" (WELDED)	1				

From Y-7046 Up to 6-8906	DATE: 01/2014	PAGE: Y2-2327-00
SUMP TANK - PLASTIC		

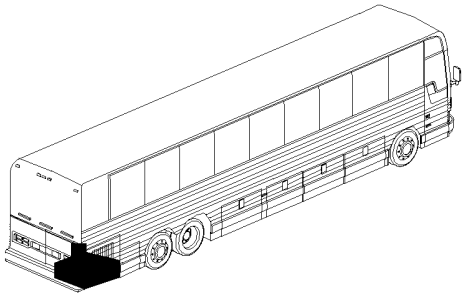

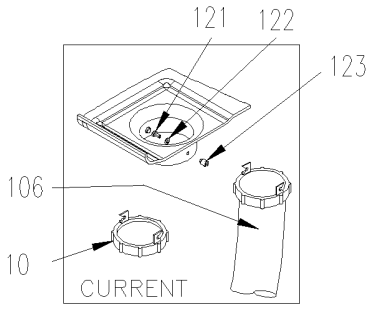

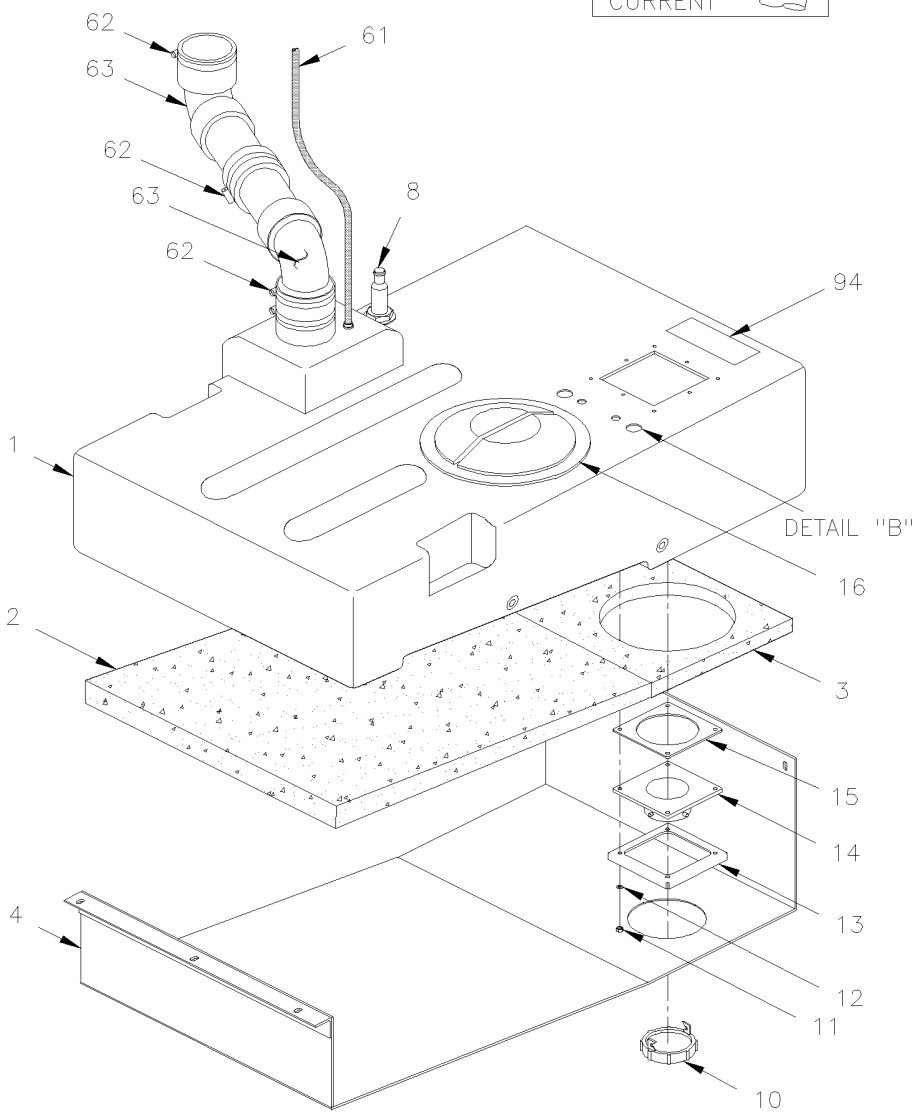

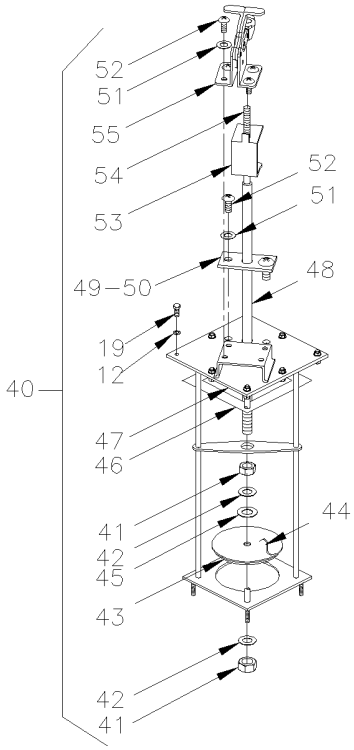

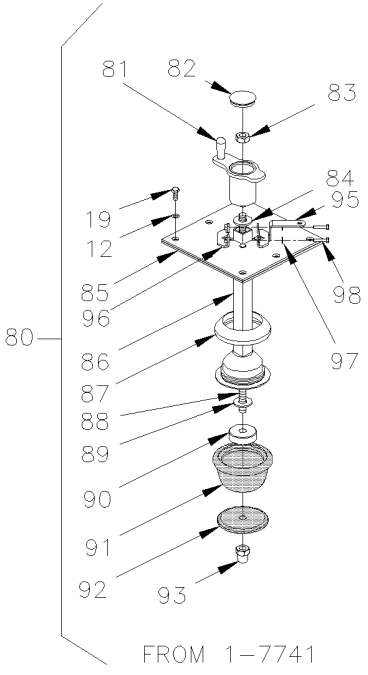

From Y-7046 Up to 6-8906	DATE: 01/2014	PAGE: Y2-2327-00
SUMP TANK - PLASTIC		

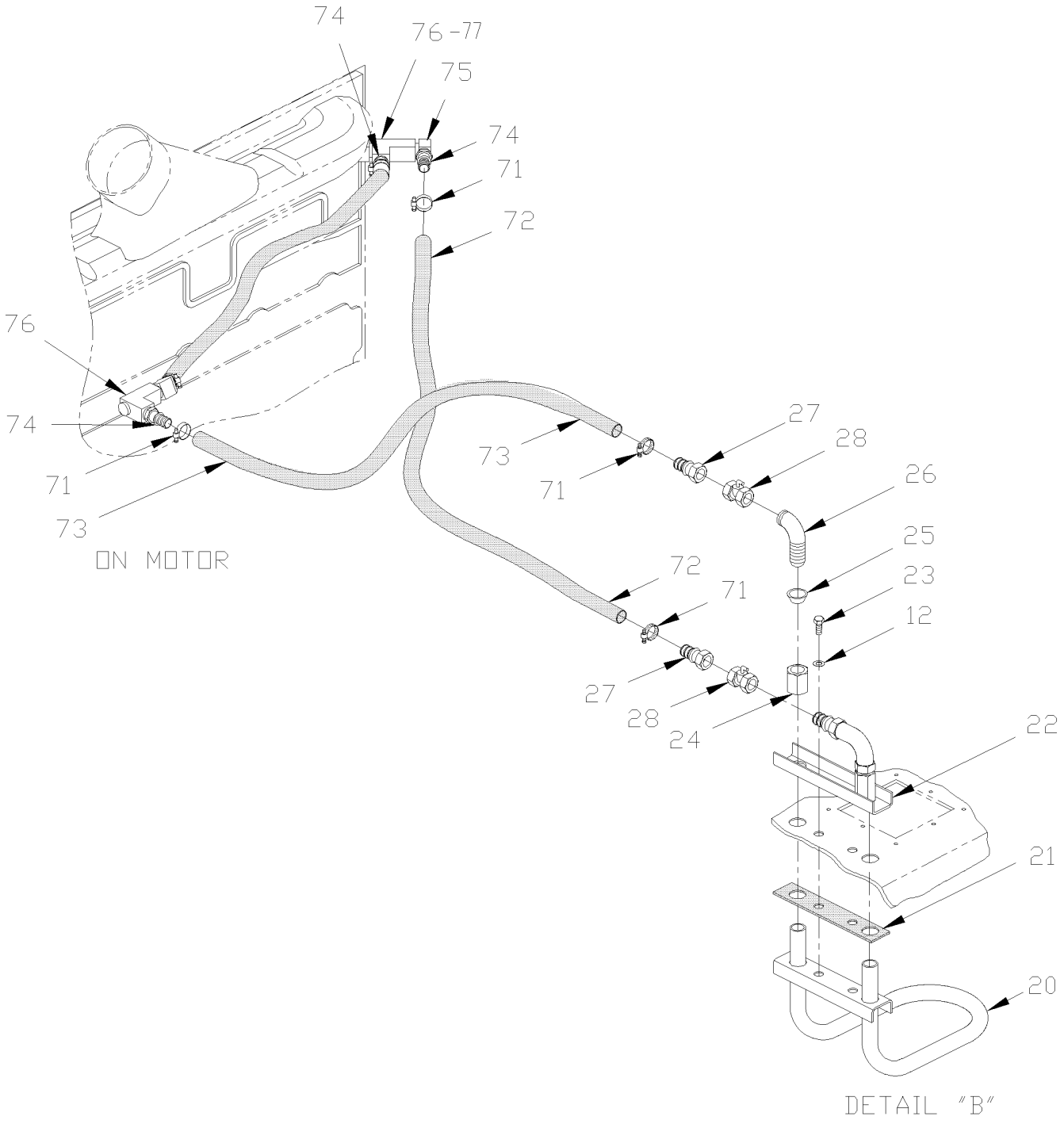

From Y-7046 Up to 6-8906	DATE: 01/2014	PAGE: Y2-2327-00

SUMP TANK - PLASTIC

ITEM	PART	DESCRIPTION	XL45	MTH40	MTH45	MTH45S	NOTE
	407552	SUMP TANK ASSY / (COMPLET FOR RETROFIT)	1				
1	404872	SUMP TANK Up to 2-7740 / REPLACED BY: 405208	1				
. NS	IS-99004	. SEE INSTRUCTION SHEET Up to 2-7740	1				
. NS	D400291	. EMPTYING PLUG INSTALLATION Up to 2-7740	1				
1	405208	SUMP TANK From 2-7741	1				
. NS	D400361	. DIAGRAM INSTALL From 2-7741	1				
2	404340	INSULATOR PANEL	1				A
3	404341	INSULATOR PANEL	1				A
4	404335	BOTTOM PANEL	1				A
	955525	SCREW CAP HEX 5/16-18x1 G5 ZG603	3				A
NS	500441	WASHER FL .312x.734x.065 ZP	9				A
NS	500248	NUT HEX STO 5/16-18 ZG603	3				A
8	900280	THRU HULL, CONNECTOR / PLASTIC	1				A
NS	409038	GASKET	1				A
10	900520	CAP Up to 1-7740	1				D
NS	404972	PLATE / TO FIXING EMTYING PLUG From 2-7741	1				D
NS	404342	GASKET From 2-7741	1				D
NS	502564	WASHER LO SPT 6.1x11.8x1.6 ZP From 2-7741	4				D
NS	502511	NUT HEX NYRT M6-1.0 ZP From 2-7741	4				D
11	502511	NUT HEX NYRT M6-1.0 ZP Up to 1-7740	4				
12	502564	WASHER LO SPT 6.1x11.8x1.6 ZP Up to 1-7740	12				
NS	502582	WASHER LO SERR 6.1x16.2x0.9 ZP Up to 1-7740	4				
13	404373	PLATE Up to 1-7740	1				
13	404972	PLATE / TO FIXING EMTYING PLUG From 1-7741	1				C
14	900522	HOSE ADAPTOR / BAYONET FLANGE Up to 1-7740	1				
15	404342	GASKET Up to 1-7740	1				
16	900825	8" CLOSED LID C/W RIM	1				
19	955269	SCREW CAP HEX M6-1.0x12 G8.8 ZG603	12				
20	404337	HEATER ASSY	1				
21	404367	GASKET	1				
22	404339	SUPPORT PLATE	1				
23	502737	SCREW CAP HEX M6-1.0x25 SS EMN	2				
24	5011027	NUT FLARELESS TUBE / JIC 37° FITTING / #10 STL	2				
25	5011028	FERRULE FLARELESS TUBE / JIC 37° FITTING / #10 STL	2				
		A) FOR RETROFIT YOU NEED ALL THOSE ITEMS					
		C) USE AND INCLUDE WITH KIT 409990P					
		D) FOR RETROFIT HOSE ADAPTOR TO DUMP SUMP WITH					
		NEW MODEL OF TANK (#405208) YOU REQUIRE					
		FOLLOWING PARTS AFTER REMOVE THE EXIT NIPPLE					
		MOULDED TO TANK EFF.: 2-7741					

From Y-7046 Up to 6-8906	DATE: 01/2014	PAGE: Y2-2327-00

SUMP TANK - PLASTIC

ITEM	PART	DESCRIPTION	XL45	MTH40	MTH45	MTH45S	NOTE
26	5011137	UNION ELBOW 90º / JIC 37° FITTING / #10JIC-Mx#10JIC-M STL	2				
26	5011176	MALE ELBOW 90° / JIC 37° FITTING / #10JIC-Mx1/2NPT-M STL	2				
27	507605	MALE CONNECTOR / HOSE BARB FITTING / #12x1/2NPT-M BR	2				
28	530096	BALL VALVE 1/2" NPT 1/2 NPT F x 1/2 NPT F	2				
40	404148P	EMPTYING TRAP DOOR Up to 1-7740	1				B
41	500875	. NUT HEX M12-1.75 SS Up to 1-7740	1				
42	500958	. WASHER FL .531x1.062x.095 SS Up to 1-7740	2				
43	404156	. GASKET Up to 1-7740	1				
NS	681285	. ADHESIVE Up to 1-7740	AR				
44	404100	. CAP Up to 1-7740	1				
45	404432	. O-RING Up to 1-7740	1				
46	404136	. GASKET Up to 1-7740	1				
47	404394	. FRAME (WELDED) Up to 1-7740	1				
48	404144	. CENTER ROD Up to 1-7740	1				
49	404396	. PLATE Up to 1-7740	1				
NS	680096	. SEALANT BUTYL ALUM / GREY / 310ml CARTRIDGE Up to 1-7740	AR				
50	507290	. MOLYTHANE SEAL POLYPAK Up to 1-7740	1				
51	502564	. WASHER LO SPT 6.1x11.8x1.6 ZP Up to 1-7740	6				
52	502526	. SCREW TC BDG PH #12-24x3/4 ZP Up to 1-7740	8				
53	404182	. HOOK Up to 1-7740	1				
54	504644	. PROTECTOR CAP / BLACK / .281 I.D. x .500 Up to 1-7740	1				
55	900834	. LOCK LEVER Up to 1-7740	1				
61	503406	TUBE, NYLON 1/2 O.D. / GREEN S.L.	AR				
NS	641012	BULKHEAD UNION / NTA FITTING / #8x3/8NPT-M BR	1				A
62	503532	UNION / ABS PIPE / 3Fx3F NEO Up to 5-8569	3				
62	504235	HOSE CLAMP / 3"9/16"-4"1/2 SS / HS-64 From 5-8570	4				A
63	404324	TUBE ASSY / ABS Up to 5-8569 / REPLACED BY: K404324	2				
63	530211	ELBOW 45° X 3 1/2" I.D. RUBBER From 5-8570	2				A
NS	404325	SEAL PLASTIC 4" I.D. / <> PIPE & FLOOR	1				A
NS	405711	TUBE DRAIN 3 ½" O.D. x 181MM SS From 5-8570	1				A
71	504646	HOSE CLAMP / 11/16"-1"1/4 / C.T. 9412	4				
72	404427	HOSE / <> HEATER & ENGINE / 3/4" I.D. 1260MM	1				
73	402618	HOSE / <> HEATER & ENGINE / 3/4" I.D. 960MM	1				
		A) FOR RETROFIT YOU NEED ALL THOSE ITEMS					
		B) FOR PRODUCT IMPROVEMENT ASK KIT #409990P FOR					
		INSTALLATION SEE DIAGRAM D-400291					

From Y-7046 Up to 6-8906	DATE: 01/2014	PAGE: Y2-2327-00

SUMP TANK - PLASTIC

ITEM	PART	DESCRIPTION	XL45	MTH40	MTH45	MTH45S	NOTE
73	503523	HOSE SILICONE 1PLY 3/4" I.D. x 100' / S.L.	AR				
74	507605	MALE CONNECTOR / HOSE BARB FITTING / #12x1/2NPT-M BR	3				
75	5011038	MALE ELBOW 90° / BEADED HOSE BARB / #12x1/2NPT-M Up to 3-8164	1				
76	501473	MALE RUN TEE / PIPE FITTING / 1/2NPT-Mx1/2NPT-Fx1/2NPT-F BR Up to 3-8164	2				
77	501528	STREET ELBOW 45° / PIPE FITTING / 1/2NPT-Mx1/2NPT-F BR	1				
80	404948P	EMPTYING PLUG ASSY From 1-7741	1				C
81	404953	. CRANK From 1-7741	1				
81	405446	. CRANK W/FLANGE	1				E
82	689948	. PLUG From 1-7741	1				
83	502567	. NUT HEX M10-1.5 SS From 1-7741	1				
84	509802	. WASHER FL .500x1.125x.081 BR From 1-7741	1				
85	404949	. PLATE ASSY / W/19MM SQ HOLE From 1-7741	1				
. NS	404950	. . PLATE From 1-7741	1				
. NS	404951	. . SEAL RUBBER / W/19MM SQ HOLE From 1-7741	1				
. NS	405083	. . SEAL RETAINER From 1-7741	1				
. NS	504643	. . RIVET POP DOME OE 1/8x.640 SS From 1-7741	4				
85	407499	. PLATE ASSY / W/22MM SQ HOLE SERVICE From 1-7741	1				
. NS	407497	. . PLATE From 1-7741	1				
. NS	407498	. . SEAL RUBBER / W/22MM SQ HOLE From 1-7741	1				
. NS	407496	. . SEAL RETAINER FORMER ONE PIECE From 1-7741	1				
. NS	409262	. . SEAL RETAINER CURRENT TWO PIECES From 1-7741	2				
. NS	504643	. . RIVET POP DOME OE 1/8x.640 SS From 1-7741	4				
86	407494	. TUBE PLASTIC From 1-7741	1				
86	409257	. TUBE PLASTIC SERVICE From 1-7741	1				
87	404956	. CLAMPING RING From 1-7741	1				
87	409256	. CLAMPING RING SERVICE From 1-7741	1				
88	407495	. ROD From 1-7741	1				
89	5001443	. WASHER FL 10.3x38.0x3.0 SS From 1-7741	1				
90	404958	. SPACER From 1-7741 Up to 3-8039	1				
91	409989	. PLUG RUBBER From 1-7741	1				
92	404959	. CLAMPING RING From 1-7741	1				
93	5001511	. NUT HEX CAP M10-1.5 SS From 1-7741	1				
94	405194	. DECAL "OPENING & CLOSING SUMP TANK PICTOGRA	1				A
95	405439	. HANDLE / USE W/SS TUBE ITEM # 86	1				E
		A) FOR RETROFIT YOU NEED ALL THOSE ITEMS					
		C) USE AND INCLUDE WITH KIT 409990P					
		E) USE WITH PLASTIC TUBE #86					

From Y-7046 Up to 6-8906	DATE: 01/2014	PAGE: Y2-2327-00

SUMP TANK - PLASTIC

ITEM	PART	DESCRIPTION	XL45	MTH40	MTH45	MTH45S	NOTE
95	405437	. HANDLE / USE W/PLASTIC TUBE ITEM # 86	1				F
96	405436	. COLLAR ASSY W/NUT	1				E
96	405438	. COLLAR ASSY W/NUT	1				F
97	502570	. WASHER LO SPT 6.1x11.8x1.6 SS	2				
98	5001165	. SCREW CAP HEX M6-1.0x20 SS EMN / REPLACED BY: 502622	2				
100	405440	KIT COLLAR & HANDLE / W/SS TUBE	1				E
. NS	IS-02130	. SEE INSTRUCTION SHEET	1				
100	405441	KIT COLLAR & HANDLE / W/PLASTIC TUBE	1				F
. NS	IS-02130	. SEE INSTRUCTION SHEET	1				
NS	409990P	KIT EMPTYING PLUG SUMP TANK	1				
106	900525	HOSE SUMP TANK	1				D
121	500557	SCREW MA PAN PH #8-32x3/8 SS	2				D
122	502556	WASHER FL 4.3x9.0X0.8 SS	2				D
123	405827	ADAPTOR WITH SPECIAL NUT / TO FIX DUMP HOSE	2				D
123	D400361	DIAGRAM INSTALL	1				D
		D) FOR RETROFIT HOSE ADAPTOR TO DUMP SUMP WITH					
		NEW MODEL OF TANK (#405208) YOU REQUIRE					
		FOLLOWING PARTS AFTER REMOVE THE EXIT NIPPLE					
		MOULDED TO TANK EFF.: 2-7741					
		E) USE WITH PLASTIC TUBE #86					
		F) USE WITH STAINLESS STEEL TUBE #86					

From Y-7046 Up to 6-8906	DATE: 01/2014	PAGE: Y2-2328-00

LAVATORY WALL - INSTALLATION

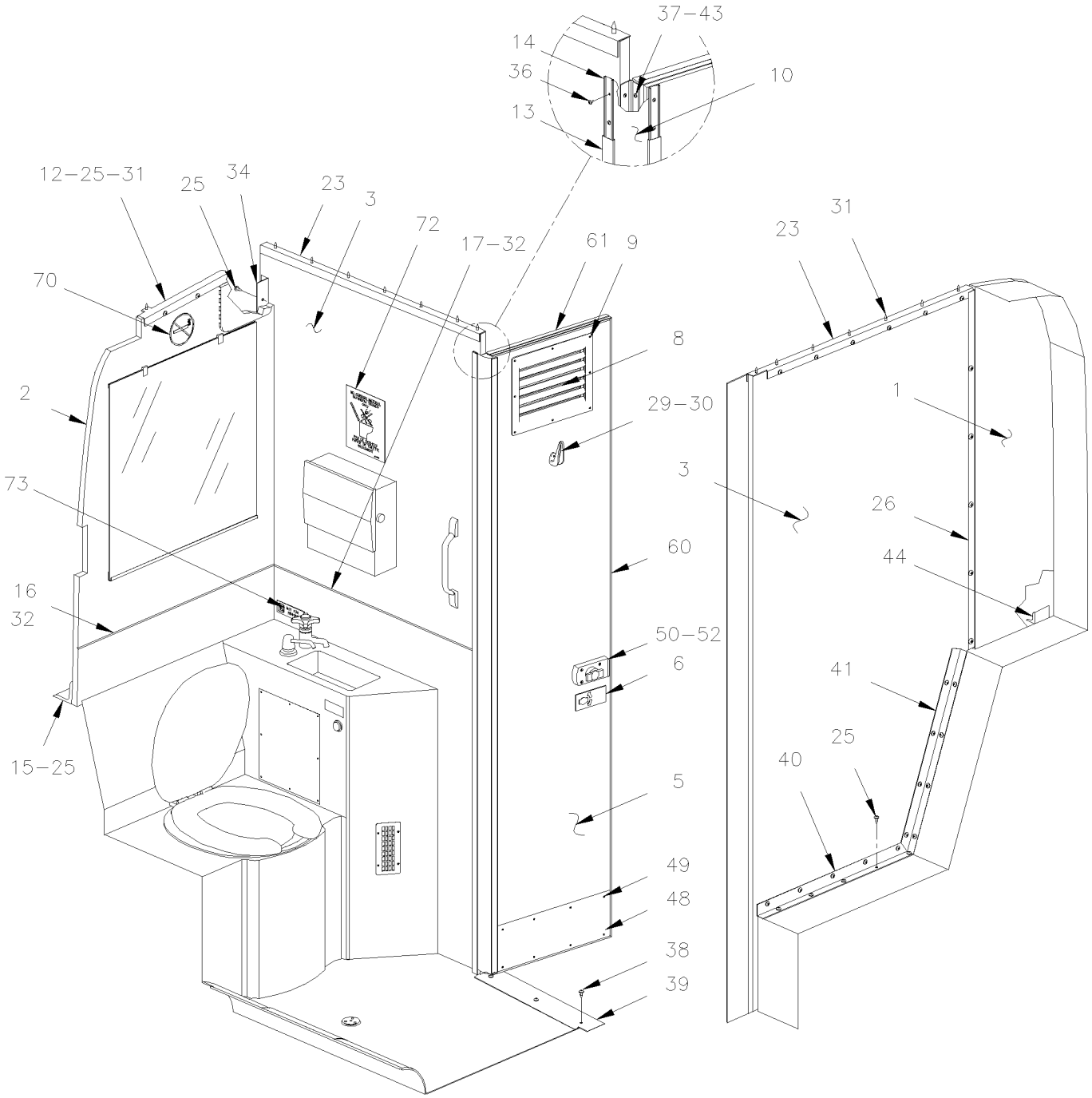

From Y-7046 Up to 6-8906	DATE: 01/2014	PAGE: Y2-2328-00
LAVATORY WALL - INSTALLATION		

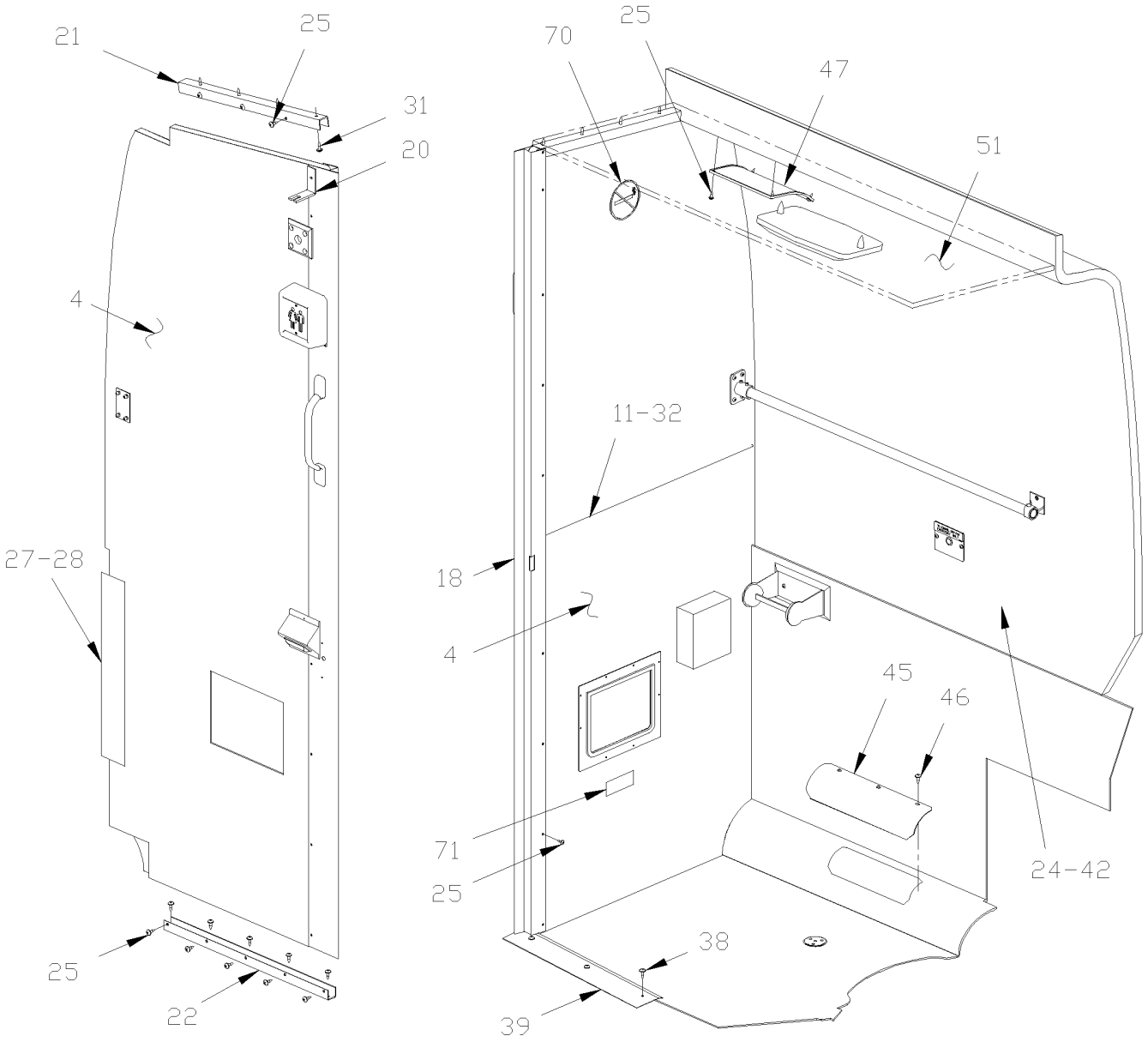

From Y-7046 Up to 6-8906	DATE: 01/2014	PAGE: Y2-2328-00

LAVATORY WALL - INSTALLATION

ITEM	PART	DESCRIPTION	XL45	MTH40	MTH45	MTH45S	NOTE
1	Call Order Desk	WALL ASSY, REAR SIDE / TISSUS / SPECIFY COLOR CODE	1				P
1	Call Order Desk	WALL ASSY, REAR SIDE / CARPET / SPECIFY COLOR CODE	1				P
1	Call Order Desk	WALL ASSY, REAR SIDE / FORMICA / SPECIFY COLOR CODE	1				P
2	Call Order Desk	WALL ASSY, REAR Up to 2-7922	1				P
2	405367P	WALL ASSY, REAR / W/WASH BASSIN From 2-7923	1				
2	Call Order Desk	WALL ASSY, REAR / W/OUT WASH BASIN From 9-9796	1				P
3	Call Order Desk	WALL ASSY, SIDE / TISSUS / SPECIFY COLOR CODE	1				P
3	Call Order Desk	WALL ASSY, SIDE / CARPET / SPECIFY COLOR CODE	1				P
3	Call Order Desk	WALL ASSY, SIDE / FORMICA / SPECIFY COLOR CODE	1				P
4	Call Order Desk	WALL ASSY, FRONT / TISSUS / SPECIFY COLOR CODE	1				P
4	Call Order Desk	WALL ASSY, FRONT / CARPET / SPECIFY COLOR CODE	1				P
4	Call Order Desk	WALL ASSY, FRONT / FORMICA / SPECIFY COLOR CODE	1				P
NS	506001	TAPE RUB ADH1 CC POL 1/8" x 3/4" x 50' / GREY 2520X Up to 2-7922	AR				
NS	506003	TAPE RUB ADH1 CC POL 3/16" x 3/4" x 40' / GREY 2520X From 2-7923	AR				
NS	506264	TAPE RUB ADH1 URE 3/4" x 1" x 12.5' / GREY 1820X	AR				
5	405279	LAVATORY DOOR ASSY / FORMICA / SPECIFY COLOR CODE Up to 2-7922	1				
5	405280	LAVATORY DOOR ASSY / FORMICA / SPECIFY COLOR CODE From 2-7923	1				
5	405281	LAVATORY DOOR ASSY / CARPET / SPECIFY COLOR CODE Up to 2-7922	1				
5	405282	LAVATORY DOOR ASSY / CARPET / SPECIFY COLOR CODE From 2-7923	1				
5	405283	LAVATORY DOOR ASSY / TISSUS / SPECIFY COLOR CODE Up to 2-7922	1				
5	405284	LAVATORY DOOR ASSY / TISSUS / SPECIFY COLOR CODE From 2-7923	1				
6	402741	DECAL "VEROUILLER" Up to 2-7922	1				
6	402743	DECAL "LOCK FOR LIGHTING" Up to 2-7922	1				
6	405222	DECAL / LAVATORY LOCK, ENGLISH From 2-7923	1				
6	403820	DECAL / LAVATORY OPEN / LOCK FOR LIGHTING ENG & FRENCH From 2-7923	1				
6	405642	DECAL / LAVATORY OPEN / LOCK FOR LIGHTING ENG & SPANISH From 2-7923	1				
8	405065	GRILL, VENT / MED GREY	2				
9	500409	SCREW TP PAN PH #8x1/2 BK	AR				
10	405016	LEATHERETTE 125MM X 1990MM / GREY Up to 2-7922	1				
10	405217	LEATHERETTE 125MM X 1990MM / GREY From 2-7923	1				
11	403972	MOULDING "J" FORM / 660MM (26") / F/F	1				
12	404926	MOULDING / "U" SHAPE 520mm	1				
13	404970	MOULDING 2100MM	2				
14	404971	MOULDING 2090MM	2				
15	400719	ANGLE, RETAINING 30" / BEHIND REAR WALL	1				
16	403973	MOULDING "J" FORM / 760MM (29 15/16") / F/F	1				
NS	404537	SPACER WOOD	1				
		P) CALL ORDER DESK FOR SPECIFIC APPLICATION					
		(V.I.N.)					

From Y-7046 Up to 6-8906	DATE: 01/2014	PAGE: Y2-2328-00

LAVATORY WALL - INSTALLATION

ITEM	PART	DESCRIPTION	XL45	MTH40	MTH45	MTH45S	NOTE
17	400886	MOULDING "J" FORM / 788MM (31") / A/A	1				
18	404973	MOULDING DOOR Up to 2-7922	1				
18	405212	MOULDING DOOR From 2-7923	1				
18	405206	MOULDING DOOR Up to 2-7922	1				A
18	405313	MOULDING DOOR From 2-7923	1				A
18	405116	MOULDING DOOR Up to 2-7922	1				B
18	405223	MOULDING DOOR From 2-7923	1				B
20	315891	ANGLE SUPPORT / (FIXED TO LAVATORY WALL)	1				
21	404924	MOULDING / "U" SHAPE 460mm	1				
22	403700	MOULDING / "U" SHAPE 533mm	1				
23	404925	MOULDING 873MM / "U" SHAPE	1				
24	326966	WALL FIBERGLASS PANEL Up to 4-8216	1				
24	328039	WALL FIBERGLASS PANEL LAVATORY 1267mm From 4-8217	1				
NS	500583	SCREW TP BDG PH #6x1/2 ZP	20				
NS	500463	WASHER FN CKF .187x.500x.090 BR NP	10				
NS	506282	TAPE RUB ADH1 CC POL 3/8" x 1" x 20' / GREY 2520	AR				
NS	506071	TAPE RUB ADH1 CC POL 1/8" x 1/2" x 50' / GREY 2520X	AR				
25	500641	SCREW TP BDG PH #8x3/4 ZP	AR				
26	404974	CHANNEL 1112MM / "Z" SHAPE	1				
27	400725	ANGLE, RETAINING 23"	1				
28	401173	ANGLE, RETAINING 12"	1				
29	900297	HOOK / COAT	1				
30	500626	SCREW TP OV PH #8x3/4 ZP	2				
31	504127	RIVET POP DOME OE 3/16x3/4 AL Up to 1-7702	10				
31	500641	SCREW TP BDG PH #8x3/4 ZP From 1-7703	8				
32	500552	SCREW TP OV PH #6x3/4 ZP	16				
34	404933	ANGLE / TO FIX SIDE WALL TO REAR WAL 1047.5MM	1				
36	500583	SCREW TP BDG PH #6x1/2 ZP	33				
37	500614	SCREW TP FL PH #6x3/4 ZP	30				
38	500640	SCREW TP BDG PH #6x3/4 ZP	12				
39	403705	PROTECTOR, FLOOR 494MM	1				
40	404931	ANGLE 800MM	1				
41	404934	ANGLE 600MM	1				
42	500614	SCREW TP FL PH #6x3/4 ZP	AR				
43	780134	HINGE NP .040 X 3/4 X 3/4 X 72"	1				
44	404975	ANGLE 100MM / TO FIX REAR SIDE WALL	1				
45	400874	PLATE, ACCESS / TOILET HEATING TUBE	1				
		A) USE WITH AUXILIARY SWITCH FOR LAVATORY					
		LIGHTNING					
		B) USE WITH WASTE TRASH CAN LIGHTENING					

From Y-7046 Up to 6-8906	DATE: 01/2014	PAGE: Y2-2328-00

LAVATORY WALL - INSTALLATION

ITEM	PART	DESCRIPTION	XL45	MTH40	MTH45	MTH45S	NOTE
46	500638	SCREW TP BDG PH #8x1/2 ZP	5				
47	404998	CLOSING PANEL	1				
48	405126	PROTECTOR PANEL SS / 460MM x 100MM	1				
49	500952	SCREW TP BDG PH #8x1/2 SS	6				
50	Y2-2329-00	**LAVATORY DOOR LOCK & SWITCH**					
51	Y2-1837-00	**CEILING PANELS & MOULDING - BUS**					
52	405518	PLATE RETAINING DOOR / 76MM X 31MM W/OBLONG H	1				
60	405006	MOULDING 1985MM / A/A	1				C
60	405005	MOULDING 1985MM / A/A	1				D
61	401490	MOULDING "J" FORM / 463MM (18 1/4") / A/A	1				C
61	401309	MOULDING "J" FORM / 463MM (18 1/4") / A/A	1				D
70	900313	DECAL / "NO SMOKING" / 2 3/4" O.D.	2				
71	402742	DECAL / "TRASH" / ENGLISH	1				
71	400746	DECAL / "WASTE" / ENGLISH / FRENCH	1				
72	401956	DECAL "NO FOREIGN MATERIAL..." / ENGLISH	1				
72	400583	DECAL "NO FOREIGN MATERIAL..." / ENGLISH / FRENCH	1				
72	406184	DECAL "NO FOREIGN MATERIAL..." / ENG & SPANISH	1				
73	400127	DECAL "DO NOT DRINK THIS WATER" / ENGLISH Up to 2-7922	1				
73	402748	DECAL / "NOT FOR DRINKING" ENGLISH From 2-7923	1				
73	400578	DECAL "DO NOT DRINK THIS WATER" / BILINGUAL Up to 2-7922	1				
73	405232	DECAL / "DO NOT DRINK THIS WATER" ENG & FRENCH From 2-7923 / REPLACED BY: 407538	1				
		C) USE WITH DOOR WITH CARPET					
		D) USE WITH DOOR WITH TISSUS					

From Y-7046 Up to 6-8906	DATE: 01/2014	PAGE: Y2-2328-00

LAVATORY WALL - INSTALLATION

ITEM	PART	DESCRIPTION	XL45	MTH400	MTH445	MTH445S	NOTE

From Y-7046 Up to 6-8906	DATE: 01/2014	PAGE: Y2-2329-00

LAVATORY DOOR LOCK & SWITCH

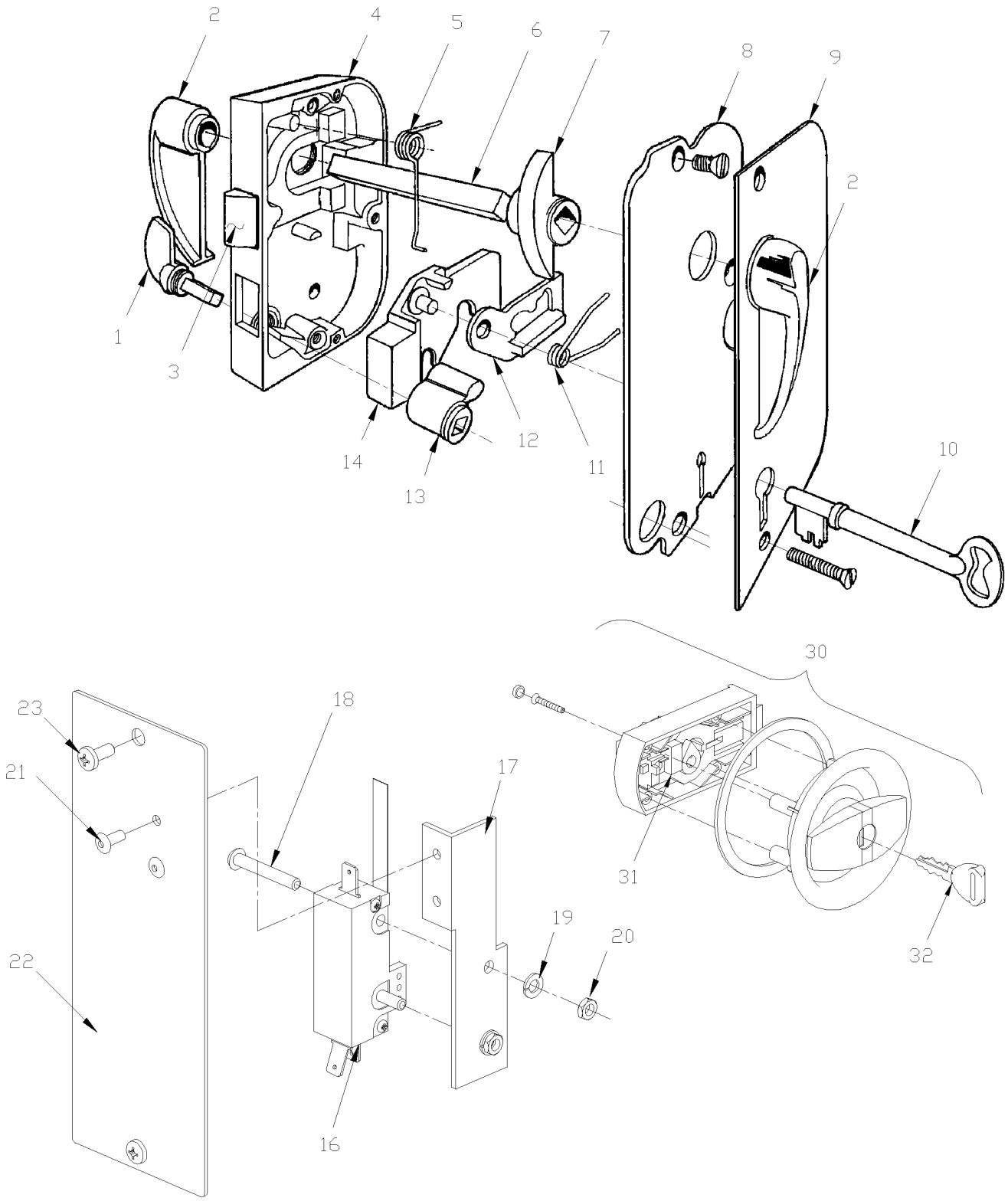

From Y-7046 Up to 6-8906	DATE: 01/2014	PAGE: Y2-2329-00

LAVATORY DOOR LOCK & SWITCH

ITEM	PART	DESCRIPTION	XL45	MTH40	MTH45	MTH45S	NOTE
	900375	LOCK ASSY, DOOR Up to 2-7922	1				
NS	500887	. SCREW MA FL PH #8-32x1 1/4 SS Up to 2-7922	3				A
1	900629	. THUMB, PIECE Up to 2-7922	1				
2	900630	. HANDLE, DOOR Up to 2-7922	2				
3	900631	. BOLT, LATCH Up to 2-7922	1				
4	N.S.S.	. CASE (ONLY) Up to 2-7922	1				1
5	900632	. SPRING, TORSION / .348 I.D. x .275 x .055 Up to 2-7922	1				
6	N.S.S.	. ROD, SQUARE 5/16" X S.L. Up to 2-7922	AR				1
7	900633	. FOLLOWER Up to 2-7922	1				
8	N.S.S.	. COVER, CASE Up to 2-7922	1				1
NS	500272	. SCREW MA FL PH #8-32x1/2 ZP Up to 2-7922	3				
9	900634	. ESCUTCHEON ASSY Up to 2-7922	1				
10	900299	. KEY / LAVATORY DOOR "ADAMS & WESTLAKE" Up to 2-7922	1				
11	900635	. SPRING, TORSION / .305 I.D. x .162 x .050 Up to 2-7922	1				
12	900636	. TUMBLER Up to 2-7922	1				
13	900637	. FOLLOWER / THUMB PIECE Up to 2-7922	1				
14	N.S.S.	. BOLT, DEAD Up to 2-7922	1				1
15	400764	SWITCH ASSY Up to 2-7922 / REPLACED BY: K400764	1				
16	560725	. MICRO SWITCH Up to 2-7922	1				
17	400765	. SUPPORT / MICRO SWITCH Up to 2-7922	1				
18	500380	. SCREW MA RND SLT #5-40x1 BZC Up to 2-7922	2				
19	500470	. WASHER LO SPT .193x.334x.047 ZP Up to 2-7922	1				
20	500766	. NUT HEX #5-40 ZP Up to 2-7922	2				
21	504105	. RIVET POP DOME OE 1/8x3/16 AL Up to 2-7922	2				
22	400766	. PLATE, CLOSING Up to 2-7922	1				
22	402741	DECAL "VEROUILLER" Up to 2-7922	1				
22	402743	DECAL "LOCK FOR LIGHTING" Up to 2-7922	1				
22	405222	DECAL / LAVATORY LOCK, ENGLISH From 2-7923	1				
22	403820	DECAL / LAVATORY OPEN / LOCK FOR LIGHTING ENG & FRENCH From 2-7923	1				
22	405642	DECAL / LAVATORY OPEN / LOCK FOR LIGHTING ENG & SPANISH From 2-7923	1				
NS	405207	PLATE, CLOSING / 100MM x 57MM Up to 2-7922	1				B
22	563083	. SWITCH / OFF-ON / S.P.S.T. / BLACK Up to 2-7922	1				B
23	500653	SCREW TC PAN PH #8-32x1/4 ZP Up to 2-7922	2				
30	901039	LOCK ASSY, DOOR From 2-7923 Up to 5-8521 / REPLACED BY: K901039	1				
30	901114	LOCK ASSY, DOOR From 5-8522	1				
31	563097	. . MICRO SWITCH / N.C. From 2-7923	1				
32	901066	. . KEY / LAVATORY DOOR "HAPPICH" From 2-7923 Up to 5-8521 / REPLACED BY: 780660	1				
32	Y2-1867-00	**KEY & CYLINDER CODE "FORD"**					C
NS	064372	WIRING HARNESS LAVATORY DOOR From 2-7923	1				
NS	504531	TIE MOUNT / 3/16" #10 SCREW / TA1S8-C From 2-7923	1				
		1) NOT SOLD SEPARATELY					
		A) TO FIX LOCK ASSY TO DOOR					
		B) USE WITH AUXILIARY SWITCH					
		C) SEE #30 AT PAGE Y2-1867-00 FOR KEY CODE					

From Y-7046 Up to 6-8906	DATE: 01/2014	PAGE: Y2-2329-00

LAVATORY DOOR LOCK & SWITCH

ITEM	PART	DESCRIPTION	XL45	MTH40	MTH45	MTH45S	NOTE
NS	504273	CABLE TIE / 1/8" X 3"1/2 From 2-7923	1				
NS	500417	SCREW TP BDG PH #6x3/8 ZP From 2-7923	1				

From Y-7046 Up to 6-8906	DATE: 01/2014	PAGE: Y2-2329-00

LAVATORY DOOR LOCK & SWITCH

ITEM	PART	DESCRIPTION	XL45	MTH40	MTH45	MTH45S	NOTE

From Y-7046 Up to 6-8906	DATE: 01/2014	PAGE: Y2-2330-00

WATER & SUMP TANK - INSTALLATION

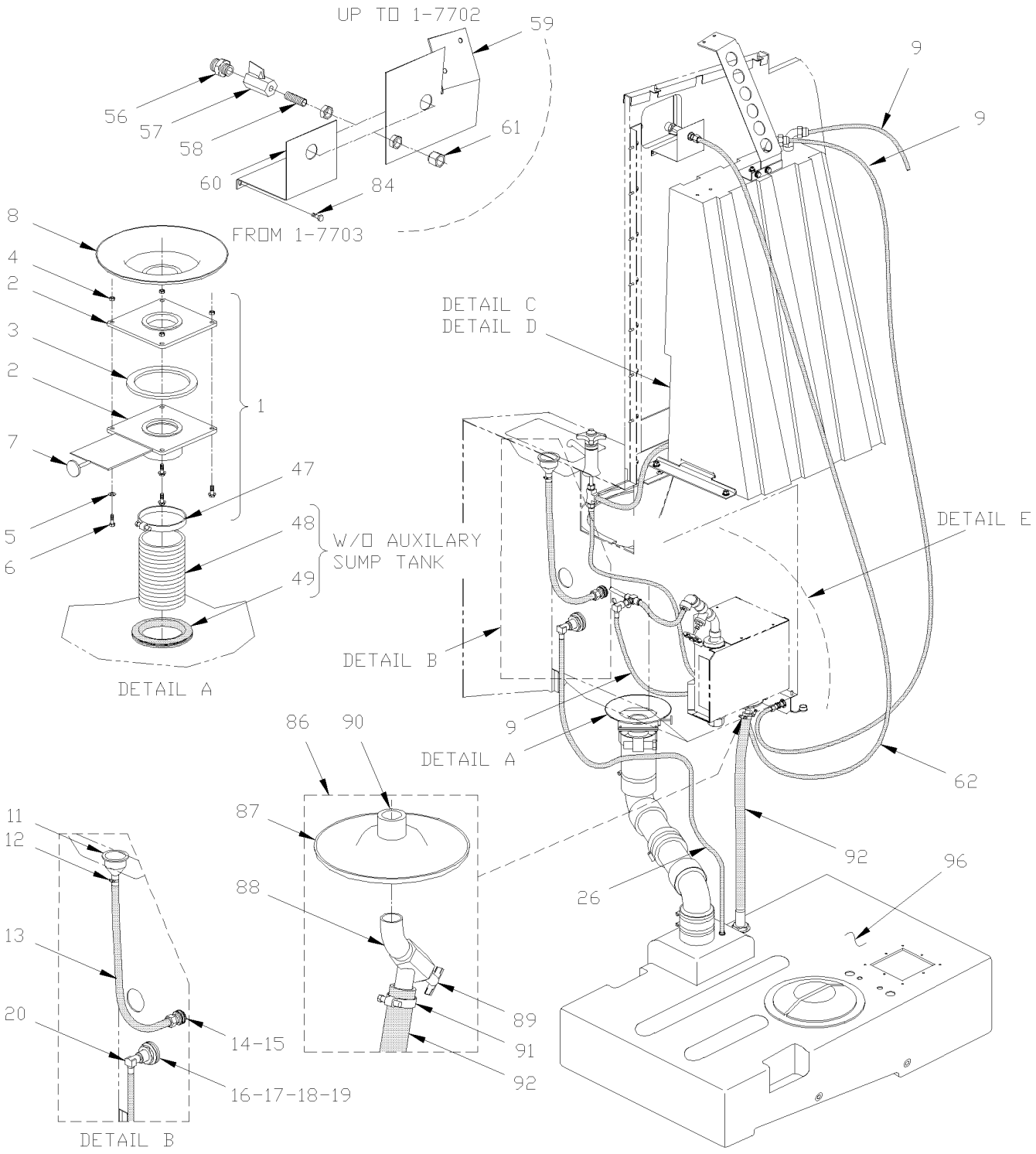

From Y-7046 Up to 6-8906	DATE: 01/2014	PAGE: Y2-2330-00

WATER & SUMP TANK - INSTALLATION

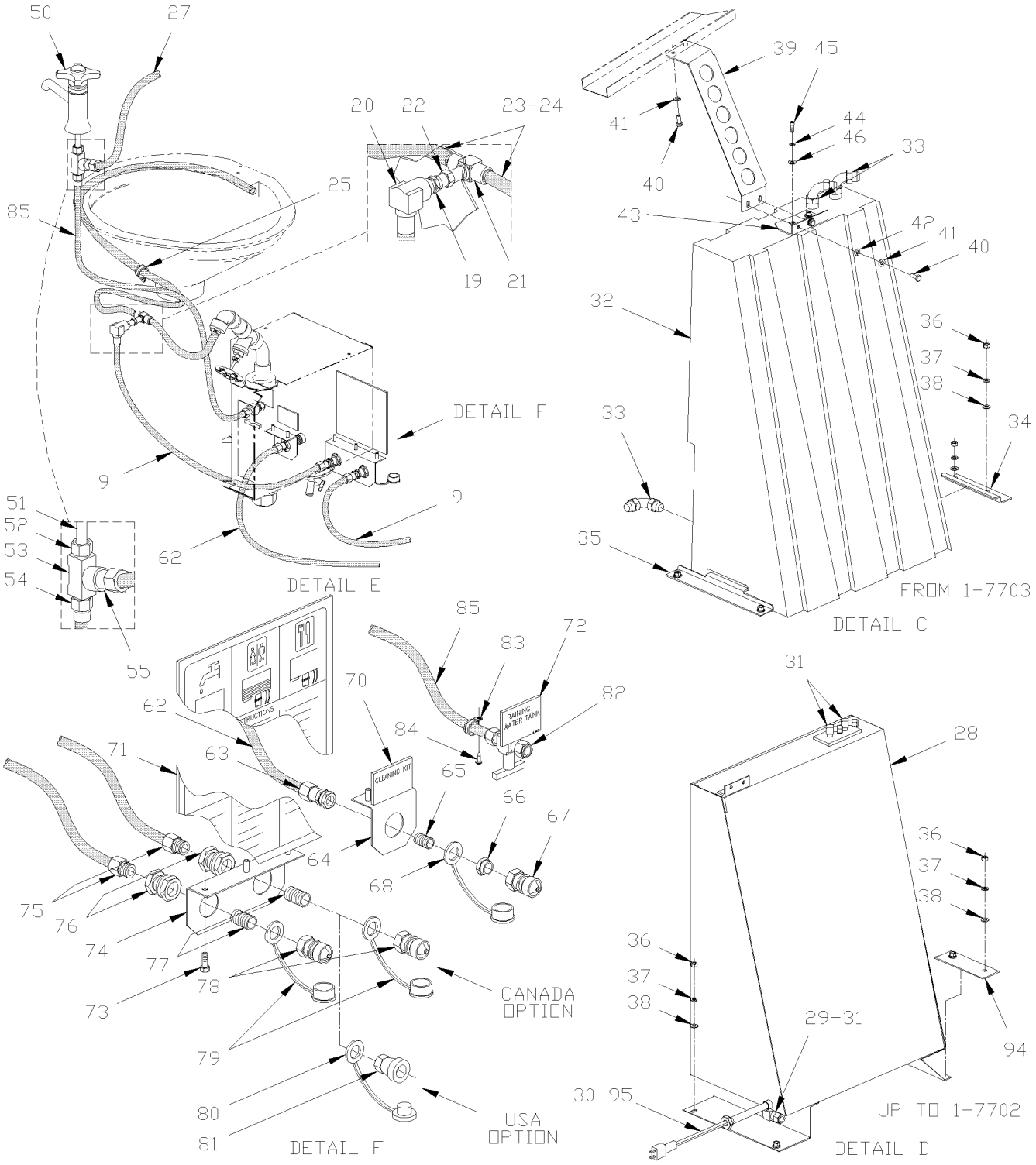

From Y-7046 Up to 6-8906	DATE: 01/2014	PAGE: Y2-2330-00

WATER & SUMP TANK - INSTALLATION

ITEM	PART	DESCRIPTION	XL45	MTH40	MTH45	MTH45S	NOTE
1	403682	THREADED VALVE ASSY W/SS HANDLE	1				
2	900197	. THREADED VALVE ASSY W/PLASTIC HANDLE	1				
3	900330	. . SEAL	2				
4	500769	. . NUT HEX 1/4-20 ZP	4				
5	500411	. . WASHER FL .260x.697x.050 SS	4				
6	500994	. . SCREW CAP HEX 1/4-20x1 3/4 G5 PT ZP	4				
7	403109	. HANDLE, THREADED VALVE / STANLESS STEEL	1				
7	680038	. THREAD LOCKER LOCTITE #243 / BLUE / 50ml	AR				
8	404325	SEAL PLASTIC 4" I.D. / <> PIPE & FLOOR	1				
9	503488	TUBE, NYLON 1/2 O.D. / BLACK S.L.	AR				
11	900509	STRAINER / WASHBASIN	1				
12	504019	HOSE CLAMP / 9/16"-1"1/16 SS / HS-10	2				
13	503006	HOSE 5/8" I.D. 50' / S.L.	AR				
14	900280	THRU HULL, CONNECTOR / PLASTIC	1				
15	409038	GASKET	1				
16	400296	SEAL NEOPRENE	1				
17	500491	WASHER LO INT 1.019x1.637x.067 ZP	1				
18	500456	WASHER FL 1.062x2.000x.134 ZP	1				
19	640863	BULKHEAD COUPLING / PIPE FITTING / 3/8NPT-Fx3/8NPT-F STL	2				
20	641376	MALE ELBOW 90° NON-SWIVEL / PUSH-IN FITTING / #8x3/8NPT-M BR	2				
21	501626	MALE BRANCH TEE/ COMPRESSION FITTING / #6x#6x1/4NPT-M BR	1				
22	501314	BUSHING REDUCER / PIPE FITTING / 3/8NTP-Mx1/4NPT-F BR	1				
23	503404	TUBE, NYLON 3/8 O.D. / BLACK S.L.	2				
24	503405	INSERT / NTA FITTING / #6 SS	1				
25	952625	CLAMP / 3/8" I.D.	2				
26	503406	TUBE, NYLON 1/2 O.D. / GREEN S.L.	AR				
27	503488	TUBE, NYLON 1/2 O.D. / BLACK S.L.	AR				
28	401612	WATER TANK ASSY Up to 1-7702 / REPLACED BY: 405241P	1				
28	401591	. WATER TANK WELDED / SS Up to 1-7702 / REPLACED BY: 401612	1				
29	400696	. . COUPLING, BULK Up to 1-7702	1				
30	501304	. PLUG SQUARE HEAD / PIPE FITTING / 1/4NPT-M BR Up to 1-7702	1				
31	641376	. MALE ELBOW 90° NON-SWIVEL / PUSH-IN FITTING / #8x3/8NPT-M BR Up to 1-7702	3				
32	405241P	WATER TANK ASSY / PLASTIC From 1-7703	1				
32	900958	. WATER TANK / PLASTIC From 1-7703	1				
33	5011227	. MALE ELBOW 90° / COMPRESSION FITTING / #8x3/8NPT-M PLAS WHITE From 1-7703	3				
34	405236	SUPPORT "Z" 178MM From 1-7703	1				
35	405235	SUPPORT "Z" 300MM From 1-7703	1				
36	500778	NUT HEX 5/16-18 ZP	4				
37	500476	WASHER LO SPT .317x.586x.078 ZP	4				
38	500473	WASHER LO SPT .262x.489x.062 ZP Up to 1-7702	4				
38	500441	WASHER FL .312x.734x.065 ZP From 1-7703	4				
39	404992	SUPPORT UPPER WATER TANK Up to 1-7702	1				

From Y-7046 Up to 6-8906	DATE: 01/2014	PAGE: Y2-2330-00

WATER & SUMP TANK - INSTALLATION

ITEM	PART	DESCRIPTION	XL45	MTH40	MTH45	MTH45S	NOTE
39	405225	SUPPORT UPPER WATER TANK From 1-7703	1				
40	500517	SCREW TC CAP HEXW 5/16-18x3/4 ZP	4				
41	500476	WASHER LO SPT .317x.586x.078 ZP	4				
42	500441	WASHER FL .312x.734x.065 ZP	2				
43	405233	ANGLE 114MM From 1-7703	1				
44	500473	WASHER LO SPT .262x.489x.062 ZP From 1-7703	2				
45	5001515	SCREW CAP HEX 1/4-20x3/4 G8 ZP From 1-7703	2				
46	500441	WASHER FL .312x.734x.065 ZP From 1-7703	2				
47	504235	HOSE CLAMP / 3"9/16"-4"1/2 SS / HS-64	2				
48	503039	HOSE FLEXIBLE / 3 1/2" I.D. X 10' / REPLACED BY: 402418	AR				
49	509558	WEATHERSEAL SNAP-ON 1/8" / SINGLE LIP / WH / C.T.L.	AR				
50	900582	FAUCET	1				
51	501176	FITTIING STRAIGHT #8BBX	1				
52	501314	BUSHING REDUCER / PIPE FITTING / 3/8NTP-Mx1/4NPT-F BR	1				
53	501527	FEMALE UNION TEE / PIPE FITTING / 3/8NPT-Fx3/8NPT-Fx3/8NPT-F BR	1				
54	640990	MALE CONNECTOR / NTA FITTING / #6x3/8NPT-M BR / REPLACED BY: 641330	1				
55	641376	MALE ELBOW 90° NON-SWIVEL / PUSH-IN FITTING / #8x3/8NPT-M BR	1				
56	5011178	MALE CONNECTOR / GARDEN FITTING / 3/4GARDEN-Mx3/8NPT-M BR	1				
57	5011180	BALL VALVE 3/8 NPT M x 3/8 NPT M	1				
58	501325	NIPPLE / PIPE FITTING / 3/8NPT-Mx3/8NPT-Mx1 BR	1				
59	405036	ANGLE SUPPORT CLEANING VALVE Up to 1-7702	1				
60	405234	ANGLE SUPPORT CLEANING VALVE From 1-7703	1				
61	641012	BULKHEAD UNION / NTA FITTING / #8x3/8NPT-M BR	1				
62	503406	TUBE, NYLON 1/2 O.D. / GREEN S.L.	AR				
63	641012	BULKHEAD UNION / NTA FITTING / #8x3/8NPT-M BR	1				
64	405038	SUPPORT	1				
65	501325	NIPPLE / PIPE FITTING / 3/8NPT-Mx3/8NPT-Mx1 BR	1				
66	501534	BUSHING REDUCER / PIPE FITTING / 1/2NPT-Mx3/8NPT-F BR	1				
67	900323	NIPPLE / QUICK DISCONNECT "B SERIES" / #10x1/2NPT-F BR	1				
68	900326	DUST CAP / QUICK DISCONNECT "B SERIES" / #10 VINYL	1				
70	403551	DECAL / "CLEANING KIT"	1				
71	400969	DECAL / "FILL INSTRUCTION" / ENGLISH & FRENCH	1				
72	405298	DECAL / "DRAINING WATER TANK"	1				
73	500613	SCREW TP PAN PH #10x1/2 ZP	5				
74	400378	SUPPORT	1				
75	640873	MALE CONNECTOR / AB FITTING / #8x1/2NPT-M BR	2				
76	501796	BULKHEAD COUPLING / PIPE FITTING / 1/2NPT-Fx1/2NPT-Fx1 1/2 BR	2				
77	501424	NIPPLE / PIPE FITTING / 1/2NPT-Mx1/2NPT-Mx1 1/8 BR	2				
78	900323	NIPPLE / QUICK DISCONNECT "B SERIES" / #10x1/2NPT-F BR	2				A
78	900323	NIPPLE / QUICK DISCONNECT "B SERIES" / #10x1/2NPT-F BR	1				B
79	900326	DUST CAP / QUICK DISCONNECT "B SERIES" / #10 VINYL	2				A
79	900326	DUST CAP / QUICK DISCONNECT "B SERIES" / #10 VINYL	1				B
		A) CANADA OPTION					
		B) USA OPTION					

From Y-7046 Up to 6-8906	DATE: 01/2014	PAGE: Y2-2330-00

WATER & SUMP TANK - INSTALLATION

ITEM	PART	DESCRIPTION	XL45	MTH40	MTH45	MTH45S	NOTE
80	900325	DUST PLUG / QUICK DISCONNECT "B SERIES" / #8 VINYL	1				B
81	900324	COUPLER / QUICK DISCONNECT "B SERIES" / #8x1/2NPT-F BR	1				B
82	501791	NEEDLE VALVE 3/8 TUBE 3/8 TUBE	1				
83	952625	CLAMP / 3/8" I.D.	AR				
84	500641	SCREW TP BDG PH #8x3/4 ZP	AR				
85	503404	TUBE, NYLON 3/8 O.D. / BLACK S.L.	AR				
86	402917	DRAIN VALVE ASSY / WATER TANK	1				
87	401253	. SEAL, PLASTIC 3/4" I.D.	1				
88	501330	. STREET ELBOW 45º / PIPE FITTING / 3/8NPT-Mx3/8NPT-F BR	1				
89	501531	. DRAIN VALVE 3/8 NPT M x 5/8 HOSE	1				
90	501534	. BUSHING REDUCER / PIPE FITTING / 1/2NPT-Mx3/8NPT-F BR	1				
91	504019	HOSE CLAMP / 9/16"-1"1/16 SS / HS-10	1				
92	900220	TUBE PVC / 5/8" I.D. / S.L.	AR				
94	401131	PLATE ATTACH Up to 1-7702	1				
95	562018	HEATER, WATER Up to 1-7702	1				
96	Y2-2327-00	**SUMP TANK - PLASTIC**					
NS	680098	THREAD SEALANT LOCTITE #567 / WHITE / 250ml	AR				
		B) USA OPTION					

From Y-7046 Up to 6-8906	DATE: 01/2014	PAGE: Y2-2330-00

WATER & SUMP TANK - INSTALLATION

ITEM	PART	DESCRIPTION	XL45	MTH40	MTH45	MTH45S	NOTE

From Y-7046 Up to 6-8906	DATE: 01/2014	PAGE: Y2-2337-00

LAVATORY FAN - INSTALLATION

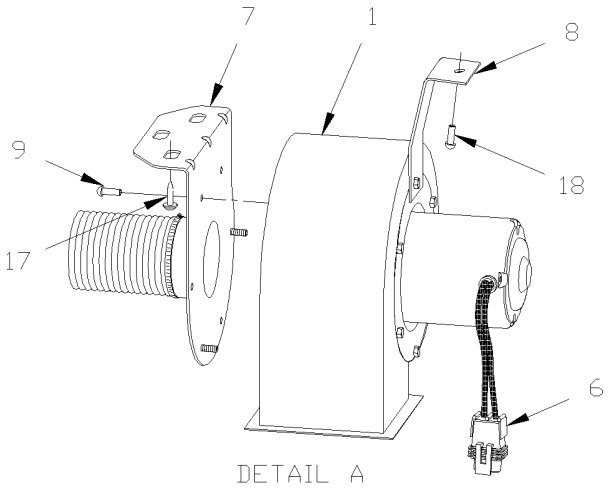

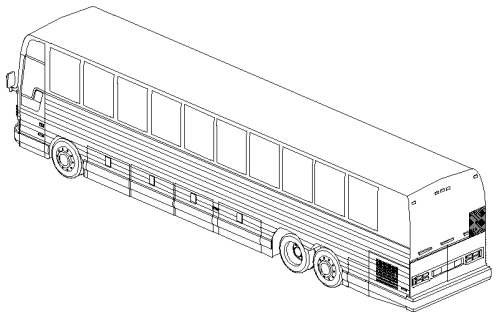

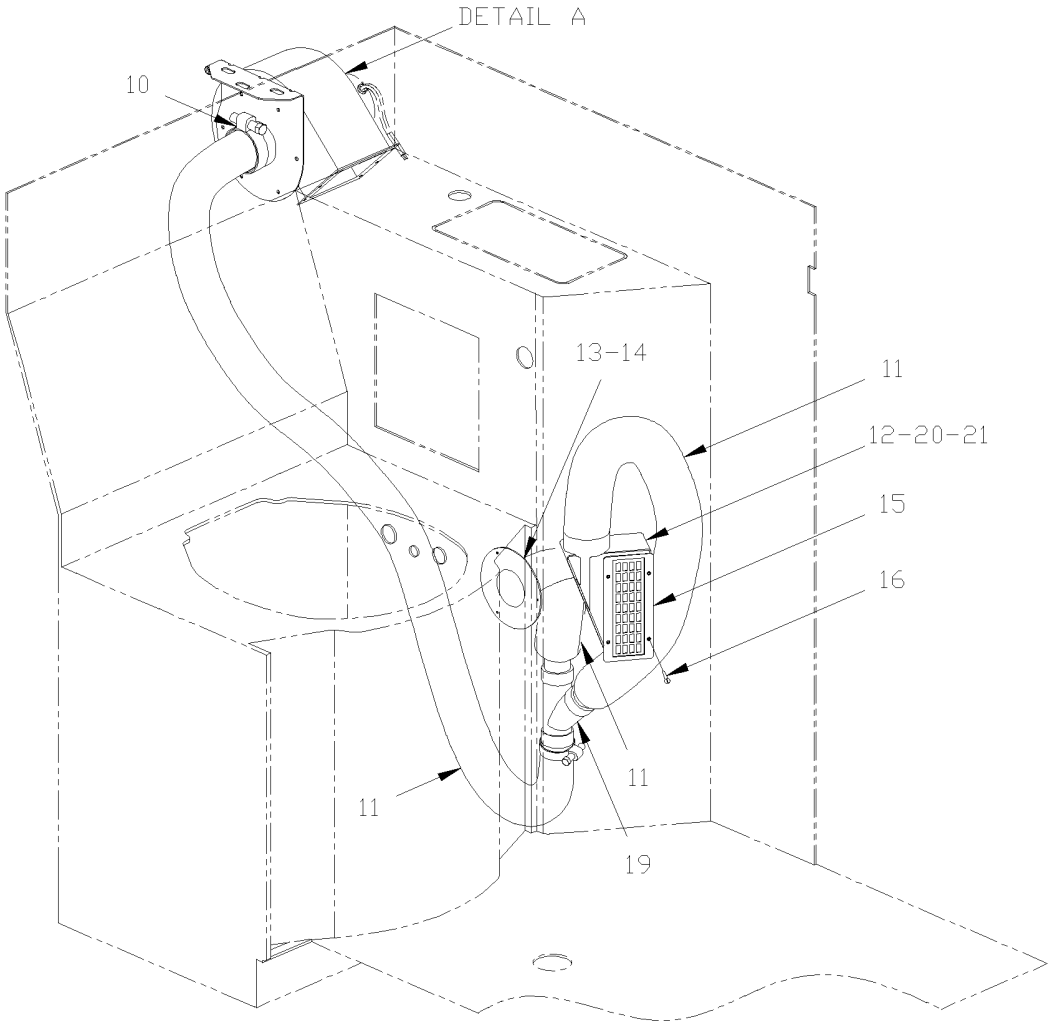

From Y-7046 Up to 6-8906	DATE: 01/2014	PAGE: Y2-2337-00

LAVATORY FAN - INSTALLATION

ITEM	PART	DESCRIPTION	XL45	MTH40	MTH45	MTH45S	NOTE
	405002	BLOWER ASSY LAVATORY	1				
1	870844	**. BLOWER & MOTOR ASSY - "M.C.C." "CW" / FAN END**					
6	561566	. CONNECTOR / WEATHER PACK / PH 2C / BLACK / PED 12010973	1				
6	561568	. PIN TERMINAL / 16-14 / PED 12089305	2				
6	561786	. CABLE SEAL / GRAY / PED 12010293	2				
7	405030	. SUPPORT / FLANGE SIDE	1				
8	403650	. SUPPORT / MOTOR SIDE	1				
9	504272	. RIVET CHY Q BRAZ 3/16x1/8 SS / REPLACED BY: 504745	3				
10	504024	HOSE CLAMP / 1"13/16"-2"3/4 SS / HS-36	2				
11	372344	HOSE 2 1/2" I.D. X 32"	1				
11	503031	HOSE FLEXIBLE / AIR DUCT 2 1/2" I.D. X 12`/ RUBBER	AR				
12	372366	BOX ASSY	1				
13	400632	FLANGE HOSE ADAPTOR / FIXED TO LAVATORY	1				
14	504108	RIVET POP DOME OE 1/8x1/2 AL	3				
15	404103	GRILLE SS / 160MM X 70MM Up to 5-8512 / REPLACED BY: 405700	1				
15	405700	GRILLE SS / 160MM X 70MM From 5-8513	1				
16	500638	SCREW TP BDG PH #8x1/2 ZP	4				
17	500524	SCREW TP PAN PH #12x5/8 SS	3				
18	500611	SCREW TC BDG PH #10-24x1/2 ZP	1				
19	372762	Y TUBE ASSY / AIR DEFLECTOR	1				
20	504006	RIVET POP CK OE 1/8x5/16 AL	4				
21	500437	WASHER FL .125x.375x.040 ZP	4				

From Y-7046 Up to 6-8906	DATE: 01/2014	PAGE: 870844
BLOWER & MOTOR ASSY - "M.C.C." "CW" / FAN END		

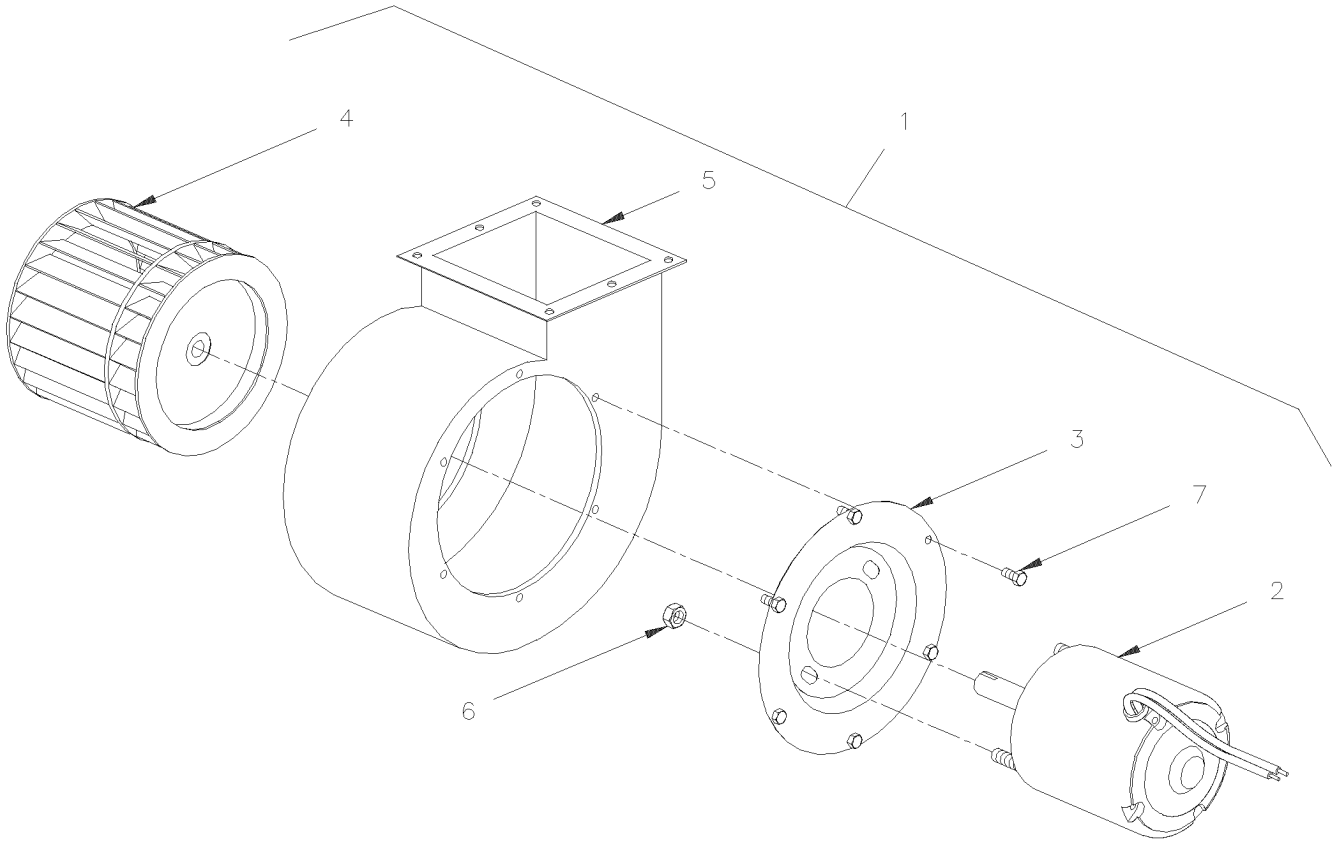

From Y-7046 Up to 6-8906	DATE: 01/2014	PAGE: 870844

BLOWER & MOTOR ASSY - "M.C.C." "CW" / FAN END

ITEM	PART	DESCRIPTION	XL45	MTH40	MTH45	MTH45S	NOTE
1		BLOWER ASSY 24V / CW	1				
2	562167	. MOTOR ASSY / 24V	1				
3	871020	. PLATE MOUNTING / MOTOR	1				
4	871017	. BLOWER WHEEL / STEEL	1				
5	871440	. HOUSING BLOWER	1				
6	500786	. NUT HEX #10-24 ZP	2				
7	500978	. SCREW CAP HEX #10-24x3/4 ZP	6				

From Y-7046 Up to 6-8906	DATE: 01/2014	PAGE: Y2-2345-40
POWERVERTER - 24/110 VOLTS - 1000 WATTS		

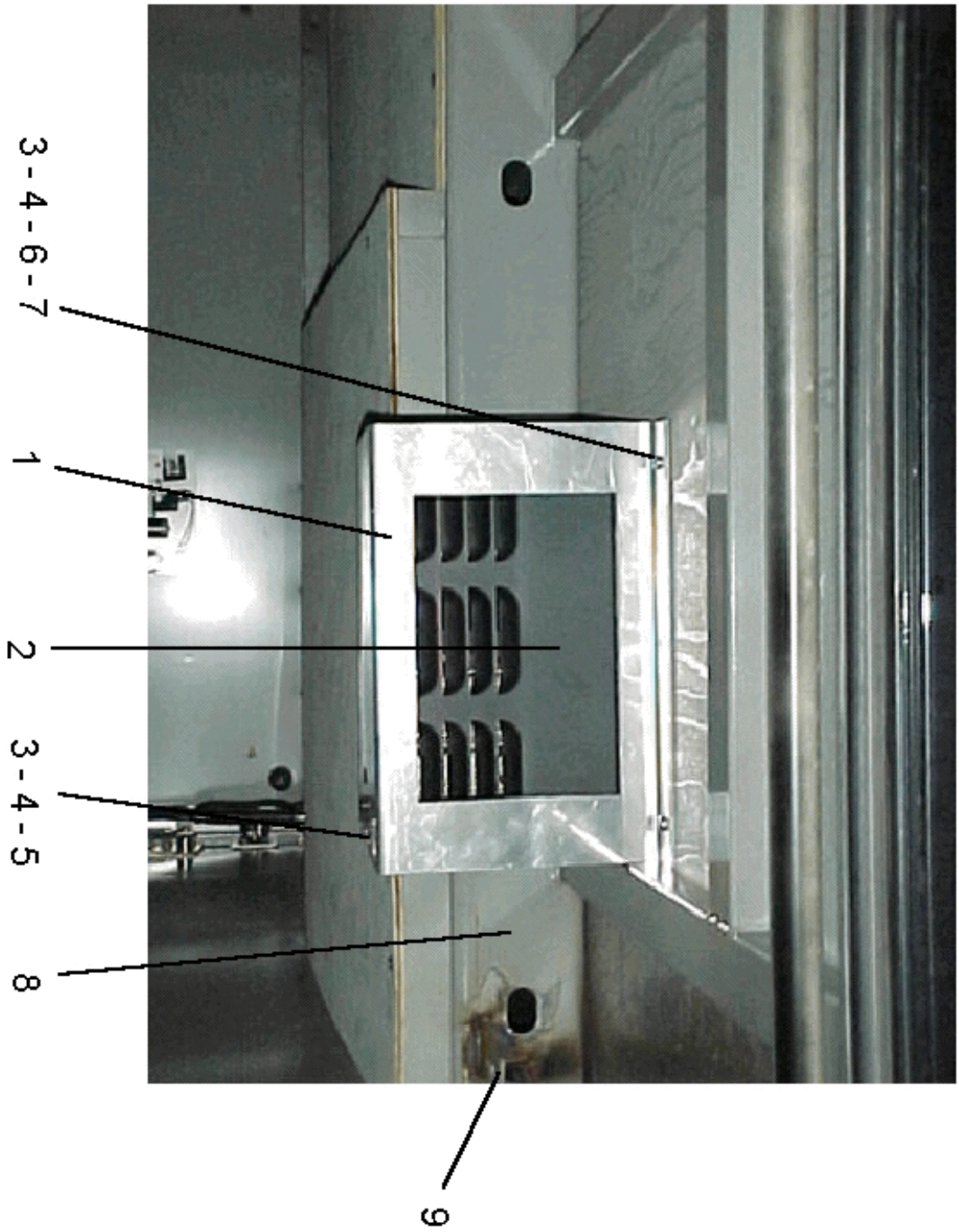

From Y-7046 Up to 6-8906	DATE: 01/2014	PAGE: Y2-2345-40

POWERVERTER - 24/110 VOLTS - 1000 WATTS

ITEM	PART	DESCRIPTION	XL45	MTH40	MTH45	MTH45S	NOTE
1	065456	SUPPORT, INVERTER	1				
2	562456	POWERVERTER ASSY / 24/110 V 1000 WATTS / REPLACED BY: 563082	1				A
3	500642	SCREW TP BDG PH #10x3/4 ZP	7				
4	500470	WASHER LO SPT .193x.334x.047 ZP	7				
5	500803	NUT SPR J #10A .035-.050	4				
6	502513	SCREW TP CAP HEX 5/16x1 ZP	3				
7	500476	WASHER LO SPT .317x.586x.078 ZP	3				
8	065458	CABLE MAIN	1				
9	504666	GROMMET / 1.000x1.375x.250x.625x1.750	1				
9	560933	CONNECTOR / 15 AMPS / HUBBELL 5266-C	AR				
9	562595	SPECIAL WIRE CABLE 14/3 / WHITE (BOAT CABLE)	AR				
9	562657	PLUG DOUBLE 110 VAC MURAL WHITE	AR				
9	562659	COVER PLATE DOUBLE 110V OUTLET WHITE	AR				
9	562661	RECEPTACLE BOX / 110Vac outlet WHITE	AR				
9	562664	PROTECTOR METALLIC 1"/CABLE	AR				
NS	065708	KIT, INVERTER REPLACEMENT / BAGGAGE COMPARMENT	1				
. NS	IS-01028	. SEE INSTRUCTION SHEET	1				
NS	065709	KIT, INVERTER REPLACEMENT / LOUNGE SEAT W/GALLEY	1				
. NS	IS-01028	. SEE INSTRUCTION SHEET	1				
		A) THIS POWERVERTER IS SUPERSEEDED BY KIT #065708 OR #065709					

From Y-7046 Up to 6-8906	DATE: 01/2014	PAGE: Y2-2345-41

POWERVERTER - 24/110 VOLTS - 5000 WATTS

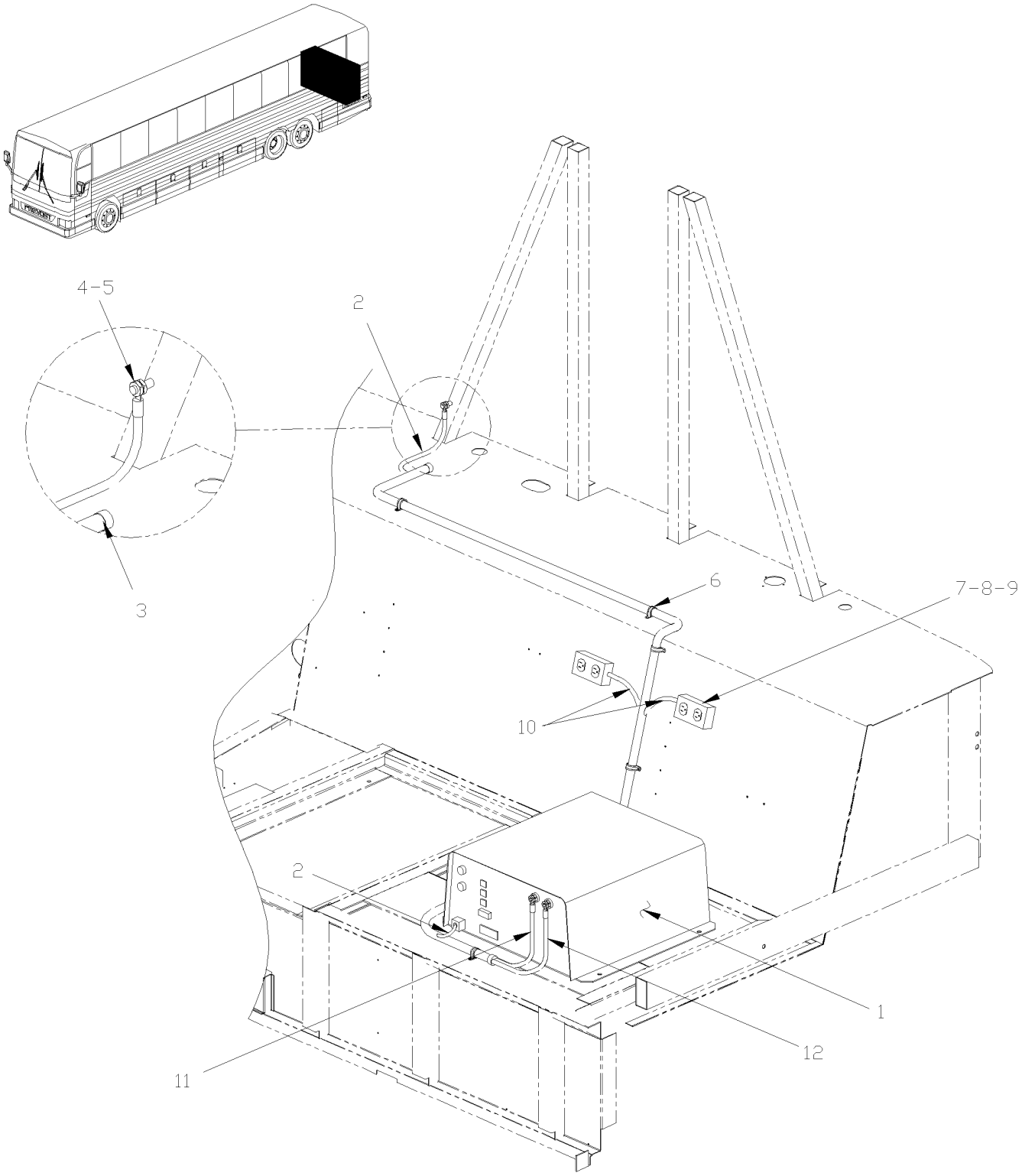

From Y-7046 Up to 6-8906	DATE: 01/2014	PAGE: Y2-2345-41

POWERVERTER - 24/110 VOLTS - 5000 WATTS

ITEM	PART	DESCRIPTION	XL45	MTH40	MTH45	MTH45S	NOTE
1	562567	POWERVERTER ASSY / 24/110 V 5000 WATTS	1				
2	065740	CABLE ASS	1				
3	504059	GROMMET / 1.250x1.500x.094x.375x1.875	1				
4	500998	NUT HEX 1/2-13 BR	1				
5	500482	WASHER LO SPT .506x.873x.125 ZP	1				
6	952639	CLAMP / 1"1/4 I.D.	7				
7	562657	PLUG DOUBLE 110 VAC MURAL WHITE	2				
8	562659	COVER PLATE DOUBLE 110V OUTLET WHITE	2				
9	562661	RECEPTACLE BOX / 110Vac outlet WHITE	2				
10	562595	SPECIAL WIRE CABLE 14/3 / WHITE (BOAT CABLE)	AR				
11	065738	CABLE ASSY / 24 /SWITCH TO INVERTER	1				A
11	065809	CABLE ASSY / 24 /SWITCH TO INVERTER	1				B
12	065739	CABLE ASSY / 0A BATTERIES TO INVERTER	1				A
12	065810	CABLE ASSY / 0A BATTERIES TO INVERTER	1				B
NS	Y2-0615-10	**BATTERIES COMPARTMENT PANEL**	1				
		A) AS SHOW WITH INVERTER INSTALLATION ON LOUNGE					
		SEAT					
		B) WITH INVERTER INSTALLATION IN 4TH BAGGAGE					
		COMPARTEMENT					

From Y-7046 Up to 6-8906	DATE: 01/2014	PAGE: Y2-2345-42

POWERVERTER - 24/110 VOLTS - 1800 WATTS

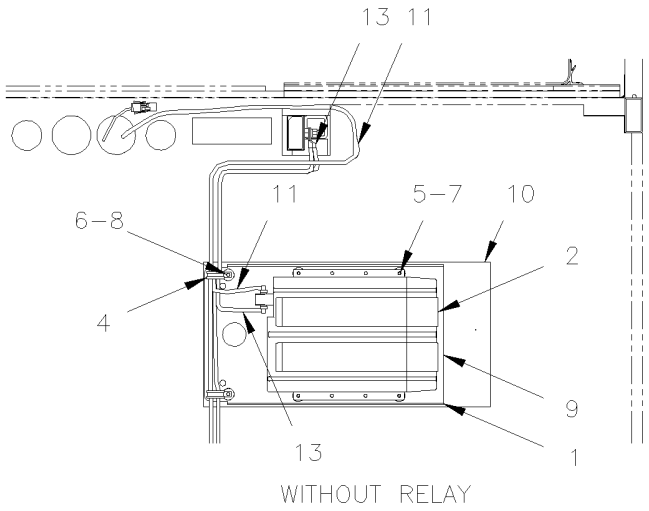

WITHOUT RELAY

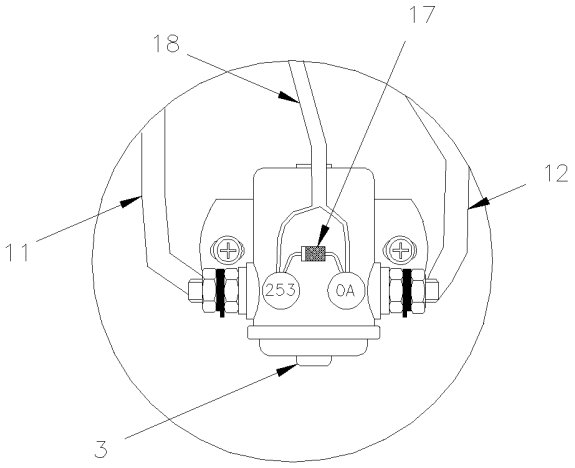

DETAIL A

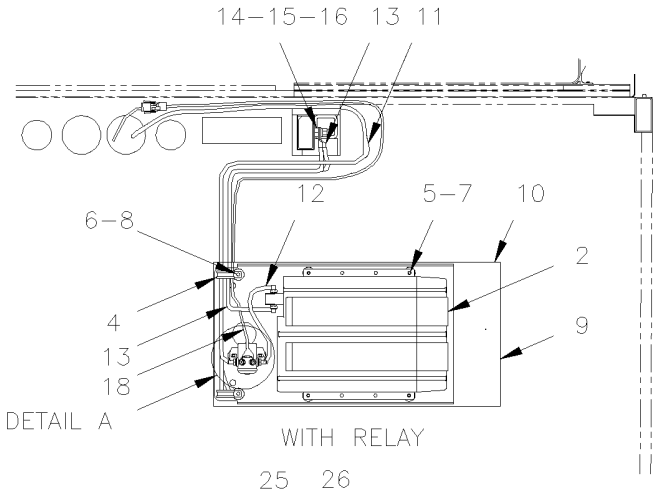

DETAIL A

WITH RELAY

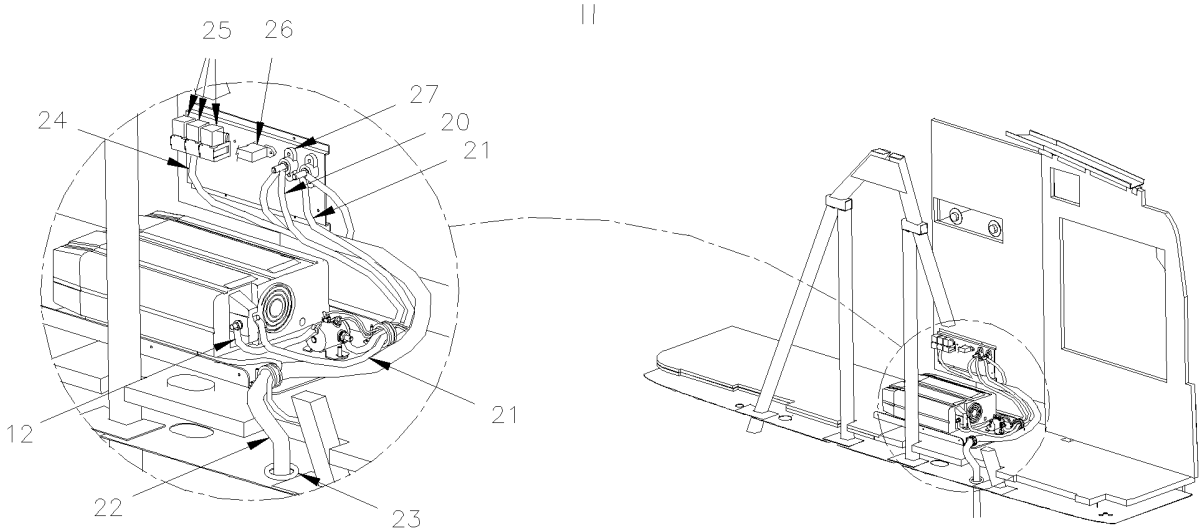

From Y-7046 Up to 6-8906	DATE: 01/2014	PAGE: Y2-2345-42

POWERVERTER - 24/110 VOLTS - 1800 WATTS

ITEM	PART	DESCRIPTION	XL45	MTH40	MTH45	MTH45S	NOTE
1	065519	INVERTER, SUPPORT	1				
2	563082	POWERVERTER ASSY / 24/110 V 1800 WATTS	1				
3	561005	SWITCH MAGNETIC / 24V S.P.S.T. / 200AMPS N.O.	1				
4	952637	CLAMP / 1"1/16 I.D.	2				
5	5001182	NUT HEX NYRT M6-1.0 SS	6				
6	500590	NUT HEX NYRT M4-0.7 ZP	2				
7	502573	WASHER FL 6.4x12.5x1.6 SS	6				
8	502637	WASHER FL .200x.437x.037 SS	2				
9	563131	POWERVERTER, COVER	1				
10	500572	SCREW MA TR PH #10-24x1/2 SS EMN	6				
11	065811	CABLE	1				
12	065540	CABLE ASSY #4 x 250MM	1				
13	065542	CABLE ASSY #4 x 1750MM	1				
14	5001330	SCREW CAP HEX 1/2-13x1 SS	1				
15	500998	NUT HEX 1/2-13 BR	1				
16	500482	WASHER LO SPT .506x.873x.125 ZP	1				
17	060798	DIODE ASSY / REPLACED BY: 064792	1				
18	065531	CABLE INVERTER	1				
20	065707	CABLE #24PV ASSY	1				
21	065706	CABLE #0 ASSY	1				
24	065018	CABLE ASSY W/LIGHT SWITCH	1				A
24	065705	CABLE ASSY / W/REAR GALLEY RELAY	1				B
25	561707	RELAY 24V S.P.D.T. W/RESISTOR / Up to 5-8577	3				
25	563332	RELAY 24V S.P.D.T. W/RESISTOR / "VOLVO" (20374662) From 5-8578	3				
27	560422	BLOCK, TERMINAL / 1 STUD 3/8-16 / BLACK	2				
		A) WITH ICE BOX					
		B) WITH FRIGO					

From Y-7046 Up to 6-8906	DATE: 01/2014	PAGE: Y2-2345-43

110 VOLT - OUTLET

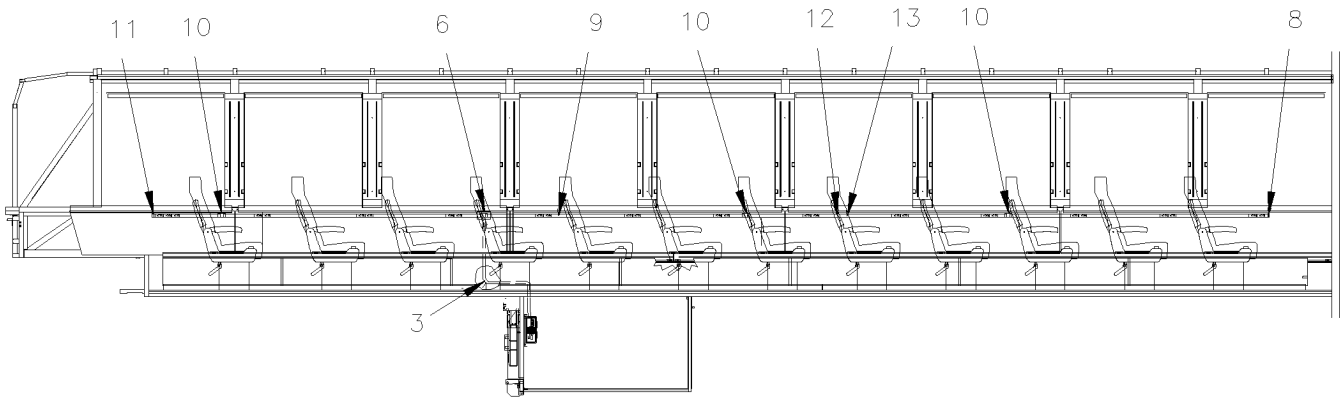

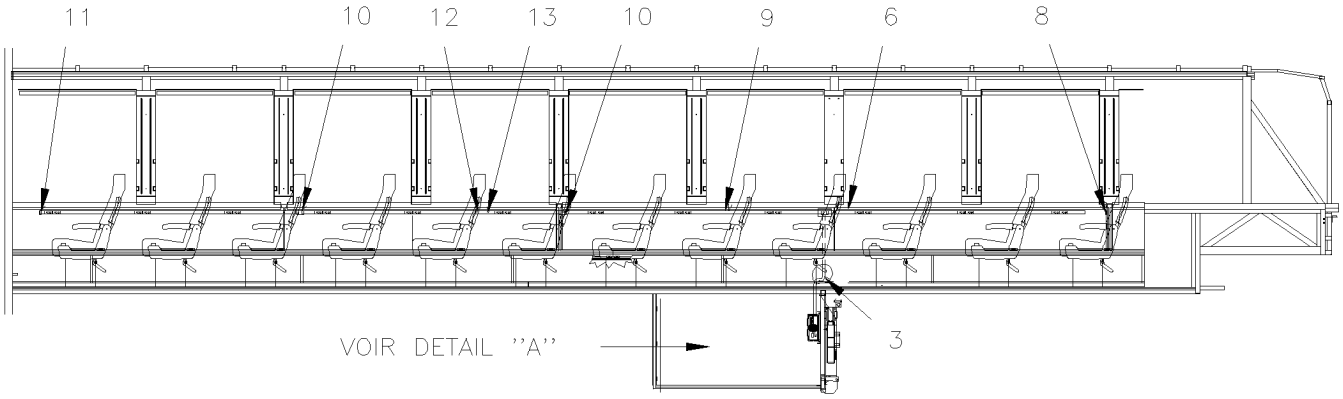

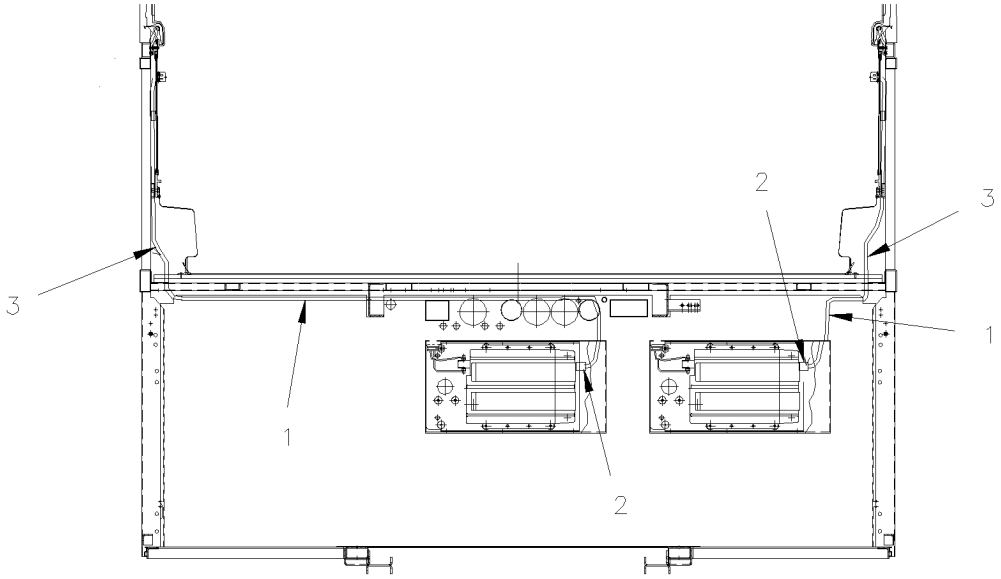

DETAIL ''A''

From Y-7046 Up to 6-8906	DATE: 01/2014	PAGE: Y2-2345-43

110 VOLT - OUTLET

ITEM	PART	DESCRIPTION	XL45	MTH40	MTH45	MTH45S	NOTE
1	562664	PROTECTOR METALLIC 1"/CABLE	AR				
2	560933	CONNECTOR / 15 AMPS / HUBBELL 5266-C	2				
3	562595	SPECIAL WIRE CABLE 14/3 / WHITE (BOAT CABLE)	AR				
6	563098	STARTER, 110V FEEDER HATRD WIRED	2				
8	563146	COVER, END TRACK	2				
9	563100	RECEPTACLE 110V	AR				
10	563101	CONNECTOR STRAIGHT TRACK	5				
11	563102	TRACK END CAP	2				
12	563099	TRACK 110V 96"	9				
13	563103	COVER, TRACK	12				

From Y-7046 Up to 6-8906	DATE: 01/2014	PAGE: Y2-2345-99
110 VOLT - OUTLET / "RETROFIT"		

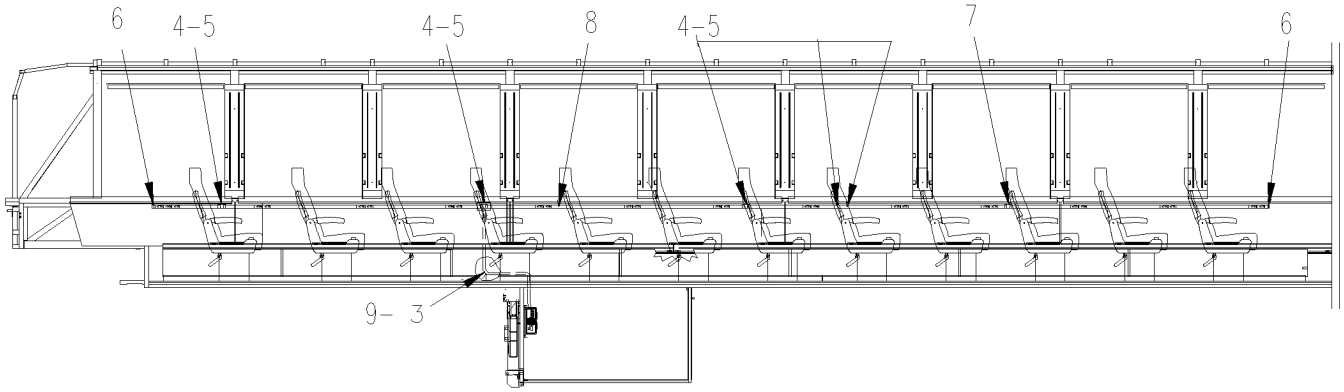

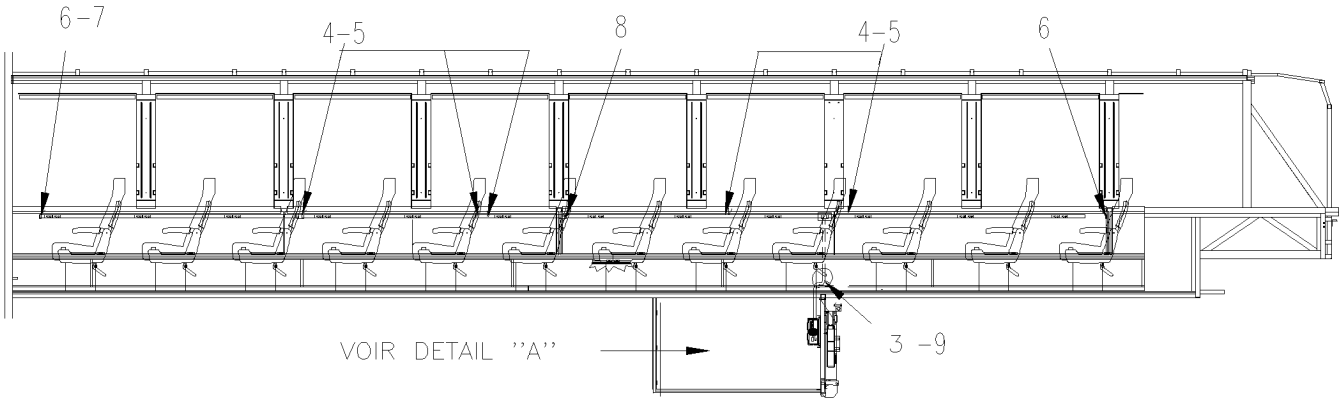

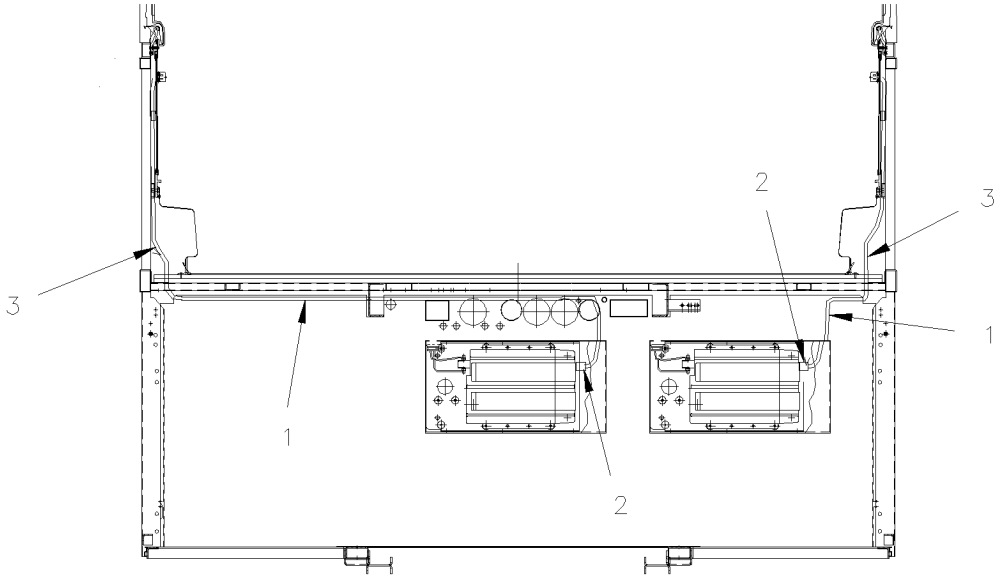

DETAIL ''A''

From Y-7046 Up to 6-8906	DATE: 01/2014	PAGE: Y2-2345-99

110 VOLT - OUTLET / "RETROFIT"

564151

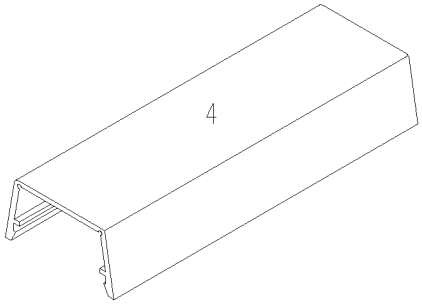

COVER ALUMINIUM
RACEWAY 110V

564152

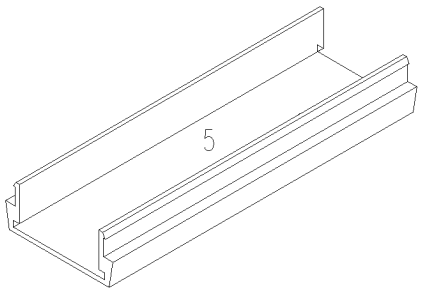

BASE ALUMINIUM
RACEWAY 110V

564153

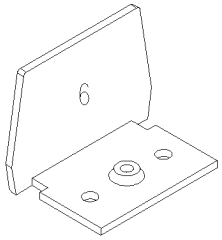

BLANK END FITTING
RACEWAY 110V

564154

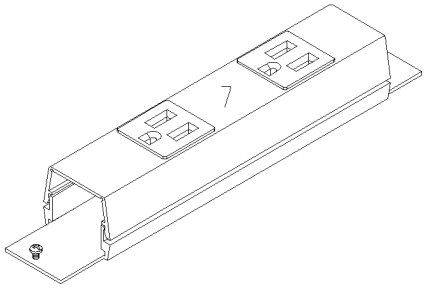

RECEPTACLE DOUBLE
RACEWAY 110V

564155

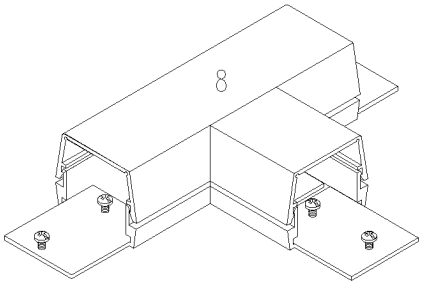

TEE
RACEWAY 110V

564156

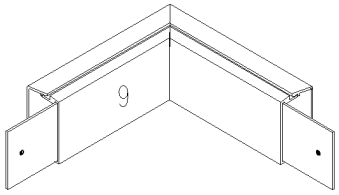

ELNOW
RACEWAY 110V

From Y-7046 Up to 6-8906	DATE: 01/2014	PAGE: Y2-2345-99

110 VOLT - OUTLET / "RETROFIT"

562657

WHITE

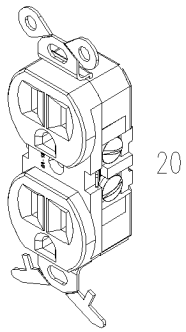

PLUG DOUBLE
OUTLET 110V

562659

WHITE

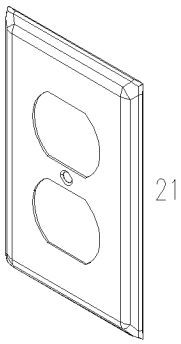

PLATE OUTLET 110V

564129

WHITE

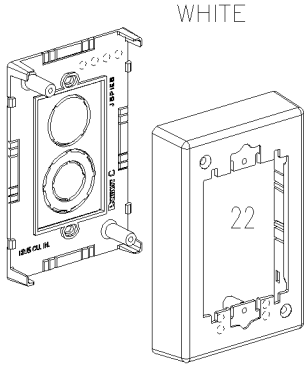

RECEPTACLE BOX
OUTLET 110V

564467

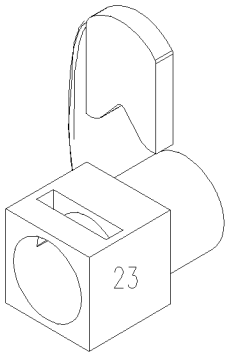

CONNECTOR IBERVILLE

563624

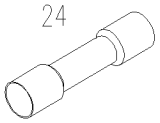

563848

WHITE

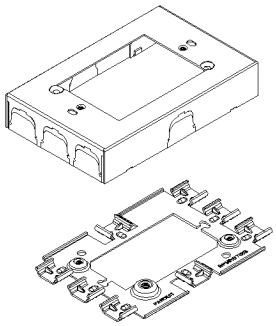

RECEPTACLE BOX
OUTLET 110V

563846

WHITE

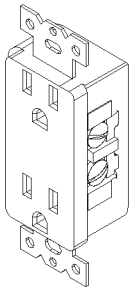

PLUG DOUBLE
OUTLET 110V

563847

WHITE

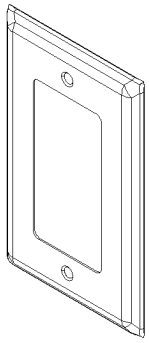

PLATE OUTLET 110V

From Y-7046 Up to 6-8906	DATE: 01/2014	PAGE: Y2-2345-99

110 VOLT - OUTLET / "RETROFIT"

ITEM	PART	DESCRIPTION	XL45	MTH40	MTH45	MTH45S	NOTE
1	562664	PROTECTOR METALLIC 1"/CABLE	AR				
2	560933	CONNECTOR / 15 AMPS / HUBBELL 5266-C	AR				
3	562595	SPECIAL WIRE CABLE 14/3 / WHITE (BOAT CABLE)	AR				
	N.P.N.	WIRE CABLE GA 16/3					4
4	564151	RACEWAY BASE ALUMINUM 60"	AR				
5	564152	RACEWAY COVER ALUMINUM 60"	AR				
6	564153	BLANK END FITTING CLOSING	AR				
7	564154	RECEPTACLE DOUBLE / IN-LINE 15 Amps	AR				
8	564155	TEE ALUMINUM RACEWAY	AR				
9	564156	ELBOW 90° EXTERNAL RACEWAY	AR				
20	562657	PLUG DOUBLE 110 VAC MURAL WHITE	AR				
21	562659	COVER PLATE DOUBLE 110V OUTLET WHITE	AR				
22	564129	RECEPTACLE BOX / 110Vac outlet WHITE	AR				
22	563848	RECEPTACLE BOX / 100Vac outlet WHITE NYLON	AR				
23	564467	CONNECTOR IBERVILLE 1/2" PLASTIC GRAY	AR				
24	563624	BUTT SPLICE / 12-10 / YELLOW / W/THERMORETRAC / PANDUIT BSH10-E	AR				
25	563846	PLUG DOUBLE 110 VAC MURAL WHITE NYLON "DECORA"	AR				
26	562662	PLUG DOUBLE 110 VAC MURAL WHITE NYLON "DECORA"	AR				
26	563847	COVER PLATE DOUBLE 110V OUTLET WHITE NYLON	AR				
26	564507	PLUG DOUBLE 110 VAC MURAL GRAY NYLON "DECORA"	AR				
27	563847	COVER PLATE DOUBLE 110V OUTLET WHITE NYLON	AR				
27	564508	COVER PLATE DOUBLE 110V OUTLET SILVER	AR				
		4) NO PARTS NUMBER					

From Y-7046 Up to 2-7764	DATE: 01/2014	PAGE: Y2-2350-10
WATER HEATER - INSTALLATION		

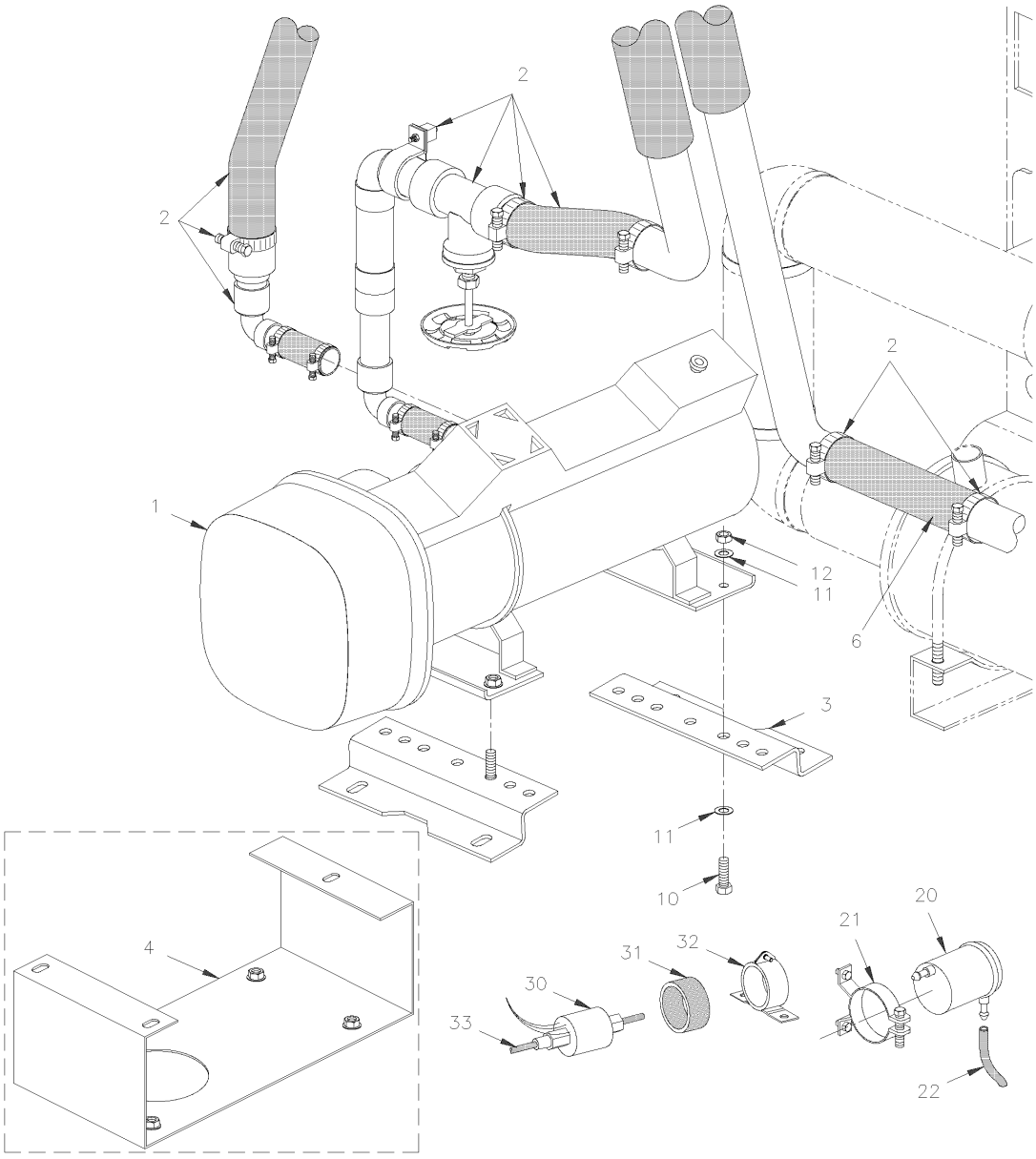

From Y-7046 Up to 2-7764	DATE: 01/2014	PAGE: Y2-2350-10

WATER HEATER - INSTALLATION

ITEM	PART	DESCRIPTION	XL45	MTH40	MTH45	MTH45S	NOTE
1	871036	**WATER HEATER - "WEBASTO" 80,000 B.T.U. From Y-7046 Up to 2-7764**					
1	871085	**WATER HEATER - "WEBASTO" 45,000 B.T.U. From Y-7046 Up to 2-7764**					
1	871097	**WATER HEATER - "ESPAR" 41,000 B.T.U. From Y-7046 Up to 2-7764**					
1	871100	**WATER HEATER - "PROHEAT" 80,000 B.T.U. From Y-7257 Up to 4-8464**					
1	871329	**WATER HEATER - "PROHEAT" 80,000 B.T.U. From 4-8165 Up to 6-8906**					
1	063399	WIRING HARNESS W/"EXPAR"	1				
2	Y2-2222-00	**HEATER LINE REAR SECTION - BUS**					
4	373765	BOX SUPPORT / W/80000 BTU "PROHEAT" Up to Y-7256	1				
4	373777	BOX SUPPORT / W/80000 BTU "PROHEAT" From Y-7257	1				
10	502780	SCREW CAP HEX M8-1.25x25 SS EMN	4				
11	500874	WASHER FL 8.4x17.0x1.6 ZP	4				
12	502744	NUT HEX STO M8-1.25 ZP	4				
20	871037	FILTER, FUEL	1				
21	871038	SUPPORT, FILTER FUEL	1				
22	503411	HOSE / 2556 / #4 X 50'	AR				
31	870972	RING, RUBBER	1				
32	870971	SUPPORT, PUMP	1				
33	870977	HOSE 3.2MM I.D. 25' / S.L.	AR				

From Y-7046 Up to 2-7764	DATE: 01/2014	PAGE: 871036
WATER HEATER - "WEBASTO" 80,000 B.T.U.		

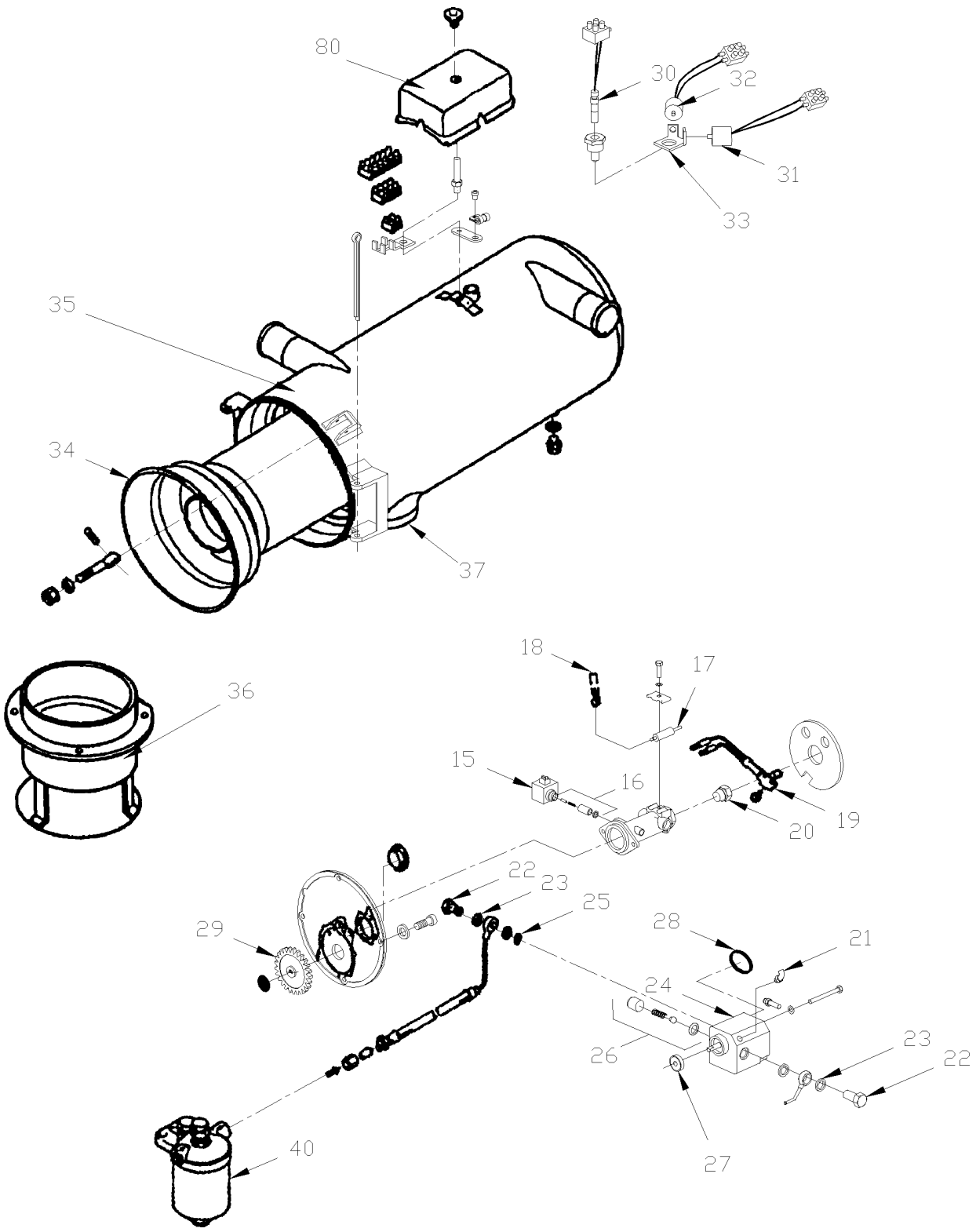

From Y-7046 Up to 2-7764	DATE: 01/2014	PAGE: 871036
WATER HEATER - "WEBASTO" 80,000 B.T.U.		

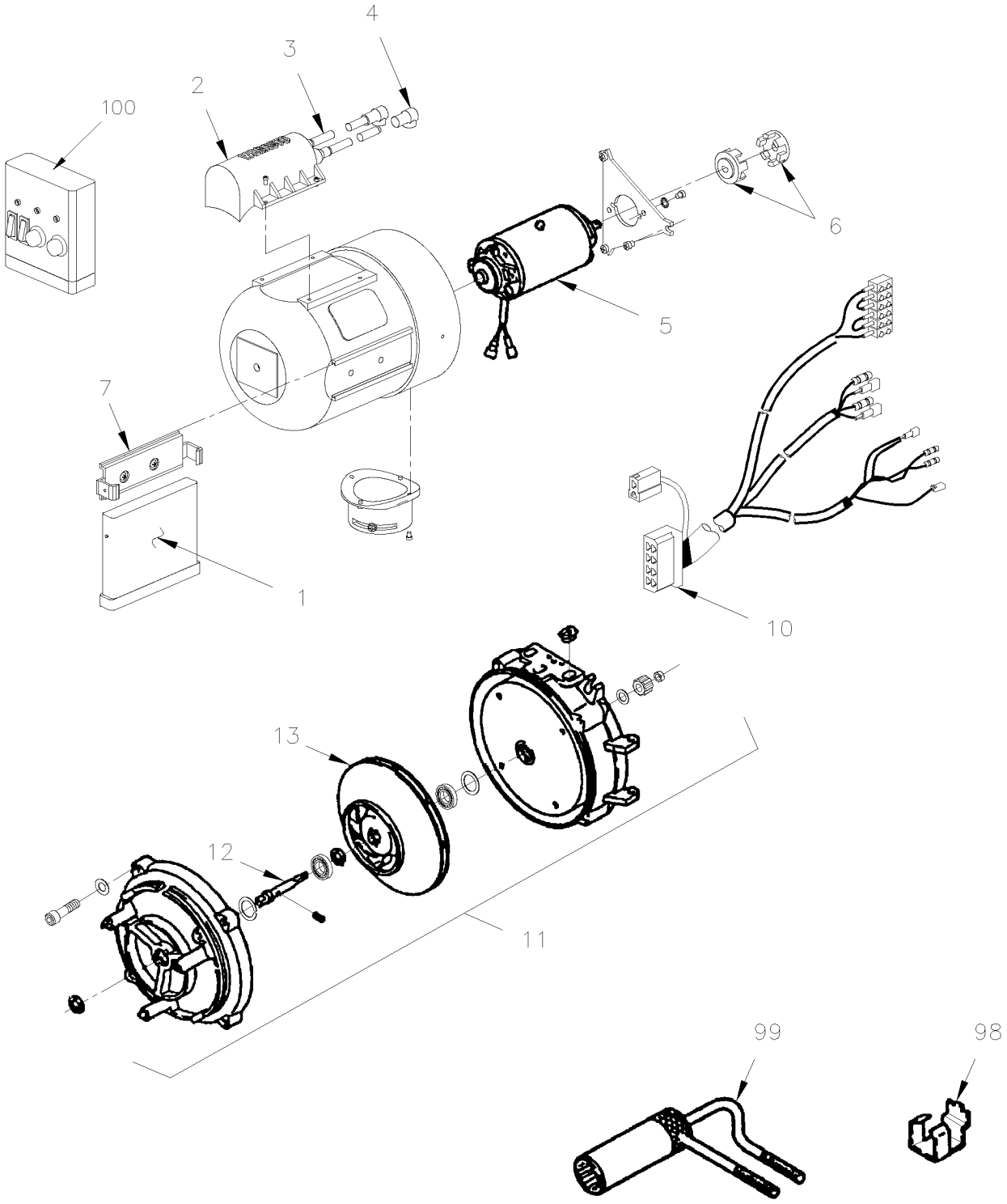

From Y-7046 Up to 2-7764	DATE: 01/2014	PAGE: 871036

WATER HEATER - "WEBASTO" 80,000 B.T.U.

ITEM	PART	DESCRIPTION	XL45	MTH40	MTH45	MTH45S	NOTE
		WATER HEATER - "WEBASTO" 80,000 B.T.U.	1				
	N25810	WATER HEATER - "WEBASTO" 80,000 B.T.U.					
NS	871309	BURNER HEAD ASSY 24V / DBW 2020	1				
1	870909	. CONTROL UNIT 24V	1				A
. NS	561186	. . CONNECTOR / FASTIN-FASTON (.250) / RH 6C / AMP 925276-0	1				
. NS	561597	. . CONNECTOR / 56 SERIES / TAB RH 2C / BROWN / PED 2965981	1				
. NS	562363	. . CONNECTOR / FASTIN-FASTON (.250) / RH 8C / AMP 163007	1				
2	870910	. COIL, IGNITION	1				
3	870911	. . SOCKET	2				
4	870912	. . CABLE, HIGH TENSION / S.L.	AR				
5	870913	. MOTOR ASSY / 24V	1				
6	870939	. CLUTCH	2				
7	N8883051	. CLIP CONTROL UNIT	1				
10	870914	. WIRING HARNESS / W/TERMINAL BLOCK 6 C	1				
11	870915	. KIT, MOUNTING SHAFT	1				
12	870916	. SHAFT	1				
13	G1017453	. ROTOR TURBINE	1				
15	870917	. SOLONOID VALVE / 24V	1				
16	870919	. . UNLOADER POWER ASSY	1				
17	870920	. ELECTRODE, IGNITION	2				
18	870921	. PLUG / ELECTRODE	2				
19	870922	. CELL, PHOTOELECTRIC	1				
20	870918	. NOZZLE 0.80GPH	1				
20	871316	NOZZLE 0.35GPH	AR				
20	871126	NOZZLE 0.40GPH	AR				
20	192271	NOZZLE 0.65GPH / PACK OF 12	AR				
20	G5007384	NOZZLE 0.65GPH / REPLACED BY: G1017473	AR				
20	G1017473	NOZZLE 0.65GPH	AR				
20	871291	NOZZLE 0.85GPH	AR				
21	870928	. PIPE, HIGH PRESSURE	1				
22	870929	. BANJO BOLT / M10-1.0	2				
23	870923	. BANJO WASHER / M10	4				
24	870930	. PUMP FUEL	1				
25	870924	. . FILTER	1				
26	870925	. . VALVE, PRESSURE CONTROL	1				
27	870926	. . GASKET / REPLACED BY: 870930	1				
		A) FOR PRODUCT IMPROVMENT USE KIT #871246 FOTR					
		EXTEND WIRE CABLE BETWEEN CONTROL BOX AND					
		WATER HEATER OR USE KIT #065744 FOR FIXED					
		UNIT CONTROL BOX IN WATERPROOF BOX					

From Y-7046 Up to 2-7764	DATE: 01/2014	PAGE: 871036

WATER HEATER - "WEBASTO" 80,000 B.T.U.

ITEM	PART	DESCRIPTION	XL45	MTH40	MTH45	MTH45S	NOTE
28	870927	. . GASKET, RING / REPLACED BY: 870930	1				
29	870931	. SPUR GEAR	1				
30	870932	. FUSE THERMO 138°C (YELLOW)	1				
31	870933	. RELEASE, THERMO 117°C (GREEN)	1				
32	870934	. CONTROL THERMOSTAT 75°C GREEN & RED	1				
33	870935	. ANGLE BRACKET	1				
34	871057	. CHAMBER, COMBUSTION / W/80,000 BTU	1				
35	871251	. HEAT EXCHANGER	1				
36	870940	. PIPE, OUTLET	1				
37	871039	EXHAUST PIPE SS 70MM O.D. X 1000MM	1				
40	Y2-2350-10	**WATER HEATER - INSTALLATION**					
80	N8883102	CAP	1				
98	870937	GAUGE / IGNITION ELECTRODE	1				
99	870938	BOX WRENCH / HIGH PRESSURE NOZZLE	1				
100	871319	TESTING GEAR TOOL	AR				
NS	871246	KIT, RETROFIT W/HEATER CONTROL BOX WATERTIGHT	AR				
NS	192273	KIT NOZZLE W/OVERHEAT FUSE / DBW 2020	AR				B
NS	065744	KIT, RETROFIT BOX W/ENTENSION CABLE AND SUPP.	AR				
NS	192274	KIT, MOTOR 24V W/BEARING, NOZZLE & O.H. FUSE / DBW 2020	AR				
NS	192269	KIT, ELECTRICAL REBUILT COMPONENTS 24V / DBW 2020 & DBW 300	AR				C
		B) INCLUDES 2 ITEMS #20 & 30					
		C) INCLUDES ITEMS #1, 2, 3, 4, 10, 17, 19 & MORE					

From Y-7046 Up to 2-7764	DATE: 01/2014	PAGE: 871085

WATER HEATER - "WEBASTO" 45,000 B.T.U.

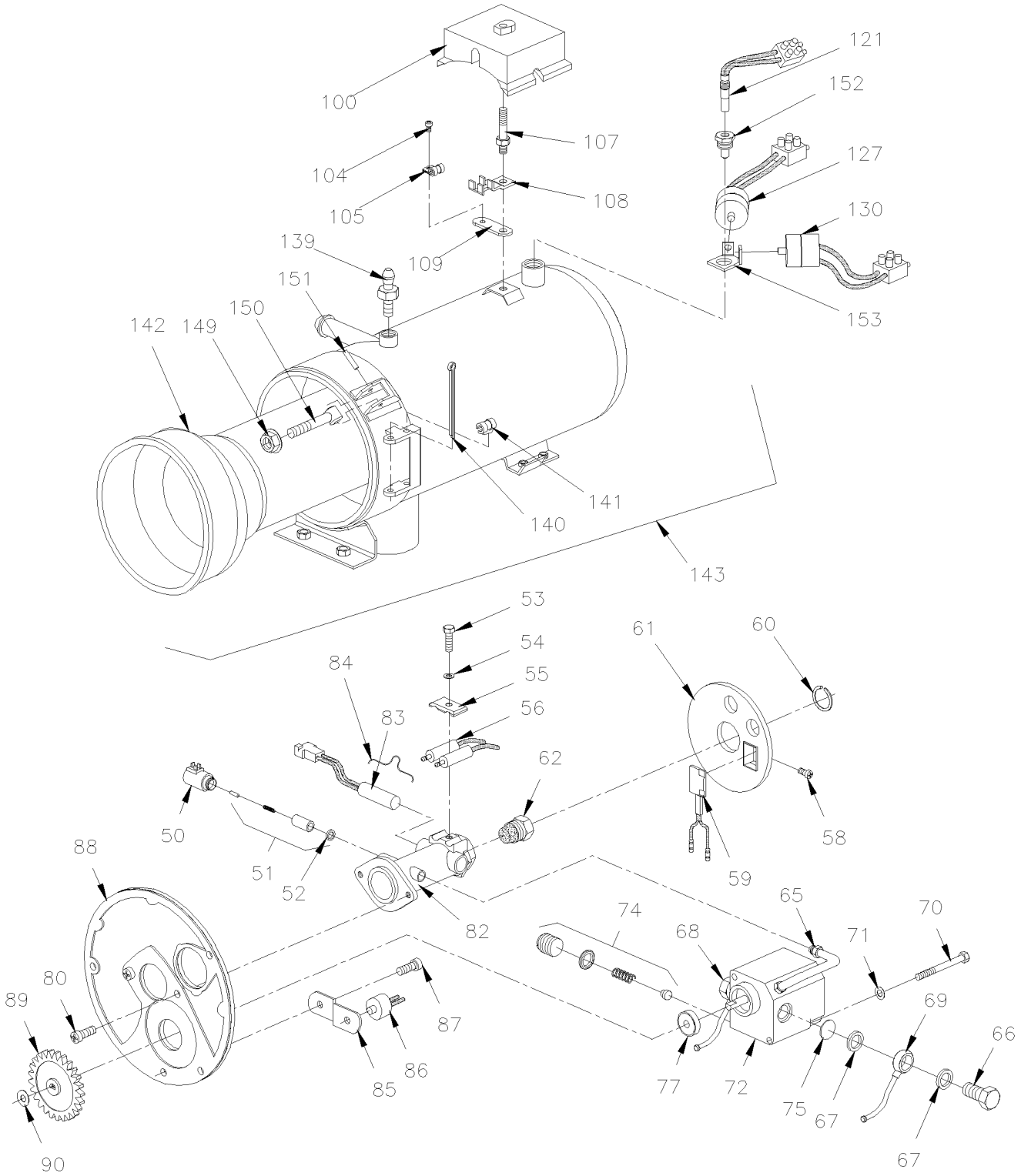

From Y-7046 Up to 2-7764	DATE: 01/2014	PAGE: 871085
WATER HEATER - "WEBASTO" 45,000 B.T.U.		

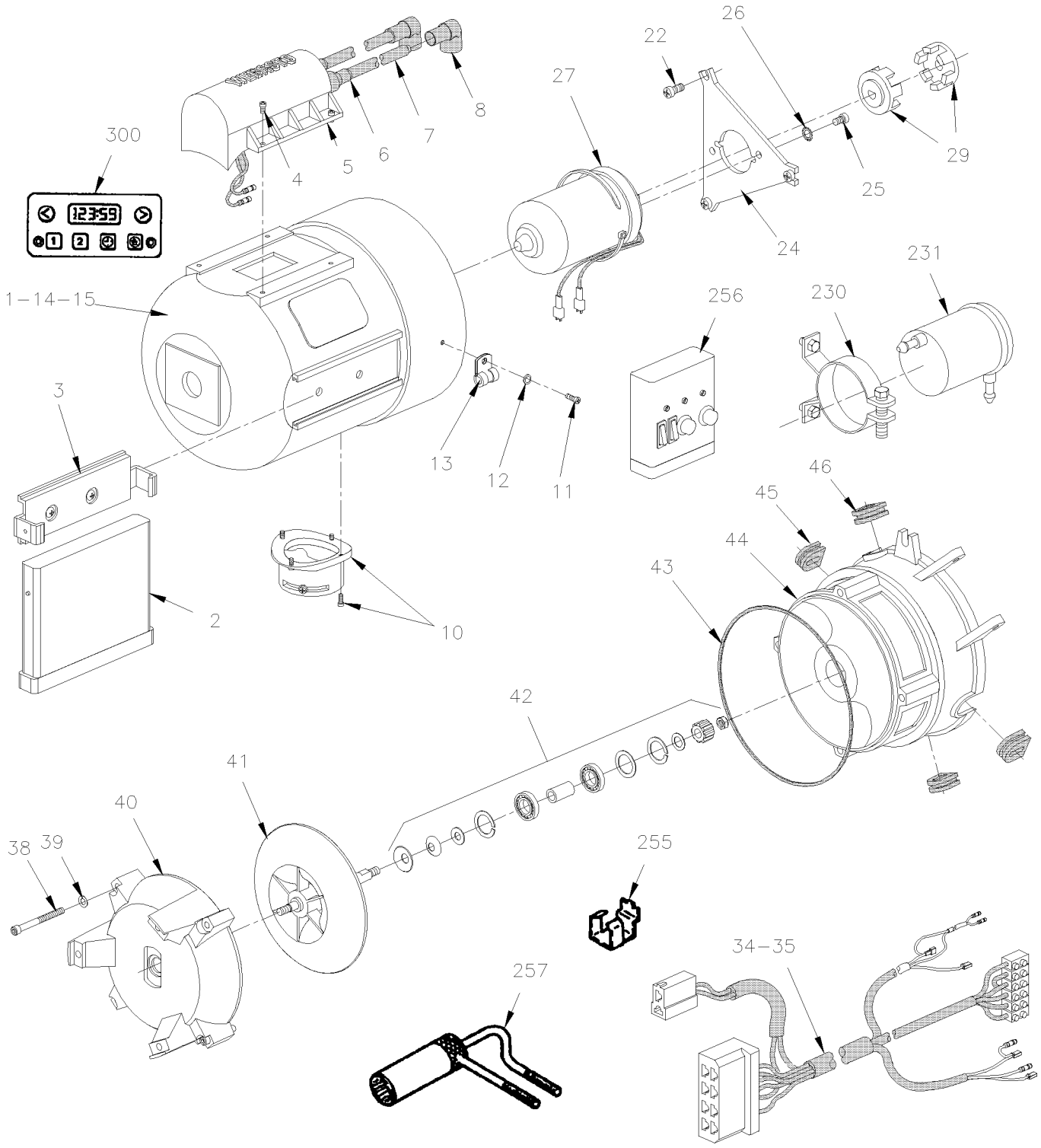

From Y-7046 Up to 2-7764	DATE: 01/2014	PAGE: 871085

WATER HEATER - "WEBASTO" 45,000 B.T.U.

ITEM	PART	DESCRIPTION	XL45	MTH40	MTH45	MTH45S	NOTE
		WATER HEATER - "WEBASTO" 45,000 B.T.U.	1				
1	871376	. BURNER HEAD ASSY / 24V / DBW 2010	1				
2	870909	. CONTROL UNIT 24V	1				A
. NS	561186	. . CONNECTOR / FASTIN-FASTON (.250) / RH 6C / AMP 925276-0	1				
. NS	561597	. . CONNECTOR / 56 SERIES / TAB RH 2C / BROWN / PED 2965981	1				
. NS	562363	. . CONNECTOR / FASTIN-FASTON (.250) / RH 8C / AMP 163007	1				
3	N8883051	. CLIP CONTROL UNIT	1				
4	G1017468	. SCREW M3.5x14	4				
5	871119	. COIL, WATER HEATER IGNITER 24V	1				
5	191768	. COIL, WATER HEATER IGNITER 12V	1				
6	870911	. SOCKET	2				
7	870912	. CABLE, HIGH TENSION / S.L.	AR				
8	G1017515	. BOOT PLUG	2				
10	G1017415	. INTAKE SOCKET	1				
11	G1093260	. SCREW M4x12	4				
12	G1017467	. WASHER SERRATED A4.3	4				
13	G1093261	. CLAMP	1				
14	G1017517	. PROTECTOR CAP W/LABEL	1				
15	G1017565	. . DECAL "DANGER"	2				
22	502529	. SCREW MA BDG PH M5-0.8x12 BZC	3				
22	G1017423	. SCREW W/WASHER AM5x12	3				
24	G1093262	. FLANGE	1				
25	500344	. SCREW MA RND PH M4-0.7x12 ZP	2				
25	G1093260	. SCREW M4x12	2				
26	G1017467	. WASHER SERRATED A4.3	2				
27	871120	. MOTOR ASSY / 24V	1				
27	191771	. MOTOR ASSY / 12V	1				
27	G1017520	. MOTOR ASSY / 24V	1				
29	871121	. CLUTCH HALF	2				
29	G1017518	. CLUTCH HALF	2				
34	871122	. HARNESS, CABLE 4 WAYS	1				
35	871123	. HARNESS, CABLE 6 WAYS	1				
35	G1017522	. CABLE HARNESS 6W / REPLACED BY: 871123	1				
36	G1017427	. TERMINAL BLOCK 6W	1				
36	G101742	. TERMINAL BLOCK 4W	1				
38	G1017546	. SCREW CAP HEXS M5x35	4				
39	G1017547	. SPRING WASHER	4				
40	G1017523	. MOTOR SUPPORT	1				
41	871124	. IMPELLER WITH SHAFT	1				
		A) FOR PRODUCT IMPROVMENT USE KIT #871246 FOTR					
		EXTEND WIRE CABLE BETWEEN CONTROL BOX AND					
		WATER HEATER OR USE KIT #065744 FOR FIXED					
		UNIT CONTROL BOX IN WATERPROOF BOX					

From Y-7046 Up to 2-7764	DATE: 01/2014	PAGE: 871085

WATER HEATER - "WEBASTO" 45,000 B.T.U.

ITEM	PART	DESCRIPTION	XL45	MTH40	MTH45	MTH45S	NOTE
41	G1017524	. IMPELLER WITH SHAFT / REPLACED BY: 871124	1				
42	871125	. PARTS FOR SHAFT MOUNTING	1				
42	G1017525	. PARTS FOR SHAFT MOUNTING / REPLACED BY: 871125	1				
43	871392	. SEALING RING	1				
43	G1093264	. SEALING RING / REPLACED BY: 871392	1				
44	871393	. BLOWER HOUSING	1				
44	G1093265	. BLOWER HOUSING	1				
45	871394	. GROMMET L.H. SIDE	2				
45	G1017527	. GROMMET L.H. SIDE	2				
46	871395	. GROMMET R.H. SIDE	2				
46	G1017528	. GROMMET R.H. SIDE	2				
50	870917	. SOLONOID VALVE / 24V	1				
50	G1017456	. SOLONOID VALVE / 24V	1				
50	192305	. SOLONOID VALVE / 12V	1				
50	G1093266	. SOLONOID VALVE / 12V	1				
51	870919	. UNLOADER POWER ASSY	1				
52	871297	. . GASKET	1				
53	502531	. SCREW CAP HEX M6-1.0x16 G8.8 ZP	1				
53	G1017437	. SCREW CAP HEX	1				
54	G1017470	. SPRING WASHER	1				
55	G1017461	. CLAMP	1				
56	870920	. ELECTRODE, IGNITION	2				
58	500560	. SCREW MA PAN PH M4-0.7x6 ZP	1				
58	G1017474	. SCREW MA PAN PH M4x6	1				
59	870922	. CELL, PHOTOELECTRIC	1				
60	G1017475	. RETAINING RING	1				
60	G1017475	. RETAINING RING	1				
61	191679	. DISC	1				
62	871316	. NOZZLE 0.35GPH	1				
62	871126	. NOZZLE 0.40GPH	1				
62	G1017532	. NOZZLE 0.40GPH	1				
62	192271	. NOZZLE 0.65GPH / PACK OF 12	AR				
62	G5007384	. NOZZLE 0.65GPH / REPLACED BY: G1017473	AR				
62	G1017473	. NOZZLE 0.65GPH	AR				
62	871291	. NOZZLE 0.85GPH	AR				
65	870928	. PIPE, HIGH PRESSURE	1				
66	870929	. BANJO BOLT / M10-1.0	1				
67	870923	. BANJO WASHER / M10	4				
68	G1017533	. FUEL LINE / (FEED LINE PRESSURE)	1				

From Y-7046 Up to 2-7764	DATE: 01/2014	PAGE: 871085

WATER HEATER - "WEBASTO" 45,000 B.T.U.

ITEM	PART	DESCRIPTION	XL45	MTH40	MTH45	MTH45S	NOTE
69	G1017534	. FUEL LINE / (RETURN)	1				
70	G1017441	. SCREW CAP HEXS M4x30	2				
71	G1017442	. SPRING WASHER / REPLACED BY: 870929	2				
72	871127	. FUEL PUMP	1				
72	G1093267	. FUEL PUMP	1				
74	870925	. . VALVE, PRESSURE CONTROL	1				
75	870924	. . FILTER	1				
77	870926	. . GASKET / REPLACED BY: 870930	1				
80	G1017424	. SCREW W/WASHER AM5x12	2				
82	G5007387	. NOZZLE HOLDER / REPLACED BY: N8883089	1				
82	N8883089	. NOZZLE HOLDER	1				
83	G1017530	. HEATING ELEMENT	1				
84	N8883147	. HOLDING STRAP	1				
85	G1017417	. BRACKET	1				
86	G1093269	. NOZZLE PRE-HEAT THERMOSTAT	1				
87	G1017423	. SCREW W/WASHER AM5x12	4				
88	G1017536	. NOZZLE HOLDER PLATE	1				
89	870931	. SPUR GEAR	1				
90	G1017439	. RETAINING RING	1				
	G1017537	. GREASE ISOFLEX LDS 18	1				
100	N8883102	. CAP	1				
104	G1017549	. SCREW M4x8	1				
105	G1017538	. CLAMP	1				
107	G1017487	. SCREW	1				
108	G1017488	. BRACKET	1				
109	G1017489	. JOINT / REPLACED BY: G1017417	1				
121	870932	. FUSE THERMO 138°C (YELLOW)	1				
127	870934	. CONTROL THERMOSTAT 75°C GREEN & RED	1				
128	G1093271	. CONTROL THERMOSTAT 70°C WHITE & ORANGE	1				
130	870933	. RELEASE, THERMO 117°C (GREEN)	1				
139	G1093273	. BLEEDING VALVE	1				
140	G1017550	. SECURRING CUTTER PIN	1				
141	G1017541	. CABLE CLAMP	1				
142	871128	. CHAMBER, COMBUSTION	1				
142	G1017540	. CHAMBER, COMBUSTION	1				
143	G1017542	. HEAT EXCHANGER ASSY	1				
149	5001110	. NUT HEXF M6-1.0 ZP	2				
149	G1017551	. NUT W/WASHER	2				
150	G1093275	. EYE BOLT AM6x45	2				

From Y-7046 Up to 2-7764	DATE: 01/2014	PAGE: 871085

WATER HEATER - "WEBASTO" 45,000 B.T.U.

ITEM	PART	DESCRIPTION	XL45	MTH40	MTH45	MTH45S	NOTE
151	G1017553	. SLOTTED PIN	2				
152	G1017428	. PLUG	2				
153	870935	. ANGLE BRACKET	1				
153	G1017479	. ANGLE BRACKET / REPLACED BY: 870935	1				
230	871038	SUPPORT, FILTER FUEL	1				
231	871037	FILTER, FUEL	1				
251	871096	EXHAUST PIPE FLEXIBLE 38MM O.D. X 1000MM	1				
255	870937	GAUGE / IGNITION ELECTRODE	1				
256	871319	TESTING GEAR TOOL	AR				
256	N8887040	TESTING GEAR TOOL / REPLACED BY: 871319	1				
257	870938	BOX WRENCH / HIGH PRESSURE NOZZLE	1				
257	N8887748	BOX WRENCH / HIGH PRESSURE NOZZLE / REPLACED BY: 870938	1				
258	N8887750	FUEL PRESSURE GAUGE	1				
259	G1093411	MAINTENANCE MANUAL PAPER	1				
300	H3-0645-00	**SWITCHES L.H. CONSOLE - BUS**					
300	H3-0645-01	**SWITCHES L.H. CONSOLE - BUS**					
300	XL-1806-50	**VALVE CONSOLE - BUS R.H. & MTH L.H.**	1	1			
300	Y2-0645-00	**SWITCHES L.H. CONSOLE - BUS**					
NS	871246	KIT, RETROFIT W/HEATER CONTROL BOX WATERTIGHT	AR				
NS	065744	KIT, RETROFIT BOX W/ENTENSION CABLE AND SUPP.	AR				

From Y-7046 Up to 2-7764	DATE: 01/2014	PAGE: 871097
WATER HEATER - "ESPAR" 41,000 B.T.U.		

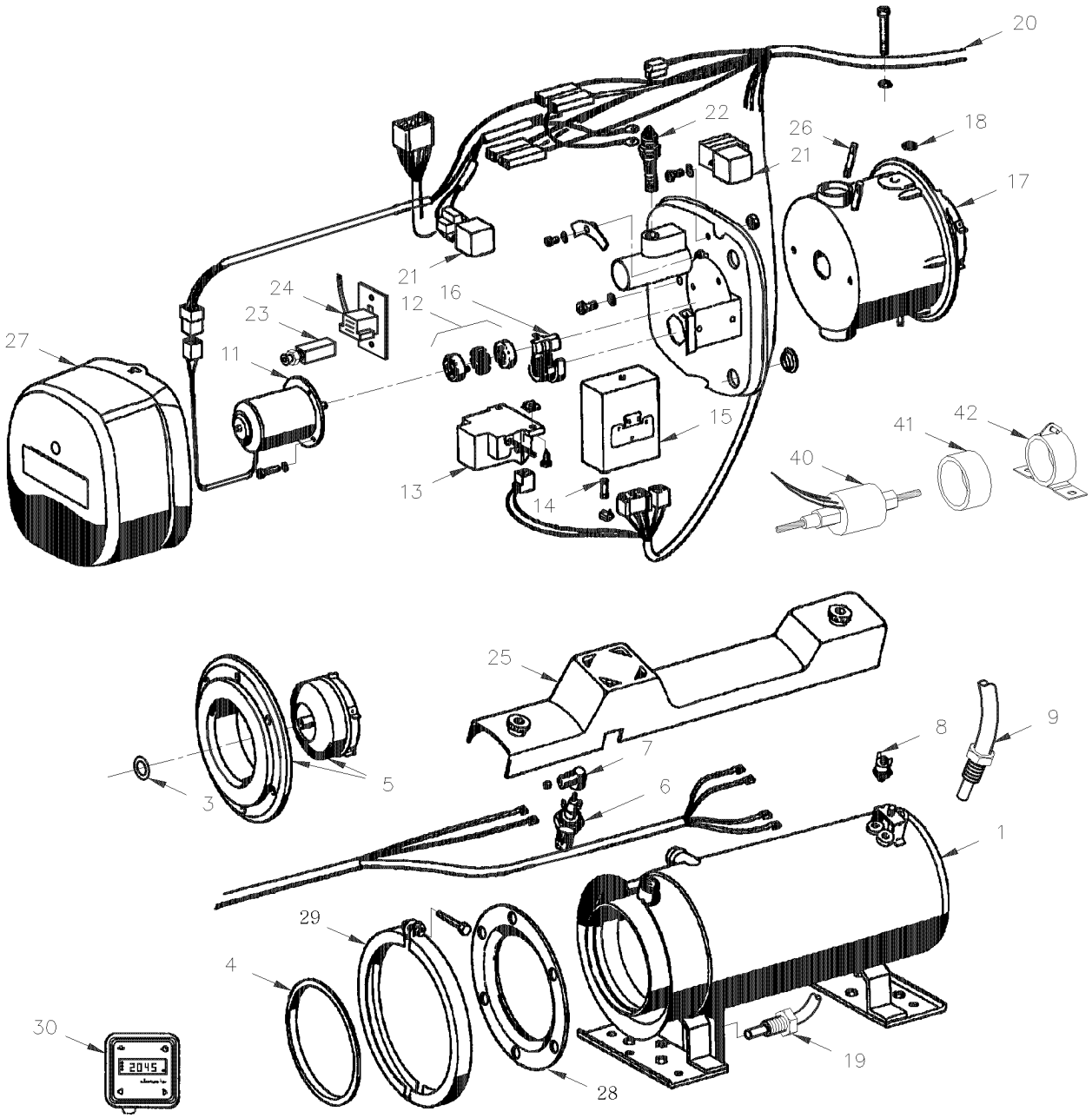

From Y-7046 Up to 2-7764	DATE: 01/2014	PAGE: 871097

WATER HEATER - "ESPAR" 41,000 B.T.U.

ITEM	PART	DESCRIPTION	XL45	MTH40	MTH45	MTH45S	NOTE
		WATER HEATER ASSY / MODEL D-12W / 25 1860 25 - "ESPAR" 41,000 B.T.U. (871097) From V-1922	1				
1	870983	. EXCHANGER HEAT Up to V-1921	1				
1	871111	. EXCHANGER HEAT From V-1922	1				
3	871115	. WASHER	1				
4	870997	. RING SEALING	1				
5	871114	. ATOMIZER	1				A
NS	870984	. KIT ATOMIZER	1				A
6	870994	. PLUG GLOW	1				
7	870993	. CONNECTOR PLUG	1				
8	870996	. SWITCH SAFETY CUTOUT / REPLACED BY: 871035	1				
9	871035	. SWITCH REGULATING / (CUT OUT 194°F / CUT IN 178°F) Up to V-1921	1				
9	871116	. SWITCH REGULATING / (CUT OUT 194°F / CUT IN 178°F) From V-1922	1				
11	870989	. MOTOR ASSY / 24V	1				
12	871005	. COUPLING	1				
13	870988	. IGNITION SPARK GENERATOR	1				
14	871003	. FUSE 4 AMPS	1				
15	871088	. UNIT CENTRAL	1				
16	870991	. GROMMET	1				
17	870990	. BURNER Up to V-1921	1				
17	871113	. BURNER From V-1922	1				
18	870998	. O-RING	1				
19	871118	. SENSOR FLAME	1				
20	870999	. HARNESS ASSY Up to V-1921	1				
20	871112	. HARNESS ASSY From V-1922	1				
21	561707	. RELAY 24V S.P.D.T. W/RESISTOR /	2				
22	870987	. RESISTOR	1				
23	871117	. LED, INDICATOR	1				
24	871095	. CIRCUIT BOARD	1				
25	871072	. COVER / GLOW PLUG	1				
26	871081	. STUD M5X40MM / TO FIX COVER	2				
27	871083	. COVER	1				
28	871367	. FLANGE	1				
29	871349	. CLAMP RETAINER	1				
30	562025	TIMER ASSY / W/"ESPAR" PREHEATER Up to V-1921 / REPLACED BY: K562025	1				
30	562680	TIMER ASSY / W/"ESPAR" PREHEATER / 7 DAYS From V-1922	1				
NS	871102	. BULB / 1.4WATT-24 VOLTS	1				
40	870973	PUMP FUEL	1				
41	870972	RING, RUBBER	1				
42	870971	SUPPORT, PUMP	1				
		A) WHEN IT`S THE FIRST ATOMIZER REPLACED, USE					
		CONVERSION KIT #870984					

From 3-4417 Up to 4-8464	DATE: 01/2014	PAGE: 871100
WATER HEATER - "PROHEAT" 80,000 B.T.U.		

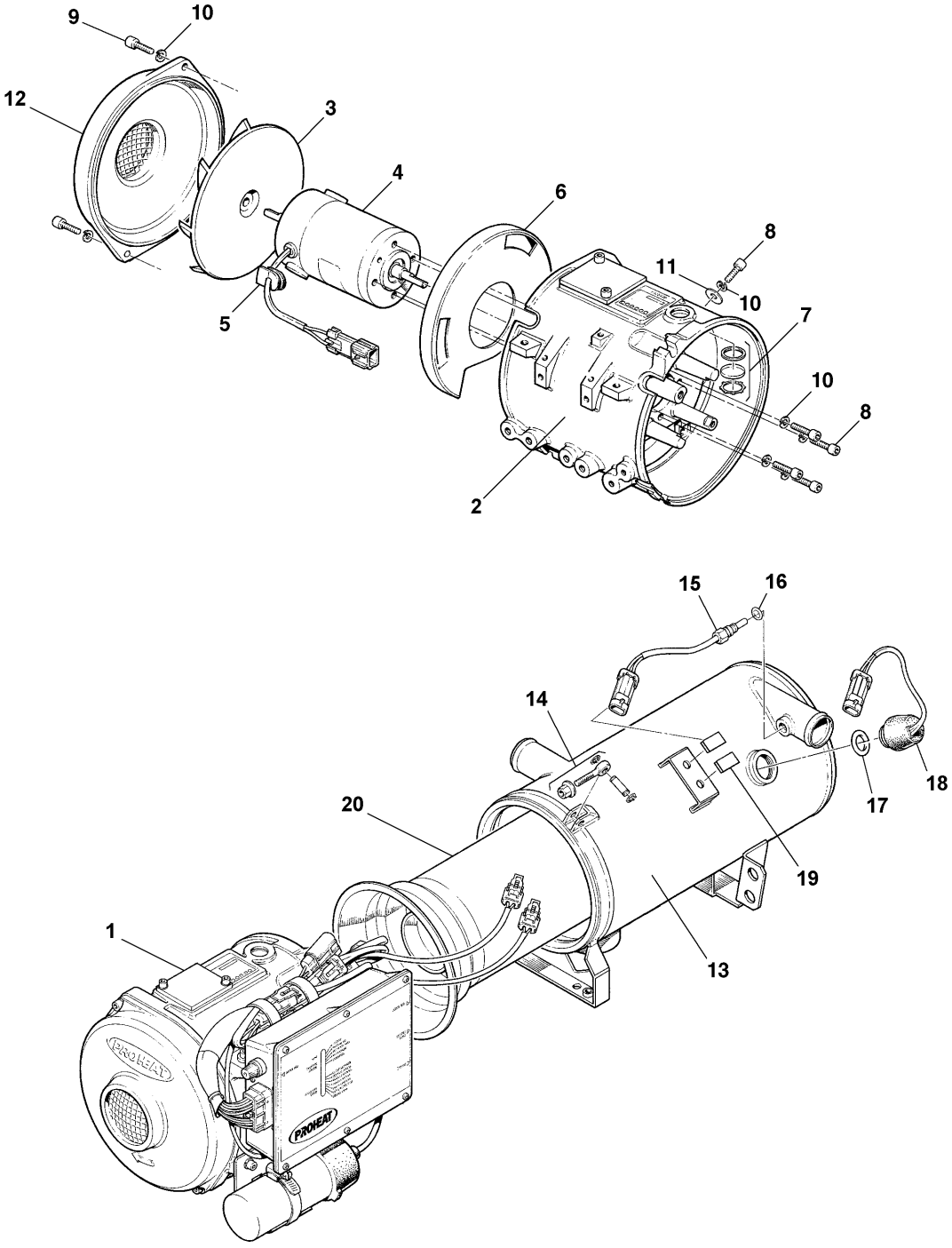

From 3-4417 Up to 4-8464	DATE: 01/2014	PAGE: 871100
WATER HEATER - "PROHEAT" 80,000 B.T.U.		

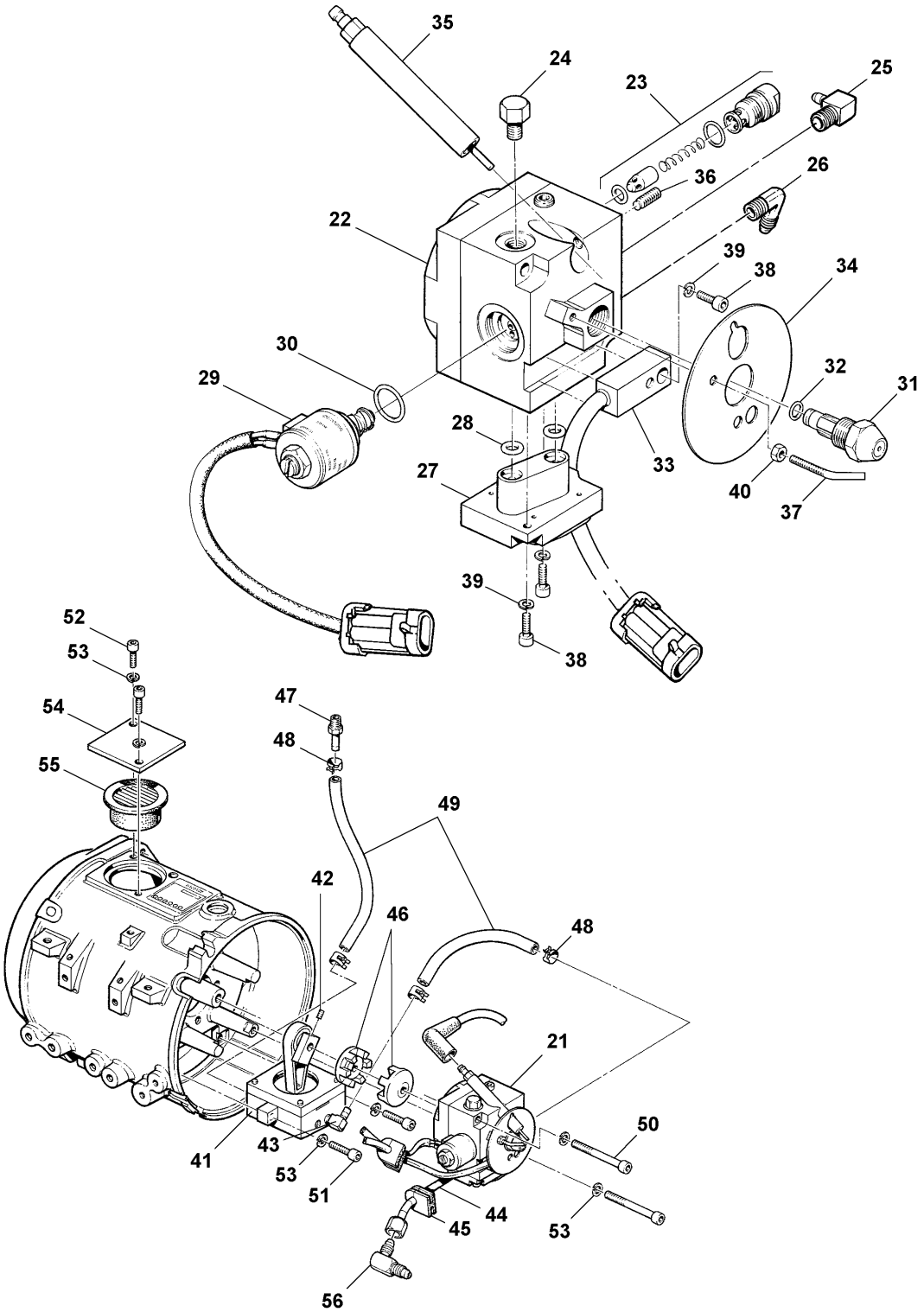

From 3-4417 Up to 4-8464	DATE: 01/2014	PAGE: 871100
WATER HEATER - "PROHEAT" 80,000 B.T.U.		

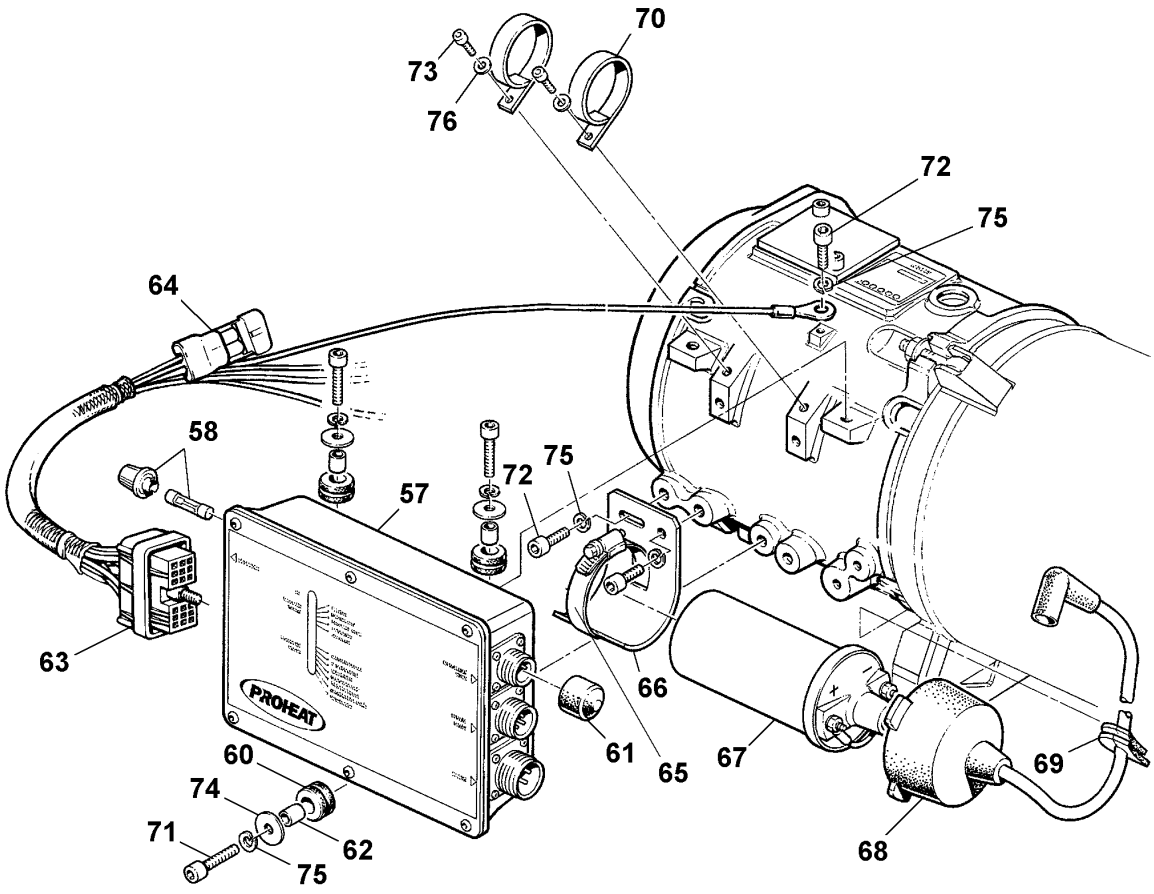

From 3-4417 Up to 4-8464	DATE: 01/2014	PAGE: 871100

WATER HEATER - "PROHEAT" 80,000 B.T.U.

ITEM	PART	DESCRIPTION	XL45	MTH40	MTH45	MTH45S	NOTE
		WATER HEATER - "PROHEAT" 80,000 B.T.U.	1				
1	N8890283	. BURNER HEAD ASM	1				
2	N8890292	. . CASTING BURNER HEAD	1				
3	N8890294	. . FAN BLADE	1				
	N8890347	. . . RETAINING RING	1				
4	N8890295	. . MOTOR 24V	1				
5	N8890296	. . GROMMET STYLE " D "	1				
6	N8890297	. . BAFFLE AIR ADJUST	1				
7	N8890298	. . SIGHT GLASS KIT	1				
8	N8890299	. . SCREW CAP HEXS M6-1.0x20 ZP	5				
9	N8890300	. . SCREW CAP HEXS M6-1.0x16 ZP	2				
10	N8890301	. . WASHER LO SPT ZP M6	7				
11	N8890302	. . WASHER FL ZP 1/4	1				
12	N8890293	. . COVER	1				
13	N8890285	. HEAT EXCHANGER	1				
14	N8890286	. . EYE BOLT KIT	2				
15	N8890287	. TEMPERATURE SENSOR	1				
16	N8890288	. . O-RING	1				
17	N8890289	. OVERHEAT BREAKER SENSOR	1				
18	N8890290	. . O-RING	1				
19	N8890291	. CLIP	2				
20	N8890284	. COMBUSTION TUBE	1				
21	N8890306	. FUEL DELIVERY UNIT	1				
22	N8890331	. . FUEL PUMP	1				
23	N8890334	. . . RELEIF VALVE KIT	1				
24	N8890341	. . . PLUG HEX-HEAD / ORB FITTING / #2ORB-M BR	1				
25	N8890305	. . . ELBOW 1/4 ID HOSE x 1/8 NPT MALE	1				
26	N8890346	. . . ELBOW 1/4 JIC MALE x 1/8 NTP MALE	1				
27	N8890332	. . FUEL REGULATOR	1				
28	N8890333	. . . O-RING	2				
29	N8890335	. . SELENOID VALVE 24V	1				
30	N8890336	. . . O-RING	1				
31	N8890337	. . NOZZLE	1				
32	N8890338	. . . O-RING	1				
33	N8890339	. . FLAME SENSOR	1				
34	N8890340	. . FLAME SHIELD	1				
35	N8890342	. . ELECTRODE SPARK	1				
36	N8890348	. . . SET SCREW	1				
37	N8890343	. . ELECTRODE GROUND	1				
38	N8890329	. . SCREW CAP HEXS M4-0.7x10 ZP	3				
39	N8890344	. . WASHER LO SPT ZP M4	3				
40	N8890345	. . NUT HEX ZP M4x.7x10MM	1				
41	N8890303	. COMPRESSOR	1				

From 3-4417 Up to 4-8464	DATE: 01/2014	PAGE: 871100

WATER HEATER - "PROHEAT" 80,000 B.T.U.

ITEM	PART	DESCRIPTION	XL45	MTH40	MTH45	MTH45S	NOTE
42	N8890304	. . SCREW SET #10-32x3/8	1				
43	N8890305	. . ELBOW 1/4 ID HOSE x 1/8 NPT MALE	2				
44	N8890307	. FUEL TUBE	1				
45	N8890296	. GROMMET STYLE " D "	2				
46	N8890308	. COUPLING 8mm	1				
47	N8890309	. FITTING 1/4 ID X 1/8 NPT MALE	1				
48	N8890310	. SPRING CLAMP	1				
49	N8890311	. HOSE 3/16 ID	AR				
50	N8890312	. SCREW CAP HEXS M6-1.0x60 ZP / REPLACED BY: N8892427	2				
51	N8890299	. SCREW CAP HEXS M6-1.0x20 ZP	2				
52	N8890300	. SCREW CAP HEXS M6-1.0x16 ZP	2				
53	N8890301	. WASHER LO SPT ZP M6	6				
54	N8890313	. COVER	1				
55	N8890314	. AIR FILTER	1				
56	N8890315	. ELBOW 1/4 JIC MALE	1				
57	N8890316	. CONTROL MODULE 24V	1				
58	N8890317	. . FUSE HOLDER	1				
NS	560062	. . . FUSE / 15 AMPS / AGC-15	1				
60	N8890320	. . GROMMET	3				
61	N8890323	. . VINYL CAP	1				
62	N8890319	. SPACER	3				
63	N8890321	. MAIN HARNESS	1				
64	N8890322	. SUSTITUTION PLUG	1				
65	N8890324	. CLAMP SS #32	1				
66	N8890325	. BRACKET "J"	1				
67	N8890326	. IGNITION COIL	1				
68	N8890327	. IGNITION LEAD & BOOT	1				
69	N8890296	. GROMMET STYLE " D "	1				
70	N8890328	. WIRE CLIP	2				
71	N8890299	. SCREW CAP HEXS M6-1.0x20 ZP	2				
72	N8890300	. SCREW CAP HEXS M6-1.0x16 ZP	2				
73	N8890329	. SCREW CAP HEXS M4-0.7x10 ZP	1				
74	N8890302	. WASHER FL ZP 1/4	3				
75	N8890301	. WASHER LO SPT ZP M6	6				
76	N8890330	. WASHER FL ZP M4	2				
		FOLLOWING ITEMS ARE RELATED WITH					
		AUTOMATIC START					
		WITH WATER HEATER INSTALLATION					
		WITH BATTERIES CHARGER 110V					
111	066236	CABLE I/F BATTERIES CHARGER / W/RELAY BASE					A
111	068248	CABLE I/F BATTERIES CHARGER / W/RELAY BASE EFFECTIC W/EPA 2010	1				A
		A) LOCATED NEAR EVAPORATOR MOTOR RELAY					

From 3-4417 Up to 4-8464	DATE: 01/2014	PAGE: 871100

WATER HEATER - "PROHEAT" 80,000 B.T.U.

ITEM	PART	DESCRIPTION	XL45	MTH40	MTH45	MTH45S	NOTE
112	066332	CABLE ASSY POWER / W/FUSE HOLDER & RECTIFIER					A
113	563332	RELAY 24V S.P.D.T. W/RESISTOR / "VOLVO" (20374662)					A
114	500946	SCREW TP BDG PH #8x1/2 ZG603					A
		A) LOCATED NEAR EVAPORATOR MOTOR RELAY					

From 4-4758 Up to 6-8906	DATE: 01/2014	PAGE: 871329
WATER HEATER - "PROHEAT" 80,000 B.T.U.		

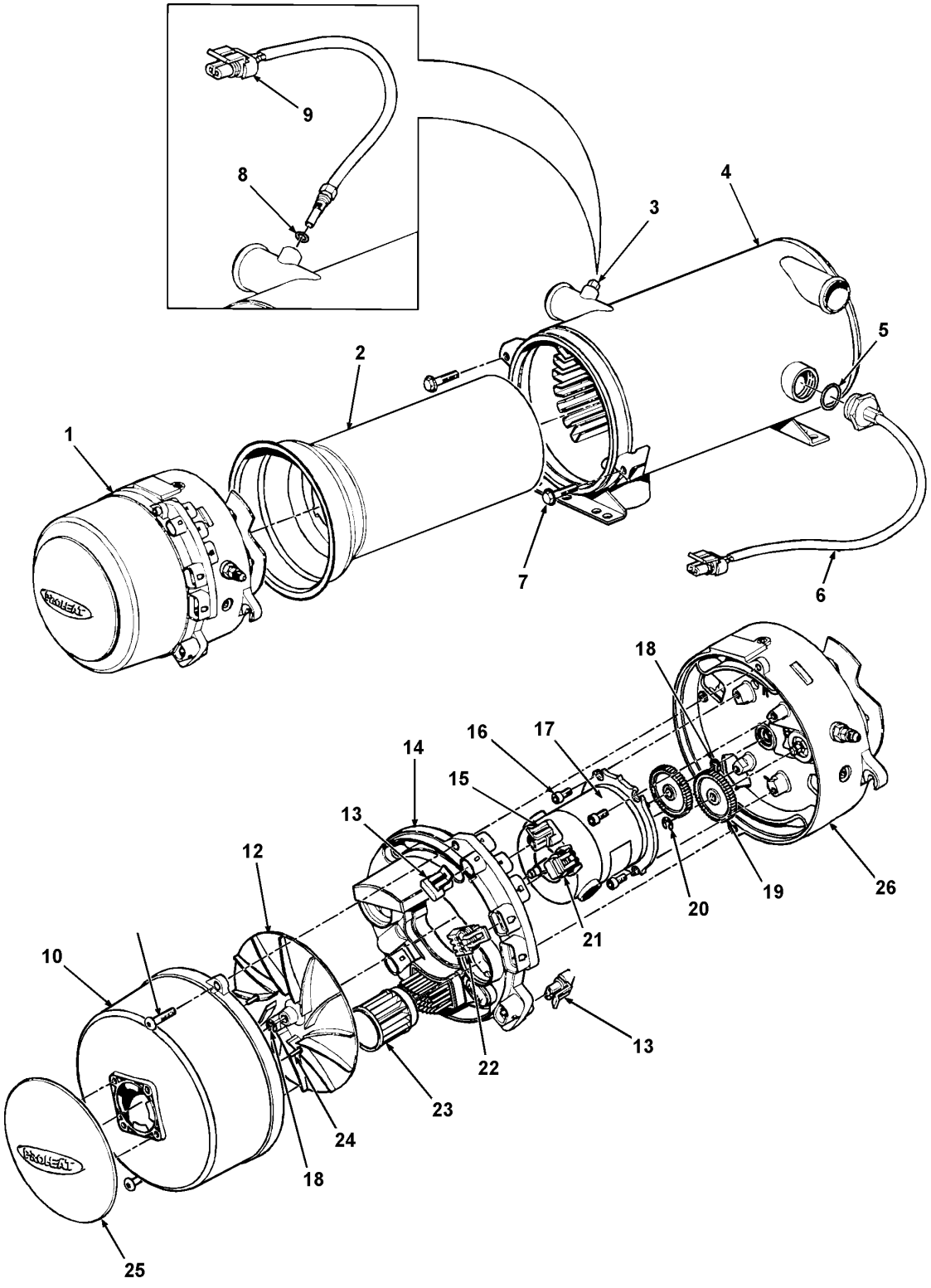

From 4-4758 Up to 6-8906	DATE: 01/2014	PAGE: 871329
WATER HEATER - "PROHEAT" 80,000 B.T.U.		

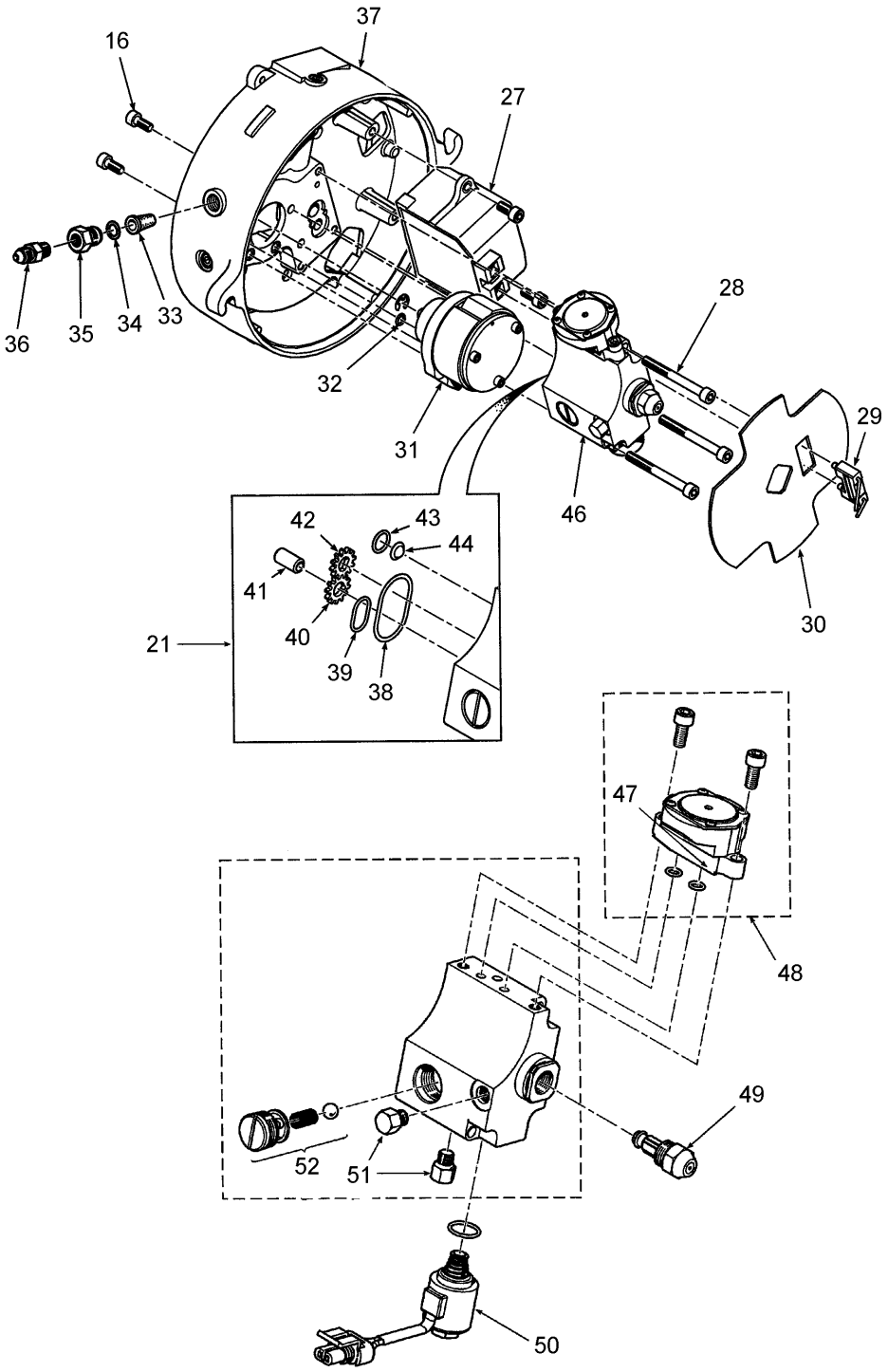

From 4-4758 Up to 6-8906	DATE: 01/2014	PAGE: 871329

WATER HEATER - "PROHEAT" 80,000 B.T.U.

ITEM	PART	DESCRIPTION	XL45	MTH40	MTH45	MTH45S	NOTE
NS	065839	CABLE ASSY INTERFACE W/"PRO-HEAT" M-80 Up to 4-4887					
NS	066172	CABLE ASSY INTERFACE W/"PRO-HEAT" M-80 From 4-4888					
NS	065839	CABLE ASSY INTERFACE W/"PRO-HEAT" M-80 Up to 5-8367					
NS	066172	CABLE ASSY INTERFACE W/"PRO-HEAT" M-80 From 5-8367					
NS	066172	CABLE ASSY INTERFACE W/"PRO-HEAT" M-80 From 7-8754					
		WATER HEATER - "PROHEAT" 80,000 B.T.U.	1				
1	N8892398	. BURNER HEAD ASSY	1				
2	N8892399	. COMBUSTION TUBE	1				
3	N8892400	. PLUG	1				
4	N8892401	. HEAT EXCHANGER	1				
5	N8892402	. O-RING, TEMPERATURE SENSOR, OVERHEAT	1				
6	N8892403	. TEMPERATURE SENSOR, OVERHEAT	1				
7	N8892405	. SCREW HEXW M8X1.25X30 (2/PKG)	1				
8	N8892406	. O-RING, TEMPERATURE SENSOR	1				
9	N8892407	. TEMPERATURE SENSOR, WITH O-RING	1				
10	N8892408	. BLOWER HOUSING	1				
11	N8892409	. SCREW CAP BUT HEXS SS M6X1X25 (2/PKG)	1				
12	N8892410	. BLOWER	1				
13	N8892411	. PLUG (2/PKG)	1				
14	N8892412	. PRIMARY CONTROL MODULE	1				
15	N8892413	. PLUG	1				
16	N8892414	. SCREW CAP HEXS M6-1.0x16 ZP	1				
17	N8892415	. MOTOR 24V	1				
18	N8892416	. RETAINING RING (3/PKG)	1				
19	N8892417	. GEAR SET	1				
20	N8892418	. RETAINING RING (2/PKG)	1				
21	N8892419	. PLUG, CAN BUS PRIMARY CONTROL MODULE	1				
22	N8892420	. PLUG, DATALINK PRIMARY CONTROL MODULE	1				
23	N8892421	. AIR FILTER	1				
24	N8892422	. SCREW, AIR INLET	1				
25	N8892423	. SPLASH GUARD	1				
26	N8892414	. SCREW CAP HEXS M6-1.0x16 ZP	1				
27	N8892426	. KIT IGNITION MODULE & ELECTRODE	1				
28	N8892427	. SCREW CAP HEXS SS M6X1X60 (3/PKG)	1				
29	N8892428	. IGNITION ELECTRODES	1				
30	N8892429	. FLAME SHIELD	1				
31	N8892430	. COMPRESSOR	1				
32	N8892431	. O-RING (3/PKG)	1				
33	N8892432	. FUEL FILTER	1				
34	N8892433	. O-RING, FUEL FILTER	1				
35	N8892434	. Adapter	1				
36	N8892435	. MALE CONNECTOR / JIC 37° FITTING / #4JIC-Mx1/8NPT-M BR	1				
37	N8892436	. BURNER HEAD FLANGE ASSY	1				

From 4-4758 Up to 6-8906	DATE: 01/2014	PAGE: 871329

WATER HEATER - "PROHEAT" 80,000 B.T.U.

ITEM	PART	DESCRIPTION	XL45	MTH40	MTH45	MTH45S	NOTE
38	N8892437	. O-RING, GEAR PUMP	1				
39	N8892438	. O-RING, AIR INTAKE / REPLACED BY: N8890336	1				
40	N8892439	. GEAR & PINION, FUEL PUMP	1				
41	N8892440	. IDLER SHAFT, FUEL PUMP	1				
42	N8892441	. GEAR DRIVE, FUEL PUMP	1				
43	N8892442	. O-RING, FUEL INTAKE	1				
44	N8892443	. SCREEN, INLET	1				
45	N8892444	. FUEL PUMP SERVICE KIT	1				
46	N8892445	. FUEL DELIVERY BLOCK ASM	1				
47	N8892446	. O-RING (3/PKG)	1				
48	N8892447	. REGULATOR ASM	1				
49	N8892448	. NOZZLE	1				
50	N8892449	. SOLENOID	1				
51	N8892450	. PLUG HEX-HEAD / ORB FITTING / #2ORB-M BR	1				
52	N8892451	. RELIEF VALVE KIT	1				
	N8892404	. PROHEAT DATA LINK KIT	1				
		FOLLOWING ITEMS ARE RELATED WITH					
		AUTOMATIC START					
		WITH WATER HEATER INSTALLATION					
		WITH BATTERIES CHARGER 110V					
111	066236	CABLE I/F BATTERIES CHARGER / W/RELAY BASE	1				A
111	068248	CABLE I/F BATTERIES CHARGER / W/RELAY BASE EFFECTIC W/EPA 2010	1				A
111	066968	CABLE ASSY W/FUSE HOLDER / W/"PRO-HEAT" M-80 / "OPTION"	1				
112	066332	CABLE ASSY POWER / W/FUSE HOLDER & RECTIFIER	1				A
113	563332	RELAY 24V S.P.D.T. W/RESISTOR / "VOLVO" (20374662)	1				A
114	500946	SCREW TP BDG PH #8x1/2 ZG603	1				A
		A) LOCATED NEAR EVAPORATOR MOTOR RELAY					

From 2-7765 Up to 6-8906	DATE: 01/2014	PAGE: Y2-2350-11

WATER HEATER - INSTALLATION

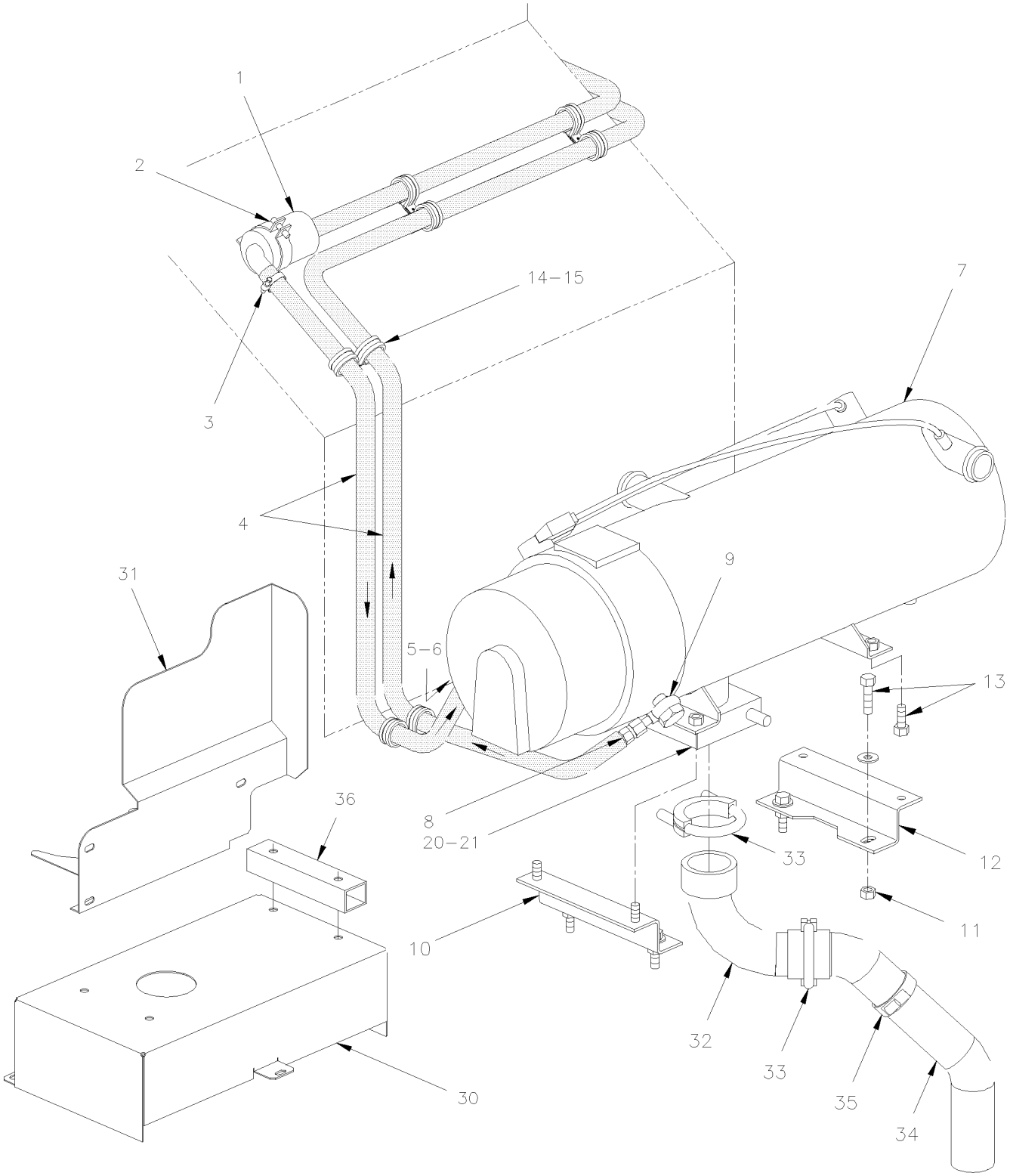

From 2-7765 Up to 6-8906	DATE: 01/2014	PAGE: Y2-2350-11

WATER HEATER - INSTALLATION

ITEM	PART	DESCRIPTION	XL45	MTH40	MTH45	MTH45S	NOTE
1	871038	SUPPORT, FILTER FUEL	1				
2	871037	FILTER, FUEL	1				
3	504230	HOSE CLAMP / 3/8"-7/8" SS / HS-6	2				
4	373382	HOSE / FUEL LINE / #4 7924MM	2				
5	501347	FEMALE CONNECTOR SWIVEL / PUSH-LOK FITTING #4JIC-Fx#4 BR	1				
6	5011237	BANJO UNION / 10MMx#4JIC-M	1				
7	871202	**WATER HEATER - "WEBASTO" 100,000 B.T.U. From 2-7765 Up to 6-8906**					
7	871100	**WATER HEATER - "PROHEAT" 80,000 B.T.U. From Y-7257 Up to 4-8164**					
7	871329	**WATER HEATER - "PROHEAT" 80,000 B.T.U. From 4-8165 Up to 6-8906**					
8	5011235	FEMALE CONNECTOR SWIVEL / PUSH-LOK FITTING #6JIC-Fx#4 BR	1				
9	5011238	BANJO UNION / 10MMx#6JIC-M	1				
10	373838	SUPPORT Up to 3-8164	2				
11	502543	NUT HEX M8-1.25 ZP	4				
12	5001003	WASHER LO SPT 8.1x12.7x2.0 ZP	8				
12	5001164	WASHER FL 8.4x25.0x2.0 ZP	8				
13	502790	SCREW CAP HEX M8-1.25x20 G8.8 ZP	8				
14	952627	CLAMP / 1/2" I.D.	AR				
15	500641	SCREW TP BDG PH #8x3/4 ZP	AR				
20	373839	EXHAUST PIPE SS 70MM O.D. X 80MM	1				
21	871203	U-CLAMP / 3" I.D.	1				
30	373777	BOX SUPPORT / W/80000 BTU "PROHEAT" Up to 4-8164	1				
30	373973	BOX SUPPORT / "WEBASTO" & "PROHEAT" From 4-8165	1				
30	374074	BOX SUPPORT / "PROHEAT" From 5-8453	1				A
31	373974	PROTECTOR & CLOSING PLATE From 4-8165	1				
32	871370	ELBOW 90° SHORT / EXHAUST "PROHEAT" From 5-8453	1				A
33	540061	U-CLAMP / 2 3/4" I.D. From 5-8453	1				A
34	871371	ELBOW 90° LONG / EXHAUST "PROHEAT" From 5-8453	1				
35	504024	HOSE CLAMP / 1"13/16"-2"3/4 SS / HS-36 From 5-8453	1				
36	374075	TUBE SPACER / 180MM From 5-8453	2				A
		A) WITH "PROHEAT" ONLY					

From 2-7765 Up to 8-1043	DATE: 01/2014	PAGE: 871202
WATER HEATER - "WEBASTO" 100,000 B.T.U.		

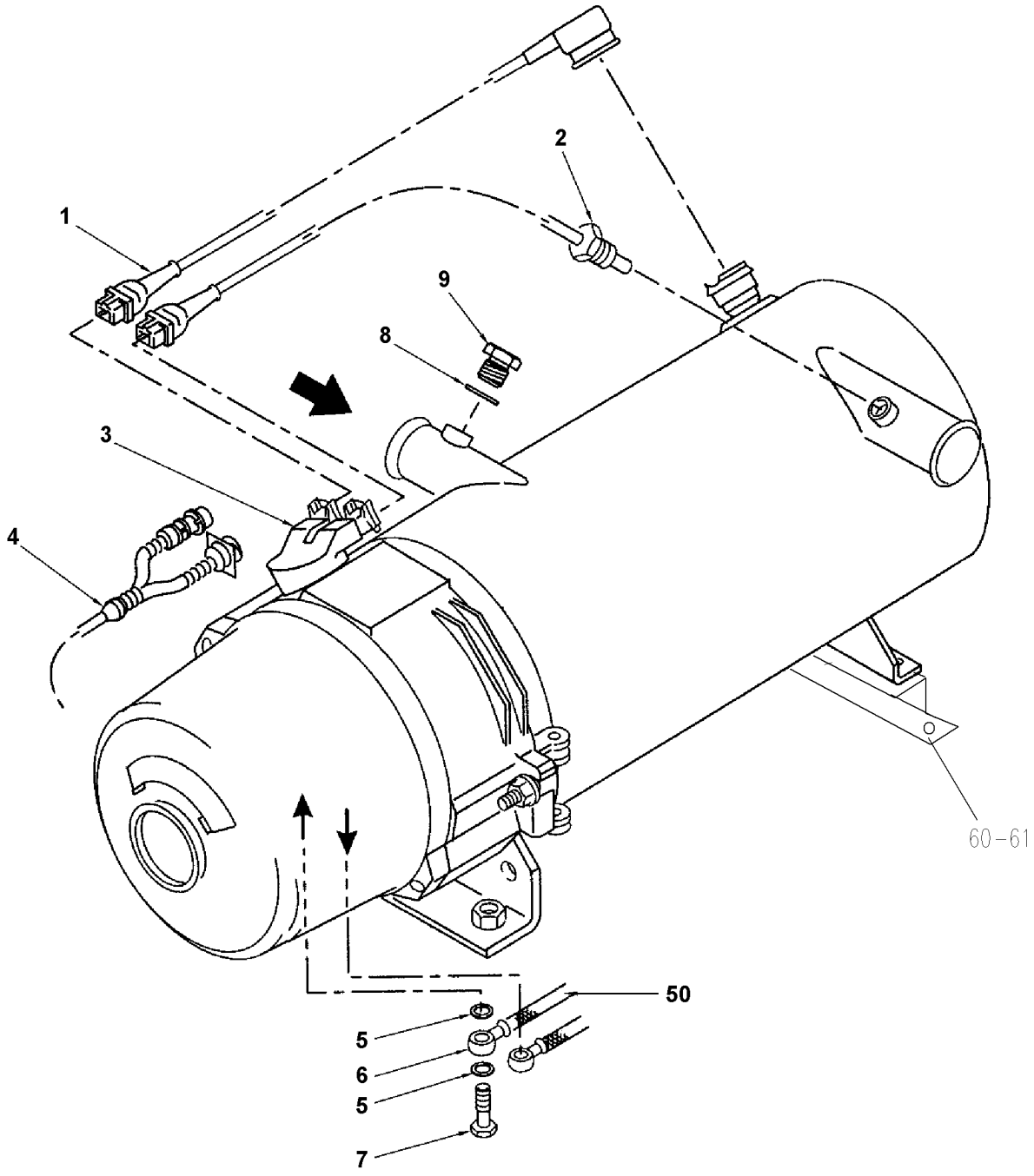

From 2-7765 Up to 8-1043	DATE: 01/2014	PAGE: 871202
WATER HEATER - "WEBASTO" 100,000 B.T.U.		

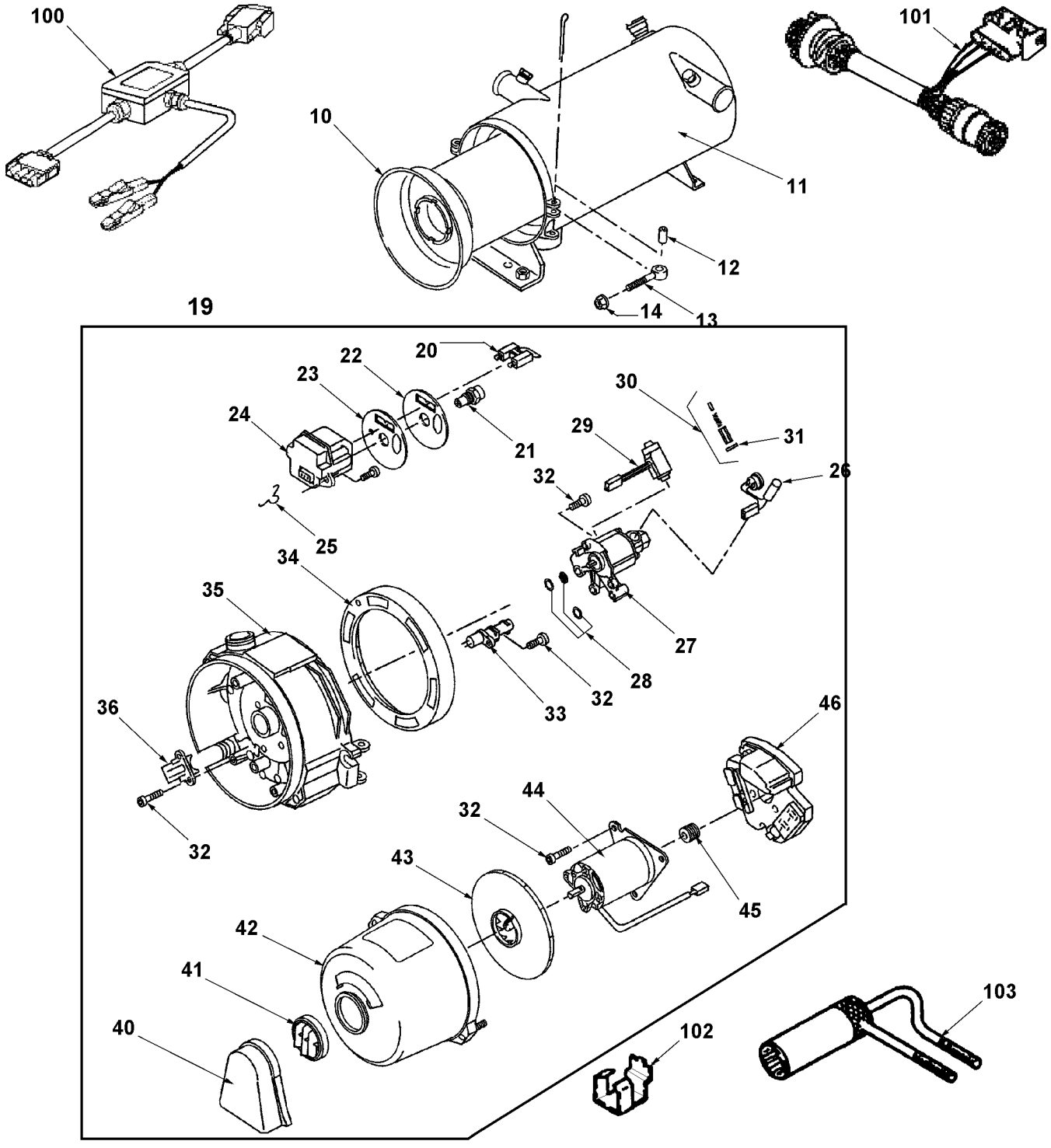

From 2-7765 Up to 8-1043	DATE: 01/2014	PAGE: 871202

WATER HEATER - "WEBASTO" 100,000 B.T.U.

ITEM	PART	DESCRIPTION	XL45	MTH40	MTH45	MTH45S	NOTE
		WATER HEATER - "WEBASTO" 100,000 B.T.U. - "WEBASTO" THERMO 300	1				
	N34000	WATER HEATER - "WEBASTO" 100,000 B.T.U. - "WEBASTO" THERMO 300 / REPLACED BY: 871202					
	N37969	WATER HEATER - "WEBASTO" 120,000 B.T.U. - "WEBASTO" THERMO 350	1				
1	871284	. OVERHEAT PROTECTION	1				
2	871285	. TEMPERATURE SENSOR	1				
2	G1094742	. TEMPERATURE SENSOR / REPLACED BY: 871285	1				
3	194873	. CABLE ASSY/ WITH RUBBER BOOT / <> CONTROL & HARNESS CABLE	1				
4	871286	. MASTER WIRING HARNESS	1				
5	870923	. BANJO WASHER / M10	1				
6	5011237	. BANJO UNION / 10MMx#4JIC-M	1				
6	5011238	. BANJO UNION / 10MMx#6JIC-M	1				
7	870929	. BANJO BOLT / M10-1.0	1				
8	N.S.P.	. GASKET / (151 173)	1				2
9	N.S.P.	. PLUG / (199 87A)	1				2
10	871288	. COMBUSTION CHAMBER	1				
11	871289	. HEAT EXCHANGER	1				
12	N8890598	. COLLAR	2				
13	N8890596	. EYE BOLT	2				
14	502692	. NUT HEXF STO M8-1.25 ZP	1				
19	N8894780	. BURNER HEAD ASSY / 24V - "WEBASTO" THERMO 300	1				
19	N8896417	. BURNER HEAD ASSY / 24V - "WEBASTO" THERMO 350	1				
20	871290	. . IGNATION ELECTRODE	1				
21	871291	. . NOZZLE 0.85GPH - "WEBASTO" THERMO 300	1				
21	870918	. . NOZZLE 0.80GPH	AR				
21	N8896407	. . NOZZLE 1.00GPH - "WEBASTO" THERMO 350	1				
22	871368	. . WASHER	1				
23	871369	. . WASHER	1				
24	871292	. . ELECTRONIC IGNITION UNIT	1				
25	N8883147	. . HOLDING STRAP	1				
26	871293	. . HEATING ELEMENT WITH THERMOSTAT	1				
27	871294	. . FUEL PUMP	1				
28	871295	. . . SMALLL PARTS FOR FUEL PUMP	1				
29	871296	. . . MAGNETIC COIL	1				
30	870919	. . . . UNLOADER POWER ASSY	1				
31	871297	. . . . GASKET	1				
32	502653	. . SCREW MA PAN PH M5-0.8x16 SS	AR				
33	871298	. . FLAME DETECTOR	1				
34	194824	. . ADJUSTING RING	1				
35	N8890616	. . HOUSING	1				
35	G1094733	. . HOUSING	1				
36	N8890590	. . CORE GRIP	1				
36	G1094734	. . CORE GRIP	1				
		2) NOT SOLD BY PREVOST (SEE MANUFACTURING PART					
		NUMBER AT END OF DESCRIPTION LINE)					

From 2-7765 Up to 8-1043	DATE: 01/2014	PAGE: 871202

WATER HEATER - "WEBASTO" 100,000 B.T.U.

ITEM	PART	DESCRIPTION	XL45	MTH40	MTH45	MTH45S	NOTE
40	871299	. . SPLASHGUARD	1				
41	871300	. . GRID	1				
42	871301	. . HOOD	1				
	G1017565	. . DECAL "DANGER"	1				
43	871302	. . FAN ROTOR	1				
44	871303	. . DRIVE ASSY	1				
45	871304	. . . CLUTCH	1				
46	871305	. . ELECTRONIC CONTROL	1				
50	H7-2350-10	**WATER HEATER - INSTALLATION From 7-0671**					
50	HF-2350-10	**WATER HEATER - INSTALLATION From 3-4417 Up to 8-1043**					
50	Y2-2350-11	**WATER HEATER - INSTALLATION From 2-7765 Up to 6-8906**					
50	X3-2350-10	**WATER HEATER - INSTALLATION From 7-8754**					
60	374322	SPACER ASSY 1" / <> "WATER HEATER & FENDER	2				
61	500069	SCREW CAP HEX M8-1.25x16 G10.9 DP	4				
NS	5001341	WASHER FL 8.4x17.0x1.6 SS	4				
NS	5001161	WASHER LO SPT 8.1x14.8x2.0 SS-304	4				
NS	5001188	NUT HEX M8-1.25 SS	4				
100	871320	DIAGNOSTIC KIT VERSION 2.2	AR				
100	N8894700	DIAGNOSTIC KIT VERSION 2.? / REPLACED BY: N36790	AR				
101	871321	ADAPTOR HARNESS / W/ROUND CONECTORS	AR				
101	195314	ADAPTOR HARNESS / W/RECTANGULAR CONECTORS	1				
102	870937	GAUGE / IGNITION ELECTRODE	AR				
103	870938	BOX WRENCH / HIGH PRESSURE NOZZLE	AR				

From 3-4417 Up to 4-8464	DATE: 01/2014	PAGE: 871100
WATER HEATER - "PROHEAT" 80,000 B.T.U.		

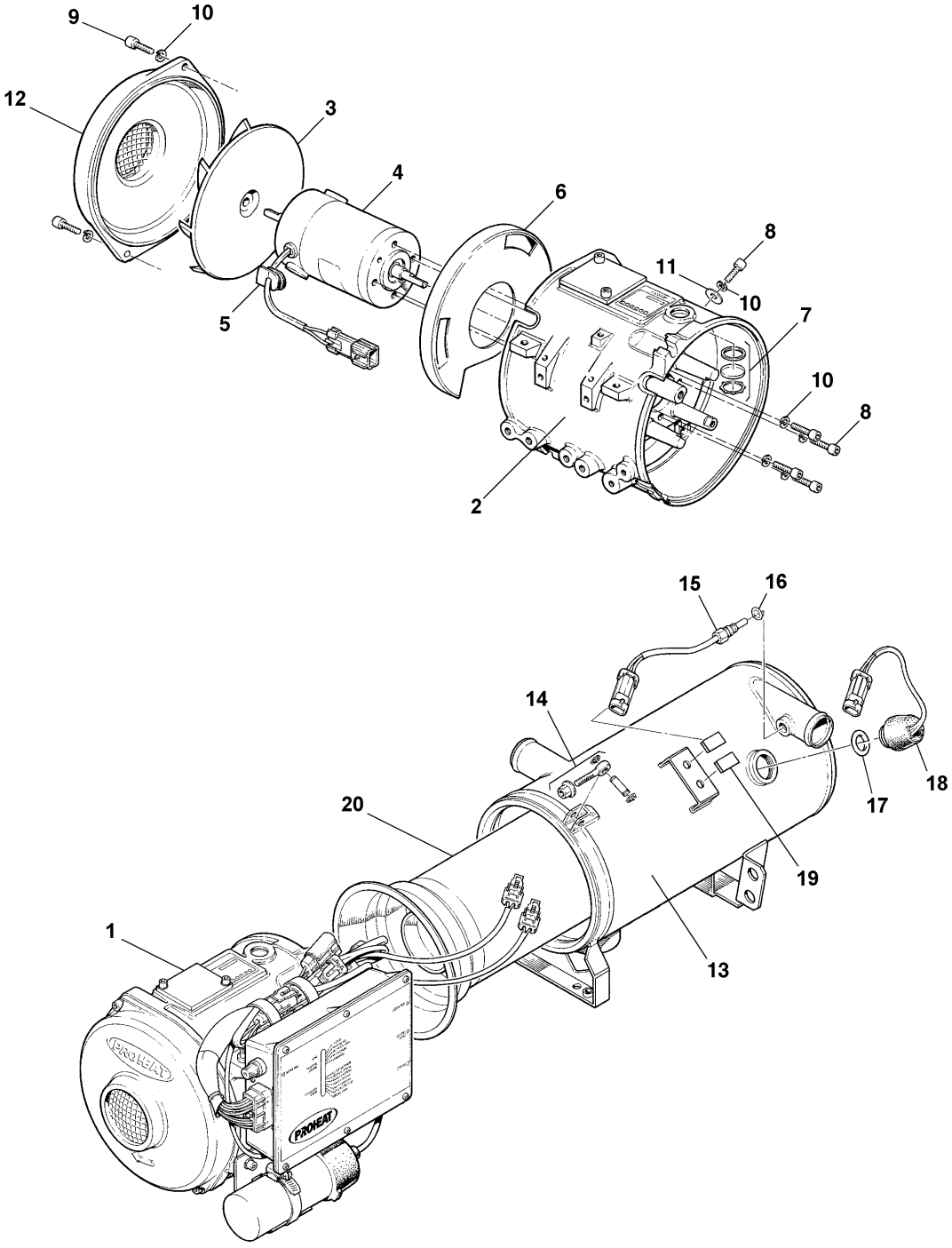

From 3-4417 Up to 4-8464	DATE: 01/2014	PAGE: 871100
WATER HEATER - "PROHEAT" 80,000 B.T.U.		

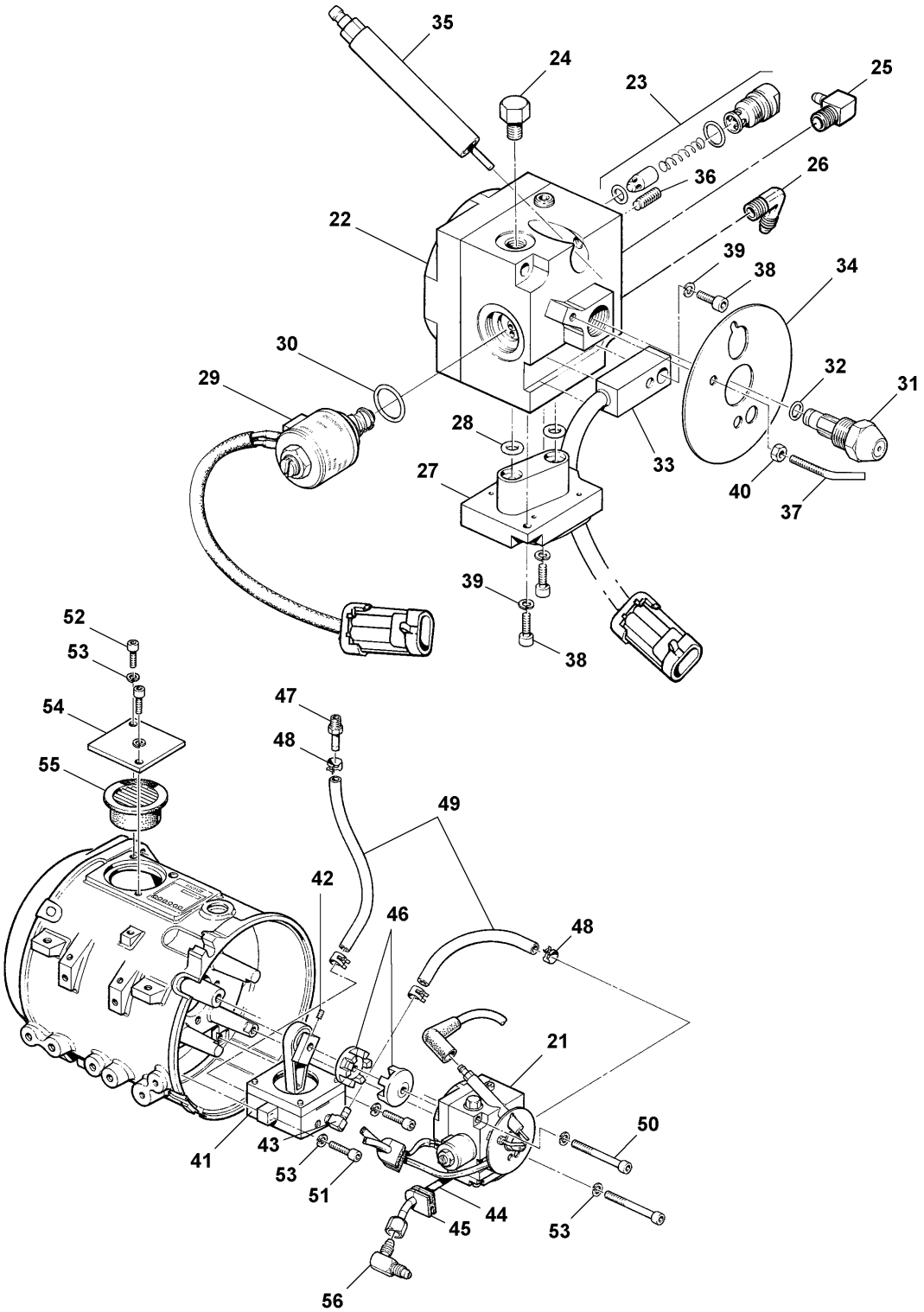

From 3-4417 Up to 4-8464	DATE: 01/2014	PAGE: 871100
WATER HEATER - "PROHEAT" 80,000 B.T.U.		

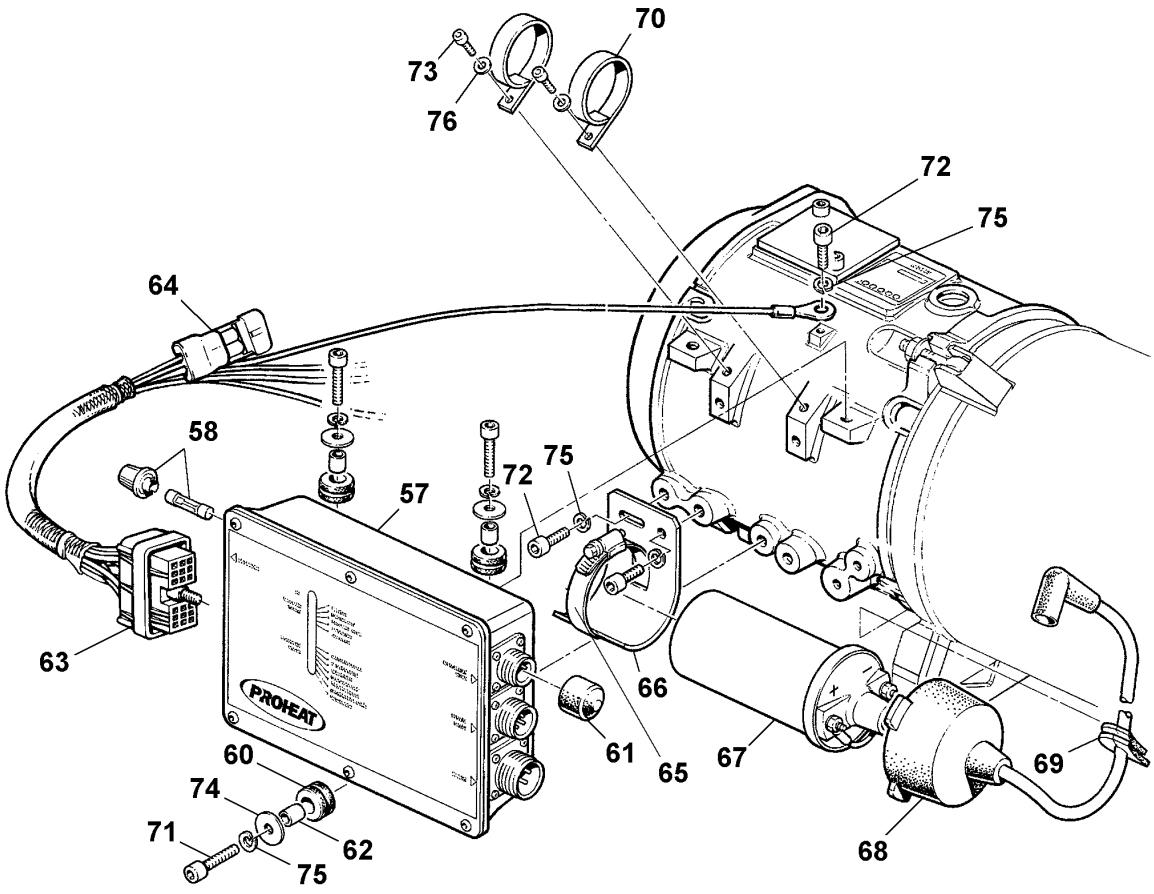

From 3-4417 Up to 4-8464	DATE: 01/2014	PAGE: 871100

WATER HEATER - "PROHEAT" 80,000 B.T.U.

ITEM	PART	DESCRIPTION	XL45	MTH40	MTH45	MTH45S	NOTE
		WATER HEATER - "PROHEAT" 80,000 B.T.U.	1				
1	N8890283	. BURNER HEAD ASM	1				
2	N8890292	. . CASTING BURNER HEAD	1				
3	N8890294	. . FAN BLADE	1				
	N8890347	. . . RETAINING RING	1				
4	N8890295	. . MOTOR 24V	1				
5	N8890296	. . GROMMET STYLE " D "	1				
6	N8890297	. . BAFFLE AIR ADJUST	1				
7	N8890298	. . SIGHT GLASS KIT	1				
8	N8890299	. . SCREW CAP HEXS M6-1.0x20 ZP	5				
9	N8890300	. . SCREW CAP HEXS M6-1.0x16 ZP	2				
10	N8890301	. . WASHER LO SPT ZP M6	7				
11	N8890302	. . WASHER FL ZP 1/4	1				
12	N8890293	. . COVER	1				
13	N8890285	. HEAT EXCHANGER	1				
14	N8890286	. . EYE BOLT KIT	2				
15	N8890287	. TEMPERATURE SENSOR	1				
16	N8890288	. . O-RING	1				
17	N8890289	. OVERHEAT BREAKER SENSOR	1				
18	N8890290	. . O-RING	1				
19	N8890291	. CLIP	2				
20	N8890284	. COMBUSTION TUBE	1				
21	N8890306	. FUEL DELIVERY UNIT	1				
22	N8890331	. . FUEL PUMP	1				
23	N8890334	. . . RELEIF VALVE KIT	1				
24	N8890341	. . . PLUG HEX-HEAD / ORB FITTING / #2ORB-M BR	1				
25	N8890305	. . . ELBOW 1/4 ID HOSE x 1/8 NPT MALE	1				
26	N8890346	. . . ELBOW 1/4 JIC MALE x 1/8 NTP MALE	1				
27	N8890332	. . FUEL REGULATOR	1				
28	N8890333	. . . O-RING	2				
29	N8890335	. . SELENOID VALVE 24V	1				
30	N8890336	. . . O-RING	1				
31	N8890337	. . NOZZLE	1				
32	N8890338	. . . O-RING	1				
33	N8890339	. . FLAME SENSOR	1				
34	N8890340	. . FLAME SHIELD	1				
35	N8890342	. . ELECTRODE SPARK	1				
36	N8890348	. . . SET SCREW	1				
37	N8890343	. . ELECTRODE GROUND	1				
38	N8890329	. . SCREW CAP HEXS M4-0.7x10 ZP	3				
39	N8890344	. . WASHER LO SPT ZP M4	3				
40	N8890345	. . NUT HEX ZP M4x.7x10MM	1				
41	N8890303	. COMPRESSOR	1				

From 3-4417 Up to 4-8464	DATE: 01/2014	PAGE: 871100

WATER HEATER - "PROHEAT" 80,000 B.T.U.

ITEM	PART	DESCRIPTION	XL45	MTH40	MTH45	MTH45S	NOTE
42	N8890304	. . SCREW SET #10-32x3/8	1				
43	N8890305	. . ELBOW 1/4 ID HOSE x 1/8 NPT MALE	2				
44	N8890307	. FUEL TUBE	1				
45	N8890296	. GROMMET STYLE " D "	2				
46	N8890308	. COUPLING 8mm	1				
47	N8890309	. FITTING 1/4 ID X 1/8 NPT MALE	1				
48	N8890310	. SPRING CLAMP	1				
49	N8890311	. HOSE 3/16 ID	AR				
50	N8890312	. SCREW CAP HEXS M6-1.0x60 ZP / REPLACED BY: N8892427	2				
51	N8890299	. SCREW CAP HEXS M6-1.0x20 ZP	2				
52	N8890300	. SCREW CAP HEXS M6-1.0x16 ZP	2				
53	N8890301	. WASHER LO SPT ZP M6	6				
54	N8890313	. COVER	1				
55	N8890314	. AIR FILTER	1				
56	N8890315	. ELBOW 1/4 JIC MALE	1				
57	N8890316	. CONTROL MODULE 24V	1				
58	N8890317	. . FUSE HOLDER	1				
NS	560062	. . . FUSE / 15 AMPS / AGC-15	1				
60	N8890320	. . GROMMET	3				
61	N8890323	. . VINYL CAP	1				
62	N8890319	. SPACER	3				
63	N8890321	. MAIN HARNESS	1				
64	N8890322	. SUSTITUTION PLUG	1				
65	N8890324	. CLAMP SS #32	1				
66	N8890325	. BRACKET "J"	1				
67	N8890326	. IGNITION COIL	1				
68	N8890327	. IGNITION LEAD & BOOT	1				
69	N8890296	. GROMMET STYLE " D "	1				
70	N8890328	. WIRE CLIP	2				
71	N8890299	. SCREW CAP HEXS M6-1.0x20 ZP	2				
72	N8890300	. SCREW CAP HEXS M6-1.0x16 ZP	2				
73	N8890329	. SCREW CAP HEXS M4-0.7x10 ZP	1				
74	N8890302	. WASHER FL ZP 1/4	3				
75	N8890301	. WASHER LO SPT ZP M6	6				
76	N8890330	. WASHER FL ZP M4	2				
		FOLLOWING ITEMS ARE RELATED WITH					
		AUTOMATIC START					
		WITH WATER HEATER INSTALLATION					
		WITH BATTERIES CHARGER 110V					
111	066236	CABLE I/F BATTERIES CHARGER / W/RELAY BASE					A
111	068248	CABLE I/F BATTERIES CHARGER / W/RELAY BASE EFFECTIC W/EPA 2010	1				A
		A) LOCATED NEAR EVAPORATOR MOTOR RELAY					

From 3-4417 Up to 4-8464	DATE: 01/2014	PAGE: 871100

WATER HEATER - "PROHEAT" 80,000 B.T.U.

ITEM	PART	DESCRIPTION	XL45	MTH40	MTH45	MTH45S	NOTE
112	066332	CABLE ASSY POWER / W/FUSE HOLDER & RECTIFIER					A
113	563332	RELAY 24V S.P.D.T. W/RESISTOR / "VOLVO" (20374662)					A
114	500946	SCREW TP BDG PH #8x1/2 ZG603					A
		A) LOCATED NEAR EVAPORATOR MOTOR RELAY					

From 4-4758 Up to 6-8906	DATE: 01/2014	PAGE: 871329
WATER HEATER - "PROHEAT" 80,000 B.T.U.		

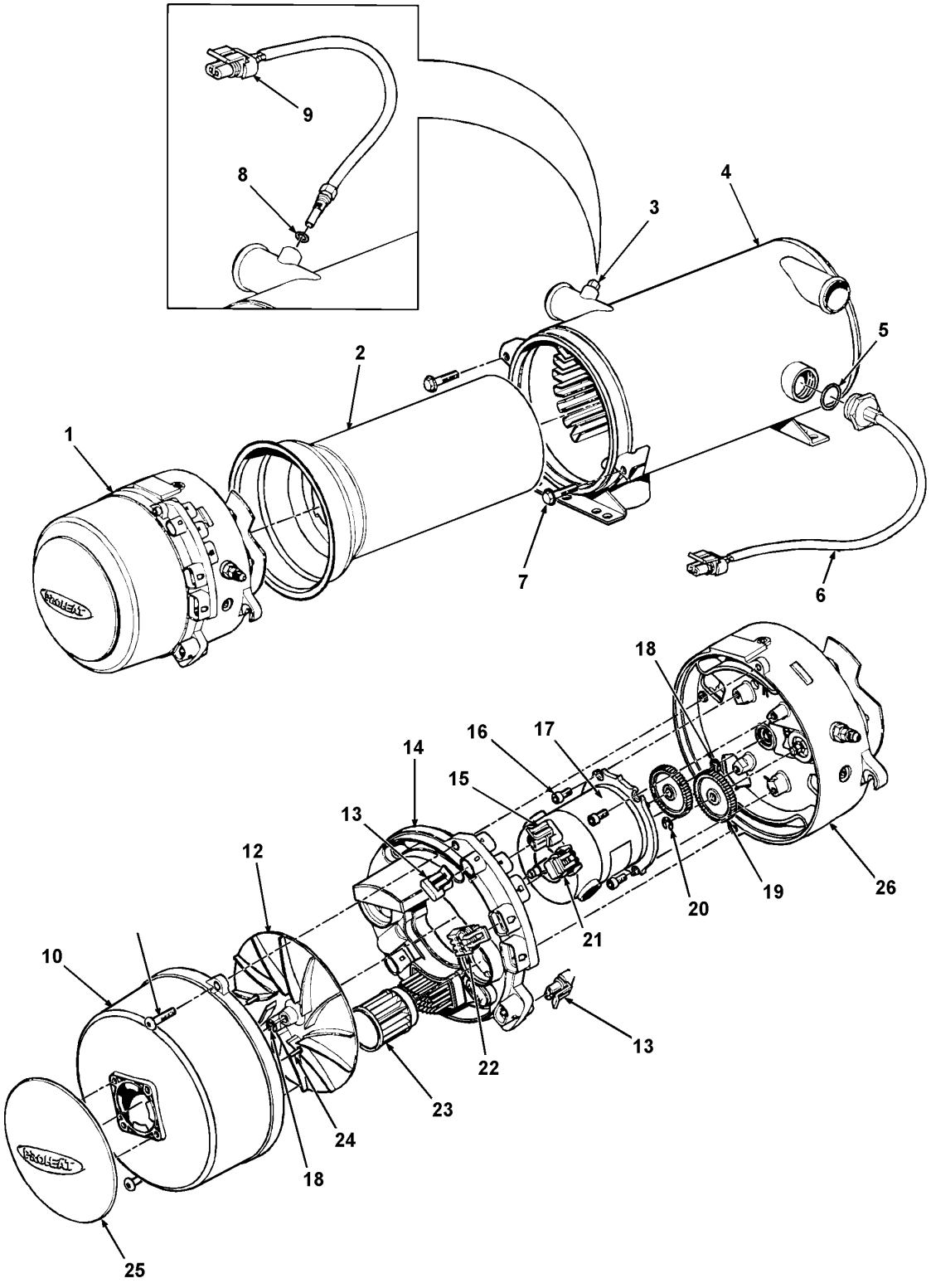

From 4-4758 Up to 6-8906	DATE: 01/2014	PAGE: 871329
WATER HEATER - "PROHEAT" 80,000 B.T.U.		

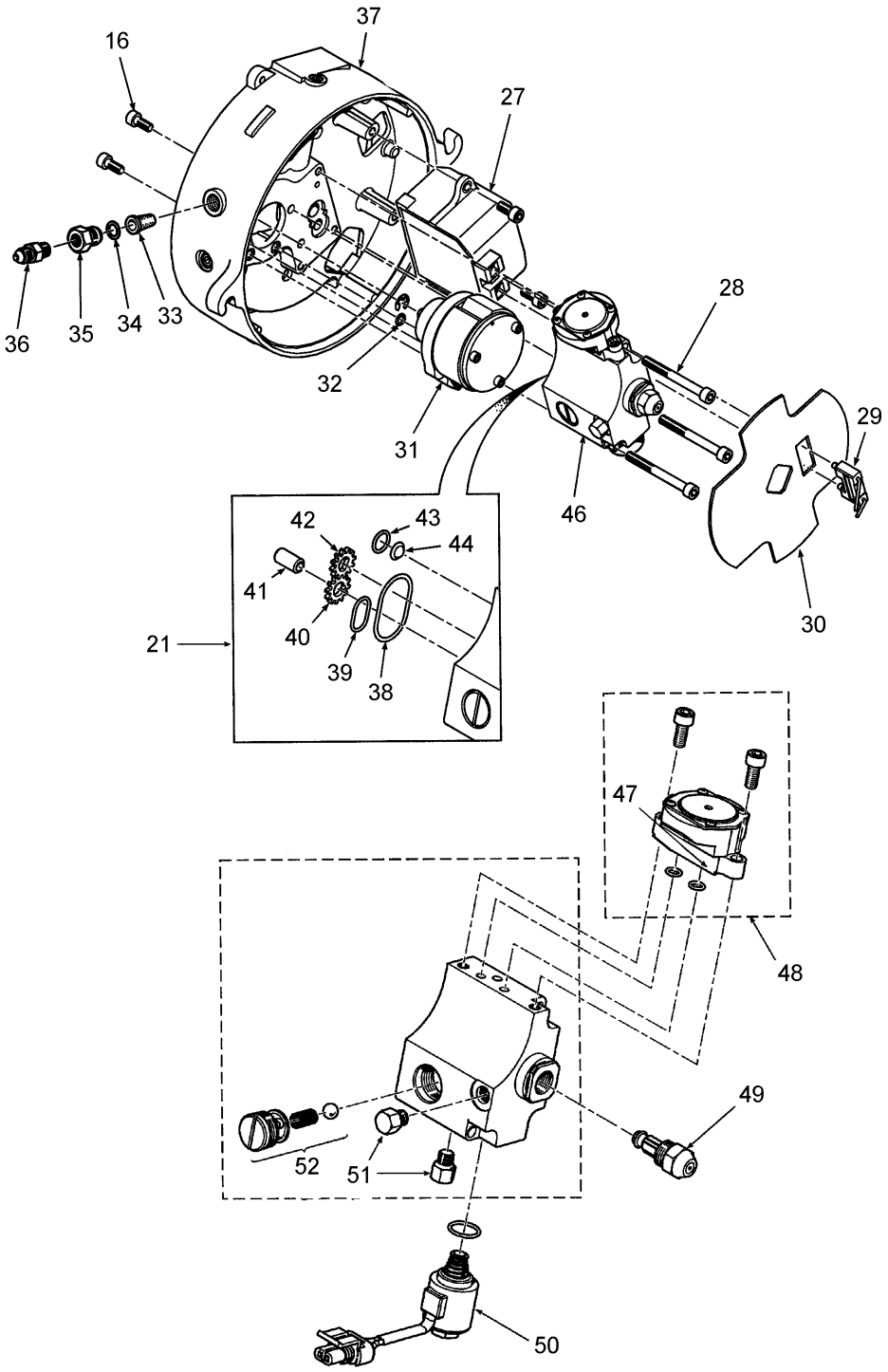

From 4-4758 Up to 6-8906	DATE: 01/2014	PAGE: 871329

WATER HEATER - "PROHEAT" 80,000 B.T.U.

ITEM	PART	DESCRIPTION	XL45	MTH40	MTH45	MTH45S	NOTE
NS	065839	CABLE ASSY INTERFACE W/"PRO-HEAT" M-80 Up to 4-4887					
NS	066172	CABLE ASSY INTERFACE W/"PRO-HEAT" M-80 From 4-4888					
NS	065839	CABLE ASSY INTERFACE W/"PRO-HEAT" M-80 Up to 5-8367					
NS	066172	CABLE ASSY INTERFACE W/"PRO-HEAT" M-80 From 5-8367					
NS	066172	CABLE ASSY INTERFACE W/"PRO-HEAT" M-80 From 7-8754					
		WATER HEATER - "PROHEAT" 80,000 B.T.U.	1				
1	N8892398	. BURNER HEAD ASSY	1				
2	N8892399	. COMBUSTION TUBE	1				
3	N8892400	. PLUG	1				
4	N8892401	. HEAT EXCHANGER	1				
5	N8892402	. O-RING, TEMPERATURE SENSOR, OVERHEAT	1				
6	N8892403	. TEMPERATURE SENSOR, OVERHEAT	1				
7	N8892405	. SCREW HEXW M8X1.25X30 (2/PKG)	1				
8	N8892406	. O-RING, TEMPERATURE SENSOR	1				
9	N8892407	. TEMPERATURE SENSOR, WITH O-RING	1				
10	N8892408	. BLOWER HOUSING	1				
11	N8892409	. SCREW CAP BUT HEXS SS M6X1X25 (2/PKG)	1				
12	N8892410	. BLOWER	1				
13	N8892411	. PLUG (2/PKG)	1				
14	N8892412	. PRIMARY CONTROL MODULE	1				
15	N8892413	. PLUG	1				
16	N8892414	. SCREW CAP HEXS M6-1.0x16 ZP	1				
17	N8892415	. MOTOR 24V	1				
18	N8892416	. RETAINING RING (3/PKG)	1				
19	N8892417	. GEAR SET	1				
20	N8892418	. RETAINING RING (2/PKG)	1				
21	N8892419	. PLUG, CAN BUS PRIMARY CONTROL MODULE	1				
22	N8892420	. PLUG, DATALINK PRIMARY CONTROL MODULE	1				
23	N8892421	. AIR FILTER	1				
24	N8892422	. SCREW, AIR INLET	1				
25	N8892423	. SPLASH GUARD	1				
26	N8892414	. SCREW CAP HEXS M6-1.0x16 ZP	1				
27	N8892426	. KIT IGNITION MODULE & ELECTRODE	1				
28	N8892427	. SCREW CAP HEXS SS M6X1X60 (3/PKG)	1				
29	N8892428	. IGNITION ELECTRODES	1				
30	N8892429	. FLAME SHIELD	1				
31	N8892430	. COMPRESSOR	1				
32	N8892431	. O-RING (3/PKG)	1				
33	N8892432	. FUEL FILTER	1				
34	N8892433	. O-RING, FUEL FILTER	1				
35	N8892434	. Adapter	1				
36	N8892435	. MALE CONNECTOR / JIC 37° FITTING / #4JIC-Mx1/8NPT-M BR	1				
37	N8892436	. BURNER HEAD FLANGE ASSY	1				

From 4-4758 Up to 6-8906	DATE: 01/2014	PAGE: 871329

WATER HEATER - "PROHEAT" 80,000 B.T.U.

ITEM	PART	DESCRIPTION	XL45	MTH40	MTH45	MTH45S	NOTE
38	N8892437	. O-RING, GEAR PUMP	1				
39	N8892438	. O-RING, AIR INTAKE / REPLACED BY: N8890336	1				
40	N8892439	. GEAR & PINION, FUEL PUMP	1				
41	N8892440	. IDLER SHAFT, FUEL PUMP	1				
42	N8892441	. GEAR DRIVE, FUEL PUMP	1				
43	N8892442	. O-RING, FUEL INTAKE	1				
44	N8892443	. SCREEN, INLET	1				
45	N8892444	. FUEL PUMP SERVICE KIT	1				
46	N8892445	. FUEL DELIVERY BLOCK ASM	1				
47	N8892446	. O-RING (3/PKG)	1				
48	N8892447	. REGULATOR ASM	1				
49	N8892448	. NOZZLE	1				
50	N8892449	. SOLENOID	1				
51	N8892450	. PLUG HEX-HEAD / ORB FITTING / #2ORB-M BR	1				
52	N8892451	. RELIEF VALVE KIT	1				
	N8892404	. PROHEAT DATA LINK KIT	1				
		FOLLOWING ITEMS ARE RELATED WITH					
		AUTOMATIC START					
		WITH WATER HEATER INSTALLATION					
		WITH BATTERIES CHARGER 110V					
111	066236	CABLE I/F BATTERIES CHARGER / W/RELAY BASE	1				A
111	068248	CABLE I/F BATTERIES CHARGER / W/RELAY BASE EFFECTIC W/EPA 2010	1				A
111	066968	CABLE ASSY W/FUSE HOLDER / W/"PRO-HEAT" M-80 / "OPTION"	1				
112	066332	CABLE ASSY POWER / W/FUSE HOLDER & RECTIFIER	1				A
113	563332	RELAY 24V S.P.D.T. W/RESISTOR / "VOLVO" (20374662)	1				A
114	500946	SCREW TP BDG PH #8x1/2 ZG603	1				A
		A) LOCATED NEAR EVAPORATOR MOTOR RELAY					

From Y-7046 Up to 6-8906	DATE: 01/2014	PAGE: Y2-2355-00

BACK-UP CAMERA & MONITOR - INSTALLATION

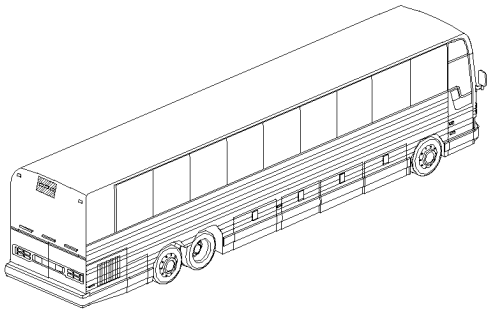

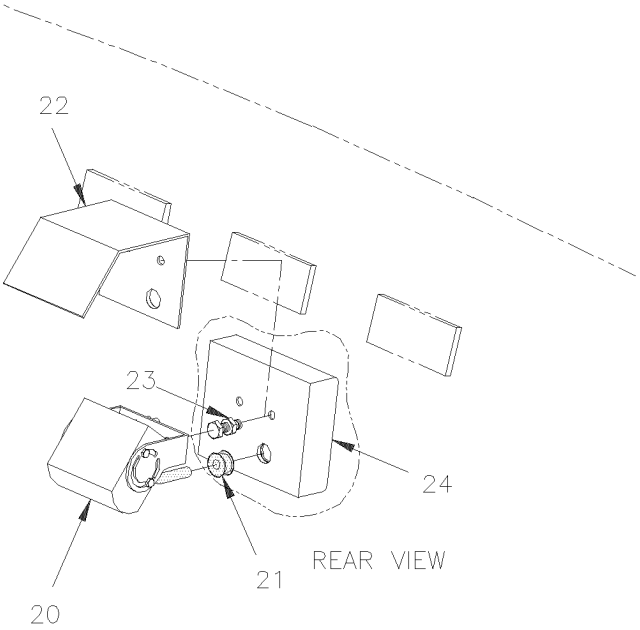

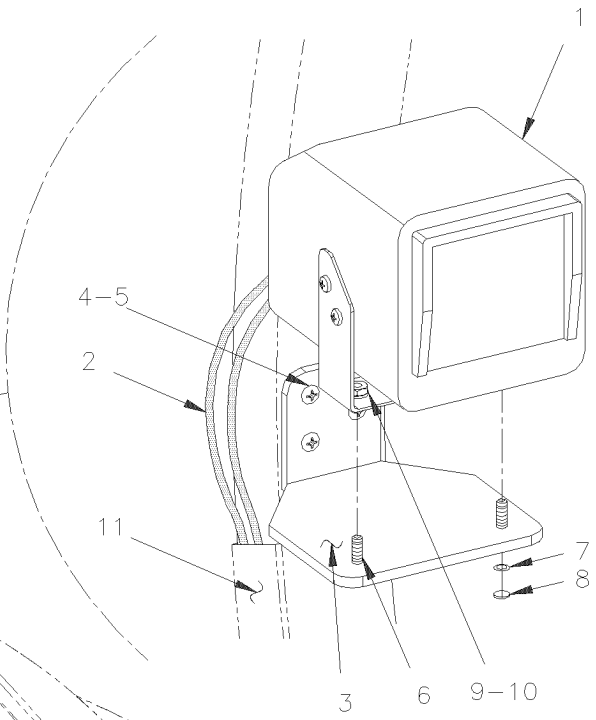

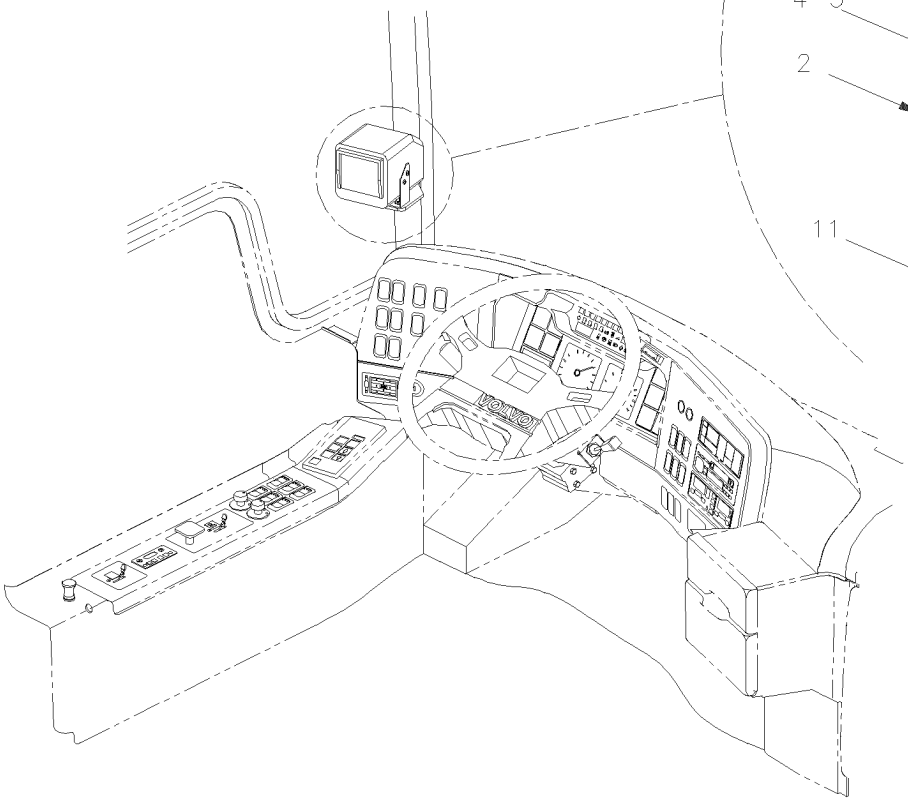

From Y-7046 Up to 6-8906	DATE: 01/2014	PAGE: Y2-2355-00

BACK-UP CAMERA & MONITOR - INSTALLATION

ITEM	PART	DESCRIPTION	XL45	MTH40	MTH45	MTH45S	NOTE
1	990334	MONITOR - "CLARION" / BLACK & WHITE 12 VOLT	1				
2	065063	CABLE ASSY / BACK-UP MONITOR	1				
. NS	990335	. CABLE MONITOR "CLARION" 652-0105-30	1				
. NS	560851	. CONNECTOR / COM. MATE-N-LOCK / PH 4C / AMP 1-480426-0	1				
. NS	504397	. GROMMET / .750x1.062x.062x.375x1.375	1				
. NS		.	AR				
3	490900	MONITOR SUPPORT	1				
3	500552	SCREW TP OV PH #6x3/4 ZP	2				
3	500463	WASHER FN CKF .187x.500x.090 BR NP	2				
4	500630	SCREW TP OV PH #10x1 ZP	3				
5	500465	WASHER FN CKF .278x.729x.119 SS	3				
6	500658	SCREW TC PAN PH #10-24x3/4 ZP	2				
9	500964	WASHER FL .203x.500x.047 ZP	2				
10	500767	NUT HEX #10-24 ZP	2				
11	327281	MOULDING HIDE CABLE	1				
20	990303	BACK-UP CAMERA - "CLARION" / BLACK & WHITE	1				
21	504625	GROMMET / .250x.750x.250x.437x1.000	1				
22	490853	PROTECTOR, CAMERA	1				
23	502737	SCREW CAP HEX M6-1.0x25 SS EMN	3				
NS	502573	WASHER FL 6.4x12.5x1.6 SS	3				
NS	502570	WASHER LO SPT 6.1x11.8x1.6 SS	3				
NS	680038	THREAD LOCKER LOCTITE #243 / BLUE / 50ml	AR				
NS	680532	SEALANT SIKA #221 / GREY / 310ml CARTRIDGE	AR				

From Y-7046 Up to 6-8906	DATE: 01/2014	PAGE: Y2-2355-10

FRONT CAMERA - INSTALLATION

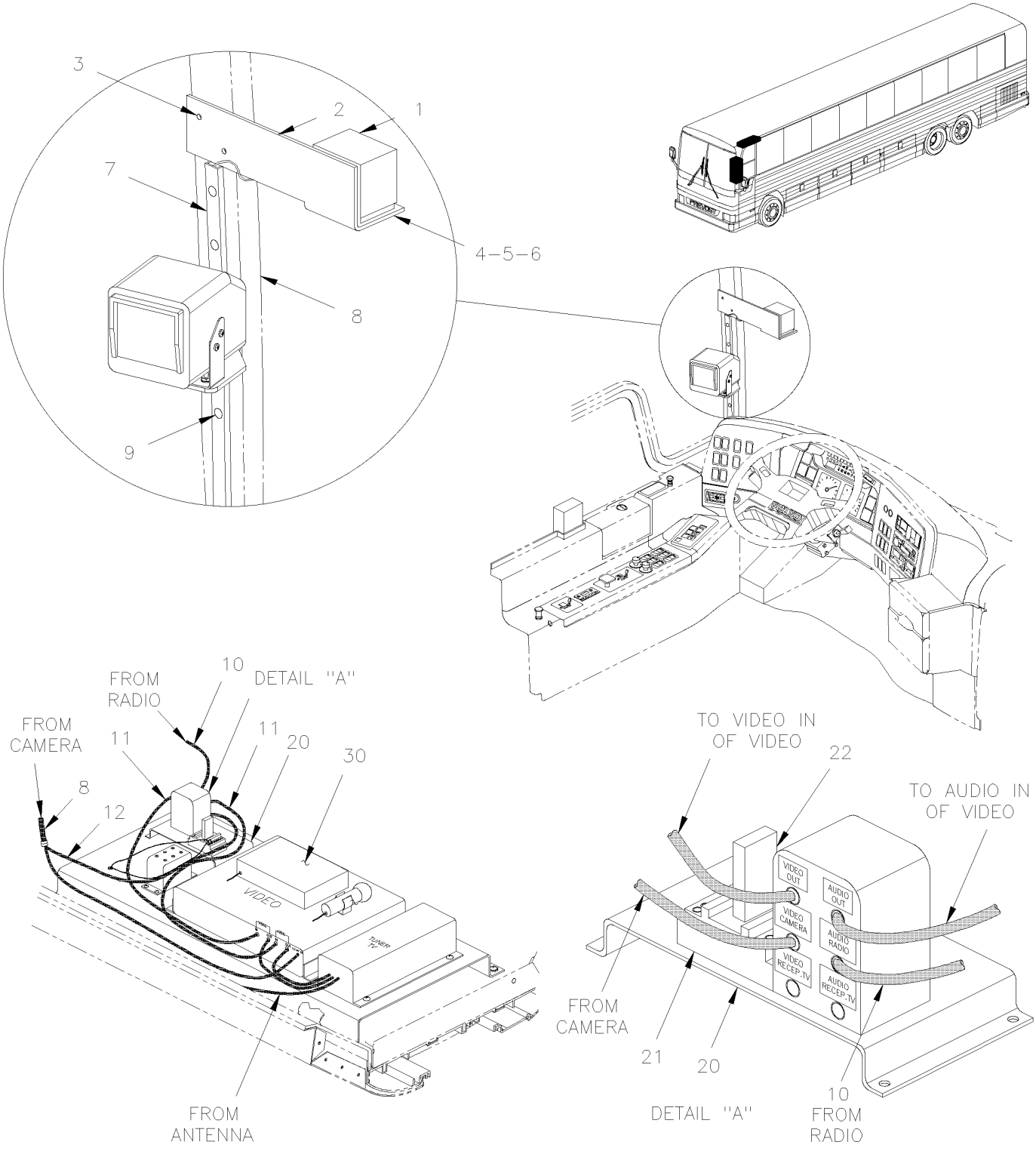

From Y-7046 Up to 6-8906	DATE: 01/2014	PAGE: Y2-2355-10

FRONT CAMERA - INSTALLATION

ITEM	PART	DESCRIPTION	XL45	MTH40	MTH45	MTH45S	NOTE
1	900914	FRONT CAMERA	1				
2	404905	SUPPORT / CAMERA	1				
3	500630	SCREW TP OV PH #10x1 ZP	1				
3	500465	WASHER FN CKF .278x.729x.119 SS	1				
4	500162	SCREW CAP HEX 1/4-20x1/2 G5 ZP	2				
5	500440	WASHER FL .250x.562x.065 ZP	2				
6	500473	WASHER LO SPT .262x.489x.062 ZP	2				
7	327332	MOULDING HIDE WIRE 587MM	1				
8	900912	CABLE ASSY / FRONT CAMERA	1				
NS	900918	CABLE RCA / 1M/1F/ 3'	1				
9	500552	SCREW TP OV PH #6x3/4 ZP	4				
NS	500463	WASHER FN CKF .187x.500x.090 BR NP	4				
10	900866	CABLE RCA / 1M/1M / 25'	1				
10	900671	ADAPTOR "Y" RCA / 1M/2F / 4"	1				
10	900758	ADAPTOR "Y" RCA / 1F/2M / 9"	1				
11	900856	CABLE RCA / 2M/2M / 3'	2				
12	900913	CABLE ASSY / <> VIDEO & FRONT CAMERA	1				
20	404701	. RELAY AND RCA PLUG PLATE ASSY Up to 4-8270	1				
20	405495	. RELAY AND RCA PLUG PLATE ASSY From 4-8271	1				
NS	404703	. PLATE MOUNTING	1				
NS	500576	. SCREW TC BDG PH #6-32x1/2 ZP	4				
NS	500467	. WASHER LO INT .138x.275x.019 ZP	4				
21	562937	. BASE SOCKET	1				
22	562936	. RELAY 24V 4.P.D.T.	1				
NS	562169	. DIODE / 1AMP	1				
22	562122	. PIN TERMINAL / 20-14 / AMP 350547-1 From 4-8271	2				
22	561248	. CONNECTOR / UNIVERSAL MATE-N-LOK / PH 2C / AMP 1-480699-0 From 4-8271	1				
30	Y2-2317-20	**VIDEO VHS PLAYER - INSTALLATION "R.E.I."**					
NS	405324	ANGLE SUPPORT CAMERA "SCENIC"	1				A
NS	405325	SUPPORT CAMERA "SCENIC"	1				A
NS	500162	SCREW CAP HEX 1/4-20x1/2 G5 ZP	2				A
NS	500440	WASHER FL .250x.562x.065 ZP	2				A
NS	500473	WASHER LO SPT .262x.489x.062 ZP	2				A
		A) THOSE ITEMS ARE USE WITH INSTALLATION ON					
		CENTER POST WINDSHIELD					

From Y-7046 Up to 6-8906	DATE: 01/2014	PAGE: Y2-2370-10

W.C.L. - DECAL

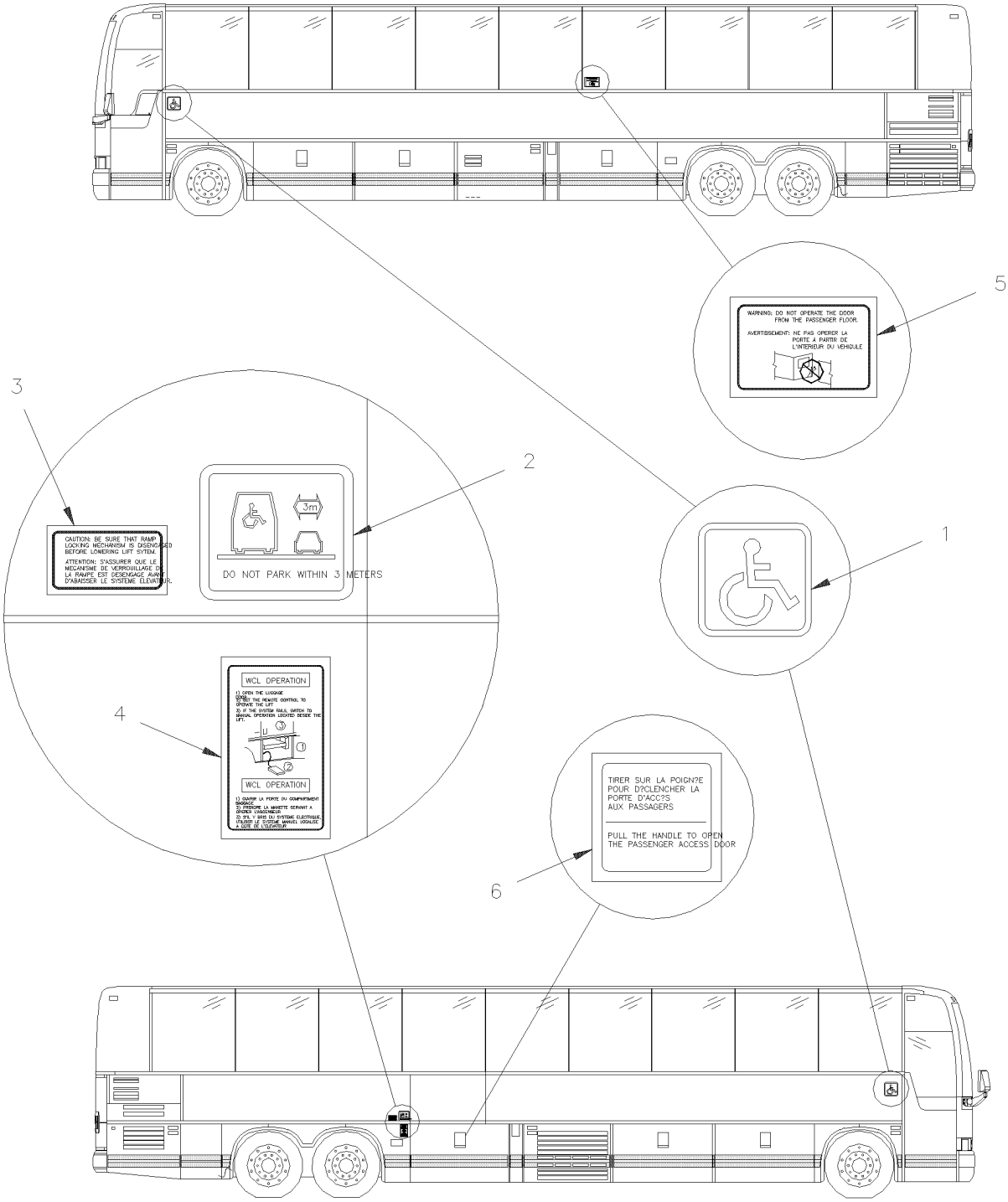

From Y-7046 Up to 6-8906	DATE: 01/2014	PAGE: Y2-2370-10
W.C.L. - DECAL		

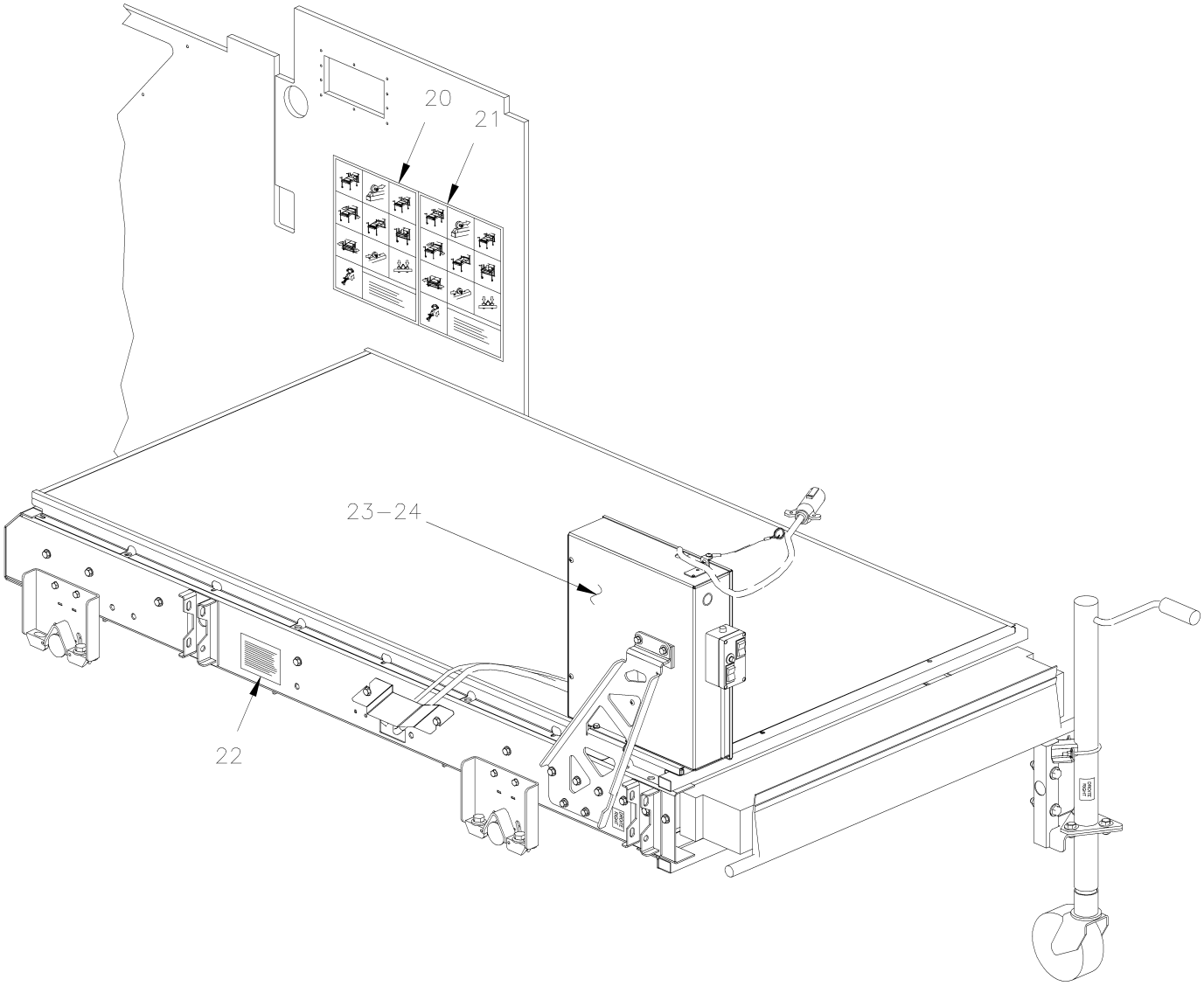

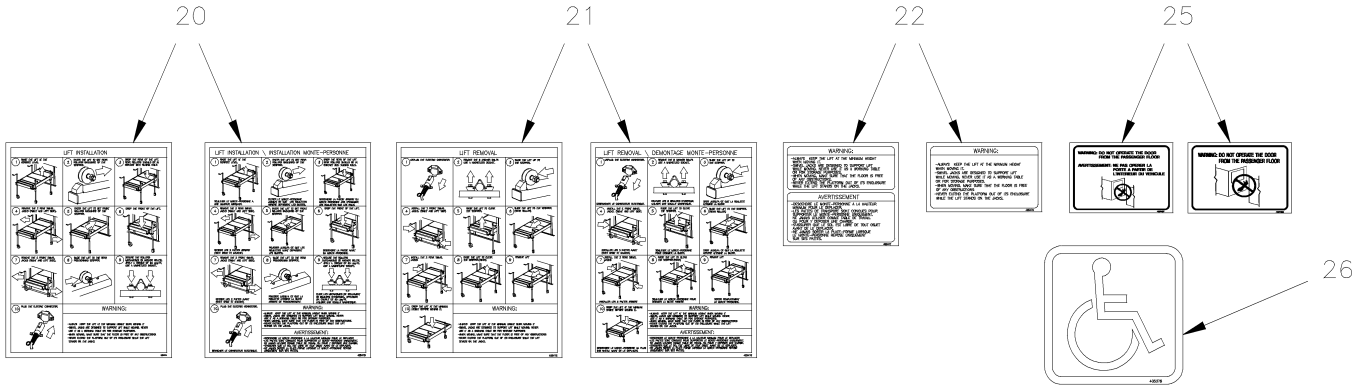

From Y-7046 Up to 6-8906	DATE: 01/2014	PAGE: Y2-2370-10

W.C.L. - DECAL

ITEM	PART	DESCRIPTION	XL45	MTH40	MTH45	MTH45S	NOTE
1	404087	DECAL / BLUE W/CHAIR / 180MM x 180MM	1				
2	404083	DECAL / DO NOT PARK WITHIN 3 METRES / ENGLISH & FRENCH	1				A
2	404089	DECAL / DO NOT PARK WITHIN 3 METRES / ENGLISH	1				
3	403898	DECAL / "WARNING" WHEN OPENING DOOR BEWARE.. / ENGLISH & FRENCH	1				A
3	404332	DECAL / "WARNING" WHEN OPENING DOOR BEWARE.. / ENGLISH	1				
4	405165	DECAL / WCL OPERATION 1. 2.3.	1				A
4	405166	DECAL / WCL OPERATION 1. 2.3.	1				
5	405167	DECAL / DO NOT OPERAT. DOOR / ENGLISH & FRENCH	1				A
5	405168	DECAL / DO NOT OPERAT. DOOR / ENGLISH	1				
6	405169	DECAL / PULL THE HANDLE.. / ENGLISH & FRENCH	1				
6	405170	DECAL / PULL THE HANDLE.. / ENGLISH	1				A
20	405474	DECAL / PICTOGRAM LIFT INSTALL… / ENGLISH Up to 5-8605	1				
20	405745	DECAL / PICTOGRAM LIFT INSTALL… / ENGLISH From 5-8606	1				
20	405475	DECAL / PICTOGRAM LIFT INSTALL…/ MONTAGE / ENGLISH / FRENCH Up to 5-8605	1				
20	405746	DECAL / PICTOGRAM LIFT INSTALL…/ MONTAGE / ENGLISH & FRENCH From 5-8606	1				
20	405654	DECAL / PICTOGRAM LIFT INSTALL… / ENG & SPANISH Up to 5-8605	1				
20	405742	DECAL / PICTOGRAM LIFT INSTALL… / ENGLISH & SPANISH From 5-8606	1				
21	405472	DECAL / PICTOGRAM LIFT REMOVAL / DEMONTAGE.. / ENGLISH / FRENCH Up to 5-8605	1				
21	405744	DECAL / PICTOGRAM LIFT REMOVAL / DEMONTAGE.. / ENGLISH & FRENCH From 5-8606	1				
21	405473	DECAL / PICTOGRAM LIFT REMOVAL / ENGLISH Up to 5-8605	1				
21	405743	DECAL / PICTOGRAM LIFT REMOVAL / ENGLISH From 5-8606	1				
21	405653	DECAL / PICTOGRAM LIFT REMOVAL / ENG & SPANISH Up to 5-8605	1				
21	405741	DECAL / PICTOGRAM LIFT REMOVAL / ENGLISH & SPANISH From 5-8606	1				
22	405471	DECAL / "WARNING" ALWAY KEEP THE LIFT AT T... / ENGLISH & FRENCH	1				
22	405470	DECAL / "WARNING" ALWAY KEEP THE LIFT AT T... / ENGLISH	1				
23	405469	DECAL / INSTRUCTION D'OPÉRATION MANUEL / FRENCH	1				
24	405503	DECAL / RICON W.C.L. OPERATING INSTRUCTION / ENGLISH Up to 5-8605	1				
24	405749	DECAL / RICON W.C.L. OPERATING INSTRUCTION EXIT / ENGLISH From 5-8606	1				
24	405504	DECAL / INSTRUCTION D'OPÉRATION DE L'ÉLÉVATEU / FRENCH Up to 5-8605	1				
24	405750	DECAL / RICON W.C.L. OPERATING INSTRUCTION EXIT / ENGLISH & FRENCH From 5-8606	1				
25	405468	DECAL / MANUAL OPERATING INSTRUCTION... / ENGLISH	1				
25	405467	DECAL / INSTRUCTION D'OPÉRATION DE L'ÉLÉVATEU / FRENCH	1				
26	405378	DECAL / BLUE W/CHAIR / 102MM x 102MM	1				
		A) BILINGUAL FRENCH & ENGLISH					

From Y-7046 Up to 6-8906	DATE: 01/2014	PAGE: Y2-2370-10

W.C.L. - DECAL

ITEM	PART	DESCRIPTION	XL45	MTH40	MTH45	MTH45S	NOTE

From Y-7046 Up to 6-8906	DATE: 01/2014	PAGE: Y2-2370-20
W.C.L. SEAT BELTS		

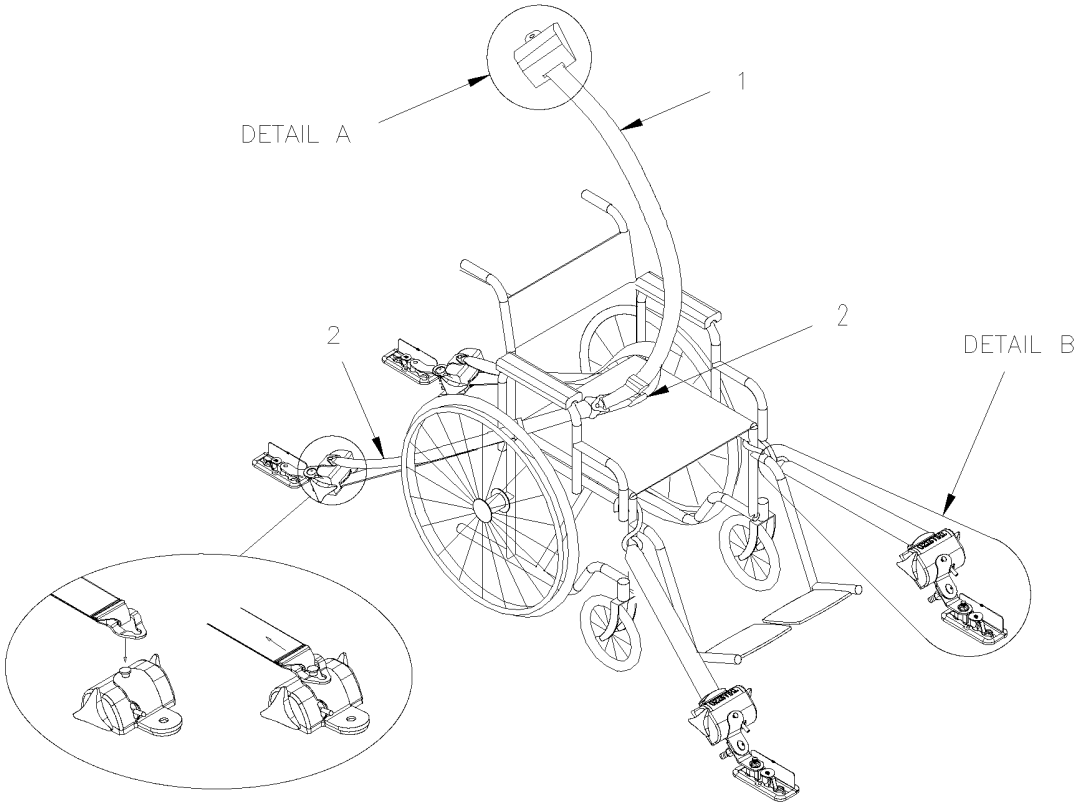

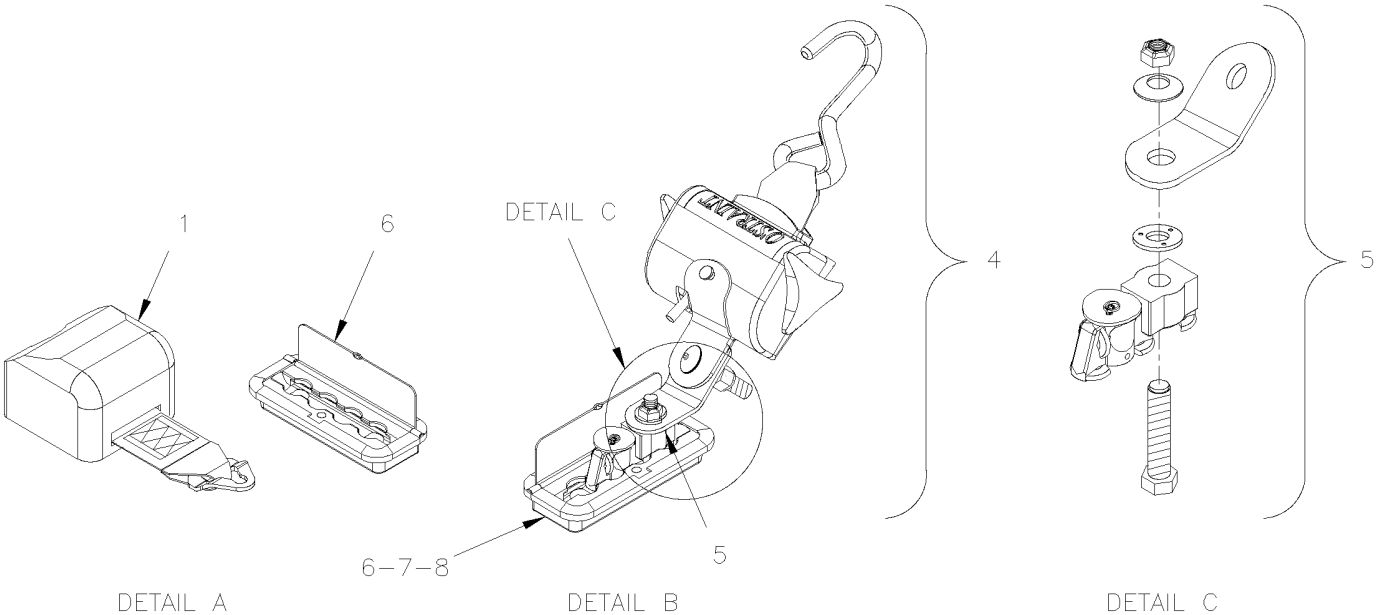

From Y-7046 Up to 6-8906	DATE: 01/2014	PAGE: Y2-2370-20

W.C.L. SEAT BELTS

ITEM	PART	DESCRIPTION	XL45	MTH40	MTH45	MTH45S	NOTE
	861930	KIT SAFETY BELT	AR				A
1	861931	. RETRACTALE SHOULDER BELT	1				
2	861932	. REGULAR LAP BELT / KIT MALE & FEMALE	1				
4	861934	. RETACTABLE SEAT MOUNTED / BELT ASSY (SET OF 4 W/TRAC ADAPTOR)	1				
5	861935	. . KIT TRAC ADAPTOR	4				
6	861929	FLOOR POCKET W/COVER	8				
NS	862213	SCREW CAP CK HEXS 5/16-18x1 3/4 SS	2				
7	223822	SPACER 1/2" O.D. X 20MM	16				
8	223818	ANCHOR PLATE	8				
NS	862967	SAFETY BELT CUTTER / W.C.L. / EMERGENCY	1				
		A) INCLUDE ITEMS 1, 2, 3, 4, 5 & 7					

From Y-7046 Up to 1-7680	DATE: 01/2014	PAGE: Y2-2380-00
W.C.L. "RICON" - INSTALLATION MODEL "F9A"		

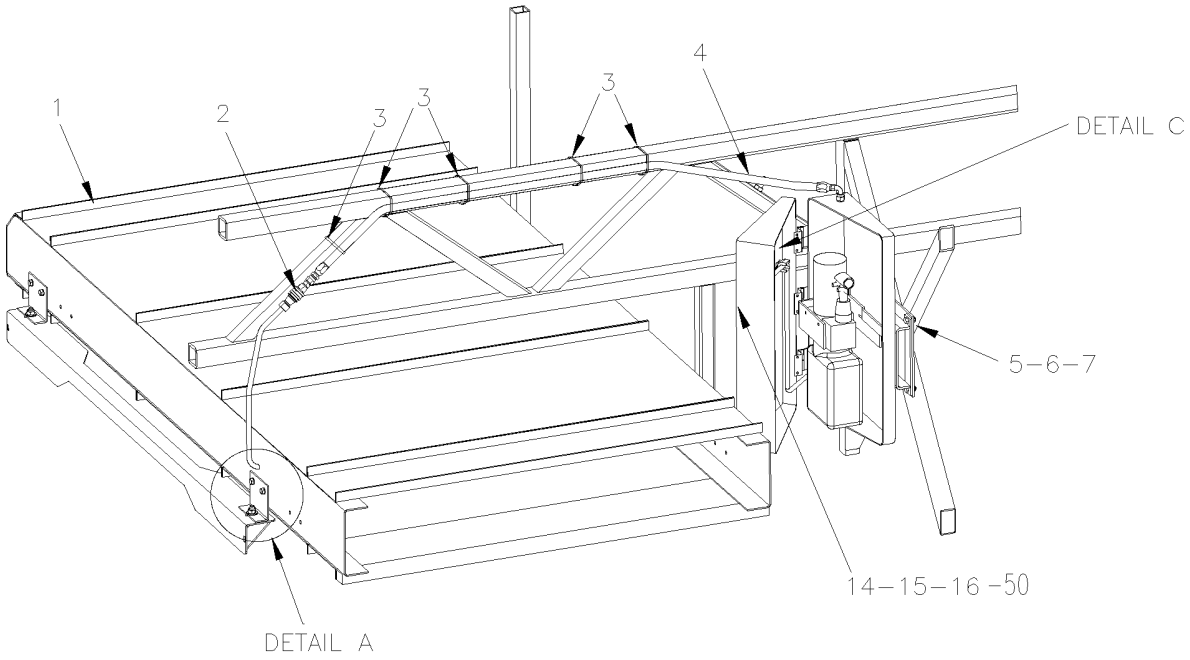

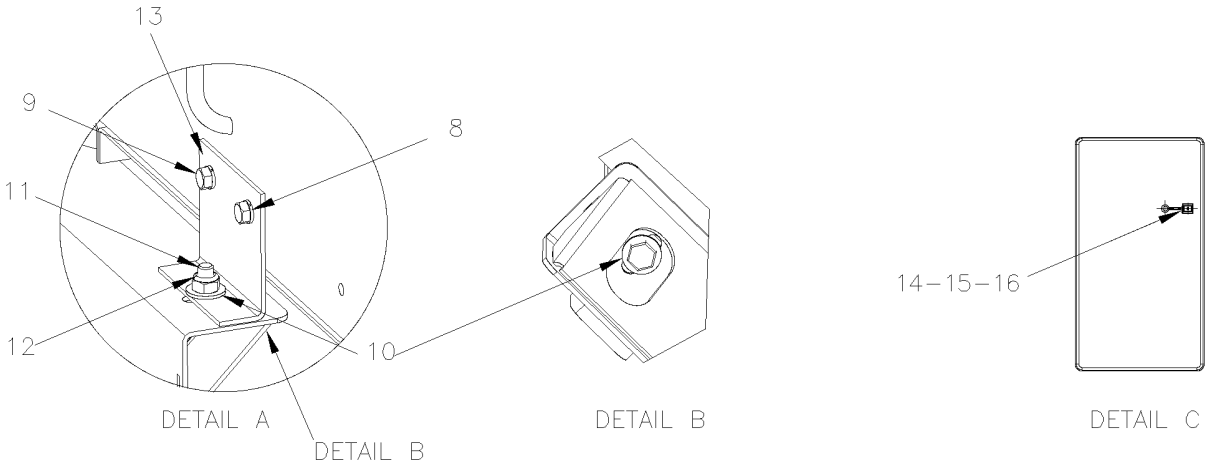

From Y-7046 Up to 1-7680	DATE: 01/2014	PAGE: Y2-2380-00

W.C.L. "RICON" - INSTALLATION MODEL "F9A"

ITEM	PART	DESCRIPTION	XL45	MTH40	MTH45	MTH45S	NOTE
1	Y2-2380-05	**W.C.L. "RICON" MODEL "F9A"**					
2	501687	MALE CONNECTOR / JIC 37° FITTING / #6JIC-Mx1/4NPT-M STL	1				
3	504637	CABLE TIE / 3/16" x 13"	5				
4	483364	HOSE ASSY / #6 1200MM	1				
5	500868	NUT HEX NYRT M8-1.25 CP	4				
6	502510	WASHER FL .375x.875x.083	4				
7	502790	SCREW CAP HEX M8-1.25x20 G8.8 ZP	4				
8	500035	WASHER LO SPT .317x.586x.078 SS	8				
9	500179	SCREW CAP HEX 5/16-18x3/4 G5 ZP	8				
10	500445	WASHER FL .437x1.000x.083 ZP	8				
11	502559	SCREW CAP HEX M10-1.5x25 G8.8 ZP	4				
12	500680	NUT HEX STO M10-1.5 ZP	4				
13	327376	SUPPORT	4				
14	561815	CLAMP W/ 2 / ITT CANNON 029-0263-000	1				
15	502637	WASHER FL .200x.437x.037 SS	1				
16	504118	RIVET POP DOME OE 3/16x3/8 AL	1				
50	Y2-2380-60	**W.C.L. "RICON" - PUMP INSTALLATION MODEL "F9A"**					

From 1-7681 Up to 4-8330	DATE: 01/2014	PAGE: Y2-2380-01
W.C.L. "RICON" - INSTALLATION MODEL "HC-L002"		

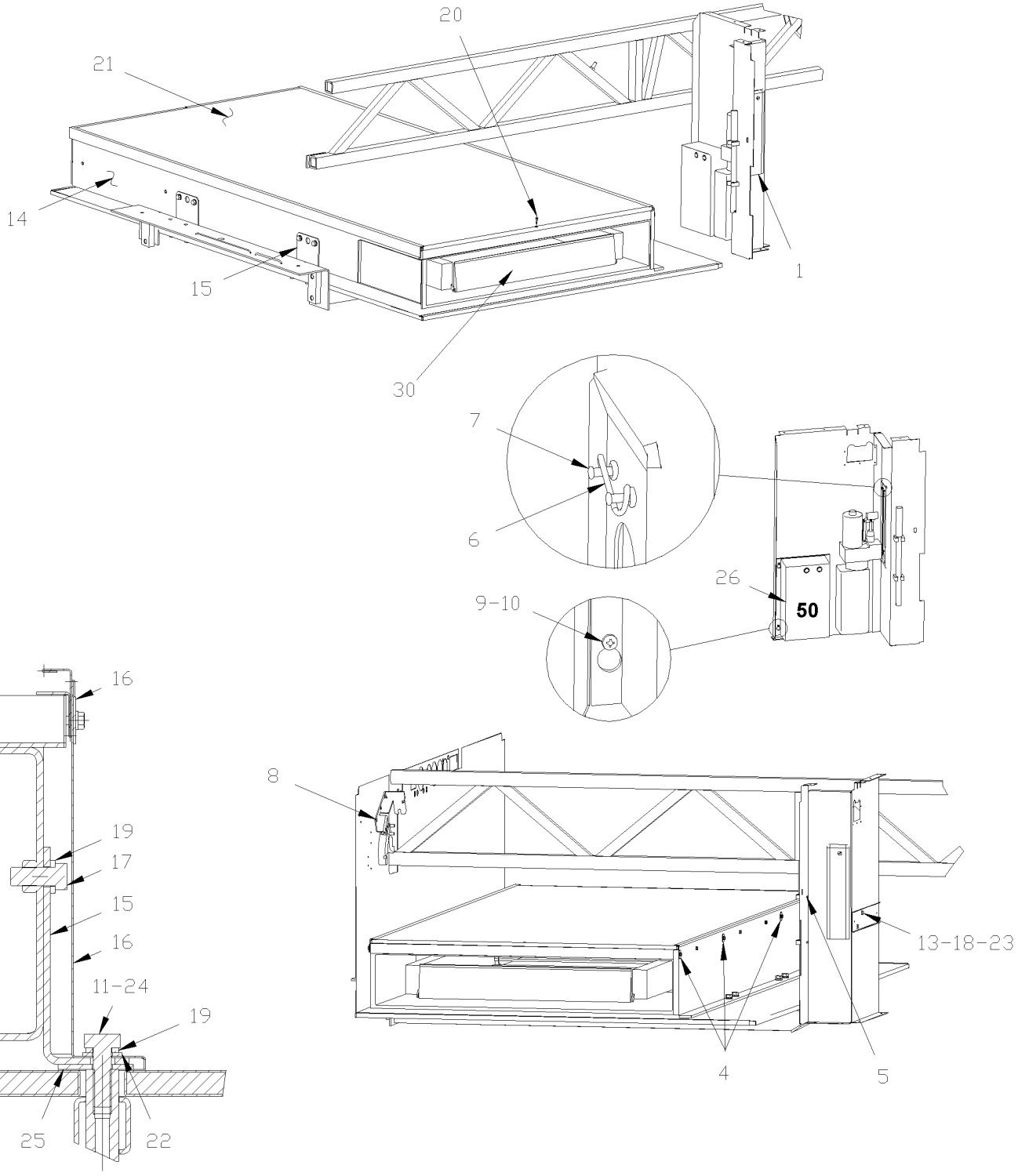

From 1-7681 Up to 4-8330	DATE: 01/2014	PAGE: Y2-2380-01

W.C.L. "RICON" - INSTALLATION MODEL "HC-L002"

ITEM	PART	DESCRIPTION	XL45	MTH40	MTH45	MTH45S	NOTE
1	032475	ACCESS DOOR / A/C COMPARTMENT 86MM x 353MM	1				
1	033182	ACCESS DOOR W/HINGE / A/C COMPARTMENT	1				
. NS	033882	. DOOR	1				
. NS	033183	. HINGE	1				
. NS	901052	. LATCH RUBBER	1				
. NS	506071	. TAPE RUB ADH1 CC POL 1/8" x 1/2" x 50' 2520X	AR				
4	500468	WASHER FL .281x1.250x.065 ZP	4				
5	504248	RIVET CHY Q PRDG 3/16x1/4 SS	2				
6	504365	SPRING HOOK / DZUS 5/16	1				
7	504339	RIVET POP DOME OE 1/8x3/8 SS	2				
8	504459	RIVET MGLP PRDG 1/4x3/8 SS	8				
9	500750	SCREW MA TR PH M4-0.7x18 CHR	5				
10	500022	WASHER LO INT .168x.340x.023 ZP	5				
11	680064	OIL ANTICOROSIVE GREY (TECTYL) (20 LITERS)	AR				
12	500341	SCREW SET HEXS CUP M12-1.75x20	8				
13	504636	HOLE PLUG BUTTON / .312 O.D. BLACK	2				
14	862026	W.C.L. "RICON" - HC-L002	1				
15	212767	ANGLE	4				
16	482735	SIDE PANEL PROTECTOR	1				
17	500850	SCREW CAP HEX M12-1.75X25 G8.8 ZP	8				
18	500845	SCREW CAP HEX 5/16-18x1/2 G5 ZP	2				
19	500482	WASHER LO SPT .506x.873x.125 ZP	16				
20	5001118	SCREW TP FL PH #8x1 SS410	2				
21	482654	PANEL BAGGAGE FLOOR	1				
22	500958	WASHER FL .531x1.062x.095 SS	8				
23	500476	WASHER LO SPT .317x.586x.078 ZP	2				
24	502731	SCREW CAP HEX M12-1.75x40 G8.8 ZP	8				
25	213921	PLATE	4				
26	065536	BOX TERMINAL PROTECTOR	1				
30	Y2-2380-06	**W.C.L. "RICON" MODEL "HC-L002"**					
50	Y2-2380-61	**W.C.L. "RICON" - PUMP INSTALLATION MODEL "HC-L002"**					
50	Y2-2380-62	**W.C.L. "RICON" - PUMP INSTALLATION MODEL "F9T" & "F9TF"**					

From 4-8331 Up to 6-8906	DATE: 01/2014	PAGE: Y2-2380-02
W.C.L. "RICON" REMOVABLE - INSTALLATION MODEL "F9T" & "F9TF"		

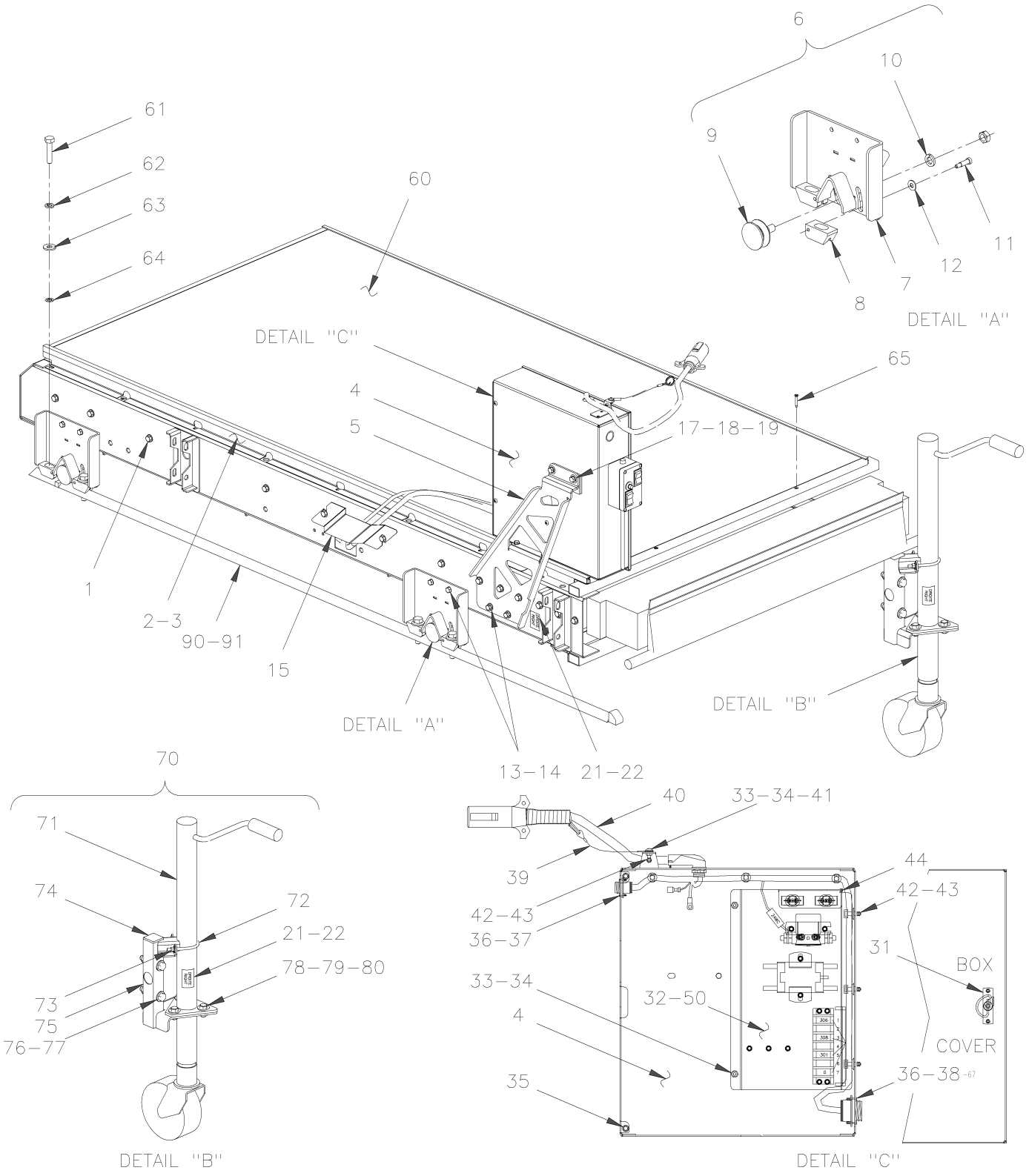

From 4-8331 Up to 6-8906	DATE: 01/2014	PAGE: Y2-2380-02

W.C.L. "RICON" REMOVABLE - INSTALLATION MODEL "F9T" & "F9TF"

ITEM	PART	DESCRIPTION	XL45	MTH40	MTH45	MTH45S	NOTE
	490891P	REMOVABLE W.C.L. COMPLETE ASSY W/ PUMP BOX ASSY	1				A
1	862352	W.C.L. "RICON" - F9T-DE004 From RETROFIT	1				
1	862662	W.C.L. "RICON" - F9TF-DE004	1				
2	490971	SLIDING TRACK REMOVABLE R.H.	1				
3	490990	SLIDING TRACK REMOVABLE L.H.	1				
4	364035	BOX ASSY	1				
5	364029	SUPPORT PUMP ASSY	1				
6	491008	CARRIER ASSY / W/WHEEL / REPLACED BY: 491228	4				
7	490998	. PLATE SUPPORT	1				
8	490995	. CALIPER	1				
9	990418	. WHEEL / W/"V" GROOVE USE W/SCREW	1				
NS	500652	. NUT HEX 1/2-20 SS	1				
10	500944	. WASHER LO SPT .506x.873x.125 ZG603	2				
11	502638	. WASHER FL .312x.734x.065 ZG603	2				
12	500631	. SCREW SHR HEXS 5/16x3/4 {1/4-20 SS	2				
13	955525	SCREW CAP HEX 5/16-18x1 G5 ZG603	10				
14	500942	WASHER LO SPT .317x.586x.078 ZG603	10				
NS	502638	WASHER FL .312x.734x.065 ZG603	2				
15	491013	PLATE PROTECTOR	1				
17	500347	SCREW CAP HEX 5/16-18x1 1/4 SS	2				
NS	364031	SPACER	2				
18	5001448	WASHER FL .343x.875x.062 SS18-8	2				
19	500035	WASHER LO SPT .317x.586x.078 SS	2				
21	491002	DECAL / GAUCHE / LEFT ENG & FRENCH	1				
21	491056	DECAL / LEFT IZQUIERDA ENG & SPANISH	1				
22	491001	DECAL / DROIT / RIGHT ENG & FRENCH	1				
22	491055	DECAL / RIGHT DERECHA ENG & SPANISH	1				
30	491033	BOX ASSY W/POWER PLATE	1				
31	504203	SPRING LATCH / KNURLED STEEL KNOB	1				
NS	504105	RIVET POP DOME OE 1/8x3/16 AL	2				
32	563370	POWER PLATE ASSY "RICON"	1				
33	5001180	NUT HEX NYRT #10-24 SS	5				
34	5001241	SCREW MA TR PH #10-24x1/2 SS	5				
35	504498	BUMPER PLUG / .406 ODx.218THx.250HOLEx.125	2				
36	500518	SCREW MA BDG PH #4-40x1/2 ZP	8				
37	561820	NUT, RING #13 / 1.125" I.D. W/4 4-40	1				
38	561823	NUT, RING #23 / 1.812" I.D. W/4 4-40	1				
39	502929	CABLE RETAINING 150MM	1				
40	065857	CABLE ASSY / POWER / W.C.L. "RICON"	1				
41	500964	WASHER FL .203x.500x.047 ZP	1				
42	509815	TIE MOUNT / ATTACHMENT W/TREE MOUNT	AR				
43	504637	CABLE TIE / 3/16" x 13"	AR				
		A) DO NOT INCLUSDED TRANSPORTER JACK L.H. & R.H.					

From 4-8331 Up to 6-8906	DATE: 01/2014	PAGE: Y2-2380-02

W.C.L. "RICON" REMOVABLE - INSTALLATION MODEL "F9T" & "F9TF"

ITEM	PART	DESCRIPTION	XL45	MTH40	MTH45	MTH45S	NOTE
44	506338	RUBBER CHANNEL / 1/16" x 1/4" INT "U" SHAPE / ROUND C.T.L.	AR				
NS	680066	GLUE / ADBOND 5014 ADH 23.6ML BOTTLE	AR				
50	Y2-2380-61	**W.C.L. "RICON" - PUMP INSTALLATION MODEL "HC-L002"**					
60	990417	PANEL FIBERGLASS 1000MM X 1940MM / OVER W.C.L. "RICON" / REPLACED BY: 484134	1				
61	5001538	SCREW CAP HEXF SERR M12-1.75x50 DP	8				
62	500944	WASHER LO SPT .506x.873x.125 ZG603	8				
64	5001568	NUT PUSH RND M12 ZP	8				
65	502903	SCREW TC FL PH #10-24x1 1/4 ZG603	2				
67	864071	HARNESS, ELECTRICAL, MAIN, W/HYDRAULIC LINE	1				
70	490988P	TRANSPORTER JACK ASSY L.H.	2				
70	490989P	TRANSPORTER JACK ASSY R.H.	2				
71	990416	. JACK	1				
72	503399	. U-CLAMP / 2" I.D.	1				
73	500769	. NUT HEX 1/4-20 ZP	2				
NS	500441	. WASHER FL .312x.734x.065 ZP	2				
NS	500473	. WASHER LO SPT .262x.489x.062 ZP	2				
74	508394	. GLIDE SQUARE END 1.5 X 1.5 TUBE 14GA / P	1				
75	490981	. SUPPORT JACK L.H.	1				
75	490982	. SUPPORT JACK R.H.	1				
76	5001862	. SCREW CAP HEX M12-1.75x70 G10.9 N500	2				
77	500860	. NUT HEX M12-1.75 ZP	2				
NS	500958	. WASHER FL .531x1.062x.095 SS	4				
78	502559	. SCREW CAP HEX M10-1.5x25 G8.8 ZP	3				
79	502644	. WASHER FL 10.5x30.0x2.5 ZP	3				
80	500680	. NUT HEX STO M10-1.5 ZP	3				
90	215121	TRACK W.C.L. BACKWARD	1				
91	255122	TRACK W.C.L. FORWARD	1				
100	Y2-2380-61	**W.C.L. "RICON" - PUMP INSTALLATION MODEL "HC-L002"**					
101	Y2-2380-62	**W.C.L. "RICON" - PUMP INSTALLATION MODEL "F9T" & "F9TF"**					

From 4-8331 Up to 6-8906	DATE: 01/2014	PAGE: Y2-2380-02

W.C.L. "RICON" REMOVABLE - INSTALLATION MODEL "F9T" & "F9TF"

ITEM	PART	DESCRIPTION	XL45	MTH40	MTH45	MTH45S	NOTE

From Y-7046 Up to 1-7680	DATE: 01/2014	PAGE: Y2-2380-05
W.C.L. "RICON" MODEL "F9A"		

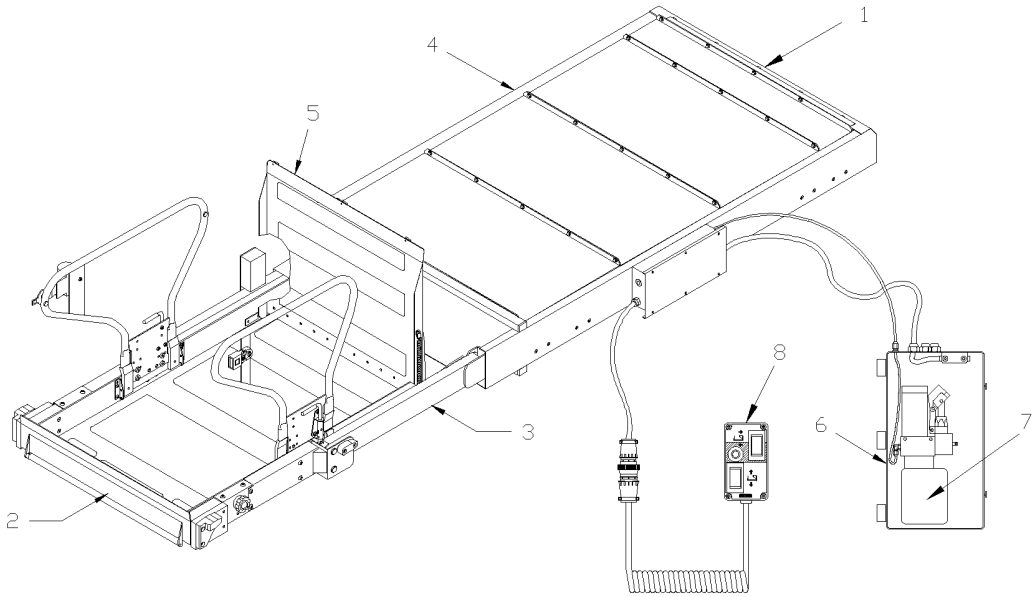

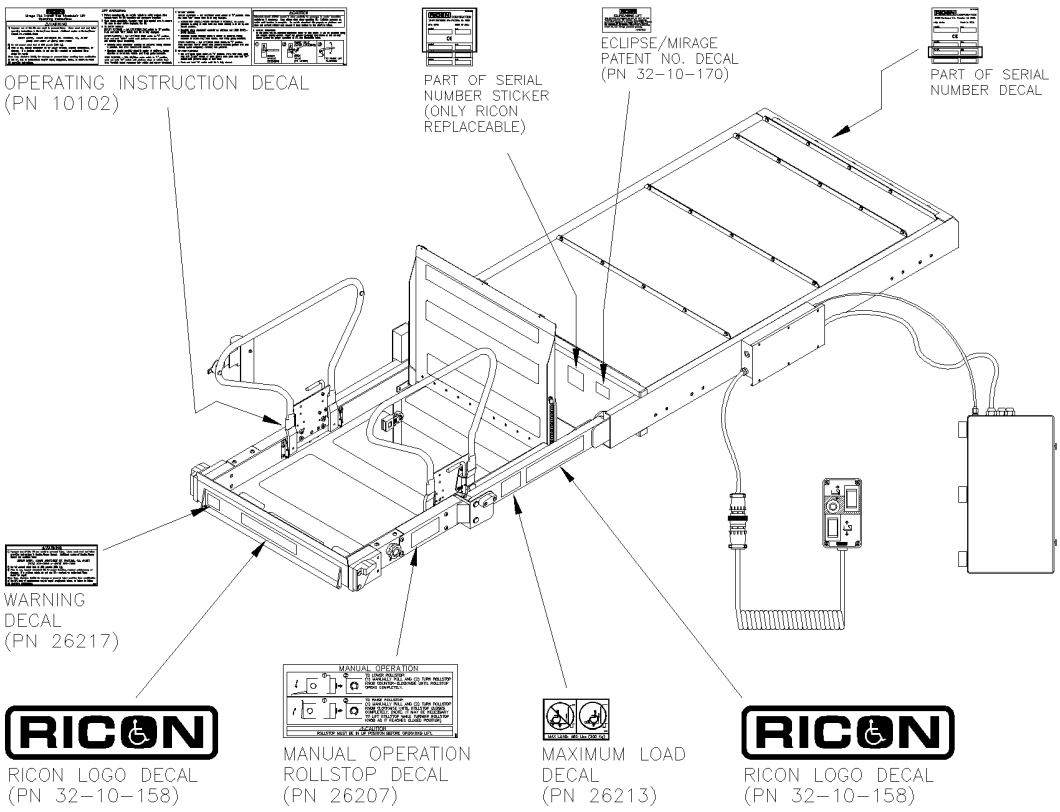

From Y-7046 Up to 1-7680	DATE: 01/2014	PAGE: Y2-2380-05

W.C.L. "RICON" MODEL "F9A"

ITEM	PART	DESCRIPTION	XL45	MTH40	MTH45	MTH45S	NOTE
	861928	W.C.L. "RICON" - F9A	1				
1	Y2-2380-10	**. W.C.L. "RICON" - LIFT ENCLOSURE ASSY MODEL "F9A"**					
2	Y2-2380-20	**. W.C.L. "RICON" - PLATFORM ASSY MODEL "F9A"**					
3	Y2-2380-30	**. W.C.L. "RICON" - TRAVELING FRAME ASSY MODEL "F9A"**					
4	Y2-2380-40	**. W.C.L. "RICON" - CARRIAGE ASSY MODEL "F9A"**					
5	Y2-2380-50	**. W.C.L. "RICON" - BRIDGE PLATE ASSY 9" MODEL "F9A"**					
6	Y2-2380-60	**. W.C.L. "RICON" - PUMP INSTALLATION MODEL "F9A"**					
7	Y2-2380-65	**. . W.C.L. "RICON" - PUMP ASSY**					
8	862206	. CONTROLER	1				
. NS	196844	. . SWITCH / M/ON-OFF-M/ON S P.D.T	1				
NS	864191	DVD "SAFETY RECALL "RICON" W.C.L.	1				
NS	864173	DECAL "FASTEN BELT" WCL	1				
NS	864194	DECAL "ATTACHEZ LA CEINTURE" WCL	1				

From 1-7681 Up to 4-8278	DATE: 01/2014	PAGE: Y2-2380-06
W.C.L. "RICON" MODEL "HC-L002"		

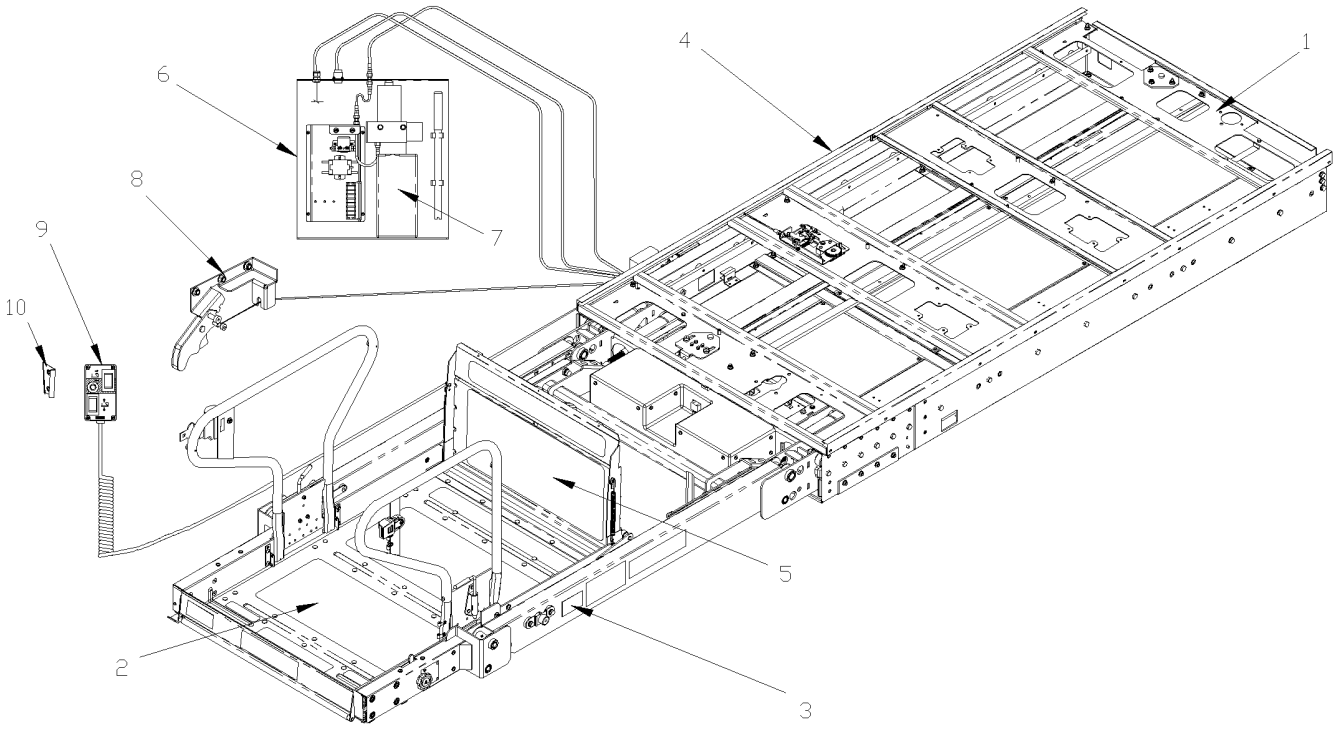

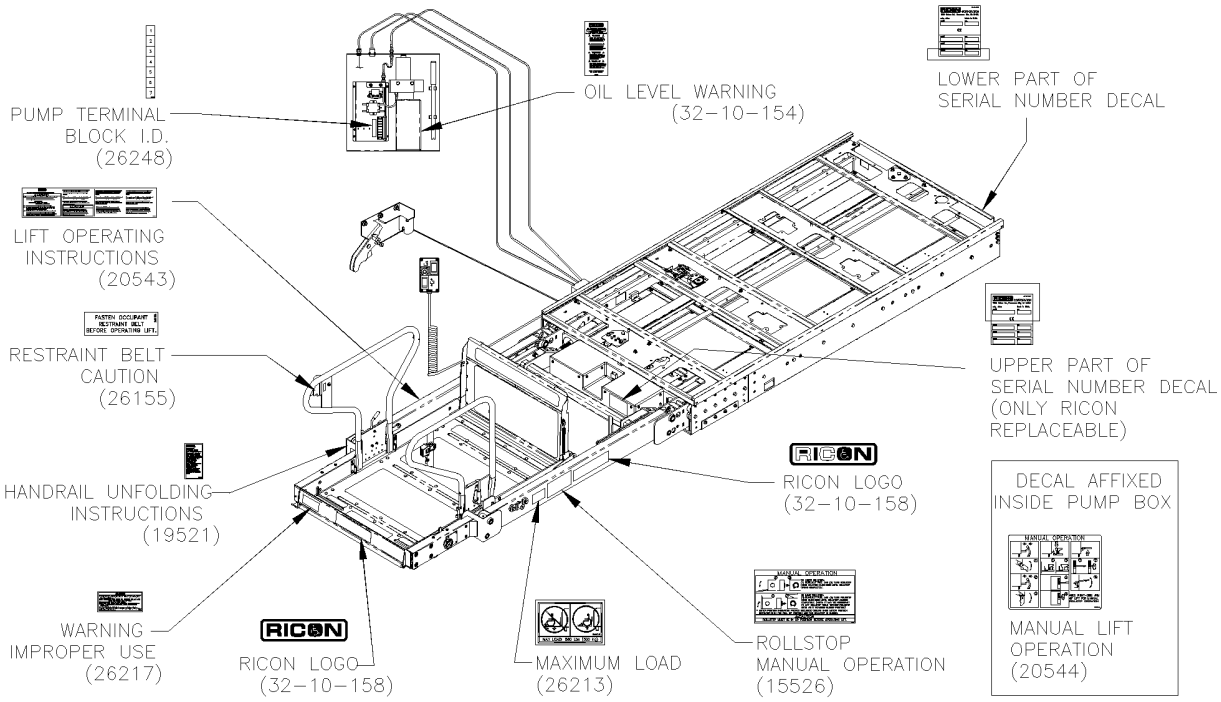

From 1-7681 Up to 4-8278	DATE: 01/2014	PAGE: Y2-2380-06

W.C.L. "RICON" MODEL "HC-L002"

ITEM	PART	DESCRIPTION	XL45	MTH40	MTH45	MTH45S	NOTE
	862026	W.C.L. "RICON" - HC-L002 Up to 4-8278	1				
1	Y2-2380-11	**. W.C.L. "RICON" - LIFT ENCLOSURE ASSY MODEL "HC-L002"**					
2	Y2-2380-21	**. W.C.L. "RICON" - PLATFORM ASSY MODEL "HC-L002"**					
3	Y2-2380-31	**. W.C.L. "RICON" - TRAVELING FRAME ASSY MODEL "HC-L002"**					
4	Y2-2380-41	**. W.C.L. "RICON" - CARRIAGE ASSY MODEL "HC-L002"**					
5	Y2-2380-51	**. W.C.L. "RICON" - BRIDGE PLATE ASSY 9" MODEL "HC-L002"**					
6	Y2-2380-61	**. W.C.L. "RICON" - PUMP INSTALLATION MODEL "HC-L002"**					
7	Y2-2380-65	**. . W.C.L. "RICON" - PUMP ASSY**					
8	Y2-2380-70	**. W.C.L. "RICON" - RELEASE HANDLE MODEL "HC-L002"**					
9	862206	. CONTROLER	1				
. NS	196844	. . SWITCH / M/ON-OFF-M/ON S P.D.T	1				
10	Call Order Desk	. MOUNTING BRACKET / CONTROLER	1				P
		P) CALL ORDER DESK FOR SPECIFIC APPLICATION					
		(V.I.N.)					

From 4-8279 Up to 5-8605	DATE: 01/2014	PAGE: Y2-2380-07
W.C.L. "RICON" REMOVABLE MODEL "F9T"		

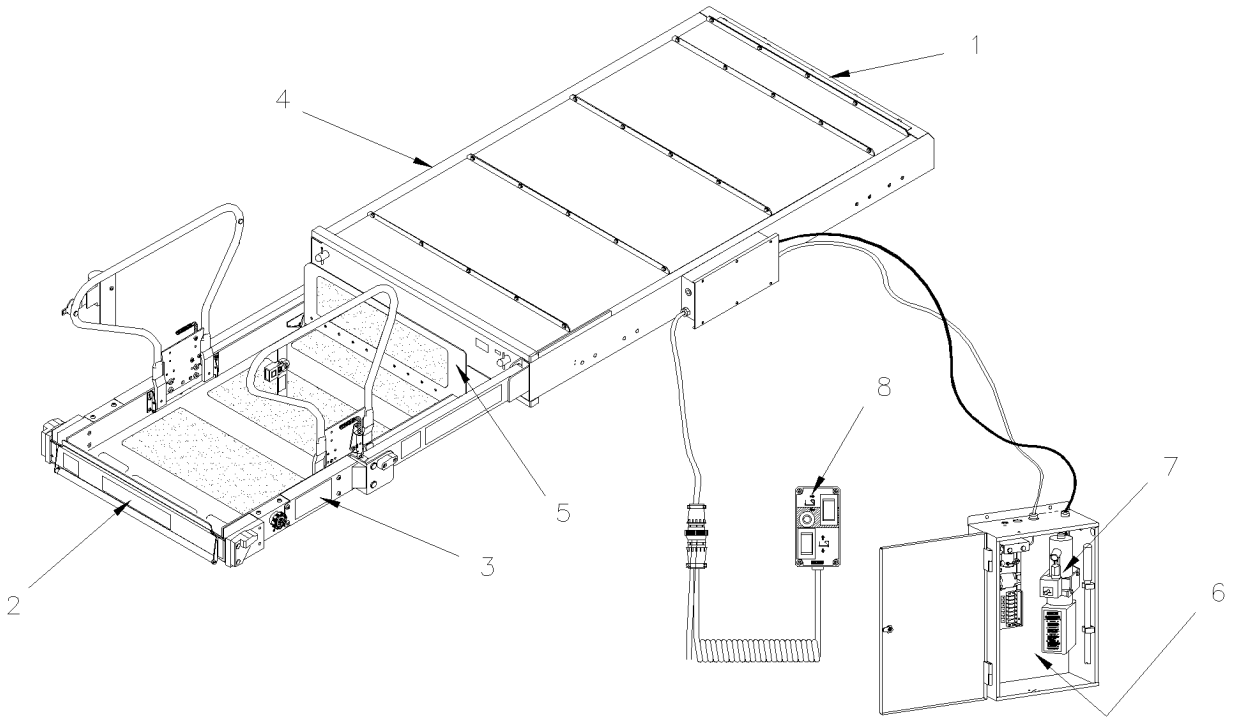

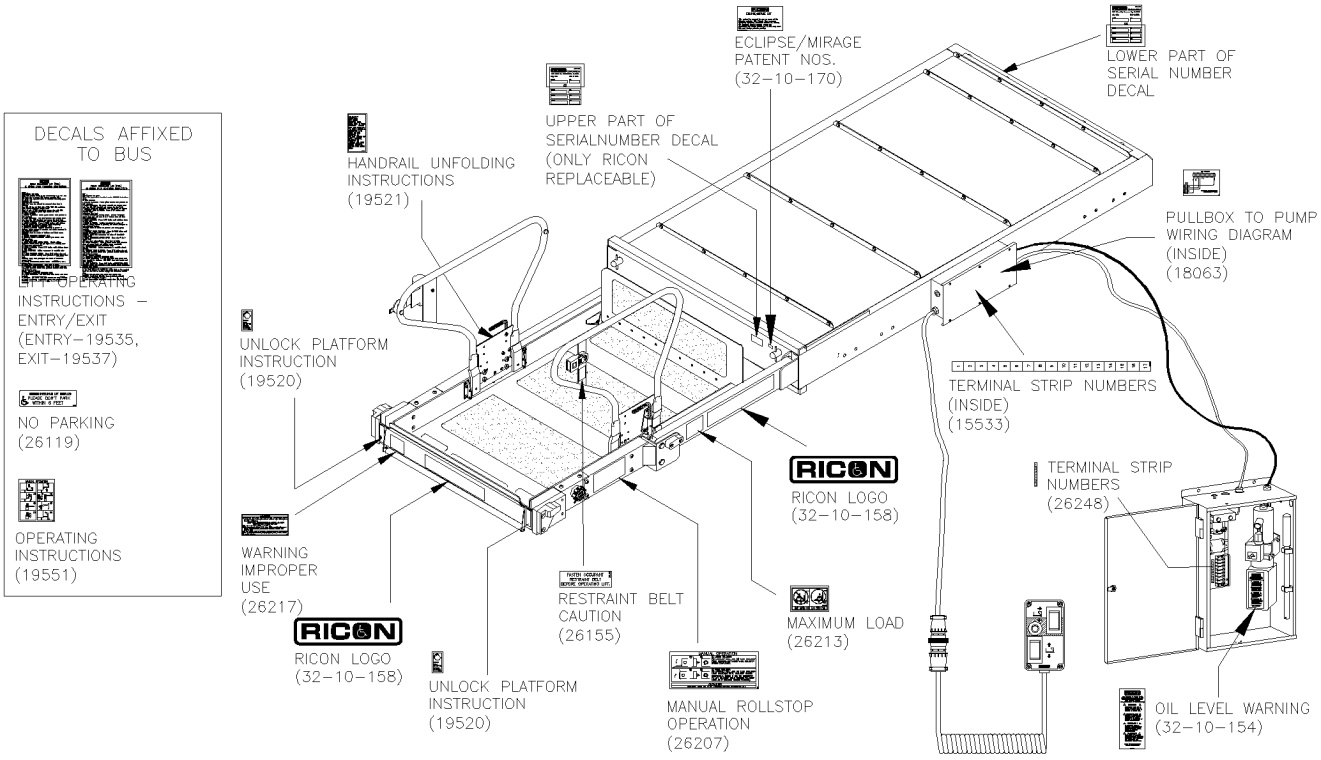

From 4-8279 Up to 5-8605	DATE: 01/2014	PAGE: Y2-2380-07

W.C.L. "RICON" REMOVABLE MODEL "F9T"

ITEM	PART	DESCRIPTION	XL45	MTH40	MTH45	MTH45S	NOTE
	862352	W.C.L. "RICON" - F9T-DE004	1				
1	Y2-2380-12	**. W.C.L. "RICON" - LIFT ENCLOSURE ASSY MODEL "F9T" & "F9TF"**					
2	Y2-2380-22	**. W.C.L. "RICON" - PLATFORM ASSY MODEL "F9T"**					
3	Y2-2380-32	**. W.C.L. "RICON" - TRAVELING FRAME ASSY MODEL "F9T" & "F9TF"**					
4	Y2-2380-42	**. W.C.L. "RICON" - CARRIAGE ASSY MODEL "F9T" & "F9TF"**					
5	Y2-2380-52	**. W.C.L. "RICON" - BRIDGE PLATE ASSY 9" MODEL "F9T" & "F9TF"**					
6	Y2-2380-62	**. W.C.L. "RICON" - PUMP INSTALLATION MODEL "F9T" & "F9TF"**					
7	Y2-2380-65	**. . W.C.L. "RICON" - PUMP ASSY**					
8	196149	PENDANT, W/COILED CORD	1				

From 5-8606 Up to 6-8906	DATE: 01/2014	PAGE: Y2-2380-08

W.C.L. "RICON" REMOVABLE MODEL "F9TF"

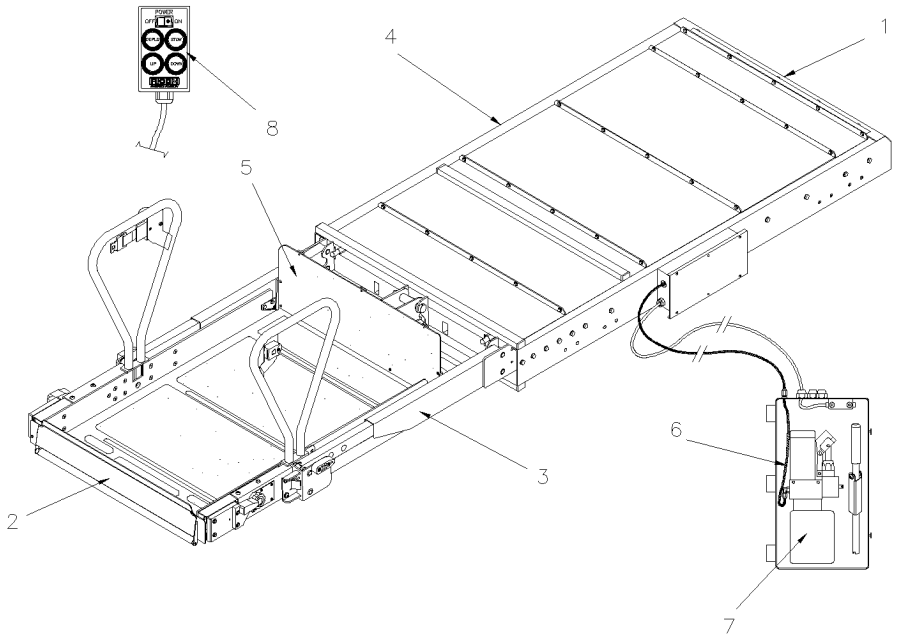

DECALS AFFIXED TO VEHICLE

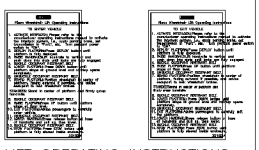

LIFT OPERATING INSTRUCTIONS, ENTRY AND EXIT ENTRY–32159, EXIT–32160

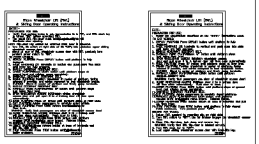

LIFT OPERATING INSTRUCTIONS, ENTRY AND EXIT, FOR LIFTS WITH A STOP AT INTERMEDIATE HEIGHT ENTRY–32154, EXIT–32155

NO PARKING (26119)

MANUAL OPERATING INSTRUCTIONS (19551)

MANUAL OPERATING INSTRUCTIONS – ENGLISH–FRENCH (29254)

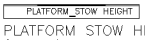

PLATFORM STOW HEIGHT (19550)

TWS WARNING (31997)

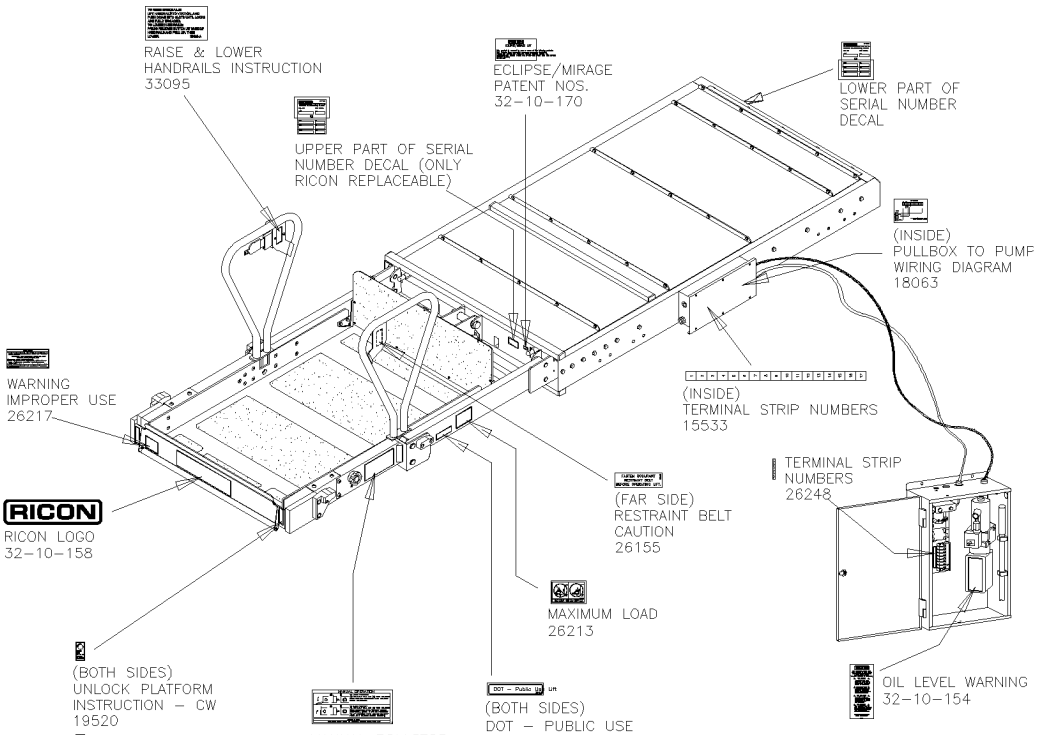

From 5-8606 Up to 6-8906	DATE: 01/2014	PAGE: Y2-2380-08

W.C.L. "RICON" REMOVABLE MODEL "F9TF"

ITEM	PART	DESCRIPTION	XL45	MTH40	MTH45	MTH45S	NOTE
	862662	W.C.L. "RICON" - F9TF-DE004	1				
1	Y2-2380-12	**. W.C.L. "RICON" - LIFT ENCLOSURE ASSY MODEL "F9T" & "F9TF"**					
2	Y2-2380-23	**. W.C.L. "RICON" - PLATFORM ASSY MODEL "F9TF"**					
3	Y2-2380-32	**. W.C.L. "RICON" - TRAVELING FRAME ASSY MODEL "F9T" & "F9TF"**					
4	Y2-2380-42	**. W.C.L. "RICON" - CARRIAGE ASSY MODEL "F9T" & "F9TF"**					
5	Y2-2380-52	**. W.C.L. "RICON" - BRIDGE PLATE ASSY 9" MODEL "F9T" & "F9TF"**					
6	Y2-2380-62	**. W.C.L. "RICON" - PUMP INSTALLATION MODEL "F9T" & "F9TF"**					
7	Y2-2380-65	**. . W.C.L. "RICON" - PUMP ASSY**					
8	862986	PENDANT, W/COILED CORD	1				
8	862987	HARNESS PENDANT EXTENSION, PULLBOX TO PENDANT	1				
8	862988	HARNESS, TWS INTERFACE, W/PCB	1				
NS	862989	CYCLE COUNTER	1				

From Y-7046 Up to 1-7680	DATE: 01/2014	PAGE: Y2-2380-10

W.C.L. "RICON" - LIFT ENCLOSURE ASSY MODEL "F9A"

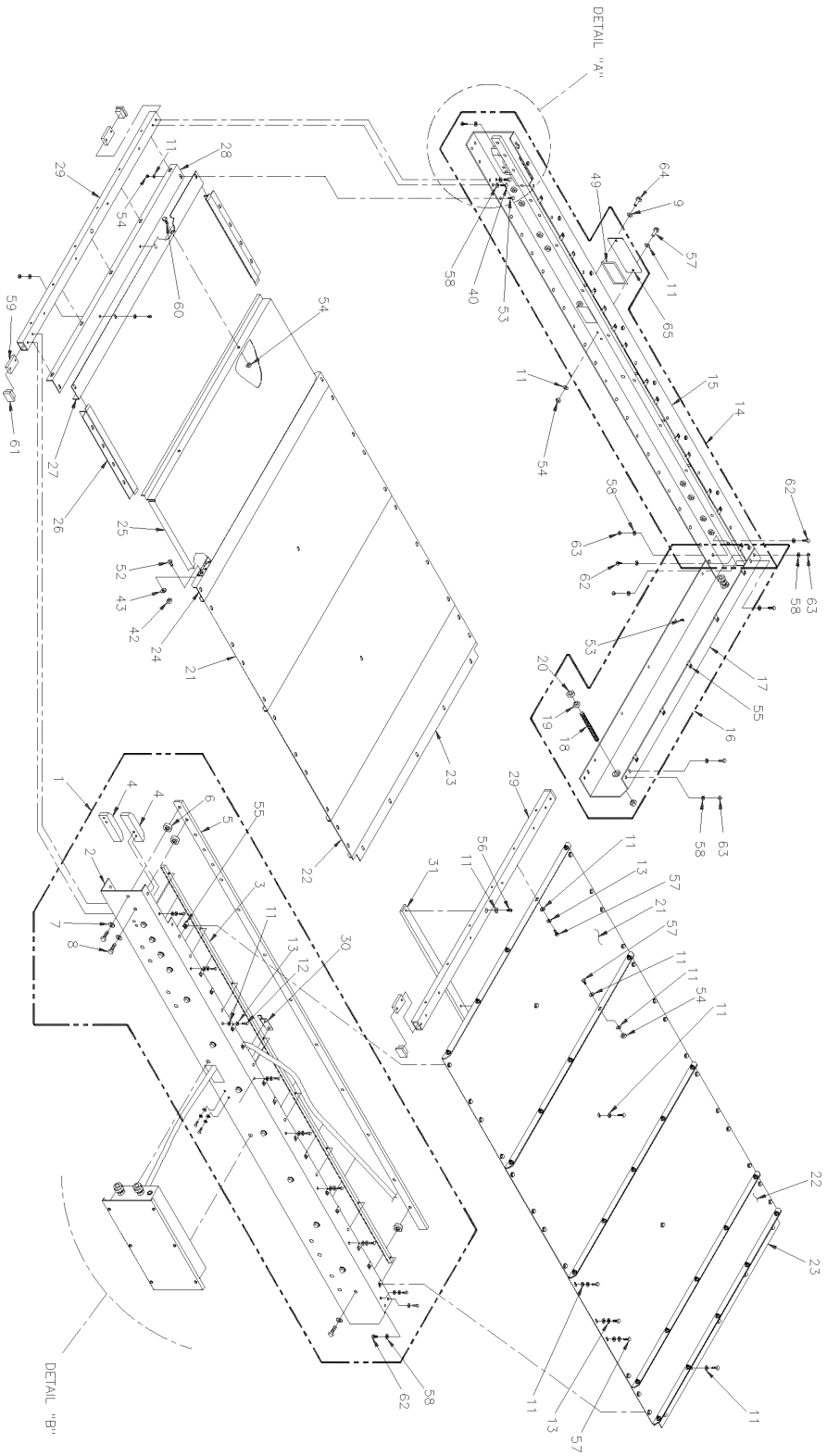

From Y-7046 Up to 1-7680	DATE: 01/2014	PAGE: Y2-2380-10

W.C.L. "RICON" - LIFT ENCLOSURE ASSY MODEL "F9A"

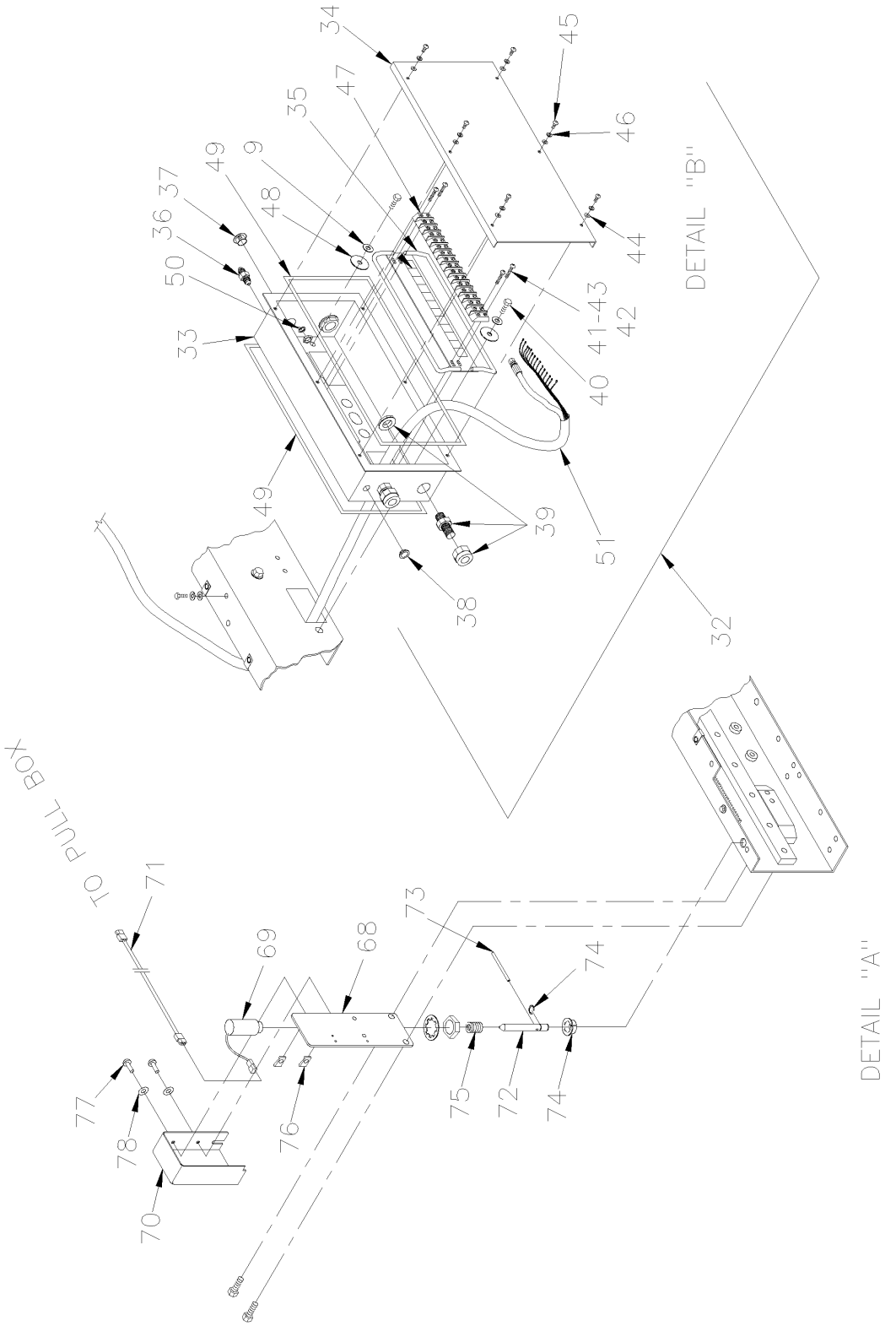

From Y-7046 Up to 1-7680	DATE: 01/2014	PAGE: Y2-2380-10

W.C.L. "RICON" - LIFT ENCLOSURE ASSY MODEL "F9A"

ITEM	PART	DESCRIPTION	XL45	MTH40	MTH45	MTH45S	NOTE
1	Call Order Desk	CHANNEL / MTG FRAME / 78.81 / RH MECH ASSY	1				P
2	Call Order Desk	CHANNEL / MTG FRAME / 78.81 / RH WELD ASSY	1				P
3	Call Order Desk	GEAR RACK	2				P
4	862109	STOP BLOCK	2				
4	862110	STOP BLOCK	2				
5	Call Order Desk	RAIL STAINLESS	2				P
6	Call Order Desk	SPACER .40THK	28				P
7	500270	WASHER FL .406x1.000x.063 SS	28				
8	Call Order Desk	SCREW CAP HEX 3/8-16x1.00 SS	1				P
9	500035	WASHER LO SPT .317x.586x.078 SS	14				
11	500411	WASHER FL .260x.697x.050 SS	AR				
12	5001315	SCREW CAP HEX 1/4-20x1 SS	16				
13	502570	WASHER LO SPT 6.1x11.8x1.6 SS	58				
14	Call Order Desk	CHANNEL / MTG FRAME / 78.81 / LH MECH ASSY	1				P
15	Call Order Desk	CHANNEL / MTG FRAME / 78.81 / LH WELD ASSY	1				P
16	Call Order Desk	CHANNEL / MTG FRAME / REAR ASSY	1				P
17	Call Order Desk	CHANNEL / MTG FRAME / REAR WELD ASSY	1				P
18	Call Order Desk	SOC SET 1/2-20x2.00 FLAT POINT / SS	2				P
19	Call Order Desk	NUT HEX THN 1/2-20	4				P
20	Call Order Desk	BUMPER / CARRIAGE STOP	2				P
21	Call Order Desk	COVER / 19.98"	5				P
22	Call Order Desk	COVER / 6.67"	2				P
23	Call Order Desk	BRACKET / COVER MOUNTING	2				P
24	Call Order Desk	BRACKET / ACCESS DOOR MOUNTING	1				P
25	Call Order Desk	PANEL / BOTTOM ACCESS COVER / TRIAN LIFT	1				P
26	Call Order Desk	BRACKET / ACCESS DOOR SIDE SHIELD / WELD ASSY	2				P
27	Call Order Desk	FLANGE / ACCESS DOOR ADJUSTEMENT	1				P
28	Call Order Desk	FLANGE / ACCESS DOOR MOUNTING	1				P
29	Call Order Desk	TUBE / FOWARD CROSS MEMBER	2				P
30	Call Order Desk	BRACKET / HOSE/CABLE CLAMP ASSEMBLY	1				P
31	Call Order Desk	RAIL / CARRIAGE GUIDE / SW	1				P
32	Call Order Desk	PULL BOX / MECHANICAL ASSY	1				P
33	Call Order Desk	BOX / PULL BOX	1				P
34	Call Order Desk	COVER / PULL BOX	1				P
35	Call Order Desk	TIE BAR / PULL BOX / WELD ASSY	1				P
36	Call Order Desk	FITTING - 1/4JIC BULKHEAD W/HEX NUT	1				P
37	Call Order Desk	HOLE PLUG HEYCO	1				P
38	Call Order Desk	PLUG / 0.43 - 0.45 DIA / UP TO .06 THK / BLK	1				P
39	Call Order Desk	STRAIN RELIEF / STRE THRU LIQ TIGHT	3				P
40	Call Order Desk	SCREW CAP HEX 5/16-18x5/8 G5	10				P
41	Call Order Desk	SCREW CAP BUT #10-24x7/8 SS	4				P
42	5001180	NUT HEX NYRT #10-24 SS	9				
		P) CALL ORDER DESK FOR SPECIFIC APPLICATION					
		(V.I.N.)					

From Y-7046 Up to 1-7680	DATE: 01/2014	PAGE: Y2-2380-10

W.C.L. "RICON" - LIFT ENCLOSURE ASSY MODEL "F9A"

ITEM	PART	DESCRIPTION	XL45	MTH40	MTH45	MTH45S	NOTE
43	Call Order Desk	WASHER FL #10 SS	13				P
44	Call Order Desk	WASHER FL #8 SS	6				P
45	Call Order Desk	SCREW CAP BUT #8-32x1/2 SS	6				P
46	Call Order Desk	WASHER LO SPT #8 SS	6				P
47	Call Order Desk	TERMINAL STRIP / 15 THERM	1				P
48	Call Order Desk	WASHER LO SPT 7/16 SS	2				P
49	506465	TAPE RUB ADH1 CC NEO 1/8" x 1/4" x 60' / BLACK 1220	AR				
50	Call Order Desk	WASHER LO EXT 7/16 SS	1				P
51	Call Order Desk	HARNESS MAIN / WITH HYDRAULIC	1				P
52	Call Order Desk	SCREW CAP CK HEXS #10-24x1/2 SS	5				P
53	Call Order Desk	SCREW CRG 1/4-20x5/8 SS	39				P
54	5001251	NUT HEX NYRT 1/4-20 SS	56				
55	500837	NUT SPR U 1/4-20 .064-.125	36				
56	Call Order Desk	SCREW CAP BUT HEXS 1/4-20x5/8 SS	3				P
57	Call Order Desk	SCREW CAP HEX 1/4-20x5/8 SS	AR				P
58	Call Order Desk	WASHER FL 5/16 SS	14				P
59	Call Order Desk	PLATE FORWARD CROSS MEMBER MOUNTING	4				P
60	Call Order Desk	SCREW CAP HEX 1/4-20x3/4 SS	2				P
61	Call Order Desk	CAP RECTANGLE / BLACK	4				P
62	Call Order Desk	SCREW CAP HEX 5/16-18x3/4 SS	4				P
63	500685	NUT HEX NYRT 5/16-18 SS	4				
64	Call Order Desk	SCREW CAP HEX 5/16-18x1/2 SS	1				P
65	Call Order Desk	PLATE / PLUG / ENCLOSURE	1				P
68	Call Order Desk	BRACKET-WASSY / STOW LOCK F9A	1				P
69	862111	SOLENOID / 24V STO LOC.3 + 1lb @ 1"	1				
70	Call Order Desk	COVER STOW LOCK MIRAGE	1				P
71	862112	HARNESS - L PULL BOX TO STOW LOCK	1				
72	Call Order Desk	PIN-STOW LOCK / MIRAGE	1				P
73	Call Order Desk	PIN SS 5/32x2.50	1				P
74	Call Order Desk	BUSHING-FLANGE .50x.25	1				P
		P) CALL ORDER DESK FOR SPECIFIC APPLICATION					
		(V.I.N.)					

From 1-7681 Up to 4-8278	DATE: 01/2014	PAGE: Y2-2380-11
W.C.L. "RICON" - LIFT ENCLOSURE ASSY MODEL "HC-L002"		

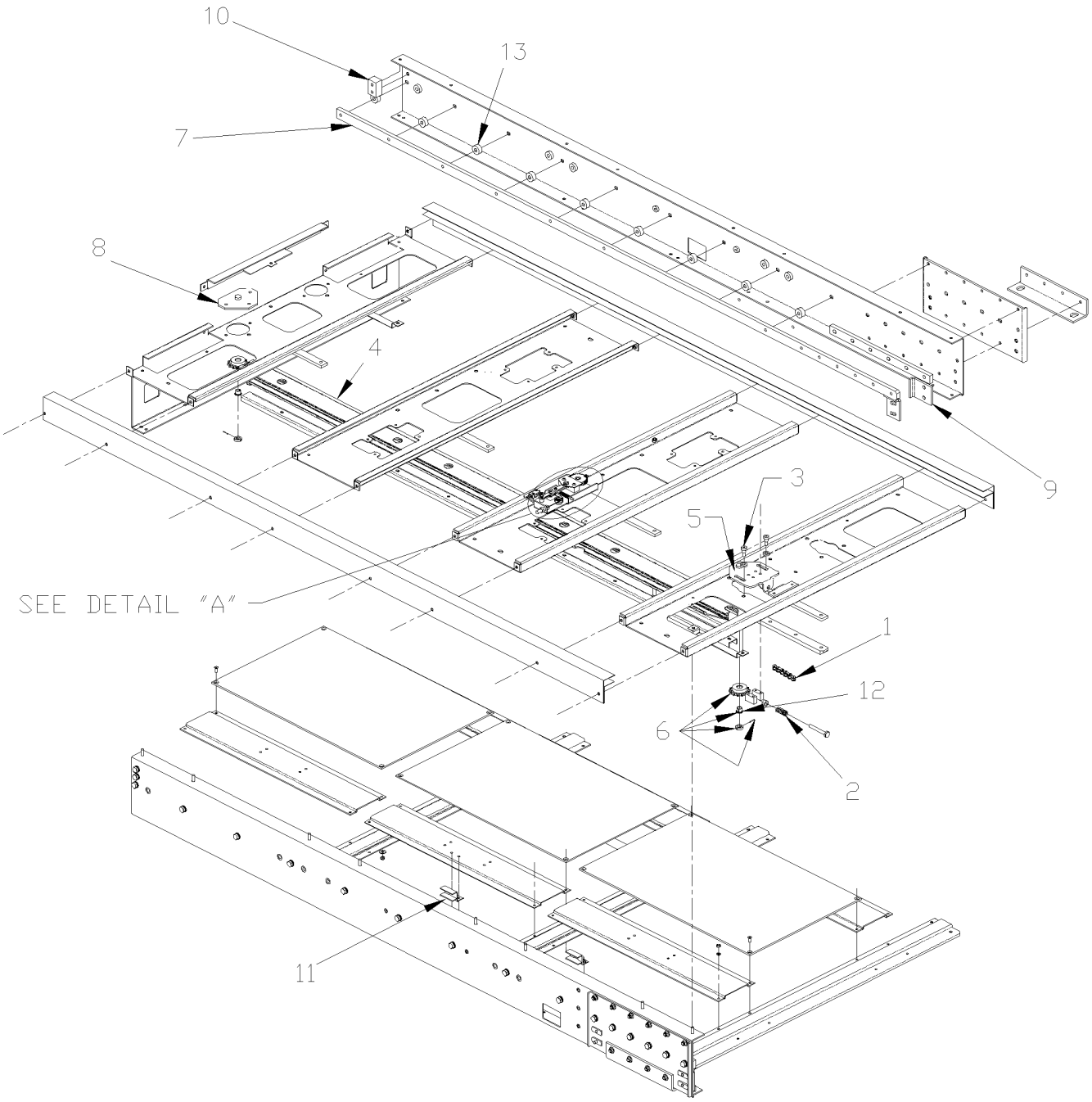

From 1-7681 Up to 4-8278	DATE: 01/2014	PAGE: Y2-2380-11
W.C.L. "RICON" - LIFT ENCLOSURE ASSY MODEL "HC-L002"		

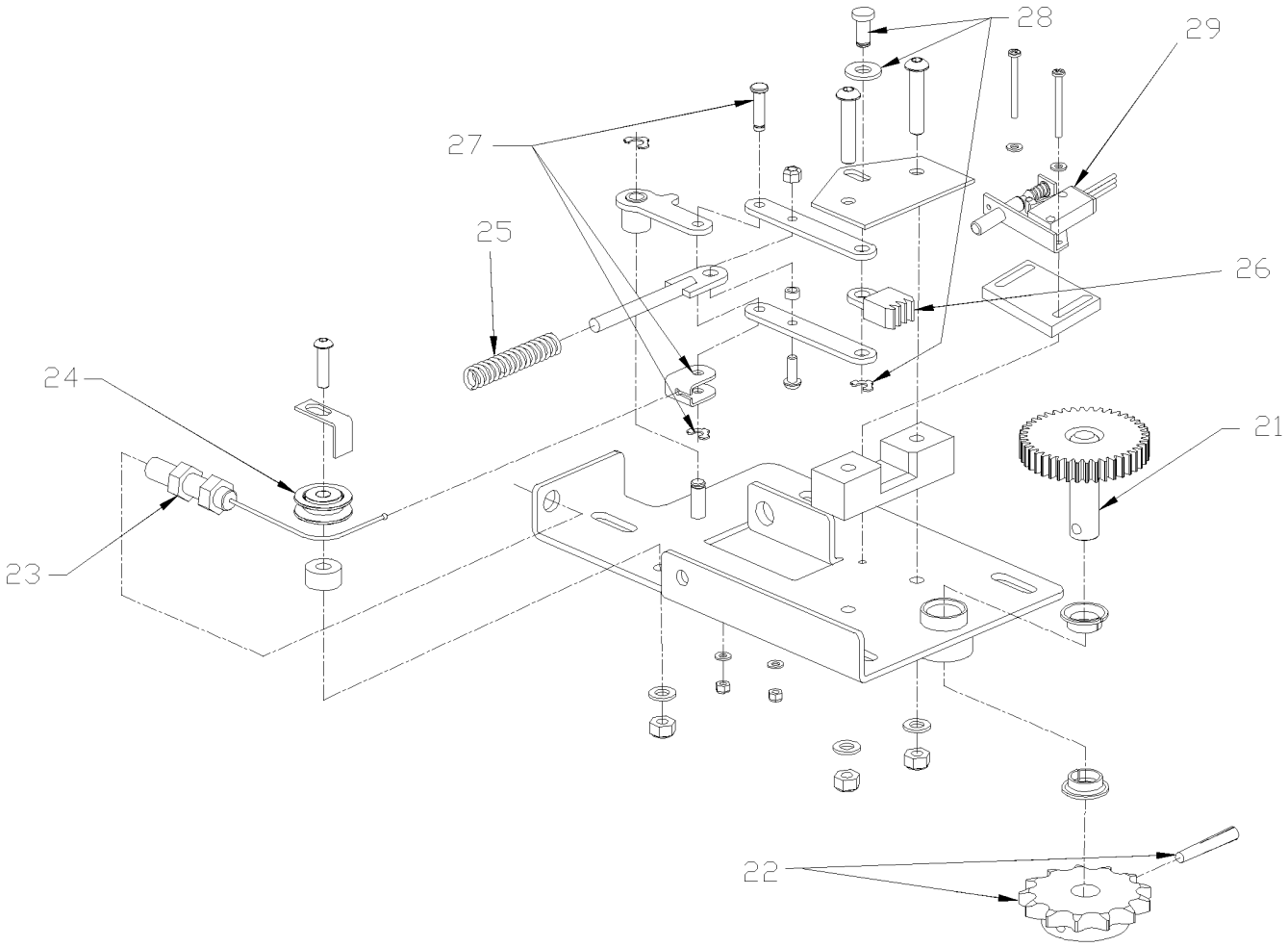

From 1-7681 Up to 4-8278	DATE: 01/2014	PAGE: Y2-2380-11

W.C.L. "RICON" - LIFT ENCLOSURE ASSY MODEL "HC-L002"

ITEM	PART	DESCRIPTION	XL45	MTH40	MTH45	MTH45S	NOTE
1	Call Order Desk	CHAIN, CARRIAGE DRIVE	1				P
2	Call Order Desk	SPRING, COMP, .60ODX1.5”	1				P
3	Call Order Desk	SCREW SHR HEXS 10x12{M8-1.25	4				P
4	Call Order Desk	CHAIN TRACK	1				P
5	Call Order Desk	PLATE / SPROCKET SUPPORT / FRONT	1				P
6	Call Order Desk	KIT, SPROCKET, #40, 14T, W/HDWR	2				P
7	Call Order Desk	GUIDE, RAIL	2				P
8	Call Order Desk	PLATE / SPROCKET SUPPORT / REAR	1				P
9	Call Order Desk	CARRIAGE STOP / FRONT	2				P
10	Call Order Desk	CARRIAGE STOP / REAR	2				P
11	Call Order Desk	CLAMP, HARNESS	2				P
12	Call Order Desk	BUSHING .50IDx.50W / (BAG OF TEN)	2				P
13	Call Order Desk	SPACER / GUIDE RAIL / (BAG OF TEN)	18				P
21	Call Order Desk	GEAR, CARRIAGE LOCK, W/SHAFT	1				P
22	Call Order Desk	KIT, SPROCKET, 13T, #40, W/PIN	1				P
23	Call Order Desk	CABLE ASSEMBLY, CARRIAGE LOCK, HC-L002	1				P
24	Call Order Desk	PULLEY, W-BEARING	1				P
25	Call Order Desk	SPRING, COMP, .41ODX2.3L	1				P
27	Call Order Desk	KIT, CLEVIS, W/PIN & CLIP	1				P
28	Call Order Desk	KIT, PIN, W/CLIP	1				P
29	Call Order Desk	PLUNGER SWITCH, SEALED, TAPPED 6-32	1				P
		P) CALL ORDER DESK FOR SPECIFIC APPLICATION					
		(V.I.N.)					

From 1-7681 Up to 4-8278	DATE: 01/2014	PAGE: Y2-2380-11

W.C.L. "RICON" - LIFT ENCLOSURE ASSY MODEL "HC-L002"

ITEM	PART	DESCRIPTION	XL45	MTH40	MTH45	MTH45S	NOTE

From 4-8279 Up to 6-8906	DATE: 01/2014	PAGE: Y2-2380-12
W.C.L. "RICON" - LIFT ENCLOSURE ASSY MODEL "F9T" & "F9TF"		

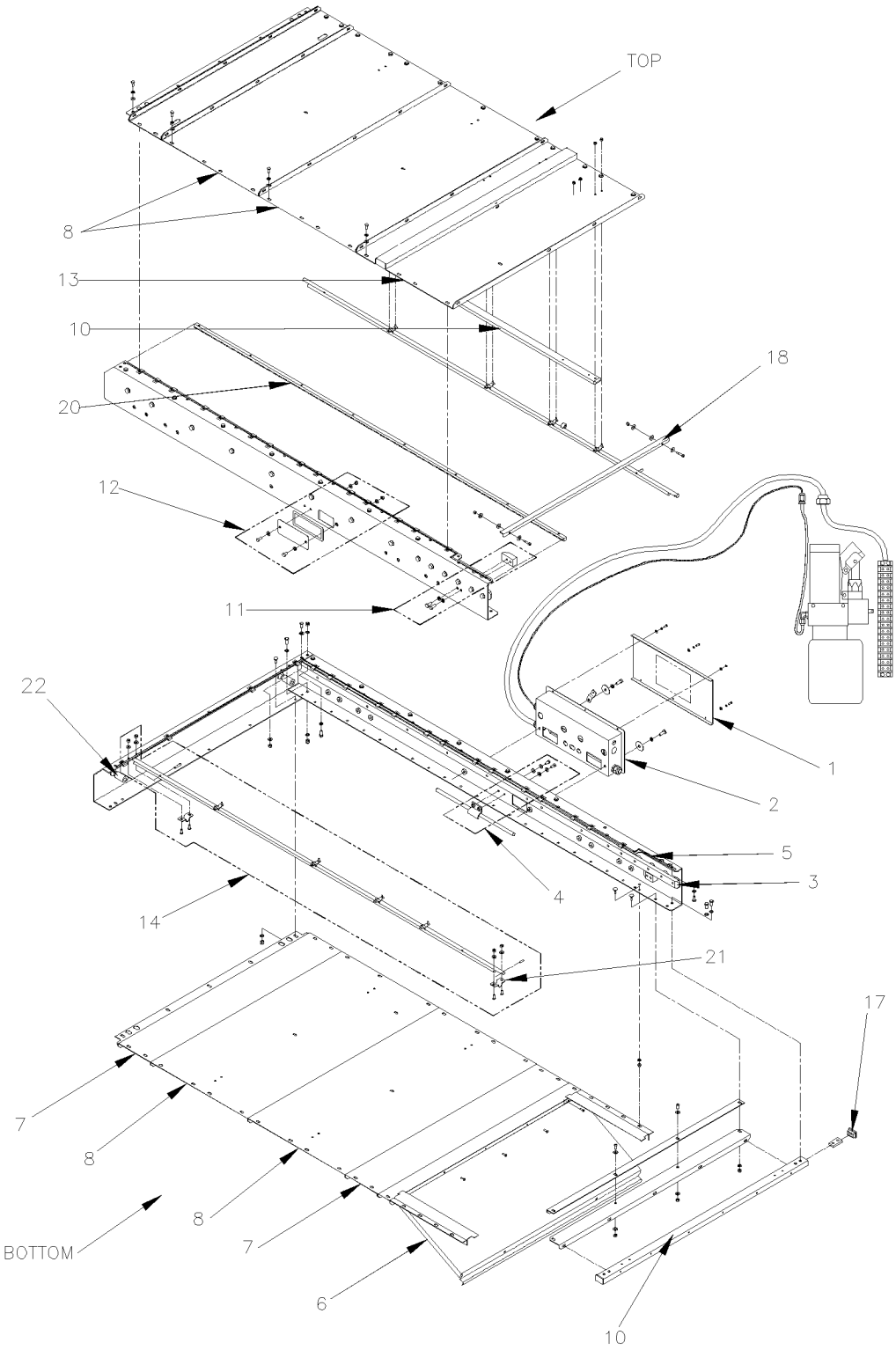

From 4-8279 Up to 6-8906	DATE: 01/2014	PAGE: Y2-2380-12

W.C.L. "RICON" - LIFT ENCLOSURE ASSY MODEL "F9T" & "F9TF"

ITEM	PART	DESCRIPTION	XL45	MTH40	MTH45	MTH45S	NOTE
1	862991	KIT, PULLBOX COVER	1				
2	30945	PULLBOX ASSY Up to 5-8605	1				
2	862992	PULLBOX ASSY From 5-8606	1				
3	862999	RAIL, CARRIAGE GUIDE	2				
4	862994	KIT, HOSE CLAMP	1				
5	Call Order Desk	WEATHERSTRIP	1				P
6	862995	KIT, SERVICE ACCESS PANEL	1				
7	862996	KIT, ROLLSTOP GEAR	2				
8	862997	KIT, ENCLOSURE COVER, 19.98”	4				
10	862998	TUBE, FORWARD CROSSMEMBER	1				
11	863000	KIT, STOP BLOCK	2				
12	863001	KIT, BLOCK-OFF PLATE	1				
13	863002	KIT, ENCLOSURE COVER, LINKAGE	1				
14	863003	KIT, PLATFORM RELEASE SHAFT	2				
17	863004	PLUG, RECTANGULAR, 1.0 X 1.5, NYLON, BLACK	4				
18	Call Order Desk	TIE BAR, PLATFORM RELEASE SHAFTS	1				P
20	863006	GEAR RACK	2				
21	863007	BRACKET, PLATFORM RELEASE SHAFT	4				
22	863008	BUMPER, CARRIAGE STOP	2				
		P) CALL ORDER DESK FOR SPECIFIC APPLICATION					
		(V.I.N.)					

From Y-7046 Up to 1-7680	DATE: 01/2014	PAGE: Y2-2380-20
W.C.L. "RICON" - PLATFORM ASSY MODEL "F9A"		

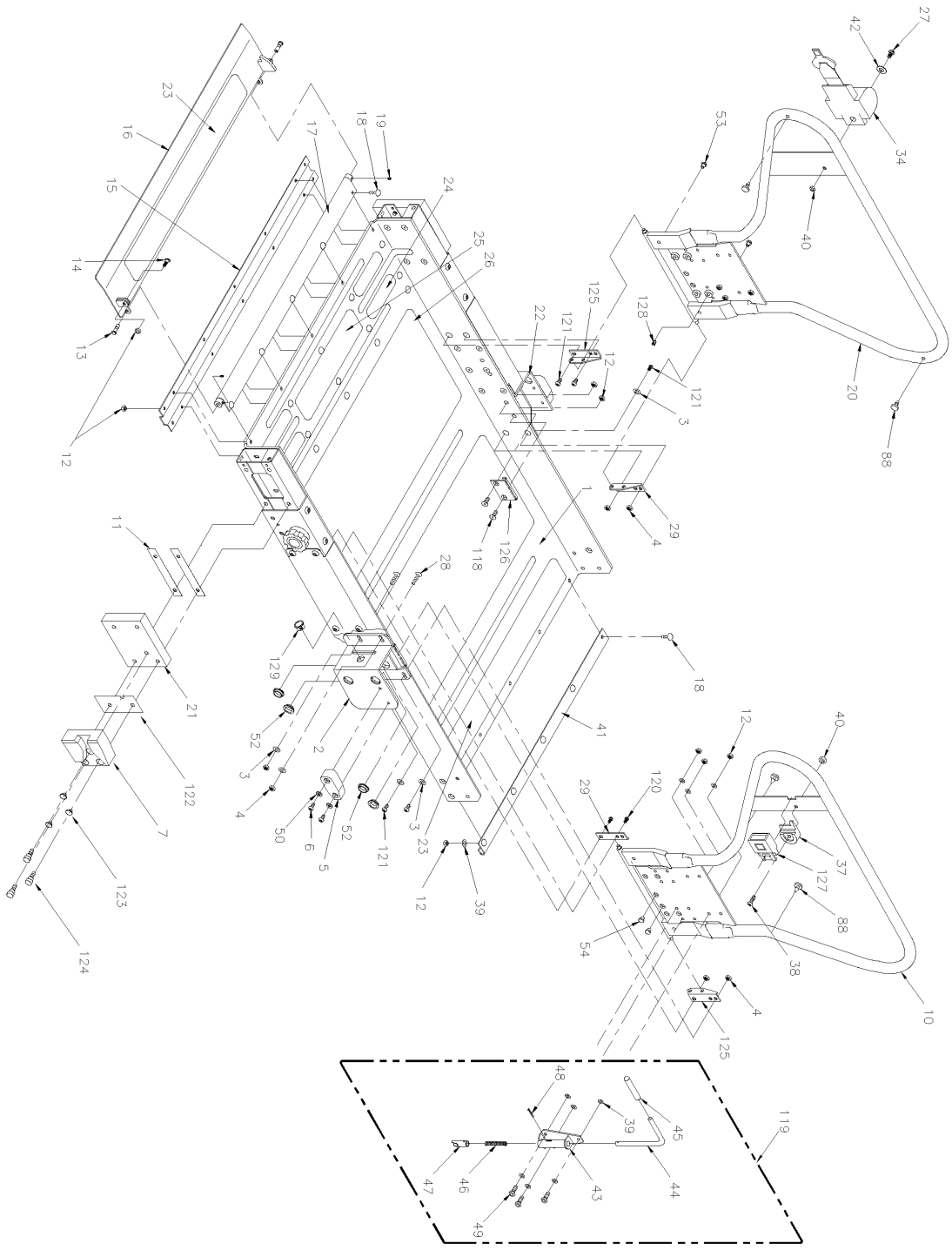

From Y-7046 Up to 1-7680	DATE: 01/2014	PAGE: Y2-2380-20
W.C.L. "RICON" - PLATFORM ASSY MODEL "F9A"		

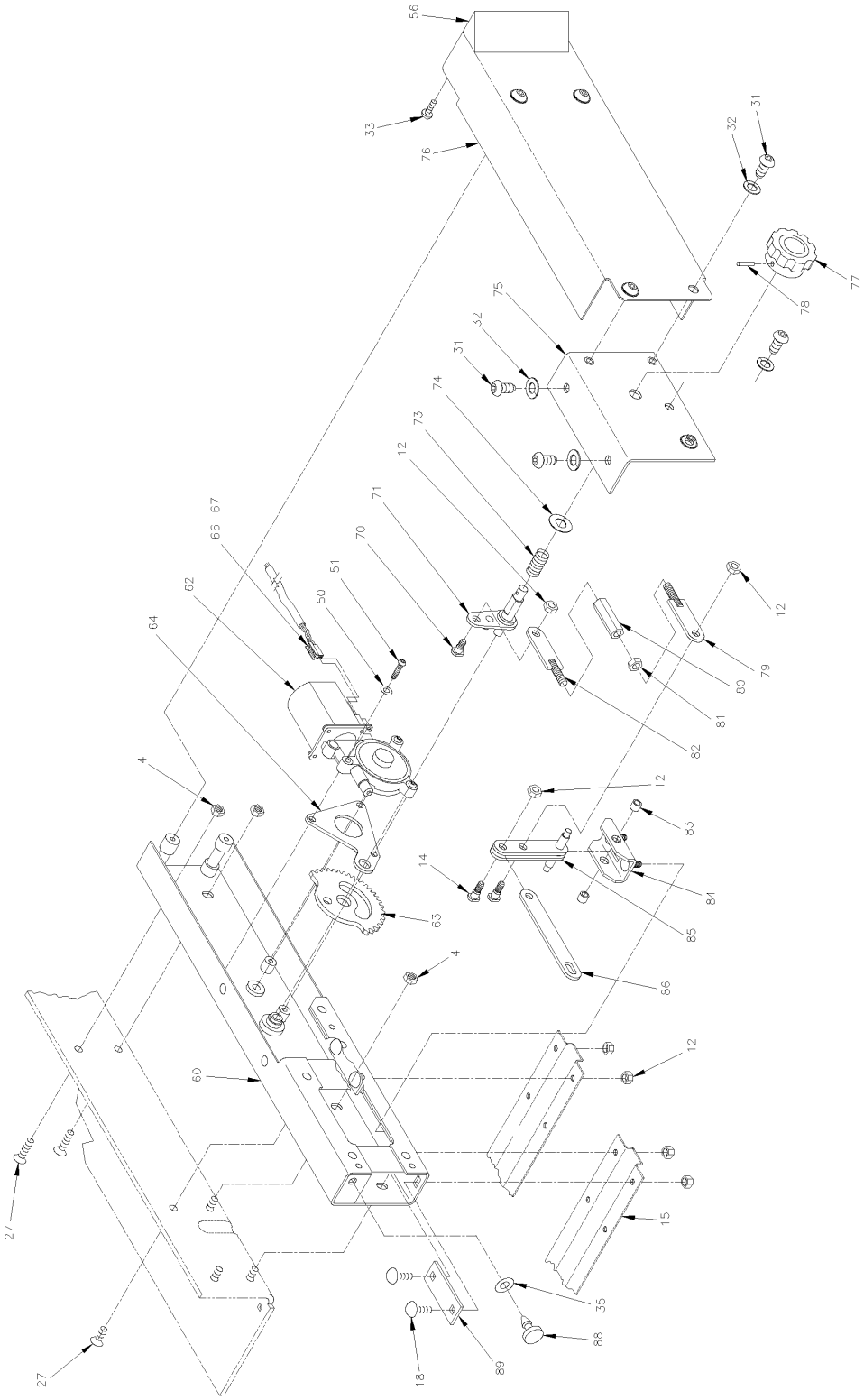

From Y-7046 Up to 1-7680	DATE: 01/2014	PAGE: Y2-2380-20
W.C.L. "RICON" - PLATFORM ASSY MODEL "F9A"		

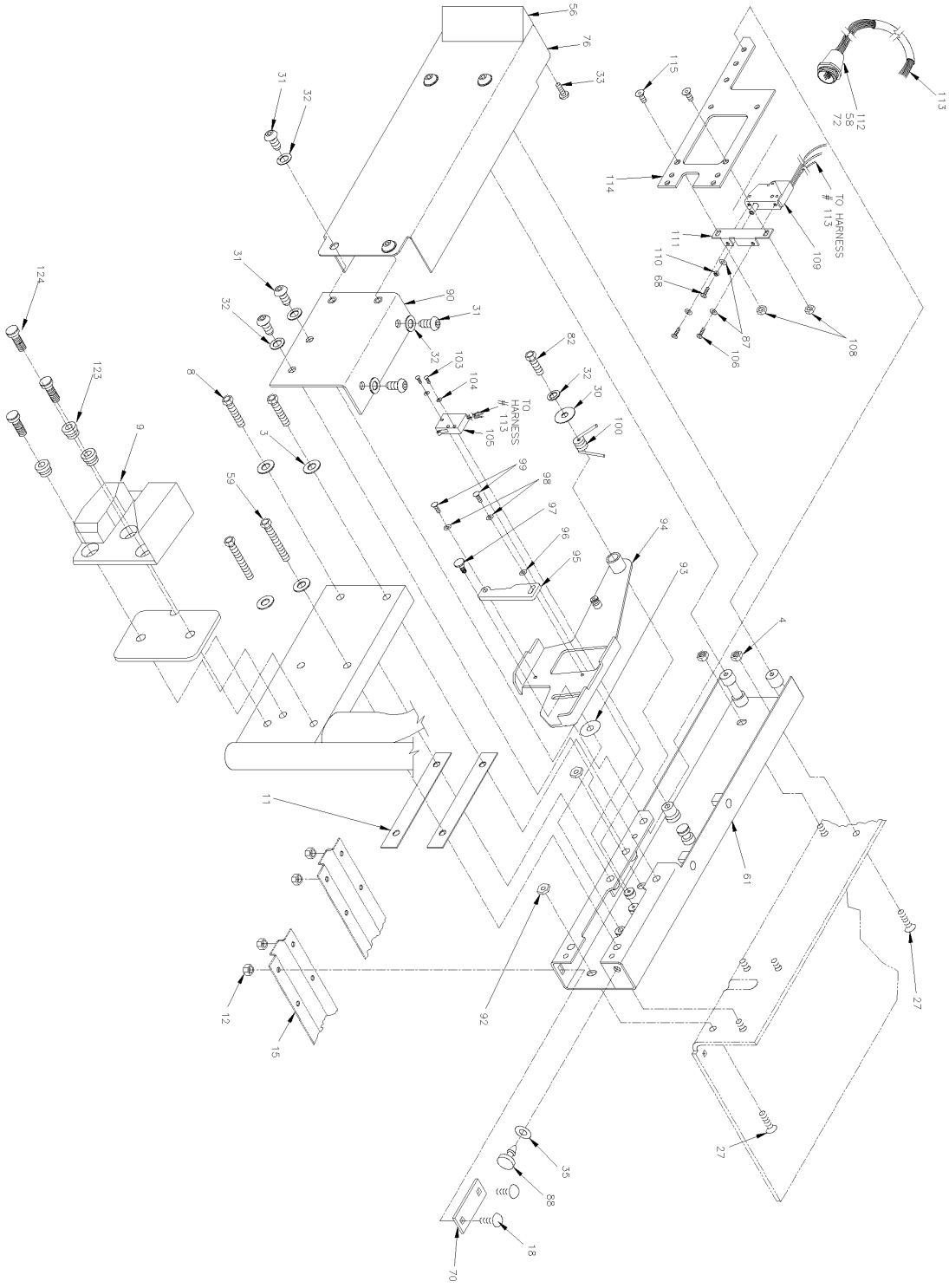

From Y-7046 Up to 1-7680	DATE: 01/2014	PAGE: Y2-2380-20

W.C.L. "RICON" - PLATFORM ASSY MODEL "F9A"

ITEM	PART	DESCRIPTION	XL45	MTH40	MTH45	MTH45S	NOTE
1	Call Order Desk	PLATFORM 32.25x47.00	1				P
2	Call Order Desk	BRACKET-WASSY / PLATFORM PIVOT RH	1				P
3	Call Order Desk	WASHER FL .32x.75x.08 SS	20				P
4	500685	NUT HEX NYRT 5/16-18 SS	AR				
5	862113	STOW GUIDE	2				
6	Call Order Desk	SCREW CAP BUT HEXS 1/4-20x3/4 SS	4				P
7	862114	BLOCK / PLAFORM GUIDE / RH	1				
8	Call Order Desk	SCREW CAP HEX 5/16-18x1 1/2 SS	4				P
9	862115	BLOCK / PLAFORM GUIDE / LH	1				
10	Call Order Desk	HANDRAIL WELD ASSEMBLY / FOLDING / RH	1				P
10	Call Order Desk	HANDRAIL WELD ASSEMBLY / FOLDING / RH	1				P
11	Call Order Desk	SHIM HANDRAIL .50THK	4				P
12	500771	NUT HEX 1/4-20 SS	47				
13	Call Order Desk	PIN-CLEVIS SS 5/16x1.00	2				P
14	Call Order Desk	SCREW SHR .250x.313	3				P
15	Call Order Desk	STIFFENER / RIB / PRS / SW	2				P
16	Call Order Desk	ROLLSTOP WELD ASSY / PRS / SW	1				P
17	Call Order Desk	STIFFENER, TUBE, PRS. PIVOT, WELD ASSY., SW	1				P
18	Call Order Desk	SCREW CRG 1/4-20x3/4 SS	31				P
19	Call Order Desk	SCREW SET HEXS SS 1/4-20x1/4 1/4-20x1/4 SS	2				P
20	Call Order Desk	HANDRAIL WELD ASSEMBLY / FOLDING / LH	1				P
21	Call Order Desk	COVER-WASSY / RS	2				P
21	Call Order Desk	COVER-WASSY / RS	2				P
22	Call Order Desk	BRACKET-WASSY / PLATFORM PIVOT LH	1				P
23	863621	SAFETY TREAD / 25.50x3.0 / SAFETY YELLOW	2				
24	863017	SAFETY TREAD / 5.5x1.5 / SAFETY YELLOW	4				
25	863016	SAFETY TREAD / 12.75x3.0 / SAFETY YELLOW	1				
26	863620	SAFETY TREAD / 25.50x12 / OCEAN GREY	2				
27	Call Order Desk	SCREW CAP CK HEXS 5/16-18x3/4 SS	9				P
28	Call Order Desk	SCREW CAP CK HEXS 5/16-18x1.00 SS	8				P
29	Call Order Desk	BRACKET-HANDRAIL PIVOT RH	2				P
30	Call Order Desk	WASHER LO SPT 7/16 SS	1				P
31	Call Order Desk	SCREW CAP BUT HEXS 5/16-18x1/2 SS	16				P
32	Call Order Desk	WASHER LO SPT 5/16 SS	17				P
33	Call Order Desk	SCREW MA PH #8-32x1/16 SS	4				P
34	862116	RETRACTOR-RESTRAINT BELT	1				
35	500975	WASHER FL .378x.620x.094 NYL	2				
37	Call Order Desk	BLOCK-BUCKLE MOUNT	1				P
38	Call Order Desk	SCREW CAP BUT HEXS 5/16-18x1 3/8 SS	1				P
		P) CALL ORDER DESK FOR SPECIFIC APPLICATION					
		(V.I.N.)					

From Y-7046 Up to 1-7680	DATE: 01/2014	PAGE: Y2-2380-20

W.C.L. "RICON" - PLATFORM ASSY MODEL "F9A"

ITEM	PART	DESCRIPTION	XL45	MTH40	MTH45	MTH45S	NOTE
39	Call Order Desk	WASHER LO SPT 1/4 SS	23				P
40	Call Order Desk	NUT HEX CAP 5/16-18 SS	2				P
41	Call Order Desk	STIFFENER / PLATFORM REAR / SW-T	1				P
42	Call Order Desk	WASHER COUNTER SINK	1				P
43	Call Order Desk	BRACKET-WASSY / LATCH	2				P
45	Call Order Desk	CAP-VINYL YLW .375-2.5 BLK LETTER.	2				P
46	N.S.S.	SPRING 2.5x.50x.52	2				1
47	864174	KIT LATCH ASSY	2				
48	Call Order Desk	ROLL PIN SS 1/8x1.00	2				P
49	Call Order Desk	SCREW CAP HEX 1/4-20x3/4 SS	6				P
50	502570	WASHER LO SPT 6.1x11.8x1.6 SS	10				
51	Call Order Desk	SCREW CAP BUT HEXS 1/4-20x.1 1/8 SS	2				P
52	Call Order Desk	BEARING .75x.25 DU FLANGED	8				P
53	Call Order Desk	BUMPER-RUBBER .50X.31X.31	2				P
54	Call Order Desk	BUMPER-RUBBER	3				P
56	Call Order Desk	BLOCK-PRS COVER	2				P
58	Call Order Desk	PIN MALE TAPE 66098-7 / (BAG OF TEN)	6				P
59	Call Order Desk	SCREW CAP HEX 5/16-18x2.00 SS	4				P
60	Call Order Desk	CHANNEL-WASSY / HOUSING / PRS / RH	1				P
60	Call Order Desk	CHANNEL-WASSY / HOUSING / SHORT PRS / RH	1				P
61	Call Order Desk	CHANNEL-WASSY / HOUSING / PRS / LH	1				P
61	Call Order Desk	CHANNEL-WASSY / HOUSING / SHORT PRS / RH	1				P
62	862117	GEAR MOTOR DELCO PH3/ 9T RH / MED-TORQ 24V	1				
63	Call Order Desk	GEAR PRS	1				P
64	Call Order Desk	PLATE / KEEPER / PRS / GEAR	1				P
66	Call Order Desk	TERMINAL CONNECTOR-2 CIRCUIT / PACK-CON	1				P
67	Call Order Desk	TERMINAL / PACK-CON SERIE 1 / HD FEM	1				P
68	Call Order Desk	SCREW MA PAN PH #6-32x5/8 SS	1				P
70	862208	BOLT-SHOULDER PRS	1				
71	862207	RELEASE TRIGGER / WELD ASSY / PRS	1				
72	Call Order Desk	STRAIN RELIEF	1				P
73	Call Order Desk	SPRING / MANUAL RELEASE TRIGGER / PRS	1				P
74	Call Order Desk	WASHER 1/2 D/SHAPE 1.00X.30	1				P
75	Call Order Desk	BRACKET / MANUAL RELEASE RH / WELD ASSY	1				P
76	Call Order Desk	COVER/ PRS SW	2				P
77	862210	KNOB KIT	1				
77	862118	. KNOB / PWR ROLL STOP / MIRAGE	1				
78	862119	. ROLL PIN SS 1/8x1 1/4	1				
79	863623	LINK / GEAR / WELD ASSEMBLY / RH	1				
		1) NOT SOLD SEPARATELY					
		P) CALL ORDER DESK FOR SPECIFIC APPLICATION					
		(V.I.N.)					

From Y-7046 Up to 1-7680	DATE: 01/2014	PAGE: Y2-2380-20

W.C.L. "RICON" - PLATFORM ASSY MODEL "F9A"

ITEM	PART	DESCRIPTION	XL45	MTH40	MTH45	MTH45S	NOTE
80	863622	LINK / HEX ADJUSTABLE / PRS	1				
81	5001189	NUT HEX 5/16-18 SS	1				
82	863624	LINK / GEAR / WELD ASSEMBLY / LH THD	1				
83	Call Order Desk	BUSHING / PIVOT SHAFT / PRS	2				P
84	Call Order Desk	BRACKET / MTG / COMP LINK / WELD ASSY	1				P
85	Call Order Desk	LINK COMPENSATOR / WELD ASSY / PRS	1				P
86	Call Order Desk	LINK / ROLL STOP / PRS	1				P
87	Call Order Desk	WASHER LO SPT #6 SS	3				P
88	862120	BUMPER / RUBBER 1.000 O.D. x .13THK	2				
89	Call Order Desk	KEEPER / REINFORCEMENT	4				P
90	Call Order Desk	BRACKET / MANUAL RELEASE / LH / WELD ASSY	1				P
92	Call Order Desk	T-NUT SS 5/16-18	4				P
93	Call Order Desk	WASHER FL .315x1.156x.062 NYL	1				P
94	Call Order Desk	FOOT / PRS ACTUATOR / WELD ASSY	1				P
95	Call Order Desk	CAM / PRS SWITCH ACTUATOR	1				P
96	Call Order Desk	WASHER FL #10 SS	1				P
97	Call Order Desk	SHOULDER SCREW / FLAP LATCH	1				P
98	Call Order Desk	WASHER LO SPT #10 SS	2				P
99	Call Order Desk	SCREW CAP BUT HEXS #10-24x3/8 SS	2				P
100	862121	SPRING / LH / ROLLSTOP ACTUATOR RETURN	1				
103	Call Order Desk	SCREW MA PAN PH #4-40x5/8	2				P
104	Call Order Desk	WASHER LO SPT #4	2				P
105	862122	LIMIT SWITCH / SEALED / PRS	1				
106	Call Order Desk	SCREW MA PAN PH #6-32x1/4 SS	2				P
108	5001180	NUT HEX NYRT #10-24 SS	2				
109	862123	PLUNGER SWITCH / SEALED / TAPPED 6-32 / REPLACED BY: 864026	1				
109	864026	PLUNGER SWITCH / SEALED / TAPPED 6-32	1				
110	500553	NUT HEX #6-32 SS / REPLACED BY: 500997	1				
111	Call Order Desk	BRACKET / MOUNTING / LIMIT SWITCH / PRS	1				P
112	Call Order Desk	RECEPTACLE / 9 PIN WO/FLANGE	1				P
113	863512	HARNESS ASSY / ROLLSTOP SWITCH	1				A
113	Call Order Desk	. HARNESS, W/TWO ROLLSTOP SWITCHES	1				P
. NS	N.S.S.	. . ROLLSTOP PLUNGER	1				1
114	Call Order Desk	PLATE / REINF LH / WELD ASSY / PRS SW-T	1				P
115	Call Order Desk	SCREW CAP CK HEXS #10-24x1/2 SS	2				P
118	Call Order Desk	SCREW CAP FL HEXS 1/4-20x3/4 SS	4				P
119	865085	MECH ASSY-LATCH	1				
120	Call Order Desk	SCREW CAP BUT HEXS 5/16-18x3/4 SS	2				P
121	Call Order Desk	SCREW CAP BUT HEXS 5/16-18x1.00 SS	6				P
		1) NOT SOLD SEPARATELY					
		P) CALL ORDER DESK FOR SPECIFIC APPLICATION					
		(V.I.N.)					
		A) INCLUDE ITEMS 58, 68, 72, 87, 105, 108, 109,					
		110, 111, 112 & 113					

From Y-7046 Up to 1-7680	DATE: 01/2014	PAGE: Y2-2380-20

W.C.L. "RICON" - PLATFORM ASSY MODEL "F9A"

ITEM	PART	DESCRIPTION	XL45	MTH40	MTH45	MTH45S	NOTE
124	Call Order Desk	SCREW CAP HEX 5/16-18x1/2 SS	6				P
125	Call Order Desk	BRACKET-HANDRAIL / LH	2				P
126	Call Order Desk	PLATE-HANDRAIL LOCK/ STRICKER	2				P
127	862124	BUCKLE-RESTRAINT BELT W/O SWITCH	1				
127	862216	BUCKLE-RESTRAINT BELT W/SWITCH	1				
128	Call Order Desk	SCREW SET HEXS SS 5/16-18x.50 5/16-18x1/2 SS	2				P
129	Call Order Desk	BUSHING .75x.25 THK SNAP IN	1				P
		P) CALL ORDER DESK FOR SPECIFIC APPLICATION					
		(V.I.N.)					

From Y-7046 Up to 1-7680	DATE: 01/2014	PAGE: Y2-2380-20

W.C.L. "RICON" - PLATFORM ASSY MODEL "F9A"

ITEM	PART	DESCRIPTION	XL45	MTH40	MTH45	MTH45S	NOTE

From 1-7681 Up to 4-8278	DATE: 01/2014	PAGE: Y2-2380-21
W.C.L. "RICON" - PLATFORM ASSY MODEL "HC-L002"		

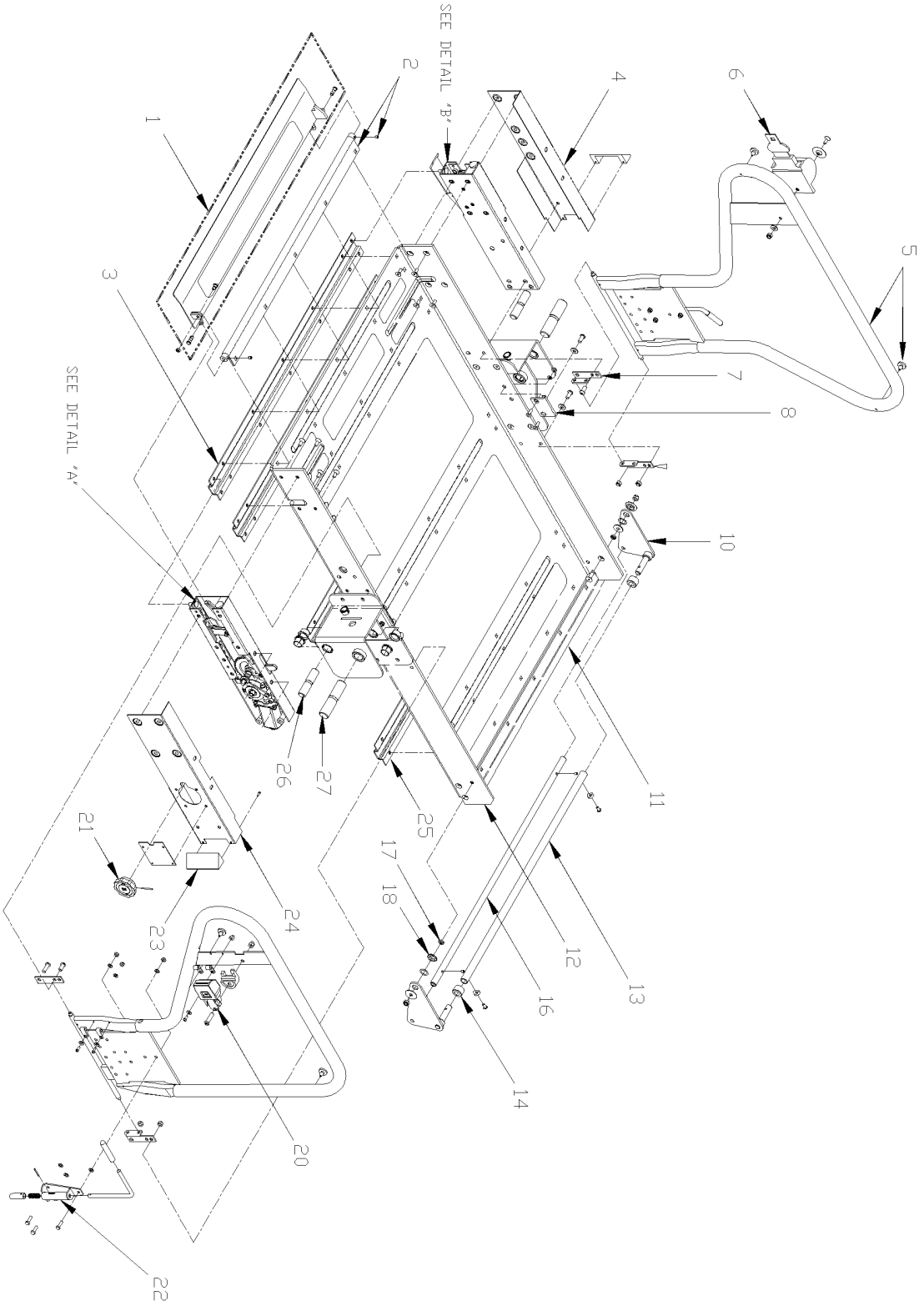

From 1-7681 Up to 4-8278	DATE: 01/2014	PAGE: Y2-2380-21

W.C.L. "RICON" - PLATFORM ASSY MODEL "HC-L002"

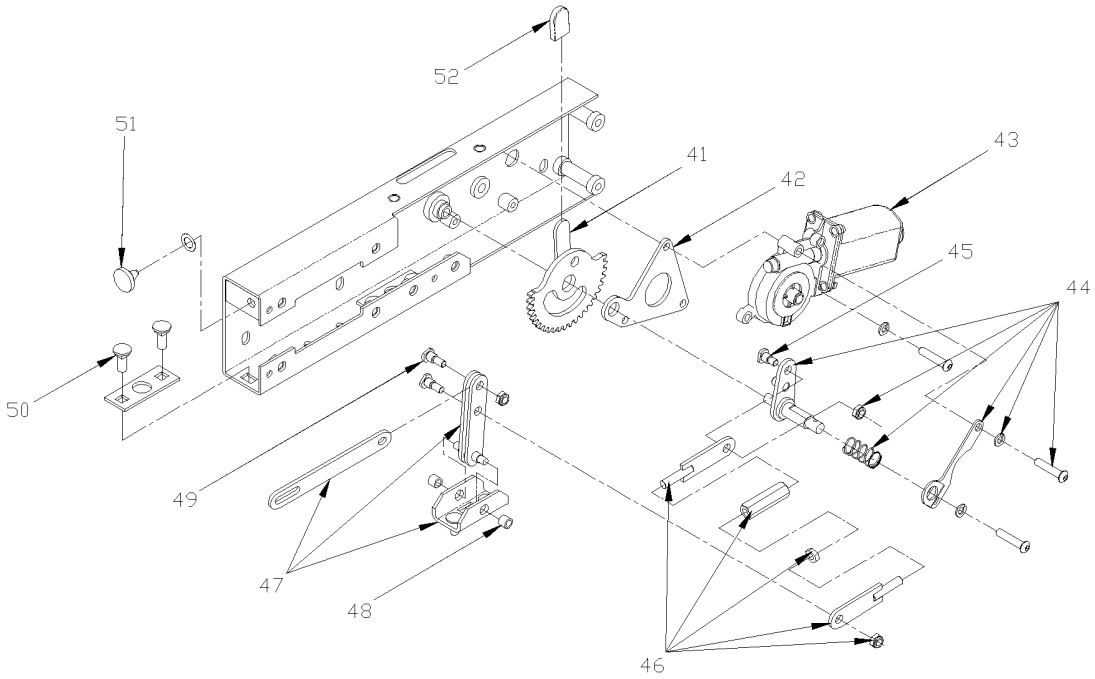

DETAIL "A"

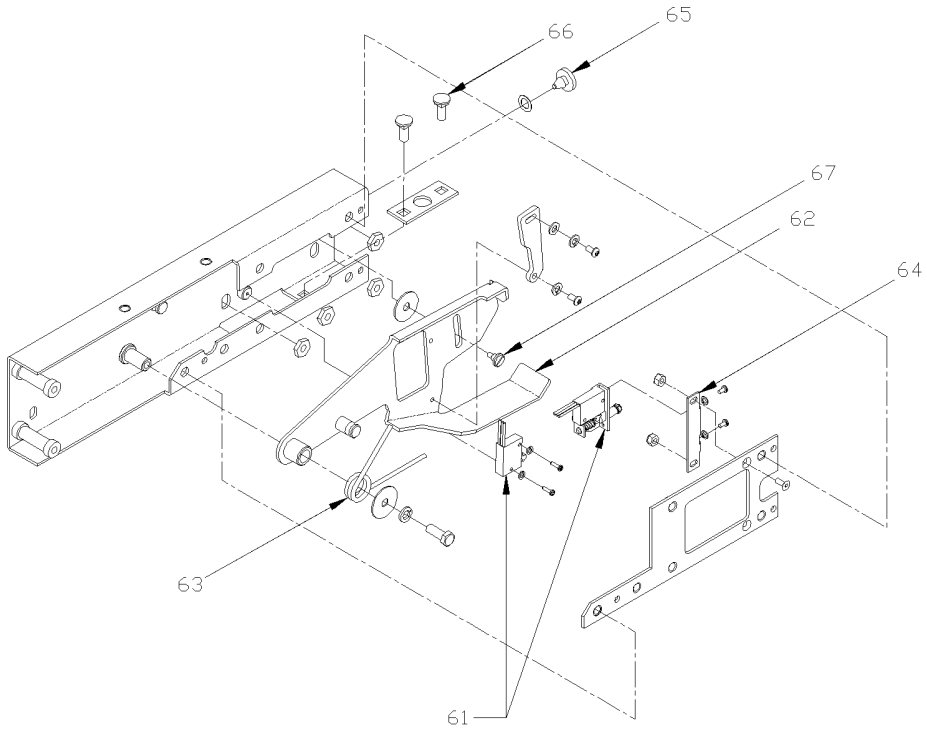

DETAIL "B"

From 1-7681 Up to 4-8278	DATE: 01/2014	PAGE: Y2-2380-21

W.C.L. "RICON" - PLATFORM ASSY MODEL "HC-L002"

ITEM	PART	DESCRIPTION	XL45	MTH40	MTH45	MTH45S	NOTE
1	Call Order Desk	KIT ROLLSTOP ASSY / W/SAFETREAD	1				P
2	Call Order Desk	KIT ROLLSTOP PIVOT / W/HARDWARE	1				P
3	Call Order Desk	STIFFENER / PLATFORM / FRONT	2				P
4	Call Order Desk	COVER / SIDE / ROLLSTOP LATCH	1				P
5	Call Order Desk	KIT HANDRAIL	1				P
6	862116	RETRACTOR-RESTRAINT BELT	1				
7	Call Order Desk	BRACKET HANDRAIL PIVOT	2				P
8	Call Order Desk	PLATE-HANDRAIL LOCK/ STRICKER	2				P
10	Call Order Desk	STIRRUP / BRIDGEPLATE	1				P
11	Call Order Desk	STIFFENER / PLATFORM / REAR	1				P
12	Call Order Desk	PLATFORM 32.25”x48”, W/SAFETREADS	1				P
13	Call Order Desk	ROD / BRIDGEPLATE ACTUATOR	1				P
14	Call Order Desk	ROLLER / BRIDGEPLATE ACTUATOR	2				P
16	Call Order Desk	ROD / STIRRUP	1				P
17	Call Order Desk	BUSHING / BRIDGEPLATE	2				P
18	Call Order Desk	BUSHING / STIRRUP PIVOT	2				P
20	862216	BUCKLE-RESTRAINT BELT W/SWITCH	1				
21	862210	KNOB KIT	1				
22	864174	KIT LATCH ASSY	2				
23	Call Order Desk	DEFLECTOR / SIDE COVER	2				P
24	Call Order Desk	COVER / SIDE / ROLLSTOP ACTUATOR	1				P
25	Call Order Desk	STIFFENER / PLATFORM / MIDDLE	2				P
26	Call Order Desk	PIN PIVOT .75x3.25	1				P
27	Call Order Desk	PIN PIVOT .75x4.25	1				P
41	Call Order Desk	GEAR, W/INDICATOR, PRS	1				P
42	Call Order Desk	KIT GEARMOTOR MOUNTING PLATE	1				P
43	Call Order Desk	KIT MOTOR, 24V W/HARDAWARE	1				P
44	Call Order Desk	KIT MANUAL RELEASE LEVER	1				P
45	Call Order Desk	. SCREW SHR HEXS .310x.250{M6-1.0	1				P
46	Call Order Desk	KIT LINK ADJUSTABLE	1				P
47	Call Order Desk	KIT COMPENSATOR LINKAGE	1				P
48	Call Order Desk	. BUSHING / PIVOT SHAFT / PRS	2				P
49	Call Order Desk	. SCREW M6-1.0x11 SS	2				P
50	Call Order Desk	SCREW CRG M8-1.25x20	2				P
	Call Order Desk						P
52	Call Order Desk	CAP, RED VINYL, W/ARROW, BAG OF TEN	2				P
61	Call Order Desk	HARNESS, W/TWO ROLLSTOP SWITCHES	1				P
. NS	N.S.S.	. ROLLSTOP PLUNGER	1				1
62	Call Order Desk	LATCH, ROLLSTOP	1				P
63	862121	SPRING / LH / ROLLSTOP ACTUATOR RETURN	1				
64	Call Order Desk	BRACKET / MOUNTING / LIMIT SWITCH / PRS	1				P
65	862120	BUMPER / RUBBER 1.000 O.D. x .13THK	1				
		1) NOT SOLD SEPARATELY					
		P) CALL ORDER DESK FOR SPECIFIC APPLICATION					
		(V.I.N.)					

From 1-7681 Up to 4-8278	DATE: 01/2014	PAGE: Y2-2380-21

W.C.L. "RICON" - PLATFORM ASSY MODEL "HC-L002"

ITEM	PART	DESCRIPTION	XL45	MTH40	MTH45	MTH45S	NOTE
66	Call Order Desk	SCREW CRG M8-1.25x20	2				P
67	Call Order Desk	SCREW, SHOULDER, LATCH	1				P
		P) CALL ORDER DESK FOR SPECIFIC APPLICATION					
		(V.I.N.)					

From 4-8279 Up to 5-8605	DATE: 01/2014	PAGE: Y2-2380-22
W.C.L. "RICON" - PLATFORM ASSY MODEL "F9T"		

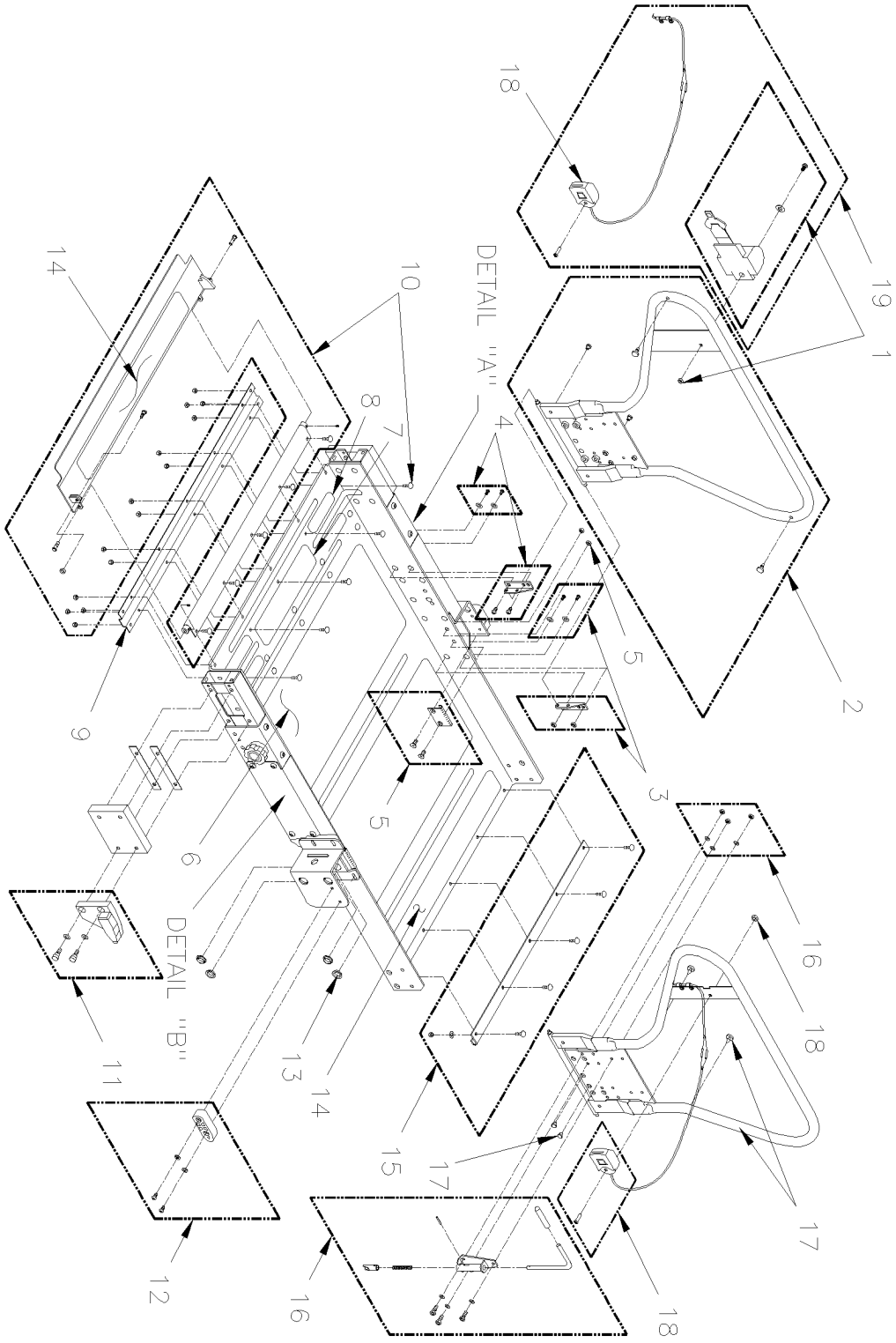

From 4-8279 Up to 5-8605	DATE: 01/2014	PAGE: Y2-2380-22
W.C.L. "RICON" - PLATFORM ASSY MODEL "F9T"		

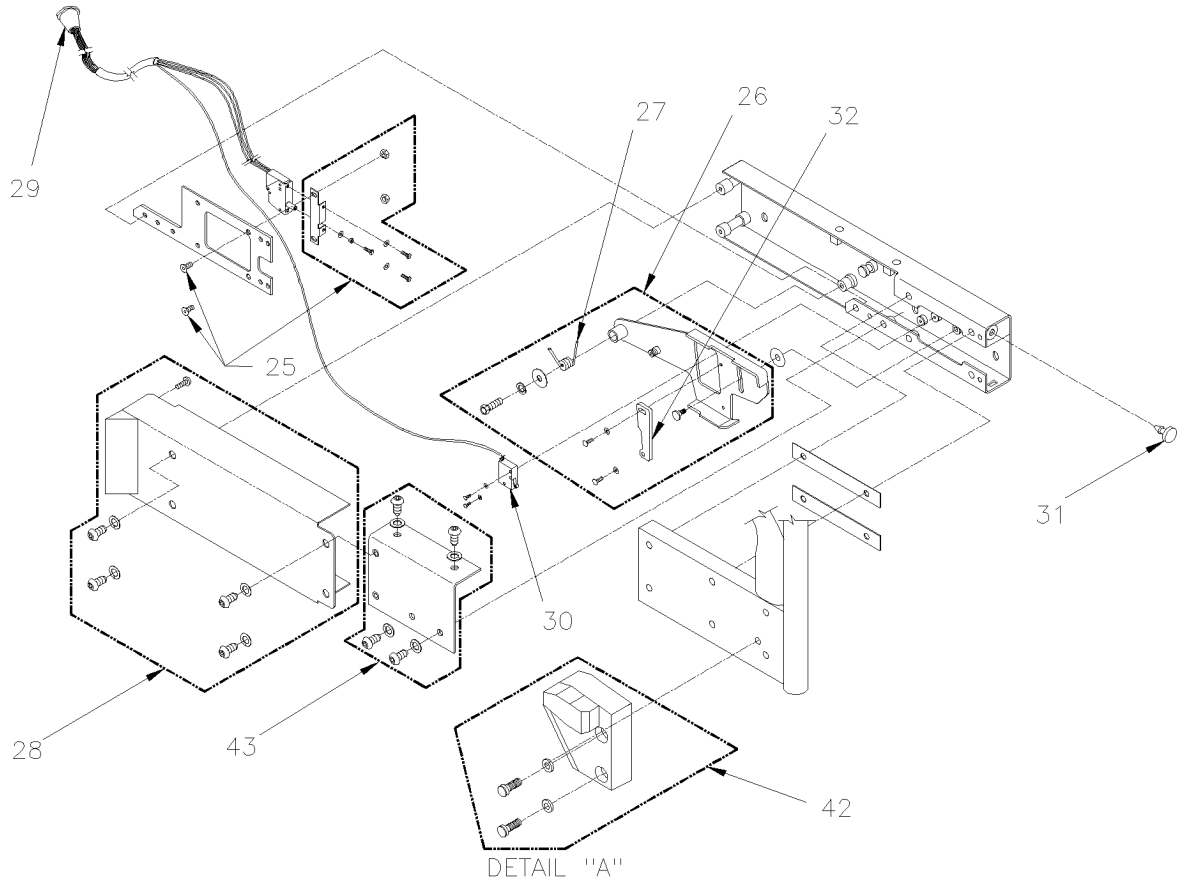

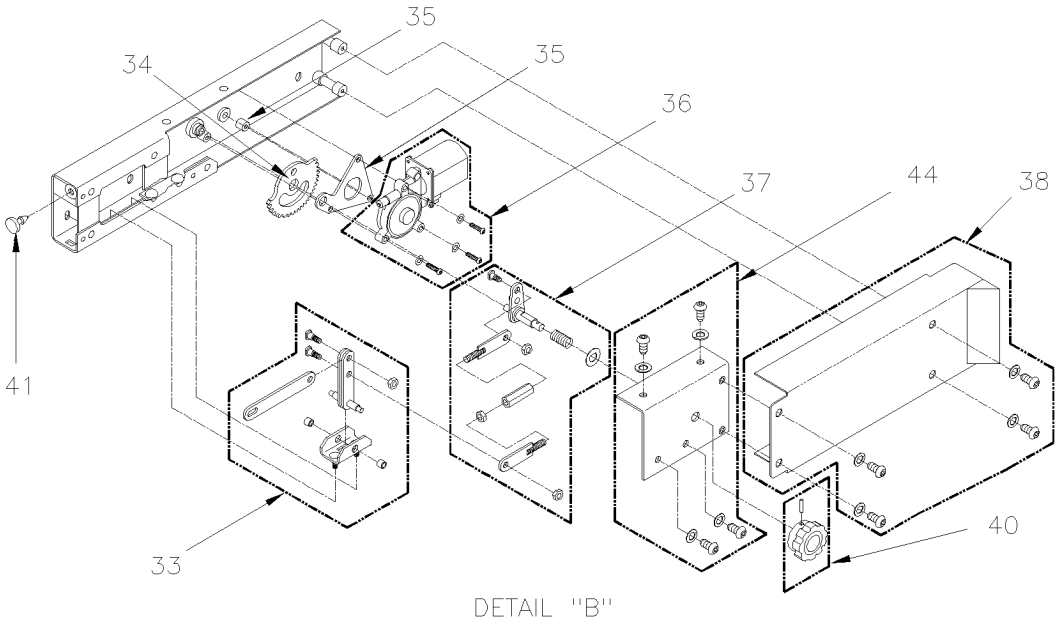

From 4-8279 Up to 5-8605	DATE: 01/2014	PAGE: Y2-2380-22

W.C.L. "RICON" - PLATFORM ASSY MODEL "F9T"

ITEM	PART	DESCRIPTION	XL45	MTH40	MTH45	MTH45S	NOTE
1	862116	RETRACTOR-RESTRAINT BELT	1				
2	Call Order Desk	KIT, FOLDING HANDRAIL, LH	1				P
3	Call Order Desk	KIT, HANDRAIL PIVOT BRACKET ASSY RH	1				P
4	Call Order Desk	KIT, HANDRAIL PIVOT BRACKET ASSY RH	1				P
5	Call Order Desk	KIT, HANDRAIL STRIKER	1				P
6	863620	SAFETY TREAD / 25.50x12 / OCEAN GREY	1				
7	863016	SAFETY TREAD / 12.75x3.0 / SAFETY YELLOW	1				
8	863017	SAFETY TREAD / 5.5x1.5 / SAFETY YELLOW	1				
9	Call Order Desk	PLATFORM STIFFENER, FRONT	4				P
10	Call Order Desk	KIT, ROLLSTOP ASSY	1				P
11	862114	BLOCK / PLAFORM GUIDE / RH	1				
12	862115	BLOCK / PLAFORM GUIDE / LH	1				
13	863018	BEARING, FLANGED, 3/4I.D. X 1/4W	2				
14	863621	SAFETY TREAD / 25.50x3.0 / SAFETY YELLOW	4				
15	863021	KIT, STIFFENER, PLATFORM, REAR	1				
16	864174	KIT LATCH ASSY	1				
17	Call Order Desk	KIT, FOLDING HANDRAIL, RH	1				P
17	862120	BUMPER / RUBBER 1.000 O.D. x .13THK	2				
17	Call Order Desk	BUMPER / RUBBER 1.000 O.D. x .50THK	2				P
17	Call Order Desk	BUMPER / RUBBER .870 O.D. x .40THK	2				P
17	Call Order Desk	BUMPER / RUBBER .630 O.D. x .31THK	4				P
18	Call Order Desk	KIT, SAFETY BELT BUCKLE	4				P
19	862124	BUCKLE-RESTRAINT BELT W/O SWITCH	1				
25	863036	KIT, MOUNTING BRACKET, LIMIT SWITCH	1				
26	863037	KIT, ACTUATOR FOOT ASSY	1				
27	862121	SPRING / LH / ROLLSTOP ACTUATOR RETURN	1				
28	Call Order Desk	KIT, SIDE COVER	1				P
29	863039	HARNESS, W/TWO ROLLSTOP SWITCHES	1				
. NS	N.S.S.	. ROLLSTOP PLUNGER	1				1
30	863129	LIMIT SWITCH	1				
31	862120	BUMPER / RUBBER 1.000 O.D. x .13THK	1				
32	863041	PLATE, ACTUATOR, SWITCH	1				
33	863031	KIT, ROLLSTOP LINKAGE	1				
34	862996	KIT, ROLLSTOP GEAR	1				
35	863032	KIT, GEAR MOTOR MTG PLATE	1				
36	862117	GEAR MOTOR DELCO PH3/ 9T RH / MED-TORQ 24V	1				
37	863033	KIT, GEAR LINKAGE	1				
38	Call Order Desk	KIT, SIDE COVER	1				P
40	862210	KNOB KIT	1				
41	862120	BUMPER / RUBBER 1.000 O.D. x .13THK	1				
42	Call Order Desk	KIT, PLATFORM GUIDE LH	1				P
43	Call Order Desk	KIT, ROLLSTOP RELEASE BRACKET	1				P
		1) NOT SOLD SEPARATELY					
		P) CALL ORDER DESK FOR SPECIFIC APPLICATION					
		(V.I.N.)					

From 4-8279 Up to 5-8605	DATE: 01/2014	PAGE: Y2-2380-22

W.C.L. "RICON" - PLATFORM ASSY MODEL "F9T"

ITEM	PART	DESCRIPTION	XL45	MTH40	MTH45	MTH45S	NOTE
44	20614	KIT, ROLLSTOP ACTUATOR BRACKET	1				

From 5-8606 Up to 6-8906	DATE: 01/2014	PAGE: Y2-2380-23
W.C.L. "RICON" - PLATFORM ASSY MODEL "F9TF"		

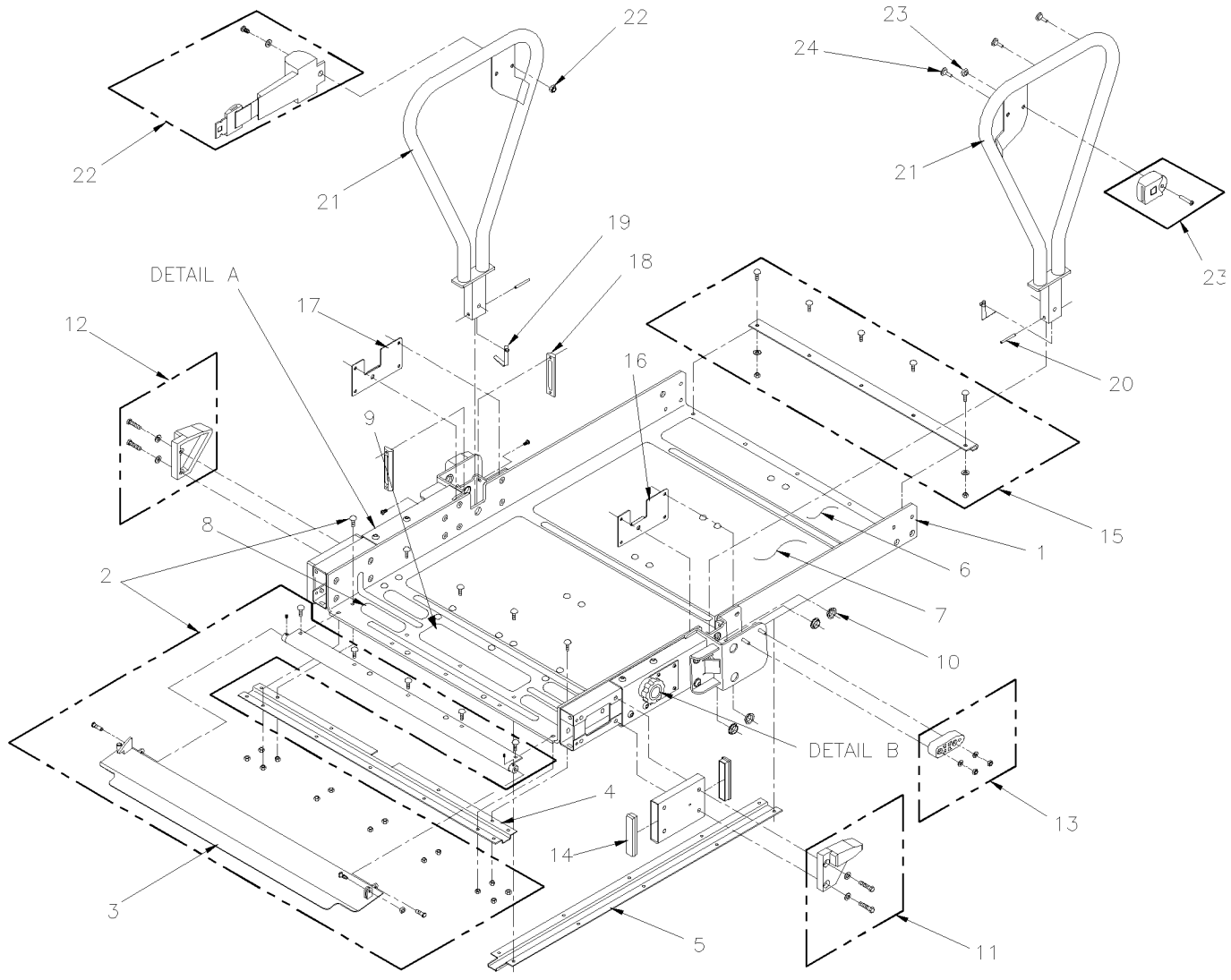

From 5-8606 Up to 6-8906	DATE: 01/2014	PAGE: Y2-2380-23
W.C.L. "RICON" - PLATFORM ASSY MODEL "F9TF"		

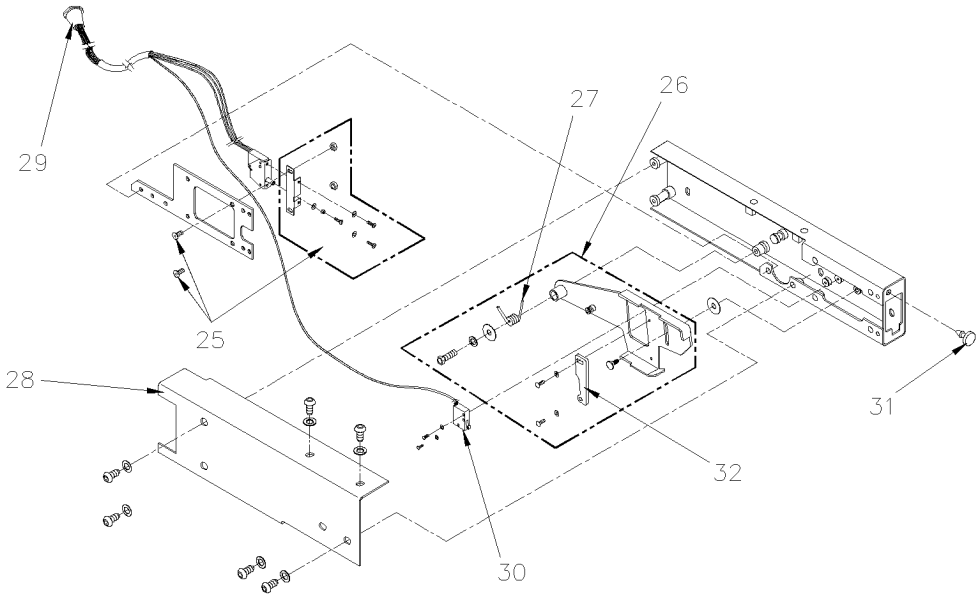

DETAIL A

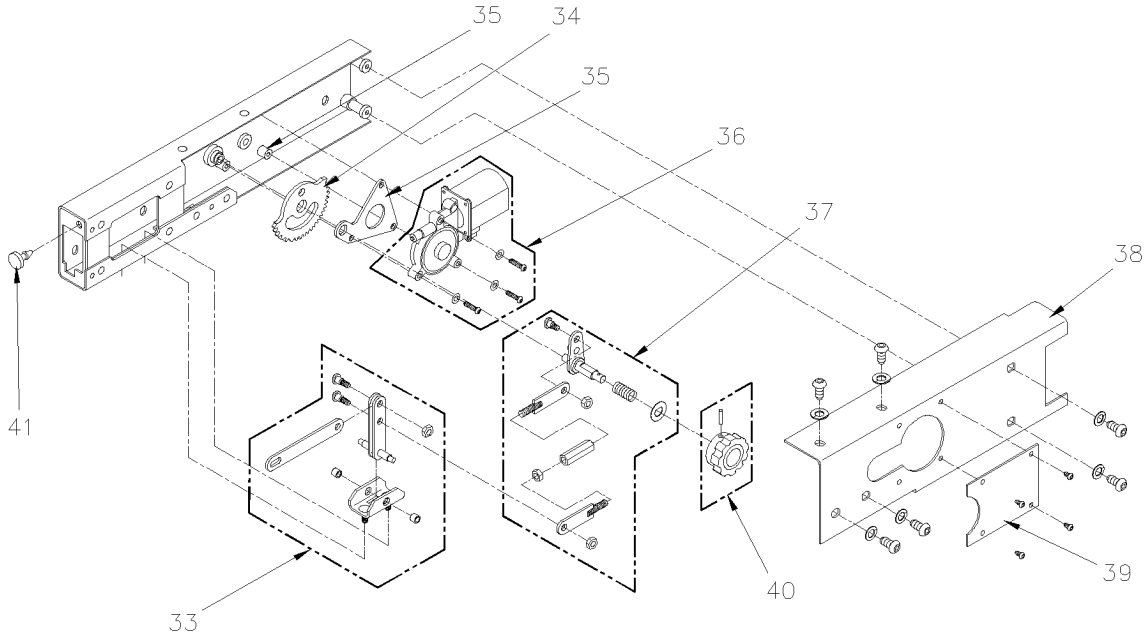

DETAIL B

From 5-8606 Up to 6-8906	DATE: 01/2014	PAGE: Y2-2380-23

W.C.L. "RICON" - PLATFORM ASSY MODEL "F9TF"

ITEM	PART	DESCRIPTION	XL45	MTH40	MTH45	MTH45S	NOTE
1	Call Order Desk	PLATFORM	1				P
2	863010	KIT, ROLLSTOP ASSEMBLY	1				
3	Call Order Desk	ROLLSTOP, PAINTED	1				P
4	Call Order Desk	STIFFENER & HARNESS CONDUIT, NOTCHED	1				P
5	Call Order Desk	HARNESS CONDUIT, FRONT TO REAR	1				P
6	863014	SAFETREAD, 3.0 X 31.0, YELLOW	1				
7	863015	SAFETREAD, 16.0 X 31.0, GRAY	1				
8	863016	SAFETY TREAD / 12.75x3.0 / SAFETY YELLOW	1				
9	863017	SAFETY TREAD / 5.5x1.5 / SAFETY YELLOW	4				
10	863018	BEARING, FLANGED, 3/4I.D. X 1/4W	1				
11	862114	BLOCK / PLAFORM GUIDE / RH	1				
12	862115	BLOCK / PLAFORM GUIDE / LH	1				
13	863019	KIT, PLATFORM GUIDE, REAR	2				
14	863020	CAP, RECTANGULAR, SNAP-IN	4				
15	863021	KIT, STIFFENER, PLATFORM, REAR	1				
16	Call Order Desk	PLATE, PIN LOCK, RH	1				P
17	Call Order Desk	PLATE, PIN LOCK, LH	1				P
18	863024	HANDRAIL GUIDE	4				
19	863618	BUTTON, HANDRAIL LOCK	2				
20	863026	PIN, HANDRAIL PIVOT	2				
21	864222	HANDRAIL	2				
22	863028	KIT, SAFETY BELT W/RETRACTOR	1				
23	863029	KIT, SAFETY BELT BUCKLE ASSEMBLY	1				
24	863030	BUMPER, RUBBER	1				
25	863036	KIT, MOUNTING BRACKET, LIMIT SWITCH	1				
26	863037	KIT, ACTUATOR FOOT ASSY	1				
27	862121	SPRING / LH / ROLLSTOP ACTUATOR RETURN	1				
28	863038	COVER, ROLLSTOP, LH	1				
29	863039	HARNESS, W/TWO ROLLSTOP SWITCHES	1				
. NS	N.S.S.	. ROLLSTOP PLUNGER	1				1
30	863040	SWITCH LIMIT, W/LEADS / REPLACED BY: 863129	1				
31	862120	BUMPER / RUBBER 1.000 O.D. x .13THK	1				
32	863041	PLATE, ACTUATOR, SWITCH	1				
33	863031	KIT, ROLLSTOP LINKAGE	1				
34	862996	KIT, ROLLSTOP GEAR	1				
35	863032	KIT, GEAR MOTOR MTG PLATE	1				
36	862117	GEAR MOTOR DELCO PH3/ 9T RH / MED-TORQ 24V	1				
37	863033	KIT, GEAR LINKAGE	1				
38	863034	COVER, ROLLSTOP, RH	1				
39	Call Order Desk	COVER PLATE, MANUAL RELEASE	1				P
40	862210	KNOB KIT	1				
41	862120	BUMPER / RUBBER 1.000 O.D. x .13THK	1				
		1) NOT SOLD SEPARATELY					
		P) CALL ORDER DESK FOR SPECIFIC APPLICATION					
		(V.I.N.)					

From 5-8606 Up to 6-8906	DATE: 01/2014	PAGE: Y2-2380-23

W.C.L. "RICON" - PLATFORM ASSY MODEL "F9TF"

ITEM	PART	DESCRIPTION	XL45	MTH40	MTH45	MTH45S	NOTE

From Y-7046 Up to 1-7680	DATE: 01/2014	PAGE: Y2-2380-30
W.C.L. "RICON" - TRAVELING FRAME ASSY MODEL "F9A"		

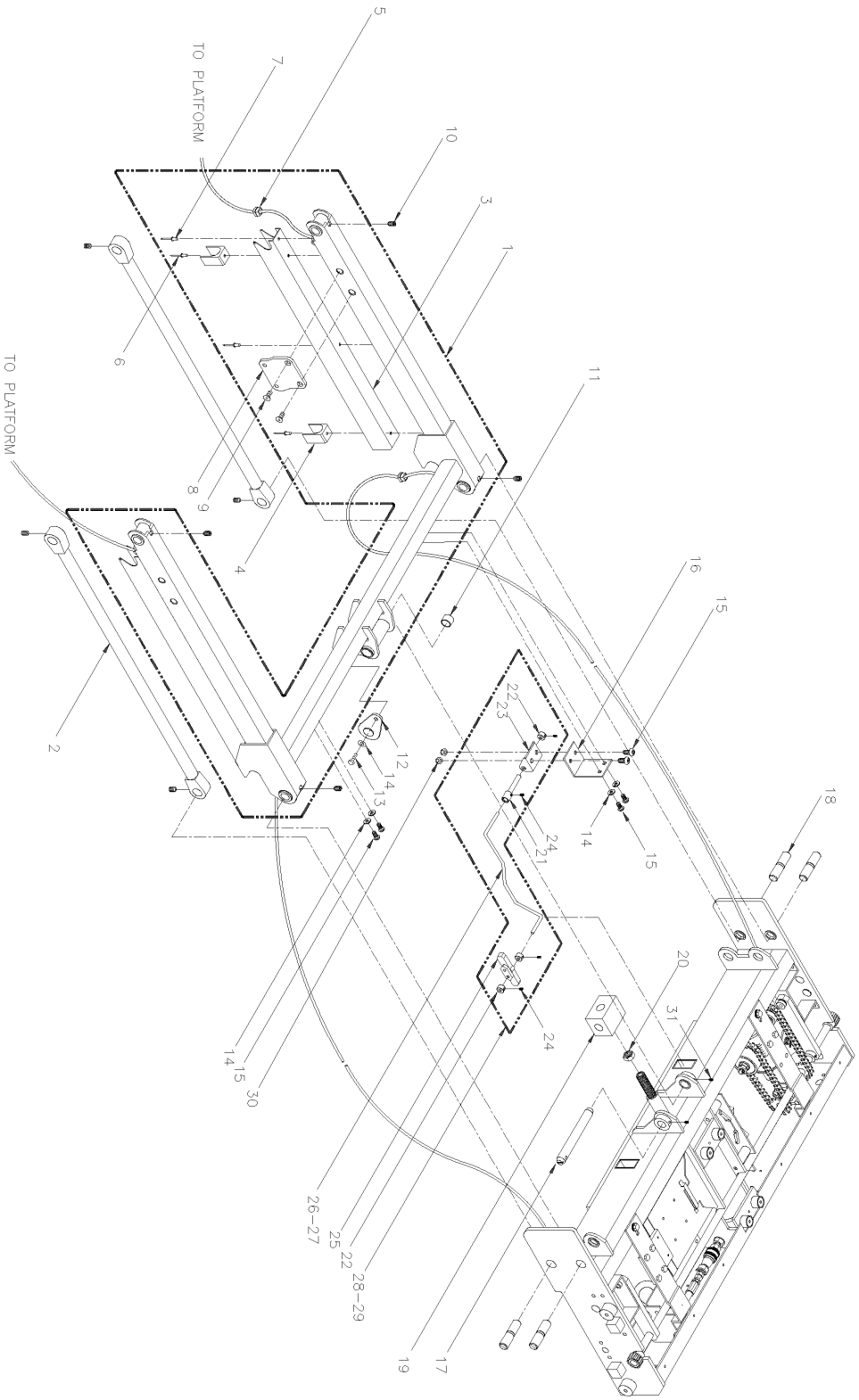

From Y-7046 Up to 1-7680	DATE: 01/2014	PAGE: Y2-2380-30

W.C.L. "RICON" - TRAVELING FRAME ASSY MODEL "F9A"

ITEM	PART	DESCRIPTION	XL45	MTH40	MTH45	MTH45S	NOTE
1	862125	LIFTING FRAME-ASSY / 43.00 CENTERS / EXT	1				
2	862126	ARM-WASSY / LOWER / 43.00 CENTERS	2				
3	Call Order Desk	COVER-ARM 30.313 CENTERS	2				P
4	Call Order Desk	BLOCK-ARM GUIDE	4				P
5	Call Order Desk	STRAIN RELIEF	4				P
6	Call Order Desk	RIVET STEEL 3/16x5/8	4				P
7	Call Order Desk	RIVET STEEL 3/16x3/8	4				P
8	Call Order Desk	PLATE-BRIDGE PLATE ACTUATOR MOUNT	2				P
9	Call Order Desk	SCREW CAP FL HEXS 1/4-20x5/8	4				P
10	Call Order Desk	SCREW SET HEXS SS 5/16-18x.50 5/16-18x1/2 SS	8				P
11	862127	BEARING DU / .75x.875x.63 / REPLACED BY: 863053	6				
12	862212	KIT KEEPER PLATE	1				
13	Call Order Desk	SCREW CAP HEX 5/16-18x5/8 SS	2				P
14	Call Order Desk	WASHER LO SPT 5/16 SS	6				P
15	Call Order Desk	SCREW CAP BUT 5/16-18x5/8 SS	6				P
16	Call Order Desk	BRACKET-ACTUATOR ROD PIVOT / EXT	1				P
17	Call Order Desk	PIN-PIVOT .75x6.00	1				P
18	862128	PIN-PIVOT / LIFTING FRAME	4				
19	Call Order Desk	TRUNNION-CYLINDER	1				P
20	Call Order Desk	NUT HEX JAM 3/4-16 SS	1				P
21	Call Order Desk	COLLAR-ACTUATOR ROD	1				P
22	Call Order Desk	COLLAR .25x.63x.38	3				P
23	Call Order Desk	BRACKET-F9000 SERIES ELCT SYSTEM	1				P
24	Call Order Desk	SCREW SET HEXS SS 10-32x1/4 #10-32x1/4 SS	6				P
25	Call Order Desk	BLOCK-SWITCH ACTUATOR CAM	1				P
26	Call Order Desk	ROD-SWITCH CAM ACTUATOR LH	1				P
27	Call Order Desk	ROD-SWITCH CAM ACTUATOR RH	1				P
28	862129	SWITCH ACTUATOR ASSY / LH	1				
29	862130	SWITCH ACTUATOR ASSY / RH	1				
30	Call Order Desk	NUT HEX THN 5/16-18 NYL	2				P
31	Call Order Desk	SCREW SET HEXS SS 1/4-20x1/4 1/4-20x1/4 SS	2				P
		P) CALL ORDER DESK FOR SPECIFIC APPLICATION					
		(V.I.N.)					

From 1-7681 Up to 4-8278	DATE: 01/2014	PAGE: Y2-2380-31
W.C.L. "RICON" - TRAVELING FRAME ASSY MODEL "HC-L002"		

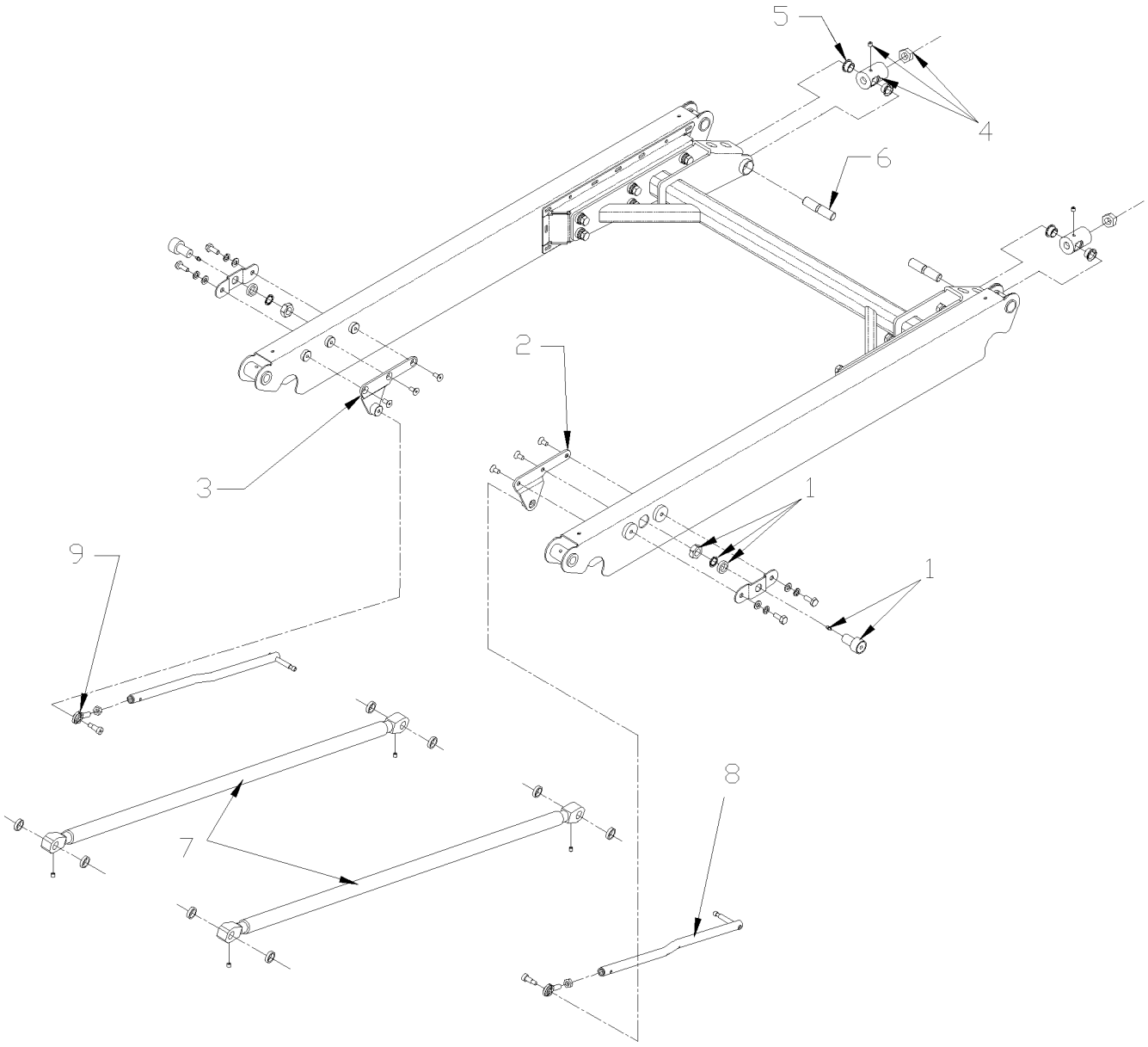

From 1-7681 Up to 4-8278	DATE: 01/2014	PAGE: Y2-2380-31

W.C.L. "RICON" - TRAVELING FRAME ASSY MODEL "HC-L002"

ITEM	PART	DESCRIPTION	XL45	MTH40	MTH45	MTH45S	NOTE
1	Call Order Desk	KIT, ROLLER, 1.25ODX .75W, W/GREASE FITTING &	2				P
2	Call Order Desk	BRACKET / ACTUATOR ROD RH	1				P
3	Call Order Desk	BRACKET / ACTUATOR ROD LH	1				P
4	Call Order Desk	KIT TRUNNION	2				P
5	Call Order Desk	. BUSHING .75IDx.75W / (BAG OF 10)	4				P
6	Call Order Desk	PIN PIVOT .75x3.25	2				P
7	Call Order Desk	KIT LOWER ARM	2				P
8	Call Order Desk	KIT BRIDGEPLATE ACTUATOR	2				P
9	Call Order Desk	ROD END, M10x14mm, M10-1.5	2				P
		P) CALL ORDER DESK FOR SPECIFIC APPLICATION					
		(V.I.N.)					

From 1-8279 Up to 6-8906	DATE: 01/2014	PAGE: Y2-2380-32
W.C.L. "RICON" - TRAVELING FRAME ASSY MODEL "F9T" & "F9TF"		

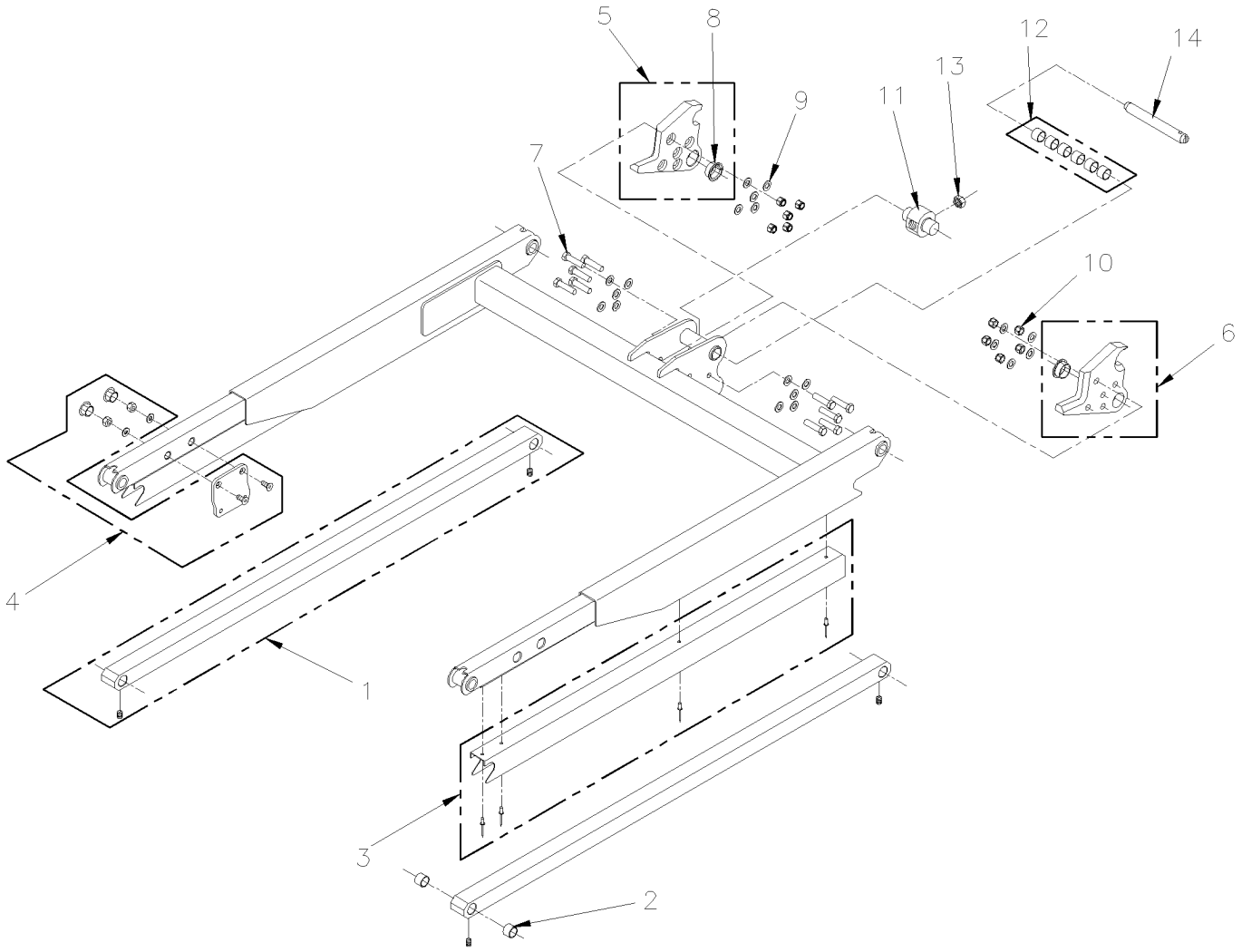

From 1-8279 Up to 6-8906	DATE: 01/2014	PAGE: Y2-2380-32

W.C.L. "RICON" - TRAVELING FRAME ASSY MODEL "F9T" & "F9TF"

ITEM	PART	DESCRIPTION	XL45	MTH40	MTH45	MTH45S	NOTE
1	863042	KIT, LOWER ARM	2				
2	863043	BUSHING, .88O.D. X .75I.D. X .38	4				
3	863044	KIT, COVER, LOWER ARM	2				
4	863045	KIT, PLATE, BRIDGEPLATE ACTUATOR	2				
5	863046	PLATE ASSY, CLEVIS REINFORCEMENT, LH	1				
6	863047	PLATE ASSY, CLEVIS REINFORCEMENT, RH	1				
7	863048	SCREW CAP HEX 3/8-16x1 1/2 SS	1				
8	863049	BEARING, FLANGED, 1.00 I.D. X .75W	2				
9	863050	WASHER FL .40x.75x.06 SS	2				
10	863051	NUT, ESN, 3/8-16, SS	1				
11	863052	TRUNNION, SOLID PIN	1				
12	863053	KIT, BEARING, .75I.D. X .875O.D. X .63	1				
13	863054	NUT, JAM, 3/4-16	1				
14	863055	PIN, .75D X 6.0L	1				

From Y-7046 Up to 1-7680	DATE: 01/2014	PAGE: Y2-2380-40
W.C.L. "RICON" - CARRIAGE ASSY MODEL "F9A"		

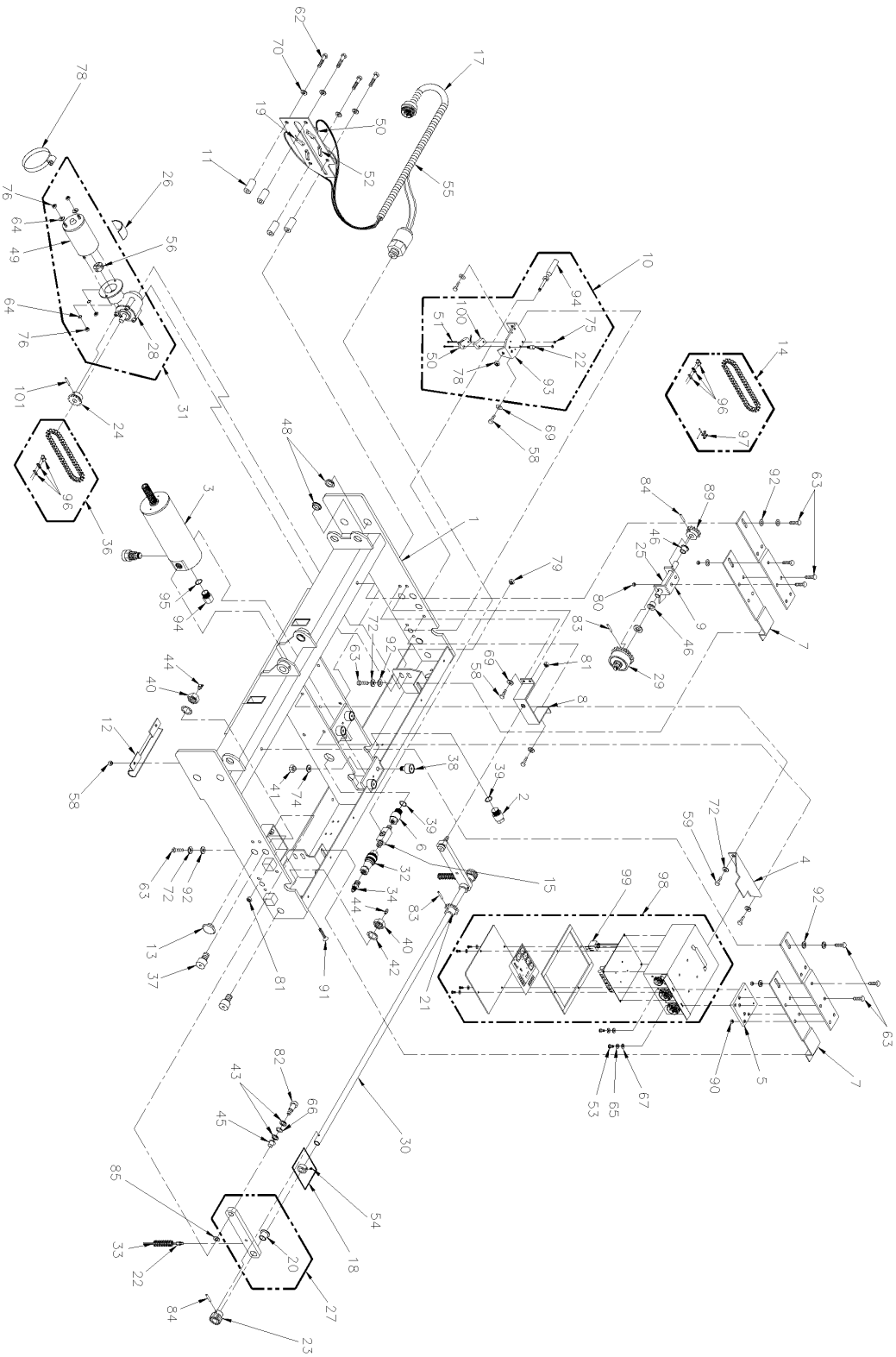

From Y-7046 Up to 1-7680	DATE: 01/2014	PAGE: Y2-2380-40

W.C.L. "RICON" - CARRIAGE ASSY MODEL "F9A"

ITEM	PART	DESCRIPTION	XL45	MTH40	MTH45	MTH45S	NOTE
1	Call Order Desk	CARRIAGE-WASSY STANDARD	1				P
2	Call Order Desk	FITTING / PIVOT	1				P
3	862131	CYLINDER / HYDRAULIC / WO/INTERNAL POT	1				
4	Call Order Desk	BRACKET-CARRIAGE ELECT BOX MTG	1				P
6	863583	KIT, FITTING, PIVOT ¼ NPT, WITH O-RING	1				
7	Call Order Desk	BRACKET-ASSY / IDLER SHAFT	2				P
8	Call Order Desk	BRACKET-ASSY / DRIVE SHAFT ARM / PIVOT	2				P
9	Call Order Desk	SUPPORT / WASSY / IDLER SHAFT	1				P
10	862211	MICRO SWITCH ASSY	2				
11	Call Order Desk	SPACER-SWITCH PLATE / STAND OFF	3				P
12	Call Order Desk	CLAMP-HARNESS	1				P
13	Call Order Desk	BUTTON / CARRIAGE / GUIDE	2				P
14	862132	CHAIN DRIVE / PRIMARY; TRAIN LIFT	1				
15	863583	KIT, FITTING, PIVOT ¼ NPT, WITH O-RING	1				
16	Call Order Desk	SWITCH PLATE	1				P
17	862133	HARNESS-ASSY SWITCH PLATE UP TO SEPT 99	1				
17	862134	HARNESS-ASSY SWITCH PLATE W/PRESSURE SWITCH FROM SEPT 99	1				
18	Call Order Desk	COLLAR SET SCREW	2				P
19	862135	BLOCK / SWITCH RETAINER / PLASTIC	4				
20	Call Order Desk	BEARING DU .625x.719x.38	2				P
21	862136	SPOCKET 12 TEETH #35 .625 BORE	1				
22	862137	BUTTON / SPRING SUPPROT	2				
23	862138	GEAR 1.125PD / .63 FACE W/HUB	2				
24	862139	SPOCKET 8 TEETH #35 .5 BORE	1				
25	862140	SHAFT / INTERMEDIATE DRIVE .50x5.00	1				
26	Call Order Desk	GASKET / RUBBER 1/8x1/2	1				P
27	Call Order Desk	LINK / DRIVE SHAFT / PIVOT / ASSY	2				P
28	862141	GEAR BOX / RATIO 24:1	1				
29	862142	CLUTCH / TORQUE LIMIT RICON	1				
30	862143	SHAFT / FINAL DRIVE - DS200	1				
31	862144	GEAR-MOTOR ASSY 24V	1				
32	Call Order Desk	FITTING / QUICK-DISCONNECT 1/4	1				P
33	862145	SPRING COMPRESSION .44x2.1	2				
34	Call Order Desk	ADAPTER / STRT / 1/4NPT-1/4JIC MAL	1				P
36	862132	CHAIN DRIVE / PRIMARY; TRAIN LIFT	1				
37	Call Order Desk	CAM FOLLOWER 1 1/4x3/4 CRWND	4				P
38	Call Order Desk	CAM FOLLOWER 1.00x5/8 / 7/16-20	4				P
39	863582	O-RING / NITRILE .644x.87	2				
40	Call Order Desk	NUT HEX JAM 3/16	5				P
41	Call Order Desk	NUT HEX JAM 7/16-20	4				P
42	Call Order Desk	WASHER LO INT 3/4	4				P
		P) CALL ORDER DESK FOR SPECIFIC APPLICATION					
		(V.I.N.)					

From Y-7046 Up to 1-7680	DATE: 01/2014	PAGE: Y2-2380-40

W.C.L. "RICON" - CARRIAGE ASSY MODEL "F9A"

ITEM	PART	DESCRIPTION	XL45	MTH40	MTH45	MTH45S	NOTE
43	Call Order Desk	WASHER NYL	4				P
44	Call Order Desk	FITTING / GREASE / 65DEG / PRESS-IN	4				P
45	Call Order Desk	BUSHING NY LINER .50x.50	2				P
46	862146	BUSHING 12 EDU08 3/4x1/2	2				
47	Call Order Desk	BUSHING 12 FDU08 1x1/2	1				P
48	Call Order Desk	BEARING .75x.25 DU FLANGED	8				P
49	862147	MOTOR-1/4HP / 24VDC / SHORT SHAFT	1				
50	862122	LIMIT SWITCH / SEALED / PRS	1				
51	Call Order Desk	SCREW MA PAN PH #4-40x1 1/8	4				P
52	Call Order Desk	SCREW MA PAN PH #4-40x1.00 ZP	8				P
53	Call Order Desk	SCREW MA PAN PH #8-32x1/2 SS	2				P
54	Call Order Desk	SCREW SET HEXS 10-24x1/4 #10-24x1/4	2				P
55	561482	CONVOLUTED TUBING / .500" / UNSLIT / BLACK	4				
56	Call Order Desk	COUPLING-ACTUATOR	1				P
58	N.P.N.	SCREW CAP HEX SS 1/4-20x1/2	10				4
59	Call Order Desk	SCREW CAP HEX 5/16-18x1/2 SS	2				P
61	Call Order Desk	SCREW CAP HEX 5/16-18x7/8 G5	1				P
62	Call Order Desk	SCREW CAP HEX 5/16-18x2 1/2 G5	3				P
63	Call Order Desk	SCREW CAP HEX 5/16-18x3/4 SS	4				P
64	Call Order Desk	WASHER LO INT #10	4				P
65	Call Order Desk	WASHER LO SPT #8 SS	2				P
66	Call Order Desk	WASHER SPR WAVE 1/2	2				P
67	Call Order Desk	WASHER FL #8 SS	22				P
69	Call Order Desk	WASHER LO SPT 1/4 SS	10				P
70	Call Order Desk	WASHER FL 5/16	3				P
72	Call Order Desk	WASHER LO SPT 5/16 SS	10				P
74	Call Order Desk	WASHER LO EXT 7/16 SS	4				P
75	500425	NUT HEX NYRT #4-40 SS	4				
76	Call Order Desk	NUT HEX #10-32	4				P
78	5001352	NUT HEX NYRT 1/4-20 SS	2				
79	Call Order Desk	NUT HEX 5/16-18 SS	2				P
80	500685	NUT HEX NYRT 5/16-18 SS	2				
81	Call Order Desk	NUT HEX NYRT 3/8-16	2				P
82	862148	BOLT-SHOULDER 1/2x3/4	2				
83	862149	PIN "SPIROL" 5/32x1 1/4	2				
84	862150	PIN "SPIROL" 5/32x1.00	3				
85	Call Order Desk	WASHER .578x1.06x.310 NYL	2				P
86	Call Order Desk	CLUTCH / TORQUE LIMITING WARNER	1				P
90	500685	NUT HEX NYRT 5/16-18 SS	4				
91	Call Order Desk	SCREW CAP FL HEXS 1/4-20x5/8	2				P
92	Call Order Desk	WASHER FL .32x.75x.08 SS	AR				P
		4) NO PARTS NUMBER					
		P) CALL ORDER DESK FOR SPECIFIC APPLICATION					
		(V.I.N.)					

From Y-7046 Up to 1-7680	DATE: 01/2014	PAGE: Y2-2380-40

W.C.L. "RICON" - CARRIAGE ASSY MODEL "F9A"

ITEM	PART	DESCRIPTION	XL45	MTH40	MTH45	MTH45S	NOTE
93	Call Order Desk	BRACKET-PLUNGER / MICRO SWITCH	3				P
94	Call Order Desk	PLUG 3/4-16 CAV / O-RING SEAL / HEX HD	1				P
NS	862209	SPRING	1				
95	Call Order Desk	SPACER-IMMEDIATE DRIVE	1				P
96	862151	LINK-MASTER NICKEL #35	2				
97	862152	OFFSET-LINK #35 - 1/2 LINK	1				
98	862099	CONTROL BOX 24V / YELLOW / W STD W.C.L.	1				
98	862957	CONTROL BOX 24V / YELLOW / W/REMOVABLE W.C.L.	1				
99	862153	RELAY 12V	1				
100	Call Order Desk	BRACKET / ALUM-LIMIT SWITCH	1				P
101	862154	ROLL PIN 5/32x3/4	1				
		P) CALL ORDER DESK FOR SPECIFIC APPLICATION					
		(V.I.N.)					

From 1-7681 Up to 4-8278	DATE: 01/2014	PAGE: Y2-2380-41

W.C.L. "RICON" - CARRIAGE ASSY MODEL "HC-L002"

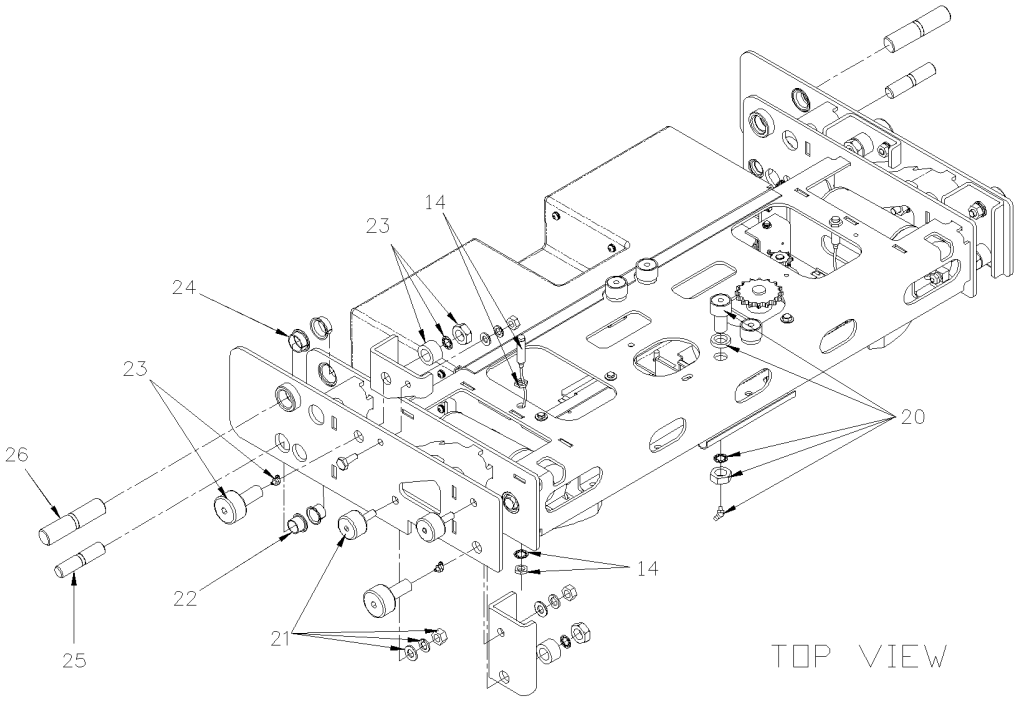

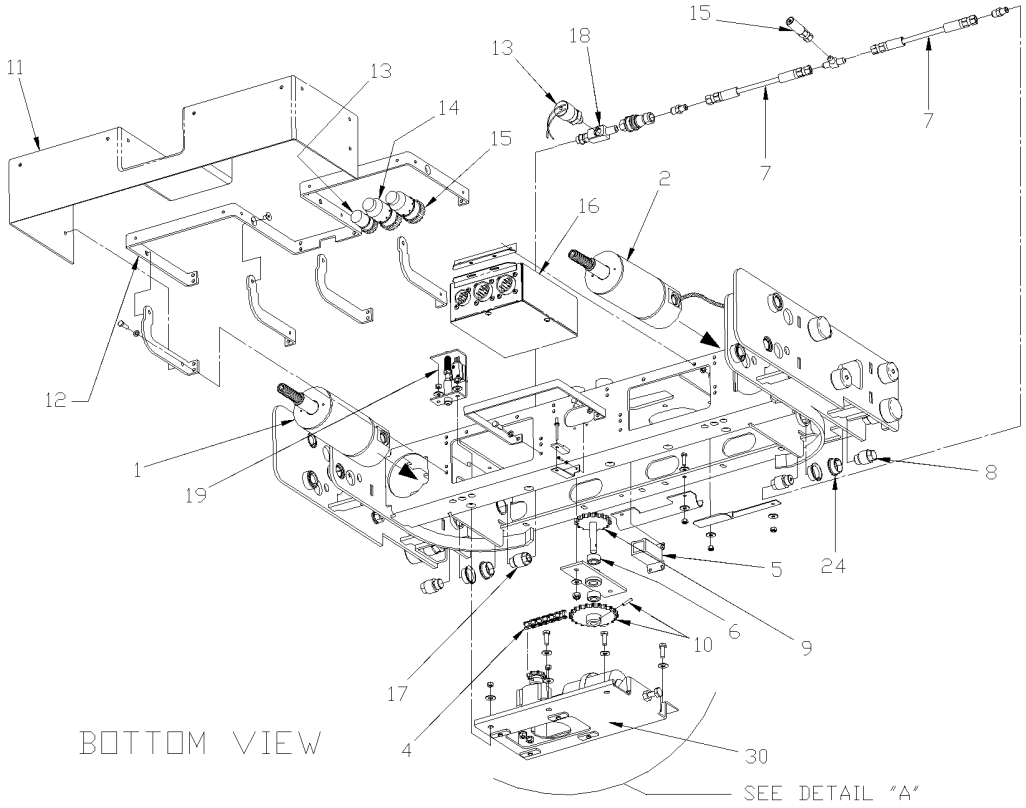

From 1-7681 Up to 4-8278	DATE: 01/2014	PAGE: Y2-2380-41
W.C.L. "RICON" - CARRIAGE ASSY MODEL "HC-L002"		

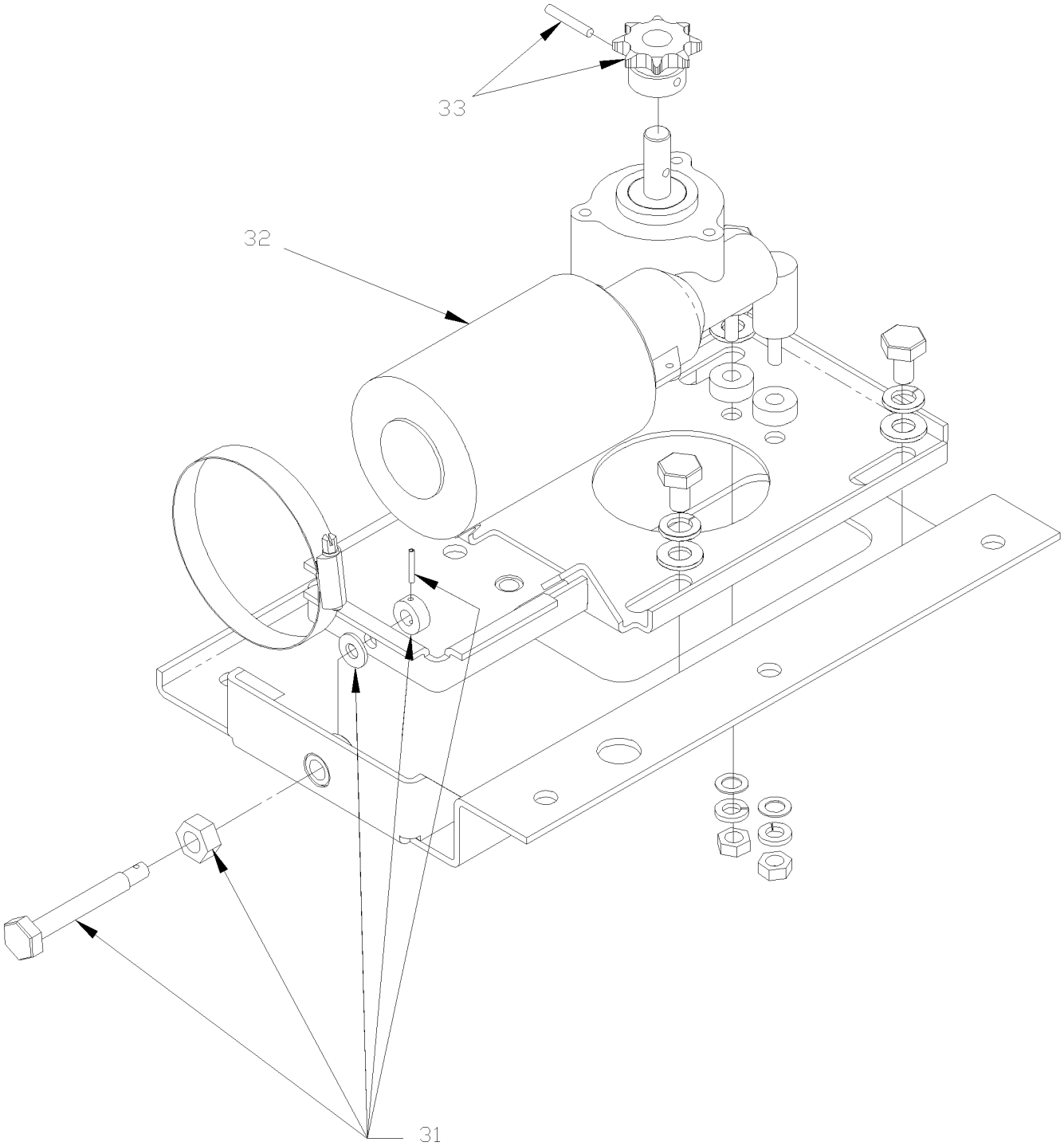

DETAIL "A"

From 1-7681 Up to 4-8278	DATE: 01/2014	PAGE: Y2-2380-41

W.C.L. "RICON" - CARRIAGE ASSY MODEL "HC-L002"

ITEM	PART	DESCRIPTION	XL45	MTH40	MTH45	MTH45S	NOTE
1	862214	HYDRAULIC CYLINDER ASSY / W/O POTENTIOMETER	1				
2	862215	HYDRAULIC CYLINDER ASSY / W/ POTENTIOMETER / REPLACED BY: 862214	1				
4	Call Order Desk	CHAIN / PRIMARY / CARRIAGE MOTOR	1				P
5	Call Order Desk	CYCLE COUNTER	1				P
6	Call Order Desk	BEARING .5OIDx1.125OD	2				P
7	Call Order Desk	HYDRAULIC HOSE SYNFLEX / 7.25”	2				P
8	Call Order Desk	FITTING / PIVOT	2				P
9	Call Order Desk	DRIVE SHAFT / W/SPROCKET	1				P
10	Call Order Desk	KIT, SPROCKET, 22T, #40, W/PIN	1				P
11	Call Order Desk	COVER / CARRIAGE	1				P
12	Call Order Desk	BRACKET MOUNTING / COVER	1				P
13	864346	HARNESS CARRIAGE / W/PRESSURE SWITCH	1				
14	864345	HARNESS CARRIAGE / W/PRESSURE SWITCH	1				
15	Call Order Desk	HARNESS PUMP-PENDANT / W/HYDRAULIC HOSE	1				P
16	862434	CONTROLLER 24V	1				
17	863583	KIT, FITTING, PIVOT ¼ NPT, WITH O-RING	2				
18	Call Order Desk	ADAPTOR / PRESSURE SWITCH	1				P
19	Call Order Desk	STOW SWITCH ASSY	1				P
20	Call Order Desk	KIT ROLLER 1.25ODx.75W	4				P
21	Call Order Desk	KIT SHOCK ABSORBER	4				P
22	Call Order Desk	BEARING DU .75IDx.50W,	4				P
23	Call Order Desk	KIT ROLLER 1.75OD / W/GREASE FITTING	4				P
24	Call Order Desk	BEARING DU 1.00IDx.50W / (BAG OF TEN)	8				P
25	Call Order Desk	PIN PIVOT .75x3.25	2				P
26	Call Order Desk	PIN PIVOT 1.00x4.25	2				P
	Call Order Desk	DUST CAP / PROGRAMMING CONNECTOR	1				P
30	Call Order Desk	MOTOR ASSEMBLY / CARRIAGE DRIVE	1				P
31	Call Order Desk	. KIT ADJUSTMENT SCREW / DRIVE MOTOR	1				P
32	862144	. GEAR-MOTOR ASSY 24V	1				
33	Call Order Desk	. KIT SPROCKET 8T #40 / W/PIN	1				P
		P) CALL ORDER DESK FOR SPECIFIC APPLICATION					
		(V.I.N.)					

From 1-7681 Up to 4-8278	DATE: 01/2014	PAGE: Y2-2380-41

W.C.L. "RICON" - CARRIAGE ASSY MODEL "HC-L002"

ITEM	PART	DESCRIPTION	XL45	MTH40	MTH45	MTH45S	NOTE

From 4-8279 Up to 6-8906	DATE: 01/2014	PAGE: Y2-2380-42
W.C.L. "RICON" - CARRIAGE ASSY MODEL "F9T" & "F9TF"		

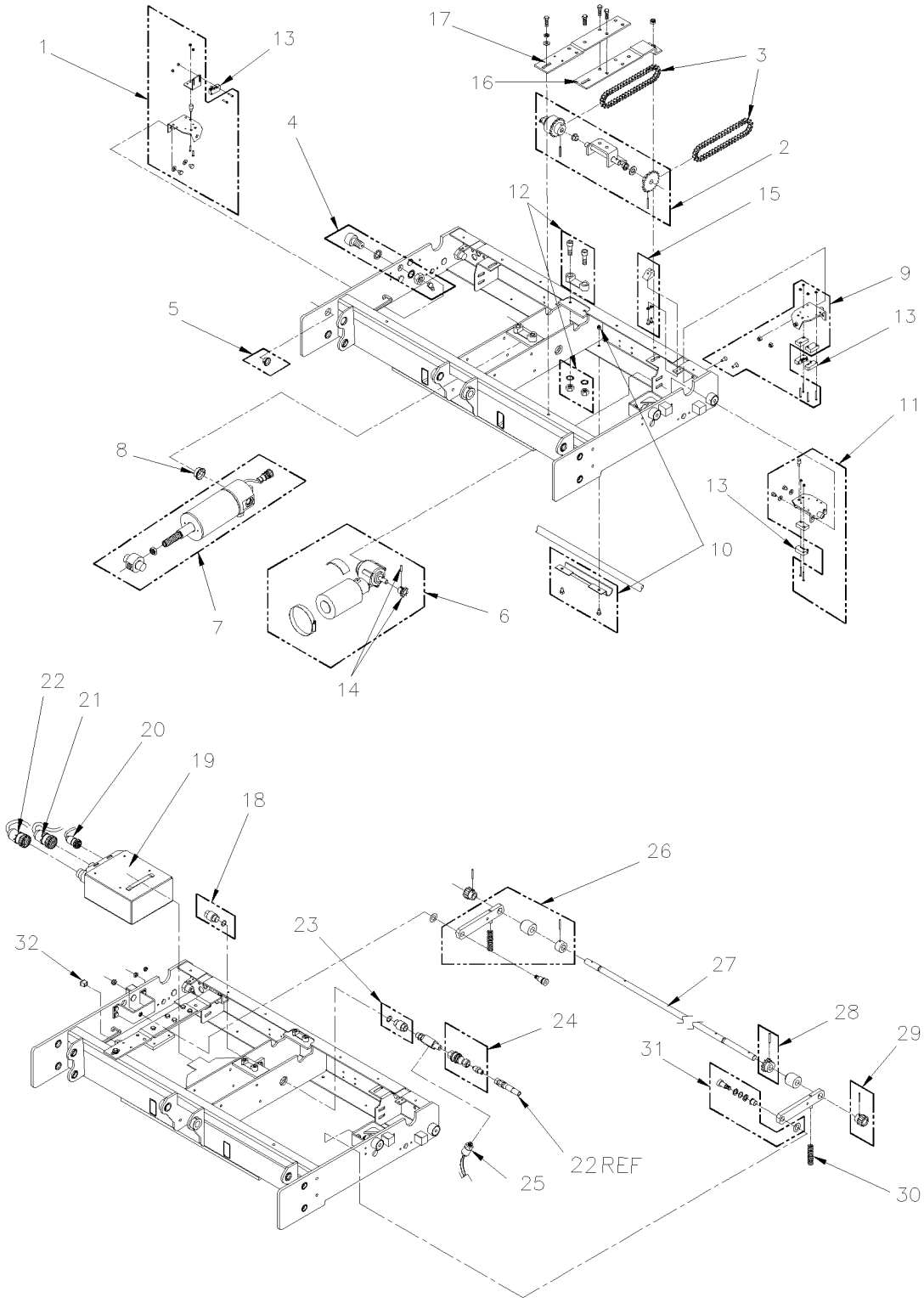

From 4-8279 Up to 6-8906	DATE: 01/2014	PAGE: Y2-2380-42

W.C.L. "RICON" - CARRIAGE ASSY MODEL "F9T" & "F9TF"

ITEM	PART	DESCRIPTION	XL45	MTH40	MTH45	MTH45S	NOTE
1	863056	KIT, PLATFORM RELEASE SWITCH BRACKET	1				
2	863057	KIT, INTERMEDIATE SHAFT ASSY	1				
3	863058	DRIVE CHAIN	2				
4	Call Order Desk	KIT, CARRIAGE ROLLER, 1 1/4 O.D. Up to 5-8605	4				P
4	863059	KIT, CARRIAGE ROLLER, 1 1/4 O.D. From 5-8606	4				
5	863128	BEARING / REPLACED BY: 863018	1				
6	863060	KIT, GEAR MOTOR ASSY, 24V	1				
7	864161	HYDRAULIC CYLINDER ASSEMBLY Up to 5-8605	1				
7	863061	HYDRAULIC CYLINDER ASSEMBLY From 5-8606	1				
8	863062	FLANGED BEARING, 1" I.D.B20	1				
9	863063	KIT, STOW SWITCH BRACKET	1				
10	863064	KIT, HARNESS CLAMP	1				
11	863065	KIT, DEPLOY SWITCH BRACKET	1				
12	N8892390	KIT, GUIDE BLOCKS CARRIAGE	1				
13	863129	LIMIT SWITCH	4				
14	863066	KIT, SPROCKET, 8T	1				
15	863067	KIT, MANUAL RELEASE RESET RAMP	2				
16	863068	BRACKET, IDLER SHAFT, REAR	1				
17	863069	BRACKET, IDLER SHAFT, FRONT	1				
18	863070	KIT, PIVOT CAP, HYDRAULIC CYLINDER	1				
19	196349	CONTROL BOX 24V / YELLOW (#29272) / W/REMOVABLE W.C.L. Up to 5-8605	1				
19	862957	CONTROL BOX 24V / YELLOW / W/REMOVABLE W.C.L. From 5-8606	1				
20	Call Order Desk	HARNESS, ELECTRICAL, HYDRAULIC CYLINDER Up to 5-8605	1				P
20	863071	HARNESS, ELECTRICAL, HYDRAULIC CYLINDER From 5-8606	1				
21	Call Order Desk	HARNESS, ELECTRICAL, CARRIAGE Up to 5-8605	1				P
21	863072	HARNESS, ELECTRICAL, CARRIAGE From 5-8606	1				
22	Call Order Desk	HARNESS, ELECTRICAL, MAIN, W/HYDRAULIC LINE Up to 5-8605	1				P
22	864071	HARNESS, ELECTRICAL, MAIN, W/HYDRAULIC LINE From 5-8606	1				
23	Call Order Desk	KIT, PIVOT FITTING, HYDRAULIC CYLINDER Up to 5-8605	1				P
23	863074	KIT, PIVOT FITTING, HYDRAULIC CYLINDER From 5-8606	1				
24	863076	KIT, QUICK DISCONNECT FITTING	1				
25	863077	KIT, PRESSURE SWITCH, W/ELECTRICAL TERMINALS	1				
26	863078	KIT, DRIVESHAFT LINK ASSY	2				
27	863079	DRIVESHAFT, FINAL	1				
28	863080	KIT, SPROCKET, 12 TEETH	1				
29	863081	KIT, PINION GEAR, 18 TEETH	2				
30	863082	SPRING, COM, .609O.D. X 2.53	2				
31	863083	KIT, BUSHING ASSY, DRIVESHAFT LINK	2				
32	863084	DUST CAP, CONTROLLER PROGRAMMING CONNECTOR	1				
		P) CALL ORDER DESK FOR SPECIFIC APPLICATION					
		(V.I.N.)					

From Y-7046 Up to 1-7680	DATE: 01/2014	PAGE: Y2-2380-50
W.C.L. "RICON" - BRIDGE PLATE ASSY 9" MODEL "F9A"		

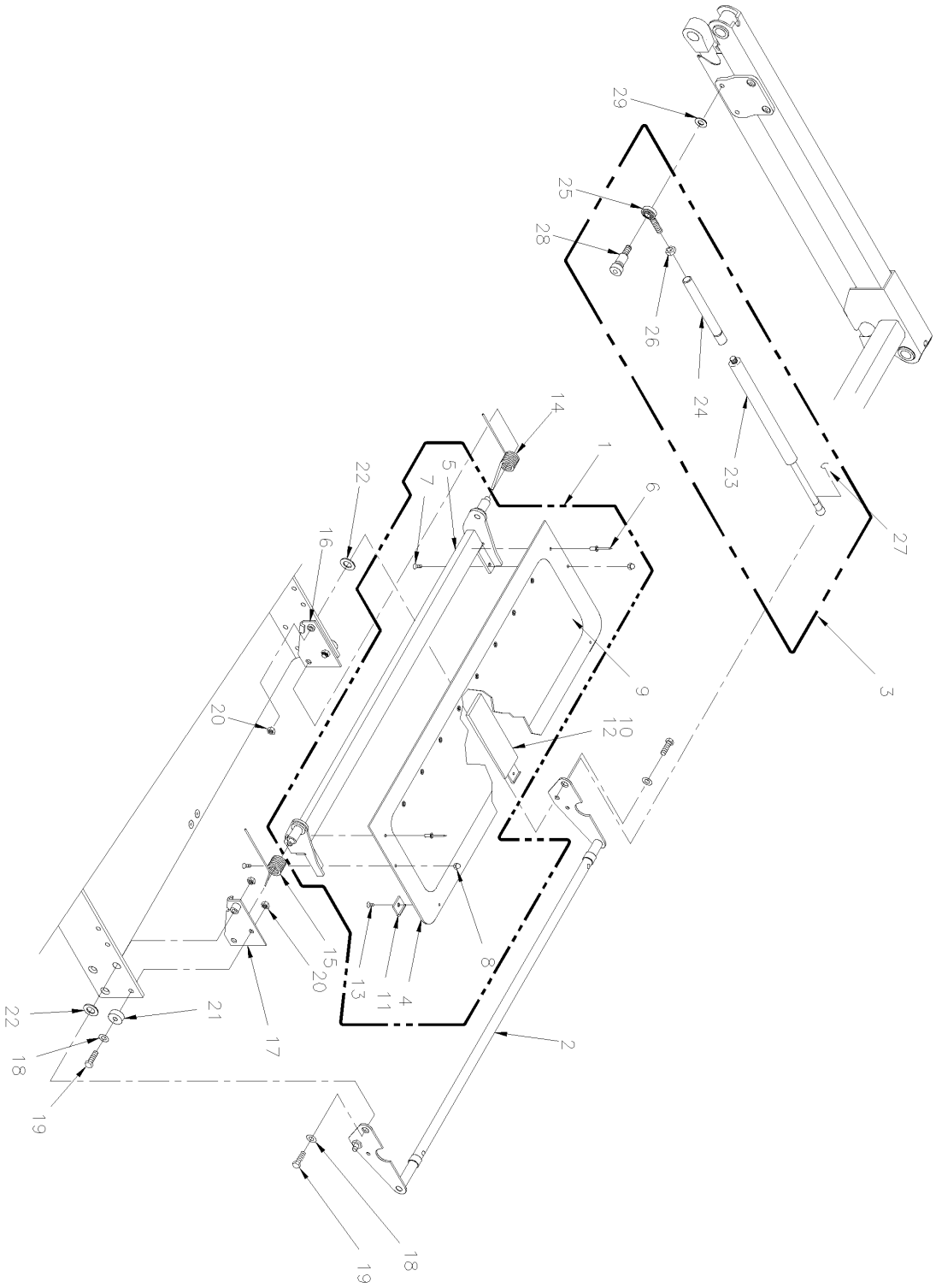

From Y-7046 Up to 1-7680	DATE: 01/2014	PAGE: Y2-2380-50

W.C.L. "RICON" - BRIDGE PLATE ASSY 9" MODEL "F9A"

ITEM	PART	DESCRIPTION	XL45	MTH40	MTH45	MTH45S	NOTE
1	Call Order Desk	BRIDGEPLATE-ASSY 9.00" SPAN	1				P
2	Call Order Desk	STIRUP-W-ASSY / BRIDGEPLATE	1				P
3	Call Order Desk	ROD-ASSY / BRIDGEPLATE ACTUATOR 26" UTS	2				P
3	Call Order Desk	ROD-ASSY / BRIDGEPLATE ACTUATOR 18.5"-23.5" UTS	2				P
4	Call Order Desk	PLATE-BRIDGE BLANK 9.00"	1				P
5	Call Order Desk	ASSY., WELD B-PLATE SUPPORT	1				P
6	Call Order Desk	RIVET-BLIND AL 3/16x3/8	10				P
7	Call Order Desk	SCREW CAP CK HEXS #10-24x1/2 SS	2				P
8	Call Order Desk	NUT HEX CAP #10-24	2				P
9	Call Order Desk	SAFETY TREAD / 25.560x7.00 / SAFETY YELLOW	1				P
10	Call Order Desk	BLOCK-BRIDGEPLATE GUIDE / BUMPER	1				P
11	Call Order Desk	SKID-BRIDGEPLATE	3				P
12	Call Order Desk	TAPE-ADHESIVE / TRANSFER 10MILx 1" WIDE	AR				P
13	Call Order Desk	SCREW MA FL PH #10-24x1/4	3				P
14	Call Order Desk	SPRING-LH / B-PLATE	1				P
15	Call Order Desk	SPRING-RH / B-PLATE	1				P
16	Call Order Desk	BRACKET-B-PLATE MOUNT / LH	1				P
17	Call Order Desk	BRACKET-B-PLATE MOUNT / RH	1				P
18	Call Order Desk	WASHER FL .32x.59x.06 SS	4				P
19	Call Order Desk	SCREW CAP HEX 5/16-18x1 1/4 SS	4				P
20	Call Order Desk	NUT HEX NYRT 5/16-18 SS	4				P
21	Call Order Desk	BUSHING .75x.32x.38	2				P
22	Call Order Desk	WASHER FL .578x1.067x.062 NYL	2				P
23	862155	SPRING-PNEUMATIC 100LBF 16.75"	2				
24	Call Order Desk	ROD-ASSY / B-PLATE ACTUATOR 26" UTS	1				P
24	Call Order Desk	ROD-ASSY / B-PLATE ACTUATOR 18.5"-23.5" UTS	1				P
25	Call Order Desk	ROD END-(M) LT THD R1700	2				P
26	Call Order Desk	NUT HEX LH 3/8-24	2				P
27	980017	CLIP BALL STUD 10MM RETAINER	2				
28	Call Order Desk	SCREW CAP HEX 5/16-18x1/2 SS	2				P
29	Call Order Desk	STANDOFF-BRIGEPLATE ACTUATOR	2				P
		P) CALL ORDER DESK FOR SPECIFIC APPLICATION					
		(V.I.N.)					

From 1-7681 Up to 4-8278	DATE: 01/2014	PAGE: Y2-2380-51
W.C.L. "RICON" - BRIDGE PLATE ASSY 9" MODEL "HC-L002"		

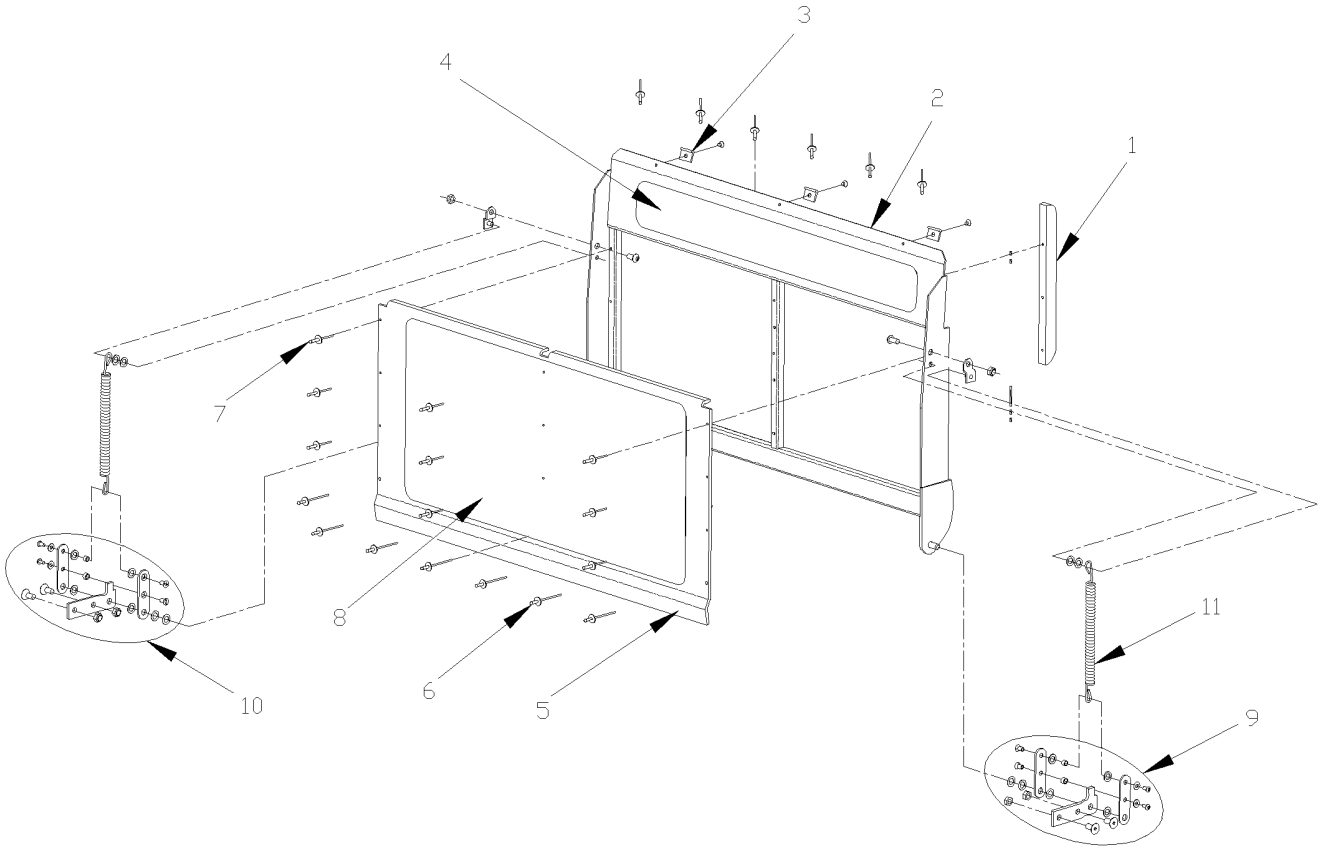

From 1-7681 Up to 4-8278	DATE: 01/2014	PAGE: Y2-2380-51

W.C.L. "RICON" - BRIDGE PLATE ASSY 9" MODEL "HC-L002"

ITEM	PART	DESCRIPTION	XL45	MTH40	MTH45	MTH45S	NOTE
1	Call Order Desk	SLIDER, BRIDGEPLATE	1				P
2	Call Order Desk	KIT, FRAME, BRIDGEPLATE	1				P
3	Call Order Desk	. SKID, BRIDGEPLATE, BAG OF 10	3				P
4	863621	. SAFETY TREAD / 25.50x3.0 / SAFETY YELLOW	1				
5	Call Order Desk	KIT, BRIDGEPLATE COVER, W/SAFETREAD	1				P
6	Call Order Desk	. RIVET, 3/16, BAG OF 10	7				P
7	Call Order Desk	. RIVET, 1/8X1/2, BAG OF 10	9				P
8	863620	. SAFETY TREAD / 25.50x12 / OCEAN GREY	1				
9	Call Order Desk	KIT, BRIDGEPLATE PIVOT LINK, W/HARDWARE, RI	1				P
10	Call Order Desk	KIT, BRIDGEPLATE PIVOT LINK, W/HARDWARE, LEFT	1				P
11	Call Order Desk	SPRING, EXTENSION, BRIDGEPLATE ASSIST	2				P
		P) CALL ORDER DESK FOR SPECIFIC APPLICATION					
		(V.I.N.)					

From 4-8279 Up to 6-8906	DATE: 01/2014	PAGE: Y2-2380-52
W.C.L. "RICON" - BRIDGE PLATE ASSY 9" MODEL "F9T" & "F9TF"		

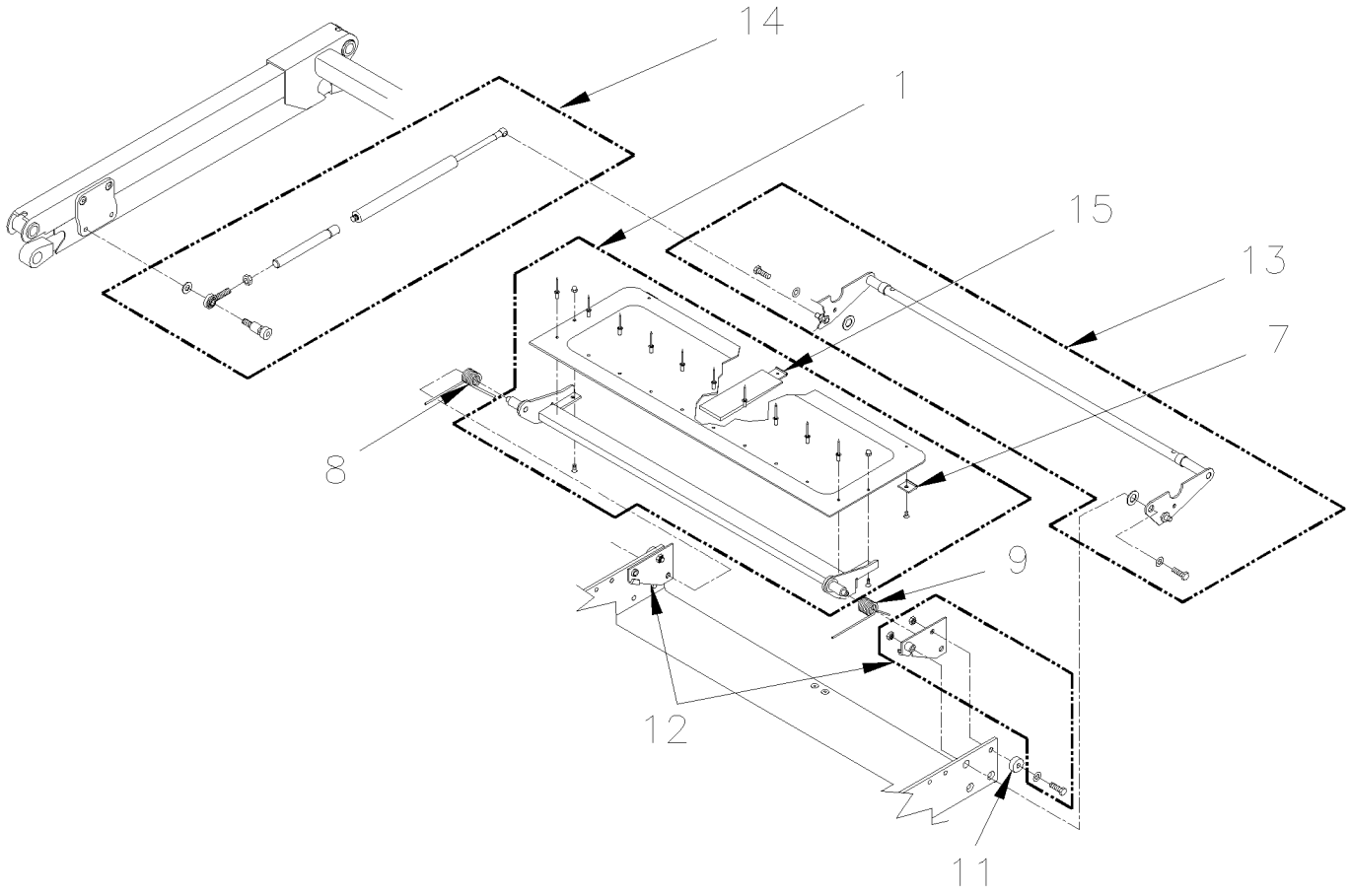

From 4-8279 Up to 6-8906	DATE: 01/2014	PAGE: Y2-2380-52
W.C.L. "RICON" - BRIDGE PLATE ASSY 9" MODEL "F9T" & "F9TF"		

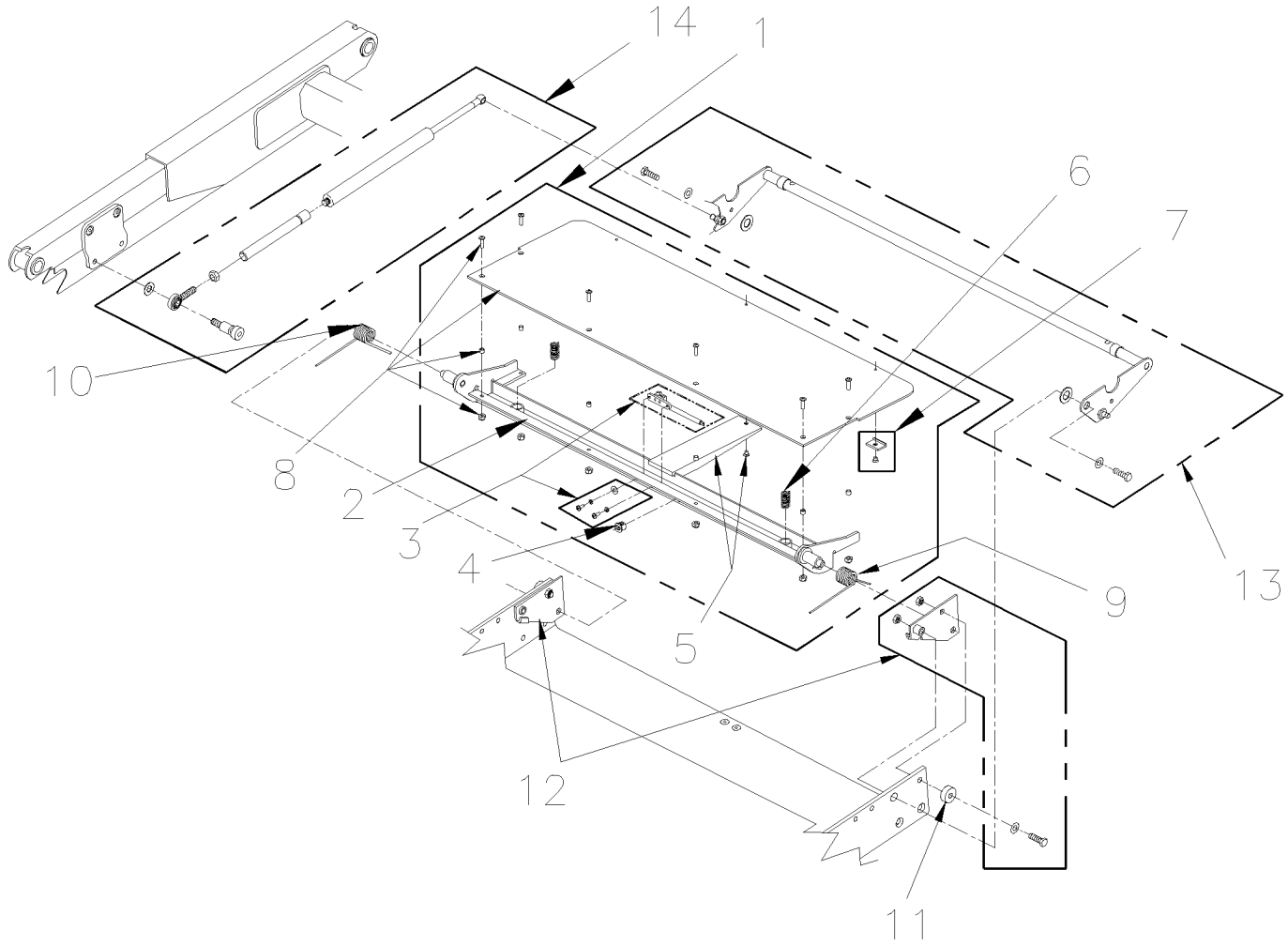

From 4-8279 Up to 6-8906	DATE: 01/2014	PAGE: Y2-2380-52

W.C.L. "RICON" - BRIDGE PLATE ASSY 9" MODEL "F9T" & "F9TF"

ITEM	PART	DESCRIPTION	XL45	MTH40	MTH45	MTH45S	NOTE
1	Call Order Desk	BRIDGEPLATE ASSEMBLY 9" Up to 5-8605	1				P
1	863097	BRIDGEPLATE ASSEMBLY 9" From 5-8606	1				
2	Call Order Desk	FRAME, BRIDGEPLATE	1				P
3	863099	KIT, SWITCH ASSEMBLY	1				
4	863100	BUSHING, SNAP-IN, 1/2	1				
5	863101	KIT, GUIDE, BRIDGEPLATE, W/SCREW	1				
6	863102	SPRING, COMP. SST, .48OD X .75L	2				
7	863103	KIT, SKID, BRIDGEPLATE	1				
8	863104	KIT, PLATE, BRIDGEPLATE	1				
9	863105	SPRING, BRIDGEPLATE RETURN, RH	1				
10	863106	SPRING, BRIDGEPLATE RETURN, LH	1				
11	863107	BUSHING, .75O.D. X .32I.D., PLASTIC	1				
12	863108	KIT, MOUNTING BRACKETS, LH AND RH	1				
13	863109	KIT, STIRRUP ASSEMBLY	1				
14	196586	KIT, ACTUATOR ROD ASSEMBLY, BRIDGEPLATE Up to 5-8605	1				
14	863110	KIT, ACTUATOR ROD ASSEMBLY, BRIDGEPLATE From 5-8606	2				
15	196658	BUMPER, BRIDGEPLATE Up to 5-8605	1				
		P) CALL ORDER DESK FOR SPECIFIC APPLICATION					
		(V.I.N.)					

From 4-8279 Up to 6-8906	DATE: 01/2014	PAGE: Y2-2380-52

W.C.L. "RICON" - BRIDGE PLATE ASSY 9" MODEL "F9T" & "F9TF"

ITEM	PART	DESCRIPTION	XL45	MTH40	MTH45	MTH45S	NOTE

From Y-7046 Up to 1-7680	DATE: 01/2014	PAGE: Y2-2380-60

W.C.L. "RICON" - PUMP INSTALLATION MODEL "F9A"

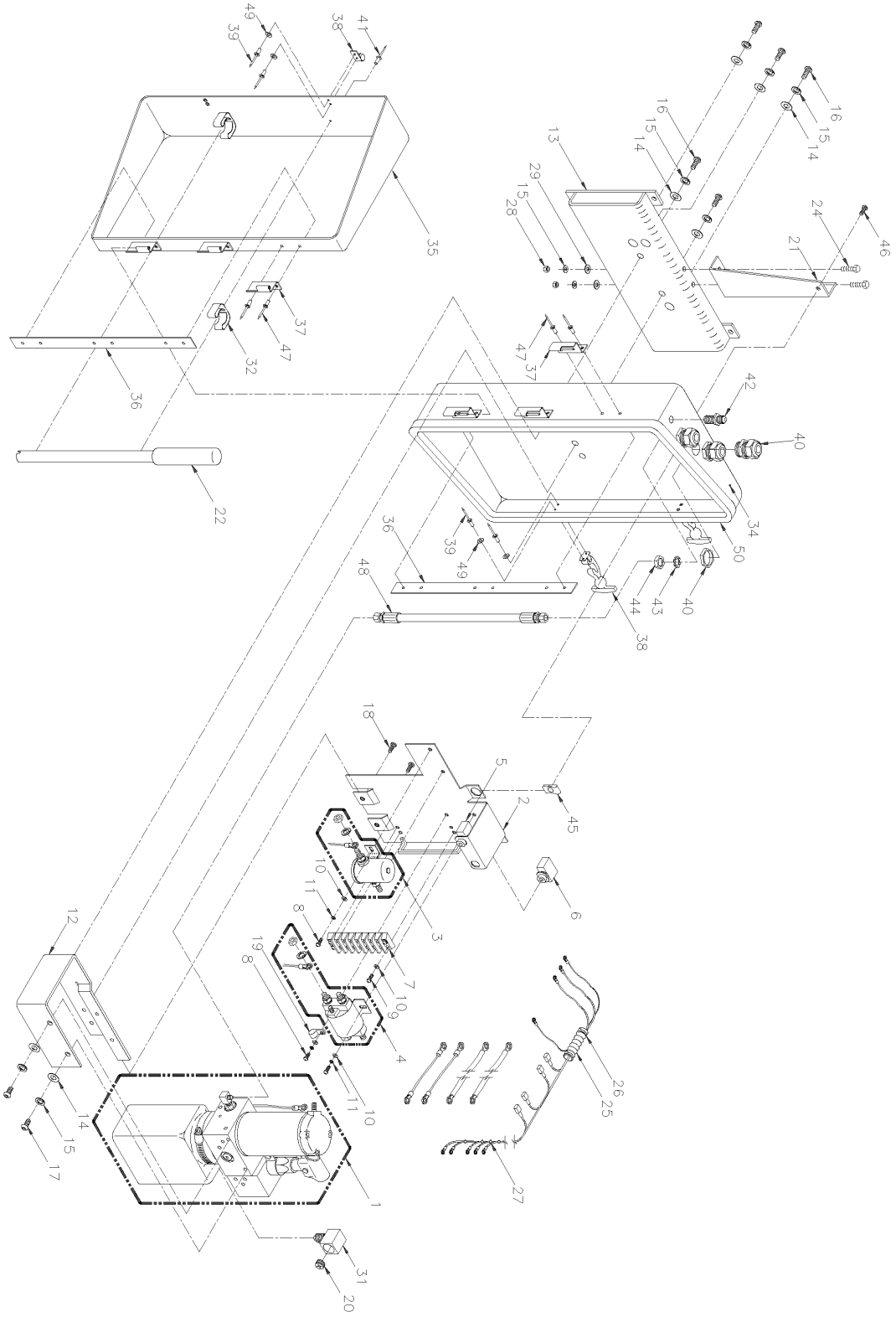

From Y-7046 Up to 1-7680	DATE: 01/2014	PAGE: Y2-2380-60

W.C.L. "RICON" - PUMP INSTALLATION MODEL "F9A"

ITEM	PART	DESCRIPTION	XL45	MTH40	MTH45	MTH45S	NOTE
1	Y2-2380-65	**W.C.L. "RICON" - PUMP ASSY**					
2	Call Order Desk	PLATE-WASSY / SOLENOID	1				P
3	862100	SOLENOID / SP 24V	1				
4	862101	SOLENOID-24V DP LARGE	1				
5	862102	CIRCUIT BREAKER / 8AMP	1				
6	862103	CIRCUIT BREAKER / 30AMPS	1				
6	860986	CIRCUIT BREAKER / 50AMPS	1				
7	Call Order Desk	TERMINAL STRIP / 10-18GA	1				P
8	Call Order Desk	SCREW MA PH #10-32x5/16 SS	4				P
9	Call Order Desk	SCREW MA PH #10-32x3/4	4				P
10	Call Order Desk	WASHER FL #10 SS	8				P
11	Call Order Desk	WASHER LO SPT #10 SS	4				P
12	Call Order Desk	BRACKET-PUMP MOUNTING	1				P
13	Call Order Desk	BRACKET-WASSY / PUMP MOUTING	1				P
14	Call Order Desk	WASHER FL .32x.75x.08 SS	7				P
15	Call Order Desk	WASHER LO SPT 5/16 SS	11				P
16	Call Order Desk	SCREW CAP BUT HEXS 5/16-24x3/4 SS	5				P
17	Call Order Desk	SCREW CAP BUT HEXS 5/16-18x3/4 SS	2				P
18	Call Order Desk	SCREW CAP BUT HEXS #10-32x1/2 SS	2				P
19	Call Order Desk	CLAMP / CABLE-3/8	1				P
20	863095	PLUG, BREATHER, RESERVOIR	1				
21	Call Order Desk	BRACKET-STIFFENER	1				P
22	Call Order Desk	HANDLE-MANUAL BACKUP PUMP	1				P
24	Call Order Desk	SCREW CAP HEX 5/16-18x3/4 SS	2				P
25	561482	CONVOLUTED TUBING / .500" / UNSLIT / BLACK	AR				
26	504012	CABLE TIE / 3/16" X 6"1/2 / REPLACED BY: 504637	2				
27	504012	CABLE TIE / 3/16" X 6"1/2 / REPLACED BY: 504637	9				
28	502600	NUT HEX NYRT 5/16-18 ZP	2				
29	5001189	NUT HEX 5/16-18 SS	2				
31	Call Order Desk	FITTING-STREET ELBOW / FEMALE	1				P
32	504585	SPRING CLIP 3/4"	2				
34	Call Order Desk	BASE-PUMP ENCLOSURE	1				P
35	Call Order Desk	DOOR-PUMP ENCLOSURE	1				P
36	Call Order Desk	PLATE REINFORCEMENT-PUMP ENCLOSURE	2				P
37	Call Order Desk	HINGE SS 2.50x2.00	6				P
38	Call Order Desk	LATCH / DRAW-FLEXIBLE-HANDLE	2				P
39	504431	RIVET POP DOME OE 1/8x3/8 AL / REPLACED BY: 504263	8				
40	Call Order Desk	STRAIN RELIEF / STRE THRU LIQ TIGHT	3				P
41	504247	RIVET POP DOME OE 5/32x3/8 AL	2				
42	Call Order Desk	FITTING - 1/4JIC BULKHEAD W/HEX NUT	1				P
43	Call Order Desk	WASHER LO EXT 7/16 SS	1				P
44	Call Order Desk	NUT HEX JAM 7/16-20	1				P
		P) CALL ORDER DESK FOR SPECIFIC APPLICATION					
		(V.I.N.)					

From Y-7046 Up to 1-7680	DATE: 01/2014	PAGE: Y2-2380-60

W.C.L. "RICON" - PUMP INSTALLATION MODEL "F9A"

ITEM	PART	DESCRIPTION	XL45	MTH40	MTH45	MTH45S	NOTE
45	500837	NUT SPR U 1/4-20 .064-.125	1				
46	Call Order Desk	SCREW CAP BUT HEXS 1/4-20x3/4 SS	1				P
47	504120	RIVET POP DOME CLE 3/16x1/2 AL	12				
48	Call Order Desk	HOSE-ASSY / 11"x 1/4JIC x1/4JIC	1				P
49	Call Order Desk	WASHER FL #8	8				P
50	Call Order Desk	SEAL / DOOR-7/16X53/64	AR				P
		P) CALL ORDER DESK FOR SPECIFIC APPLICATION					
		(V.I.N.)					

From Y-7046 Up to 1-7680	DATE: 01/2014	PAGE: Y2-2380-60

W.C.L. "RICON" - PUMP INSTALLATION MODEL "F9A"

ITEM	PART	DESCRIPTION	XL45	MTH40	MTH45	MTH45S	NOTE

From 1-7681 Up to 4-8278	DATE: 01/2014	PAGE: Y2-2380-61
W.C.L. "RICON" - PUMP INSTALLATION MODEL "HC-L002"		

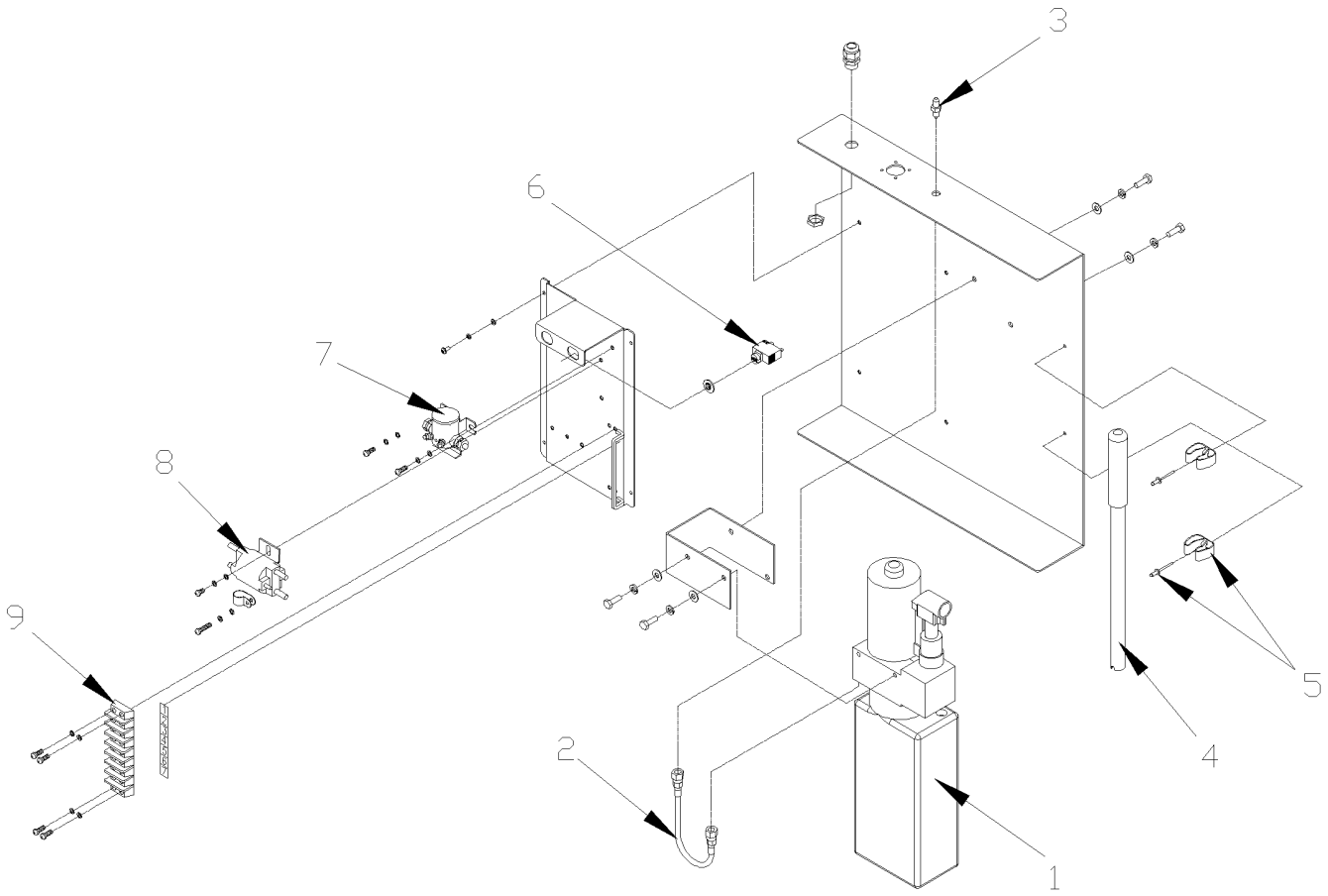

From 1-7681 Up to 4-8278	DATE: 01/2014	PAGE: Y2-2380-61

W.C.L. "RICON" - PUMP INSTALLATION MODEL "HC-L002"

ITEM	PART	DESCRIPTION	XL45	MTH40	MTH45	MTH45S	NOTE
1	Y2-2380-65	**W.C.L. "RICON" - PUMP ASSY**					
2	Call Order Desk	HOSE-ASSY / 11"x 1/4JIC x1/4JIC	1				P
3	Call Order Desk	HYDRAULIC FITTING / PUMP BOX	1				P
4	Call Order Desk	HANDLE-MANUAL BACKUP PUMP	1				P
5	Call Order Desk	KIT TOOL CLIP / W/RIVET	2				P
6	862103	CIRCUIT BREAKER / 30AMPS	1				
7	862100	SOLENOID / SP 24V	1				
8	862101	SOLENOID-24V DP LARGE	1				
9	Call Order Desk	KIT TERMINAL STRIP / W/DECAL	1				P
		P) CALL ORDER DESK FOR SPECIFIC APPLICATION					
		(V.I.N.)					

From 4-8279 Up to 6-8906	DATE: 01/2014	PAGE: Y2-2380-62
W.C.L. "RICON" - PUMP INSTALLATION MODEL "F9T" & "F9TF"		

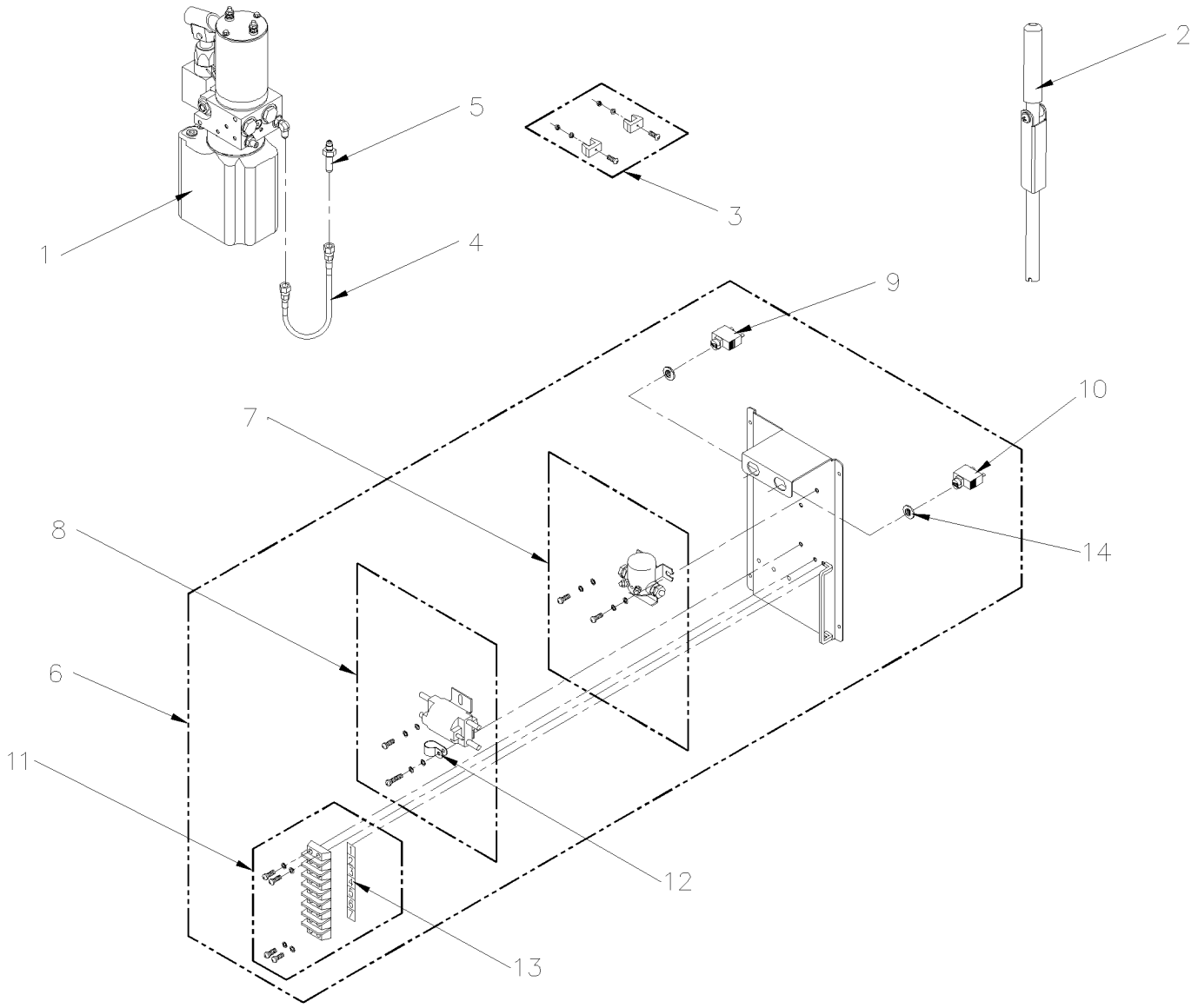

From 4-8279 Up to 6-8906	DATE: 01/2014	PAGE: Y2-2380-62

W.C.L. "RICON" - PUMP INSTALLATION MODEL "F9T" & "F9TF"

ITEM	PART	DESCRIPTION	XL45	MTH40	MTH45	MTH45S	NOTE
1	Y2-2380-65	**W.C.L. "RICON" - PUMP ASSY**					
2	464678	HANDLE-MANUAL BACKUP PUMP	1				
3	Call Order Desk	TOOL CLIP	1				P
4	863085	HOSE ASSY 13 3/4"	1				
5	863086	FITTING, BUN, 1/4J, 2.08L	1				
6	863087	KIT, SOLENOID PLATE ASSY, 24VDC	1				
7	862100	SOLENOID / SP 24V	1				
8	862101	SOLENOID-24V DP LARGE	1				
9	862102	CIRCUIT BREAKER / 8AMP	1				
10	862103	CIRCUIT BREAKER / 30AMPS	1				
11	863088	KIT, TERMINAL STRIP	1				
12	863089	CLAMP, NYLON, 3/8” BLACK	1				
13	Call Order Desk	DECAL, PUMP TERMINAL STRIP	1				P
14	863091	ADAPTER, .625 D-HOLE	1				
		P) CALL ORDER DESK FOR SPECIFIC APPLICATION					
		(V.I.N.)					

From Y-7046 Up to 6-8906	DATE: 01/2014	PAGE: Y2-2380-65
W.C.L. "RICON" - PUMP ASSY		

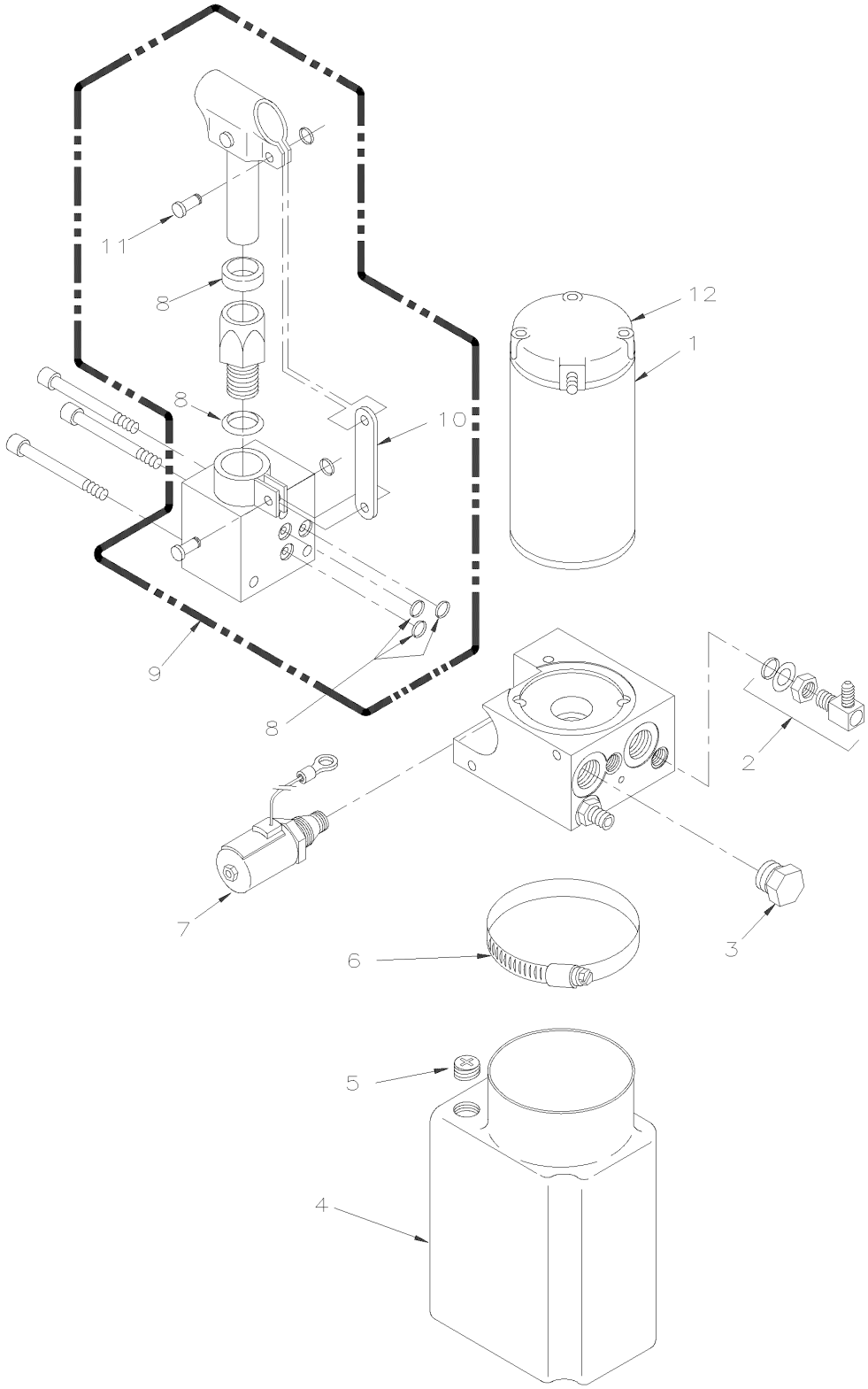

From Y-7046 Up to 6-8906	DATE: 01/2014	PAGE: Y2-2380-65

W.C.L. "RICON" - PUMP ASSY

ITEM	PART	DESCRIPTION	XL45	MTH40	MTH45	MTH45S	NOTE
	Call Order Desk	PUMP ASSY 2.0 KPSI / 24V Up to 1-7680	1				P
	Call Order Desk	PUMP ASSY 1.8 KPSI / 24V / W/LARGE RESERVOIR From 1-7681 Up to 4-8278	1				P
	PM224162007	PUMP ASSY 2.0 KPSI / 24V From 4-8279 Up to 5-8605	1				
	Call Order Desk	PUMP ASSY 2.0 KPSI / 24V From 5-8606	1				P
1	862104	. MOTOR ASSY. / 24V 3" MONARCCH PUMP	1				
2	Call Order Desk	. FITTING / "L" 1/4 SAE O-RING BOSS 1/4 JIC	1				P
3	Call Order Desk	. PLUG / 3/4-16 CAVITY / W/O-RING	2				P
4	862105	. RESERVOIR / RICON POWER UNIT / PLASTIC Up to 1-7680 / REPLACED BY: 863092	1				
4	N.P.N.	. RESERVOIR / RICON POWER UNIT / PLASTIC From 1-7681 Up to 4-8278	1				4
4	863092	. RESERVOIR / RICON POWER UNIT / PLASTIC From 4-8279	1				
5	863095	. PLUG, BREATHER, RESERVOIR	1				
6	504235	. HOSE CLAMP / 3"9/16"-4"1/2 SS / HS-64	1				
7	862106	. HYD. POPPET VALVE ASSY. / 24V DELTROL Up to 1-7680	1				
7	Call Order Desk	. KIT DOWN VALVE / W/TERMINALS From 1-7681	1				P
8	862107	. SEAL KIT / MANUAL BACK-UP PUMP	1				
9	Call Order Desk	. BACK-UP PUMP / MANUAL W/O HANDLE	1				P
10	Call Order Desk	. BRACKET / TENSION LINK / MANARCH PUMP	1				P
11	Call Order Desk	. PIN & RETAINING RING-BACKUP PUMP	2				P
12	862108	. KIT / PUMP MOTOR BRUSH SET	1				
NS	685682	OIL HYDRAULIC W.C.L. (19 LITERS)	1				
		4) NO PARTS NUMBER					
		P) CALL ORDER DESK FOR SPECIFIC APPLICATION					
		(V.I.N.)					

From 1-7681 Up to 4-8278	DATE: 01/2014	PAGE: Y2-2380-70
W.C.L. "RICON" - RELEASE HANDLE MODEL "HC-L002"		

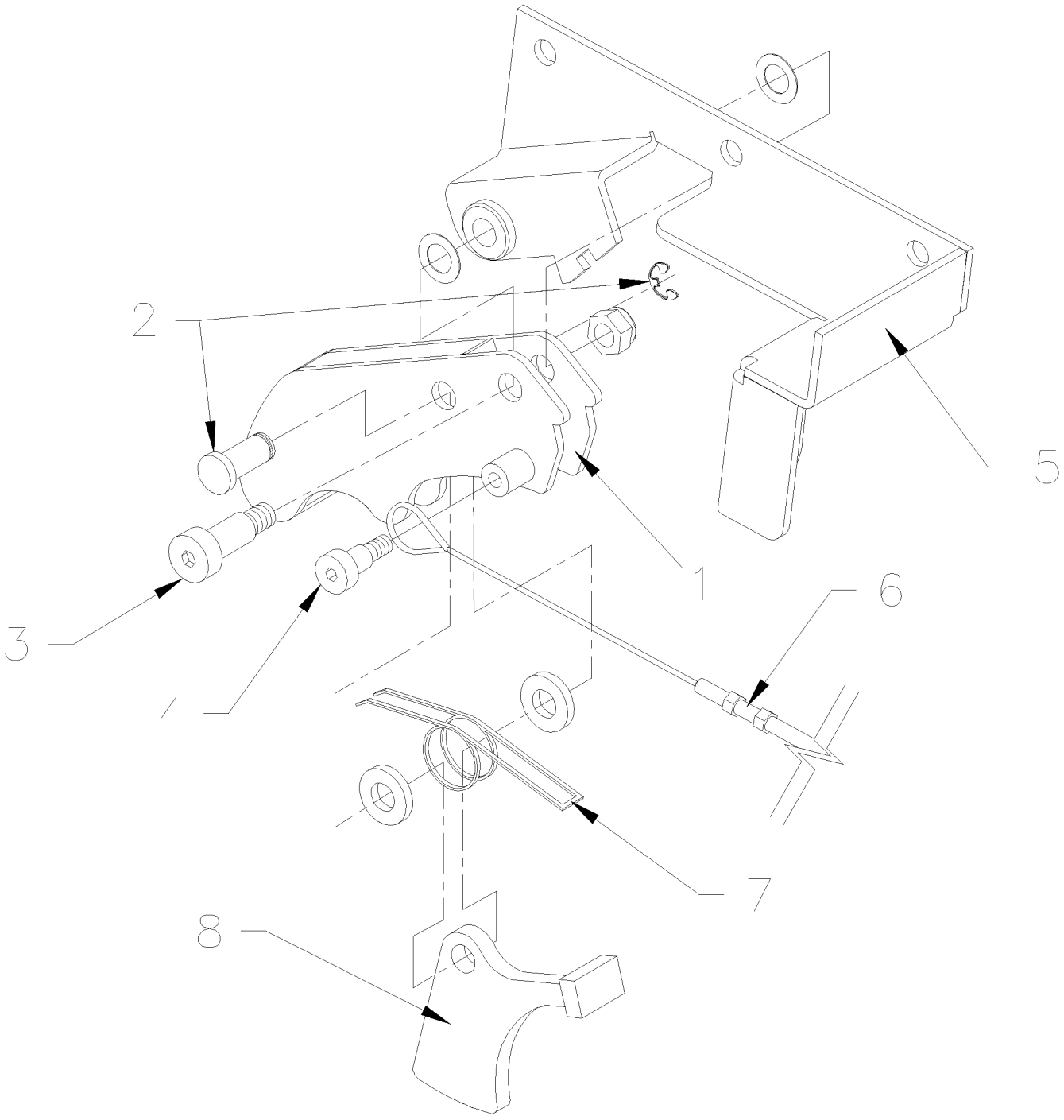

From 1-7681 Up to 4-8278	DATE: 01/2014	PAGE: Y2-2380-70

W.C.L. "RICON" - RELEASE HANDLE MODEL "HC-L002"

ITEM	PART	DESCRIPTION	XL45	MTH40	MTH45	MTH45S	NOTE
1	Call Order Desk	HANDLE, CARRIAGE RELEASE, HC-L002	1				P
2	Call Order Desk	KIT, PIVOT PIN, TRIGGER	1				P
3	Call Order Desk	SCREW SHR HEXS 10x20{M8-1.25	1				P
4	Call Order Desk	SCREW SHR HEXS 8x10{M6-1.0	1				P
5	Call Order Desk	BRACKET, CARRIAGE RELEASE	1				P
6	Call Order Desk	CABLE ASSY, CARRIAGE RELEASE	1				P
7	Call Order Desk	SPRING, TORSION, TRIGGER	1				P
8	Call Order Desk	TRIGGER, CARRIAGE RELEASE	1				P
		P) CALL ORDER DESK FOR SPECIFIC APPLICATION					
		(V.I.N.)					

From Y-7046 Up to 6-8805	DATE: 01/2014	PAGE: Y2-2390-00

"SLIDE-OUT" INFLATED SEAL & LOCKING PIN

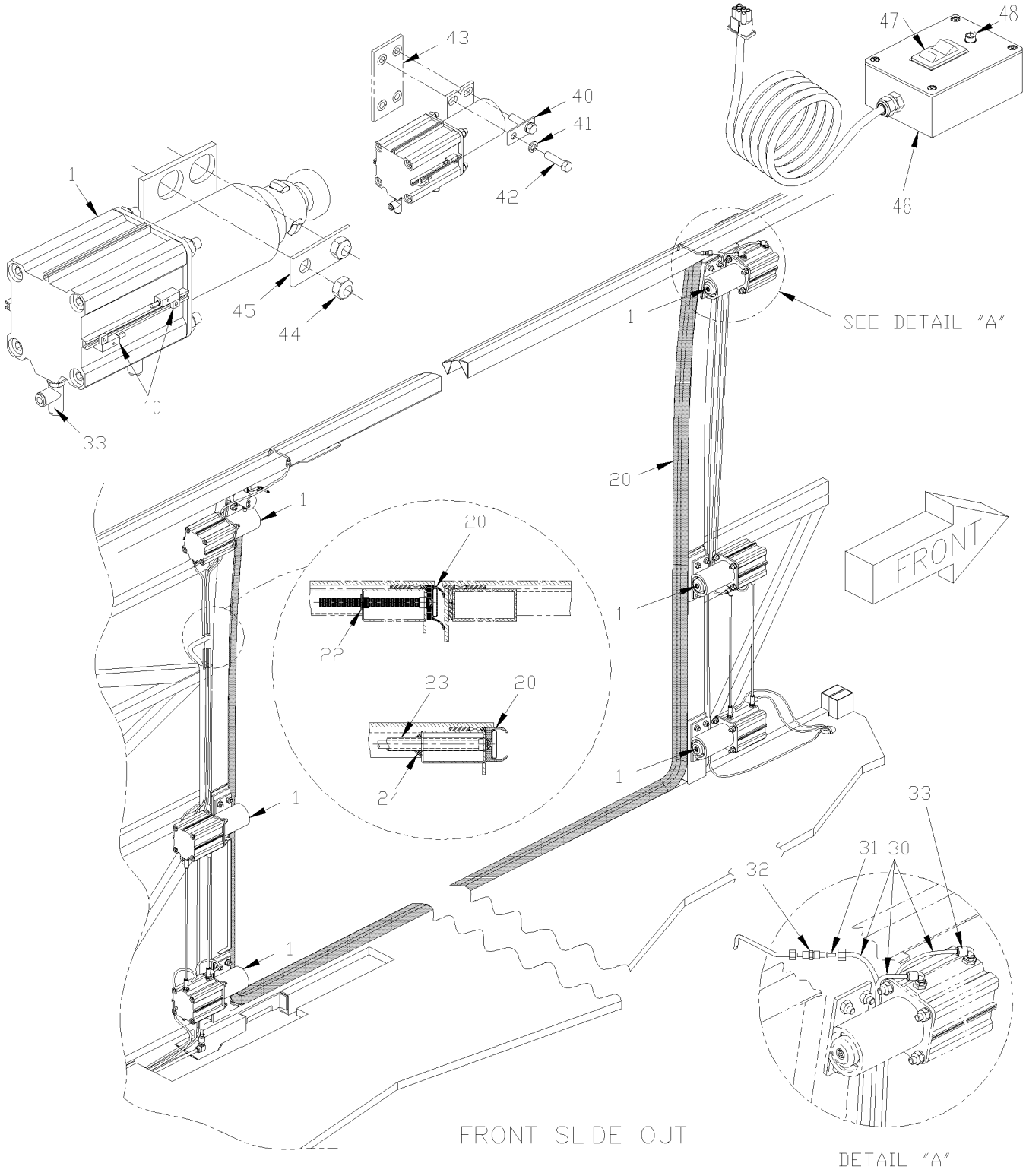

From Y-7046 Up to 6-8805	DATE: 01/2014	PAGE: Y2-2390-00
"SLIDE-OUT" INFLATED SEAL & LOCKING PIN		

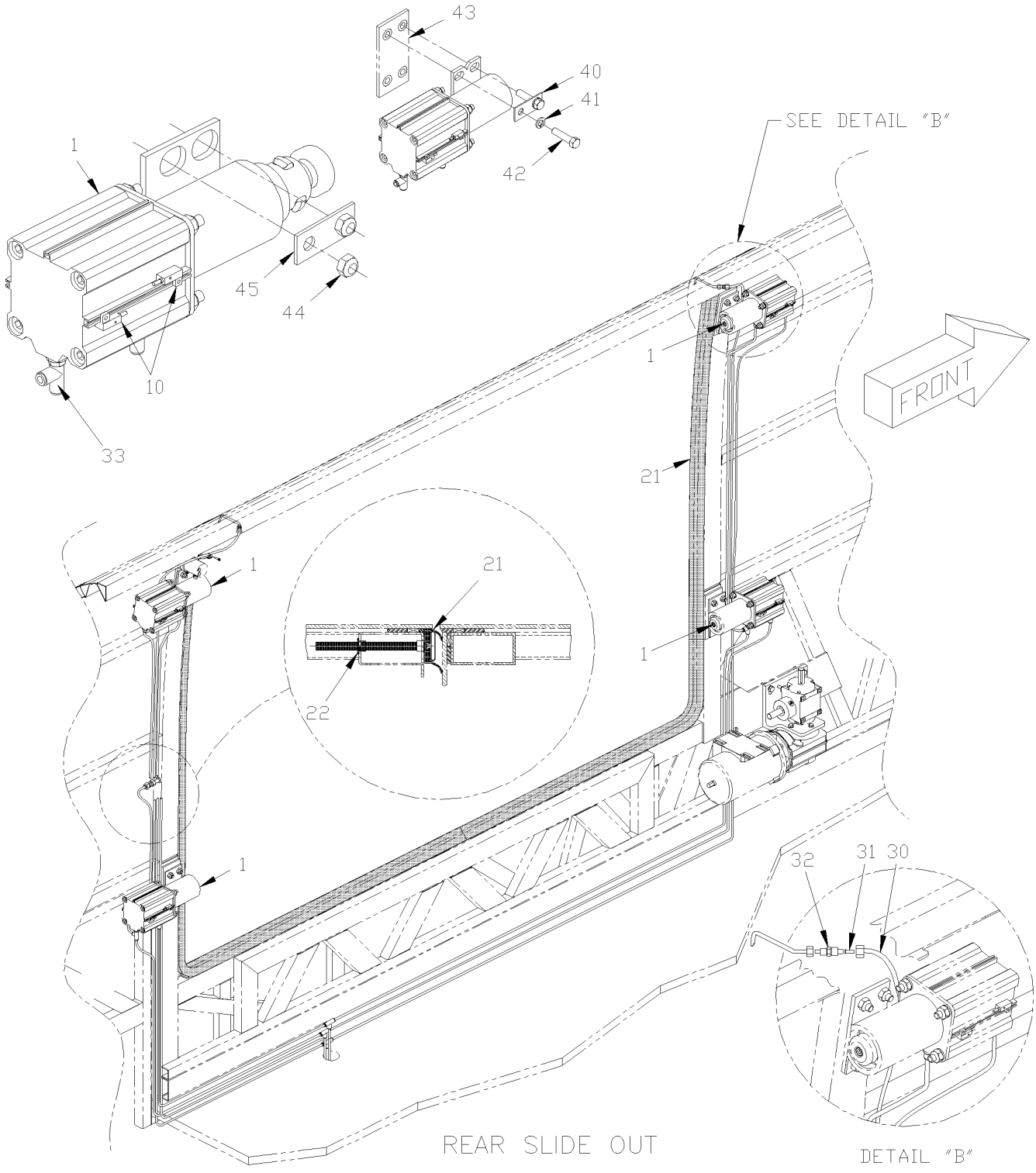

From Y-7046 Up to 6-8805	DATE: 01/2014	PAGE: Y2-2390-00

"SLIDE-OUT" INFLATED SEAL & LOCKING PIN

ITEM	PART	DESCRIPTION	XL45	MTH40	MTH45	MTH45S	NOTE
1	Y2-2390-50	**"SLIDE-OUT" - CYLINDER LOCK PIN ASSY**					
10	690407	LIMIT SWITCH ASSY W/CONNECTOR Up to 4-8251 / REPLACED BY: 065846			2		
. NS	690342	. LIMIT SWITCH W/WIRE Up to 4-8251			1		
. NS	690308	. CONNECTOR / MINI UNIVERSAL MATE-N-LOK / SH 4C Up to 4-8251			1		
10	065846	LIMIT SWITCH ASSY W/CONNECTOR From 4-8252			2		
10	563345	LIMIT SWITCH W/WIRE From 4-8252			1		
20	690228	SEAL, INFLATABLE FRONT / "XL" 4465MM x 2039MM / 1500MM Up to 4-8251 / REPLACED BY: 476322			1		
20	476322	SEAL, INFLATABLE FRONT / "XL" 4465MM x 2039MM / 1500MM From 4-8252			1		
21	690229	SEAL, INFLATABLE REAR 2330MM x 1673MM / 763MM Up to 4-8251 / REPLACED BY: 476321			1		
21	476321	SEAL, INFLATABLE REAR 2330MM x 1673MM / 763MM From 4-8252			1		
NS	690323	BRASS INSERT TUBE 5/16 I.D.			AR		
NS	690321	BRASS INSERT TUBE 3/8 I.D.			AR		
22	507260	BUSHING NYLINER W/SHOULDER .375x.437x.375x.594			2		
23	503540	TUBE, NYLON 5/8 O.D. / BLACK S.L.			AR		
24	682176	SEALANT SIKA #221 / BLACK / 310ml CARTRIDGE			AR		
NS	690341	GLUE PRISM 426 BLACK GEL			AR		
NS	690354	PRIMER 770			AR		
30	503402	TUBE, NYLON 1/4 O.D. / BLACK S.L.			AR		
31	690324	COMPRESS-ALIGN FITTING UNION 1/4 TUBE Up to 4-8251 / REPLACED BY: 642012			AR		
31	642012	INSERT / COMPRESS-ALIGN FITTING / #4x.040 BR From 4-8252			AR		
32	690322	COMPRESS-ALIGN FITTING UNION 1/4 - 3/16 TUBE Up to 4-8251 / REPLACED BY: 642011			AR		
32	642011	UNION REDUCER / COMPRESS-ALIGN FITTING / #4x#3 BR From 4-8252			AR		
33	Y2-2390-50	**"SLIDE-OUT" - CYLINDER LOCK PIN ASSY**					
40	690225	PLATE			AR		
41	690264	WASHER LO SPT 12.2x21.1x2.5 ZP			AR		
42	5001043	SCREW CAP HEX M12-1.75x50 G8.8 ZP			AR		
43	690263	NUT RIV FL OKS OE ZP M12-1.75			AR		
44	502617	NUT HEX NYRT M10-1.5 CP			AR		
45	690125	PLATE Up to 4-8251 / REPLACED BY: 144623			1		
45	144623	PLATE From 4-8252			1		
NS	144636	SPACER 0.015"			AR		
NS	144637	SPACER 0.031"			AR		
NS	144638	SPACER 0.062"			AR		
NS	144639	SPACER 0.125"			AR		
NS	144640	SPACER 0,187"			AR		
NS	144641	SPACER 0,250"			AR		
46	382048	REMOTE CONTROL / SINGLE SLIDE-OUT			1		
. NS	563380	. SWITCH / M/ON-OFF-M/ON S P.D.T			1		
. NS	563379	. PILOT LIGHT GREEN /			1		
. NS	382047	. DECAL "REMOTE CONTROL"			1		
46	382047	. DECAL "REMOTE CONTROL"			1		
47	563380	. SWITCH / M/ON-OFF-M/ON S P.D.T BLACK			1		
48	563379	. PILOT LIGHT GREEN / 28 VOLTS			1		

From Y-7046 Up to 6-8805	DATE: 01/2014	PAGE: Y2-2390-00

"SLIDE-OUT" INFLATED SEAL & LOCKING PIN

ITEM	PART	DESCRIPTION	XL45	MTH40	MTH45	MTH45S	NOTE

From 6-8806 Up to 8-9339	DATE: 01/2014	PAGE: Y2-2390-01
"SLIDE-OUT" INFLATED SEAL		

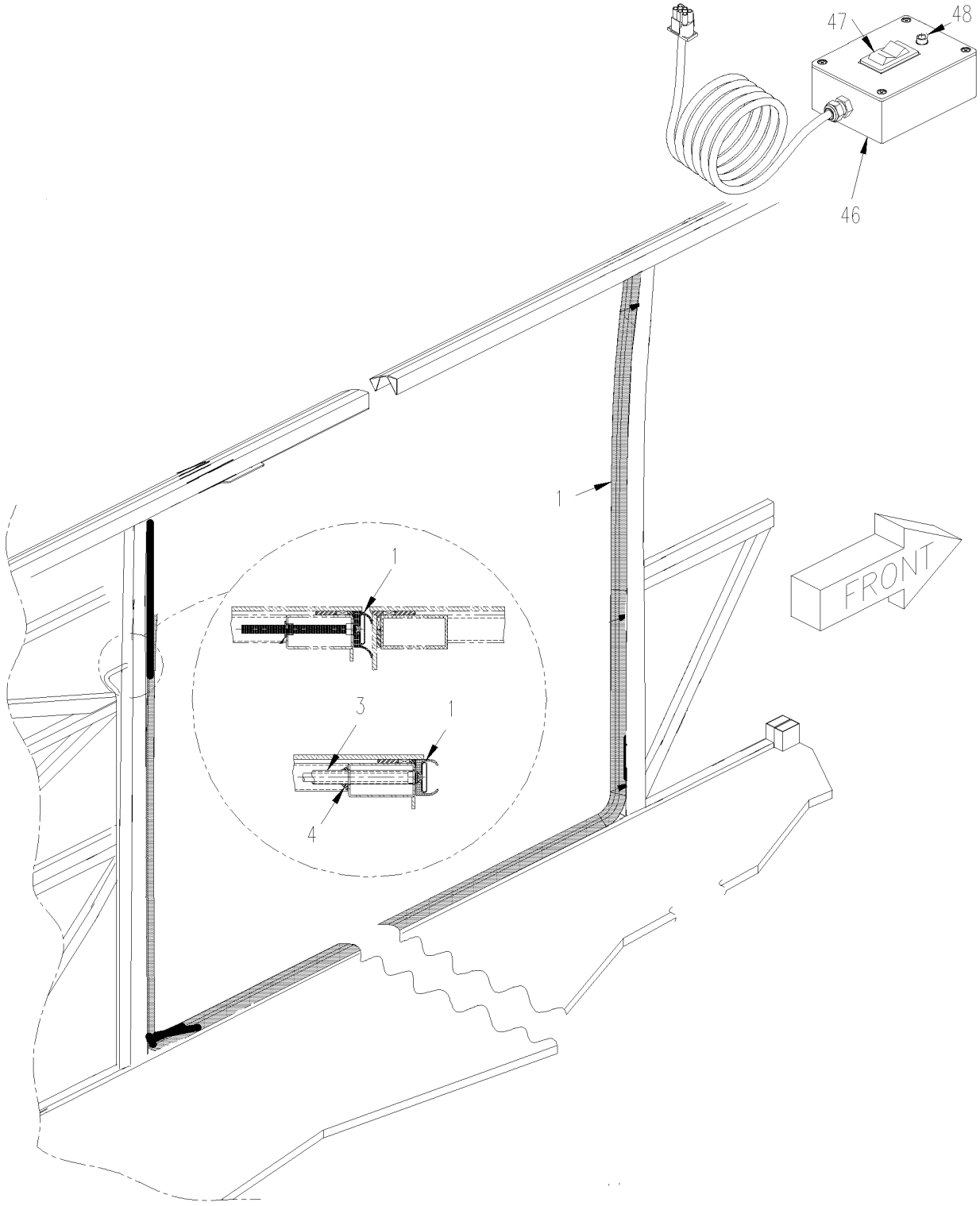

From 6-8806 Up to 8-9339	DATE: 01/2014	PAGE: Y2-2390-01
"SLIDE-OUT" INFLATED SEAL		

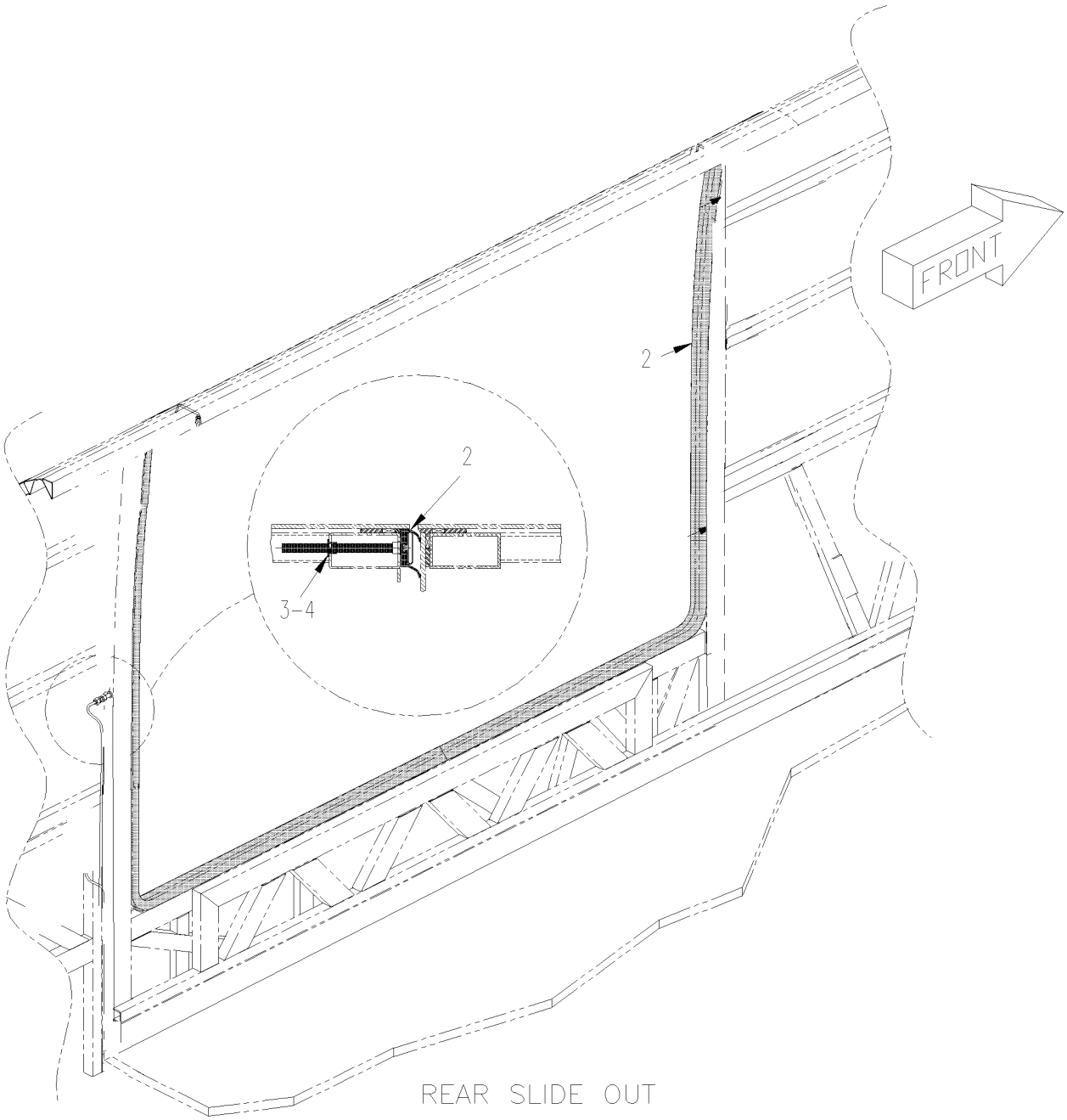

From 6-8806 Up to 8-9339	DATE: 01/2014	PAGE: Y2-2390-01

"SLIDE-OUT" INFLATED SEAL

ITEM	PART	DESCRIPTION	XL45	MTH40	MTH45	MTH45S	NOTE
1	478147	SEAL, INFLATABLE FRONT / "XL II" 4465MM x 2039MM / 175MM			1		
1	478149	SEAL, INFLATABLE FRONT / 3591MM x 2115MM / 175MM				1	
2	478148	SEAL, INFLATABLE REAR / W/7.5' 2330MM x 1648MM / 175MM			1		
3	503541	TUBE, NYLON 3/4" O.D. / BLACK S.L			AR	AR	
3	504715	HOSE CLAMP / 7/32"-5/8" SS			1	1	
NS	642010	FEMALE CONNECTOR / HOSE BARB FITTING / #4x1/4NPT-F BR			AR	AR	
NS	641331	MALE CONNECTOR / PUSH-IN FITTING / #6x1/4NPT-M BR			AR	AR	
3	509815	TIE MOUNT / ATTACHMENT W/TREE MOUNT			AR	AR	
3	562679	4 WAY ADH. BACKED MOUNTS 1.000 x 1.000 x .200			AR	AR	
3	504637	CABLE TIE / 3/16" x 13"			AR	AR	
3	504720	GROMMET / 2.375x3.000x.250x.437x3.250			1	1	
4	684517	ADHESIVE SIMSON #ISR 70-03 / GREY / 310ml CARTRIDGE			AR	AR	
10	382048	REMOTE CONTROL / SINGLE SLIDE-OUT			1	1	
. NS	563380	. SWITCH / M/ON-OFF-M/ON S P.D.T			1	1	
. NS	563379	. PILOT LIGHT GREEN /			1	1	
. NS	382047	. DECAL "REMOTE CONTROL"			1	1	

From 6-8806 Up to 8-9339	DATE: 01/2014	PAGE: Y2-2390-01

"SLIDE-OUT" INFLATED SEAL

ITEM	PART	DESCRIPTION	XL45	MTH40	MTH45	MTH45S	NOTE

From Y-7046 Up to 6-8805	DATE: 01/2014	PAGE: Y2-2390-05
"SLIDE-OUT" CONTROL INSTALLATION		

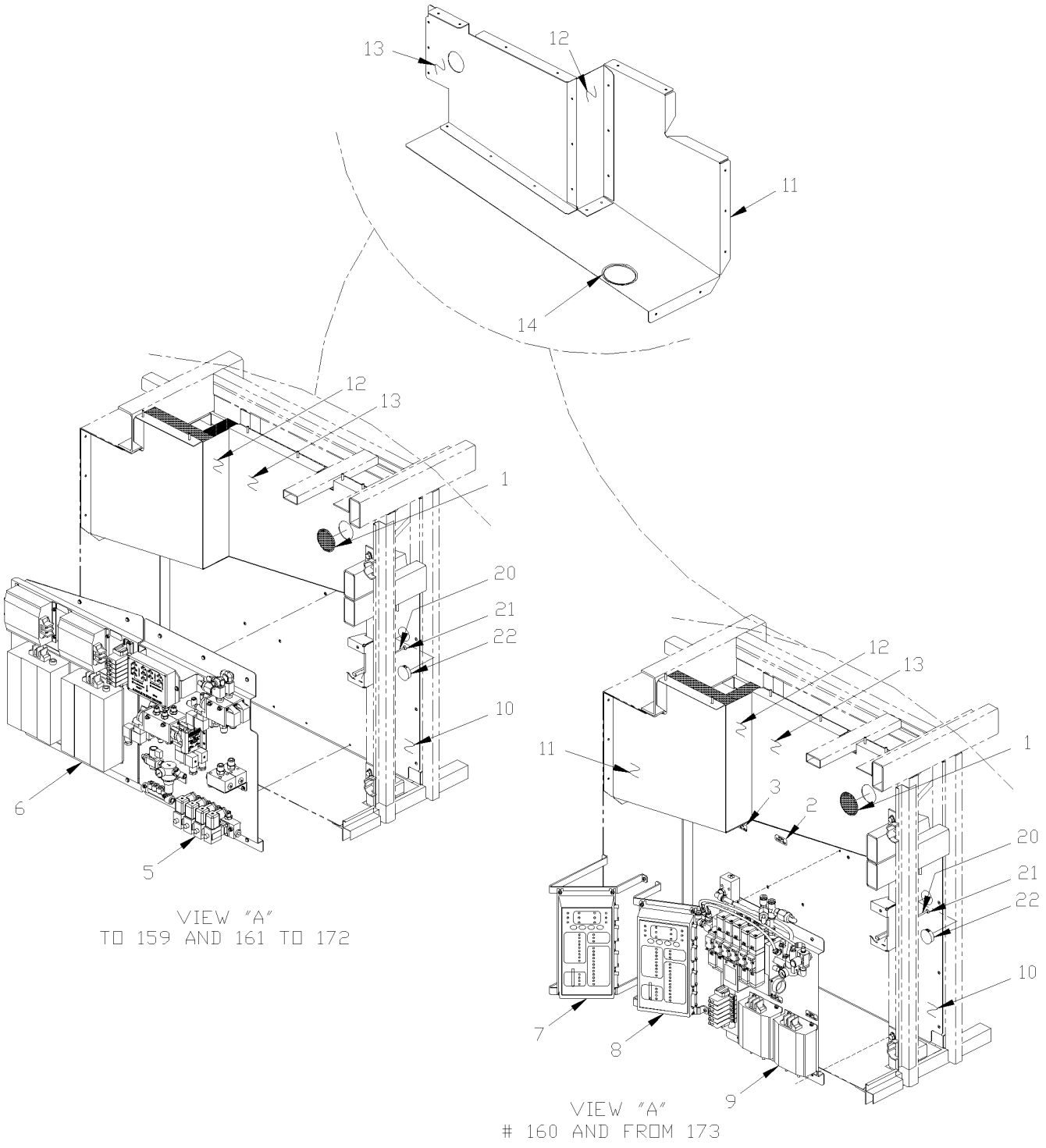

From Y-7046 Up to 6-8805	DATE: 01/2014	PAGE: Y2-2390-05

"SLIDE-OUT" CONTROL INSTALLATION

ITEM	PART	DESCRIPTION	XL45	MTH40	MTH45	MTH45S	NOTE
1	690286	PLUG SNAP-IN 1 PLAS 2 1/8" X 0.05" EP.			1		
2	690096	DECAL "FRONT SLIDE OUT" Up to 4-8251 / REPLACED BY: 065921			1		
2	065921	DECAL "FRONT SLIDE OUT" From 4-8252			1		
3	690097	DECAL "REAR SLIDE OUT" STICKER Up to 4-8251 / REPLACED BY: 065922			1		
3	065922	DECAL "REAR SLIDE OUT" STICKER From 4-8252			1		
5	Y2-2390-10	**"SLIDE-OUT" AIR CONTROL PANEL**					
6	Y2-2390-06	**"SLIDE-OUT" CONTROL PANEL - INSTALLATION**					
7	065907	SUPPORT / PRAN MODULE			1		
7	065908	SUPPORT / PRAN MODULE			1		A
8	065906	SUPPORT / PRAN MODULE			1		
8	065908	SUPPORT / PRAN MODULE			1		A
9	Y2-2390-11	**"SLIDE-OUT" AIR CONTROL PANEL**					
10	Call Order Desk	PANEL			1		P
11	Call Order Desk	PANEL			1		P
12	Call Order Desk	PANEL			1		P
13	Call Order Desk	PANEL			1		P
14	506338	RUBBER CHANNEL / 1/16" x 1/4" INT "U" SHAPE / ROUND C.T.L.			1		
20	Call Order Desk	ROD OPENING 243MM			1		P
21	690288	RUBBER GROMMET ° 5/16"			1		
22	504265	PLUG 1 3/8"			1		
		P) CALL ORDER DESK FOR SPECIFIC APPLICATION					
		(V.I.N.)					
		A) WITH SMALL A/C SYSTEM					

From Y-7046 Up to 2-7780	DATE: 01/2014	PAGE: Y2-2390-06

"SLIDE-OUT" CONTROL PANEL - INSTALLATION

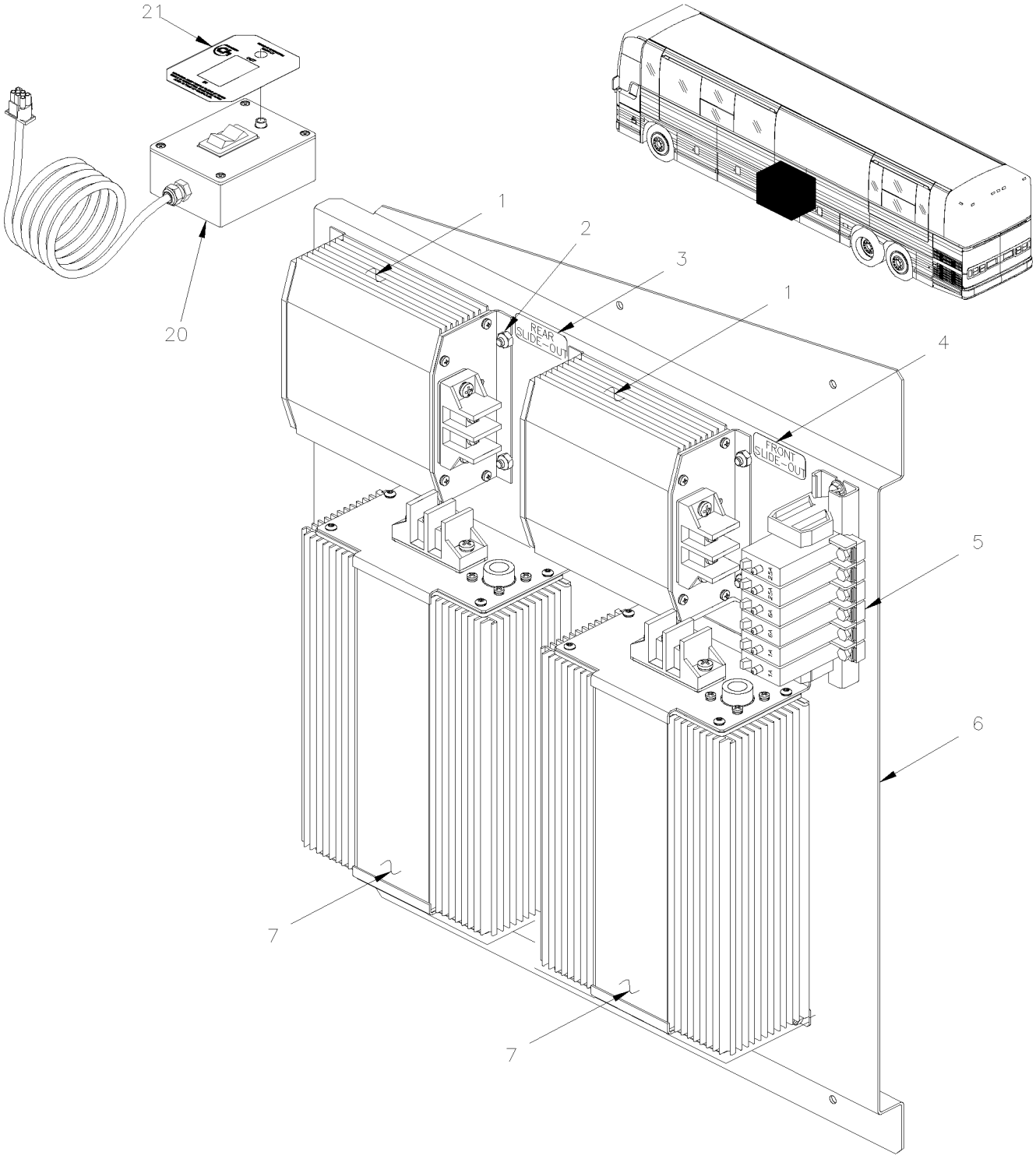

From Y-7046 Up to 2-7780	DATE: 01/2014	PAGE: Y2-2390-06

"SLIDE-OUT" CONTROL PANEL - INSTALLATION

ITEM	PART	DESCRIPTION	XL45	MTH40	MTH45	MTH45S	NOTE
	690065	ELECTRIC COMPONENTS PANEL			1		
1	690303	. MODULE MOTOR DRIVE ASM 24V Up to Y-7398 / REPLACED BY: 563316			2		A
1	563318	. MODULE MOTOR DRIVE ASM 24V From Y-7399			2		
2	502782	. NUT HEX NYRT M5-0.8 CP			16		
3	690097	. DECAL "REAR SLIDE OUT" STICKER Up to 4-8251 / REPLACED BY: 065922			1		
3	065922	. DECAL "REAR SLIDE OUT" STICKER From 4-8252			1		
4	690096	. DECAL "FRONT SLIDE OUT" Up to 4-8251 / REPLACED BY: 065921			1		
4	065921	. DECAL "FRONT SLIDE OUT" From 4-8252			1		
5	Y2-0616-00	**. JUNCTION BOX COMPONENTS, RELAY & BREAKER**					
6	690062	. ELECTRIC COMPONENTS PANELS			1		
7	690304	. SLIDE OUT CONTROL MODUL			2		
20	690087	REMOTE CONTROL / SINGLE SLIDE-OUT Up to 1-7439			AR		
20	382048	REMOTE CONTROL / SINGLE SLIDE-OUT From 1-7450			AR		
. NS	563380	. SWITCH / M/ON-OFF-M/ON S P.D.T From 1-7450			1		
. NS	563379	. PILOT LIGHT GREEN / From 1-7450			1		
. NS	382047	. DECAL "REMOTE CONTROL" From 1-7450			1		
21	690091	. DECAL "REMOTE CONTROL" Up to 4-8251 / REPLACED BY: 382047			1		
21	382047	. DECAL "REMOTE CONTROL" From 4-8252			1		
NS	690297	HARNESS DOUBLE XLII From 1-7450			1		
22	065730	KIT, RETROFIT SAFETY MODULE "SLIDE OUT" XLII Up to 1-7780			AR		
23	065731	KIT, RETROFIT SAFETY MODULE "SLIDE OUT" XLII From 1-7781			AR		
24	563222	SAFETY MODULE PR-4101			1		
		A) THIS MOTOR CONTROL MODULE IT SUPERSEEDED BY					
		#563318 AND #563316 WITH KIT 065730					

From Y-7046 Up to 2-7780	DATE: 01/2014	PAGE: Y2-2390-10

"SLIDE-OUT" AIR CONTROL PANEL

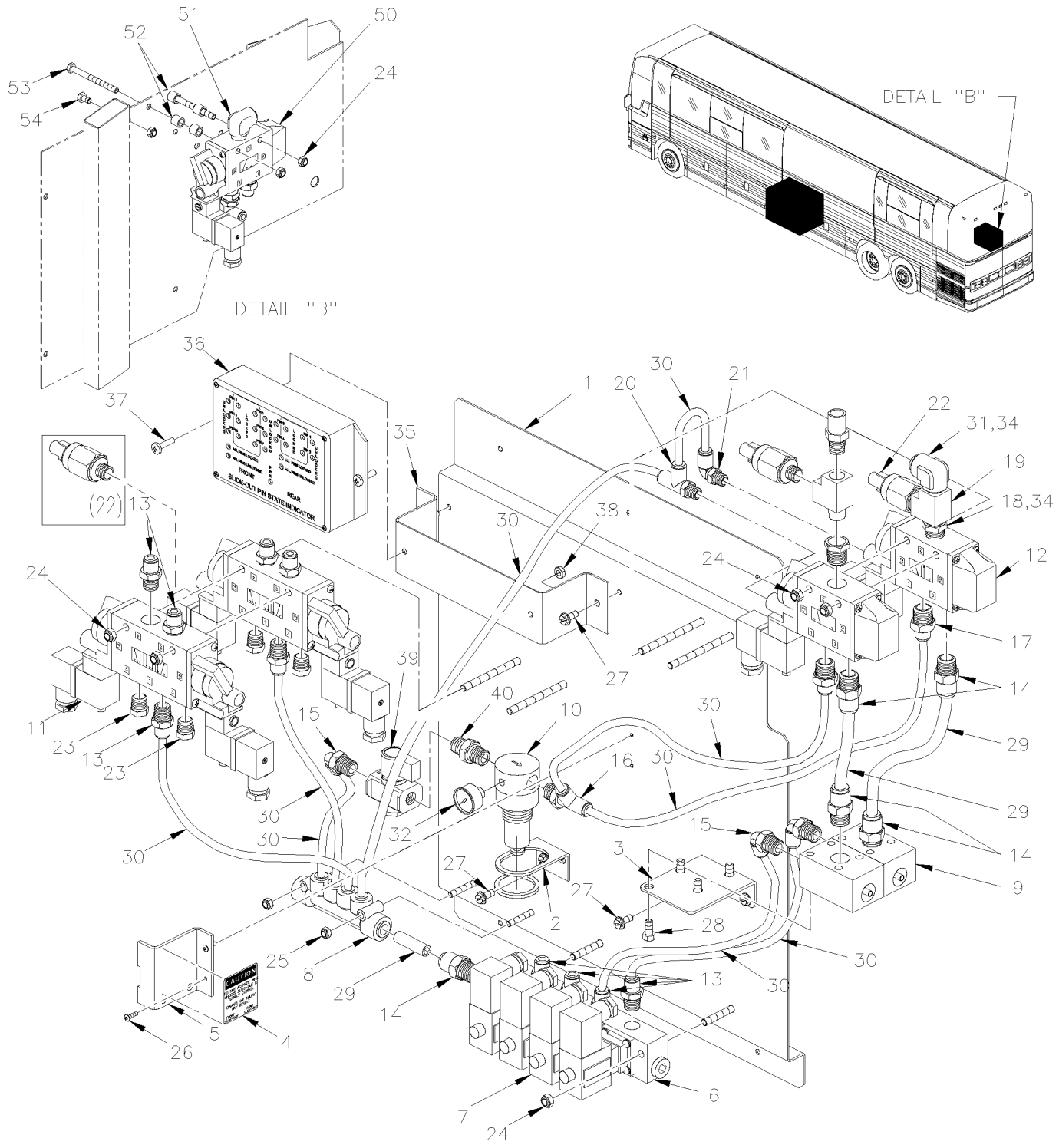

From Y-7046 Up to 2-7780	DATE: 01/2014	PAGE: Y2-2390-10

"SLIDE-OUT" AIR CONTROL PANEL

ITEM	PART	DESCRIPTION	XL45	MTH40	MTH45	MTH45S	NOTE
	690064	PNEUMATIC COMPONENTS PANEL			1		
1	690060	PNEUMATIC COMPONENTS PANEL			1		
2	690381	REGULATOR SEAT Up to TODAY			1		
2	N.S.P.	REGULATOR SEAT / (6500087) From FUTUR			1		2
3	690061	VACUUM GENERATOR SUPPORT			1		
4	690085	STICKER			1		
5	690069	PROTECTOR PLATE			1		
6	690349	4 PORTS VALVE MANIFOLD			1		
7	690350	SOLENOID VALVE 2/2 N.C.			4		
8	690330	MANIFOLD / PUSH-IN FITTING / 2x#6 / 4x#4 PLAS / REPLACED BY: 641897			1		
9	690344	VACUUM GENERATORS			2		
10	690380	PRESSURE REGULATOR Up to TODAY			1		
10	N.S.P.	PRESSURE REGULATOR / (6500085) From FUTUR			1		2
11	690332	VALVE, 5 WAYS, 3 POSITIONS / 2 SOLONOIDS			2		
. NS	641929	. COIL 24V			2		
. NS	641385	. CONNECTOR / SOCKET HOUSING ASSY 3C / PNEUMAC 54934-01			1		
12	690331	VALVE, 3 WAYS, 2 POSITIONS N.O.			2		
. NS	641929	. COIL 24V			1		
. NS	641169	. SPOOL			1		
. NS	641385	. CONNECTOR / SOCKET HOUSING ASSY 3C / PNEUMAC 54934-01			1		
13	641242	MALE CONNECTOR / PUSH-IN FITTING / #4x1/8NPT-M BR			10		
14	641330	MALE CONNECTOR / PUSH-IN FITTING / #6x3/8NPT-M BR			5		
15	690327	MALE ELBOW 90° SWIVEL / PUSH-IN FITTING / #4x1/4NPT-M BR			3		
16	690326	RUN TEE PUSH-IN 1/4 NPT SWIVEL - 1/4 TUBE / REPLACED BY: 444620			1		
17	641347	MALE CONNECTOR / PUSH-IN FITTING / #4x3/8NPT-M BR			2		
18	501314	BUSHING REDUCER / PIPE FITTING / 3/8NTP-Mx1/4NPT-F BR			2		
19	501338	MALE RUN TEE / PIPE FITTING / 1/4NPT-Mx1/4NPT-Fx1/4NPT-F BR			2		
20	690329	MALE RUN TEE SWIVEL / PUSH-IN FITTING / #4x#4x1/8NPT-M BR			1		
21	690328	MALE ELBOW 90° SWIVEL / PUSH-IN FITTING / #4x1/8NPT-M BR			1		
22	690361	VACUUM SWITCH 16" HG			2		
22	690411	VACUUM SWITCH 11" HG			AR		H
23	641926	SILENCER / MUFFLER / 1/4NPT-M			4		
23	N17945	SILENCER / MUFFLER / 1/4NPT-M			4		AS
24	502511	NUT HEX NYRT M6-1.0 ZP			6		
25	502782	NUT HEX NYRT M5-0.8 CP			2		
26	504107	RIVET POP DOME OE 1/8x5/16 AL			2		
27	690275	SCR TP HEXW SLT ZP #12-16 X 1/2 LG.			4		
28	500162	SCREW CAP HEX 1/4-20x1/2 G5 ZP			4		
29	503404	TUBE, NYLON 3/8 O.D. / BLACK S.L.			1		
		2) NOT SOLD BY PREVOST (SEE MANUFACTURING PART					
		NUMBER AT END OF DESCRIPTION LINE)					
		AS) AS SHOWN					
		H) USE ONLY WITH "HIGH" ALTITUDE OPERATIONAL					

From Y-7046 Up to 2-7780	DATE: 01/2014	PAGE: Y2-2390-10

"SLIDE-OUT" AIR CONTROL PANEL

ITEM	PART	DESCRIPTION	XL45	MTH40	MTH45	MTH45S	NOTE
30	503402	TUBE, NYLON 1/4 O.D. / BLACK S.L.			1		
31	641372	MALE ELBOW 90° NON-SWIVEL / PUSH-IN FITTING #6x1/4NPT-M BR			2		
32	690379	PRESSURE GAUGE 1/8 NPT Up to TODAY			1		
32	N.S.P.	PRESSURE GAUGE 1/8 NPT / (6500088) From FUTUR			1		2
33	690382	BRANCH TEE UNION PUSH-IN 1/4 TUBE / REPLACED BY: 641092			3		
34	680098	THREAD SEALANT LOCTITE #567 / WHITE / 250ml			AR		
35	690248	ELECTRONIC MODUL SUPPORT From 1-7450			1		
36	690298	PINS ELECTRONIC MODUL ASSY From 1-7450			1		
37	500387	SCREW MA RND PH #10-24x3/4 ZP From 1-7450			2		
38	5001180	NUT HEX NYRT #10-24 SS From 1-7450			2		
39	690351	PORT RELIEVING SHUT-OFF VALVE From FUTUR			1		
40	501321	NIPPLE HEX / PIPE FITTING / 1/4NPT-Mx1/4NPT-Mx1 3/8 BR From FUTUR			1		
50	641937	VALVE, 3 WAYS, 2 POSITIONS N.C. / W/MAN OVERRIDE			1		
. NS	641929	. COIL 24V			1		
. NS	641385	. CONNECTOR / SOCKET HOUSING ASSY 3C / PNEUMAC 54934-01			1		
51	641374	MALE ELBOW 90° NON-SWIVEL / PUSH-IN FITTING / #4x3/8NPT-M BR			1		
52	5001357	ROUND SPACER 7/16" O.D. X 5/16" I.D. X 13/32"			4		
53	502769	SCREW CAP HEX M6-1.0x70 G10.9 DP			2		
54	5001106	SCREW CAP HEX M6-1.0x10 G8.8 ZP			1		
NS	690297	HARNESS DOUBLE XLII			1		
		2) NOT SOLD BY PREVOST (SEE MANUFACTURING PART NUMBER AT END OF DESCRIPTION LINE)					

From Y-7046 Up to 2-7780	DATE: 01/2014	PAGE: Y2-2390-10

"SLIDE-OUT" AIR CONTROL PANEL

ITEM	PART	DESCRIPTION	XL45	MTH40	MTH45	MTH45S	NOTE

From 2-7781 Up to 6-8805	DATE: 01/2014	PAGE: Y2-2390-11

"SLIDE-OUT" AIR CONTROL PANEL

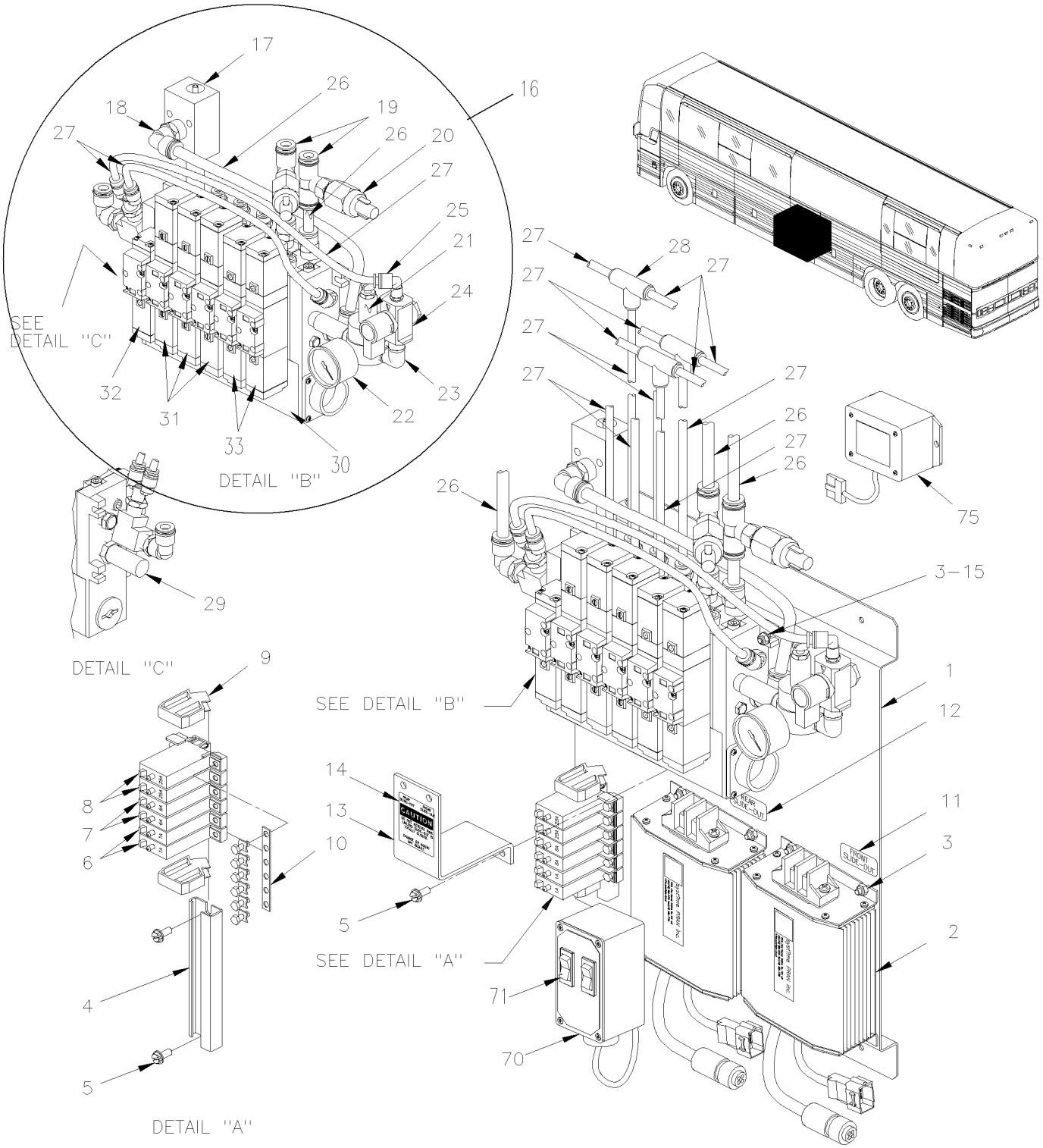

From 2-7781 Up to 6-8805	DATE: 01/2014	PAGE: Y2-2390-11
"SLIDE-OUT" AIR CONTROL PANEL		

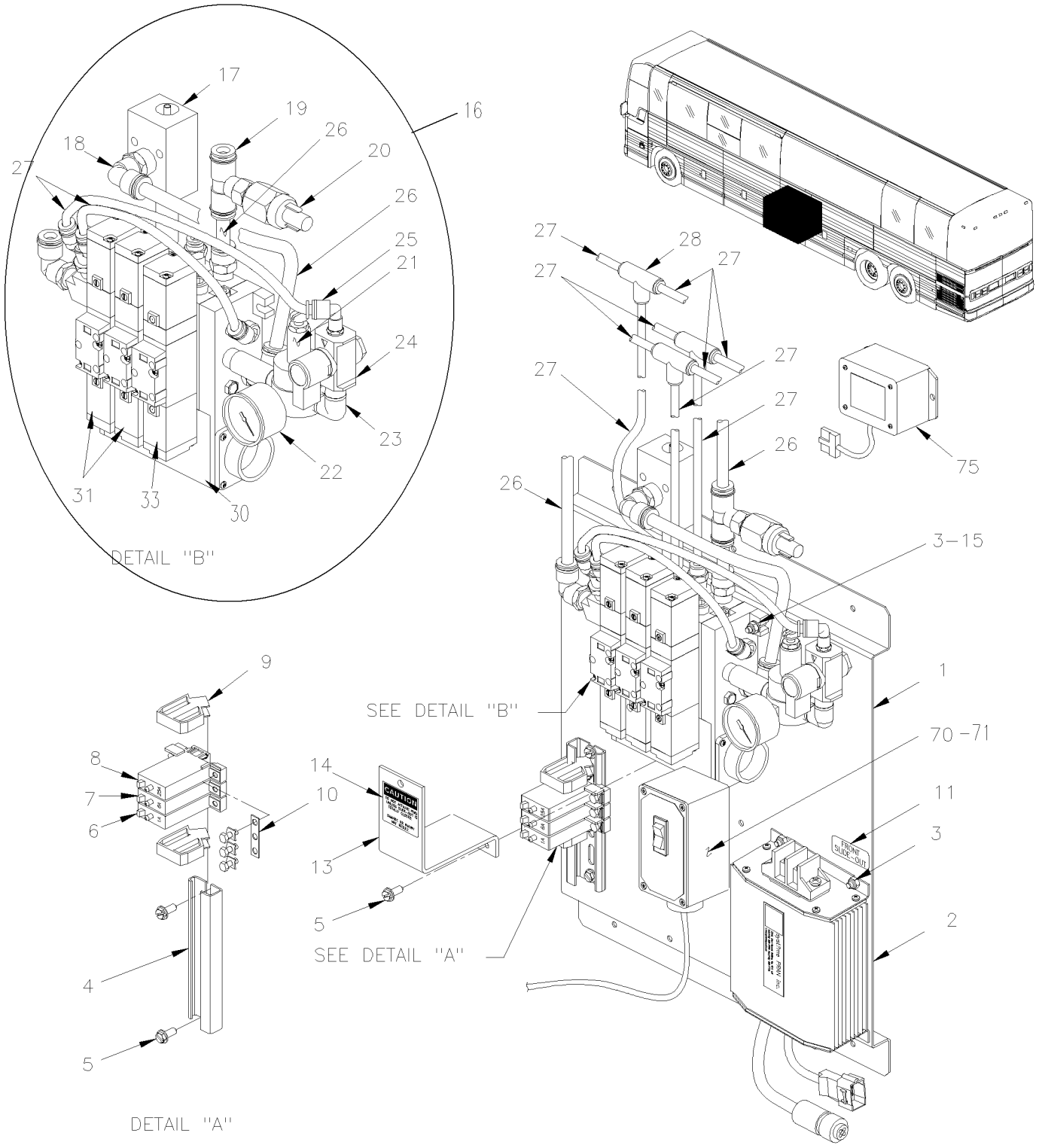

From 2-7781 Up to 6-8805	DATE: 01/2014	PAGE: Y2-2390-11
"SLIDE-OUT" AIR CONTROL PANEL		

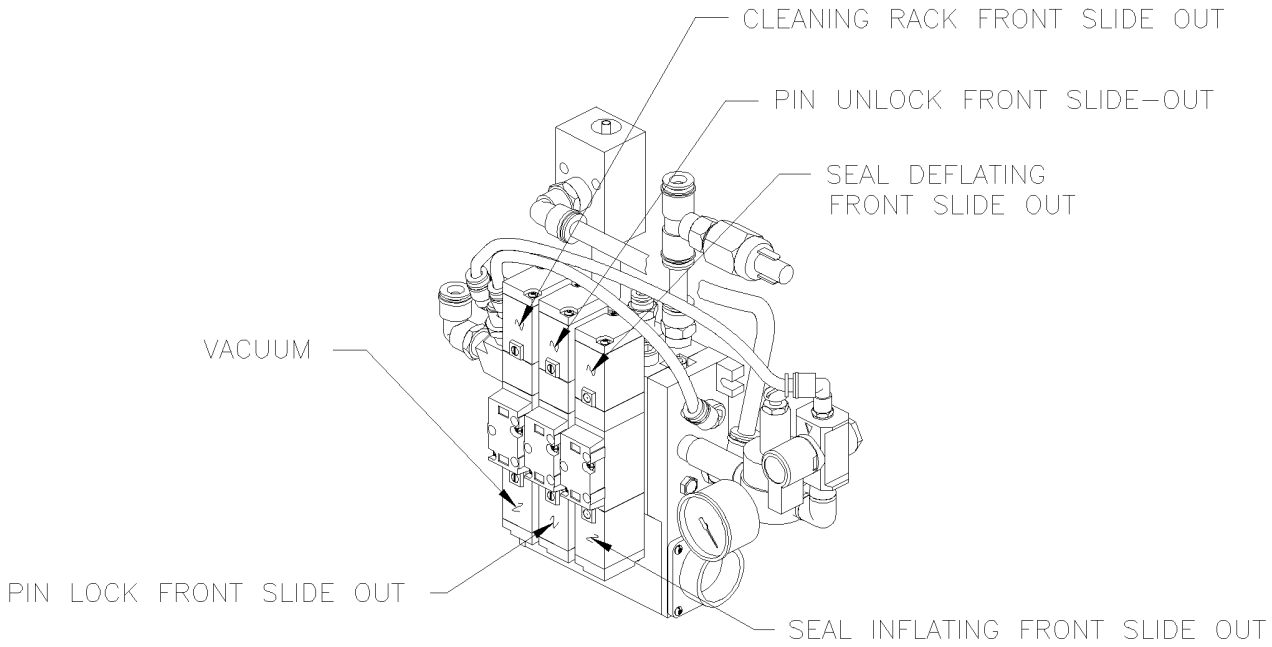

WITH FRONT SLIDE OUT ONLY

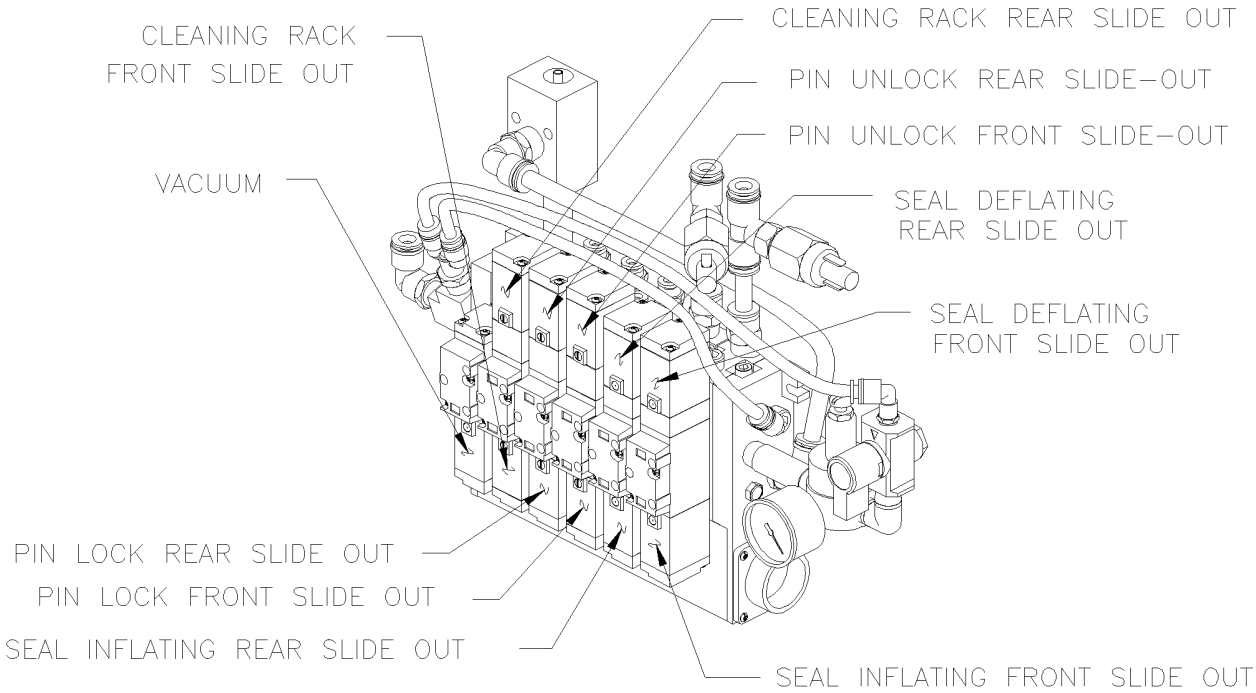

WITH FRONT & REAR SLIDE OUT

From 2-7781 Up to 6-8805	DATE: 01/2014	PAGE: Y2-2390-11
"SLIDE-OUT" AIR CONTROL PANEL		

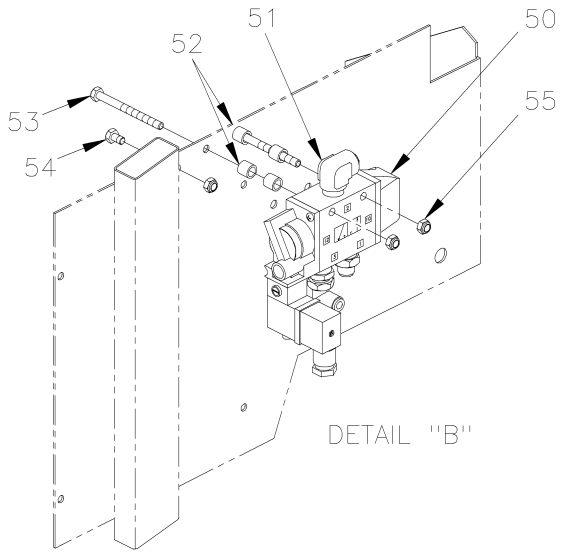

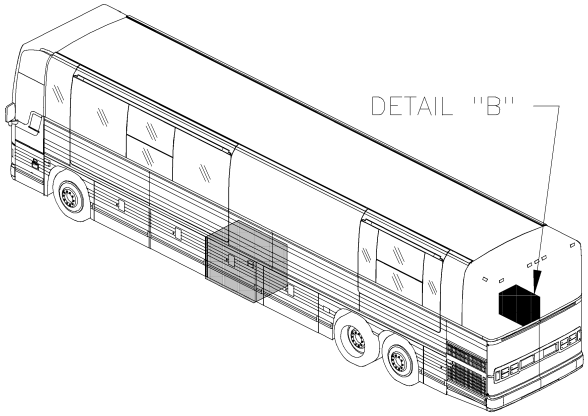

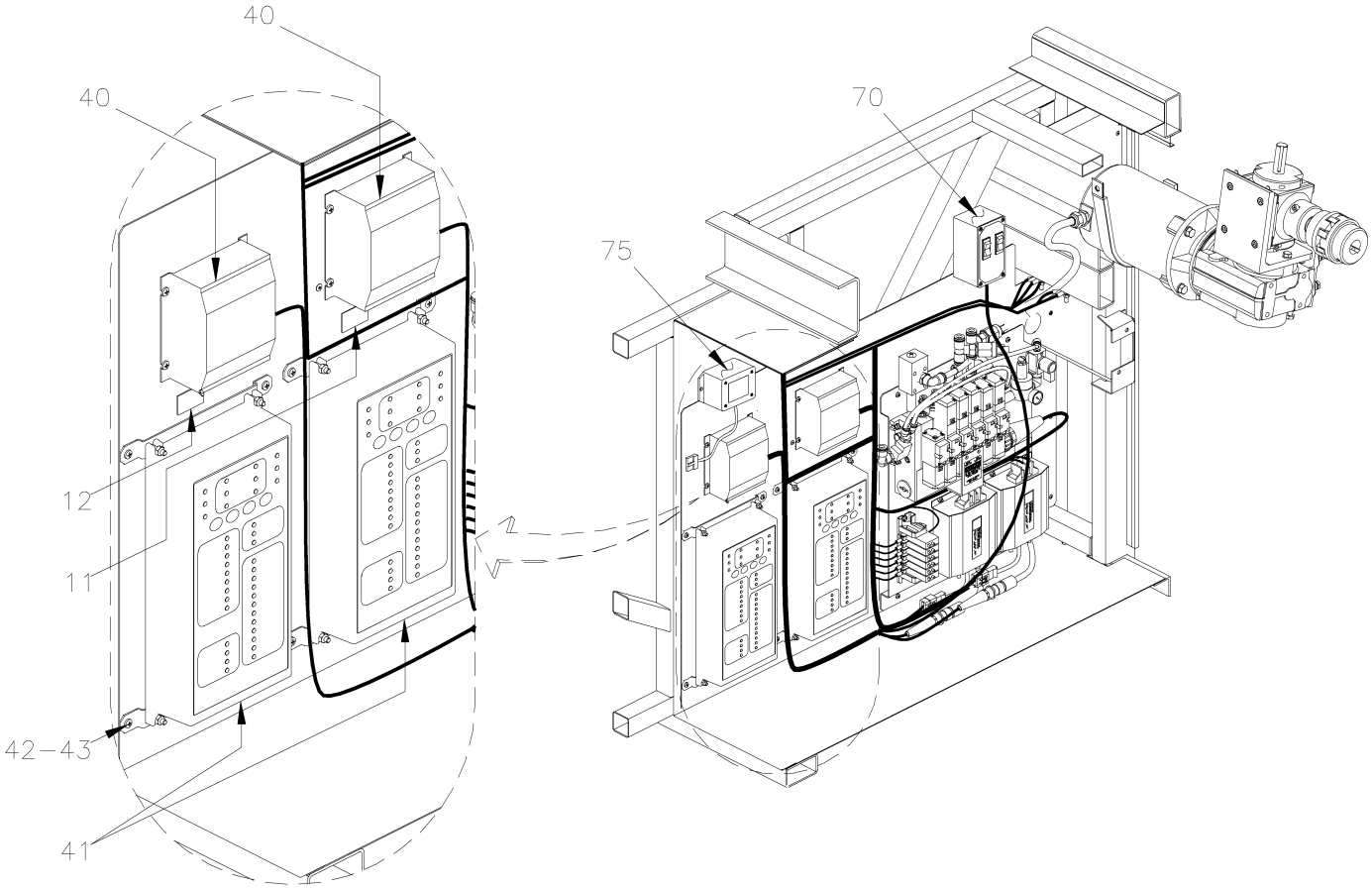

From 2-7781 Up to 6-8805	DATE: 01/2014	PAGE: Y2-2390-11

"SLIDE-OUT" AIR CONTROL PANEL

ITEM	PART	DESCRIPTION	XL45	MTH40	MTH45	MTH45S	NOTE
1	065903	SUPPORT / DRIVE CONTROL MODULE W/DOUBLE SLIDE-OUT			1		
1	065904	SUPPORT / DRIVE CONTROL MODULE W/SINGLE SLIDE-OUT			1		
2	563319	MODULE MOTOR DRIVE ASM 24V			1		R
2	563318	MODULE MOTOR DRIVE ASM 24V			1		F
3	502783	SCREW TP CAP HEXW #6x3/8 ZP Up to 4-8251			12		
3	502841	NUT HEX NYRT M5-0.8 ZG603 From 4-8252			12		
4	690063	RAIL SUPPORT 100MM Up to 4-8251			1		
4	381203	RAIL SUPPORT / 100MM From 4-8252			1		
5	690275	SCR TP HEXW SLT ZP #12-16 X 1/2 LG. Up to 4-8251			4		
5	502868	SCREW TC TR PH 10-24x1/2 ZG603 From 4-8252			4		
6	690356	BREAKER 1AMP / 24V / Up to 4-8251 / REPLACED BY: 563382			2		
6	563382	BREAKER 1AMP / 24V / From 4-8252			2		
7	561790	BREAKER 6AMPS / 24V /			2		
8	561795	BREAKER 25AMPS / 24V /			1		
9	690357	STOPPER Up to 4-8251 / REPLACED BY: 561729			1		
9	561729	STOPPER From 4-8252			1		
10	381817	BUS BAR / W/6 HOLES 77MM			1		
10	381814	BUS BAR / W/3 HOLES 38MM			1		
11	690096	DECAL "FRONT SLIDE OUT" Up to 4-8251 / REPLACED BY: 065921			1		
11	065921	DECAL "FRONT SLIDE OUT" From 4-8252			1		
12	690097	DECAL "REAR SLIDE OUT" STICKER Up to 4-8251 / REPLACED BY: 065922			1		
12	065922	DECAL "REAR SLIDE OUT" STICKER From 4-8252			1		
13	144819	PROTECTOR VALVE / W/DOUBLE "SLIDE-OUT" Up to 5-8384			1		
13	142345	PROTECTOR VALVE / W/DOUBLE "SLIDE-OUT" From 5-8385			1		
13	144825	PROTECTOR VALVE / W/SINGLE "SLIDE-OUT" Up to 5-8384			1		
13	142346	PROTECTOR VALVE / W/SINGLE "SLIDE-OUT" From 5-8385			1		
14	144823	DECAL "DO NOT ACTIVE…." / W/DOUBLE "SLIDE-OUT"			1		
14	144824	DECAL "DO NOT ACTIVE…." / W/SINGLE "SLIDE-OUT"			1		
15	N.P.N.	FLAT WASHER M5 ZP			4		4
16	144821	BLOCK VALVE ASSY COMPLET / W/SINGLE "SLIDE-OUT" Up to 5-8384 / REPLACED BY: 142372			1		
16	142372	BLOCK VALVE ASSY COMPLET / W/SINGLE "SLIDE-OUT" From 5-8385			1		
16	144820	BLOCK VALVE ASSY COMPLET / W/DOUBLE "SLIDE-OUT" Up to 5-8384			1		
16	142371	BLOCK VALVE ASSY COMPLET / W/DOUBLE "SLIDE-OUT" From 5-8385			1		
17	690344	. VACUUM GENERATORS			1		
		4) NO PARTS NUMBER					
		F) USE WITH FRONT "SLIDE OUT" ONLY					
		R) USE WITH REAR "SLIDE OUT" ONLY					

From 2-7781 Up to 6-8805	DATE: 01/2014	PAGE: Y2-2390-11

"SLIDE-OUT" AIR CONTROL PANEL

ITEM	PART	DESCRIPTION	XL45	MTH40	MTH45	MTH45S	NOTE
18	641375	. MALE ELBOW 90° NON-SWIVEL / PUSH-IN FITTING #6x3/8NPT-M BR			1		
19	642002	. FEMALE BRANCH TEE / PUSH-IN FITTING / #6X#6X1/4NPT-F PLAS			1		
20	690361	. VACUUM SWITCH 16" HG Up to 5-8384			AR		
20	690423	. VACUUM SWITCH 1" HG / W/2 WIRES From 5-8385			AR		
20	690411	. VACUUM SWITCH 11" HG			AR		H
21	690380	. PRESSURE REGULATOR			1		
22	690379	. PRESSURE GAUGE 1/8 NPT			1		
23	641999	. MALE ELBOW 90º / PIPE FITTING / 3/8NPT-Mx3/8NPT-M BR			1		
24	690351	. PORT RELIEVING SHUT-OFF VALVE			1		
25	641371	. MALE ELBOW 90° NON-SWIVEL / PUSH-IN FITTING #4x1/4NPT-M BR			1		
26	503404	. TUBE, NYLON 3/8 O.D. / BLACK S.L.			AR		
27	503402	. TUBE, NYLON 1/4 O.D. / BLACK S.L.			AR		
28	690382	. BRANCH TEE UNION PUSH-IN 1/4 TUBE / REPLACED BY: 641092			6		
29	N17945	. SILENCER / MUFFLER / 1/4NPT-M			1		AS
29	641926	. SILENCER / MUFFLER / 1/4NPT-M			1		
30	642006	. BLOCK VALVE / W/DOUBLE "SLIDE-OUT"			1		
30	642007	. BLOCK VALVE / W/SINGLE "SLIDE-OUT"			1		
30	642055	. . BLOCK VALVE SUB ASSY / W/SINGLE SLIDE OUT			1		S
30	642056	. . BLOCK VALVE SUB ASSY / W/DOUBLE SLIDE OUT			1		D
31	641996	. . . SOLENOID VALVE 5/3 ASSY / W/DOUBLE COIL			AR		
. NS	642059	. . . . GASKET VALVE BODY / RECTANGULAR			1		
32	641997	. . . SOLENOID VALVE 5/2 ASSY / W/SIMPLE COIL 2			1		
. NS	642059	. . . . GASKET VALVE BODY / RECTANGULAR			1		
33	641995	. . . SOLENOID VALVE 5/2 ASSY / W/DOUBLE COIL 2			AR		
. NS	642059	. . . . GASKET VALVE BODY / RECTANGULAR			1		
40	563222	SAFETY MODULE PR-4101			2		
41	563261	MODULE CONTROLER SLIDE-OUT / "PRAN" Up to 5-8384			2		
41	563430	MODULE CONTROLER SLIDE-OUT / "PRAN" From 5-8385			2		
42	065908	SUPPORT / PRAN MODULE			2		
43	500854	SCREW TC BDG PH #8-32x3/4 ZG603			AR		
50	641937	VALVE, 3 WAYS, 2 POSITIONS N.C. / W/MAN OVERRIDE			1		
. NS	641929	. COIL 24V			1		
. NS	641385	. CONNECTOR / SOCKET HOUSING ASSY 3C / PNEUMAC 54934-01			1		
51	641374	MALE ELBOW 90° NON-SWIVEL / PUSH-IN FITTING / #4x3/8NPT-M BR			1		
		AS) AS SHOWN					
		D) INCLUDE ITEM # 31 QTY 3 , ITEM # 32 QTY 1 & ITEM # 33 QTY 2					
		H) USE ONLY WITH "HIGH" ALTITUDE OPERATIONAL					
		S) INCLUDE ITEM # 31 QTY 2 & ITEM # 33 QTY 1					

From 2-7781 Up to 6-8805	DATE: 01/2014	PAGE: Y2-2390-11

"SLIDE-OUT" AIR CONTROL PANEL

ITEM	PART	DESCRIPTION	XL45	MTH40	MTH45	MTH45S	NOTE
52	5001357	ROUND SPACER 7/16" O.D. X 5/16" I.D. X 13/32"			4		
53	502769	SCREW CAP HEX M6-1.0x70 G10.9 DP			2		
54	5001106	SCREW CAP HEX M6-1.0x10 G8.8 ZP			1		
55	502511	NUT HEX NYRT M6-1.0 ZP			2		
70	382091	REMOTE CONTROL / DOUBLE SLIDE-OUT From 5-8385			1		
NS	563547	. SWITCH / M/ON-OFF-M/ON D P.D.T WHITE From 5-8385			2		
NS	066171	. DECAL From 5-8385			1		
75	563540	REGULATOR VOLTAGE / PRAN From 5-8385			1		

From 2-7781 Up to 6-8805	DATE: 01/2014	PAGE: Y2-2390-11

"SLIDE-OUT" AIR CONTROL PANEL

ITEM	PART	DESCRIPTION	XL45	MTH40	MTH45	MTH45S	NOTE

From 6-8806 Up to 8-9339	DATE: 01/2014	PAGE: Y2-2390-12
"SLIDE-OUT" AIR CONTROL PANEL - MUX		

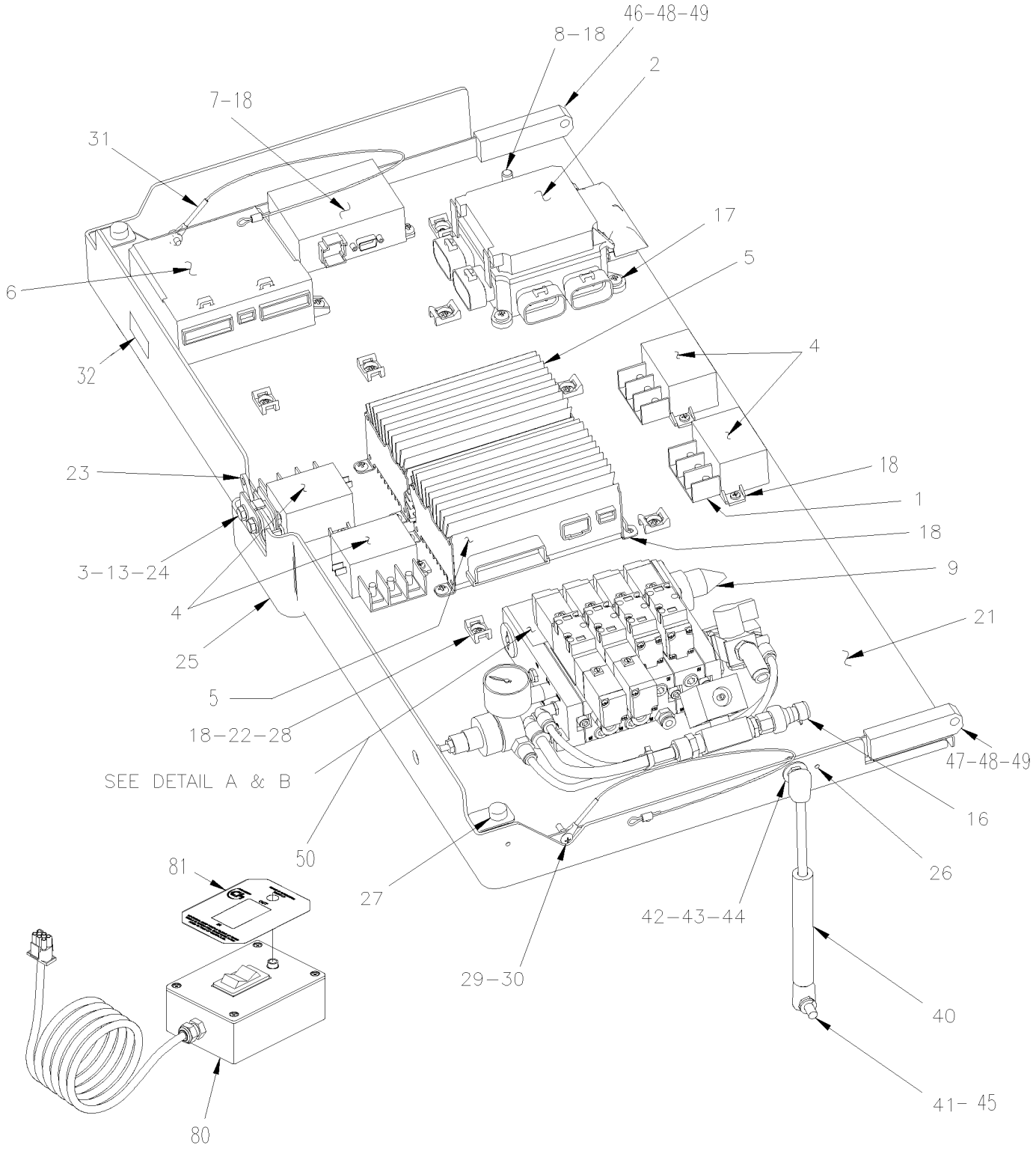

From 6-8806 Up to 8-9339	DATE: 01/2014	PAGE: Y2-2390-12
"SLIDE-OUT" AIR CONTROL PANEL - MUX		

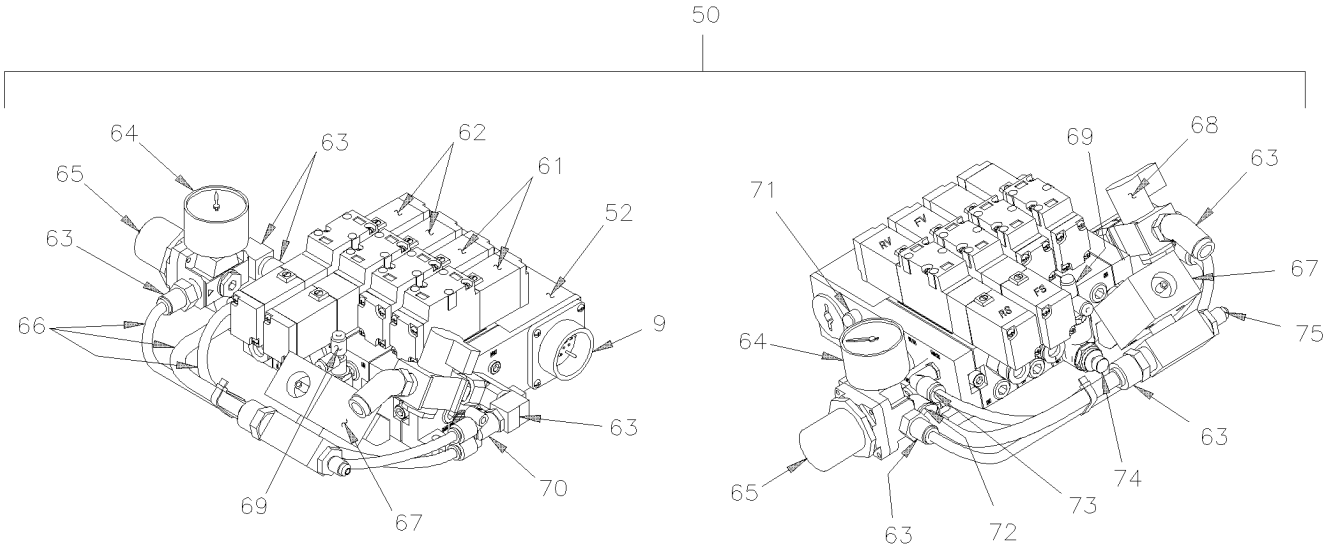

WITH DOOBLE SLIDE–OUT

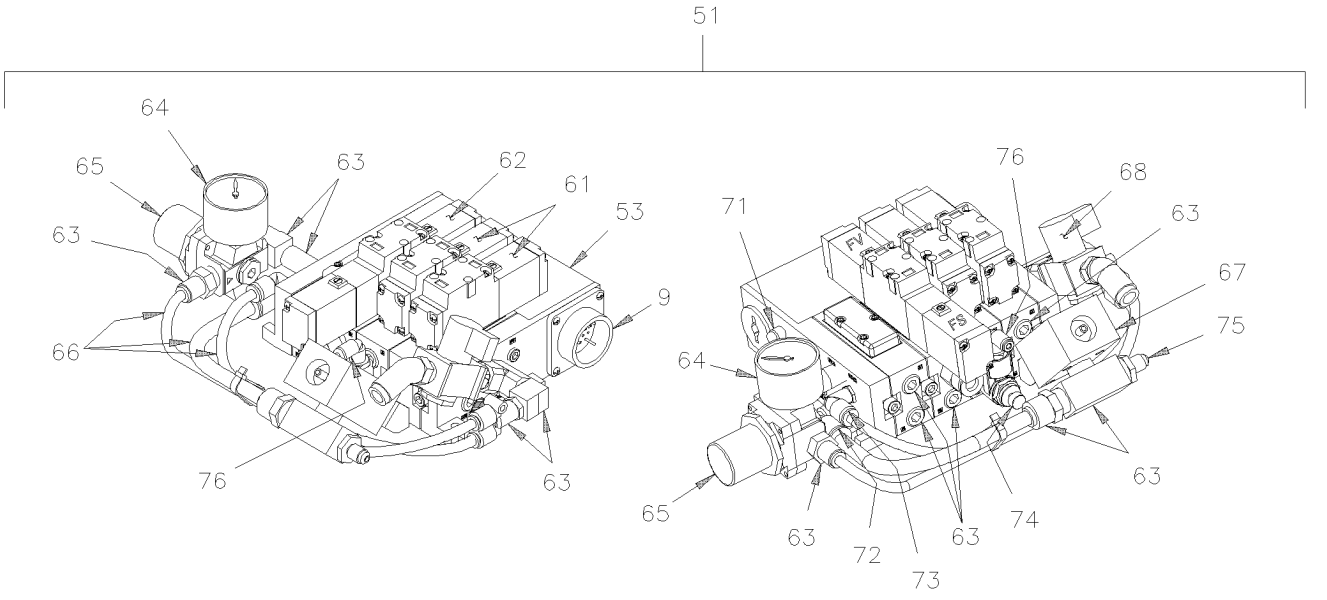

WITH SINGLE SLIDE–OUT

From 6-8806 Up to 8-9339	DATE: 01/2014	PAGE: Y2-2390-12

"SLIDE-OUT" AIR CONTROL PANEL - MUX

ITEM	PART	DESCRIPTION	XL45	MTH40	MTH45	MTH45S	NOTE
1	5001182	NUT HEX NYRT M6-1.0 SS			6	6	
2	563449	VEC DISTRIBUTION MODULE / W/SLIDE-OUT Up to 7-9095			1	1	
. NS	564104	. COVER / VEC BOX Up to 7-9095			1	1	
. NS	563004	. FUSE / ATM 2 AMPS GREY Up to 7-9095			1	1	
. NS	563279	. FUSE / ATM 3 AMPS VIOLET Up to 7-9095			1	1	
. NS	563280	. FUSE / ATM 5 AMPS AMBER Up to 7-9095			1	1	
. NS	563005	. FUSE / ATM 7.5 AMPS BROWN Up to 7-9095			1	1	
. NS	563284	. FUSE / ATM 15 AMPS BLUE Up to 7-9095			1	1	
. NS	563282	. FUSE / ATM 20 AMPS YELLOW Up to 7-9095			1	1	
. NS	563153	. FUSE / ATM 25 AMPS NATURAL Up to 7-9095			1	1	
. NS	563165	. FUSE / ATM 30 AMPS GREEN Up to 7-9095			1	1	
. NS	563181	. CONNECTOR / SH 8C / YELLOW / BUSSMANN 32006-E21 Up to 7-9095			1	1	
. NS	563182	. CONNECTOR / SH 8C / ORANGE / BUSSMANN 32006-G21 Up to 7-9095			1	1	
. NS	563183	. CONNECTOR / SH 8C / RED / BUSSMANN 32006-F21 Up to 7-9095			1	1	
. NS	563184	. CONNECTOR / SH 8C / GREEN / BUSSMANN 32006-C21 Up to 7-9095			1	1	
. NS	563185	. CONNECTOR / SH 8C / BLACK / BUSSMANN 32006-A21 Up to 7-9095			1	1	
. NS	563186	. CONNECTOR / SH 8C / GREY / BUSSMANN 32006-B21 Up to 7-9095			1	1	
. NS	563187	. CONNECTOR / SH 8C / BROWN / BUSSMANN 32006-H21 Up to 7-9095			1	1	
. NS	563448	. CONNECTOR / SH 8C / BLUE / BUSSMANN 32006-D21 Up to 7-9095			1	1	
NS	066259	CABLE ASSY POWER VEC DISTRIBUTION Up to 7-9095			1	1	
3	500440	WASHER FL .250x.562x.065 ZP			2	2	
4	563445	RELAY POWER 24V 130 AMPS / S.P.D.T. N.O.			4	4	
5	563273	I/O B-MODULE VOLVO MULTIPLEX / ALLUMINUM Up to 7-9116			AR	AR	
5	565865	I/O B-MODULE VOLVO MULTIPLEX / ALLUMINUM From 7-9117 / REPLACED BY: 564075			1	1	
6	563274	CECM VOLVO MULTIPLEX MODULE Up to 7-9095			1	1	
7	563295	MASTER ID-MODULE VOLVO MULTIPLEX Up to 7-9095			1	1	
8	560422	BLOCK, TERMINAL / 1 STUD 3/8-16 / BLACK			1	1	
9	066261	WIRING HARNESS SLIDE-OUT FRONT LEFT Up to 7-9095			1	1	
9	066790	WIRING HARNESS SLIDE-OUT FRONT LEFT From 7-9096			1	1	
9	066260	WIRING HARNESS SLIDE-OUT REAR LEFT Up to 7-9095			1		
13	502819	NUT HEX JAM 1/4-20 ZP			2	2	
15	500658	SCREW TC PAN PH #10-24x3/4 ZP			4	4	
16	563459	TRANSDUSER -14.7 to 100LBS / 1/8 NPT-F			1	1	
. NS	563159	. CONNECTOR / METRI-PACK 150 / SH 3C / PED 12065287			1	1	
17	500841	SCREW TP BDG PH #14x3/4 ZP			4	4	
18	502868	SCREW TC TR PH 10-24x1/2 ZG603			AR	AR	
20	500638	SCREW TP BDG PH #8x1/2 ZP			1	1	
21	066632	PANEL MOUNTING / W/DOUBLE "SLIDE-OUT"			1	1	

From 6-8806 Up to 8-9339	DATE: 01/2014	PAGE: Y2-2390-12

"SLIDE-OUT" AIR CONTROL PANEL - MUX

ITEM	PART	DESCRIPTION	XL45	MTH40	MTH45	MTH45S	NOTE
21	067538	PANEL MOUNTING / W/TRIPLE "SLIDE-OUT"	1				
22	504013	TIE MOUNT / 1/4" X 1/4" I.D.			AR	AR	
23	780778	LOCK L.H.			1	1	
24	500163	SCREW CAP HEX 1/4-20x3/4 G5 ZP			1	1	
25	066380	COVER PLASTIC			1	1	
26	504105	RIVET POP DOME OE 1/8x3/16 AL			6	6	
27	504334	BUMPER RUBBER / .625 OD x .406 TH x .156 HOLE			1	1	
NS	500576	SCREW TC BDG PH #6-32x1/2 ZP			2	2	
28	504637	CABLE TIE / 3/16" x 13"			AR	AR	
29	5001241	SCREW MA TR PH #10-24x1/2 SS			1	1	
30	5001180	NUT HEX NYRT #10-24 SS			1	1	
31	Call Order Desk	CABLE RETAINER COVER			1	1	P
. NS	283069	. CABLE 1/16 DIA. / 565MM LG			1	1	
. NS	780341	. SLEEVE / TO HOLDING CABLE			1	1	
32	066395	DECAL "JCT BOX SLIDE-OUT " XL-II			1	1	
40	980020	CYLINDER GAZ / 244/164MM C/C / 35LBS Up to 7-9184			1	1	
40	980029	CYLINDER GAZ / 354/219MM C/C / 46LBS From 7-9185			1	1	
41	980015	BALL STUD / W/10MM X M8-1.25 / 29.18MM			1	1	
42	980027	BALL STUD / W/10MM X M8-1.25 / 36.5MM			1	1	
43	500332	WASHER FL .328x.875x.062 ZG603			1	1	
44	500868	NUT HEX NYRT M8-1.25 CP			1	1	
45	Call Order Desk	CYLINDER SUPPORT FIXED TO STRUCTURE			1	1	P
46	066489	HINGE BLOCK L.H. FIXED TO STRUCTURE			1	1	
47	066490	HINGE BLOCK R.H. FIXED TO STRUCTURE			1	1	
NS	5001634	SCREW SET HEXS CUP M6-1.0X12MM ZP			6	6	
48	507381	BUSHING W/SHOULDER 1/4" I,D,			2	2	
49	502180	PIN HITCH CLIP .042 X 3/8 ZP			2	2	
50	144840	CONTROL VALVE ASSY / W/DOUBLE "SLIDE-OUT" Up to 7-9095			1		
50	144866	CONTROL VALVE ASSY / W/DOUBLE "SLIDE-OUT" From 7-9096			1		
51	144841	CONTROL VALVE ASSY / W/SINGLE "SLIDE-OUT" Up to 7-9095			1	1	
51	144867	CONTROL VALVE ASSY / W/SINGLE "SLIDE-OUT" From 7-9096			1	1	
52	642024	. BLOCK VALVE / W/DOUBLE "SLIDE-OUT"			1		D
53	642025	. BLOCK VALVE / W/SINGLE "SLIDE-OUT"			1	1	S
61	641995	. . SOLENOID VALVE 5/2 ASSY / W/DOUBLE COIL 2			1		
. NS	642059	. . . GASKET VALVE BODY / RECTANGULAR			1		
62	641997	. . SOLENOID VALVE 5/2 ASSY / W/SIMPLE COIL 2			1	1	
. NS	642059	. . . GASKET VALVE BODY / RECTANGULAR			1	1	
63	Y2-1201-00	**. FITTING - MISCELLANEOUS**	1				
		P) CALL ORDER DESK FOR SPECIFIC APPLICATION					
		(V.I.N.)					
		D) INCLUDE ITEM # 61 QTY 2 & ITEM # 62 QTY 2					
		S) INCLUDE ITEM # 61 QTY 1 & ITEM # 62 QTY 2					

From 6-8806 Up to 8-9339	DATE: 01/2014	PAGE: Y2-2390-12

"SLIDE-OUT" AIR CONTROL PANEL - MUX

ITEM	PART	DESCRIPTION	XL45	MTH40	MTH45	MTH45S	NOTE
64	690379	. PRESSURE GAUGE 1/8 NPT			1	1	
65	647891	. PRESSURE REGULATOR			1	1	
66	Y2-1202-00	**. TUBES PLASTIC / AIR D.O.T.**	1				
67	690344	. VACUUM GENERATORS			1	1	
68	690351	. PORT RELIEVING SHUT-OFF VALVE			1	1	
69	641920	. MALE RUN TEE / PUSH-IN FITTING / #2x#2x1/4NPT-M PLAS			1		
70	642047	. MALE BRANCH "Y" / PUSH-IN FITTING / #4X#4X1/4NPT-M PLAS			1	1	
71	642048	. SILENCER / MUFFLER / 1/8NPT-M			1	1	
72	642051	. MALE ELBOW 90° / PUSH-IN FITTING / #6x1/4NPT-M PLAS			1	1	
73	642052	. MALE ELBOW 90° / PUSH-IN FITTING / #2x3/8NPT-M PLAS			1	1	
74	642050	. AIR REGULATOR			1	1	
75	642049	. MALE CONNECTOR / PUSH-IN FITTING / #4x3/8NPT-M PLAS			1	1	
76	642053	. MALE ELBOW 90° / PUSH-IN FITTING / #2x1/4NPT-M PLAS			1	1	
80	382048	REMOTE CONTROL / SINGLE SLIDE-OUT			AR	AR	
. NS	563380	. SWITCH / M/ON-OFF-M/ON S P.D.T			1	1	
. NS	563379	. PILOT LIGHT GREEN /			1	1	
. NS	382047	. DECAL "REMOTE CONTROL"			1	1	
81	382047	DECAL "REMOTE CONTROL"			1	1	

From 6-8806 Up to 8-9339	DATE: 01/2014	PAGE: Y2-2390-12

"SLIDE-OUT" AIR CONTROL PANEL - MUX

ITEM	PART	DESCRIPTION	XL45	MTH400	MTH445	MTH445S	NOTE

From Y-7046 Up to 6-8805	DATE: 01/2014	PAGE: Y2-2390-20

"SLIDE-OUT" - FRONT MECHANISM INSTALLATION

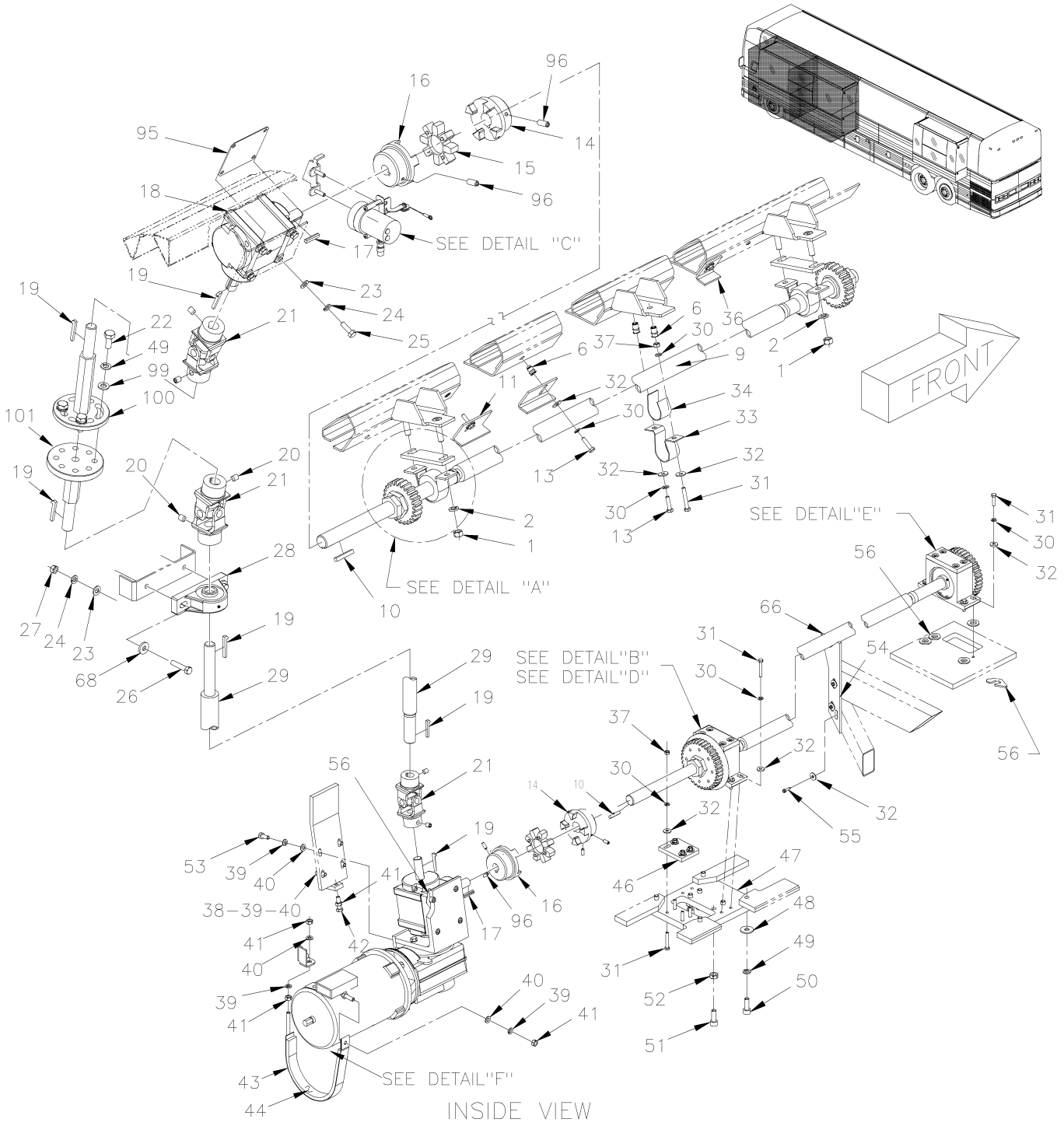

From Y-7046 Up to 6-8805	DATE: 01/2014	PAGE: Y2-2390-20

"SLIDE-OUT" - FRONT MECHANISM INSTALLATION

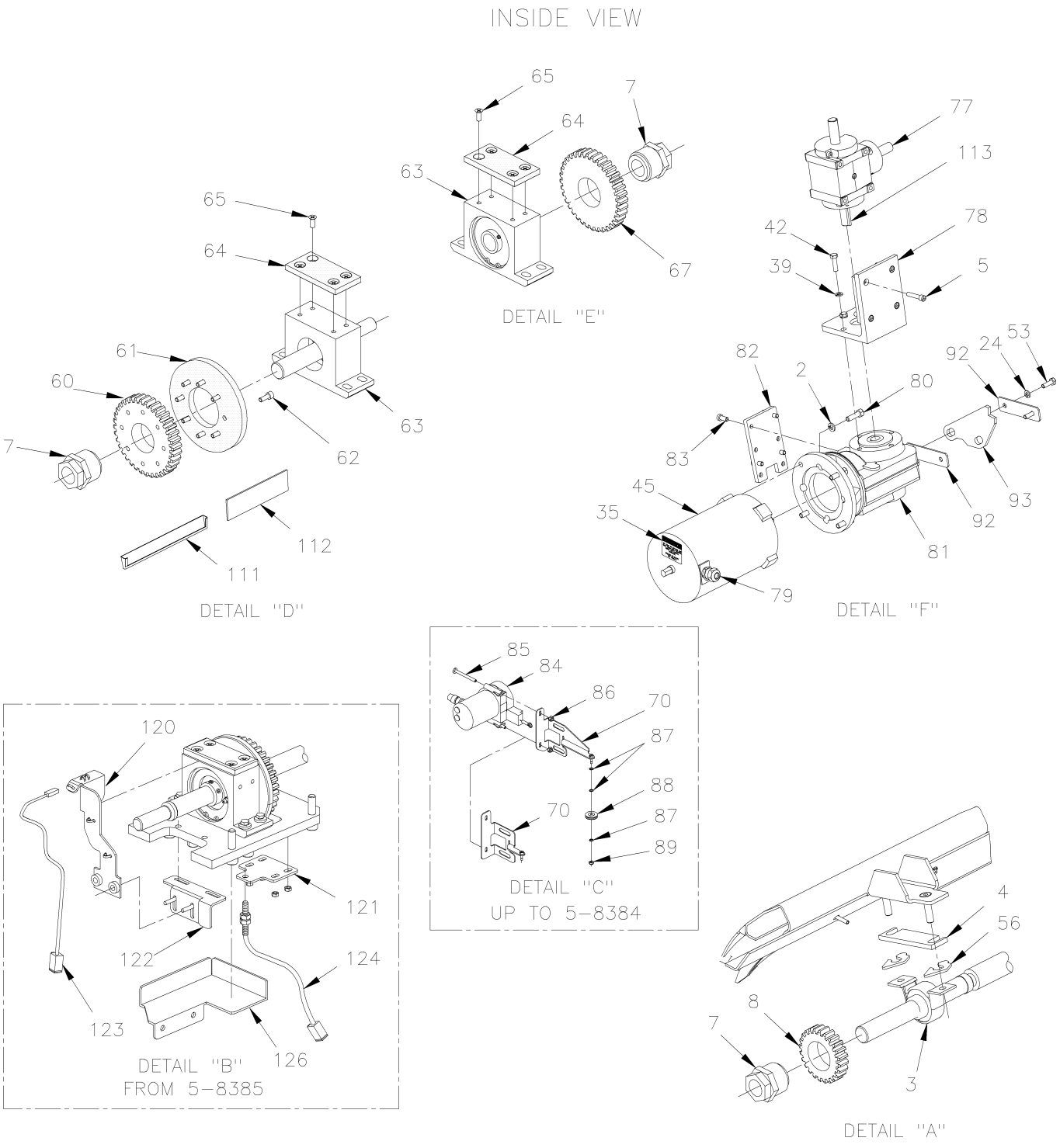

From Y-7046 Up to 6-8805	DATE: 01/2014	PAGE: Y2-2390-20

"SLIDE-OUT" - FRONT MECHANISM INSTALLATION

ITEM	PART	DESCRIPTION	XL45	MTH40	MTH45	MTH45S	NOTE
1	500783	NUT HEX 3/8-16 ZP			4		
2	500478	WASHER LO SPT .380x.683x.094 ZP			4		
3	690315	PILLOW BLOCK LPB1 Up to 4-8251 / REPLACED BY: 507631			2		
3	507631	PILLOW BLOCK LPB1 From 4-8252			2		
4	690019	SPACER 6.35mm Up to 4-8251 / REPLACED BY: 479128			2		
4	479128	SPACER 6.35mm From 4-8252			2		
5	502512	SCREW CAP HEXS 5/16-18x1 1/2 ZP / REPLACED BY: 502503			4		
6	690259	NUT INS TYPE "A-L" OE M6-1.0 0.7-4.2 ZP Up to 4-8251 / REPLACED BY: 502842			11		
6	502842	NUT INS TYPE "A-L" OE M6-1.0 0.7-4.2 ZP From 4-8252			11		
7	690313	CPG TRANTORQUE GT Up to 4-8251 / REPLACED BY: 505523			4		
7	505523	CPG TRANTORQUE GT From 4-8252			4		
8	690075	TOP GEAR Up to 4-8251 / REPLACED BY: 479115			2		
8	479115	TOP GEAR From 4-8252			2		
9	690042	UPPER SHAFT Up to 4-8251 / REPLACED BY: 476198			1		
9	476198	UPPER SHAFT From 4-8252			1		
10	690006	PARALLEL KEY Up to 4-8251 / REPLACED BY: 476160			2		
10	476160	PARALLEL KEY From 4-8252			2		
11	690031	UPPER LIMITING KEY Up to 4-8251 / REPLACED BY: 476103			1		
11	476103	UPPER LIMITING KEY From 4-8252			1		
12	690267	WASHER LO SERR 6.1x16.0x0.9 ZP Up to 4-8251 / REPLACED BY: 500356			11		
12	500356	WASHER LO SERR 6.1x16.0x0.9 ZG603 From 4-8252			11		
13	5001209	SCREW CAP HEX M6-1.0x25 G8.8 ZP			10		
14	690016	COUPLING SHAFT DRIVE 1" I.D. / TYPE GS 38 Up to 3-7929 / REPLACED BY: 407513			2		
14	407513	COUPLING SHAFT DRIVE 1" I.D. / TYPE GS 38 From 3-7930			2		
. NS	502506	. SCREW SET HEXS CUP From 3-7930			1		
. NS	5001282	. SCREW SET HEXS CUP From 3-7930			1		
NS	502512	SCREW CAP HEXS 5/16-18x1 1/2 ZP From 3-7930 / REPLACED BY: 502503			1		
15	690364	SPIDER RUBBER / TYPE GS 38 Up to 4-8251 / REPLACED BY: 507632			2		
15	507632	SPIDER RUBBER / TYPE GS 38 From 4-8252			2		
16	690017	COUPLING SHAFT DRIVE 3/4" I.D. / TYPE GS 38 Up to 3-7929 / REPLACED BY: 407512			2		
16	407512	COUPLING SHAFT DRIVE 3/4" I.D. / TYPE GS 38 From 3-7930			2		
. NS	502503	. SCREW CAP HEXS From 3-7930			1		
. NS	5001282	. SCREW SET HEXS CUP From 3-7930			1		
16	502512	SCREW CAP HEXS 5/16-18x1 1/2 ZP From 3-7930 / REPLACED BY: 502503			1		
17	690233	STEP KEY Up to 4-8251 / REPLACED BY: 476039			2		
17	476039	STEP KEY From 4-8252			2		
18	690346	RIGHT ANGLE GEARBOX Up to 4-8251 / REPLACED BY: 970299			1		
18	970299	RIGHT ANGLE GEARBOX From 4-8252			1		
19	690234	KEY, TAPER 3/16" X 3/8" Up to 4-8251			5		
19	476037	PARALLEL KEY From 4-8252			5		
20	5001167	SCREW SET HEXS CUP 3/8-16x1/2			6		

From Y-7046 Up to 6-8805	DATE: 01/2014	PAGE: Y2-2390-20

"SLIDE-OUT" - FRONT MECHANISM INSTALLATION

ITEM	PART	DESCRIPTION	XL45	MTH40	MTH45	MTH45S	NOTE
21	505525	U-JOINT ASSY 3/4" O.D.SHAFT X 5" Up to 3-8004			3		
21	475977	U-JOINT ASSY 3/4" O.D.SHAFT X 5" From 3-8005			3		
. NS	476066	. "C" CLAMP From 3-8005			2		
. NS	500239	. SCREW CAP HEXS From 3-8005			4		
. NS	500319	. SCREW SET HEXS CUP From 3-8005			2		
21	690320	KIT, CROSS & BEARING 15/16" O.D. X 2 1/4"			3		
NS	500239	. SCREW CAP HEXS 1/4-20x1 ZP From 3-8005			4		
NS	500319	. SCREW SET HEXS CUP 5/16-18x1/2 From 3-8005			2		
22	502559	SCREW CAP HEX M10-1.5x25 G8.8 ZP			4		
23	500441	WASHER FL .312x.734x.065 ZP			6		
24	500476	WASHER LO SPT .317x.586x.078 ZP			6		
25	5001263	SCREW CAP HEXS 5/16-18x1 ZP			4		
26	500183	SCREW CAP HEX 5/16-18x1 1/2 G5 PT ZP			2		
27	500778	NUT HEX 5/16-18 ZP			2		
28	690317	PILLOW BLOCK NP 3/4 Up to 4-8251 / REPLACED BY: 507630			1		
28	507630	PILLOW BLOCK NP 3/4 From 4-8252			1		
29	690039	LOWER VERTICAL SHAFT Up to 4-8251 / REPLACED BY: 476197			1		
29	476197	LOWER VERTICAL SHAFT From 4-8252			1		
30	502564	WASHER LO SPT 6.1x11.8x1.6 ZP			14		
31	502793	SCREW CAP HEX M6-1.0x45 G8.8 ZP Up to 5-8384			13		
31	5001209	SCREW CAP HEX M6-1.0x25 G8.8 ZP From 5-8385			13		
	942605	WASHER LO EXT 6.4x11.0x0.7 ZP From 5-8385			AR		
32	690261	WASHER FL 6.4x12.0x1.6 SS Up to 4-8251 / REPLACED BY: 502573			23		
32	502573	WASHER FL 6.4x12.5x1.6 SS From 4-8252			23		
33	Call Order Desk	SUPPORT Up to Y-7193			1		P
33	690126	SUPPORT From Y-7194 Up to 4-8251 / REPLACED BY: 476203			1		
33	476203	SUPPORT From 4-8252			1		
34	690347	PLASTIC PAD Up to 4-8251			1		
34	5060057	RUB AD1 UHMW .050" X 1" X 50' From 4-8252			1		
35	690236	DECAL "MANUAL OPERATION" Up to 4-8251 / REPLACED BY: 476108			2		
35	476108	DECAL "MANUAL OPERATION" From 4-8252			2		
36	690110	UPPER LIMITING KEY Up to 4-8251 / REPLACED BY: 476104			1		
36	476104	UPPER LIMITING KEY From 4-8252			1		
37	560365	FIBER LOOMS / 1/4" / BLACK			5		
38	502790	SCREW CAP HEX M8-1.25x20 G8.8 ZP			4		
39	5001003	WASHER LO SPT 8.1x12.7x2.0 ZP			6		
40	500874	WASHER FL 8.4x17.0x1.6 ZP			6		
41	502543	NUT HEX M8-1.25 ZP			4		
42	500544	SCREW CAP HEX M8-1.25x30 G8.8 ZP			1		
43	690100	STRAP ASSY Up to 4-8251 / REPLACED BY: 476074			1		
43	476074	STRAP ASSY From 4-8252			1		
		P) CALL ORDER DESK FOR SPECIFIC APPLICATION					
		(V.I.N.)					

From Y-7046 Up to 6-8805	DATE: 01/2014	PAGE: Y2-2390-20

"SLIDE-OUT" - FRONT MECHANISM INSTALLATION

ITEM	PART	DESCRIPTION	XL45	MTH40	MTH45	MTH45S	NOTE
44	690338	SELF SEALING SPONGE RUBBER 1" X 5/16" TH.			1		
45	690363	MOTOR 1/3 HP Up to 4-8251 / REPLACED BY: 563315			1		
45	563315	MOTOR 1/3 HP From 4-8252			1		
46	690117	PLASTIC STOPPER Up to 4-8251 / REPLACED BY: 476071			1		
46	476071	PLASTIC STOPPER From 4-8252			1		
47	690092	MOUNTING PLATE Up to 2-7843 / REPLACED BY: 382015			1		
47	382015	MOUNTING PLATE From 2-7844 Up to 5-8384			1		
47	382060	MOUNTING PLATE From 5-8385			1		
48	502644	WASHER FL 10.5x30.0x2.5 ZP			4		
49	500257	WASHER LO SPT 10.2x18.1x2.2 ZP			8		
50	70314708	SCREW CAP HEXS M10-1.5X30 G8.8 ZP			4		
51	500317	SCREW CAP HEXS M10-1.5x45 G8.8 ZP			4		
52	500256	NUT HEX M10-1.5 ZP			4		
53	502589	SCREW CAP HEX M8-1.25x25 G8.8 ZP			2		
54	690018	SHAFT SUPPORT Up to 4-8251 / REPLACED BY: 476070			1		
54	476070	SHAFT SUPPORT From 4-8252			1		
55	690272	SCREW TC CAP HEXW TEKS #8-18x3/4 ZP			3		
56	690056	SPACER 0.015" Up to 1-7574 / REPLACED BY: 144636			AR		
56	144636	SPACER 0.015" Up to 1-7574			AR		
56	Call Order Desk	SPACER 0.015" From 1-7575			AR		P
56	690057	SPACER 0.031" Up to 1-7574 / REPLACED BY: 144637			AR		
56	144637	SPACER 0.031" Up to 1-7574			AR		
56	Call Order Desk	SPACER 0.031" From 1-7575			AR		P
56	690058	SPACER 0.062" Up to 1-7574 / REPLACED BY: 144638			AR		
56	144638	SPACER 0.062" Up to 1-7574			AR		
56	Call Order Desk	SPACER 0.062" From 1-7575			AR		P
56	690059	SPACER 0.125" Up to 1-7574 / REPLACED BY: 144639			AR		
56	144639	SPACER 0.125" Up to 1-7574			AR		
56	Call Order Desk	SPACER 0.125" From 1-7575			AR		P
56	690404	SPACER 0,187" / REPLACED BY: 144640			AR		
56	144640	SPACER 0,187"			AR		
56	690403	SPACER 0,250" / REPLACED BY: 144641			AR		
56	144641	SPACER 0,250"			AR		
60	690077	GEAR Up to 4-8251 / REPLACED BY: 479105			1		
60	479105	GEAR From 4-8252			1		
61	690076	GUIDE WHEEL Up to 4-8251 / REPLACED BY: 479102			1		
61	479102	GUIDE WHEEL From 4-8252			1		
62	966802	SCREW CAP HEXS M6-1.0x16 G8.8 ZP			8		
63	690222	PILLOW BLOCK ASSY W/BEARING & SKID PAD Up to 4-8251 / REPLACED BY: 479123			2		
63	479123	PILLOW BLOCK ASSY W/BEARING & SKID PAD From 4-8252 Up to 5-8384			2		
63	476399	PILLOW BLOCK ASSY W/BEARING & SKID PAD / WITH 2 HOLES TO INSTALL REE From 5-8355			2		
		P) CALL ORDER DESK FOR SPECIFIC APPLICATION					
		(V.I.N.)					

From Y-7046 Up to 6-8805	DATE: 01/2014	PAGE: Y2-2390-20

"SLIDE-OUT" - FRONT MECHANISM INSTALLATION

ITEM	PART	DESCRIPTION	XL45	MTH40	MTH45	MTH45S	NOTE
64	690037	SLIDING PAD / REPLACED BY: 479101			2		
65	5001198	SCREW MA FL PH M6-1.0x16 ZP			8		
66	690041	LOWER SHAFT Up to 4-8251 / REPLACED BY: 476196			1		
66	476196	LOWER SHAFT From 4-8252			1		
67	690078	GEAR Up to 4-8251 / REPLACED BY: 479103			1		
67	479103	GEAR From 4-8252			1		
68	500441	WASHER FL .312x.734x.065 ZP			2		
NS	680038	THREAD LOCKER LOCTITE #243 / BLUE / 50ml			AR		
70	690070	TRANSDUCER LINEAR SUPPORT Up to 2-7773			1		
70	065850	TRANSDUCER LINEAR SUPPORT From 2-7774 Up to 5-8384			1		
NS	502511	NUT HEX NYRT M6-1.0 ZP Up to 5-8384			2		
NS	690267	WASHER LO SERR 6.1x16.0x0.9 ZP Up to 4-8251 / REPLACED BY: 500356			2		
NS	500356	WASHER LO SERR 6.1x16.0x0.9 ZG603 From 4-8252 Up to 5-8384			2		
NS	690261	WASHER FL 6.4x12.0x1.6 SS Up to 4-8251 / REPLACED BY: 502573			2		
NS	502573	WASHER FL 6.4x12.5x1.6 SS From 4-8252 Up to 5-8384			2		
77	690249	RIGHT ANGLE GEARBOX Up to 4-8251			1		
77	970298	RIGHT ANGLE GEARBOX From 4-8252			1		
78	690035	SUPPORT ASSY Up to 4-8251 / REPLACED BY: 476087			1		
78	476087	SUPPORT ASSY From 4-8252			1		
79	690337	CONNECTOR STRAIGHT-THRU / HEYCO #3231 / BLK 1/2NPT-M / .170-.450 Up to 4-8251 / REPLACED BY: 563336			1		
79	563336	CONNECTOR STRAIGHT-THRU / HEYCO #3231 / BLK 1/2NPT-M / .170-.450 From 4-8252			1		
80	500192	SCREW CAP HEX 3/8-16x1 1/4 G5 ZP			4		
81	690314	REDUCER 140:1 Up to 4-8251 / REPLACED BY: 970297			1		
81	970297	REDUCER 140:1 From 4-8252			1		
82	Call Order Desk	SUPPORT Up to Y-7362			1		P
82	690124	SUPPORT From Y-7363 Up to 1-7512			1		
82	476082	SUPPORT From 1-7513			1		
83	690256	SCREW CAP HEXS M8-1,25x18 G8.8 Up to 4-8251 / REPLACED BY: 5001573			4		
83	5001573	SCREW CAP HEXS M8-1.25x18 G8.8 From 4-8252			4		
84	690388	LINEAR POSITION TRANDUCER Up to 4-8251 / REPLACED BY: 563346			1		
84	563346	LINEAR POSITION TRANDUCER From 4-8252 Up to 5-8384			1		
85	690270	SCREW MA PAN PH M4-0.7x45 ZP Up to 4-8251 / REPLACED BY: 502921			2		
85	502921	SCREW MA PAN PH M4-0.7x45 ZP From 4-8252 Up to 5-8384			2		
86	500590	NUT HEX NYRT M4-0.7 ZP Up to 5-8384			2		
87	690278	SHIM RND 1/64" Up to 4-8251 / REPLACED BY: 502923			3		
87	502928	NUT WD TAB M8-1.25 From 4-8252 Up to 5-8384			3		
88	690279	IDLER PULLEY Up to 4-8251 / REPLACED BY: 502924			1		
88	502924	IDLER PULLEY From 4-8252 Up to 5-8384			1		
89	500425	NUT HEX NYRT #4-40 SS Up to 5-8384			1		
92	690239	SPACER			2		
93	690235	REINFORCEMENT, MOTOR			1		
		P) CALL ORDER DESK FOR SPECIFIC APPLICATION					
		(V.I.N.)					

From Y-7046 Up to 6-8805	DATE: 01/2014	PAGE: Y2-2390-20

"SLIDE-OUT" - FRONT MECHANISM INSTALLATION

ITEM	PART	DESCRIPTION	XL45	MTH40	MTH45	MTH45S	NOTE
NS	682176	SEALANT SIKA #221 / BLACK / 310ml CARTRIDGE			AR		
95	690245	PLATE Up to 4-8251 / REPLACED BY: 479129			1		
95	479129	PLATE From 4-8252			1		
96	5001282	SCREW SET HEXS CUP 1/4-20x5/8			8		
97	690219	TUBE, AIR Up to 4-8251 / REPLACED BY: 144635			2		
97	144635	TUBE, AIR From 4-8252			2		
	N25539	THREAD LOCKER LOCTITE #262 / RED / 250ml			AR		
99	502644	WASHER FL 10.5x30.0x2.5 ZP			4		
100	690246	SHAFT, UPPER (WELDED) Up to 4-8251 / REPLACED BY: 475988			1		
100	475988	SHAFT, UPPER (WELDED) From 4-8252			1		
101	690247	SHAFT, BOTTOM (WELDED) Up to 4-8251 / REPLACED BY: 475985			1		
101	475985	SHAFT, BOTTOM (WELDED) From 4-8252			1		
111	Call Order Desk	GUTTER			1		P
112	Call Order Desk	PLATE			1		P
113	690007	PARALLEL KEY Up to 4-8251 / REPLACED BY: 476037			1		
113	476037	PARALLEL KEY From 4-8252			1		
120	066030	SENSOR SUPPORT From 5-8385			1		
121	066044	SENSOR SUPPORT From 5-8385			1		
122	066063	SENSOR SUPPORT From 5-8385			1		
123	066079	LIMITING REED SWITCH ASSY W/LED S.P.D.T. / W/SLIDE OUT From 5-8385			1		?
124	066080	SWITCH PROXIMITY ASSY / TEETH READER SLIDE OUT From 5-8385			1		?
126	476362	GUARD SENSOR From 5-8385			1		
		?) SEE DETAIL SCREEN					
		P) CALL ORDER DESK FOR SPECIFIC APPLICATION					
		(V.I.N.)					

From Y-7046 Up to 6-8805	DATE: 01/2014	PAGE: Y2-2390-20

"SLIDE-OUT" - FRONT MECHANISM INSTALLATION

ITEM	PART	DESCRIPTION	XL45	MTH400	MTH445	MTH445S	NOTE

From 6-8806 Up to 8-9339	DATE: 01/2014	PAGE: Y2-2390-21
"SLIDE-OUT" - FRONT MECHANISM INSTALLATION		

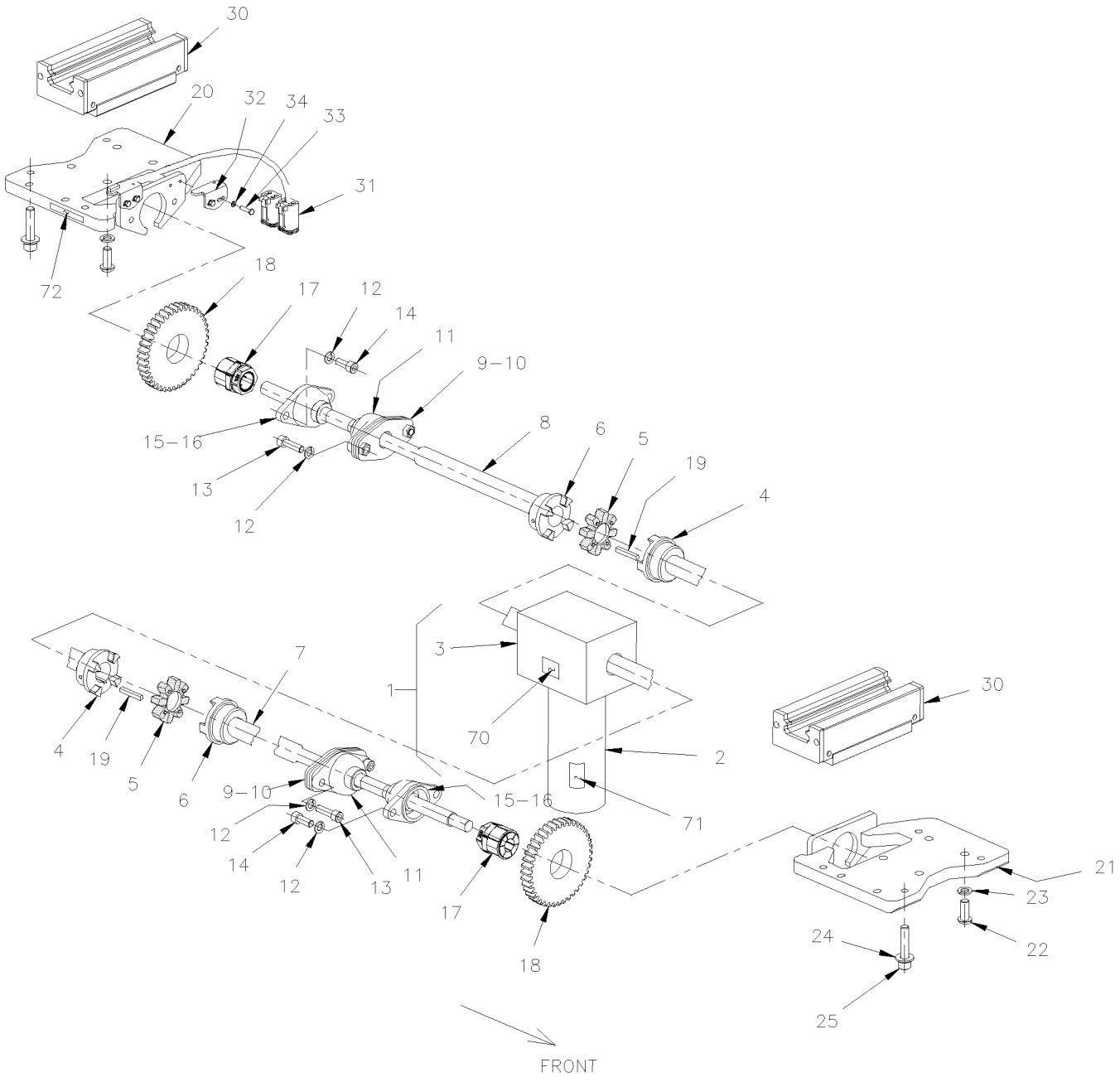

From 6-8806 Up to 8-9339	DATE: 01/2014	PAGE: Y2-2390-21

"SLIDE-OUT" - FRONT MECHANISM INSTALLATION

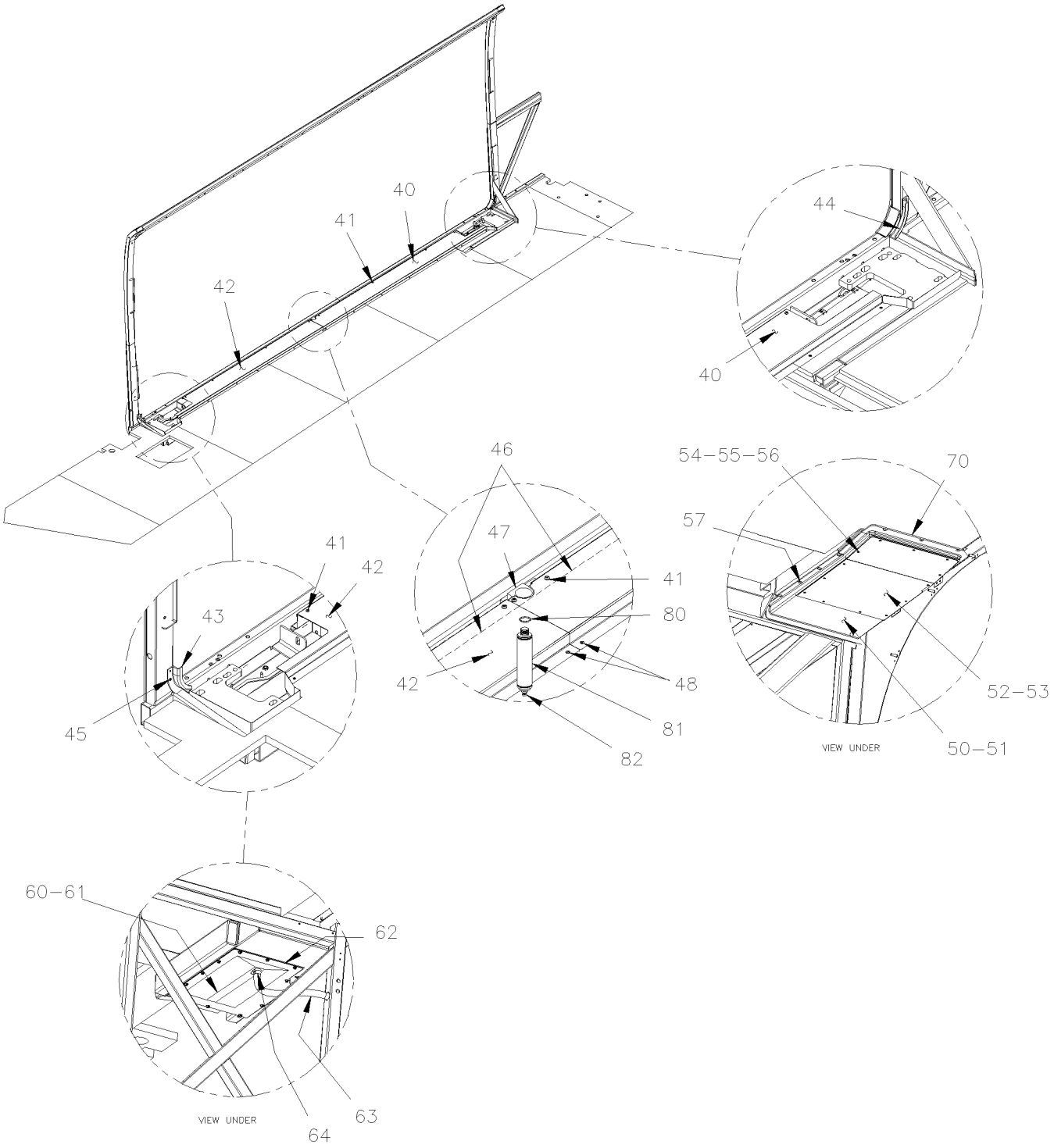

From 6-8806 Up to 8-9339	DATE: 01/2014	PAGE: Y2-2390-21

"SLIDE-OUT" - FRONT MECHANISM INSTALLATION

ITEM	PART	DESCRIPTION	XL45	MTH40	MTH45	MTH45S	NOTE
1	066651	MOTOR 24V ASSY W/CONNECTOR			1	1	?
2	563936	. MOTOR 24V ASSY W/GEAR-BOX			1	1	
. NS	563937	. . MOTOR 24V			1	1	
. NS	563938	. . GEAR BOX RATIO 738/1			1	1	
3	563938	. GEAR BOX RATIO 738/1			1	1	
NS	505533	. KEY 6MM x 6MM x 40MM			2	2	
NS	5001450	SCREW CAP HEX M8-1.25x20 G10.9 DP			4	4	
NS	500035	WASHER LO SPT .317x.586x.078 SS			4	4	
4	505530	COUPLING SHAFT DRIVE 20MM I.D. / TYPE GS 28			2	2	
5	505529	SPIDER RUBBER / TYPE GS 28			2	2	
6	505528	COUPLING SHAFT DRIVE 1 1/8" I.D. / TYPE GS 28			2	2	
7	470138	SHAFT 1980MM / FORWARD			1		
7	476490	SHAFT 1925MM / FORWARD				1	
8	470136	SHAFT 1789MM / BACKWARD			1		
8	476485	SHAFT 973MM / BACKWARD				1	
9	470129	PLATE TORQUE			2	2	
10	470128	SPACER 3/16"			AR	AR	
11	507641	PILLOW BEARING ASSY			2	2	
NS	501499	GREASE FITTING 45º / 1/4-28			2	2	
NS	684754	GREASE OPTIMOL OLISTA / CARTRIGE 14Oz			AR	AR	
NS	477916	CLOSING PLATE SS 168MM x 94MM			2	2	
NS	477917	PLATE PLASTIC 76MM x 74MM			2	2	
NS	5001017	SCREW TC CAP HEXW #10-24x1/2 ZP			8	8	
NS	500964	WASHER FL .203x.500x.047 ZP			8	8	
NS	504511	GROMMET / .500x1.000x.062x.250x1.250			1	1	
12	502616	WASHER LO SPT 10.2x18.1x2.2 SS			8	8	
13	5001620	SCREW CAP HEXS M10-1.5X35 G10.9 DP			4	4	
14	5001616	SCREW CAP HEXS M10-1.5X25 G10.9 DP			4	4	
15	470116	PILLOW BEARING ASSY			2	2	
16	501490	GREASE FITTING / 1/8 NPT			1	1	
17	470118	COUPLING TORQUE			2	2	
18	470119	GEAR 5 1/4" W/40TH			2	2	
19	505527	KEY SQUARE 1/4" x 1/4" x 1 3/4"			2	2	
20	477752	BASE GUIDE ASSY FORWARD			1	1	
21	477753	BASE GUIDE ASSY BACKWARD			1	1	
22	5001621	SCREW CAP HEXS M12-1.75x55 G10.9 DP			8	8	
22	5001615	SCREW CAP BUT HEXS M12-1.75x30 G10.9 DP			8	8	
		?) SEE DETAIL SCREEN					

From 6-8806 Up to 8-9339	DATE: 01/2014	PAGE: Y2-2390-21

"SLIDE-OUT" - FRONT MECHANISM INSTALLATION

ITEM	PART	DESCRIPTION	XL45	MTH40	MTH45	MTH45S	NOTE
23	500747	WASHER LO SPT 12.2x21.1x2.5 ZG603			8	8	
24	5001622	SCREW CAP HEXS M12-1.75x40 G10.9 DP			8	8	
25	5001623	NUT HEX JAM M12x1.75 SS			8	8	
NS	684420	SCREW MARKER LOCK			AR	AR	
30	470107	GUIDE			2	2	
NS	507642	RAIL GUIDE LINEAR BEARING 254MM PLASTIC DUMMY / USE WITH 470107 ONLY			AR	AR	W
NS	685232	RAIL GUIDE EXTENSION TOOL L.H.			AR	AR	T
NS	685233	RAIL GUIDE EXTENSION TOOL R.H.			AR	AR	T
31	066270	LIMITING REED SWITCH ASSY W/LED S.P.D.T. / W/SLIDE OUT Up to 6-8935 / REPLACED BY: 066852			2	2	?
31	066852	LIMITING REED SWITCH ASSY W/LED S.P.D.T. / W/SLIDE OUT From 6-8936			2	2	?
32	477829	SUPPORT LIMITING READ SWITCH			1	1	
33	5001146	SCREW CAP HEX M5-0.8x20 SS EMN			4	4	
34	500804	WASHER FL .203x.500x.047 ZG603			4	4	
40	328175	PROTECTOR PLATE FORWARD			1		
40	328219	PROTECTOR PLATE FORWARD				1	
41	500799	SCREW TC PAN PH #8-32x3/8 ZG603			9	9	
42	328176	PROTECTOR PLATE BACKWARD			1		
42	328220	PROTECTOR PLATE BACKWARD				1	
43	477748	GUTTER MOULDING BACKWARD			1	1	
44	477747	GUTTER MOULDING FORWARD			1	1	
45	504379	RIVET POP DOME OE 3/16x1/4 SS			AR	AR	
46	506227	TAPE RUB ADH1 CC POL 1/16" x 3/4" x 100' / GREY 2520			AR	AR	
47	328224	GASKET JOINT			1	1	
48	5001349	SCREW WO TR PH #8x7/8			13	13	
50	Call Order Desk	ACCESS PANEL ASSY / FORWARD			1	1	P
51	477737	. RECEPTACLE BOX			1	1	
52	477738	. ACCESS PANEL			1	1	
53	477739	. GASKET			1	1	
54	481249	. NUT			14	14	
55	5001605	. SCREW TP HEXW SLT #12x3/4 SS			14	14	
56	5001686	. WASHER FL SEAL .218x.625x20GA SS			14	14	
57	504248	RIVET CHY Q PRDG 3/16x1/4 SS			8	8	
60	Call Order Desk	ACCESS PANEL ASSY W/DRAIN / BACKWARD			1		P
60	Call Order Desk	ACCESS PANEL ASSY W/DRAIN / BACKWARD				1	P
61	477885	. ACCESS PANEL			1		
61	477941	. ACCESS PANEL				1	
62	477886	. GASKET			1		
		?) SEE DETAIL SCREEN					
		P) CALL ORDER DESK FOR SPECIFIC APPLICATION					
		(V.I.N.)					
		T) THOSE RAIL EXTENTION TOOLS ARE FOR EASY					
		REMOVED SLIDE-OUT FROM STRUCTURE					
		W) "WARNING" YOUR REQUIRE THIS DUMMY BEFORE					
		REMOVE THE SLIDE-OUT FROM STRUCTURE					

From 6-8806 Up to 8-9339	DATE: 01/2014	PAGE: Y2-2390-21

"SLIDE-OUT" - FRONT MECHANISM INSTALLATION

ITEM	PART	DESCRIPTION	XL45	MTH40	MTH45	MTH45S	NOTE
62	477943	. GASKET				1	
63	503707	HOSE PVC REINFORCED 1/2			AR	AR	
64	504230	HOSE CLAMP / 3/8"-7/8" SS / HS-6			1	1	
NS	680532	SEALANT SIKA #221 / GREY / 310ml CARTRIDGE			AR	AR	
NS	684517	ADHESIVE SIMSON #ISR 70-03 / GREY / 310ml CARTRIDGE			AR	AR	
70	477987	DECAL "PAT PENDING"			1	1	
71	477989	DECAL " ON OVERRIDE MUST BE LOW TORQUE…"			1	1	
NS	477988	DECAL "SEAL MUST BE DEFLATED…"			1	1	
72	477990	DECAL "THIS SLIDE-OUT PLATE IS FACTORY.."			1	1	
NS	477991	DECAL "CAUTION" DO NOT MAKE ANY MODI.."			1	1	
80	507345	O-RING / ORS FITTING / #16 NEO			1	1	
81	642027	CYLINDER 1 1/16"			1	1	
82	641126	MALE CONNECTOR / PUSH-IN FITTING / #2x1/8NPT-M BR			1	1	

From 6-8806 Up to 8-9339	DATE: 01/2014	PAGE: Y2-2390-21

"SLIDE-OUT" - FRONT MECHANISM INSTALLATION

ITEM	PART	DESCRIPTION	XL45	MTH400	MTH445	MTH445S	NOTE

From Y-7046 Up to 6-8805	DATE: 01/2014	PAGE: Y2-2390-30

"SLIDE-OUT" - REAR MECHANISM INSTALLATION

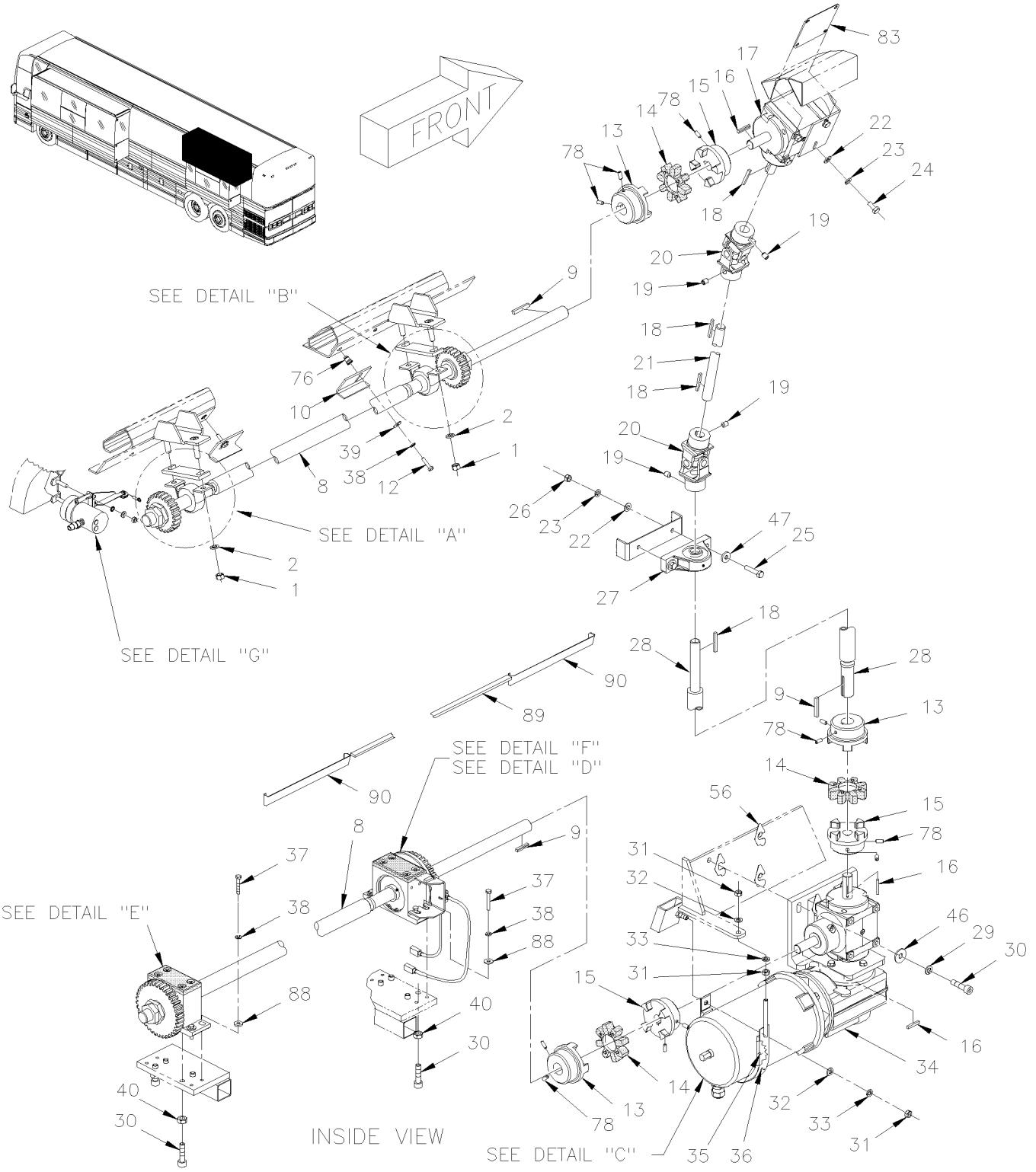

From Y-7046 Up to 6-8805	DATE: 01/2014	PAGE: Y2-2390-30

"SLIDE-OUT" - REAR MECHANISM INSTALLATION

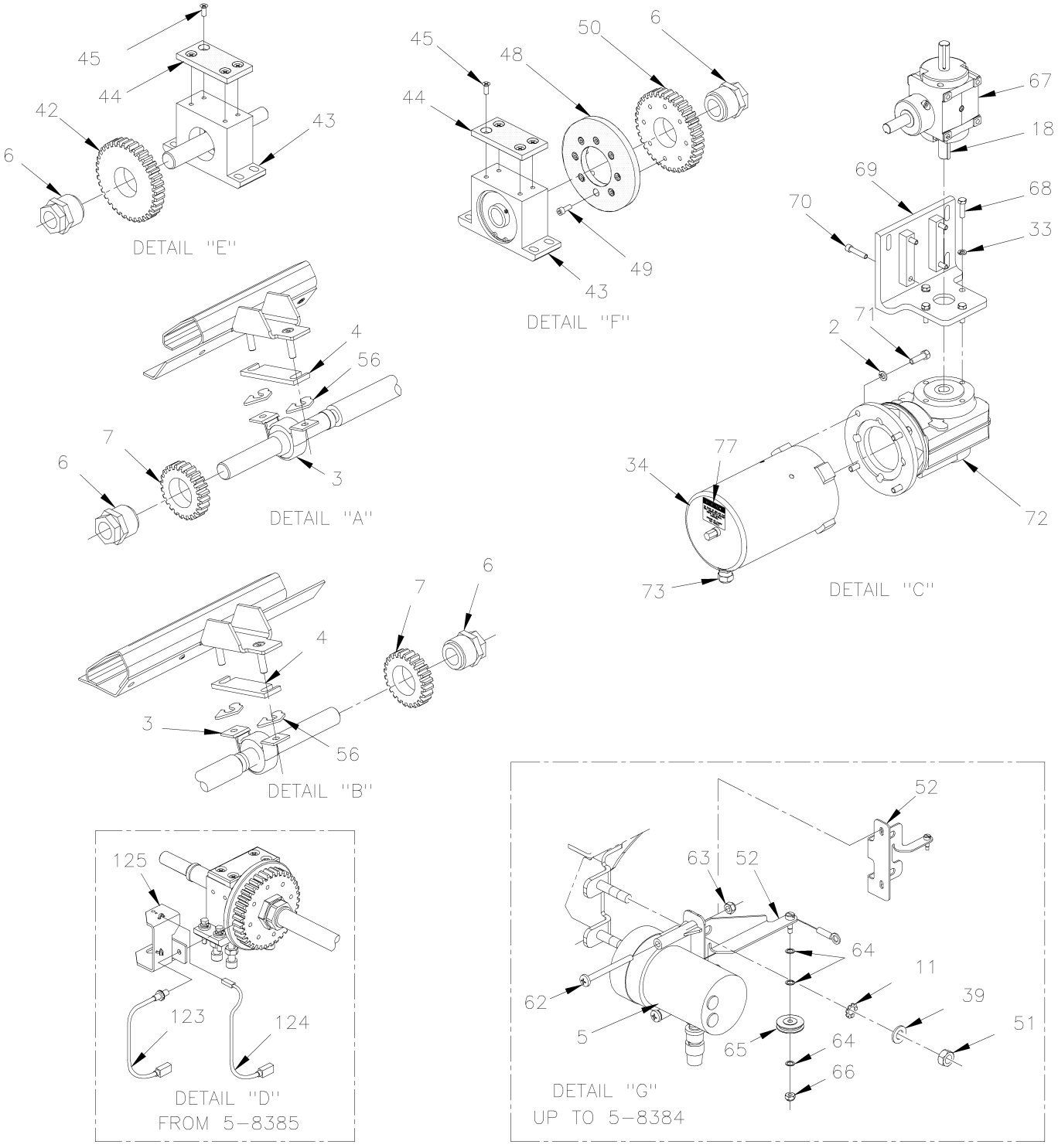

INSIDE VIEW

From Y-7046 Up to 6-8805	DATE: 01/2014	PAGE: Y2-2390-30

"SLIDE-OUT" - REAR MECHANISM INSTALLATION

ITEM	PART	DESCRIPTION	XL45	MTH40	MTH45	MTH45S	NOTE
1	500783	NUT HEX 3/8-16 ZP			4		
2	500478	WASHER LO SPT .380x.683x.094 ZP			8		
3	690315	PILLOW BLOCK LPB1 Up to 4-8251 / REPLACED BY: 507631			2		
3	507631	PILLOW BLOCK LPB1 From 4-8252			2		
4	690019	SPACER 6.35mm Up to 4-8251 / REPLACED BY: 479128			2		
4	479128	SPACER 6.35mm From 4-8252			2		
5	690388	LINEAR POSITION TRANDUCER Up to 4-8251 / REPLACED BY: 563346			1		
5	563346	LINEAR POSITION TRANDUCER From 4-8252 Up to 5-8384			1		
6	690313	CPG TRANTORQUE GT Up to 4-8251 / REPLACED BY: 505523			4		
6	505523	CPG TRANTORQUE GT From 4-8252			4		
7	690075	TOP GEAR Up to 4-8251 / REPLACED BY: 479115			2		
7	479115	TOP GEAR From 4-8252			2		
8	479117	UPPER SHAFT			1		
8	690047	UPPER SHAFT Up to 3-8164 / REPLACED BY: 479117			2		
8	479117	UPPER SHAFT From 4-8165			1		
8	479104	LOWER SHAFT From 4-8165			1		
9	690006	PARALLEL KEY Up to 4-8251 / REPLACED BY: 476160			3		
9	476160	PARALLEL KEY From 4-8252			3		
10	690043	UPPER LIMITING KEY Up to 4-8251 / REPLACED BY: 476102			1		
10	476102	UPPER LIMITING KEY From 4-8252			1		
11	690267	WASHER LO SERR 6.1x16.0x0.9 ZP Up to 4-8251 / REPLACED BY: 500356			7		
11	500356	WASHER LO SERR 6.1x16.0x0.9 ZG603 From 4-8252			7		
12	5001209	SCREW CAP HEX M6-1.0x25 G8.8 ZP			5		
13	690016	COUPLING SHAFT DRIVE 1" I.D. / TYPE GS 38 Up to 3-7929 / REPLACED BY: 407513			3		
13	407513	COUPLING SHAFT DRIVE 1" I.D. / TYPE GS 38 From 3-7930			3		
. NS	502506	. SCREW SET HEXS CUP From 3-7930			1		
. NS	5001282	. SCREW SET HEXS CUP From 3-7930			1		
NS	502512	SCREW CAP HEXS 5/16-18x1 1/2 ZP From 3-7930 / REPLACED BY: 502503			1		
14	690365	SPIDER RUBBER / TYPE GS 38 Up to 4-8251 / REPLACED BY: 5061049			3		
14	507632	SPIDER RUBBER / TYPE GS 38 From 4-8252			1		
15	690017	COUPLING SHAFT DRIVE 3/4" I.D. / TYPE GS 38 Up to 3-7929 / REPLACED BY: 407512			3		
15	407512	COUPLING SHAFT DRIVE 3/4" I.D. / TYPE GS 38 From 3-7930			3		
. NS	502503	. SCREW CAP HEXS From 3-7930			1		
. NS	5001282	. SCREW SET HEXS CUP From 3-7930			1		
15	502512	SCREW CAP HEXS 5/16-18x1 1/2 ZP From 3-7930 / REPLACED BY: 502503			1		
NS	502503	SCREW CAP HEXS 5/16-18x1 1/2 ZG603			1		
16	690233	STEP KEY Up to 4-8251 / REPLACED BY: 476039			3		
16	476039	STEP KEY From 4-8252			3		
17	690346	RIGHT ANGLE GEARBOX Up to 4-8251 / REPLACED BY: 970299			1		
17	970299	RIGHT ANGLE GEARBOX From 4-8252			1		
18	690007	PARALLEL KEY Up to 4-8251 / REPLACED BY: 476037			4		

From Y-7046 Up to 6-8805	DATE: 01/2014	PAGE: Y2-2390-30

"SLIDE-OUT" - REAR MECHANISM INSTALLATION

ITEM	PART	DESCRIPTION	XL45	MTH40	MTH45	MTH45S	NOTE
18	476037	PARALLEL KEY From 4-8252			4		
19	5001167	SCREW SET HEXS CUP 3/8-16x1/2			4		
20	505525	U-JOINT ASSY 3/4" O.D.SHAFT X 5" Up to 3-8004			2		
20	475977	U-JOINT ASSY 3/4" O.D.SHAFT X 5" From 3-8005			2		
. NS	476066	. "C" CLAMP From 3-8005			2		
. NS	500239	. SCREW CAP HEXS From 3-8005			4		
. NS	500319	. SCREW SET HEXS CUP From 3-8005			2		
NS	690320	KIT, CROSS & BEARING 15/16" O.D. X 2 1/4"			2		
21	690040	UPPER VERTICAL SHAFT Up to 4-8251 / REPLACED BY: 479127			1		
21	479127	UPPER VERTICAL SHAFT From 4-8252			1		
22	500441	WASHER FL .312x.734x.065 ZP			6		
23	500476	WASHER LO SPT .317x.586x.078 ZP			6		
24	5001263	SCREW CAP HEXS 5/16-18x1 ZP			4		
25	500183	SCREW CAP HEX 5/16-18x1 1/2 G5 PT ZP			2		
26	500778	NUT HEX 5/16-18 ZP			2		
27	690317	PILLOW BLOCK NP 3/4 Up to 4-8251 / REPLACED BY: 507630			1		
27	507630	PILLOW BLOCK NP 3/4 From 4-8252			1		
28	690046	LOWER VERTICAL SHAFT Up to 4-8251 / REPLACED BY: 479118			1		
28	479118	LOWER VERTICAL SHAFT From 4-8252			1		
29	500257	WASHER LO SPT 10.2x18.1x2.2 ZP			3		
30	500317	SCREW CAP HEXS M10-1.5x45 G8.8 ZP			11		
31	502543	NUT HEX M8-1.25 ZP			3		
32	500874	WASHER FL 8.4x17.0x1.6 ZP			2		
33	5001209	SCREW CAP HEX M6-1.0x25 G8.8 ZP			6		
34	690363	MOTOR 1/3 HP Up to 4-8251 / REPLACED BY: 563315			1		
34	563315	MOTOR 1/3 HP From 4-8252			1		
35	690338	SELF SEALING SPONGE RUBBER 1" X 5/16" TH.			1		
36	690100	STRAP ASSY Up to 4-8251 / REPLACED BY: 476074			1		
36	476074	STRAP ASSY From 4-8252			1		
37	502793	SCREW CAP HEX M6-1.0x45 G8.8 ZP			8		
38	502564	WASHER LO SPT 6.1x11.8x1.6 ZP			8		
39	690261	WASHER FL 6.4x12.0x1.6 SS Up to 4-8251 / REPLACED BY: 502573			10		
39	502573	WASHER FL 6.4x12.5x1.6 SS From 4-8252			10		
40	500256	NUT HEX M10-1.5 ZP			8		
41	690045	LOWER SHAFT			1		
42	690078	GEAR Up to 4-8251 / REPLACED BY: 479103			1		
42	479103	GEAR From 4-8252			1		
43	690222	PILLOW BLOCK ASSY W/BEARING & SKID PAD Up to 4-8251 / REPLACED BY: 479123			2		
43	479123	PILLOW BLOCK ASSY W/BEARING & SKID PAD From 4-8252 Up to 5-8384			2		
43	476399	PILLOW BLOCK ASSY W/BEARING & SKID PAD / WITH 2 HOLES TO INSTALL REE From 5-8385			2		
44	690037	SLIDING PAD Up to 4-8251 / REPLACED BY: 479101			2		

From Y-7046 Up to 6-8805	DATE: 01/2014	PAGE: Y2-2390-30

"SLIDE-OUT" - REAR MECHANISM INSTALLATION

ITEM	PART	DESCRIPTION	XL45	MTH40	MTH45	MTH45S	NOTE
44	479101	SLIDING PAD			2		
45	5001198	SCREW MA FL PH M6-1.0x16 ZP			8		
46	502644	WASHER FL 10.5x30.0x2.5 ZP			3		
47	500441	WASHER FL .312x.734x.065 ZP			2		
48	690076	GUIDE WHEEL Up to 4-8251 / REPLACED BY: 479102			1		
48	479102	GUIDE WHEEL From 4-8252			1		
49	502531	SCREW CAP HEX M6-1.0x16 G8.8 ZP			8		
50	690077	GEAR Up to 4-8251 / REPLACED BY: 479105			1		
50	479105	GEAR From 4-8252			1		
51	502511	NUT HEX NYRT M6-1.0 ZP Up to 5-8384			2		
52	690070	TRANSDUCER LINEAR SUPPORT Up to 2-7773			1		
52	065850	TRANSDUCER LINEAR SUPPORT From 2-7774 Up to 5-8384			1		
56	690056	SPACER 0.015" Up to 4-8251 / REPLACED BY: 144636			AR		
56	144636	SPACER 0.015" From 4-8252			AR		
56	690057	SPACER 0.031" Up to 4-8251 / REPLACED BY: 144637			AR		
56	144637	SPACER 0.031" From 4-8252			AR		
56	690058	SPACER 0.062" Up to 4-8251 / REPLACED BY: 144638			AR		
56	144638	SPACER 0.062" From 4-8252			AR		
56	690059	SPACER 0.125" Up to 4-8251 / REPLACED BY: 144639			AR		
56	144639	SPACER 0.125" From 4-8252			AR		
56	690404	SPACER 0,187" Up to 4-8251 / REPLACED BY: 144640			AR		
56	144640	SPACER 0,187" From 4-8252			AR		
56	690403	SPACER 0,250" Up to 4-8251 / REPLACED BY: 144641			AR		
56	144641	SPACER 0,250" From 4-8252			AR		
62	690270	SCREW MA PAN PH M4-0.7x45 ZP Up to 4-8251 / REPLACED BY: 502921			2		
62	502921	SCREW MA PAN PH M4-0.7x45 ZP From 4-8252 Up to 5-8384			2		
63	500590	NUT HEX NYRT M4-0.7 ZP Up to 5-8384			2		
64	690278	SHIM RND 1/64" Up to 4-8251 / REPLACED BY: 502923			3		
64	502923	SHIM RND 1/64" From 4-8252 Up to 5-8384			3		
65	690279	IDLER PULLEY Up to 4-8251 / REPLACED BY: 502924			1		
65	502924	IDLER PULLEY From 4-8252 Up to 5-8384			1		
66	500425	NUT HEX NYRT #4-40 SS Up to 5-8384			1		
67	690345	RIGHT ANGLE GEARBOX Up to 4-8251 / REPLACED BY: 970298			1		
67	970298	RIGHT ANGLE GEARBOX From 4-8252			1		
68	500544	SCREW CAP HEX M8-1.25x30 G8.8 ZP			4		
69	690044	SUPPORT ASSY			1		
70	502512	SCREW CAP HEXS 5/16-18x1 1/2 ZP / REPLACED BY: 502503			4		
71	500192	SCREW CAP HEX 3/8-16x1 1/4 G5 ZP			4		
72	690314	REDUCER 140:1 Up to 4-8251 / REPLACED BY: 970297			1		
72	970297	REDUCER 140:1 From 4-8252			1		
73	690337	CONNECTOR STRAIGHT-THRU / HEYCO #3231 / BLK 1/2NPT-M / .170-.450 Up to 4-8251 / REPLACED BY: 563336			1		

From Y-7046 Up to 6-8805	DATE: 01/2014	PAGE: Y2-2390-30

"SLIDE-OUT" - REAR MECHANISM INSTALLATION

ITEM	PART	DESCRIPTION	XL45	MTH40	MTH45	MTH45S	NOTE
73	563336	CONNECTOR STRAIGHT-THRU / HEYCO #3231 / BLK 1/2NPT-M / .170-.450 From 4-8252			1		
76	690259	NUT INS TYPE "A-L" OE M6-1.0 0.7-4.2 ZP Up to 4-8251 / REPLACED BY: 502842			5		
76	502842	NUT INS TYPE "A-L" OE M6-1.0 0.7-4.2 ZP From 4-8252			5		
77	690236	DECAL "MANUAL OPERATION" Up to 4-8251 / REPLACED BY: 476108			2		
77	476108	DECAL "MANUAL OPERATION" From 4-8252			2		
78	5001282	SCREW SET HEXS CUP 1/4-20x5/8			12		
NS	680038	THREAD LOCKER LOCTITE #243 / BLUE / 50ml			AR		
	N25539	THREAD LOCKER LOCTITE #262 / RED / 250ml			AR		
NS	682176	SEALANT SIKA #221 / BLACK / 310ml CARTRIDGE			AR		
83	690245	PLATE Up to 4-8251 / REPLACED BY: 479129			1		
83	479129	PLATE From 4-8252			1		
88	690261	WASHER FL 6.4x12.0x1.6 SS Up to 4-8251 / REPLACED BY: 502573			AR		
88	502573	WASHER FL 6.4x12.5x1.6 SS From 4-8252			AR		
89	690383	TAPE RUB ADH1 NEO 3/16" x 1/2" x 40' / BLACK B3C Up to 4-8251			AR		
89	506002	TAPE RUB ADH1 CC POL 3/16" x 1/2" x 40' / GREY 2520 From 4-8252			AR		
90	Call Order Desk	GUTTER			2		P
123	066080	SWITCH PROXIMITY ASSY / TEETH READER SLIDE OUT From 5-8385			1		?
124	066079	LIMITING REED SWITCH ASSY W/LED S.P.D.T. / W/SLIDE OUT From 5-8385			1		?
125	066033	SENSOR SUPPORT From 5-8385			1		
		?) SEE DETAIL SCREEN					
		P) CALL ORDER DESK FOR SPECIFIC APPLICATION					
		(V.I.N.)					

From 6-8806 Up to 8-9339	DATE: 01/2014	PAGE: Y2-2390-31

"SLIDE-OUT" - REAR MECHANISM INSTALLATION

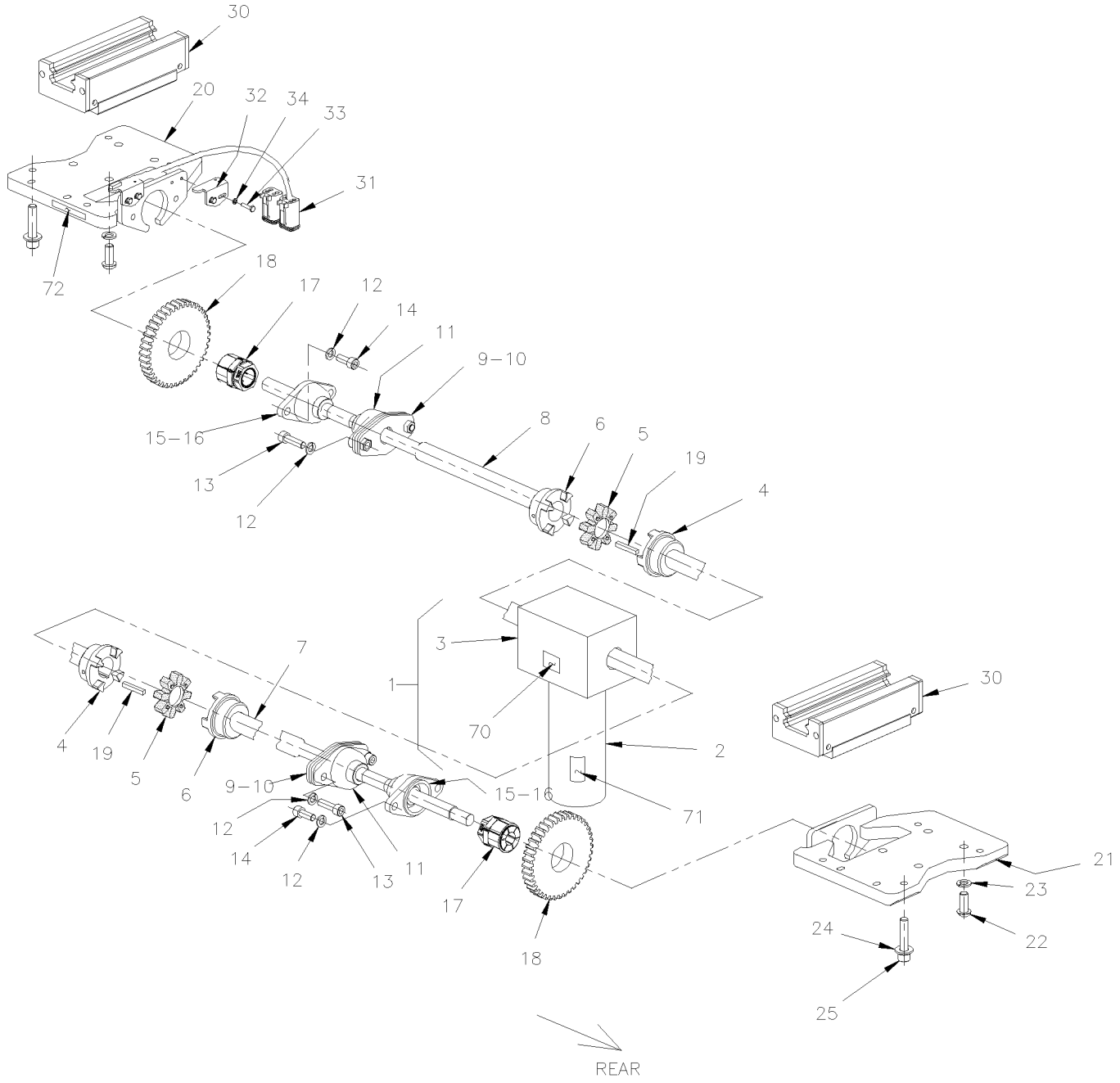

From 6-8806 Up to 8-9339	DATE: 01/2014	PAGE: Y2-2390-31

"SLIDE-OUT" - REAR MECHANISM INSTALLATION

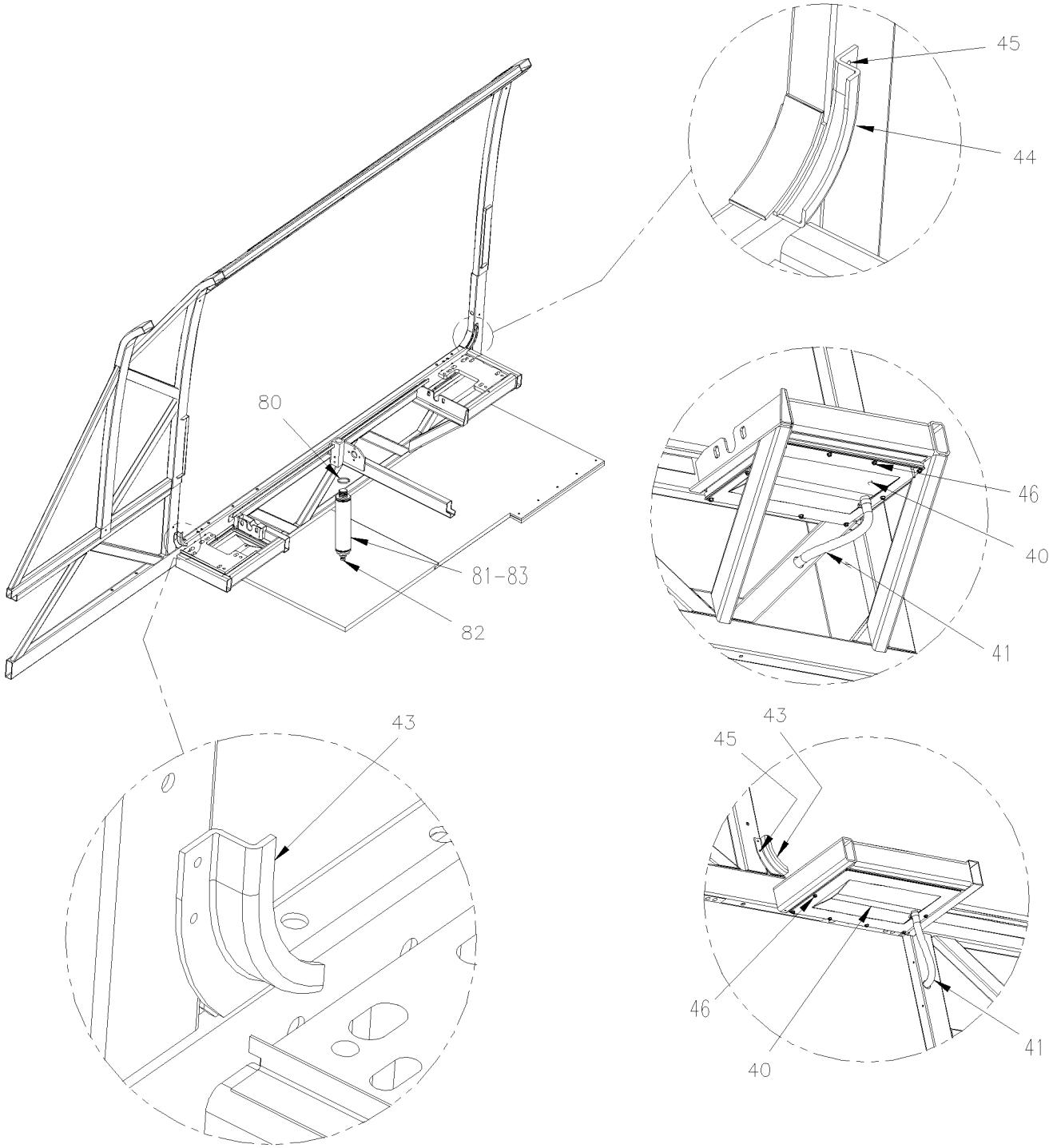

From 6-8806 Up to 8-9339	DATE: 01/2014	PAGE: Y2-2390-31

"SLIDE-OUT" - REAR MECHANISM INSTALLATION

ITEM	PART	DESCRIPTION	XL45	MTH40	MTH45	MTH45S	NOTE
1	066651	MOTOR 24V ASSY W/CONNECTOR Up to 7-9021			1		? A
1	066969	MOTOR 24V ASSY W/CONNECTOR From 7-9022			1		?
2	563936	. MOTOR 24V ASSY W/GEAR-BOX Up to 7-9021			1		
. NS	563937	. . MOTOR 24V Up to 7-9021			1		
. NS	563938	. . GEAR BOX RATIO 738/1 Up to 7-9021			1		
2	564036	. MOTOR 24V ASSY W/GEAR-BOX From 7-9022			1		
. NS	563937	. . MOTOR 24V From 7-9022			1		
. NS	563938	. . GEAR BOX RATIO 738/1 From 7-9022			1		
3	563938	. GEAR BOX RATIO 738/1			1		
NS	505533	. KEY 6MM x 6MM x 40MM			2		
NS	5001450	SCREW CAP HEX M8-1.25x20 G10.9 DP			4		
NS	500035	WASHER LO SPT .317x.586x.078 SS			4		
4	505530	COUPLING SHAFT DRIVE 20MM I.D. / TYPE GS 28			2		
5	505529	SPIDER RUBBER / TYPE GS 28			2		
6	505528	COUPLING SHAFT DRIVE 1 1/8" I.D. / TYPE GS 28			2		
7	470144	SHAFT 859MM / BACKWARD			1		
8	470141	SHAFT 776MM / FORWARD			1		
9	470129	PLATE TORQUE			2		
10	470128	SPACER 3/16"			AR		
11	507641	PILLOW BEARING ASSY			2		
NS	501499	GREASE FITTING 45° / 1/4-28			2		
NS	684754	GREASE OPTIMOL OLISTA / CARTRIGE 14Oz			AR		
12	5001620	SCREW CAP HEXS M10-1.5X35 G10.9 DP			4		
13	502616	WASHER LO SPT 10.2x18.1x2.2 SS			4		
14	5001616	SCREW CAP HEXS M10-1.5X25 G10.9 DP			4		
15	470116	PILLOW BEARING ASSY			2		
16	501490	GREASE FITTING / 1/8 NPT			1		
17	470118	COUPLING TORQUE			2		
18	470119	GEAR 5 1/4" W/40TH			2		
19	505527	KEY SQUARE 1/4" x 1/4" x 1 3/4"			2		
20	477752	BASE GUIDE ASSY FORWARD			1		
21	477753	BASE GUIDE ASSY BACKWARD			1		
22	5001621	SCREW CAP HEXS M12-1.75x55 G10.9 DP			1		
22	5001615	SCREW CAP BUT HEXS M12-1.75x30 G10.9 DP			8		
		?) SEE DETAIL SCREEN					
		A) THIS MOTOR CHANGE POSITION YOU COULD BE					
		CHANGE POSITION IF YOU REVERSE WIRE CABLE IN					
		CONNECTOR					

From 6-8806 Up to 8-9339	DATE: 01/2014	PAGE: Y2-2390-31

"SLIDE-OUT" - REAR MECHANISM INSTALLATION

ITEM	PART	DESCRIPTION	XL45	MTH40	MTH45	MTH45S	NOTE
23	500747	WASHER LO SPT 12.2x21.1x2.5 ZG603			8		
24	5001622	SCREW CAP HEXS M12-1.75x40 G10.9 DP			8		
25	5001623	NUT HEX JAM M12x1.75 SS			8		
NS	684420	SCREW MARKER LOCK			AR		
30	470107	GUIDE			2		
NS	507642	RAIL GUIDE LINEAR BEARING 254MM PLASTIC DUMMY / USE WITH 470107 ONLY			AR		W
NS	685232	RAIL GUIDE EXTENSION TOOL L.H.			AR		T
NS	685233	RAIL GUIDE EXTENSION TOOL R.H.			AR		T
31	066270	LIMITING REED SWITCH ASSY W/LED S.P.D.T. / W/SLIDE OUT Up to 6-8935 / REPLACED BY: 066852			2		?
31	066852	LIMITING REED SWITCH ASSY W/LED S.P.D.T. / W/SLIDE OUT From 6-8936			2		?
32	470120	SUPPORT LIMITING READ SWITCH			2		
33	5001146	SCREW CAP HEX M5-0.8x20 SS EMN			4		
34	500804	WASHER FL .203x.500x.047 ZG603			4		
40	Call Order Desk	ACCESS PANEL ASSY W/DRAIN / FORWARD			1		P
40	Call Order Desk	ACCESS PANEL ASSY W/DRAIN / BACKWARD			1		P
40	477888	. ACCESS PANEL			1		
40	477892	. ACCESS PANEL / BACKWARD			1		
NS	477889	. GASKET			2		
41	503707	. HOSE PVC REINFORCED 1/2			AR		
NS	504230	. HOSE CLAMP / 3/8"-7/8" SS / HS-6			2		
43	477748	GUTTER MOULDING BACKWARD			1		
44	477747	GUTTER MOULDING FORWARD			1		
45	504379	RIVET POP DOME OE 3/16x1/4 SS			4		
NS	680532	SEALANT SIKA #221 / GREY / 310ml CARTRIDGE			AR		
NS	684517	ADHESIVE SIMSON #ISR 70-03 / GREY / 310ml CARTRIDGE			AR		
46	500526	SCREW TP CAP HEXW #12x3/4 ZG603			16		
NS	5001686	WASHER FL SEAL .218x.625x20GA SS			16		
70	477987	DECAL "PAT PENDING"			1		
71	477989	DECAL " ON OVERRIDE MUST BE LOW TORQUE…" Up to 9-9021			1		
71	478251	DECAL " ON OVERRIDE MUST BE LOW TORQUE…" From 9-9022			1		
NS	477988	DECAL "SEAL MUST BE DEFLATED…"			1		
72	477990	DECAL "THIS SLIDE-OUT PLATE IS FACTORY.."			1		
NS	477991	DECAL "CAUTION" DO NOT MAKE ANY MODI.."			1		
80	507345	O-RING / ORS FITTING / #16 NEO			1		

?) SEE DETAIL SCREEN

P) CALL ORDER DESK FOR SPECIFIC APPLICATION
(V.I.N.)

T) THOSE RAIL EXTENTION TOOLS ARE FOR EASY
REMOVED SLIDE-OUT FROM STRUCTURE

W) "WARNING" YOU REQUIRE THIS DUMMY BEFORE
REMOVE SLIDE-OUT FROM STRUCTURE

From 6-8806 Up to 8-9339	DATE: 01/2014	PAGE: Y2-2390-31

"SLIDE-OUT" - REAR MECHANISM INSTALLATION

ITEM	PART	DESCRIPTION	XL45	MTH40	MTH45	MTH45S	NOTE
81	642027	CYLINDER 1 1/16"			1		
82	641126	MALE CONNECTOR / PUSH-IN FITTING / #2x1/8NPT-M BR			1		
83	470133	SAFETY PIN 1 1/4" O.D. x 120MM Up to 8-9331			1		
83	470182	SAFETY PIN 1 1/4" O.D. x 116MM From 8-9332			1		

From 6-8806 Up to 8-9339	DATE: 01/2014	PAGE: Y2-2390-31

"SLIDE-OUT" - REAR MECHANISM INSTALLATION

ITEM	PART	DESCRIPTION	XL45	MTH400	MTH445	MTH445S	NOTE

From Y-7046 Up to 6-8805	DATE: 01/2014	PAGE: Y2-2390-40
"SLIDE-OUT" - BED SUPPORT		

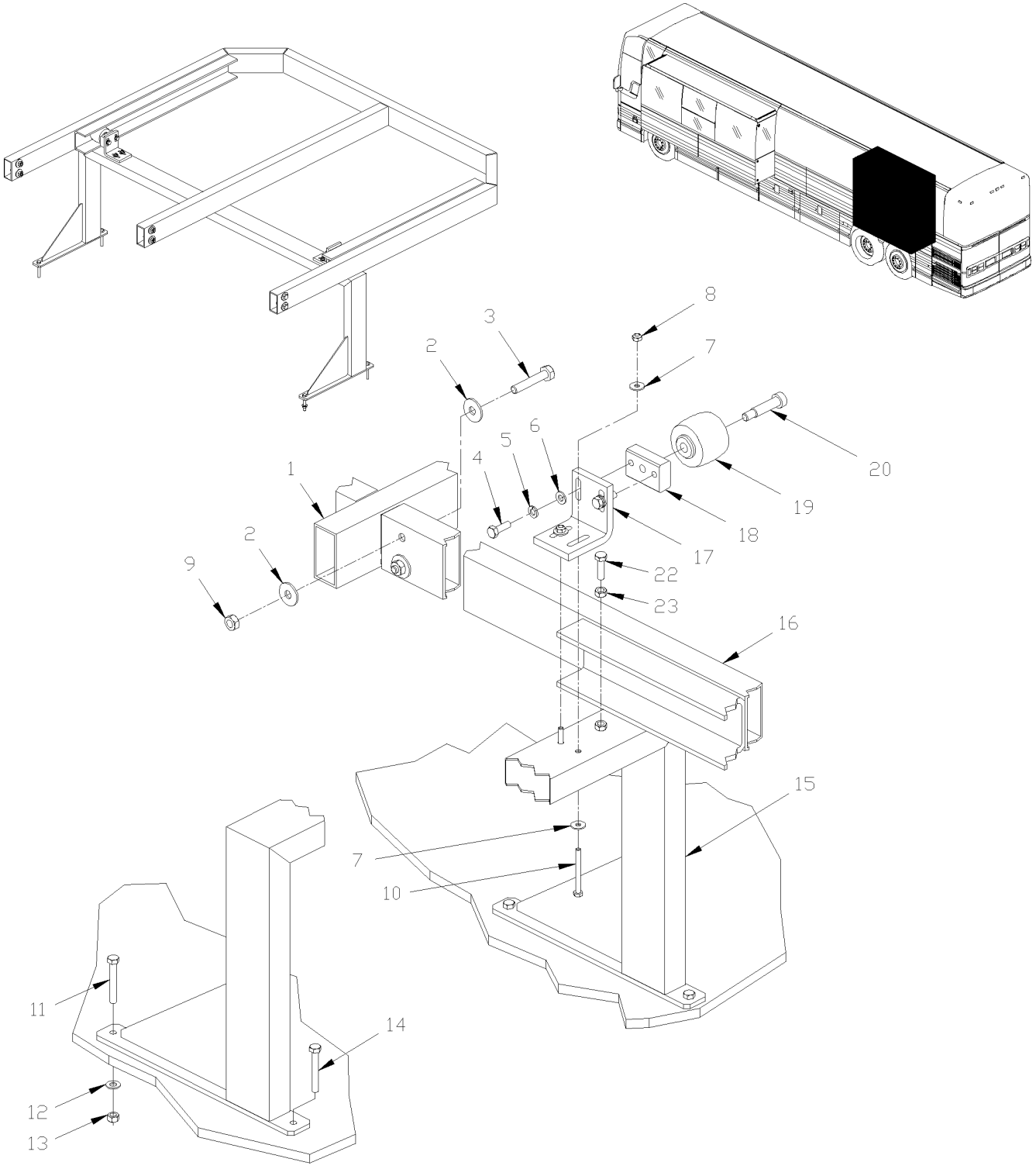

From Y-7046 Up to 6-8805	DATE: 01/2014	PAGE: Y2-2390-40

"SLIDE-OUT" - BED SUPPORT

ITEM	PART	DESCRIPTION	XL45	MTH40	MTH45	MTH45S	NOTE
1	Call Order Desk	REAR SLIDE-OUT ASSY Up to 4-8251			1		P
1	Call Order Desk	REAR SLIDE-OUT ASSY From 4-8252			1		P
2	502644	WASHER FL 10.5x30.0x2.5 ZP			12		
3	5001485	SCREW CAP HEX M10-1.5x60 G8.8 ZP			6		
4	502589	SCREW CAP HEX M8-1.25x25 G8.8 ZP			4		
5	5001003	WASHER LO SPT 8.1x12.7x2.0 ZP			4		
6	500874	WASHER FL 8.4x17.0x1.6 ZP			4		
7	690261	WASHER FL 6.4x12.0x1.6 SS / REPLACED BY: 502573			14		
7	502573	WASHER FL 6.4x12.5x1.6 SS			14		
8	502611	SCREW TP FL PH #6x1/2 ZP			10		
9	500256	NUT HEX M10-1.5 ZP			6		
10	509839	SCREW CAP HEX M6-1.0x60 G8.8 ZP			4		
11	Call Order Desk	SCREW CAP HEX 5/16-18x2 1/4 SS			2		P
12	500441	WASHER FL .312x.734x.065 ZP			1		
13	500701	NUT HEX 5/16-18 ZP / REPLACED BY: 5001189			1		
14	Call Order Desk	SCREW TP HEX CAP 5/16-12x2 1/4 ZP			1		P
15	Call Order Desk	SUPPORT REAR BED Up to 4-8251			1		P
15	Call Order Desk	BED STRUCTURE ASSY			1		P
16	690215	SUPPORT REAR BED Up to 4-8251 / REPLACED BY: 407525			1		
16	407525	SUPPORT REAR BED From 4-8252			1		
17	476178	ANGLE SUPPORT			2		
18	476177	PLATE			2		
19	476181	WHEEL			2		
20	5001064	SCREW SHR HEXS 12x40 {M10-1.5			2		
21	680038	THREAD LOCKER LOCTITE #243 / BLUE / 50ml			AR		
22	500544	SCREW CAP HEX M8-1.25x30 G8.8 ZP			2		
23	502543	NUT HEX M8-1.25 ZP			2		
		P) CALL ORDER DESK FOR SPECIFIC APPLICATION					
		(V.I.N.)					

From 6-8806 Up to 8-9339	DATE: 01/2014	PAGE: Y2-2390-41
"SLIDE-OUT" - BED SUPPORT		

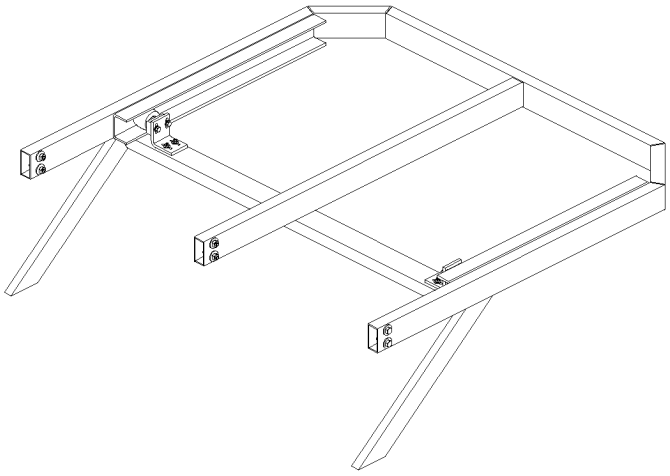

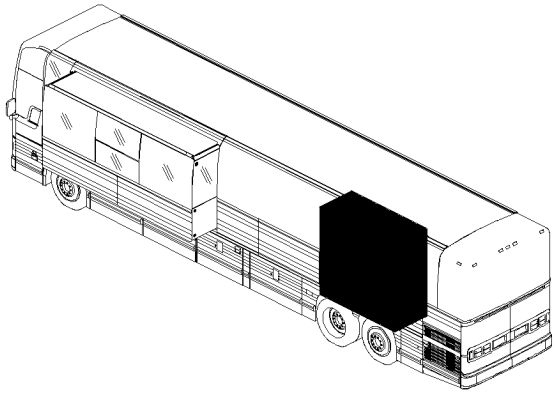

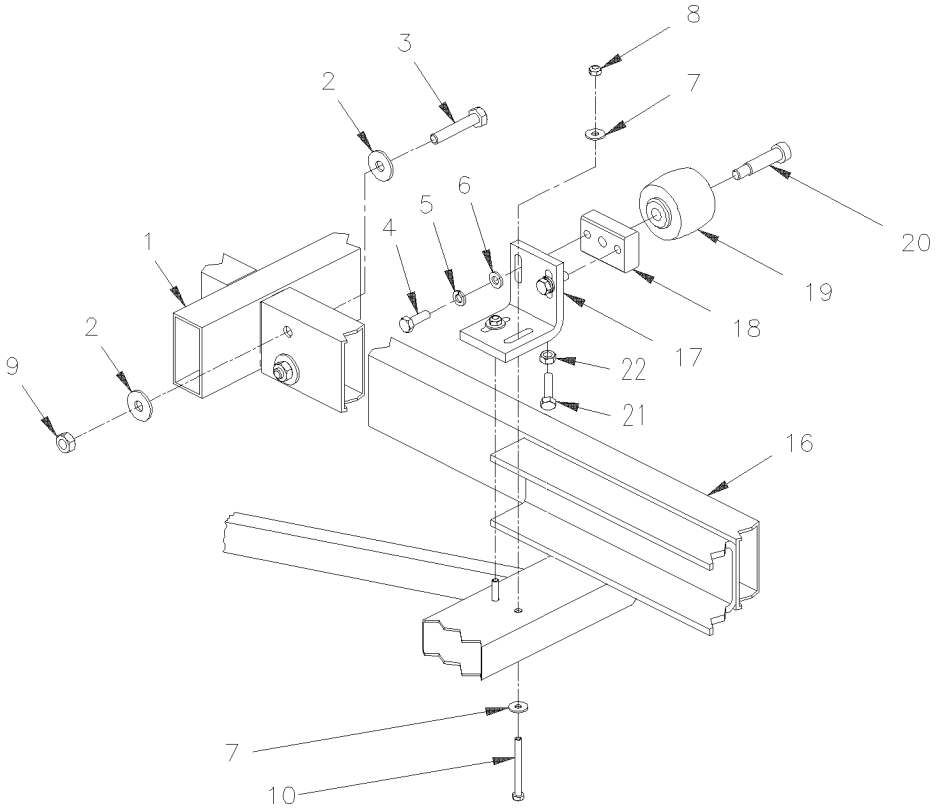

From 6-8806 Up to 8-9339	DATE: 01/2014	PAGE: Y2-2390-41

"SLIDE-OUT" - BED SUPPORT

ITEM	PART	DESCRIPTION	XL45	MTH40	MTH45	MTH45S	NOTE
1	Call Order Desk	REAR SLIDE-OUT ASSY 7.5'			1		P
2	502644	WASHER FL 10.5x30.0x2.5 ZP			12		
3	5001485	SCREW CAP HEX M10-1.5x60 G8.8 ZP			6		
4	502589	SCREW CAP HEX M8-1.25x25 G8.8 ZP			4		
5	5001003	WASHER LO SPT 8.1x12.7x2.0 ZP			4		
6	500874	WASHER FL 8.4x17.0x1.6 ZP			4		
7	500440	WASHER FL .250x.562x.065 ZP			8		
8	502511	NUT HEX NYRT M6-1.0 ZP			4		
9	5001570	NUT HEX NYRT M10-1.5 ZP			6		
10	509839	SCREW CAP HEX M6-1.0x60 G8.8 ZP			4		
16	407525	SUPPORT REAR BED			1		
17	477815	ANGLE SUPPORT			2		
18	476177	PLATE			2		
19	476181	WHEEL			2		
20	5001064	SCREW SHR HEXS 12x40 {M10-1.5			2		
NS	680038	THREAD LOCKER LOCTITE #243 / BLUE / 50ml			AR		
21	502651	SCREW CAP HEX M8-1.25x35 G8.8 ZP			1		A
22	502543	NUT HEX M8-1.25 ZP			1		A
		P) CALL ORDER DESK FOR SPECIFIC APPLICATION					
		(V.I.N.)					
		A) FIXED TO ANGLE TO ADJUST HEIGHT					

From Y-7046 Up to 6-8805	DATE: 01/2014	PAGE: Y2-2390-50
"SLIDE-OUT" - CYLINDER LOCK PIN ASSY		

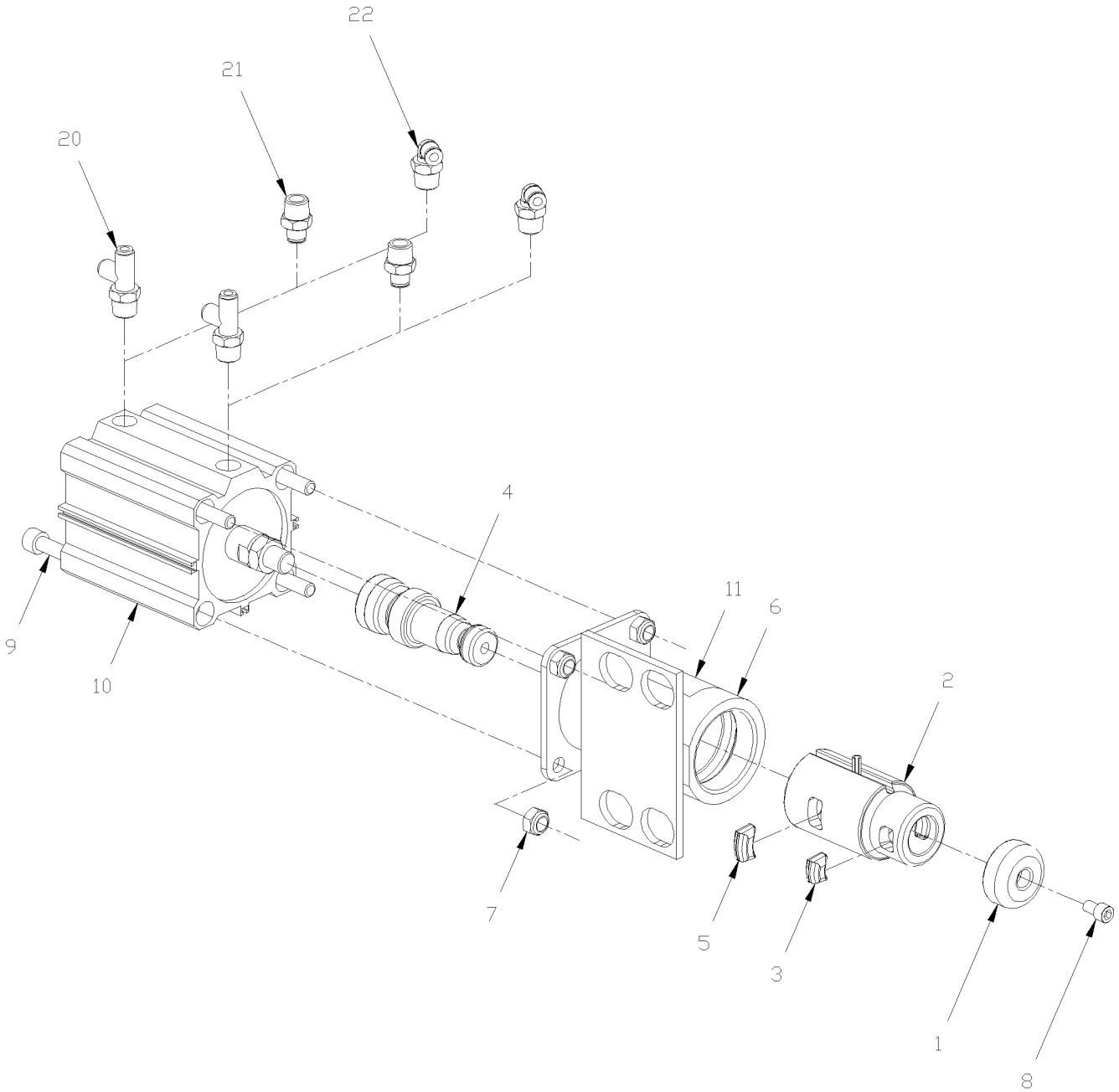

From Y-7046 Up to 6-8805	DATE: 01/2014	PAGE: Y2-2390-50

"SLIDE-OUT" - CYLINDER LOCK PIN ASSY

ITEM	PART	DESCRIPTION	XL45	MTH40	MTH45	MTH45S	NOTE
	N.P.N.	CYLINDER AIR ASSY / W/2 SHOES 5 DEG Up to 1-7918			AR		4 A,B
	641976	CYLINDER AIR ASSY / W/2 SHOES 7 DEG From 1-7919			AR		A
. NS	690402	. SLEEVE & SLIDING PIN ASSY W/SHOES 7 DEG From 1-7919			1		
1	641974	. . SWIVEL HEAD Up to 4-8251 / REPLACED BY: 144627			1		
1	144627	. . SWIVEL HEAD From 4-8252			1		
2	690397	. . SLEEVE SLIDING / 2 SHOES MODEL From 1-7919 Up to 4-8251 / REPLACED BY: 144628			1		
2	144628	. . SLEEVE SLIDING / 2 SHOES MODEL From 4-8252			1		
3	641967	. . SHOE PIN SMALL 7 DEG From 1-7919 Up to 4-8251 / REPLACED BY: 144631			2		
3	144631	. . SHOE PIN SMALL 7 DEG From 4-8252			1		
4	641959	. . SHAFT PIN 7 DEG From 1-7919 Up to 4-8251 / REPLACED BY: 144630			1		
4	144630	. . SHAFT PIN 7 DEG From 4-8252			1		
5	641968	. . SHOE PIN LARGE 7 DEG From 1-7919 Up to 4-8251 / REPLACED BY: 144629			2		
5	144629	. . SHOE PIN LARGE 7 DEG From 4-8252			1		
6	641975	. RECEPTACLE ASSY From 1-7919 Up to 4-8251 / REPLACED BY: 144624			1		
6	144624	. RECEPTACLE ASSY From 4-8252			1		
7	502859	. NUT HEX NYRT M10-1.5 ZG603 Up to 4-8251			4		
7	5001570	. NUT HEX NYRT M10-1.5 ZP From 4-8252			4		
8	690393	. SCREW CAP HEXS 5/16-18x1/2 ZP			1		
9	690417	. SCREW CAP HEXS M10-1.5x140			4		
10	690412	. CYLINDER AIR			1		
11	144622	DECAL / "DO NOT READJUST..."			1		
20	690329	MALE RUN TEE SWIVEL / PUSH-IN FITTING / #4x#4x1/8NPT-M BR Up to 1-7499			1		
20	Call Order Desk	BUSHING REDUCER 3/8 NPT X 1/8 NPT Up to 1-7499			1		P
20	641960	MALE RUN TEE / PUSH-IN FITTING / #4x#4x3/8NPT-M PLAS From 1-7500			1		
20	641961	MALE RUN TEE / PUSH-IN / W/RESTRICTION #4x#4x 3/8NPT-M x .71ID PLAS From 1-7500			1		
21	641242	MALE CONNECTOR / PUSH-IN FITTING / #4x1/8NPT-M BR Up to 1-7499			1		
21	Call Order Desk	BUSHING REDUCER 3/8 NPT X 1/8 NPT Up to 1-7499			1		P
21	641964	MALE CONNECTOR / PUSH-IN FITTING / #4x3/8NPT-M PLAS From 1-7500			1		
21	641965	MALE CONNECTOR / PUSH-IN / W/RESTRICTION #4x 3/8NPT-M x .71ID PLAS From 1-7500			1		
22	690328	MALE ELBOW 90° SWIVEL / PUSH-IN FITTING / #4x1/8NPT-M BR Up to 1-7499			1		
22	Call Order Desk	BUSHING REDUCER 3/8 NPT X 1/8 NPT Up to 1-7499			1		P
22	641962	MALE ELBOW 90° / PUSH-IN FITTING / #4x3/8NPT-M PLAS From 1-7500			1		
22	641963	MALE ELBOW 90° / PUSH-IN / W/RESTRICTION #4x3/8NPT-M x .71ID PLAS From 1-7500			1		
		4) NO PARTS NUMBER					
		P) CALL ORDER DESK FOR SPECIFIC APPLICATION					
		(V.I.N.)					
		A) THIS CYLINDER ARE SUPPERSEEDED BY # 641976					
		B) THIS MODEL BE USED APROXIMATIVELY ON 210					
		VEHICLES					