Automatic fire suppression system

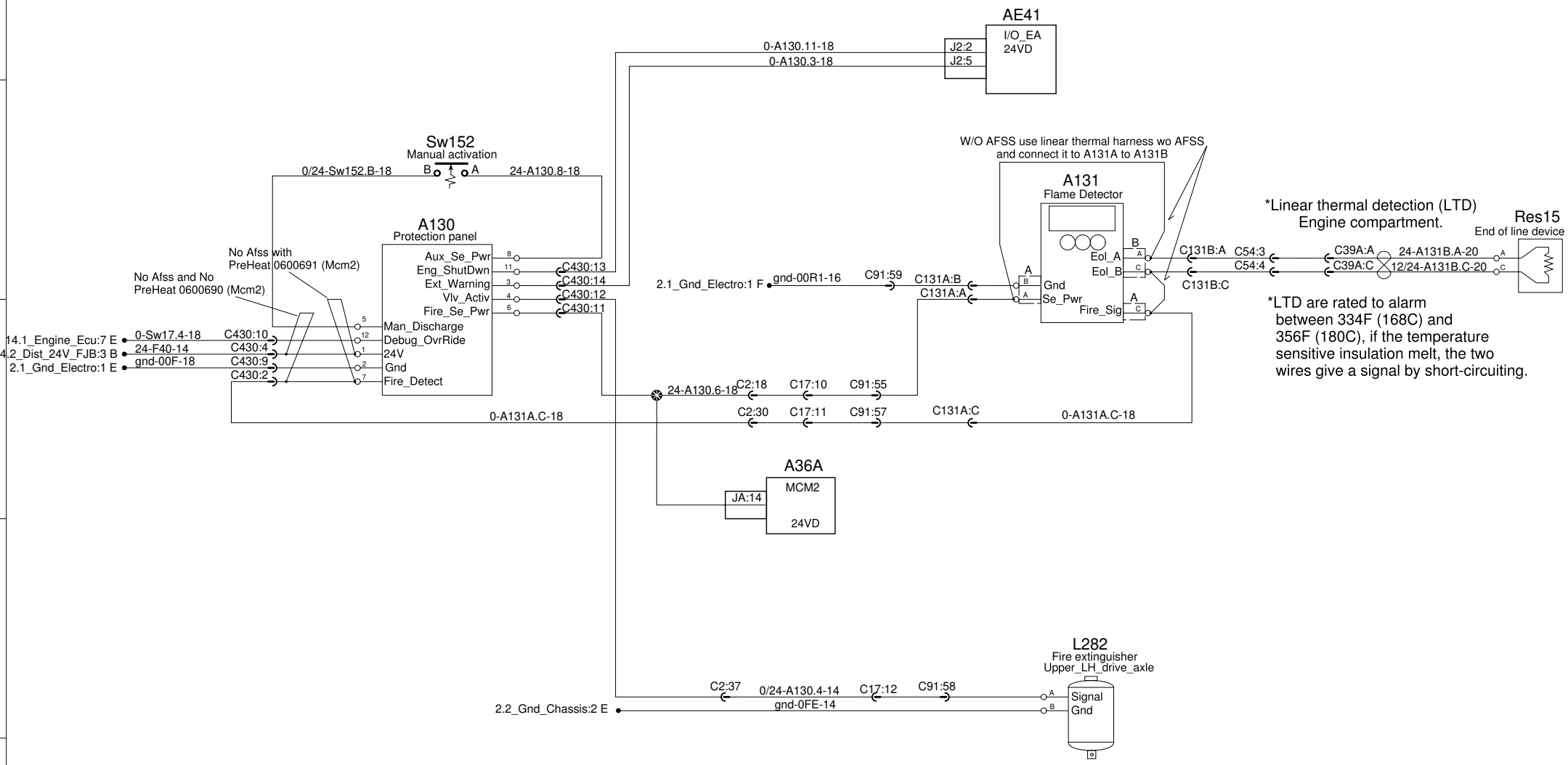

PREVOST®	WIRING DIAGRAM	No:D062160	Page:38.1	Rev:7