BATTERIES STANDARD AND 8D

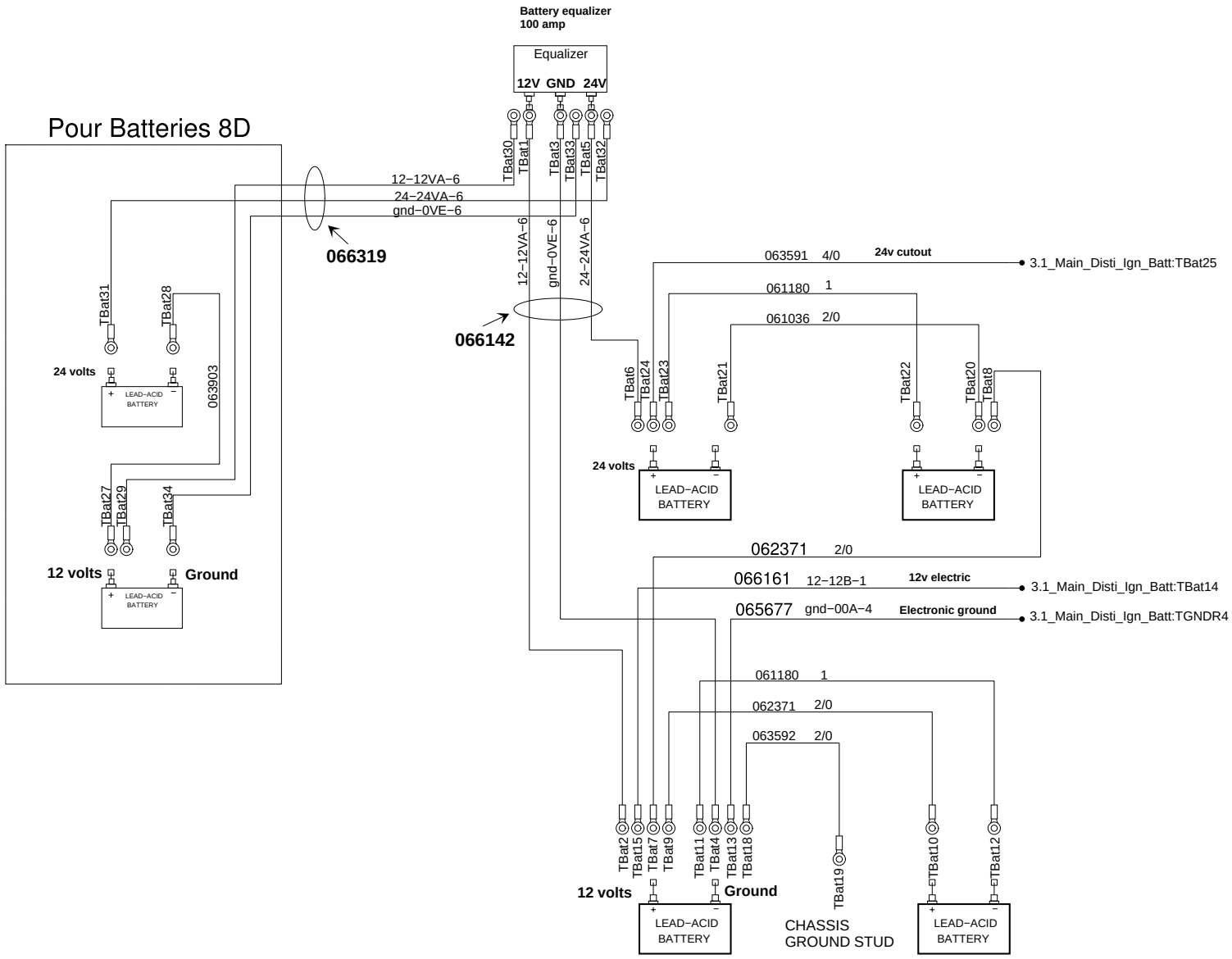

PREVOST	WIRING DIAGRAM	No:D061020	Page:1.1	Rev:1