Cluster Pollak

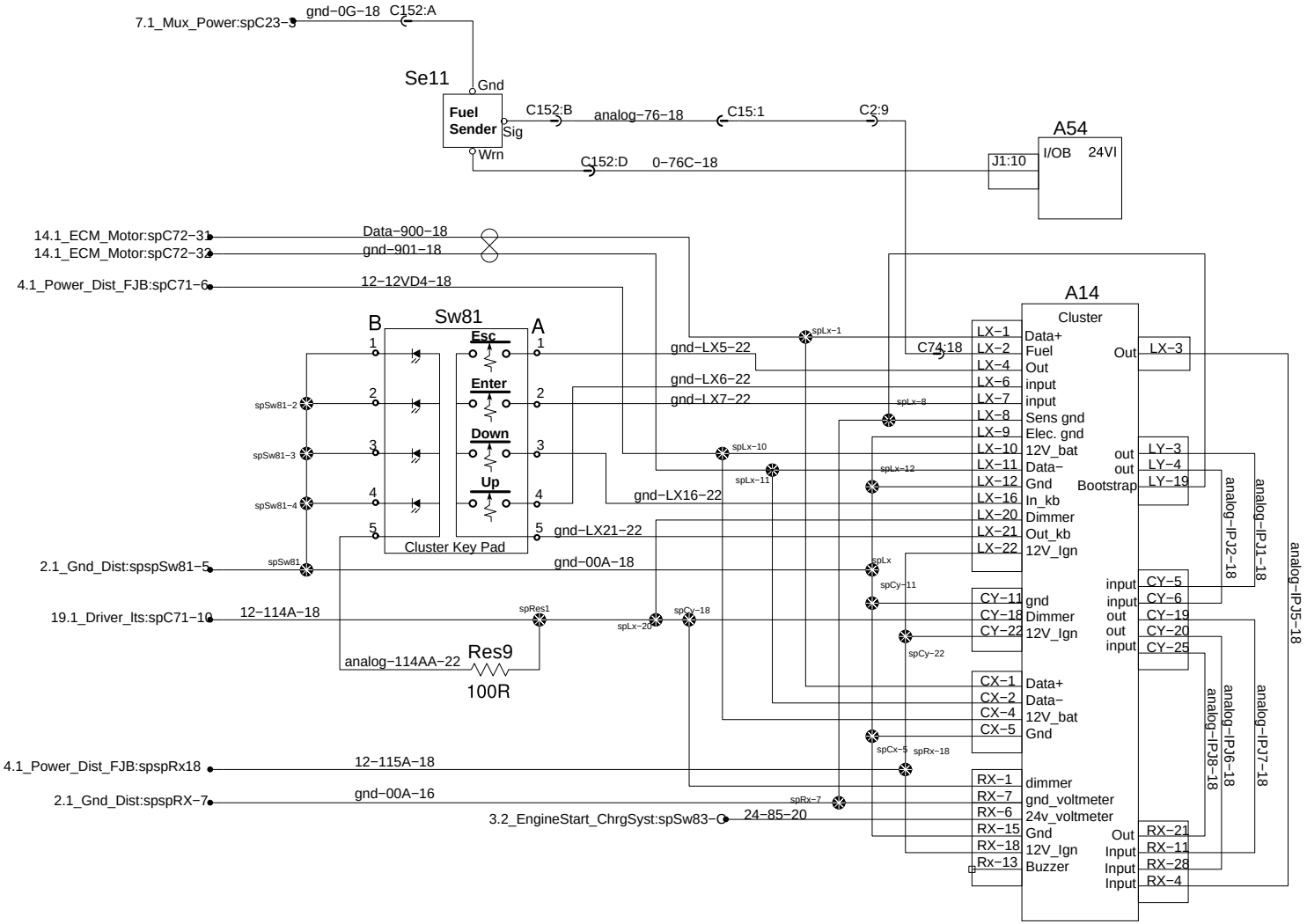

Prevost	WIRING DIAGRAM	No:D061020	Page:10.1	Rev:2