ABS ESP

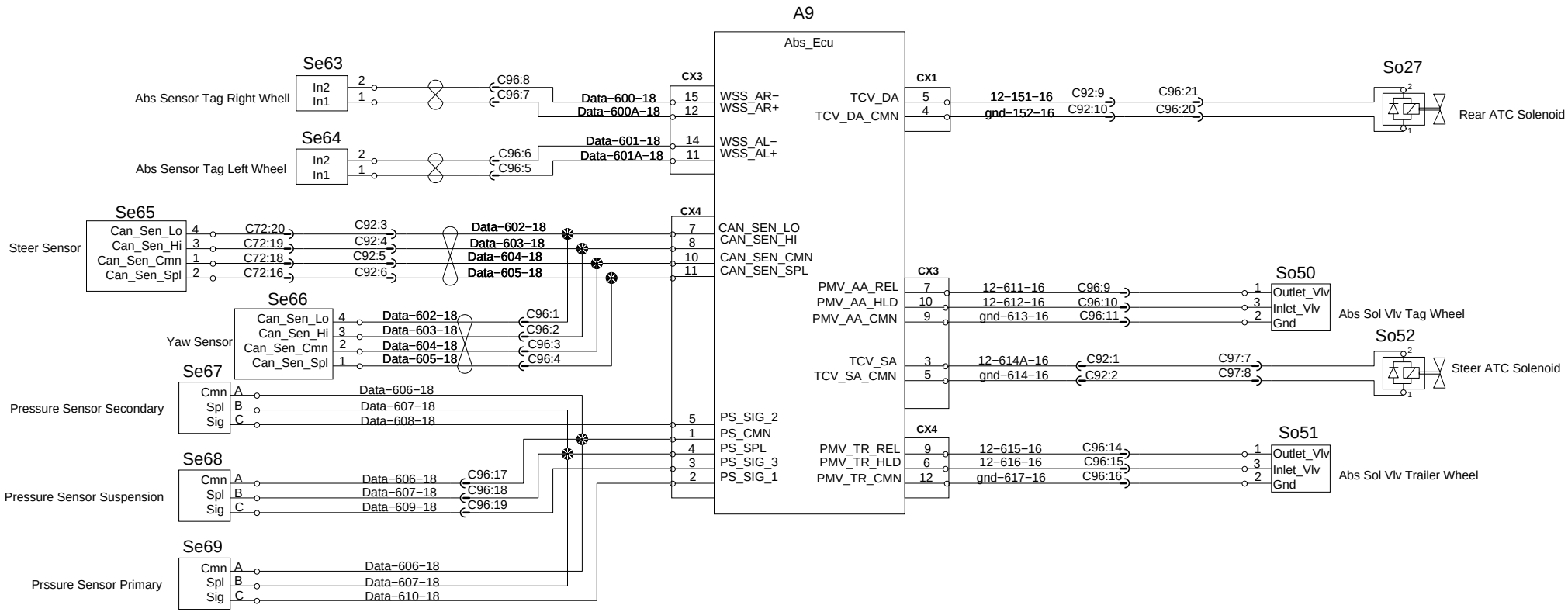

PREVOST®	WIRING DIAGRAM	No:D061020	Page:16.2	Rev:21