Driver lights

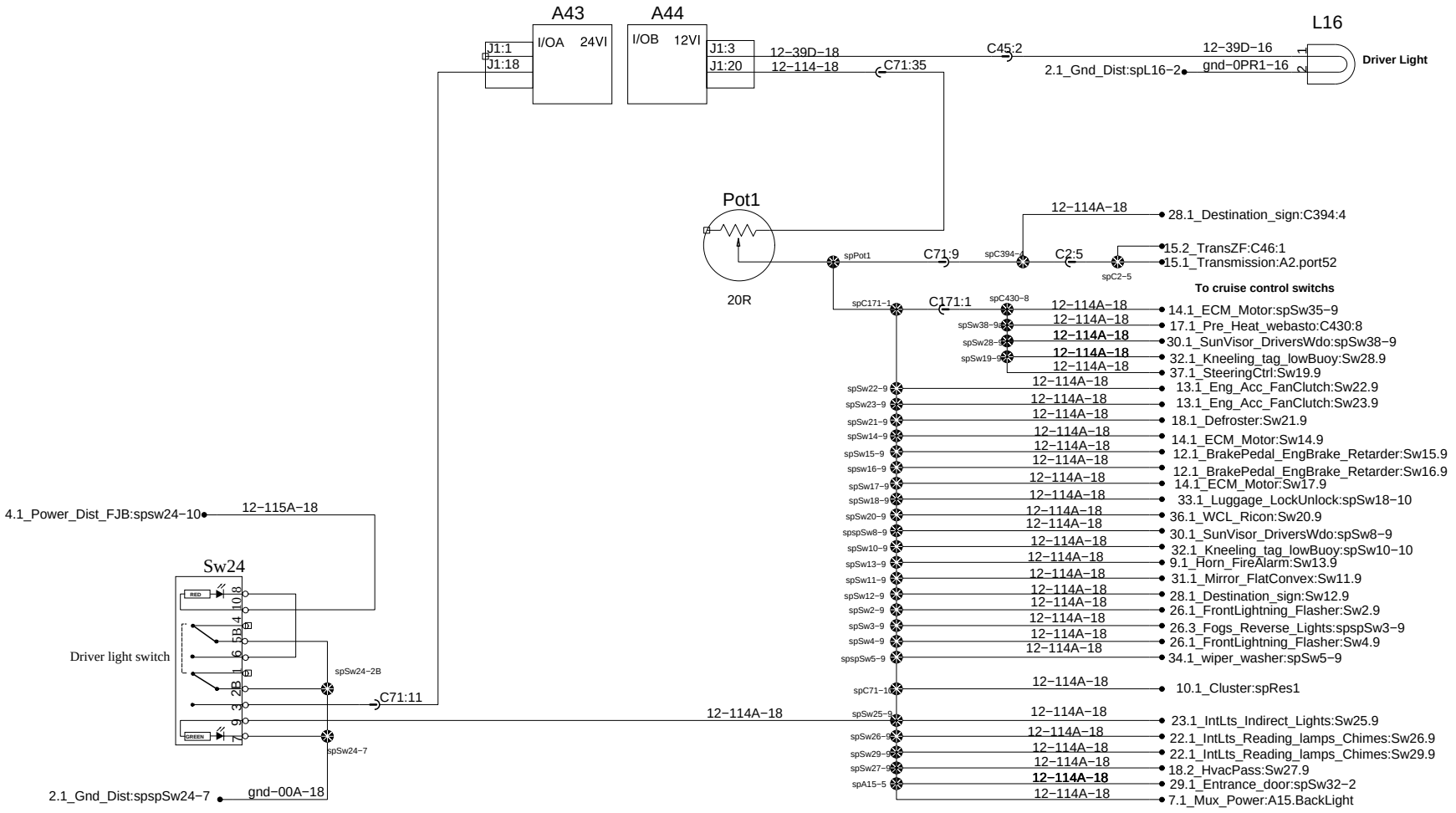

PREVOST	WIRING DIAGRAM	No:D061020	Page:19.1	Rev:1