Driver lights

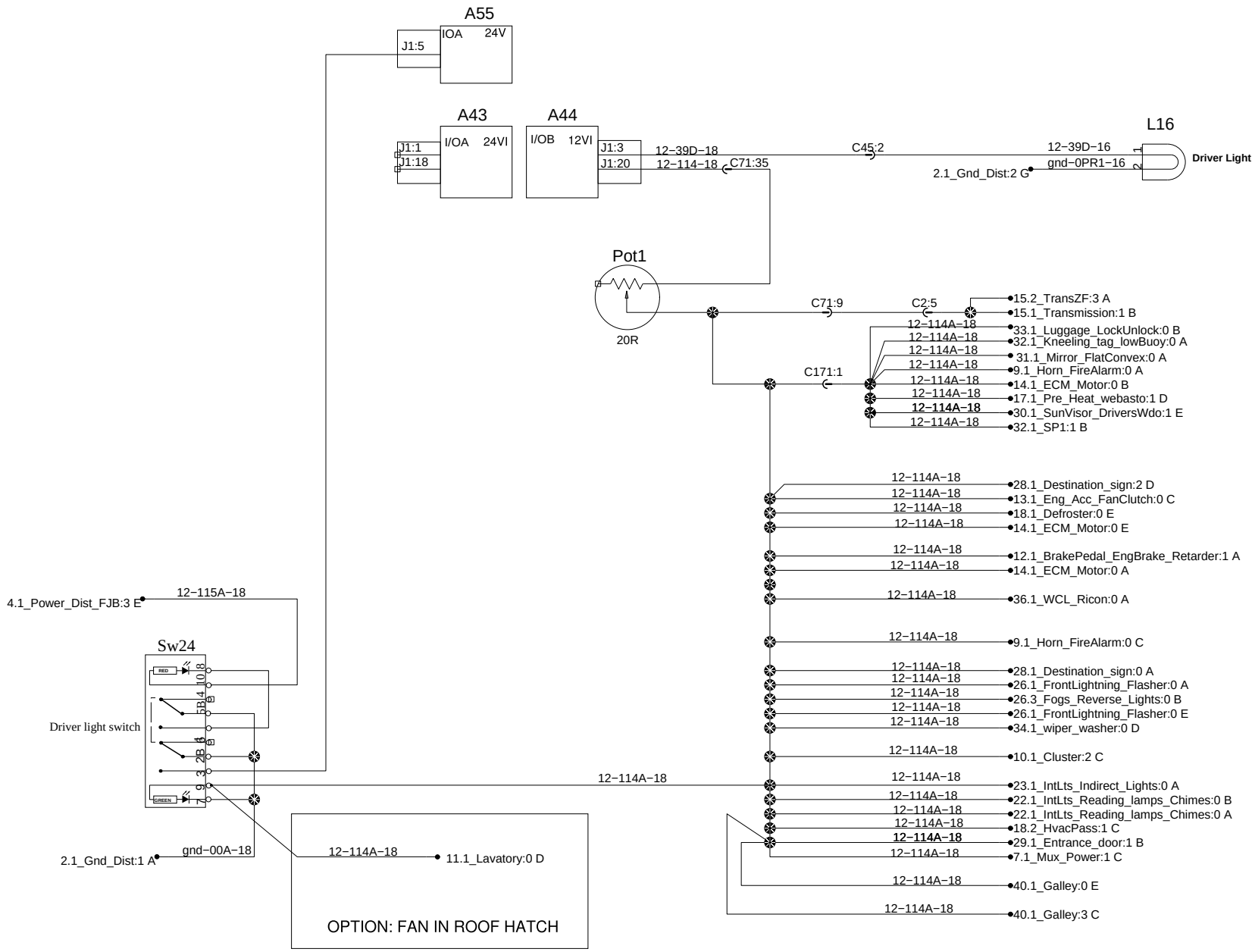

PREVOST®	WIRING DIAGRAM	No:D061020	Page:19.1 sp2	Rev:22