Engine Start and Charging system

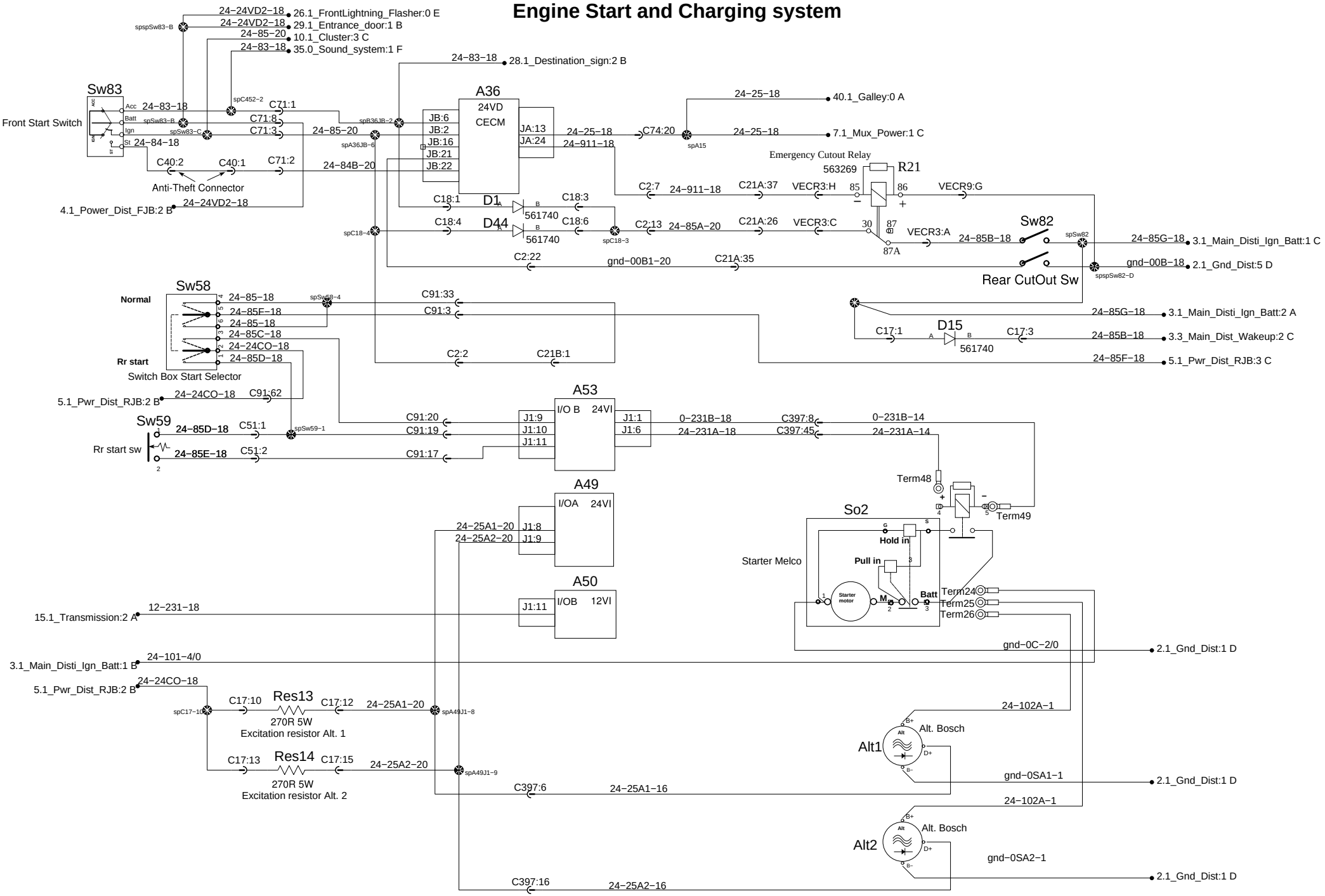

PREVOST®

WIRING DIAGRAM

No:D061020

Page:3.2

Rev:16