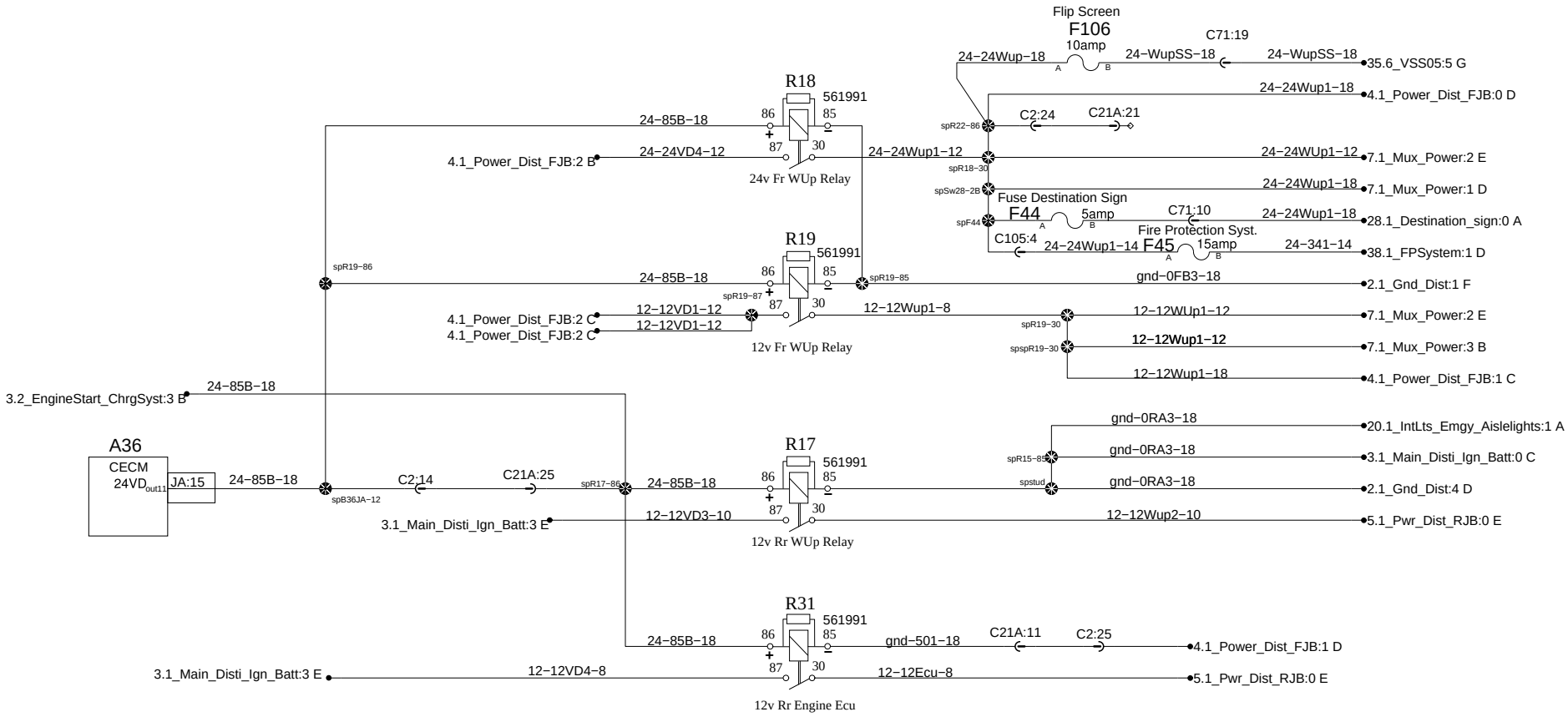MAIN DISTRIBUTION Wake−Up