NAVIGATION SYSTEM WITH BACKUP CAMERA

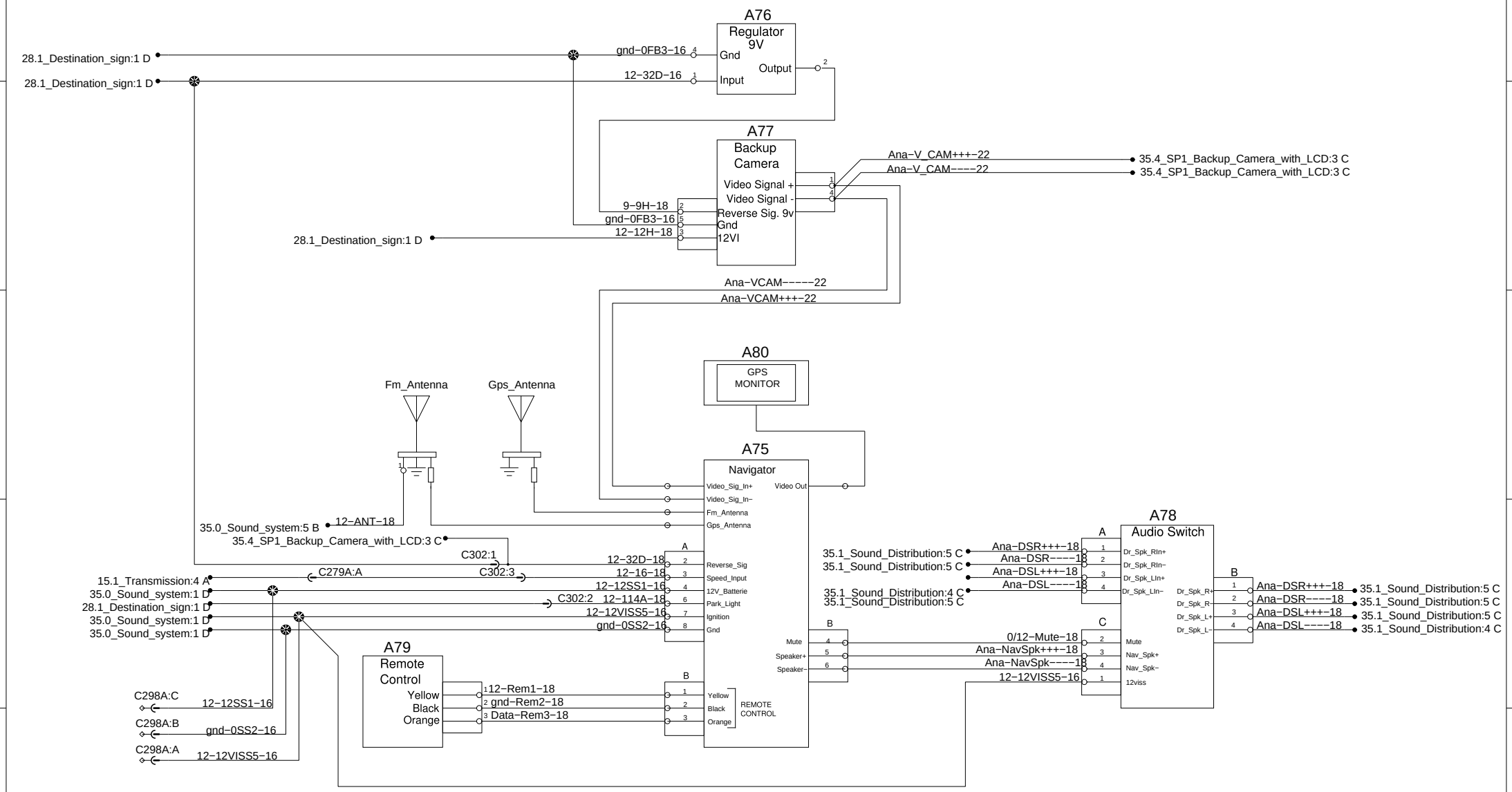

PREVOST®

WIRING DIAGRAM

No:D061020

Page:35.4

Rev:14