Horn, Fire Alarm and Test Switch

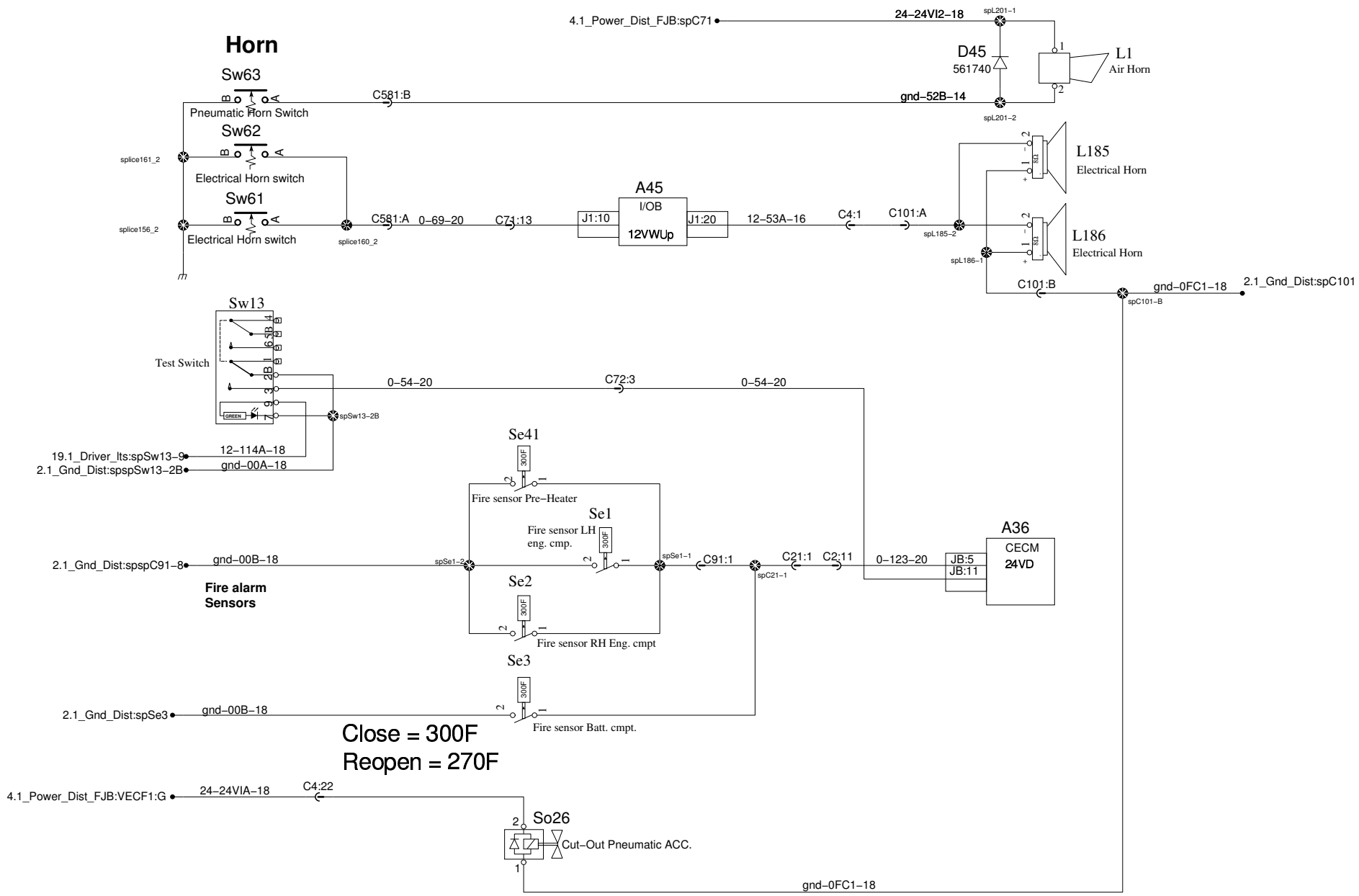

PREVOST CAR	WIRING DIAGRAM	No:D061020	Page:9.1	Rev:0