Lavatory and No Smoking Sign

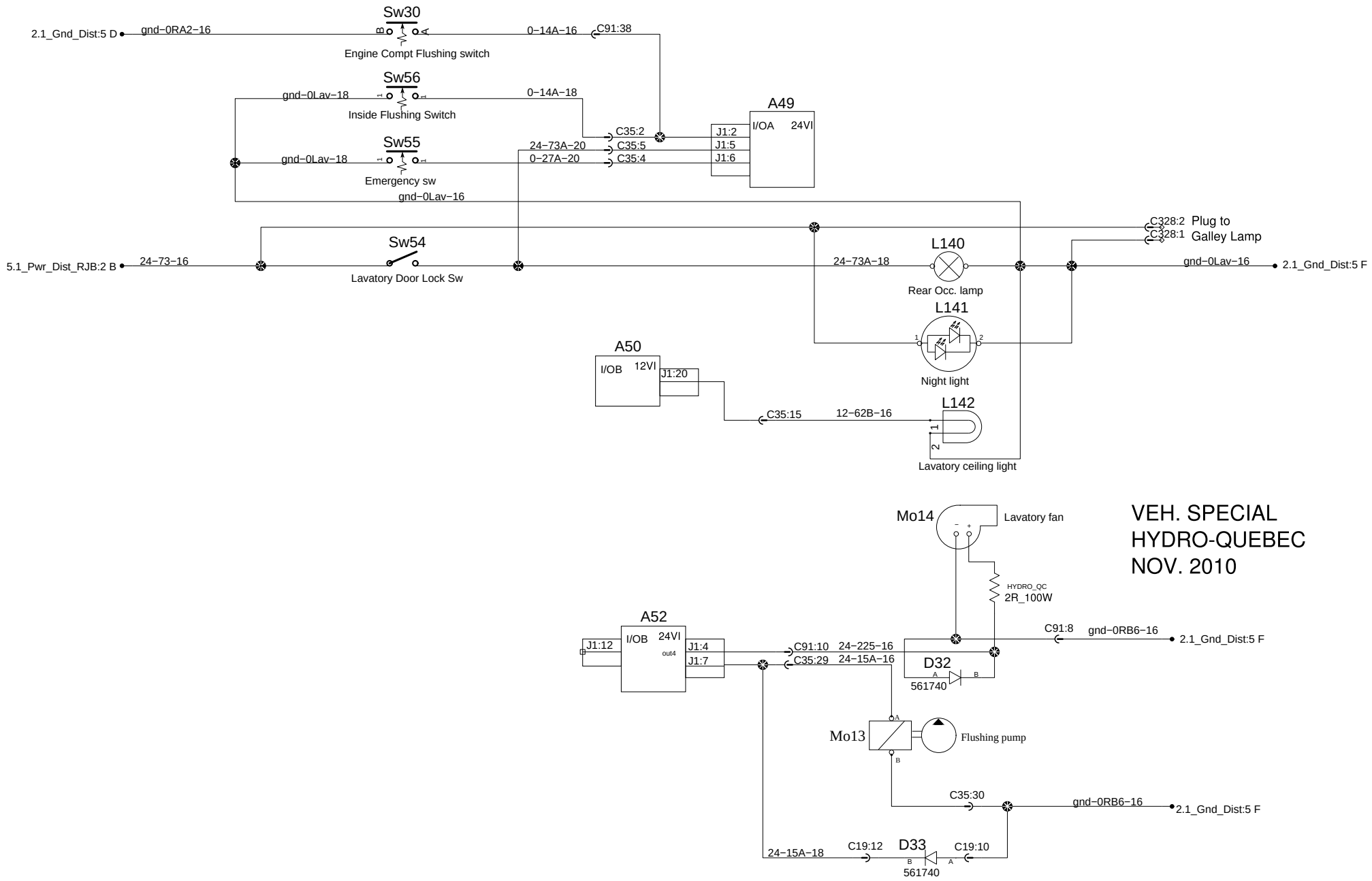

PREVOST®	WIRING DIAGRAM	No:D061030	Page:11.1 SP2	Rev:00