Water PreHeater (Webasto or Pro−Heat)

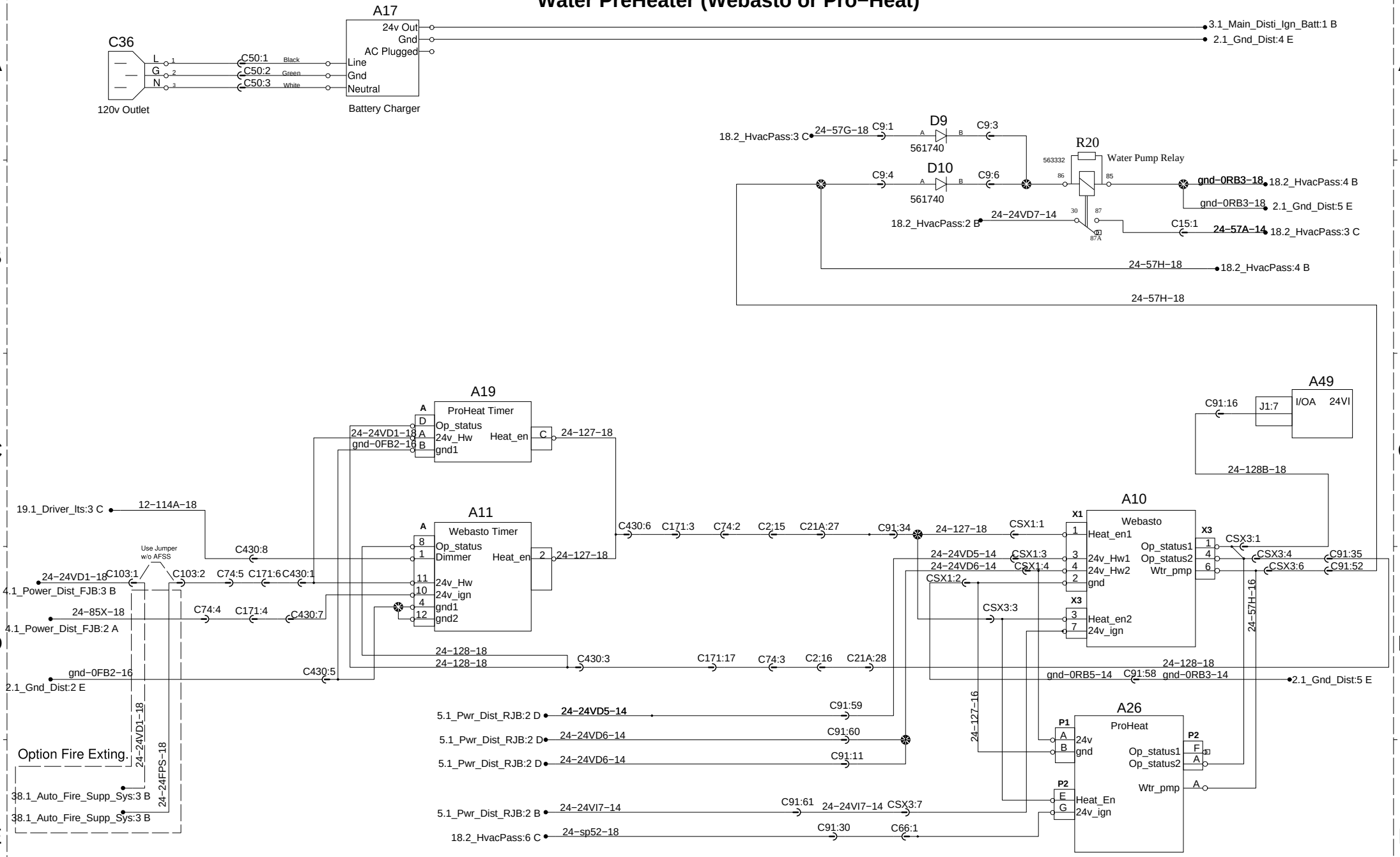

PREVOST®	WIRING DIAGRAM	No:D061030	Page:17.1	Rev:26