Entrance door

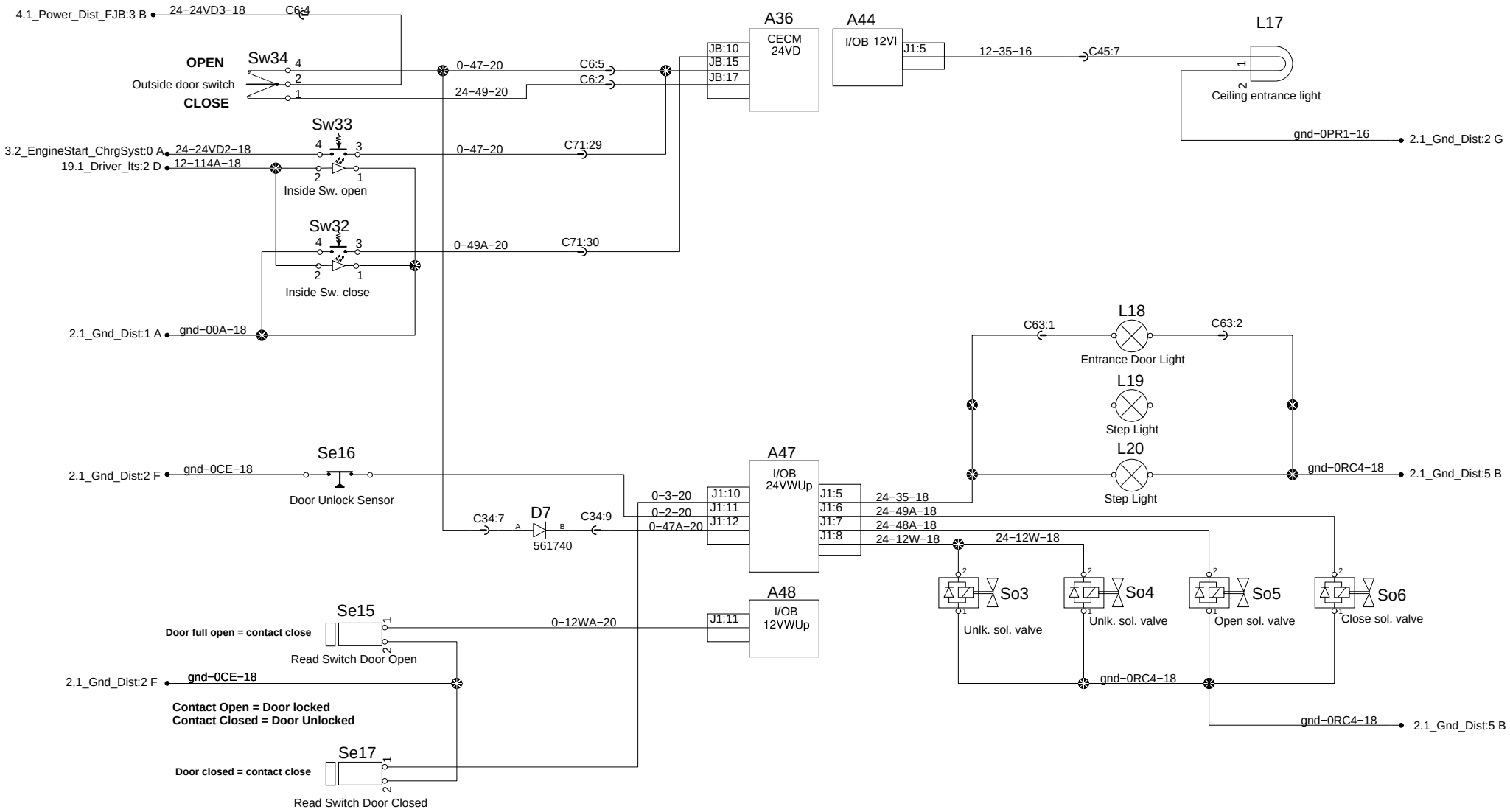

PREVOST®	WIRING DIAGRAM	No:D061020	Page:29.1	Rev:00