Cluster

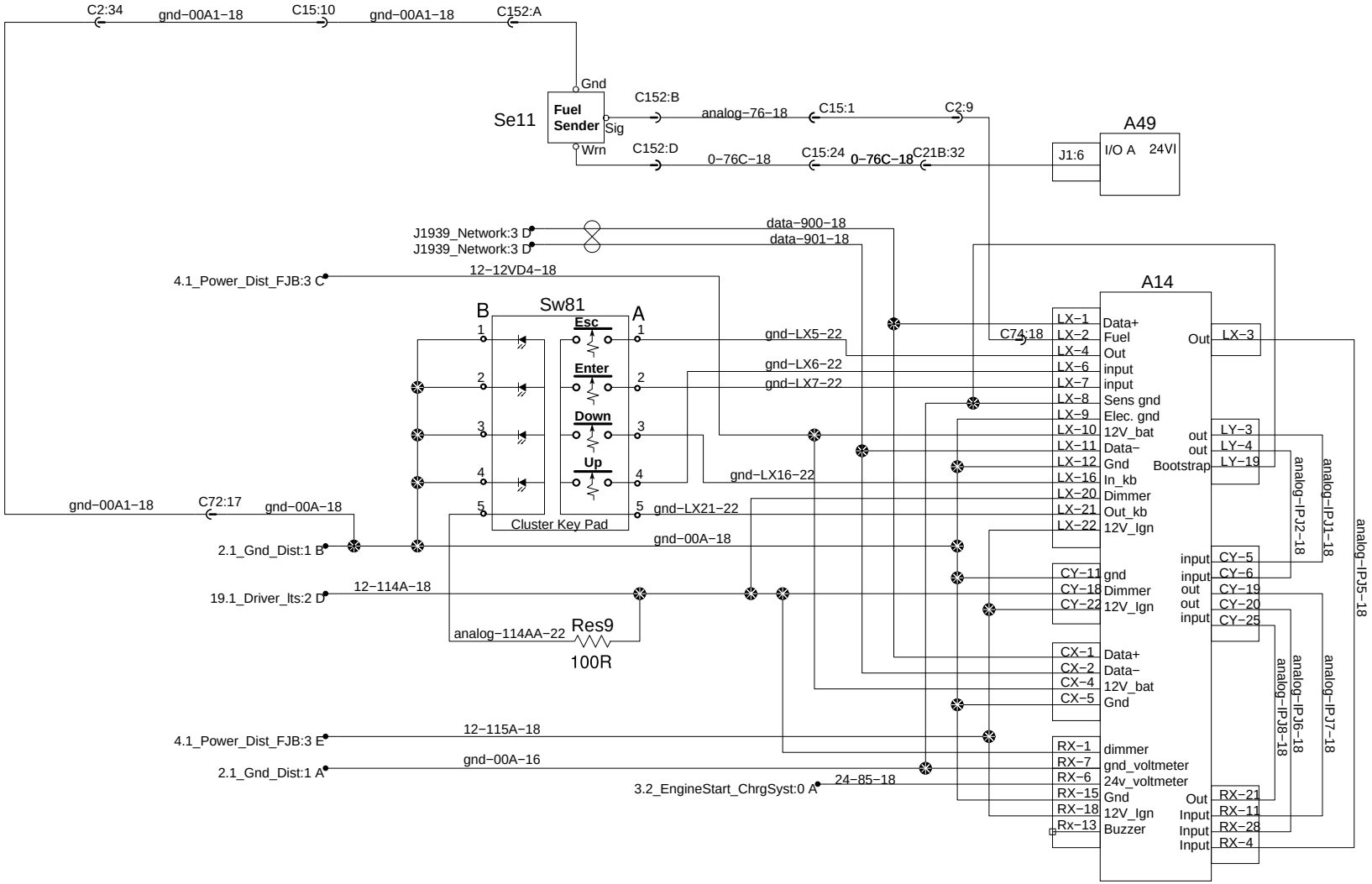

PREVOST®	WIRING DIAGRAM	No:D061040	Page:10.1	Rev:08