ABS ESP

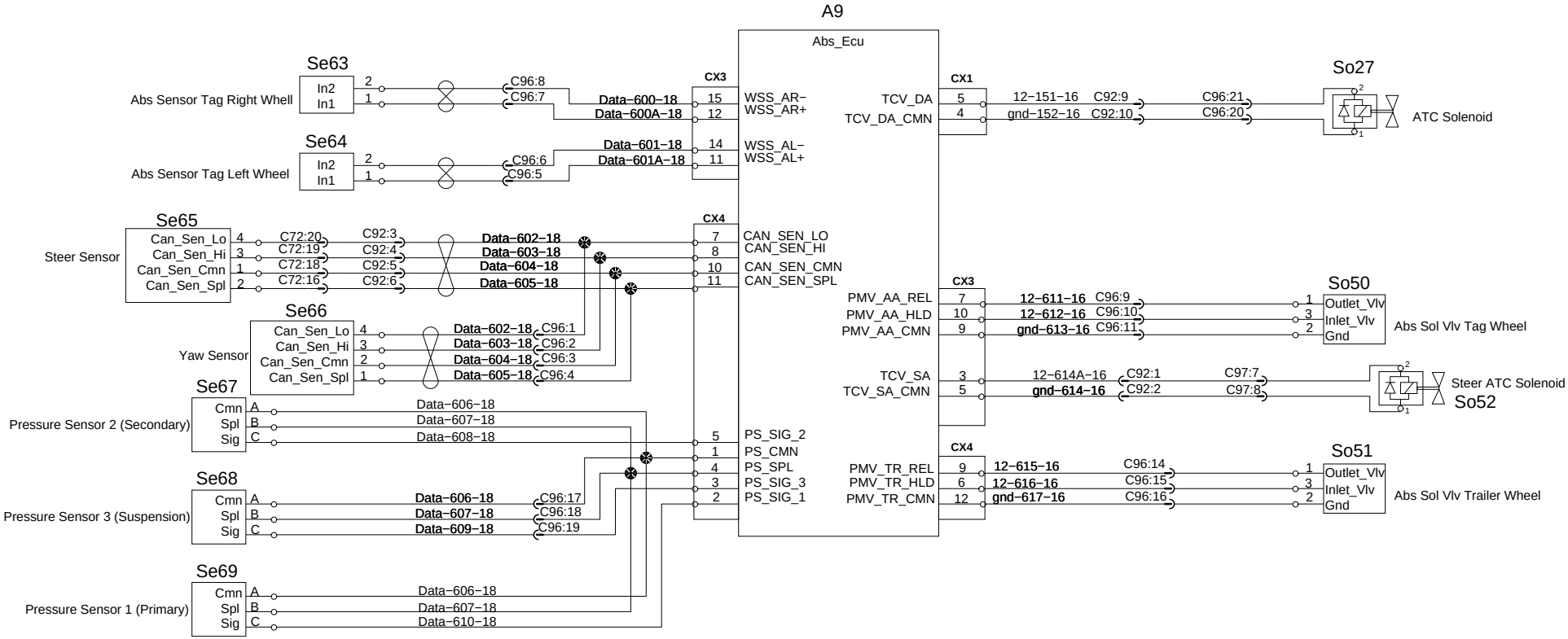
A9
Abs_Ecu
Se63
In2
In1
Abs Sensor Tag Right Whell
Se64
Abs Sensor Tag Left Wheel
Se65
Can_Sen_Lo
Can_Sen_Hi
Can_Sen_Cmn
Can_Sen_Spl
Steer Sensor
Se66
Yaw Sensor
Se67
Cmn
Spl
Sig
Pressure Sensor 2 (Secondary)
Se68
Pressure Sensor 3 (Suspension)
Se69
Pressure Sensor 1 (Primary)
C96:8
C96:7
C96:6
C96:5
Data−600−18
Data−600A−18
Data−601−18
Data−601A−18
CX3
WSS_AR−
WSS_AR+
WSS_AL−
WSS_AL+
CX4
CAN_SEN_LO
CAN_SEN_HI
CAN_SEN_CMN
CAN_SEN_SPL
PS_SIG_2
PS_CMN
PS_SPL
PS_SIG_3
PS_SIG_1
TCV_DA
TCV_DA_CMN
CX1
12−151−16
gnd−152−16
C92:9
C92:10
C96:21
C96:20
So27
ATC Solenoid
PMV_AA_REL
PMV_AA_HLD
PMV_AA_CMN
12−611−16
12−612−16
gnd−613−16
C96:9
C96:10
C96:11
So50
Outlet_Vlv
Inlet_Vlv
Gnd
Abs Sol Vlv Tag Wheel
TCV_SA
TCV_SA_CMN
12−614A−16
gnd−614−16
C92:1
C92:2
C97:7
C97:8
Steer ATC Solenoid
So52
PMV_TR_REL
PMV_TR_HLD
PMV_TR_CMN
12−615−16
12−616−16
gnd−617−16
C96:14
C96:15
C96:16
So51
Abs Sol Vlv Trailer Wheel